GENERAL ELECTRIC

DRAWING NO. 0-731E752 CONT ON SH F SH NO. 1

UNLESS OTHERWISE SPECIFIED USE THE FOLLOWING
APPLIED PRACTICES — SURFACES — TOLERANCES ON WORKING DIMENSIONS: FRACTIONS ± DECIMALS ± ANGLES ±

TITLE: ONE LINE DIAGRAM
INST & CONTROL AC SYSTEM
FIRST MADE FOR BROWNS FERRY UNIT 1, 2 & 3 59-4

FCF 236x237 (BROWNS FERRY 1,2, & 3) 59.4

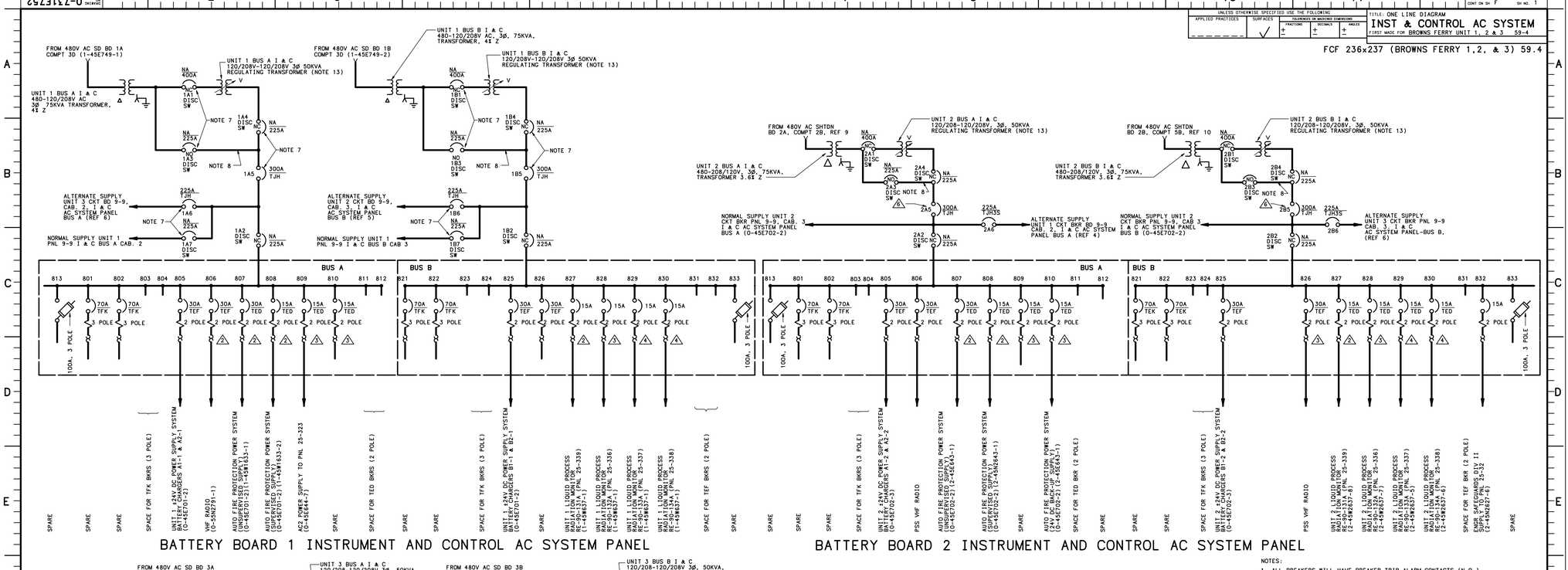

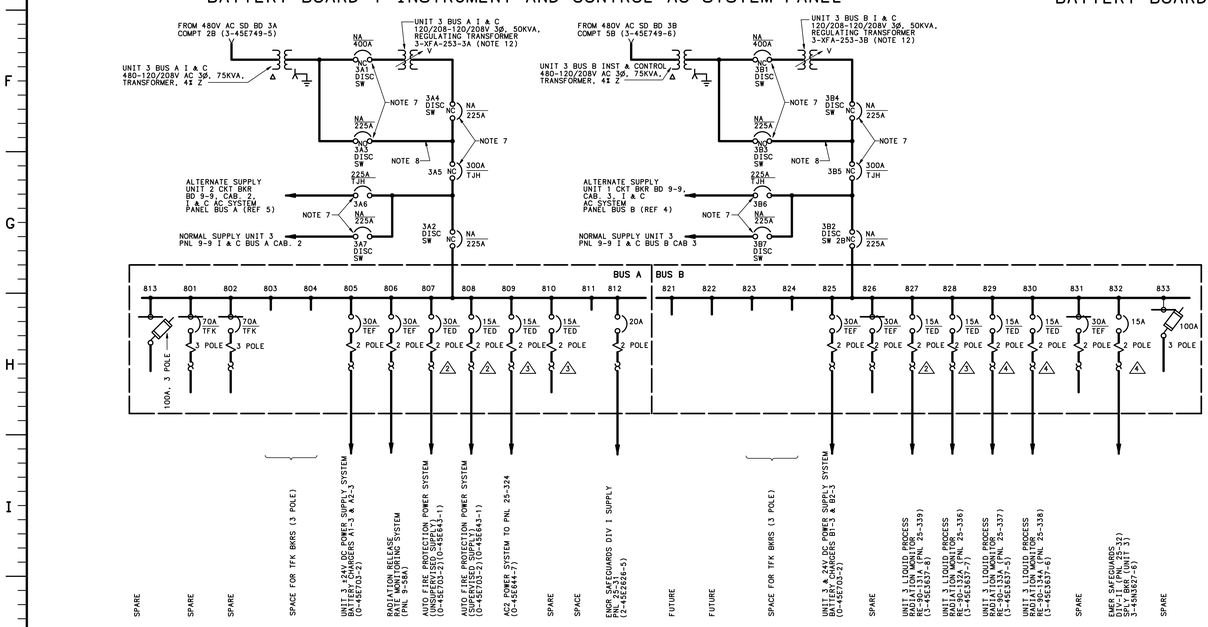

	UNID	BKR SETTING
1A1	1-SW-253-1A/1A1	DISCONNECT SW
1A2	1-SW-253-1A/1A2	DISCONNECT SW
1A3	1-SW-253-1A/1A3	DISCONNECT SW
1A4	1-SW-253-1A/1A4	DISCONNECT SW
1A5	1-BKR-253-1A/1A5	SEE NOTE 7
1A6	1-BKR-253-1A/1A6	SEE NOTE 7
1A7	1-SW-253-1A/1A7	DISCONNECT SW
1B1	1-SW-253-1B/1B1	DISCONNECT SW
1B2	1-SW-253-1B/1B2	DISCONNECT SW
1B3	1-SW-253-1B/1B3	DISCONNECT SW
1B4	1-SW-253-1B/1B4	DISCONNECT SW
1B5	1-BKR-253-1B/1B5	SEE NOTE 7
1B6	1-BKR-253-1B/1B6	SEE NOTE 7
1B7	1-SW-253-1B/1B7	DISCONNECT SW

	UNID	BKR SETTING
2A1	2-SW-253-2A/2A1	DISCONNECT SW
2A2	2-SW-253-2A/2A2	DISCONNECT SW
2A3	2-SW-253-2A/2A3	DISCONNECT SW
2A4	2-SW-253-2A/2A4	DISCONNECT SW
2A5	2-BKR-253-2A/2A5	SEE NOTE 6
2A6	2-BKR-253-2A/2A6	SEE NOTE 7
2B1	2-SW-253-2B/2B1	DISCONNECT SW
2B2	2-SW-253-2B/2B2	DISCONNECT SW
2B3	2-SW-253-2B/2B3	DISCONNECT SW
2B4	2-SW-253-2B/2B4	DISCONNECT SW
2B5	2-BKR-253-2B/2B5	SEE NOTE 6
2B6	2-BKR-253-2B/2B6	SEE NOTE 7

	UNID	BKR SETTING
3A1	3-SW-253-3A/3A1	DISCONNECT SW
3A2	3-SW-253-3A/3A2	DISCONNECT SW
3A3	3-SW-253-3A/3A3	DISCONNECT SW
3A4	3-SW-253-3A/3A4	DISCONNECT SW
3A5	3-BKR-253-3A/3A5	SEE NOTE 7
3A6	3-BKR-253-3A/3A6	SEE NOTE 7
3A7	3-SW-253-3A/3A7	DISCONNECT SW
3B1	3-SW-253-3B/3B1	DISCONNECT SW
3B2	3-SW-253-3B/3B2	DISCONNECT SW
3B3	3-SW-253-3B/3B3	DISCONNECT SW
3B4	3-SW-253-3B/3B4	DISCONNECT SW
3B5	3-BKR-253-3B/3B5	SEE NOTE 7
3B6	3-BKR-253-3B/3B6	SEE NOTE 7
3B7	3-SW-253-3B/3B7	DISCONNECT SW

REFERENCE DRAWINGS:

1. 45BM702-1...BILL OF MATERIALS
2. 0-731E700...ONE LINE DIAGRAM, KEY DIAGRAM OF PLANT DC & INST & CONTROL AC SYSTEM
3. 731E717 ....ONE LINE DIAGRAM 124V DC POWER SUPPLY SYSTEM
4. 1-731E753-3.ONE LINE DIAGRAM UNIT 1 CKT BKR BD 9-9 AC PANELS
5. 2-731E753-3.ONE LINE DIAGRAM UNIT 2 CKT BKR BD 9-9 AC PANELS
6. 3-731E753-3.ONE LINE DIAGRAM UNIT 3 CKT BKR BD 9-9 AC PANELS
7. 1-45E749-1..ONE LINE DIAGRAM 480V SHUTDOWN BD 1A
8. 1-45E749-2..ONE LINE DIAGRAM 480V SHUTDOWN BD 1B
9. 2-45E749-3..ONE LINE DIAGRAM 480V SHUTDOWN BD 2A
10. 2-45E749-4..ONE LINE DIAGRAM 480V SHUTDOWN BD 2B
11. 1-45N637-1..WIRING DIAGRAM PROCESS RADIATION MONITOR SYS SCHEM DIA
12. 0-45E643-1..WIRING DIAGRAM AUTOMATIC FIRE PROTECTION SYS SCHEM DIA
13. 2-45E643-1..WIRING DIAGRAM AUTOMATIC FIRE PROTECTION SYS SCHEM DIA
14. 0-45E644-7..WIRING DIAGRAM FIRE PROTECTION SYS SCHEM DIA
15. 0-45E701-2..WIRING DIAGRAM BATTERY BD 1 PNL 8-12 SINGLE LINE
16. 0-45E702-2..WIRING DIAGRAM BATTERY BD 2 PNL 8-11 SINGLE LINE
17. 0-45E702-3..WIRING DIAGRAM BATTERY BD 2 PNL 12-1A SINGLE LINE
18. 0-45E703-2..WIRING DIAGRAM BATTERY BD 3 PNL 8-12 SINGLE LINE
20. 3-45E749-5..WIRING DIAGRAM 480V SHUTDOWN BD 3A SINGLE LINE
21. 3-45E749-6..WIRING DIAGRAM 480V SHUTDOWN BD 3B SINGLE LINE
22. 1-45N1633-1.WIRING DIAGRAM AUTOMATIC FIRE PROTECTION SYS CONN DIA
23. 1-45E1647-2.WIRING DIAGRAM UNIT CONTROL BD PNL 9-9 CABINET 2
24. 1-45E1647-3.WIRING DIAGRAM UNIT CONTROL BD PNL 9-9 CABINET 3
25. 2-45E2626-5.WIRING DIAGRAM REACTOR CORE ISOLATION CLG SYS CONN DIA
26. 2-45N2627-6.WIRING DIAGRAM BACK-UP CONTROL CENTER PNL 25-32 CONN DIA
27. 2-45N2637-5,6,7,8..CONNECTION DIAGRAM PROCESS RADIATION MONITORING SYS
28. 2-45E2643-1.WIRING DIAGRAM UNIT CONTROL BD PNL 9-5
29. 2-45E2647-2.WIRING DIAGRAM UNIT CONTROL BD PNL 9-9 CABINET 2
30. 2-45E2647-3.WIRING DIAGRAM UNIT CONTROL BD PNL 9-9 CABINET 3
31. 3-45N3626-1.WIRING DIAGRAM REACTOR CORE ISOLATION CLG SYS CONN DIA
32. 3-45N3626-5.WIRING DIAGRAM REACTOR CORE ISOLATION CLG SYS CONN DIA
33. 3-45E3647-2.WIRING DIAGRAM REACTOR CORE ISOLATION CLG SYS CONN DIA
34. 0-55N2791-1.EMERGENCY RADIO SYS FM RADIO PAGING SYS

NOTES:

1. ALL BREAKERS WILL HAVE BREAKER TRIP ALARM CONTACTS (N.O.) WIRED OUT TO TERMINAL BLOCKS FOR COMMON ANNUNCIATION
2. △ BREAKERS WILL BE CONNECTED TO PHASE A AND NEUTRAL
3. △ BREAKER WILL BE CONNECTED TO PHASE B AND NEUTRAL
4. △ BREAKER WILL BE CONNECTED TO PHASE C AND NEUTRAL
5. △ BREAKER IS A GE TYPE TJH6S WITH MICROVERSATRIP RMS-9 DEVICE. 300A CURRENT SENSOR, SET CURRENT SETTING AT 0.5X, LONG TIME DELAY AT 1, SHORT TIME PICKUP AT 9C, SHORT TIME DELAY AT MAXIMUM
6. △ CIRCUIT BREAKERS 2A5 AND 2B5 ARE GENERAL ELECTRIC, TJH6S WITH MICROVERSATRIP RMS-9 DEVICE, RATING PLUG IS 300A. SET CURRENT SETTING AT 0.5, LTD AT 3.0, STPU AT 9.0, STD AT "MAX", I^T ON "OUT", INST AT 15.0, LTPU IS FIXED AT 1.1. DISCONNECT SWITCH 2A1 AND 2B1 ARE GE TJJ436Y400 NON-AUTOMATIC MOLDED CASE CIRCUIT BREAKERS
7. DISCONNECT SWITCHES, 1A1, 1B1, 3A1 AND 3B1 ARE GE NON-AUTOMATIC 400A, CAT NO. TJJ436Y400. DISCONNECT SWITCHES 1A2, 1A3, 1A4, 1A7, 1B2, 1B3, 1B4, 1B7, 2A2, 2A3, 2A4, 2A7, 2B2, 2B3, 2B4, 2B7, 3A2, 3A3, 3A4, 3A7, 3B2, 3B3, 3B4 AND 3B7 ARE GE NON-AUTOMATIC 225A CAT NO. TFK236Y225. CIRCUIT BREAKERS 1A5, 1B5, 3A5 AND 3B5 ARE GE TJH3S WITH MICROVERSATRIP RMS-9 DEVICE AND 300A RATING PLUG. SET CURRENT SETTING AT 0.5, FIX LTPU AT 1.1, LTD AT 3, STPU AT 9, STD AT "MAX", AND "INST" AT 15. CIRCUIT BREAKERS 1A6, 1B6, 2A6, 2B6, 3A6 AND 3B6 ARE GE TJH3S WITH MICROVERSATRIP RMS-9 DEVICE AND 225A RATING PLUG. SET CURRENT SETTING AT 0.5, LTPU AT 1.1, LTD AT 2, STPU AT 9, STD AT "INT" AND "INST" AT 15.
8. THE LOADS ON THE BUS WILL NOT BE CONSIDERED OPERABLE IN THE CONTEXT OF THE TECHNICAL SPECIFICATION REQUIREMENTS WHEN THE BUS IS FED THROUGH THE MAINTENANCE BYPASS. I & C BUS CLASS 1E LOADS, WHEN FED THROUGH THE MAINTENANCE BYPASS, ARE NOT CONSIDERED TECHNICAL SPECIFICATION OPERABLE, BUT NON-CLASS 1E LOADS (INCLUDING FIRE PROTECTION LOADS) MAYBE CONSIDERED OPERABLE WHEN THE UPSTREAM 480V SHUTDOWN BOARD VOLTAGE IS 508 VOLTS OR LESS.
9. DISCONNECT SWITCHES 1A1 (1B1) AND 1A4 (1B4) MUST BE OPENED TO DISCONNECT THE REGULATOR BEFORE MAINTENANCE BYPASS SWITCH 1A3. (1B3) IS CLOSED. BYPASS SWITCH 1A3 (1B3) MUST BE OPENED BEFORE DISCONNECT SWITCHES 1A1 (1B1) AND 1A4 (1B4) ARE CLOSED TO RECONNECT THE REGULATOR.
10. DISCONNECT SWITCHES 2A1 (2B1) AND 2A4 (2B4) MUST BE OPENED TO DISCONNECT THE REGULATOR BEFORE MAINTENANCE BYPASS SWITCH 2A3 (2B3) IS CLOSED. BYPASS SWITCH 2A3 (2B3) MUST BE OPENED BEFORE DISCONNECT SWITCHES 2A1 (2B1) AND 2A4 (2B4) ARE CLOSED TO RECONNECT THE REGULATOR.
11. DISCONNECT SWITCHES 3A1 (3B1) AND 3A4 (3B4) MUST BE OPENED TO DISCONNECT THE REGULATOR BEFORE MAINTENANCE BYPASS SWITCH 3A3 (3B3) IS CLOSED. BYPASS SWITCH 3A3 (3B3) MUST BE OPENED BEFORE DISCONNECT SWITCHES 3A1 (3B1) AND 3A4 (3B4) ARE CLOSED TO RECONNECT THE REGULATOR.
12. THE 50KVA REGULATING TRANSFORMERS THAT FEED THE I & C BUSES HAVE A NOMINAL OUTPUT VOLTAGE SETTING OF 125V AND AN ALLOWABLE SETTING RANGE OF 124V TO 126V PER CALCULATION ED-03253-920086 R1 (UNIT 3).
13. THE 50KVA REGULATING TRANSFORMERS THAT FEED THE I & C BUSES HAVE A NOMINAL OUTPUT VOLTAGE OF 125V AND AN ALLOWABLE SETTING RANGE OF 124V TO 126V PER CALCULATION EDQ12532002006O FOR UNIT 1 & EDQ2000870028 FOR UNIT 2.

ABBREVIATIONS:
NA - NON AUTOMATIC

LEGEND

| PERPENDICULAR RED LINE UNIT 1/UNIT 2, UNIT 2/UNIT 3 BOUNDARY ISOLATION POINT. VALVES CLOSED FOR ISOLATION PURPOSES.

AMENDMENT 28

UNIT 1-3

BROWNS FERRY NUCLEAR PLANT
FINAL SAFETY ANALYSIS REPORT

INSTRUMENTATION AND CONTROLS
AC POWER SYSTEM
ONE-LINE DIAGRAM

FIGURE 8.7-1

PROJECT BFNP DISCIPLINE ELEC
CONTRACT 90744-91750 UNIT 1-3
DESC. INST & CONTROL AC SYSTEM
DWG/DOC NO. 0-731E752
SHEET 1 OF REV 033
DCN DATE

Figure 8.7-2

Deleted by Amendment 9.

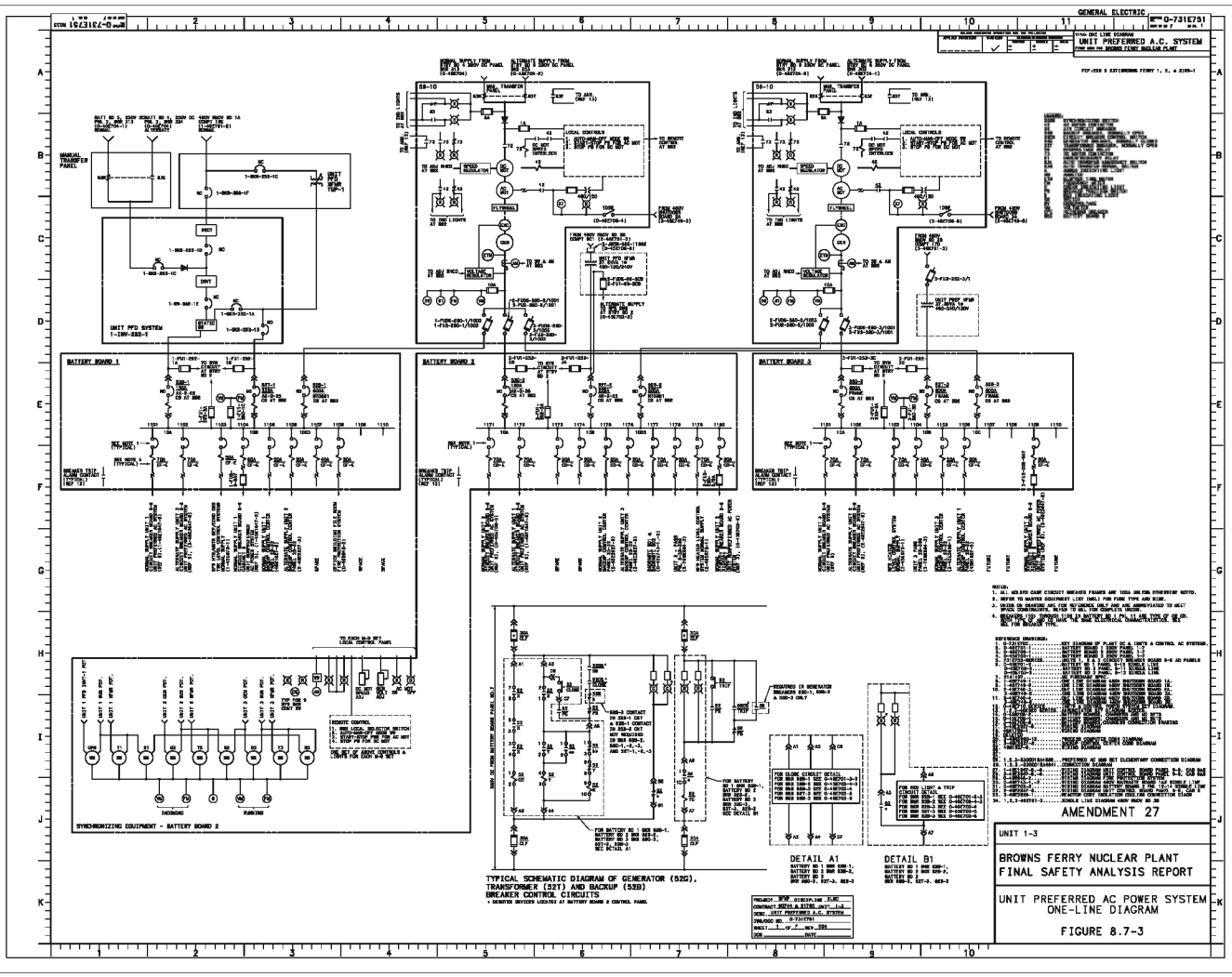
GENERAL ELECTRIC
UNIT PREFERRED A.C. SYSTEM
BATTERY BOARD 1
BATTERY BOARD 2
BATTERY BOARD 3
UNIT PFD SYSTEM
MANUAL TRANSFER PANEL
SYNCHRONIZING EQUIPMENT - BATTERY BOARD 2
TYPICAL SCHEMATIC DIAGRAM OF GENERATOR (52G), TRANSFORMER (52T) AND BACKUP (52B) BREAKER CONTROL CIRCUITS
DETAIL A1
DETAIL B1
AMENDMENT 27
UNIT 1-3
BROWNS FERRY NUCLEAR PLANT
FINAL SAFETY ANALYSIS REPORT
UNIT PREFERRED AC POWER SYSTEM
ONE-LINE DIAGRAM
FIGURE 8.7-3

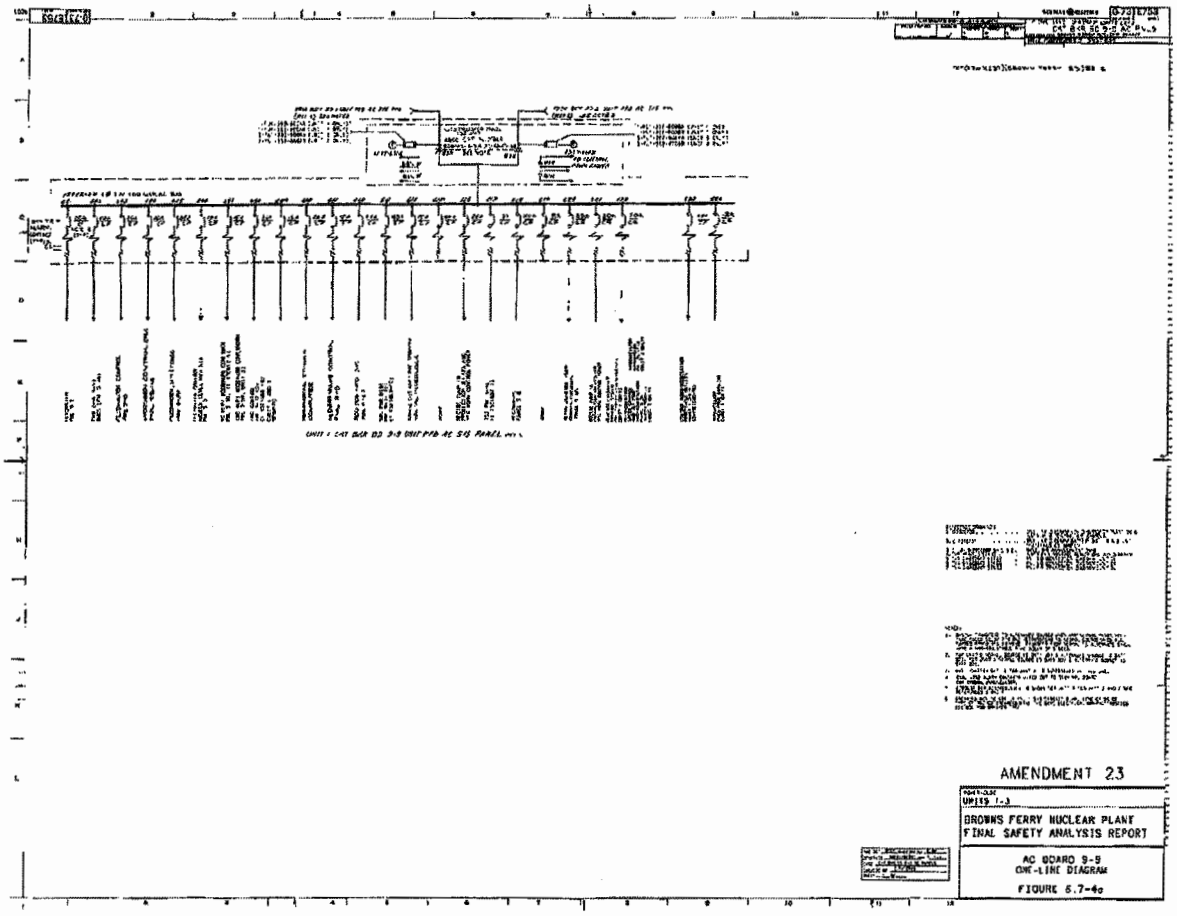

AMENDMENT 23

UNITS 1-3

BROWNS FERRY NUCLEAR PLANT
FINAL SAFETY ANALYSIS REPORT

AC BOARD 9-9
ONE-LINE DIAGRAM

FIGURE 5.7-4a

R011

0-731E753 SHT. NO. REVISED

GENERAL ELECTRIC 0-731E753 SHT 3 OF 3 SH. 2

UNLESS OTHERWISE SPECIFIED USE THE FOLLOWING:				
APPLIED PRACTICES	SURFACES	TOLERANCE OF MACHINED DIMENSIONS		
		MACHINE	MACHINE	MACHINE
	✓	±	±	±

TITLE ONE LINE DIAGRAM - UNITS 1&3
CKT BKR BD 9-9 AC PNLS.
FIRST MADE FOR BROWNS FERRY NUCLEAR PLANT
PLANT PREFERRED ☒ UNIT NON PREFERRED SYSTEM ☐

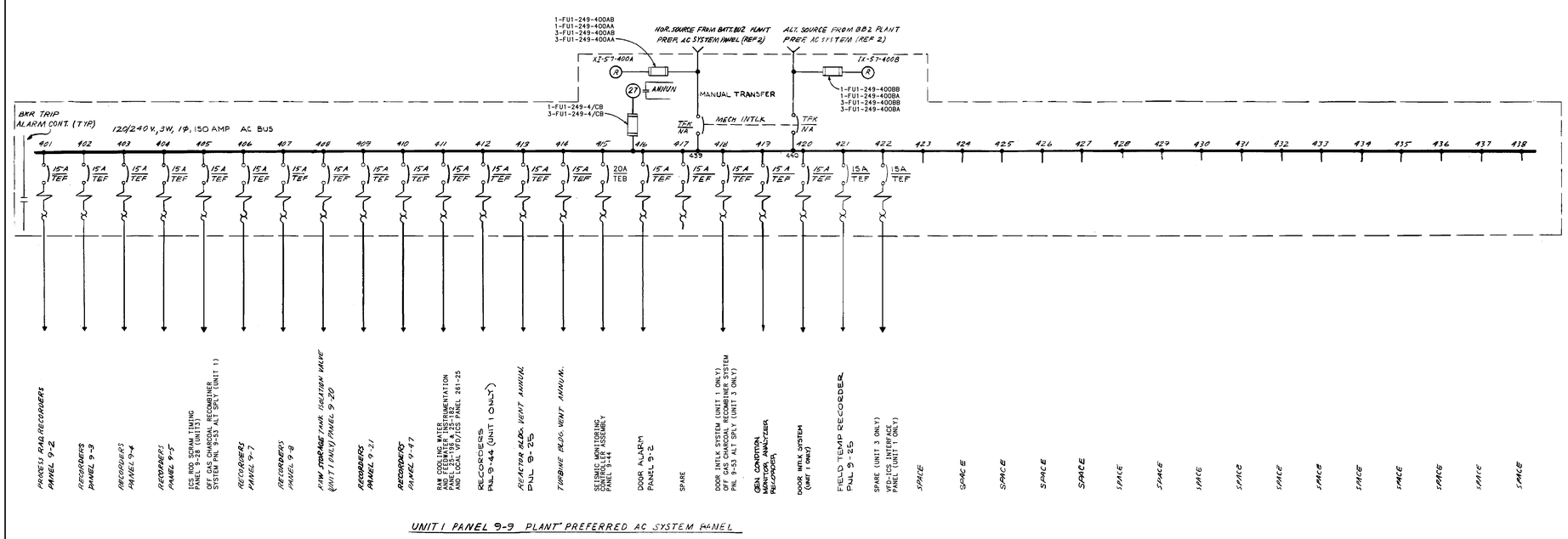

UNIT 1 PANEL 9-9 PLANT PREFERRED AC SYSTEM PANEL

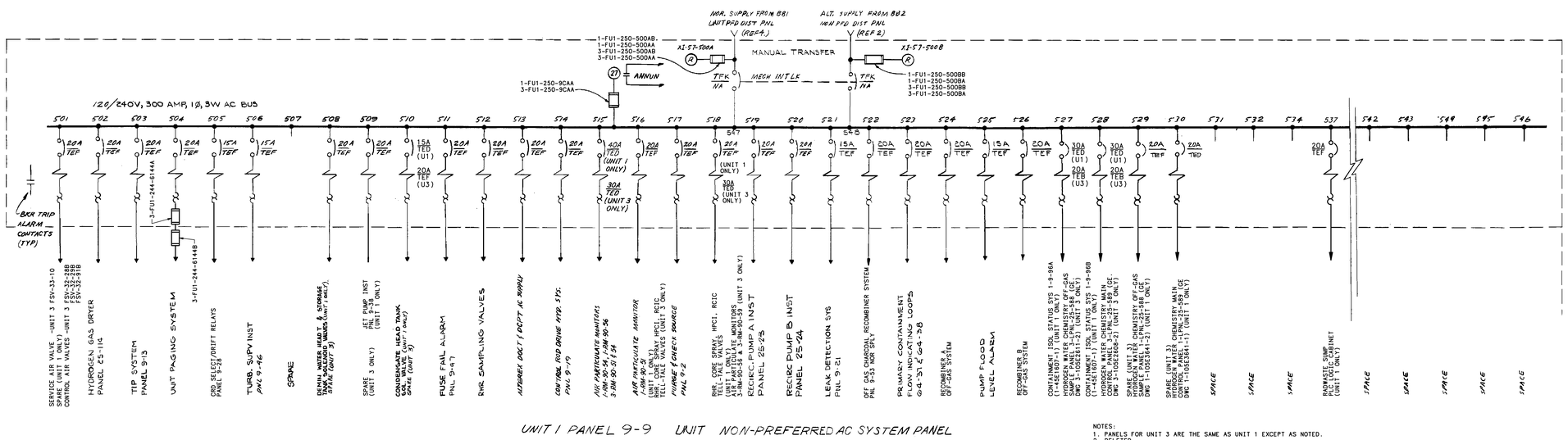

UNIT 1 PANEL 9-9 UNIT NON-PREFERRED AC SYSTEM PANEL

NOTES:
1. PANELS FOR UNIT 3 ARE THE SAME AS UNIT 1 EXCEPT AS NOTED.
2. DELETED
3. BKR TRIP ALARM CONTACTS WIRED OUT TO TERMINAL BOARDS FOR COMMON ANNUN.
4. CIRCUIT BREAKER DISTRIBUTION IS SHOWN FOR UNIT 1. FOR DIFFERENCES IN UNIT 3, SEE 3-45E3647 SERIES DWGS.
5. UNIDS ON DRAWING ARE FOR REFERENCE ONLY AND ARE ABBREVIATED TO MEET SPACE CONSTRAINTS. REFER TO MEL FOR COMPLETE UNIDS.

REFERENCE DRAWINGS:
1. 0-731E700----------ONE LINE DIAG, KEY DIAG OF PLANT DC INST & CONTROL AC SYSTEMS
2. 0-731E758-1----------ONE LINE DIAG, BATT BD 2 PLANT PREF AND NONPREF SYSTEM PNLS
3. 1-,3-791E207-1-------PANEL 9-9 ARRANGEMENT DIAG 1-,3-791E207-2
4. 0-731E751-1----------ONE LINE DIAG, UNIT PREF AC PWR SYS
5. 0-45E710 SERIES------INSTR & CONT PWR SYS, KEY DIAGRAM
6. 1-45E1647 SERIES-----PNL 9-9 CONN DIAG (NOTE 4) 3-45E3647 SERIES
7. 2-731E753-2----------UNIT 2 PNL 9-9 SINGLE LINE

PROJECT BFNP	DISCIPLINE ELEC
CONTRACT 90744, 91750	UNIT 1 & 3
DESC. CKT BKR BD 9-9 AC PNLS	
DWG/DOC NO. 0-731E753	
SHEET 2 OF	REV 011
DCN	DATE

AMENDMENT 28

UNITS 1 & 3

BROWNS FERRY NUCLEAR PLANT
FINAL SAFETY ANALYSIS REPORT

AC BOARD 9-9
PREFERRED AND NONPREFERRED LOADS
ONE-LINE DIAGRAM

FIGURE 8.7-4b SH 1

GENERAL ELECTRIC

2-731E753 SHEET 3 OF 2

UNLESS OTHERWISE SPECIFIED USE THE FOLLOWING

APPLIED PRACTICES	SURFACES	FRACTIONS	DECIMALS	ANGLES
	✓	±	±	±

ONE LINE DIAGRAM UNIT 2

CKT BKR BD 9-9 AC PNLS

FIRST MADE FOR BROWNS FERRY NUCLEAR PLANT

PLANT PREFERRED (UNIT N N PREFERRED SYSTEM)

FCF (236 X 237) (BROWNS FERRY 2 59-2

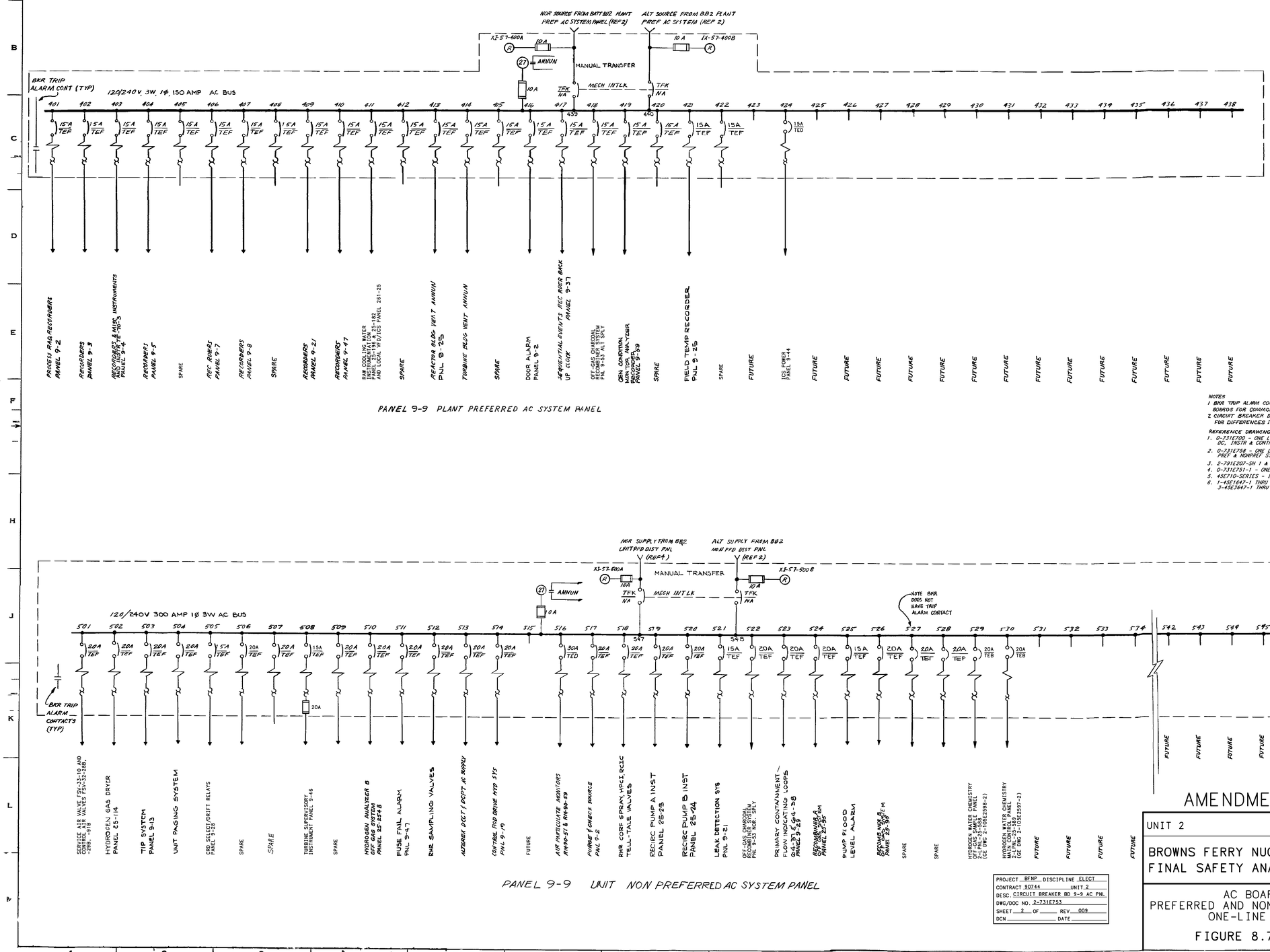

PANEL 9-9 PLANT PREFERRED AC SYSTEM PANEL

NOTES

1 BKR TRIP ALARM CONTACTS WIRED OUT TO TERMINAL BOARDS FOR COMMON ANNUNCIATOR.

2 CIRCUIT BREAKER DISTRIBUTION IS SHOWN FOR UNIT 2 FOR DIFFERENCES IN UNITS 1 AND 3 SEE REFERENCE 6.

REFERENCE DRAWINGS:

1. 0-731E700 - ONE LINE DIAGRAM KEY DIAGRAM OF PLANT DC, INSTR & CONTROL AC SYSTEMS.
2. 0-731E758 - ONE LINE DIAGRAM, BATT BD 2, PLANT PREF & NONPREF SYSTEM PANELS.
3. 2-791E207-SH 1 & 2 - PANEL 9-9 ARRANGEMENT DIAGRAM.
4. 0-731E751-1 - ONE LINE DIAG UNIT PREF AC POWER SYSTEM.
5. 45E710-SERIES - INSTR & CONT PWR SYSTEM KEY DIAGRAM.
6. 1-45E1647-1 THRU -5, 2-45E2647-1 THRU -5 & 3-45E3647-1 THRU -5 - PANEL 9-9 CONN DIAGRAM (NOTE 2).

PANEL 9-9 UNIT NON PREFERRED AC SYSTEM PANEL

AMENDMENT 28

UNIT 2	
BROWNS FERRY NUCLEAR PLANT FINAL SAFETY ANALYSIS REPORT	
AC BOARD 9-9 PREFERRED AND NONPREFERRED LOADS ONE-LINE DIAGRAM	
FIGURE 8.7-4b SH 2	

PROJECT BFNP	DISCIPLINE ELECT
CONTRACT 90744	UNIT 2
DESC. CIRCUIT BREAKER BD 9-9 AC PNL	
DWG/DOC NO. 2-731E753	
SHEET 2 OF	REV 009
DCN	DATE

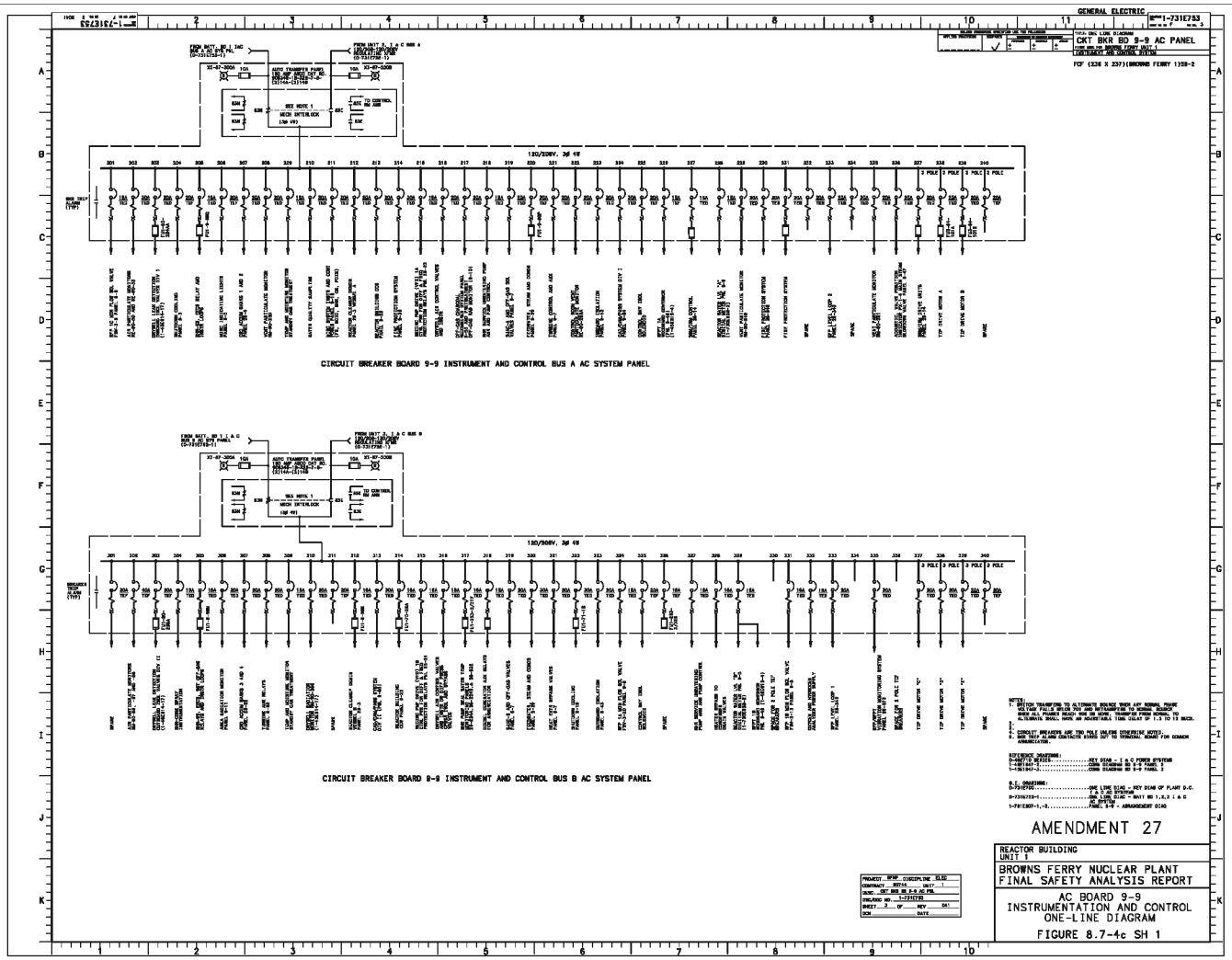
GENERAL ELECTRIC
CKT BKR BD 9-9 AC PANEL
CIRCUIT BREAKER BOARD 9-9 INSTRUMENT AND CONTROL BUS A AC SYSTEM PANEL
CIRCUIT BREAKER BOARD 9-9 INSTRUMENT AND CONTROL BUS B AC SYSTEM PANEL
AMENDMENT 27
REACTOR BUILDING
UNIT 1
BROWNS FERRY NUCLEAR PLANT
FINAL SAFETY ANALYSIS REPORT
AC BOARD 9-9
INSTRUMENTATION AND CONTROL
ONE-LINE DIAGRAM
FIGURE 8.7-4c SH 1

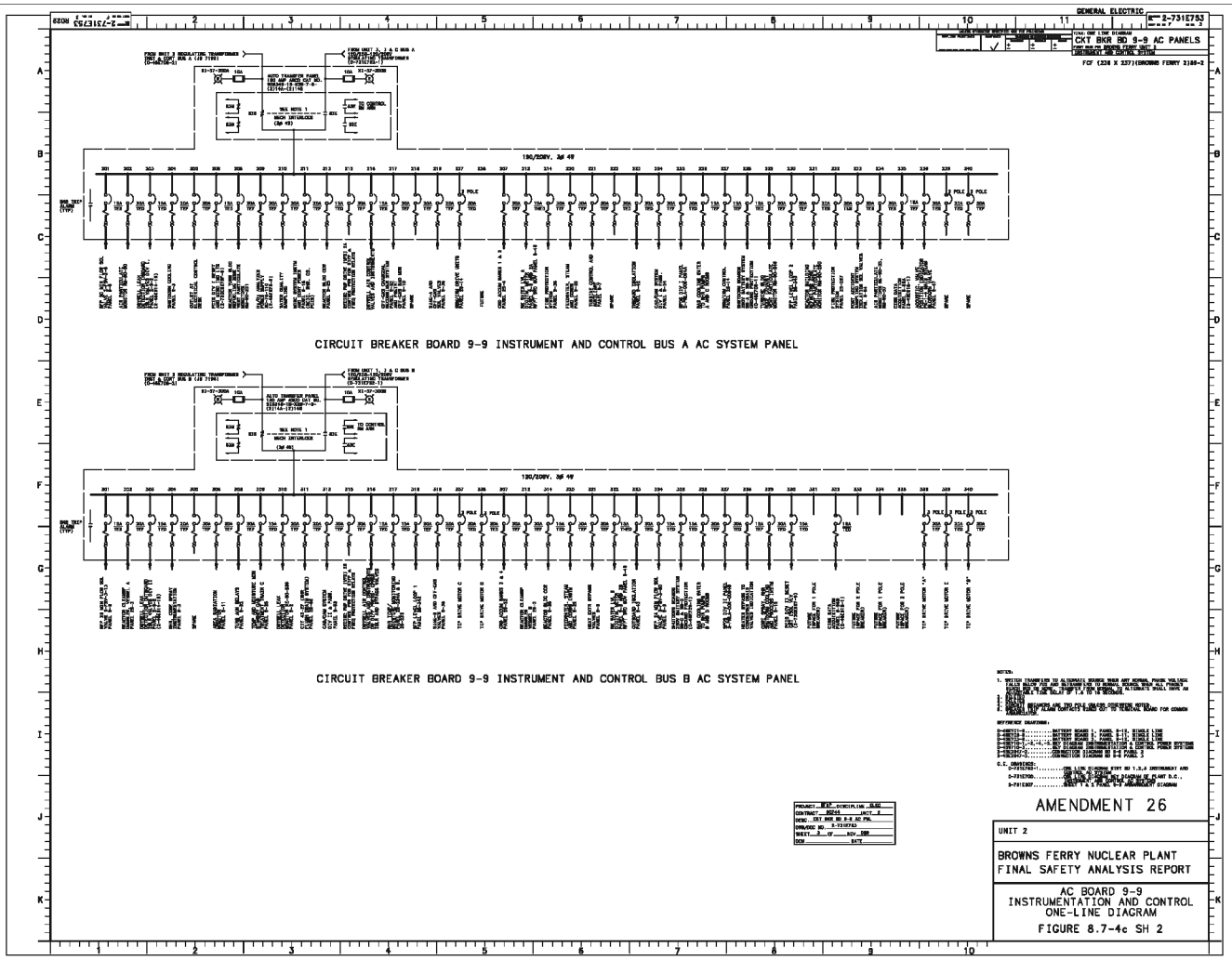
CIRCUIT BREAKER BOARD 9-9 INSTRUMENT AND CONTROL BUS A AC SYSTEM PANEL
CIRCUIT BREAKER BOARD 9-9 INSTRUMENT AND CONTROL BUS B AC SYSTEM PANEL
CKT BKR BD 9-9 AC PANELS
AMENDMENT 26
UNIT 2
BROWNS FERRY NUCLEAR PLANT
FINAL SAFETY ANALYSIS REPORT
AC BOARD 9-9
INSTRUMENTATION AND CONTROL
ONE-LINE DIAGRAM
FIGURE 8.7-4c SH 2

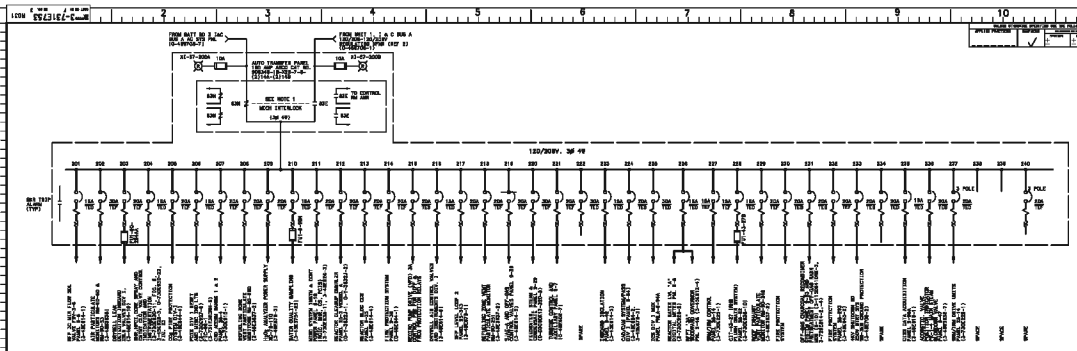

CIRCUIT BREAKER BOARD 9-9 INSTRUMENT AND CONTROL BUS A AC SYSTEM PANEL

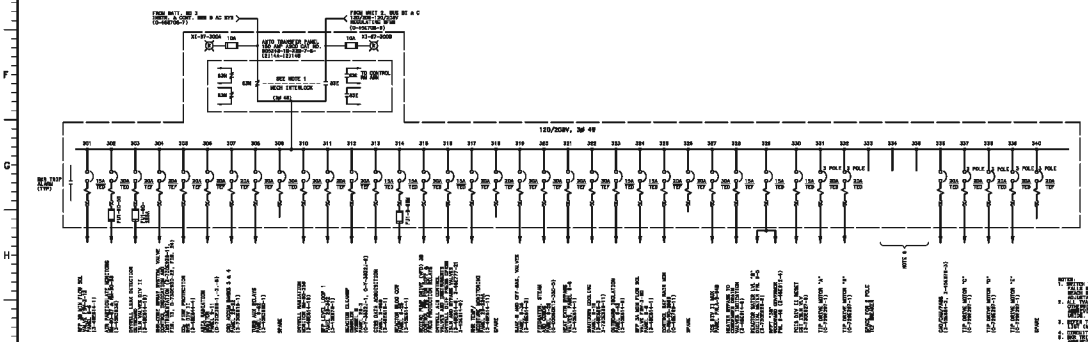

CIRCUIT BREAKER BOARD 9-9 INSTRUMENT AND CONTROL BUS B AC SYSTEM PANEL

AMENDMENT 27

POWERHOUSE
UNIT 3

BROWNS FERRY NUCLEAR PLANT
FINAL SAFETY ANALYSIS REPORT

AC BOARD 9-9
INSTRUMENTATION AND CONTROL
ONE-LINE DIAGRAM

FIGURE 8.7-4c SH 3

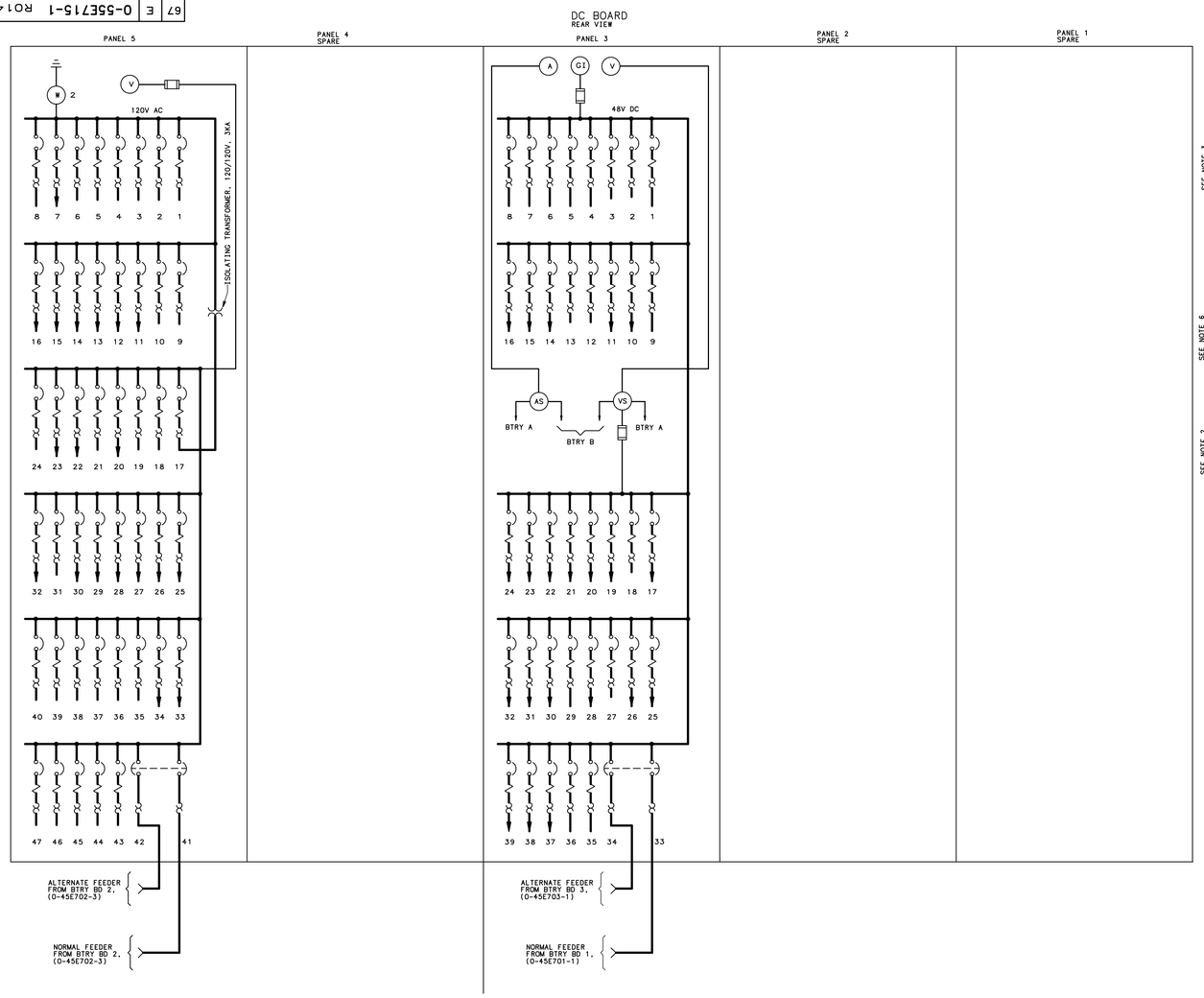

CONTROL SUPPLIES CIRCUIT SCHEDULES
120V AC PLANT PREFERRED

PNL NO.	BKR NO.	CABLE NO.	BKR FRAME	TRIP	CIRCUIT
5	1		100	15	SPARE
	2		100	15	SPARE
	3		100	15	SPARE
	4		100	15	SPARE
	5		100	15	SPARE
	6		100	15	SPARE
	7		100	15	DIESEL GEN LOW LOW OIL PRESS. ANN
	8		100	15	SPARE
	9		100	15	SPARE
	10		100	15	SPARE
	11	FE50	100	15	CARPENTER SHOP SPRINKLER CONTROL
	12	FE20	100	15	FIRE PUMP CONTROL
	13	FE25	100	15	OXYGEN,ACETYLENE & OIL STOR RMS SPR CONTROL
	14	SS106	100	15	COMMON STA SERV XFMR A SPR RLYS CONTROL
	15	SS131	100	15	COMMON STA SERV XFMR B SPR RLYS CONTROL
	16		100	15	TRANSFORMER 4 SPR RELAYS CONTROL (FUTURE)
	17		100	30	120/120V ISOLATING TRANSFORMER
	18		100	30	SPARE
	19		100	30	TRANSFORMER 4 TAP CHANGER CONTROL (FUTURE)
	20	L500	100	15	PHOTO ILLUMINATION CABINET
	21		100	30	SPARE
	22		100	30	USS XFMR W/WH TOT FEEDER
	23	CL1	150	20	CLOCK FEEDER
	24		100	30	SPARE
	25	M4	100	30	REVERSE POWER RELAY-GENERATOR 1
	26	M5	100	30	REVERSE POWER RELAY-GENERATOR 2
	27	M6	100	30	REVERSE POWER RELAY-GENERATOR 3
	28	M7	100	30	PCB RECLOSER RELAYS
	29	M8	100	30	MRB48 RECEPTACLE
	30		100	30	RECDG INSTR BD CHRT DR (SECT 1)& O-VR-242-1,2
	31		100	30	SPARE
	32		100	30	TOTALIZER
	33	A1225	100	30	CONT BAY HEAT, VENT & AIR CONDITIONING, ANN
	34	IPL5015	150	20	USST 1B, 2B, 3P REMOTE POSITION INDICATOR
	35		100	30	SPARE
	36		100	30	SPARE
	37		100	30	SPARE
	38		100	30	SPARE
	39		100	30	SPARE
	40		100	30	SPARE
	41	M1	100	70	120V AC PLANT PREFERRED (NORMAL FEEDER)
	42	M2	100	70	120V AC PLANT PREFERRED (ALTERNATE FEEDER)
	43		100	30	SPARE
	44		100	30	SPARE
	45		100	30	SPARE
	46		100	30	SPARE
	47		100	30	SPARE

SEE NOTE 3

SEE NOTE 6 (SHD (SHARD)

SEE NOTE 2 **

CONTROL SUPPLIES CIRCUIT SCHEDULES

PNL NO.	BKR NO.	CABLE NO.	BKR FRAME	TRIP	CIRCUIT
2					

CONTROL SUPPLIES CIRCUIT SCHEDULES
48V DC SUPPLY

PNL NO.	BKR NO.	CABLE NO.	BKR FRAME	TRIP	CIRCUIT
3	1		100	30	SPARE
	2		100	30	SPARE
	3		100	30	SPARE
	4		100	30	SPARE
	5		100	30	SPARE
	6		100	30	SPARE
	7		100	30	SPARE
	8		100	30	SPARE
	9		100	30	SPARE
	10	B136	100	30	500KV MADISON 1 LINE TRANSFER TRIP
	11	B137	100	30	500KV MADISON 1 LINE REMOTE TRIP
	12		100	30	SPARE
	13		100	30	SPARE
	14	B577	100	30	500KV UNION LINE XFRT RECEIVER
	15	B578	100	30	500KV UNION LINE REMOTE TRIP TRANSMITTERS
	16	B142	100	30	500KV TRINITY 1 LINE REMOTE TRIP
	17	B776	100	30	2030 RELAY COMMUNICATION INTERFACE MODULE
	18		100	30	SPARE
	19	B145	100	30	500KV MAURY LINE REMOTE TRIP
	20	B146	100	30	500KV LIMESTONE LINE POR & XFR TRIP SET B
	21	B147	100	30	500KV LIMESTONE LINE RLY CARR SET A
	22		100	30	SPARE
	23		100	30	SPARE
	24		100	30	SPARE
	25	B169	100	30	500KV TRINITY 2 LINE ECMCH RELAYS CARR SET
	26		100	30	SPARE
	27		100	30	SPARE
	28	B154	100	30	500KV TRINITY 2 LINE POR & XFR TRIP
	29		100	30	SPARE
	30	B156	100	30	500KV MAURY LINE XFRT (DUAL CHAN)
	31	B165	100	30	500KV TRINITY 1 LINE MICROWAVE TRANSFER TRIP
	32	L502	100	20	PHOTO-ELECTRIC ILLUMINATION CABINET
	33	B125	100	70	48V BATTERY FEEDER (NORMAL)
	34	B126	100	70	48V BATTERY FEEDER (ALTERNATE)
	35		100	30	SPARE
	36		100	30	SPARE
	37	B831	100	30	MRB 23 & MRB 41 ETHERNET SWITCHES
	38	B832	100	30	MRB 48 ETHERNET SWITCHES
	39	OB972	100	30	MRB 43 ETHERNET SWITCH AND IOC

SEE NOTE 2 {*, *}

NOTES:

1. SEE 0-55N702 FOR GENERAL NOTES AND DETAILS.
2. BREAKERS MARKED WITH AN ASTERISK (*) HAVE ONLY THERMAL TRIP ELEMENTS. ALL OTHER BREAKERS HAVE BOTH THERMAL AND MAGNETIC TRIP ELEMENTS.
3. 120V AC BREAKERS NO. 1 THRU 16 ARE FED THROUGH A 120/120V ISOLATING TRANSFORMER.

AMENDMENT 29

POWERHOUSE
UNIT 0

BROWNS FERRY NUCLEAR PLANT
FINAL SAFETY ANALYSIS REPORT

WIRING DIAGRAM
CONTROL ROOM DC BOARD
SINGLE LINE

FIGURE 8.7-4d