GPU Nuclear	TMI-1 Maintenance and Construction Department	Installation Procedure No. A25K-51512-IP6
Installation Procedure Title: 'A' & 'B' OTSG STABILIZATION AND PLUGGING		Page 1 of 25

LIST OF EFFECTIVE PAGES

PAGE	REV.	EFFECTIVE DATE	EXHIBIT	PAGE	REV.	EFFECTIVE DATE
1.0	1	03/15/83	7.1	1.0	0	03/12/83
2.0	1	03/15/83		2.0	0	03/12/83
3.0	0	03/12/83		3.0	0	03/12/83
4.0	0	03/12/83		4.0	0	03/12/83
5.0	0	03/12/83		5.0	0	03/12/83
6.0	0	03/12/83		6.0	1	03/15/83
7.0	0	03/12/83		7.0	0	03/12/83
8.0	0	03/12/83		8.0	0	03/12/83
9.0	0	03/12/83		9.0	0	03/12/83
10.0	0	03/12/83		10.0	0	03/12/83
11.0	0	03/12/83		11.0	0	03/12/83
				12.0	1	03/15/83
			7.2	1.0	0	03/12/83
			7.3	1.0	0	03/12/83

RECEIVED

MAR 16 1983

G. KULL

WA-ADL # 23-6
Page / Sheet 1 OF 25
WA # A25K-51512

	SIGNATURE	TITLE/DIVISION/DEPARTMENT	DATE
Originator	[signature]	Job Planner	3-15-83
Concurrence	[signature]	Technical Support / ISR	3/15/83
Reviewed By	[signature]	Responsible Technical Reviewer	3-15-83
	[signature]	Plant Review Group	3/15/83
	[signature]	Rad Con	3/15/83
Approved By	[signature]	P&S Manager	3-15-83
	[signature]	O&M Director or N/A	3-15-83
	[signature]	Mod/Ops ~~QC~~ SRE Manager or N/A	3/15/83

FORM A200-ADM-1218.1-1

8506140189 850125
PDR FOIA
DETJEN84-897 PDR

Revision No. 1 103

1.0 INTRODUCTION AND SCOPE

1.1 This Installation Procedure provides direction for the final tube end prep, stabilizer insertion and welding of stabilizer welding caps and welded plugs.

2.0 REFERENCES

2.1 DRF 8755, B&W FCA 3922, Rev. 0

2.2 DRF 10639, B&W FCA 3921, Rev. 0

2.3 AP 1020, Cleanliness Requirements

2.4 AP 1030, Control of Access to Primary System Opening

2.5 AP 1042, Control of Welding

2.6 Radiation Protection Plan

2.7 B&W Operating Specification 64-100 1546-06

2.8 GPUN Specification SP-1101-12-030, Rev. 8

2.9 Weld Procedure - New Stabilizers (WPS #04324, Rev. 0)

2.10 Weld Procedure - Old Stabilizers (WPS #04322, Rev. 0)

2.11 Weld Procedure - Tapered Stabilizer Cap (WPS #04323, Rev.0)

2.12 GPUN Specification SP-1101-12-039, Rev. 6

2.13 ~~A25K 51512 IP1~~ 3/12/83

2.14 Notes of Telecon, 3/12/83, Barley to Lee

2.15 Notes of Telecon, 3/12/83, Barley to Abramovici

2.16 Memo - Barley to Lee - 3/14/83

GPU G.C. | GPU Weld Dept Dark Rock

To Rep. MT WS-013 & insp Criteria (M. de Filippis)

3/23

WA-ADL # 23-6
Page / Sheet 2 OF 25
WA # A25K-51512

3.0 RESPONSIBILITIES

3.1 M&C Department is responsible for all aspects of this work.

3.2 Plant Engineering will provide assistance as required.

4.0 PREREQUISITES

4.1 OTSG Primary side drained and manways removed.

4.2 Specific training on stabilizer assembly and insertion must be accomplished prior to inserting stabilizers into tubes.

4.3 ALARA and RWP requirement have been satisfied.

4.4 Safety Department "Confined Space Entry Requirements" are met.

4.5 Cold leg plugs installed, inflated and maintained in accordance with current applicable "STP" or J-leg covers installed. Drain plug installed.

4.6 Tooling to be cleaned to Class C cleanliness as specified in AP 1020.

4.7 Video/Communications equipment installed and operable.

4.8 The Reactor must be in cold shutdown and depressurized.

4.9 All tubes slated to receive stabilizers have been identified and those identifications have been verified by Quality Control.

4.10 All stabilizer installation tooling shall have unique serial numbers assigned to each tool prior to use.

4.11 Installation Tooling Qualification

NOTE: These tests are to be performed at the beginning and end of each shift or when the tooling is changed. Do not adjust tooling for post installation tests.

NOTE: All results of the Holder and Crimper Qualifications shall be documented on Attachment 7.2.

4.11.1 Holder Qualification

(1) Clamp a special vice grip holder onto the modified bolt of crimp tool qualification device.

(2) Apply a torque to the bolt head using a torque wrench until the modified bolt held with the special vice grip holder slips, or until a maximum of 20 ft/lbs is reached.

(3) If 20 ft/lbs is reached without slippage, adjust the special vice grip holders to ensure slippage occurs at less than 20 ft/lbs, but greater than 10 ft/lbs.

(4) Upon satisfactory testing, securely tighten the adjustment screw lock nut. Verify setting by repeating Steps (1) and (2).

(5) Repeat Steps (1) through (4) for additional special vice grip holders, as required.

4.11.2 Crimper Qualification

(1) Place tested vice grip holder in the middle of the stabilizer part of the crimp tool qualification device.

(2) Insert the Modified Bolt into the other end.

(3) Crimp the joint with a special vice grip crimping tool previously adjusted.

(4) Using a torque wrench on the bolt specified in Step (2), measure the torque required to cause the joint to rotate. This must be greater than 8 ft/lbs.

(5) If crimp slips at less than 8 ft/lbs, adjust the vice grip crimping tool accordingly and repeat Step (4).

(6) Upon satisfactory crimp test, lock (weld) the crimping tool adjustment screw and lock nut.

5.0 SPECIAL/SAFETY PRECAUTIONS

5.1 Any time the primary pressure boundary is breached, the requirements of AP 1030, Control of Access to Primary Openings, must be observed.

5.2 Any item entering the OTSG, including clothing, must meet the cleanliness requirements Ref. 2.12 (SP-1101-12-039).

5.3 Exercise extreme care to prevent dropping tools or parts inside the OTSG or piping since such an accident will result in lengthy retrieval operations. Use of nylon lanyards or equivalent means of positive capture is required.

5.4 Prior to performing welding operations, drop to minimal nitrogen overpressure and water level to at least 12" below secondary face of upper tubesheet.

5.5 Observe all applicable limits and precautions of the Radiation Protection Plan and RWP.

RECEIVED
MAR 14 1983
G. KULL

6.0 INSTALLATION REQUIREMENTS

6.1 For kinetically expanded tubes to be stabilized.

1 3/12/83

NOTE: See Attachment 7.1 for list of tubes to be end prepped. Cleaning to be documented on WA-ADL # 61-5 weld end preparation record sheet, found in Job Order A25K-V1512.

6.1.1 Tube cleaning shall consist as a minimum 360° I.D. to a depth of 1/4" and the entire O.D. of the tube to tube sheet seal weld area.

NOTE: Clean tube I.D. and seal weld using B&W supplied Scotch-Brite Pads or approved equivalent.

6.1.2 Cleaning shall consist of the removal of all grease, paint, or other foreign matters present. Oil and grease shall be removed by using acetone or approved equivalent.

6.1.3 During fit-up, verify that burrs do not interfere with the two base materials (Plug/tube and plug/tubesheet) thus preventing contact with each other (360°).

NOTE: Burrs shall be removed by using rubber or resin bonded grinding wheels which shall be aluminum oxide or silicon carbide grinding wheels which are unused.

6.1.4 Perform stabilizer assembly and installation in accordance with Attachment 7.3 in those tubes listed on Attachment 7.1, PARTS I, II, VI & VII.

6.1.5 Perform stabilizer assembly welding in accordance with Welding Procedure 04324, Ref. 2.9.

6.2 For stabilization of non-kinetically expanded tubes.

6.2.1 The tubes involved in this portion of this procedure are as follows:

B-77-4	B-77-24
B-77-5	A-1-9
B-77-6	A-11-65
B-77-7	A-114-106
B-77-8	A-140-64
B-77-9	

6.2.2 Verify that all above listed tubes have been endmilled to the requirements of Ref. 2.8, SP 1101-12-030.

6.2.3 Tube cleaning shall consist as a minimum 360° I.D. to a depth of 1/4" and the entire O.D. of the tube to tube sheet seal weld area.

NOTE: Clean tube I.D. and seal weld using B&W supplied Scotch-Brite Pads or approved equivalent.

6.2.4 Cleaning shall consist of the removal of all grease, paint, or other foreign matters present. Oil and grease shall be removed by using acetone or approved equivalent.

6.2.5 During Fit-up, verify that burrs do not interfere with the two base materials (Plug /tube and plug/tubesheet) thus preventing contact with each other (360°).

NOTE: Burrs shall be removed by using rubber or resin bonded grinding wheels which shall be aluminum oxide or silicon carbide grinding wheels which are unused.

NOTE: Prior to performing stabilizer insertion, weld caps shall have been modified in accordance with Ref. 2.2 (B&W FCA 3921, Rev. 0).

6.2.6 Perform stabilizer assembly and installation in accordance with Attachment 7.3 in those tubes listed in Step 6.2.1.

6.2.7 Perform stabilizer assembly welding in accordance with Welding Procedure 04322, Ref. 2.10.

6.3 For stabilization of Row/Tube No. A-23-93

6.3.1 Locate and identify (with hairpin marker) tube A-23-93. Quality Control verify.

6.3.2

6.3.3

6.3.4

6.3.5

LATER

6.3.6

6.3.7

6.3.8

6.4 For plugging tubes previously explosively plugged in upper tubesheet.

6.4.1 The tubes involved in this portion of this procedure are as follows:

A-1-16	A-75-48	A-22-93
A-75-126	A-70-80	A-128-79
A-73-33	B-81-22	A-74-125

6.4.2 Verify that all above listed tubes have been endmilled to the requirements of Ref. 2.8, SP-1101-12-030.

6.4.3 Tube cleaning shall consist as a minimum 360° I.D. to a depth of 1/4" and the entire O.D. of the tube to tube sheet seal weld area.

NOTE: Clean tube I.D. and seal weld using B&W supplied Scotch-Brite Pads or approved equivalent.

6.4.4 Cleaning shall consist of the removal of all grease, paint, or other foreign matters present. Oil and grease shall be removed by using acetone or approved equivalent.

6.4.5 During fit-up, verify that burrs do not interfere with the two base materials (Plug/tube and plug/tubesheet) thus preventing contact with each other (360°).

NOTE: Burrs shall be removed by using rubber or resin bonded grinding wheels which shall be aluminum oxide or silicon carbide grinding wheels which are unused.

NOTE: Prior to performing plug insertion, weld plugs will have been modified in accordance with Ref. 2.2, (B&W FCA 3921, Rev. 0).

6.4.6 Perform plug welding in accordance with Welding Procedure 04322, Ref. 2.10.

7.0 ATTACHMENTS

7.1 List of Tubes to be Stabilized

7.2 Installation Tool Verification Data Sheet - SAMPLE

7.3 Stabilizer Assembly/Insertion Procedure and Checklist - SAMPLE

~~7.4 List of Tubes to be End-Prepped~~ [illegible] 2/12/83

ATT. 7.1
PG. 1

PART I. OTSG A

LIST OF TUBES TO BE STABILIZED AND PLUGGED

EC INDICATIONS FROM US + 04* THRU 15TH TSP

	Row	Tube		Row	Tube		Row	Tube
1.	1	9	25.	11	68	49.	24	95
2.	1	10	26.	13	3	50.	25	4
3.	2	10	27.	13	7	51.	25	95
4.	2	12	~~28.~~	~~13~~	~~68~~ Deleted	52.	25	96
5.	2	23	29.	13	72	53.	25	97
6.	3	30	30.	13	73	54.	26	97
7.	4	2	31.	13	74	55.	27	98
8.	4	3	32.	14	2	56.	28	100
9.	4	5	33.	14	72	57.	28	101
10.	4	36	34.	14	74	58.	29	93
11.	4	40	35.	18	82	59.	29	98
12.	5	4	36.	18	85	60.	29	102
13.	6	49	37.	19	86	61.	29	103
14.	6	50	38.	20	79	62.	29	104
15.	7	43	39.	20	80	63.	30	19
16.	7	54	40.	21	1	64.	30	96
17.	8	3	41.	21	89	65.	30	103
18.	8	57	42.	22	86	66.	30	104
19.	9	60	43.	23	1	67.	31	68
20.	9	61	44.	23	88	68.	31	89
21.	10	23	45.	23	89	69.	31	104
22.	10	27	46.	24	14	70.	32	105
23.	10	64	47.	24	91	71.	32	106
24.	10	65	48.	24	93	72.	33	106

* 8x1 EC data at US + 05 less than 270°.

ATT. 7.1
PG. 2

OTSG A

LIST OF TUBES TO BE STABILIZED AND PLUGGED

EC INDICATIONS FROM US + 04* THRU 15TH TSP

	Row	Tube		Row	Tube		Row	Tube
73.	33	107	98.	41	113	123.	50	121
74.	34	100	99.	41	114	124.	50	122
75.	34	104	100.	42	113	125.	51	113
76.	34	105	101	42	115	126.	51	119
77.	34	106	102.	42	116	127.	51	120
78.	35	87	103.	43	114	128.	51	123
79.	36	104	104.	43	115	129.	52	2
80.	36	108	105.	43	117	130.	53	125
81.	36	112	106.	44	116	131.	53	126
82.	37	111	107.	45	115	132.	54	123
83.	37	112	108.	45	116	133.	54	124
84.	37	114	109.	45	120	134.	54	125
85.	38	110	110.	46	115	135.	54	127
86.	38	111	111.	46	116	136.	55	32
87.	38	113	112.	46	118	137.	55	121
88.	38	115	113.	47	106	138.	55	126
89.	39	111	114.	47	119	139.	56	126
90.	39	112	115.	47	120	140.	56	127
91.	39	116	116.	47	122	141.	57	127
92.	40	13	117.	48	2	142.	58	126
93.	40	112	118.	48	77	143.	58	128
94.	40	114	119.	49	121	144.	59	32
95.	40	115	120.	49	122	145.	59	123
96.	40	116	121.	49	123	146.	60	17
97.	41	1	122.	49	124	147.	60	127

* 8x1 EC data at US + 05 less than 270°.

ATT. 7.1
PG. 3

OTSG A

LIST OF TUBES TO BE STABILIZED AND PLUGGED

EC INDICATIONS FROM US + 04* THRU 15TH TSP

	Row	Tube		Row	Tube		Row	Tube
148.	62	126	173.	71	127	198.	83	129
149.	62	127	174.	73	124	199.	84	125
150.	62	128	175.	73	125	200.	84	128
151.	64	125	176.	73	127	201.	84	129
152.	65	128	177.	74	118	202.	85	126
153.	65	129	178.	74	122	203.	85	128
154.	66	10	179.	75	120	204.	85	130
155.	66	124	180.	76	117	205.	86	124
156.	66	128	181.	76	120	206.	86	129
157.	66	130	182.	78	21	207.	87	125
158.	67	124	183.	78	120	208.	87	126
159.	67	125	184.	79	3	209.	87	130
160.	67	127	185.	79	125	210.	88	126
161.	67	128	186.	79	127	211.	89	126
162.	68	126	187.	79	128	212.	90	124
163.	68	130	188.	79	129	213.	90	125
164.	68	131	189.	80	125	214.	91	70
165.	69	125	190.	80	129	215.	91	121
166.	69	126	191.	81	125	216.	91	123
167.	69	127	192.	81	126	217.	91	124
168.	69	128	193.	81	128	218.	91	125
169.	69	129	194.	82	114	219.	92	93
170.	70	125	195.	82	123	220.	92	94
171.	70	127	196.	82	129	221.	92	126
172.	70	130	197.	82	130	222.	92	127

* 8x1 EC data at US + 05 less than 270°.

ATT. 7.1
PG. 4

OTSG A

LIST OF TUBES TO BE STABILIZED AND PLUGGED

EC INDICATIONS FROM US + 04* THRU 15TH TSP

	Row	Tube		Row	Tube		Row	Tube
223.	92	128	249.	109	110	275.	124	95
224.	92	129	250.	109	116	276.	125	91
225.	95	18	251.	110	1	277.	125	94
226.	95	125	252.	112	99	278.	126	81
227.	96	80	253.	112	107	279.	126	88
228.	96	124	254.	113	3	280.	127	86
229.	96	126	255.	113	106	281.	128	69
230.	97	78	256.	113	110	~~282.~~	~~128~~	~~85~~ deleted
231.	97	123	257.	114	106	283.	128	85
232.	97	125	258.	114	109	284.	128	89
233.	98	60	259.	116	24	~~285.~~	~~128~~	~~91~~ deleted
234.	98	123	260.	116	49	286.	129	2
235.	98	127	261.	116	107	287.	129	84
236.	99	123	262.	116	110	288.	129	85
237.	100	123	263.	117	99	289.	130	85
238.	100	124	264.	119	100	290.	130	86
239.	100	125	265.	119	105	291.	130	90
240.	101	121	266.	120	99	292.	131	83
241.	101	123	267.	121	95	293.	131	87
242.	101	124	268.	121	97	294.	131	88
243.	102	91	269.	122	98	295.	132	78
244.	102	122	270.	122	99	296.	132	80
245.	103	122	271.	123	94	297.	132	83
246.	105	122	272.	123	98	298.	132	84
247.	106	117	273.	124	90	299.	133	82
248.	108	113	274.	124	92	300.	133	86

* Rel EC data at US + 05 less than 270°.

ATT. 7.1
PG. 5

OTSG A

LIST OF TUBES TO BE STABILIZED AND PLUGGED

EC INDICATIONS FROM US + 04* THRU 15TH TSP

	Row	Tube		Row	Tube		Row	Tube
301.	134	69	326.	138	71	351.	144	55
302.	134	79	327.	138	72	352.	144	57
303.	134	80	328.	138	73	353.	145	44
304.	134	84	329.	139	3	354.	145	45
305.	135	73	330.	139	72	355.	146	5
306.	135	75	331.	139	74	356.	146	24
307.	135	76	332.	140	2	357.	146	46
308.	135	77	333.	140	63	358.	147	21
309.	135	79	334.	141	52	359.	147	22
310.	135	80	335.	141	61	360.	148	5
311.	135	82	336.	141	63	361.	148	28
312.	136	68	337.	141	67	362.	148	38
313.	136	70	338.	141	68	363.	148	40
314.	136	72	339.	142	3	364.	149	4
315.	136	74	340.	142	56	365.	150	7
316.	136	75	341.	142	59	366.	150	12
317.	136	78	342.	142	60	367.	150	14
318.	136	79	343.	142	62	368.	150	26
319.	137	74	344.	142	64	369.	150	27
320.	137	75	345.	142	65	370.	151	6
321.	137	77	346.	143	45	371.	151	7
322.	138	5	347.	143	60	372.	151	13
323.	138	57	348.	143	62	373.	37	113
324.	138	67	349.	144	9	374.	49	2
325.	138	69	350.	144	46	375.	143	59

* 8x1 EC data at US + 05 less than 270°.

ATT. 7.1
PG. 6
REV. 1

OTSG A

LIST OF TUBES TO BE STABILIZED AND PLUGGED

EC INDICATIONS FROM US + 04* THRU 15TH TSP

	Row	Tube	
376.	42	42	(See Note 1)
377.	73	40	(See Note 1)
378.	99	125	(See Note 2)
379.	143	58	(See Note 2)
380.	35	105	(See Note 2)
381.	26	98	(See Note 3)
382.	90	127	(See Note 4)
383	~~116~~	~~98~~	~~(See Note 5)~~ deleted
384.	79	36	(See Note 5)
385.	23	93	(See Note 7) 3/15/83
386.	~~60~~	~~37~~	~~(See Note 6)~~
387	109	100	(")
388.	~~127~~	~~98~~	~~(")~~
389.	~~149~~	~~7~~	~~(")~~
390.	30	95	(SEE NOTE 8) 3/12/83
391.	~~4~~	~~35~~	~~(SEE REF. 2.15) 3/12/83~~

DELETED BY REV. 1

RECEIVED
MAR 16 1983
G. KULL

WA-ADL # 23-6
Page / Sheet 17 OF 25
WA # A25K-51512

* 8x1 EC data at US + 05 less than 270°.

ATT. 7.1
PG. 7

OTSG A

LIST OF TUBES TO BE STABILIZED AND PLUGGED

EC INDICATIONS FROM US + 04* THRU 15TH TSP

NOTES

Note 1: 0.540 and 8x1 EC data is not in agreement for stabilization criteria.

Note 2: 8x1 EC data has an additional indication that requires these tubes to be stabilized.

Note 3: Defect on 0.540 unable to be confirmed on 8x1.

Note 4: Multiple defects in 16th span of < 40% TW., 1 Call & multiple 1 Vert

Note 5: < 20% TW. OD. in 16th span, 1 Call & 1 Vert on 8x1 data

Note 6: Plants Engineering reviewed the EC data and determined these tubes should be added to the list to satisfy the revised stabilizing criteria (per R.O. Barley 3-11-83 telecon)

Note 7: 95% TW. at 15TSP 6.13". Remove Tapered Plug & REPLUG with Stabilizer

NOTE 8: THIS TUBE ADDED AS A RESULT OF TELECON (BARLEY TO LEE) DISCUSSING SP-1101-12-030, REV. 8 (REF. 2.14) 3/12/83

RECEIVED
MAR 14 1983
G. KULL
PLANNER COPY

Deletions = 5 3/12/83 3/12/83

Grand Total = 390 - 5 = 385 3/12/83
391 = 386

* 8x1 EC data at US + 05 is less than 270°.

23.6
15 OF 25
H25V-51513

ATT. 7.1
PG. 8

PART II. OTSG B

LIST OF TUBES TO BE STABILIZED AND PLUGGED

(TO BE DETERMINED LATER)

ATT. 7.1
PG. 9

PART III

LIST OF TUBES TO BE STABILIZED AND PLUGGED

REMOVE EXISTING WELDED PLUG AND REPLUG WITH NEW CAP

		Row	Tube
1.	B	77	4
2.	B	77	5
3.	B	77	6
4.	B	77	7
5.	B	77	8
6.	B	77	9
7.	B	77	24

PART IV

LIST OF TUBES TO BE STABILIZED AND PLUGGED

REMOVE EXISTING ROLLED W PLUG FROM UTS

AND REPLUG WITH B&W WELDED CAP AND STABILIZER IN UTS

		Row	Tube
1.	A	11	65
2.	A	140	64

PART V

LIST OF TUBES TO BE PLUGGED WITH A WELDED CAP ON TOP OF THE EXISTING EXPLOSIVE PLUG IN UTS TO BE WELDED TO THE EXISTING SEAL WELD

		Row	Tube
1.	A	74	125
2.	A	75	126
3.	A	128	79
4.	A	75	48
5.	A	73	33
6.	A	1	16
7.	A	22	93
8.	A	70	80
9.	B	81	22

ATT. 7.1
PG. 11

PART VI

LIST OF TUBES TO BE STABILIZED AND PLUGGED

TUBES LOCATED IN LANE OR LANE WEDGE AREA

OTSG	ROW-TUBE	DEFECT LOCATION
A	75 - 1	Non-Crossflow Area
A	75 - 2	" " "
A	77 - 36	" " "
A	77 - 46	" " "
A	77 - 52	" " "
A	71 - 3	" " "
A	81 - 3	" " "
A	82 - 1	" " "
A	85 - 1	" " "
A	86 - 1	" " "

ATT. 7.1
PG. 12
REV. 1

PART VII

LIST OF TUBES TO BE STABILIZED AND PLUGGED WITH LONG STABILIZERS

OTSG A

DELETED BY REV. 1

	Row	Tube	Defect Location	
~~1.~~	~~A3~~	~~32~~	~~14 thru 15-06~~	
~~2.~~	~~A27~~	~~100~~	~~14-01 thru 15-17~~	Deleted
~~3.~~	~~A136~~	~~9~~	~~14 TSP thru 15 TSP-07~~	
~~4.~~	~~A31~~	~~106~~	~~10 TSP-0~~	
~~5.~~	~~A145~~	~~17~~	~~14 TSP-8~~	
~~6.~~	~~B110~~	~~106~~	~~15-17 thru 15-24~~	TBD
~~7.~~	~~B54~~	~~221~~	~~9 TSP +10 thru 10 TSP-20~~	
2.	A 84	127	STABILIZE TO 12th TSP	
3.	A 96	79	STABILIZE TO 10th TSP	
4.	A 9	22*	STABILIZE TO 12th TSP	3/15/83

* REFERENCE 2.15 | 3/15/83

RECEIVED
MAR 16 1983
G. KULL

WA-ADL # 23-6
Page / Sheet 23 OF 25
WA # A25K-51512

INSTALLATION TOOL VERIFICATION DATA SHEET

ATTACHMENT 7.2

Page _____ Of _____

NOTE: Qualification of tooling shall be performed as specified in Step 4.11 of Installation Procedure A25K-51512-IP6

NOTE: If end-of-shift qualification is "Unsat", OTSG Coordinator shall notify Q.C. and Plant Engineering.

WA-ADL # 23-6
Page / Sheet 24 of 25
WA # A25K-51512

TOOL NUMBER	DATE	TIME	SAT.	UNSAT.	Q.C. SIGNOFF	COMMENTS

STABILIZER ASSEMBLY/INSERTION PROCEDURE AND CHECKLIST

OTSG_____ TUBE_____ DATE_____

Inst. Tooling Serial Nos._____ INITIALS

1. Verify that tube end weld preparation has been completed. _____

2. Jumper to obtain correct stabilizer packet from tentman. Proceed to tube to be stabilized. _____

3. Partially withdraw tube marker from tube end until tube I.D. marker is visible. Verify marker I.D. number is the same as the I.D. number on the stabilizer packet. _____
   NOTE: Do not remove tube marker completely from hole.

4. Remove stabilizer nose section from packet and attach vise grips to nose segment. _____

5. Partially insert nose segment with vise grips attached into tube and withdraw tube I.D. marker. _____

6. Insert nose segment into tube. _____
   NOTE: If identity of tube is lost, inform Task Supervisor for directions.

7. Assemble stabilizer sections as follows:

   7.1 Thread next segment into installed segment until hand tight. _____

   7.2 Attach vise grip pliers to the upper segment and tighten firmly as shown in Training. _____

   7.3 Using special crimping tool, lock threaded joint by crimping. _____

   7.4 Repeat above steps until all segments are assembled including weld cap. _____
   NOTE: Special vise grip holder is required for installation of larger diameter stabilizer caps.

8. Verify weld cap I.D. number is the same as tube I.D. number. Report any descrepancy to the Task Supervisor. _____

9. Stabilizer assembled and installed per this procedure. _____

PLANNER COPY

B&W OTSG COORDINATOR

ATTACHMENT 7.3

Inter-Office Memorandum

Date March 15, 1983

GPU Nuclear

Subject OTSG TUBE SEGMENT H_2O_2 FLUSH

3310-83-081

To B. D. ELAM, MANAGER - MECHANICAL SYSTEMS, TECH. FUNCTIONS, PARSIPPANY

Location Three Mile Island

1.) Background. Materials Engineering has requested Plant Engineering to develop a method of inserting tube segments previously pulled from the OTSG's back into the reactor coolant flow path during the H_2O_2 Flush. These tubing segments would be periodically withdrawn to determine if the desired cleaning effect is being achieved. Additional tube segments could also be reinserted into the flow path if desired.

2.) Method. Plant Engineering proposes that the tubing originally installed to measure the d/p across the A and B Reactor Coolant Pumps be utilized for this testing. The tubing is still installed and, as shown in Attachment 1, terminates on the D-ring wall right next to the door used to gain access to the D-ring. Differential pressure transmitters RC-98A/B -dPXT were initially installed in this tubing but has since been removed from service. A temporary tubing and valve manifold would be connected from the discharge of one of these pumps to the suction of the other. This arrangement would ensure that the reactor coolant flow path would be unidirectional regardless of which pump on that side of the reactor is running. N. Shah has performed preliminary calculations which indicate that the flow rate expected through this tubing would be about 2 gpm.

The connection to the RCS would not require any cutting or welding. Tubing connections would only require reconnection after the completion of the test.

3.) Tubing Manifold. The tubing manifold itself is shown on Attachment 2. It would consist basically of isolation valves, tubing reducers, vent and drain connections, a pressure gauge (0 to 500 psig) and a flowmeter (if desired) mounted on a wooden frame to facilitate operation.

Five segments of OTSG tubing would be mounted in series as shown. The segments would be mounted by using a 5/8"

- continued -

Swagelok fitting. A test segment of simulated OTSG tubing was pressure tested to 1000 psig using this type of Swagelok fitting. No leakage was noted during this test. Since the presently installed tubing is 1/2" O.D., reducers must be used to accomodate the diameter difference. The tubing segments would be connected by short lengths of 5/8" O.D. stainless steel tubing.

4.) System Operation. When either the A or the B RCP is running, a flow of about 2 gpm is expected. When it is desired to removed a tube segment, the manifold would be isolated, drained and vented. The desired tube segments could be removed and new segment installed (if desired) or that section of the manifold could be eliminated completely. The manifold would be returned to the RCS flow path by shutting the vent and drain and opening the isolation valves. The tubing segments will be forwarded to Batelle (Ohio) for analysis. No onsite analysis is planned.

5.) Administrative Requirements

a.) System Installation. The system would be installed in accordance with the requirements of AP 1013, Bypass of Safety Functions and Jumper Control. It will be treated as a Temporary Mechanical Modification and handled accordingly.

b.) System Operation. The system will be operated in accordance with an STP generated by Plant Engineering.

c.) Safety Evaluation. The safety evaluation will be generated by the Mechanical Systems Department of Tech. Functions. This safety evaluation shall determine that such a test loop can be installed and operated safely at test conditions with respect to pressure integrity of the Reactor Coolant System including any applicable code requirements.

d.) System Installation. The system could be installed by either Plant Maintenance or TMI-1 M&C Department in accordance with their respective administrative requirements.

6.) Summary. The method outlined above seems to be the most practical

- continued -

method of reinserting the tube segments back into the RCS flow path. Target date for operation of this system is April 25, 1983. Please contact F. Paulewicz at 948-8147 if you have any questions or comments.

SUBMITTED BY: F. W. Paulewicz
F. W. PAULEWICZ
Engineer III, TMI-1

REVIEWED BY: R O Barley
R. O. BARLEY
Lead Mechanical Engineer, TMI-1

APPROVED BY: J J Colitz
J. J. COLITZ
Plant Engineering Director, TMI-1

FWP/ROB/JJC:gh
Attachments
cc: D. W. Ethridge, Radiological Engineer, TMI-1
E. C. Fuhrer, Plant Chemistry Manager, TMI-1
F. S. Giacobbe, Manager - Materials Engr./Fail. Anal., Tech. Functions, Parsippany
J. A. Janiszewski, Engineer, Tech. Functions, Parsippany
D. L. Langan, NDE/Piping Monitoring Lead
M. J. Ross, Manager, Plant Operations, TMI-1
N. Shah, Engineer, Reactor Plant, Tech. Functions, Parsippany
H. B. Shipman, Operations Engineer Senior II, TMI-1
D. G. Slear, Manager, TMI Engineering Projects, Tech. Functions, Parsippany
A. P. Spivak, Site Liaison Engineering, TMI-1
R. J. Toole, Operations & Maintenance Director, TMI-1
CARIRS - TMI-1

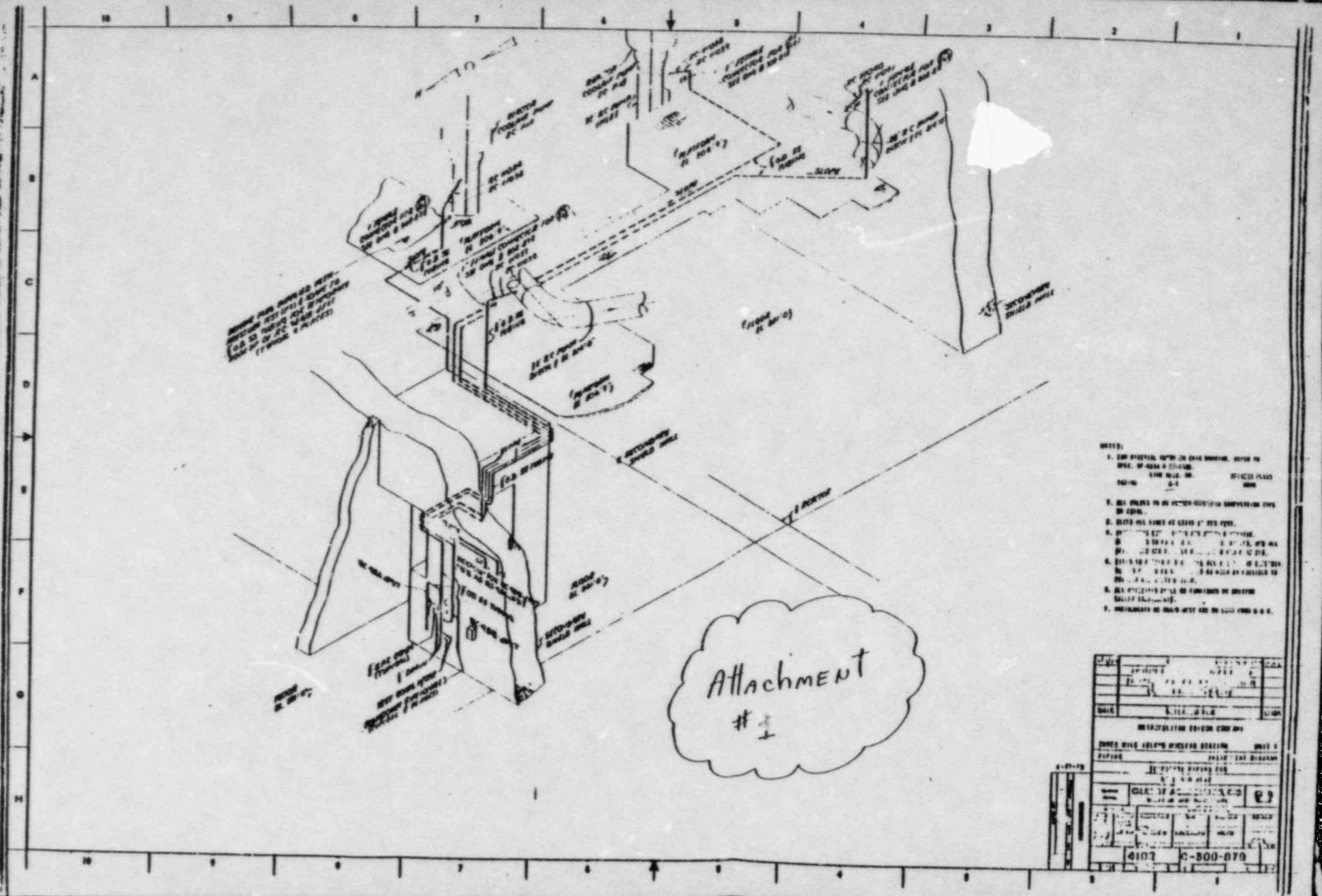
Attachment
#1
4102
C-300-079

Attachment #2

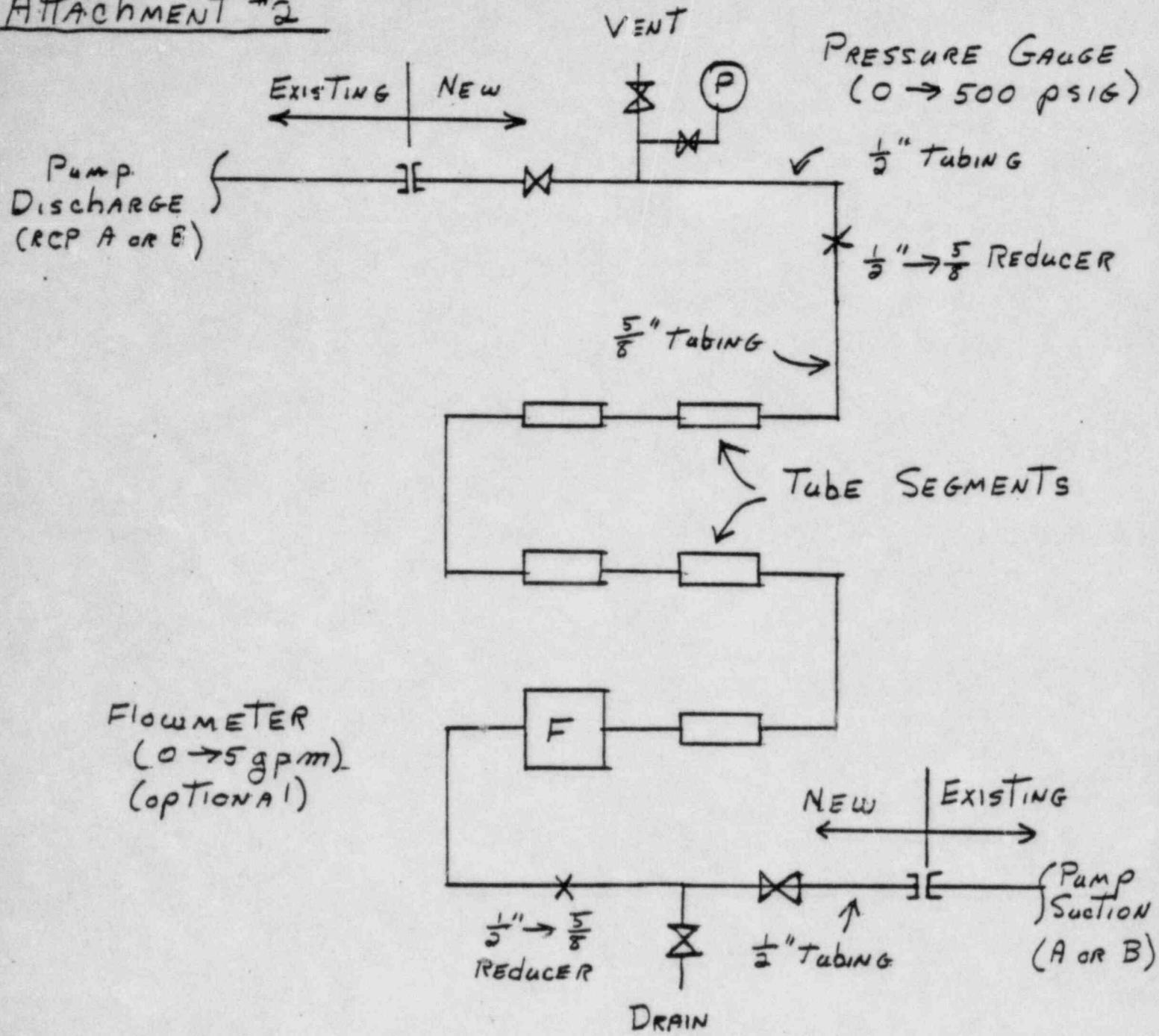

MATERIAL: S.S. Tubing and Fittings

J. Paulewicz
3-16-83

candle debris and screen

GENERAL PUBLIC UTILITIES
OTSG REPAIRS

DATE 3/15/83

ITEM	DESCRIPTION	RESPONSIBILITY	DATE REQUIRED
1.	Round Robin Samples-NWT Lab	J. Colitz	
	. Spent Fuel		
	. BWST		
	. Decay Heat - Monthly Samples		End of Month
	. Ship Next Monthly Samples		3/31
2.	Restoration Secondary Side		
	A. Temp. Chem. System		
3.	Ops OTSG Status		
	. A and B OTSG Full Wet Layup		2/7
	. Receive Backing Plates for "A" Upper Manway		4/1
4.	Post Expansion		
	. Felt Plug Blowing Device-Store at Reactor Bldg		
	. Final Freepath - Blow Plugs from Top		TBD
	. B&W Equipment		3/27
	. B&W Proposal		
5.	Immunol Flush System		
	. Receive Vyton Tubing		TBD
	. Revised Spec for Flushing	T. Functions	TBD
6.	Tube Plug Stabilization		
	. Spec for Plugging Final Rev 9 Issue	C. K. Lee	3/15
	. Resolve Plug Pulling Process	Westinghouse	TBD
	. Procedure Received--for Review		
	Remove Stabilizers and Restabilize		TBD
	Explosive Plug Removal Procedure		TBD
	Tapered Plug Removal		TBD
	W Plug Removal-Needs Reviewed Westinghouse in rodder [illegible]		TBD
	. Procedure for Lower Head Explosive Plugging not started	G. Kull	3/18
	. Procedure for Jump Pack Modification	G. Kull	3/14
	. Receive Eddy Current Templates		3/14
	. Explosive Plugs On-site monday 250 plugs		3/21
	. Caps and Noses for Jump Packs	B&W	

DRF E Generator

DS = for Washington

E Marks installed verify key QA 5 tubes need to be endmill

Fact — stabilizer [illegible] weld

105

OTSG REPAIRS DATE 3/15/83

ITEM	DESCRIPTION	RESPONSIBILITY	DATE REQUIRED

7. Miscellaneous Items to Resolve
   . Hydrogen Peroxide Tube Soak

8. Waiting Documentation

MNCR		Responsibility
215-82	Plug Exploded at Wrong Area of Tube	B&W
345-82	2 Tubes Plugged Incorrectly	
354-82	Documentation for Immunol-1st Batch	Eng
426-82	Wire Brush B6-1	
009-83	Immunol at Cold Legs	
041-83	Tube Ends	Eng.

9. Tube Endmilling
   5 A on OTSG today → scotch bridge

10. Rad Con Exposure Data (Based on SRDs) as of 3/14
    . Total OTSG Exposure since 1st Blast - 678.8 Man Rem
    . Total OTSG Exposure since Nov 1981 - 855.0 Man Rem

11. Freepath Work STP closed out in control room

12. Bubble and Drip Test

Draft Detailed Spec	T. Reichter	3/18
Final		3/25
Cleaning of the Cold Legs		

13. Anticipated Jumps

Date	Description	Responsibility
3/15	A - Upper -	Levin/Catalytic
	A - Lower -	
3/15	B - Upper -	
	B - Lower -	

Hydrogen peroxide meeting at 1:00