GA Technologies Inc.

GA 1485 (REV. 10/82) ROLL 2011

ISSUE SUMMARY

TITLE	APPROVAL LEVEL
EVALUATION OF FORT ST. VRAIN METALLIC COMPONENTS EXPOSED TO PRIMARY COOLANT CHLORIDE CONTAMINATION	☐ R & D ☐ OV & S ☒ DESIGN — 5

DISCIPLINE	SYSTEM	DOC. TYPE	PROJECT	DOCUMENT NO.	ISSUE NO./LTR.
M	01	RGE	1900	907875	N/C

QUALITY ASSURANCE LEVEL	SAFETY CLASSIFICATION	SEISMIC CATEGORY	ELECTRICAL CLASSIFICATION
QAL-I	FSV I	FSV I	N/A

ISSUE	DATE	PREPARED BY	APPROVAL: ENGINEERING	APPROVAL: QA	FUNDING PROJECT	APPLICABLE PROJECT	ISSUE DESCRIPTION/ CWBS NO.
N/C	MAR 21 1985	Project Staff/ R. Rao B. Thurgood	L. Swanson Interface Assurance G. Bramblett D. Roberts	R. Maxwell 3/21/85		R. Rosenberg	Preliminary Assessment/2970.221

2 RELEASED

CONTINUE ON GA FORM 1485-1

NEXT INDENTURED DOCUMENTS

N5053

8504080588 850326
PDR ADOCK 05000267
P PDR

REV																										
SH																										
REV																										
SH	29	30	31	32	33	34	35	36	37	38	39	40	41	42	43	44	45	46	47	48	49	50	51	52	53	54	55	56
REV																										
SH	1	2	3	4	5	6	7	8	9	10	11	12	13	14	15	16	17	18	19	20	21	22	23	24	25	26	27	28

TITLE: EVALUATION OF FORT ST. VRAIN METALLIC COMPONENTS EXPOSED TO PRIMARY COOLANT CHLORIDE CONTAMINATION

DOCUMENT NO. 907875	ISSUE NO./LTR. N/C

CONTENTS

	Page
1. SUMMARY	4
2. PURPOSE AND SCOPE	4
3. INTRODUCTION AND BACKGROUND	6
4. EVALUATION OF CHLORIDE-EXPOSED COMPONENTS	8
4.1 Cavity Liner	9
4.1.1 Metallurgical Evaluation	9
4.1.2 Engineering Evaluation	10
4.2 Plenum Elements	11
4.2.1 Metallurgical Evaluation	11
4.2.2 Engineering Evaluation	12
4.3 Core Restraint Devices	15
4.3.1 Metallurgical Evaluation	15
4.3.2 Engineering Evaluation	16
4.4 Helium Purification System and Hydrogen Getter	21
4.4.1 Metallurgical Evaluation	21
4.4.2 Engineering Evaluation	21
4.5 Instrument and Sensor Lines	25
4.5.1 Metallurgical Evaluation	25
4.5.2 Engineering Evaluation	26
4.6 Control Rod and Control Rod Drive Mechanisms	29
4.6.1 Metallurgical Evaluation	29
4.6.2 Engineering Evaluation	29
4.7 Helium Circulator	35
4.7.1 Metallurgical Evaluation	35
4.7.2 Engineering Evaluation	37
4.8 Thermal Barrier Attachments	41
4.8.1 Metallurgical Evaluation	41
4.8.2 Engineering Evaluation	43
5. CONCLUSIONS	52
6. ACKNOWLEDGMENT	52
APPENDIX A	53

LIST OF FIGURES

4.2-1. Top plenum and orifice valve arrangement 13

4.3-1. Core restraint device locations 17

4.3-2. Core restraint device installation 18

4.3-3. Cross section of core restraint device 19

4.6-1. Control rod assembly 31

4.6-2. Control and orificing assembly installation 32

4.7-1. Helium compressor 36

4.7-2. FSV circulator machine assembly 39

4.8-1. Typical thermal barrier attachment stud fixture 42

A-1. Approximate relationships between hardness, strength, and stress corrosion susceptibility of carbon and low alloy steels 57

LIST OF TABLES

1-1. Components evaluated 5

4-1. Summary of possible concerns and engineering failure evaluation 46

1. SUMMARY

An evaluation was performed on the possible effects of chloride contamination-induced corrosion failure on components in the Fort St. Vrain (FSV) HTGR plant. The components exposed to reactor primary coolant were reviewed. The components shown in Table 1-1 were selected because they are exposed to primary coolant, contain materials susceptible to chloride contamination induced corrosion failure, and the failure could conceivably have an adverse effect on safety.

The results of the study showed that the credible chloride-induced failure modes that might conceivably occur would not adversely affect public health and safety. The failures postulated were either similar to or less severe than those already considered in the FSAR.

A metallurgical assessment of chloride-induced corrosion mechanisms and their applicability to primary loop components studied is included in this report.

2. PURPOSE AND SCOPE

The purpose of this evaluation is to identify any implications, relative to public health and safety, of chloride contamination of components exposed to the primary coolant of the FSV plant. The scope of work reported herein was limited to the specific components listed in Table 1-1. These components were selected using the following criteria:

1. The components must be exposed to reactor primary coolant, a major transport medium for chloride and water corrosives.

TABLE 1-1
COMPONENTS EVALUATED

	Components	Reason for Selection
1.	PCRV Cavity Liner	General corrosion
2.	Plenum Elements	Type 347 stainless steels
3.	Core Restraint Devices	High-strength steel fasteners, type 304 stainless steel retainers
4.1.	Helium Purification System Filters	300 series stainless steels
4.2.	Hydrogen Getter	300 series stainless steels
5.	Instrument and Sensor Lines	300 series stainless steels
6.	Control Rods and CRD Mechanism Assembly	High-strength steel fasteners, 300 series stainless steels
7.	Helium Circulator	High-strength steel fasteners and components
8.	Thermal Barrier Attachments	Possible high hardness in heat affected zones

2. Components must contain some materials susceptible to chloride-induced corrosion damage such as:

   a) Carbon steel and low alloy steel (these materials may be subject to general corrosion and pitting);

   b) Austenitic stainless steels (which may be subject to stress corrosion cracking);

   c) High-strength steels (may be subject to stress corrosion/hydrogen embrittlement).

3. The components with susceptible materials are stressed and/or subject to an occasional moisture environment.

3. INTRODUCTION AND BACKGROUND

Subsequent to the June 1984 shutdown of the FSV HTGR plant, stress corrosion cracking (SCC) failures were observed in certain control rod cables. The cables were made of type 347 stainless steel (SS). Detailed metallurgical analysis showed the presence of significant levels of chloride on the cable surfaces. The level of chloride on the cables caused Public Service Company (PSC) of Colorado to request a review of the implications of the observed chloride levels on other components exposed to primary coolant. Accordingly, GA Technologies Inc. initiated this review at PSC's request in December 1984.

In January 1985, while reassembling circulator C2102, one of the high-strength (AMS 6487 type H11) primary closure bolts failed during retorquing due to the presence of SCC. Examination of this bolt and other bolts exposed to the primary coolant and randomly selected from the same circulator showed evidence of incipient SCC and levels of surface chloride contamination very similar to that observed on the control rod cables. This observation increased the importance of the chloride implication review under way at GA.

The presence of chlorides in the primary coolant of the reactor has a number of potentially adverse complications including enhanced elevated temperature corrosion during normal reactor operation and enhanced general corrosion, pitting, corrosion, stress corrosion cracking, and hydrogen embrittlement when water is also present in the reactor. These potential mechanisms are described in more detail in Appendix A. As described in the Appendix, these various corrosion phenomena have the potential to affect different materials in different ways. Thus, it is necessary to consider implications on a component-by-component basis. Based on such a preliminary review, it was concluded that the phenomenon most likely to be important in the reactor are:

1. Stress corrosion cracking of austenitic stainless steel,
2. Stress corrosion/hydrogen embrittlement of high-strength steel,[1] and
3. General and pitting corrosion of carbon steel and low alloy steel.

[1] High-strength steels can experience delayed failures in some environments including those containing chlorides. Opinion is divided regarding the exact mechanism; some attributing failure to stress corrosion cracking, while others believe failure is due to hydrogen embrittlement. The difference between these phenomena, while of scientific importance, is not significant from an engineering viewpoint. Both processes produce failure. For the purpose of this report, the terms are used interchangeably for high-strength steel behavior.

A review of the materials employed in the components exposed to primary coolant revealed that most were constructed from materials that are resistant to chloride-induced SCC. The steam generators, for example, are fabricated from mill-annealed and solution-annealed Alloy 800 and 2-1/4 Cr-1 Mo steel -- materials highly resistant to chloride SCC/hydrogen embrittlement. Likewise, the control rod cladding and spine are solution-annealed Alloy 800. The thermal barrier cover plates are Hastelloy X, an alloy with a high resistance to chloride SCC, and carbon steel, a material which does not suffer chloride SCC/hydrogen embrittlement at moderate strength levels used in these components. Similarly, items such as expansion bellows used in the steam generator assembly and the instrumentation systems are Inconel 600, a material which also is resistant to chloride-induced SCC. Many other reactor components are fabricated from carbon steel and low alloy steel. These materials are not susceptible to chloride SCC/hydrogen embrittlement unless they contain regions of high hardness due, for example, to certain types of welding.

Nevertheless, a preliminary review of FSV primary loop components showed that some components contained materials susceptible to chloride-induced corrosion as indicated in Table 1-1.

Both metallurgical investigations and an engineering failure consequence evaluation for the selected components are presented in Section 4. Appendix A provides a background discussion of the possible compatibility issues raised by the presence of chlorides in the primary coolant.

4. EVALUATION OF CHLORIDE-EXPOSED COMPONENTS

The susceptibility of materials to chloride corrosion and the components selected for review/evaluation are discussed in the following subsections.

Table 4-1 summarizes the overall results of the metallurgical and engineering evaluation and is included at the end of this section.

4.1 Cavity Liner

4.1.1 Metallurgical Evaluation

As noted previously, the low alloy steels used in the cavity liner are not generally susceptible to stress corrosion cracking unless they contain regions of very high hardness. Evaluation of the liner fabrication records indicates that such high hardness regions do not exist except beneath the Nelson studs holding the thermal barrier (this is discussed further in Section 4.8). From the standpoint of liner integrity, SCC was not considered to be a relevant failure mode. General and pitting corrosion were viewed as possible concerns and were studied further.

The structures most likely to be adversely affected by enhanced general or pitting corrosion rates are the carbon steel liner and the core side attachments. This is based on the assumption that, subsequent to water ingress, much of the water will condense and collect on the liner, particularly in the bottom head of the PCRV. The pH value of the condensed fluid cannot easily be defined. However, if the solution is initially acidic, it is very likely that reaction with the surrounding structures will rapidly dissolve sufficient corrosion products to move the solution back toward neutrality. The condensed solution probably represents a rather unique environment which has little industrial precedence (most industrial environments contain significant levels of oxygen, whereas the dominant gas in FSV is helium with very low levels of gaseous impurities). It is therefore difficult to find a practical experience basis to quantitatively define the likely corrosion rates. However, one assumption that could be made is that the condensed fluid will act like warm

seawater (the PCRV liner is normally at 90°F - 150°F). Corrosion rates of carbon steel in warm seawater environments typically lie in the range of 5 to 10 mils (0.005 to 0.010 in.) per year. In some cases shallow pitting is observed, and worst case pitting rates are in the range 15 to 20 mils per year. These rates, which are applicable to warm, flowing, oxygenated seawater, are probably very conservative relative to the low oxygen, static conditions existing within the FSV reactor. However, for the purposes of a conservative analysis, a corrosion rate of 30 mils a year was assumed and is used in the engineering review.

4.1.2 Engineering Evaluation

4.1.2.1 Assessment Summary

The PCRV liner is constructed from carbon steel ASTM A537 Grade B and as such is subject only to general corrosion. It is estimated that the maximum loss of effective liner material is 0.15 in. over a period of 30 years. Since the liner is fabricated from a 3/4-in. thick plate, it is concluded that breaching of the liner by general corrosion is very unlikely. However, requirements have been established and employed to monitor the liner thickness in the bottom head, sidewall, and top head regions by ultrasonic testing (UT) per Technical Specification SR 5.2.14. The UT readings as of 1981 have shown no decrease in liner thickness. In the unlikely event of a liner breach occurring, radioactive release from the primary coolant will be detected by radiation monitors as described in the FSAR and corrective actions will be taken. Hence, the public health and safety would not be adversely impacted.

4.1.2.2 Failure Consequence

Moisture in the primary coolant can be assumed to condense on and collect on the liner, especially at the bottom head of the PCRV. If, by a series of

such condensation and subsequent drying, the condensed fluids become relatively high in chloride concentrations, corrosion and pitting of the steel liner ASTM-A537 can occur. Assuming that the wet condition exists for 2 months per year, it would take approximately 150 years to fully corrode the 0.75-in. thick liner with a corrosion rate of 30 mils per year. Since the plant has a 30-year life, the most corrosion that could occur during that time using these conservative assumptions is 0.15 in., leaving 0.60 in. of effective material (local areas of the liner were ground to a thickness of 0.69 in., leaving a minimum effective thickness of 0.54 in. if the most severe corrosion rate is assumed in the local area). Therefore, breaching the liner by general chloride corrosion is extremely unlikely. The PCRV liner seismic loads are based on the maximum ground acceleration of 0.15 g for OBE and 0.30 g for SSE. Even at the estimated maximum corrosion rate, the effects of seismic events on the liner of reduced thickness would not be of any significant concern when considering safe operation of the reactor or public safety. Should the liner be breached, release of the gas containing fission products would be detected by the radiation monitors.

4.1.2.3 Safety Consequence

It is very unlikely that the liner could corrode to the extent of causing failure within the reactor lifetime. Such corrosion, should it occur, would be gradual and released radioactivity through the liner breach is detectable by radiation monitors as described in Section 11.2.3 of the FSAR.

4.2 Plenum Elements

4.2.1 Metallurgical Evaluation

Certain of the core inlet plenum elements are type 347 SS castings. During normal operating modes, the temperature of the plenum elements is too high

(650°F) for moisture condensation to occur unless very high partial pressures of water exist in the reactor. Even during reactor shutdown, the temperature of the elements is high enough to avoid moisture condensation. However, it is conceivable that condensation could occur on these elements during very extended reactor shutdowns if high primary coolant moisture levels exist. Thus, some stress corrosion possibility exists in the plenum elements.

4.2.2 Engineering Evaluation

4.2.2.1 Assessment Summary

Failure of type 347 SS plenum elements by SCC is unlikely, but if it occurred, it would not adversely impact public health and safety. Only the control column plenum element material is type 347 SS. All other plenum elements are 2-1/4 Cr-1 Mo material which is not susceptible to this type of corrosion.

4.2.2.2 Failure Consequence

A typical fuel region plenum element/orifice valve assembly is shown in Fig. 4.2-1.

Failure of the 347 SS control column plenum elements, which might be caused by SCC, would occur only in locations where the chloride concentration is significant, water is present, and a high stress level exists.

The plenum elements are relatively free from moisture condensation because their normal operating temperatures are above the dew point of the water vapor which can be present in the primary coolant, except during prolonged shutdown. The infrequent occurrence of water condensation on the elements limits the opportunities for stress corrosion.

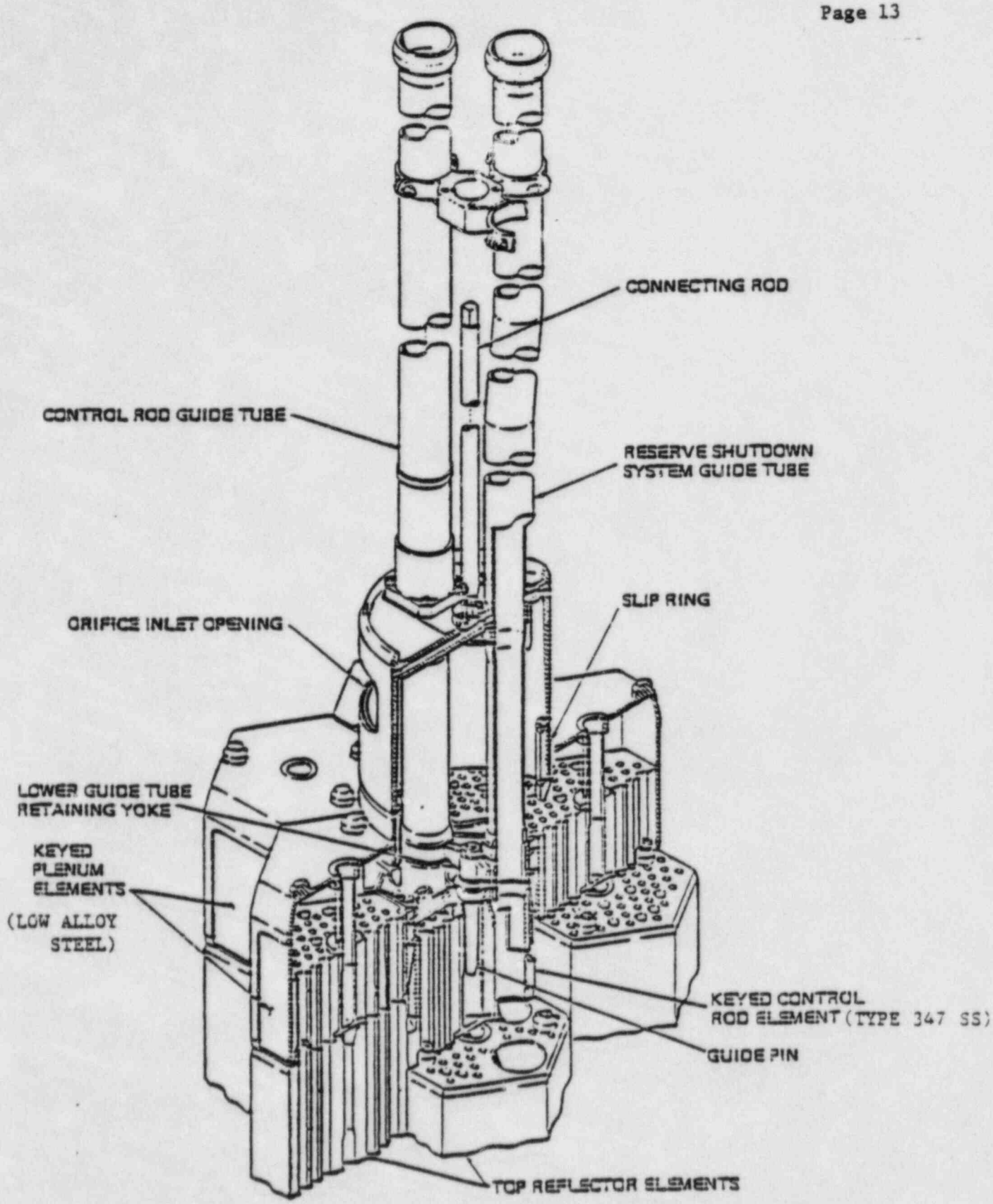

Fig. 4.2-1 Top Plenum and Orifice Valve Arrangement

The long-term stress levels in the plenum elements are generally low. The long-term primary load on the element is the differential pressure caused by the coolant flow through the plenum element and the weight of the orifice assembly.

Some of the plenum elements are subject to relatively higher loads for short durations, caused by the dynamics of column movements in the core. These loads are transmitted by the region constraint devices attached to the peripheral plenum elements around the control column. The movements are associated with pressure fluctuations, thermal expansions and contractions of the core columns, and the occurrence of seismic events. However, assessment of these loads showed that they are not large and they do not exist long enough to cause any concern.

During a seismic event, the major loads are transmitted by the core restraint devices which attach only to the nonaustenitic peripheral plenum elements. The control column plenum elements do not share the core restraint loads. SCC does not cause any degradation in the ability of the control column plenum elements to resist seismic events.

The plenum elements are also subject to secondary stresses caused by thermal gradients. These gradients are small because the elements are exposed to the uniform temperature of the core inlet coolant flow. The effects of neutron irradiation on the embrittlement of the metal elements is within acceptable limits. The boron graphite granules in the plenum elements do not generate internal structural loads on the metal element by neutron irradiation swelling because of the void spaces inherent to the granule packing.

No SCC is anticipated in the plenum element because of the absence of moisture condensation in the upper plenum of the core and the absence of long-term, high-stress levels.

Even if a plenum element failure is postulated, it would require a severe fracture and distortion to produce conditions which would plug some coolant holes and prevent proper cooling of the affected fuel elements. Although unlikely, such a failure could locally increase fuel temperature and increase fission product release into the coolant system. However, the coolant system is continuously monitored for fission product buildup; hence, such a plenum element failure would be detectable. The increased fission product inventory would be retained in the PCRV and processed by the helium purification system. A plenum element which would produce the above scenario can be removed and replaced during normal refueling operations.

4.2.2.3 Safety Consequence

Accelerated fission product buildup could occur from a fuel temperature increase if the coolant flow to the fuel elements was restricted by an unusually severe plenum element failure. However, there is no adverse impact (Ref. Technical Specification LCO 4.2.8, "Primary Coolant Activity") on public health and safety by a severely damaged plenum element because fission product buildup is continuously monitored and would not increase sufficiently rapidly that corrective operator action could not be taken (Ref. Technical Specification SL 3.1, "Reactor Core Safety Limit").

4.3 Core Restraint Devices

4.3.1 Metallurgical Evaluation

The carbon steel core restraint devices contain hardened austenitic stainless steel (A286) bolts with 304 SS retainers which hold the Inconel 718 pins. The operating environment surrounding the core restraint devices is similar to that of the plenum elements. Since it is conceivable for

condensation to occur in the regions, an assessment of potential stress corrosion of the core restraint device was performed.

4.3.2 Engineering Evaluation

4.3.2.1 Assessment Summary

Chloride corrosion induced failure of the stainless steel bolts and retainers of the core restraint devices is not expected. If a large number of restraint devices were postulated to fail, it could result in the initiation of core temperature and nuclear flux channel measurement fluctuations. Such fluctuations will be readily detectable as described in Section 3.6.6.1 of the FSAR. It is assessed that the public health and safety would not be adversely impacted by core restraint device failures.

4.3.2.2 Failure Consequence

The core restraint devices (Figs. 4.3-1 and 4.3-2), like the plenum elements, normally operate at temperatures too high for moisture condensation to occur. In addition, owing to the configuration of the stainless steel bolts and retainers in question (Fig. 4.3-3), exposure to moisture is considered an unlikely occurrence. Further, redundant bolt/retainer sets are employed and these are stressed to only approximately 60% of yield strength. Assuming that condensation could occur on these items with resultant chloride-induced stress corrosion, the torqued bolts and their retainers would have to be rendered completely ineffective for the core restraint devices to fail to function by allowing separation or unlocking of adjacent plenum elements.

Failure of one or all 84 core restraint devices will not impact the safe operation of the reactor. The reactor operated without them until 1979 with occasional temperature and nuclear flux channel measurement fluctuations.

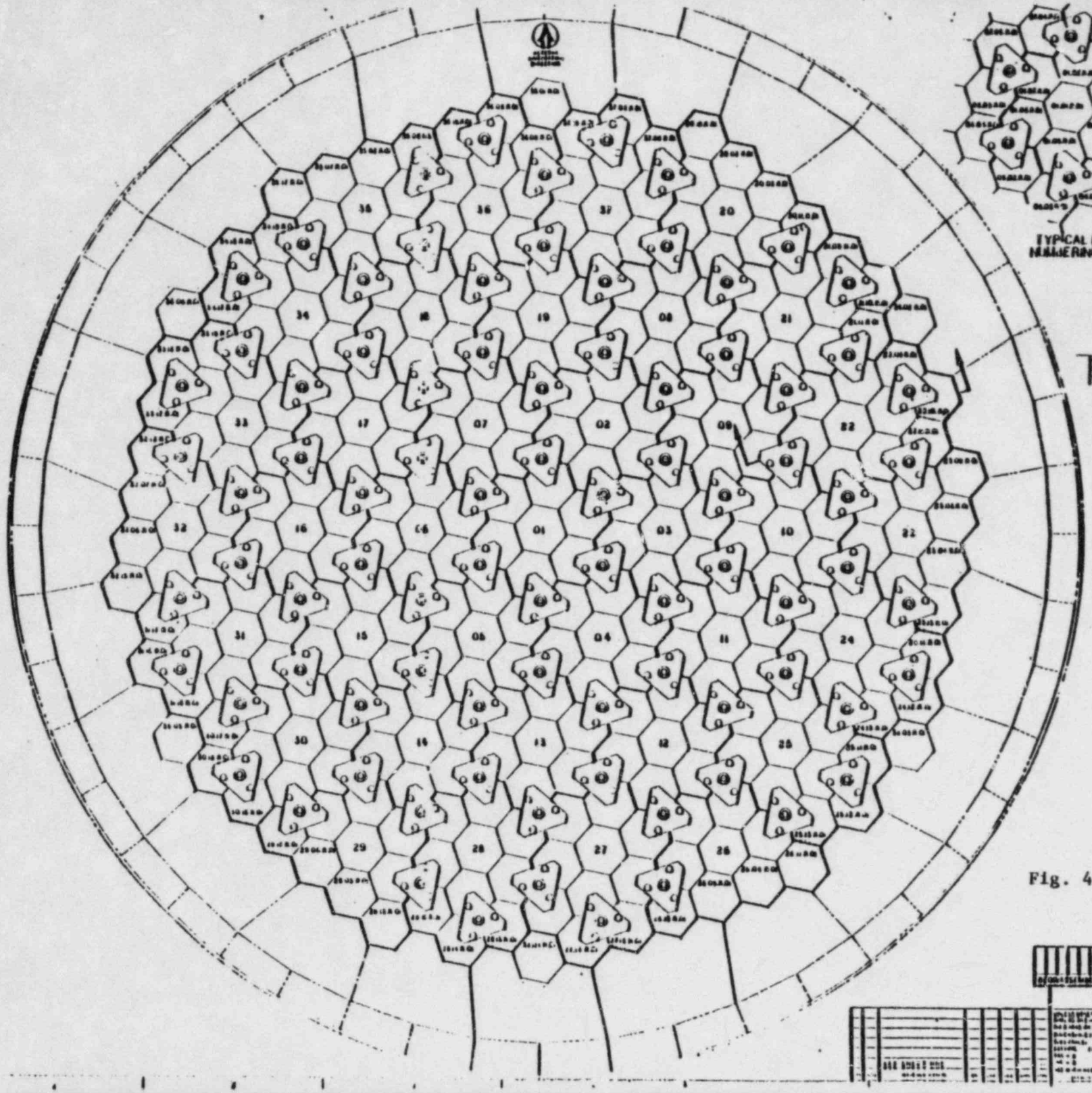

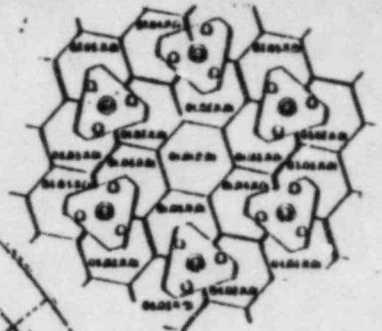

TYPICAL REGION NUMBERING KEY

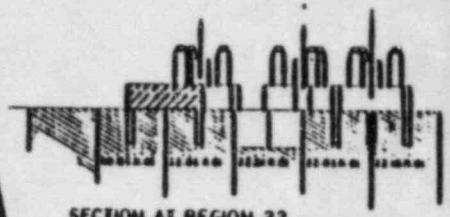

SECTION AT REGION 22

Fig. 4.3-1 Core Restraint Device Locations

907875 N/C
Page 17

		PARTS LIST	
		REACTOR CORE GENERAL ASSEMBLY	

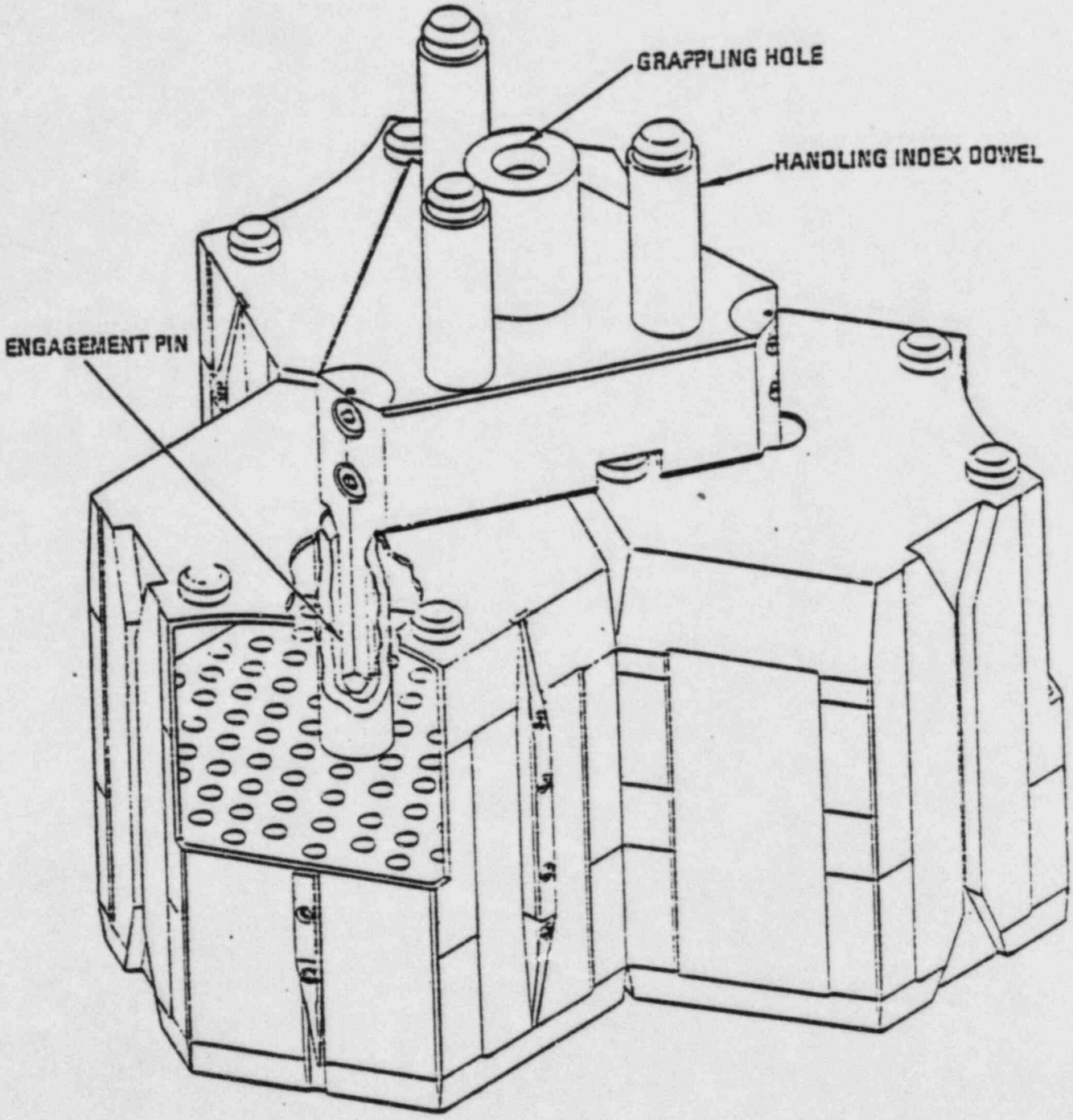

Fig. 4.3-2 Core Restraint Device Installation

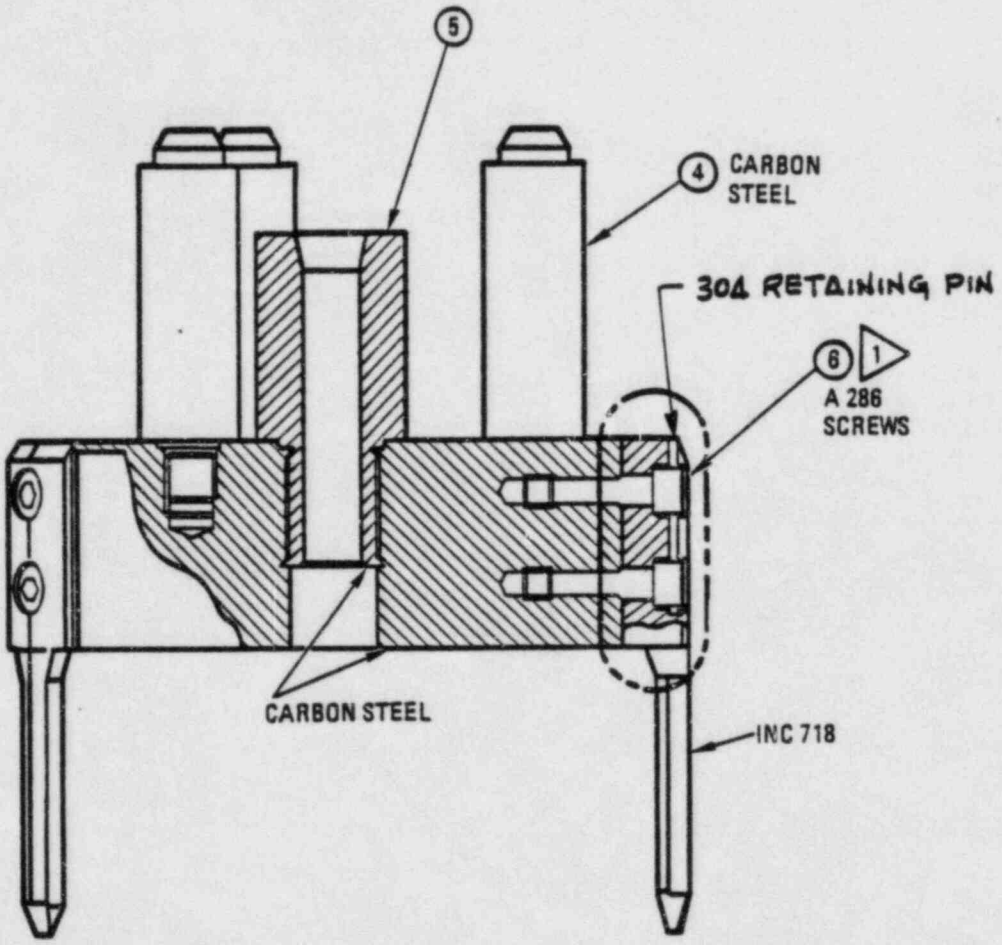

Fig. 4.3-3 Cross Section of Core Restraint Device

Failure of one or several of the devices would not likely be detectable during plant operation owing to the redundancy of the configuration, i.e., each core region contains six restraint devices. Failure of a core restraint device would be detected during refueling of a region with the failed device. A failed restraint device would be removed and replaced. The failure of many core restraint devices could result in core thermal fluctuations. These would be observed in the primary coolant circuit at individual core region outlets, at the steam generator module helium inlets, and in the main and reheat steam outlets, as described in Section 3.6.6.1 of the FSAR. Individual nuclear flux channel fluctuations would also be observed. In assessing the effects of seismic events following the failure of core restraint devices owing to stress corrosion, it was concluded that the results would not be of any more concern than those previously discussed; i.e., failure of all the restraint devices will not impact the safe operation of the reactor.

If the bolts fail to retain the Inconel 718 pins to the body of the restraint device through the effects of chloride stress corrosion, the pins would remain engaged in the plenum element handling holes upon removal of the device. The pins would then be accessible for removal by the in-core service handling equipment which are provided as accessories to the fuel handling machine.

4.3.2.3 Safety Consequence

Failure of the core restraint devices could result in temperature and nuclear flux channel fluctuations. However, as discussed in Section 3.6.6.1 of the FSAR, a safety evaluation concluded that fluctuations would result in no undue risk to the health and safety of the public.

4.4 Helium Purification System and Hydrogen Getter

4.4.1 Metallurgical Evaluation

The helium purification system contains some austenitic stainless steel components. The high-temperature filter-adsorber, for example, contains 300 series SS filter elements. The hydrogen getter is 300 series SS except for the titanium sponge. These components are susceptible to SCC by exposure to primary coolant chlorides.

4.4.2 Engineering Evaluation

4.4.2.1 Filter Elements

4.4.2.1.1 Assessment Summary

Postulated failure of these filter elements will not impact activity releases, will not introduce debris into the PCRV larger than about 100μ in diameter, will not impact the operation of any other system, and will not prevent continued operation of the helium purification system. Furthermore, such failures will not adversely impact the public health and safety.

4.4.2.1.2 Failure Consequence

Filter elements are installed in the high-temperature filter-adsorbers (HTFAs, A-2301 and A-2302), purified helium filters (F-2301 and F-2302), and hydrogen removal filter (F-2304).

These filter elements consist of a blanket of type 347 SS fibers which is wrapped around the outside of a perforated support sleeve fabricated from 1-1/2

in. Sch. 40 pipe. The support sleeve and associated fittings are fabricated from 300 series stainless steel. The fibers are compacted and sintered to form a rigid filter mat. Each filter element is nominally 2 in. dia x 20 in. to 40 in. long, and the perforations in the support sleeves are 1/4 in. dia. Each of the listed filtering vessels contains seven to ten such filter elements. All other parts of these vessels are fabricated from carbon steel and low alloy steel, and are not subject to stress corrosion cracking.

Each of these filtering vessels is characterized by a top helium outlet chamber, a dead-leg catch basin below the filter elements, a helium inlet line near the top of the catch basin, and a very low flow velocity of about 1 ft/sec. In the event of a filter element failure, the low helium flow velocity would not be capable of transporting any particle greater than 100μ in dia. Larger particles would only settle harmlessly to the bottom of the catch basin. The HTFA filters are the only ones which should be exposed to the chemical impurities necessary for stress corrosion cracking. The HTFAs are also the only filtering vessels which have the potential for containing radioactive particulates. Any such particulates transported through failed filter elements would be expected to be deposited in downstream components such as the knockout drum, dryer, low-temperature charcoal adsorbers and back-up filters.

The HTFAs are located in the top head of the PCRV and are the best candidates for "dropping" filter element debris into the PCRV. However, any such debris would have to contort into the high-elevation filter chamber inlet port and then pass counterflow through two carbon steel screens (0.034 in. opening), a charcoal bed, and a cooling coil (0.125 in. gap) before it could enter the PCRV.

Therefore, failure of the filter elements in the helium purification system will not impact activity release, will not introduce debris into the PCRV larger than 100μ in diameter, will not block helium flow through the

helium purification systems, and will not impact the operation of other system. Likewise, the consequences of an earthquake will not be altered if these filter elements fail prior to or during the earthquake for the same reason.

Failure of these filter elements will not impact plant depressurization following a loss of forced circulation accident (DBA-I, Design Basis Accident-I), since such failures will not interfere with the continued operation of the helium purification system.

4.4.2.1.3 Safety Consequence

Failure of filter elements in the helium purification system will not adversely impact the public health and safety. Such filter element failures will not impact activity release, nor introduce debris into the PCRV, nor interfere with the continued operation of this or any other system.

4.4.2.2 Hydrogen Getter

4.4.2.2.1 Assessment Summary

Stress corrosion cracking failures are not expected to occur, since the impurity conditions necessary for the corrosion process (chloride and water) do not exist within the hydrogen getter section.

Nevertheless, even if such a failure were postulated to occur, it would not impact activity releases; would not introduce debris into the PCRV any larger than 100μ in diameter; would not impact safety-related plant depressurization capabilities, since the hydrogen getter section is bypassed under such conditions; and would not adversely impact the public health and safety.

4.4.2.2.2 Failure Consequence

The hydrogen getter section is fabricated from 300 series stainless steel and consists of titanium sponge filled hydrogen getter units (A-2309 and A-2309S), plus piping up to and including the isolation valves. The hydrogen getter section does not receive the impurity conditions necessary for stress corrosion cracking. The hydrogen getter section is installed at the outlet end of the helium purification system and processes only helium which has had all impurities removed with the single exception of molecular hydrogen. This is a process and design requirement, since even ppm levels of other impurities will "poison" the surface of the titanium sponge gettering material and render it ineffective for hydrogen removal. Whenever such titanium "poisoning" occurs, the titanium sponge material must be either removed and replaced or must be reactivated at highly elevated temperatures. For this reason, the process gas to the hydrogen getters is first purified by the helium purification dryers (molecular sieve) and the low-temperature adsorbers (charcoal at -320°F) to remove all impurities except molecular hydrogen. Since chloride-induced stress corrosion cracking requires the simultaneous presence of chloride and water, the necessary conditions for stress corrosion cracking do not exist in the hydrogen getter section.

Nevertheless, even though conditions do not permit stress corrosion cracking, the implications of such a failure have been evaluated. In the event of an internal screen failure, the low bed flow velocity of 1.5 ft/sec would not be capable of transporting any titanium or steel particle larger than 100μ diameter. Furthermore, even if all included 300 series stainless steel components were to simply collapse, the impact would be as follows: The hydrogen getter section would be isolated and bypassed; plant depressurization capabilities of the system would not be impaired; and, the health and safety of the public would not be endangered.

Failure of the hydrogen getter section would not impact plant depressurization following a loss of forced circulation accident (DBA-I, Design Basis Accident-I), since the getter section is bypassed under such conditions. Likewise, the consequences of an earthquake will not be altered if the hydrogen getter section fails prior to or during the earthquake for the same reason.

Full helium purification flow during normal operation could be regained by installing one non-nuclear isolation valve on the cold-inlet side of the hydrogen removal economizer.

4.4.2.2.3 Safety Consequence

Stress corrosion cracking failures should not occur, since the impurity conditions necessary for this corrosion process do not exist within the hydrogen getter section. Nevertheless, even if such a failure were to occur, it would not adversely impact the public health and safety.

4.5 Instrument and Sensor Lines

4.5.1 Metallurgical Evaluation

A review of the Moisture Monitor System and the primary coolant pressure and analytical instruments of the circulator auxiliaries indicate that some of the instruments and sensor lines are made from 300 series stainless steel and therefore may be susceptible to stress corrosion cracking.

4.5.2 Engineering Evaluation

4.5.2.1 Assessment Summary

An analysis of the Moisture Monitor System indicates that the failure of an instrument, sample line, or other part containing primary coolant would result in an alarm in the control room, and that there would be no loss of safety function. The sampling lines are small; therefore, a line break cannot cause a significant primary coolant leak. The public health and safety are not adversely affected relative to the primary coolant leakage scenarios evaluated in Section 14.7 of the FSAR.

Failure of an instrument line that provides a primary coolant pressure signal to the PPS may result in the trip of a single PPS channel as evaluated in Section 7 of the FSAR. However, public health and safety are not adversely affected because there is no loss of safety function and because the size of the sampling line is small.

The analytical instrument sample lines are not safety-related. Primary coolant released due to the failure of an instrument line is contained inside some of the penetrations. Because of the small size of the line, a release of primary coolant is not significant. The health and safety of the public are not adversely affected.

Breaking of any instruments or sensing lines in the circulator auxiliaries cannot result in a significant primary coolant leak because of the small size of the sensing lines. Stress corrosion cracking is not credible for any of the sensors at the upper end of the circulator because the instruments normally see only dry, moisture-free helium. They are the instruments that monitor and control the buffer helium supply to the circulator.

Instruments and sensing lines below the midbuffer line of the circulator cartridge normally or occasionally do see wet helium and, though the chloride content of the mixture should be low, these components may be subject to stress corrosion cracking. However, the health and safety of the public is not adversely affected due to the PPS action and control room alarms.

4.5.2.2 Failure Consequence

The following failure consequence was identified for the moisture monitor system. Primary coolant gas is circulated from the sample rakes at the circulator diffusers, through the process and moisture penetrations, and back to the discharge point at the circulator inlet plenum. Most of the parts in contact with the primary coolant are stainless steel. Valves, fittings, and other machined metal parts are welded in the sample system inside the penetration interspaces.

Pipe breaks or cracks are automatically detected and alarmed by the primary coolant sample bypass control system as discussed in Section 7.3.2 of the FSAR. The affected channel is then manually tripped by the operator. Furthermore, even a sudden guillotine rupture (e.g., that caused by a seismic event) of all instrument lines penetrating the secondary interspace of a penetration cannot result in a significant primary coolant leak due to the small size of the sampling lines. Therefore, there can be no degradation of safety functions.

The following failure consequence was identified for the primary coolant pressure sensing system and analytical instruments. The primary coolant and analytical instrument sample system contains series 300 stainless steel. If a crack occurs in a line close to the sample point, purge helium may leak back into the reactor, in which case an increase in the helium purge flow would be alarmed. Or, primary coolant may leak into a penetration interspace. If the

leak into the interspace is small, primary coolant would be contained within the interspace. If large, the PPS channel would trip and the primary coolant would still be contained. This discussion appears in Section 7.3.3.2 of the FSAR.

Furthermore, because of the size of the lines, there can be no significant primary coolant leakage. Therefore, there would be no release of radioactivity or loss of safety function, and the health and safety of the public would not be adversely affected.

The investigation of failure consequence for the circulator auxiliaries showed the following. Cracks or breaks in instruments or sensing lines that monitor or control the helium circulator auxiliaries do not cause a loss of safety function. Malfunction in these instruments above the midbuffer level result in rapid action by the PPS to isolate the circulator and alert the operator (this is discussed in Section 7.1 of the FSAR). This limits exposure of these instruments to water. Therefore, they are not susceptible to credible stress corrosion cracking.

Other instruments and sensing lines that may be exposed to chlorides are located lower on the circulator and monitor the various water drains. These instruments are exposed to helium and water most of the time. They monitor conditions of circulator operation by monitoring differential pressures across the helium-water, main drain, and steam-water drain cavities. If stress corrosion cracking did occur in one or more instrument/sensing lines, it would be detected and that channel would be isolated or the affected circulator would be shutdown as discussed in Section 7.1 of the FSAR.

Furthermore, due to the small size of the lines involved, there can be no significant primary coolant leakage nor loss of safety functions due to seismically caused breaks or due to breaks from other causes.

4.5.2.3 Safety Consequence

Because the PPS acts to isolate equipment and trip a failed channel, there are no loss of safety functions. Therefore, there are no conceivable safety concerns, including impact on public health and safety, for the instrument and sense lines of the Moisture Monitor System, the primary coolant pressure and analytical instruments, and the circulator auxiliaries.

4.6 Control Rod and Control Rod Drive Mechanisms

4.6.1 Metallurgical Evaluation

The control rods and control rod drive mechanisms utilize 347 austenitic stainless steel cables and numerous precipitation-hardened austenitic stainless steel A286 bolting. A high-strength austenitic stainless steel (A286) bolt and a captured nut attach the cable assembly to the control rod. The top portion of the control rod, the clevis, as well as a jam nut and tab washer, which prevent the control rod spine from unscrewing in the clevis, are all made of austenitic stainless steel (see Fig. 4.6-1) and therefore susceptible to stress corrosion cracking.

4.6.2 Engineering Evaluation

4.6.2.1 Assessment Summary

The cable and bolt end fittings have been changed to Inconel 625. Certain other elements of the cable assembly that may be susceptible to stress corrosion cracking are now changed to materials resistant to chloride-induced stress corrosion.

Stress corrosion failure of the bolt, nut, and clevis is unlikely. The tab washer and jam nut, however, may have significant stress levels. If failure of any or all of these parts is postulated (even if failure occurred during a seismic event), the control rod would drop into the core. Public health or safety would not be adversely affected due to the failure of one or more of these parts.

The stainless steel (A286) nut, which attaches the control rod shock absorber to the control rod spine (see Fig. 4.6-1) supports only the weight of the shock absorber, and therefore the occurrence of stress corrosion failure in this nut is not expected. Should the nut fail, an existing expansion of the spine below the nut will prevent the shock absorber from detaching from the rod.

The possibility of moisture condensing at the top plenum is low, but stress levels in the A286 nuts and bolts connecting an actuating rod to the outer cylinder of the orifice valve (see Fig. 4.6-2) may be significant, depending on torque values. Stress corrosion, although unlikely, is credible.

Failure of these parts while the plant is operating would cause the outer cylinder to fail, which would fully open the orifice and provide the maximum amount of cooling flow. As discussed in the FSAR Section 3.6.7, this would degrade plant performance but would not affect public health and safety, even if failure occurred during a seismic event.

No adverse impact on public health or safety would result from the failure of any or all of the above parts.

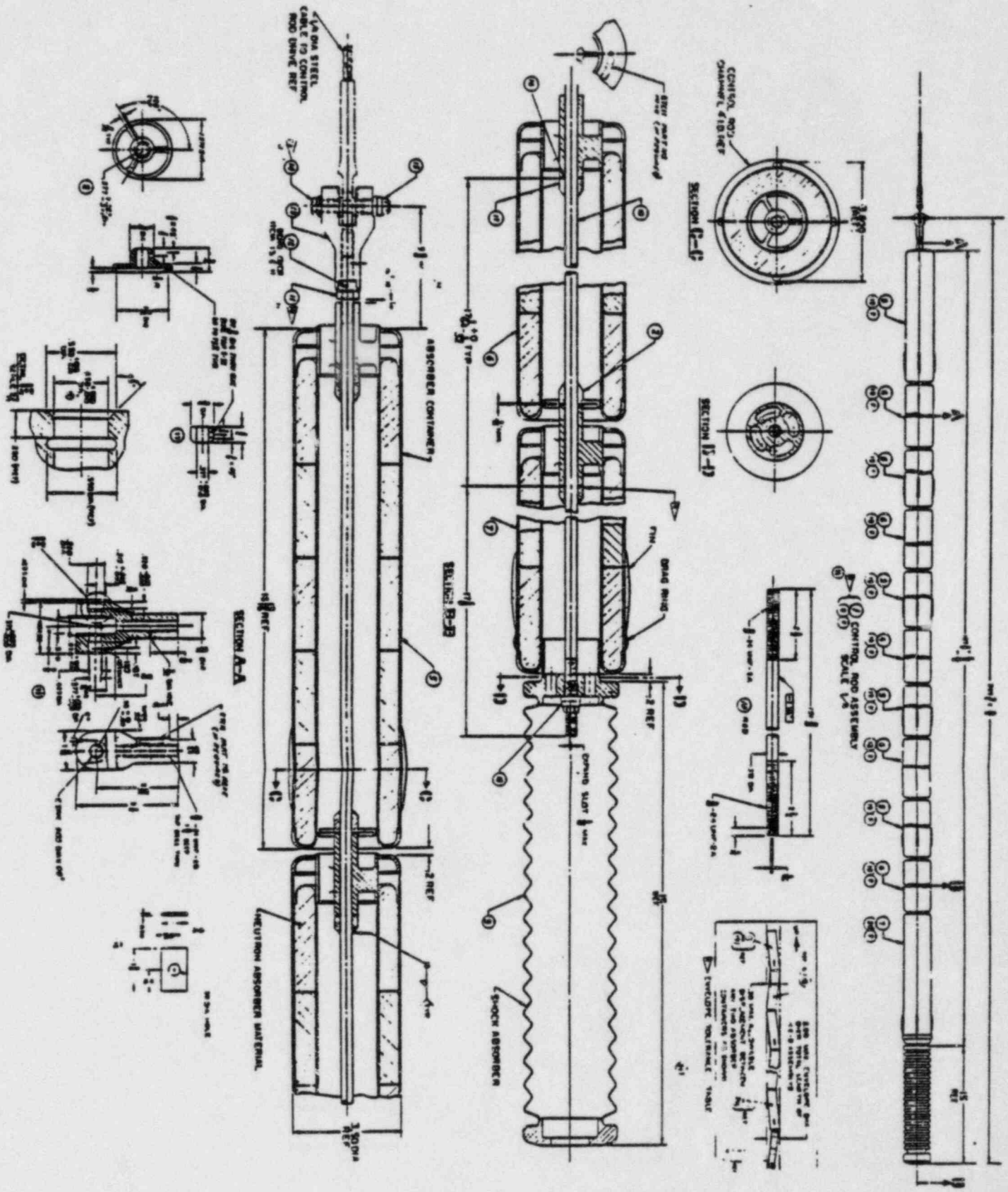

Fig. 4.6-1 Control Rod Assembly

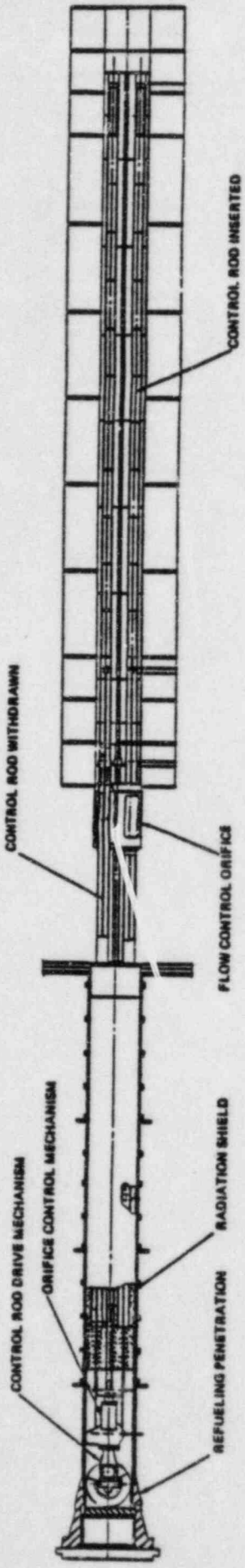

Fig. 4.6-2 Control and Orificing Assembly Installation

4.6.2.2 Failure Consequence

When the rod is in the fully raised position, any condensed water from the upper control rod drive cavity could run down the control rod drive cable and wet the bolt, nut and clevis, as well as the jam nut and the washer. If the water contained dissolved chlorides there would be potential for stress corrosion.

The nut and bolt can be assembled into the clevis without torquing the bolt. In this condition the only load on the bolt and clevis would be the dead weight of the control rod, which would induce a shear stress in the bolt of <560 psi, which is much less than the level normally required to initiate stress corrosion. Stress levels in the clevis would be even lower and the nut would have no stress. Stress corrosion in these parts is therefore very unlikely (provided residual stresses in the parts are low).

The tab washer may have large residual stresses in the tabs and may therefore experience stress corrosion. The jam nut is torqued against the washer and clevis with 20 ft-lb, resulting in a stress of 26 ksi in the nut threads. Failure or loosening of these parts would reduce the friction resistance that inhibits the rod from rotating and unscrewing from the clevis. It would then be possible (but not necessarily probable) that the rod would unscrew and fall into the core.

If a rod detaches from the cable assembly, the slack cable switch would indicate that the control rod had fallen (see Section 3.8.1.1.1 of the FSAR). In addition, the fallen control rod would cause a local reduction of core gas outlet temperature and degrade plant performance, which should be detectable.

If the control rod fell, the shock absorber located at the bottom of the rod would absorb the impact and prevent damage to the rod or the bottom

reflector blocks. The plant would be shut down, the rod would be retrieved, and a new shock absorber installed (see Section 3.8.1.1.1. of the FSAR).

The nut attaching the shock absorber to the control rod spine is located at the bottom of the control rod where water is very unlikely to condense. The only load on this nut is the weight of the shock absorber; stresses are low and stress corrosion is therefore unlikely. The nut is the same captured type used at the clevis; it would have to fail in more than one location to separate from the control rod threaded spine.

The threaded spine is expanded below the nut to keep the nut from loosening. This same expansion also prevents the shock absorber from falling off the spine if the nut dropped off. Failure of the nut in a manner which would permit the nut to separate from the spine is probably not credible; and even if this event occurs the shock absorber will remain attached to the control rod.

Water is not likely to condense in the orifice valve area, and stresses in the bolts and nuts that connect the orifice valve actuating rod to the orifice valve outer cylinder are low. Stress corrosion of these parts is not probable.

Failure of these bolts and nuts would fully open the valve and result in increased gas coolant flow through the valve, which would cause a local reduction of core outlet gas temperature. The failure scenario is discussed in the FSAR Section 3.6.7. This change in gas temperature might not be detectable. Failure of the parts would be detectable in the hot cell during routine maintenance. As failure results in a local increase of cooling gas flow, there are no adverse safety consequences.

4.6.2.3 Safety Consequence

The dropping of a control rod into the core and/or accidental opening of the orifice valves are events which were evaluated in the FSAR and shown to have no adverse impact on public health or safety.

4.7 Helium Circulator

4.7.1 Metallurgical Evaluation

High-strength steels are utilized in fasteners (e.g., bolts) in a number of components of the helium circulator. The primary closure bolts that failed in circulator C2102 were of AMS 6487 type H11 steel which has a minimum yield strength of 215 ksi. As indicated in Appendix A, these bolts fall into the chloride-induced failure prone group. The circulator also contains A286 bolts, which are susceptible to SCC.

The helium circulator compressor blades are of 422 stainless steel hardened to R_c40 maximum and the compressor disk is of D6AC alloy hardened to the range R_c40-44 (see Fig. 4.7-1). Potentially, these components are susceptible to stress corrosion. However, the stresses on the blades and compressor are low except during reactor operation. During operation, water cannot reside on the compressor due to the speed of rotation. During reactor shutdown stresses will be low.

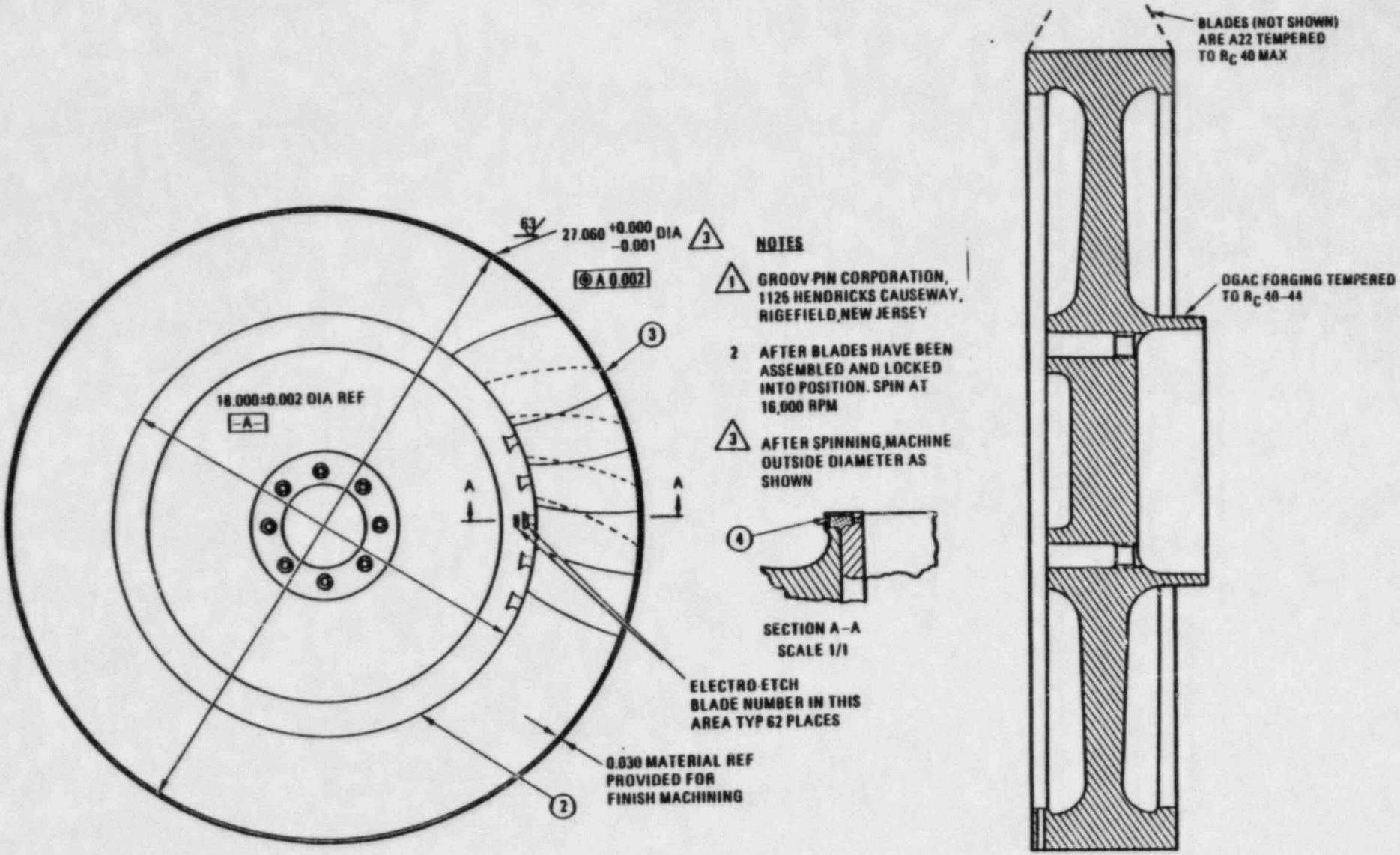

Fig. 4.7-1 Helium Compressor

4.7.2 Engineering Evaluation

4.7.2.1 Assessment Summary

Thirty-one different types of fasteners utilized in the FSV circulator machine assembly were examined for susceptibility to chloride-induced stress corrosion, four of them were found to be susceptible to the conditions that may result in stress corrosion cracking.

Failure of three types of bolts (90C2101-310-4, -340-9, -380-10) may affect only the functional capability of the circulator and will not cause a breach of the primary coolant boundary. However, failure of the inner diameter primary closure bolts (90C2101-300-40), combined with failure of turbine housing torus (90C2101-431) could release primary coolant into the reheat steam piping. The isolation valves provided in the reheat steam piping will inhibit release of primary coolant to the environment, if the primary closure bolts and the turbine housing fail.

The compressor disk (90C2101-362) and blades (SOC2101-363) have been identified to be potentially susceptible to chloride stress corrosion. It was also established that during compressor operation any liquid is thrown off. This precludes the simultaneous occurrence of stress and aqueous chlorides required for stress corrosion damage. In any case, the failure of the circulator compressor disk or blades would be contained within the envelope of the circulator inlet and would only affect the function of the particular circulator, with no other adverse consequences.

There would not be any adverse impact on public health and safety as a result of the failure of the components identified. The consequences of the circulator primary closure bolt failure causing primary coolant to enter the

steam piping system would result in a failure scenario as discussed in the the FSAR Section 10.2.3.4.

4.7.2.2 Failure Consequence

Figure 4.7-2 shows the circulator machine assembly. The pertinent parts discussed in this section are identified.

Postulated failure of the primary closure bolts (90C2101-300-40) under certain plant operating conditions (i.e., full helium pressure combined with very low or no steam pressure) would cause the circulator machine assembly to move downward due to the helium to steam differential pressure force, causing the stresses in the toroidal housing (Part No. 90C2101-431) to exceed the yield and possibly the tensile strength values. The structural failure of this part would allow for the primary coolant helium to enter the reheat steam piping (see Fig. 4.7-2).

The failure of the primary closure bolts could cause primary coolant helium to enter the secondary closure and the reheat steam piping. There are two steam isolation valves downstream of the circulator. The first valve, typically HV-2249, downstream of the circulator (i.e., in the cold reheat) would trip automatically on the high shaft wobble and other circulator trip signals. The second valve typically HV-2253 (i.e., in the hot reheat) downstream of the reheaters would trip on the radiation monitoring PPS signal (caused by the primary coolant in the steam) if the first valve at the circulator turbine discharge fails to close. The closing of the second valve is estimated to be within seconds of signal initiation. Closing of either valve will isolate and contain any primary coolant leakage within the steam piping system and cause shutdown of the affected loop. The consequences of the circulator primary closure bolt and turbine housing failures, causing primary coolant to enter the reheat steam piping system, would result in a failure

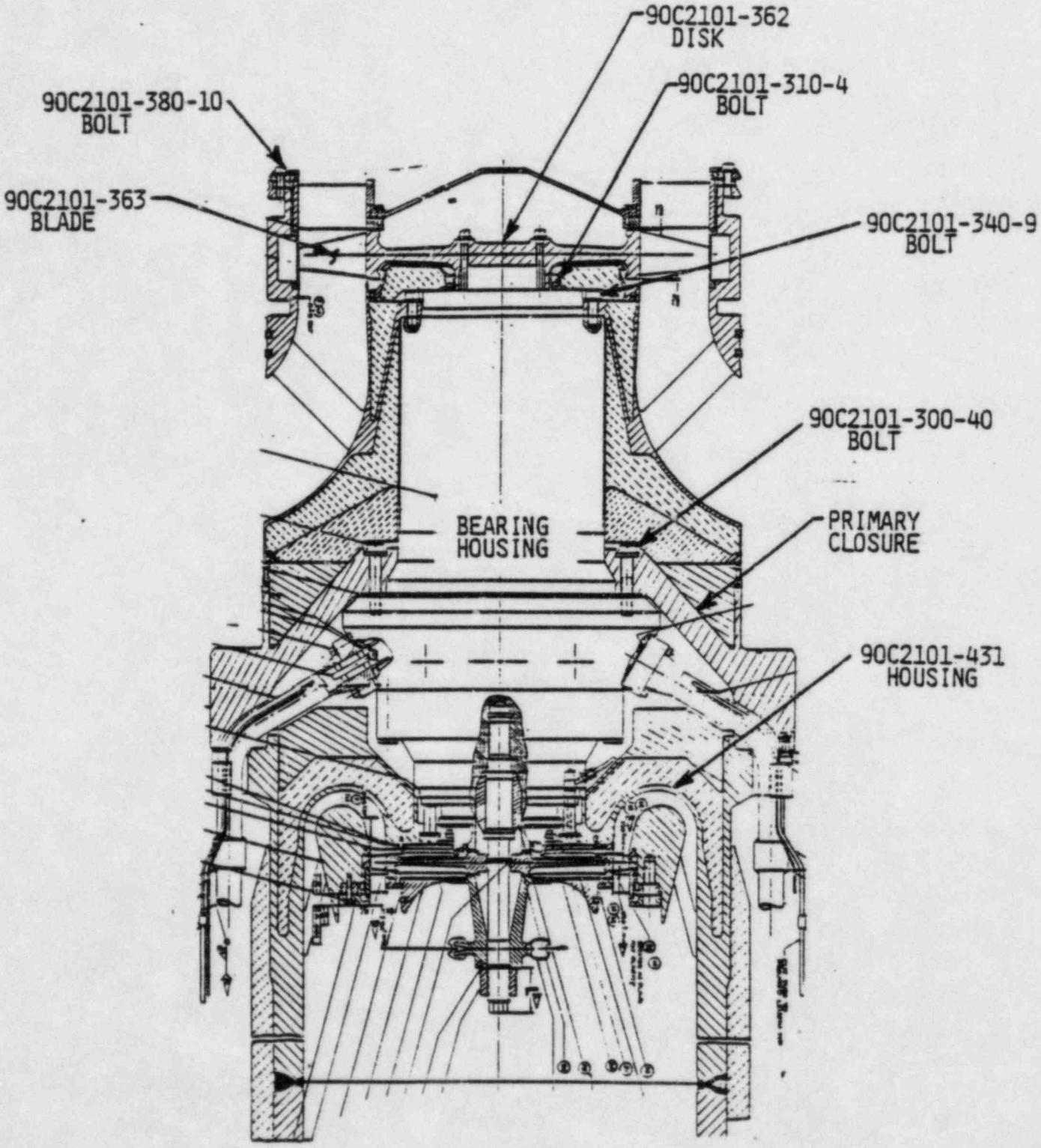

Fig. 4.7-2 FSV Circulator Machine Assembly

scenario as discussed in Section 10.2.3.4 of the FSAR. As discussed in the FSAR, this failure scenario has no adverse impact on public health and safety.

The initial investigation indicates that failure of the primary closure bolts may or may not be readily detectable. This would depend on the pressure differential between the primary coolant and the secondary coolant pressure, i.e., whether the flange is being compressed or separated. If the flange separates, the drop in secondary closure pressure will cause actuation of PPS alarm.

Postulated failure of three other circulator bolts (90C2101-310-4, 340-9, and 380-10) may all result in a loss of circulator function. Any of these failures could interfere with compressor rotation and the the worst case failure would be loss of compressor blading, i.e., loss of circulator function. The overall circulator design incorporates features to contain any disk or blade failure within the envelope of the circulator inlet. Thus any bolt, blade, or disk failure in the compressor region could cause a loss of circulator function; but damage would be restricted to the circulator parts.

All consequential failures would be detectable with the shaft wobble instrumentation. The worst case failure (disk burst) would result in a repairable failure that would cause a plant shutdown.

The effect of seismic loads on a degraded component is negligible considering that the seismic loads would constitute a small fraction of the load due to bolting forces. Seismic or circulator generated dynamic loads are well within the safety margins of the bolts.

4.7.2.3 Safety Consequence

No postulated circulator failures induced by chloride stress corrosion have been identified that would result either in fuel failure or breach of the primary coolant boundary in a way to adversely affect public health and safety. Obviously, should a failure of all the primary closure bolts occur the primary coolant boundary would be breached, but the primary coolant would be contained within the reheat steam system as a result of isolation valve closure.

4.8 Thermal Barrier Attachments

4.8.1 Metallurgical Evaluation

The class A and class B thermal barrier attachment studs are attached to the carbon steel liner by Nelson stud welding. This process produces the approximate equivalent of a resistance flash butt weld between the carbon steel stud and the carbon steel liner. The configuration of these studs is shown in Fig. 4.8-1. Since the liner is relatively cold at the time of stud welding and the assembly is not post weld heat treated, there is a significant probability of forming a hard, martensitic, heat affected zone (HAZ) in the liner immediately underneath the studs. Examination of available records indicates that the liner steel has a carbon equivalent of about 0.6% which would provide the potential for significant hardening. In recognition of this in-process welding controls were employed during construction so that the liner HAZ stayed below a hardness of approximately R_c 35. In the final assembly of the thermal barrier to the studs, a sleeve is threaded on the stud, butted against the liner, and tightened so as to produce a tensile stress of approximately 37 ksi in the stud. The hard zone beneath the stud is therefore continuously subjected to tensile stress. Thermal barrier studs are ASTM A108 Grade 1018 carbon steel and the PCRV liner is ASTM A537 Grade B.

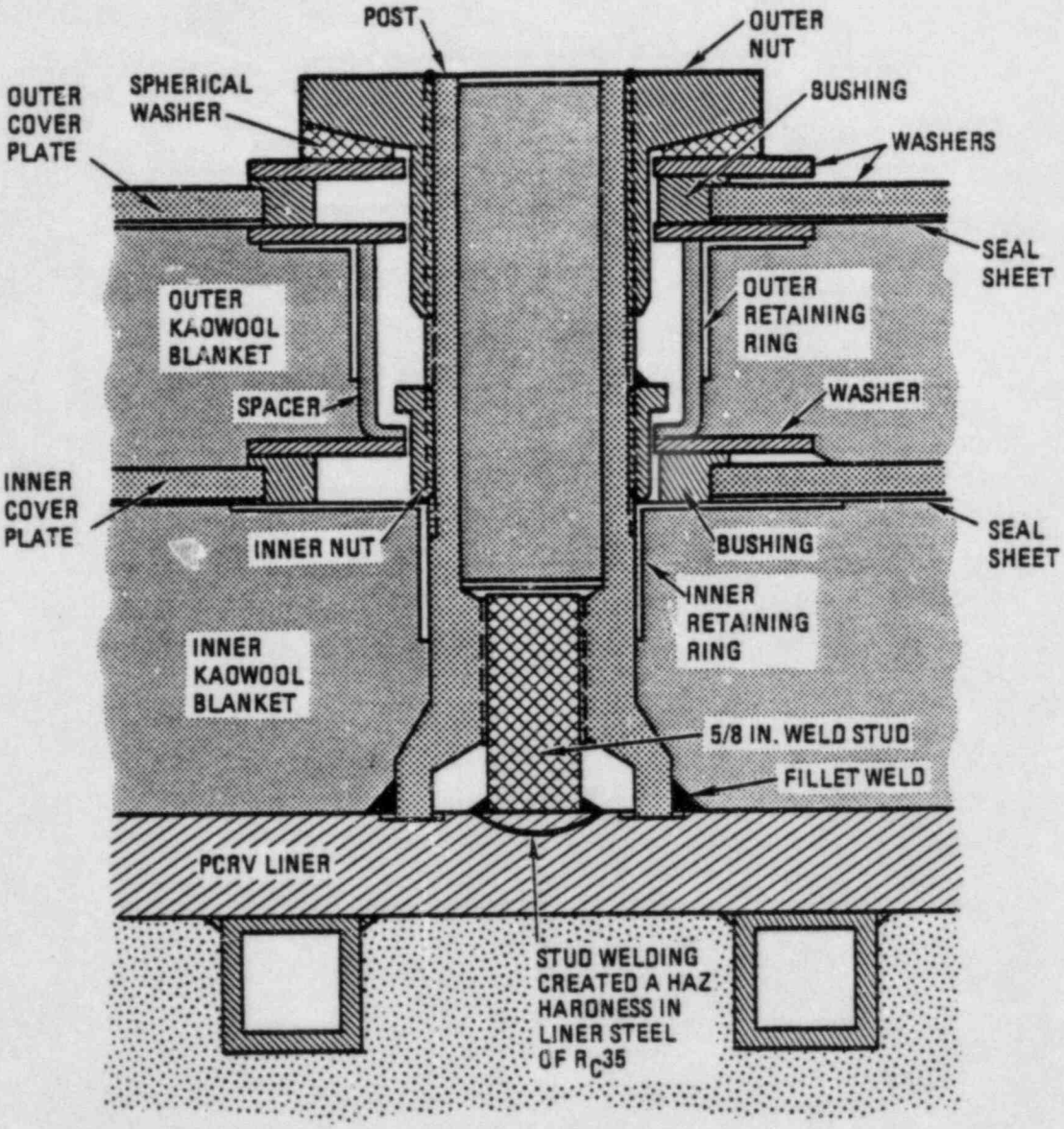

Fig. 4.8-1 Typical Thermal Barrier Attachment Stud Fixture

Since the studs are attached to the liner, the integrity of the stud to liner joints is of potential concern for all thermal barrier regions. The regions of most concern are at the bottom head of the PCRV where chloride bearing water can collect and pool. The top head and upper sidewalls will not be subjected to standing water and, therefore, chloride corrosion is much less likely. It is evident (see Appendix A) that the stud HAZ hardness is above industry-accepted values for resistance to stress corrosion. In addition, in view of the large number of studs and the sensitivity of stud welds to weld gun operation, it is possible that some HAZs may be harder than R_c35.

4.8.2 Engineering Evaluation

4.8.2.1 Assessment Summary

If the stud weld is postulated to fail, a fillet weld having a larger area than the stud weld will hold the thermal barrier attachment in position. In the event that both sets of welds were to fail, local voids between the insulation and liner are possible. This could result in liner hot spots over a sizable area which can be detected by the liner cooling water system as described in the FSAR (Section 9.7.3.5.6) and Technical Specifications (SR 5.4.4 and 5.4.5).

It is concluded that the loss of thermal barrier attachments associated with the bottom head and lower liner barrel section will not adversely affect public health and safety.

4.8.2.2 Failure Consequence

The thermal barrier cover plate attachments or posts (Fig. 4.8-1) are threaded onto studs that have been welded to the liner in accordance with GA Specification 11-R-38. The post is torqued to generate a prestress in the weld

stud of 37.5 ± 2.5 ksi. Yield stress for the stud material is 50 ksi. Three 1-in. fillet welds at the liner/post interface complete this installation. At the time of installation (and until failure), the stud weld is in tension, while the fillet weld is lightly loaded. he area of the fillet weld is greater than that of the stud weld. Should the stud weld fail, the load on the fillet weld becomes tensile, but will not exceed about 30% of the yield strength. The presence of the redundant fillet welds substantially decreases the probability of total stud failure. However, if stud failures do occur, there will be no immediate impact even at the bottom head due to the failure of the attachments. Attachment failures will not be detectable until the thermal barrier has degraded significantly or has permitted excessive primary coolant flow due to voids between the liner and the insulation. An indication of the possible stud failure can be provided by monitoring the liner cooling tube temperature as described in the FSAR and Technical Specifications. The temperature scanner provides for continuous monitoring of the outlet water temperature of each liner cooling tube and is to be checked on a monthly basis during power operation. Postulating complete loss of an insulation assembly during power operation, a local liner hot spot of up to 400°F could result. Such a condition is expected to be tolerable without jeopardizing the primary coolant boundary for a period of time not exceeding the interval between cooling tube thermocouple checks according to the requirements of the Technical Specification SR 5.4.4.

Failure of the lower liner barrel section thermal barrier attachments could result in an initial slight pull away of the insulation from the liner. Total failure of the cover plates is unlikely because of the integrated and staggered nature of the insulation, seal sheets, and cover plates. Since each thermal barrier assembly employs eight or nine fasteners in this region, some individual failures will be inconsequential. A substantial number of fasteners within individual assemblies would have to fail before a failure consequence need be addressed. As with the bottom head, failure of the sidewall thermal

barrier can be detected by the required monitoring of the cooling water tubes as specified in the FSAR and Technical Specifications.

The thermal barrier is designed for seismic loads with the maximum horizontal ground accelerations being 0.15 g for OBE and 0.30 g for SSE. Due to the relatively low mass of the thermal barrier assembly, a seismic event is not expected to result in component dislodgement. However, in the event of the failure of the studs due to stress corrosion, it was concluded that the added results of a seismic event would not be of any more concern than those previously discussed. That is, the failure of the studs in the areas of concern would not impact the safe operation of the reactor nor adversely affect public health and safety.

4.8.2.3 Safety Consequence

Individual liner cooling tube thermocouple monitoring is used to detect increases in liner temperature which could be indicative of potential failure of thermal barrier assemblies due to stud failures. Thus, the failure of the studs on the bottom head and/or the lower liner barrel sidewall will not adversely affect public health and safety.

TABLE 4-1
SUMMARY OF POSSIBLE CONCERNS AND ENGINEERING FAILURE EVALUATION

Component	Material	Issue	Other Considerations	Failure Consequence	Adverse Impact on Public Health and Safety
1. Cavity liner	ASTM-A537 GrB	Perforation due to Cℓ enhanced water corrosion rates	Conservative corrosion rates based on seawater experience suggests perforation very unlikely.	No failure is expected during the life of the reactor. However, if a failure should occur, release of fission product in the primary coolant would trigger radiation monitors (Channel 7312--see FSAR Fig. 11.2-1).	None.
2. Plenum elements	Cast 347 SS (control column only)	Susceptible to SCC*	Condensation probably occurs only rarely; so opportunities for stress corrosion are limited.	No major SCC expected. Damage to the plenum elements must be severe to prevent proper flow to the fuel elements. Overheated fuel can cause fission product buildup in the primary coolant system, but fission product buildup is continuously monitored.	None.

*SCC = Stress corrosion cracking

TABLE 4-1 (Continued)

Component	Material	Issue	Other Considerations	Failure Consequence	Adverse Impact on Public Health and Safety
2. Plenum elements (continued)				The reactor would be shut down for replacement of damaged plenum elements. No off-site radiological release will occur.	
3. Core restraint devices	A286 SS bolts; 304 SS retainers	Susceptible to SCC.	Condensation occurs rarely, so opportunities for SCC are limited.	May impede removal of restraint device and/or plenum elements and core elements. Failures could result in core thermal fluctuations which are detectable. Failed restraint devices can be replaced.	None.
4.1 HPS filters	Filter elements are sintered - 300 series SS.	Susceptible to SCC.		Filter failure will not introduce debris larger than about 100μ into the PCRV or into the HPS; will not prevent continued operation of the HPS; will not increase activity releases; and will not impact the operation of any other system.	None.

TABLE 4-1 (Continued)

Component	Material	Issue	Other Considerations	Failure Consequence	Adverse Impact on Public Health and Safety
4.2 Hydrogen getter	Piping and valves are 300 series SS.	Susceptible to SCC.	All impurities including chlorides are removed from primary coolant before reaching this unit.	Postulated failure should not occur due to absence of reactant impurities. Nevertheless, such a failure would not introduce debris larger than about 100μ into the PCRV, and would not impact plant depressurization capabilities, since the hydrogen getter unit is bypassed under such conditions.	None.
5. Instrument and sensor lines	300 series SS tubing	Susceptible to SCC.	Tubing probably contains residual stresses due to cold formed bends.	Moisture monitor system: 1) Any primary coolant leak will be contained in the reactor or within process and moisture penetrations B1-B6. High helium purge flow alarm indicates interspace depressurization. <u>Note</u>: All lines containing primary coolant are ≤0.5 in. i.d.	None.

TABLE 4-1 (Continued)

Component	Material	Issue	Other Considerations	Failure Consequence	Adverse Impact on Public Health and Safety
5. Instrument and sensor lines (continued)				2) Component failure causing loss of flow will be alarmed in control room and channel trip may be initiated. Primary coolant pressure and analytical instruments: 1) Same as above. 2) If break causes 50 psi drop below primary coolant pressure, the pressure channel will trip. Circulator auxiliaries: 1) Instruments above buffer midline see only dry helium. Those below see helium and water. But if a break occurs, PPS or operator action shuts circulator down.	

TABLE 4-1 (Continued)

	Component	Material	Issue	Other Considerations	Failure Consequence	Adverse Impact on Public Health and Safety
6.	Control rod clevis, bolt, washer, nuts	321 SS	Susceptible to SCC.	Applied loads are very low.	The control rod falls back into core and a slack cable signal is activated.	None.
	Shock absorber nut	321 SS	Susceptible to SCC.	Condensation probably occurs very rarely, so opportunity for SCC is limited.	Shock absorber remains attached to rod after complete failure of nut.	None.
	Orifice valve connecting bolts and nuts	321 SS	Susceptible to SCC.	Condensation probably only occurs very rarely, so opportunity for SCC is limited.	Orifice opens fully after failure of bolted connection; coolant flow through the region increases.	None.
7.	Helium circulator	Compressor: D6AC R_c 40-44 Blades: 422 SS R_c 40	Susceptible to SCC.	Water thrown off in operation: stresses low when stationary; therefore, stress corrosion risk low.	Loss of circulator function.	None.
		High-strength bolts - (H-11, A286)	Susceptible to SCC.	Stresses high in some cases; one H-11 bolt failed, another cracked. Crack indications on some A286 bolts.	Loss of circulator function. Primary coolant ingress into the steam piping for bolts 90C2101-300-40 only.	

TABLE 4-1 (Continued)

Component	Material	Issue	Other Considerations	Failure Consequence	Adverse Impact on Public Health and Safety
8. Thermal barrier attachment	Liner ASTM-A537: studs A108-GR1018	Nelson stud HAZ* may be SCC susceptible.	HAZ hardness will vary: condensation will occur in these regions; potential for SCC exists.	Stud weld failure will transfer load to post-to-liner fillet welds of greater area than post. If fillet welds also fail, loads transferred to other studs. If all studs fail, thermal barrier may detach and cause hot spots over a sizable area which can be detected by liner cooling system instrumentation as described in FSAR and Technical Specifications.	None.

*HAZ = Heat affected zone.

5. CONCLUSIONS

The following are the conclusions from the evaluation study performed on the selected FSV components which are exposed to primary coolant chloride contamination:

1. The component failure modes and failure consequences of credible chloride-induced failures were found to be either similar or less severe than those failure cases which have already been considered in the FSAR.

2. The consequences of the chloride-induced failures identified would not adversely affect public health and safety, which is consistent with similar results in the FSAR.

6. ACKNOWLEDGMENT

Acknowledgment of their contribution in the preparation of this report is given to the following lead personnel and their associates:

H. Jones
C. McDonald
C. Perry
D. Roberts
C. Rodriguez
L. Swanson
J. Wistrom

APPENDIX A
EFFECTS OF CHLORIDES IN FSV PRIMARY COOLANT

The presence of significant levels of chloride in the primary coolant of the reactor could have two types of potentially adverse effects. One is the possibility of accelerated corrosion of the materials of construction at elevated temperatures found during normal reactor operation. The second could occur in the event of water ingress to the reactor which would create chloride bearing aqueous solutions with the potential to cause enhanced general corrosion, pitting corrosion, stress corrosion or hydrogen embrittlement.

A.1 High-Temperature Corrosion

To determine in-reactor corrosion rates due to elevated temperature interaction with all primary coolant impurities (including chlorides), data were collected from a plate-out probe, which was removed from the reactor in November 1981. The probe had been placed in the reactor at start-up. This probe had corrosion coupons on its outside surfaces exposed to the hot primary coolant helium. The coupons included samples of Alloy 800, Inconel 600, and type 304 SS. These coupons were exposed to temperatures close to the primary coolant outlet gas temperature (up to ~1400°F). Following removal of the probe, the coupons were examined for corrosion and the results showed no evidence of either damage or the formation of surface chlorides of any kind. Accordingly, it was concluded that the chloride levels present in the reactor primary coolant stream, at least during the period preceding the removal of the plate-out probe, did not cause enhanced elevated temperature corrosion.

A.2 Chloride Interactions with Water Ingress

The possible interaction of chlorides in the primary coolant with water which accidentally ingresses into the reactor does pose a concern. The chlorides may be initially distributed fairly uniformly around the primary coolant circuit. If the water vapor pressure rises to the point where condensation occurs on chloride contaminated surfaces, the condensing water will dissolve the plated-out chlorides and produce pools of chloride containing water. In addition, as the reactor is dried out following a water ingress, the chloride levels in the remaining pools of water will concentrate until finally all the water is removed to leave chloride enriched debris. During subsequent water ingress, dissolution of this debris may form relatively chloride-rich water.

The process of repeatedly forming chloride enriched aqueous regions is most likely to occur in areas either where water ingress occurs directly (i.e., around the helium circulators) or in regions subject to condensation when high primary coolant water levels occur (i.e., the PCRV liner). However, the process can also occur on additional components during some modes of reactor operation.

The nature of the chloride bearing aqueous solutions that is formed during the process described above is not entirely clear. If, as it is currently postulated, the chloride is being introduced as HCl gas from the core, then the initial condensate will be acidic. However, since acid chloride is very reactive, it is quite likely that the condensate will be rapidly neutralized by interaction with corrosion products from the structural materials. However, for the purpose of this review, it has been assumed that, at least on some occasions, the condensate is acidic.

A.3 Metallurgical Impact of Chloride Solutions

Chloride-bearing solutions, particularly if acidic, can have a number of adverse impacts on the types of structural materials used in FSV. There are at least three potential effects:

1. Enhanced general corrosion and development of pitting attack,
2. Stress corrosion cracking (SCC), and
3. Hydrogen embrittlement.

Enhanced general corrosion is most likely to be of concern for carbon steel and low alloy steel components. Pitting is a possible concern in carbon steels and low alloy steels, stainless steels, and aluminum alloys. Stress corrosion cracking, in the presence of chlorides, poses a significant concern to components of 300 series stainless steel even at moderate stress levels. Stress corrosion cracking is also significant, along with hydrogen embrittlement, to components made of high-strength steels which are significantly stressed.

With respect to the latter phenomenon, stress corrosion/hydrogen embrittlement cracking of high-strength steels occurs in several industries. One is the petroleum industry where the principal stress corrodents are typically warm, moist H_2S environments which are acid and may also contain chlorides. In this industry, it is a standard practice to use steels with a hardness of less than R_c22 and yield strengths below about 90-100 ksi to minimize the possibility of stress corrosion. In the milder aqueous chloride environments that may occur in FSV, it seems likely that steels below these strength and hardness levels will not suffer stress corrosion.

Evidence from many industrial uses and laboratory experiments indicates that steels with a hardness above about R_c35 or a yield strength above about

150 ksi are, if subject to high stress, prone to stress corrosion/hydrogen embrittlement failure. These general trends are illustrated, for carbon steels, in Fig. A-1. Hardness and yield strength are not the only criteria governing susceptibility. The exact microstructure and chemical composition of the steel also has a strong influence on resistance to stress corrosion. Steels containing martensite, which have been only lightly tempered, for example, may be much more susceptible to cracking, at the same strength levels, than steels with other carbide strengthened microstructures. Thus, each steel must be assessed specifically for stress corrosion susceptibility. Nevertheless, the trends shown in Fig. A-1 provide a useful engineering guide for initial screening to assess where problems may occur.

In all the above corrosion processes, the presence of dissolved oxygen in the aqueous solutions plays an important role. It is suspected that there may have been circumstances in which water and oxygen were jointly present in the FSV reactor. Moreover, if the condensed solutions are acid, base metal attack can proceed even without oxygen. For the purpose of this review, it has therefore been assumed that oxygen levels are high enough, or pH levels are low enough to permit the corrosion processes to proceed. This is a conservative assumption.

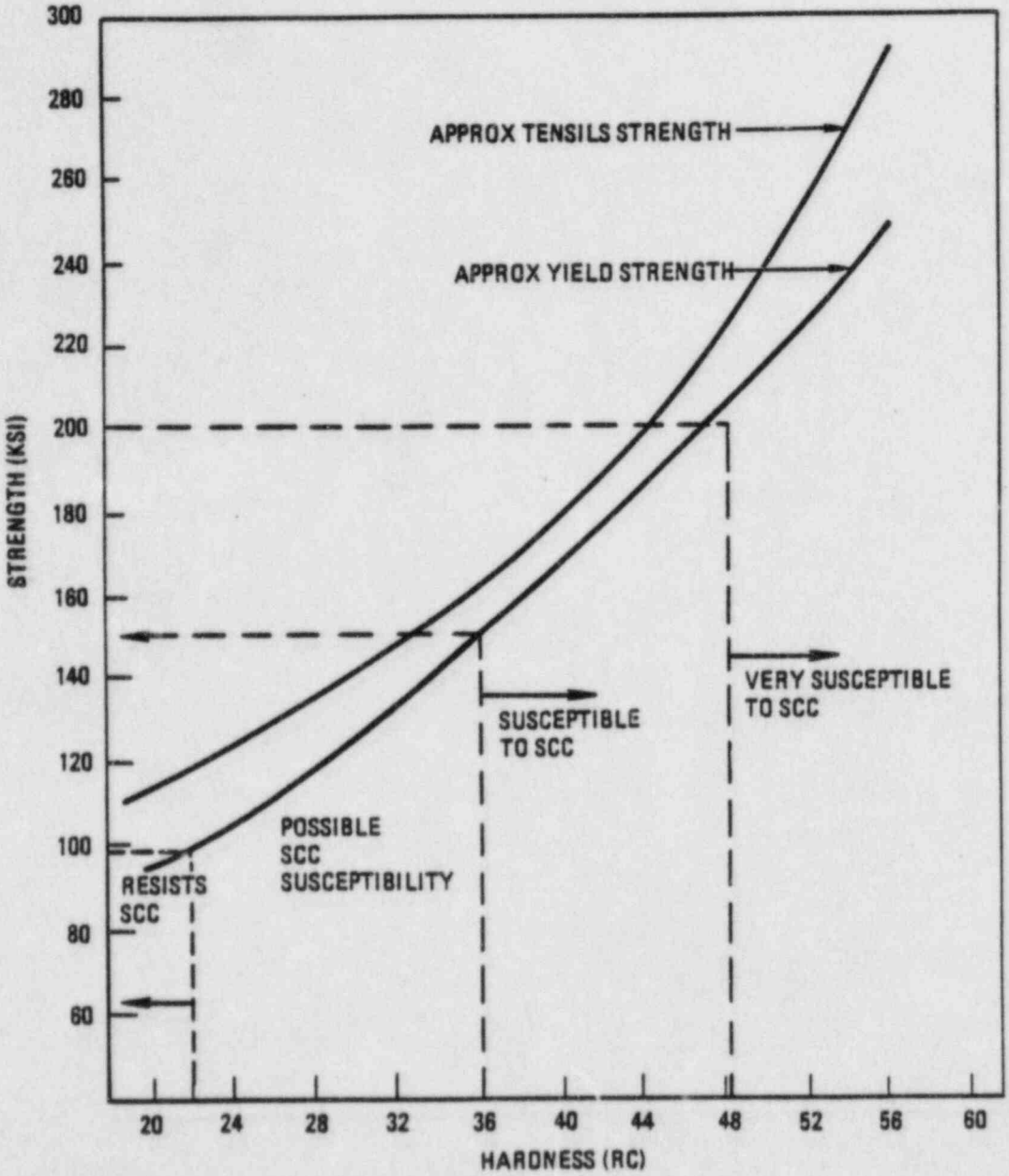

Fig. A-1 Approximate Relationships Between Hardness, Strength and Stress Corrosion Susceptibility of Carbon and Low Alloy Steels