WCAP-14535

TOPICAL REPORT ON REACTOR COOLANT PUMP FLYWHEEL INSPECTION ELIMINATION

JANUARY 1996

P. L. Strauch
W. H. Bamford
B. A. Bishop
D. Kurek

Reviewed By D. E. Prager

Approved By S. A. Swamy, Manager, Structural Mechanics Technology

WESTINGHOUSE ELECTRIC CORPORATION
Systems and Major Projects Division
P. O. Box 355
Pittsburgh, Pennsylvania 15230
© 1996 Westinghouse Electric Corporation
All Rights Reserved

9601290404 960124
PDR ADOCK 05000334
P PDR

TABLE OF CONTENTS

SECTION	TITLE	PAGE
1.0	Introduction	1-1
2.0	Design and Fabrication	2-1
3.0	Inspection	3-1
4.0	Stress and Fracture Evaluation	4-1
5.0	Risk Assessment: Effect of Inspections	5-1
6.0	Summary and Conclusions	6-1
7.0	References	7-1
Appendix A	Regulatory Position	A-1
Appendix B	Historical Inspection Information: Haddam Neck	B-1
Appendix C	Sample Flywheel Inspection Procedures	C-1
Appendix D	Sample Flywheel Material Test Certificates	D-1

SECTION 1
INTRODUCTION

An integral part of the reactor coolant system (RCS) in pressurized water reactor plants is the reactor coolant pump (RCP), a vertical, single stage, single-suction, centrifugal, shaft seal pump. The RCP ensures an adequate cooling flow rate by circulating large volumes of the primary coolant water at high temperature and pressure through the reactor coolant system. Following an assumed loss of power to the RCP motor, the flywheel, in conjunction with the impeller and motor assembly, provide sufficient rotational inertia to assure adequate cooling flow during RCP coastdown, thus resulting in adequate core cooling.

During normal power operation, the RCP flywheel possesses sufficient kinetic energy to produce high energy missiles in the event of failure. Conditions which may result in overspeed of the RCP increase both the potential for failure and the kinetic energy of the flywheel. This led to the issuance of Regulatory Guide 1.14 in 1971 (Reference 1), which describes a range of actions to ensure flywheel integrity.

One of the recommendations of Regulatory Guide 1.14 (a portion of which is shown in Appendix A) is regular inservice volumetric inspection of flywheels. Operating power plants have been inspecting their flywheels for over twenty years now, and no flaws have been identified which affect flywheel integrity. Flywheel inspections are expensive, and involve irradiation exposure for personnel, so this study was commissioned to present the safety case for flywheels, and to quantify the effects of elimination of such inspections.

1.1 Previous Flywheel Integrity Evaluations

Westinghouse Plants

Fracture evaluations were performed in WCAP-8163 (Reference 2) for a postulated rupture of the RCP discharge piping. The RCP flywheel evaluated had an outer radius of 37.5", a bore radius of 4.7" and a keyway with a radial length of 0.9" and a width of 2.0", which are typical dimensions for RCP flywheels. The flywheel material was A533, Grade B, Class 1 steel plate, which is typically used in flywheel construction. The ultimate tensile stress (for ductile failure analysis) was 80,000 psi, and the fracture toughness at 120°F in the weak or transverse direction was 220,000 psi $\sqrt{\text{inch}}$. Detailed finite element analyses were performed to determine the stress intensity factors for cracks emanating radially from the flywheel keyway. These results were compared to closed form solutions for crack tip locations remote from the keyway, with good correlation. The conclusion of the Reference 2 evaluation was that the limiting speed for ductile failure of 3485 rpm (about 290 % of the normal operating speed) is governing for crack lengths less than 1.15 inches, and that the brittle fracture limit is

governing for larger crack lengths. Because the 1.15 inch crack is very large in comparison to that detectable under inspection and quality assurance procedures for the flywheel design, it was concluded that 3485 rpm was the limiting speed for design. The failure prediction methodology was verified by scale model testing, which is discussed in detail in Reference 2.

A series of flywheel overspeed studies were carried out for postulated circumferential and longitudinal split pipe breaks. Table 1-1 summarizes the studies performed in Reference 2. The maximum speed of 3321 rpm is less than the original design limiting speed of 3485 rpm.

Table 1-1: Summary of LOCA Speed Calculations for Westinghouse Plants

Case No.	Description	Peak Speed (rpm)
1	4 Loop plant, double ended break, RCP trip after 30 seconds.	1248
2	Case 1 with instantaneous power loss.	3321
3	Case 1 with instantaneous power loss and break area equal to 60% of double ended break area.	2609
4	Case 3 with break area equal to 3.0 ft^2.	1189
5	Case 3 with break area equal to 0.5 ft^2.	1189
6	Case 3 for a 3 loop plant	2330
7	Case 2 with moment of inertia increased by 10%	3200
8	Case 1 with moment of inertia increased by 10%	1248
9	Case 1 with loop out of service	2965
10	Case 1 with longitudinal split break areas of 0.5 ft^2, 3.0 ft^2 and pipe cross sectional area.	1200
11	Case 10 with instantaneous power loss	1200

Babcock and Wilcox Plants

Babcock and Wilcox analyzed the RCP for a spectrum of postulated reactor coolant system breaks for a typical Babcock and Wilcox 2568 MWt, 177 fuel assembly, nuclear steam system (Reference 3). A stress analysis of the upper flywheel assembly top flywheel was conducted to determine areas of stress concentration, stress magnitude, and the most likely flawed configurations to consider in the fracture mechanics analysis. The upper assembly top flywheel was considered to be the most critical component, and was the only component

modeled for the stress analysis. This spoked flywheel had an outer radius of 36", and an inner radius of 15.2". The flywheel material was ASTM A-516-67 grade 65. The ultimate tensile stress was 76,500 psi, the yield stress was 48,500 psi, and the fracture toughness at 70°F and 120°F was 67,000 and 109,000 psi √inch, respectively. Stresses were calculated using a finite element model.

Three flawed configurations were considered in the linear elastic fracture mechanics analysis. These configurations were through-wall radial cracks perpendicular to the faces of the flywheel, and emanating from the following locations: the inner bore, a bolt hole, and a keyway. Since shrink fit forces would retard the growth of radial cracks in the keyway area, they were omitted from the analysis of the keyway crack. The initial crack length was assumed to be the largest crack that could be missed in nondestructive testing (0.24").

Linear elastic fracture mechanics calculations were performed for flywheel temperatures of 70°F and 120°F. The results of the analysis indicated that the flywheels of the RCPs will not fail under the expected normal operating conditions and that failure conditions are not reached until 220% of the normal operating speed is attained, for the assumed initial crack of 0.24". (The normal operating speed is 1190 rpm, rounded off to 1200 rpm for calculational purposes).

Fatigue crack growth calculations were performed to determine the size of the flaw over the life of the plant. Motor startup is the only plant transient significant to the flywheel. It was assumed that there are 500 starts over the 40 year life of the plant. The applied cycle stress was based on 125% of normal speed. Fatigue crack growth was calculated to be less than 0.0002". Therefore, it was concluded that the assumed initial crack would not grow to critical length during the design life of the flywheel.

LOCA evaluations performed in Reference 3 included eight different cold leg breaks, including the 8.55 ft^2 double ended break at the RCP discharge (with and without electrical braking effects), and smaller break sizes. A summary of the results from the eight analyses are provided in Table 1-2.

Table 1-2: Summary of LOCA Speed Calculations for Babcock and Wilcox Plants

Case No.	Description	Pump Trip Time (seconds)	Max Speed (rpm)
1	8.55 ft^2 cold leg guillotine break (pump discharge).	0.1	3310
2	8.55 ft^2 cold leg guillotine break (pump discharge).	30.0	1700
3	5.00 ft^2 cold leg split break (pump discharge).	30.0	1210
4	3.0 ft^2 cold leg split break (pump discharge).	30.0	1200
5	1.0 ft^2 cold leg split break (pump discharge).	30.0	1190
6	8.55 ft^2 cold leg guillotine break with 80% voltage (pump discharge).	30.0	2510
7	8.55 ft^2 cold leg guillotine break with 90% pump and motor inertia (pump discharge).	30.0	1750
8	8.55 ft^2 cold leg guillotine break (pump suction).	0.1	1190

Notes: Maximum speed is for the pump in the broken line.
Pump trip time is seconds after the break.

1.2 Leak Before Break (LBB) Considerations

Subsequent to the analyses of References 2 and 3, 10 CFR Part 50 Appendix A General Design Criterion 4 was revised to allow exclusion of dynamic effects associated with postulated pipe ruptures, including the effects of missiles, pipe whip, and discharging fluids from the design basis, when analyses reviewed and approved by the NRC demonstrate that the probability of fluid system rupture is extremely low under conditions consistent with the design basis for the piping. This is commonly referred to as leak-before-break (LBB) licensing. Since that time, all domestic Westinghouse and Babcock and Wilcox designed PWR plants have qualified for LBB exclusion of the primary loop double ended guillotine LOCA.

Given that a plant has LBB exclusion for the main loop LOCA, the largest break required to be postulated under the structural design basis becomes that of the largest branch line. The largest branch lines not covered by the LBB exclusion would be 14" schedule 140 or 160 piping (0.72 ft^2 break area, maximum), typically the accumulator line in the cold leg piping. Such a break may be treated as the equivalent of a 0.72 ft^2 longitudinal split break in the primary loop piping.

Westinghouse Plants

As shown in Table 1-1, the smallest breaks examined were 3.0 ft^2 and 0.5 ft^2 longitudinal split breaks (Cases 10 and 11). The 3.0 ft^2 split break would bound the largest branch line break not covered by the LBB exclusion (0.72 ft^2) with respect to the effect on the RCP speed. From Reference 2, it is apparent that with or without RCP power, the RCP speed will not exceed 1200 rpm for 3.0 ft^2 or 0.5 ft^2 longitudinal split breaks for the model 93A 6000 hp RCP described in Reference 2.

Reference 2 concluded that the increase in RCP speed due to the 3.0 ft^2 area split break was less than 11 rpm over the normal operating speed of 1189 rpm, or less than 1%. Given that the Reference 2 analysis shows that the RCP speed increase is less than 1% for the 3.0 ft^2 longitudinal breaks area, and that the maximum credible break under LBB is less than 1/4 of that size, it is concluded that any RCP speed increase resulting from a branch line break will be well within the design RCP speed tolerance of 25%, i.e., 1.25 times the design speed of 1200 rpm, or 1500 rpm, with or without the dynamic braking effects from the RCP being energized. No known non-LOCA events which lead to RCP speedup would be more limiting than the above mentioned pipe break with respect to overspeed. (Further studies extended this conclusion to a range of RCP designs including 63A (4000 hp), 93 (6000 hp), 93A (6000 hp), 93A (7000 hp) and 100 (8000 hp). Note that RCP rotational inertia is a plant specific parameter. The above conclusion for RCP applicability is only valid for the range of pump rotational inertias from 45000 to 123000 lb_m-ft^2. As shown in the next section, all Westinghouse flywheels meet this criterion. Therefore, a peak LOCA speed of 1500 rpm is used in the evaluation of Westinghouse RCP flywheel integrity in this report.

Babcock and Wilcox Plants

As shown in Table 1-2, the smallest breaks examined were 5.0 ft^2, 3.0 ft^2, and 1.0 ft^2 split breaks (Cases 3, 4 and 5). The 1.0 ft^2 split break would bound the largest branch line break not covered by the LBB exclusion (0.72 ft^2) with respect to the effect on the RCP speed. From Reference 3, the RCP speed will not exceed 1200 rpm for 1.0 ft^2 split breaks, with the effects of electrical braking. Although calculations were not specifically performed to determine the effect of excluding electrical braking effects, the Babcock and Wilcox pumps

are similar in design to Westinghouse pumps, where the effect of electrical braking was found to be very small on the small break sizes of interest. (As noted for typical Westinghouse pressurized water reactors, a loss of RCP drive power due to electrical faults in the 30 second time interval following a large area break LOCA is an event of extremely low probability, in the range of 3.0×10^{-7}). Therefore, a peak LOCA speed of 1500 rpm is used in the evaluation of Babcock and Wilcox RCP flywheel integrity in this calculation.

1.3 Report Purpose

The purpose of this report is to provide an engineering basis for the elimination of RCP flywheel inservice inspection requirements for all operating domestic Westinghouse plants and the following Babcock and Wilcox plants:

- Crystal River Unit 3
- Oconee Units 1, 2 and 3
- Davis Besse
- Three Mile Island Unit 1

Three complimentary approaches will be used to demonstrate that flywheel inspection may be safely eliminated. A study of the inspection techniques and a summary of inspection results to date shows no indications have been found which affect flywheel integrity (see Section 3.) A stress and fracture evaluation has shown that very large flaws are needed to cause a failure under maximum overspeed conditions (Section 4). Finally, a risk assessment has been completed to directly compare the flywheel failure probabilities with and without further inspections (Section 5).

SECTION 2
DESIGN AND FABRICATION

Reactor coolant pump flywheels consist of one or more large steel discs which are shrunk fit either directly to the RCP motor shaft or to spokes extending from the motor shaft. In the case of two or more flywheel discs, the individual flywheels are bolted together to form an integral flywheel assembly. Each flywheel is keyed to the motor shaft with one or more vertical keyways.

2.1 Flywheel Geometry

The flywheels which are attached directly to the motor shaft typically consist of two flywheel discs which are bolted together and are located above the RCP rotor core. The top and bottom discs typically have the same outer diameter and bore dimensions but different thicknesses. The bottom disc usually has a circumferential notch along the outside diameter bottom surface for placement of antirotation pawls. Typically, each flywheel is keyed to the motor shaft by means of three vertical keyways, positioned at 120° intervals. An example of this type of flywheel is shown in Figure 2-1.

The spoked flywheels consist of an upper and a lower flywheel assembly, above and below the RCP rotor core. The upper flywheel assembly consists of three discs bolted together, with the top disc having a larger outside diameter than the middle and bottom disc. The lower flywheel consists of a single disc, of the same dimensions as the middle and bottom disc of the upper flywheel assembly. There are eight spokes, 2.5 inches thick, extending from and welded to the motor shaft. Each flywheel assembly is keyed to the spokes by means of one keyway. An example of this type of flywheel is shown in Figure 2-2.

For the purpose of the evaluations performed for this report, the larger flywheel outside diameter for a particular flywheel assembly is used, since this is judged to be conservative with respect to stress and fracture. For the flywheels investigated in this report, outer diameters range from 65 to 76.5 inches, bore diameters range from 8.375 to 30.5 inches (the later being the spoked flywheel), and keyway radial lengths range from 0.39 to 1.06 inches.

Most of the flywheels covered by this report are made from A533 Grade B Class 1 or A508 Class 3 steel. Flywheels for the pumps at three plants are made from A516 Grade 70 steel, and those at one plant are made from boiler plate.

A summary of pertinent flywheel parameters is provided in Table 2-1. Plant alpha designations used in Table 2-1 are identified in Table 2-2.

2.2 Material Information

The pump motors for all the Westinghouse plants and many of the Babcock and Wilcox plants were manufactured by Westinghouse. All of the Westinghouse flywheels except Haddam Neck are made of A533 Grade B Class 1 steel. The Haddam Neck flywheels were made of boiler plate steel.

It has not been possible to locate each of the certified material test reports for all of the flywheels, but a sample is contained in Appendix D. It will be helpful to examine the ordering specifications for the Westinghouse flywheel materials. The first specification is dated December 1969, and requires that the nil-ductility transition temperature from both longitudinal and transverse Charpy specimens be less than 10°F. This does not guarantee RT_{NDT} is less than 10°F, but it is highly likely that this is the case.

The Westinghouse equipment specification was changed in January of 1973 to require both Charpy and drop weight tests to ensure that RT_{NDT} is no greater than 10°F.

Even though it is likely that most, if not all, of the flywheels in operation have an RT_{NDT} of 10°F or less, a range of RT_{NDT} values from 10°F to 60°F has been assumed in the integrity evaluations to be discussed later.

Table 2-1: Summary of Westinghouse and Babcock & Wilcox Domestic Flywheel Information

Group	Outer Diam. (Inches)	Bore (Inches)	Keyway Radial Length (Inches)	Pump & Motor Inertia (Lb_m-ft^2)	Material Type	Applicable Plants (Plant Alpha Designation)
1	76.50	9.375	0.937	110,000	SA533B	TGX/THX/Spare
2	75.75	8.375	0.906	82,000	SA533B	PSE[4]/PNJ/Spare
3	75.00	9.375	0.937	95,000	SA533B	CQL; CAE/CBE/CCE/CDE[1]; DAP/DBP/DCP/DDP; GAE/GBE[1]; SAP/Spare; NEU; NAH; CGE/Spare; WAT/Spare; TBX/TCX/Spare; SCP; VRA/VGB/Spare
4	75.00	9.375	0.937	83,000	SA533B	TVA/TEN/Spare
5	75.00	9.375	0.937	82,000	SA533B	ALA/APR/Spare; AEP/AMP/Spare; CWE/COM; DLW/DMW
6	75.00	9.375	0.937	80,000	SA533B	NSP/NRP[3]; WPS[3]
7	75.00	8.375	0.911	82,000	SA533B	INT Spare
8	75.00	8.375	0.906	82,000	SA533B	IPP/INT; PGE/PEG
9	75.00	8.375	0.906	80,000	SA533B	WEP[6]/WIS
10	72.00	16.125	0.906	72,000	SA533B	BOCO/Spare
11	72.00	9.375	0.937	72,700	SA533B	BDAV1[5]
12	72.00	8.375	0.906	80,000	SA533B	RGE[4]
13	72.00	8.375	0.906	70,000	SA533B	CPL/Spare; FPL/FLA/Spare; VPA/VIR[4]
14	65.00	8.375	0.656	45,000	Boiler Plate	CYW[2]
15	72.00	30.50	0.390	70,540	A516	B3MI1[7]
16	65.00	13.800	1.060	70,000	A516	BCRY3

Notes:

1) Spare has a keyway radial length of 0.885".
2) Haddam Neck spare has a keyway radial length of 0.618", and material is SA533B.
3) Spare has a keyway radial length of 0.883".
4) Spare has a keyway radial length of 0.911".
5) Spares have a keyway radial length of 0.942", one spare is of SA508 material.
6) Spare has a keyway radial length of 0.937".
7) Spoked flywheels.

Table 2-2: Plant Alpha Designation Listing

Plant Alpha Designation	Plant
AEP/AMP	D.C. Cook Units 1 and 2
ALA/APR	J.M. Farley Units 1 and 2
CAE/CBE	Byron Units 1 and 2
CCE/CDE	Braidwood Units 1 and 2
CGE	V.C. Summer
CWE/COM	Zion Units 1 and 2
CPL	H.B. Robinson Unit 2
CQL	Shearon Harris
CYW	Haddam Neck
DAP/DBP	McGuire Units 1 and 2
DCP/DDP	Catawba Units 1 and 2
DLW/DMW	Beaver Valley Units 1 and 2
FPL/FLA	Turkey Point Units 3 and 4
GAE/GBE	Vogtle Units 1 and 2
IPP/INT	Indian Point Units 2 and 3
NAH	Seabrook
NEU	Millstone Unit 3
NSP/NRP	Prairie Island Units 1 and 2
PGE/PEG	Diablo Canyon Units 1 and 2
PSE/PNJ	Salem Units 1 and 2
RGE	Ginna
SAP	Wolf Creek
SCP	Callaway
TBX/TCX	Comanche Peak Units 1 and 2
TVA/TEN	Sequoyah Units 1 and 2
TGX/THX	South Texas Units 1 and 2
VGB/VRA	North Anna Units 1 and 2
VPA/VIR	Surry Units 1 and 2
WAT	Watts Bar Unit 1
WEP/WIS	Point Beach Units 1 and 2
WPS	Kewaunee
BCRY3	Crystal River Unit 3
BDAV1	Davis Besse
BOCO1/BOCO2/BOCO3	Oconee Units 1, 2 and 3
B3MI1	Three Mile Island Unit 1

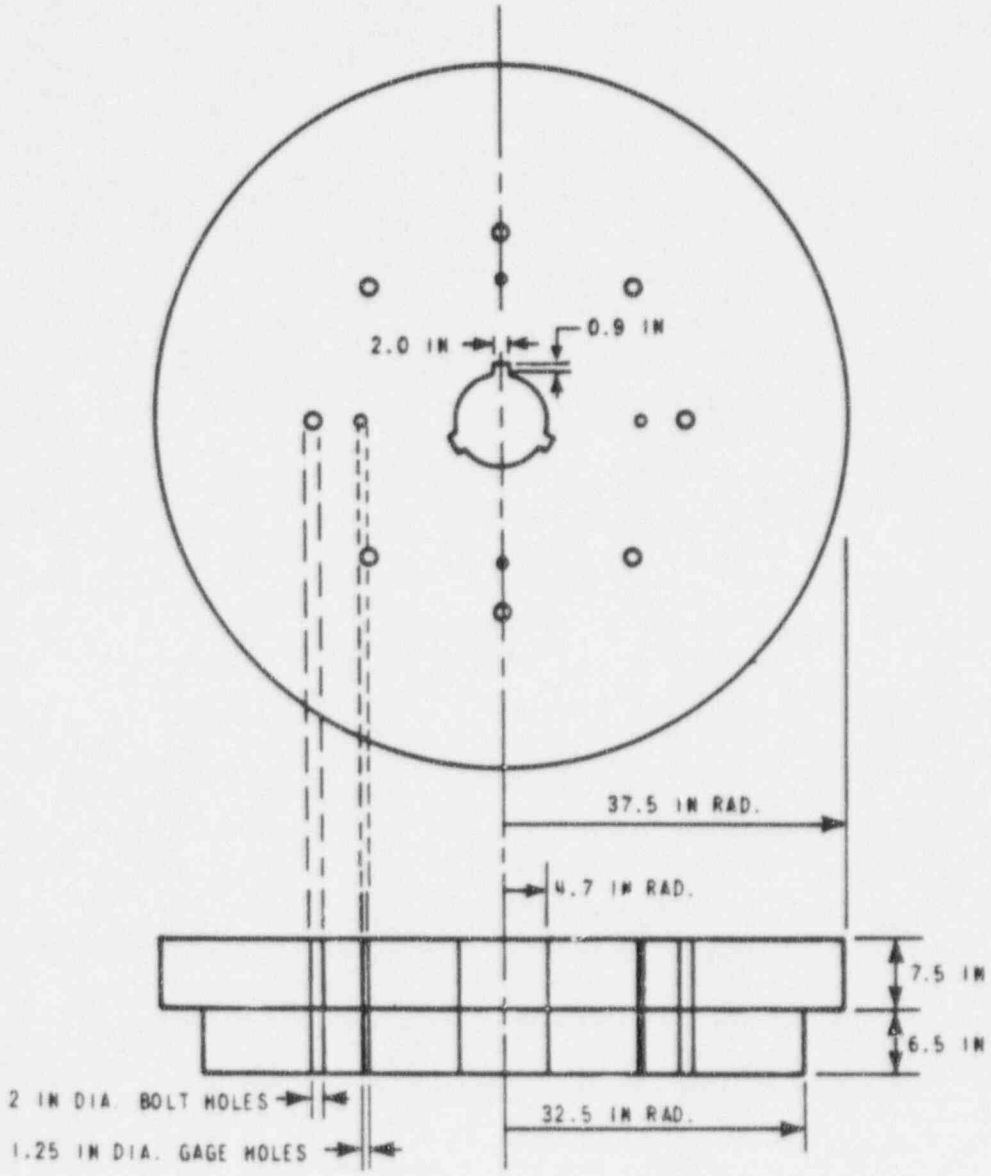

Figure 2-1: Example of a Flywheel which is Attached Directly to the Motor Shaft

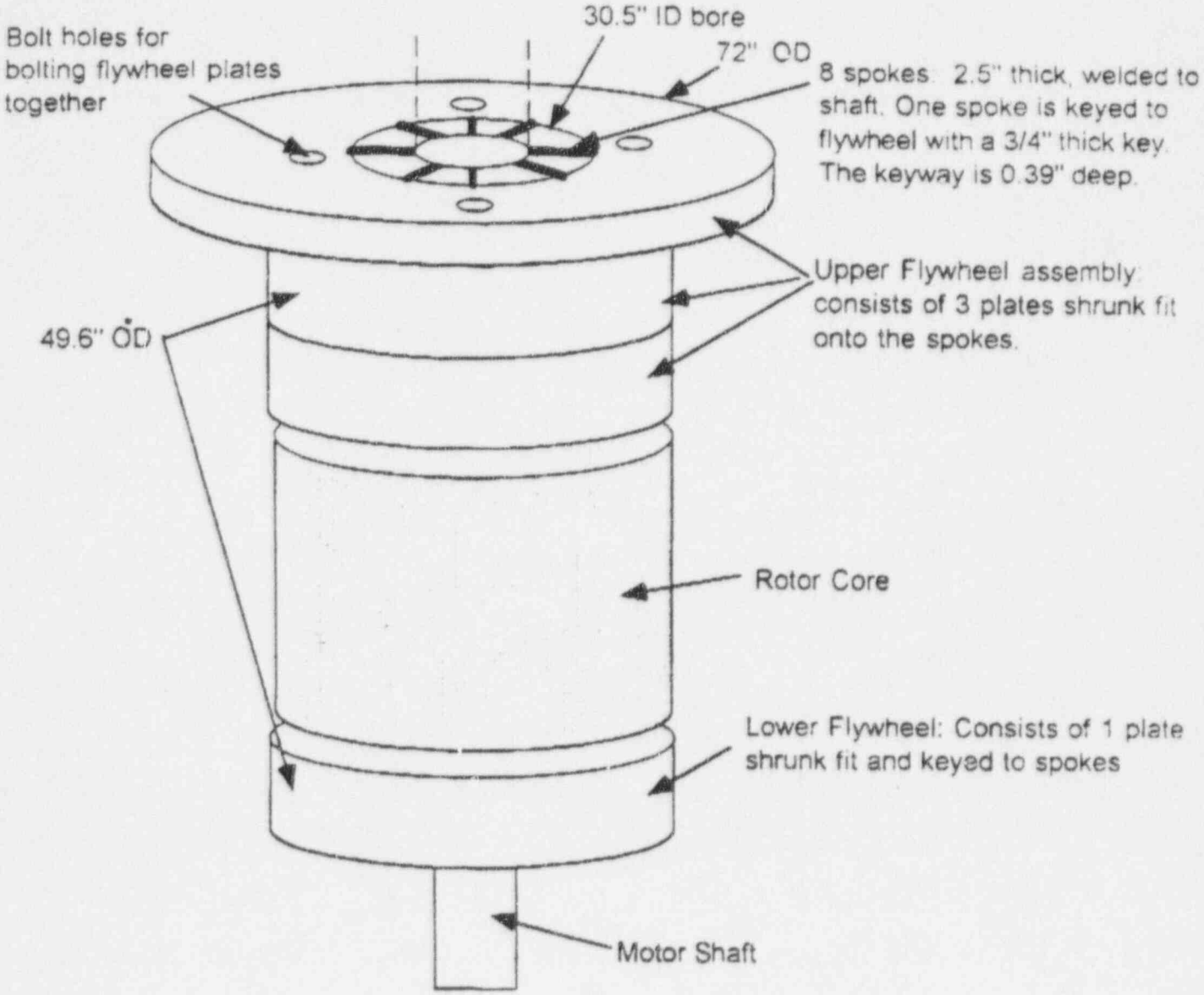

Figure 2-2: Example of a Spoked Flywheel

SECTION 3
INSPECTION

Flywheels are inspected at the plant or during motor refurbishment. Inspections are conducted under Section XI (Reference 4) standard practice for control of instrumentation and personnel qualification. The inspections are conducted by UT level II and level III examiners.

3.1 Examination Volumes

Reactor Coolant pump flywheel examinations are conducted under the control of Utility ISI programs according to surveillance schedules governed by individual Plant Technical Specifications. The volumetric examinations recommended in Regulatory Guide 1.14 have been uniformly applied to the accessible surfaces of the pump flywheel after removal of the shroud cover and gauge hole plugs. The volume of flywheel is inspected generally with straight beam techniques applied laterally, checking the plate material for planar defects emanating from the bore, keyways, and around the gauge holes and ream bolt holes.

3.2 Examination Approaches

Generally, three examinations are performed. The keyway corner exam is conducted by inserting specially designed ultrasonic probes into the gauge holes and directing the sound laterally through the plate material so that reflections are obtained from the center bore radius. Normal reflections will then be seen from the corners of the keyways. These reflections are predictable in distance and rate of occurrence, with abnormalities such as cracking branching out from the keyway being detectable as an abnormal response. A second examination is performed when the sound is projected laterally towards the other remaining gauge holes, for evidence of cracking emanating from the bores of the holes and plate material between the holes. The third examination is commonly referred to as the "Periphery" examination. In this test, standard contact transducers are placed on the outer edges of both upper and lower flywheel plates. The sound is directed laterally into the plate material for examination of the material between the peripheral holes and the plate outer edge.

3.3 Access and Exposure

Access to the exam surfaces is made possible by permanent walkways or by erecting scaffolding. Radiation exposure depends greatly on the amount of pump motor work being conducted nearby and can range from 20-100 millirem/hour.

3.4 Inspection History

A survey was conducted of historical plant inservice inspection results, and all member utilities contributed. The flywheel population surveyed was a total of 217. A total of 729 examination results were reported, and no indications which would affect the integrity of the flywheels were found. These results are summarized on a plant by plant basis in Table 3-1. A summary of recordable indications is provided in Table 3-2. It is interesting to note from Table 3-2 that a number of indications in the form of nicks, gashes, etc. were found at the keyway area, having been created by the act of removing or reassemblying the flywheel. These were all dispositioned as not affecting flywheel integrity, but are clear evidence that disassembly for inspection and reassembly actually can produce damage.

Indications were found at the Haddam Neck plant, in the weld used to join the two flywheel plates together. The indications identified were associated with this seal weld and resulted in no radially oriented cracking, and no impact on the integrity of the flywheels. A detailed summary of this finding is given in Appendix B. Sample flywheel inspection procedures are provided in Appendix C.

Table 3-1: Flywheel Inspection Results

Plant Alpha Designation	Plant	Number of Flywheels	Total Number of Flywheel Inspections	Total Number of Inspections with No Indications or Nonrecordable Indications	Total Number of Inspections with Recordable Indications	Number of Indications Affecting Flywheel Integrity
AEP	Cook 1	4	14	13	1	0
AMP	Cook 2	4	12	12	0	0
ALA	Farley 1	3	17	17	0	0
APR	Farley 2	3	19	19	0	0
CAE/CBE	Byron 1 & 2	8	20	19	1	0
CCE	Braidwood 1	4	13	11	2	0
CDE	Braidwood 2	4	9	8	1	0
CGE	Summer	4	10	10	0	0
CWE	Zion 1	4	10	9	1	0
COM	Zion 2	4	16	16	0	0
CPL	Robinson 2	4	22	20	2	0
CQL	Harris	3	17	17	0	0
CYW	Haddam Neck	4	32	28	4	0
DAP	McGuire 1	4	13	13	0	0
DBP	McGuire 2	4	8	8	0	0
DCP	Catawba 1	4	6	6	0	0
DDP	Catawba 2	4	6	6	0	0
DLW	Beaver Valley 1	3	15	11	4	0
DMW	Beaver Valley 2	3	5	5	0	0
FPL/FLA	Turkey Point 3 and 4	7	36	34	2	0
GAE/GBE	Vogtle 1 and 2	9	19	19	0	0
IPP	Indian Point 2	5	21	21	0	0
INT	Indian Point 3	5	17	17	0	0
NAH	Seabrook	4	8	8	0	0
NEU	Millstone 3	5	12	12	0	0
NSP	Prairie Island 1	2	13	12	1	0
NRP	Prairie Island 2	2	11	10	1	0

Table 3-1: Flywheel Inspection Results (continued)

Plant Alpha Designation	Plant	Number of Flywheels	Total Number of Flywheel Inspections	Total Number of Inspections with No Indications or Nonrecordable Indications	Total Number of Inspections with Recordable Indications	Number of Indications Affecting Flywheel Integrity
PGE	Diablo Canyon 1	4	12	11	1	0
PEG	Diablo Canyon 2	4	11	11	0	0
PSE/PNJ	Salem 1 and 2	9	24	13	11	0
RGE	Ginna	3	21	21	0	0
SAP	Wolf Creek	4	13	12	1	0
SCP	Callaway	4	11	11	0	0
TBX	Comanche Peak 1	4	8	8	0	0
TCX	Comanche Peak 2	4	4	4	0	0
TVA/TEN	Sequoyah 1 and 2	9	37	36	1	0
TGX	South Texas 1	4	12	12	0	0
THX	South Texas 2	4	12	12	0	0
VGB/VRA	North Anna 1 and 2	7	37	33	4	0
VPA/VIR	Surry 1 and 2	7	17	17	0	0
WAT	Watts Bar 1	4	4	2	2	0
WEP	Point Beach 1	2	12	12	0	0
WIS	Point Beach 2	2	13	13	0	0
WPS	Kewaunee	3	6	5	1	0
BCRY3	Crystal River 3	4	30	30	0	0
BDAV1	Davis Besse	5	24	22	2	0
BOCO1	Oconee 1	4	6	6	0	0
BOCO2	Oconee 2	4	2	2	0	0
BOCO3	Oconee 3	4	3	3	0	0
B3MI1	Three Mile Island 1	4	9	9	0	0
TOTALS	57	217	729	686	43	0

Table 3-2: Summary of Recordable Indications

Plant Alpha Designation	Year	Description of Recordable Indications
AEP	1987	Surface examination on RCP flywheel no. 13 showed two 3/8" long recordable indications. Surface chatter removed by minor surface reconditioning.
CAE/CBE	1993	0.45" rounded indication in RCP flywheel 1B keyway area (surface exam) characterized as minor tool mark.
CCE	1991	PT indications on RCP "A" flywheel were acceptable.
	1994	Indications noted on RCP "B" flywheel with PT and VT-1 were resurfaced and found to be acceptable.
CDE	1994	Four 1/16" rounded indications noted in various areas located approximately 0.8" below top surface of RCP "C" flywheel. One linear indication noted (circ. oriented). Indications were acceptable.
CWE	1986	PT recordable indication in loop 1 RCP flywheel, bleed out from gouges and metal folds in keyways.
CPL	1984	PT recordable indication on RCP "C" flywheel bore was filed out and reexamined.
	1992	Gouge on spare flywheel blended out to 3 to 1 taper.
DLW	1980	PT indication, unsatisfactory mechanical damage from removal of RCP "B" flywheel. Grinding repaired condition.
	1987	PT recordable indication dispositioned as satisfactory for RCP "A" flywheel. Damage from handling.
	1993	UT recordable indication in RCP "B" flywheel due to geometry, dispositioned as satisfactory. PT recordable indication due to handling, dispositioned as satisfactory.
	1994	UT recordable indication in RCP "C" flywheel due to geometry, dispositioned as satisfactory.
FPL/FLA	1974	Laminations midwall (UT) in motor 1S-76P499 flywheel accepted as-is.
	1993	Torn metal in keyway (PT) on motor 2S-76P499 flywheel removed by buffing.
NSP	1994	MT of flywheel no. 11 periphery (0.4 inch) to be re-examined in January 1996 outage.
NRP	1995	MT indications in periphery of flywheel no. 21 (which were buffed in 1993) were found to be unchanged.
PGE	1995	Multiple MT linear indications (laminations) on lower periphery of RCP 1-4 flywheel, accept as-is, monitor.
PSE/PNJ	1983-1995	Eleven recorded indications from surface examinations on seven flywheels were identified as minor chatter marks in keyway from original rough machine cuts due to the arbor tool used during manufacture. Accept as is.

Table 3-2: Summary of Recordable Indications (Continued)

Plant Alpha Designation	Year	Description of Recordable Indications
SAP	1995	Wear marks on bottom surface of RCP 1 flywheel within seal ring (circular like spacer wear) - removed.
TVA/TEN	1993	Recorded indications (10 year MT) in flywheel 3S-81P352. Laminations in edge, dispositioned as acceptable.
VGB/VRA	1983	Tool marks noted in keyway of flywheel 2S-81P355.
	1986	Four PT indications in the keyway of flywheel 3S-81P355 caused by incorrect installation.
	1988	Six reportable indications from keyway scratches in flywheel 3S-81P777.
	1993	Three acceptable rounded indications in the keyway of flywheel 2S-81P777.
WAT	1986	PT recorded indication in keyway area of RCP 1 flywheel resulted from tool chatter which occurred during manufacture of the flywheel. The indications were formed by the tearing and smearing of the raised metal (introduced by the tool chatter) at disassembly and reassembly of the keys.
	1986	VT recorded indication in keyway area of RCP 4 flywheel.
WPS	1976	Visual recorded indication in RCP "A" flywheel. Machine chips in five small holes in center of shaft.
BDAV1	1975	Volumetric preservice indication in RCP 2 flywheel found to be acceptable. Surface tears in keyway removed by surface conditioning.
	1988	Surface gouges in bore of RCP 4 flywheel from flywheel removal found to be acceptable.
CYW	1971	See Appendix B.

SECTION 4
STRESS AND FRACTURE EVALUATION

All of the flywheels were subjected to a detailed stress and fracture evaluation, which is summarized in this section. To avoid repetition, the flywheels were grouped by geometry, and the logic for this grouping is explained in Section 4.1. There are two possible failure mechanisms, ductile and brittle, which must be considered in flywheel evaluation and these are discussed in detail in evaluations reported earlier (References 2 and 3). Figure 4-1 shows the results of a typical flywheel overspeed evaluation, where the flywheel failure speed was calculated for a range of postulated crack depths. Note that the brittle failure limit governs for large flaws. The limiting speed increases for small flaws. Using brittle fracture considerations alone, the limiting speed would approach infinity for vanishingly small flaws. For these situations, the ductile failure limit governs, a finding that has been proven by scale model tests whose results are reported in Reference 2.

Regulatory Guide 1.14, Revision 1, Section C, Subsection 2 (see Appendix A, or Reference 1), provides the following regulatory position for flywheel design:

a. *The flywheel assembly, including any speed-limiting and antirotation devices, the shaft, and the bearings, should be designed to withstand normal conditions, anticipated transients, the design basis loss-of-coolant accident, and the Safe Shutdown Earthquake loads without loss of structural integrity.*

b. *Design speed should be at least 125% of normal speed but not less than the speed that could be attained during a turbine overspeed transient. Normal speed is defined as synchronous speed of the a.c. drive motor at 60 hertz.*

c. *An analysis should be conducted to predict the critical speed for ductile failure of the flywheel. The methods and limits of paragraph F-1323.1(b) in Section III of the ASME Code are acceptable. If another method is used, justification should be provided. The analysis should be submitted to the NRC staff for evaluation.*

d. *An analysis should be conducted to predict the critical speed for nonductile failure of the flywheel. Justification should be given for the stress analysis method, the estimate of flaw size and location, which should take into account initial flaw size and flaw growth in service, and the values of fracture toughness assumed for the material. The analysis should be submitted to the NRC staff for evaluation.*

e. An analysis should be conducted to predict the critical speed for excessive deformation of the flywheel. The analysis should be submitted to the NRC staff for evaluation. (Excessive deformation means any deformation such as an enlargement of the bore that could cause separation directly or could cause an unbalance of the flywheel leading to structural failure or separation of the flywheel from the shaft. The calculation of deformation should employ elastic-plastic methods unless it can be shown that stresses remain within the elastic range).

f. The normal speed should be less than one-half of the lowest of the critical speeds calculated in regulatory positions C.2.c, d, and e above.

g. The predicted LOCA overspeed should be less than the lowest of the critical speeds calculated in regulatory positions C.2.c, d, and e above.

These guidelines will be reviewed in this section, for all the flywheels covered by this report, and the results tabulated.

4.1 Selection of Flywheel Groups for Evaluation

From the flywheel dimensional information provided in Table 2-1 of this report, six flywheel groups were selected for evaluation, which encompass the range of domestic flywheel dimensions covered by this report. These groups are as follows:

Table 4-1: Flywheel Groups Evaluated

Flywheel Group	Outer Diameter (Inches)	Bore (Inches)	Keyway Radial Length (Inches)	Comments
1	76.50	9.375	0.937	Maximum flywheel OD.
2	75.75	8.375	0.906	Large flywheel OD, Minimum flywheel bore.
10	72.00	16.125	0.906	Large flywheel OD, Large flywheel bore.
14	65.00	8.375	0.656	Minimum flywheel OD, Minimum flywheel bore.
15	72.00	30.500	0.390	Maximum flywheel bore (spoked flywheel), Minimum keyway radial length.
16	65.00	13.800	1.060	Minimum flywheel OD, Maximum keyway radial length.

4.2 Ductile Failure Analysis

The capacity of a structure to resist ductile failure with sufficient margin of safety during faulted conditions can be demonstrated by meeting the faulted condition criteria of Section III of the ASME Boiler and Pressure Vessel Code. The faulted condition stress limits for elastic analysis, P_m and $P_m + P_b$, are taken as 0.7 S_u and 1.05 S_u, where S_u is the minimum specified ultimate tensile stress of the material. As in Reference 2, 80 ksi was used for S_u, which is the minimum specified value for A-533 Grade B, Class 1 steel. The stresses in the RCP flywheel, neglecting local stress concentrations such as holes and keyways, can be calculated by the following equations (Reference 2):

$$\sigma_r = \frac{(3+\nu)}{8} \frac{\rho\omega^2}{386.4} \left(b^2 + a^2 - \frac{a^2 b^2}{r^2} - r^2 \right)$$

$$\sigma_\theta = \frac{(3+\nu)}{8} \frac{\rho\omega^2}{386.4} \left[b^2 + a^2 + \frac{a^2 b^2}{r^2} - \left(\frac{1+3\nu}{3+\nu} \right) r^2 \right]$$

where σ_r = radial stress, psi
σ_θ = circumferential, or hoop stress, psi
ν = Poisson's ratio, 0.3
ρ = flywheel material density, 0.283 $lb_m/inch^3$
ω = flywheel angular speed, radians/second
b = flywheel outer radius, inches
a = flywheel bore radius, inches
r = flywheel radial location of interest, inches

Since the stress in the thickness direction (σ_z) is assumed to be negligible, and the radial stress (σ_r) always falls between σ_z and σ_θ, the maximum stress intensity at any point in the flywheel is equal to the circumferential stress, σ_θ. It should be noted that the circumferential stress peaks at the flywheel bore and keyway locations and decreases approximately linearly thereafter in the radial direction. To apply the faulted stress limits to a nonlinear stress

distribution, the actual stress distribution must be resolved into its membrane and bending components:

$$P_m = \frac{1}{(b-a)} \int_a^b \sigma_\theta \, dr$$

$$P_b = \frac{6}{(b-a)^2} \int_a^b \sigma_\theta \, (r_m - r) \, dr$$

where r_m is the flywheel mean radius defined as (a + b) / 2. Substituting the circumferential stress term shown above and carrying out the integrations yields

$$P_m = \left(\frac{3+\nu}{8}\right) \frac{\rho \omega^2}{386.4\,(b-a)} (b^3 - a^3) \left[1 - \frac{1}{3}\left(\frac{1+3\nu}{3+\nu}\right)\right]$$

$$P_b = \left(\frac{3+\nu}{8}\right) \frac{6\,\rho \omega^2}{386.4\,(b-a)^2} \left[\frac{b^4}{12}\left(\frac{1+3\nu}{3+\nu}\right) + \frac{b^3 a}{2}\left[1 - \frac{1}{3}\left(\frac{1+3\nu}{3+\nu}\right)\right]\right.$$

$$\left. - a^2 b^2 \ln\left(\frac{b}{a}\right) - \frac{b\,a^3}{2}\left[1 + \frac{1}{3}\left(\frac{1+3\nu}{3+\nu}\right)\right] - \frac{a^4}{12}\left(\frac{1+3\nu}{3+\nu}\right)\right]$$

As was performed in the Reference 2 evaluation, a ductile failure limiting speed was determined for each flywheel group selected for evaluation, assuming that cracks are not present and neglecting the local stress effects from holes and keyways. Limiting speeds were also calculated considering the reduced cross sectional area resulting from the keyway, and from assuming that cracks may be present. Cracks were assumed to emanate radially from the keyway, through the full thickness of the flywheel. The results of these calculations are provided in the following table.

Table 4-2: Ductile Failure Limiting Speed (rpm)

Flywheel Group	Assuming No Cracks		Crack Length (from Keyway)			
	Neglecting Keyway Radial Length	Considering Keyway Radial Length	1" Crack	2" Crack	5" Crack	10" Crack
1	3487	3430	3378	3333	3240	3012
2	3553	3493	3435	3386	3281	3060
10	3503	3471	3443	3398	3238	2990
14	4086	4032	3961	3903	3768	3448
15	3175	3155	3105	3056	2915	2698
16	3900	3850	3815	3760	3565	3264

Per Regulatory Guide 1.14, Revision 1, Section C, item 2f, the normal speed should be less than one-half of the lowest of the critical speeds as calculated for ductile failure, nonductile failure and excessive deformation. At the minimum calculated limiting speed of 3155 rpm (assuming cracks are not present), the normal speed must be less than 1577 rpm. Since the normal operating flywheel speed is 1200 rpm, item 2f of the Regulatory Guide is satisfied for ductile failure with no cracks present. Assuming that a rather large crack of 10" depth is present, item 2f is still satisfied for ductile failure since one-half of the lowest calculated critical speed (2698 rpm) is 1349 rpm, which is higher than the normal operating flywheel speed of 1200 rpm.

Per item 2g of Section C of the Regulatory Guide, the predicted LOCA overspeed should be less than the lowest of the critical speeds calculated for ductile failure, nonductile failure and excessive deformation. Since the predicted LOCA overspeed is in all cases less than 1500 rpm, and the minimum calculated limiting velocity for ductile failure is 3155 rpm, item 2g of the Regulatory Guide is satisfied for ductile failure, assuming no cracks are present. Assuming that a rather large crack of 10" length is present, item 2g is still satisfied for ductile failure since the lowest calculated critical speed (2698 rpm) is higher than the LOCA overspeed of 1500 rpm

Therefore, the Regulatory Guide acceptance criteria for ductile failure of the flywheels are satisfied.

4.3 Nonductile Failure Analysis

As provided in Reference 2, an approximate solution for the stress intensity factor for a radial full depth crack emanating from the bore of a rotating disk may be calculated by the following equations (Reference 5):

$$K_I = \frac{\rho\omega^2}{386.4}\, b^{5/2}\, \phi \left[\frac{\pi\left(\frac{c}{b}-\frac{a}{b}\right)}{(1-\nu^2)}\right]^{1/2}$$

$$\phi = \frac{(3+\nu)}{32}\left[3\left(1+\frac{a^2}{b^2}\right)+3\left(\frac{a}{b}\right)\left(\frac{b}{c}\right)+\left(1+\frac{a}{b}+\frac{a^2}{b^2}\right)\frac{\left(1-\frac{a}{b}\right)}{\left(1-\frac{c}{b}\right)}\right]$$

$$-\left(\frac{1+3\nu}{32}\right)\left[\frac{\left(\frac{c}{b}\right)^3-\left(\frac{a}{b}\right)^3}{\left(\frac{c}{b}-\frac{a}{b}\right)}+\frac{1}{3}\,\frac{\left(1-\frac{a}{b}\right)^3}{\left(1-\frac{c}{b}\right)}\right]$$

where	ρ	=	flywheel material density (lb_m per cubic inch)
	ω	=	flywheel angular speed (radians per second)
	b	=	flywheel outer radius (inches)
	a	=	flywheel inner radius (inches)
	c	=	radial location of crack tip (inches)
	ν	=	Poisson's ratio (0.3)

In the Reference 2 analysis, the keyway radial length was initially assumed to be included as part of the total crack length for conservatism. Using the closed form solution, a nonzero value of stress intensity was obtained for a zero crack length (i.e., c = a + keyway radial length), as would be expected, since the keyway itself was in essence considered to be a crack. To eliminate this undue conservatism for short crack lengths, finite element analysis was performed. It was shown that cracks emanating from the center of the keyway yielded higher stress intensity factors than cracks emanating from the keyway corner, and that a zero length crack resulted in a zero stress intensity factor. The finite element analysis results were in close agreement with the closed form solution for crack lengths larger than about 1.0 inch. It was also shown in the Reference 2 analysis that the ductile failure mode controls for smaller crack lengths (less than 1.15 inches for the particular flywheel evaluated), and that

nonductile failure controls for larger crack lengths. Therefore, the closed form solution was used for calculation of the stress intensity factors in this report, keeping in mind that it is overly conservative for small cracks. (However, small cracks are controlled by the ductile failure mode).

To envelope the range of RT_{NDT} values for the flywheel materials, an upper and lower bound value of 0°F and 60°F were used in this report. The lower bound fracture toughness for ferritic steels was calculated by the following equation (Reference 4):

$$K_{IC} = 33.2 + 20.734 \exp[0.02 (T - RT_{NDT})]$$

This resulted in fracture toughness values of 117 ksi √inch and 58.5 ksi √inch for RT_{NDT} values of 0°F and 60°F, respectively, at an ambient temperature of 70°F. The ambient temperature used for the fracture evaluation represents a much lower temperature than would be expected in the containment building during normal plant operating conditions (typically 100°F to 120°F), and is therefore conservative with respect to nonductile failure analysis.

At the maximum flywheel overspeed condition of 1500 rpm, the following critical crack lengths were calculated for cracks emanating radially from the keyway. Note that an intermediate RT_{NDT} value of 30°F (K_{IC} = 79.3 ksi √inch) is included in the table.

Table 4-3: Critical Crack Lengths for Flywheel Overspeed of 1500 rpm

Flywheel Group	Critical Crack Length in Inches and % through Flywheel		
	RT_{NDT} = 0°F	RT_{NDT} = 30°F	RT_{NDT} = 60°F
1	16.6" (50%)	7.7" (24%)	3.1" (9%)
2	17.5" (53%)	8.5" (26%)	3.6" (11%)
10	15.1" (56%)	7.5" (27%)	3.3" (12%)
14	20.3" (73%)	14.4" (52%)	8.3" (30%)
15	10.4" (51%)	5.3" (26%)	2.6" (12%)
16	17.2" (70%)	11.4" (46%)	6.0" (24%)

Note: Crack length is measured radially from the keyway, and percentage through flywheel is calculated as the crack length divided by the radial length from the keyway to the flywheel outer radius.

As shown in the above table, the critical crack lengths are quite large, even when considering higher values of RT_{NDT} and a lower than expected operating temperature.

4.3.1 Fatigue Crack Growth

To estimate the magnitude of fatigue crack growth during plant life, an initial radial crack length of 10% of the way through the flywheel (from the keyway to the flywheel outer radius) was conservatively assumed. The fatigue crack growth rate may be characterized in terms of the range of applied stress intensity factor, and is generally of the form (Reference 4):

$$\frac{da}{dN} = C_0 \, (\Delta K_I)^n$$

where da/dN = crack growth rate (inches/cycle)
n = slope of the log (da/dN) versus log (ΔK_I)
C_0 = scaling constant

The fatigue crack growth behavior is affected by the R ratio (K_{min}/K_{max}) and the environment. Reference fatigue crack growth behavior of carbon and low alloy ferritic steels exposed to an air environment is provided by the above equation with n = 3.07 and $C_0 = 1.99 \times 10^{-10}$ S. (S is a scaling parameter to account for the R ratio and is given by $S = 25.72 \, (2.88 - R)^{-3.07}$ where $0 \leq R < 1$. Since the maximum stress intensity range occurs between RCP shutdown (zero rpm) and the normal operating speed of approximately 1200 rpm, the R ratio is zero, and S = 1). The fatigue crack growth rate for the flywheels may therefore be estimated by

$$\frac{da}{dN} = 1.99 \times 10^{-10} \, (\Delta K_I)^{3.07}$$

Assuming 6000 cycles of RCP starts and stops for a 60 year plant life (typical for RCP design including the potential for extended plant life, and conservative for actual operation), the estimated radial crack growth is as shown below:

Table 4-4: Fatigue Crack Growth Assuming 6000 RCP Starts and Stops

FLY-WHEEL GROUP	FLY-WHEEL OD (INCHES)	FLY-WHEEL BORE (INCHES)	KEY-WAY RADIAL LENGTH (INCH)	LENGTH FROM KEYWAY TO OD (INCHES)	ASSUMED INITIAL CRACK LENGTH (INCHES)	ΔK_I (KSI $\sqrt{INCH}$)	CRACK GROWTH AFTER 6000 CYCLES (INCH)
1	76.50	9.375	0.937	32.63	3.26	38	0.08
2	75.75	8.375	0.906	32.78	3.28	37	0.08
10	72.00	16.125	0.906	27.03	2.70	35	0.07
14	65.00	8.375	0.656	27.66	2.77	25	0.02
15	72.00	30.500	0.390	20.36	2.04	33	0.05
16	65.00	13.800	1.060	24.54	2.45	28	0.03

As shown in the above table, crack growth is negligible over a 60 year life of the flywheel, even when assuming a large initial crack length.

4.4 Excessive Deformation Analysis

The change in the bore radius (a) and the outer radius (b) of the flywheel at the overspeed condition may be estimated by the following equations (Reference 6):

$$\Delta a = \frac{1}{4} \frac{\rho \omega^2}{386.4} \frac{a}{E} [(3 + \nu) b^2 + (1 - \nu) a^2]$$

$$\Delta b = \frac{1}{4} \frac{\rho \omega^2}{386.4} \frac{b}{E} [(1 - \nu) b^2 + (3 + \nu) a^2]$$

where a = bore radius (inches)
b = outer radius (inches)
ρ = flywheel material density (0.283 lb_m/cubic inch)
ω = flywheel angular speed (radians per second)
E = Young's modulus (30×10^6 psi)
ν = Poisson's ratio (0.3)

At the flywheel overspeed condition of 1500 rpm (157.08 radians/second), the change in the bore radius and the outer radius is calculated as shown below:

Table 4-5: Flywheel Deformation at 1500 rpm

FLYWHEEL GROUP	CHANGE IN BORE RADIUS (INCH)	CHANGE IN OUTER RADIUS (INCH)
1	0.003	0.006
2	0.003	0.006
10	0.005	0.006
14	0.002	0.004
15	0.010	0.009
16	0.004	0.004

As shown in the table above, a maximum flywheel deformation of only 0.010 inches is anticipated for the flywheel overspeed condition. As deformation is proportional to ω^2, this represents an increase of 56% over the normal operating deformation. This increase would not result in any adverse conditions, such as excessive vibrational stresses leading to crack propagation, since the flywheel assemblies are typically shrunk fit to the flywheel shaft, and the deformations are negligible.

4.5 Summary of Stress and Fracture Results

The integrity evaluations presented in this section have shown that the reactor coolant pump flywheels have a very high tolerance for the presence of flaws. The results obtained here are even better than those obtained in earlier evaluations, because the application of leak before break has demonstrated that flywheel overspeed events are limited to less than 1500 rpm.

There are no significant mechanisms for inservice degradation of the flywheels, since they are isolated from the primary coolant environment. Analyses presented in this section have shown there is no significant deformation of the flywheels even at maximum overspeed conditions. Fatigue crack growth calculations have shown that for 60 years of operation, crack growth from large postulated flaws in each of the flywheel groups is only a few mils. Therefore the flywheel inspections completed prior to service are sufficient to ensure their integrity during service. In fact, the most likely source of inservice degradation is damage to the keyway region which could occur during disassembly or reassembly for inspection.

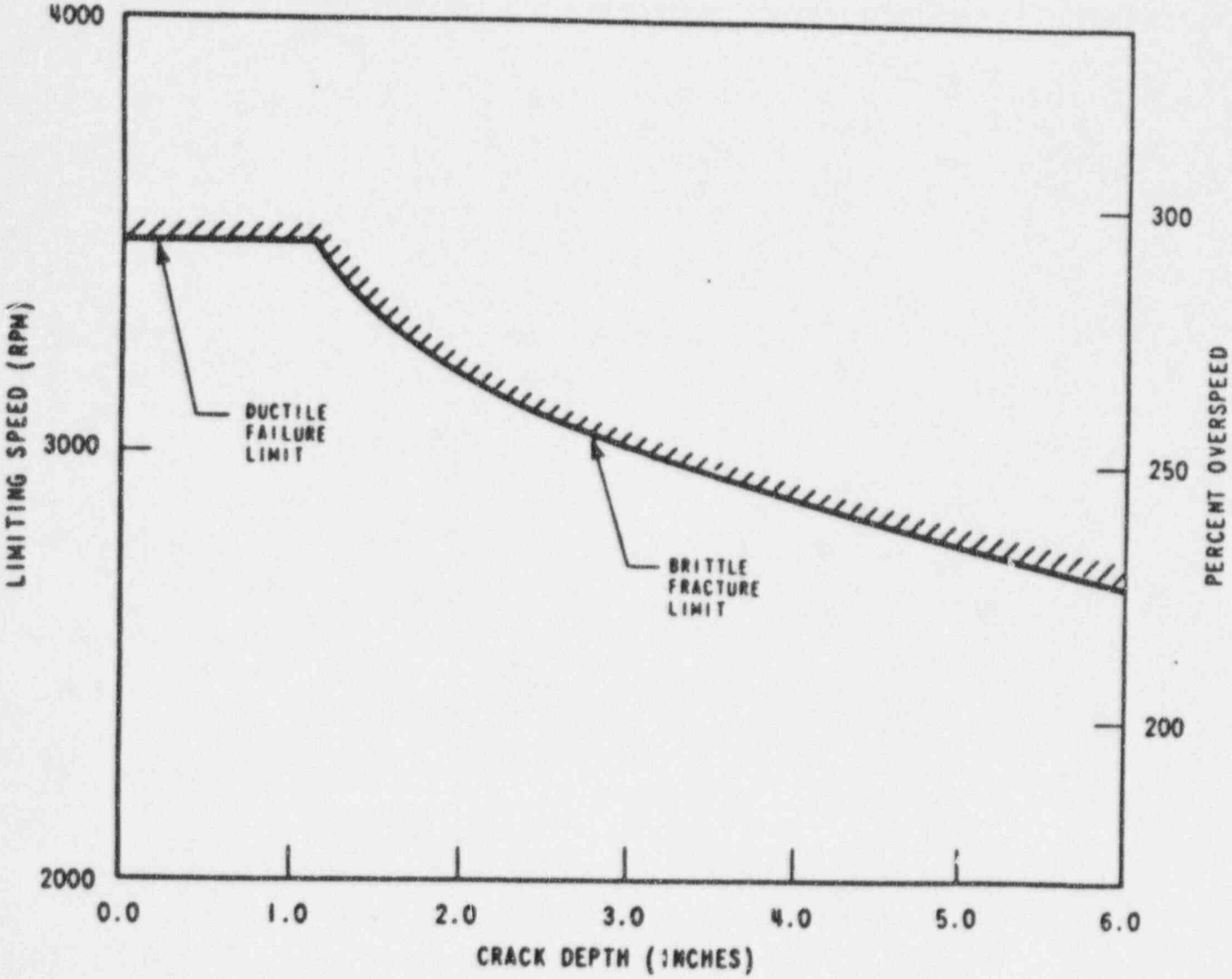

Figure 4-1: Results of a Typical Reactor Coolant Pump Flywheel Overspeed Evaluation

SECTION 5
RISK ASSESSMENT: EFFECT OF INSPECTIONS

To investigate the effect of flywheel inspections on the risk of failure, a structural reliability and risk assessment was performed for each of the flywheel groups selected for evaluation in Section 4. A 40 year plant life including the potential for an extended plant life of 60 years, and 12 month operating cycles were assumed for the evaluation. The following subsections describe the methodology used and the results of this assessment.

5.1 Method of Calculating Failure Probabilities

The probability of failure of the RCP flywheel as a function of operating time t, $Pr(t \leq t_f)$, is calculated directly for each set of input values using Monte-Carlo simulation with importance sampling. The Monte-Carlo simulation does not force the calculated distribution of time to failure to be of a fixed type (e.g. Weibull, Log-normal or Extreme Value). The actual failure distribution is estimated based upon the distributions of the uncertainties in the key structural reliability model parameters and plant specific input parameters. Importance sampling, as described by Witt (Reference 7), is a variance reduction technique to greatly reduce the number of trials required for calculating small failure probabilities. In this very effective technique, random values are selected from the more severe high or low regions of their distributions so as to promote failure. However, when failure is calculated, the count is corrected to account for the lower probability of simultaneously obtaining all of the more severe random values.

To apply this simulation method to reactor pump flywheel (RPFW) failure, the existing Westinghouse PROF (probability of failure) Software System (object library) is combined with the problem-specific structural analysis models described in Section 4.3. The PROF library provides standard input and output, including plotting, and probabilistic analysis capabilities (e.g. random number generation, importance sampling). The result is the executable program RPFWPROF.EXE for calculation of pump flywheel failure probability with time. The failure mode being simulated by the program is an initial flaw, undetected during pre-service inspection, growing by fatigue crack growth due to pump startup and shutdown until a critical length is obtained. The critical length is that which causes the flaw stress intensity factor due to pump overspeed during the design limiting event to exceed the fracture toughness of the flywheel material.

The Westinghouse PROF Software Library, which was used to generate the RPFWPROF program, has been verified and benchmarked in a number of ways. Table 5-1 provides a comparison of probabilities from hand calculation for simple models where the only random variables are the initial and limiting crack depths. The crack growth due to two independent mechanisms is deterministic (variables are constant). As can be seen, the W-PROF calculated values agree very well (less than 4% error) for a number of different distributions and with the effects of importance sampling.

Table 5-1: Simple Verification of Results for Westinghouse PROF Methods

Type of Distribution on Crack Depths (1)	Import. Sampling Shift (2)	Hand Calculated Prob. (3)	W-PROF Calculated Probability	Percent Error
Normal	0.0	0.1003	0.10004	-0.26
Normal	± 1.0	0.1003	0.09889	-1.41
Log-Normal	0.0	0.1003	0.09880	-1.50
Log-Normal	± 1.0	0.1003	0.09652	-3.77
Uniform	0.0	0.1003	0.10393	+3.62
Log-Uniform	0.0	0.1003	0.10018	-0.12
Weibull	0.0	0.0950	0.0934	-1.68

(1) Same type of distribution on the random values of initial crack depth and limiting crack depth.
(2) Median value of initial depth shifted +1 standard deviation and median value of limiting depth shifted -1 standard deviation when importance sampling (Reference 7) is used with less than half the number of trials.
(3) Calculated using stress-strength overlap techniques on crack depth.

The calculation of failure probability using the W-PROF methods and importance sampling was also compared to that calculated by an alternative method for more complex models. The more complex model also included the uncertainties in growth rate, which were also a function of the crack depth. The alternative method was the @RISK add-in for Lotus 1-2-3 spreadsheets (Reference 8). As seen in Figure 5-1, the comparison of calculated probabilities is excellent at the low probability values, where importance sampling is normally used.

In the verification of the simplified piping fracture mechanics (SPFM) structural reliability programs for risk based inspection (Reference 9), the calculated probabilities for thermal transient induced fatigue crack growth were compared with results from the pc-PRAISE program (Reference 10). PRAISE, which was developed by Lawrence Livermore National Laboratory for the NRC, is the nuclear industry's standard for calculating the structural reliability of piping. As shown in Figure 5-2, the comparison of calculated leak probabilities with the number of operating cycles, without the effects of inspection, is excellent for both the SPFMPROF and SPFMSRRA programs. The SPFMSRRA program uses Westinghouse developed approximations to estimate the changes in probability with time due to changes in the input variables relative to a reference case. The reference case is initially calculated using the SPFMPROF Program, which is the same type of program as RPFWPROF.

When the same inservice inspection frequency and accuracy are used, Figure 5-3 shows that essentially the same failure probabilities are calculated by pc-PRAISE, SPFMPROF and SPFMSRRA. Therefore, it is concluded that the Westinghouse methods employed in calculating probabilities with

the RPFWPROF.EXE program have been sufficiently verified and benchmarked for the assessment of pump flywheel failure risk and the effects of inspection.

The input parameters to the RPFWPROF program are described in Table 5-2. Variables 1 to 4 and 9 to 17 are the key input parameters needed for failure probability calculation, as identified in Section 4.3. Their usage in the program is specified as shown in the last column of Table 5-2 and schematically in the flow chart of Figure 5-4. "Initial" conditions do not change with time, "Steady-State" is not needed for RPFWPROF, "Transient" calculates fatigue crack growth and "Failure" checks to see if the accumulated crack length exceeds the critical length.

Table 5-2: Variables for Structural Reliability Model of RCP Flywheel Failure

No.	Name	Description of Input Variable	Usage Type
1	ORADIUS	Outer Flywheel Radius (Inch)	Initial
2	IRADIUS	Inner Flywheel Radius (Inch)	Initial
3	PFE-PSI	Probability of Flaw Existing After Preservice Inspection	Initial
4	ILENGTH	Initial Radial Flaw Length (Inch)	Initial
5	CY1-ISI	Operating Cycle for First Inservice Inspection	Inspection
6	DCY-ISI	Operating Cycles Between Inservice Inspections	Inspection
7	POD-ISI	Flaw Detection Probability per Inservice Inspection	Inspection
8	DFP-ISI	Fraction PFE Increases per Inservice Inspection	Inspection
9	NOTR/CY	Number of Transients per Operating Cycle	Transient
10	DRPM-TR	Speed Change per Transient (RPM)	Transient
11	RATE-FCG	Fatigue Crack Growth Rate (Inch/Transient)	Transient
12	KEXP-FCG	Fatigue Crack Growth Rate SIF Exponent	Transient
13	RPM-DLE	Speed for Design Limiting Event (RPM)	Failure
14	TEMP-F	Temperature for Design Limiting Event (F)	Failure
15	RT-NDT	Reference Nil Ductility Transition Temperature (F)	Failure
16	F-KIC	Crack Initiation Toughness Factor	Failure
17	DLENGTH	Flywheel Keyway Radial Length (Inch)	Failure

Variables 5 to 8 are available to calculate the effects of an inservice inspection (ISI) in the RPFWPROF program. In a Monte-Carlo type simulation, the failure probability at a given time is approximated as the ratio of the number of failures at that time to the total number of trials. For inservice inspections, this ratio is modified to reflect the fact that only those cracks that are not

detected will remain to possibly cause failure. That is, a component with a detected crack is assumed to be repaired or replaced, returning it to a good-as-new condition. This modified ratio for ISI is expressed by the following equation:

$$Pr_f = \underset{n = 1 \text{ to } N}{\text{Summation}} \; [\, Pr_{ND}(n)\, F(n) \,] \,/\, N$$

Where:

Pr_f = the approximate probability of failure,

$Pr_{ND}(n)$ = the ISI non-detection probability for the nth trial,

$F(n)$ = the failure weight for the nth trial
(e.g. 1 if failure occurs and 0 otherwise for no importance sampling), and

N = the total number of trials (simulations).

The non-detection probability normally varies as a function of time since it depends upon the size of the crack at the time the ISI is performed. That is, the larger the crack size, the lower the probability of not detecting it. This is also expressed in equation form for the Ith inservice inspection as:

$$Pr_{ND}(n) = \underset{i = 1 \text{ to } I}{\text{Product}} \; [\, Pr_{ND}(n,t_i) \,]$$

Where:

$Pr_{ND}(n,t_i)$ = the probability of non-detection for the inservice inspection of weld n at time t_i.

These equations, which are used in the simplified model for the effect of ISI, are consistent with those described in the pc-PRAISE Code User's Manual (Reference 10). They are somewhat optimistic since there is no correlation between successive inspections of the same material, which may systematically occur in actual practice. The parameters needed to describe the selected ISI program are the time of the first inspection, the frequency of subsequent inspections (expressed as the number of fuel or operating cycles between inspections) and the probability of non-detection as a function of crack length. For the reactor pump flywheel, the non-detection probability, which is independent of crack length, is simply one minus a constant value of detection probability, variable 7 in Table 5-2. An increase in failure probability due to pump inspection (chance of incorrect disassembly and reassembly) was included in the ISI model but not used (variable 8 set to zero).

The median input values and their uncertainties for each of the parameters of Table 5-2 are shown in Table 5-3. The median is the value at 50% probability (half above and half below this value); it is also the mean (average) value for symmetric distributions, like the normal (bell-shaped curve) distribution. Uncertainties are based upon expert engineering judgement and previous structural

reliability modeling experience. For example, the fracture toughness for initiation as a function of the reference nil-ductility transition temperature and the uncertainties on these parameters are based upon prior probabilistic fracture mechanics analyses of the pressure vessel (Reference 11). Also note that the stress intensity factor calculation for crack growth and failure used the flywheel keyway radial length (variable 17) in addition to the calculated flaw length. This allowed the probabilistic models to be checked using the results of the conservative deterministic evaluations of Tables 4-3 and 4-4.

Table 5-3: Input Values for Structural Reliability Model of RCP Flywheel Failure

No.	Name	Median	Distribution	Uncertainty*
1	ORADIUS	Per Flywheel Group	Constant	
2	IRADIUS	Per Flywheel Group	Constant	
3	PFE-PSI	1.000E-01	Constant	
4	ILENGTH	1.000E-01	Log-Normal	2.153E+00
5	CY1-ISI	3.000E+00	Constant	
6	DCY-ISI	4.000E+00	Constant	
7	POD-ISI	5.000E-01	Constant	
8	DFP-ISI	0.000E+00	Constant	
9	NOTR/CY	1.000E+02	Normal	1.000E+01
10	DRPM-TR	1.200E+03	Normal	1.200E+02
11	RATE-FCG	9.950E-11	Log-Normal	1.414E+00
12	KEXP-FCG	3.070E+00	Constant	
13	RPM-DLE	1.500E+03	Normal	1.500E+02
14	TEMP-F	9.500E+01	Normal	1.250E+01
15	RT-NDT	3.000E+01	Normal	1.700E+01
16	F-KIC	1.000E+00	Normal	1.000E-01
17	DLENGTH	Per Flywheel Group	Constant	

* Note: Uncertainty is either the normal standard deviation, the range (median to maximum) for uniform distributions or the corresponding factor for logarithmic distributions.

Table 5-4 provides sample output from the RPFWPROF Program for the values of the input variables in Table 5-3. The first page of the output describes the input that is used for the calculations. The "SHIFT MV/SD" column indicates how many standard deviations (SD) the median value (MV) is shifted for importance sampling (Reference 7). The second page of the output provides the change in failure probability per fuel (operating) cycle and the cumulative probability. The deviation on the

cumulative total that is output is the deviation due to the Monte-Carlo simulation only. Figure 5-5 shows the computer generated plot comparing the calculated reactor pump failure probabilities with and without the effects of inservice inspection. As can be seen, the effect of ISI, even with a 50% probability of detection, is very small. This is because the failure probability is not changing much with time; therefore, the rate of increase cannot be significantly reduced even for a perfect inspection with 100% probability detection.

Table 5-4: Example Output from the RPFWPROF Program

STRUCTURAL RELIABILITY AND RISK ASSESSMENT (SRRA)

WESTINGHOUSE PROBABILITY OF FAILURE PROGRAM RPFWPROF ESBU-NTD

INPUT VARIABLES FOR CASE 1: REACTOR COOLANT PUMP FLYWHEEL FAILURE

NCYCLE =	60	NFAILS =	1000	NTRIAL =	9999
NOVARS =	17	NUMSET =	4	NUMISI =	4
NUMSSC =	0	NUMTRC =	4	NUMFMD =	5

VARIABLE NO.	NAME	DISTRIBUTION TYPE	LOG	MEDIAN VALUE	DEVIATION OR FACTOR	SHIFT MV/SD	USAGE NO.	SUB
1	ORADIUS	- CONSTANT -		3.6000D+01			1	SET
2	IRADIUS	- CONSTANT -		8.0625D+00			2	SET
3	PFE-PSI	- CONSTANT -		1.0000D-01			3	SET
4	ILENGTH	NORMAL	YES	1.0000D-01	2.1528D+00	1.00	4	SET
5	CY1-ISI	- CONSTANT -		3.0000D+00			1	ISI
6	DCY-ISI	- CONSTANT -		4.0000D+00			2	ISI
7	POD-ISI	- CONSTANT -		5.0000D-01			3	ISI
8	DFP-ISI	- CONSTANT -		0.0000D+00			4	ISI
9	NOTR/CY	NORMAL	NO	1.0000D+02	1.0000D+01	.00	1	TRC
10	DRPM-TR	NORMAL	NO	1.2000D+03	1.2000D+02	1.00	2	TRC
11	RATE-FCG	NORMAL	YES	9.9499D-11	1.4142D+00	1.00	3	TRC
12	KEXP-FCG	- CONSTANT -		3.0700D+00			4	TRC
13	RPM-DLE	NORMAL	NO	1.5000D+03	1.5000D+02	1.00	1	FMD
14	TEMP-F	NORMAL	NO	9.5000D+01	1.2500D+01	-2.00	2	FMD
15	RT-NDT	NORMAL	NO	3.0000D+01	1.7000D+01	2.00	3	FMD
16	F-KIC	NORMAL	NO	1.0000D+00	1.0000D-01	-1.00	4	FMD
17	DLENGTH	- CONSTANT -		9.0600D-01			5	FMD

Table 5-4: Example Output from the RPFWPROF Program (Cont'd.)

PROBABILITIES OF FAILURE MODE: FATIGUE CRACK GROWTH SIF > TOUGHNESS

NUMBER FAILED = 470 NUMBER OF TRIALS = 9999

END OF CYCLE	FAILURE PROBABILITY WITHOUT AND WITH IN-SERVICE INSPECTION FOR PERIOD	CUM. TOTAL	FOR PERIOD	CUM. TOTAL
1.0	9.00777D-08	9.00777D-08	9.00777D-08	9.00777D-08
2.0	1.00713D-08	1.00149D-07	1.00713D-08	1.00149D-07
3.0	8.70982D-11	1.00236D-07	8.70982D-11	1.00236D-07
11.0	3.56616D-11	1.00272D-07	8.91540D-12	1.00245D-07
12.0	9.40206D-13	1.00273D-07	1.17526D-13	1.00245D-07
13.0	2.17369D-11	1.00294D-07	2.71711D-12	1.00248D-07
14.0	4.71179D-10	1.00766D-07	5.88974D-11	1.00307D-07
18.0	2.91939D-10	1.01058D-07	1.82462D-11	1.00325D-07
19.0	1.59524D-09	1.02653D-07	9.97024D-11	1.00425D-07
24.0	6.00973D-12	1.02659D-07	9.39020D-14	1.00425D-07
26.0	2.07667D-11	1.02680D-07	3.24480D-13	1.00425D-07
31.0	1.30332D-09	1.03983D-07	1.01822D-11	1.00435D-07
32.0	2.87692D-11	1.04012D-07	1.12380D-13	1.00435D-07
34.0	1.81125D-11	1.04030D-07	7.07521D-14	1.00435D-07
35.0	1.30472D-10	1.04160D-07	5.09655D-13	1.00436D-07
38.0	1.12340D-10	1.04273D-07	2.19414D-13	1.00436D-07
40.0	2.93218D-11	1.04302D-07	2.86346D-14	1.00436D-07
46.0	8.71264D-11	1.04389D-07	4.25422D-14	1.00436D-07
47.0	1.12251D-10	1.04501D-07	5.48099D-14	1.00436D-07
50.0	7.94921D-11	1.04581D-07	1.94072D-14	1.00436D-07
51.0	5.07795D-12	1.04586D-07	1.23973D-15	1.00436D-07
52.0	2.88193D-12	1.04589D-07	3.51798D-16	1.00436D-07
54.0	4.48702D-10	1.05037D-07	5.47732D-14	1.00436D-07
55.0	1.17426D-11	1.05049D-07	1.43343D-15	1.00436D-07
58.0	9.35600D-11	1.05143D-07	5.71045D-15	1.00436D-07
59.0	2.43375D-11	1.05167D-07	1.48544D-15	1.00436D-07
60.0	0.00000D+00	1.05167D-07	0.00000D+00	1.00436D-07
	DEVIATION ON CUMULATIVE TOTALS =		4.73585D-09	4.63324D-09

Note: Failure probabilities are provided in double precision format (e.g. 4.28172D-08 is 4.28172×10^{-8})

5.2 Evaluation of Risk for RCP Flywheels

Evaluations were performed to determine the effect on the probability of flywheel failure for continuing the current inservice inspections over the life of the plant and for discontinuing the inspections. Since most plants have been in operation for at least ten years, the evaluation calculated the effects of the inspections being discontinued after ten years.

It is important to keep in mind that the probability of failure determined by these evaluations is only a calculated parameter. The reason for this is that the evaluation conservatively assumes that the probability of a flaw existing after preservice inspection is 10%, and that the ISI flaw detection probability is only 50%. In reality, most preservice and ISI flaws would be detected, especially for the larger flaw depths which may lead to failure. Therefore, the calculated values are very conservative. (The effects of some important parameters on the calculated probability of failure are discussed later in Section 5.3). The most important result of the evaluation is the change in calculated probability of failure from continuing to discontinuing the inspections after ten years (cycles) of plant life.

As shown in Figures 5-6 through 5-11, the effect of inservice inspection on failure probability has little effect on minimizing the potential for failure of the flywheel. The results of this assessment are summarized as follows for a plant life of 40 and 60 years:

Table 5-5: Probability of Failure after 40 and 60 Years with and without Inservice Inspection

Flywheel Group	Probability of flywheel failure with ISI prior to and after 10 years	Probability of flywheel failure with ISI prior to 10 years and without ISI after 10 years		% Increase in failure probability for eliminating inspections	
		At 40 years	At 60 years	At 40 years	At 60 Years
1	2.45E-7	2.50E-7	2.57E-7	2	5
2	1.43E-7	1.45E-7	1.47E-7	1	3
10	1.00E-7	1.04E-7	1.05E-7	4	5
14	2.98E-10	2.98E-10	2.98E-10	0	0
15	1.15E-8	1.18E-8	1.22E-8	3	6
16	6.92E-9	7.02E-9	7.02E-9	1	1

It can be seen above that continuing inspection after 10 years has essentially no impact on the failure probabilities.

5.3 Sensitivity Study

A sensitivity study was performed to determine the effect of some important flywheel risk assessment parameters on the probability of failure. Flywheel group 10 was arbitrarily chosen for the study. The parameters evaluated included the probability of detection, the initial flaw length, and the initial flaw length uncertainty. The results of this study are summarized in the table below. Note that this study was performed for a flywheel design life of 40 years.

Table 5-6: Effect of Flywheel Risk Parameters on Failure Probability

Description of flywheel risk parameter varied	Probability of flywheel failure after 40 years with ISI prior to and after 10 years	Probability of flywheel failure after 40 years with ISI prior to 10 years and without ISI after 10 years
Base Case	1.00E-7	1.04E-7
Probability of Detection of 10%	1.03E-7	1.04E-7
Probability of Detection of 80%	1.00E-7	1.04E-7
Initial flaw length of 0.05 inches	4.57E-8	4.74E-8
Initial flaw length of 0.20 inches	2.97E-7	3.01E-7
Ilength 3 Sigma Bound Factor of 3	6.40E-8	6.46E-8
Ilength 3 Sigma Bound Factor of 20	1.94E-7	1.95E-7

The values for the base case, shown in Table 5-6 above are for a 10% probability of a flaw existing after preservice inspection, an initial flaw length of 0.10 inch (1.006 inch with keyway), an initial flaw length (Ilength) 3-sigma bound factor of 10, an initial inservice inspection at three years of plant life and subsequent inspections at four year intervals, and a probability of detection of 50% per inservice inspection (see Table 5-5, flywheel group 10).

The flaw detection probability was varied from 50% to 10% and 80%. Failure probability increased approximately 3% for a decrease in flaw detection probability from 50% to 10%. Failure probability did not change for an increase in flaw detection probability from 50% to 80%. Therefore, flaw detection probability, which is a measure of how well the inspections are performed, has essentially no effect on flywheel failure probability.

The initial flaw length was varied from 0.10 inch to 0.05 inch and 0.20 inches. Failure probability decreased by 54% for a decrease in initial flaw length from 0.10 inch to 0.05 inch. Failure probability tripled for an increase in initial flaw length from 0.10 inch to 0.20 inches. Therefore, initial flaw length does affect flywheel failure probability, but the failure probability is small, even for larger

initial flaw lengths. Moreover, the probability of the larger flaw being missed during preservice inspection would be even smaller than the assumed 10 percent.

The initial flaw length 3-sigma bound factor was varied from 10 to 3 and 20. Failure probability decreased about 38% for a decrease in the 3-sigma bound factor from 10 to 3. Failure probability increased about 90% for an increase in the factor from 10 to 20. Therefore, the uncertainty in the deviation factor does affect flywheel failure probability, but failure probability is still small, even for a higher 3-sigma bound factor of 20.

5.4 Risk Assessment Conclusions

An evaluation of flywheel structural reliability was performed for each of the flywheel groups selected for evaluation in Section 4, using methods which have been sufficiently verified and benchmarked.

Using conservative input values for preservice flaw existence, initial flaw length, inservice flaw detection capability and RCP start/stop transients, it was shown that flywheel inspections beyond ten years of plant life have no significant benefit on the risk of flywheel failure. The reasons for this are that most flaws which could lead to failure would be detected during preservice inspection or at worst early in the plant life, and crack growth is negligible over the plant life. It should be noted that the effect on potential flywheel failure from damage through disassembly and reassembly for inspection has not been evaluated. It is believed that this effect could demonstrate that the risk of failure by continuing flywheel inspections is the same as or greater than the risk by eliminating the inspections.

Sensitivity studies showed that improved flaw detection capability and more inspections result in a small relative change in calculated failure probability. Failure probability was most affected by the initial flaw length and its uncertainty. These parameters are determined by the accuracy of the preservice inspection. The uncertainty could be reduced using the results from the first inservice inspection but would probably not change much during subsequent inspections.

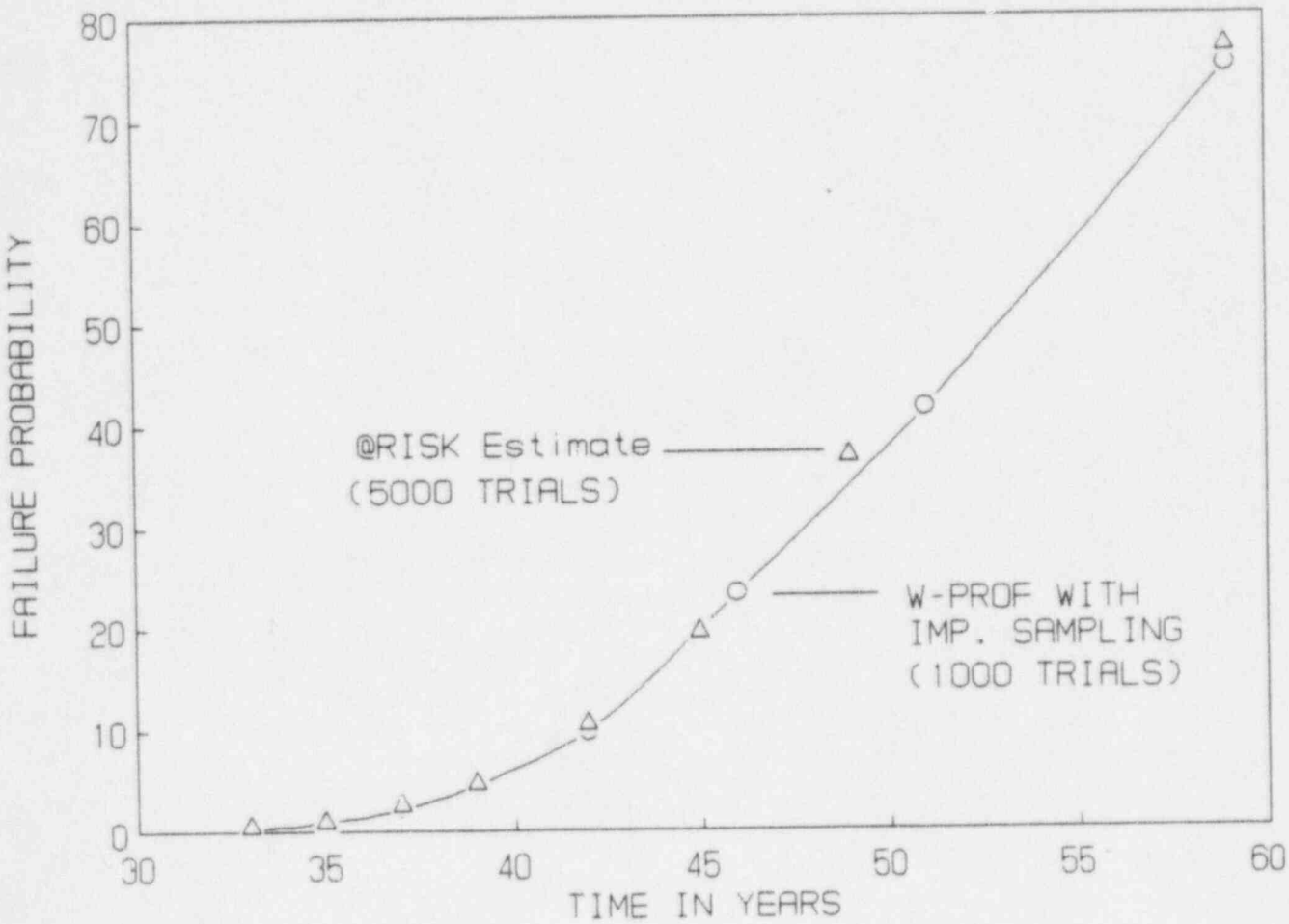

Figure 5-1: Importance Sampling Check of Westinghouse PROF Methods

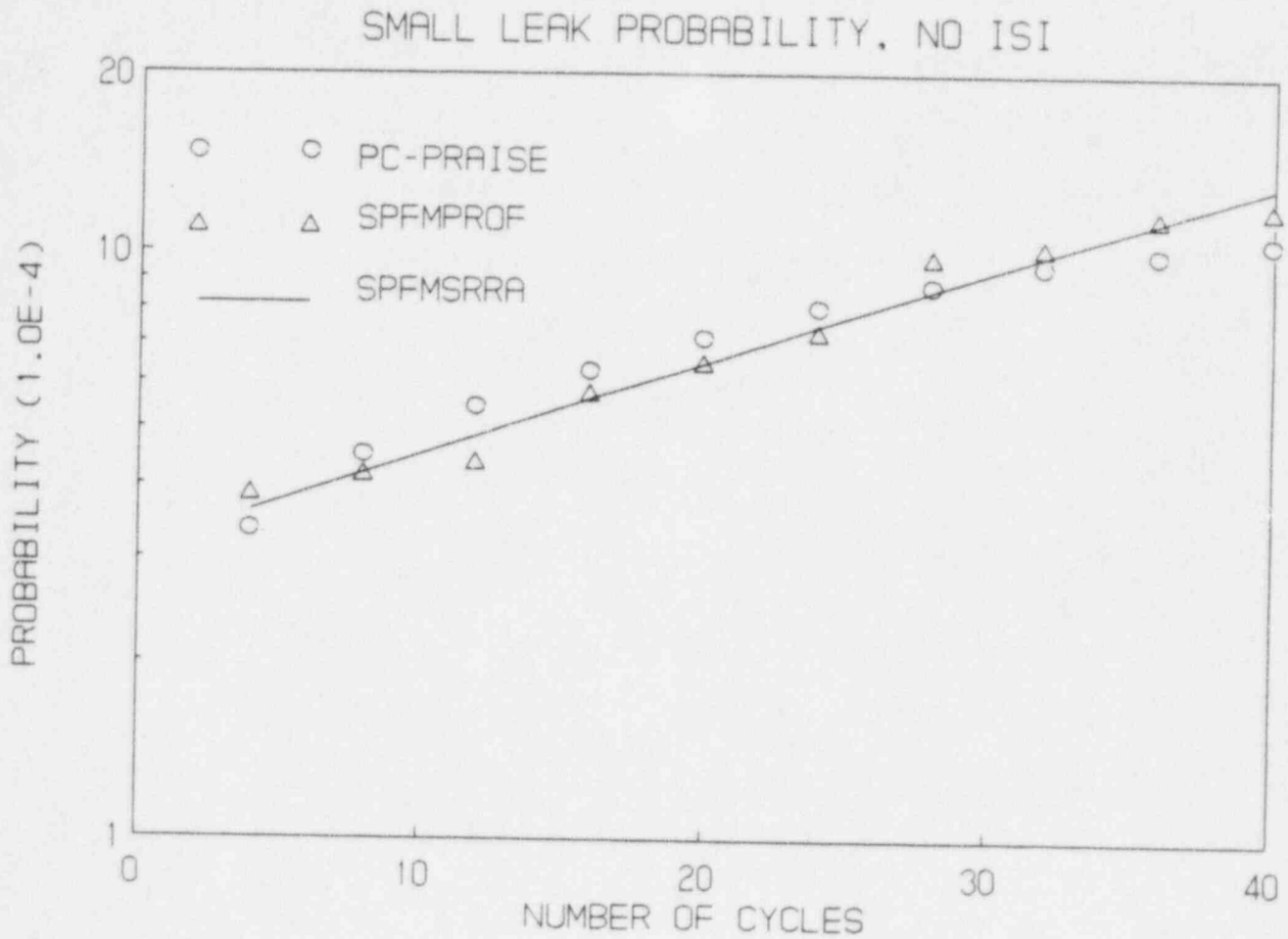

Figure 5-2: Comparison of Leak Probabilities without Inspection

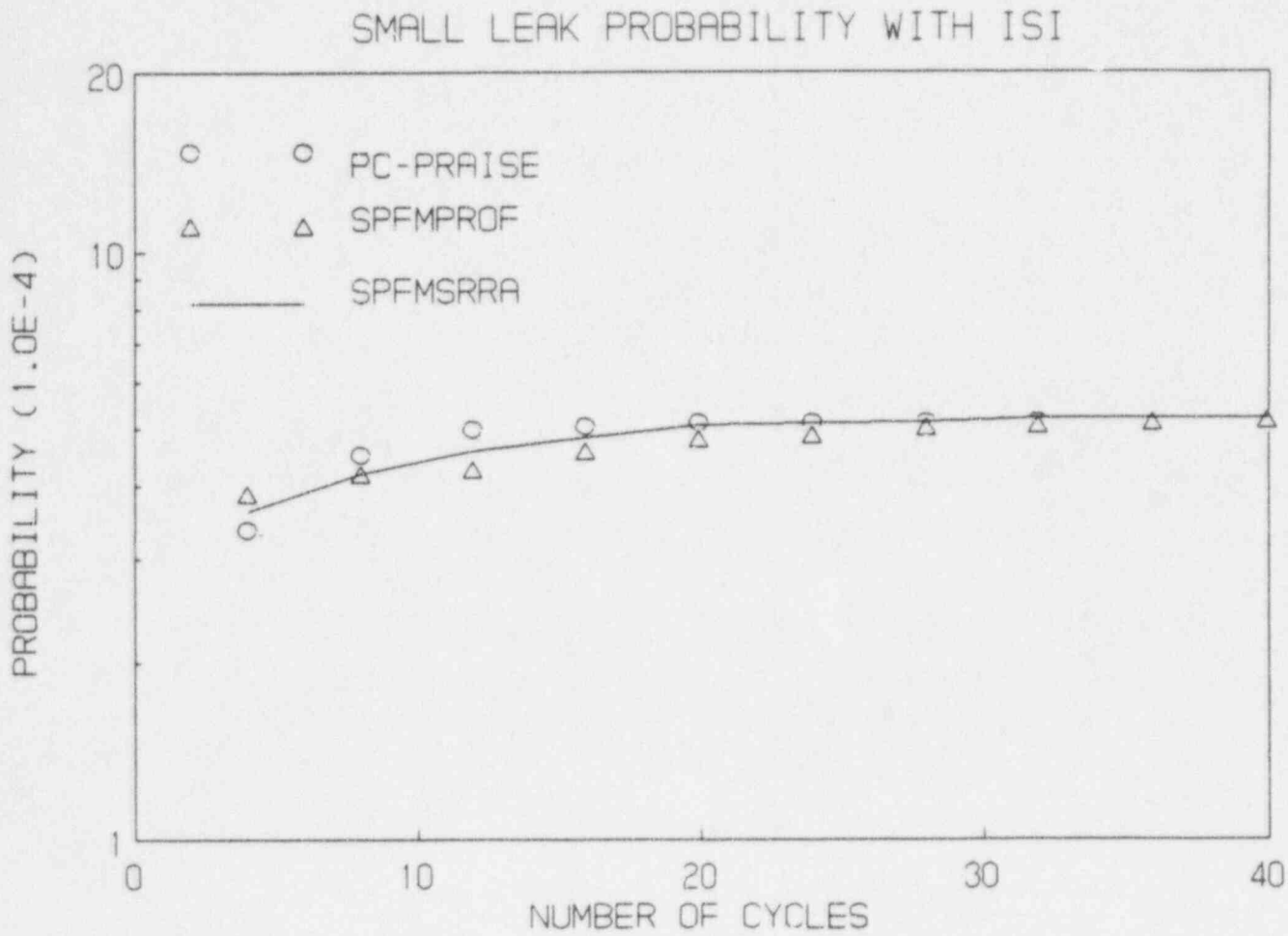

Figure 5-3: Comparison of Leak Probabilities with Inservice Inspection

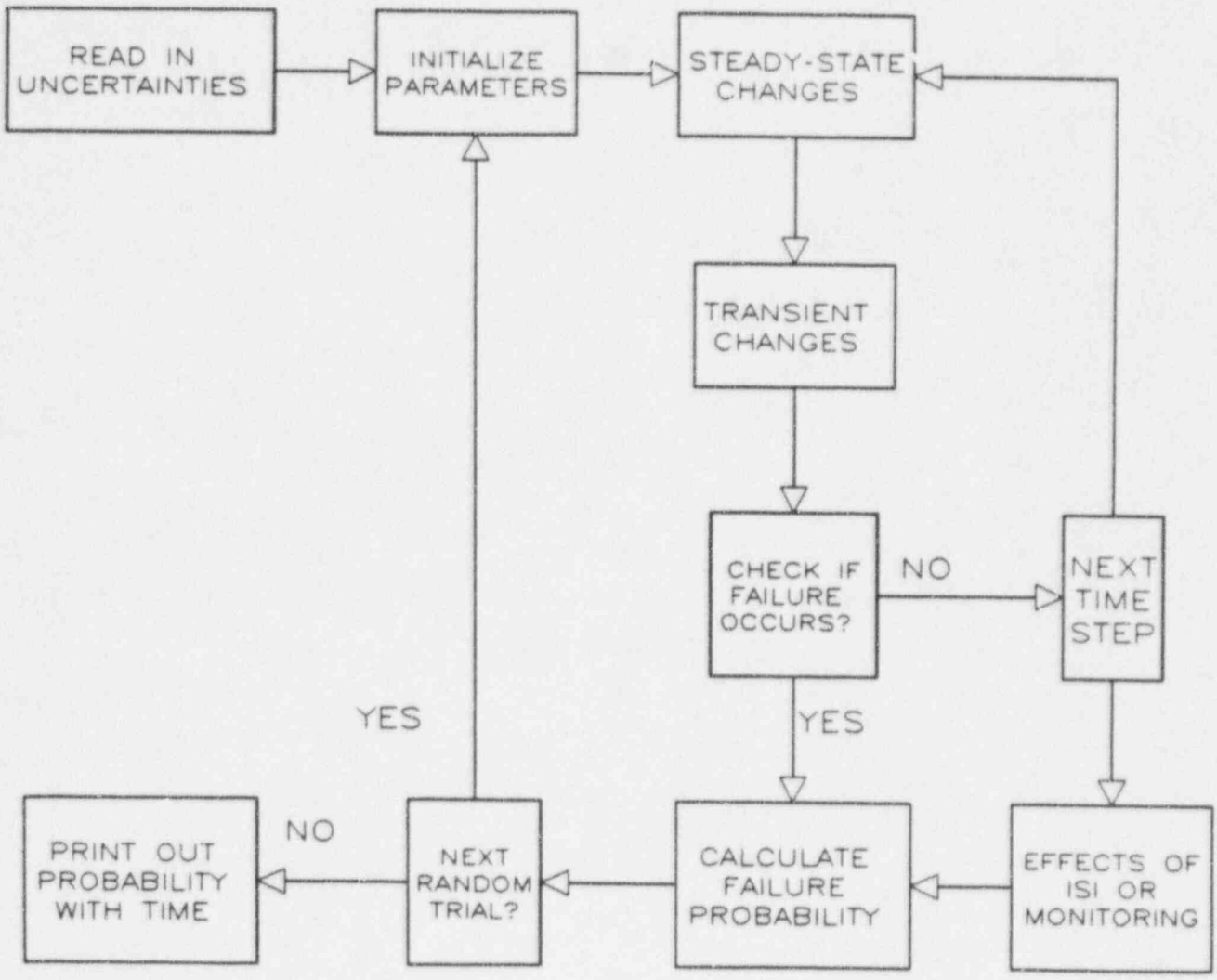

Method for Component Probabilistic SRRA Analysis

Figure 5-4: Westinghouse PROF Program Flow Chart for Calculating Failure Probability

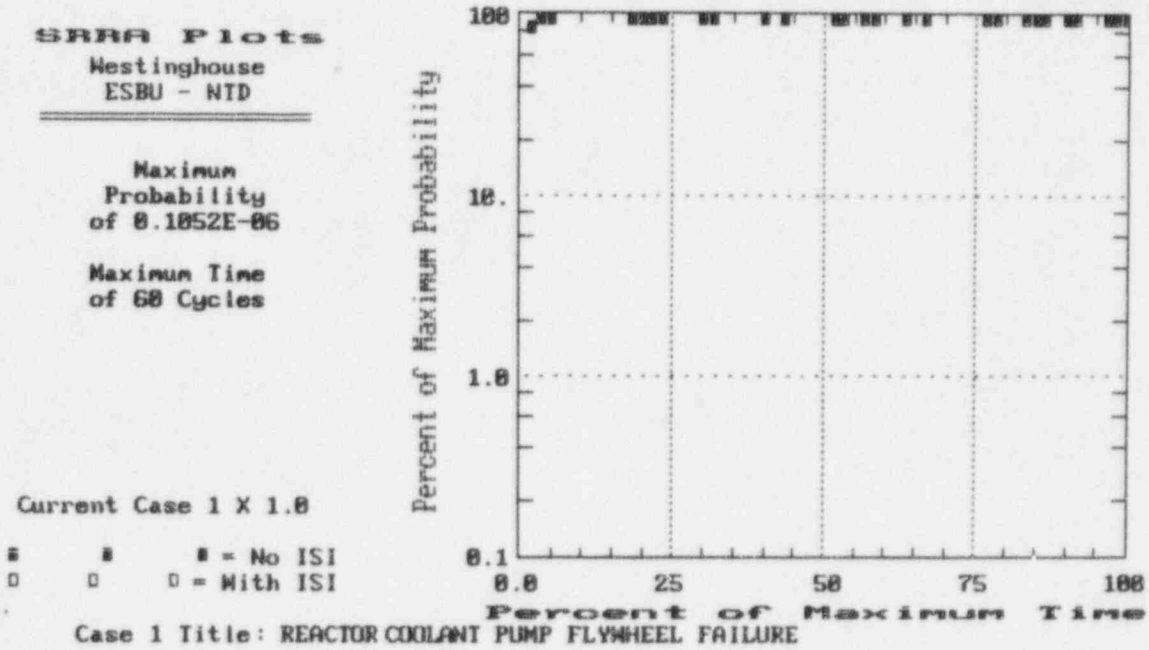

Figure 5-5: Computer SRRA Plot for RCP Flywheel Failure Probability

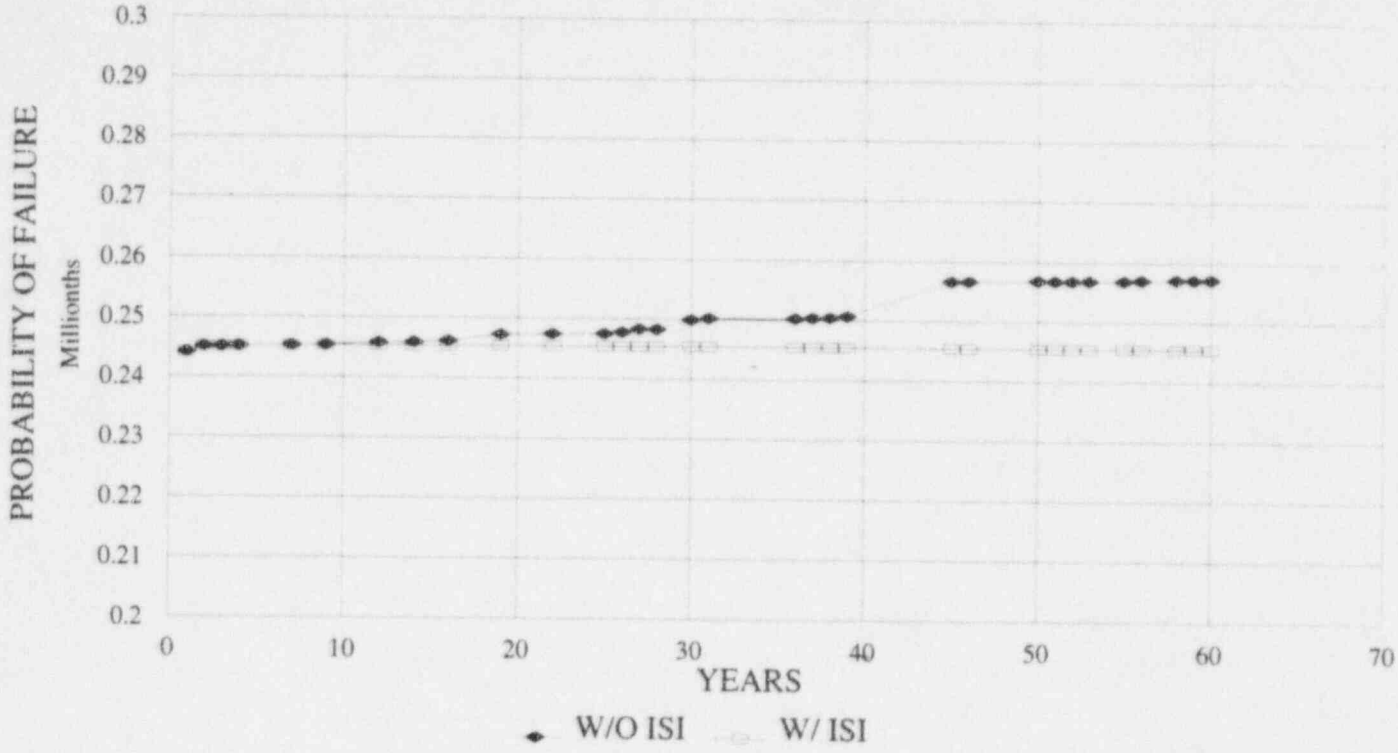

Figure 5-6: Probability of Failure for Flywheel Evaluation Group 1

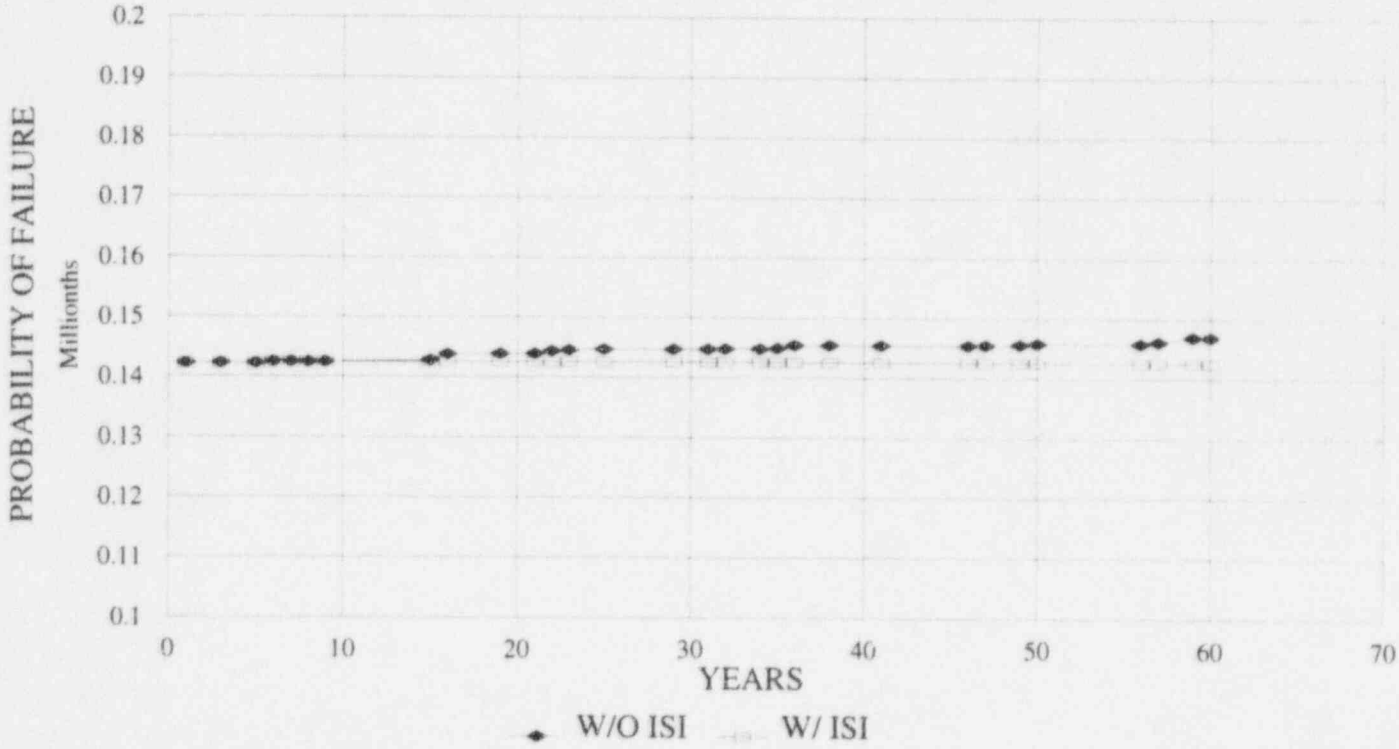

Figure 5-7: Probability of Failure for Flywheel Evaluation Group 2

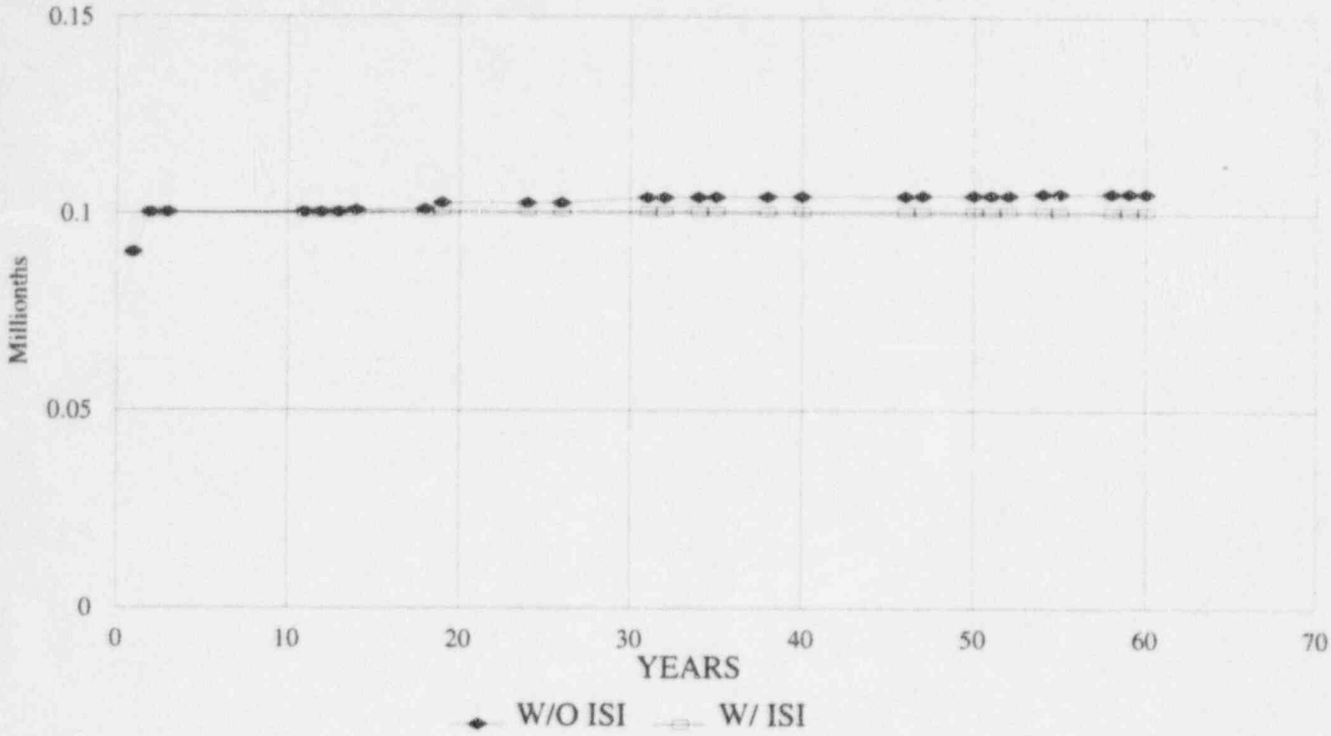

Figure 5-8: Probability of Failure for Flywheel Evaluation Group 10

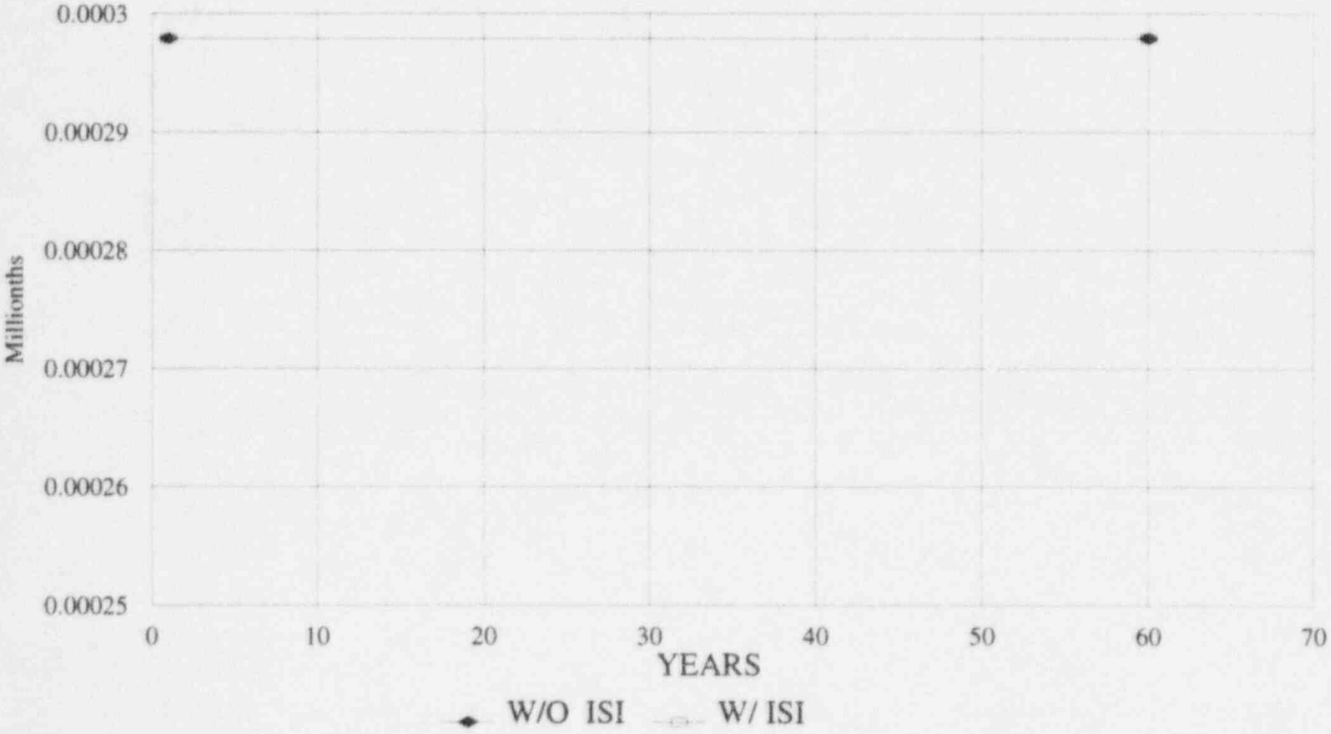

Figure 5-9: Probability of Failure for Flywheel Evaluation Group 14

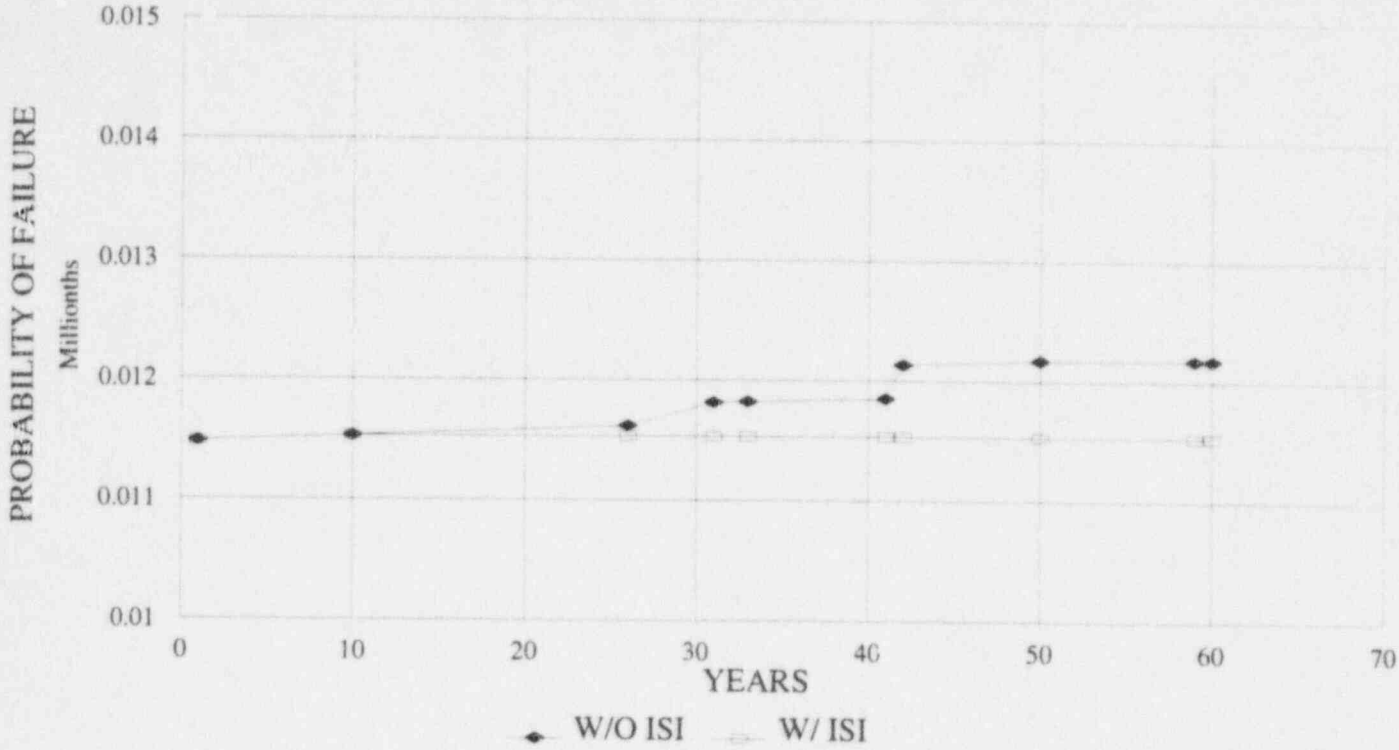

Figure 5-10: Probability of Failure for Flywheel Evaluation Group 15

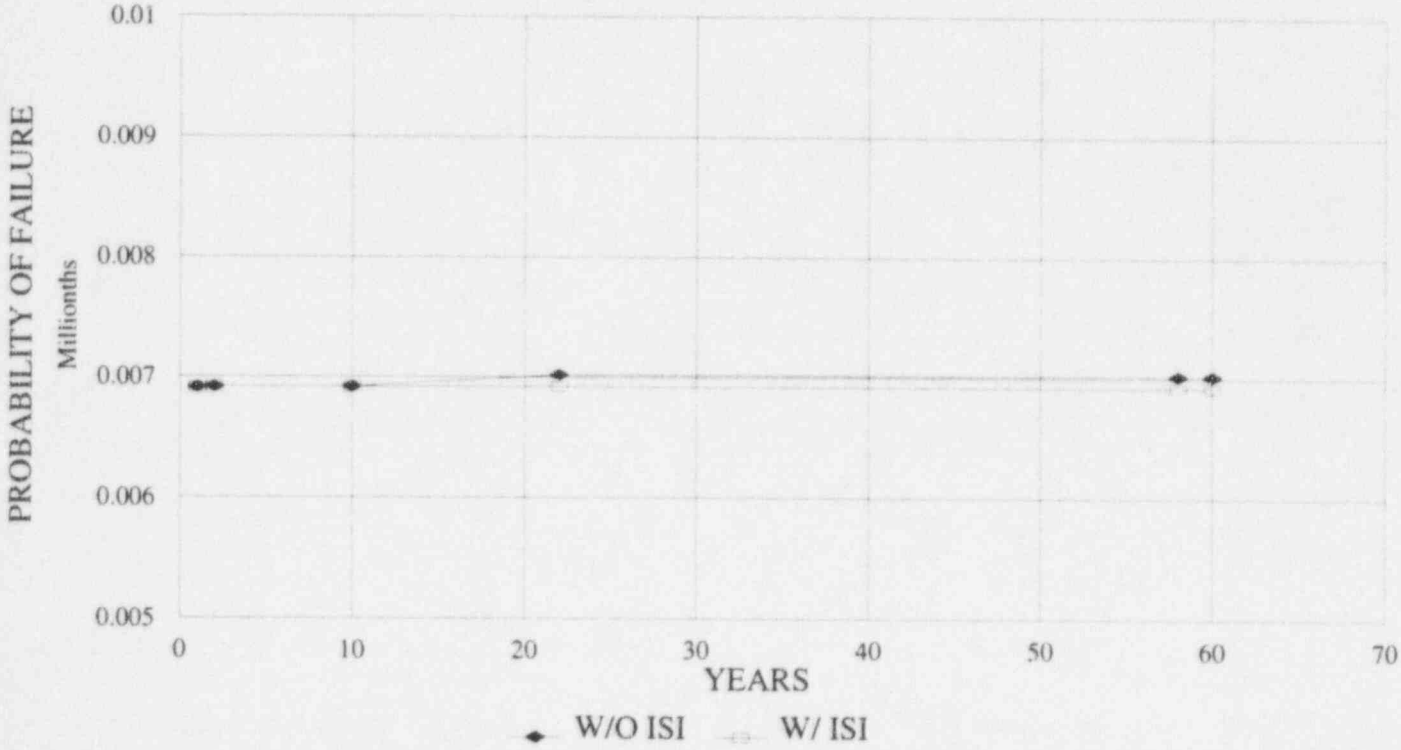

Figure 5-11: Probability of Failure for Flywheel Evaluation Group 16

SECTION 6
SUMMARY AND CONCLUSIONS

Reactor coolant pump flywheel inspections were implemented as a result of United States Nuclear Regulatory Commission Regulatory Guide 1.14, which was published in 1971 and revised in 1975.

- Flywheels are carefully designed and manufactured from excellent quality steel, which has a high fracture toughness.
- Flywheel overspeed is the critical loading, but leak-before-break has limited the maximum speed to less than 1500 rpm.
- Flywheel inspections have been performed for 20 years, with no indications of service induced flaws.
- Flywheel integrity evaluations show a very high flaw tolerance for the flywheels.
- Crack extension over a 60 year service life is negligible.
- Structural reliability studies have shown that eliminating inspections after 10 years of plant life will not significantly change the probability of failure.
- Inspections result in man-rem exposure and the potential for flywheel damage during assembly and reassembly.

Based on the above conclusions, continued inspections of reactor coolant pump flywheels are not necessary. Furthermore, overall plant safety could be increased by eliminating these inspections, because man rem doses would be lowered, and the potential for flywheel damage during disassembly and reassembly for inspection would be eliminated.

SECTION 7
REFERENCES

1) United States Nuclear Regulatory Commission, Office of Standards Development, Regulatory Guide 1.14, "Reactor Coolant Pump Flywheel Integrity," 1971; Revision 1, August 1975.

2) Westinghouse report WCAP-8163, "Topical Report Reactor Coolant Pump Integrity in LOCA," September 1973, WNES Class 3.

3) Babcock and Wilcox Power Generation Group, Nuclear Power Generation Division Topical Report BAW-10040, December 1973, "Reactor Coolant Pump Assembly Overspeed Analysis."

4) ASME Boiler and Pressure Vessel Code, Section XI, 1995 Edition.

5) J. G. Williams and D. P. Isherwood, "Calculation of the Strain-Energy Release Rates of Cracked Plates by an Approximate Method," Journal of Strain Analysis, Vol. 3, No. 1, 17-22 (1968).

6) Formulas for Stress and Strain, Fifth Edition, R. J. Roark and W. C. Young, McGraw-Hill Book Company, 1975.

7) "Development and Applications of Probabilistic Fracture Mechanics for Critical Nuclear Reactor Components," pp 55-70, *Advances in Probabilistic Fracture Mechanics*, ASME PVP-Vol. 92, F. J. Witt, 1984

8) *@RISK, Risk Analysis and Simulation add-In for Lotus 1-2-3, Version 2.01 Users Guide*, Palisade Corporation, Newfield, NY, February 6, 1992

9) *Final Report Documenting the Development of Piping Simplified Probabilistic Fracture Mechanics (SPFM) Models for EG&G Idaho, Inc.*, B. A. Bishop, October 1993, transmitted by Westinghouse Letter FDRT/SRPLO-027(94), February 17, 1994

10) NUREG/CR-5864, *Theoretical and User's Manual for pc-PRAISE, A Probabilistic Fracture Mechanics Computer Code for Piping Reliability Analysis*, Harris and Dedhia, July 1992

11) EPRI TR-105001, *Documentation of Probabilistic Fracture Mechanics Codes Used for Reactor Pressure Vessels Subjected to Pressurized Thermal Shock Loading*, K. R. Balkey and F. J. Witt (Part 1) and B. A. Bishop (Part 2), June 1995

APPENDIX A

REGULATORY POSITION

The United States Nuclear Regulatory Commission (NRC) issued Regulatory Guide 1.14, (Reference 1) to describe acceptable methods to ensure RCP flywheel integrity. Under Section C of the regulatory guide, the NRC Regulatory position is defined. This portion of the regulatory guide is provided below.

1. *Material and Fabrication*

   a. *The flywheel material should be of closely controlled quality. Plates should conform to ASTM A20 and should be produced by the vacuum-melting and degassing process or the electroslag remelting process. Plate material should be cross-rolled to a ratio of at least 1 to 3.*

   b. *Fracture toughness and tensile properties of each plate of a flywheel material should be checked by tests that yield results suitable to confirm the applicability to that flywheel of the properties used in the fracture analyses called for in regulatory positions C.2.c, d, and e.*

   c. *All flame-cut surfaces should be removed by machining to a depth of at least 12 mm (1/2 inch) below the flame cut surface.*

   d. *Welding, including tack welding and repair welding, should not be permitted in the finished flywheel unless the welds are inspectable and considered as potential sources of flaws in the fracture analysis.*

2. *Design*

   a. *The flywheel assembly, including any speed-limiting and antirotation devices, the shaft, and the bearings, should be designed to withstand normal conditions, anticipated transients, the design basis loss-of-coolant accident, and the Safe Shutdown Earthquake loads without loss of structural integrity.*

   b. *Design speed should be at least 125% of normal speed but not less than the speed that could be attained during a turbine overspeed transient. Normal speed is defined as synchronous speed of the a.c. drive motor at 60 hertz.*

   c. *An analysis should be conducted to predict the critical speed for ductile failure of the flywheel. The methods and limits of paragraph F-1323.1(b) in Section III of the ASME Code are acceptable. If another method is used, justification should be provided. The analysis should be submitted to the NRC staff for evaluation.*

d. An analysis should be conducted to predict the critical speed for nonductile failure of the flywheel. Justification should be given for the stress analysis method, the estimate of flaw size and location, which should take into account initial flaw size and flaw growth in service, and the values of fracture toughness assumed for the material. The analysis should be submitted to the NRC staff for evaluation.

e. An analysis should be conducted to predict the critical speed for excessive deformation of the flywheel. The analysis should be submitted to the NRC staff for evaluation. (Excessive deformation means any deformation such as an enlargement of the bore that could cause separation directly or could cause an unbalance of the flywheel leading to structural failure or separation of the flywheel from the shaft. The calculation of deformation should employ elastic-plastic methods unless it can be shown that stresses remain within the elastic range).

f. The normal speed should be less than one-half of the lowest of the critical speeds calculated in regulatory positions C.2.c, d, and e above.

g. The predicted LOCA overspeed should be less than the lowest of the critical speeds calculated in regulatory positions C.2.c, d, and e above.

3. Testing

Each flywheel assembly should be spin tested at the design speed of the flywheel.

4. Inspection

a. Following the spin test described in regulatory position C.3, each finished flywheel should receive a check of critical dimensions and a nondestructive examination as follows:

(1) Areas of higher stress concentrations, e.g. bores, keyways, splines, and drilled holes, and surfaces adjacent to these areas on the finished flywheel should be examined for surface defects in accordance with paragraph NB-2545 or NB-2546 of Section III of the ASME Code using the procedures of paragraph NB-2540. No linear indications more than 1.6 mm (1/16 inch) long, other than laminations, should be permitted.

(2) Each finished flywheel should be subjected to a 100% volumetric examination by ultrasonic methods using procedures and acceptance criteria specified in paragraph NB-2530 (for plates) or paragraph NB-2540 (for forgings) of Section III of the ASME Code.

b. Inservice inspection should be performed for each flywheel as follows:

(1) An in-place ultrasonic volumetric examination of the areas of higher stress concentration at the bore and keyway at approximately 3 year intervals during the refueling or maintenance shutdown coinciding with the inservice inspection schedule as required by Section XI of the ASME Code.

(2) A surface examination of all exposed surfaces and complete ultrasonic volumetric examination at approximately 10 year intervals, during the plant shutdown coinciding with the inservice inspection schedule as required by Section XI of the ASME Code.

(3) Examination procedures should be in accordance with the requirements of Subarticle IWA-2200 of Section XI of the ASME Code.

(4) Acceptance criteria should conform to the recommendations of regulatory position C.2.f.

(5) If the examination and evaluation indicate an increase in flaw size or growth rate greater than predicted for the service life of the flywheel, the results of the examination and evaluation should be submitted to the staff for evaluation.

APPENDIX B

HISTORICAL INSPECTION INFORMATION: HADDAM NECK

The following chronological listing shows the results of reactor coolant pump flywheel inspections at the Haddam Neck Plant:

1970 - Prior to the April 1970 refueling outage, **Westinghouse** and the AEC, became concerned about the possibility of cracks being initiated at or propagating from the interior corners of the keyway areas in RCP flywheels. **Ultrasonic examinations** were performed during the refueling outage on all four RCP flywheels and **revealed a <5% amplitude indication on RCP flywheel #4 in the bore keyway area** and it was not recordable. The indication was recorded by Westinghouse personnel purely for future reference purposes.

RCP flywheel #1 was liquid penetrant inspected in the bore area after it had been removed from the shaft and **no indications were observed**.

Total radiation exposure for these **first inspections was 1.038 Person REM and** included examination technicians, and engineering and maintenance personnel. This amount of **personnel radiation exposure has continued to be expended to complete these inspections** when they were required **during the last 25 years**.

1971 - In April 1971, the Inservice **Inspection** Program Requirements of ASME Section XI, were put into the Plant Technical Specifications. **Requirements were** additionally **added for RCP flywheels**, outside of Section XI Requirements, based on AEC request.

Technical Specification Requirement - One different flywheel shall be examined visually and 100% volumetrically at every other refueling shutdown.

The AEC requested that **all four flywheels** be **examined at** the next **refueling outage** before this inspection sampling program could be put into effect.

During the **May 1971** refueling outage, all four flywheels were inspected. The **bore seal weld area of RCP flywheel #4 was found to be cracked**. The cracks were identified in the bore seal weld and it's associated heat affected zone. Cracked areas were **removed by grinding and weld repaired**.

Review of the inspection data shows that these **cracks may have been identified** by the ultrasonic examination indication reported **in 1970**, but the data is not conclusive. One point that does stand out is that the **material of** the **RCP flywheel #4 is** Grade T-1 Boiler Plate and is **different** than the other three flywheels which were fabricated to a Westinghouse specification.

1973 - During the 1973 refueling outage, the **inspection sampling program** now required by Plant Technical Specifications **began**. RCP flywheels #1 and #4 were examined. Both flywheels were removed from their shafts. **Cracks** were **discovered in the RCP flywheel #4** bore seal weld area **emanating from** the **weld repairs and** in the **existing seal weld areas**.

Westinghouse was contacted and recommended that the **bore seal weld and** associated **heat affected zone** be **removed by grinding**. Ultrasonic and liquid penetrant examinations were performed following the grinding repair and no indications were identified. Additionally, liquid penetrant examinations were performed in the bore pawl areas of both RCP flywheels. Liquid penetrant **indications** were **identified in RCP flywheel #1** at two **bore pawl areas**. These indications were determined to be from mechanical surface marks and were dispositioned as acceptable.

1980 to 1986 - During this time frame **inspections continued** under the sampling program provided in Plant Technical Specifications with continuing efforts by CYAPCO **to meet a request by** the **NRC to comply with** the inspection requirements specified in **Regulatory Guide 1.14. No further flaws/cracks** were **identified** in any of the flywheels. In 1980, one of the flywheels had liquid penetrant indications in the bore keyway areas, but were once again determined to be from mechanical surface marks and dispositioned as acceptable.

1986 - **Plant Technical Specifications** were **changed** under Amendment No. 87 **to** specifically **include** reference to **Regulatory Guide 1.14 inspection requirements**.

1987 - During this refueling outage **all four** of the **RCP flywheels** were completely removed from the motors and **sent to Westinghouse for a 10-year refurbishment**. RCP flywheel #1 and #2 were examined to the requirements of Regulatory Guide 1.14 and magnetic particle **indications** were **found in** the **seal baffle surface fillet weld area** of **RCP flywheel #2**. These indications/flaws/cracks were **removed by grinding, weld repaired** and **reinspected** until **no indications** were found. RCP flywheel #3 was not required to be inspected per Regulatory Guide 1.14 requirements. The **RCP flywheel #4 bore seal weld area** that had been ground out in 1973 was **machined smooth**, liquid penetrant inspected, and no indications were observed.

1988 to Present - **No cracks** have been **identified** on any of the RCP flywheels **in** the **critical areas** of the bore and keyways **since 1973**.

No cracks have exceeded the critical flaw size needed **to cause a** catastrophic **failure** of our flywheels in a normal operating overspeed condition.

All of the **1973 RCP flywheel #4 cracks were of a limited depth** approximately 1/2" deep **and the bore seal weld and heat affected zone is now totally removed.**

Note: Additional details are available in Docket No. 50-213, B15320, dated August 10, 1995.

APPENDIX C

SAMPLE FLYWHEEL INSPECTION PROCEDURES

NORTHEAST UTILITIES

NUCLEAR QUALITY-RELATED
NONDESTRUCTIVE EXAMINATION PROCEDURES

NU-UT-24

Ultrasonic Examination
Reactor Coolant Pump Flywheel
Connecticut Yankee

Rev	Issue Date	NUSCO Level III Approval/Date	Director QSD Approval/Date	Auth. Insp. Agency Approval/Date
5	11/29/88	R. J. Fuller-10/12/88	B. Kaufman-10/18/88	R. L. Zoner-10/28/88
6	1-4-91	R J Fuller 6/4/90	B. Kaufman 6/14/90	E A Yost HSB 11/8/90
7	4-20-93	S A Gla 4/5/93	B. Kaufman 4/12/93	E A Yost 4.15.93

Always verify with the procedure Status Log before using this procedure.

ULTRASONIC EXAMINATION
REACTOR COOLANT PUMP FLYWHEEL
CONNECTICUT YANKEE

1. SCOPE

1.1 INTENT

This procedure shall be used in conjunction with Procedure NU-UT-1 unless otherwise specified. NU-UT-1 contains all the general requirements applicable to this examination procedure. This procedure contains all the specific application requirements for the examination of areas specified in paragraph 1.2.

1.2 AREAS OF EXAMINATION

This document covers the ultrasonic examination procedure for the bore and keyway areas and the remaining volume of the Connecticut Yankee reactor coolant pump (RCP) flywheels.

1.3 TYPE OF EXAMINATION

1. Volumetric examination shall be performed using ultrasonic pulse echo 0° and 3½° beam technique applied to the gage holes in the flywheel.

2. The examinations shall be performed manually using contact search units.

2. REFERENCES

1. NU-UT-1 Ultrasonic Examination General Requirements.

2. Calibration block CYW-47. 7

3. Nuclear Regulatory Commission Guide 1.14.

4. ASME Section XI Code - IWA 2240.

3. PROCEDURE CERTIFICATION

The examination procedure described in this document is in conjunction with Procedure NU-UT-1 and complies with Section XI of the ASME Boiler and Pressure Code, 1983 Edition, Summer of 1983 Addenda, except where examination coverage is limited by part geometry or access.

4. PERSONNEL CERTIFICATION

1. Each person performing ultrasonic examination governed by this procedure shall be certified in accordance with Procedure NU-UT-1.

5. EXAMINATION REQUIREMENTS

5.1 EXAMINATION FREQUENCY

The nominal examination frequency shall be 5 MHz. Other frequencies may be used if such variables as materials, attenuation, grain structure, etc., necessitates their use to achieve penetration or resolution.

5.2 EXAMINATION ANGLES AND COVERAGE

1. The bore and keyways and the remaining accessible volume of the RCP flywheel shall be examined using special design 0° and 34° azimuth probes. Coverage will be limited to those areas of the flywheel that can be scanned from the four gage hole probes in each flywheel.

2. Other angles and techniques may be used if required for aid in evaluating indications.

6. EQUIPMENT REQUIREMENTS

6.1 EXAMINATION EQUIPMENT

The following test equipment or its equivalent shall be provided for examinations specified in this procedure.

1. Special design azimuth probes

2. Couplant

7. EXAMINATION SYSTEM CALIBRATION

7.1 Calibration using the .920" diameter azimuth probe shall be performed as follows:

1. Fully insert the .920" diameter transducer and set the 0° on the azimuth to coincide with the axial centerline and facing the bore of the flywheel calibration block.

2. Inject couplant and establish acoustic contact.

3. Set the amplitude of the reflection from the bore to 100% full screen height.

4. Rotate transducer counterclockwise, CCW, through 90° and locate the ¼" diameter through drilled hole. Adjust gain if necessary.

5. Using the sweep control, establish a 20" sweep on the display by placing the signal from the sidewall at 5.75" along the timebase. Return to the bore signal and place this at 10" on the timebase.

Through the use of the sweep control and delay control, repeat the above procedure until the display is as described above.

6. Sensitivity: Rotate the transducer to locate the signal from the number one ¼" diameter thru hole, see Figure 1, and adjust signal amplitude from this reflector to 80% FSH. Rotate transducer to locate signal from the number two ¼" diameter thru hole and record % FSH. Draw DAC curve between two points obtained from holes #1 and #2. Rotate transducer to notch in flywheel keyway and record % FSH. If the CRT is saturated, record the dB difference to bring notch signal to 80% FSH. 7

7. Attenuation: Locate the signal from the bore of the CYW-47 and adjust the amplitude to 80% FSH and note the gain setting. Locate the signal from the bore of the flywheel and set the signal to 80% FSH and record the gain setting. The difference between the gain setting on the calibration block and flywheel must be added or subtracted to the instrument settings for calibration to account for any attenuation differences between the calibration block and the flywheel. 7

8. Repeat the above calibration steps for the .721" diameter and 3½° aziumth probe. 7

9. Upon completion of the calibration, ensure that all data and instrument settings are recorded on the appropriate calibration data sheet (NU-UT-1, Figure 6).

7.2 CALIBRATION CHECKS

Calibration checks shall be performed in accordance with Procedure NU-UT-1.

8. EXAMINATION PROCEDURES

1. Insert .920" diameter azimuth probe into gage holes on the RCP flywheel and examine bore and keyway to maximum extent possible.

2. Insert .721" diameter azimuth probe into gage holes on the RCP flywheel and examine bore and keyway to the maximum extent possible.

3. Insert the 3½° angle beam azimuth probe so that the transducer just clears the threaded portion of the gage hole. Examine the bore and keyway to maximum extent possible.

9. RECORDING CRITERIA

1. All indications with a signal amplitude >100% DAC at reference level shall be recorded and investigated to ensure proper evaluation.

2. The reference point for recording all indications shall be as follows: Looking down at the top surface of the flywheel, locate all indications clockwise, CW, from the gage hole in line with the largest keyway in the flywheel. All radial and angular measurements to recordable indications shall be taken from the exit point of the

probe. A sketch of all recordable indications shall be attached to the RCP flywheel data sheet.

FIGURE 1

CALIBRATION BLOCK
CYW-47

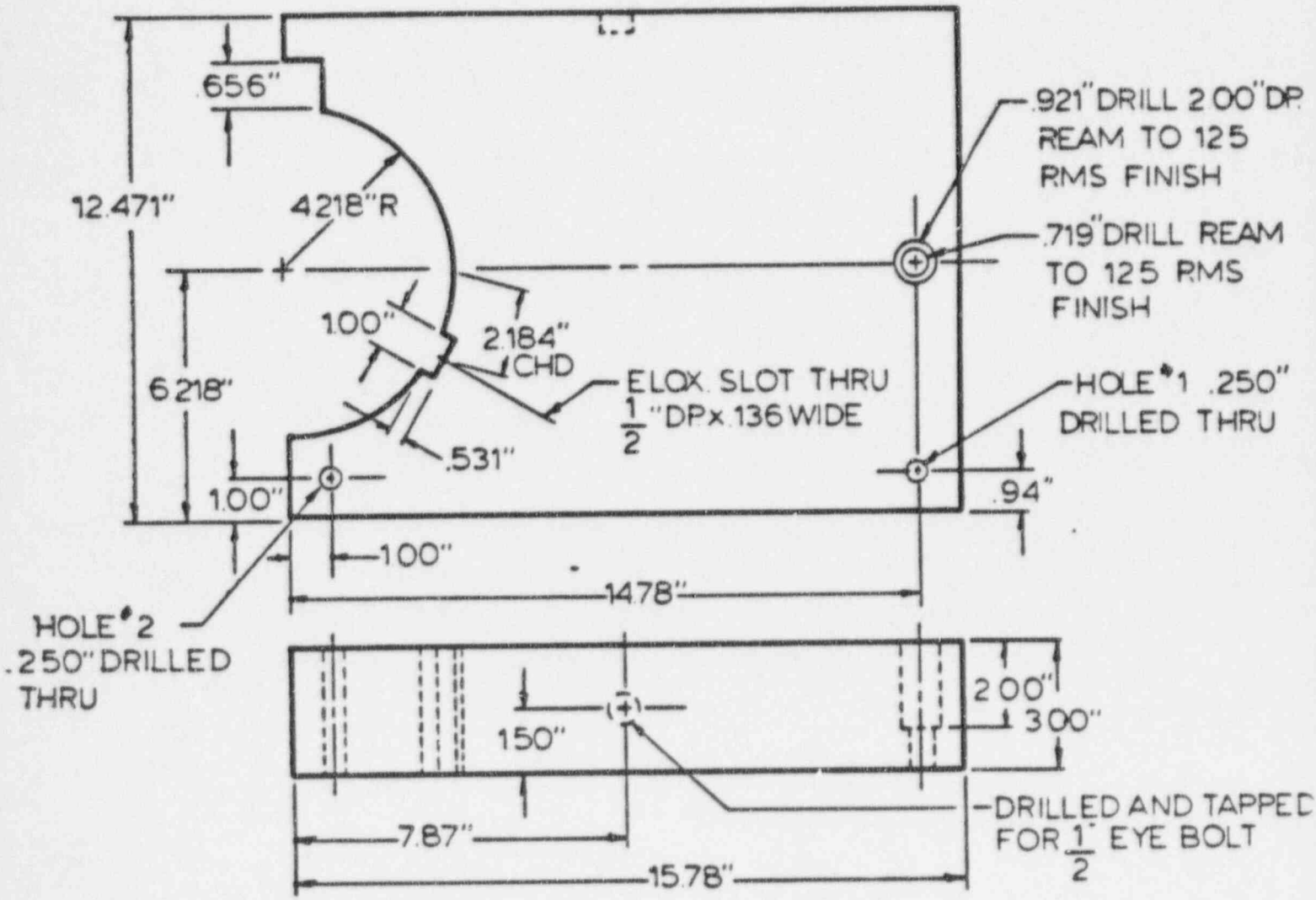

REVISION/CHANGE ATTACHMENT SHEET

Revision	Section	Change
5	All	Major Rewrite
6	All	Major Rewrite
7	Para. 2.2	Change Blocks to Read "Block"
	Para. 7.1.6	Correct Typo
	Para. 7.1.7	Reword 1st Sentence
	Para. 7.1.8	Change 7.6.1 to Read "7.2.1"

SOUTHERN NUCLEAR OPERATING COMPANY

INSPECTION AND TESTING SERVICES

MANUAL ULTRASONIC EXAMINATION OF REACTOR COOLANT PUMP MOTOR FLYWHEELS

UT-V-417

REVISION 3

PREPARED BY

SUPERVISOR, NDE PROJECTS APPROVAL

NDE LEVEL III APPROVAL

MANAGER ITS APPROVAL

PLANT VOGTLE APPROVAL

DATE

TABLE OF CONTENTS

SECTION	TITLE	PAGE
1.0	Purpose	1
2.0	Scope	1
3.0	Applicable Documents	1
4.0	Responsibilities	1
5.0	Qualification of Ultrasonic Examination Personnel	2
6.0	Ultrasonic Equipment	2
7.0	Surface Preparation	3
8.0	Equipment Calibration	3
9.0	Examination Procedure	5
10.0	Investigation of Indications	6
11.0	Recording of Indications	6
12.0	Reporting of Indications	7

.0 PURPOSE

This procedure provides the ultrasonic examination requirements for reactor coolant pump flywheel in accordance with the applicable American Society of Mechanical Engineers (ASME) Boiler and Pressure Vessel Code.

2.0 SCOPE

This procedure defines the method for ultrasonic examination reactor coolant pump flywheel to facilitate preservice and inservice inspection all high-stress regions (bore, keyways and bolt hole regions) with or without the removal of the flywheel from its shaft.

Note: Applications in this procedure are not covered in Section XI and are based on special techniques as allowed in IWA-2240.

3.0 APPLICABLE DOCUMENTS

This procedure is written to comply with the requirements of the following documents to the extent specified within this procedure.

3.1 ASME Boiler and Pressure Vessel Code, Section XI, 1983 Edition with Addenda through Summer 1983, "Rules for Inservice Inspection of Nuclear Power Plant Components."

3.2 ASME Boiler and Pressure Vessel Code, Section V, 1983 Edition with Addenda through Summer 1983, "Nondestructive Examination."

3.3 U. S. Nuclear Regulatory Commission Regulatory Guide 1.14 "Reactor Coolant Pump Flywheel Integrity" Revision 1 dated August 1975.

4.0 RESPONSIBILITIES

4.1 The Manager- Inspection and Testing Services shall be responsible for the approval and control of this procedure.

4.2 An ITS NDE Level III individual certified in ultrasonic examination is responsible for having ultrasonic procedures and techniques developed, approved, and for assuring that this procedure, when correctly followed, will detect discontinuities which do not meet the applicable acceptance standards.

5.0 QUALIFICATION OF ULTRASONIC EXAMINATION PERSONNEL

5.1 All personnel performing ultrasonic examinations in accordance with this procedure shall be qualified and certified to the requirements of a procedure (written practice) written and approved by ITS in accordance with the "American Society of Nondestructive Testing" (ASME) SNT-TC-1A.

5.2 The ultrasonic examination may be performed by a Level I Examiner under the direct supervision of a certified Level II or Level III individual in ultrasonic examination; however, all interpretation of the results shall be performed by a Level II or Level III examiner certified in ultrasonic examination.

6.0 ULTRASONIC EQUIPMENT

6.1 The Ultrasonic Instrument

6.1.1 A pulse-echo type ultrasonic instrument with an A-Scan presentation and operating frequencies of one to ten MHz shall be used to perform examination in accordance with this procedure.

6.2 The Ultrasonic Transducer Search Unit

6.2.1 Search units with a nominal frequency of 2.25 MHz shall be used for examination in accordance with this procedure.

6.2.2 Search unit size for the "periphery" scan shall be .750" to 1.00" diameter straight beam.

6.2.3 Search unit size and configuration for "radial gauge hole" and "keyway corner" examination will be a special design internal probe from the gauge hole.

6.2.4 Upon ITS NDE Level III concurrence, other frequencies and sizes of search units may be used if product grain structure precludes achieving the necessary penetration or sensitivity required.

6.3 Couplant

Any commercially available ultrasonic couplant may be used and shall be certified for total sulfur and halogen content in accordance with the American Society for Testing and Materials (ASTM) D-129 and D0808. The total residual amount of sulfur and halogen shall not exceed one percent by weight.

6.4 Reference Block

Reference blocks (e.g., IIW, ROMPAS, DSC) if used, shall be of the same material as the component to be examined.

6.5 Calibration Block

The flywheel to be examined shall be used for calibration.

6.6 CABLES

Coaxial type cables shall be used and may be of any convenient length not to exceed 50 feet (unless permitted by qualification). The type and length shall be recorded on the Reactor Coolant Pump Flywheel Report, (Figure 417-1), or equivalent form.

7.0 SURFACE PREPARATION

The finished contact surface shall be free from any roughness that would interfere with free movement of the search unit. This examination and calibration may be performed through tightly adhered paint.

8.0 EQUIPMENT CALIBRATION

8.1 A daily linearity, as a minimum, shall be performed to verify the instrument to linearity requirements of Procedure UT-V-455.

8.2 The reject control shall be placed and remain in the "0" (off or minimum) position during calibration and examination.

8.3 Temperature of the flywheel shall be recorded on the Data Report.

8.4 The equipment calibration shall be performed in accordance with the following and the results documented on the Reactor Coolant Pump Flywheel Report, (Figure 417-1), or equivalent form.

8.4.1 Keyway Corner Examination

8.4.1.1 Reflections from the bore of the flywheel shall be used for calibration.

8.4.1.2 From the gauge hole, obtain the maximum reflection from the bore of the flywheel using the special gauge hole probe.

8.4.1.3 Establish a horizontal screen range by setting the response from the flywheel bore at a maximum of 60 percent of the instruments screen range.

8.4.1.4 Bring the bore reflection to 80% FSH. This shall be the primary reference level.

8.4.2 Radial Gauge Hole Examinations

8.4.2.1 Reflections from any two holes shall be used for calibration. The hole selected for the longest metal path shall be a maximum of 25 inches.

8.4.2.2 From the hole, obtain the maximum response from the nearer of the two holes. Set this response at 80% FSH.

8.4.2.3 Without changing the gain setting, obtain the maximum response from the remaining hole.

8.4.2.4 Mark these amplitudes on the CRT. Connect the two points with a smooth line. Extend the DAC to cover the maximum calibrated screen width. This shall be the primary reference level.

8.4.3 Periphery Examination

8.4.3.1 From the edge of the flywheel, obtain the maximum response from any two holes with a minimum of 10 inches metal path separation.

8.4.3.2 Establish the horizontal screen range to coincide with the hole location from the edge of the plate. The response obtained from the hole with the greatest metal path shall be set between 50-80 percent of screen range.

8.4.3.3 Construct a DAC curve by setting the maximum response from the hole with the shortest metal path at 80% FSH.

8.4.3.4 Without changing the gain setting, obtain the maximum response from the hole with the greatest metal path. Mark these points on the CRT and connect them with a smooth line to cover the examination area. This shall be the primary reference level.

8.5 Calibration Checks

8.5.1 A calibration check shall be performed at the beginning and end of each examination or every 12 hours, whichever is less.

8.5.2 If, in the opinion of the examiner, the validity of the calibration is in doubt, a calibration check shall be performed.

8.5.3 If any point of the calibration check has moved on the sweep line by more than 10 percent of the sweep division reading, correct the sweep range calibration and note the correction on the applicable calibration sheet. If recordable indications are noted, the examination is voided, and a new calibration Section 8.0) shall be recorded and the voided examination shall be reexamined.

8.5.4 If any point of the calibration check has decreased 20 percent or 2 dB of its amplitude, all data and/or calibration sheets since the last calibration or calibration check shall be recorded and the voided examinations shall be reexamined.

8.5.5 If any points of the calibration check was increased more than 20 percent or 2 dB of its amplitude, all recorded indications since the last valid calibration or calibration check may be reexamined with the corrected calibration and their value shall be recorded on the applicable calibration and data sheet.

9.0 EXAMINATION PROCEDURE

9.1 Keyway Corner Examination

9.1.1 Scanning of the keyway corners shall be accomplished starting at the top of the gauge hole and rolling the sound beam from the bore over to examine the keyway and back. Insert the probe with a minimum of 25% overlap and repeat until the entire length of the keyway has been examined.

9.1.2 Each gauge hole shall be used to examine the keyway corners for indications propagating from the keyway.

9.2 Radial Gauge Hole Examination

9.2.1 Scanning shall be accomplished by inserting and retracting the probe the full length of the gauge hole and overlapping a minimum of 25% for each insertion.

9.2.2 Each gauge hole shall be used to scan the complete available portion of the flywheel cross-section.

9.3 Periphery Examination

9.3.1 Scanning from the edge shall include the area from the edge up to and including the gauge holes.

9.3.2 The transducer shall be moved across and along the flywheel edge so as to scan the entire edge overlapping each scan by a minimum of 25% of the transducer diameter.

9.4 Scanning speed shall not exceed six inches/second.

9.5 Scanning shall be performed at a minimum gain setting of two times the primary reference level sensitivity (6 dB).

NOTE:

If conditions such as material properties produce noise levels which preclude a meaningful examination, then scanning shall be performed at the highest possible sensitivity level above the primary reference level. The examiner shall note the dB and the reason on the applicable data sheet and notify the site NDE coordinator to proceed per the applicable ITS PM Procedure 2-1.

9.6 Upon completion of the ultrasonic examination, the couplant shall be removed from the area of examination to the extent practical.

10.0 INVESTIGATION OF INDICATIONS

10.1 All indications shall be investigated to the extent that the examiner can determine the size, identify and location of the reflectors.

10.2 Previous data, when applicable, shall be made available to the technicians to provide previous examination information.

11.0 RECORDING OF INDICATIONS

11.1 For the keyway corner examination, all indication which exceed 10% of the primary reference level shall be recorded.

11.2 For the radial gauge hole or periphery examinations, all indications which exceed 50% DAC shall be recorded.

NOTE:

Geometric reflectors in the flywheel shall be verified by physical measurements and need not be recorded.

12.0 REPORTING INDICATIONS

12.1 It shall be the responsibility of the Level II or level III individual certified in ultrasonic examination re review, evaluate the disposition all recordable indications to determine their reportability requirements. Previous data shall be made available to the reviewer/evaluator for appropriate indication disposition.

12.2 Reportable indications or other indications determined to be significant by the ITS Level II or level III individual shall be reported to the operating company in accordance with ITS PM Procedure 3-4.

VOGTLE ELECTRIC GENERATING PLANT Southern Nuclear Operating Company
Reactor Coolant Pump Flywheel Report UT-V-Form 015

Plant/Unit:	RCP Flywheel No:
Isometric Drawing No:	Procedure/Revision/Deviation:
Couplant Batch No:	Sheet No:

Transducer	Periphery Exam	Gauge Hole & Keyway Exam
Serial No:	_____	_____
Size:	_____	_____
Frequency:	_____	_____

Equipment

Instrument: _____ Frequency: _____ Damping: _____

Serial No: _____ Rep. Rate: _____ Reject: _____

Cable Type: _____ Cable Length: _____

Calibration/Examination

Keyway Corner	Screen Range:	_____	% FSH
	dB:	_____	
	Screen Div:	_____	NI __ NRI __ RI __
Bolt Hole Region	Screen Range:	_____	
	dB:	_____	
	Screen Div:	_____	NI __ NRI __ RI __
Periphery	Screen Range:	_____	
	dB:	_____	
	Screen Div:	_____	NI __ NRI __ RI __

Remarks: _____

_____

Examiner/SNT Level:	Examiner/SNT Level:
Technical Review:	Non Technical Review:

Figure 417-1

Vogtle Reactor Coolant
Pump Flywheel

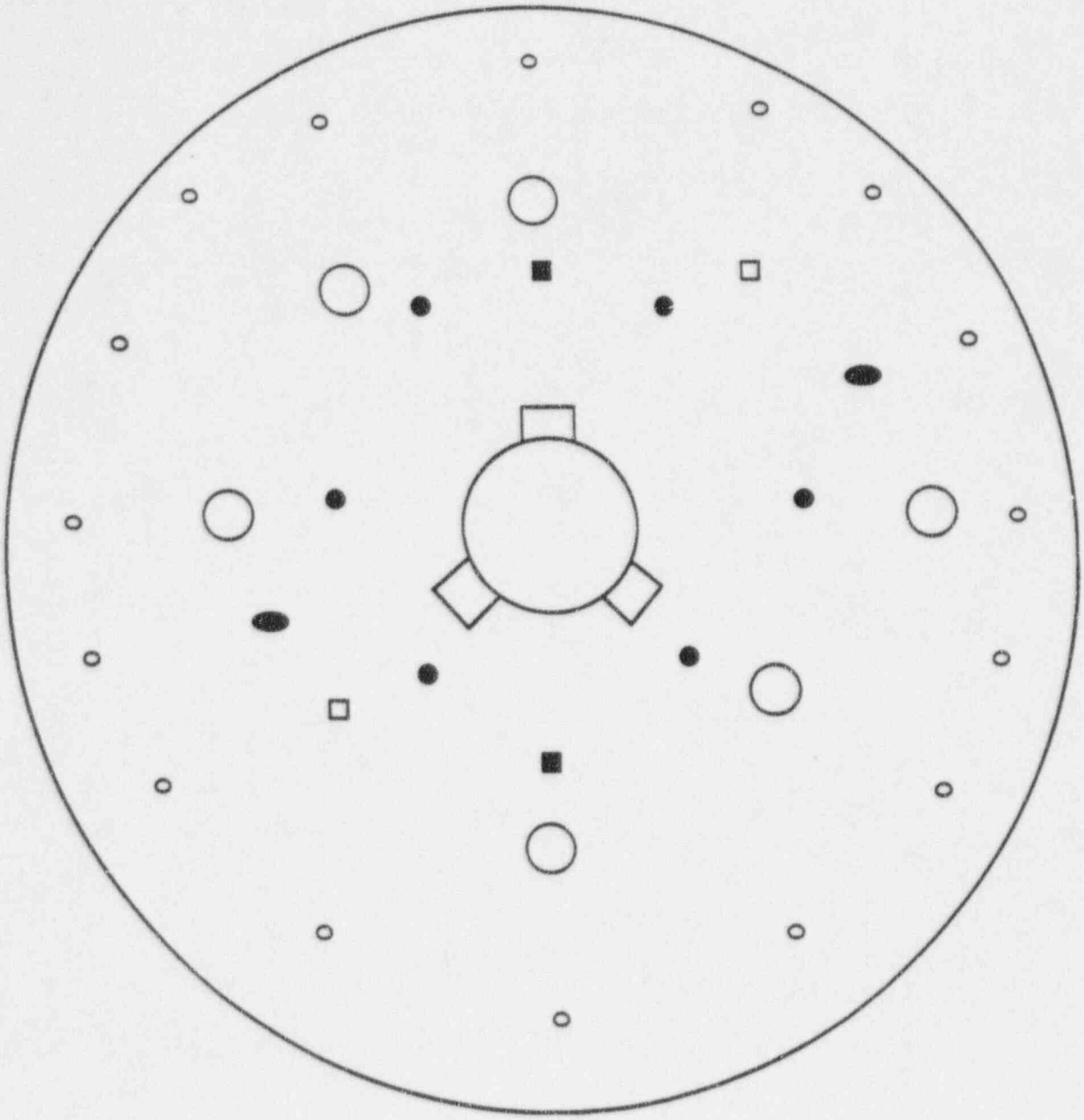

○ 3/4" x 3-3/4"

⬭ 1-3/8" x 5"

■ 1-1/2" x 3-3/4"

● 1" x 10"

□ 2" x 1-7/8"

◯ 3" x 10"

Figure 417-2

GPU Nuclear	GPU NUCLEAR ISI/NDE MANUAL	Number 5361-NDE-7209.24
Title ULTRASONIC EXAMINATION OF REACTOR COOLANT PUMP FLYWHEELS		Revision No. 0
Applicability/Scope This procedure is applicable at any site		Responsible Office 5361
This document is within QA Plan Scope X Yes __ No Safety Reviews Required X Yes __ No		Effective Date 08-15-95

List of Effective Pages

Page	Revision	Page	Revision
1.0	0	E1-1	0
2.0	0	E2-1	0
3.0	0	E3-1	0
4.0	0	E4-1	0
5.0	0	E5-1	0
6.0	0	E6-1	0
7.0	0	E7-1	0
8.0	0		
9.0	0		
10.0	0		
11.0	0		
12.0	0		
13.0	0		

TMI-1

GPUN DOCUMENT CONTROL COPY #10

This procedure replaces 6100-QAP-7209.24.

	Signature	Concurring Organizational Element	Date
Originator	Michael Zeise	NDE/ISI Specialist	7-25-95
Concurred By	[illegible]	Level III	7-28-95
Approved By	[illegible]	Chemistry/Materials Director	8/8/95

DOCUMENT HISTORY

Revision	Summary of Change	Date
0	Original Revision. This procedure replaces 6100-QAP-7209.24.	08-15-95

TABLE OF CONTENTS

Cover Page 1.0

Document History 2.0

Table of Contents 3.0

1.0 PURPOSE 4.0

2.0 APPLICABILITY/SCOPE 4.0

3.0 DEFINITIONS 4.0

4.0 PROCEDURE 4.0

4.1 Personnel Certification/Qualification 4.0
4.2 Material/Equipment 4.0
4.3 Prerequisites 6.0
4.4 Calibration 6.0
4.5 Examination 9.0
4.6 Reporting 11.0
4.7 QA Records 11.0

5.0 RESPONSIBILITIES 12.0

6.0 REFERENCES 12.0

7.0 EXHIBITS 13.0

1.0 **PURPOSE**

1.1 The purpose of this procedure is to describe the techniques for manual ultrasonic examination of TMI-1 Reactor Coolant pump motor assembly flywheels.

2.0 **APPLICABILITY/SCOPE**

2.1 This procedure is applicable to all certified GPUN and contractor personnel assigned by GPUN to perform manual ultrasonic examination of reactor coolant pump flywheels.

2.2 The requirements of this procedure delineate the manual ultrasonic techniques to detect, locate and dimension indications in the reactor coolant pump motor assembly flywheels in accordance with Reference 6.2

3.0 **DEFINITIONS**

3.1 None.

4.0 **PROCEDURE**

4.1 Personnel Qualification and Certification

4.1.1 GPUN personnel performing examinations to this procedure shall be certified in accordance with Reference 6.3.

4.1.2 Contractor personnel performing examinations to this procedure shall be qualified and certified in accordance with the Contractor's written practice which has been approved by GPUN or they may be certified in accordance with Reference 6.3.

4.1.3 At least one member of the examination crew shall be certified Level II UT inspector or higher.

4.1.4 The examination crew should demonstrate practical proficiency in applying the technical requirements of this standard to a GPUN UT Level III.

4.2 Material/Equipment

4.2.1 Flaw detector

4.2.1.1 A pulse echo ultrasonic flaw detection instrument capable of generating frequencies from 1.0 to 5.0 MHZ shall be utilized. The instrument shall contain a stepped gain control, calibrated in units of 2db or less, and shall be accurate over its useful range to ±0% of the nominal amplitude ratio which will allow comparison of indications beyond the viewable portion of the CRT.

4.2.2 Search units

4.2.2.1 Angle beam and straight beam search units shall be single element with a nominal frequency of 2.25 MHZ. Other frequencies may be

used to overcome variables caused by material properties and for purposes of evaluation of indications. Use of other frequencies shall be approved by a GPUN UT Level III and recorded on Exhibit 1.

4.2.2.2 Examinations shall be performed utilizing a 45° beam angle for flywheels #1 and #4 from the top and bottom surfaces respectively.

4.2.3 Angle beam exit point/angle verification

4.2.3.1 Prior to performance of examinations the exit point of the search unit wedge (angle beam) shall be verified utilizing a standard IIW block or mini-IIW block. This verification shall be performed daily prior to any examinations being performed.

4.2.3.2 Prior to performance of examinations, the actual beam angle shall be determined utilizing a carbon steel IIW block or mini-IIW block. This shall be done to verify that the beam angle is within the required range of ±° of the nominal angle of the search unit wedge. This verification shall be performed daily prior to any examinations being performed. The actual angle and nominal angle of the search unit wedge shall be recorded on Exhibit 1.

4.2.4 Coaxial cables

4.2.4.1 Coaxial cable assembly shall be of any convenient length not to exceed 50 feet.

4.2.5 Couplant

4.2.5.1 Any GPUN approved couplant, such as Ultragel II, which provides intimate contact required for the transmission of high frequency ultrasound shall be acceptable for use. Use of couplant shall be as required by reference 6.8.

4.2.5.2 The minimum amount of couplant should be utilized to prevent damage to the motor windings.

4.2.5.3 Couplant shall be removed from the flywheels after completion of the examinations.

4.2.6 Calibration standard

4.2.6.1 The pump motor assembly flywheels have calibration holes as shown in Exhibits 3 and 4. These holes may be utilized for the initial calibration if directed by a GPUN UT Level III. Flywheel Calibration Standards TMI 370 (Flywheel #1) and TMI 371 (Flywheel #4) shall be used to establish the sweep range of the instrument and DAC curve. To establish the primary sensitivity level for examination, the transfer method, which is outlined in paragraph 4.4.3.6, shall be performed when using calibration standards.

4.3 Prerequisites

4.3.1 Surface preparation

4.3.1.1 Surfaces to be examined shall be clean and free of foreign material which could interfere with the performance of the examination or conduction of sound energy into the part.

> **NOTE**
> Precautions shall be taken to prevent loose parts from falling into motor flywheel assemblies whenever access is gained to the flywheels.

4.3.2 Examination records

4.3.2.1 Baseline and subsequent examination records should be available for review.

4.3.3 Maintenance and Operation Preparation

4.3.3.1 Operation of the flywheel motor lift pumps shall be coordinated with the control room. The motor lift pumps must be energized before the flywheels can be rotated.

4.3.3.2 The oil drip pan should be removed for access to the lower flywheel.

4.4 Calibration

4.4.1 Instrument calibration

4.4.1.1 Instrument calibration for screen height, horizontal and amplitude control linearity shall be in accordance with References 6.4.

4.4.1.2 For instruments and search units, maintenance, calibration and performance characteristics shall be as required by reference 6.9.

4.4.2 System calibration

4.4.2.1 Calibration shall include the complete ultrasonic examination system Any change in search units, shoes, couplants, cables, ultrasonic instruments, recording devices or any part of the examination system shall be cause for a calibration check. The calibration shall be performed on flywheel calibration standards and the transfer method identified in paragraph 4.4.3.6 shall be performed.

4.4.2.2 The maximum reflector response, during calibration, shall be obtained with the sound beam oriented essentially perpendicular to the axis of the calibration reflector. The centerline of the search unit

shall be a minimum of 3/4" from the nearest edge of the calibration standard. Rotation of the sound beam into a corner formed by the reflector and the side of the block may produce a higher amplitude signal at a longer beam path; this beam path shall not be used for calibration.

4.4.2.3 The temperature difference between component to be examined and the basic calibration block shall not exceed 25°F.

4.4.2.4 The transfer method as described elsewhere in this procedure may be omitted by a GPUN Level III if there is reason to question the reliability of the results or if unobtainable.

4.4.3 45° angle beam calibration

4.4.3.1 Calibration shall be performed on Calibration Standard TMI-370 for flywheel #1 and TMI-371 for flywheel #4. Side drilled holes (SDH) are present in each flywheel as identified in Exhibits 3 and 4, however, only the 1/2T SDHs shall be utilized for the transfer method.

> **NOTE**
> Calibration may be performed directly on the flywheel but only as directed by a GPUN UT Level III.

4.4.3.2 To determine the 45° angle beam sweep calibration on flywheel #1, utilize Calibration Standard TMI-370 and place the bottom notch at the 4.2 screen position and the top notch at 8.4. The instrument sweep is now calibrated to represent 10" of metal path.

4.4.3.3 On Calibration Standard TMI-370 for Flywheel #1, establish a DAC curve by adjusting the gain to set the bottom notch signal at 80% ± % FSH at screen position 4.2. Without changing gain, peak the top notch signal at screen position 8.4 and mark the location on the screen. Plot a DAC curve by connecting the peak signal locations (marked on the CRT screen) with a straight line and extrapolate through the full examination range. Note the gain setting (db) on Exhibit 1.

4.4.3.4 On Calibration Standard TMI-370, locate the 1/2T SDH and establish a signal between 50% and 80% FSH and note the signal height and gain setting (db) on Exhibit 1.

4.4.3.5 On flywheel #1, locate the 1/2T SDH by scanning adjacent to the edge of the flywheel (i.e. 1 to 3 inches) as the flywheel is being slowly rotated or by visually locating the holes between the flywheel face and the motor housing or both.

4.4.3.6 The transfer method shall be used to note the difference in gain (db) between the response received from the 1/2T signal in the calibration standard and the 1/2T signal in the flywheel and add or subtract the difference to the reference level established by the bottom notch. This level shall be primary reference level and the difference shall be noted on Exhibit 1.

NOTE
Other transfer methods may be utilized such as the two search unit techniques with the sound opposing each other, but only as directed and approved by GPUN UT Level III.

4.4.3.7 To determine the 45° angle beam sweep calibration on Flywheel #4, utilize Calibration Standard TMI-371 and place the 1/2T signal at screen division 3, the 3/4T at 4.5 the bottom notch at 6 and the 1 1/4T at 7.5. The instrument sweep is now calibrated to represent 20" of metal path.

4.4.3.8 On Calibration Standard TMI-371 for flywheel #4, establish a DAC curve by adjusting the gain to set the 1/2T signal at 80% ±5% FSH at screen position 3 and mark its position on the CRT. Maximize the response from the 3/4T and 1 1/4T SDHs and mark their positions on the CRT. Note the gain setting (db) on Exhibit 1, since this reference level will be utilized for the transfer method on the flywheel. Connect the marks with a straight line and extrapolate through the thickness being examined.

4.4.3.9 Locate the bottom notch signal on Calibration Standard TMI-371 at screen division 6. Increase or decrease the gain to set the peak of this signal to the DAC curve line. Note this gain setting (db) on Exhibit 1.

4.4.3.10 On flywheel #4, locate the 1/2T SDH as identified in paragraph 4.4.3.5 for flywheel #1. With the gain setting and signal height from the 1/2T SDH in paragraph 4.4.3.8, utilize the transfer method as outlined in paragraph 4.4.3.6 to determine the db difference between the 1/2T SDH in flywheel #4 and the 1/2T SDH response on Calibration Standard TMI-371.

4.4.3.11 Add or subtract the db difference established in paragraph 4.4.3.10 to the gain setting established in paragraph 4.4.3.9. This gain setting shall be primary reference level.

4.4.4 System calibration confirmation

4.4.4.1 The sweep range and primary DAC curve shall be checked and verified:

- At the beginning of each day of examination.
- At least every four (4) hours during performance of examinations.
- If any component of the test system is changed (i.e., instrument, transducer, coaxial cable, etc.).
- After any change in personnel.
- At the completion of the examination to which the calibration applies.
- If the operator suspects any malfunction of the UT system.
- In the event of a power loss.

4.4.5 Calibration changes

4.4.5.1 If any point on the DAC curve has decreased 20% of its amplitude, all data sheets since the last calibration check shall be marked void. A new calibration shall be performed and recorded and the voided examination area(s) shall be re-examined.

4.4.5.2 If any point on the DAC curve has increased more than 20% of its amplitude, recordable indications taken since the last valid calibration or calibration check may be re-examined with the current calibration and their values changed on the data sheets.

4.4.5.3 If any point on the DAC curve has moved on the sweep line more than 10% of the sweep division reading, correct the sweep range calibration and note the correction on the appropriate data sheets. If recordable indications are noted on the data sheets, those data sheets shall be voided and a new calibration shall be recorded and the examination areas shall be re-examined.

4.5 Examination procedures

4.5.1 Examination of base material for laminar type reflectors.

4.5.1.1 Base material adjacent to the inner bore region on flywheels #1 and #4 and the bolt holes on flywheel #1 shall be scanned with a longitudinal (0 degree) search unit to detect discontinuities which may interfere with the transmission of shear waves during angle beam examination. (See Exhibit 7)

NOTE
The requirements of paragraph 4.5.1.1 apply only when there is a reason to question sound penetration such as excessive loss of back reflection or existence of abnormal geometric reflectors which dampen.

4.5.2 General requirements

4.5.2.1 All angle beam examinations shall be performed at a scanning sensitivity level at 2x (+6 db) greater than the calibrated reference sensitivity level.

4.5.2.2 Scan speeds shall not exceed six (6) inches per second. Scan the exposed areas within each access port prior to moving the flywheel to the next adjacent area for each system calibration.

4.5.2.3 All angle beam examinations shall be performed in two directions (i.e. beam directed essentially clockwise and counter clockwise around the flywheel bore regions and bolt holes as depicted on Exhibits 5 and 6).

4.5.2.4 Beam angles other than 45° may be utilized as directed and approved by a GPUN UT Level III.

4.5.3 45° Angle Beam Examination

4.5.3.1 On flywheel #1, the top surface is accessible through access ports 1 through 3. The area of interest for the top flywheel is the inside bore region which includes the keyway and all accessible areas surrounding the four (4) bolt holes (Reference Exhibits 5 and 6).

4.5.3.2 On flywheel #4, the bottom surface is accessible through one access port. The area of interest for the bottom flywheel is the inside bore region which includes the keyway.

4.5.3.3 For both Flywheels #1 and #4, the examination requirements for the inside bore region and keyway are identified on Exhibit 5. Exhibit 6 delineates the requirements on flywheel #1 for examination of the areas surrounding each bolt hole.

4.5.3.4 For the inside bore region, Keyway and the areas surrounding the bolt holes, scanning shall be performed on a tangential line or on a line perpendicular to the flywheel and bolt hole radii. The scan width (w) shall be as identified in Exhibits 5 and 6. The minimum overlap of the search unit shall be 25% of the search unit width. The search unit shall be oscillated a minimum of 15° in each direction for each parallel path.

NOTE

Due to access restrictions and surface area limitations, the scanning distances and patterns will be a best effort activity. Limitations and restrictions shall be documented on the UT Examination Data Sheet, Exhibit 2, or a Limited Examination Sheet.

4.5.3.5 45° angle beam examination of flywheels #2 and #3 is not possible unless the flywheels are disassembled.

4.5.4 Evaluation/Interpretation

4.5.4.1 Indications showing a signal amplitude response equal to or greater than 20% of the reference response shall be investigated to determine their origin (geometric or non-geometric). If an indication is determined geometric, it need not be recorded.

4.5.4.2 Evaluation of indications shall be made at the reference sensitivity level and in accordance with the requirements of the Reference 6.6.

4.5.4.3 Non-geometric indications showing a signal amplitude response equal to or greater than 50% of the reference sensitivity level shall be recorded on the data sheet.

4.5.4.4 Each recorded indication shall be identified on the data sheet as to depth, length, signal amplitude and location.

4.5.4.5 In order to determine depth and length of a flaw, flaw sizing techniques, as delineated in Reference 6.7, may be required.

4.5.4.6 Calibration and examination results shall be documented on the applicable data sheets Exhibits 1 and 2.

4.6 Reporting

4.6.1 The distribution of NDE/ISI data shall be performed in accordance with Reference 6.5.

4.7 QA Records

4.7.1 All calibration and examination results shall be recorded on Exhibits 1 and 2, as applicable, and are considered permanent QA Records.

4.7.2 All forms must be totally filled out as applicable, then signed and dated for the day the examination was performed. There shall be no blank spaces on any form after completion. If there is no information available for a particular space, the space shall be filled in with "N/A".

4.7.3 Errors on data forms shall not be covered or eradicated with white-out (liquid paper). Any error which may occur shall be crossed out with a line, initialed and dated by the person making the change. All forms shall be filled out with black ink.

4.7.4 Record retention and transmittal shall be in accordance with Reference 6.5.

5.0 RESPONSIBILITIES

5.1 Responsibilities are as defined earlier in this procedure.

6.0 REFERENCES

6.1 ASME Boiler and Pressure Vessel Code, Section V, Non-destructive Examination, Article 5, 1986 Edition, No addenda

6.2 TMI-1 Technical Specifications Section 4.2.4

6.3 GPUN Procedure 5361-ADM-7230.01, Qualification and Certification of NDE Examination Personnel

6.4 GPUN Procedure 5361-NDE-7209.17, Ultrasonic Instrument Linearity

6.5 GPUN Procedure 5361-ADM-3272.03, Control and Processing of NDE Data

6.6 GPUN Procedure 5361-SPC-7230.26, Evaluation of Recordable Indications

6.7 GPUN Procedure 5361-NDE-7209.10, Ultrasonic Sizing of Planar Flaws

6.8 TMI Administrative Procedure 1104-28Q, Mixed Low Level Radioactive Waste Control Program

6.9 GPUN Procedure 5361-NDE-7209.18, Calibration and Maintenance of Nondestructive Examination Equipment

6.10 TMI Administrative Procedure 1068 - Controlled Consumable Materials

7.0 **EXHIBITS**

7.1 Exhibit 1 - UT Calibration Data Sheet (Typical).

7.2 Exhibit 2 - UT Examination Data Sheet (Typical).

7.3 Exhibit 3 - Configuration of Flywheel #1.

7.4 Exhibit 4 - Configuration of Flywheel #4.

7.5 Exhibit 5 - Scanning Requirements for flywheel #1 and 4 inside bore region and keyway

7.6 Exhibit 6 - Scanning Requirements for flywheel #1 bolt hole region

7.7 Exhibit 7 - Straight beam scan requirements for laminar reflectors

EXHIBIT 1

UT CALIBRATION DATA SHEET
-TYPICAL-

GPU Nuclear **Calibration Sheet** Cal Sheet#

Components Examined: Procedure: Rev

Examiner Signature: Print: Initial: SSN: Level

Examiner Signature: Print: Initial: SSN: Level

Instrument Make Model

Instrument ID Number

Pulser
Pulse Duration
Damping ☐ Off ☐ On
☐ Pulse Echo ☐ Dual
Repetition Rate
Voltage

Sweep Circuit
Coarse
Range
Delay
Velocity
Screen Depth in.

Gain
Coarse
Fine
Uncal %

Receiver
Frequency
Reject ☐ Off ☐ On %

Display
☐ Fullwave ☐ RF
☐ Half (+) ☐ Half (-)
☐ Filter 1 2 3 4 5
☐ Other

DAC Plot

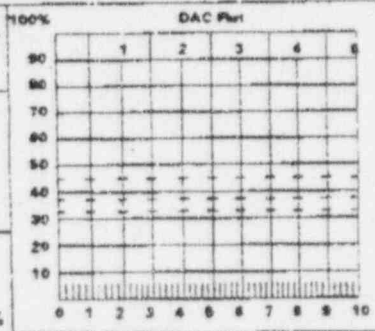

Date	Hours	Screen Reading in Inches
Reflector	Amplitude % of FSH	

Search Unit Cable
Type Length
No. of Inter. Connectors
Couplant
Make Batch #
Thermometer
S/N: Cal Due

Cal Standard
ID#
Size Sch.
Thickness
S/S CS
Temp °F

Cal Direction
☐ Axial ☐ Both
☐ Circ. ☐ Normal

System Check
☐ Exit Point
☐ Angle +/- 2

Search Unit
I.D. #
Type Size
Freq MHZ
Angle Mode

Other Instrument Settings

Setting	Value

Date / Hours	/		/		/	
Reflector	% FSH	Inches	% FSH	Inches	% FSH	Inches
Initials						

Remarks:

ANII Review

Technical Review
Reviewed By
Level Date

N0927 (09/83)

EXHIBIT 2

UT EXAMINATION DATA SHEET
-TYPICAL-

GPU Nuclear — **Ultrasonic Examination Data Sheet** — Page ___ of ___

Location: ☐OC ☐TMI-1 ☐TMI-2		NDE Request	Data Sheet No.
Class:	Item:		
Task Description:		Task No.:	Date:
Comp. Desc.:	System:		Code/Spec.:
Procedure/Rev.:		Drawing No./Rev.:	
Test Surface:	Thickness:		Material
Examiner	Signature:	Print:	ID:	Level:
Examiner	Signature:	Print:	ID:	Level:
Scanning Direction: ☐Circumferential ☐Axial	Limited Scan: ☐Yes ☐No	Cal Sheet:	Cal Sheet:	Cal Sheet:
		Angle:	Angle:	Angle:
		Time Start: Hrs.	Time Start: Hrs.	Time Start: Hrs.
		Time Stop: Hrs.	Time Stop: Hrs.	Time Stop: Hrs.
		Temp.: F	Temp.: F	Temp.: F
		Date:	Date:	Date:

Weld Joint
Surface 1: ___
Surface 2: ___
LD: ___
WD: ___

Weld Profile
Weld Height: ___ Weld Width: ___
Flow
Surface One — Surface Two

BM	Haz.	Weld Ct.	Haz.	BM

S/N ID	Indication No.	Angle	Test Surface	Beam Dir.	Max Amp %	Max Data	W	Max Depth	Max CCW	Forwarded Two W	Forwarded Two Depth	Backward Two W	Backward Two Depth	End L Point 1 W	End L Point 1 CCW	End L Point 2 W	End L Point 2 CCW	Reference Mark	Reference Location	Fingerprints

Technical Review
By: ___
Level: ___
Date: ___

Disposition
☐ISI ☐Recordable
☐PSI ☐No Recordable
☐Nonrelevant

ANI Review

ER Number: | NDE Request #:

N 1006 (12-89)

EXHIBIT 3

CONFIGURATION OF FLYWHEEL #1

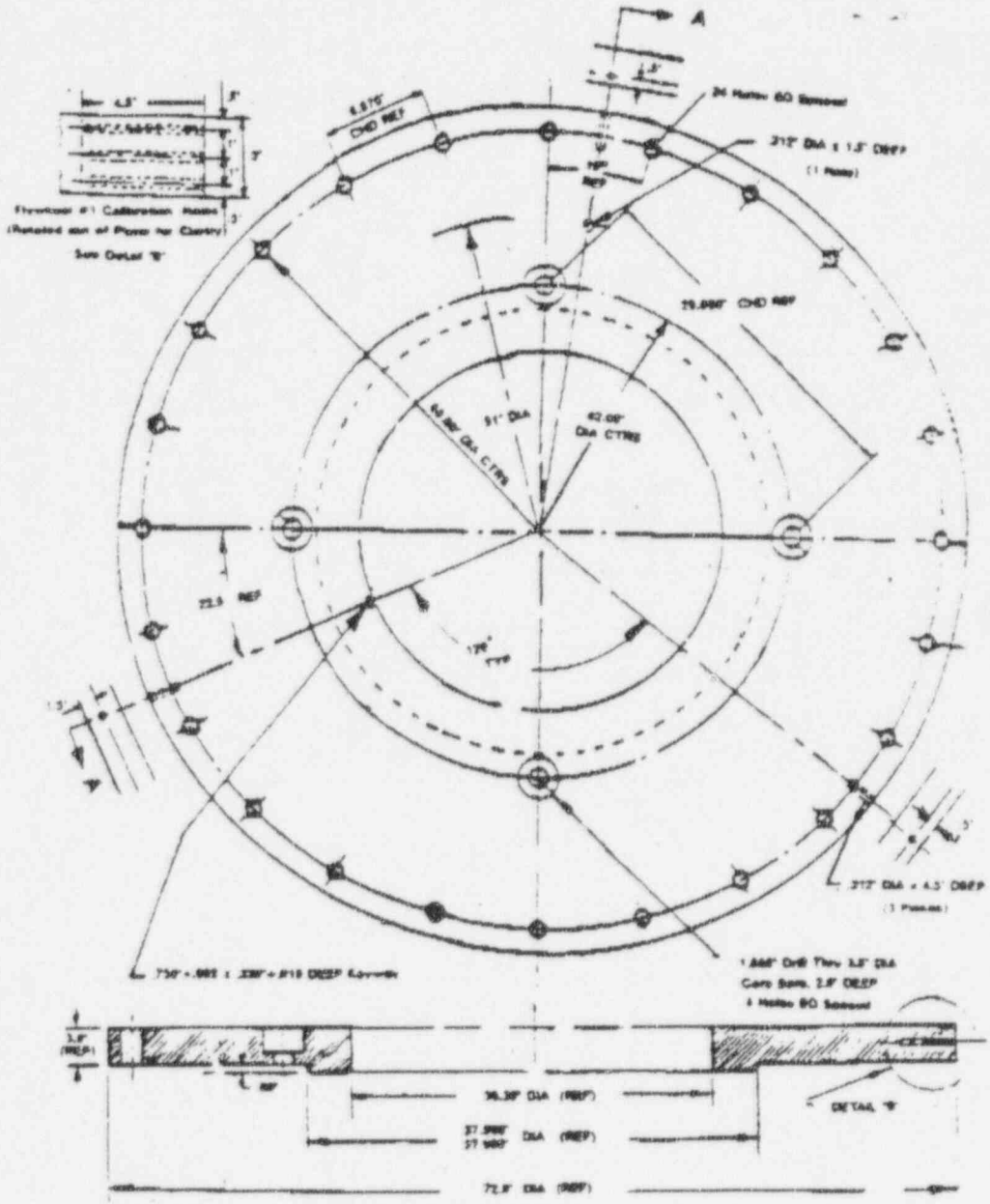

FLYWHEEL #1

EXHIBIT 4

CONFIGURATION OF FLYWHEEL #4

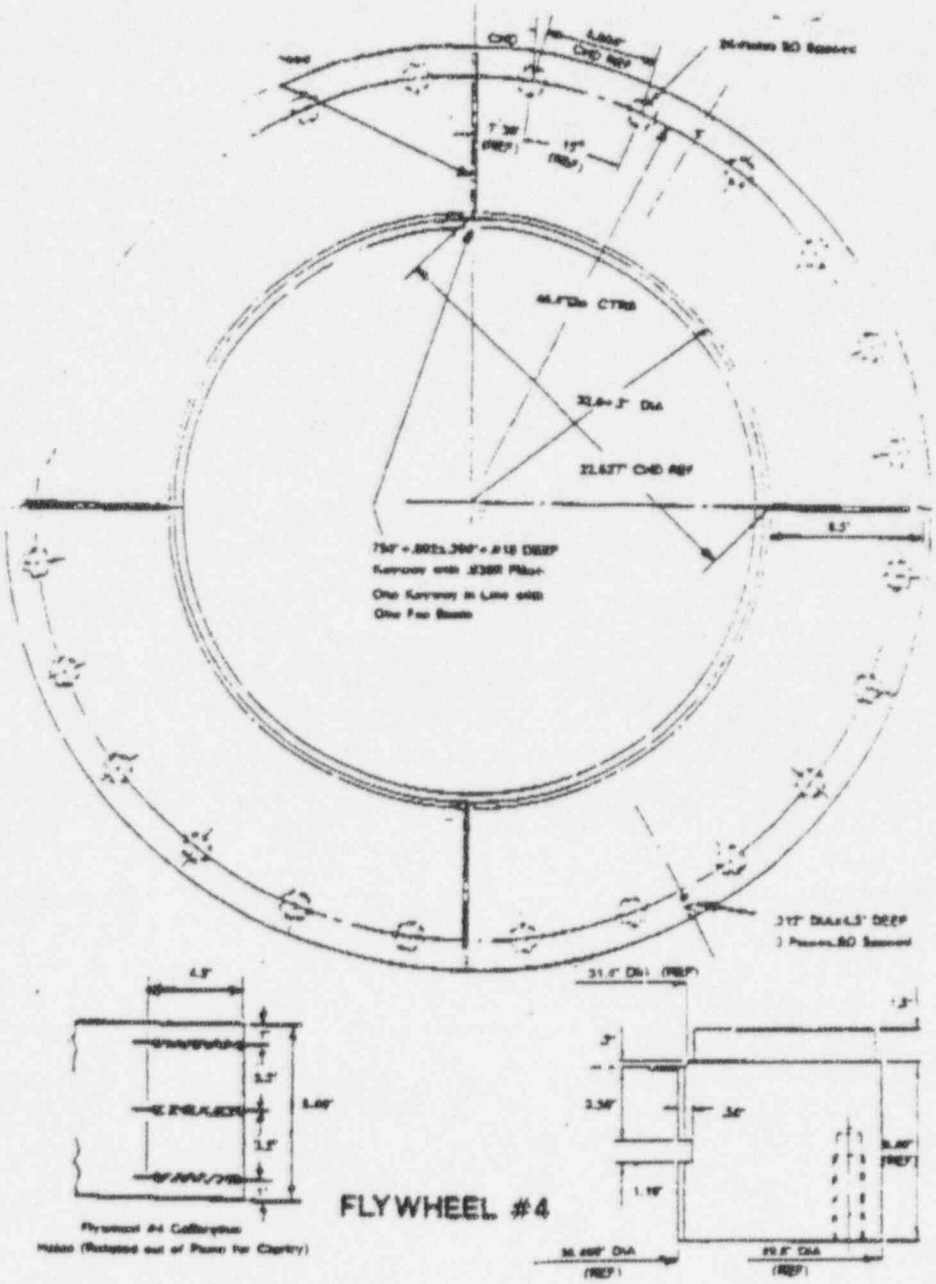

EXHIBIT 5

SCANNING REQUIREMENTS FOR FLYWHEEL #1 AND #4 INSIDE BORE REGION AND KEYWAY

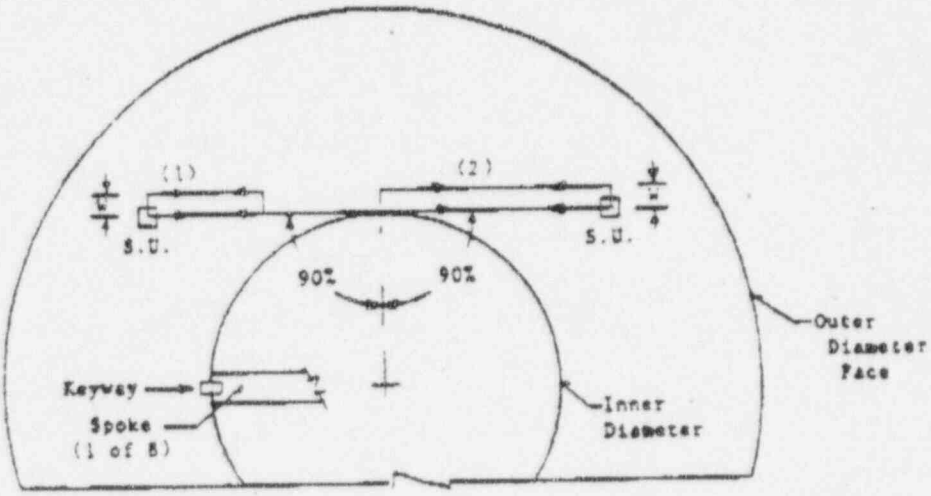

Inner bore and Keyway	Foreward/Backward Scan Distance	Scan Width(W)	Scan Direction
(1) Flywheel #1	3.5"(1/2V) to 7"(full 'V')	1"	360° CW & CCW
(2) Flywheel #4	0" (Surface) to 8.4"(1/2V)	1"	360° CW & CCW

EXHIBIT 6

SCANNING REQUIREMENTS FOR FLYWHEEL #1 BOLT HOLE REGION

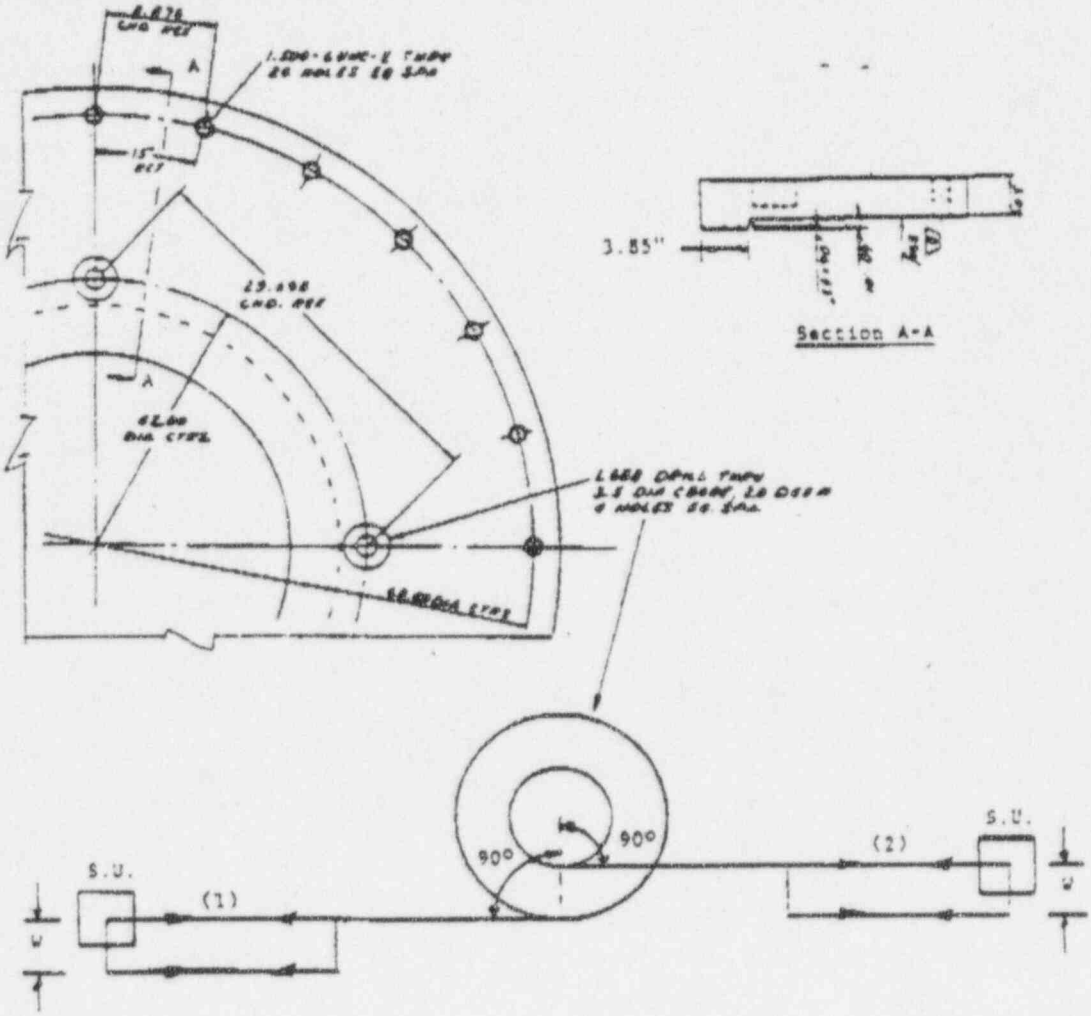

	Bolt Hole	Foreward/Backward Scan Distance	Scan Width(W)	Scan Direction
(1)	3.5" dia.	3.5"(1/2V) to 7"(Full 'V')	1"	360° CW & CCW
(2)	1.68" dia.	3.5"(1/2V) to 7"(Full 'V')	0.9	360° CW & CCW

NOTE:

Scans 1 & 2 may be performed simultaneously in both CW & CCW directions.

EXHIBIT 7

STRAIGHT BEAM SCAN REQUIREMENTS FOR LAMINAR REFLECTORS

Straight Beam for Laminar Reflectors (all procedure requirements apply except when superseded by this exhibit).

1.0 CALIBRATION

1.1 Calibrate the screen range on the calibration standard or other similar metal standard.

1.2 Select a direct read screen range which will produce a back reflection of greater than 40% but less than 100% full screen sweep from the maximum anticipated examination thickness.

1.3 Couple the search unit to the calibration standard and calibrate the screen range by use of the sweep and delay controls.

1.4 Couple the search unit to the part being examined and adjust the initial back reflection to 80% FSH. Adjustment of the gain control is permitted during examination in order to maintain the back reflection response.

2.0 RECORDING

2.1 Record all areas giving indications equal to or greater than the remaining back reflection.

2.2 Recording of straight beam laminar type reflectors requires recording the locations of all four sides of a rectangle which would contain the indication extremities at the required recording level.

2.3 Record all laminar indications which produce a response equal to or greater than the remaining back reflection. These dimensions and locations will be used to determine areas of interference with the angle beam examination.

2.4 Record all laminar indications where a continuous loss of back reflection exists along with a continuous indication in the same plane. These dimensions and locations will be used to determine acceptability of the component for continued service.

3.0 SCAN SENSITIVITY

3.1 Adjustment to the scan sensitivity may be necessary and shall be considered when recordable laminar reflectors are noted in order to maintain an acceptable back reflection.

APPENDIX D

SAMPLE FLYWHEEL MATERIAL TEST CERTIFICATES

U336

NON-DESTRUCTIVE TEST REPORT
QUALITY CONTROL
WESTINGHOUSE FORM 36556

FILE: SHOP ORDER 81 P352 #2

TEST: ULTRASONIC ZYGLO (DYE PENETRANT) MAGNAFLUX HARDNESS

C.C.: Miss Jackson 5NS C.C.: ME 2 insp.

C.C.: Mr. Carlson 6G C.C.:

PURCHASE ORDER NO.	SUPPLIER	SECTION	DRAWING NO.	HEAT NO.	FORGING NO.
10 FV 06409 10PV47470	Lukens	ME 2	6550D851	C9474 C9446	3 21

MATERIAL: FLYWHEEL ASSY.

P.O.S.

RESULTS: of dye check of 9.438 dia bore & 18" dia face shows no indications E.G. Patrick 2-23-72
9.375 bore & 18 dia face shows no indications E.G.P. 2-28-72

REPORTED BY: E.G. Patrick DATE: 2-28-72

DA NO.

13

LUKENS STEEL COMPANY

INSPECTION DEPARTMENT

NON-DESTRUCTIVE TESTING REPORT

MILL ORDER NO. 8587-1-57107-1	TYPE TEST ~~MAGLEC TOUCOPS~~	DATE 1/4/72
QUALITY ASTM A-533-69A Gr. B CL 1	SPECIFICATION CODE CASE 1338-4 ALT. 1 AND. PROC. 8-9	
CUSTOMER NO ~~KINAT 10-PV-47570~~	EQUIPMENT USED ~~Sperry~~ UM 715 # 31	COUPLANT
SIZE & ONLY 1-1/8 LIB. 2.25 AHS	METHOD	METHOD SOAP & WATER
SPACING 1 x 1 2.25 AHS A.	AMPERAGE	TYPE OF SURFACE CONTACT
TRANSDUCER SPERRY	GRID REF	
TYPE OF PROCS 100 % SD	SIZE ~~200 % AD~~	UNGROUND
IF INSPECTOR'S NAME & QUALIFICATIONS	OD	ID
WITNESSED BY [illegible]	2 RINGS 75-1/2 x	3-1/4 x 8
	MELT & SLAB C9446-2A	MARK Ic. 1

I HEREBY CERTIFY THAT THE ABOVE IS CORRECT TO THE BEST OF MY KNOWLEDGE, INFORMATION AND BELIEF.

U.T. OK per. SPEC.

[illegible] Rank

U336

PURCHASER:
Westinghouse Elec. Corp.
3 LRA Purch. Dept.
Mr. G. E. Stepp
E.Pittsburgh, Pa. 15112

LUKENS STEEL COMPANY

COATESVILLE, PA. 19320

TEST CERTIFICATE

MILL ORDER NO.	CUSTOMER P.O.	
57808-1	10-PV-66404	DP 122371 DD

DATE 12-31-71 FILE NO 8587-07-14

CONSIGNEE
S.O. U33C TVA
Motor No. 81P352-2

SPECIFICATIONS:
A-533-67 Gr. B Class 1 Mod. by Sales Order

BEND TEST O.K. HOMOGENEITY TEST

CHEMICAL ANALYSIS

MELT NO.	C	Mn	P	S	Cu	Si	Ni	Cr	Mo	V	Ti	Al	Basic Process X	
C9479	20	1.32	010	020		24	47		51				Elec. E.C.P. V.I.P. Steel	

RELEASED BY Q.C.
TO TEC. 7W F-2
INSP. 1-12-72

PHYSICAL PROPERTIES

MELT NO.	SLAB NO	YIELD PSI X100	TENSILE PSI X100	% ELONG IN 2	% R.A.	BHN	IMPACTS V-Notch +10°F.				DESCRIPTION
C9479	3	TX 638	865	28		174	T 67	71	77		1-5" x 8-1/4 ID x 65-1/2 OD
		BX 673	880	27		179					
		TL 646	873	29		174					
		BL 667	881	28		179	L 81	74	79		

Ring and tests heated to 1650°F./1700°F., held 1 hr. per inch min. and water quenched to 500°F., then tempered 1280°F., held 1 hr. per inch min. and air cooled.

Ring and tests stress relieved by heating to 1150°F., held 1 hr. per inch min. and furnace cooled to 600°F.

U336

11-1-72 CAV MT

We hereby certify the above figures are correct as contained in the records of the company.

AUTHORIZED SIGNATURE F. G. Kline

FORM# F1/002/001-R 7/70

LUKENS STEEL COMPANY

INSPECTION DEPARTMENT

NON-DESTRUCTIVE TESTING REPORT

CUSTOMER	MILL ORDER NO. 9537-14-57802-1	TYPE TEST BEELEC RESCOPE	DATE 12/14/71
	QUALITY ASTM A-533-69A GR. B CL. 1 MOD.	SPECIFICATION CODE CASE 1338-4 ALT. 1 MOD, PROC. S-9	
	CUSTOMER NO. P.O.#10-IV-66404	EQUIPMENT USED SPERRY UM 715 # 31	
CONSIGNED TO	SEARCH UNIT 1-1/8 DIA. 2.25 MHz SPACING 1 X 1 2.25 MHz AB	AMPLITUDE AMPERAGE	COUPLANT SOAP & WATER METHOD CONTACT
	TRANSDUCER SPERRY TYPE OF PRODS	GRID REF. 100% SB 200% AB	TYPE OF SURFACE BLASTED
	INSPECTORS NAME & QUALIFICATIONS [illegible]	SIZE 1 RING 65-1/2 OD X 8-1/4 ID X 5	
	WITNESSED BY	MELT & SLAB C9479-3	MARK It. 1

(16)

U336

I HEREBY CERTIFY THAT THE ABOVE IS CORRECT TO THE BEST OF MY KNOWLEDGE AND BELIEF.

NON-DESTRUCTIVE TEST REPORT
QUALITY CONTROL
WESTINGHOUSE FORM 26356

FILE: SHOP ORDER 81P352 #3

TEST: ULTRASONIC ZYGLO (DYE PENETRANT) MAGNAFLUX HARDNESS

C.C.: Miss Jackson C.C.: ME-2 Insp.

C.C.: Mr. Carlson C.C.:

PURCHASE ORDER NO.	SUPPLIER	SECTION	DRAWING NO.	HEAT NO.	FORGING NO.
10PV47470 10PV47471	LUKENS	ME-2	6550D85	C9446 C9362	2B 1A

MATERIAL: Flywheel Assy.

P.O.S.

RESULTS: of dye check of 9.4375 dia bore and 18" dia face shows no indications. E.G. Patrick 6-2-72
and 9.375 dia bore & 18" dia face show no indications.

DA NO.

REPORTED BY: E.G. Patrick

DATE: 6-5-72

U336

PURCHASER:

Westinghouse Elec. Corp.

3 Mr. G. E. Stepp

LUKENS STEEL COMPANY

COATESVILLE, PA. 19320

TEST CERTIFICATE

MILL ORDER NO.	CUSTOMER P.O.	
57106-1	10-PV-47471	DP 122371 DD

DATE: 12-31-71 FILE NO. 8587-07-14

CONSIGNEE:

S.O. U336 TVA

Meter No. 81P353

SPECIFICATIONS:

A-533-69A Gr. B Class 1 Mod. by Sales Order 81P352

BEND TEST O.K. HOMOGENEITY TEST

CHEMICAL ANALYSIS

MELT NO.	C	Mn	P	S	Cu	Si	Ni	Cr	Mo	V	Ti	Al	Nb		
C9362	21	1.30	010	020		27	59		54				Basic Process	Elec. F.G.P.	V.I.P. Steel

PHYSICAL PROPERTIES

MELT NO	SLAB NO.	YIELD PSI X100	TENSILE PSI X100	% ELONG. IN 2"	% R.A.	BHN	IMPACTS Y-Notch +10°F.				DESCRIPTION
C9362	1A	TX 634	891	25		192	T 44	45	35		4-5" x 8-1/4 ID x 65-1/2 OD
		BX 651	891	25		192					
		TL 617	870	27		183					
		BL 638	831	28		187	L 30	34	45		

Rings and tests heated to 1650°F./1700°F., held 1 hr. per inch min. and water quenched to 500°F., then tempered 1280°F., held 1 hr. per inch min. and air cooled.

Rings and tests stress relieved by heating to 1150°F., held 1 hr. per inch min. and furnace cooled to 600°F.

(23)

U336

CAV WT

LUKENS STEEL COMPANY
INSPECTION DEPARTMENT

NON-DESTRUCTIVE TESTING REPORT

CUSTOMER	MILL ORDER NO. 8587-18-57106-1	TYPE TEST REFLECTOSCOPE	DATE 12/29/72
	QUALITY ASTM A-533-69A GR. B CL.1	SPECIFICATION CODE CASE 1330-4 ST.1 MOD. PROC.S-9	
	CUSTOMER NO. P.O. 10-PV-47471	EQUIPMENT USED SPERRY UM 725 # 31	
CONSIGNED TO	SEARCH UNIT 1-1/8 DIA. 2.25 MHz	AMPLITUDE	COUPLANT
	SPACING 7 X 1 2.25 MHz	AMPERAGE	METHOD SOAP & WATER
	TRANSDUCER SPERRY	GRID REF. 100% SB 200% BB	TYPE OF SURFACE BLASTED
	TYPE OF PRODS		
	INSPECTORS NAME & QUALIFICATIONS	SIZE 4 RINGS 65-1/2 OD X 9-1/4 ID X 5	
	WITNESSED BY	MELT & SLAB C9362-1A	MARK Jt. 1

I HEREBY CERTIFY THAT THE ABOVE IS CORRECT TO THE BEST OF MY KNOWLEDGE AND BELIEF. U.C. OK PER. SPEC.

INSPECTION SUPERVISOR

U336

PURCHASER:
3 Westinghouse Elec. Corp.
LRA Pur. Dept.
Mr. G. E. Stepp
E. Pittsburgh, Pa. 15112

LUKENS STEEL COMPANY

COATESVILLE, PA 19320

TEST CERTIFICATE

MILL ORDER NO.	CUSTOMER P.O.	
57107-1	10-PV-47470	MP .1572 DR

CORRECTED COPY: 1-20-72

DATE: 1-11-72 FILE NO. 3587-07-14

CONSIGNEE: S.O. U-336 TVA

Motor No. 81P353 #3

SPECIFICATIONS: A-533-69A Gr. B CL 1 Mod. by Sales Order

M JAN 1 9 72

LINE TEST O.K. HOMOGENEITY TEST

CHEMICAL ANALYSIS

MELT NO.	C	Mn	P	S	Cu	Si	Ni	Cr	Mo	V	XXXX	XXX	XXXX	XXXX	BASIC PROCESS
C9446	22	1.30	007	015		22	57		53		V.I.P. Steel			P.G.P.	Electric

PHYSICAL PROPERTIES

MELT NO.	SLAB NO.	TENSILE PSI	YIELD PSI	ELONG % 2"	XXXX BHN	XXX LOC.	IMPACTS V-Notch +10°F.				DESCRIPTION
C9446	2A	TX 699	917	24	187	T	52	54	48		2-8" x 8-1/4 ID x 75-1/2 OD
		CL 660	921	28	187						
		TX 694	926	23	192						
		CL 705	926	25	192	L	106	70	70		
"	2B	TX 669	886	23	187	T	38	48	45		2- "
		CL 693	905	26	183						
		TX 734	950	24	187						
		CL 715	925	24	192	L	92	89	102		

Rings and tests heated 1650-1700 F., held 1 hr. per inch min. and water quenched to 500°F., then tempered 1150°F., 1260 hr held 1 hr. per inch min. and air cooled.

Rings and tests stress relieved by heating to 1100°F., held 1 hr. per inch min. and furnace cooled to 600°F.

FEB 1972 RECEIVED L.R.A. 4 PURCHASING

We hereby certify the above figures are correct as contained in the records of the company.

SUPERVISOR-TESTING F. H. Kline

U 336

LUKENS STEEL COMPANY

INSPECTION DEPARTMENT

NON-DESTRUCTIVE TESTING REPORT

CUSTOMER	MILL ORDER NO. 6567-14-57107-1	TYPE TEST ULTRASONIC	DATE 1/4/72
	QUALITY ASTM A-533-'68A GR.B CL.1	SPECIFICATION CODE CASE 1336-4 ART.1 NED. PROC. 8-9	
	CUSTOMER NO. P.O.# 10-PV-47470	EQUIPMENT USED SPERRY UM 715 # 31	
CONSIGNED TO	SEARCH UNIT 1-1/8 DIA. 2.25 MHz	AMPLITUDE	COUPLANT METHOD SOAP & WATER CONTACT
	SPACING 1 X 1 2.25 MHz AB	AMPERAGE	
	TRANSDUCER SPERRY	GRID REF. 100 % SB 200 % AB	TYPE OF SURFACE GROUND
	TYPE OF PROBE		
	INSPECTORS NAME & QUALIFICATIONS M. Hare	SIZE 2 RINGS 75-1/2 OD X 8-1/4 ID X 8	
	WITNESSED BY	MELT & SLAB C9446-2B	MARK It. 1

(26)

I HEREBY CERTIFY THAT THE ABOVE IS CORRECT TO THE BEST OF MY KNOWLEDGE AND BELIEF. N.D.T. SK Pers. Supv.

A. Rauck

INSPECTION SUPERVISOR

U336

NON-DESTRUCTIVE TEST REPORT
QUALITY CONTROL
WESTINGHOUSE FORM 26320

FILE: SHOP ORDER B1P352 #4

TEST: ULTRASONIC ZYGLO (DYE PENETRANT) MAGNAFLUX HARDNESS

C.C.: Miss Jackson C.C.: ME-2 INSP.

C.C.: Mr. Carlson C.C.:

PURCHASE ORDER NO.	SUPPLIER	SECTION	DRAWING NO.	HEAT NO.	FORGING NO.
10PV47471 10PV47470	LUKENS	ME-2	6550D85	C9362 C9446	1A 3A

MATERIAL: FLYWHEEL ASSY.

P.O.S.

RESULTS: of dye check of 9.437 dia bore & 18" dia face shows no indications Ref. 6-8-72
Dye Check of 9.375 Bore + 18" Dia face OK
Roberts 6/12/72

REPORTED BY: Roberts DATE: 6/12/72

DA NO.

U336

PURCHASER:
3 Westinghouse Elec. Corp.
LRA Pur. Dept.
Mr. G. E. Stepp
E. Pittsburgh, Pa. 15112

LUKENS STEEL COMPANY
COATESVILLE, PA. 19320
TEST CERTIFICATE

MILL ORDER NO.	CUSTOMER P.O.	
57107-1	10-PV-47470	MP .1572 DR

CORRECTED COPY: 1-20-72
DATE: 1-11-72 FILE NO. 6587-07-14
CONSIGNEE: SO. UNSL. TVA
MOTOR # 81P852 #4

SPECIFICATIONS:
A-533-69A Gr. B CL 1 Mod. by Sales Order

M JAN 1 9

BEND TEST O.K. HOMOGENEITY TEST

CHEMICAL ANALYSIS

MELT NO.	C	Mn	P	S	Cu	Si	Ni	Cr	Mo	V	XXXX	XXX	XXXX	XXXX	BASIC PROCESS
C9446	22	1.30	007	015		22	57		53		V.I.P. Steel				P.G.P. Electric

PHYSICAL PROPERTIES

MELT NO.	BAR NO.	YIELD PT. PSI	TENSILE PSI	% ELONG. 2"	XXXX BHN	XXX Loc.	IMPACTS V-Notch +10°F.				DESCRIPTION
C9446	2A	PX 689	917	24	187	T	52	54	48		2-8" x 8-1/4 ID x 75-1/2 OD
		PL 666	901	28	187						
		PX 694	926	23	192						
		PL 706	926	25	192	L	106	70	70		
"	2B	PX 665	886	23	187	T	38	48	45		2- "
		PL693	905	25	183						
		PX 734	950	24	187						
		PL 715	925	24	192	L	92	89	102		

Rings and tests heated 1650-1700 F., hold 1 hr. per inch min. and water quenched to 500°F., then tempered 1100°F., hold 1 hr. per inch min. and air cooled.
1260

Rings and tests stress relieved by heating to 1100°F., hold 1 hr. per inch min. and furnace cooled to 600°F.

FEB 1972 RECEIVED L.R.A. 4 PURCHASING

U336

We hereby certify the above figures are correct as contained in the records of the company.

SUPERVISOR-TESTING C. F. Kline

LUKENS STEEL COMPANY
INSPECTION DEPARTMENT

NON-DESTRUCTIVE TESTING REPORT

CUSTOMER	MILL ORDER NO. 8587-14-57106-1	TYPE TEST REFLECTOSCOPE	DATE 12/22/72
	QUALITY ASTM A-533-69A GR. B CL. 1	SPECIFICATION CODE CASE 1338-4 ALT. 3 MOD. PROC. S-9	
	CUSTOMER NO. P.O. 10-IV-47471	EQUIPMENT USED SPERRY UM 715 # 31	
CONSIGNED TO	SEARCH UNIT SPACING 1-1/8 DIA. 2.25 MHz ~~1 X 2 2.25 MHz AB~~	AMPLITUDE / AMPERAGE	COUPLANT METHOD SOAP & WATER
	TRANSDUCER SPERRY TYPE OF PRODS	GRID REF. 100% SB 200% AB	TYPE OF SURFACE ~~BLASTED~~
	INSPECTORS NAME & QUALIFICATIONS [illegible]	SIZE 6 RINGS 65-1/2 OD X 8-1/4 ID X 5	
	WITNESSED BY	MELT & SLAB C9362-1A	MARK Ic. 2

I HEREBY CERTIFY THAT THE ABOVE IS CORRECT TO THE BEST OF MY KNOWLEDGE AND BELIEF. U.T. OK per. SPEC.

[illegible]
INSPECTION SUPERVISOR

C 238

Motor S/N

V

NON-DESTRUCTIVE TEST REPORT
QUALITY CONTROL
WESTINGHOUSE FORM 36356

FILE: SHOP ORDER 81P352 #1

TEST: ULTRASONIC ZYGLO (DYE PENETRANT) MAGNAFLUX HARDNESS

C.C.: Miss Jackson C.C.: ME-2 Insp

(C.C.:) Mr Carlson C.C.:

PURCHASE ORDER NO.	SUPPLIER	SECTION	DRAWING NO.	HEAT NO.	FORGING NO.
10PV47471	Lukens	ME-2	655D855	C9362	1A
10PV47470				C9446	2B

MATERIAL: Flywheel Assem

P.O.S.

RESULTS: Dye check of 9.438 bore + 18 face OK R Baughman 2-25-72

DYE CHECK OF 9.3255 BORE + 18 DIA FACE OK
Condisky 2-28-72

DA NO.

REPORTED BY

DATE

0336

NON-DESTRUCTIVE TEST REPORT
QUALITY CONTROL
W. STINGHOUSE FORM 36336

FILE: SHOP ORDER 81P352 #2

TEST: ULTRASONIC ZYGLO (DYE PENETRANT) MAGNAFLUX HARDNESS

C.C.: Miss Jackson 5NS C.C.: Mr. 2 insp.

C.C.: Mr. Carlson 6G C.C.:

PURCHASE ORDER NO.	SUPPLIER	SECTION	DRAWING NO.	HEAT NO.	FORGING NO.
10FV66409 10PV47470	Lukens	ME 2	655D851-	C9474 C9446	3 2A

MATERIAL: FLYWHEEL ASSY.

P.O.S.:

RESULTS: of dye check of 9.438 dia bore & 18" dia face shows no indications E.G. Patrick 2-23-72
9.375 bore & 18 dia face shows no indications E.G.P. 2-28-72

DA NO.

REPORTED BY: E.G. Patrick

DATE: 2-28-72

U336

NON-DESTRUCTIVE TEST REPORT
QUALITY CONTROL
WESTINGHOUSE FORM 28398

FILE: SHOP ORDER 81P352 #3

TEST: ULTRASONIC ZYGLO (DYE PENETRANT) MAGNAFLUX HARDNESS

C.C.: Miss Jackson C.C.: ME-2 Insp.

C.C.: Mr. Carlson C.C.:

PURCHASE ORDER NO.	SUPPLIER	SECTION	DRAWING NO.	HEAT NO.	FORGING NO.
10PV47470 10PV47471	LUKENS	ME-2	6550D85	C9446 C9362	2B 1A

MATERIAL: Flywheel Assy.

P.D.S.

RESULTS of dye check of 9.4375 dia bore and 18" dia face shows no indications. E.G. Patrick 6-2-72
and 9.375 dia bore & 18" dia face show no indications.

DA NO.

REPORTED BY: E.G. Patrick

DATE: 6-5-72

U336

NON-DESTRUCTIVE TEST REPORT
QUALITY CONTROL
WESTINGHOUSE FORM 36396

FILE: SHOP ORDER 81P352 #4

TEST: ULTRASONIC ZYGLO (DYE PENETRANT) MAGNAFLUX HARDNESS

c.c.: Miss Jackson c.c.: ME-2 insp.

c.c.: Mr. Carlson c.c.:

PURCHASE ORDER NO.	SUPPLIER	SECTION	DRAWING NO.	HEAT NO.	FORGING NO.
10PV47471 10PV47470	LUKENS	ME-2	6550D85	C9362 C9446	1A 2A

MATERIAL: FLYWHEEL ASSY.

P.O.S.:

RESULTS: of dye check of 9.437 dia bore & 18" dia face shows no indications Eap. 6-8-72
Dye Check of 9.375 Bore + 18" Dia face OK
Roberts 6/12/72

DA NO.

REPORTED BY: Roberts

DATE: 6/12/72

U336

U435

NDE FOR FLYWHEELS

Shop Order 88P976

PT per 84350UD of plate prior to assembly.

P.O. P092-237 Ht. No. D5301-4 Insp.&Date T. Condrasky 5-2-78

PT per 84350UD of plate prior to assembly.

P.O. P092-238 Ht.No. B1717-4 Insp.&Date T. Condrasky 4-19-78

PT per 84350UD after first machining.

Insp. &Date T. Condrasky 5-15-78 and 6-2-78

PT per 84350UD after keyway.

Insp. & Date G. Walk. 10-18-78

UT per 84351WL of finished flywheel.

Insp. & Date J. Rene & J.C. Rice 10-6-78

C. L. Carlson

Original documents are on file at W LRAD East Pittsburgh, Penna. 15112

PURCHASER:
3. WESTINGHOUSE ELEC. CORP.
QUAL. ASSURANCE DEPT.-26A
EAST PITTSBURGH, PA. 15112

LUKENS STEEL COMPANY

COATESVILLE, PA. 19320

TEST CERTIFICATE

DATE: 4-11-78 FILE NO 8587-07-99

CONSIGNEE:

MILL ORDER NO.	CUSTOMER P.O.	
54173-1	P092-238	MP 4778 DD 2/10

THE MATERIAL HAS BEEN MANUFACTURED AND TESTED IN ACCORDANCE WITH PURCHASE ORDER REQUIREMENTS AND SPECIFICATION(S)

WEST PDS-10310CR REV. N 77 A-533 GR. B CL. 1

BEND TEST HOMOGENEITY TEST

1pc-55-P-7L

CHEMICAL ANALYSIS

MELT NO.	C	MN	P	S	CU	SI	NI	CR	MO	V	TI	AL	XXXX		BASIC PROCESS
B1717	.20	1.33	.011	.002		.25	.68		.59				VIP STEEL		ELEC

29

PHYSICAL PROPERTIES

MELT NO.	SLAB NO.	YIELD PSI X100	TENSILE PSI X 100	% ELONG IN 2"	% R.A.	XXXX XXXX LOC.	IMPACTS V-NOTCH +70°F.			FRACTURE APPEARANCE % SHEAR	DESCRIPTION
B1717	4	701 719	925 964	23 26		T	156	160	166	99-99-99	2- 5" -1/2 ID X 66 OD
					LATERAL EXPANSION IN INCHES		.096	.098	.098		
						L	172	166	180	99-99-99	
					LATERAL EXPANSION IN INCHES		.096	.099	.098		

TRANS. DROP WEIGHT TESTS PER E208 (SIZE P3) @ +20°F., EXHIBIT NO BREAK
NDT IS +10°F. OR BELOW

RINGS AND TESTS HEATED 1625-1675°F., HELD 1/2 HR. PER INCH MIN. AND WATER QUENCHED, THEN TEMPERED 1260°F., HELD 1/2 HR. PER INCH MIN. AND WATER QUENCHED.

RINGS AND TESTS STRESS RELIEVED BY HEATING TO 1100-1150°F., HELD 1 HR. PER INCH MIN. AND FURNACE COOLED TO 600°F.

RELEASED BY Q.C.
TO SEC. 220K
INSP. N. MATEJEVICH DATE 4-11-78

U435

We hereby certify the above information is correct.

SUPERVISOR TESTING F.C. Kline

FORM 25 (LUKENS INS. 12)

LUKENS STEEL COMPANY
INSPECTION DEPARTMENT

NON-DESTRUCTIVE TESTING REPORT

CUSTOMER: Westinghouse Elec. Corp. Purchasing Dept. ARH Division - 3N53 East Pittsburgh, Pa. 15112	MILL ORDER NO: 5587-99-54172-1	TYPE TEST: Sonic	DATE: 2/23/75
	QUALITY: Hot Rolled Rd. N 1018 1533 Gr. B Cl. 1	SPECIFICATION: A578 & A577 MOD.	
	CUSTOMER NO.: M.# M92-238	EQUIPMENT USED: Mark 5 #50 4/13/75	
CONSIGNED TO: Gate 11, 200K Stran. 700 Braddock Ave. East Pittsburgh, Pa. 15112	SPACING:	AMPLITUDE:	COUPLANT: Rozint & Water
	TRANSDUCER: ~~Pr 1½ Dia 2.25 MHz~~ Sonic 1 & 1 2.25 MHz	AMPERAGE:	METHOD: Contact
	TYPE OF RODS:	GRID REF.: 100 DB 20 db HZ	TYPE OF SURFACE: Ground
	INSPECTORS NAME (LEVEL I-SNT-TC-1A): W. Hine	GAUGE: 5	WIDTH: 6½ I.D. / LENGTH: 66 O.D.
	WITNESSED BY:	MELT & SLAB: 2 pcs. B1717-4	MARK NO: / ITEM NO: 1

30

I HEREBY CERTIFY THAT THE ABOVE IS CORRECT TO THE BEST OF MY KNOWLEDGE AND BELIEF. H.J.C.K per Inc.

A. Rauch
INSPECTION SUPERVISOR (LEVEL II-SNT-TC-1A)

U435

PURCHASER:
3. WESTINGHOUSE ELEC. CORP.
QUAL. ASSURANCE DEPT.-2GA
EAST PITTSBURGH, PENNA.
15112

LUKENS STEEL COMPANY

COATESVILLE, PA. 19320

TEST CERTIFICATE

MILL ORDER NO.	CUSTOMER P.O.	
52345-1	P092-237	MP 22378 WM 2/24

DATE: 2-24-78 FILE NO 8587-07-99

CONSIGNEE:

58P976 (91) 92-237

THIS MATERIAL HAS BEEN MANUFACTURED AND TESTED IN ACCORDANCE WITH PURCHASE ORDER REQUIREMENTS AND SPECIFICATION(S):

WEST PDS-10310CR REV. N 77 A-533 GR. B CL. 1

BEND TEST HOMOGENEITY TEST

CHEMICAL ANALYSIS

MELT NO.	C	MN	P	S	CU	SI	NI	CR	MO	V	TI	AL	XXX		BASIC PROCESS
D5301	.18	1.30	.013	.005		.22	.65		.55				VIP STEEL		ELEC.

31

PHYSICAL PROPERTIES

MELT NO.	SLAB NO	YIELD PSI X100	TENSILE PSI X100	% ELONG IN 2"	% R.A.	BHN	IMPACTS V+70°F.			FRACTURE APPEARANCE	DESCRIPTION
D5302	4	729	950	24			T 142	143	147	% SHEAR 99-99-99	1- 7.5" X 6.5 ID X 73 OD
		707	925	25			L 147	150	148	99-99-99	
						LATERAL EXPANSION IN INCHES					
							T.090	.088	.089		
							L.090	.093	.091		

TRANS DROP WEIGHT TESTS PER E208(SIZE P-3) @ +20°F., EXHIBIT NO BREAK.
N.D.T. IS +10°F. OR BELOW.

RINGS AND TESTS HEATED 1625-1675°F., HELD 1/2 HR. PER INCH MIN. AND
WATER QUENCHED, THEN TEMPERED 1240°F., HELD 1/2 HR. PER INCH MIN. AND
WATER QUENCHED.

RINGS AND TESTS STRESS RELIEVED BY HEATING TO 1100-1150°F., HELD 1 HR.
PER INCH MIN. AND FURNACE COOLED TO 600°F.

RELEASED BY Q.C.
TO SEC 200K
INSP. N. MATEJEVICH DATE

We hereby certify the above information is correct.

SUPERVISOR TESTING

U435

LUKENS STEEL COMPANY
INSPECTION DEPARTMENT

NON-DESTRUCTIVE TESTING REPORT

CUSTOMER: Westinghouse Elec. Corp. Purchasing Dept. 2401 Jenkins - 2N53 Pittsburgh, Pa 15112	MILL ORDER NO.: 577-97-52345-1	TYPE TEST: Sonic	DATE: 2/14/78
	QUALITY: ASTM A533 Gr B Cl 1	SPECIFICATION: A577 & A577	
	CUSTOMER NO.: M P 1192-237	EQUIPMENT USED: Mark I & 50 4/3/78	
CONSIGNED TO: Jas H. Zick Stearns 710 Bridstock Ave Pittsburgh, Pa 15112	SPACING:	AMPLITUDE: / AMPERAGE:	COUPLANT: Water / METHOD: Contact
	TRANSDUCER: Ch 1 2.25 MHz / TYPE OF PROBE: Ch 1 2.25 MHz	GRID REF.: 1 to 20 / 1 to 5	TYPE OF SURFACE: Ground
	INSPECTOR'S NAME (LEVEL I-SNT-TC-1A): [illegible]	GAUGE: 7½	WIDTH: 6.5 I.D. / LENGTH: 73 O.D.
	WITNESSED BY:	MELT & SLAB: D5301-4	MARK NO.: / ITEM NO.: 1

32

I HEREBY CERTIFY THAT THE ABOVE IS CORRECT TO THE BEST OF MY KNOWLEDGE AND BELIEF. [illegible]

R. Rawlins
INSPECTION SUPERVISOR (LEVEL II-SNT-TC-1A)

U435

4473

NDE FOR FLYWHEELS

Shop Order 89P969

PT per 84350UD of plate prior to assembly.

P.O. 179-979 Ht. No. A7503-1 Insp.&Date J. Condrasky 11-21-80

PT per 84350UD of plate prior to assembly.

P.O. 179-980 Ht.No. A7503-1 Insp.&Date J. Condrasky 11-17-80

PT per 84350UD after first machining.

Insp. &Date J. Condrasky & H. O'Grady 1-26-81

PT per 84350UD after keyway.

Insp. & Date L. Veychek 3-25-81

UT per 84351WL of finished flywheel.

Insp. & Date J. Connelly & T. Plancy 3-25-81

C. R. Carbo

Original documents are on file at LRAD East Pittsburgh, Penna. 15112

PURCHASER:
WEST. ELEC. CORP.
QUAL. ASSURANCE DEPT.

LUKENS STEEL COMPANY

COATESVILLE, PA. 19320

TEST CERTIFICATE

DATE: 9-10-80 FILE NO. 8587-07-11

CONSIGNEE:

MILL ORDER NO.	CUSTOMER P.O.	
39437-1	P179-980	MP 9480 VS L9880 3/6

THE MATERIAL HAS BEEN MANUFACTURED AND TESTED IN ACCORDANCE WITH PURCHASE ORDER REQUIREMENTS AND SPECIFICATION(S):

WEST PDS-10310CR REV. P 78 A-533 GR. B CL. 1 ASME CODE SECT. III SUB NCA N-1160 8/4/81

BEND TEST HOMOGENEITY TEST

89P969

CHEMICAL ANALYSIS

MELT NO.	C	MN	P	S	CU	SI	NI	CR	MO	V	TI	AL	XX B		BASIC PROCESS
A7503	.19	1.31	.014	.008		.27	.67		.57				VIP STEEL		ELEC.

34

PHYSICAL PROPERTIES

MELT NO.	SLAB NO.	YIELD PSI X100	TENSILE PSI X100	% ELONG. IN 2"	% R.A.	XXX XXXM LOC	IMPACTS V +70°F.			FRACTURE APPEARANCE % SHEAR	DESCRIPTION
A7503	1	757	950	24		T	86	86	70	70-70-70	1- 8" X 7 ID X 66.75 OD
		724	924	24		L	130	115	117	80-80-80	
						LATERAL EXPANSION IN INCHES					
						T	.056	.061	.062		
						L	.084	.089	.090		

TRANS. DROP WEIGHT TESTS PER E208 (SIZE P-3) FROM TOP & BOTTOM OF RING @ +20°F. EXHIBIT NO BREAK.

RINGS AND TESTS HEATED 1625-1675°F., HELD 1/2 HR. PER INCH MIN. AND QUENCHED, THEN TEMPERED 1220°F., HELD 1/2 HR. PER INCH MIN. AND WATER QUENCHED.

RINGS AND TESTS STRESS RELIEVED BY HEATING TO 1100-1150°F., HELD 1 HR. PER INCH MIN. AND FURNACE COOLED TO 800°F.

MATERIAL TRACEABILITY ENSURE

RELEASED BY Q.C.
TO SEC. ME
INSP. N. MATEJEVICH DATE 9/17/80

U473

FORM 50/500/001A (R 2/70)

LUKENS STEEL COMPANY
INSPECTION DEPARTMENT

NON-DESTRUCTIVE TESTING REPORT

CUSTOMER: Westinghouse Elec. Corp. Purchasing Dept. Elec Division - 3N53 East Pittsburgh, Pa. 15112	MILL ORDER NO. 8377-11-37437-1	TYPE TEST Sonic	DATE 7/2/50
	QUALITY PDS-1031DCR-5 ASTM A533 Gr B Cl. 1	SPECIFICATION 75 ASTM-21-51 & ASTM-A533-2	
	CUSTOMER NO. K P179-980	EQUIPMENT USED Mark I #50 11/27/50	
CONSIGNED TO	SPACING Elliptic 2.25 MHz	AMPLITUDE	COUPLANT Oil
	TRANSDUCER Elliptic 1x1 2.25 MHz	AMPERAGE	METHOD Contact
	TYPE OF PRODS	GRID REF. Left	TYPE OF SURFACE Ground
	INSPECTORS NAME (LEVEL I-SNT-TC-1A)	GAUGE 8	WIDTH 7 I.D. / LENGTH 16" O.D.
	WITNESSED BY	MELT & SLAB R7503-1	MARK NO. / ITEM NO. 1

35

I HEREBY CERTIFY THAT THE ABOVE IS CORRECT TO THE BEST OF MY KNOWLEDGE AND BELIEF.

H.J.K. per Spec.

INSPECTION SUPERVISOR OR MGR. & SIGNATURE

U473

PURCHASER:
WEST. ELEC. CORP.
QUAL. ASSURANCE DEPT.

LUKENS STEEL COMPANY

COATESVILLE, PA. 19320

TEST CERTIFICATE

DATE: 9-10-80 FILE NO. 8587-07-11

CONSIGNEE:

MILL ORDER NO.	CUSTOMER P.O.	
39438-1	P179-979	MP 9480 VS L9880 3/7

THE MATERIAL HAS BEEN MANUFACTURED AND TESTED IN ACCORDANCE WITH PURCHASE ORDER REQUIREMENTS AND SPECIFICATION(S):

WEST PDS-10310CR REV. P 78 A-533 GR. B CL. 1 ASME CODE SECT. III SUB-NCA N-1160 8/4/81

89P969

BEND TEST HOMOGENEITY TEST

CHEMICAL ANALYSIS

MELT NO.	C	MN	P	S	CU	SI	NI	CR	MO	V	TI	AL	XX		BASIC PROCESS
A7503	.19	1.31	.014	.008		.27	.67		.57				VIP STEEL		ELEC.

PHYSICAL PROPERTIES

MELT NO.	SLAB NO.	YIELD PSI X100	TENSILE PSI X100	% ELONG. IN 2"	% R.A.	XXX XXX LOC	IMPACTS V +70°F.			FRACTURE APPEARANCE % SHEAR	DESCRIPTION
A7503	1	757	950	24		T	86	86	70	70-70-70	1- 8" X 7 ID X 76.5 OD
		724	924	24		L	130	115	117	80-80-80	
						LATERAL EXPANSION IN INCHES					
						T	.056	.061	.062		
						L	.084	.089	.090		

36

TRANS. DROP WEIGHT TESTS PER E208 (SIZE P-3) FROM TOP & BOTTOM OF RING @ +20°F. EXHIBIT NO BREAK.

RINGS AND QUENCHED, TESTS HEATED 1625-1675°F., HELD 1/2 HR. PER INCH MIN. AND WATER THEN TEMPERED 1220°F., HELD 1/2 HR. PER INCH MIN. AND WATER QUENCHED.

RING AND INCH MIN. TESTS STRESS RELIEVED BY HEATING TO 1100-1150°F., HELD 1 HR. PER AND FURNACE COOLED TO 800°F.

MATERIAL TRACEABILITY REQUIRED

RELEASED BY Q.C.
TO SEC. ME 2
INSP. N. MATEJEVICH DATE 9-17-

U473

We hereby certify the above information is correct.

SUPERVISOR-TESTING

FORM 20/2001-081A 10 3/79

LUKENS STEEL COMPANY
INSPECTION DEPARTMENT

NON-DESTRUCTIVE TESTING REPORT

CUSTOMER: Westinghouse Elec. Corp. Purchasing Dept. RRA Division - 3N53 East Pittsburgh, Pa. 15112	MILL ORDER NO.: 577-11-39438-1	TYPE TEST: Sonic	DATE: 7/2/80
	QUALITY: SDS-10310 Gr B Cl 1 ASTM A533 Gr B Cl 1	SPECIFICATION: ASTM-75 A533-11-5 ASTM A517-[illegible]	
	CUSTOMER NO.: M & P179-979	EQUIPMENT USED: Mach I 50 [illegible]	
CONSIGNED TO	SPACING: [illegible]	AMPLITUDE / AMPERAGE	COUPLANT / METHOD
	TRANSDUCER: [illegible] / TYPE OF PROBE: [illegible] 1x12 15 MHz	GRID REF.: [illegible]	TYPE OF SURFACE: [illegible]
	INSPECTORS NAME (LEVEL I-SNT-TC-1A): [illegible]	GAUGE: 8 [illegible]	WIDTH: 7 IN. / LENGTH: [illegible]
	WITNESSED BY	MELT & SLAB: 11503-1	MARK NO. / ITEM NO.: 1

37

I HEREBY CERTIFY THAT THE ABOVE IS CORRECT TO THE BEST OF MY KNOWLEDGE AND BELIEF.

[illegible] [illegible]

INSPECTION SUPERVISOR (LEVEL II-SNT-TC-1A)

U473