THERMO-LAG ASSESSMENT REPORT
FOR HOUSTON LIGHT AND POWER COMPANY
SOUTH TEXAS PROJECT ELECTRIC GENERATING STATION

REVISION 0

FOR

SOUTH TEXAS PROJECT ELECTRIC GENERATION STATION
PO BOX 289
WADSWORTH, TEXAS 77483

9509190195 950914
PDR ADOCK 05000498
P PDR

TABLE OF CONTENTS

Section	Title	Page
1.0	BACKGROUND	3
2.0	OBJECTIVE	6
3.0	SCOPE	6
4.0	REFERENCES/INPUTS	6
5.0	DEFINITIONS	9
6.0	ASSUMPTIONS	11
7.0	METHODOLOGY	11
8.0	RESULTS	14
9.0	CONCLUSIONS	15

APPENDIX A -	Thermo-Lag Configuration Evaluations	A1-A132
APPENDIX B -	Summary of Results	B1-B3
APPENDIX C -	Upgrade Techniques	C1-C3
APPENDIX D -	Record of Conversation with Thermo-Lag Installer	D1-D3

FIGURES

FIGURE 7-1	Application Guide Methodology and Extent of Generic Applicability	17

1.0 BACKGROUND

Many US nuclear utilities have installed Thermo-Lag 330-1 (Thermo-Lag) manufactured by Thermal Science, Inc. (TSI) in their facilities as a fire barrier/wrap material. Thermo-Lag has been used within the industry to provide separation of redundant or fire safe shutdown systems, as well as radiant energy shields and structural fire proofing.

After receiving allegations relative to potential problems with the performance of Thermo-Lag, the NRC convened a Special Review Team to review prior test reports, observe plant installations, and assess material compliance to regulatory requirements. The review team's final report, dated April 1992, concluded that fire ratings and ampacity derating factors for Thermo-Lag were indeterminate, and that some utilities had used inadequate installation procedures. The review team concluded, however, that the overall safety significance of the issue was low, based on evidence that the barriers would provide some degree of protection, and that most plant areas containing such barriers typically have low fuel loads, controlled ignition sources, and other fire protection and mitigation features.

NRC Bulletin 92-01 (Ref. 4.6) and Supplement 1 (Ref. 4.7) were issued following performance of utility tests that raised further questions relative to material performance, and validity of previous test results. The Bulletin declared previous tests indeterminate and required utilities to treat installed Thermo-Lag barriers as providing an "indeterminate" level of protection. Utilities invoked compensatory actions as required for inoperable fire barriers. Typically, this involved establishment of fire watches as an interim measure.

NRC Generic Letter 92-08 (Ref. 4.9) identified three major areas of concern relative to Thermo-Lag fire barriers: 1) the fire endurance capability of installed barriers, 2) the ampacity derating of cables enclosed in Thermo-Lag barriers, and 3) the evaluation and application of the results of previous tests conducted to determine fire endurance ratings and ampacity derating factors of Thermo-Lag barriers.

To assess material performance and provide a basis for evaluation of installed Thermo-Lag fire barriers, an industry fire endurance test program was conducted by NUMARC (NEI). To assist in addressing generic industry issues associated with the fire endurance capability of installed barrier configurations, the Industry Test Program:

- Assessed current industry configurations through the use of survey data
- Conducted tests to establish performance of various baseline and upgraded fire barrier system assemblies

- Developed a guideline to assist utilities in evaluating installed barrier configurations

Utility test programs have also been conducted, the results of which may have applicability to other utility installations.

To expand and supplement the guidance provided in Generic Letter 86-10 relative to the acceptance basis for future fire endurance testing, the NRC issued Supplement 1 to Generic Letter 86-10 (Ref. 4.12) on March 25, 1994. Since the supplement was issued following the NEI test program, it does not apply to the *performance* of tests which serve as the basis for the NEI Application Guide (Ref. 4.18). The extent to which the guidance outlined in the supplement is intended to apply to the *application* of prior test results in unclear. However, if it is assumed to apply, the supplement *does* provide for alternate test methodologies and acceptance criteria that demonstrate an equivalent level of fire protection. In this regard, the substantial body of industry test data represented by the Application Guide can be used to establish acceptability of generic equivalencies to the test methods and acceptance criteria described in GL 86-10 Supplement 1. The Application Guide therefore provides a methodology for evaluating equivalency between certain tested and installed barrier configurations and is consistent with the process previously established by GL 86-10 (Ref. 4.14).

On December 15, 1992, the NRC issued Information Notice (IN) 92-82 (Ref. 4.5) informing utilities that, as a result of their testing, they had concluded that Thermo-Lag is a combustible material. The NRC's concern regarding Thermo-Lag combustibility is attributed to the use of this material at many plants as a radiant energy shield in containment or within 20 foot separation areas as a means of segregating redundant safe shutdown paths. Since the presence of combustibles materials in these areas is restricted by 10CFR50, Appendix R and plant licenses, regulatory compliance could be in question.

NUMARC (now NEI) reviewed the generic implications of the NRC findings and issued its "Thermo-Lag 330-1 Combustibility Evaluation Methodology, Plant Screening Guide" on October 12, 1993. This Guide concludes that Thermo-Lag may not necessarily be considered a combustible material for all plants and provides a methodology for conducting plant specific evaluations to assess Thermo-Lag for combustibility in the form used and under the conditions anticipated.

To comply with the requirements of GL 92-08 and the subsequent NRC 50.54(f) letters issued to request additional Thermo-Lag information, it is necessary that utilities document the Thermo-Lag barrier configurations installed at their plants, evaluate the effectiveness of these barriers in meeting

regulatory requirements and determine the action plan for bringing their plant into compliance with NRC requirements.

Additionally, via NRC memorandum dated June 27, 1994 (Ref. 4.16), the Commission directed the NRC staff not to limit consideration for exemptions which are currently permitted by regulations. Further, the Commission requested that the staff consider possible new exemptions to Appendix R based on contemporary fire protection methodology and technology and to proceed to evaluate the feasibility of developing new guidance for rating fire barriers on the basis of representative plant fire hazards. The Commission did recognize however, that the responsibility for developing the technical basis for new exemptions would rest with the licensees. Therefore, the Commission has acknowledged that new exemptions, when technically justifiable based on specific plant barrier and hazard configurations, are a viable option for resolution of Thermo-Lag barrier issues.

2.0 OBJECTIVE

The objective of this report is to take the Thermo-Lag configurations at Houston Light and Power's (HL&P) South Texas Project Electric Generating Station (STPEGS) and:

- Evaluate the installed Thermo-Lag coverage utilizing the methodology contained in the NEI Industry Application Guide (Reference 4.18) to determine if the Thermo-Lag enclosure is bounded by testing and, if bounded, the fire rating that could be expected for that configuration.

- Identify upgrades that can be installed on the existing typical details to either obtain a fire rating on an as installed unrated (unbounded) barrier or enhance the rating of a rated (bounded) barrier and the fire rating these upgrades will achieve..

3.0 SCOPE

The scope of this report includes all Thermo-Lag configurations at STPEGS which are still required to protect redundant safe shutdown paths as required by 10 CFR 50, Appendix R (Ref. 4.17).

4.0 REFERENCES/INPUTS

4.1 NRC Information Notice 91-47: "Failure of Thermo-Lag Fire Barrier Material to Pass Fire Endurance Test", August 6, 1991.

4.2 NRC Information Notice 91-79: "Deficiencies in the Procedures for Installation Thermo-Lag Fire Barrier Materials", December 6, 1991.

4.3 NRC Information Notice 92-46: "Thermo-Lag Fire Barrier Material Special Review Team Report Findings, Current Fire Endurance Tests,

and Ampacity Calculation Errors", June 23, 1992.

4.4 NRC Information Notice 92-55: "Current Fire Endurance Test Results for Thermo-Lag Fire Barrier Material", July 27, 1992.

4.5 NRC Information Notice 92-82: "Results of Thermo-Lag 330-1 Combustibility Testing", December 15, 1992.

4.6 NRC Bulletin 92-01: "Failure of Thermo-Lag 330 Fire Barrier System to Maintain Cabling in Wide Cable Trays and Small Conduits Free from Fire Damage", June 24, 1992.

4.7 NRC Bulletin 92-01, Supplement 1: "Failure of Thermo-Lag 330 Fire Barrier System to Perform its Specified Fire Endurance Function", August 18, 1992.

4.8 NRC Generic Letter 92-XX (Draft): "Thermo-Lag Fire Barriers", February 11, 1992.

4.9 NRC Generic Letter 92-08: "Thermo-Lag Fire Barriers", December 17, 1992.

4.10 NRC Inspector General Inspection Report, Case No. 91-04N: "Adequacy of NRC Staffs Acceptance and Review of Thermo-Lag 330-1 Fire Barrier Materials", August 12, 1992.

4.11 Thermal Science, Inc. (TSI) Technical Note 20684, Thermo-Lag 330 Fire Barrier System, Installation Procedures Manual, Power Generating Plant Applications, Revision V, November, 1985 (STP Log No. C042-00010-3M).

4.12 Supplement 1 to NRC Generic Letter 86-10: "Fire Endurance Test Acceptance Criteria for Fire Barrier Systems Used to Separate Safe Shutdown Trains Within the Same Fire Area", Dated March 25, 1994.

4.13 NRC Information Notice 94-22: "Fire Endurance and Ampacity Derating Test Results for 3 Hour Rated Thermo-Lag 330-1 Fire Barriers", Dated March 16, 1994.

4.14 NRC Generic Letter 86-10, "Implementation of Fire Protection Requirements", April 24, 1986

4.15 NRC memo from James M. Taylor to the NRC Commissioners, "Options for Resolving the Thermo-Lag Fire Barrier Issues", dated May 12, 1994.

4.16 NRC memo from John C. Hoyle to James M. Taylor "SECY-94-127 - Options for Resolving the Thermo-Lag Fire Barrier Issues", dated June 27, 1994.

4.17 VECTRA Calculation No. 0023-00170-CO2, Rev. 0, "Appendix R Compliance Assessment" (This is currently a draft calculation.)

4.18 VECTRA Technical Report No. 0784-00001-TR-02, "NEI Application Guide for Evaluation of Thermo-Lag 330 Fire Barrier Systems", Revision 1.

4.19 Houston Light and Power Letter No. ST-HL-AE-4695, dated February 10, 1994, "Response to Request for Additional Information Regarding Generic Letter 92-08, Thermo-Lag 330-1 Fire Barriers"

4.20 Drawing No. 7E041EL1099, Rev 8, "10 CFR 50 Appendix R: Raceway Wrapping Schedule, Unit 1"

4.21 Drawing No. 7E042EL1099, Rev. 4, "10 CFR 50 Appendix R: Raceway Wrapping Schedule, Unit 2"

4.22 Houston Light and Power Calculation No. EC-5045, Rev 1, "Raceway Weight Analysis"

4.23 Houston Light and Power Calculation No. EC-5046, Rev. 4, "Power Cable Sizing Verification in Fire Wrapped Raceways"

4.24 Unit 1 Field Takeoff and Inspection Record for Item No. 43, Identifier C1XE2ATSAB, dated 4/23/87 (QA installation record for cable tray C1XE2ATSAB)

4.25 Unit 1 Field Takeoff and Inspection Record for Item No. 143, Identifier C1XE2ARX002, dated 4/24/87 and 9/17/87 (QA installation record for conduit C1XE2ARX002)

4.26 Unit 2 Transco Work Release & Inspection Record, T.O. Area 2XE01-P10, Item No. 4, dated 5/12/87, 5/13/87, 5/16/87, 5/17/87 and 5/31/87 (QA installation record for conduit C2XE2ARX002)

4.27 Unit 2 Transco Work Release & Inspection Record, T.O. Area 2XE01-P10, Item No. 5, dated 5/17/88, 5/18/87 and 11/3/88 (QA installation record for cable tray C2XE2ATSAB)

4.28 VECTRA Report No. 0023-00177-RPT-001, Rev. 0, "Fire Modeling

Analysis of STP Auxiliary Shutdown Areas"

5.0 DEFINITIONS

5.1 Thermo-Lag Barrier Segment

A portion of a Thermo-Lag barrier which can be determined to be of different construction than adjacent portions. For example, two different Thermo-Lag barrier construction techniques found along the same raceway (e.g., preshaped coverage on a horizontal conduit and V-rib panel coverage on an adjacent conduit support).

5.2 Fire Barrier Performance Parameters

The parameters of the Thermo-Lag Typical Style or Detail that affect the overall performance of the fire barrier. These parameters include material type, thickness, stiffener (V-rib) location/orientation, stress skin location, joint type, fastener type and spacing, distance of fasteners from joints, unsupported barrier span, etc.

5.3 Commodity Parameters

The parameters of the contents enclosed within the fire barrier system segment being evaluated that affect the performance of the fire barrier. These parameters consist of size, type of material, mass and orientation.

5.4 Bounded Configuration

Installed commodity and barrier configuration whose collective performance parameters are consistent with (or "better than") those of tested configurations such that an equivalent level of fire endurance capability can be concluded.

5.5 Butt Joint

A type of joint between prefabricated Thermo-Lag materials in which the mating surfaces of adjacent pieces abut as in either an end-to-end or corner configuration without beveling.

5.6 Fasteners

Metallic or other components used to secure prefabricated Thermo-Lag materials in place during installation. Commonly used fasteners on conduit and cable tray enclosures include 16 to 18 Ga. stainless steel tie wire and 1/2 in. wide x 0.020 in. thick stainless steel banding. Mechanical fasteners such as anchor bolts are often used to secure

barrier materials to concrete structures.

5.7 Mitered Joint

A type of joint between prefabricated Thermo-Lag materials where the mating surfaces of adjacent pieces are beveled.

5.8 Pre-Buttered Joints

Joints and seams between prefabricated Thermo-Lag materials sealed on all mating surfaces with Thermo-Lag 330-1 bulk (trowel) grade material during construction of the protective envelope around the protected commodity.

5.9 Score and Fold

A technique used to install prefabricated Thermo-Lag materials whereby a cut or score is made into the material leaving the internal stress skin layer (facing the protected commodity) intact. This technique results in a "seam" to facilitate forming the Thermo-Lag around a protected commodity, thus avoiding joints between individual pieces. This also includes "grooving" which is cutting a "V"-shaped notch into the material to facilitate forming the Thermo-Lag around a protected commodity leaving the internal stress skin layer intact.

5.10 Structural Ribs ("V"-ribs)

Contoured "V"-shaped ribs formed into prefabricated Thermo-Lag panels during manufacture for the purpose of providing structural support across the width of the panel.

5.11 Stress Skin

A pretreated open weave carbon steel mesh used to provide a mechanical base for application of Thermo-Lag 330-1 bulk grade material during manufacture of prefabricated Thermo-Lag materials. Stress skin is also used as a mechanism to externally reinforce joints and seams between the prefabricated Thermo-Lag materials. Stress skin is also used as a mechanism to externally reinforce joints and seams between the prefabricated Thermo-Lag materials forming protective envelopes.

5.12 Total Enclosed Mass

As used herein, this term refers to the total mass of contents per unit

length (or volume) contained within a protective envelope. For example, the total enclosed mass for an installed cable tray barrier can be expressed as the mass (lb.) of the cable tray plus that of the cabling it contains per linear foot.

5.13 Inaccessible Parameters

Parameters which can only be verified or measured through a destructive examination of the Thermo-Lag barrier (e.g., internal tray banding, panel thickness, V-ribs, internal stress skin).

5.14 Unsupported Span

The dimensions of a protective envelope configuration for which Thermo-Lag panels comprising the enclosure are primarily self-supporting. As such, panels installed along the distance are not substantially supported by the protected commodity itself or other support mechanisms such as unistrut type frame segments. Examples of unsupported barrier spans include Thermo-Lag panels installed across the top and bottom surfaces of horizontal cable trays or those projecting from wall surfaces without internal support or methods of joint reinforcement.

6.0 ASSUMPTIONS

6.1 This report assumes that the Thermo-Lag being evaluated in this report is installed in accordance with information obtained from the installer and documented in Appendix D of this report, the information contained in the installation manual (Ref. 4.11) and the information contained in the QA records (Ref. 4.24 through 4.27).

6.2 This report evaluates the Thermo-Lag identified as still being required in the VECTRA draft Calculation No. 0023-00170-CO2 (Ref. 4.17).

7.0 METHODOLOGY

7.1 Evaluating Effectiveness of Thermo-Lag Barriers

The Thermo-Lag fire barrier systems installed at HL & P's STPEGS will be evaluated utilizing the methodology contained in the NUMARC (NEI) Industry Application Guide (Ref. 4.18). This process is consistent with the guidance provided in Generic Letter 86-10 (Ref. 4.12), but has been expanded due to the unique performance characteristics of Thermo-Lag. Figure 7-1 depicts the evaluation process for determining whether Thermo-Lag barriers can be

reasonably bounded by those tested and the extent that the Application Guide applies relative to resolving overall Thermo-Lag fire endurance capability issue.

Step 1: Determine The Configurations To Be Evaluated And The Performance Parameters For These Configurations

a) Obtain the total population of Thermo-Lag barrier configurations to be evaluated from the VECTRA Calculation No. 0023-00170-CO2 (Ref. 4.17).

b) Separate each Fire Barrier System (FBS) into individual barrier segments on a per plant basis for evaluation purposes

Individual FBS segments are constituted by one or more of the following distinguishing characteristics: 1) change in barrier construction technique; 2) significant change in protected commodity or contents; 3) change in type of barrier material; or 4) change in orientation of the protected commodity or the barrier which necessitates a change in barrier construction technique.

The Application Guide tabulates FBS segments previously tested, including applicable interface points between individual barrier segments. FBS segments being evaluated will be grouped into typical details to the greatest extent practicable.

c) List the FBS segments to be evaluated on the "Installed To Tested Fire Barrier Evaluation Forms" provided in Appendix F of the NEI Industry Application Guide. Additionally, to assist in identifying specific segments being evaluated, reference the applicable Commodity Number or Numbers from the input data that are being evaluated.

d) Determine the as-built commodity and barrier performance parameters for each configuration that are needed to complete the evaluation forms. The information for these parameters is obtained from the walkdown of the Thermo-Lag enclosures, a record of conversation with a Thermo-Lag installer (See Appendix D), the QA installation records for the Thermo-Lag (Ref. 2.24 through 4.27) and the Thermo-

Lag Installation Manual (Ref. 4.11)

Step 2: Determine Tests and Parameters To Be Applied For Evaluation Of Segments

a) For each segment, review the NEI Industry Application Guide to identify tests of similar barrier segments and commodities to be utilized for comparative purposes in the evaluation. In selection of tested segments and assemblies to be used to evaluate the installed barrier configurations, consideration should be given to methods of barrier construction, specific commodities tested and test results. It should be noted that several tests, or portions thereof, may be applicable to a single installed FBS segment.

b) Using Appendix C, "Tested Parameters" of the NEI Industry Application Guide, identify the applicable commodity and barrier performance parameters for each tested segment. In some instances, it may be necessary to review the respective test report excerpts contained in Appendices H through K of the NEI Industry Application Guide to obtain detailed information for the applicable performance parameters associated with tested configurations.

c) For each segment, enter the selected fire test designations and performance parameter data for the tested configurations on the evaluation forms.

Step 3: Evaluate Installed And Tested Commodity And Barrier Performance Parameters

a) For each segment, compare the performance parameters between installed and tested configuration.

b) Using Table 5-1, "Performance Parameter Bounding Criteria" in the NEI Industry Application Guide, determine whether the pertinent performance parameters associated with each installed FBS segment are bounded by test. Appendix D of the NEI Industry Application Guide contains the technical bases used to develop the bounding criteria to establish whether installed configurations can be reasonably bounded.

c) If all segments comprising a Fire Barrier System (FBS) are bounded, then that entire system is bounded. Therefore, as a minimum, a level of fire resistance capability equivalent to that of "worst" performing segment can be concluded for the installed FBS. Document the evaluation results for the entire FBS using the forms provided in Appendix F of the NEI Industry Application Guide and consider further actions as appropriate.

d) If the aggregate of performance parameters associated with each segment comprising the FBS are not bounded by tested configurations, then further evaluation is required to determine if equivalency to tested configurations can be established. In performing such evaluations, the significance and extent that performance parameters associated with the installed configuration differ from those of tested configurations should be considered. Table 5-1 and Appendix D of the NEI Industry Application Guide provide guidance which may assist in distinguishing parameter variations that may be significant in terms of affecting fire endurance capability, from those that testing has demonstrated would not be anticipated to significantly affect barrier performance. Additionally, the guidance provided in Section 3.2.2, "Deviations From Tested Configurations" of Enclosure 2, "Appendix R Questions and Answers", to GL-86-10 (Ref. 4.14) will be considered in the determination of whether equivalency to tested configurations can be reasonably established. Upon completion of these evaluations as required, document the results for the applicable FBS using the appropriate evaluation forms.

8.0 RESULTS

8.1 Thermo-Lag Configuration Fire Barrier Evaluation Results Summary

The safe shutdown re-evaluation at STPEGS (Ref. 4.17) has resulted in a dramatic reduction in the amount of Thermo-Lag required to protect safe shutdown paths. The only Thermo-Lag remaining that is required to protect safe shutdown paths is located in the Auxiliary Shutdown area (Fire Area 7) in both Unit 1 and Unit 2. It involves 37 linear feet of 24" wide cable tray and 47 linear feet of 4" conduit. The coverage for the cable tray is V-ribbed panels installed directly against the tray

and the coverage on the conduit is preshaped half rounds installed directly against the conduit. Each raceway also has a metal, rectangular box where the cables go through the floor penetration. This box is covered with V-ribbed panels installed directly against the box. The remaining Thermo-Lag is 3 hour material and it is installed in an area currently requiring a 3 hour rating.

The Thermo-Lag coverage has been evaluated in accordance with the NUMARC (NEI) Industry Application Guide. The detailed evaluations for each raceway segment are included in Appendix A of this report. Appendix B provides a summary of results and Appendix C provides a detailed description of the upgrades discussed in the evaluations and Appendix D contains the record of conversation with the Thermo-Lag installer.

The results of the evaluations indicate the following

- The Thermo-Lag configurations are bound by testing except for the Thermo-Lag/structural interfaces. Upgrading these interfaces in accordance with the upgrades utilized in TUEC Test 11-4 will result in all of the configurations having a fire rating of at least 60 minutes.

- It is questionable if a fire rating greater than 60 minutes can be obtained due to the lack of testing for more than 60 minutes for structural interfaces even though the conduits, cable trays and junction boxes can obtain a rating greater than 60 minutes.

9.0 CONCLUSION

In their correspondence describing options for resolving Thermo-Lag fire barrier issues (Ref. 4.15 and 4.16), the NRC staff has indicated compliance with existing regulatory requirements with exemptions granted (where technically justified) will be the primary focus of ongoing activities. In general, the NRC staff's current perception is that 1-hour rated barrier configurations can be reasonably obtained by either evaluation of installed configurations or implementing upgrades. However, the perception is that 3-hour rated barrier configurations cannot reasonably be obtained by upgrade based on previous testing with additional Thermo-Lag materials.

There are essentially seven (7) options for addressing Thermo-Lag barrier configurations which do not currently comply with regulatory requirements:

1. Upgrade existing barriers to achieve compliance. However, without further testing, this option is only viable for 1-hour configurations.

Although, it should be noted that TVA and Thermal Sciences, Inc. are currently pursuing a joint test program which will evaluate the performance of some 3-hour upgrade configurations using advanced Thermo-Lag materials.

2. Re-evaluate components protected by Thermo-Lag barriers to determine if they are truly required to achieve safe shutdown objectives. Such analyses have demonstrated considerable success in reducing the population of required barriers and are considered a cost effective measure. This option has already been completed.

3. Relocate/reroute safe shutdown components where feasible.

4. Qualify 3-hour barriers as 1-hour barriers by evaluation and/or test. This option would also generally require provision of both automatic fire detection and suppression system capability in the area. . Inadvertent actuation and flooding concerns would have to be addressed. The area currently has area wide detection.

5. Replace Thermo-Lag barriers with other qualified barrier materials. As with option 1, without further qualification testing of 3-hour configurations and materials this option has limited applicability. However, replacement of 3-hour barriers may become a future option should further testing succeed in qualifying alternate cost effective materials.

6. Request limited plant-specific exemptions. This approach could include a performance based approach in conjunction with other methods, such as probabilistic techniques, etc. This is a viable option based on the results of the fire modeling analysis (Ref. 4.28), the area wide detection provided and the level of protection afforded by the Thermo-Lag coverage especially if the existing enclosures are upgraded to provide a 1 hour fire rated barrier.

7. An approach employing various combinations of the above options. This option maximizes the ability to tailor the action on a specific barrier basis. This approach typically draws on a comprehensive cost/benefit analysis of each barrier configuration to select the appropriate method for resolution.

FIGURE 7-1
APPLICATION GUIDE METHODOLOGY AND EXTENT OF GENERIC APPLICABILITY

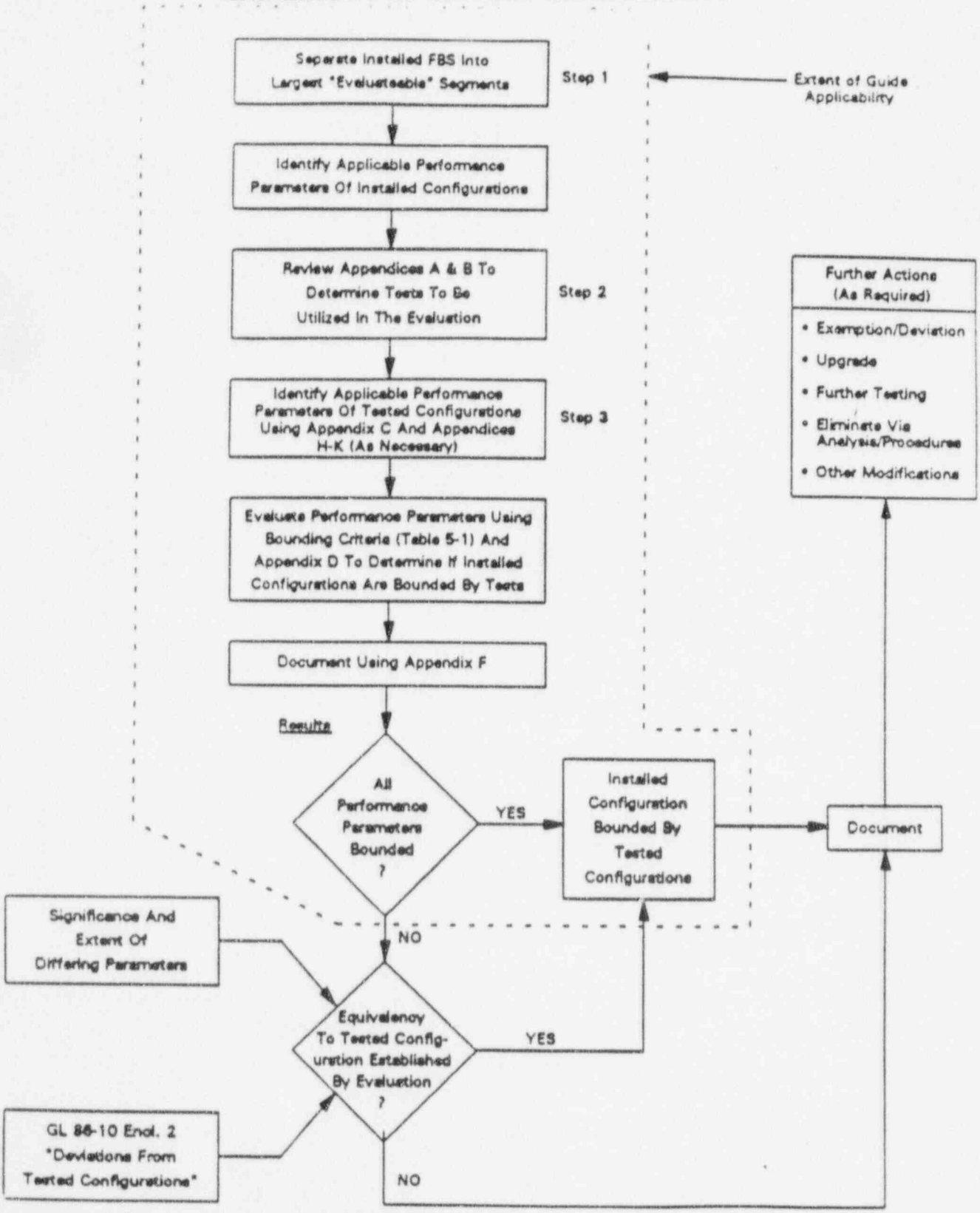

FIGURE F-1 INSTALLED TO TESTED FIRE BARRIER EVALUATION PAGE 1 OF 31

1. THERMO-LAG BARRIER SYSTEM/PROTECTED COMMODITY IDENTIFIER: C1XE2ATSAB

2. BARRIER/COMMODITY LOCATION DATA: SOUTH TEXAS PROJECT UNIT ONE
FIRE AREA/ZONE 07/Z071
ELEC. AUX. BUILDING, EL. 20'-0"

3. REQUIRED RATING: _____ 1-HOUR __X__ 3-HOUR ____ OTHER ____ RES

4. FIRE BARRIER SYSTEM SEGMENTS EVALUATED: SEE PAGE 2

5. FIRE BARRIER SYSTEM SEE PAGE 2

EVALUATION RESULTS: _____ BOUNDED BY TEST _____ NOT BOUNDED BY TEST

_____ RATED BARRIER SYSTEM _____ FURTHER EVALUATION REQUIRED

_____ _____
(OTHER)

6. APPLICABLE TEST REFERENCES: NEI TESTS 2-2, 2-3 AND 2-10 AND TUEC TEST SCHEME 11-4

7. REMARKS: N/A

FIGURE F-1.1 INSTALLED TO TESTED FIRE BARRIER EVALUATION

1. THERMO-LAG BARRIER SYSTEM/PROTECTED COMMODITY IDENTIFIER: C1XE2ATSAB

2.

NODE	COMMODITY TYPE	BOUNDED BY TEST (Y/N)	BARRIER RATING AS INSTALLED (MIN)	BARRIER RATING WITH UPGRADE (MIN)	EVAL PAGES
1	BOX CONFIGURATION	N	0	60	4-10
1-2	CABLE TRAY	Y	60	86	11-17
2	CABLE TRAY RADIAL BEND	Y	60	86	18-24
2-3	CABLE TRAY	Y	60	86	11-17
3	CABLE TRAY RADIAL BEND	Y	60	86	18-24
3-4	CABLE TRAY	Y	60	86	11-17
4	CABLE TRAY RADIAL BEND	Y	60	86	18-24
4-5	CABLE TRAY	Y	60	86	11-17
5	CABLE TRAY/WALL INTERFACE	N	0	60	25-31

FIGURE F-2 INSTALLED TO TESTED FIRE BARRIER EVALUATION PAGE 3 OF 31

1. THERMO-LAG BARRIER SYSTEM/PROTECTED COMMODITY IDENTIFIER: C1XE2ATSAB

2.

SKETCH OF INSTALLED CONFIGURATION

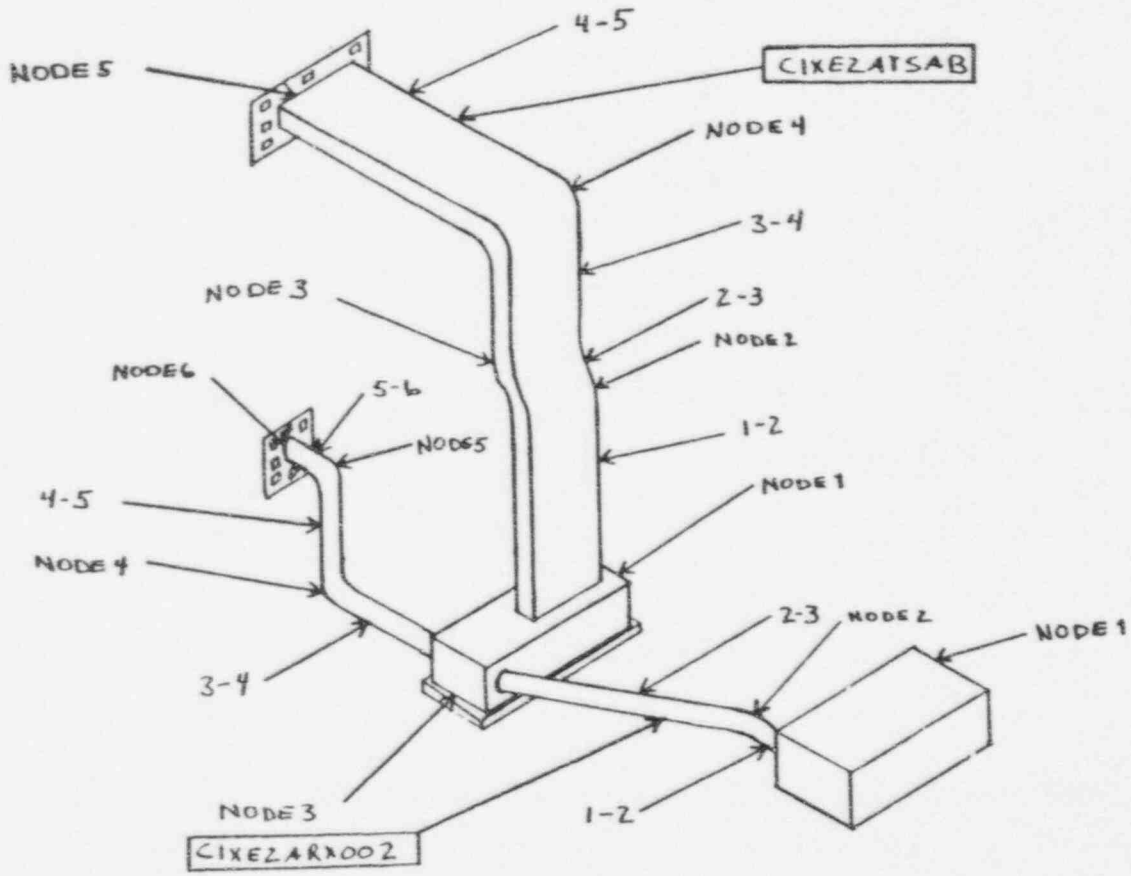

FIGURE F-3	INSTALLED TO TESTED FIRE BARRIER EVALUATION			PAGE 4 OF 31
PERFORMANCE PARAMETERS	1 THERMO-LAG BARRIER SYSTEM/PROTECTED COMMODITY IDENTIFIER: C1XE2ATSAB			
	2 APPLICABLE FIRE BARRIER SYSTEM SEGMENT: NODE 1			
COMMODITY	3A INSTALLED CONFIGURATION	4A TESTED CONFIGURATION(S) EVALUATED	5A APPLICABLE TESTS	6A EVALUATION/ REF. NO.
TYPE	CABLE TRAY AND CONDUIT	LBDS CABLES AIR DROPPING FROM CABLE TRAY TO SLEEVES	NEI TEST 2-3 TUEC TEST SCHEME 11-4	DIFFERENT COMMODITIES, BOUNDING WILL DEPEND ON MATERIAL, MASS AND ORIENTATION. SEE EVALUATION E-1
SIZE	(2) 4" CONDUITS, (1)24" CABLE TRAY	3" AND 6" LBDS 24 AIR DROP CABLES FROM 2-STACKED 24" WIDE CABLE TRAYS TO EMBEDDED SLEEVES	NEI TEST 2-3 TUEC TEST SCHEME 11-4	DIFFERENT SIZES, BOUNDING WILL DEPEND ON MATERIAL, MASS AND ORIENTATION. SEE EVALUATION E-1
MATERIAL	STEEL	ALUMINUM ELECTRICAL CABLES	NEI TEST 2-3 TUEC TEST SCHEME 11-4	TESTED BOUNDS INSTALLED. NO EVALUATION REQUIRED.
CONTENTS/ TOTAL ENCLOSED MASS	34.157 LB/FT	6" LBD = 70.0 LBS 3" LBD = 5.62 LBS 8.8 LBS	NEI TEST 2-3 TUEC TEST SCHEME 11-4	SEE EVALUATION E-2
ORIENTATION	HORIZONTAL	HORIZONTAL/VERTICAL	NEI TEST 2-3 AND TUEC TEST SCHEME 11-4	TESTED BOUNDS INSTALLED. NO EVALUATION REQUIRED.

FIGURE F-4	INSTALLED TO TESTED FIRE BARRIER EVALUATION			PAGE 5 OF 31
PERFORMANCE PARAMETERS	1 THERMO-LAG BARRIER SYSTEM/PROTECTED COMMODITY IDENTIFIER: C1XE2ATSAB			
	2 APPLICABLE FIRE BARRIER SYSTEM SEGMENT: NODE 1			
BARRIER	3B INSTALLED CONFIGURATION	4B TESTED CONFIGURATION(S) EVALUATED	5B APPLICABLE TESTS	6B EVALUATION/ REF. NO.
MATERIAL TYPE	THERMO-LAG 330-1 V-RIB PANELS	THERMO-LAG 330-1 V-RIB PANELS V-RIB PANELS ON SIDES & TOP FLAT PANEL ON BOTTOM AND AT "PICTURE FRAME" AT WALL.	NEI TEST 2-3 TUEC TEST SCHEME 11-4	TESTED BOUNDS INSTALLED/ NO EVALUATION REQUIRED.
MATERIAL THICKNESS	1.25" ± 0.25"	1.0" + .25" - 0" 0.625 ± 0.125"	NEI TEST 2-3 TUEC TEST SCHEME 11-4	TESTED BOUNDS INSTALLED. NO EVALUATION REQUIRED.
STIFFENER (V-RIB) LOCATION/ ORIENTATION	INSIDE. ORIENTATION VARIES	INTERNAL AND ORIENTED HORIZONTAL. ALL V-RIBS ARE ON INSIDE. ORIENTED TRAY TO WALL ON TOP PANEL AND VERTICAL ON SIDE PANELS.	NEI TEST 2-3 TUEC TEST SCHEME 11-4	TESTED BOUNDS INSTALLED. NO EVALUATION REQUIRED.
STRESS SKIN LOCATION	BOTH INSIDE AND OUTSIDE	BOTH INSIDE AND OUTSIDE ON INSIDE ONLY	NEI TEST 2-3 TUEC TEST SCHEME 11-4	TESTED BOUNDS INSTALLED. NO EVALUATION REQUIRED.

FIGURE F-5	INSTALLED TO TESTED FIRE BARRIER EVALUATION			PAGE 6 OF 31
PERFORMANCE PARAMETERS	1 THERMO-LAG BARRIER SYSTEM/PROTECTED COMMODITY IDENTIFIER: C1XE2ATSAB			
	2 APPLICABLE FIRE BARRIER SYSTEM SEGMENT: NODE 1			
BARRIER	3C INSTALLED CONFIGURATION	4C TESTED CONFIGURATION(S) EVALUATED	5C APPLICABLE TESTS	6C EVALUATION/ REF. NO.
JOINT TYPE(S)	PRE-BUTTERED BUTT JOINTS WITH PRE-BUTTERED "PICTURE FRAME" BUTTED TO THE RACEWAY COVERAGE AND BOLTED TO THE CONCRETE	PRE-BUTTERED BUTT JOINTS WITH SOME SCORE AND FOLD PRE-BUTTERED BUTT JOINTS WITH 1 SCORE AND FOLD ON BOTTOM. PRE-BUTTERED "PICTURE FRAME" BUTTED TO THE RACEWAY COVERAGE AND BOLTED TO THE CONCRETE.	NEI TEST 2-3 TUEC TEST SCHEME 11-4	TESTED BOUNDS INSTALLED. NO EVALUATION REQUIRED.
JOINT GAP	≤ 1/4"	≤ 1/4"	NEI TEST 2-3 TUEC TEST SCHEME 11-4	SAME. NO EVALUATION REQUIRED.
UNSUPPORTED BARRIER SPANS	36" X 18" X 10"	6" LBD = 45" X 12" X 13" 3" LBD = 18" X 8" X 8" 36" X 20" X 12"	NEI TEST 2-3 TUEC TEST SCHEME 11-4	TESTS BOUND INSTALLED. NO EVALUATION REQUIRED.
INTERNAL SUPPORT MECHANISMS	INSTALLED AGAINST METAL BOX	INSTALLED AGAINST LBD NONE	NEI TEST 2-3 TUEC TEST SCHEME 11-4	TESTED BOUNDS INSTALLED. NO EVALUATION REQUIRED.

FIGURE F-6	INSTALLED TO TESTED FIRE BARRIER EVALUATION			PAGE 7 OF 31
PERFORMANCE PARAMETERS	1 THERMO-LAG BARRIER SYSTEM/PROTECTED COMMODITY IDENTIFIER: C1XE2ATSAB			
	2 APPLICABLE FIRE BARRIER SYSTEM SEGMENT: NODE 1			
BARRIER	3D INSTALLED CONFIGURATION	4D TESTED CONFIGURATION(S) EVALUATED	5D APPLICABLE TESTS	6D EVALUATION/ REF. NO.
FASTENER TYPE	1/2" BANDS	1/2" BANDS	NEI TEST 2-3 AND TUEC TEST SCHEME 11-4	SAME. NO EVALUATION REQUIRED.
FASTENER SPACING	12" MAXIMUM	12" MAXIMUM	NEI TEST 2-3 AND TUEC TEST SCHEME 11-4	TESTED BOUNDS INSTALLED. NO EVALUATION REQUIRED.
FASTENER DISTANCE FROM JOINTS	VARIES. INSTALLERS HAD NO MINIMUM SPACING REQUIREMENT FROM JOINTS.	2" MAXIMUM	NEI TEST 2-3 TUEC TEST SCHEME 11-4	SEE EVALUATION E-3.
FASTENER EDGE GUARDS	NONE	NONE	NEI TEST 2-3 TUEC TEST SCHEME 11-4	SAME. NO EVALUATION REQUIRED.

FIGURE F-7	INSTALLED TO TESTED FIRE BARRIER EVALUATION			PAGE 8 OF 31
PERFORMANCE PARAMETERS	1 THERMO-LAG BARRIER SYSTEM/PROTECTED COMMODITY IDENTIFIER: C1XE2ATSAB			
	2 APPLICABLE FIRE BARRIER SYSTEM SEGMENT: NODE 1			
BARRIER	3E INSTALLED CONFIGURATION	4E TESTED CONFIGURATION(S) EVALUATED	5E APPLICABLE TESTS	6E EVALUATION/ REF. NO.
JOINT REINFORCEMENT MECHANISMS	NO REINFORCEMENT AT JOINTS OR AT STRUCTURE INTERFACE. THE "PICTURE FRAME" IS BUTTED TO THE BOX COVERAGE WITH NO STRESS SKIN AND TROWEL GRADE REINFORCEMENT.	NONE JOINTS REINFORCED WITH STRESS SKIN, TROWEL GRADE AND STAPLES. WALL INTERFACE REINFORCED WITH PICTURE FRAME, STRESS SKIN, TROWEL GRADE AND STAPLES.	NEI TEST 2-3 TUEC TEST SCHEME 11-4	THE INSTALLED IS NOT BOUNDED BY THE TESTED CONFIGURATIONS.
STRUCTURAL SUPPORT AND INTERVENING STEEL PROTECTION	SUPPORTS ARE COMPLETELY COVERED. INTERVENING STEEL IS COVERED 18".	SUPPORT MEMBERS WERE PROTECTED FOR FULL LENGTH AND INTERVENING STEEL MEMBERS WERE PROTECTED FOR AN 18" DISTANCE/ COVERED OUT 9"	NEI TEST 2-3 TUEC TEST SCHEME 11-4	TESTED BOUNDS INSTALLED. NO EVALUATION REQUIRED.
LOCATION OF ENCLOSURE	CONCRETE ON ONE SIDE.	EXPOSED ON ALL SIDES CONCRETE ON ONE SIDE.	NEI TEST 2-3 TUEC TEST SCHEME 11-4	TESTED BOUNDS INSTALLED. NO EVALUATION REQUIRED.

FIGURE F-8 INSTALLED TO TESTED FIRE BARRIER EVALUATION PAGE 9 OF 31

1. THERMO-LAG BARRIER SYSTEM/PROTECTED COMMODITY IDENTIFIER: C1XE2ATSAB

2. APPLICABLE FIRE BARRIER SYSTEM SEGMENT(S): NODE 1

3. EVALUATION REF. NO.(S): E1 THROUGH E-3

4. EVALUATION(S):

E-1 THE EVALUATION COMPARES THE COVERAGE ON A 36" X 18" X 10" JUNCTION BOX WITH THE COVERAGE ON A 3" AND 6" LBD IN TEST 2-3 AND THE BOX AND THE STRUCTURAL INTERFACE IN TUEC TEST 11-4. THE 6" LBD IS THE ONLY BOXED COMMODITY WITHOUT JOINT UPGRADE WHOSE SIZE IS COMPARABLE TO THE INSTALLED JUNCTION BOX. THEY ARE DIFFERENT TYPES OF COMMODITIES, BUT THE COVERAGE TECHNIQUES ARE COMPARABLE. BOTH HAVE PRE-BUTTERED BUTT JOINTS, BOTH ARE COVERED WITH 3 HOUR MATERIAL AND THE 45" LONG VERTICAL PANEL ON THE 6" LBD WILL BOUND THE 36" WIDE PANEL ON THE INSTALLED JUNCTION BOX.

E-2 ENCLOSED MASS:

C1XE2ATSAB	1 - 24" CABLE TRAY	= 3.870 LB/FT
	4 - 7/C, #12 AWG - 600V	= 1.628 LB/FT
	17 - 5/C, #12 AWG - 600V	= 5.763 LB/FT
	22 - 3/C, #12 AWG - 600V	= 5.126 LB/FT
	1 - 3/C, #4 AWG - 2KV	= 0.000 LB/FT (NOTE 1)
	1 - 3/C, #6 AWG - 2KV	= 0.000 LB/FT (NOTE 1)
	2 - 2/C, #12 AWG - 600V	= 0.240 LB/FT
	4 - 12/C, #12 AWG - 600V	= 2.796 LB/FT
	2 - 3/C, #10 AWG - 2KV	= 0.674 LB/FT
	13 - 1 PR, #16 AWG - 600V	= 0.000 LB/FT (NOTE 1)
	3 - 1 QD, #16 AWG - 600V	= 0.000 LB/FT (NOTE 1)
	2 - 3 PR, #16 AWG - 600V	= 0.000 LB/FT (NOTE 1)
	1 - 3/C, #2 AWG - 2KV	= 0.000 LB/FT (NOTE 1)
	TOTAL	= 20.097 LB/FT
C1XE2ARX002	1 - 4" CONDUIT	= 9.720 LB/FT
	4 - 2/C, #16 AWG - 600V	= 0.320 LB/FT
	2 - 4/C, #16 AWG - 600V	= 0.270 LB/FT
	2 - 16 PR, #16 AWG - 600V	= 1.296 LB/FT
	TOTAL	= 11.606 LB/FT
10" OF C1XE2ATSAB = 10"/12" X 20.097 LB/FT		= 16.748 LB/FT
18" OF CDXE2ARX002 = 1.5 X 11.606 LB/FT		= 17.409 LB/FT
	TOTAL	= 34.157 LB/FT

NOTES:

1. THE WEIGHTS FOR THESE CABLES WERE NOT READILY AVAILABLE. SINCE THE ENCLOSED MASS EVALUATION WITH THESE CABLE WEIGHT WILL BE NO DIFFERENT THAN WITHOUT THE WEIGHTS, THE CABLE WEIGHTS ARE NOT INCLUDED.

2. THE CABLE WEIGHTS WERE TAKEN FROM CALCULATION EC - 5045, REV. 1, "RACEWAY WEIGHT ANALYSIS". THE PARTICULAR CABLES CONTAINED IN EACH RACEWAY WAS OBTAINED FROM CALCULATION EC - 5046, REV. 4, "POWER CABLE SIZING VERIFICATION IN FIRE WRAPPED RACEWAYS.

FIGURE F-8 INSTALLED TO TESTED FIRE BARRIER EVALUATION PAGE 10 OF 31

1. THERMO-LAG BARRIER SYSTEM/PROTECTED COMMODITY IDENTIFIER: C1XE2ATSAB

2. APPLICABLE FIRE BARRIER SYSTEM SEGMENT(S): NODE 1

3. EVALUATION REF. NO.(S): E1 THROUGH E-3

4. EVALUATION(S):

E-3 FASTENER SPACING WAS MAINTAINED AT 12" OR LESS. THERE WAS HOWEVER NO REQUIREMENT FOR BAND TO JOINT SPACING SO THAT DIMENSION VARIES. THE INSTALLED CONFIGURATION IS A BOX RESTING ON THE FLOOR, WITH BANDS INSTALLED ON THE SIDE PANELS WITHIN 4" OF THE JOINTS. THESE SIDE PANELS ARE IN COMPRESSION. THE TOP PANEL IS MISSING BANDING IN ONE DIRECTION, BUT THE TOP PANEL JOINTS ARE NOT CONSIDERED A FAILURE MODE. ALSO THE 3 HOUR PANELS DID NOT TEND TO DISTORT IN TESTS LIKE THE THINNER 1 HOUR PANELS. THE GREATER BAND TO JOINT SPACING IS CONSIDERED TO BE INSIGNIFICANT AND THE INSTALLED IS CONSIDERED BOUNDED BY THE TESTED CONFIGURATIONS.

SEGMENT EVALUATION:

AS INSTALLED, THERE IS NO BOUNDING TEST AND THEREFORE NO FIRE RATING FOR THE ENCLOSURE DUE TO THE STRUCTURAL INTERFACE NOT BEING BOUNDED BY TUEC TEST 11-4. REINFORCING THE JOINTS BETWEEN THE "PICTURE FRAME" AND THE BOX COVERAGE WITH STRESS SKIN AND TROWEL GRADE CONSISTENT WITH TUEC TEST 11-4 WILL RESULT IN REASONABLE ASSURANCE THAT A 60 MINUTE RATING CAN BE OBTAINED. THE 3" AND 6" LBDS WILL BOUND THE BOX CONFIGURATION AS INSTALLED. THE LBDS HAD A RATING OF 102 MINUTES WHICH EXCEEDS THE 60 MINUTES OF THE STRUCTURAL INTERFACE RESULTING IN THE OVERALL RATING OF THE ENCLOSURE BEING 60 MINUTES.

THE INSTALLED CONFIGURATIONS WILL BE BOUNDED THERMALLY BY THE TESTS BECAUSE OF THE GREATER THICKNESS OF THE 3 HOUR PANELS THAN THAT REQUIRED FOR A 60 MINUTE RATING AND THE GREATER ENCLOSED MASS. THE ENCLOSURES WILL BE BOUNDED STRUCTURALLY ONCE THE CONCRETE INTERFACE IN REINFORCED. IT IS QUESTIONABLE IF A GREATER THAN 60 MINUTE RATING COMPARABLE TO THE 102 MINUTES OBTAINED BY THE 3" AND 6" LBDS IN NEI TEST 2-3 CAN BE OBTAINED, DUE TO THE LACK OF TESTING FOR GREATER THAN 60 MINUTES FOR THE STRUCTURAL INTERFACE. GREATER REINFORCEMENT OF BOX JOINTS, CONCRETE INTERFACE AND CONDUIT/CABLE TRAY AT BOX INTERFACE WITH STRESS SKIN AND TROWEL GRADE WILL RESULT IN THE INSTALLED CONFIGURATION BEING BOUNDED BY TUEC TEST SCHEME 11-4 AND A 60 MINUTE BARRIER RATING.

ALTHOUGH MINOR BARRIER OPENINGS OCCURRED DURING THE HOSE STREAM TEST FOR BOTH TUEC 11-4 AND NEI 2-3, THE COMMODITIES WITHIN THE INSTALLED BOX DESIGN BARRIER CONFIGURATIONS WOULD NOT BE PRONE TO DAMAGE DUE TO FIRE FIGHTING ACTIVITIES OR FROM FALLING EXTERNAL OBJECTS DURING FIRE CONDITIONS.

FIGURE F-3	INSTALLED TO TESTED FIRE BARRIER EVALUATION			PAGE 11 OF 31
PERFORMANCE PARAMETERS	1 THERMO-LAG BARRIER SYSTEM/PROTECTED COMMODITY IDENTIFIER: C1XE2ATSAB			
	2 APPLICABLE FIRE BARRIER SYSTEM SEGMENT: 1-2, 2-3, 3-4, 4-5			
COMMODITY	3A INSTALLED CONFIGURATION	4A TESTED CONFIGURATION(S) EVALUATED	5A APPLICABLE TESTS	6A EVALUATION/ REF. NO.
TYPE	CABLE TRAY STRAIGHT RUN	CABLE TRAY STRAIGHT RUN	NEI TEST 2-10	SAME/ NO EVALUATION REQUIRED
SIZE	24" CABLE TRAY	24" X 4" CABLE TRAY	NEI TEST 2-10	TESTED BOUNDS INSTALLED. NO EVALUATION REQUIRED
MATERIAL	STEEL	ALUMINUM	NEI TEST 2-10	TESTED BOUNDS INSTALLED. NO EVALUATION REQUIRED
CONTENTS/ TOTAL ENCLOSED MASS	20.097 LB/FT	24" TRAY = 12.74 LB/FT	NEI TEST 2-10	TESTED BOUNDS INSTALLED. SEE EVALUATION E-1
ORIENTATION	VERTICAL/HORIZONTAL	HORIZONTAL AND VERTICAL	NEI TEST 2-10	TESTED BOUNDS INSTALLED. NO EVALUATION REQUIRED.

FIGURE F-4 INSTALLED TO TESTED FIRE BARRIER EVALUATION

PERFORMANCE PARAMETERS	1 THERMO-LAG BARRIER SYSTEM/PROTECTED COMMODITY IDENTIFIER: C1XE2ATSAB 2 APPLICABLE FIRE BARRIER SYSTEM SEGMENT: 1-2, 2-3, 3-4, 4-5			
B.. RIER	3B INSTALLED CONFIGURATION	4B TESTED CONFIGURATION(S) EVALUATED	5B APPLICABLE TESTS	6B EVALUATION/ REF. NO.
MATERIAL TYPE	THERMO-LAG 330-1 V-RIB PANELS (3 HR.)	THERMO-LAG 330-1 V-RIB PANELS (3 HR.)	NEI TEST 2-10	SAME. NO EVALUATION REQUIRED.
MATERIAL THICKNESS	1.25" ± .250"	1.00" + .25" - 0"	NEI TEST 2-10	TESTED BOUNDS INSTALLED. NO EVALUATION REQUIRED.
STIFFENER (V-RIB) LOCATION/ ORIENTATION	INSIDE. ORIENTATION VARIES.	INTERNAL AND PARALLEL TO SIDE RAILS.	NEI TEST 2-10	TESTED BOUNDS INSTALLED. NO EVALUATION REQUIRED.
STRESS SKIN LOCATION	INTERNAL AND EXTERNAL	INTERNAL AND EXTERNAL	NEI TEST 2-10	TESTED BOUNDS INSTALLED. NO EVALUATION REQUIRED..

FIGURE F-5	INSTALLED TO TESTED FIRE BARRIER EVALUATION			PAGE 13 OF 31
PERFORMANCE PARAMETERS	1 THERMO-LAG BARRIER SYSTEM/PROTECTED COMMODITY IDENTIFIER: C1XE2ATSAB			
	2 APPLICABLE FIRE BARRIER SYSTEM SEGMENT: 1-2, 2-3, 3-4, 4-5			
BARRIER	3C INSTALLED CONFIGURATION	4C TESTED CONFIGURATION(S) EVALUATED	5C APPLICABLE TESTS	6C EVALUATION/ REF. NO.
JOINT TYPE(S)	PRE-BUTTERED BUTT JOINTS	PRE-BUTTERED BUTT JOINTS	NEI TEST 2-10	TESTED BOUNDS INSTALLED. NO EVALUATION REQUIRED.
JOINT GAP	< 1/4"	≤ 1/4"	NEI TEST 2-10	TESTED BOUNDS INSTALLED. NO EVALUATION REQUIRED
UNSUPPORTED BARRIER SPANS	24"	24"	NEI TEST 2-10	TESTED BOUNDS INSTALLED. NO EVALUATION REQUIRED.
INTERNAL SUPPORT MECHANISMS	SUPPORTED AGAINST CABLE TRAY	SUPPORTED AGAINST TRAY	NEI TEST 2-10	TESTED BOUNDS INSTALLED. NO EVALUATION REQUIRED.

FIGURE F-6	INSTALLED TO TESTED FIRE BARRIER EVALUATION			PAGE 14 OF 31
PERFORMANCE PARAMETERS	1 THERMO-LAG BARRIER SYSTEM/PROTECTED COMMODITY IDENTIFIER: C1XE2ATSAB			
	2 APPLICABLE FIRE BARRIER SYSTEM SEGMENT: 1-2, 2-3, 3-4, 4-5			
BARRIER	3D INSTALLED CONFIGURATION	4D TESTED CONFIGURATION(S) EVALUATED	5D APPLICABLE TESTS	6D EVALUATION/ REF. NO.
FASTENER TYPE	1/2" BANDS	1/2" BANDS	NEI TEST 2-10	TESTED BOUNDS INSTALLED. NO EVALUATION REQUIRED.
FASTENER SPACING	12" MAXIMUM	12" MAXIMUM	NEI TEST 2-10	SAME / NO EVALUATION REQUIRED
FASTENER DISTANCE FROM JOINTS	VARIES. INSTALLERS HAD NO MINIMUM SPACING REQUIREMENT FROM JOINTS.	2" MAXIMUM	NEI TEST 2-10	SEE EVALUATION E-2
FASTENER EDGE GUARDS	NONE	NONE	NEI TEST 2-10	SAME /NO EVALUATION REQUIRED

FIGURE F-7	INSTALLED TO TESTED FIRE BARRIER EVALUATION			PAGE 15 OF 31
PERFORMANCE PARAMETERS	1 THERMO-LAG BARRIER SYSTEM/PROTECTED COMMODITY IDENTIFIER: C1XE2ATSAB			
	2 APPLICABLE FIRE BARRIER SYSTEM SEGMENT: 1-2, 2-3, 3-4, 4-5			
BARRIER	3E INSTALLED CONFIGURATION	4E TESTED CONFIGURATION(S) EVALUATED	5E APPLICABLE TESTS	6E EVALUATION/ REF. NO.
JOINT REINFORCEMENT MECHANISMS	NONE	NONE	NEI TEST 2-10	SAME / NO EVALUATION IS REQUIRED
STRUCTURAL SUPPORT AND INTERVENING STEEL PROTECTION	SUPPORTS ARE COVERED TO STRUCTURE. INTERVENING STEEL WAS COVERED OUT AT LEAST 18".	SUPPORTS COVERED TO STRUCTURE. INTERVENING STEEL COVERED FOR 18".	NEI TEST 2-10	TESTED BOUNDS INSTALLED. NO EVALUATION REQUIRED
LOCATION OF ENCLOSURE	EXPOSED ON ALL SIDES.	EXPOSED ON ALL SIDES.	NEI TEST 2-10	SAME / NO EVALUATION REQUIRED

FIGURE F-8	INSTALLED TO TESTED FIRE BARRIER EVALUATION	PAGE 16 OF 31

1. THERMO-LAG BARRIER SYSTEM/PROTECTED COMMODITY IDENTIFIER: C1XE2ATSAB

2. APPLICABLE FIRE BARRIER SYSTEM SEGMENT(S): 1-2, 2-3, 3-4, 4-5

3. EVALUATION REF. NO.(S): E-1 THROUGH E-2

4. EVALUATION(S):

E-1 ENCLOSED MASS:

C1XE2ATSAB	1 - 24" CABLE TRAY	= 3.870 LB/FT
	6 - 7/C, #12 AWG - 600V	= 1.628 LB/FT
	17 - 5/C, #12 AWG - 600V	= 5.763 LB/FT
	22 - 3/C, #12 AWG - 600V	= 5.126 LB/FT
	1 - 3/C, #4 AWG - 2KV	= 0.000 LB/FT (NOTE 1)
	1 - 3/C, #6 AWG - 2KV	= 0.000 LB/FT (NOTE 1)
	2 - 2/C, #12 AWG - 600V	= 0.240 LB/FT
	4 - 12/C, #12 AWG - 600V	= 2.796 LB/FT
	2 - 3/C, #10 AWG - 2KV	= 0.674 LB/FT
	12 - 1 PR, #16 AWG - 600V	= 0.000 LB/FT (NOTE 1)
	3 - 1 QD, #16 AWG - 600V	= 0.000 LB/FT (NOTE 1)
	2 - 3 PR, #16 AWG - 600V	= 0.000 LB/FT (NOTE 1)
	1 - 3/C, #2 AWG - 2KV	= 0.000 LB/FT (NOTE 1)
	TOTAL	= 20.097 LB/FT

NOTES:

1. THE WEIGHTS FOR THESE CABLES WERE NOT READILY AVAILABLE. SINCE THE ENCLOSED MASS EVALUATION WITH THESE CABLE WEIGHTS WILL BE NO DIFFERENT THAN WITHOUT THE WEIGHTS, THE CABLE WEIGHTS ARE NOT INCLUDED.

2. THE CABLE WEIGHTS WERE TAKEN FROM CALCULATION EC - 5045, REV. 1, "RACEWAY WEIGHT ANALYSIS". THE PARTICULAR CABLES CONTAINED IN EACH RACEWAY WAS OBTAINED FROM CALCULATION EC - 5046, REV. 4, "POWER CABLE SIZING VERIFICATION IN FIRE WRAPPED RACEWAYS.

E-2 BANDS WERE USED ON THE INSTALLED CABLE TRAY AND FASTENER SPACING WAS MAINTAINED AT 12" OR LESS. THERE WAS HOWEVER NO REQUIREMENT FOR BAND TO JOINT SPACING SO THAT DIMENSION VARIES. THE ACTUAL INSTALLED CONFIGURATION IS WITHIN 4" OF THE JOINT ON THE BOTTOM PANEL FOR THE HORIZONTAL SECTION WHICH WOULD BE THE CRITICAL JOINT. THIS COUPLED WITH THE FACT THAT THESE ARE 3 HOUR PANELS WHICH DID NOT TEND TO DISTORT IN THE TEST, RESULTS IN THE SPACING OF THE BANDS TO JOINT GREATER THAN 2" BEING INSIGNIFICANT AND THE INSTALLED BEING BOUNDED BY THE TESTED. TO MAINTAIN CONSERVATISM IN THIS EVALUATION CREDIT IS BEING TAKEN FOR ONLY A 60 MINUTE BARRIER RATING INSTEAD OF THE 86 MINUTES OBTAINED IN NEI TEST 2-3

FIGURE F-8 INSTALLED TO TESTED FIRE BARRIER EVALUATION PAGE 17 OF 31

1. THERMO-LAG BARRIER SYSTEM/PROTECTED COMMODITY IDENTIFIER: C1XE2ATSAB

2. APPLICABLE FIRE BARRIER SYSTEM SEGMENT(S): 1-2, 2-3, 3-4, 4-5

3. EVALUATION REF. NO.(S): E-1 THROUGH E-2

4. EVALUATION(S):

SEGMENT EVALUATION:

THE INSTALLED CONFIGURATION IS BOUNDED BY NEI TEST 2-10. IN ORDER TO MAINTAIN THE CONSERVATISM OF THIS EVALUATION, CREDIT IS NOT TAKEN FOR THE FULL 86 MINUTE RATING OBTAINED IN NEI TEST 2-10, BUT IT IS REASONABLE TO EXPECT THAT THE INSTALLED CONFIGURATION CAN PROVIDE AT LEAST A 60 MINUTE RATING WHICH IS CONSISTENT WITH THE MAXIMUM RATING THAT CAN BE OBTAINED FOR THE WALL INTERFACE WITH UPGRADE.

IT WOULD BE POSSIBLE TO MAINTAIN CONSERVATISM AND OBTAIN A HIGHER RATING BY INSTALLING ADDITIONAL BANDING TO COMPLY WITH MAXIMUM TESTED BAND TO JOINT SPACING. THIS WOULD RESULT IN AN 86 MINUTE RATING. ALSO, THE EXISTING COVERAGE COULD BE UPGRADED PER NEI TEST 1-4 TO OBTAIN A 3 HOUR RATING FOR THE CABLE TRAY, BUT THE UPGRADES REQUIRED ARE VERY ELABORATE AND THE ENTIRE TRAY RUN COULD NOT OBTAIN A RATING HIGHER THAN ITS "WEAKEST LINK", THE STRUCTURAL INTERFACE.

TESTS 2-10 EXHIBITED STRUCTURAL INTEGRITY FOLLOWING THE HOSE STREAM TEST.

FIGURE F-3	INSTALLED TO TESTED FIRE BARRIER EVALUATION			PAGE 18 OF 31
PERFORMANCE PARAMETERS	1 THERMO-LAG BARRIER SYSTEM/PROTECTED COMMODITY IDENTIFIER: C1XE2ATSAB			
	2 APPLICABLE FIRE BARRIER SYSTEM SEGMENT: NODES 2, 3, 4			
COMMODITY	3A INSTALLED CONFIGURATION	4A TESTED CONFIGURATION(S) EVALUATED	5A APPLICABLE TESTS	6A EVALUATION/ REF. NO.
TYPE	CABLE TRAY RADIAL BEND	CABLE TRAY RADIAL BEND	NEI TEST 2-10	SAME/ NO EVALUATION REQUIRED
SIZE	24" CABLE TRAY	24" X 4" CABLE TRAY	NEI TEST 2-10	TESTED BOUNDS INSTALLED. NO EVALUATION REQUIRED
MATERIAL	STEEL	ALUMINUM	NEI TEST 2-10	TESTED BOUNDS INSTALLED. NO EVALUATION REQUIRED
CONTENTS/ TOTAL ENCLOSED MASS	20.097 LB/FT	24" TRAY = 12.74 LB/FT	NEI TEST 2-10	TESTED BOUNDS INSTALLED. SEE EVALUATION E-1
ORIENTATION	HORIZONTAL AND VERTICAL	HORIZONTAL AND VERTICAL	NEI TEST 2-10	SAME. NO EVALUATION REQUIRED.

FIGURE F-4	INSTALLED TO TESTED FIRE BARRIER EVALUATION			PAGE 19 OF 31
PERFORMANCE PARAMETERS	1 THERMO-LAG BARRIER SYSTEM/PROTECTED COMMODITY IDENTIFIER: C1XE2ATSAB			
	2 APPLICABLE FIRE BARRIER SYSTEM SEGMENT: NODES 2, 3, 4			
BARRIER	3B INSTALLED CONFIGURATION	4B TESTED CONFIGURATION(S) EVALUATED	5B APPLICABLE TESTS	6B EVALUATION/ REF. NO.
MATERIAL TYPE	THERMO-LAG 330-1 V-RIB PANELS (3 HR.)	THERMO-LAG 330-1 V-RIB PANELS (3 HR.)	NEI TEST 2-10	SAME. NO EVALUATION REQUIRED.
MATERIAL THICKNESS	1.25" ± .250"	1.00" + .25" - 0"	NEI TEST 2-10	TESTED BOUNDS INSTALLED. NO EVALUATION REQUIRED.
STIFFENER (V-RIB) LOCATION/ ORIENTATION	INSIDE. ORIENTATION VARIES.	INTERNAL AND PARALLEL TO SIDE RAILS.	NEI TEST 2-10	TESTED BOUNDS INSTALLED. NO EVALUATION REQUIRED.
STRESS SKIN LOCATION	INTERNAL AND EXTERNAL	INTERNAL AND EXTERNAL	NEI TEST 2-10	TESTED BOUNDS INSTALLED. NO EVALUATION REQUIRED..

FIGURE F-5	INSTALLED TO TESTED FIRE BARRIER EVALUATION			PAGE 20 OF 31
PERFORMANCE PARAMETERS	1 THERMO-LAG BARRIER SYSTEM/PROTECTED COMMODITY IDENTIFIER: C1XE2ATSAB			
	2 APPLICABLE FIRE BARRIER SYSTEM SEGMENT: NODES 2, 3, 4			
BARRIER	3C INSTALLED CONFIGURATION	4C TESTED CONFIGURATION(S) EVALUATED	5C APPLICABLE TESTS	6C EVALUATION/ REF. NO.
JOINT TYPE(S)	PRE-BUTTERED MITERED JOINTS	PRE-BUTTERED MITERED JOINTS	NEI TEST 2-10	TESTED BOUNDS INSTALLED. NO EVALUATION REQUIRED.
JOINT GAP	< 1/4"	≤ 1/4"	NEI TEST 2-10	TESTED BOUNDS INSTALLED. NO EVALUATION REQUIRED
UNSUPPORTED BARRIER SPANS	24"	24"	NEI TEST 2-10	TESTED BOUNDS INSTALLED. NO EVALUATION REQUIRED.
INTERNAL SUPPORT MECHANISMS	SUPPORTED AGAINST CABLE TRAY	SUPPORTED AGAINST TRAY	NEI TEST 2-10'	TESTED BOUNDS INSTALLED. NO EVALUATION REQUIRED.

FIGURE F-6	INSTALLED TO TESTED FIRE BARRIER EVALUATION			PAGE 21 OF 31
PERFORMANCE PARAMETERS	1 THERMO-LAG BARRIER SYSTEM/PROTECTED COMMODITY IDENTIFIER: C1XE2ATSAB			
	2 APPLICABLE FIRE BARRIER SYSTEM SEGMENT: NODES 2, 3, 4			
BARRIER	3D INSTALLED CONFIGURATION	4D TESTED CONFIGURATION(S) EVALUATED	5D APPLICABLE TESTS	6D EVALUATION/ REF. NO.
FASTENER TYPE	1/2" BANDS	1/2" BANDS	NEI TEST 2-10	SAME/ NO EVALUATION REQUIRED.
FASTENER SPACING	12" MAXIMUM	12" MAXIMUM	NEI TEST 2-10	SAME / NO EVALUATION REQUIRED
FASTENER DISTANCE FROM JOINTS	VARIES. INSTALLERS HAD NO MINIMUM SPACING REQUIREMENT FROM JOINTS.	2" MAXIMUM	NEI TEST 2-10	SEE EVALUATION E-2
FASTENER EDGE GUARDS	NONE	NONE	NEI TEST 2-10	SAME /NO EVALUATION REQUIRED

FIGURE F-7	INSTALLED TO TESTED FIRE BARRIER EVALUATION			PAGE 22 OF 31
PERFORMANCE PARAMETERS	1 THERMO-LAG BARRIER SYSTEM/PROTECTED COMMODITY IDENTIFIER: C1XE2ATSAB			
	2 APPLICABLE FIRE BARRIER SYSTEM SEGMENT: NODES 2, 3, 4			
BARRIER	3E INSTALLED CONFIGURATION	4E TESTED CONFIGURATION(S) EVALUATED	5E APPLICABLE TESTS	6E EVALUATION/ REF. NO.
JOINT REINFORCEMENT MECHANISMS	NONE	NONE	NEI TEST 2-10	SAME / NO EVALUATION REQUIRED
STRUCTURAL SUPPORT AND INTERVENING STEEL PROTECTION	SUPPORTS ARE COVERED TO STRUCTURE. INTERVENING STEEL WAS COVERED OUT AT LEAST 18".	SUPPORTS COVERED TO STRUCTURE. INTERVENING STEEL COVERED FOR 18".	NEI TEST 2-10	TESTED BOUNDS INSTALLED. NO EVALUATION REQUIRED
LOCATION OF ENCLOSURE	EXPOSED ON ALL SIDES.	EXPOSED ON ALL SIDES.	NEI TEST 2-10	SAME / NO EVALUATION REQUIRED

FIGURE F-8 INSTALLED TO TESTED FIRE BARRIER EVALUATION

1. THERMO-LAG BARRIER SYSTEM/PROTECTED COMMODITY IDENTIFIER: C1XE2ATSAB

2. APPLICABLE FIRE BARRIER SYSTEM SEGMENT(S): NODES 2, 3, 4

3. EVALUATION REF. NO.(S): E-1 THROUGH E-2

4. EVALUATION(S):

E-1 ENCLOSED MASS:

C1XE2ATSAB	1 - 24" CABLE TRAY	= 3.870 LB/FT
	4 - 7/C, #12 AWG - 600V	= 1.628 LB/FT
	17 - 5/C, #12 AWG - 600V	= 5.763 LB/FT
	22 - 3/C, #12 AWG - 600V	= 5.126 LB/FT
	1 - 3/C, #4 AWG - 2KV	= 0.000 LB/FT (NOTE 1)
	1 - 3/C, #6 AWG - 2KV	= 0.000 LB/FT (NOTE 1)
	2 - 2/C, #12 AWG - 600V	= 0.240 LB/FT
	4 - 12/C, #12 AWG - 600V	= 2.796 LB/FT
	2 - 3/C, #10 AWG - 2KV	= 0.674 LB/FT
	12 - 1 PR, #16 AWG - 600V	= 0.000 LB/FT (NOTE 1)
	3 - 1 QD, #16 AWG - 600V	= 0.000 LB/FT (NOTE 1)
	2 - 3 PR, #16 AWG - 600V	= 0.000 LB/FT (NOTE 1)
	1 - 3/C, #2 AWG - 2KV	= 0.000 LB/FT (NOTE 1)
	TOTAL	= 20.097 LB/FT

NOTES:

1. THE WEIGHTS FOR THESE CABLES WERE NOT READILY AVAILABLE. SINCE THE ENCLOSED MASS EVALUATION WITH THESE CABLE WEIGHTS WILL BE NO DIFFERENT THAN WITHOUT THE WEIGHTS, THE CABLE WEIGHTS ARE NOT INCLUDED.

2. THE CABLE WEIGHTS WERE TAKEN FROM CALCULATION EC - 5045, REV. 1, "RACEWAY WEIGHT ANALYSIS". THE PARTICULAR CABLES CONTAINED IN EACH RACEWAY WAS OBTAINED FROM CALCULATION EC - 5046, REV. 4, "POWER CABLE SIZING VERIFICATION IN FIRE WRAPPED RACEWAYS.

E-2 BANDS WERE USED ON THE INSTALLED CABLE TRAY AND FASTENER SPACING WAS MAINTAINED AT 12" OR LESS. THERE WAS HOWEVER NO REQUIREMENT FOR BAND TO JOINT SPACING SO THAT DIMENSION VARIES. THE ACTUAL INSTALLED CONFIGURATION IS WITHIN 4" OF THE JOINT ON THE BOTTOM PANEL FOR THE HORIZONTAL SECTION WHICH WOULD BE THE CRITICAL JOINT. THIS COUPLED WITH THE FACT THAT THESE ARE 3 HOUR PANELS WHICH DID NOT TEND TO DISTORT IN THE TEST, RESULTS IN THE SPACING OF THE BANDS TO JOINTS GREATER THAN 2 " BEING INSIGNIFICANT AND THE INSTALLED BEING BOUNDED BY THE TESTED. TO MAINTAIN CONSERVATISM IN THIS EVALUATION CREDIT IS BEING TAKEN FOR ONLY A 60 MINUTE BARRIER RATING INSTEAD OF THE 86 MINUTES OBTAINED IN NEI TEST 2-3.

FIGURE F-8 INSTALLED TO TESTED FIRE BARRIER EVALUATION PAGE 24 OF 31

1. THERMO-LAG BARRIER SYSTEM/PROTECTED COMMODITY IDENTIFIER: CIXE2ATSAB

2. APPLICABLE FIRE BARRIER SYSTEM SEGMENT(S): NODES 2,3,4

3. EVALUATION REF. NO.(S): E-1 THROUGH E-2

4. EVALUATION(S):

SEGMENT EVALUATION:

THE INSTALLED CONFIGURATION IS BOUNDED BY NEI TEST 2-10. IN ORDER TO MAINTAIN THE CONSERVATISM OF THIS EVALUATION, CREDIT IS NOT TAKEN FOR THE FULL 86 MINUTE RATING OBTAINED IN NEI TEST 2-10, BUT IT IS REASONABLE TO EXPECT THAT THE INSTALLED CONFIGURATION CAN PROVIDE AT LEAST A 60 MINUTE RATING WHICH IS CONSISTENT WITH THE MAXIMUM RATING THAT CAN BE OBTAINED FOR THE WALL INTERFACE WITH UPGRADE.

IT WOULD BE POSSIBLE TO MAINTAIN CONSERVATISM AND OBTAIN A HIGHER RATING BY INSTALLING ADDITIONAL BANDING TO COMPLY WITH MAXIMUM TESTED BAND TO JOINT SPACING. THIS WOULD RESULT IN AN 86 MINUTE RATING. ALSO, THE EXISTING COVERAGE COULD BE UPGRADED PER NEI TEST 1-4 TO OBTAIN A 3 HOUR RATING FOR THE CABLE TRAY, BUT THE UPGRADES REQUIRED ARE VERY ELABORATE AND THE ENTIRE TRAY RUN COULD NOT OBTAIN A RATING HIGHER THAN ITS "WEAKEST LINK", THE STRUCTURAL INTERFACE.

TESTS 2-10 EXHIBITED STRUCTURAL INTEGRITY FOLLOWING THE HOSE STREAM TEST.

FIGURE F-3	INSTALLED TO TESTED FIRE BARRIER EVALUATION			PAGE 25 OF 31
PERFORMANCE PARAMETERS	1. THERMO-LAG BARRIER SYSTEM/PROTECTED COMMODITY IDENTIFIER: C1XE2ATSAB			
	2 APPLICABLE FIRE BARRIER SYSTEM SEGMENT: NODE 5			
COMMODITY	3A INSTALLED CONFIGURATION	4A TESTED CONFIGURATION(S) EVALUATED	5A APPLICABLE TESTS	6A EVALUATION/ REF. NO.
TYPE	CABLE TRAY INTERFACE WITH A STRUCTURE.	CONDUIT/WALL INTERFACE CABLES AIR DROPPING FROM CABLE TRAYS TO EMBEDDED WALL SLEEVES	NEI TEST 2-2 TUEC TEST SCHEME 11-4	SEE EVALUATION E-1.
SIZE	24"	3/4",2" & 3" CONDUITS 24 AIR DROPPING CABLES AT EMBEDDED WALL SLEEVES	NEI TEST 2-2 TUEC TEST SCHEME 11-4	SEE EVALUATION E-1.
MATERIAL	STEEL	ALUMINUM ELECTRICAL CABLES	NEI TEST 2-2 TUEC TEST SCHEME 11-4	TEST BOUNDS INSTALLED. NO EVALUATION REQUIRED
CONTENTS/ TOTAL ENCLOSED MASS	N/A AT INTERFACE	N/A AT INTERFACE	NEI TEST 2-2 AND TUEC TEST SCHEME 11-4	THIS IS AN EVALUATION OF THE INTERFACE BETWEEN CABLE TRAY COVERAGE AND A CONCRETE WALL. THERMAL MASS IS NOT A CONSIDERATION IN THIS EVALUATION
ORIENTATION	HORIZONTAL/VERTICAL	VERTICAL/HORIZONTAL	NEI TEST 2-2 AND TUEC TEST SCHEME 11-4	TEST BOUNDS INSTALLED. NO EVALUATION REQUIRED

FIGURE F-4	INSTALLED TO TESTED FIRE BARRIER EVALUATION			PAGE 26 OF 31
PERFORMANCE PARAMETERS	1. THERMO-LAG BARRIER SYSTEM/PROTECTED COMMODITY IDENTIFIER: C1XE2ATSAB			
	2 APPLICABLE FIRE BARRIER SYSTEM SEGMENT: NODE 5			
BARRIER	3B INSTALLED CONFIGURATION	4B TESTED CONFIGURATION(S) EVALUATED	5B APPLICABLE TESTS	6B EVALUATION/ REF. NO.
MATERIAL TYPE	THERMO-LAG 330-1 PRE-FABRICATED V-RIB PANELS (3 HR.)	THERMO-LAG 330-1 V-RIB PANELS FLATTENED THERMO-LAG 330-1 FLAT PANELS	NEI TEST 2-2 TUEC TEST SCHEME 11-4	TEST BOUNDS INSTALLED. NO EVALUATION REQUIRED
MATERIAL THICKNESS	1.25" ± .25"	0.50" + 0.125" - 0" 0.625" ± 0.125"	NEI TEST 2.2 TUEC TEST SCHEME 11-4	TESTED BOUNDS INSTALLED. NO EVALUATION REQUIRED.
STIFFENER (V-RIB) LOCATION/ ORIENTATION	INSIDE. ORIENTATION VARIES.	INTERNAL BUT FLATTENED NONE	NEI TEST 2-2 TUEC TEST SCHEME 11-4	TEST BOUNDS INSTALLED. NO EVALUATION REQUIRED
STRESS SKIN LOCATION	INTERNAL AND EXTERNAL	INTERNAL	NEI TEST 2-2 AND TUEC TEST SCHEME 11-4	TESTED BOUNDS INSTALLED. NO EVALUATION REQUIRED.

FIGURE F-5	INSTALLED TO TESTED FIRE BARRIER EVALUATION			PAGE 27 OF 31
PERFORMANCE PARAMETERS	1. THERMO-LAG BARRIER SYSTEM/PROTECTED COMMODITY IDENTIFIER: C1XE2ATSAB			
	2 APPLICABLE FIRE BARRIER SYSTEM SEGMENT: NODE 5			
BARRIER	3C INSTALLED CONFIGURATION	4C TESTED CONFIGURATION(S) EVALUATED	5C APPLICABLE TESTS	6C EVALUATION/ REF. NO.
JOINT TYPE(S)	PRE-BUTTERED "PICTURE FRAME" BUTTED TO RACEWAY COVERAGE AND BOLTED TO THE CONCRETE WALL.	SCORE & FOLD "PICTURE FRAME" BOLTED TO CONCRETE. PRE-BUTTERED "PICTURE FRAME" BUTTED TO RACEWAY COVERAGE AND BOLTED TO THE CONCRETE WALL.	NEI TEST 2-2 TUEC TEST SCHEME 11-4	INSTALLED IS NOT BOUNDED BY TESTED. SEE EVALUATION E-1.
JOINT GAP	≤ 1/4"	≤ 1/4"	NEI TEST 2-2 AND TUEC TEST SCHEME 11-4	SAME/NO EVALUATION REQUIRED
UNSUPPORTED BARRIER SPANS	N/A AT WALL INTERFACE	N/A AT WALL INTERFACE	NEI TEST 2-2 AND TUEC TEST SCHEME 11-4	SAME/NO EVALUATION REQUIRED
INTERNAL SUPPORT MECHANISMS	N/A AT WALL INTERFACE	N/A AT WALL INTERFACE	NEI TEST 2-2 AND TUEC TEST SCHEME 11-4	SAME/NO EVALUATION REQUIRED.

FIGURE F-6	INSTALLED TO TESTED FIRE BARRIER EVALUATION			PAGE 28 OF 31
PERFORMANCE PARAMETERS	1. THERMO-LAG BARRIER SYSTEM/PROTECTED COMMODITY IDENTIFIER: C1XE2ATSAB			
	2 APPLICABLE FIRE BARRIER SYSTEM SEGMENT: NODE 5			
BARRIER	3D INSTALLED CONFIGURATION	4D TESTED CONFIGURATION(S) EVALUATED	5D APPLICABLE TESTS	6D EVALUATION/ REF. NO.
FASTENER TYPE	CONCRETE ANCHOR BOLTS	CONCRETE ANCHOR BOLTS	NEI TEST 2-2 AND TUEC TEST SCHEME 11-4	SEE EVALUATION E-1.
FASTENER SPACING	BOLTS SPACED A MAXIMUM OF 12"	BOLTS SPACED A MAXIMUM OF 12"	NEI TEST 2-2 AND TUEC TEST SCHEME 11-4	SEE EVALUATION E-1
FASTENER DISTANCE FROM JOINTS	1" - 2" FROM JOINTS AND EDGE OF THERMO-LAG	1" - 2" FROM JOINTS AND EDGE OF THERMO-LAG	NEI TEST 2-2 AND TUEC TEST SCHEME 11-4	SEE EVALUATION E-1.
FASTENER EDGE GUARDS	NONE	NONE	NEI TEST 2.2 AND TUEC TEST SCHEME 11-4	SAME/NO EVALUATION REQUIRED

FIGURE F-7	INSTALLED TO TESTED FIRE BARRIER EVALUATION			PAGE 29 OF 31
PERFORMANCE PARAMETERS	1. THERMO-LAG BARRIER SYSTEM/PROTECTED COMMODITY IDENTIFIER: C1XE2ATSAB			
	2 APPLICABLE FIRE BARRIER SYSTEM SEGMENT: NODE 5			
BARRIER	3E INSTALLED CONFIGURATION	4E TESTED CONFIGURATION(S) EVALUATED	5E APPLICABLE TESTS	6E EVALUATION/ REF. NO.
JOINT REINFORCEMENT MECHANISMS	NONE	GROOVE AND FOLD METHOD IS USED AT JOINTS WHERE THERMO-LAG FLARES OUT ONTO THE CONCRETE. "PICTURE FRAME" IS TIED INTO RACEWAY COVERAGE UTILIZING A STRESS SKIN AND TROWEL GRADE UPGRADE.	NEI TEST 2-2 TUEC TEST SCHEME 11-4	SEE EVALUATION E-2
STRUCTURAL SUPPORT AND INTERVENING STEEL PROTECTION	INTERVENING STEEL IS COVERED 18"	NONE	NEI TEST 2-2 AND TUEC TEST SCHEME 11-4	TESTED BOUNDS INSTALLED. NO EVALUATION REQUIRED.
LOCATION OF ENCLOSURE	AT A CONCRETE WALL	AT A CONCRETE CEILING AT A CONCRETE WALL	NEI TEST 2-2 TUEC TEST SCHEME 11-4	SAME/ NO EVALUATION REQUIRED.

FIGURE F-8 INSTALLED TO TESTED FIRE BARRIER EVALUATION PAGE 30 OF 31

1. THERMO-LAG BARRIER SYSTEM/PROTECTED COMMODITY IDENTIFIER: C1XE2ATSAB

2. APPLICABLE FIRE BARRIER SYSTEM SEGMENT(S): NODE 5

3. EVALUATION REF. NO.(S): E-1 THROUGH E-2

4. EVALUATION(S):

E-1 THIS EVALUATION IS FOR THE INTERFACE OF THERMO-LAG COVERAGE ON A CABLE TRAY WITH A WALL. THE ONLY TWO TESTED ARRANGEMENTS OF THERMO-LAG MATERIAL ABUTTING MASONRY ARE IN NEI TEST 2-2 IN WHICH A THERMO-LAG BOX DESIGN UTILIZING 1 HOUR MATERIAL CONFIGURATION WAS ATTACHED TO THE CEILING OF THE TEST DECK WITH HILTI BOLTS, AND TUEC TEST SCHEME 11-4 WHICH INCLUDED A SIMILAR BOX DESIGN UTILIZING 1 HOUR MATERIAL ATTACHED TO A CONCRETE WALL. IN NEI TEST 2-2 THERMO LAG V-RIB PANELS WERE SCORED & FOLDED TO CREATE A BOX SHAPED ENCLOSURE WITH 3 INCH FLANGES ALL AROUND WHICH LAY FLAT AGAINST THE CONCRETE AND ACT AS A BASE THROUGH WHICH ANCHOR BOLTS WERE INSTALLED. THIS FLANGED AREA PROVIDES STRUCTURAL SUPPORT AND THERMAL PROTECTION FOR THE INTERFACE AREA. TUEC TEST SCHEME 11-4 UTILIZED A SEPARATE "PICTURE FRAME" COLLAR AROUND A THERMO-LAG BOX. THE BOX WAS CONNECTED TO THE "PICTURE FRAME" WITH STRESS SKIN AND TROWEL GRADE TO ENSURE STRUCTURAL SUPPORT.

E-2 THE INSTALLED IS NOT BOUNDED BY THE TESTED DUE TO THE LACK OF STRESS SKIN AND TROWEL GRADE AT THE "PICTURE FRAME" AT THE STRUCTURE INTERFACE. THE ACCEPTABLE UPGRADE WOULD BE TO TIE THE "PICTURE FRAME" COVERAGE INTO THE CABLE TRAY COVERAGE WITH STRESS SKIN AND TROWEL GRADE PER TUEC TEST SCHEME 11-4.

FIGURE F-8 INSTALLED TO TESTED FIRE BARRIER EVALUATION PAGE 31 OF 31

1. THERMO-LAG BARRIER SYSTEM/PROTECTED COMMODITY IDENTIFIER: C1XE2ATSAB

2. APPLICABLE FIRE BARRIER SYSTEM SEGMENT(S): NODE 5

3. EVALUATION REF. NO.(S): E-1 THROUGH E-2

4. EVALUATION(S):

SEGMENT EVALUATION:

AS INSTALLED, THERE IS NO BOUNDING TEST AND THEREFORE NO FIRE RATING FOR THE STRUCTURE INTERFACE. THE PRINCIPAL ATTRIBUTE MISSING FROM THE INSTALLED CONFIGURATION IS STRESS SKIN AND TROWEL GRADE SUPPORT BETWEEN THE "PICTURE FRAME" AND CABLE TRAY COVERAGE PROVIDING ADDITIONAL STRUCTURAL PROTECTION AT THE INTERFACE AREA.

AN UPGRADE OF THE INSTALLED CONFIGURATIONS BY TYING THE "PICTURE FRAME" COVERAGE INTO THE RACEWAY COVERAGE WITH STRESS SKIN AND TROWEL GRADE PER TUEC TEST SCHEME 11-4 WILL PROVIDE REASONABLE ASSURANCE THAT THE INSTALLED WILL BE BOUNDED BY THAT TEST AND PROVIDE A RATED DURATION OF 60 MINUTES.

TESTED RACEWAYS EXHIBITED ACCEPTABLE STRUCTURAL INTEGRITY IN THE AREA OF THE THERMO-LAG COLLARS FOLLOWING THE HOSE STREAM TEST.

FIGURE F-1 INSTALLED TO TESTED FIRE BARRIER EVALUATION PAGE 1 0F 31

1. THERMO-LAG BARRIER SYSTEM/PROTECTED COMMODITY IDENTIFIER: C1XE2ARX002

2. BARRIER/COMMODITY LOCATION DATA: SOUTH TEXAS PROJECT UNIT ONE
FIRE AREA/ZONE 07/Z071
ELEC. AUX BUILDING, EL. 20'-0"

3. REQUIRED RATING: _____ 1-HOUR __X__ 3-HOUR _____ OTHER _____ RES

4. FIRE BARRIER SYSTEM SEGMENTS EVALUATED: SEE PAGE 2

5. FIRE BARRIER SYSTEM SEE PAGE 2

EVALUATION RESULTS: _____ BOUNDED BY TEST _____ NOT BOUNDED BY TEST

_____ RATED BARRIER SYSTEM _____ FURTHER EVALUATION REQUIRED

_____ _____
(OTHER)

6. APPLICABLE TEST REFERENCES: NEI TEST 2-2, 2-3 AND 1-7 AND TUEC TEST 11-4

7. REMARKS: N/A

FIGURE F-1.1 INSTALLED TO TESTED FIRE BARRIER EVALUATION PAGE 2 0F 31

1. THERMO-LAG BARRIER SYSTEM/PROTECTED COMMODITY IDENTIFIER: C1XE2ARX002

2.

NODE	COMMODITY TYPE	BOUNDED BY TEST (Y/N)	BARRIER RATING AS INSTALLED (MIN)	BARRIER RATING WITH UPGRADE (MIN)	EVAL PAGES
1	BOX CONFIGURATION	N	0	60	4-10
1-2	CONDUIT	Y	91	112	11-17
2	CONDUIT RADIAL BEND	Y	102	129	18-24
2-3	CONDUIT	Y	91	112	11-17
3-4	CONDUIT	Y	91	112	11-17
4	CONDUIT RADIAL BEND	Y	102	129	18-24
4-5	CONDUIT	Y	91	112	11-17
5	CONDUIT RADIAL BEND	Y	102	129	18-24
5-6	CONDUIT	Y	91	112	11-17
6	CONDUIT/WALL INTERFACE	N	0	60	25-31

BOX AT NODE 3 IS EVALUATED IN THE EVALUATION OF CABLE TRAY C1XE2ATSAB (NODE 1)

FIGURE F-2 INSTALLED TO TESTED FIRE BARRIER EVALUATION PAGE 3 OF 31

1. THERMO-LAG BARRIER SYSTEM/PROTECTED COMMODITY IDENTIFIER: C1XE2ARX002

2. SKETCH OF INSTALLED CONFIGURATION

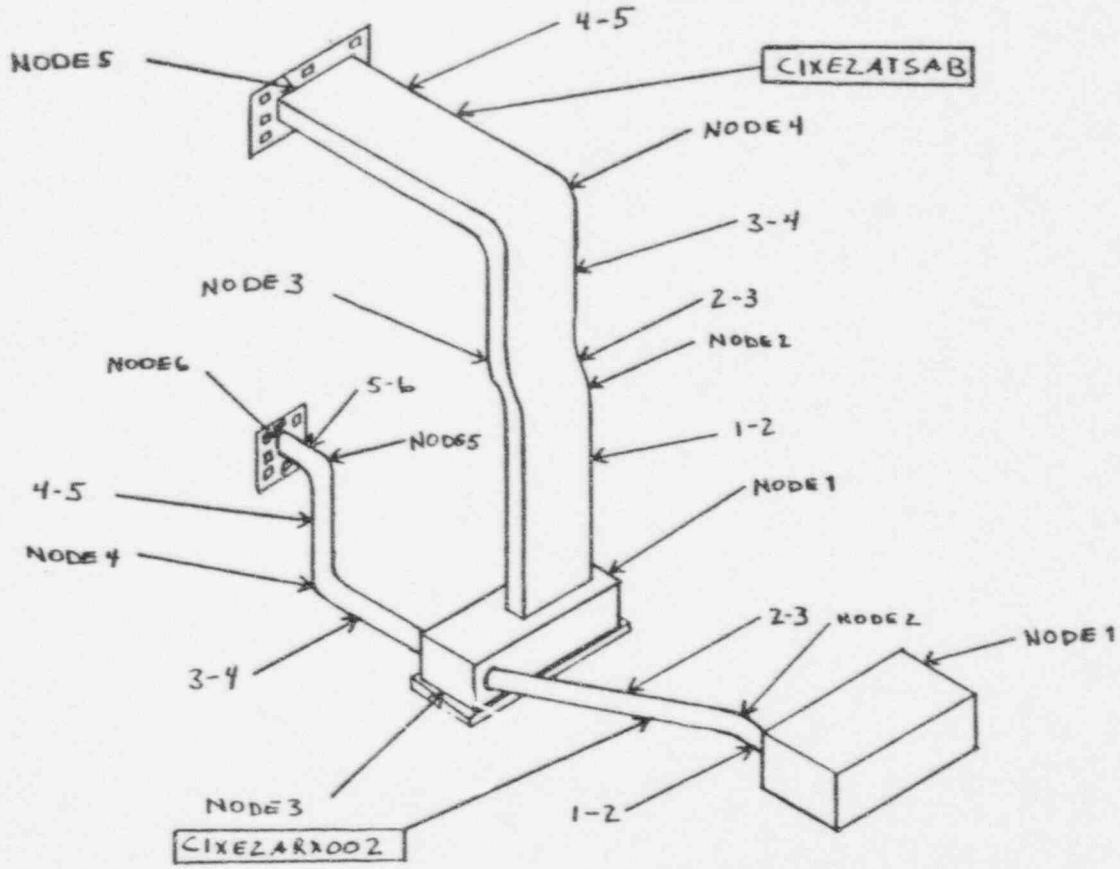

FIGURE F-3	INSTALLED TO TESTED FIRE BARRIER EVALUATION			PAGE 4 0F 31
PERFORMANCE PARAMETERS	1 THERMO-LAG BARRIER SYSTEM/PROTECTED COMMODITY IDENTIFIER: C1XE2ARX002			
	2 APPLICABLE FIRE BARRIER SYSTEM SEGMENT: NODE 1			
COMMODITY	3A INSTALLED CONFIGURATION	4A TESTED CONFIGURATION(S) EVALUATED	5A APPLICABLE TESTS	6A EVALUATION/ REF. NO.
TYPE	JUNCTION BOX MOUNTED TO FLOOR	LBDS CABLES AIR DROPPING FROM CABLE TRAYS TO WALL SLEEVES	NEI TEST 2-3 TUEC TEST 11-4	DIFFERENT COMMODITIES, BOUNDING WILL DEPEND ON MATERIAL, MASS AND ORIENTATION. SEE EVALUATION E-1
SIZE	36" X 24" X 12" JUNCTION BOX	3" AND 6" LBDS 24 AIR DROP CABLES FROM 2 STACKED 24" CABLE TRAYS TO EMBEDDED SLEEVES.	NEI TEST 2-3 TUEC TEST 11-4	DIFFERENT SIZES, BOUNDING WILL DEPEND ON MATERIAL, MASS AND ORIENTATION. SEE EVALUATION E-1
MATERIAL	STEEL	ALUMINUM ELECTRICAL CABLES	NEI TEST 2-3 TUEC TEST 11-4	TESTED BOUNDS INSTALLED. NO EVALUATION REQUIRED.
CONTENTS/ TOTAL ENCLOSED MASS	11.606 LBS	6" LBD = 70.0 LBS 3" LBD = 5.62 LBS 8.8 LBS	NEI TEST 2-3 TUEC TEST 11-4	SEE EVALUATION E-2.
ORIENTATION	HORIZONTAL	HORIZONTAL/VERTICAL	NEI TEST 2-3 TUEC TEST 11-4	TESTED BOUNDS INSTALLED. NO EVALUATION REQUIRED.

FIGURE F-4	INSTALLED TO TESTED FIRE BARRIER EVALUATION			PAGE 5 0F 31
PERFORMANCE PARAMETERS	1 THERMO-LAG BARRIER SYSTEM/PROTECTED COMMODITY IDENTIFIER: C1XE2ARX002			
	2 APPLICABLE FIRE BARRIER SYSTEM SEGMENT: NODE 1			
BARRIER	3B INSTALLED CONFIGURATION	4B TESTED CONFIGURATION(S) EVALUATED	5B APPLICABLE TESTS	6B EVALUATION/ REF. NO.
MATERIAL TYPE	THERMO-LAG 330-1 V-RIB PANELS	THERMO-LAG 330-1 V-RIBBED PANELS THERMO-LAG 330-1 V-RIBBED PANELS ON SIDES AND TOP. FLAT PANEL ON BOTTOM AND AT "PICTURE FRAME" AT WALL	NEI TEST 2-3 TUEC TEST 11-4	TESTED BOUNDS INSTALLED. NO EVALUATION REQUIRED.
MATERIAL THICKNESS	1.25" ± 0.25"	1.0" +0.25" - 0". 625" ± 0.125"	NEI TEST 2-3 TUEC TEST 11-4	TEST BOUNDS INSTALLED. NO EVALUATION REQUIRED.
STIFFENER (V-RIB) LOCATION/ ORIENTATION	INSIDE. ORIENTATION VARIES.	INTERNAL AND ORIENTED HORIZONTAL. INTERNAL/ORIENTED TRAY TO WALL ON TOP PANEL AND VERTICAL ON SIDE PANELS.	NEI TEST 2-3 TUEC TEST 11-4	TESTED BOUNDS INSTALLED. NO EVALUATION REQUIRED.
STRESS SKIN LOCATION	INSIDE AND OUTSIDE	BOTH INSIDE AND OUTSIDE INSIDE ONLY	NEI TEST 2-3 TUEC TEST 11-4	TESTED BOUNDS INSTALLED. NO EVALUATION REQUIRED.

FIGURE F-5	INSTALLED TO TESTED FIRE BARRIER EVALUATION			PAGE 6 0F 31
PERFORMANCE PARAMETERS	1 THERMO-LAG BARRIER SYSTEM/PROTECTED COMMODITY IDENTIFIER: C1XE2ARX002			
	2 APPLICABLE FIRE BARRIER SYSTEM SEGMENT: NODE 1			
BARRIER	3C INSTALLED CONFIGURATION	4C TESTED CONFIGURATION(S) EVALUATED	5C APPLICABLE TESTS	6C EVALUATION/ REF. NO.
JOINT TYPE(S)	PRE-BUTTERED BUTT JOINTS. BUTTS TO CONCRETE FLOOR.	PRE-BUTTERED BUTT JOINTS WITH SOME SCORE & FOLD. PRE-BUTTERED BUTT AND SCORE AND FOLD JOINTS. "PICTURE FRAME" BOLTED TO CONCRETE AND BUTTED TO RACEWAY COVERAGE.	NEI TEST 2-3 TUEC TEST 11-4	INSTALLED IS BOUNDED BY NEI TEST 2-3 BUT IS NOT BOUNDED BY TUEC TEST 11-4
JOINT GAP	≤ 1/4" GAP	≤ 1/4" GAP	NEI TEST 2-3 TUEC TEST 11-4	SAME. NO EVALUATION REQUIRED.
UNSUPPORTED BARRIER SPANS	36" X 24" X 12"	6" LBD = 45" X 12" X 13" 3" LBD = 18" X 8" X 8" 36" x 20" x 12"	NEI TEST 2-3 TUEC TEST 11-4	TESTED BOUNDS INSTALLED. NO EVALUATION REQUIRED.
INTERNAL SUPPORT MECHANISMS	INSTALLED AGAINST JUNCTION BOX	INSTALLED AGAINST LBD NONE.	NEI TEST 2-3 TUEC TEST 11-4	TESTED BOUNDS INSTALLED. NO EVALUATION REQUIRED.

FIGURE F-6	INSTALLED TO TESTED FIRE BARRIER EVALUATION			PAGE 7 0F 31
PERFORMANCE PARAMETERS	1 THERMO-LAG BARRIER SYSTEM/PROTECTED COMMODITY IDENTIFIER: C1XE2ARX002			
	2 APPLICABLE FIRE BARRIER SYSTEM SEGMENT: NODE 1			
BARRIER	3D INSTALLED CONFIGURATION	4D TESTED CONFIGURATION(S) EVALUATED	5D APPLICABLE TESTS	6D EVALUATION/ REF. NO.
FASTENER TYPE	1/2" STAINLESS STEEL BANDS	1/2" STAINLESS STEEL BANDS	NEI TEST 2-3 AND TUEC TEST 11-4	SAME/ NO EVALUATION REQUIRED.
FASTENER SPACING	12" MAXIMUM	12" MAXIMUM	NEI TEST 2-3 AND TUEC TEST 11-4	SAME/NO EVALUATION REQUIRED.
FASTENER DISTANCE FROM JOINTS	VARIES. INSTALLERS HAD NO MAXIMUM SPACING REQUIREMENT FROM JOINTS	2" MAXIMUM	NEI TEST 2-3 AND TUEC TEST 11-4	SEE EVALUATION E-3.
FASTENER EDGE GUARDS	NONE	NONE	NEI TEST 2-3 AND TUEC TEST 11-4	SAME/NO EVALUATION REQUIRED.

FIGURE F-7	INSTALLED TO TESTED FIRE BARRIER EVALUATION			PAGE 8 0F 31
PERFORMANCE PARAMETERS	1 THERMO-LAG BARRIER SYSTEM/PROTECTED COMMODITY IDENTIFIER: C1XE2ARX002			
	2 APPLICABLE FIRE BARRIER SYSTEM SEGMENT: NODE 1			
BARRIER	3E INSTALLED CONFIGURATION	4E TESTED CONFIGURATION(S) EVALUATED	5E APPLICABLE TESTS	6E EVALUATION/ REF. NO.
JOINT REINFORCEMENT MECHANISMS	NONE	NONE JOINTS REINFORCED WITH STRESS SKIN, TROWEL GRADE AND STAPLES. WALL INTERFACE REINFORCED WITH "PICTURE FRAME", STRESS SKIN, TROWEL GRADE AND STAPLES.	NEI TEST 2-3 TUEC TEST 11-4	INSTALLED IS BOUNDED BY NEI TEST 2-3, BUT IS NOT BOUNDED BY TUEC TEST 11-4
STRUCTURAL SUPPORT AND INTERVENING STEEL PROTECTION	JUNCTION BOX SUPPORTS ARE INTERNAL TO THE ENCLOSURE. INTERVENING STEEL IS COVERED 18".	SUPPORT MEMBERS WERE PROTECTED FOR FULL LENGTH AND INTERVENING STEEL MEMBERS WERE PROTECTED FOR AN 18" DISTANCE. COVERED OUT 9"	NEI TEST 2-3 TUEC TEST 11-4	TESTED BOUNDS INSTALLED. NO EVALUATION REQUIRED.
LOCATION OF ENCLOSURE	AGAINST CONCRETE FLOOR ON 1 SIDE	OPEN ON ALL SIDES AGAINST CONCRETE ON ONE SIDE	NEI TEST 2-3 TUEC TEST 11-4	TESTED BOUNDS INSTALLED. NO EVALUATION REQUIRED.

FIGURE F-8 INSTALLED TO TESTED FIRE BARRIER EVALUATION PAGE 9 OF 31

1. THERMO-LAG BARRIER SYSTEM/PROTECTED COMMODITY IDENTIFIER: C1XE2ARX002

2. APPLICABLE FIRE BARRIER SYSTEM SEGMENT(S): NODE 1

3. EVALUATION REF. NO.(S): E-1 THROUGH E-3

4. EVALUATION(S):

E-1 THE EVALUATION COMPARES THE COVERAGE ON A 36" X 24" X 12" JUNCTION BOX WITH THE COVERAGE ON A 3" AND 6" LBD IN TEST 2-3 AND THE BOX AND THE STRUCTURAL INTERFACE IN TUEC TEST 11-4. THE 6" LBD IS THE ONLY BOXED COMMODITY WITHOUT JOINT UPGRADE WHOSE SIZE IS COMPARABLE TO THE INSTALLED JUNCTION BOX. THEY ARE DIFFERENT TYPES OF COMMODITIES, BUT THE COVERAGE TECHNIQUES ARE COMPARABLE. BOTH HAVE PRE-BUTTERED BUTT JOINTS, BOTH ARE COVERED WITH 3 HOUR MATERIAL AND THE 45" LONG VERTICAL PANEL ON THE 6" LBD WILL BOUND THE 36" WIDE PANEL ON THE INSTALLED JUNCTION BOX.

E-2 ENCLOSED MASS:

C1XE2ARX002	1 - 4" CONDUIT		= 9.720 LB/FT
	4 - 2/C, #16 AWG - 600V		= 0.320 LB/FT
	2 - 4/C, #16 AWG - 600V		= 0.270 LB/FT
	2 - 16 PR, #16 AWG - 600V		= 1.296 LB/FT
		TOTAL	= 11.606 LB/FT
12" OF C1XE2ARX002 = 1 X 11.606 LB/FT			= 11.606 LB/FT
		TOTAL	= 11.606 LB/FT

NOTES:

1. THE CABLE WEIGHTS WERE TAKEN FROM CALCULATION EC - 5045, REV. 1, "RACEWAY WEIGHT ANALYSIS". THE PARTICULAR CABLES CONTAINED IN EACH RACEWAY WAS OBTAINED FROM CALCULATION EC - 5046, REV. 4, "POWER CABLE SIZING VERIFICATION IN FIRE WRAPPED RACEWAYS.

2. THE INSTALLED IS BOUNDED B Y THE 3" LBD OF NEI TEST 2-3 AND BY TUEC TEST 11-4. IT IS NOT BOUNDED BY THE 6" LBD IN NEI TEST 2-3

E-3 FASTENER SPACING WAS MAINTAINED AT 12" OR LESS. THERE WAS HOWEVER NO REQUIREMENT FOR BAND TO JOINT SPACING SO THAT DIMENSION VARIES. THE INSTALLED CONFIGURATION IS A BOX RESTING ON THE FLOOR, WITH BANDS INSTALLED ON THE SIDE PANELS WITHIN 4" OF THE JOINTS. THE SIDE PANELS ARE IN COMPRESSION. THE TOP PANEL IS MISSING BANDING IN ONE DIRECTION, BUT THE TOP PANEL JOINTS ARE NOT CONSIDERED A FAILURE MODE. ALSO THE 3 HOUR PANELS DID NOT TEND TO DISTORT IN TESTS LIKE THE THINNER 1 HOUR PANELS. THE GREATER BAND TO JOINT SPACING IS CONSIDERED TO BE INSIGNIFICANT AND THE INSTALLED IS BOUNDED BY THE TESTED CONFIGURATIONS.

FIGURE F-8 INSTALLED TO TESTED FIRE BARRIER EVALUATION PAGE 10 0F 31

1. THERMO-LAG BARRIER SYSTEM/PROTECTED COMMODITY IDENTIFIER: C1XE2ARX002

2. APPLICABLE FIRE BARRIER SYSTEM SEGMENT(S): NODE 1

3. EVALUATION REF. NO.(S): E-1 THROUGH E-3

4. EVALUATION(S):

SEGMENT EVALUATION:

AS INSTALLED THERE IS NO BOUNDING TEST AND THEREFORE NO FIRE RATING FOR THE ENCLOSURE DUE TO THE STRUCTURAL INTERFACE NOT BEING BOUNDED BY TUEC TEST 11-4. REINFORCING THE INTERFACE WITH THE STRUCTURE BY INSTALLING A "PICTURE FRAME" WITH STRESS SKIN AND TROWEL GRADE REINFORCEMENT PER TUEC TEST 11-4 WILL RESULT IN REASONABLE ASSURANCE THAT A 60 MINUTE RATING CAN BE OBTAINED. THE 3" AND 6" LBDS WILL BOUND THE BOX CONFIGURATION AS INSTALLED. THE LBDS HAD A RATING OF 102 MINUTES WHICH EXCEEDS THE 60 MINUTES OF THE STRUCTURAL INTERFACE BUT THE OVERALL RATING OF THE ENCLOSURE WOULD BE 60 MINUTES.

THE INSTALLED CONFIGURATIONS WILL BE BOUNDED THERMALLY BY THE TESTS BECAUSE OF THE GREATER THICKNESS OF THE 3 HOUR PANELS THAN THAT REQUIRED FOR A 60 MINUTE RATING AND THE GREATER ENCLOSED MASS WHEN COMPARED AGAINST THE 3" LBD OF NEI TEST 2-3 AND THE BOX OF TUEC TEST 11-4. THE ENCLOSURE WILL BE BOUNDED STRUCTURALLY ONCE THE CONCRETE INTERFACE IS REINFORCED. IT IS QUESTIONABLE IF A GREATER THAN 60 MINUTE RATING COMPARABLE TO THE 102 MINUTES OBTAINED BY THE 3" AND 6" LBDS IN NEI TEST 2-3, CAN BE OBTAINED DUE TO THE LACK OF TESTING FOR GREATER THAN 60 MINUTES FOR THE STRUCTURAL INTERFACE.

WHILE A MINOR BARRIER OPENING OCCURRED IN THE ENCLOSURE FOR BOTH TUEC TEST 11-4 AND NEI TEST 2-2(BASELINE), THE INSTALLED CONFIGURATION INVOLVES CABLES IN ELECTRICAL BOXES WHICH WOULD NOT BE PRONE TO DAMAGE DUE TO FIRE FIGHTING ACTIVITIES OR FALLING EXTERNAL OBJECTS DURING FIRE CONDITIONS.

FIGURE F-3	INSTALLED TO TESTED FIRE BARRIER EVALUATION			PAGE 11 0F 31
PERFORMANCE PARAMETERS	1 THERMO-LAG BARRIER SYSTEM/PROTECTED COMMODITY IDENTIFIER: C1XE2ARX002			
	2 APPLICABLE FIRE BARRIER SYSTEM SEGMENT: 1-2, 2-3, 3-4, 4-5, 5-6			
COMMODITY	3A INSTALLED CONFIGURATION	4A TESTED CONFIGURATION(S) EVALUATED	5A APPLICABLE TESTS	6A EVALUATION/ REF. NO.
TYPE	CONDUIT STRAIGHT RUN	CONDUIT STRAIGHT RUN	NEI TEST 2-3 (AS INSTALLED) AND NEI TEST 1-7 (UPGRADE)	SAME/NO EVALUATION REQUIRED
SIZE	4"	3" AND 6" 3" AND 5"	NEI TEST 2-3 (AS INSTALLED) NEI TEST 1-7 (UPGRADE)	TESTED BOUNDS INSTALLED/ NO EVALUATION REQUIRED
MATERIAL	STEEL	ALUMINUM STEEL	NEI TEST 2-3 (AS INSTALLED) NEI TEST 1-7 (UPGRADE)	TESTED BOUNDS INSTALLED/NO EVALUATION REQUIRED
CONTENTS/ TOTAL ENCLOSED MASS	11.606 LBS/FT	NEI TEST 2-3 3" COND. = 2.39 LBS/FT. 6" COND .= 6.66 LBS/FT. 3" COND. = 7.58 LBS/FT. 5 " COND = 14.62 LBS/FT	NEI TEST 2-3 (AS INSTALLED) NEI TEST 1-7 (UPGRADE)	TESTED BOUNDS INSTALLED FOR 3" AND 6" CONDUIT IN NEI TEST 2-3 AND FOR THE 3" CONDUIT IN TEST 1-7
ORIENTATION	HORIZONTAL/VERTICAL	HORIZONTAL/VERTICAL	NEI TEST 2-3 (AS INSTALLED) NEI TEST 1-7 (UPGRADE)	SAME/NO EVALUATION REQUIRED.

FIGURE F-4	INSTALLED TO TESTED FIRE BARRIER EVALUATION			PAGE 12 OF 31
PERFORMANCE PARAMETERS	1 THERMO-LAG BARRIER SYSTEM/PROTECTED COMMODITY IDENTIFIER: C1XE2ARX002			
	2 APPLICABLE FIRE BARRIER SYSTEM SEGMENT: 1-2, 2-3, 3-4, 4-5, 5-6			
BARRIER	3B INSTALLED CONFIGURATION	4B TESTED CONFIGURATION(S) EVALUATED	5B APPLICABLE TESTS	6B EVALUATION/ REF. NO.
MATERIAL TYPE	THERMO-LAG 330-1 PRE-SHAPED CONDUIT HALF ROUNDS	THERMO-LAG 330-1 PRE-SHAPED CONDUIT HALF ROUNDS	NEI TEST 2-3 (AS INSTALLED) AND NEI TEST 1-7 (UPGRADE)	SAME/NO EVALUATION REQUIRED
MATERIAL THICKNESS	1.25" ± 0.25"	1.00" + 0.250" - 0"	NEI TEST 2-3 (AS INSTALLED) AND NEI TEST 1-7 (UPGRADE)	TESTED BOUNDS INSTALLED. NO EVALUATION REQUIRED
STIFFENER (V-RIB) LOCATION/ ORIENTATION	NONE	NONE	NEI TEST 2-3 (AS INSTALLED) AND NEI TEST 1-7 (UPGRADE)	SAME/NO EVALUATION REQUIRED
STRESS SKIN LOCATION	INSIDE AND OUTSIDE	INSIDE AND OUTSIDE	NEI TEST 2-3 (AS INSTALLED) AND NEI TEST 1-7 (UPGRADE)	SAME/NO EVALUATION REQUIRED

FIGURE F-5	INSTALLED TO TESTED FIRE BARRIER EVALUATION			PAGE 13 0F 31
PERFORMANCE PARAMETERS	1 THERMO-LAG BARRIER SYSTEM/PROTECTED COMMODITY IDENTIFIER: C1XE2ARX002			
	2 APPLICABLE FIRE BARRIER SYSTEM SEGMENT: 1-2, 2-3, 3-4, 4-5, 5-6			
BARRIER	3C INSTALLED CONFIGURATION	4C TESTED CONFIGURATION(S) EVALUATED	5C APPLICABLE TESTS	6C EVALUATION/ REF. NO.
JOINT TYPE(S)	PRE-BUTTERED BUTT JOINTS	PRE-BUTTERED BUTT JOINTS POST-BUTTERED BUTT JOINTS	NEI TEST 2-3 (AS INSTALLED) NEI TEST 1-7 (UPGRADE)	TESTED BOUNDS INSTALLED. NO EVALUATION REQUIRED
JOINT GAP	≤ 1/4"	≤ 1/4"	NEI TEST 2-3 (AS INSTALLED) AND NEI TEST 1-7 (UPGRADE)	TESTED BOUNDS INSTALLED. NO EVALUATION REQUIRED
UNSUPPORTED BARRIER SPANS	HALF ROUNDS INSTALLED ON CONDUIT. NO UNSUPPORTED SPANS	HALF ROUNDS INSTALLED ON CONDUIT. NO UNSUPPORTED SPANS.	NEI TEST 2-3 (AS INSTALLED) AND NEI TEST 1-7 (UPGRADE)	SAME. NO EVALUATION REQUIRED.
INTERNAL SUPPORT MECHANISMS	HALF ROUNDS INSTALLED OVER CONDUIT.	HALF ROUNDS INSTALLED OVER CONDUIT	NEI TEST 2-3 (AS INSTALLED) AND NEI TEST 1-7 (UPGRADE)	SAME. NO EVALUATION REQUIRED.

FIGURE F-6	INSTALLED TO TESTED FIRE BARRIER EVALUATION			PAGE 14 0F 31
PERFORMANCE PARAMETERS	1 THERMO-LAG BARRIER SYSTEM/PROTECTED COMMODITY IDENTIFIER: C1XE2ARX002			
	2 APPLICABLE FIRE BARRIER SYSTEM SEGMENT: 1-2, 2-3, 3-4, 4-5, 5-6			
BARRIER	3D INSTALLED CONFIGURATION	4D TESTED CONFIGURATION(S) EVALUATED	5D APPLICABLE TESTS	6D EVALUATION/ REF. NO.
FASTENER TYPE	1/2" STAINLESS STEEL BANDS	1/2" STAINLESS STEEL BANDS	NEI TEST 2-3 (AS INSTALLED) AND NEI TEST 1-7 (UPGRADE)	SAME. NO EVALUATION REQUIRED
FASTENER SPACING	12" MAXIMUM	12" MAXIMUM	NEI TEST 2-3 (AS INSTALLED) AND NEI TEST 1-7 (UPGRADE)	TESTED BOUNDS INSTALLED. NO EVALUATION REQUIRED.
FASTENER DISTANCE FROM JOINTS	VARIES. INSTALLERS HAD NO REQUIREMENT TO MAINTAIN FASTENER TO JOINT SPACING.	2" MAXIMUM	NEI TEST 2-3 (AS INSTALLED) AND NEI TEST 1-7 (UPGRADE)	SEE EVALUATION E-2
FASTENER EDGE GUARDS	NOT USED	NOT USED	NEI TEST 2-3 (AS INSTALLED) AND NEI TEST 1-7 (UPGRADE)	SAME. NO EVALUATION REQUIRED

FIGURE F-7	INSTALLED TO TESTED FIRE BARRIER EVALUATION			PAGE 15 0F 31
PERFORMANCE PARAMETERS	1 THERMO-LAG BARRIER SYSTEM/PROTECTED COMMODITY IDENTIFIER: C1XE2ARX002			
	2 APPLICABLE FIRE BARRIER SYSTEM SEGMENT: 1-2, 2-3, 3-4, 4-5, 5-6			
BARRIER	3E INSTALLED CONFIGURATION	4E TESTED CONFIGURATION(S) EVALUATED	5E APPLICABLE TESTS	6E EVALUATION/ REF. NO.
JOINT REINFORCEMENT MECHANISMS	NONE	NONE JOINTS AND SEAMS ARE REINFORCED WITH STRESS SKIN AND TROWEL GRADE	NEI TEST 2-3 (AS INSTALLED) NEI TEST 1-7 (UPGRADE)	NEI TEST 2-3 BOUNDS THE INSTALLED. THE INSTALLED WOULD HAVE TO BE UPGRADED TO BE BOUNDED BY NEI TEST 1-7. NO EVALUATION REQUIRED
STRUCTURAL SUPPORT AND INTERVENING STEEL PROTECTION	SUPPORTS ARE COMPLETELY COVERED TO STRUCTURE. INTERVENING STEEL IS COVERED 18".	SUPPORT MEMBERS WERE PROTECTED FOR LENGTH IN NEI TESTS 1-7 AND 2-3. TEST 2-3 INCLUDED INTERVENING STEEL MEMBERS PROTECTED FOR AN 18" DISTANCE.	NEI TEST 2-3 (AS INSTALLED) AND NEI TEST 1-7 (UPGRADE)	TESTED BOUNDS INSTALLED. NO EVALUATION REQUIRED.
LOCATION OF ENCLOSURE	EXPOSED ON ALL SIDES	EXPOSED ON ALL SIDES	NEI TEST 2-3 (AS INSTALLED) AND NEI TEST 1-7 (UPGRADE)	TESTED BOUNDS INSTALLED. NO EVALUATION IS REQUIRED.

FIGURE F-8 INSTALLED TO TESTED FIRE BARRIER EVALUATION PAGE 16 0F 31

1. THERMO-LAG BARRIER SYSTEM/PROTECTED COMMODITY IDENTIFIER: C1XE2ARX002

2. APPLICABLE FIRE BARRIER SYSTEM SEGMENT(S): 1-2, 2-3, 3-4, 4-5, 5-6

3. EVALUATION REF. NO.(S): E-1 AND E-2

4. EVALUATION(S):

E-1 ENCLOSED MASS

C1XE2ARX002	1 - 4" CONDUIT		= 9.720 LB/FT
	4 - 2/C, #16 AWG - 600V		= 0.320 LB/FT
	2 - 4/C, #16 AWG - 600V		= 0.270 LB/FT
	2 - 16 PR, #16 AWG - 600V		= 1.296 LB/FT
		TOTAL	= 11.606 LB/FT

E-2 THE INSTALLERS HAD NO REQUIREMENT FOR THE DISTANCE OF FASTENERS (BANDS OR TIE WIRES) TO CONDUIT SECTION BUTT JOINTS SO FASTENER TO JOINT DISTANCES VARY. THE INSTALLERS MAINTAINED 12" OR LESS BETWEEN FASTENERS AND THERE WAS A MINIMUM OF ONE FASTENER ON SMALLER SECTIONS (I.E., MITERED JOINTS AT RADIAL BENDS). THE TEST RESULTS DID NOT INDICATE THAT JOINT SEPARATION WAS A FAILURE MODE FOR PRE-SHAPED SECTIONS, THEREFORE FASTENER TO JOINT SPACING IS NOT CONSIDERED A CRITICAL PARAMETER. THE INSTALLED CONFIGURATIONS ARE CONSIDERED BOUNDED BY THE TESTED CONFIGURATIONS.

FIGURE F-8 INSTALLED TO TESTED FIRE BARRIER EVALUATION PAGE 17 0F 31

1. THERMO-LAG BARRIER SYSTEM/PROTECTED COMMODITY IDENTIFIER: C1XE2ARX002

2. APPLICABLE FIRE BARRIER SYSTEM SEGMENT(S): 1-2, 2-3, 3-4, 4-5, 5-6

3. EVALUATION REF. NO.(S): E-1 AND E-2

4. EVALUATION(S):

SEGMENT EVALUATION:

AS SHOWN THROUGH PARAMETER COMPARISONS, THE INSTALLED CONFIGURATION IS BOUNDED BY THE 3" CONDUIT CONFIGURATION IN NEI TEST 2-3. THE 3" DIAMETER CONDUIT MAXIMUM INDIVIDUAL TEMPERATURE CRITERION (325° F OVER AMBIENT) WAS EXCEEDED AT 91 MINUTES.

THE 3" DIAMETER OR STEEL CONDUIT CONFIGURATION TESTED IN NEI TEST 1-7 WOULD BOUND THE INSTALLED IF THE INSTALLED HAD ALL JOINTS AND SEAMS UPGRADED WITH STRESS SKIN AND TROWEL GRADE CONSISTENT WITH THAT TEST. THE 3" STEEL CONDUIT IN NEI TEST 1-7 EXCEEDED THE MAXIMUM INDIVIDUAL TEMPERATURE CRITERION AFTER 112 MINUTES

WHILE A MINOR BARRIER OPENING OCCURRED IN THE 6" LBD IN NEI TEST 2-3, THE INSTALLED CONFIGURATION INVOLVES CABLES IN CONDUITS WHICH WOULD NOT BE PRONE TO DAMAGE DUE TO FIRE FIGHTING ACTIVITIES OR FALLING EXTERNAL OBJECTS DURING FIRE CONDITIONS.

FIGURE F-3	INSTALLED TO TESTED FIRE BARRIER EVALUATION			PAGE 18 OF 31
PERFORMANCE PARAMETERS	1 THERMO-LAG BARRIER SYSTEM/PROTECTED COMMODITY IDENTIFIER: C1XE2ARX002			
	2 APPLICABLE FIRE BARRIER SYSTEM SEGMENT: NODES 2, 4, 5			
COMMODITY	3A INSTALLED CONFIGURATION	4A TESTED CONFIGURATION(S) EVALUATED	5A APPLICABLE TESTS	6A EVALUATION/ REF. NO.
TYPE	CONDUIT RADIAL BEND	CONDUIT RADIAL BEND	NEI TEST 2-3 (AND INSTALLED) AND NEI TEST 1-7 (UPGRADED)	SAME. NO EVALUATION REQUIRED.
SIZE	4" DIAMETER	3" AND 6" DIAMETER 3" AND 5" DIAMETER	NEI TEST 2-3 (AS INSTALLED) NEI TEST 1-7 (UPGRADE)	TEST BOUNDS INSTALLED. NO EVALUATION REQUIRED
MATERIAL	STEEL	ALUMINUM STEEL	NEI TEST 2-3 (AS INSTALLED) NEI TEST 1-7 (UPGRADE)	TEST BOUNDS INSTALLED. NO EVALUATION REQUIRED
CONTENTS/ TOTAL ENCLOSED MASS	11.606 LBS/FT	NEI TEST 2-3 3" = 2.39 LBS/FT 6" = 6.66 LBS/FT NEI TEST 1-7 3" = 7.58 LBS/FT 5" = 14.62 LBS/FT	NEI TEST 2-3 (AS INSTALLED) NEI TEST 1-7 (UPGRADE)	TOTAL THERMAL MASS OF INSTALLED CONFIGURATION IS GREATER THAN THAT TESTED AND IS BOUNDED. SEE EVALUATION E-1.
ORIENTATION	HORIZONTAL TO VERTICAL AND HORIZONTAL IN THE SAME PLANE	HORIZONTAL TO VERTICAL	NEI TEST 2-3 (AS INSTALLED) AND NEI TEST 1-7 (UPGRADE)	TEST BOUNDS INSTALLED. NO EVALUATION REQUIRED

FIGURE F-4	INSTALLED TO TESTED FIRE BARRIER EVALUATION			PAGE 19 0F 31
PERFORMANCE PARAMETERS	1 THERMO-LAG BARRIER SYSTEM/PROTECTED COMMODITY IDENTIFIER: C1XE2ARX002			
	2 APPLICABLE FIRE BARRIER SYSTEM SEGMENT: NODES 2, 4, 5			
BARRIER	3B INSTALLED CONFIGURATION	4B TESTED CONFIGURATION(S) EVALUATED	5B APPLICABLE TESTS	6B EVALUATION/ REF. NO.
MATERIAL TYPE	THERMO-LAG 330-1 PRE-SHAPED CONDUIT SECTIONS (3 HR.)	THERMO-LAG 330-1 PRE-SHAPED CONDUIT SECTIONS (3 HR.)	NEI TEST 2-3 (AS REQUIRED) AND NEI TEST 1-7 (UPGRADE)	SAME. NO EVALUATION REQUIRED.
MATERIAL THICKNESS	1.25" ± 0.25"	1" = 0.250" - 0"	NEI TEST 2-3 (AS REQUIRED) AND NEI TEST 1-7 (UPGRADE)	TEST BOUNDS INSTALLED. NO EVALUATION REQUIRED.
STIFFENER (V-RIB) LOCATION/ ORIENTATION	NONE	NONE	NEI TEST 2-3 (AS INSTALLED) AND NEI TEST 1-7 (UPGRADE)	SAME. NO EVALUATION REQUIRED.
STRESS SKIN LOCATION	BOTH INSIDE AND OUTSIDE	BOTH INSIDE AND OUTSIDE	NEI TEST 2-3 (AS INSTALLED) AND NEI TEST 1-7 (UPGRADE)	SAME. NO EVALUATION REQUIRED

FIGURE F-5	INSTALLED TO TESTED FIRE BARRIER EVALUATION			PAGE 20 OF 31
PERFORMANCE PARAMETERS	1 THERMO-LAG BARRIER SYSTEM/PROTECTED COMMODITY IDENTIFIER: C1XE2ARX002			
	2 APPLICABLE FIRE BARRIER SYSTEM SEGMENT: NODES 2, 4, 5			
BARRIER	3C INSTALLED CONFIGURATION	4C TESTED CONFIGURATION(S) EVALUATED	5C APPLICABLE TESTS	6C EVALUATION/ REF. NO.
JOINT TYPE(S)	PRE-BUTTERED MITERED JOINTS	NEI TEST 2-3 = PRE-BUTTERED MITERED JOINTS NEI TEST 1-7 = PRE-BUTTERED MITERED JOINTS	NEI TEST 2-3 (AS INSTALLED) NEI TEST 1-7 (UPGRADE)	TESTED BOUNDS INSTALLED. NO EVALUATION REQUIRED
JOINT GAP	≤ 1/4"	≤ 1/4"	NEI TEST 2-3 (AS INSTALLED) AND NEI TEST 1-7 (UPGRADE)	SAME. NO EVALUATION REQUIRED
UNSUPPORTED BARRIER SPANS	HALF ROUNDS INSTALLED ON CONDUIT. NO UNSUPPORTED SPANS	HALF ROUNDS INSTALLED ON CONDUIT. NO UNSUPPORTED SPANS	NEI TEST 2-3 (AS INSTALLED) AND NEI TEST 1-7 (UPGRADE)	SAME/NO EVALUATION REQUIRED
INTERNAL SUPPORT MECHANISMS	HALF ROUNDS INSTALLED OVER CONDUIT	HALF ROUNDS INSTALLED OVER CONDUIT	NEI TEST 2-3 (AS INSTALLED) AND NEI TEST 1-7 (UPGRADE)	SAME/NO EVALUATION REQUIRED

FIGURE F-6	INSTALLED TO TESTED FIRE BARRIER EVALUATION			PAGE 21 OF 31
PERFORMANCE PARAMETERS	1 THERMO-LAG BARRIER SYSTEM/PROTECTED COMMODITY IDENTIFIER: C1XE2ARX002			
	2 APPLICABLE FIRE BARRIER SYSTEM SEGMENT: NODES 2, 4, 5			
BARRIER	3D INSTALLED CONFIGURATION	4D TESTED CONFIGURATION(S) EVALUATED	5D APPLICABLE TESTS	6D EVALUATION/ REF. NO.
FASTENER TYPE	1/2" STAINLESS STEEL BANDS	1/2" STAINLESS STEEL BANDS	NEI TEST 2-3 (AS INSTALLED) AND NEI TEST 1-7 (UPGRADE)	SAME. NO EVALUATION REQUIRED
FASTENER SPACING	MINIMUM OF 1 PER MITERED PIECE	1 OR 2 PER MITERED PIECE	NEI TEST 2-3 (AS INSTALLED) AND NEI TEST 1-7 (UPGRADE)	SEE EVALUATION E-2
FASTENER DISTANCE FROM JOINTS	VARIES. BUT, DUE TO THE SIZE OF THE MITERED PIECES THE DISTANCES TO THE JOINT IS GENERALLY 2" OR LESS.	2"	NEI TEST 2-3 (AS INSTALLED) AND NEI TEST 1-7 (UPGRADE)	SEE EVALUATION E-2
FASTENER EDGE GUARDS	NOT USED	NOT USED	NEI TEST 2-3 (AS INSTALLED) AND NEI TEST 1-7 (UPGRADE)	SAME/NO EVALUATION REQUIRED

FIGURE F-7	INSTALLED TO TESTED FIRE BARRIER EVALUATION			PAGE 22 OF 31
PERFORMANCE PARAMETERS	1 THERMO-LAG BARRIER SYSTEM/PROTECTED COMMODITY IDENTIFIER: C1XE2ARX002			
	2 APPLICABLE FIRE BARRIER SYSTEM SEGMENT: NODES 2, 4, 5			
BARRIER	3E INSTALLED CONFIGURATION	4E TESTED CONFIGURATION(S) EVALUATED	5E APPLICABLE TESTS	6E EVALUATION/ REF. NO.
JOINT REINFORCEMENT MECHANISMS	NONE	NEI TEST 2-3 = NONE NEI TEST 1-7 = TROWEL GRADE AND STRESS SKIN UPGRADES ON ALL JOINTS AND SEAM LOCATIONS	NEI TEST 2-3 (AS INSTALLED) NEI TEST 1-7 (UPGRADE)	TEST 2-3 BOUNDS THE INSTALLED. TEST 1-7 DOES NOT BOUND THE INSTALLED. NO EVALUATION REQUIRED. .
STRUCTURAL SUPPORT AND INTERVENING STEEL PROTECTION	SUPPORTS ARE COVERED TO STRUCTURE. THERE IS NO INTERVENING STEEL.	SUPPORT MEMBERS WERE PROTECTED FOR FULL LENGTH IN TESTS 1-7 AND 2-3. NEI TEST 2-3 INCLUDED INTERVENING STEEL MEMBERS PROTECTED FOR AN 18" DISTANCE.	NEI TEST 2-3 (AS INSTALLED) AND NEI TEST 1-7 (UPGRADE)	TESTED BOUNDS INSTALLED. NO EVALUATION REQUIRED
LOCATION OF ENCLOSURE	EXPOSED ON ALL SIDES	EXPOSED ON ALL SIDES	NEI TEST 2-3 (AS INSTALLED) AND NEI TEST 1-7 (UPGRADE)	SAME / NO EVALUATION REQUIRED

FIGURE F-8 INSTALLED TO TESTED FIRE BARRIER EVALUATION PAGE 23 OF 31

1. THERMO-LAG BARRIER SYSTEM/PROTECTED COMMODITY IDENTIFIER: C1XE2ARX002

2. APPLICABLE FIRE BARRIER SYSTEM SEGMENT(S): NODES 2, 4, 5

3. EVALUATION REF. NO.(S): E-1 THROUGH E-2

4. EVALUATION(S):

E-1 ENCLOSED MASS:

C1XE2ARX002	1 - 4" CONDUIT		= 9.720 LB/FT
	4 - 2/C, #16 AWG - 600V		= 0.320 LB/FT
	2 - 4/C, #16 AWG - 600V		= 0.270 LB/FT
	2 - 16 PR, #16 AWG - 600V		= 1.296 LB/FT
		TOTAL	= 11.606 LB/FT

E-2 THE INSTALLERS HAD NO REQUIREMENTS FOR THE DISTANCE OF FASTENERS (BANDS OR TIE WIRES) TO CONDUIT SECTION BUTT JOINTS SO FASTENER TO JOINT DISTANCES VARY. THE INSTALLERS MAINTAINED 12" OR LESS BETWEEN FASTENERS AND THERE WAS A MINIMUM OF ONE FASTENER ON SMALLER SECTIONS (I.E., MITERED JOINTS AT RADIAL BENDS). THE TEST RESULTS DID NOT INDICATE THAT JOINT SEPARATION WAS A FAILURE MODE FOR PRE-SHAPED SECTIONS, THEREFORE FASTENER TO JOINT SPACING IS NOT CONSIDERED A CRITICAL PARAMETER. THE INSTALLED CONFIGURATIONS ARE CONSIDERED BOUNDED BY THE TESTED CONFIGURATIONS.

FIGURE F-8 INSTALLED TO TESTED FIRE BARRIER EVALUATION PAGE 24 OF 31

1. THERMO-LAG BARRIER SYSTEM/PROTECTED COMMODITY IDENTIFIER: C1XE2ARX002

2. APPLICABLE FIRE BARRIER SYSTEM SEGMENT(S): NODES 2, 4, 5

3. EVALUATION REF. NO.(S): E-1 THROUGH E-2

4. EVALUATION(S):

SEGMENT EVALUATION:

AS SHOWN THROUGH PARAMETERS COMPARISONS, THE INSTALLED CONFIGURATION IS BOUNDED BY TESTED CONFIGURATIONS IN NEI 2-3. THE BOUNDING CONFIGURATIONS INCLUDE THE 3" DIAMETER ALUMINUM CONDUIT RADIAL BEND TESTED IN NEI TEST 2-3. THE 3" DIAMETER CONDUIT RADIAL BEND MAXIMUM INDIVIDUAL TEMPERATURE CRITERION (325°F OVER AMBIENT) WAS NOT EXCEEDED WHEN THE TEST WAS SUSPENDED AT 102 MINUTES.

THE 3" DIAMETER STEEL CONDUIT RADIAL BEND TESTED IN NEI TEST 1-7 WOULD BOUND THE INSTALLED IF THE INSTALLED HAD ALL JOINT AND SEAMS UPGRADED WITH STRESS SKIN AND TROWEL GRADE CONSISTENT WITH THE TEST. THE 3" STEEL CONDUIT IN NEI TEST 1-7 EXCEEDED THE MAXIMUM INDIVIDUAL TEMPERATURE CRITERION AFTER 129 MINUTES.

ALTHOUGH THE 3" DIAMETER CONDUIT IN NEI TEST 2-3 EXHIBITED MINOR AREAS OF BURNTHROUGH FOLLOWING THE HOSE STREAM TEST, THIS ASSEMBLY HAD RECEIVED AN ADDITIONAL 11 MINUTES OF FIRE EXPOSURE AFTER EXCEEDING TEMPERATURE ACCEPTANCE CRITERIA AT 91 MINUTES. THEREFORE THE INSTALLED BARRIERS AND THE STEEL CONDUIT SYSTEMS THEMSELVES WOULD PREVENT DAMAGE TO ENCLOSED CABLING DUE TO FIRE FIGHTING ACTIVITIES OR FROM FALLING EXTERNAL OBJECTS DURING FIRE CONDITIONS.

FIGURE F-3	INSTALLED TO TESTED FIRE BARRIER EVALUATION			PAGE 25 OF 31
PERFORMANCE PARAMETERS	1. THERMO-LAG BARRIER SYSTEM/PROTECTED COMMODITY IDENTIFIER: C1XE2ARX002			
	2 APPLICABLE FIRE BARRIER SYSTEM SEGMENT: NODE 6			
COMMODITY	3A INSTALLED CONFIGURATION	4A TESTED CONFIGURATION(S) EVALUATED	5A APPLICABLE TESTS	6A EVALUATION/ REF. NO.
TYPE	CONDUIT INTERFACE WITH A STRUCTURE.	CONDUIT/WALL INTERFACE CABLES AIR DROPPING FROM CABLE TRAYS TO EMBEDDED WALL SLEEVES	NEI TEST 2-2 TUEC TEST SCHEME 11-4	SEE EVALUATION E-1.
SIZE	4"	3/4",2" & 3" CONDUITS 24 AIR DROPPING CABLES AT EMBEDDED WALL SLEEVES	NEI TEST 2-2 TUEC TEST SCHEME 11-4	SEE EVALUATION E-1.
MATERIAL	STEEL	ALUMINUM ELECTRICAL CABLES	NEI TEST 2-2 TUEC TEST SCHEME 11-4	TEST BOUNDS INSTALLED. NO EVALUATION REQUIRED
CONTENTS/ TOTAL ENCLOSED MASS	N/A AT INTERFACE	N/A AT INTERFACE	NEI TEST 2-2 AND TUEC TEST SCHEME 11-4	THIS IS AN EVALUATION OF THE INTERFACE BETWEEN CONDUIT COVERAGE AND A CONCRETE WALL. THERMAL MASS IS NOT A CONSIDERATION IN THIS EVALUATION
ORIENTATION	HORIZONTAL/VERTICAL	VERTICAL/HORIZONTAL	NEI TEST 2-2 AND TUEC TEST' SCHEME 11-4	TEST BOUNDS INSTALLED. NO EVALUATION REQUIRED

FIGURE F-4	INSTALLED TO TESTED FIRE BARRIER EVALUATION			PAGE 26 OF 31
PERFORMANCE PARAMETERS	1. THERMO-LAG BARRIER SYSTEM/PROTECTED COMMODITY IDENTIFIER: C1XE2ARX002			
	2 APPLICABLE FIRE BARRIER SYSTEM SEGMENT: NODE 6			
BARRIER	3B INSTALLED CONFIGURATION	4B TESTED CONFIGURATION(S) EVALUATED	5B APPLICABLE TESTS	6B EVALUATION/ REF. NO.
MATERIAL TYPE	THERMO-LAG 330-1 PRE-SHAPED CONDUIT HALF ROUNDS (3 HR.)	THERMO-LAG 330-1 V-RIB PANELS FLATTENED THERMO-LAG 330-1 FLAT PANELS	NEI TEST 2-2 TUEC TEST SCHEME 11-3	SEE EVALUATION E-1.
MATERIAL THICKNESS	1.25" ± .25"	0.50" + 0.125" - 0" 0.625" ± 0.125"	NEI TEST 2.2 TUEC TEST SCHEME 11-4	TESTED BOUNDS INSTALLED. NO EVALUATION REQUIRED.
STIFFENER (V-RIB) LOCATION/ ORIENTATION	NONE.	INTERNAL BUT FLATTENED NONE	NEI TEST 2-2 TUEC TEST SCHEME 11-4	SEE EVALUATION E-1.
STRESS SKIN LOCATION	INTERNAL AND EXTERNAL	INTERNAL	NEI TEST 2-2 AND TUEC TEST SCHEME 11-4	TESTED BOUNDS INSTALLED. NO EVALUATION REQUIRED.

FIGURE F-5	INSTALLED TO TESTED FIRE BARRIER EVALUATION			PAGE 27 OF 31
PERFORMANCE PARAMETERS	1. THERMO-LAG BARRIER SYSTEM/PROTECTED COMMODITY IDENTIFIER: C1XE2ARX002			
	2 APPLICABLE FIRE BARRIER SYSTEM SEGMENT: NODE 6			
BARRIER	3C INSTALLED CONFIGURATION	4C TESTED CONFIGURATION(S) EVALUATED	5C APPLICABLE TESTS	6C EVALUATION/ REF. NO.
JOINT TYPE(S)	PRE-BUTTERED "PICTURE FRAME" BUTTED TO RACEWAY COVERAGE AND BOLTED TO THE CONCRETE WALL.	SCORE & FOLD "PICTURE FRAME" BOLTED TO CONCRETE. PRE-BUTTERED "PICTURE FRAME" BUTTED TO RACEWAY COVERAGE AND BOLTED TO THE CONCRETE WALL.	NEI TEST 2-2 TUEC TEST SCHEME 11-4	TESTED BOUNDS INSTALLED. NO EVALUATION REQUIRED
JOINT GAP	≤ 1/4"	≤ 1/4"	NEI TEST 2-2 AND TUEC TEST SCHEME 11-4	SAME/NO EVALUATION REQUIRED
UNSUPPORTED BARRIER SPANS	N/A AT WALL INTERFACE	N/A AT WALL INTERFACE	NEI TEST 2-2 AND TUEC TEST SCHEME 11-4	SAME/NO EVALUATION REQUIRED
INTERNAL SUPPORT MECHANISMS	N/A AT WALL INTERFACE	N/A AT WALL INTERFACE	NEI TEST 2-2 AND TUEC TEST SCHEME 11-4	SAME/NO EVALUATION REQUIRED.

FIGURE F-6	INSTALLED TO TESTED FIRE BARRIER EVALUATION			PAGE 28 OF 31
PERFORMANCE PARAMETERS	1. THERMO-LAG BARRIER SYSTEM/PROTECTED COMMODITY IDENTIFIER: C1XE2ARX002			
	2 APPLICABLE FIRE BARRIER SYSTEM SEGMENT: NODE 6			
BARRIER	3D INSTALLED CONFIGURATION	4D TESTED CONFIGURATION(S) EVALUATED	5D APPLICABLE TESTS	6D EVALUATION/ REF. NO.
FASTENER TYPE	CONCRETE ANCHOR BOLTS	CONCRETE ANCHOR BOLTS	NEI TEST 2-2 AND TUEC TEST SCHEME 11-4	TESTED BOUNDS INSTALLED. NO EVALUATION REQUIRED
FASTENER SPACING	BOLTS SPACED A MAXIMUM OF 12"	BOLTS SPACED A MAXIMUM OF 12"	NEI TEST 2-2 AND TUEC TEST SCHEME 11-4	TESTED BOUNDS INSTALLED. NO EVALUATION REQUIRED
FASTENER DISTANCE FROM JOINTS	1" - 2" FROM JOINTS AND EDGE OF THERMO-LAG	1" - 2" FROM JOINTS AND EDGE OF THERMO-LAG	NEI TEST 2-2 AND TUEC TEST SCHEME 11-4	TESTED BOUNDS INSTALLED. NO EVALUATION REQUIRED
FASTENER EDGE GUARDS	NONE	NONE	NEI TEST 2.2 AND TUEC TEST SCHEME 11-4	SAME/NO EVALUATION REQUIRED

FIGURE F-7	INSTALLED TO TESTED FIRE BARRIER EVALUATION			PAGE 29 OF 31
PERFORMANCE PARAMETERS	1. THERMO-LAG BARRIER SYSTEM/PROTECTED COMMODITY IDENTIFIER: C1XE2ARX002			
	2 APPLICABLE FIRE BARRIER SYSTEM SEGMENT: NODE 6			
BARRIER	3E INSTALLED CONFIGURATION	4E TESTED CONFIGURATION(S) EVALUATED	5E APPLICABLE TESTS	6E EVALUATION/ REF. NO.
JOINT REINFORCEMENT MECHANISMS	NONE	GROOVE AND FOLD METHOD IS USED AT JOINTS WHERE THERMO-LAG FLARES OUT ONTO THE CONCRETE. "PICTURE FRAME" IS TIED INTO RACEWAY COVERAGE UTILIZING A STRESS SKIN AND TROWEL GRADE UPGRADE.	NEI TEST 2-2 TUEC TEST SCHEME 11-4	SEE EVALUATION E-2
STRUCTURAL SUPPORT AND INTERVENING STEEL PROTECTION	NONE.	NONE	NEI TEST 2-2 AND TUEC TEST SCHEME 11-4	SAME. NO EVALUATION REQUIRED.
LOCATION OF ENCLOSURE	AT A CONCRETE WALL	AT A CONCRETE CEILING AT A CONCRETE WALL	NEI TEST 2-2 TUEC TEST SCHEME 11-4	SAME/ NO EVALUATION REQUIRED.

FIGURE F-8 INSTALLED TO TESTED FIRE BARRIER EVALUATION PAGE 30 OF 31

1. THERMO-LAG BARRIER SYSTEM/PROTECTED COMMODITY IDENTIFIER: C1XE2ARX002

2. APPLICABLE FIRE BARRIER SYSTEM SEGMENT(S): NODE 6

3. EVALUATION REF. NO.(S): E-1 THROUGH E-3

4. EVALUATION(S):

E-1 THIS EVALUATION IS FOR THE INTERFACE OF THERMO-LAG COVERAGE ON A CONDUIT WITH A WALL. THE ONLY TWO TESTED ARRANGEMENTS OF THERMO-LAG MATERIAL ABUTTING MASONRY ARE IN NEI TEST 2-2 IN WHICH A THERMO-LAG BOX DESIGN UTILIZING 1 HOUR MATERIAL CONFIGURATION WAS ATTACHED TO THE CEILING OF THE TEST DECK WITH HILTI BOLTS, AND TUEC TEST SCHEME 11-4 WHICH INCLUDED A SIMILAR BOX DESIGN UTILIZING 1 HOUR MATERIAL ATTACHED TO A CONCRETE WALL. IN NEI TEST 2-2 THERMO LAG V-RIB PANELS WERE SCORED & FOLDED TO CREATE A BOX SHAPED ENCLOSURE WITH 3 INCH FLANGES ALL AROUND WHICH LAY FLAT AGAINST THE CONCRETE AND ACT AS A BASE THROUGH WHICH ANCHOR BOLTS WERE INSTALLED. THIS FLANGED AREA PROVIDES STRUCTURAL SUPPORT AND THERMAL PROTECTION FOR THE INTERFACE AREA. TUEC TEST SCHEME 11-4 UTILIZED A SEPARATE "PICTURE FRAME" COLLAR AROUND A THERMO-LAG BOX. THE BOX WAS CONNECTED TO THE "PICTURE FRAME" WITH STRESS SKIN AND TROWEL GRADE TO ENSURE STRUCTURAL SUPPORT.

E-2 THE INSTALLED IS NOT BOUNDED BY THE TESTED DUE TO THE LACK OF STRESS SKIN AND TROWEL GRADE AT THE "PICTURE FRAME" AT THE STRUCTURE INTERFACE. THE ACCEPTABLE UPGRADE WOULD BE TO TIE THE "PICTURE FRAME" COVERAGE INTO THE CONDUIT COVERAGE WITH STRESS SKIN AND TROWEL GRADE PER TUEC TEST SCHEME 11-4.

FIGURE F-8 INSTALLED TO TESTED FIRE BARRIER EVALUATION PAGE 31 OF 31

1. THERMO-LAG BARRIER SYSTEM/PROTECTED COMMODITY IDENTIFIER: C1XE2ARX002

2. APPLICABLE FIRE BARRIER SYSTEM SEGMENT(S): NODE 6

3. EVALUATION REF. NO.(S): E-1 THROUGH E-2

4. EVALUATION(S):

SEGMENT EVALUATION:

AS INSTALLED, THERE IS NO BOUNDING TEST AND THEREFORE NO FIRE RATING FOR THE STRUCTURE INTERFACE. THE PRINCIPAL ATTRIBUTE MISSING FROM THE INSTALLED CONFIGURATION IS STRESS SKIN AND TROWEL GRADE SUPPORT BETWEEN THE "PICTURE FRAME" AND CONDUIT COVERAGE PROVIDING ADDITIONAL STRUCTURAL AND THERMAL PROTECTION AT THE INTERFACE AREA.

AN UPGRADE OF THE INSTALLED CONFIGURATIONS BY TYING THE "PICTURE FRAME" COVERAGE INTO THE RACEWAY COVERAGE WITH STRESS SKIN AND TROWEL GRADE PER TUEC TEST SCHEME 11-4, WILL PROVIDE REASONABLE ASSURANCE THAT THE INSTALLED WILL BE BOUNDED BY THAT TEST AND PROVIDE A RATED DURATION OF 60 MINUTES.

TESTED RACEWAYS EXHIBITED ACCEPTABLE STRUCTURAL INTEGRITY IN THE AREA OF THE THERMO-LAG COLLARS FOLLOWING THE HOSE STREAM TEST.

FIGURE F-1 INSTALLED TO TESTED FIRE BARRIER EVALUATION PAGE 1 OF 31

1. THERMO-LAG BARRIER SYSTEM/PROTECTED COMMODITY IDENTIFIER: C2XE2ATSAB

2. BARRIER/COMMODITY LOCATION DATA: SOUTH TEXAS PROJECT UNIT TWO
FIRE AREA/ZONE 07/Z071
ELEC. AUX. BUILDING, EL. 20'-0"

3. REQUIRED RATING: _____ 1-HOUR __X__ 3-HOUR _____ OTHER _____ RES

4. FIRE BARRIER SYSTEM SEGMENTS EVALUATED: SEE PAGE 2

5. FIRE BARRIER SYSTEM SEE PAGE 2

EVALUATION RESULTS: _____ BOUNDED BY TEST _____ NOT BOUNDED BY TEST

_____ RATED BARRIER SYSTEM _____ FURTHER EVALUATION REQUIRED

_____ _____
(OTHER)

6. APPLICABLE TEST REFERENCES: NEI TESTS 2-2, 2-3 AND 2-10 AND TUEC TEST SCHEME 11-4

7. REMARKS: N/A

FIGURE F-1.1 INSTALLED TO TESTED FIRE BARRIER EVALUATION

1. THERMO-LAG BARRIER SYSTEM/PROTECTED COMMODITY IDENTIFIER: C2XE2ATSAB

2.

NODE	COMMODITY TYPE	BOUNDED BY TEST (Y/N)	BARRIER RATING AS INSTALLED (MIN)	BARRIER RATING WITH UPGRADE (MIN)	EVAL PAGES
1	BOX CONFIGURATION	N	0	60	4-10
1-2	CABLE TRAY	Y	60	86	11-17
2	CABLE TRAY RADIAL BEND	Y	60	86	18-24
2-3	CABLE TRAY	Y	60	86	11-17
3	CABLE TRAY RADIAL BEND	Y	60	86	18-24
3-4	CABLE TRAY	Y	60	86	11-17
4	CABLE TRAY RADIAL BEND	Y	60	86	18-24
4-5	CABLE TRAY	Y	60	86	11-17
5	CABLE TRAY/WALL INTERFACE	N	0	60	25-31

FIGURE F-2 INSTALLED TO TESTED FIRE BARRIER EVALUATION PAGE 3 OF 31

1. THERMO-LAG BARRIER SYSTEM/PROTECTED COMMODITY IDENTIFIER: C2XE2ATSAB

2.

SKETCH OF INSTALLED CONFIGURATION

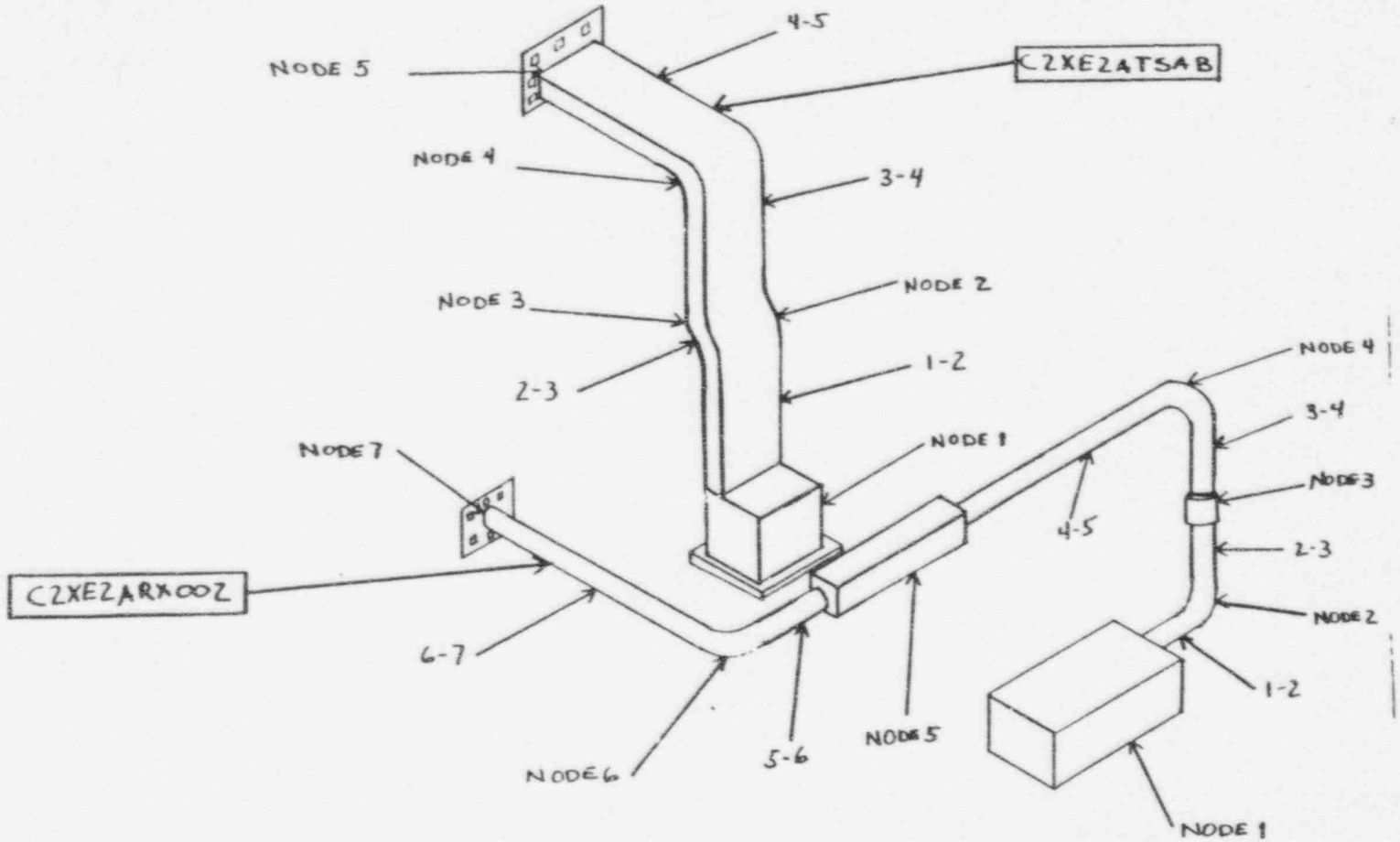

FIGURE F-3	INSTALLED TO TESTED FIRE BARRIER EVALUATION			PAGE 4 OF 31
PERFORMANCE PARAMETERS	1 THERMO-LAG BARRIER SYSTEM/PROTECTED COMMODITY IDENTIFIER: C2XE2ATSAB			
	2 APPLICABLE FIRE BARRIER SYSTEM SEGMENT: NODE 1			
COMMODITY	3A INSTALLED CONFIGURATION	4A TESTED CONFIGURATION(S) EVALUATED	5A APPLICABLE TESTS	6A EVALUATION/ REF. NO.
TYPE	CABLE TRAY AND CONDUIT	LBDS CABLES AIR DROPPING FROM CABLE TRAY TO SLEEVES	NEI TEST 2-3 TUEC TEST SCHEME 11-4	DIFFERENT COMMODITIES, BOUNDING WILL DEPEND ON MATERIAL, MASS AND ORIENTATION. SEE EVALUATION E-1
SIZE	24" CABLE TRAY	3" AND 6" LBDS 24 AIR DROP CABLES FROM 2-STACKED 24" WIDE CABLE TRAYS TO EMBEDDED SLEEVES	NEI TEST 2-3 TUEC TEST SCHEME 11-4	DIFFERENT SIZES, BOUNDING WILL DEPEND ON MATERIAL, MASS AND ORIENTATION. SEE EVALUATION E-1
MATERIAL	STEEL	ALUMINUM ELECTRICAL CABLES	NEI TEST 2-3 TUEC TEST SCHEME 11-4	TESTED BOUNDS INSTALLED. NO EVALUATION REQUIRED.
CONTENTS/ TOTAL ENCLOSED MASS	28.284 LB/FT	6" LBD = 70.0 LBS 3" LBD = 5.62 LBS 8.8 LBS	NEI TEST 2-3 TUEC TEST SCHEME 11-4	SEE EVALUATION E-2
ORIENTATION	HORIZONTAL	HORIZONTAL/VERTICAL	NEI TEST 2-3 AND TUEC TEST SCHEME 11-4	TESTED BOUNDS INSTALLED. NO EVALUATION REQUIRED.

FIGURE F-4	INSTALLED TO TESTED FIRE BARRIER EVALUATION			PAGE 5 OF 31
PERFORMANCE PARAMETERS	1 THERMO-LAG BARRIER SYSTEM/PROTECTED COMMODITY IDENTIFIER: C2XE2ATSAB			
	2 APPLICABLE FIRE BARRIER SYSTEM SEGMENT: NODE 1			
BARRIER	3B INSTALLED CONFIGURATION	4B TESTED CONFIGURATION(S) EVALUATED	5B APPLICABLE TESTS	6B EVALUATION/ REF. NO.
MATERIAL TYPE	THERMO-LAG 330-1 V-RIB PANELS	THERMO-LAG 330-1 V-RIB PANELS V-RIB PANELS ON SIDES & TOP FLAT PANEL ON BOTTOM AND AT "PICTURE FRAME" AT WALL.	NEI TEST 2-3 TUEC TEST SCHEME 11-4	TESTED BOUNDS INSTALLED/ NO EVALUATION REQUIRED.
MATERIAL THICKNESS	1.25" ± 0.25"	1.0" + .25" - 0" 0.625 ± 0.125"	NEI TEST 2-3 TUEC TEST SCHEME 11-4	TESTED BOUNDS INSTALLED. NO EVALUATION REQUIRED.
STIFFENER (V-RIB) LOCATION/ ORIENTATION	INSIDE. ORIENTATION VARIES	INTERNAL AND ORIENTED HORIZONTAL. ALL V-RIBS ARE ON INSIDE. ORIENTED TRAY TO WALL ON TOP PANEL AND VERTICAL ON SIDE PANELS.	NEI TEST 2-3 TUEC TEST SCHEME 11-4	TESTED BOUNDS INSTALLED. NO EVALUATION REQUIRED.
STRESS SKIN LOCATION	BOTH INSIDE AND OUTSIDE	BOTH INSIDE AND OUTSIDE ON INSIDE ONLY	NEI TEST 2-3 TUEC TEST SCHEME 11-4	TESTED BOUNDS INSTALLED. NO EVALUATION REQUIRED.

FIGURE F-5	INSTALLED TO TESTED FIRE BARRIER EVALUATION			PAGE 6 OF 31
PERFORMANCE PARAMETERS	1 THERMO-LAG BARRIER SYSTEM/PROTECTED COMMODITY IDENTIFIER: C2XE2ATSAB			
	2 APPLICABLE FIRE BARRIER SYSTEM SEGMENT: NODE 1			
BARRIER	3C INSTALLED CONFIGURATION	4C TESTED CONFIGURATION(S) EVALUATED	5C APPLICABLE TESTS	6C EVALUATION/ REF. NO.
JOINT TYPE(S)	PRE-BUTTERED BUTT JOINTS WITH PRE-BUTTERED "PICTURE FRAME" BUTTED TO THE RACEWAY COVERAGE AND BOLTED TO THE CONCRETE	PRE-BUTTERED BUTT JOINTS WITH SOME SCORE AND FOLD PRE-BUTTERED BUTT JOINTS WITH 1 SCORE AND FOLD ON BOTTOM. PRE-BUTTERED "PICTURE FRAME" BUTTED TO THE RACEWAY COVERAGE AND BOLTED TO THE CONCRETE.	NEI TEST 2-3 TUEC TEST SCHEME 11-4	TESTED BOUNDS INSTALLED. NO EVALUATION REQUIRED.
JOINT GAP	≤ 1/4"	≤ 1/4"	NEI TEST 2-3 AND TUEC TEST SCHEME 11-4	SAME. NO EVALUATION REQUIRED.
UNSUPPORTED BARRIER SPANS	36" X 18" X 10"	6" LBD = 45" X 12" X 13" 3" LBD = 18" X 8" X 8" 36" X 20" X 12"	NEI TEST 2-3 TUEC TEST SCHEME 11-4	TESTS BOUND INSTALLED. NO EVALUATION REQUIRED.
INTERNAL SUPPORT MECHANISMS	INSTALLED AGAINST METAL BOX	INSTALLED AGAINST LBD NONE	NEI TEST 2-3 TUEC TEST SCHEME 11-4	TESTED BOUNDS INSTALLED. NO EVALUATION REQUIRED.

FIGURE F-6	INSTALLED TO TESTED FIRE BARRIER EVALUATION			PAGE 7 OF 31
PERFORMANCE PARAMETERS	1 THERMO-LAG BARRIER SYSTEM/PROTECTED COMMODITY IDENTIFIER: C2XE2ATSAB			
	2 APPLICABLE FIRE BARRIER SYSTEM SEGMENT: NODE 1			
BARRIER	3D INSTALLED CONFIGURATION	4D TESTED CONFIGURATION(S) EVALUATED	5D APPLICABLE TESTS	6D EVALUATION/ REF. NO.
FASTENER TYPE	1/2" BANDS	1/2" BANDS	NEI TEST 2-3 AND TUEC TEST SCHEME 11-4	SAME. NO EVALUATION REQUIRED.
FASTENER SPACING	12" MAXIMUM	12" MAXIMUM	NEI TEST 2-3 AND TUEC TEST SCHEME 11-4	TESTED BOUNDS INSTALLED. NO EVALUATION REQUIRED.
FASTENER DISTANCE FROM JOINTS	VARIES. INSTALLERS HAD NO MINIMUM SPACING REQUIREMENT FROM JOINTS.	2" MAXIMUM	NEI TEST 2-3 AND TUEC TEST SCHEME 11-4	SEE EVALUATION E-3.
FASTENER EDGE GUARDS	NONE	NONE	NEI TEST 2-3 AND TUEC TEST SCHEME 11-4	SAME. NO EVALUATION REQUIRED.

FIGURE F-7	INSTALLED TO TESTED FIRE BARRIER EVALUATION			PAGE 8 OF 31
PERFORMANCE PARAMETERS	1 THERMO-LAG BARRIER SYSTEM/PROTECTED COMMODITY IDENTIFIER: C2XE2ATSAB 2			
	2 APPLICABLE FIRE BARRIER SYSTEM SEGMENT: NODE 1			
BARRIER	3E INSTALLED CONFIGURATION	4E TESTED CONFIGURATION(S) EVALUATED	5E APPLICABLE TESTS	6E EVALUATION/ REF. NO.
JOINT REINFORCEMENT MECHANISMS	NO REINFORCEMENT AT JOINTS OR AT STRUCTURE INTERFACE. THE "PICTURE FRAME" IS BUTTED TO THE BOX COVERAGE WITH NO STRESS SKIN AND TROWEL GRADE REINFORCEMENT.	NONE JOINTS REINFORCED WITH STRESS SKIN, TROWEL GRADE AND STAPLES. WALL INTERFACE REINFORCED WITH PICTURE FRAME, STRESS SKIN, TROWEL GRADE AND STAPLES.	NEI TEST 2-3 TUEC TEST SCHEME 11-4	THE INSTALLED IS BOUNDED BY NEI TEST 2-3. BUT IS NOT BOUNDED BY TUEC TEST 11-4
STRUCTURAL SUPPORT AND INTERVENING STEEL PROTECTION	SUPPORTS ARE COMPLETELY COVERED. INTERVENING STEEL IS COVERED 18".	SUPPORT MEMBERS WERE PROTECTED FOR FULL LENGTH AND INTERVENING STEEL MEMBERS WERE PROTECTED FOR AN 18" DISTANCE/ COVERED OUT 9"	NEI TEST 2-3 TUEC TEST SCHEME 11-4	TESTED BOUNDS INSTALLED. NO EVALUATION REQUIRED.
LOCATION OF ENCLOSURE	CONCRETE ON ONE SIDE.	EXPOSED ON ALL SIDES CONCRETE ON ONE SIDE.	NEI TEST 2-3 TUEC TEST SCHEME 11-4	TESTED BOUNDS INSTALLED. NO EVALUATION REQUIRED.

FIGURE F-8 INSTALLED TO TESTED FIRE BARRIER EVALUATION

1. THERMO-LAG BARRIER SYSTEM/PROTECTED COMMODITY IDENTIFIER: C2XE2ATSAB

2. APPLICABLE FIRE BARRIER SYSTEM SEGMENT(S): NODE 1

3. EVALUATION REF. NO.(S): E1 THROUGH E-3

4. EVALUATION(S):

E-1 THE EVALUATION COMPARES THE COVERAGE ON A 36" X 18" X 10" JUNCTION BOX WITH THE COVERAGE ON A 3" AND 6" LBD IN NEI TEST TEST 2-3 AND THE BOX AND THE STRUCTURAL INTERFACE IN TUEC TEST 11-4. THE 6" LBD IS THE ONLY BOXED COMMODITY WITHOUT JOINT UPGRADE WHOSE SIZE IS COMPARABLE TO THE INSTALLED JUNCTION BOX. THEY ARE DIFFERENT TYPES OF COMMODITIES, BUT THE COVERAGE TECHNIQUES ARE COMPARABLE. BOTH HAVE PRE-BUTTERED BUTT JOINTS, BOTH ARE COVERED WITH 3 HOUR MATERIAL AND THE 45" LONG VERTICAL PANEL ON THE 6" LBD WILL BOUND THE 36" WIDE PANEL ON THE INSTALLED JUNCTION BOX.

E-2 ENCLOSED MASS:

C2XE2ATSAB	1 - 24" CABLE TRAY		= 3.870 LB/FT
	4 - 7/C, #12 AWG - 600V		= 1.628 LB/FT
	14 - 5/C, #12 AWG - 600V		= 4.746 LB/FT
	20 - 3/C, #12 AWG - 600V		= 4.660 LB/FT
	2 - 3/C, #4 AWG - 2KV		= 0.000 LB/FT (NOTE 1)
	1 - 3/C, #6 AWG - 2KV		= 0.000 LB/FT (NOTE 1)
	2 - 2/C, #12 AWG - 600V		= 0.120 LB/FT
	5 - 12/C, #12 AWG - 600V		= 3.495 LB/FT
	1 - 3/C, #10 AWG - 2KV		= 0.337 LB/FT
	12 - 1 PR, #1[illegible] AWG - 600V		= 0.000 LB/FT (NOTE 1)
	3 - 1 QD, #16 AWG - 600V		= 0.000 LB/FT (NOTE 1)
	2 - 3 PR, #16 AWG - 600V		= 0.000 LB/FT (NOTE 1)
	1 - 3/C, #2 AWG - 2KV		= 0.000 LB/FT (NOTE 1)
		TOTAL	= 18.856 LB/FT
18" OF C2XE2ATSAB = 1.5 X 18.856 LB/FT			= 28.284 LB/FT
		TOTAL	= 28.284 LB/FT

NOTES:

1. THE WEIGHTS FOR THESE CABLES WERE NOT READILY AVAILABLE. SINCE THE ENCLOSED MASS EVALUATION WITH THESE CABLE WEIGHTS WILL BE NO DIFFERENT THAN WITHOUT THE WEIGHTS, THE CABLE WEIGHTS ARE NOT INCLUDED.

2. THE CABLE WEIGHTS WERE TAKEN FROM CALCULATION EC - 5045, REV. 1, "RACEWAY WEIGHT ANALYSIS". THE PARTICULAR CABLES CONTAINED IN EACH RACEWAY WAS OBTAINED FROM CALCULATION EC - 5046, REV. 4, "POWER CABLE SIZING VERIFICATION IN FIRE WRAPPED RACEWAYS.

3. THE INSTALLED IS BOUNDED BY THE 3" LBD OF NEI TEST 2-3 AND BY TUEC TEST 11-4. IT IS NOT BOUNDED BY THE 6" LBD IN NEI TEST 2-3.

FIGURE F-8 INSTALLED TO TESTED FIRE BARRIER EVALUATION PAGE 10 OF 31

1. THERMO-LAG BARRIER SYSTEM/PROTECTED COMMODITY IDENTIFIER: C2XE2ATSAB

2. APPLICABLE FIRE BARRIER SYSTEM SEGMENT(S): NODE 1

3. EVALUATION REF. NO.(S): E1 THROUGH E-3

4. EVALUATION(S):

E-3 FASTENER SPACING WAS MAINTAINED AT 12" OR LESS. THERE WAS HOWEVER NO REQUIREMENT FOR BAND TO JOINT SPACING SO THAT DIMENSION VARIES. THE INSTALLED CONFIGURATION IS A BOX RESTING ON THE FLOOR, WITH BANDS INSTALLED ON THE SIDE PANELS ARE WITHIN 4" OF THE JOINTS. THE SIDE PANELS ARE IN COMPRESSION. THE TOP PANEL IS MISSING BANDING IN ONE DIRECTION, BUT SINCE THE TOP PANEL RESTS ON THE SIDE PANELS, ITS JOINTS ARE NOT CONSIDERED A FAILURE MODE. ALSO THE 3 HOUR PANELS DID NOT TEND TO DISTORT IN TESTS LIKE THE THINNER 1 HOUR PANELS AND THE BOX CONFIGURATION IS SITTING ON THE FLOOR. DUE TO THE ABOVE, THE GREATER BAND TO JOINT SPACING IS CONSIDERED TO BE INSIGNIFICANT AND THE INSTALLED IS BOUNDED BY THE TESTED CONFIGURATIONS.

SEGMENT EVALUATION:

AS INSTALLED, THERE IS NO BOUNDING TEST AND THEREFORE NO FIRE RATING FOR THE ENCLOSURES DUE TO THE STRUCTURAL INTERFACE NOT BEING BOUNDED BY TUEC TEST 11-4. REINFORCING THE JOINTS BETWEEN THE "PICTURE FRAME" AND THE BOX COVERAGE WITH STRESS SKIN AND TROWEL GRADE CONSISTENT WITH TUEC TEST 11-4 WILL RESULT IN REASONABLE ASSURANCE THAT A 60 MINUTE RATING CAN BE OBTAINED. THE 3" AND 6" LBDS WILL BOUND THE BOX CONFIGURATION AS INSTALLED. THE LBDS HAD A RATING OF 102 MINUTES WHICH EXCEEDS THE 60 MINUTES OF THE STRUCTURAL INTERFACE, BUT THE OVERALL RATING OF THE ENCLOSURE WOULD BE 60 MINUTES.

THE INSTALLED CONFIGURATIONS WILL BE BOUNDED THERMALLY BY THE TESTS BECAUSE OF THE GREATER THICKNESS OF THE 3 HOUR PANELS THAN THAT REQUIRED FOR A 60 MINUTE RATING AND THE GREATER ENCLOSED MASS WHEN COMPARED AGAINST THE 3" LBD OF NEI TEST 2-3 AND THE BOX OF TUEC TEST 11-4. THE ENCLOSURES WILL BE BOUNDED STRUCTURALLY ONCE THE CONCRETE INTERFACE IS REINFORCED. IT IS QUESTIONABLE IF A GREATER THAN 60 MINUTE RATING, COMPARABLE TO THE 102 MINUTES OBTAINED BY THE 3" AND 6" LBDS IN NEI TEST 2-3, CAN BE OBTAINED DUE TO THE LACK OF TESTING FOR GREATER THAN 60 MINUTES FOR THE STRUCTURAL INTERFACE.

ALTHOUGH MINOR BARRIER OPENINGS OCCURRED DURING THE HOSE STREAM TEST FOR BOTH TUEC 11-4 AND NEI 2-3, THE COMMODITIES WITHIN THE INSTALLED BOX DESIGN BARRIER CONFIGURATIONS WOULD NOT BE PRONE TO DAMAGE DUE TO FIRE FIGHTING ACTIVITIES OR FROM FALLING EXTERNAL OBJECTS DURING FIRE CONDITIONS.

FIGURE F-3	INSTALLED TO TESTED FIRE BARRIER EVALUATION			PAGE 11 OF 31
PERFORMANCE PARAMETERS	1 THERMO-LAG BARRIER SYSTEM/PROTECTED COMMODITY IDENTIFIER: C2XE2ATSAB			
	2 APPLICABLE FIRE BARRIER SYSTEM SEGMENT: 1-2, 2-3, 3-4, 4-5			
COMMODITY	3A INSTALLED CONFIGURATION	4A TESTED CONFIGURATION(S) EVALUATED	5A APPLICABLE TESTS	6A EVALUATION/ REF. NO.
TYPE	CABLE TRAY STRAIGHT RUN	CABLE TRAY STRAIGHT RUN	NEI TEST 2-10	SAME/ NO EVALUATION REQUIRED
SIZE	24" CABLE TRAY	24" X 4" CABLE TRAY	NEI TEST 2-10	TESTED BOUNDS INSTALLED. NO EVALUATION REQUIRED
MATERIAL	STEEL	ALUMINUM	NEI TEST 2-10	TESTED BOUNDS INSTALLED. NO EVALUATION REQUIRED
CONTENTS/ TOTAL ENCLOSED MASS	18.856 LB/FT	24" TRAY = 12.74 LB/FT	NEI TEST 2-10	TESTED BOUNDS INSTALLED. SEE EVALUATION E-1
ORIENTATION	VERTICAL/HORIZONTAL	HORIZONTAL AND VERTICAL	NEI TEST 2-10	TESTED BOUNDS INSTALLED. NO EVALUATION REQUIRED.

FIGURE F-4	INSTALLED TO TESTED FIRE BARRIER EVALUATION			PAGE 12 OF 31
PERFORMANCE PARAMETERS	1 THERMO-LAG BARRIER SYSTEM/PROTECTED COMMODITY IDENTIFIER: C2XE2ATSAB			
	2 APPLICABLE FIRE BARRIER SYSTEM SEGMENT: 1-2, 2-3, 3-4, 4-5			
BARRIER	3B INSTALLED CONFIGURATION	4B TESTED CONFIGURATION(S) EVALUATED	5B APPLICABLE TESTS	6B EVALUATION/ REF. NO.
MATERIAL TYPE	THERMO-LAG 330-1 V-RIB PANELS (3 HR.)	THERMO-LAG 330-1 V-RIB PANELS (3 HR.)	NEI TEST 2-10	SAME. NO EVALUATION REQUIRED.
MATERIAL THICKNESS	1.25" ± .250"	1.00" + .25" - 0"	NEI TEST 2-10	TESTED BOUNDS INSTALLED. NO EVALUATION REQUIRED.
STIFFENER (V-RIB) LOCATION/ ORIENTATION	INSIDE. ORIENTATION VARIES.	INTERNAL AND PARALLEL TO SIDE RAILS.	NEI TEST 2-10	TESTED BOUNDS INSTALLED. NO EVALUATION REQUIRED.
STRESS SKIN LOCATION	INTERNAL AND EXTERNAL	INTERNAL AND EXTERNAL	NEI TEST 2-10	TESTED BOUNDS INSTALLED. NO EVALUATION REQUIRED..

FIGURE F-5	INSTALLED TO TESTED FIRE BARRIER EVALUATION			PAGE 13 OF 31
PERFORMANCE PARAMETERS	1 THERMO-LAG BARRIER SYSTEM/PROTECTED COMMODITY IDENTIFIER: C2XE2ATSAB			
	2 APPLICABLE FIRE BARRIER SYSTEM SEGMENT: 1-2, 2-3, 3-4, 4-5			
BARRIER	3C INSTALLED CONFIGURATION	4C TESTED CONFIGURATION(S) EVALUATED	5C APPLICABLE TESTS	6C EVALUATION/ REF. NO.
JOINT TYPE(S)	PRE-BUTTERED BUTT JOINTS	PRE-BUTTERED BUTT JOINTS	NEI TEST 2-10	TESTED BOUNDS INSTALLED. NO EVALUATION REQUIRED.
JOINT GAP	< 1/4"	≤ 1/4"	NEI TEST 2-10	TESTED BOUNDS INSTALLED. NO EVALUATION REQUIRED
UNSUPPORTED BARRIER SPANS	24"	24"	NEI TEST 2-10	TESTED BOUNDS INSTALLED. NO EVALUATION REQUIRED.
INTERNAL SUPPORT MECHANISMS	SUPPORTED AGAINST CABLE TRAY	SUPPORTED AGAINST TRAY	NEI TEST 2-10'	TESTED BOUNDS INSTALLED. NO EVALUATION REQUIRED.

FIGURE F-6	INSTALLED TO TESTED FIRE BARRIER EVALUATION			PAGE 14 OF 31
PERFORMANCE PARAMETERS	1 THERMO-LAG BARRIER SYSTEM/PROTECTED COMMODITY IDENTIFIER: C2E2ATSAB			
	2 APPLICABLE FIRE BARRIER SYSTEM SEGMENT: 1-2, 2-3, 3-4, 4-5			
BARRIER	3D INSTALLED CONFIGURATION	4D TESTED CONFIGURATION(S) EVALUATED	5D APPLICABLE TESTS	6D EVALUATION/ REF. NO.
FASTENER TYPE	1/2" BANDS	1/2" BANDS	NEI TEST 2-10	TESTED BOUNDS INSTALLED. NO EVALUATION REQUIRED.
FASTENER SPACING	12" MAXIMUM	12" MAXIMUM	NEI TEST 2-10	SAME / NO EVALUATION REQUIRED
FASTENER DISTANCE FROM JOINTS	VARIES. INSTALLERS HAD NO MINIMUM SPACING REQUIREMENT FROM JOINTS.	2" MAXIMUM	NEI TEST 2-10	SEE EVALUATION E-2
FASTENER EDGE GUARDS	NONE	NONE	NEI TEST 2-10	SAME /NO EVALUATION REQUIRED

FIGURE F-7	INSTALLED TO TESTED FIRE BARRIER EVALUATION			PAGE 15 OF 31
PERFORMANCE PARAMETERS	1 THERMO-LAG BARRIER SYSTEM/PROTECTED COMMODITY IDENTIFIER: C2XE2ATSAB			
	2 APPLICABLE FIRE BARRIER SYSTEM SEGMENT: 1-2, 2-3, 3-4, 4-5			
BARRIER	3E INSTALLED CONFIGURATION	4E TESTED CONFIGURATION(S) EVALUATED	5E APPLICABLE TESTS	6E EVALUATION/ REF. NO.
JOINT REINFORCEMENT MECHANISMS	NONE	NONE	NEI TEST 2-10	SAME / NO EVALUATION IS REQUIRED
STRUCTURAL SUPPORT AND INTERVENING STEEL PROTECTION	SUPPORTS ARE COVERED TO STRUCTURE. INTERVENING STEEL WAS COVERED OUT AT LEAST 18".	SUPPORTS COVERED TO STRUCTURE. INTERVENING STEEL COVERED FOR 18".	NEI TEST 2-10	TESTED BOUNDS INSTALLED. NO EVALUATION REQUIRED
LOCATION OF ENCLOSURE	EXPOSED ON ALL SIDES.	EXPOSED ON ALL SIDES.	NEI TEST 2-10	SAME / NO EVALUATION REQUIRED

FIGURE F-8 INSTALLED TO TESTED FIRE BARRIER EVALUATION PAGE 16 OF 31

1. THERMO-LAG BARRIER SYSTEM/PROTECTED COMMODITY IDENTIFIER: C2XE2ATSAB

2. APPLICABLE FIRE BARRIER SYSTEM SEGMENT(S): 1-2, 2-3, 3-4, 4-5

3. EVALUATION REF. NO.(S): E-1 THROUGH E-2

4. EVALUATION(S):

E-1 ENCLOSED MASS:

C2XE2ATSAB	1 - 24" CABLE TRAY	= 3.870 LB/FT
	4 - 7/C, #12 AWG - 600V	= 1.628 LB/FT
	14 - 5/C, #12 AWG - 600V	= 4.746 LB/FT
	20 - 3/C, #12 AWG - 600V	= 4.660 LB/FT
	2 - 3/C, #4 AWG - 2KV	= 0.000 LB/FT (NOTE 1)
	1 - 3/C, #6 AWG - 2KV	= 0.000 LB/FT (NOTE 1)
	2 - 2/C, #12 AWG - 600V	= 0.120 LB/FT
	5 - 12/C, #12 AWG - 600V	= 3.495 LB/FT
	1 - 3/C, #10 AWG - 2KV	= 0.337 LB/FT
	12 - 1 PR, #16 AWG - 600V	= 0.600 LB/FT (NOTE 1)
	3 - 1 QD, #16 AWG - 600V	= 0.000 LB/FT (NOTE 1)
	2 - 3 PR, #16 AWG - 600V	= 0.000 LB/FT (NOTE 1)
	1 - 3/C, #2 AWG - 2KV	= 0.000 LB/FT (NOTE 1)
	TOTAL	= 18.856 LB/FT

NOTES:

1. THE WEIGHTS FOR THESE CABLES WERE NOT READILY AVAILABLE. SINCE THE ENCLOSED MASS EVALUATION WITH THESE CABLE WEIGHT WILL BE NO DIFFERENT THAN WITHOUT THE WEIGHTS, THE CABLE WEIGHTS ARE NOT INCLUDED.

2. THE CABLE WEIGHTS WERE TAKEN FROM CALCULATION EC - 5045, REV. 1, "RACEWAY WEIGHT ANALYSIS". THE PARTICULAR CABLES CONTAINED IN EACH RACEWAY WAS OBTAINED FROM CALCULATION EC - 5046, REV. 4, "POWER CABLE SIZING VERIFICATION IN FIRE WRAPPED RACEWAYS."

E-2 BANDS WERE USED ON THE INSTALLED CABLE TRAY AND FASTENER SPACING WAS MAINTAINED AT 12" OR LESS. THERE WAS HOWEVER NO REQUIREMENT FOR BAND TO JOINT SPACING SO THAT DIMENSION VARIES. THE ACTUAL INSTALLED CONFIGURATION IS WITHIN 4" OF THE JOINT ON THE BOTTOM PANEL FOR THE HORIZONTAL SECTION WHICH WOULD BE THE CRITICAL JOINT. THIS COUPLED WITH THE FACT THAT THESE ARE 3 HOUR PANELS WHICH DID NOT TEND TO DISTORT IN THE TESTING RESULTS IN THE SPACING OF THE BANDS TO JOINT GREATER THAN 2" BEING INSIGNIFICANT AND THE INSTALLED BEING BOUNDED BY THE TESTED. TO MAINTAIN CONSERVATISM IN THIS EVALUATION CREDIT IS BEING TAKEN FOR ONLY A 60 MINUTE BARRIER RATING INSTEAD OF THE 86 MINUTES OBTAINED IN NEI TEST 2-3

FIGURE F-8 INSTALLED TO TESTED FIRE BARRIER EVALUATION PAGE 17 OF 31

1. THERMO-LAG BARRIER SYSTEM/PROTECTED COMMODITY IDENTIFIER: C2XE2ATSAB

2. APPLICABLE FIRE BARRIER SYSTEM SEGMENT(S): 1-2, 2-3, 3-4, 4-5

3. EVALUATION REF. NO.(S): E-1 THROUGH E-2

4. EVALUATION(S):

SEGMENT EVALUATION:

THE INSTALLED CONFIGURATION IS BOUNDED BY NEI TEST 2-10. IN ORDER TO MAINTAIN CONSERVATISM IN THIS EVALUATION, CREDIT IS NOT TAKEN FOR THE FULL 86 MINUTE RATING OBTAINED IN NEI TEST 2-10 DUE TO THE INSTALLED FASSTENER TO JOINT SPAACING EXCEEDING THE TESTED, BUT IT IS REASONABLE TO EXPECT THAT THE INSTALLED CONFIGURATION CAN PROVIDE AT LEAST A 60 MINUTE RATING WHICH IS CONSISTENT WITH THE MAXIMUM RATING THAT CAN BE OBTAINED FOR THE UPGRADED WALL INTERFACE.

IT WOULD BE POSSIBLE TO MAINTAIN CONSERVATISM AND OBTAIN A HIGHER RATING BY INSTALLING ADDITIONAL BANDING TO COMPLY WITH MAXIMUM TESTED BAND TO JOINT SPACING. THIS WOULD RESULT IN AN 86 MINUTE RATING. ALSO, THE EXISTING COVERAGE COULD BE UPGRADED PER NEI TEST 1-4 TO OBTAIN A 3 HOUR RATING FOR THE CABLE TRAY, BUT THE UPGRADES REQUIRED ARE VERY ELABORATE AND THE ENTIRE TRAY RUN COULD NOT OBTAIN A RATING HIGHER THAN ITS "WEAKEST LINK", THE STRUCTURAL INTERFACE.

TESTS 2-10 EXHIBITED STRUCTURAL INTEGRITY FOLLOWING THE HOSE STREAM TEST.

FIGURE F-3	INSTALLED TO TESTED FIRE BARRIER EVALUATION			PAGE 18 OF 31
PERFORMANCE PARAMETERS	1 THERMO-LAG BARRIER SYSTEM/PROTECTED COMMODITY IDENTIFIER: C2XE2ATSAB			
	2 APPLICABLE FIRE BARRIER SYSTEM SEGMENT: NODES 2, 3, 4			
COMMODITY	3A INSTALLED CONFIGURATION	4A TESTED CONFIGURATION(S) EVALUATED	5A APPLICABLE TESTS	6A EVALUATION/ REF. NO.
TYPE	CABLE TRAY RADIAL BEND	CABLE TRAY RADIAL BEND	NEI TEST 2-10	SAME/ NO EVALUATION REQUIRED
SIZE	24" CABLE TRAY	24" X 4" CABLE TRAY	NEI TEST 2-10	TESTED BOUNDS INSTALLED. NO EVALUATION REQUIRED
MATERIAL	STEEL	ALUMINUM	NEI TEST 2-10	TESTED BOUNDS INSTALLED. NO EVALUATION REQUIRED
CONTENTS/ TOTAL ENCLOSED MASS	20.097 LB/FT	24" TRAY = 12.74 LB/FT	NEI TEST 2-10	TESTED BOUNDS INSTALLED. SEE EVALUATION E-1
ORIENTATION	HORIZONTAL AND VERTICAL	HORIZONTAL AND VERTICAL	NEI TEST 2-10	SAME. NO EVALUATION REQUIRED.

FIGURE F-4	INSTALLED TO TESTED FIRE BARRIER EVALUATION			PAGE 19 OF 31
PERFORMANCE PARAMETERS	1 THERMO-LAG BARRIER SYSTEM/PROTECTED COMMODITY IDENTIFIER: C2XE2ATSAB			
	2 APPLICABLE FIRE BARRIER SYSTEM SEGMENT: NODES 2, 3, 4			
BARRIER	3B INSTALLED CONFIGURATION	4B TESTED CONFIGURATION(S) EVALUATED	5B APPLICABLE TESTS	6B EVALUATION/ REF. NO.
MATERIAL TYPE	THERMO-LAG 330-1 V-RIB PANELS (3 HR.)	THERMO-LAG 330-1 V-RIB PANELS (3 HR.)	NEI TEST 2-10	SAME/ NO EVALUATION REQUIRED.
MATERIAL THICKNESS	1.25" ± .250"	1.00" + .25" - 0"	NEI TEST 2-10	TESTED BOUNDS INSTALLED. NO EVALUATION REQUIRED.
STIFFENER (V-RIB) LOCATION/ ORIENTATION	INSIDE. ORIENTATION VARIES.	INTERNAL AND PARALLEL TO SIDE RAILS.	NEI TEST 2-10	TESTED BOUNDS INSTALLED. NO EVALUATION REQUIRED.
STRESS SKIN LOCATION	INTERNAL AND EXTERNAL	INTERNAL AND EXTERNAL	NEI TEST 2-10	TESTED BOUNDS INSTALLED. NO EVALUATION REQUIRED..

FIGURE F-5	INSTALLED TO TESTED FIRE BARRIER EVALUATION			PAGE 20 OF 31
PERFORMANCE PARAMETERS	1 THERMO-LAG BARRIER SYSTEM/PROTECTED COMMODITY IDENTIFIER: C2XE2ATSAB			
	2 APPLICABLE FIRE BARRIER SYSTEM SEGMENT: NODES 2, 3, 4			
BARRIER	3C INSTALLED CONFIGURATION	4C TESTED CONFIGURATION(S) EVALUATED	5C APPLICABLE TESTS	6C EVALUATION/ REF. NO.
JOINT TYPE(S)	PRE-BUTTERED MITERED JOINTS	PRE-BUTTERED MITERED JOINTS	NEI TEST 2-10	TESTED BOUNDS INSTALLED. NO EVALUATION REQUIRED.
JOINT GAP	< 1/4"	≤ 1/4"	NEI TEST 2-10	TESTED BOUNDS INSTALLED. NO EVALUATION REQUIRED
UNSUPPORTED BARRIER SPANS	24"	24"	NEI TEST 2-10	TESTED BOUNDS INSTALLED. NO EVALUATION REQUIRED.
INTERNAL SUPPORT MECHANISMS	SUPPORTED AGAINST CABLE TRAY	SUPPORTED AGAINST TRAY	NEI TEST 2-10	TESTED BOUNDS INSTALLED. NO EVALUATION REQUIRED.

FIGURE F-6	INSTALLED TO TESTED FIRE BARRIER EVALUATION			PAGE 21 OF 31
PERFORMANCE PARAMETERS	1 THERMO-LAG BARRIER SYSTEM/PROTECTED COMMODITY IDENTIFIER: C2XE2ATSAB			
	2 APPLICABLE FIRE BARRIER SYSTEM SEGMENT: NODES 2, 3, 4			
BARRIER	3D INSTALLED CONFIGURATION	4D TESTED CONFIGURATION(S) EVALUATED	5D APPLICABLE TESTS	6D EVALUATION/ REF. NO.
FASTENER TYPE	1/2" BANDS	1/2" BANDS	NEI TEST 2-10	SAME/ NO EVALUATION REQUIRED.
FASTENER SPACING	12" MAXIMUM	12" MAXIMUM	NEI TEST 2-10	SAME / NO EVALUATION REQUIRED
FASTENER DISTANCE FROM JOINTS	VARIES. INSTALLERS HAD NO MINIMUM SPACING REQUIREMENT FROM JOINTS.	2" MAXIMUM	NEI TEST 2-10	SEE EVALUATION E-2
FASTENER EDGE GUARDS	NONE	NONE	NEI TEST 2-10	SAME /NO EVALUATION REQUIRED

FIGURE F-7	INSTALLED TO TESTED FIRE BARRIER EVALUATION			PAGE 22 OF 31
PERFORMANCE PARAMETERS	1 THERMO-LAG BARRIER SYSTEM/PROTECTED COMMODITY IDENTIFER: C2XE2ATSAB			
	2 APPLICABLE FIRE BARRIER SYSTEM SEGMENT: NODES 2, 3, 4			
BARRIER	3E INSTALLED CONFIGURATION	4E TESTED CONFIGURATION(S) EVALUATED	5E APPLICABLE TESTS	6E EVALUATION/ REF. NO.
JOINT REINFORCEMENT MECHANISMS	NONE	NONE	NEI TEST 2-10	SAME / NO EVALUATION REQUIRED
STRUCTURAL SUPPORT AND INTERVENING STEEL PROTECTION	SUPPORTS ARE COVERED TO STRUCTURE. INTERVENING STEEL WAS COVERED OUT AT LEAST 18".	SUPPORTS COVERED TO STRUCTURE. INTERVENING STEEL COVERED FOR 18".	NEI TEST 2-10	TESTED BOUNDS INSTALLED. NO EVALUATION REQUIRED
LOCATION OF ENCLOSURE	EXPOSED ON ALL SIDES.	EXPOSED ON ALL SIDES.	NEI TEST 2-10	SAME / NO EVALUATION REQUIRED

FIGURE F-8 INSTALLED TO TESTED FIRE BARRIER EVALUATION

1. THERMO-LAG BARRIER SYSTEM/PROTECTED COMMODITY IDENTIFIER: C2XE2ATSAB

2. APPLICABLE FIRE BARRIER SYSTEM SEGMENT(S): NODES 2, 3, 4

3. EVALUATION REF. NO.(S): E-1 THROUGH E-2

4. EVALUATION(S):

E-1 ENCLOSED MASS:

C2XE2ATSAB	1 - 24" CABLE TRAY		= 3.870 LB/FT
	4 - 7/C, #12 AWG - 600V		= 1.628 LB/FT
	14 - 5/C, #12 AWG - 600V		= 4.746 LB/FT
	20 - 3/C, #12 AWG - 600V		= 4.660 LB/FT
	2 - 3/C, #4 AWG - 2KV		= 0.000 LB/FT (NOTE 1)
	1 - 3/C, #6 AWG - 2KV		= 0.000 LB/FT (NOTE 1)
	2 - 2/C, #12 AWG - 600V		= 0.120 LB/FT
	5 - 12/C, #12 AWG - 600V		= 3.495 LB/FT
	1 - 3/C, #10 AWG - 2KV		= 0.337 LB/FT
	12 - 1 PR, #16 AWG - 600V		= 0.000 LB/FT (NOTE 1)
	3 - 1 QD, #16 AWG - 600V		= 0.000 LB/FT (NOTE 1)
	2 - 3 PR, #16 AWG - 600V		= 0.000 LB/FT (NOTE 1)
	1 - 3/C, #2 AWG - 2KV		= 0.000 LB/FT (NOTE 1)
		TOTAL	= 18.856 LB/FT

NOTES:

1. THE WEIGHTS FOR THESE CABLES WERE NOT READILY AVAILABLE. SINCE THE ENCLOSED MASS EVALUATION WITH THESE CABLE WEIGHTS WILL BE NO DIFFERENT THAN WITHOUT THE WEIGHTS, THE CABLE WEIGHTS ARE NOT INCLUDED.

2. THE CABLE WEIGHTS WERE TAKEN FROM CALCULATION EC - 5045, REV. 1, "RACEWAY WEIGHT ANALYSIS". THE PARTICULAR CABLES CONTAINED IN EACH RACEWAY WAS OBTAINED FROM CALCULATION EC - 5046, REV. 4, "POWER CABLE SIZING VERIFICATION IN FIRE WRAPPED RACEWAYS.

E-2 BANDS WERE USED ON THE INSTALLED CABLE TRAY AND FASTENER SPACING WAS MAINTAINED AT 12" OR LESS. THERE WAS HOWEVER NO REQUIREMENT FOR BAND TO JOINT SPACING SO THAT DIMENSION VARIES. THE ACTUAL INSTALLED CONFIGURATION IS WITHIN 4" OF THE JOINT ON THE BOTTOM PANEL FOR THE HORIZONTAL SECTION WHICH WOULD BE THE CRITICAL JOINT. THIS COUPLED WITH THE FACT THAT THESE ARE 3 HOUR PANELS WHICH DID NOT TEND TO DISTORT IN THE TEST, RESULTS IN THE SPACING OF THE BANDS TO JOINTS GREATER THAN 2 " BEING INSIGNIFICANT AND THE INSTALLED BEING BOUNDED BY THE TESTED. TO MAINTAIN CONSERVATISM IN THIS EVALUATION CREDIT IS BEING TAKEN FOR ONLY A 60 MINUTE BARRIER RATING INSTEAD OF THE 86 MINUTES OBTAINED IN NEI TEST 2-3.

FIGURE F-8 INSTALLED TO TESTED FIRE BARRIER EVALUATION PAGE 24 OF 31

1. THERMO-LAG BARRIER SYSTEM/PROTECTED COMMODITY IDENTIFIER: C2XE2ATSAB

2. APPLICABLE FIRE BARRIER SYSTEM SEGMENT(S): NODES 2, 3, 4

3. EVALUATION REF. NO.(S): E-1 THROUGH E-2

4. EVALUATION(S):

SEGMENT EVALUATION:

THE INSTALLED CONFIGURATION IS BOUNDED BY NEI TEST 2-10. IN ORDER TO MAINTAIN CONSERVATISM IN THIS EVALUATION, CREDIT IS NOT TAKEN FOR THE FULL 86 MINUTE RATING OBTAINED IN NEI TEST 2-10 DUE TO TH INSTALLED FASTENER TO JOINT SPAACING ECEEDING THE TESTED, BUT IT IS REASONABLE TO EXPECT THAT THE INSTALLED CONFIGURATION CAN PROVIDE AT LEAST A 60 MINUTE RATING WHICH IS CONSISTENT WITH THE MAXIMUM RATING THAT CAN BE OBTAINED FOR THE WALL INTERFACE WITH UPGRADE.

IT WOULD BE POSSIBLE TO MAINTAIN CONSERVATISM AND OBTAIN A HIGHER RATING BY INSTALLING ADDITIONAL BANDING TO COMPLY WITH MAXIMUM TESTED BAND TO JOINT SPACING. THIS WOULD RESULT IN AN 86 MINUTE RATING. ALSO, THE EXISTING COVERAGE COULD BE UPGRADED PER NEI TEST 1-4 TO OBTAIN A 3 HOUR RATING FOR THE CABLE TRAY, BUT THE UPGRADES REQUIRED ARE VERY ELABORATE AND THE ENTIRE TRAY RUN COULD NOT OBTAIN A RATING HIGHER THAN ITS "WEAKEST LINK", THE STRUCTURAL INTERFACE.

TESTS 2-10 EXHIBITED STRUCTURAL INTEGRITY FOLLOWING THE HOSE STREAM TEST.

FIGURE F-3	INSTALLED TO TESTED FIRE BARRIER EVALUATION			PAGE 25 OF 31
PERFORMANCE PARAMETERS	1. THERMO-LAG BARRIER SYSTEM/PROTECTED COMMODITY IDENTIFIER: C2XE2ATSAB			
	2 APPLICABLE FIRE BARRIER SYSTEM SEGMENT: NODE 5			
COMMODITY	3A INSTALLED CONFIGURATION	4A TESTED CONFIGURATION(S) EVALUATED	5A APPLICABLE TESTS	6A EVALUATION/ REF. NO.
TYPE	CABLE TRAY INTERFACE WITH A STRUCTURE.	CONDUIT/WALL INTERFACE CABLES AIR DROPPING FROM CABLE TRAYS TO EMBEDDED WALL SLEEVES	NEI TEST 2-2 TUEC TEST SCHEME 11-4	SEE EVALUATION E-1.
SIZE	24"	3/4",2" & 3" CONDUITS 24 AIR DROPPING CABLES AT EMBEDDED WALL SLEEVES	NEI TEST 2-2 TUEC TEST SCHEME 11-4	SEE EVALUATION E-1.
MATERIAL	STEEL	ALUMINUM ELECTRICAL CABLES	NEI TEST 2-2 TUEC TEST SCHEME 11-4	TEST BOUNDS INSTALLED. NO EVALUATION REQUIRED
CONTENTS/ TOTAL ENCLOSED MASS	N/A AT INTERFACE	N/A AT INTERFACE	NEI TEST 2-2 AND TUEC TEST SCHEME 11-4	THIS IS AN EVALUATION OF THE INTERFACE BETWEEN CABLE TRAY COVERAGE AND A CONCRETE WALL. THERMAL MASS IS NOT A CONSIDERATION IN THIS EVALUATION
ORIENTATION	HORIZONTAL/VERTICAL	VERTICAL/HORIZONTAL	NEI TEST 2-2 AND TUEC TEST SCHEME 11-4	TEST BOUNDS INSTALLED. NO EVALUATION REQUIRED

FIGURE F-4	INSTALLED TO TESTED FIRE BARRIER EVALUATION			PAGE 26 OF 31
PERFORMANCE PARAMETERS	1. THERMO-LAG BARRIER SYSTEM/PROTECTED COMMODITY IDENTIFIER: C2XE2ATSAB			
	2 APPLICABLE FIRE BARRIER SYSTEM SEGMENT: NODE 5			
BARRIER	3B INSTALLED CONFIGURATION	4B TESTED CONFIGURATION(S) EVALUATED	5B APPLICABLE TESTS	6B EVALUATION/ REF. NO.
MATERIAL TYPE	THERMO-LAG 330-1 PRE-FABRICATED V-RIB PANELS (3 HR.)	THERMO-LAG 330-1 V-RIB PANELS FLATTENED THERMO-LAG 330-1 FLAT PANELS	NEI TEST 2-2 TUEC TEST SCHEME 11-4	TEST BOUNDS INSTALLED. NO EVALUATION REQUIRED
MATERIAL THICKNESS	1.25" ± .25"	0.50" + 0.125" - 0" 0.625" ± 0.125"	NEI TEST 2.2 TUEC TEST SCHEME 11-4	TESTED BOUNDS INSTALLED. NO EVALUATION REQUIRED.
STIFFENER (V-RIB) LOCATION/ ORIENTATION	INSIDE. ORIENTATION VARIES.	INTERNAL BUT FLATTENED NONE	NEI TEST 2-2 TUEC TEST SCHEME 11-4	TEST BOUNDS INSTALLED. NO EVALUATION REQUIRED
STRESS SKIN LOCATION	INTERNAL AND EXTERNAL	INTERNAL	NEI TEST 2-2 AND TUEC TEST SCHEME 11-4	TESTED BOUNDS INSTALLED. NO EVALUATION REQUIRED.

FIGURE F-5	INSTALLED TO TESTED FIRE BARRIER EVALUATION			PAGE 27 OF 31
PERFORMANCE PARAMETERS	1. THERMO-LAG BARRIER SYSTEM/PROTECTED COMMODITY IDENTIFIER: C2XE2ATSAB			
	2 APPLICABLE FIRE BARRIER SYSTEM SEGMENT: NODE 5			
BARRIER	3C INSTALLED CONFIGURATION	4C TESTED CONFIGURATION(S) EVALUATED	5C APPLICABLE TESTS	6C EVALUATION/ REF. NO.
JOINT TYPE(S)	PRE-BUTTERED "PICTURE FRAME" BUTTED TO RACEWAY COVERAGE AND BOLTED TO THE CONCRETE WALL.	SCORE & FOLD "PICTURE FRAME" BOLTED TO CONCRETE. PRE-BUTTERED "PICTURE FRAME" BUTTED TO RACEWAY COVERAGE AND BOLTED TO THE CONCRETE WALL.	NEI TEST 2-2 TUEC TEST SCHEME 11-4	TESTED BOUNDS INSTALLED.
JOINT GAP	≤ 1/4"	≤ 1/4"	NEI TEST 2-2 AND TUEC TEST SCHEME 11-4	SAME/NO EVALUATION REQUIRED
UNSUPPORTED BARRIER SPANS	N/A AT WALL INTERFACE	N/A AT WALL INTERFACE	NEI TEST 2-2 AND TUEC TEST SCHEME 11-4	SAME/NO EVALUATION REQUIRED
INTERNAL SUPPORT MECHANISMS	N/A AT WALL INTERFACE	N/A AT WALL INTERFACE	NEI TEST 2-2 AND TUEC TEST SCHEME 11-4	SAME/NO EVALUATION REQUIRED.

FIGURE F-6	INSTALLED TO TESTED FIRE BARRIER EVALUATION			PAGE 28 OF 31
PERFORMANCE PARAMETERS	1. THERMO-LAG BARRIER SYSTEM/PROTECTED COMMODITY IDENTIFIER: C2XE2ATSAB			
	2 APPLICABLE FIRE BARRIER SYSTEM SEGMENT: NODE 5			
BARRIER	3D INSTALLED CONFIGURATION	4D TESTED CONFIGURATION(S) EVALUATED	5D APPLICABLE TESTS	6D EVALUATION/ REF. NO.
FASTENER TYPE	CONCRETE ANCHOR BOLTS	CONCRETE ANCHOR BOLTS	NEI TEST 2-2 AND TUEC TEST SCHEME 11-4	SEE EVALUATION E-1.
FASTENER SPACING	BOLTS SPACED A MAXIMUM OF 12"	BOLTS SPACED A MAXIMUM OF 12"	NEI TEST 2-2 AND TUEC TEST SCHEME 11-4	SEE EVALUATION E-1
FASTENER DISTANCE FROM JOINTS	1" - 2" FROM JOINTS AND EDGE OF THERMO-LAG	1" - 2" FROM JOINTS AND EDGE OF THERMO-LAG	NEI TEST 2-2 AND TUEC TEST SCHEME 11-4	SEE EVALUATION E-1.
FASTENER EDGE GUARDS	NONE	NONE	NEI TEST 2.2 AND TUEC TEST SCHEME 11-4	SAME/NO EVALUATION REQUIRED

FIGURE F-7	INSTALLED TO TESTED FIRE BARRIER EVALUATION			PAGE 29 OF 31
PERFORMANCE PARAMETERS	1. THERMO-LAG BARRIER SYSTEM/PROTECTED COMMODITY IDENTIFIER: C2XE2ATSAB			
	2 APPLICABLE FIRE BARRIER SYSTEM SEGMENT: NODE 5			
BARRIER	3E INSTALLED CONFIGURATION	4E TESTED CONFIGURATION(S) EVALUATED	5E APPLICABLE TESTS	6E EVALUATION/ REF. NO.
JOINT REINFORCEMENT MECHANISMS	NONE	GROOVE AND FOLD METHOD IS USED AT JOINTS WHERE THERMO-LAG FLARES OUT ONTO THE CONCRETE. "PICTURE FRAME" IS TIED INTO RACEWAY COVERAGE UTILIZING A STRESS SKIN AND TROWEL GRADE UPGRADE.	NEI TEST 2-2 TUEC TEST SCHEME 11-4	SEE EVALUATION E-2
STRUCTURAL SUPPORT AND INTERVENING STEEL PROTECTION	INTERVENING STEEL IS COVERED 18"	NONE	NEI TEST 2-2 AND TUEC TEST SCHEME 11-4	TESTED BOUNDS INSTALLED. NO EVALUATION REQUIRED.
LOCATION OF ENCLOSURE	AT A CONCRETE WALL	AT A CONCRETE CEILING AT A CONCRETE WALL	NEI TEST 2-2 TUEC TEST SCHEME 11-4	SAME/ NO EVALUATION REQUIRED.

FIGURE F-8 INSTALLED TO TESTED FIRE BARRIER EVALUATION PAGE 30 OF 31

1. THERMO-LAG BARRIER SYSTEM/PROTECTED COMMODITY IDENTIFIER: C2XE2ATSAB

2. APPLICABLE FIRE BARRIER SYSTEM SEGMENT(S): NODE 5

3. EVALUATION REF. NO.(S): E-1 THROUGH E-2

4. EVALUATION(S):

E-1 THIS EVALUATION IS FOR THE INTERFACE OF THERMO-LAG COVERAGE ON A CABLE TRAY WITH A WALL. THE ONLY TWO TESTED ARRANGEMENTS OF THERMO-LAG MATERIAL ABUTTING MASONRY ARE IN NEI TEST 2-2 IN WHICH A THERMO-LAG BOX DESIGN UTILIZING 1 HOUR MATERIAL CONFIGURATION WAS ATTACHED TO THE CEILING OF THE TEST DECK WITH HILTI BOLTS, AND TUEC TEST SCHEME 11-4 WHICH INCLUDED A SIMILAR BOX DESIGN UTILIZING 1 HOUR MATERIAL ATTACHED TO A CONCRETE WALL. IN NEI TEST 2-2 THERMO LAG V-RIB PANELS WERE SCORED & FOLDED TO CREATE A BOX SHAPED ENCLOSURE WITH 3 INCH FLANGES ALL AROUND WHICH LAY FLAT AGAINST THE CONCRETE AND ACT AS A BASE THROUGH WHICH ANCHOR BOLTS WERE INSTALLED. THIS FLANGED AREA PROVIDES STRUCTURAL SUPPORT AND THERMAL PROTECTION FOR THE INTERFACE AREA. TUEC TEST SCHEME 11-4 UTILIZED A SEPARATE "PICTURE FRAME" COLLAR AROUND A THERMO-LAG BOX. THE BOX WAS CONNECTED TO THE "PICTURE FRAME" WITH STRESS SKIN AND TROWEL GRADE TO ENSURE STRUCTURAL SUPPORT.

E-2 THE INSTALLED IS NOT BOUNDED BY THE TESTED DUE TO THE LACK OF STRESS SKIN AND TROWEL GRADE AT THE "PICTURE FRAME" AT THE STRUCTURE INTERFACE. THE ACCEPTABLE UPGRADE WOULD BE TO TIE THE "PICTURE FRAME" COVERAGE INTO THE CABLE TRAY COVERAGE WITH STRESS SKIN AND TROWEL GRADE PER TUEC TEST SCHEME 11-4.

FIGURE F-8 INSTALLED TO TESTED FIRE BARRIER EVALUATION PAGE 31 OF 31

1. THERMO-LAG BARRIER SYSTEM/PROTECTED COMMODITY IDENTIFIER: C2XE2ATSAB

2. APPLICABLE FIRE BARRIER SYSTEM SEGMENT(S): NODE 5

3. EVALUATION REF. NO.(S): E-1 THROUGH E-2

4. EVALUATION(S):

SEGMENT EVALUATION:

AS INSTALLED, THERE IS NO BOUNDING TEST AND THEREFORE NO FIRE RATING FOR THE STRUCTURE INTERFACE. THE PRINCIPAL ATTRIBUTE MISSING FROM THE INSTALLED CONFIGURATION IS STRESS SKIN AND TROWEL GRADE SUPPORT BETWEEN THE "PICTURE FRAME" AND CABLE TRAY COVERAGE PROVIDING ADDITIONAL STRUCTURAL PROTECTION AT THE INTERFACE AREA.

AN UPGRADE OF THE INSTALLED CONFIGURATIONS BY TYING THE "PICTURE FRAME" COVERAGE INTO THE RACEWAY COVERAGE WITH STRESS SKIN AND TROWEL GRADE PER TUEC TEST SCHEME 11-4 WILL PROVIDE REASONABLE ASSURANCE THAT THE INSTALLED WILL BE BOUNDED BY THAT TEST AND PROVIDE A RATED DURATION OF 60 MINUTES.

TESTED RACEWAYS EXHIBITED ACCEPTABLE STRUCTURAL INTEGRITY IN THE AREA OF THE THERMO-LAG COLLARS FOLLOWING THE HOSE STREAM TEST.

FIGURE F-1 INSTALLED TO TESTED FIRE BARRIER EVALUATION

1. THERMO-LAG BARRIER SYSTEM/PROTECTED COMMODITY IDENTIFIER: C2XE2ARX002

2. BARRIER/COMMODITY LOCATION DATA: SOUTH TEXAS PROJECT UNIT TWO
FIRE AREA/ZONE 07/Z071
ELEC. AUX BUILDING, EL. 20'-0"

3. REQUIRED RATING: _____ 1-HOUR __X__ 3-HOUR _____ OTHER _____ RES

4. FIRE BARRIER SYSTEM SEGMENTS EVALUATED: SEE PAGE 2

5. FIRE BARRIER SYSTEM SEE PAGE 2

EVALUATION RESULTS: _____ BOUNDED BY TEST _____ NOT BOUNDED BY TEST

_____ RATED BARRIER SYSTEM _____ FURTHER EVALUATION REQUIRED

_____ _____
(OTHER)

6. APPLICABLE TEST REFERENCES: NEI TEST 2-2, 2-3 AND 1-7 AND TUEC TEST 11-4

7. REMARKS: N/A

1. THERMO-LAG BARRIER SYSTEM/PROTECTED COMMODITY IDENTIFIER: C2XE2ARX002

2.

NODE	COMMODITY TYPE	BOUNDED BY TEST (Y/N)	BARRIER RATING AS INSTALLED (MIN)	BARRIER RATING WITH UPGRADE (MIN)	EVAL PAGES
1	BOX CONFIGURATION	N	0	60	4-10
1-2	CONDUIT	Y	91	112	18-24
2	CONDUIT RADIAL BEND	Y	102	129	11-17
2-3	CONDUIT	Y	91	112	18-24
3	CONDUIT COUPLING	Y	91	112	18-24
3-4	CONDUIT	Y	91	112	18-24
4	CONDUIT RADIAL BEND	Y	102	129	11-17
4-5	CONDUIT	Y	91	112	18-24
5	CONDULET	Y	102	180	25-31
5-6	CONDUIT	Y	91	112	18-24
6	CONDUIT RADIAL BEND	Y	102	129	11-17
6-7	CONDUIT	Y	91	112	18-24
7	CONDUIT/WALL INTERFACE	N	0	60	32-38

FIGURE F-2 INSTALLED TO TESTED FIRE BARRIER EVALUATION PAGE 3 OF 38

1. THERMO-LAG BARRIER SYSTEM/PROTECTED COMMODITY IDENTIFIER: C2XE2ARX002

2. SKETCH OF INSTALLED CONFIGURATION

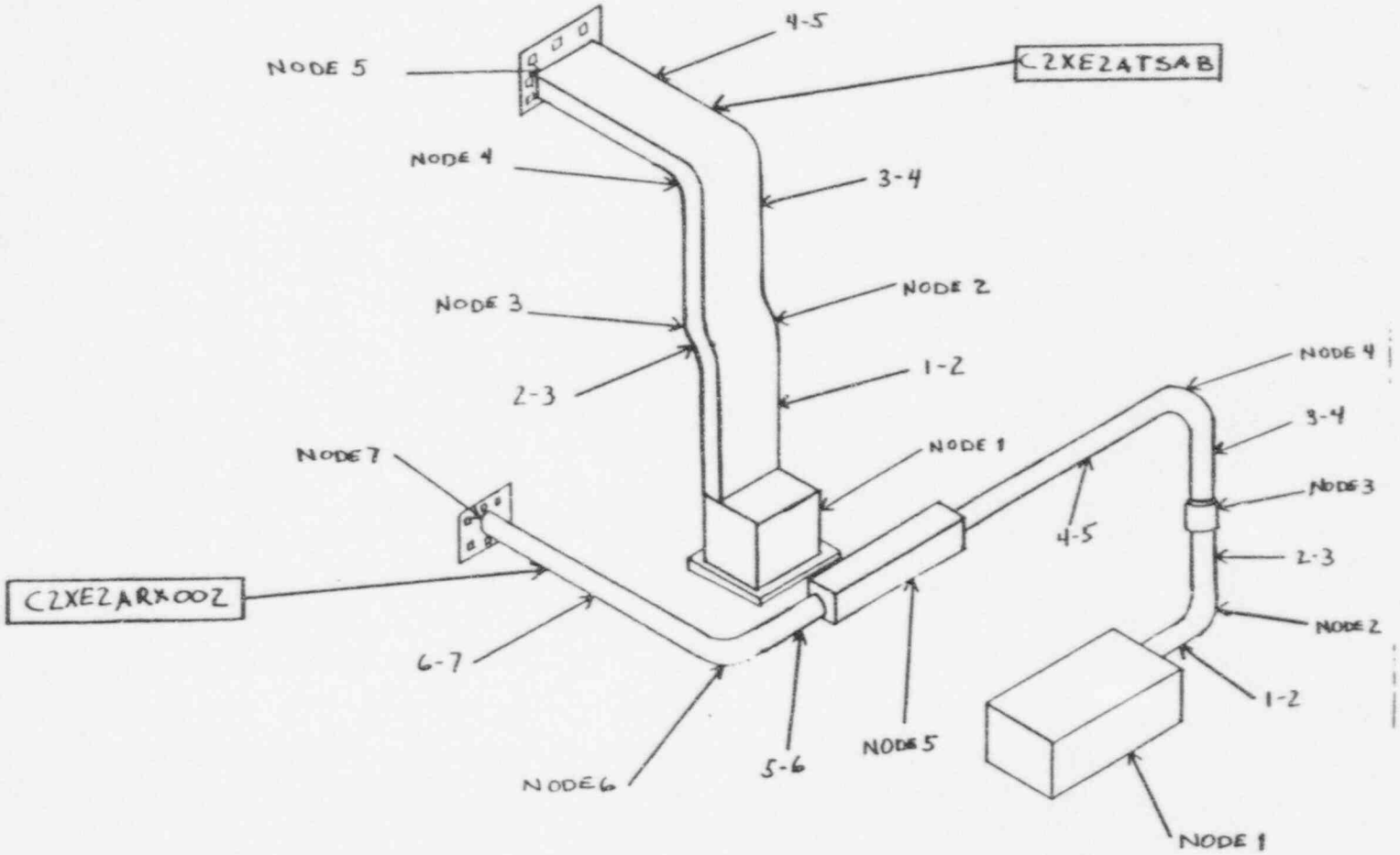

FIGURE F-3	INSTALLED TO TESTED FIRE BARRIER EVALUATION			PAGE 4 0F 38
PERFORMANCE PARAMETERS	1 THERMO-LAG BARRIER SYSTEM/PROTECTED COMMODITY IDENTIFIER: C2XE2ARX002			
	2 APPLICABLE FIRE BARRIER SYSTEM SEGMENT: NODE 1			
COMMODITY	3A INSTALLED CONFIGURATION	4A TESTED CONFIGURATION(S) EVALUATED	5A APPLICABLE TESTS	6A EVALUATION/ REF. NO.
TYPE	JUNCTION BOX MOUNTED TO FLOOR	LBDS CABLES AIR DROPPING FROM CABLE TRAYS TO WALL SLEEVES	NEI TEST 2-3 TUEC TEST 11-4	DIFFERENT COMMODITIES, BOUNDING WILL DEPEND ON MATERIAL, MASS AND ORIENTATION. SEE EVALUATION E-1
SIZE	48" X 30" X 12" JUNCTION BOX	3" AND 6" LBDS 24 AIR DROP CABLES FROM 2 STACKED 24" CABLE TRAYS TO EMBEDDED SLEEVES.	NEI TEST 2-3 TUEC TEST 11-4	DIFFERENT SIZES, BOUNDING WILL DEPEND ON MATERIAL, MASS AND ORIENTATION. SEE EVALUATION E-1
MATERIAL	STEEL	ALUMINUM ELECTRICAL CABLES	NEI TEST 2-3 TUEC TEST 11-4	TESTED BOUNDS INSTALLED. NO EVALUATION REQUIRED.
CONTENTS/ TOTAL ENCLOSED MASS	11.606 LBS	6" LBD = 70.0 LBS 3" LBD = 5.62 LBS 8.8 LBS	NEI TEST 2-3 TUEC TEST 11-4	SEE EVALUATION E-2.
ORIENTATION	HORIZONTAL	HORIZONTAL/VERTICAL	NEI TEST 2-3 TUEC TEST 11-4	TESTED BOUNDS INSTALLED. NO EVALUATION REQUIRED.

FIGURE F-4	INSTALLED TO TESTED FIRE BARRIER EVALUATION			PAGE 5 OF 38
PERFORMANCE PARAMETERS	1 THERMO-LAG BARRIER SYSTEM/PROTECTED COMMODITY IDENTIFIER: C2XE2ARX002			
	2 APPLICABLE FIRE BARRIER SYSTEM SEGMENT: NODE 1			
BARRIER	3B INSTALLED CONFIGURATION	4B TESTED CONFIGURATION(S) EVALUATED	5B APPLICABLE TESTS	6B EVALUATION/ REF. NO.
MATERIAL TYPE	THERMO-LAG 330-1 V-RIB PANELS	THERMO-LAG 330-1 V-RIBBED PANELS THERMO-LAG 330-1 V-RIBBED PANELS ON SIDES AND TOP. FLAT PANEL ON BOTTOM AND AT "PICTURE FRAME" AT WALL	NEI TEST 2-3 TUEC TEST 11-4	TESTED BOUNDS INSTALLED. NO EVALUATION REQUIRED.
MATERIAL THICKNESS	1.25" ± 0.25"	1.0" +0.25" - 0". 625" ± 0.125"	NEI TEST 2-3 TUEC TEST 11-4	TEST BOUNDS INSTALLED. NO EVALUATION REQUIRED.
STIFFENER (V-RIB) LOCATION/ ORIENTATION	INSIDE. ORIENTATION VARIES.	INTERNAL AND ORIENTED HORIZONTAL. INTERNAL/ORIENTED TRAY TO WALL ON TOP PANEL AND VERTICAL ON SIDE PANELS.	NEI TEST 2-3 TUEC TEST 11-4	TESTED BOUNDS INSTALLED. NO EVALUATION REQUIRED.
STRESS SKIN LOCATION	INSIDE AND OUTSIDE	BOTH INSIDE AND OUTSIDE INSIDE ONLY	NEI TEST 2-3 TUEC TEST 11-4	TESTED BOUNDS INSTALLED. NO EVALUATION REQUIRED.

FIGURE F-5	INSTALLED TO TESTED FIRE BARRIER EVALUATION			PAGE 6 0F 38
PERFORMANCE PARAMETERS	1 THERMO-LAG BARRIER SYSTEM/PROTECTED COMMODITY IDENTIFIER: C2XE2ARX002			
	2 APPLICABLE FIRE BARRIER SYSTEM SEGMENT: NODE 1			
BARRIER	3C INSTALLED CONFIGURATION	4C TESTED CONFIGURATION(S) EVALUATED	5C APPLICABLE TESTS	6C EVALUATION/ REF. NO.
JOINT TYPE(S)	PRE-BUTTERED BUTT JOINTS. BUTTS TO CONCRETE FLOOR.	PRE-BUTTERED BUTT JOINTS WITH SOME SCORE & FOLD. PRE-BUTTERED BUTT AND SCORE AND FOLD JOINTS. "PICTURE FRAME" BOLTED TO CONCRETE AND BUTTED TO RACEWAY COVERAGE.	NEI TEST 2-3 TUEC TEST 11-4	INSTALLED IS BOUNDED BY NEI TEST 2-3 BUT IS NOT BOUNDED BY TUEC TEST 11-4
JOINT GAP	≤ 1/4" GAP	≤ 1/4" GAP	NEI TEST 2-3 TUEC TEST 11-4	SAME. NO EVALUATION REQUIRED.
UNSUPPORTED BARRIER SPANS	48" X 30" X 12"	6" LBD = 45" X 12" X 13" 3" LBD = 18" X 8" X 8" 36" x 20" x 12"	NEI TEST 2-3 TUEC TEST 11-4	TESTED BOUNDS INSTALLED. NO EVALUATION REQUIRED.
INTERNAL SUPPORT MECHANISMS	INSTALLED AGAINST JUNCTION BOX	INSTALLED AGAINST LBD NONE.	NEI TEST 2-3 TUEC TEST 11-4	TESTED BOUNDS INSTALLED. NO EVALUATION REQUIRED.

FIGURE F-6	INSTALLED TO TESTED FIRE BARRIER EVALUATION			PAGE 7 0F 38
PERFORMANCE PARAMETERS	1 THERMO-LAG BARRIER SYSTEM/PROTECTED COMMODITY IDENTIFIER: C2XE2ARX002			
	2 APPLICABLE FIRE BARRIER SYSTEM SEGMENT: NODE 1			
BARRIER	3D INSTALLED CONFIGURATION	4D TESTED CONFIGURATION(S) EVALUATED	5D APPLICABLE TESTS	6D EVALUATION/ REF. NO.
FASTENER TYPE	1/2" STAINLESS STEEL BANDS	1/2" STAINLESS STEEL BANDS	NEI TEST 2-3 AND TUEC TEST 11-4	SAME. NO EVALUATION REQUIRED.
FASTENER SPACING	12" MAXIMUM	12" MAXIMUM	NEI TEST 2-3 AND TUEC TEST 11-4	SAME/NO EVALUATION REQUIRED.
FASTENER DISTANCE FROM JOINTS	VARIES. INSTALLERS HAD NO MAXIMUM SPACING REQUIREMENT FROM JOINTS	2" MAXIMUM	NEI TEST 2-3 TUEC TEST 11-4	SEE EVALUATION E-3.
FASTENER EDGE GUARDS	NONE	NONE	NEI TEST 2-3 TUEC TEST 11-4	SAME/NO EVALUATION REQUIRED.

FIGURE F-7	INSTALLED TO TESTED FIRE BARRIER EVALUATION			PAGE 8 0F 38
PERFORMANCE PARAMETERS	1 THERMO-LAG BARRIER SYSTEM/PROTECTED COMMODITY IDENTIFIER: C2XE2ARX002			
	2 APPLICABLE FIRE BARRIER SYSTEM SEGMENT: NODE 1			
BARRIER	3E INSTALLED CONFIGURATION	4E TESTED CONFIGURATION(S) EVALUATED	5E APPLICABLE TESTS	6E EVALUATION/ REF. NO.
JOINT REINFORCEMENT MECHANISMS	NONE	NONE JOINTS REINFORCED WITH STRESS SKIN, TROWEL GRADE AND STAPLES. WALL INTERFACE REINFORCED WITH "PICTURE FRAME", STRESS SKIN, TROWEL GRADE AND STAPLES.	NEI TEST 2-3 TUEC TEST 11-4	INSTALLED IS BOUNDED BY NEI TEST 2-3, BUT IS NOT BOUNDED BY TUEC TEST 11-4
STRUCTURAL SUPPORT AND INTERVENING STEEL PROTECTION	JUNCTION BOX SUPPORTS ARE INTERNAL TO THE ENCLOSURE. INTERVENING STEEL IS COVERED 18".	SUPPORT MEMBERS WERE PROTECTED FOR FULL LENGTH AND INTERVENING STEEL MEMBERS WERE PROTECTED FOR AN 18" DISTANCE. COVERED OUT 9"	NEI TEST 2-3 TUEC TEST 11-4	TESTED BOUNDS INSTALLED. NO EVALUATION REQUIRED.
LOCATION OF ENCLOSURE	AGAINST CONCRETE FLOOR ON 1 SIDE	OPEN ON ALL SIDES AGAINST CONCRETE ON ONE SIDE	NEI TEST 2-3 TUEC TEST 11-4	TESTED BOUNDS INSTALLED. NO EVALUATION REQUIRED.

FIGURE F-8 INSTALLED TO TESTED FIRE BARRIER EVALUATION PAGE 9 OF 38

1. THERMO-LAG BARRIER SYSTEM/PROTECTED COMMODITY IDENTIFIER: C2XE2ARX002

2. APPLICABLE FIRE BARRIER SYSTEM SEGMENT(S): NODE 1

3. EVALUATION REF. NO.(S): E-1 THROUGH E-3

4. EVALUATION(S):

E-1 THE EVALUATION COMPARES THE COVERAGE ON A 48" X 30 X 12" JUNCTION BOX WITH THE COVERAGE ON A 3" AND 6" LBD IN TEST 2-3 AND THE BOX AND THE STRUCTURAL INTERFACE IN TUEC TEST 11-4. THE 6" LBD IS THE ONLY BOXED COMMODITY WITHOUT JOINT UPGRADE WHOSE SIZE IS COMPARABLE TO THE INSTALLED JUNCTION BOX. THEY ARE DIFFERENT TYPES OF COMMODITIES, BUT THE COVERAGE TECHNIQUES ARE COMPARABLE. BOTH HAVE PRE-BUTTERED BUTT JOINTS, BOTH ARE COVERED WITH 3 HOUR MATERIAL AND THE 45" LONG VERTICAL PANEL ON THE 6" LBD WILL BOUND THE 48" WIDE PANEL ON THE INSTALLED JUNCTION BOX.

E-2 ENCLOSED MASS:

C2XE2ARX002	1 - 4" CONDUIT		= 9.720 LB/FT
	4 - 2/C, #16 AWG - 600V		= 0.320 LB/FT
	2 - 4/C, #16 AWG - 600V		= 0.270 LB/FT
	2 - 16 PR, #16 AWG - 600V		= 1.296 LB/FT
		TOTAL	= 11.606 LB/FT
12" OF C2XE2ARX002 = 1 X 11.606 LB/FT			= 11.606 LB/FT
		TOTAL	= 11.606 LB/FT

NOTES:

1. THE CABLE WEIGHTS WERE TAKEN FROM CALCULATION EC - 5045, REV. 1, "RACEWAY WEIGHT ANALYSIS". THE PARTICULAR CABLES CONTAINED IN EACH RACEWAY WAS OBTAINED FROM CALCULATION EC - 5046, REV. 4, "POWER CABLE SIZING VERIFICATION IN FIRE WRAPPED RACEWAYS.

2. THE INSTALLED IS BOUNDED BY THE 3" LBD OF NEI TEST 2-3 AND BY TUEC TEST 11-4. IT IS NOT BOUNDED BY THE 6" LBD IN NEI TEST 2-3

E-3 FASTENER SPACING WAS MAINTAINED AT 12" OR LESS. THERE WAS HOWEVER NO REQUIREMENT FOR BAND TO JOINT SPACING SO THAT DIMENSION VARIES. THE INSTALLED CONFIGURATION IS A BOX RESTING ON THE FLOOR, WITH BANDS INSTALLED ON THE SIDE PANELS WITHIN 4" OF THE JOINTS. THE SIDE PANELS ARE IN COMPRESSION. THE TOP PANEL IS MISSING BANDING IN ONE DIRECTION, BUT THE TOP PANEL JOINTS ARE NOT CONSIDERED A FAILURE MODE. ALSO THE 3 HOUR PANELS DID NOT TEND TO DISTORT IN TESTS LIKE THE THINNER 1 HOUR PANELS. THE GREATER BAND TO JOINT SPACING IS CONSIDERED TO BE INSIGNIFICANT AND THE INSTALLED IS BOUNDED BY THE TESTED CONFIGURATIONS.

FIGURE F-8 INSTALLED TO TESTED FIRE BARRIER EVALUATION PAGE 10 0F 38

1. THERMO-LAG BARRIER SYSTEM/PROTECTED COMMODITY IDENTIFIER: C1XE2ARX002

2. APPLICABLE FIRE BARRIER SYSTEM SEGMENT(S): NODE 1

3. EVALUATION REF. NO.(S): E-1 THROUGH E-3

4. EVALUATION(S):

SEGMENT EVALUATION:

AS INSTALLED THERE IS NO BOUNDING TEST AND THEREFORE NO FIRE RATING FOR THE ENCLOSURE DUE TO THE STRUCTURAL INTERFACE NOT BEING BOUNDED BY TUEC TEST 11-4. REINFORCING THE INTERFACE WITH THE STRUCTURE BY INSTALLING A "PICTURE FRAME" WITH STRESS SKIN AND TROWEL GRADE REINFORCEMENT PER TUEC TEST 11-4 WILL RESULT IN REASONABLE ASSURANCE THAT A 60 MINUTE RATING CAN BE OBTAINED. THE 3" AND 6' LBDS WILL BOUND THE BOX CONFIGURATION AS INSTALLED. THE LBDS HAD A RATING OF 102 MINUTES WHICH EXCEEDS THE 60 MINUTES OF THE STRUCTURAL INTERFACE BUT THE OVERALL RATING OF THE ENCLOSURE WOULD BE 60 MINUTES.

THE INSTALLED CONFIGURATIONS WILL BE BOUNDED THERMALLY BY THE TESTS BECAUSE OF THE GREATER THICKNESS OF THE 3 HOUR PANELS THAN THAT REQUIRED FOR A 60 MINUTE RATING AND THE GREATER ENCLOSED MASS WHEN COMPARED AGAINST THE 3" LBD OF NEI TEST 2-3 AND THE BOX OF TUEC TEST 11-4. THE ENCLOSURE WILL BE BOUNDED STRUCTURALLY ONCE THE CONCRETE INTERFACE IS REINFORCED. IT IS QUESTIONABLE IF A GREATER THAN 60 MINUTE RATING COMPARABLE TO THE 102 MINUTES OBTAINED BY THE 3" AND 6" LBDS IN NEI TEST 2-3, CAN BE OBTAINED DUE TO THE LACK OF TESTING FOR GREATER THAN 60 MINUTES FOR THE STRUCTURAL INTERFACE.

ALTHOUGH A MINOR OPENING DEVELOPED IN THE ENCLOSURE FOR BOTH TUEC TEST 11-4 AND NEI TEST 2-3, THE INSTALLED CONFIGURATION INVOLVES CABLES IN A BOX WHICH WOULD NOT BE PRONE TO DAMAGE DUE TO FIRE FIGHTING ACTIVITIES OR FALLING EXTERNAL OBJECTS DURING FIRE CONDITIONS.

FIGURE F-3	INSTALLED TO TESTED FIRE BARRIER EVALUATION			PAGE 11 0F 38
PERFORMANCE PARAMETERS	1 THERMO-LAG BARRIER SYSTEM/PROTECTED COMMODITY IDENTIFIER: C2XE2ARX002			
	2 APPLICABLE FIRE BARRIER SYSTEM SEGMENT: NODES 2, 4, 6			
COMMODITY	3A INSTALLED CONFIGURATION	4A TESTED CONFIGURATION(S) EVALUATED	5A APPLICABLE TESTS	6A EVALUATION/ REF. NO.
TYPE	CONDUIT RADIAL BEND	CONDUIT RADIAL BEND	NEI TEST 2-3 (AND INSTALLED) AND NEI TEST 1-7 (UPGRADED)	SAME. NO EVALUATION REQUIRED.
SIZE	4" DIAMETER	3" AND 6" DIAMETER 3" AND 5" DIAMETER	NEI TEST 2-3 (AS INSTALLED) NEI TEST 1-7 (UPGRADE)	TEST BOUNDS INSTALLED. NO EVALUATION REQUIRED
MATERIAL	STEEL	ALUMINUM STEEL	NEI TEST 2-3 (AS INSTALLED) NEI TEST 1-7 (UPGRADE)	TEST BOUNDS INSTALLED. NO EVALUATION REQUIRED
CONTENTS/ TOTAL ENCLOSED MASS	11.606 LBS/FT	NEI TEST 2-3 3" = 2.39 LBS/FT 6" = 6.66 LBS/FT NEI TEST 1-7 3" = 7.58 LBS/FT 5" = 14.62 LBS/FT	NEI TEST 2-3 (AS INSTALLED) NEI TEST 1-7 (UPGRADE)	TOTAL THERMAL MASS OF INSTALLED CONFIGURATION IS GREATER THAN THAT TESTED AND IS BOUNDED. SEE EVALUATION E-1.
ORIENTATION	HORIZONTAL TO VERTICAL AND HORIZONTAL IN THE SAME PLANE	HORIZONTAL TO VERTICAL	NEI TEST 2-3 (AS INSTALLED) AND NEI TEST 1-7 (UPGRADE)	TEST BOUNDS INSTALLED. NO EVALUATION REQUIRED

FIGURE F-4	INSTALLED TO TESTED FIRE BARRIER EVALUATION			PAGE 12 OF 38
PERFORMANCE PARAMETERS	1 THERMO-LAG BARRIER SYSTEM/PROTECTED COMMODITY IDENTIFIER: C2XE2ARX002			
	2 APPLICABLE FIRE BARRIER SYSTEM SEGMENT: NODES 2, 4, 6			
BARRIER	3B INSTALLED CONFIGURATION	4B TESTED CONFIGURATION(S) EVALUATED	5B APPLICABLE TESTS	6B EVALUATION/ REF. NO.
MATERIAL TYPE	THERMO-LAG 330-1 PRE-SHAPED CONDUIT SECTIONS (3 HR.)	THERMO-LAG 330-1 PRE-SHAPED CONDUIT SECTIONS (3 HR.)	NEI TEST 2-3 (AS REQUIRED) AND NEI TEST 1-7 (UPGRADE)	SAME. NO EVALUATION REQUIRED.
MATERIAL THICKNESS	1.25" ± 0.25"	1" = 0.250" - 0"	NEI TEST 2-3 (AS REQUIRED) AND NEI TEST 1-7 (UPGRADE)	TEST BOUNDS INSTALLED. NO EVALUATION REQUIRED.
STIFFENER (V-RIB) LOCATION/ ORIENTATION	NONE	NONE	NEI TEST 2-3 (AS INSTALLED) AND NEI TEST 1-7 (UPGRADE)	SAME. NO EVALUATION REQUIRED.
STRESS SKIN LOCATION	BOTH INSIDE AND OUTSIDE	BOTH INSIDE AND OUTSIDE	NEI TEST 2-3 (AS INSTALLED) AND NEI TEST 1-7 (UPGRADE)	SAME. NO EVALUATION REQUIRED

FIGURE F-5	INSTALLED TO TESTED FIRE BARRIER EVALUATION			PAGE 13 OF 38
PERFORMANCE PARAMETERS	1 THERMO-LAG BARRIER SYSTEM/PROTECTED COMMODITY IDENTIFIER: C2XE2ARX002			
	2 APPLICABLE FIRE BARRIER SYSTEM SEGMENT: NODES 2, 4, 6			
BARRIER	3C INSTALLED CONFIGURATION	4C TESTED CONFIGURATION(S) EVALUATED	5C APPLICABLE TESTS	6C EVALUATION/ REF. NO.
JOINT TYPE(S)	PRE-BUTTERED MITERED JOINTS	NEI TEST 2-3 = PRE-BUTTERED MITERED JOINTS NEI TEST 1-7 = PRE-BUTTERED MITERED JOINTS	NEI TEST 2-3 (AS INSTALLED) NEI TEST 1-7 (UPGRADE)	TESTED BOUNDS INSTALLED. NO EVALUATION REQUIRED
JOINT GAP	≤ 1/4"	≤ 1/4"	NEI TEST 2-3 (AS INSTALLED) AND NEI TEST 1-7 (UPGRADE)	SAME. NO EVALUATION REQUIRED
UNSUPPORTED BARRIER SPANS	HALF ROUNDS INSTALLED ON CONDUIT. NO UNSUPPORTED SPANS	HALF ROUNDS INSTALLED ON CONDUIT. NO UNSUPPORTED SPANS	NEI TEST 2-3 (AS INSTALLED) AND NEI TEST 1-7 (UPGRADE)	SAME/NO EVALUATION REQUIRED
INTERNAL SUPPORT MECHANISMS	HALF ROUNDS INSTALLED OVER CONDUIT	HALF ROUNDS INSTALLED OVER CONDUIT	NEI TEST 2-3 (AS INSTALLED) AND NEI TEST 1-7 (UPGRADE)	SAME/NO EVALUATION REQUIRED

FIGURE F-6	INSTALLED TO TESTED FIRE BARRIER EVALUATION			PAGE 14 OF 38
PERFORMANCE PARAMETERS	1 THERMO-LAG BARRIER SYSTEM/PROTECTED COMMODITY IDENTIFIER: C2XE2ARX002			
	2 APPLICABLE FIRE BARRIER SYSTEM SEGMENT: NODES 2, 4, 6			
BARRIER	3D INSTALLED CONFIGURATION	4D TESTED CONFIGURATION(S) EVALUATED	5D APPLICABLE TESTS	6D EVALUATION/ REF. NO.
FASTENER TYPE	1/2" STAINLESS STEEL BANDS	1/2" STAINLESS STEEL BANDS	NEI TEST 2-3 (AS INSTALLED) AND NEI TEST 1-7 (UPGRADE)	SAME. NO EVALUATION REQUIRED
FASTENER SPACING	MINIMUM OF 1 PER MITERED PIECE	1 OR 2 PER MITERED PIECE	NEI TEST 2-3 (AS INSTALLED) AND NEI TEST 1-7 (UPGRADE)	SEE EVALUATION E-2
FASTENER DISTANCE FROM JOINTS	VARIES. BUT, DUE TO THE SIZE OF THE MITERED PIECES THE DISTANCES TO THE JOINT IS GENERALLY 2" OR LESS.	2"	NEI TEST 2-3 (AS INSTALLED) AND NEI TEST 1-7 (UPGRADE)	SEE EVALUATION E-2
FASTENER EDGE GUARDS	NOT USED	NOT USED	NEI TEST 2-3 (AS INSTALLED) AND NEI TEST 2-3 (UPGRADE)	SAME/NO EVALUATION REQUIRED

FIGURE F-7	INSTALLED TO TESTED FIRE BARRIER EVALUATION			PAGE 15 OF 38
PERFORMANCE PARAMETERS	1 THERMO-LAG BARRIER SYSTEM/PROTECTED COMMODITY IDENTIFIER: C2XE2ARX002			
	2 APPLICABLE FIRE BARRIER SYSTEM SEGMENT: NODES 2, 4, 6			
BARRIER	3E INSTALLED CONFIGURATION	4E TESTED CONFIGURATION(S) EVALUATED	5E APPLICABLE TESTS	6E EVALUATION/ REF. NO.
JOINT REINFORCEMENT MECHANISMS	NONE	NEI TEST 2-3 = NONE NEI TEST 1-7 = TROWEL GRADE AND STRESS SKIN UPGRADES ON ALL JOINTS AND SEAM LOCATIONS	NEI TEST 2-3 (AS INSTALLED) NEI TEST 1-7 (UPGRADE)	TEST 2-3 BOUNDS THE INSTALLED. TEST 1-7 DOES NOT BOUND THE INSTALLED. NO EVALUATION REQUIRED. .
STRUCTURAL SUPPORT AND INTERVENING STEEL PROTECTION	SUPPORTS ARE COVERED TO STRUCTURE. THERE IS NO INTERVENING STEEL.	SUPPORT MEMBERS WERE PROTECTED FOR FULL LENGTH IN TESTS 1-7 AND 2-3. NEI TEST 2-3 INCLUDED INTERVENING STEEL MEMBERS PROTECTED FOR AN 18" DISTANCE.	NEI TEST 2-3 (AS INSTALLED) AND NEI TEST 1-7 (UPGRADE)	TESTED BOUNDS INSTALLED. NO EVALUATION REQUIRED
LOCATION OF ENCLOSURE	EXPOSED ON ALL SIDES	EXPOSED ON ALL SIDES	NEI TEST 2-3 (AS INSTALLED) AND NEI TEST 1-7 (UPGRADE)	SAME / NO EVALUATION REQUIRED

1. THERMO-LAG BARRIER SYSTEM/PROTECTED COMMODITY IDENTIFIER: C2XE2ARX002

2. APPLICABLE FIRE BARRIER SYSTEM SEGMENT(S): NODES 2, 4, 6

3. EVALUATION REF. NO.(S): E-1 THROUGH E-2

4. EVALUATION(S):

E-1 ENCLOSED MASS:

C2XE2ARX002	1 - 4" CONDUIT		= 9.720 LB/FT
	4 - 2/C, #16 AWG - 600V		= 0.320 LB/FT
	2 - 4/C, #16 AWG - 600V		= 0.270 LB/FT
	2 - 16 PR, #16 AWG - 600V		= 1.296 LB/FT
		TOTAL	= 11.606 LB/FT

NOTES:

1. THE CABLE WEIGHTS WERE TAKEN FROM CALCULATION EC - 5045, REV. 1, "RACEWAY WEIGHT ANALYSIS". THE PARTICULAR CABLES CONTAINED IN EACH RACEWAY WAS OBTAINED FROM CALCULATION EC - 5046, REV. 4, "POWER CABLE SIZING VERIFICATION IN FIRE WRAPPED RACEWAYS.

2. THE INSTALLED IS BOUNDED B Y THE 3" LBD OF NEI TEST 2-3 AND BY TUEC TEST 11-4. IT IS NOT BOUNDED BY THE 6" LBD IN NEI TEST 2-3

E-2 THE INSTALLERS HAD NO REQUIREMENTS FOR THE DISTANCE OF FASTENERS (BANDS OR TIE WIRES) TO CONDUIT SECTION BUTT JOINTS SO FASTENER TO JOINT DISTANCES VARY. THE INSTALLERS MAINTAINED 12" OR LESS BETWEEN FASTENERS AND THERE WAS A MINIMUM OF ONE FASTENER ON SMALLER SECTIONS (I.E., MITERED JOINTS AT RADIAL BENDS). THE TEST RESULTS DID NOT INDICATE THAT JOINT SEPARATION WAS A FAILURE MODE FOR PRE-SHAPED SECTIONS, THEREFORE FASTENER TO JOINT SPACING IS NOT CONSIDERED A CRITICAL PARAMETER. THE INSTALLED CONFIGURATIONS ARE CONSIDERED BOUNDED BY THE TESTED CONFIGURATIONS.

1. THERMO-LAG BARRIER SYSTEM/PROTECTED COMMODITY IDENTIFIER: C2XE2ARX002

2. APPLICABLE FIRE BARRIER SYSTEM SEGMENT(S): NODES 2, 4, 6

3. EVALUATION REF. NO.(S): E-1 THROUGH E-2

4. EVALUATION(S):

SEGMENT EVALUATION:

AS SHOWN THROUGH PARAMETERS COMPARISONS, THE INSTALLED CONFIGURATION IS BOUNDED BY TESTED CONFIGURATIONS IN NEI 2-3. THE BOUNDING CONFIGURATIONS INCLUDE THE 3" DIAMETER ALUMINUM CONDUIT RADIAL BEND TESTED IN NEI TEST 2-3. THE 3" DIAMETER CONDUIT RADIAL BEND MAXIMUM INDIVIDUAL TEMPERATURE CRITERION (325°F OVER AMBIENT) WAS NOT EXCEEDED WHEN THE TEST WAS SUSPENDED AT 102 MINUTES.

THE 3" DIAMETER STEEL CONDUIT RADIAL BEND TESTED IN NEI TEST 1-7 WOULD BOUND THE INSTALLED IF THE INSTALLED HAD ALL JOINT AND SEAMS UPGRADED WITH STRESS SKIN AND TROWEL GRADE CONSISTENT WITH THE TEST. THE 3" STEEL CONDUIT IN NEI TEST 1-7 EXCEEDED THE MAXIMUM INDIVIDUAL TEMPERATURE CRITERION AFTER 129 MINUTES.

ALTHOUGH THE 3" DIAMETER CONDUIT IN NEI TEST 2-3 EXHIBITED MINOR AREAS OF BURNTHROUGH FOLLOWING THE HOSE STREAM TEST, THIS ASSEMBLY HAD RECEIVED AN ADDITIONAL 11 MINUTES OF FIRE EXPOSURE AFTER EXCEEDING TEMPERATURE ACCEPTANCE CRITERIA AT 91 MINUTES. THEREFORE THE INSTALLED BARRIERS AND THE STEEL CONDUIT SYSTEMS THEMSELVES WOULD PREVENT DAMAGE TO ENCLOSED CABLING DUE TO FIRE FIGHTING ACTIVITIES OR FROM FALLING EXTERNAL OBJECTS DURING FIRE CONDITIONS.

FIGURE F-3	INSTALLED TO TESTED FIRE BARRIER EVALUATION			PAGE 18 0F 38
PERFORMANCE PARAMETERS	1 THERMO-LAG BARRIER SYSTEM/PROTECTED COMMODITY IDENTIFIER: C2XE2ARX002			
	2 APPLICABLE FIRE BARRIER SYSTEM SEGMENT: 1-2, 2-3, 3, 3-4, 4-5, 5-6, 6-7			
COMMODITY	3A INSTALLED CONFIGURATION	4A TESTED CONFIGURATION(S) EVALUATED	5A APPLICABLE TESTS	6A EVALUATION/ REF. NO.
TYPE	CONDUIT STRAIGHT RUN	CONDUIT STRAIGHT RUN	NEI TEST 2-3 (AS INSTALLED) AND NEI TEST 1-7 (UPGRADE)	SAME/NO EVALUATION REQUIRED
SIZE	4"	3" AND 6" 3" AND 5"	NEI TEST 2-3 (AS INSTALLED) NEI TEST 1-7 (UPGRADE)	TESTED BOUNDS INSTALLED/ NO EVALUATION REQUIRED
MATERIAL	STEEL	ALUMINUM STEEL	NEI TEST 2-3 (AS INSTALLED) NEI TEST 1-7 (UPGRADE)	TESTED BOUNDS INSTALLED/NO EVALUATION REQUIRED
CONTENTS/ TOTAL ENCLOSED MASS	11.606 LBS/FT	NEI TEST 2-3 3" COND. = 2.39 LBS/FT. 6" COND .= 6.66 LBS/FT. 3" COND. = 7.58 LBS/FT. 5 " COND = 14.62 LBS/FT	NEI TEST 2-3 (AS INSTALLED) NEI TEST 1-7 (UPGRADE)	TESTED BOUNDS INSTALLED FOR 3" AND 6" CONDUIT IN NEI TEST 2-3 AND FOR THE 3" CONDUIT IN TEST 1-7
ORIENTATION	HORIZONTAL/VERTICAL	HORIZONTAL/VERTICAL	NEI TEST 2-3 (AS INSTALLED) NEI TEST 1-7 (UPGRADE)	SAME/NO EVALUATION REQUIRED.

FIGURE F-4	INSTALLED TO TESTED FIRE BARRIER EVALUATION			PAGE 19 0F 38
PERFORMANCE PARAMETERS	1 THERMO-LAG BARRIER SYSTEM/PROTECTED COMMODITY IDENTIFIER: C2XE2ARX002			
	2 APPLICABLE FIRE BARRIER SYSTEM SEGMENT: 1-2, 2-3, 3, 3-4, 4-5, 5-6, 6-7			
BARRIER	3B INSTALLED CONFIGURATION	4B TESTED CONFIGURATION(S) EVALUATED	5B APPLICABLE TESTS	6B EVALUATION/ REF. NO.
MATERIAL TYPE	THERMO-LAG 330-1 PRE-SHAPED CONDUIT HALF ROUNDS	THERMO-LAG 330-1 PRE-SHAPED CONDUIT HALF ROUNDS	NEI TEST 2-3 (AS INSTALLED) AND NEI TEST 1-7 (UPGRADE)	SAME/NO EVALUATION REQUIRED
MATERIAL THICKNESS	1.25" ± 0.25"	1.00" + 0.250" - 0"	NEI TEST 2-3 (AS INSTALLED) AND NEI TEST 1-7 (UPGRADE)	TESTED BOUNDS INSTALLED. NO EVALUATION REQUIRED
STIFFENER (V-RIB) LOCATION/ ORIENTATION	NONE	NONE	NEI TEST 2-3 (AS INSTALLED) AND NEI TEST 1-7 (UPGRADE)	SAME/NO EVALUATION REQUIRED
STRESS SKIN LOCATION	INSIDE AND OUTSIDE	INSIDE AND OUTSIDE	NEI TEST 2-3 (AS INSTALLED) AND NEI TEST 1-7 (UPGRADE)	SAME/NO EVALUATION REQUIRED

FIGURE F-5	INSTALLED TO TESTED FIRE BARRIER EVALUATION			PAGE 20 0F 38
PERFORMANCE PARAMETERS	1 THERMO-LAG BARRIER SYSTEM/PROTECTED COMMODITY IDENTIFIER: C2XE2ARX002			
	2 APPLICABLE FIRE BARRIER SYSTEM SEGMENT: 1-2, 2-3, 3, 3-4, 4-5, 5-6, 6-7			
BARRIER	3C INSTALLED CONFIGURATION	4C TESTED CONFIGURATION(S) EVALUATED	5C APPLICABLE TESTS	6C EVALUATION/ REF. NO.
JOINT TYPE(S)	PRE-BUTTERED BUTT JOINTS	PRE-BUTTERED BUTT JOINTS POST-BUTTERED BUTT JOINTS	NEI TEST 2-3 (AS INSTALLED) NEI TEST 1-7 (UPGRADE)	TESTED BOUNDS INSTALLED. NO EVALUATION REQUIRED
JOINT GAP	≤ 1/4"	≤ 1/4"	NEI TEST 2-3 (AS INSTALLED) AND NEI TEST 1-7 (UPGRADE)	TESTED BOUNDS INSTALLED. NO EVALUATION REQUIRED
UNSUPPORTED BARRIER SPANS	HALF ROUNDS INSTALLED ON CONDUIT. NO UNSUPPORTED SPANS	HALF ROUNDS INSTALLED ON CONDUIT. NO UNSUPPORTED SPANS.	NEI TEST 2-3 (AS INSTALLED) AND NEI TEST 1-7 (UPGRADE)	SAME. NO EVALUATION REQUIRED.
INTERNAL SUPPORT MECHANISMS	HALF ROUNDS INSTALLED OVER CONDUIT.	HALF ROUNDS INSTALLED OVER CONDUIT	NEI TEST 2-3 (AS INSTALLED) AND NEI TEST 1-7 (UPGRADE)	SAME. NO EVALUATION REQUIRED.

FIGURE F-6	INSTALLED TO TESTED FIRE BARRIER EVALUATION			PAGE 21 0F 38
PERFORMANCE PARAMETERS	1 THERMO-LAG BARRIER SYSTEM/PROTECTED COMMODITY IDENTIFIER: C2XE2ARX002			
	2 APPLICABLE FIRE BARRIER SYSTEM SEGMENT: 1-2, 2-3, 3, 3-4, 4-5, 5-6, 6-7			
BARRIER	3D INSTALLED CONFIGURATION	4D TESTED CONFIGURATION(S) EVALUATED	5D APPLICABLE TESTS	6D EVALUATION/ REF. NO.
FASTENER TYPE	1/2" STAINLESS STEEL BANDS	1/2" STAINLESS STEEL BANDS	NEI TEST 2-3 (AS INSTALLED) AND NEI TEST 1-7 (UPGRADE)	SAME. NO EVALUATION REQUIRED
FASTENER SPACING	12" MAXIMUM	12" MAXIMUM	NEI TEST 2-3 (AS INSTALLED) AND NEI TEST 1-7 (UPGRADE)	TESTED BOUNDS INSTALLED. NO EVALUATION REQUIRED.
FASTENER DISTANCE FROM JOINTS	VARIES. INSTALLERS HAD NO REQUIREMENT TO MAINTAIN FASTENER TO JOINT SPACING.	2" MAXIMUM	NEI TEST 2-3 (AS INSTALLED) AND NEI TEST 1-7 (UPGRADE)	SEE EVALUATION E-2
FASTENER EDGE GUARDS	NOT USED	NOT USED	NEI TEST 2-3 (AS INSTALLED) AND NEI TEST 1-7 (UPGRADE)	SAME. NO EVALUATION REQUIRED

FIGURE F-7	INSTALLED TO TESTED FIRE BARRIER EVALUATION			PAGE 22 OF 38
PERFORMANCE PARAMETERS	1 THERMO-LAG BARRIER SYSTEM/PROTECTED COMMODITY IDENTIFIER: C2XE2ARX002			
	2 APPLICABLE FIRE BARRIER SYSTEM SEGMENT: 1-2, 2-3, 3, 3-4, 4-5, 5-6, 6-7			
BARRIER	3E INSTALLED CONFIGURATION	4E TESTED CONFIGURATION(S) EVALUATED	5E APPLICABLE TESTS	6E EVALUATION/ REF. NO.
JOINT REINFORCEMENT MECHANISMS	NONE	NONE JOINTS AND SEAMS ARE REINFORCED WITH STRESS SKIN AND TROWEL GRADE	NEI TEST 2-3 (AS INSTALLED) NEI TEST 1-7 (UPGRADE)	NEI TEST 2-3 BOUNDS THE INSTALLED. THE INSTALLED WOULD HAVE TO BE UPGRADED TO BE BOUNDED BY NEI TEST 1-7. NO EVALUATION REQUIRED
STRUCTURAL SUPPORT AND INTERVENING STEEL PROTECTION	SUPPORTS ARE COMPLETELY COVERED TO STRUCTURE. INTERVENING STEEL IS COVERED 18".	SUPPORT MEMBERS WERE PROTECTED FOR LENGTH IN NEI TESTS 1-7 AND 2-3. TEST 2-3 INCLUDED INTERVENING STEEL MEMBERS PROTECTED FOR AN 18" DISTANCE.	NEI TEST 2-3 (AS INSTALLED) AND NEI TEST 1-7 (UPGRADE)	TESTED BOUNDS INSTALLED. NO EVALUATION REQUIRED.
LOCATION OF ENCLOSURE	EXPOSED ON ALL SIDES	EXPOSED ON ALL SIDES	NEI TEST 2-3 (AS INSTALLED) AND NEI TEST 1-7 (UPGRADE)	TESTED BOUNDS INSTALLED. NO EVALUATION IS REQUIRED.

1. THERMO-LAG BARRIER SYSTEM/PROTECTED COMMODITY IDENTIFIER: C2XE2ARX002

2. APPLICABLE FIRE BARRIER SYSTEM SEGMENT(S): 1-2, 2-3, 3, 3-4, 4-5, 5-6, 6-7

3. EVALUATION REF. NO.(S): E-1 AND E-2

4. EVALUATION(S):

E-1 ENCLOSED MASS

C2XE2ARX002	1 - 4" CONDUIT		= 9.720 LB/FT
	4 - 2/C, #16 AWG - 600V		= 0.320 LB/FT
	2 - 4/C, #16 AWG - 600V		= 0.270 LB/FT
	2 - 16 PR, #16 AWG - 600V		= 1.296 LB/FT
		TOTAL	= 11.606 LB/FT

NOTES:

1. THE CABLE WEIGHTS WERE TAKEN FROM CALCULATION EC - 5045, REV. 1, "RACEWAY WEIGHT ANALYSIS". THE PARTICULAR CABLES CONTAINED IN EACH RACEWAY WAS OBTAINED FROM CALCULATION EC - 5046, REV. 4, "POWER CABLE SIZING VERIFICATION IN FIRE WRAPPED RACEWAYS.

2. THE INSTALLED IS BOUNDED B Y THE 3" LBD OF NEI TEST 2-3 AND BY TUEC TEST 11-4. IT IS NOT BOUNDED BY THE 6" LBD IN NEI TEST 2-3

E-2 THE INSTALLERS HAD NO REQUIREMENT FOR THE DISTANCE OF FASTENERS (BANDS OR TIE WIRES) TO CONDUIT SECTION BUTT JOINTS SO FASTENER TO JOINT DISTANCES VARY. THE INSTALLERS MAINTAINED 12" OR LESS BETWEEN FASTENERS AND THERE WAS A MINIMUM OF ONE FASTENER ON SMALLER SECTIONS (I.E., MITERED JOINTS AT RADIAL BENDS). THE TEST RESULTS DID NOT INDICATE THAT JOINT SEPARATION WAS A FAILURE MODE FOR PRE-SHAPED SECTIONS, THEREFORE FASTENER TO JOINT SPACING IS NOT CONSIDERED A CRITICAL PARAMETER. THE INSTALLED CONFIGURATIONS ARE CONSIDERED BOUNDED BY THE TESTED CONFIGURATIONS.

FIGURE F-8 INSTALLED TO TESTED FIRE BARRIER EVALUATION

1. THERMO-LAG BARRIER SYSTEM/PROTECTED COMMODITY IDENTIFIER: C2XE2ARX002

2. APPLICABLE FIRE BARRIER SYSTEM SEGMENT(S): 1-2, 2-3, 3, 3-4, 4-5, 5-6, 6-7

3. EVALUATION REF. NO.(S): E-1 AND E-2

4. EVALUATION(S):

SEGMENT EVALUATION:

AS SHOWN THROUGH PARAMETER COMPARISONS, THE INSTALLED CONFIGURATION IS BOUNDED BY THE 3" CONDUIT TESTED CONFIGURATION IN NEI TEST 2-3. THE 3" DIAMETER CONDUIT MAXIMUM INDIVIDUAL TEMPERATURE CRITERION (325° F OVER AMBIENT) WAS EXCEEDED AT 91 MINUTES.

THE 3" DIAMETER OR STEEL CONDUIT CONFIGURATION TESTED IN NEI TEST 1-7 WOULD BOUND THE INSTALLED IF THE INSTALLED HAD ALL JOINTS AND SEAMS UPGRADED WITH STRESS SKIN AND TROWEL GRADE CONSISTENT WITH THAT TEST. THE 3" STEEL CONDUIT IN NEI TEST 1-7 EXCEEDED THE MAXIMUM INDIVIDUAL TEMPERATURE CRITERION AFTER 112 MINUTES

WHILE A MINOR BARRIER OPENING OCCURRED IN THE 6" LBD IN NEI TEST 2-3, THE INSTALLED CONFIGURATION INVOLVES CABLES IN CONDUITS WHICH WOULD NOT BE PRONE TO DAMAGE DUE TO FIRE FIGHTING ACTIVITIES OR FALLING EXTERNAL OBJECTS DURING FIRE CONDITIONS.

FIGURE F-3	INSTALLED TO TESTED FIRE BARRIER EVALUATION			PAGE 25 OF 38
PERFORMANCE PARAMETERS	1 THERMO-LAG BARRIER SYSTEM/PROTECTED COMMODITY IDENTIFIER: C2XE2ARX002			
	2 APPLICABLE FIRE BARRIER SYSTEM SEGMENT: NODE 5			
COMMODITY	3A INSTALLED CONFIGURATION	4A TESTED CONFIGURATION(S) EVALUATED	5A APPLICABLE TESTS	6A EVALUATION/ REF. NO.
TYPE	CONDULET	LBD'S LBD'S	NEI TEST 1-7 (UPGRADE) NEI TEST 2-3 (AS INSTALLED)	TESTED BOUNDS INSTALLED. NO EVALUATION REQUIRED.
SIZE	4"	3" AND 5" LBDS 3" AND 6" LBD'S	NEI TEST 1-7 (UPGRADE) NEI TEST 2-3 (AS INSTALLED)	TESTED BOUNDS INSTALLED. NO EVALUATION REQUIRED.
MATERIAL	STEEL	STEEL ALUMINUM	NEI TEST 1-7 (UPGRADE) NEI TEST 2-3 (AS INSTALLED)	TESTED BOUNDS INSTALLED. NO EVALUATION REQUIRED.
CONTENTS/ TOTAL ENCLOSED MASS	46.424 LBS	3" LBD = 15.00 LBS 5" LBD = 19.88 LBS 3" LBD = 5.62 LBS 6" LBD = 70.00 LBS	NEI TEST 1-7 (UPGRADE) NEI TEST 2-3 (AS INSTALLED)	TESTED BOUNDS INSTALLED. SEE EVALUATION E-1.
ORIENTATION	HORIZONTAL	3" = HORIZONTAL 5" = VERTICAL 3" AND 6" = VERTICAL	NEI TEST 1-7 (UPGRADE) NEI TEST 2-3 (AS INSTALLED)	TESTED BOUNDS INSTALLED. NO EVALUATION REQUIRED.

FIGURE F-4	INSTALLED TO TESTED FIRE BARRIER EVALUATION			PAGE 26 OF 38
PERFORMANCE PARAMETERS	1 THERMO-LAG BARRIER SYSTEM/PROTECTED COMMODITY IDENTIFIER: C2XE2ARX002			
	2 APPLICABLE FIRE BARRIER SYSTEM SEGMENT: NODE 5			
BARRIER	3B INSTALLED CONFIGURATION	4B TESTED CONFIGURATION(S) EVALUATED	5B APPLICABLE TESTS	6B EVALUATION/ REF. NO.
MATERIAL TYPE	THERMO-LAG 330-1 V-RIB PANELS	THERMO-LAG 330-1 V-RIBBED PANELS	NEI TEST 1-7 (UPGRADE) AND NEI TEST 2-3 (AAS INSTALLED)	TESTED BOUNDS INSTALLED. NO EVALUATION REQUIRED.
MATERIAL THICKNESS	1.25" ± 0.25"	1" + 0.250" - 0"	NEI TEST 1-7 (UPGRADE) AND NEI TEST 2-3 (AS INSTALLED)	TESTED BOUNDS INSTALLED. NO EVALUATION REQUIRED.
STIFFENER (V-RIB) LOCATION/ ORIENTATION	INSIDE. ORIENTATION VARIES.	INTERNAL AND ORIENTED HORIZONTAL	NEI TEST 1-7 (UPGRADE) AND NEI TEST 2-3 (AS INSTALLED)	TESTED BOUNDS INSTALLED. NO EVALUATION REQUIRED.
STRESS SKIN LOCATION	BOTH INSIDE AND OUTSIDE	INSIDE AND OUTSIDE	NEI TEST 1-7 (UPGRADE) AND NEI TEST 2-3 (AS INSTALLED)	TESTED BOUNDS INSTALLED. NO EVALUATION REQUIRED.

FIGURE F-5	INSTALLED TO TESTED FIRE BARRIER EVALUATION			PAGE 27 OF 38
PERFORMANCE PARAMETERS	1 THERMO-LAG BARRIER SYSTEM/PROTECTED COMMODITY IDENTIFIER: C2XE2ARX002			
	2 APPLICABLE FIRE BARRIER SYSTEM SEGMENT:: NODE 5			
BARRIER	3C INSTALLED CONFIGURATION	4C TESTED CONFIGURATION(S) EVALUATED	5C APPLICABLE TESTS	6C EVALUATION/ REF. NO.
JOINT TYPE(S)	PRE-BUTTERED BUTT JOINTS.	POST-BUTTERED BUTT JOINTS PRE-BUTTERED BUTT JOINTS WITH SOME SCORE AND FOLD ON THE 6" LBD	NEI TEST 1-7 (UPGRADE) NEI TEST 2-3 (AS INSTALLED	TESTED BOUNDS INSTALLED. NO EVALUATION REQUIRED.
JOINT GAP	< 1/4" GAP	≤ 1/4" GAP	NEI TEST 1-7 (UPGRADE) AND NEI TEST 2-3 (AS INSTALLED)	SAME. NO EVALUATION REQUIRED.
UNSUPPORTED BARRIER SPANS	48" X 8" X 8"	3" LBD = 18" X 10" X 10" 5" LBD = 24" X 10" X 10" 3" LBD = 18" X 10" X 10" 6" LBD = 45" X 12" X 13"	NEI TEST 1-7 (UPGRADE) NEI TEST 2-3 (AS INSTALLED)	TESTED BOUNDS INSTALLED. NO EVALUATION REQUIRED.
INTERNAL SUPPORT MECHANISMS	INSTALLED AGAINST CONDULET	THE TESTED BARRIERS ARE INSTALLED SO THAT THEY ARE SUPPORTED BY THE LBD'S	NEI TEST 1-7 (UPGRADE) AND NEI TEST 2-3 (AS INSTALLED)	SAME. NO EVALUATION REQUIRED.

FIGURE F-6	INSTALLED TO TESTED FIRE BARRIER EVALUATION			PAGE 28 OF 38
PERFORMANCE PARAMETERS	1 THERMO-LAG BARRIER SYSTEM/PROTECTED COMMODITY IDENTIFIER: C2XE2ARX002			
	2 APPLICABLE FIRE BARRIER SYSTEM SEGMENT: NODE 5			
BARRIER	3D INSTALLED CONFIGURATION	4D TESTED CONFIGURATION(S) EVALUATED	5D APPLICABLE TESTS	6D EVALUATION/ REF. NO.
FASTENER TYPE	1/2" BANDS	1/2" BANDS	NEI TEST 1-7 (UPGRADE) AND NEI TEST 2-3 (AS INSTALLED)	SAME. NO EVALUATION REQUIRED.
FASTENER SPACING	12" MAXIMUM	12" MAXIMUM	NEI TEST 1-7 (UPGRADE) AND NEI TEST 2-3 (AS INSTALLED)	SAME. NO EVALUATION REQUIRED.
FASTENER DISTANCE FROM JOINTS	VARIES. INSTALLERS HAD NO MAXIMUM SPACING REQUIREMENT FROM JOINTS	2" MAXIMUM	NEI TEST 1-7 (UPGRADE) AND NEI TEST 2-3 (AS INSTALLED)	SEE EVALUATION E-2
FASTENER EDGE GUARDS	NONE	NONE	NEI TEST 1-7 (UPGRADE) AND NEI TEST 2-3 (AS INSTALLED)	SAME. NO EVALUATION REQUIRED.

FIGURE F-7	INSTALLED TO TESTED FIRE BARRIER EVALUATION			PAGE 29 OF 38
PERFORMANCE PARAMETERS	1 THERMO-LAG BARRIER SYSTEM/PROTECTED COMMODITY IDENTIFIER: C2XE2ARX002			
	2 APPLICABLE FIRE BARRIER SYSTEM SEGMENT: NODE 5			
BARRIER	3E INSTALLED CONFIGURATION	4E TESTED CONFIGURATION(S) EVALUATED	5E APPLICABLE TESTS	6E EVALUATION/ REF. NO.
JOINT REINFORCEMENT MECHANISMS	NONE	JOINTS REINFORCED WITH TROWEL GRADE AND STRESS SKIN. NONE	NEI TEST 1-7 (UPGRADE) NEI TEST 2-3 (AS INSTALLED)	NEI TEST 2-3 BOUNDS THE INSTALLED BUT TEST 1-7 DOES NOT. NO EVALUATION REQUIRED.
STRUCTURAL SUPPORT AND INTERVENING STEEL PROTECTION	SUPPORTS ARE COMPLETELY COVERED. INTERVENING STEEL CONDUITS ARE COVERED OUT 18".	SUPPORT MEMBERS COVERED OUT FULL LENGTH. SUPPORT MEMBERS WERE PROTECTED FOR FULL LENGTH AND INTERVENING STEEL MEMBERS WERE PROTECTED FOR AN 18" DISTANCE	NEI TEST 1-7 (UPGRADE) NEI TEST 2-3 (AS INSTALLED)	TESTED BOUNDS INSTALLED. NO EVALUATION REQUIRED.
LOCATION OF ENCLOSURE	OPEN ON ALL SIDES	OPEN ON ALL SIDES	NEI TEST 1-7 (UPGRADE) AND NEI TEST 2-3 (AS INSTALLED)	SAME. NO EVALUATION REQUIRED.

1. THERMO-LAG BARRIER SYSTEM/PROTECTED COMMODITY IDENTIFIER: C2XE2ARX002

2. APPLICABLE FIRE BARRIER SYSTEM SEGMENT(S): NODE 5

3. EVALUATION REF. NO.(S): E-1

4. EVALUATION(S):

E-1 ENCLOSED MASS

C2XE2ARX002	1 - 4" CONDUIT		= 9.720 LB/FT
	4 - 2/C, #16 AWG - 600V		= 0.320 LB/FT
	2 - 4/C, #16 AWG - 600V		= 0.270 LB/FT
	2 - 16 PR, #16 AWG - 600V		= 1.296 LB/FT
		TOTAL	= 11.606 LB/FT

4' OF C2XE2ARX002 = 4' X 11.606LB/FT = 46.424 LBS

NOTES:

1. THE CABLE WEIGHTS WERE TAKEN FROM CALCULATION EC - 5045, REV. 1, "RACEWAY WEIGHT ANALYSIS". THE PARTICULAR CABLES CONTAINED IN EACH RACEWAY WAS OBTAINED FROM CALCULATION EC - 5046, REV. 4, "POWER CABLE SIZING VERIFICATION IN FIRE WRAPPED RACEWAYS.

2. THE INSTALLED IS BOUNDED B Y THE 3" LBD OF NEI TEST 2-3 AND BY TUEC TEST 11-4. IT IS NOT BOUNDED BY THE 6" LBD IN NEI TEST 2-3

3. WEIGHTS FOR A 4" CONDULET WERE NOT READILY AVAILABLE. CONSERVATIVELY USED THE WEIGHT OF THE 4" CONDUIT FOR THE LENGTH OF THE COVERAGE.

E-2 BANDS WERE USED ON THE INSTALLED CABLE TRAY AND FASTENER SPACING WAS MAINTAINED AT 12" OR LESS. THERE WAS HOWEVER NO REQUIREMENT FOR BAND TO JOINT SPACING SO THAT DIMENSION VARIES. THE ACTUAL INSTALLED CONFIGURATION IS WITHIN 4" OF THE JOINT ON THE BOTTOM PANEL FOR THE HORIZONTAL SECTION WHICH WOULD BE THE CRITICAL JOINT. THIS COUPLED WITH THE FACT THAT THESE ARE 3 HOUR PANELS WHICH DID NOT TEND TO DISTORT IN THE TESTING RESULTS IN THE SPACING OF THE BANDS TO JOINT GREATER THAN 2 " BEING INSIGNIFICANT AND THE INSTALLED BEING BOUNDED BY THE TESTED. TO MAINTAIN CONSERVATISM IN THIS EVALUATION CREDIT IS BEING TAKEN FOR ONLY A 60 MINUTE BARRIER RATING INSTEAD OF THE 86 MINUTES OBTAINED IN NEI TEST 2-3

FIGURE F-8 INSTALLED TO TESTED FIRE BARRIER EVALUATION PAGE 31 OF 38

1. THERMO-LAG BARRIER SYSTEM/PROTECTED COMMODITY IDENTIFIER: C2XE2ARX002

2. APPLICABLE FIRE BARRIER SYSTEM SEGMENT(S): NODE 5

3. EVALUATION REF. NO.(S): E-1 THROUGH E-2

4. EVALUATION(S):

SEGMENT EVALUATION:

AS SHOWN THROUGH PARAMETER COMPARISONS, THE INSTALLED CONFIGURATION IS BOUNDED BY TESTED CONFIGURATIONS IN NEI TEST 2-3. THE BOUNDING CONFIGURATION IS THE 3" LBD. THE 3" LBD MAXIMUM INDIVIDUAL TEMPERATURE CRITERION WAS NOT EXCEEDED WHEN THE TEST WAS STOPPED AT 102 MINUTES.

THE 3" LBD TESTED IN NEI TEST 1-7 WOULD BOUND THE INSTALLED IF THE 4" CONDULET HAD AN OVERLAY INSTALLED AND HAD ALL JOINTS AND SEAMS UPGRADED WITH STRESS SKIN AND TROWEL GRADE CONSISTENT WITH THE TEST. THE 3" LBD IN NEI TEST 1-7 ACHIEVED A 180 MINUTE RATING.

WHILE A MINOR BARRIER OPENING OCCURRED IN THE 6" LBD IN NEI TEST 2-3, THE INSTALLED CONFIGURATION INVOLVES CABLES IN CONDUITS WHICH WOULD NOT BE PRONE TO DAMAGE DUE TO FIRE FIGHTING ACTIVITIES OR FROM FALLING EXTERNAL OBJECTS DURING FIRE CONDITIONS.

FIGURE F-3	INSTALLED TO TESTED FIRE BARRIER EVALUATION			PAGE 32OF 38
PERFORMANCE PARAMETERS	1. THERMO-LAG BARRIER SYSTEM/PROTECTED COMMODITY IDENTIFIER: C2XE2ARX002			
	2 APPLICABLE FIRE BARRIER SYSTEM SEGMENT: NODE 7			
COMMODITY	3A INSTALLED CONFIGURATION	4A TESTED CONFIGURATION(S) EVALUATED	5A APPLICABLE TESTS	6A EVALUATION/ REF. NO.
TYPE	CONDUIT INTERFACE WITH A STRUCTURE.	CONDUIT/WALL INTERFACE CABLES AIR DROPPING FROM CABLE TRAYS TO EMBEDDED WALL SLEEVES	NEI TEST 2-2 TUEC TEST SCHEME 11-4	SEE EVALUATION E-1.
SIZE	4"	3/4",2" & 3" CONDUITS 24 AIR DROPPING CABLES AT EMBEDDED WALL SLEEVES	NEI TEST 2-2 TUEC TEST SCHEME 11-4	SEE EVALUATION E-1.
MATERIAL	STEEL	ALUMINUM ELECTRICAL CABLES	NEI TEST 2-2 TUEC TEST SCHEME 11-4	TEST BOUNDS INSTALLED. NO EVALUATION REQUIRED
CONTENTS/ TOTAL ENCLOSED MASS	N/A AT INTERFACE	N/A AT INTERFACE	NEI TEST 2-2 AND TUEC TEST SCHEME 11-4	THIS IS AN EVALUATION OF THE INTERFACE BETWEEN CONDUIT COVERAGE AND A CONCRETE WALL. THERMAL MASS IS NOT A CONSIDERATION IN THIS EVALUATION
ORIENTATION	HORIZONTAL/VERTICAL	VERTICAL/HORIZONTAL	NEI TEST 2-2 AND TUEC TEST SCHEME 11-4	TEST BOUNDS INSTALLED. NO EVALUATION REQUIRED

FIGURE F-4	INSTALLED TO TESTED FIRE BARRIER EVALUATION			PAGE 33 OF 38
PERFORMANCE PARAMETERS	1. THERMO-LAG BARRIER SYSTEM/PROTECTED COMMODITY IDENTIFIER: C2XE2ARX002			
	2 APPLICABLE FIRE BARRIER SYSTEM SEGMENT: NODE 7			
BARRIER	3B INSTALLED CONFIGURATION	4B TESTED CONFIGURATION(S) EVALUATED	5B APPLICABLE TESTS	6B EVALUATION/ REF. NO.
MATERIAL TYPE	THERMO-LAG 330-1 PRE-SHAPED CONDUIT HALF ROUNDS (3HR.)	THERMO-LAG 330-1 V-RIB PANELS FLATTENED THERMO-LAG 330-1 FLAT PANELS	NEI TEST 2-2 TUEC TEST SCHEME 11-4	SEE EVALUATION E-1.
MATERIAL THICKNESS	1.25" ± .25"	0.50" + 0.125" - 0" 0.625" ± 0.125"	NEI TEST 2.2 TUEC TEST SCHEME 11-4	TESTED BOUNDS INSTALLED. NO EVALUATION REQUIRED.
STIFFENER (V-RIB) LOCATION/ ORIENTATION	NONE.	INTERNAL BUT FLATTENED NONE	NEI TEST 2-2 TUEC TEST SCHEME 11-4	SEE EVALUATION E-1.
STRESS SKIN LOCATION	INTERNAL AND EXTERNAL	INTERNAL	NEI TEST 2-2 AND TUEC TEST SCHEME 11-4	TESTED BOUNDS INSTALLED. NO EVALUATION REQUIRED.

FIGURE F-5	INSTALLED TO TESTED FIRE BARRIER EVALUATION			PAGE 34 OF 38
PERFORMANCE PARAMETERS	1. THERMO-LAG BARRIER SYSTEM/PROTECTED COMMODITY IDENTIFIER: C2XE2ARX002			
	2 APPLICABLE FIRE BARRIER SYSTEM SEGMENT: NODE 7			
BARRIER	3C INSTALLED CONFIGURATION	4C TESTED CONFIGURATION(S) EVALUATED	5C APPLICABLE TESTS	6C EVALUATION/ REF. NO.
JOINT TYPE(S)	PRE-BUTTERED "PICTURE FRAME" BUTTED TO RACEWAY COVERAGE AND BOLTED TO THE CONCRETE WALL.	SCORE & FOLD "PICTURE FRAME" BOLTED TO CONCRETE. PRE-BUTTERED "PICTURE FRAME" BUTTED TO RACEWAY COVERAGE AND BOLTED TO THE CONCRETE WALL.	NEI TEST 2-2 TUEC TEST SCHEME 11-4	INSTALLED IS NOT BOUNDED BY TESTED. SEE EVALUATION E-1.
JOINT GAP	≤ 1/4"	≤ 1/4"	NEI TEST 2-2 AND TUEC TEST SCHEME 11-4	SAME/NO EVALUATION REQUIRED
UNSUPPORTED BARRIER SPANS	N/A AT WALL INTERFACE	N/A AT WALL INTERFACE	NEI TEST 2-2 AND TUEC TEST SCHEME 11-4	SAME/NO EVALUATION REQUIRED
INTERNAL SUPPORT MECHANISMS	N/A AT WALL INTERFACE	N/A AT WALL INTERFACE	NEI TEST 2-2 AND TUEC TEST SCHEME 11-4	SAME/NO EVALUATION REQUIRED.

FIGURE F-6	INSTALLED TO TESTED FIRE BARRIER EVALUATION			PAGE 35 OF 38
PERFORMANCE PARAMETERS	1. THERMO-LAG BARRIER SYSTEM/PROTECTED COMMODITY IDENTIFIER: C2XE2ARX002			
	2 APPLICABLE FIRE BARRIER SYSTEM SEGMENT: NODE 7			
BARRIER	3D INSTALLED CONFIGURATION	4D TESTED CONFIGURATION(S) EVALUATED	5D APPLICABLE TESTS	6D EVALUATION/ REF. NO.
FASTENER TYPE	NONE AT INTERFACE	CONCRETE ANCHOR BOLTS	NEI TEST 2-2 AND TUEC TEST SCHEME 11-4	SEE EVALUATION E-1.
FASTENER SPACING	NONE AT INTERFACE	BOLTS SPACED A MAXIMUM OF 12"	NEI TEST 2-2 AND TUEC TEST SCHEME 11-4	SEE EVALUATION E-1
FASTENER DISTANCE FROM JOINTS	NONE AT INTERFACE	1" - 2" FROM JOINTS AND EDGE OF THERMO-LAG	NEI TEST 2-2 AND TUEC TEST SCHEME 11-4	SEE EVALUATION E-1.
FASTENER EDGE GUARDS	NONE	NONE	NEI TEST 2.2 AND TUEC TEST SCHEME 11-4	SAME/NO EVALUATION REQUIRED

FIGURE F-7	INSTALLED TO TESTED FIRE BARRIER EVALUATION			PAGE 36 OF 38
PERFORMANCE PARAMETERS	1. THERMO-LAG BARRIER SYSTEM/PROTECTED COMMODITY IDENTIFIER: C2XE2ARX002 2 APPLICABLE FIRE BARRIER SYSTEM SEGMENT: NODE 7			
BARRIER	3E INSTALLED CONFIGURATION	4E TESTED CONFIGURATION(S) EVALUATED	5E APPLICABLE TESTS	6E EVALUATION/ REF. NO.
JOINT REINFORCEMENT MECHANISMS	NONE	GROOVE AND FOLD METHOD IS USED AT JOINTS WHERE THERMO-LAG FLARES OUT ONTO THE CONCRETE. "PICTURE FRAME" IS TIED INTO RACEWAY COVERAGE UTILIZING A STRESS SKIN AND TROWEL GRADE UPGRADE.	NEI TEST 2-2 TUEC TEST SCHEME 11-4	SEE EVALUATION E-2
STRUCTURAL SUPPORT AND INTERVENING STEEL PROTECTION	NONE.	NONE	NEI TEST 2-2 AND TUEC TEST SCHEME 11-4	SAME. NO EVALUATION REQUIRED.
LOCATION OF ENCLOSURE	AT A CONCRETE WALL	AT A CONCRETE CEILING AT A CONCRETE WALL	NEI TEST 2-2 TUEC TEST SCHEME 11-4	SAME/ NO EVALUATION REQUIRED.

FIGURE F-8 INSTALLED TO TESTED FIRE BARRIER EVALUATION PAGE 37 OF 38

1. THERMO-LAG BARRIER SYSTEM/PROTECTED COMMODITY IDENTIFIER: C2XE2ARX002

2. APPLICABLE FIRE BARRIER SYSTEM SEGMENT(S): NODE 7

3. EVALUATION REF. NO.(S): E-1 THROUGH E-3

4. EVALUATION(S):

E-1 THIS EVALUATION IS FOR THE INTERFACE OF THERMO-LAG COVERAGE ON A CONDUIT WITH A WALL. THE ONLY TWO TESTED ARRANGEMENTS OF THERMO-LAG MATERIAL ABUTTING MASONRY ARE IN NEI TEST 2-2 IN WHICH A THERMO-LAG BOX DESIGN UTILIZING 1 HOUR MATERIAL CONFIGURATION WAS ATTACHED TO THE CEILING OF THE TEST DECK WITH HILTI BOLTS, AND TUEC TEST SCHEME 11-4 WHICH INCLUDED A SIMILAR BOX DESIGN UTILIZING 1 HOUR MATERIAL ATTACHED TO A CONCRETE WALL. IN NEI TEST 2-2 THERMO LAG V-RIB PANELS WERE SCORE & FOLDED TO CREATE A BOX SHAPED ENCLOSURE WITH 3 INCH FLANGES ALL AROUND WHICH LAY FLAT AGAINST THE CONCRETE AND ACT AS A BASE THROUGH WHICH ANCHOR BOLTS WERE INSTALLED. THIS FLANGED AREA PROVIDES STRUCTURAL SUPPORT AND THERMAL PROTECTION FOR THE INTERFACE AREA. TUEC TEST SCHEME 11-4 UTILIZED A SEPARATE "PICTURE FRAME" COLLAR AROUND A THERMO-LAG BOX. THE BOX WAS CONNECTED TO THE "PICTURE FRAME" WITH STRESS SKIN AND TROWEL GRADE TO ENSURE STRUCTURAL SUPPORT.

E-2 THE INSTALLED IS NOT BOUNDED BY THE TESTED DUE TO THE LACK OF STRESS SKIN AND TROWEL GRADE AT THE "PICTURE FRAME" AT THE STRUCTURE INTERFACE. THE ACCEPTABLE UPGRADE WOULD BE TO TIE THE "PICTURE FRAME" COVERAGE INTO THE CONDUIT COVERAGE WITH STRESS SKIN AND TROWEL GRADE PER TUEC TEST SCHEME 11-4.

FIGURE F-8 INSTALLED TO TESTED FIRE BARRIER EVALUATION PAGE 38 OF 38

1. THERMO-LAG BARRIER SYSTEM/PROTECTED COMMODITY IDENTIFIER: C2XE2ARX002

2. APPLICABLE FIRE BARRIER SYSTEM SEGMENT(S): NODE 7

3. EVALUATION REF. NO.(S): E-1 THROUGH E-2

4. EVALUATION(S):

SEGMENT EVALUATION:

AS INSTALLED, THERE IS NO BOUNDING TEST AND THEREFORE NO FIRE RATING FOR THE STRUCTURE INTERFACE. THE PRINCIPAL ATTRIBUTE MISSING FROM THE INSTALLED CONFIGURATION IS STRESS SKIN AND TROWEL GRADE SUPPORT BETWEEN THE "PICTURE FRAME" AND CONDUIT COVERAGE PROVIDING ADDITIONAL STRUCTURAL PROTECTION AT THE INTERFACE AREA.

AN UPGRADE OF THE INSTALLED CONFIGURATIONS BY TYING THE "PICTURE FRAME" COVERAGE INTO THE RACEWAY COVERAGE WITH STRESS SKIN AND TROWEL GRADE PER TUEC TEST SCHEME 11-4, WILL PROVIDE REASONABLE ASSURANCE THAT THE INSTALLED WILL BE BOUNDED BY THAT TEST AND PROVIDE A RATED DURATION OF 60 MINUTES.

TESTED RACEWAYS EXHIBITED ACCEPTABLE STRUCTURAL INTEGRITY IN THE AREA OF THE THERMO-LAG COLLARS FOLLOWING THE HOSE STREAM TEST.

APPENDIX B

SUMMARY OF RESULTS

Appendix B
Summary of Results

South Texas Project Unit One

Fire Area	Fire Rating Classification (1 or 3 Hour)	Commodity Number	Commodity Size	Commodity	Bounded By Test (Y/N)	Barrier Rating As Installed (Min)	Applicable Test(s)	Anticipated Barrier Rating (By Eval) with Upgrade (Min)	Applicable Test(s)
07	3	C1XE2ATSAB	24"	Box Configuration	N	0	N/A	60	TUEC Test 11-4
				Cable Tray Straight Run	Y	60	NEI Test 2-10	86	NEI Test 2-10
				Cable Tray Radial Bend	Y	60	NEI Test 2-10	86	NEI Test 2-10
				Cable Tray/Wall Interface	N	0	N/A	60	TUEC Test 11-4
	3	C1XE2ARX002	4"	Junction Box Configuration	N	0	N/A	60	TUEC Test 11-4
				Conduit Straight Run	Y	91	NEI Test 2-3	112	NEI Test 1-7
				Conduit Radial Bend	Y	102	NEI Test 2-3	129	NEI Test 1-7
				Conduit/Wall Interface	N	0	N/A	60	TUEC Test 11-4

Appendix B
Summary of Results

South Texas Project Unit Two

Fire Area	Fire Rating Classification (1 or 3 Hour)	Commodity Number	Commodity Size	Commodity	Bounded By Test (Y/N)	Barrier Rating As Installed (Min)	Applicable Test(s)	Anticipated Barrier Rating (By Eval) with Upgrade (Min)	Applicable Test(s)
07	3	C2XE2ATSAB	24"	Box Configuration	N	0	N/A	60	TUEC Test 11-4
				Cable Tray Straight Run	Y	60	NEI Test 2-10	86	NEI Test 2-10
				Cable Tray Radial Bend	Y	60	NEI Test 2-10	86	NEI Test 2-10
				Cable Tray/Wall Interface	N	0	N/A	60	TUEC Test 11-4
	3	C2XE2ARX002	4"	Junction Box Configuration	N	0	N/A	60	TUEC Test 11-4
				Conduit Straight Run	Y	91	NEI Test 2-3	112	NEI Test 1-7
				Conduit Radial Bend	Y	102	NEI Test 2-3	129	NEI Test 1-7
				Conduit Coupling	Y	91	NEI Test 2-3	112	NEI Test 1-7
				Condulet	Y	102	NEI Test 2-3	180	NEI Test 1-7
				Conduit/Wall Interface	N	0	N/A	60	TUEC Test 11-4

APPENDIX C

UPGRADE TECHNIQUES

APPENDIX C

UPGRADE TECHNIQUES

This Appendix contains detailed descriptions of the upgrades to existing Thermo-Lag configurations referenced in Appendices A and B for structural interfaces.

1.0 Upgrade of Structural Interfaces per TUEC Test 11-4

1.1 Structural Interface Upgrade with "Picture Frame" where no frame currently exists.

1.1.1 Install stress skin around the perimeter of the enclosure extending approximately 3 in. onto sides of the enclosure, stapled to the Thermo-Lag panels with 9/16 in. staples and then flared out onto the concrete surface for an approximate 2 in. distance.

1.1.2 Install an approximate 3/16 in. thick layer of 330-1 Trowel Grade material over the stress skin.

1.1.3 Install 2 in. wide flat panel strips in a "picture frame" fashion over the stress skin portion which flared out onto the structural surface using 1/4 in. diameter x 3 1/4 in. long "Hilti" bolts spaced at approximately 10 in. intervals and 1 in. from the edge of the panel strips.

1.2 Structural interface upgrade with stress skin and trowel grade where "picture frame" exists, but there is no stress skin and trowel grade joints reinforcement.

1.2.1 This is not a specific tested arrangement, but the following upgrades are based on tested joint reinforcement techniques used to reinforce other joints in TUEC Test 11-4.

1.2.2 Install an approximate 3/16 in. thick layer of 330-1 Trowel Grade material extending approximately 3 in. onto sides of the enclosure and flared out onto the "picture frame" at least 2". Thermo-Lag panels that are installed over the panel that is bolted to the structure to cover the Hilti bolt should be removed before applying the trowel grade.

1.2.3 Install stress skin over the trowel trade and secure with 9/16" staples. Stress skin can be cut out as necessary to accommodate the bolts.

1.2.4 Apply a skim coat of Trowel Grade approximately 1/16" thick over the stress skin and staples.

APPENDIX D

RECORD OF CONVERSATION WITH THERMO-LAG INSTALLER

APPENDIX D

Record of Conversation

[ ] **Telephone** [X] **Meeting** [ ] **Other** _____

To: McArthur Johnson **From:** John G. Crowther

Company: HL&P STPEGS **Phone No:** N/A **Date:** 10/26/94

Subject: Original Thermo-Lag Installation at STPEGS

Summary of Conversation:

Background

An interview was conducted on October 26, 1994 with Mr. McArthur Johnson who was involved in the original installation of Thermo-Lag at STPEGS in the late 1980's. This interview was based on Mr. Johnson's best recollections. The information provided is to supplement information obtained from the installation manual and the QA records to determine how the Thermo-Lag configurations were constructed.

Summary of Conversation

Materials

- STPEGS received prefabricated panels and preshaped conduit sections from Thermal Sciences, Inc. (TSI). There were no panels or conduit sections fabricated on site. Panels were V-ribbed. Stress skin on 3 hour materials was on the inside and outside.

Installation

- The installation was to a quality control program. There were QC hold points in the work packages.
- Joints were pre-buttered, butt joints.
- V-ribs were pounded flat when it was necessary to make a joint fit.
- Material was not "thinned" or cut away in any manner which would result in less than minimum thickness.
- Radial bends were covered with mitered joints on conduit. Coverage on cable

tray radial bends was provided by bending the panels to the extent possible without damaging the panel then mitering pieces to obtain coverage around the bend.

- Stress skin was no removed and, if damaged or loose, it was repaired or the piece replaced.

- Banding was the most prevalent fastener used with a maximum spacing of 12" (there was no maximum distance requirement of fastener to Thermo-Lag joint). Tie wires were also used and panels against concrete structures were secured with expansion bolts.