ATTACHMENT A

Specification No.: 5875-MP-1

CARBON STEEL METAL ARC WELDING PROCEDURE

FOR USE ON PANELS FOR ARIZONA NUCLEAR POWER PROJECT, PALO VERDE GENERATING STATION, UNITS 1, 2, & 3.

COMSIP INCORPORATED
CUSTOMLINE DIVISION
Linden, New Jersey

Ref : Bechtel/Arizona
P.O. #10407-JM-000

REV.	DATE	DESCRIPTION	COMSIP APPROVALS			
			BY	Q.A.	PROD	PROJ
6	4/12/82	REVISED TO INCLUDE MODIFIED ACCEPTANCE CRITERIA TO AWSD1.1	CMA	CMA	TB	RCR
7	10/27/82	Procedure re-qualified	CMA	CMA	[illegible]	RCR

8308010435 830726
PDR QA999 EMVCOMSD
99900771 PDR

QUALIFIED JOINT WELDING PROCEDURE
PROCEDURE SPECIFICATION

Material specification: A36 to A 36
Welding process: G.M.A.W.
Manual or machine: Semi-Automatic
Position of welding: 5G - Fixed Horiz.
Filler metal specification: AWS 5.18
Filler metal classification: E70S-3
Flux: N/A
Weld metal grade*: N/A
Shielding gas: 75%Ar. 25%CO_2 Flow rate: 25-30CFM
Single or multiple pass: Single
Single or multiple arc: N/A
Welding current: DC
Polarity: Reverse
Welding progression: Backhand
Root treatment: Machining or Grinding
Preheat and interpass temperature: 50°F
Postheat treatment: N/A

*Applicable only when filler metal has no AWS classification.

WELDING PROCEDURE

Pass no.	Electrode size	Welding current		Travel speed	Joint detail
		Amperes	Volts		
1.	0.035"	160-170 ± 10	24 - 28	9-10, ipm	FULL PENETRATION 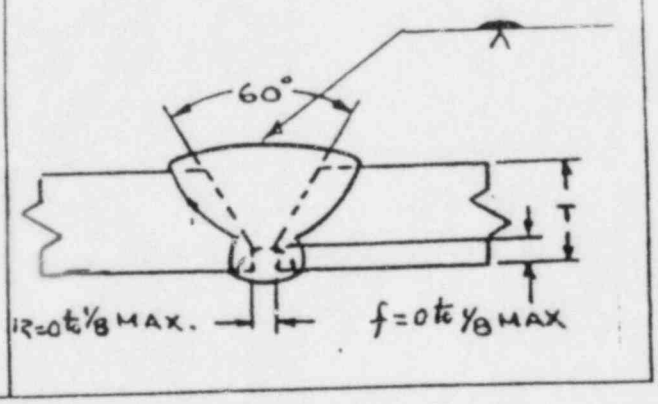

This procedure may vary due to fabrication sequence, fit-up, pass size, etc., within the limitation of variables given in 4B, C, or D of AWS D1.1, Structural Welding Code.

Procedure no. WPS-1

Revision no. 0

Manufacturer or contractor: COMSIP, INC.

Authorized by: Cole N. Ferdinand

Date: Deceaber 2, 1982

Form E-1

© 1978 by American Welding Society. All rights reserved.

WELDING PROCEDURE QUALIFICATION TEST RECORD

PROCEDURE SPECIFICATION

Material specification: A36 to A36
Welding process: GMAW
Manual or machine: Semi-Automatic
Position of welding: 5G - Fixed Horiz.
Filler metal specification: SA5.18
Filler metal classification: E705-3
Weld metal grade*: -
Shielding gas: * Flow rate: 25-30 cpm
Single or multiple pass: Single
Single or multiple arc: Single
Welding current: DC
Welding progression: Backhand
Preheat temperature: None
Postheat treatment: None
Welder's name: Rubien Curiel

* 75% Ar. 25% CO_2

*Applicable when filler metal has no AWS classification.

GROOVE WELD TEST RESULTS

Reduced-section tension tests

Tensile strength, psi
1. 65,300
2. 65,200

Guided-bend tests (2 root-, 2 face-, or 4 side-bend)

Root	Face
1. Satisfactory	1. Satisfactory
2. Satisfactory	2. Satisfactory

Radiographic-ultrasonic examination: Satisfactory

FILLET WELD TEST RESULTS

Minimum size multiple pass Macroetch	Maximum size single pass Macroetch
1. N/A 3. N/A	1. N/A 3. N/A
2. N/A	2.

All-weld-metal tension test

Tensile strength, psi: N/A
Yield point, psi: N/A
Elongation in 2 in., %: N/A

Laboratory test no. 83603-3-1

WELDING PROCEDURE

Pass No.	Elect. size	Welding current		Speed of travel	Joint detail
		Amperes	Volts		
1	0.035	160 ± 10	24 - 28	9-10 ipm	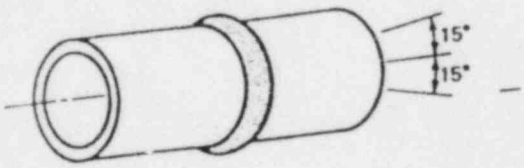 3" Dia. Pipe 0.225" wall

We, the undersigned, certify that the statements in this record are correct and that the test welds were prepared, welded, and tested in accordance with the requirements of 5B of AWS D1.1, Structural Welding Code.

Procedure no. 5875 mpi
Manufacturer or contractor H. Henrich Inc.
Revision no. .7
Authorized by
United States Testing Company, Inc.
Date January 3, 1983

Frank Pepe

Specification NO. 5875 MP-1 Rev. 7

QUALIFIED JOINT WELDING PROCEDURE
PROCEDURE SPECIFICATION

Material specification: A569 to A569
Welding process: GMAW
Manual or machine: Semi Automatic
Position of welding: 5G Fixed Horizontal
Filler metal specification: AWS A5.18
Filler metal classification: ER70S-3
Flux: N/A
Weld metal grade*: N/A
Shielding gas: 75%Ar 25% CO_2 Flow rate: 25-30CFM
Single or multiple pass: Single
Single or multiple arc: Single
Welding current: DC
Polarity: Reverse
Welding progression: Backhand
Root treatment: Grind to achieve shape
Preheat and interpass temperature: None
Postheat treatment: None

*Applicable only when filler metal has no AWS classification.

WELDING PROCEDURE

Pass no.	Electrode size	Welding current		Travel speed	Joint detail
		Amperes	Volts		FULL PENETRATION
For T .187-.250					
1	.035	160±10	24-28	9-10ipm	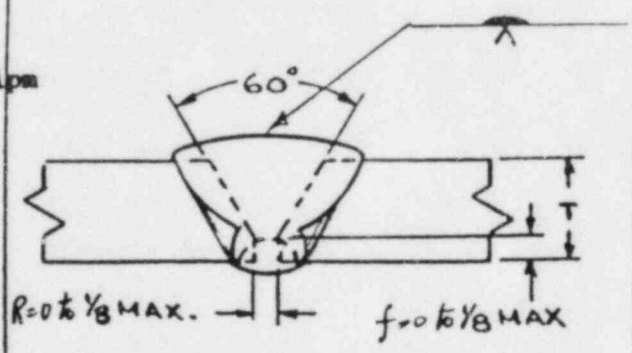

This procedure may vary due to fabrication sequence, fit-up, pass size, etc., within the limitation of variables given in 4B, C, or D of AWS D1.1, Structural Welding Code.

Procedure no. 5875 MP-1

Revision no. 7

Manufacturer or contractor: Comsip, Inc.

Authorized by: Robert M. Jerdinian

Date: October 27, 1982

Form E-1

© 1978 by American Welding Society. All rights reserved.

WELDING PROCEDURE QUALIFICATION TEST RECORD

PROCEDURE SPECIFICATION

Material specification: A569 to A569
Welding process: GMAW
Manual or machine: Semi-Automatic
Position of welding: 5G - Fixed Horiz.
Filler metal specification: SA5.18
Filler metal classification: E705-3
Weld metal grade*: -
Shielding gas: * Flow rate: 25-30 cpm
Single or multiple pass: Single
Single or multiple arc: Single
Welding current: DC
Welding progression: Backhand
Preheat temperature: None
Postheat treatment: None
Welder's name: Rubien Curiel

*75% Ar. 25% CO_2

*Applicable when filler metal has no AWS classification.

GROOVE WELD TEST RESULTS

Reduced-section tension tests

Tensile strength, psi
1. 65,300
2. 65,200

Guided-bend tests (2 root-, 2 face-, or 4 side-bend)

Root	Face
1. Satisfactory	1. Satisfactory
2. Satisfactory	2. Satisfactory

Radiographic-ultrasonic examination: Satisfactory

FILLET WELD TEST RESULTS

Minimum size multiple pass Macroetch	Maximum size single pass Macroetch
1. N/A 3. N/A	1. N/A 3. N/A
2. N/A	2. N/A

All-weld-metal tension test

Tensile strength, psi: N/A
Yield point, psi: N/A
Elongation in 2 in., %: N/A

Laboratory test no. 83603-3-2

WELDING PROCEDURE

Pass No.	Elect. size	Welding current		Speed of travel	Joint detail
		Amperes	Volts		
1	0.035	160 ± 10	24-28	9-10 ipm	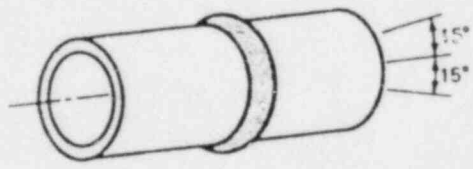 3" Dia. Pipe 0.225"wall

We, the undersigned, certify that the statements in this record are correct and that the test welds were prepared, welded, and tested in accordance with the requirements of 5B of AWS D1.1, Structural Welding Code.

Procedure no. 5875 mpi
Manufacturer or contractor H. Henrich Inc.
Revision no. .7
Authorized by
United States Testing Company, Inc.
Date January 3, 1983

Frank Pepe

Specification NO. 5875 MP-1 Rev. 7

QUALIFIED JOINT WELDING PROCEDURE
PROCEDURE SPECIFICATION

Material specification: A569 to A36
Welding process: GMAW
Manual or machine: Semi Automatic
Position of welding: 2F
Filler metal specification: AWS A5.18
Filler metal classification: E70S-3
Flux: N/A
Weld metal grade*: N/A
Shielding gas: 75%Ar 25% CO_2 Flow rate: 25-30CFM
Single or multiple pass: Single
Single or multiple arc: Single
Welding current: DC
Polarity: Reverse
Welding progression: Backhand
Root treatment: N/A
Preheat and interpass temperature: None
Postheat treatment: None

*Applicable only when filler metal has no AWS classification.

WELDING PROCEDURE

Pass no.	Electrode size	Welding current		Travel speed	Joint detail
		Amperes	Volts		
For T .187-.250					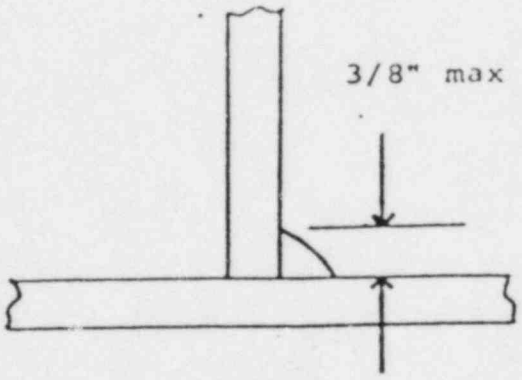
1	.035	160±10	24-28	"	

This procedure may vary due to fabrication sequence, fit-up, pass size, etc., within the limitation of variables given in 4B, C, or D of AWS D1.1, Structural Welding Code.

Procedure no. 5875 MP-1

Revision no. 7

Manufacturer or contractor: Cole M. Hendrian Jr. Comsip, Inc.

Authorized by

Date: October 27, 1982

Form E-1

© 1978 by American Welding Society. All rights reserved.

UNITED STATES TESTING COMPANY, INC.

WELDING PROCEDURE QUALIFICATION TEST RECORD

PROCEDURE SPECIFICATION

Material specification: A569 to A36
Welding process: GMAW (MIG)
Manual or machine: Semi Augomatic
Position of welding: 2F Horizontal
Filler metal specification: AWS A5.18
Filler metal classification: E70S-3
Weld metal grade: N/A
Shielding gas: * Flow: 25-30 CFM
Single or multiple pass: Single
Single or multiple arc: Single
Welding current: DC
Welding progression: Backhand
Preheat temperature: Ambient
Postheat treatment: N/A
Welder's name: Ed Urban

*75% Argon 25% CO_2

GROOVE WELD TEST RESULTS

Reduced-section tension test
Tensile strength, psi:
1 N/A
2 N/A

Guided-bend test

Root		Face	
1	N/A	1	N/A
2	N/A	2	N/A

Radiographic-Ultrasonic Examination: Not Required

Fillet test results

Min Size Multiple Pass Macroetch		Max Size Single Pass Macroetch	
1 N/A	3 N/A	1 Pass	3 Pass
2 N/A		2 Pass	

Laboratory Test No. 83603-6
United States Testing Company, Inc.
Frank Pepe, Assistant Vice President
Engineering Division

WELDING PROCEDURE

Pass no.	Elect. size	Welding Current Amperes	Welding Current Volts	Speed of travel
1	0.035	160 ± 10	24-28	9-10 ipm

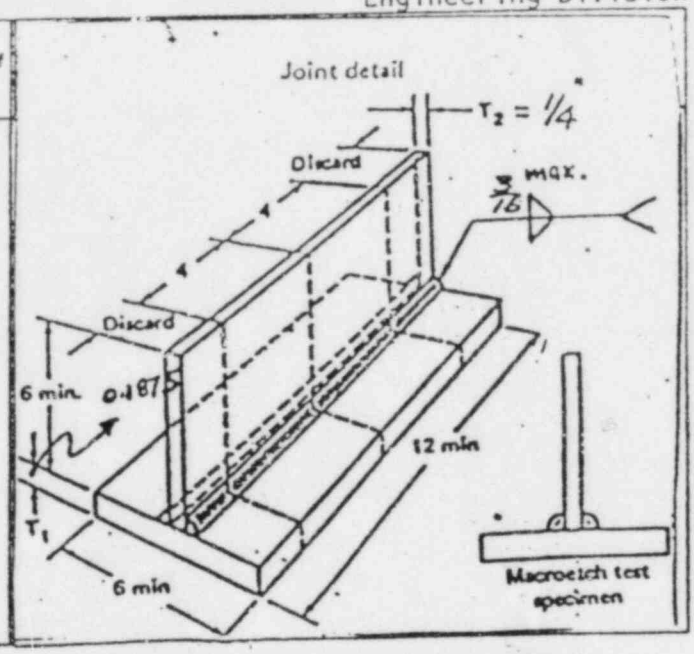

We the undersigned, certify that the statements in this record are correct and that the test welds were prepared, welded and tested in accordance with the requirements of 5B of AWS D1.1, Structural Welding Code.

Procedure Number 5875 MP-1
Revision Number 7

Manufacturer or Contractor: Harold R. Henrich Inc.
Authorized by
Date: October 27, 1982

lv

UNITED STATES TESTING COMPANY, INC.

WELDING PROCEDURE QUALIFICATION TEST RECORD

PROCEDURE SPECIFICATION

Material specification: A569 to A36
Welding process: GMAW (MIG)
Manual or machine: Semi Automatic
Position of welding: 2F Horizontal
Filler metal specification: AWS A5.18
Filler metal classification: E70S-3
Weld metal grade: N/A
Shielding gas: * Flow: 25-30 CFM
Single or multiple pass: Single
Single or multiple arc: Single
Welding current: DC
Welding progression: Backhand
Preheat temperature: Ambient
Postheat treatment: N/A
Welder's name: Jim Carley

*75% Argon 25% CO_2

GROOVE WELD TEST RESULTS

Reduced-section tension test
Tensile strength, psi:
1 N/A
2 N/A

Guided-bend test

Root		Face	
1	N/A	1	N/A
2	N/A	2	N/A

Radiographic-Ultrasonic Examination

Fillet test results

Min Size Multiple Pass Macroetch		Max Size Single Pass Macroetch	
1 N/A	3 N/A	1 Pass	3 Pass
2 N/A		2 Pass	

Laboratory Test No. 83603-5
United States Testing Company, Inc.
Frank Pepe, Assistant Vice Presiden
Engineering Division

WELDING PROCEDURE

Pass no.	Elect. size	Welding Current Amperes	Welding Current Volts	Speed of travel
1	0.035	160 ± 10	24-28	9-10 ipm

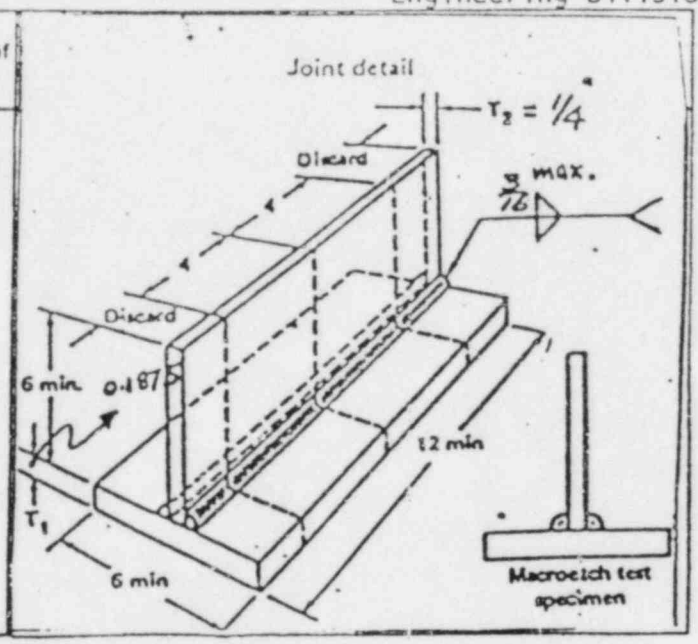

We the undersigned, certify that the statements in this record are correct and that the test welds were prepared, welded and tested in accordance with the requirements of 5B of AWS D1.1, Structural Welding Code.

Procedure Number 5875 MP-1
Revision Number 7

Manufacturer or Contractor Harold R. Henrich Inc.
Authorized by
Date October 27, 1982

UNITED STATES TESTING COMPANY, INC.

WELDING PROCEDURE QUALIFICATION TEST RECORD

PROCEDURE SPECIFICATION

Material specification: A569 to A36
Welding process: GMAW (MIG)
Manual or machine: Semi Automatic
Position of welding: 2F Horizontal
Filler metal specification: AWS A5.18
Filler metal classification: E70S-3
Weld metal grade: N/A
Shielding gas: * Flow: 25-30 CFM
Single or multiple pass: Single
Single or multiple arc: Single
Welding current: DC
Welding progression: Backhand
Preheat temperature: Ambient
Postheat treatment: N/A
Welder's name: John Wesch

*75% Argon 25% CO_2

GROOVE WELD TEST RESULTS

Reduced-section tension test
Tensile strength, psi:
1 N/A
2 N/A

Guided-bend test

Root		Face	
1	N/A	1	N/A
2	N/A	2	N/A

Radiographic-Ultrasonic Examination: Not Required

Fillet test results

Min Size Multiple Pass Macroetch		Max Size Single Pass Macroetch	
1 N/A	3 N/A	1 Pass	3 Pass
2 N/A		2 Pass	

Laboratory Test No. 83603-4
United States Testing Company, Inc
Frank Pepe, Assistant Vice Preside
Engineering Division

WELDING PROCEDURE

Pass no.	Elect. size	Welding Current Amperes	Welding Current Volts	Speed of travel
1	0.035	160 ± 10	24-28	9-10 ipm

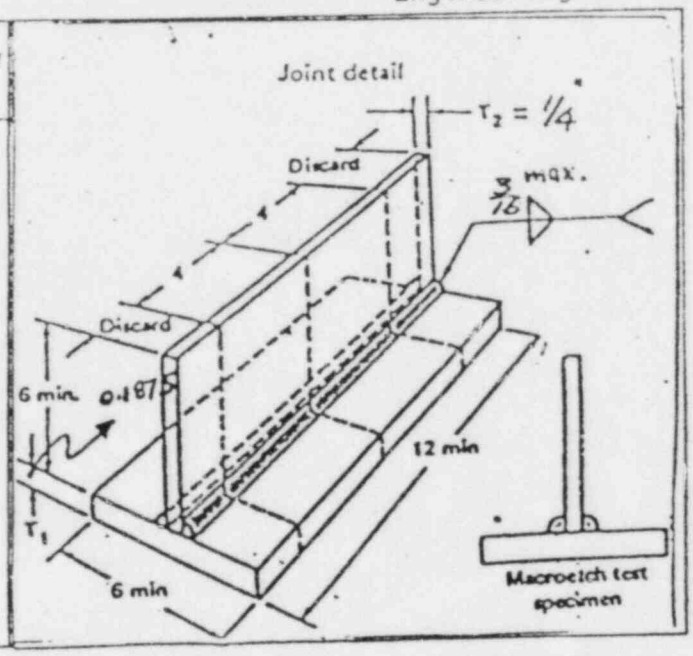

We the undersigned, certify that the statements in this record are correct and that the test welds were prepared, welded and tested in accordance with the requirements of 5B of AWS D1.1, Structural Welding Code.

Procedure Number: 5875 MP-1

Revision Number: 7

Manufacturer or Contractor: Harold R. Henrich Inc.

Authorized by:

Date: October 27, 1982

lv

UNITED STATES TESTING COMPANY, INC.

WELDING PROCEDURE QUALIFICATION TEST RECORD

PROCEDURE SPECIFICATION

Material specification: A569 to A36
Welding process: GMAW (MIG)
Manual or machine: Semi Automatic
Position of welding: 2F Horizontal
Filler metal specification: AWS A5.18
Filler metal classification: E70S-3
Weld metal grade: N/A
Shielding gas: * Flow: 25-30 CFM
Single or multiple pass: Single
Single or multiple arc: Single
Welding current: DC
Welding progression: Backhand
Preheat temperature: Ambient
Postheat treatment: N/A
Welder's name: Ruben Curiel

* 75% Argon 25% CO_2

GROOVE WELD TEST RESULTS

Reduced-section tension test
Tensile strength, psi:
1 N/A
2 N/A

Guided-bend test

Root		Face	
1	N/A	1	N/A
2	N/A	2	N/A

Radiographic-Ultrasonic Examination: Not Required

Fillet test results

Min Size Multiple Pass Macroetch		Max Size Single Pass Macroetch	
1 N/A	3 N/A	1 Pass	3 Pass
2 N/A		2 Pass	

Laboratory Test No. 83603-3
United States Testing Company, I
Frank Pepe, Ass't. Vice Presider
Engineering Divisior

WELDING PROCEDURE

Pass no.	Elect. size	Welding Current Amperes	Welding Current Volts	Speed of travel
1	0.035	160 ± 10	24-28	9-10 ipm

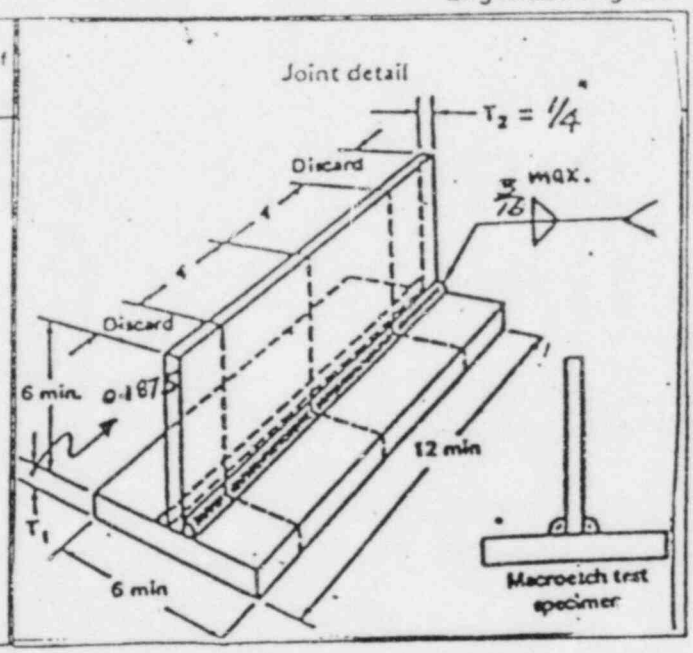

We the undersigned, certify that the statements in this record are correct and that the test welds were prepared, welded and tested in accordance with the requirements of 5B of AWS D1.1, Structural Welding Code.

Procedure Number: 5875 MP-1
Revision Number: 7

Manufacturer or Contractor: Harold R. Henrich Inc.
Authorized by:
Date: October 27, 1982

lv

WELDER AND WELDING OPERATOR QUALIFICATION TEST RECORD

Welder or welding operator's name Ed Urban Identification no. EU
Welding process GMAW Manual ____ Semiautomatic X Machine ____
Position 5G - Fixed Horizontal
(Flat, horizontal, overhead or vertical – if vertical, state whether upward or downward)
In accordance with procedure specification no. 5875 mpi Rev. 7
Material specification A36 to A36
Diameter and wall thickness (if pipe) – otherwise, joint thickness 3 in. dia. - 0.225" Wall
Thickness range this qualifies 0.063 to 0.674

FILLER METAL

Specification no. SA5.18 Classification E705-3 F no. ____
Describe filler metal (if not covered by AWS specification) ____
Is backing strip used? No
Filler metal diameter and trade name ____ Flux for submerged arc or gas for gas metal arc or flux cored arc welding ____

Guided Bend Test Results

Type	Result	Type	Result
Face	Satisfactory	Root	Satisfactory
Face	Satisfactory	Root	Satisfactory

Test conducted by United States Testing Co., Inc Laboratory test no. 83603-3-3
per Frank Pepe

Fillet Test Results N/A

Appearance ____ Fillet size ____
Fracture test root penetration ____ Macroetch ____
(Describe the location, nature, and size of any crack or tearing of the specimen.)
Test conducted by ____ Laboratory test no. ____
per ____

RADIOGRAPHIC TEST RESULTS N/A

Film identification	Results	Remarks	Film identification	Results	Remarks

Test witnessed by ____ Test no. ____
per ____

We, the undersigned, certify that the statements in this record are correct and that the welds were prepared and tested in accordance with the requirements of 5C or D of AWS D1.1, Structural Welding Code.

Manufacturer or contractor H. Henrich Inc.
Authorized by ____
Date January 3, 1983

WELDER AND WELDING OPERATOR QUALIFICATION TEST RECORD

Welder or welding operator's name Ed Urban Identification no. EU

Welding process GMAW Manual ____ Semiautomatic X Machine ____

Position 5G - Fixed Horizontal

(Flat, horizontal, overhead or vertical – if vertical, state whether upward or downward)

In accordance with procedure specification no. 5875 mpi Rev. 7

Material specification A569 to A569

Diameter and wall thickness (if pipe) – otherwise, joint thickness 3 in. dia. - 0.225" Wall

Thickness range this qualifies ____

FILLER METAL

Specification no. SA 5.18 Classification E705.3 F no. ____

Describe filler metal (if not covered by AWS specification) ____

Is backing strip used? No

Filler metal diameter and trade name ____ Flux for submerged arc or gas for gas metal arc or flux cored arc welding ____

Guided Bend Test Results

Type	Result	Type	Result
Face	Satisfactory	Root	Satisfactory
Face	Satisfactory	Root	Satisfactory

Test conducted by United States Testing Co., Inc. Laboratory test no. 83603-3-6

per Frank Pepe

Fillet Test Results N/A

Appearance ____ Fillet size ____

Fracture test root penetration ____ Macroetch ____

(Describe the location, nature, and size of any crack or tearing of the specimen.)

Test conducted by ____ Laboratory test no. ____

per ____

RADIOGRAPHIC TEST RESULTS N/A

Film identification	Results	Remarks	Film identification	Results	Remarks

Test witnessed by ____ Test no. ____

per ____

We, the undersigned, certify that the statements in this record are correct and that the welds were prepared and tested in accordance with the requirements of 5C or D of AWS D1.1, Structural Welding Code.

Manufacturer or contractor H. Henrich Inc.

Authorized by ____

Date January 3, 1983

WELDER AND WELDING OPERATOR QUALIFICATION TEST RECORD

Welder or welding operator's name Jim Carley Identification no. JC
Welding process GMAW Manual ____ Semiautomatic X Machine ____
Position 5G - Fixed Horizontal
(Flat, horizontal, overhead or vertical – if vertical, state whether upward or downward)
In accordance with procedure specification no. 5875 mpi Rev. 7
Material specification A569 to A569
Diameter and wall thickness (if pipe) – otherwise, joint thickness 3 in. Dia. - 0.225" Wall
Thickness range this qualifies ____

FILLER METAL

Specification no. SA5.18 Classification E705-3 F no. ____
Describe filler metal (if not covered by AWS specification) ____

Is backing strip used? No
Filler metal diameter and trade name ____ Flux for submerged arc or gas for gas metal arc or flux cored arc welding ____

Guided Bend Test Results

Type	Result	Type	Result
Face	Satisfactory	Root	Satisfactory
Face	Satisfactory	Root	Satisfactory

Test conducted by United States Testing Co., Inc. Laboratory test no. 83603-3-7
per Frank Pepe

Fillet Test Results N/A

Appearance ____ Fillet size ____
Fracture test root penetration ____ Macroetch ____
(Describe the location, nature, and size of any crack or tearing of the specimen.)
Test conducted by ____ Laboratory test no. ____
per ____

RADIOGRAPHIC TEST RESULTS N/A

Film identification	Results	Remarks	Film identification	Results	Remarks

Test witnessed by ____ Test no. ____
per ____

We, the undersigned, certify that the statements in this record are correct and that the welds were prepared and tested in accordance with the requirements of 5C or D of AWS D1.1, Structural Welding Code.

Manufacturer or contractor H. Henrich Inc.
Authorized by ____
Date January 3, 1983

WELDER AND WELDING OPERATOR QUALIFICATION TEST RECORD

Welder or welding operator's name Jim Carley Identification no. JC
Welding process GMAW Manual ____ Semiautomatic X Machine ____
Position 5G - Fixed Horizontal
(Flat, horizontal, overhead or vertical – if vertical, state whether upward or downward)
In accordance with procedure specification no. 5875 mpi Rev. 7
Material specification A36 to A36
Diameter and wall thickness (if pipe) – otherwise, joint thickness 3 in. dia. - 0.225" Wall
Thickness range this qualifies ____

FILLER METAL

Specification no. SA5.18 Classification E705-3 F no. ____
Describe filler metal (if not covered by AWS specification) ____

Is backing strip used? No
Filler metal diameter and trade name ____ Flux for submerged arc or gas for gas metal arc or flux cored arc welding ____

Guided Bend Test Results

Type	Result	Type	Result
Face	Satisfactory	Root	Satisfactory
Face	Satisfactory	Root	Satisfactory

Test conducted by United States Testing Company, Inc. Laboratory test no. 83603-3-4
per Frank Pepe

Fillet Test Results N/A

Appearance ____ Fillet size ____
Fracture test root penetration ____ Macroetch ____
(Describe the location, nature, and size of any crack or tearing of the specimen.)
Test conducted by ____ Laboratory test no. ____
per ____

RADIOGRAPHIC TEST RESULTS N/A

Film identification	Results	Remarks	Film identification	Results	Remarks

Test witnessed by ____ Test no. ____
per ____

We, the undersigned, certify that the statements in this record are correct and that the welds were prepared and tested in accordance with the requirements of 5C or D of AWS D1.1, Structural Welding Code.

Manufacturer or contractor H. Henrich Inc.
Authorized by ____
Date January 3, 1983

WELDER AND WELDING OPERATOR QUALIFICATION TEST RECORD

Welder or welding operator's name John Wesch Identification no. JW
Welding process GMAW Manual _____ Semiautomatic X Machine _____
Position 5G - Fixed Horizontal
(Flat, horizontal, overhead or vertical – if vertical, state whether upward or downward)
In accordance with procedure specification no. 5875 mpi Rev. 7
Material specification A569 to A569
Diameter and wall thickness (if pipe) – otherwise, joint thickness 3 in. Dia. - 0.225" Wall
Thickness range this qualifies _____

FILLER METAL

Specification no. SA5.18 Classification E705-3 F no. _____
Describe filler metal (if not covered by AWS specification) _____

Is backing strip used? No
Filler metal diameter and trade name _____ Flux for submerged arc or gas for gas metal arc or flux cored arc welding _____

Guided Bend Test Results

Type	Result	Type	Result
Face	Satisfactory	Root	Satisfactory
Face	Satisfactory	Root	Satisfactory

Test conducted by United States Testing Co., Inc. Laboratory test no. 83603-3-8
per Frank Pepe

Fillet Test Results N/A

Appearance _____ Fillet size _____
Fracture test root penetration _____ Macroetch _____
(Describe the location, nature, and size of any crack or tearing of the specimen.)
Test conducted by _____ Laboratory test no. _____
per _____

RADIOGRAPHIC TEST RESULTS N/A

Film identification	Results	Remarks	Film identification	Results	Remarks

Test witnessed by _____ Test no. _____
per _____

We, the undersigned, certify that the statements in this record are correct and that the welds were prepared and tested in accordance with the requirements of 5C or D of AWS D1.1, Structural Welding Code.

~~Manufacturer or contractor~~ H. Henrich Inc.
~~Authorized by~~ _____
Date January 3, 1983

WELDER AND WELDING OPERATOR QUALIFICATION TEST RECORD

Welder or welding operator's name John Wesch Identification no. JW
Welding process GMAW Manual ____ Semiautomatic X Machine ____
Position 5G - Fixed Horizontal
(Flat, horizontal, overhead or vertical – if vertical, state whether upward or downward)
In accordance with procedure specification no. 3875 mpi Rev. 7
Material specification A36 to A36
Diameter and wall thickness (if pipe) – otherwise, joint thickness 3 in. dia. - 0.225" Wall
Thickness range this qualifies ____

FILLER METAL

Specification no. SA5.18 Classification E705-3 F no. ____
Describe filler metal (if not covered by AWS specification) ____
Is backing strip used? No
Filler metal diameter and trade name ____ Flux for submerged arc or gas for gas metal arc or flux cored arc welding ____

Guided Bend Test Results

Type	Result	Type	Result
Face	Satisfactory	Root	Satisfactory
Face	Satisfactory	Root	Satisfactory

Test conducted by United States Testing Co., Inc. Laboratory test no. 83603-3-5
per Frank Pepe

Fillet Test Results N/A

Appearance ____ Fillet size ____
Fracture test root penetration ____ Macroetch ____
(Describe the location, nature, and size of any crack or tearing of the specimen.)
Test conducted by ____ Laboratory test no. ____
per ____

RADIOGRAPHIC TEST RESULTS N/A

Film identification	Results	Remarks	Film identification	Results	Remarks

Test witnessed by ____ Test no. ____
per ____

We, the undersigned, certify that the statements in this record are correct and that the welds were prepared and tested in accordance with the requirements of 5C or D of AWS D1.1, Structural Welding Code.

~~Manufacturer or contractor~~ H. Henrich Inc.
~~Authorized by~~ ____
Date January 3, 1983

ALL WELDS SHALL BE:

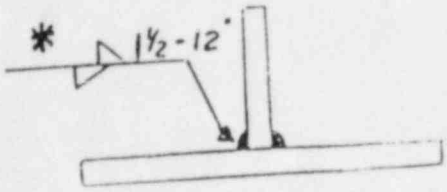

*NOTE: Minimum fillet weld sizes for: T< ½ 1/8 ± 1/32"
T= ½ 1/4 ± 1/32"

FIG. 1

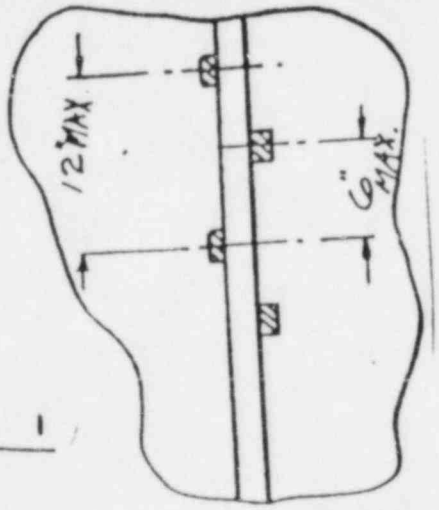

NOTES

1. Base metal shall be ASTM-569 for body steel and ASTM A-36 for frame stiffening and base steel.

2. Edges to be welded shall be prepared by machining, flame cutting or grinding, or any combination of these, to achieve a shape as shown in the attached diagram.

3. Surfaces to be welded shall be cleaned free from slag, paint, oil, rust, scale or any other material which may be detrimental to the weld.

4. The minimum length of an interrupted fillet weld shall be 1½ inches.

5. Groove welds will be in accordance with figure 2.

6. **If tack welds are used, they shall be of the same electrode material as the first root pass and shall be deposited in such a manner as to facilitate incorporation into the weld if need be. Cracked or broken tack welds shall be chipped out and all others thoroughly cleansed prior to incorporation into the weld.**

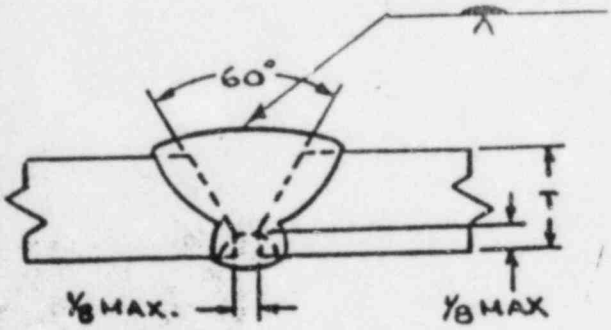

FIG. 2

BECHTEL JOB # 10407

REV NO.	DATE	DESCRIPTION	DRWN BY	CHK'D BY	DRAFT. SUPVR.	QA APPR.	PROJ ENG APPR.

Comsip, Inc. CUSTOMLINE DIVISION
LINDEN, NEW JERSEY

TITLE: WELDING DETAIL

PROJECT: BECHTEL NORWALK, CAL. ARIZONA NUCLEAR POWER PROJECT

DRWN BY | DATE | SCALE | SHEET
CHK'D BY | DATE | DRAWING NO. SBT3-WD | REV. NO. 1
APPV'D BY | DATE 5/12/72 | SHEET | OF

G.B. SRAPP