LaSalle UNITS 1 AND 2

UFSAR, REVISION 23

AND

FIRE PROTECTION REPORT (FPR), REVISION 8

THE SECURITY SENSITIVE INFORMATION HAS BEEN REDACTED FROM THE ORIGINAL DOCUMENT.

THIS DOCUMENT PROVIDES THE REDACTED VERSION.

THE REDACTED INFORMATION WITHIN THIS DOCUMENT IS INDICATED BY SOLID BLACKEDOUT REGIONS.

ATTACHMENT 1

LASALLE FIRE PROTECTION REPORT

PAGE INDEX

CURRENT THROUGH REVISION 8

APRIL 2018

PAGE/FIGURE NUMBER	REVISION	PAGE/FIGURE NUMBER	REVISION
H.0-i	8	H.3-25	8
H.0-ii	8	H.3-26	8
H.0-iii	8	H.3-27	8
H.0-iv	8	H.3-28	8
H.0-v	8	H.3-29	8
H.0-vi	8	H.3-30	8
H.0-vii	8	H.3-31	8
H.0-viii	8	H.3-32	8
H.0-ix	8	H.3-33	8
H.0-x	8	H.3-34	8
H.0-xi	8	H.3-35	8
H.0-xii	8	H.3-36	8
H.0-xiii	8	H.3-37	8
H.0-xiv	8	H.3-38	8
H.0-xv	8	H.3-39	8
H.1-1	8	H.3-40	8
H.1-2	8	H.3-41	8
H.1-3	8	H.3-42	8
H.1-4	8	H.3-43	8
H.1-5	8	H.3-44	8
H.1-6	8	H.3-45	8
H.1-7	8	H.3-46	8
H.1-8	8	H.3-47	8
H.2-1	8	H.3-48	8
H.3-1	8	H.3-49	8
H.3-2	8	H.3-50	8
H.3-3	8	H.3-51	8
H.3-4	8	H.3-52	8
H.3-5	8	H.3-53	8
H.3-6	8	H.3-54	8
H.3-7	8	H.3-55	8
H.3-8	8	H.3-56	8
H.3-9	8	H.3-57	8
H.3-10	8	H.3-58	8
H.3-11	8	H.3-59	8
H.3-12	8	H.3-60	8
H.3-13	8	H.3-61	8
H.3-14	8	H.3-62	8
H.3-15	8	H.3-63	8
H.3-16	8	H.3-64	8
H.3-17	8	H.3-65	8
H.3-18	8	H.3-66	8
H.3-19	8	H.3-67	8
H.3-20	8	H.3-68	8
H.3-21	8	H.3-69	8
H.3-22	8	H.3-70	8
H.3-23	8	H.3-71	8
H.3-24	8	H.3-72	8

PAGE/FIGURE NUMBER	REVISION	PAGE/FIGURE NUMBER	REVISION
H.3-73	8	H.3-121	8
H.3-74	8	H.3-122	8
H.3-75	8	H.3-123	8
H.3-76	8	H.3-124	8
H.3-77	8	H.3-125	8
H.3-78	8	H.3-126	8
H.3-79	8	H.3-127	8
H.3-80	8	H.3-128	8
H.3-81	8	H.3-129	8
H.3-82	8	H.3-130	8
H.3-83	8	H.3-131	8
H.3-84	8	H.3-132	8
H.3-85	8	H.3-133	8
H.3-86	8	H.3-134	8
H.3-87	8	H.3-135	8
H.3-88	8	H.3-136	8
H.3-89	8	H.3-137	8
H.3-90	8	H.3-138	8
H.3-91	8	H.3-139	8
H.3-92	8	H.3-140	8
H.3-93	8	H.3-141	8
H.3-94	8	H.3-142	8
H.3-95	8	H.3-143	8
H.3-96	8	H.3-144	8
H.3-97	8	H.3-145	8
H.3-98	8	H.3-146	8
H.3-99	8	H.3-147	8
H.3-100	8	H.3-148	8
H.3-101	8	H.3-149	8
H.3-102	8	H.3-150	8
H.3-103	8	H.3-151	8
H.3-104	8	H.3-152	8
H.3-105	8	H.3-153	8
H.3-106	8	H.3-154	8
H.3-107	8	H.3-155	8
H.3-108	8	H.3-156	8
H.3-109	8	H.3-157	8
H.3-110	8	H.3-158	8
H.3-111	8	H.3-159	8
H.3-112	8	H.3-160	8
H.3-113	8	H.3-161	8
H.3-114	8	H.3-162	8
H.3-115	8	H.3-163	8
H.3-116	8	H.3-164	8
H.3-117	8	H.3-165	8
H.3-118	8	H.3-166	8
H.3-119	8	H.3-167	8
H.3-120	8	H.3-168	8

PAGE/FIGURE NUMBER	REVISION	PAGE/FIGURE NUMBER	REVISION
H.3-169	8	H.4-5	8
H.3-170	8	H.4-6	8
H.3-171	8	H.4-7	8
H.3-172	8	H.4-8	8
H.3-173	8	H.4-9	8
H.3-174	8	H.4-10	8
H.3-175	8	H.4-11	8
H.3-176	8	H.4-12	8
H.3-177	8	H.4-13	8
H.3-178	8	H.4-14	8
H.3-179	8	H.4-15	8
H.3-180	8	H.4-16	8
H.3-181	8	H.4-17	8
H.3-182	8	H.4-18	8
H.3-183	8	H.4-19	8
H.3-184	8	H.4-20	8
H.3-185	8	H.4-21	8
H.3-186	8	H.4-22	8
H.3-187	8	H.4-23	8
H.3-188	8	H.4-24	8
H.3-189	8	H.4-25	8
H.3-190	8	H.4-26	8
H.3-191	8	H.4-27	8
H.3-192	8	H.4-28	8
H.3-193	8	H.4-29	8
H.3-194	8	H.4-30	8
H.3-195	8	H.4-31	8
H.3-196	8	H.4-32	8
H.3-197	8	H.4-33	8
H.3-198	8	H.4-34	8
H.3-199	8	H.4-35	8
H.3-200	8	H.4-36	8
H.3-201	8	H.4-37	8
H.3-202	8	H.4-38	8
H.3-203	8	H.4-39	8
H.3-204	8	H.4-40	8
H.3-205	8	H.4-41	8
H.3-206	8	H.4-42	8
H.3-207	8	H.4-43	8
H.3-208	8	H.4-44	8
H.3-209	8	H.4-45	8
H.3-210	8	H.4-46	8
H.3-211	8	H.4-47	8
H.3-212	8	H.4-48	8
H.4-1	8	H.4-49	8
H.4-2	8	H.4-50	8
H.4-3	8	H.4-51	8
H.4-4	8	H.4-52	8

PAGE/FIGURE NUMBER	REVISION
H.4-53	8
H.4-54	8
H.4-55	8
H.4-56	8
H.4-57	8
H.4-58	8
H.4-59	8
H.4-60	8
H.4-61	8
H.4-62	8
H.4-63	8
H.4-64	8
H.5-1	8
H.6-1	8
H.7-1	8
Table H.1-1 #Sheets-1	8
Table H.2-1 #Sheets-5	8
Table H.3-1 #Sheets-13	8
Table H.3-2 #Sheets-22	8
Table H.4-1 #Sheets-1	8
Table H.4-2 #Sheets-7	8
Table H.4-3 #Sheets-5	8
Table H.4-4 #Sheets-6	8
Table H.4-5 #Sheets-2	8
Table H.4-6 #Sheets-4	8
Table H.4-7 #Sheets-3	8
Table H.4-8 #Sheets-2	8
Table H.4-9 #Sheets-1	8
Table H.4-10 #Sheets-1	8
Table H.4-11 #Sheets-2	8
Table H.4-12 #Sheets-2	8
Table H.4-13 #Sheets-2	8
Table H.4-14 #Sheets-2	8
Table H.4-15 #Sheets-2	8
Table H.4-16 #Sheets-2	8
Table H.4-17 #Sheets-3	8
Table H.4-18 #Sheets-4	8
Table H.4-19 #Sheets-3	8
Table H.4-20 #Sheets-4	8
Table H.4-21 #Sheets-3	8
Table H.4-22 #Sheets-4	8
Table H.4-23 #Sheets-3	8
Table H.4-24 #Sheets-5	8
Table H.4-25 #Sheets-2	8
Table H.4-26 #Sheets-1	8
Table H.4-27 #Sheets-2	8
Table H.4-28 #Sheets-1	8
Table H.4-29 #Sheets-1	8

PAGE/FIGURE NUMBER	REVISION
Table H.4-30 #Sheets-1	8
Table H.4-31 #Sheets-1	8
Table H.4-32 #Sheets-3	8
Table H.4-33 #Sheets-2	8
Table H.4-34 #Sheets-1	8
Table H.4-35 #Sheets-2	8
Table H.4-36 #Sheets-1	8
Table H.4-37 #Sheets-1	8
Table H.4-38 #Sheets-2	8
Table H.4-39 #Sheets-1	8
Table H.4-40 #Sheets-1	8
Table H.4-41 #Sheets-1	8
Table H.4-42 #Sheets-1	8
Table H.4-43 #Sheets-1	8
Table H.4-44 #Sheets-2	8
Table H.4-45 #Sheets-2	8
Table H.4-46 #Sheets-1	8
Table H.4-47 #Sheets-2	8
Table H.4-48 #Sheets-3	8
Table H.4-49 #Sheets-4	8
Table H.4-50 #Sheets-8	8
Table H.4-51 #Sheets-8	8
Table H.4-52 #Sheets-2	8
Table H.4-53 #Sheets-2	8
Table H.4-54 #Sheets-7	8
Table H.4-55 #Sheets-4	8
Table H.4-56 #Sheets-4	8
Table H.4-57 #Sheets-5	8
Table H.4-58 #Sheets-6	8
Table H.4-59 #Sheets-5	8
Table H.4-60 #Sheets-9	8
Table H.4-61 #Sheets-4	8
Table H.4-62 #Sheets-8	8
Table H.4-63 #Sheets-7	8
Table H.4-64 #Sheets-7	8
Table H.4-65 #Sheets-5	8
Table H.4-66 #Sheets-6	8
Table H.4-67 #Sheets-6	8
Table H.4-68 #Sheets-7	8
Table H.4-69 #Sheets-9	8
Table H.4-70 #Sheets-8	8
Table H.4-71 #Sheets-3	8
Table H.4-72 #Sheets-3	8
Table H.4-73 #Sheets-3	8
Table H.4-74 #Sheets-3	8
Table H.4-74a #Sheets-1	8
Table H.4-75 #Sheets-2	8
Table H.4-76 #Sheets-2	8

PAGE/FIGURE NUMBER	REVISION
Table H.4-77 #Sheets-2	8
Table H.4-78 #Sheets-3	8
Table H.4-79 #Sheets-3	8
Table H.4-80 #Sheets-3	8
Table H.4-81 #Sheets-1	8
Table H.4-82 #Sheets-1	8
Table H.4-83 #Sheets-1	8
Table H.4-84 #Sheets-1	8
Table H.4-85 #Sheets-1	8
Table H.4-86 #Sheets-1	8
Table H.4-87 #Sheets-2	8
Table H.4-88 #Sheets-1	8
Table H.4-89 #Sheets-1	8
Table H.4-90 #Sheets-2	8
Table H.4-91 #Sheets-2	8
Table H.4-92 #Sheets-3	8
Table H.4-93 #Sheets-2	8
Table H.4-94 #Sheets-1	8
Table H.4-95 #Sheets-1	8
Table H.4-96 #Sheets-1	8
Table H.4-97 #Sheets-1	8
Table H.4-98 #Sheets-2	8
Table H.4-99 #Sheets-1	8
Table H.4-100 #Sheets-1	8
Table H.4-101 #Sheets-8	8
Table H.4-102 #Sheets-2	8
Table H.4-103 #Sheets-1	8
Table H.4-104 #Sheets-2	8
Table H.4-105 #Sheets-3	8
Table H.4-106 #Sheets-3	8
Table H.4-107 #Sheets-5	8
Table H.4-108 #Sheets-4	8
Table H.4-109 #Sheets-1	8
Table H.4-110 #Sheets-1	8
Table H.4-111 #Sheets-5	8
Table H.4-112 #Sheets-1	8
Table H.4-113 #Sheets-1	8
Table H.4-114 #Sheets-1	8
Table H.4-115 #Sheets-1	8
Table H.4-116 #Sheets-1	8
Table H.4-117 #Sheets-1	8
Table H.4-118 #Sheets-2	8
Table H.4-119 #Sheets-1	8
Table H.4-120 #Sheets-1	8
Table H.4-121 #Sheets-1	8
Table H.4-122 #Sheets-1	8
Table H.4-123 #Sheets-1	8
Table H.4-124 #Sheets-1	8

PAGE/FIGURE NUMBER	REVISION
Table H.4-125 #Sheets-1	8
Table H.4-126 #Sheets-1	8
Table H.4-127 #Sheets-1	8
Table H.4-128 #Sheets-1	8
Table H.4-129 #Sheets-1	8
Figure H.1-1 #Sheets-1	8
Figure H.2-1 #Sheets-10	8
Figure H.4-1 #Sheets-1	8
Figure H.4-2 #Sheets-1	8
Figure H.4-3 #Sheets-1	8
Figure H.4-4 #Sheets-1	8
3-1	8
3-2	8
3-3	8
3-4	8
3-5	8
3-6	8
3-7	8
3-8	8
3-9	8
3-10	8
3-11	8
3-12	8
3-13	8
3-14	8
3-15	8
3-16	8
3-17	8
3-18	8
3-19	8
3-20	8
3-21	8
3-22	8
3-23	8
3-24	8
3-25	8
3-26	8
3-27	8
3-28	8
3-29	8
3-30	8
3-31	8
3-32	8
3-33	8
3-34	8
3-35	8
3-36	8
3-37	8

PAGE/FIGURE NUMBER	REVISION	PAGE/FIGURE NUMBER	REVISION
3-38	8	5-2-31	8
3-39	8	5-2-32	8
3-40	8	5-2-33	8
3-41	8	5-2-34	8
3-42	8	5-2-35	8
3-43	8	5-2-36	8
3-44	8	5-2-37	8
3-45	8	5-2-38	8
3-46	8	5-2-39	8
4-1	8	5-2-40	8
4-2	8	5-2-41	8
Fig 4-1 Sheet 1 of 4	8	5-2-42	8
Fig 4-1 Sheet 2 of 4	8	5-2-43	8
Fig 4-1 Sheet 3 of 4	8	5-2-44	8
Fig 4-1 Sheet 4 of 4	8	5-2-45	8
5-1	8	5-2-46	8
5-1-1	8	5-2-47	8
5-1-2	8	5-2-48	8
5-2-1	8	5-2-49	8
5-2-2	8	5-2-50	8
5-2-3	8	5-2-51	8
5-2-4	8	5-2-52	8
5-2-5	8	5-2-53	8
5-2-6	8	5-2-54	8
5-2-7	8	5-2-55	8
5-2-8	8	5-2-56	8
5-2-9	8	5-2-57	8
5-2-10	8	5-2-58	8
5-2-11	8	5-2-59	8
5-2-12	8	5-2-60	8
5-2-13	8	5-2-61	8
5-2-14	8	5-2-62	8
5-2-15	8	5-2-63	8
5-2-16	8	5-2-64	8
5-2-17	8	5-2-65	8
5-2-18	8	5-2-66	8
5-2-19	8	5-2-67	8
5-2-20	8	5-2-68	8
5-2-21	8	5-2-69	8
5-2-22	8	5-2-70	8
5-2-23	8	5-2-71	8
5-2-24	8	5-2-72	8
5-2-25	8	5-2-73	8
5-2-26	8	5-2-74	8
5-2-27	8	5-2-75	8
5-2-28	8	5-2-76	8
5-2-29	8	5-2-77	8
5-2-30	8	5-2-78	8

PAGE/FIGURE NUMBER	REVISION
5-2-79	8
5-2-80	8
5-2-81	8
5-2-82	8
5-2-83	8
5-2-84	8
5-2-85	8
5-2-86	8
5-2-87	8
5-2-88	8
5-2-89	8
5-2-90	8
5-2-91	8
5-2-92	8
5-2-93	8
5-2-94	8
5-2-95	8
5-2-96	8
5-2-97	8
5-2-98	8
5-2-99	8
5-2-100	8
5-3-1	8
5-3-2	8
5-3-3	8
6-1	8
6-2	8
6-3	8
6-4	8
6-5	8
6-6	8
6-7	8
6-8	8
6-9	8
6-10	8
6-11	8
6-12	8
6-13	8
6-14	8
6-15	8
6-16	8
6-17	8
6-18	8
6-19	8
6-20	8
6-21	8
6-22	8
6-23	8

PAGE/FIGURE NUMBER	REVISION
6-24	8
6-25	8
6-26	8
6-27	8
6-28	8
6-29	8
6-30	8
7-1	1
7-2	1
7-3	1
7-4	1
7-5	1
7-6	1
7-7	1
7-8	1
7-9	1
7-10	1
7-11	1
7-12	1
7-13	1
7-14	1
7-15	1
7-16	1
7-17	1
7-18	1
7-19	1
7-20	1
7-21	1
7-22	1
7-23	1
7-24	1

LaSalle County Nuclear Station

Fire Protection Report

(FPR)

Volume 1

LaSalle County Nuclear Station

Fire Protection Report (FPR)

Table of Contents

Volume 1

1. Introduction

2. Appendix H – Fire Hazards Analysis and Safe Shutdown Analysis
    1. H.0 Fire Hazards Analysis
       H.1 Introduction
    2. H.2 Area Designations
    3. H.3. Fire Hazards Analysis
    4. H.4 Safe Shutdown Analysis
    5. H.5 Summary
    6. H.6 Staffing Requirements for Post Fire Safe Shutdown
    7. H.7 Communications
    8. Tables
    9. Figures

Volume 2

3. 10CFR50 Appendix R

4. Safe Shutdown Timelines
    1. 72 Hr. Timeline
    2. Timeline for Operator No. 2
    3. Timeline for Operators No. 1 and 3

5. NFPA Code Conformance
    1. LaSalle NFPA Code List
    2. LaSalle NFPA Code Deviation Summary Matrix
    3. Deleted Deviations (Attachment A)

6. An Analysis of the Effects of Initiation of Fire Suppression Systems on Safe Shutdown Equipment at LaSalle County Station

7. Fire Wraps/Ampacity Ratings
    1. Darmatt KM-1 Safety Evaluations/Correspondence

1. Introduction:

The Fire Protection Report (FPR) includes the documentation necessary to establish and demonstrate compliance with the NRC approved fire protection program. This includes but is not limited to the Fire Hazards Analysis (FHA), the Safe Shutdown Analysis (SSA), the 10CFR50 Appendix R review, the NFPA Code deviation review, and the Suppression Effects Analysis. Controlled changes to the FPR will ensure that changes to approved fire protection are performed in accordance with the fire protection license condition.

LaSalle County Nuclear Station

Fire Protection Report (FPR)

2. Appendix H – Fire Hazards Analysis (FHA) and Safe Shutdown Analysis (SSA)

APPENDIX H - FIRE HAZARDS ANALYSIS

TABLE OF CONTENTS

		PAGE
H.0	FIRE HAZARDS ANALYSIS	H.1-1
H.1	INTRODUCTION	H.1-1
H.1.1	Analysis Methodology	H.1-1
H.1.2	Assumptions	H.1-4
H.1.3	Structural Design Elements	H.1-5
H.1.4	Design Changes and Plant Modifications	H.1-6
H.1.5	Miscellaneous Information in the Fire Protection Report	H.1-7
ATTACHMENT H.1 - RESUME		H.1-8
H.2	AREA DESIGNATIONS	H.2-1
H.3	FIRE HAZARDS ANALYSIS	H.3-1
H.3.1	Fire Area 1: Refueling Floor	H.3-1
H.3.1.1	Refueling Floor – Fire Zone 1	H.3-1
H.3.2	Fire Area 2: Unit 1 Reactor Building	H.3-2
H.3.2.1	Instrument Storage Room - Fire Zone 2A, 832'0"	H.3-3
H.3.2.2	Elevation 820 feet - 6 inches - Fire Zone 2B1	H.3-4
H.3.2.3	Elevation 820 feet - 6 inches - Fire Zone 2B2	H.3-6
H.3.2.4	Elevation 807 feet - 0 inch - Fire Zone 2C	H.3-8
H.3.2.5	Unit 1 - Elevation 786 feet - 6 inches - Fire Zone 2D	H.3-10
H.3.2.6	Unit 1 - Elevation 761 feet - 0 inch - Fire Zone 2E	H.3-12
H.3.2.7	Unit 1 - Elevation 740 feet - 0 inch - Fire Zone 2F	H.3-14
H.3.2.8	Unit 1 - Elevation 710 feet - 6 inches - Fire Zone 2G	H.3-16
H.3.2.9	Unit 1 - Elevation 694 feet - 6 inches - General Floor Area - Fire Zone 2H1	H.3-18
H.3.2.10	Unit 1 - HPCS Cubicle Elevation 694 feet - 6 inches - Fire Zone 2H2	H.3-20
H.3.2.11	Unit 1 - RHR Heat Exchanger B Cubicle - Elevation 694 feet - 6 inches - Fire Zone 2H3	H.3-21
H.3.2.12	Unit 1 - RCIC/LPCS Cubicle Elevation 694 feet - 6 inches - Fire Zone 2H4	H.3-23
H.3.2.13	Unit 1 - RHR Heat Exchanger A Cubicle Fire Zone 2H5	H.3-24
H.3.2.14	Unit 1 - General Area Elevation 673 feet - 4 inches - Fire Zone 2I1	H.3-26
H.3.2.15	Unit 1 - HPCS Cubicle - Fire Zone 2I2	H.3-27
H.3.2.16	Unit 1 - RHR Pump B and C Cubicle - Fire Zone 2I3	H.3-28
H.3.2.17	Unit 1 - LPCS/RCIC Pump Cubicle - Fire Zone 2I4	H.3-30

TABLE OF CONTENTS (Cont'd)

H.3.2.18	Unit 1 - RHR Pump A Cubicle - Fire Zone 2I5	H.3-31
H.3.2.19	Unit 1-Reactor Building Drain Tank Room - Fire Zone 2I6	H.3-32
H.3.2.20	Unit 1 - Primary Containment - Fire Zone 2J	H.3-33
H.3.2.21	Unit 1 - Steam Tunnel - Fire Zone 2K	H.3-35
H.3.3	Fire Area 3: Unit 2 Reactor Building	H.3-36
H.3.3.1	Sipping Instrument Room - Fire Zone 3A(832'0")	H.3-37
H.3.3.2	Elevation 820 feet - 6 inches - Fire Zone 3B1	H.3-37
H.3.3.3	Elevation 820 feet - 6 inches - Fire Zone 3B2	H.3-38
H.3.3.4	Elevation 807 feet - 0 inch Fire Zone 3C	H.3-39
H.3.3.5	Unit 2 Elevation 786 feet - 6 inches - Fire Zone 3D	H.3-40
H.3.3.6	Unit 2 Elevation 761 feet - 0 inch - Fire Zone 3E	H.3-41
H.3.3.7	Unit 2 Elevation 740 feet - 0 inch - Fire Zone 3F	H.3-42
H.3.3.8	Unit 2 Elevation 710 feet - 6 inches - Fire Zone 3G	H.3-43
H.3.3.9	Unit 2 Elevation 694 feet - 6 inches - General Floor Area - Fire Zone 3H1	H.3-44
H.3.3.10	Unit 2 - HPCS Cubicle - Elevation 694 feet - 6 inches - Fire Zone 3H2	H.3-45
H.3.3.11	Unit 2 - RHR Heat Exchanger B Cubicle - Elevation 694 feet - 6 inches - Fire Zone 3H3	H.3-45
H.3.3.12	Unit 2 - RCIC/LPCS Cubicle - Elevation 694 feet - 6 inches - Fire Zone 3H4	H.3-46
H.3.3.13	Unit 2 - RHR Exchanger A Cubicle - Fire Zone 3H5	H.3-47
H.3.3.14	Unit 2 - General Area - Elevation 673 feet - 4 inches - Fire Zone 3I1	H.3-48
H.3.3.15	Unit 2 - HPCS Cubicle - Fire Zone 3I2	H.3-49
H.3.3.16	Unit 2 - RHR Pump B and C Cubicle - Fire Zone 3I3	H.3-49
H.3.3.17	Unit 2 – LPCS/RCIC Pump Cubicle - Fire Zone 3I4	H.3-50
H.3.3.18	Unit 2 - RHR Pump A Cubicle - Fire Zone 3I5	H.3-51
H.3.3.19	Unit 2 - Reactor Building Drain Tank Room - Fire Zone 3I6	H.3-52
H.3.3.20	Unit 2 - Primary Containment - Fire Zone 3J	H.3-52
H.3.3.21	Unit 2 - Steam Tunnel - Fire Zone 3K	H.3-53
H.3.4	Fire Area 4: Auxiliary Building - Units 1 and 2	H.3-55
H.3.4.1	Auxiliary Building Upper Ventilation Equipment Floor - Fire Zone 4A (815'0")	H.3-55
H.3.4.2	Auxiliary Building Lower Ventilation Equipment Floor - Fire Zone 4B (786'6")	H.3-57
H.3.4.3	Control Room - Fire Zone 4C1	H.3-60
H.3.4.4	Auxiliary Building Main Floor - Fire Zone 4C2	H.3-62
H.3.4.5	Auxiliary Building Elevation 768 feet - 0 inches - Fire Zone 4C3	H.3-65
H.3.4.6	Computer Room - Fire Zone 4C4	H.3-68
H.3.4.7	Security Control Center - Fire Zone 4C5	H.3-70
H.3.4.8	Unit 1 Cable Spreading Room - Fire Zone 4D1	H.3-72
H.3.4.9	Unit 2 Cable Spreading Room - Fire Zone 4D2	H.3-74
H.3.4.10	Electrical Equipment Room - Fire Zone 4D3 (749'0")	H.3-75
H.3.4.11	Electrical Equipment Room - Fire Zone 4D4	H.3-78
H.3.4.12	Unit 1 Auxiliary Equipment Room - Fire Zone 4E1	H.3-78

TABLE OF CONTENTS (Cont'd)

H.3.4.13	Unit 2 Auxiliary Equipment Room - Fire Zone 4E2	H.3-80
H.3.4.14	Unit 1 Division 2 Essential Switchgear Room - Fire Zone 4E3 (731'0")	H.3-81
H.3.4.15	Unit 2 Division 2 Essential Switchgear Room - Fire Zone 4E4	H.3-84
H.3.4.16	Unit 1 Division 1 Essential Switchgear Room - Fire Zone 4F1 (710'6")	H.3-85
H.3.4.17	Unit 2 Division 1 Essential Switchgear Room - Fire Zone 4F2	H.3-87
H.3.4.18	Auxiliary Building Ground Floor - Fire Zone 4F3	H.3-88
H.3.5	Fire Area 5: Turbine Building - Units 1 and 2	H.3-90
H.3.5.1	Unit 1 Turbine Driven Reactor Feed Pump Area - Fire Zone 5A1	H.3-90
H.3.5.2	Unit 2 Turbine Driven Reactor Feed Pump Area - Fire Zone 5A2	H.3-92
H.3.5.3	Turbine Operating Floor and Heater Bay - Fire Zone 5A3	H.3-93
H.3.5.4	Cable Area - Elevation 749 Feet - 0 inch - Fire Zone 5A4	H.3-96
H.3.5.5	Unit 1 Heater Bays - Fire Zone 5B1	H.3-98
H.3.5.6	Unit 2 Heater Bays - Fire Zone 5B2	H.3-101
H.3.5.7	Turbine Oil Package Room - Fire Zone 5B3 (735'0")	H.3-102
H.3.5.8	Electrode Boiler Room - Fire Zone 5B4	H.3-104
H.3.5.9	Elevation 731 Feet - 0 inch - Fire Zone 5B5	H.3-106
H.3.5.10	Unit 2 Elevation 731 feet - 0 inch - Fire Zone 5B6	H.3-108
H.3.5.11	Unit 1 Hydrogen Seal Oil Unit - Fire Zone 5B7	H.3-109
H.3.5.12	Unit 2 Hydrogen Seal Oil Unit - Fire Zone 5B8	H.3-110
H.3.5.13	Unit 1 Motor Driven Reactor Feed Pump Room - Fire Zone 5B9	H.3-111
H.3.5.14	Unit 2 Motor Driven Reactor Feed Pump Room - Fire Zone 5B10	H.3-113
H.3.5.15	Unit 1 Heater Aisle - Fire Zone 5B11 (728'0" TB West)	H.3-113
H.3.5.16	Unit 2 Heater Aisle - Fire Zone 5B12	H.3-115
H.3.5.17	Balance-of-Plant Cable Area - Fire Zone 5B13 (731'0")	H.3-116
H.3.5.18	Unit 1 Valve Aisle - Fire Zone 5C1 (710' 6" TB West)	H.3-118
H.3.5.19	Unit 2 Valve Aisle - Fire Zone 5C2	H.3-119
H.3.5.20	Unit 1 Condenser Tube Pull Area - Fire Zone 5C3	H.3-120
H.3.5.21	Unit 2 Condenser Tube Pull Area - Fire Zone 5C4	H.3-121
H.3.5.22	Unit 1 Number 2 High Pressure Heater Cubicle - Fire Zone 5C5	H.3-122
H.3.5.23	Unit 1 Number 1 High Pressure Heater Cubicle - Fire Zone 5C6	H.3-124
H.3.5.24	Unit 2 Number 1 High Pressure Heater Cubicle - Fire Zone 5C7	H.3-125
H.3.5.25	Unit 2 Number 2 HP Heater Cubicle - Fire Zone 5C8	H.3-125
H.3.5.26	Unit 1 Valve Room - Fire Zone 5C9	H.3-126
H.3.5.27	Unit 2 Valve Room - Fire Zone 5C10	H.3-127

TABLE OF CONTENTS (Cont'd)

H.3.5.28	Turbine Building Ground Floor General Area - Fire Zone 5C11	H.3-128
H.3.5.29	Unit 1 HPCS Switchgear Area - Fire Zone 5D1 (687'0")	H.3-132
H.3.5.30	Unit 2 HPCS Switchgear Area - Fire Zone 5D2	H.3-134
H.3.5.31	Demineralizer Zone - Fire Zone 5D3 (687'0" TB South)	H.3-135
H.3.5.32	Heater Drain Tank Zone Fire Zone 5D4(687'0" TB North)	H.3-136
H.3.5.33	Turbine Building Upper Basement Area - Fire Zone 5D5	H.3-137
H.3.5.34	Clean and Dirty Oil Tank Room - Fire Zone 5D6 (693'0" TB)	H.3-139
H.3.5.35	Unit 1 Turbine Building Lower Basement - Fire Zone 5E1 (663'0" TB South)	H.3-140
H.3.5.36	Unit 2 Turbine Building Lower Basement - Fire Zone 5E2	H.3-142
H.3.6	Fire Area 6: Radwaste Building - Units 1 and 2	H.3-143
H.3.6.1	Radwaste Concentration Area - Fire Zone 6A (734'6")	H.3-143
H.3.6.2	Radwaste Control Room - Fire Zone 6B1 (710'6")	H.3-145
H.3.6.3	Elevation 706 feet - 6 inches - Fire Zone 6B2	H.3-146
H.3.6.4	Radwaste Filters - Fire Zone 6B3	H.3-148
H.3.6.5	Radwaste Pipe Tunnel - Fire Zone 6C	H.3-149
H.3.6.6	Elevation 687 feet - 0 inch - Fire Zone 6D	H.3-151
H.3.6.7	Elevation 663 feet - 0 inch - Fire Zone 6E	H.3-153
H.3.7	Fire Area 7: Diesel-Generator Building - Unit 1	H.3-155
H.3.7.1	HPCS Diesel Ventilation Equipment Room -Fire Zone 7A1	H.3-155
H.3.7.2	Division 2 Diesel Ventilation Equipment Room - Fire Zone 7A2	H.3-156
H.3.7.3	Division 1 Diesel Ventilation Equipment Room - Fire Zone 7A3	H.3-158
H.3.7.4	HPCS Diesel Generator Room - Fire Zone 7B1	H.3-160
H.3.7.5	Division 2 Standby Diesel-Generator Room - Fire Zone 7B2	H.3-162
H.3.7.6	Division 1 Standby Diesel-Generator Room - Fire Zone 7B3	H.3-164
H.3.7.7	HPCS Diesel Day Tank Room - Fire Zone 7B4	H.3-167
H.3.7.8	Division 2 Diesel Day Tank Room - Fire Zone 7B5	H.3-168
H.3.7.9	Division 1 Diesel Day Tank Room - Fire Zone 7B6	H.3-170
H.3.7.10	HPCS Diesel Fuel Tank Room - Fire Zone 7C1	H.3-171
H.3.7.11	Division 2 Diesel Fuel Tank Room - Fire Zone 7C2	H.3-173
H.3.7.12	Division 1 Diesel Fuel Tank Room - Fire Zone 7C3	H.3-175
H.3.7.13	HPCS Diesel Pump Room - Fire Zone 7C4	H.3-176
H.3.7.14	Division 2 RHR Service Water Pump Room - Fire Zone 7C5	H.3-178
H.3.7.15	Division 1 RHR Service Water Pump Room - Fire Zone 7C6	H.3-179
H.3.8	Fire Area 8: Diesel-Generator Building - Unit 2	H.3-182
H.3.8.1	HPCS Diesel Ventilation Equipment Room -Fire Zone 8A1	H.3-182

TABLE OF CONTENTS (Cont'd)

H.3.8.2	Division 2 Diesel Ventilation Equipment Room - Fire Zone 8A2	H.3-184
H.3.8.3	HPCS Diesel-Generator Room - Fire Zone 8B1	H.3-185
H.3.8.4	Division 2 Standby Diesel-Generator Room - Fire Zone 8B2	H.3-188
H.3.8.5	HPCS Diesel Day Tank Room - Fire Zone 8B3	H.3-190
H.3.8.6	Division 2 Diesel Day Tank Room - Fire Zone 8B4	H.3-192
H.3.8.7	HPCS - Diesel Fuel Tank Room - Fire Zone 8C1	H.3-193
H.3.8.8	Division 2 Diesel Fuel Tank Room - Fire Zone 8C2	H.3-195
H.3.8.9	HPCS Diesel Pump Room - Fire Zone 8C3	H.3-197
H.3.8.10	Division 2 RHR Service Water Pump Room - Fire Zone 8C4	H.3-199
H.3.8.11	Division 1 RHR Service Water Pump Room - Fire Zone 8C5	H.3-201
H.3.9	Fire Area 9: Service Building	H.3-202
H.3.10	Fire Area 10: Off-Gas Building - Units 1 and 2	H.3-203
H.3.10.1	Off-Gas Building Ventilation Room - Fire Zone 10A1 (710'6" West)	H.3-203
H.3.10.2	Filter Access Room - Fire Zone 10A2 (710'6" East)	H.3-204
H.3.10.3	Elevation 690 feet - 0 inch - Fire Zone 10B1 (West)	H.3-205
H.3.10.4	Off-Gas Afterfilter Cubicle - Fire Zone 10B2 689'6" Center)	H.3-206
H.3.10.5	Unit 1 - Off-Gas Prefilter Cubicle - Fire Zone 10B3 (689'6" South)	H.3-207
H.3.10.6	Unit 2 - Off-Gas Prefilter Cubicle - Fire Zone 10B4 (689'6" North)	H.3-208
H.3.10.7	Unit 1 Charcoal Absorber Vault - Fire Zone 10C1 (674'0"/690'0" Southeast)	H.3-209
H.3.10.8	Unit 2 Charcoal Absorber Vault Fire Zone 10C2 (674'0"/690'0" Northeast)	H.3-210
H.3.10.9	Elevation 674 feet - 0 inch - Fire Zone 10C3 (West)	H.3-211
H.3.10.10	New Service Building-Fire Zone 11- elevation 710'-6"	H-3-212
H.4	SAFE SHUTDOWN ANALYSIS	H.4-1
H.4.1	Introduction	H.4-1
H.4.1.1	Purpose	H.4-1
H.4.1.2	Analysis Criterion	H.4-2
H.4.1.3	Evaluation Method	H.4-2
H.4.1.4	Safe Shutdown Equipment	H.4-4
H.4.1.5	Basis and Assumptions	H.4-4
H.4.2	Fire Area/Zone Hot Shutdown Analysis	H.4-5
H.4.2.1	Fire Zone 2B1 (Unit 1 Reactor Building, Elevation 820 feet 6 inches)	H.4-7
H.4.2.2	Fire Zone 3B1 (Unit 2 Reactor Building, Elevation 820 feet 6 inches)	H.4-8

TABLE OF CONTENTS (Cont'd)

H.4.2.3	Fire Zone 2B2 (Unit 1 Reactor Building, Elevation 820 feet, 6 inches)	H.4-8
H.4.2.4	Fire Zone 3B2 (Unit 2 Reactor Building, Elevation 820 feet, 6 inches)	H.4-8
H.4.2.5	Fire Zone 2C (Unit 1 Reactor Building, Elevation 807 feet, 0 inches)	H.4-8
H.4.2.6	Fire Zone 3C (Unit 2 Reactor Building, Elevation 807 feet, 0 inches)	H.4-8
H.4.2.7	Fire Zone 2D (Unit 1 Reactor Building, Elevation 786 feet 6 inches)	H.4-9
H.4.2.8	Fire Zone 3D (Unit 2 Reactor Building, Elevation 786 feet 6 inches)	H.4-9
H.4.2.9	Fire Zone 2E (Unit 1 Reactor Building, Elevation 761 feet 0 inch)	H.4-9
H.4.2.9.1	Fire Subzone 2E-1	H.4-10
H.4.2.9.2	Fire Subzone 2E-2	H.4-10
H.4.2.10	Fire Zone 3E (Unit 2 Reactor Building, Elevation 761 feet 0 inch)	H.4-11
H.4.2.10.1	Fire Subzone 3E-1	H.4-11
H.4.2.10.2	Fire Subzone 3E-2	H.4-12
H.4.2.11	Fire Zone 2F (Unit 1 Reactor Building, Elevation 740 feet 0 inch)	H.4-13
H.4.2.11.1	Fire Subzone 2F-1	H.4-13
H.4.2.11.2	Fire Subzone 2F-2	H.4-14
H.4.2.12	Fire Zone 3F (Unit 2 Reactor Building, Elevation 740 feet 0 inch)	H.4-14
H.4.2.12.1	Fire Subzone 3F-1	H.4-15
H.4.2.12.2	Fire Subzone 3F-2	H.4-15
H.4.2.13	Fire Zone 2G (Unit 1 Reactor Building, Elevation 710 feet 6 inches)	H.4-16
H.4.2.13.1	Fire Subzone 2G-1	H.4-16
H.4.2.13.2	Fire Subzone 2G-2	H.4-17
H.4.2.14	Fire Zone 3G (Unit 2 Reactor Building, Elevation 710 feet 6 inches)	H.4-17
H.4.2.14.1	Fire Subzone 3G-1	H.4-18
H.4.2.14.2	Fire Subzone 3G-2	H.4-18
H.4.2.15	Fire Zone 2H1 (Unit 1 Reactor Building, Elevation 694 feet 6 inches, General Floor Area)	H.4-19
H.4.2.15.1	Fire Subzone 2H1-1	H.4-19
H.4.2.15.2	Fire Subzone 2H1-2	H.4-19
H.4.2.16	Fire Zone 3H1 (Unit 2 Reactor Building, Elevation 694 feet 6 inches, General Floor Area)	H.4-20
H.4.2.16.1	Fire Subzone 3H1-1	H.4-20
H.4.2.16.2	Fire Subzone 3H1-2	H.4-20
H.4.2.17	Fire Zone 2H2 (Unit 1 Reactor Building, Elevation 694 feet 6 inches, HPCS Cubicle)	H.4-21

TABLE OF CONTENTS (Cont'd)

H.4.2.18	Fire Zone 2H3 (Unit 1 Reactor Building, Elevation 694 feet 6 inches, RHR Heat Exchanger B Cubicle)	H.4-21
H.4.2.19	Fire Zone 3H3 (Unit 2 Reactor Building, Elevation 694 feet 6 inches, RHR Heat Exchanger B Cubicle)	H.4-21
H.4.2.20	Fire Zone 2H4 (Unit 1 Reactor Building, Elevation 694 feet 6 inches, RCIC/LPCS Cubicles)	H.4-21
H.4.2.21	Fire Zone 3H4 (Unit 2 Reactor Building, Elevation 694 feet 6 inches, RCIC/LPCS Cubicles)	H.4-22
H.4.2.22	Fire Zone 2H5 (Unit 1 Reactor Building, Elevation 694 feet 6 inches, RHR Heat Exchanger A Cubicle)	H.4-22
H.4.2.23	Fire Zone 3H5 (Unit 2 Reactor Building, Elevation 694 feet 6 inches, RHR Heat Exchanger A Cubicle)	H.4-22
H.4.2.24	Fire Zone 2I1 (Unit 1 Reactor Building, Elevation 673 feet 4 inches, General Area)	H.4-22
H.4.2.24.1	Fire Subzone 2I1-1	H.4-23
H.4.2.24.2	Fire Zone Subzone 2I1-2	H.4-23
H.4.2.25	Fire Zone 3I1 (Unit 2 Reactor Building, Elevation 673 feet 4 inches, General Area)	H.4-23
H.4.2.25.1	Fire Subzone 3I1-1	H.4-24
H.4.2.25.2	Fire Subzone 3I1-2	H.4-24
H.4.2.26	Fire Zone 2I2 (Unit 1 Reactor Building, Elevation 673 feet 4 inches, HPCS Cubicle)	H.4-24
H.4.2.27	Fire Zone 3I2 (Unit 2 Reactor Building, Elevation 673 feet 4 inches, HPCS Cubicle)	H.4-24
H.4.2.28	Fire Zone 2I3 (Unit 1 Reactor Building, Elevation 673 feet 4 inches, RHR Pump B and C Cubicle)	H.4-25
H.4.2.29	Fire Zone 3I3 (Unit 2 Reactor Building, Elevation 673 feet 4 inches, RHR Pump B and C Cubicle)	H.4-25
H.4.2.30	Fire Zone 2I4 (Unit 1 Reactor Building, Elevation 673 feet 4 inches, LPCS/RCIC Pump Cubicle)	H.4-25
H.4.2.31	Fire Zone 3I4 (Unit 2 Reactor Building, Elevation 673 feet 4 inches, LPCS/RCIC Pump Cubicle)	H.4-25
H.4.2.32	Fire Zone 2I5 (Unit 1 Reactor Building, Elevation 673 feet 4 inches, RHR Pump A Cubicle)	H.4-26
H.4.2.33	Fire Zone 3I5 (Unit 2 Reactor Building, Elevation 673 feet 4 inches, RHR Pump A Cubicle)	H.4-26
H.4.2.34	Fire Zone 2J (Unit 1 Reactor Building, Primary Containment)	H.4-26
H.4.2.35	Fire Zone 3J (Unit 2 Reactor Building, Primary Containment)	H.4-27
H.4.2.36	Fire Zone 2K (Unit 1 Steam Tunnel)	H.4-27
H.4.2.37	Fire Zone 3K (Unit 2 Steam Tunnel)	H.4-27
H.4.2.38	Fire Zone 4C1 (Auxiliary Building, Elevation 768 feet 0 inch, Control Room)	H.4-28
H.4.2.39	Fire Zone 4C2 (Unit 1 Auxiliary Building, Elevation 768 feet 0 inch, Main Floor)	H.4-29

TABLE OF CONTENTS (Cont'd)

H.4.2.40	Fire Zone 4C3 (Unit 2 Auxiliary Building, Elevation 768 feet 0 inch, Main Floor)	H.4-29
H.4.2.41	Fire Zone 4C4 Computer Room	H.4-30
H.4.2.42	Fire Zone 4D1 (Unit 1 Auxiliary Building, Elevation 749 feet 0 inch, Cable Spreading Room)	H.4-30
H.4.2.42.1	Fire Subzone 4D1-1	H.4-30
H.4.2.42.2	Fire Subzone 4D1-2	H.4-31
H.4.2.43	Fire Zone 4D2 (Unit 2 Auxiliary Building, Elevation 749 feet 0 inch, Cable Spreading Room)	H.4-31
H.4.2.44	Fire Zone 4D3 (Unit 1 Auxiliary Building, Elevation 749 feet 0 inch, Electrical Equipment Room)	H.4-32
H.4.2.45	Fire Zone 4D4 (Unit 2 Auxiliary Building, Elevation 749 feet 0 inch, Electrical Equipment Room)	H.4-32
H.4.2.46	Fire Zone 4E1 (Unit 1 Auxiliary Building, Elevation 731 feet 0 inch, Auxiliary Electric Equipment Room)	H.4-33
H.4.2.46.1	Fire Subzone 4E1-1	H.4-33
H.4.2.46.2	Fire Subzone 4E1-2	H.4-34
H.4.2.47	Fire Zone 4E2 (Unit 2 Auxiliary Building, Elevation 731 feet 0 inch, Auxiliary Electric Equipment Room)	H.4-35
H.4.2.47.1	Fire Subzone 4E2-1	H.4-35
H.4.2.47.2	Fire Subzone 4E2-2	H.4-36
H.4.2.48	Fire Zone 4E3 (Unit 1 Auxiliary Building, Elevation 731 feet 0 inch, Division 2 Essential Switchgear Room)	H.4-37
H.4.2.48.1	Fire Subzone 4E3-1	H.4-37
H.4.2.48.2	Fire Subzone 4E3-2	H.4-38
H.4.2.49	Fire Zone 4E4 (Unit 2 Auxiliary Building, Elevation 731 feet 0 inch, Division 2 Essential Switchgear Room)	H.4-38
H.4.2.49.1	Fire Subzone 4E4-1	H.4-38
H.4.2.49.2	Fire Subzone 4E4-2	H.4-39
H.4.2.50	Fire Zone 4F1 (Unit 1 Auxiliary Building, Elevation 710 feet 6 inches, Division 1 Essential Switchgear Room)	H.4-40
H.4.2.51	Fire Zone 4F2 (Unit 2 Auxiliary Building, Elevation 710 feet 6 inches, Division 1 Essential Switchgear Room)	H.4-40
H.4.2.52	Fire Zone 4F3 (Auxiliary Building, Elevation 710 feet 6 inches, Auxiliary Building Ground Floor)	H.4-40
H.4.2.53	Fire Zone 5A4 (Cable Area Turbine Building Elevation 749 feet, 0 inches)	H.4-42
H.4.2.54	Fire Zone 5B13	H.4-42
H.4.2.55	Fire Zone 5C5 (Turbine Building Unit 1; Number 2 High Pressure Heater Cubicle)	H.4-43
H.4.2.56	Fire Zone 5C8 (Turbine Building Unit 2, Number 2 High Pressure Heater Cubicle)	H.4-43
H.4.2.57	Fire Zone 5C11 (Turbine Building, Elevation 710 feet 6 inches. Turbine Building Ground Floor General Area)	H.4-43

TABLE OF CONTENTS (Cont'd)

H.4.2.58	Fire Zone 5D1 (Unit 1 Auxiliary Building, Elevation 687 feet 0 inch, HPCS Switchgear Area)	H.4-45
H.4.2.59	Fire Zone 5D2 (Unit 2 Auxiliary Building, Elevation 687 feet 0 inch, HPCS Switchgear Area)	H.4-46
H.4.2.59a	Fire Zone 5D5 (Unit 2 Turbine Building, Elevation 693 feet 0 inch, Turbine Building Upper Basement Area)	H.4-46
H.4.2.60	Fire Zone 7A1 (Unit 1 Auxiliary Building, Elevation 736 feet 6 inches, HPCS Diesel Ventilation Equipment Room)	H.4-46
H.4.2.61	Fire Zone 7A2 (Unit 1 Auxiliary Building, Elevation 736 feet 6 inches, Division 2 Diesel Ventilation Equipment Room)	H.4-46
H.4.2.62	Fire Zone 7A3 (Unit 1 Auxiliary Building, Elevation 736 feet 6 inches, Division 1 Diesel Ventilation Equipment Room)	H.4-47
H.4.2.63	Fire Zone 7B1 (Unit 1 Auxiliary Building, Elevation 710 feet 6 inches, HPCS Diesel-Generator Room)	H.4-47
H.4.2.64	Fire Zone 7B2 (Unit 1 Auxiliary Building, Elevation 710 feet 6 inches, Division 2 Standby Diesel-Generator Room)	H.4-47
H.2.4.65	Fire Zone 7B3 (Unit 1 Auxiliary Building, Elevation 710 feet 6 inches, Division 1 Standby Diesel-Generator Room)	H.4-47
H.4.2.66	Fire Zone 7B4 (Unit 1 Auxiliary Building, Elevation 710 feet 6 inches, HPCS Diesel Day Tank Room)	H.4-47
H.4.2.67	Fire Zone 7B5 (Unit 1 Auxiliary Building, Elevation 710 feet 6 inches, Division 2 Diesel Day Tank Room)	H.4-48
H.4.2.68	Fire Zone 7B6 (Unit 1 Auxiliary Building, Elevation 710 feet,6 inches, Division 1 Diesel Day Tank Room)	H.4-48
H.4.2.69	Fire Zone 7C1 (Unit 1 Auxiliary Building, Elevation 674 feet 0 inch, HPCS Diesel Fuel Tank Room)	H.4-48
H.4.2.70	Fire Zone 7C2 (Unit 1 Auxiliary Building, Elevation 674 feet 0 inch, Division 2 Diesel Fuel Tank Room)	H.4-48
H.4.2.71	Fire Zone 7C3 (Unit 1 Auxiliary Building, Elevation 674 feet 0 inch, Division 1 Diesel Fuel Tank Room)	H.4-49
H.4.2.72	Fire Zone 7C4 (Unit 1 Auxiliary Building, Elevation 674 feet 0 inch, HPCS Diesel Pump Room)	H.4-49
H.4.2.73	Fire Zone 7C5 (Unit 1 Auxiliary Building, Elevation 674 feet 0 inch, Division 2 RHR Service Water Pump Rm)	H.4-49
H.4.2.74	Fire Zone 7C6 (Unit 1 Auxiliary Building, Elevation 674 feet 0 inch, Division 1 RHR Service Water Pump Rm)	H.4-49
H.4.2.75	Fire Zone 8A1 (Unit 2 Auxiliary Building, Elevation 736 feet 6 inches, HPCS Diesel Ventilation Equipment Room)	H.4-50
H.4.2.76	Fire Zone 8A2 (Unit 2 Auxiliary Building, Elevation 736 feet 6 inches, Division 2 Diesel Ventilation Equipment Rm)	H.4-50

TABLE OF CONTENTS (Cont'd)

H.4.2.77	Fire Zone 8B1 (Unit 2 Auxiliary Building, Elevation 710 feet 6 inches, HPCS Diesel-Generator Room)	H.4-50
H.4.2.78	Fire Zone 8B2 (Unit 2 Auxiliary Building, 710 feet 6 inches, Division 2 Standby Diesel-Generator Room)	H.4-50
H.4.2.79	Fire Zone 8B3 (Unit 2 Auxiliary Building, Elevation 710 feet 6 inches, HPCS Diesel Day Tank Room)	H.4-50
H.4.2.80	Fire Zone 8B4 (Unit 2 Auxiliary Building, Elevation 710 feet 6 inches, Division 2 Diesel Day Tank Room)	H.4-51
H.4.2.81	Fire Zone 8C1 (Unit 2 Auxiliary Building, Elevation 674 feet 0 inch, HPCS Diesel Fuel Tank Room)	H.4-51
H.4.2.82	Fire Zone 8C2 (Unit 2 Auxiliary Building, Elevation 674 feet 0 inch, Division 2 Diesel Fuel Tank Room)	H.4-51
H.4.2.83	Fire Zone 8C3 (Unit 2 Auxiliary Building, Elevation 674 feet 0 inch, HPCS Diesel Pump Room)	H.4-51
H.4.2.84	Fire Zone 8C4 (Unit 2 Auxiliary Building, Elevation 674 feet 0 inch, Division 2 RHR Service Water Pump Rm)	H.4-52
H.4.2.85	Fire Zone 8C5 (Unit 2 Auxiliary Building, Elevation 674 feet 0 inch, Division 1 RHR Service Water Pump Rm)	H.4-52
H.4.2.86	Unit 1 Fire Zones Containing Unit 2 Cables and Components	H.4-52
H.4.2.87	Auxiliary Building Southeast and Northeast Corner Stairwells	H.4-52
H.4.3	Ventilation	H.4-53
H.4.3.1	Control Room Ventilation System and Auxiliary Electric Equipment Room Ventilation System	H.4-54
H.4.3.2	Other Safe Shutdowns Systems	H.4-55
H.4.4	Instrumentation	H.4-55
H.4.4.1	Reactor Vessel Pressure	H.4-55
H.4.4.2	Reactor Vessel Level	H.4-56
H.4.4.3	Suppression Pool Temperature	H.4-56
H.4.4.4	Suppression Pool Level	H.4-56
H.4.4.5	Diagnostic Instrumentation	H.4-56
H.4.4.6	Tank Level Instrumentation	H.4-56
H.4.4.6.1	Cycled Condensate Tank Level	H.4-56
H.4.4.6.2	Diesel Fuel Oil Day Tank Level	H.4-57
H.4.4.7	Other Instruments	H.4-57
H.4.5	Cold Shutdown Analysis	H.4-58
H.4.6	Valve Spurious Operations and Cable Separation Analysis	H.4-59
H.4.6.1	Identification of Valves	H.4-59
H.4.6.2	Evaluation	H.4-59
H.4.6.3	RCIC Steam Line/RHR Heat Exchanger High-Low Pressure Interface Analysis	H.4-60
H.5	SUMMARY	H.5-1
H.6	Staffing Requirements	H.6-1
H.7	Communications	H.7-1

TABLE OF CONTENTS (Cont'd)

APPENDIX H - FIRE HAZARDS ANALYSIS

LIST OF TABLES

NUMBER	TITLE
H.1-1	Fire Hazards Characteristics of Materials Used at LSCS
H.2-1	Fire Area/Zone Description
H.3-1	Safety-Related and Radioactive Equipment
H.3-2	Combustible Loadings and Extinguishing Capabilities
H.4-1	Primary Systems for Safe Shutdown of Reactor
H.4-2	Basic Shutdown Method - Mechanical Equipment List
H.4-3	Alternate Shutdown Method - Mechanical Equipment List
H.4-4	Ventilation Equipment List
H.4-5	Hot Shutdown Systems Affected by a Loss of Selected Ventilation Systems
H.4-6	Basic Shutdown Method Electrical Equipment List
H.4-7	Alternate Shutdown Method Electrical Equipment List
H.4-8	Fire Areas/Zones Not Affecting Safe Shutdown
H.4-9	Safe Shutdown Equipment Located in Fire Zone 2B1
H.4-10	Safe Shutdown Equipment Located in Fire Zone 3B1
H.4-11	Safe Shutdown Equipment Located in Fire Zone 2D
H.4-12	Safe Shutdown Equipment Located in Fire Zone 3D
H.4-13	Safe Shutdown Equipment Located in Fire Subzone 2E-1
H.4-14	Safe Shutdown Equipment Located in Fire Subzone 2E-2
H.4-15	Safe Shutdown Equipment Located in Fire Subzone 3E-1
H.4-16	Safe Shutdown Equipment Located in Fire Subzone 3E-2
H.4-17	Safe Shutdown Equipment Located in Fire Subzone 2F-1
H.4-18	Safe Shutdown Equipment Located in Fire Subzone 2F-2
H.4-19	Safe Shutdown Equipment Located in Fire Subzone 3F-1
H.4-20	Safe Shutdown Equipment Located in Fire Subzone 3F-2
H.4-21	Safe Shutdown Equipment Located in Fire Subzone 2G-1
H.4-22	Safe Shutdown Equipment Located in Fire Subzone 2G-2
H.4-23	Safe Shutdown Equipment Located in Fire Subzone 3G-1
H.4-24	Safe Shutdown Equipment Located in Fire Subzone 3G-2
H.4-25	Safe Shutdown Equipment Located in Fire Subzone 2H1-1
H.4-26	Safe Shutdown Equipment Located in Fire Subzone 2H1-2
H.4-27	Safe Shutdown Equipment Located in Fire Subzone 3H1-1
H.4-28	Safe Shutdown Equipment Located in Fire Subzone 3H1-2
H.4-29	Safe Shutdown Equipment Located in Fire Subzone 2H2
H.4-30	Safe Shutdown Equipment Located in Fire Zone 2H3

TABLE OF CONTENTS (Cont'd)

H.4-31 Safe Shutdown Equipment Located in Fire Subzone 3H3
H.4-32 Safe Shutdown Equipment Located in Fire Zone 2H4
H.4-33 Safe Shutdown Equipment Located in Fire Subzone 3H4
H.4-34 Safe Shutdown Equipment Located in Fire Zone 2H5
H.4-35 Safe Shutdown Equipment Located in Fire Subzone 3H5
H.4-36 Safe Shutdown Equipment Located in Fire Subzone 2I1-1
H.4-37 Safe Shutdown Equipment Located in Fire Subzone 2I1-2
H.4-38 Safe Shutdown Equipment Located in Fire Subzone 3I1-1
H.4-39 Safe Shutdown Equipment Located in Fire Zone 3I1-2
H.4-40 Safe Shutdown Equipment Located in Fire Zone 2I2
H.4-41 Safe Shutdown Equipment Located in Fire Zone 3I2
H.4-42 Safe Shutdown Equipment Located in Fire Zone 2I3
H.4-43 Safe Shutdown Equipment Located in Fire Zone 3I3
H.4-44 Safe Shutdown Equipment Located in Fire Zone 2I4
H.4-45 Safe Shutdown Equipment Located in Fire Zone 3I4
H.4-46 Safe Shutdown Equipment Located in Fire Zone 2I5
H.4-47 Safe Shutdown Equipment Located in Fire Zone 3I5
H.4-48 Safe Shutdown Equipment Located in Fire Zone 2J (Primary Containment)
H.4-49 Safe Shutdown Equipment Located in Fire Zone 3J (Primary Containment)
H.4-50 Safe Shutdown Equipment Located in Fire Zone 4C1 (Control Room Unit 1)
H.4-51 Safe Shutdown Equipment Located in Fire Zone 4C1 (Control Room Unit 2)
H.4-52 Safe Shutdown Equipment Located in Fire Zone 4C2
H.4-53 Safe Shutdown Equipment Located in Fire Zone 4C3
H.4-54 Safe Shutdown Equipment Located in Fire Subzone 4D1-1
H.4-55 Safe Shutdown Equipment Located in Fire Subzone 4D1-2 (Cable Spreading Room)
H.4-56 Safe Shutdown Equipment Located in Fire Subzone 4D2
H.4-57 Safe Shutdown Equipment Located in Fire Zone 4D3
H.4-58 Safe Shutdown Equipment Located in Fire Zone 4D4
H.4-59 Safe Shutdown Equipment Located in Fire Subzone 4E1-1
H.4-60 Safe Shutdown Equipment Located in Fire Subzone 4E1-2
H.4-61 Safe Shutdown Equipment Located in Fire Subzone 4E2-1
H.4-62 Safe Shutdown Equipment Located in Fire Subzone 4E2-2
H.4-63 Safe Shutdown Equipment Located in Fire Subzone 4E3-1
H.4-64 Safe Shutdown Equipment Located in Fire Subzone 4E3-2
H.4-65 Safe Shutdown Equipment Located in Fire Subzone 4E4-1
H.4-66 Safe Shutdown Equipment Located in Fire Subzone 4E4-2
H.4-67 Safe Shutdown Equipment Located in Fire Zone 4F1
H.4-68 Safe Shutdown Equipment Located in Fire Zone 4F2
H.4-69 Safe Shutdown Equipment Located in Fire Zone 4F3 (Unit 1)
H.4-70 Safe Shutdown Equipment Located in Fire Zone 4F3 (Unit 2)
H.4-71 Safe Shutdown Equipment Located in Fire Zone 5C11 (Unit 1)
H.4-72 Safe Shutdown Equipment Located in Fire Zone 5C11 (Unit 2)
H.4-73 Safe Shutdown Equipment Located in Fire Zone 5D1
H.4-74 Safe Shutdown Equipment Located in Fire Zone 5D2
H.4-74a Safe Shutdown Equipment Located in Fire Zone 5D5

H.4-75 Safe Shutdown Equipment Located in Fire Zone 7A1
H.4-76 Safe Shutdown Equipment Located in Fire Zone 7A2

LIST OF TABLES (Cont'd)

NUMBER	TITLE
H.4-77	Safe Shutdown Equipment Located in Fire Zone 7A3
H.4-78	Safe Shutdown Equipment Located in Fire Zone 7B1
H.4-79	Safe Shutdown Equipment Located in Fire Zone 7B2
H.4-80	Safe Shutdown Equipment Located in Fire Zone 7B3
H.4-81	Safe Shutdown Equipment Located in Fire Zone 7B4
H.4-82	Safe Shutdown Equipment Located in Fire Zone 7B5
H.4-83	Safe Shutdown Equipment Located in Fire Zone 7B6
H.4-84	Safe Shutdown Equipment Located in Fire Zone 7C1
H.4-85	Safe Shutdown Equipment Located in Fire Zone 7C2
H.4-86	Safe Shutdown Equipment Located in Fire Zone 7C3
H.4-87	Safe Shutdown Equipment Located in Fire Zone 7C4
H.4-88	Safe Shutdown Equipment Located in Fire Zone 7C5
H.4-89	Safe Shutdown Equipment Located in Fire Zone 7C6
H.4-90	Safe Shutdown Equipment Located in Fire Zone 8A1
H.4-91	Safe Shutdown Equipment Located in Fire Zone 8A2
H.4-92	Safe Shutdown Equipment Located in Fire Zone 8B1
H.4-93	Safe Shutdown Equipment Located in Fire Zone 8B2
H.4-94	Safe Shutdown Equipment Located in Fire Zone 8B3
H.4-95	Safe Shutdown Equipment Located in Fire Zone 8B4
H.4-96	Safe Shutdown Equipment Located in Fire Zone 8C1
H.4-97	Safe Shutdown Equipment Located in Fire Zone 8C2
H.4-98	Safe Shutdown Equipment Located in Fire Zone 8C3
H.4-99	Safe Shutdown Equipment Located in Fire Zone 8C4
H.4-100	Safe Shutdown Equipment Located in Fire Zone 8C5
H.4-101	Safe Shutdown Equipment Located in Fire Zone 4B
H.4-102	Relative Distances Between Critical Components in Fire Zone 4B
H.4-103	General Safe Shutdown Instrumentation
H.4-104	Reactor Vessel Pressure
H.4-105	Reactor Vessel Level
H.4-106	Process Instrumentation and Connecting Cables
H.4-107	Suppression Pool Water Temperature
H.4-108	Suppression Pool Water Level
H.4-109	Cable and Panel List-Unit 1
H.4-110	Cable and Panel List-Unit 2
H.4-111	Potential Spurious Valve Operations that could affect Hot Shutdown Resulting in Prefire or Post fire action
H.4-112	Safe Shutdown Equipment Located in Fire Zone 2B2
H.4-113	Safe Shutdown Equipment Located in Fire Zone 3B2
H.4-114	Safe Shutdown Equipment Located in Fire Zone 2C
H.4-115	Safe Shutdown Equipment Located in Fire Zone 3C
H.4-116	Safe Shutdown Equipment Located in Fire Zone 2K
H.4-117	Safe Shutdown Equipment Located in Fire Zone 3K
H.4-118	Safe Shutdown Equipment Located in Fire Zone 5A4 (Unit 1)
H.4-119	Safe Shutdown Equipment Located in Fire Zone 5A4 (Unit 2)
H.4-120	Safe Shutdown Equipment Located in Fire Zone 5B13 (Unit 1)
H.4-121	Safe Shutdown Equipment Located in Fire Zone 5B13 (Unit 2)
H.4-122	Safe Shutdown Equipment Located in Fire Zone 5C8

LIST OF TABLES (Cont'd)

NUMBER	TITLE
H.4-123	Valves considered in Cable Separation Analysis because concern over Spurious Operation resulting in loss of Reactor Water Inventory and Physical Location of the Valve.
H.4-124	Electrical Equipment Associated with Valves listed in Table H.4-123
H.4-125	Safe Shutdown Equipment Located in Fire Zone 4C4
H.4-126	Safe Shutdown Equipment Located in Fire Zone 5C5
H.4-127	Safe Shutdown Equipment Located in Fire Zone 3H2
H.4-128	Safe Shutdown Equipment Located in Fire Zone 5B1
H.4-129	Safe Shutdown Equipment Located in Fire Zone 5B9

TABLE OF CONTENTS (Cont'd)

APPENDIX H - FIRE HAZARDS ANALYSIS

LIST OF FIGURES

NUMBER	TITLE
H.1-1	Fire Seals
H.2-1	Fire Area/Zone Locations
H.4-1	Auxiliary Electric Equipment Room Layout (Unit 1)
H.4-2	Auxiliary Electric Equipment Room Layout (Unit 2)
H.4-3	Valves Whose Spurious Operation Could Degrade Operability of Safe Shutdown Systems
H.4-4	Valves Whose Spurious Operation Could Cause Loss of Reactor Inventory

H.0 FIRE HAZARDS ANALYSIS

H.1 INTRODUCTION

This appendix has been prepared in response to the NRC request of September 30, 1976 to perform a fire hazards analysis of the LaSalle County Station fire protection design. Based upon the results of this analysis, Section 9.5 has been revised to incorporate the requested information. Qualified personnel have been used to produce and revise the fire hazards analysis

To satisfy the NRC requirement for a qualified fire protection engineer, the assistance and technical direction of Mr. C. F. Baldassarra of Schirmer Engineering Corporation has been utilized in the production of this fire hazards analysis; Mr. Baldassarra's resume is provided for reference at the end of this appendix as Attachment H1.

H.1.1 Analysis Methodology

This fire hazards analysis utilized the following methodology:

a. Fire areas are designated, based on planned and as- built conditions, as those portions of a building which are separated from other areas by physical boundaries whose construction approaches that of a rated fire barrier. This is necessary since the plant did not incorporate the "fire-area" concept in its original design. It is believed, however, that the intent of a physical impedance to fire propagation is satisfied based on the relatively low fire loading which exists in most of the plant and upon the adequacy of the barriers even though their design originated from other considerations (e.g., radiation shielding, pipe whip, tornado, seismic, etc.). Fire areas are generally established at boundaries of buildings which are separated by 3-hour fire boundaries.

b. Fire areas are further subdivided into fire zones for purposes of the safety evaluation. Credit is taken for spatial separation of combustibles within a given area such that the maximum credible fire is established as the design-basis fire in each zone. Separation of fire areas into zones is also designated by elevation for convenience in the analysis. The capability of a fire to spread between elevations was analyzed. The fires zones were chosen to be as realistic as possible with consideration to the actual distribution of combustibles.

c. A 3-hour fire rating is not always consistent with plant design. Barriers may have a rating significantly higher, especially at shielding walls. Openings in these barriers will not necessarily have fire ratings equivalent to the rating of the wall or floor as suggested by the NRC.

Such openings are qualified to either a 3-hour fire rating or less, depending upon the fire loadings on either side of the barrier.

d. The calculation of fire loads in a given fire area or zone is accomplished by considering the effect of the potential total heat release on the affected fire zone. Although this does not focus on localized combustible concentrations, it provides a more realistic picture of the effects of a potential fire than results from postulating a localized concentration in a very limited area. Due to the spaciousness of the LaSalle County generating station, the total unimpeded area functions as a heat sink due to the temperature differentials that are associated with a postulated fire. This method was used to categorize the fire zones and as a basis for evaluation of fire barrier adequacy and protective system needs.

e. The fire hazards analysis established the fire loading in each area or zone and, on the basis of this fire loading, determined whether the fire barriers were adequate to localize or isolate the postulated fire. Fire protection of walls, floors, and ceilings to an arbitrary 3-hour fire rating was not provided except where isolation was necessary to protect safety-related equipment. Three-hour fire barriers were established between buildings wherever possible.

f. The design-basis fire is the most severe fire that could occur within a fire area or zone. The design-basis fire is not a credible event in the majority of the fire areas. The design-basis fire hypothesis dictated the design of protective measures. Fire propagation was assumed as was the failure of existing automatic protection systems to result in the design-basis fire.

g. Fire is not considered to occur simultaneously with other accidents, events, or phenomena such as design-basis accident. Capability exists, consistent with GDC 19, to safely shut down the plant if necessary in the event of any single fire which may credibly occur.

h. Fire loads less than 10,000 Btu/ft^2 are considered negligible.

i. For the purpose of this analysis, reactor protection system cabling is not considered. This system's cables are all enclosed in conduit or metal enclosures, and its circuits are designed for fail safe operation. Therefore, a fire could not jeopardize RPS operation.

j. It is assumed that cable trays are filled to 100% of their usable volume as discussed in Subsection 8.3.3.1. This is a conservative assumption, resulting in calculated fire loadings considerably higher for similar

areas than those utilized for operating plants. This is done purposely to obviate future reanalysis of cable tray fires when plant modifications occur during the life of the plant.

k. The amount of cable insulation in conduit and liquid tight flex is a small percentage of that within the cable trays. Its contribution is considered negligible and is not in the calculation.

l. In the calculation of fire loadings within each fire zone, it is assumed that all cable insulation is fully consumed by fire. This is extremely conservative because these cables have been satisfactorily tested to IEEE Standard-383 (See Cable Routing Criteria 8.3.1.4.2.2). These cables will not burn unless there is a sustaining external source of heat with a temperature above the ignition point of the insulation. Consequently a fire cannot propagate unless there is a direct continuity of combustibles and a continuous flame source.

m. The LaSalle County Station meets the intent of the separation requirements of IEEE Standard 384-1974.

n. For hose station locations, refer to the M-776 series of mechanical drawings. For detector locations, refer to the electrical, control, and instrumentation drawings 1E-0-3930 through 1E-0-3939 series. Also refer to the following drawings: M-775 (Fire Protection Arrangement), M-814 (Fire Protection Piping), and M-914 (Fire Protection Piping).

A systematic approach was established for the conduct of the fire hazards analysis. The fire areas or zones were reviewed to identify fire hazards and their proximity to and inclusion of safety-related equipment and components. The combustible materials, the type of fire hazard, the quantity, and the combustible loading and resultant severity that the material imposes on the zone were reviewed. The postulated effects on the performance of safety-related functions and the minimization of radioactive releases to the environment were evaluated. The fire loading of combustibles in Btu/ft^2 of floor area of the system or enclosure was calculated. The severity of a postulated fire without any fire suppression activity was estimated based on the fire loading. The fire barrier rating was compared with the fire severity for the subject area to determine if propagation of the fire to or from other areas was a potential hazard. The distance required between two areas or pieces of equipment so that a fire could not propagate from one area to the other was also considered.

Inadvertent actuation of automatic fire suppression systems has no adverse effects on safety related systems, with the exception of the filter unit charcoal beds. Inadvertent actuation of the manual charcoal deluge valves and solenoid operated valves within a charcoal bed would degrade that filter unit.

H.1.2 Assumptions

In order to facilitate the analysis the following assumptions were used:

a. Transient fire loads of unidentified combustibles were assumed to be equivalent in Btu content to the fire load of a 55-gallon drum of lubricating oil. These transient fire loads were used in the analysis for all possible areas where transient fire loadings could occur.

b. Fire propagation in the electrical cable trays is limited by horizontal and vertical fire seals at barrier penetrations. These seals are described in Subsection 8.3.3.

c. The pressure integrity of reactor containment structure electrical penetration assemblies and cable tray fire stops is assumed.

d. The pressure integrity of fluid systems, including those containing radioactive liquids, was assumed to be unaffected by fire. Sprinkler and deluge protection are provided for charcoal filters and combustible radioactive storage areas to prevent the release of radioactivity to the environment.

e. Credit is taken for the tripping of breakers and other electrical protective devices to mitigate the consequences of electrical faults due to fires.

f. When it is shown that a fire involving a safety-related train or system does not propagate to its redundant counterpart, the availability of the redundant train is assumed.

g. In analyzing the effects of a fire on the cable tray system, it is assumed that if a divisionalized cable tray is affected by a fire, that the tray contains cables affecting engineered safeguard features. It is also assumed that if only one division is affected by the fire, safe shutdown is assured by the other division.

h. All fires are assumed to follow the Standard Time--Temperature Curve given in ASTM E-119. The relationship between fire loading and severity is in accordance with the NFPA Handbook, 14th edition.

H.1.3 Structural Design Elements

The following material descriptions apply to structural elements discussed in Section H.3.

Concrete used for construction is a mix of limestone (carbonate) aggregate. Portland Cement Association states a 5.75 inch thick slab qualifies as a 3-hour fire barrier. For columns and beams, 2 inches of concrete on wire mesh is sufficient for a 3-hour rating. The column rating is based on tests performed by the National Bureau of Standards reports BMS 92 and 124. The beam rating is extrapolated from the column tests, by the American Insurance Association. Removable concrete slabs are assumed to be equivalent to a 3-hour rated barrier when they are a minimum of 6 inches thick, having a minimum 3-inch bearing in the direction of the span, with a maximum 6-inch by 1/4-inch thick exposed steel plate frame.

Hollow concrete block used in the construction of walls conforms to the applicable requirements of ASTM C-90 for Type I units for Grade NI block. The blocks are autoclaved and formed from a mix containing lightweight expanded slag aggregate. Blocks are laid in a standard running-bond pattern with 3/8 inch thick horizontal and vertical mortar joints. Heavy-duty steel truss type continuous reinforcing ties are provided in the horizontal joints at 16-inch on center vertically. Illinois Brick Company, the supplier for LaSalle County Station, states that a 7 5/8-inch thick wall qualifies as a 4-hour fire barrier and an 11 5/8 inch thick wall qualifies as a fire barrier for more than 4 hours. A 3-hour fire rating on columns is obtained by a 4 inch hollow concrete block covering filled solid with grout. This is based on information from the American Insurance Association.

Solid concrete block used in the construction of walls conforms to the applicable requirements of ASTM C-145 for Type I units and for Grade N-I block. The lightweight, concrete block weighs 100 pounds per cubic foot, with a net area of 60%. A 6-inch thick wall of solid autoclaved block qualifies as a 4-hour fire rated barrier. High density solid concrete block weighs 140 lb/ft, with a net area of 100%.

The fire seal which is located at the top of the concrete block walls in Seismic Category I structures is 6-inch deep silicone foam SF-20 (see Figure H.1-1). This dimension is interpolated from the E 119-73 floor test and hose stream, conducted by the Portland Cement Association, to be a 3-hour fire seal. When exposed to a 70% concentration of Halon 1301 the silicone did not react adversely. This test was conducted with Bisco (manufacturer of silicone), du Pont, and Safety First (supplier of Halon 1301).

The fire seal which is located at the top of the concrete block walls in Seismic Category II structures is 1-inch thick, 12 inches deep thermafiber safing insulation (see Figure H.1-1). This material is a 4 pcf density precision-preformed semi rigid mineral fiber felt. The dimension is extrapolated from the ASTM E-119 test,

conducted by the U.S. Gypsum Research Center, to be a 3-hour fire seal. Thermafiber safing insulation is rated noncombustible in accordance with ASTM E-136 and NFPA definition. The fire hazard classification is Flame Spread-15, Fuel Contribution-0, and Smoke Developed-0. Vimasco 3IR cable coating is applied over the thermafiber safing insulation (Figure H.1-1) in order to provide an airtight seal. Locations where this occurs is indicated on the architectural design drawings.

United States Gypsum states a 4-inch thick cover of thermafiber on beams qualifies as a 3-hour fire barrier. The beam rating is based on test design N-304 performed by Underwriters' Laboratories. The assembly consists of a double-layer of 2-inch thick thermafiber mineral fireproofing attached to the beam with 12 gauge flange clips and clinch shields spaced a maximum 12 inches on center. Thermafiber mineral fireproofing is rated noncombustible in accordance with ASTM E-136 and NFPA definition. The fire hazard classification is Flame Spread-15, Fuel Contribution-0, and Smoke Developed-0.

The exterior roofing system, which in Section H.3 is referred to as a "UL Class "A" roofing" is a four-ply built-up pitch and asphalt, felt, and gravel roofing with 1-inch or 2-inch thick preformed board insulation. The rating applies to roof coverings which are effective against severe fire exposures and under such exposures "are not readily flammable and do not carry or communicate fire; afford a fairly high degree of fire protection to the roof deck; do not slip from position; possess no flying brand hazard; and do not require frequent repairs in order to maintain their fire resistive properties." The roof assembly meets the requirements of the Factory Mutual Class I system, except the purlin spacing exceeds Factory Mutual specification for decking spans and the perimeter of the roof insulation is not mechanically fastened to the deck. Factory Mutual allows a 7-foot 6-inch span for 18 gauge wide rib decking. The purlin spacing at LaSalle County Station extends up to 9 feet-0 inch. These deviations, however, have a negligible effect on the fire hazard properties of the roof construction.

The fire hazard characteristics, obtained from tests in accordance with ASTM test E-84, applicable to materials used at LaSalle County Station are shown in Table H.1-1. For fire hazard analysis purposes, interior/floor coverings and coatings are considered non-combustible if the material has a structural base of noncombustible material, with a nominal depth not over 1/8-inch thick, and has a flame spread rating not higher than 50 as defined by ASTM E-84. Fire Protection Engineering evaluates exceptions to these guidelines for acceptability on a case-by-case basis using the NEIL criteria for interior/floor coverings and coatings

H.1.4 Design Changes and Plant Modifications

If the fire hazards analyses demonstrated the necessity of a change, the change was incorporated directly into the station design. The Fire Marshal may occasionally add additional backup suppression not discussed in the USFAR for insurance and/or other purposes. Therefore, the actual amount of backup suppression located

in any area of the plant may exceed the suppression requirements shown in the UFSAR.

H.1.5 Miscellaneous Information In the Fire Protection Report

The Fire Protection Report references certain nominal values on length of fire hose stations, CO_2 hose stations and number of fire extinguishers in a Fire Hazard Zone. One example, the FHA distinguishes between 50 and 100-foot fire hose stations. The nominal hose length that is provided in the FHA gives an idea of the general coverage area provided by the fire hose station. However, the hose vendors may provide a fire hose or CO_2 hose with a length tolerance that does not physically make the hose exactly 50 or 100 feet. The length tolerance on the fire hose or CO_2 hose does not impact the fire brigade's ability to extinguish a fire.

Small amounts of transient combustibles may be brought into a fire hazard zone that would result in negligible changes to the combustible loading. The UFSAR assumes 55 gallons of lube oil as a transient load in the majority of the fire zones. This assumption allows transient combustibles to be stored in fire hazard zone without compromising safety of the plant to shut down due to combustible loading.

Tracking of additional manual fire protection equipment above NFPA code requirements in the FHA is not required. It is the discretion of the Station Fire Marshal to determine if there is a need to add additional manual suppression because hazards in the areas may change due to work processes, additional combustible loading brought into a fire zone temporarily or other reasons. Therefore, additional Fire Protection equipment may be brought into a fire zone based on the fire marshal's evaluation of the work or materials brought into the area.

RESUME

ATTACHMENT H.1

CARL F. BALDASSARRA

EDUCATION

1973 Illinois Institute of Technology, Chicago, Ill. Bachelor of Science, Fire Protection and Safety Engineering.

BUSINESS EXPERINCE SCHIRMER ENGINEERING CORPORATION

1973-Present Fire Protection Engineer

Conduct fire protection loss prevention engineering inspections which include testing and evaluation of water supplies, fire pumps, alarm systems and other fire protection equipment for Highly Protected Risks such as Allied Chemical Corp.; Deere & Co.; Motorola; Sears, Roebuck and Co.; Southwide, Inc. (account engineer) and Wickes Corp. Recent and current assignments include building code and fire prevention code analysis and application to extraordinary structures, fire safety analysis of large assembly and institutional facilities, development of design criteria for fire suppression systems, and several fire protection research projects.

REGISTRATION E.I.T. - State of Illinois

PROFESSIONAL AFFILIATIONS National Fire Protection Association. National Society of Professional Engineers.
Society of Fire Protection Engineers.

COMMITTEES Illinois Advisory Committee on Arson Prevention.
Editor, SFPE Chicago Chapter Newsletter

H.2 AREA DESIGNATIONS

For the purpose of this analysis the plant is divided into 11 fire areas. Most of these areas are further divided into a number of fire zones for fire protection purposes. With the exception of the refueling floor the fire areas are assigned by buildings as follows:

Fire Area	Building
1	Refueling Floor
2	Unit 1 Reactor Building
3	Unit 2 Reactor Building
4	Auxiliary Building
5	Turbine Building
6	Radwaste Building
7	Unit 1 Diesel-Generator Building
8	Unit 2 Diesel-Generator Building
9	North (old) Service Building
10	Off-Gas Filter Building
11	South Service Building

The areas are subdivided into fire zones which are identified throughout this analysis by an alphanumeric number-letter-number symbol. The first number refers to the fire area, as listed above, which contains the zone. A letter is then assigned to each level within the fire area, starting at the uppermost floor elevation and descending. For example, all zones beginning with 4C are on the third highest level in the auxiliary building. These letters were assigned separately for each building and may not correspond to the same elevations in all buildings. The final number in the identifier enumerates the unique fire zones which may be on the same elevation. In cases where a single fire zone may extend over several levels of a building, the same letter is used to identify this zone over all the elevations it covers. For example fire zone 5B1 extends over four levels in the turbine building, but its identification remains the same throughout.

Table H.2-1 lists all the fire zones used in this analysis. The locations of each zone within the plant are shown on Figure H.2-1.

Fire Area 9 is no longer addressed by the FHA. This area contains no safe shutdown or safety related equipment. It is separate from the adjacent Fire Area 5 by a masonry barrier with other additional fire protection features. Refer to the FSAR for historical information on Fire Area 9.

H.3 FIRE HAZARDS ANALYSIS

H.3.1 Fire Area 1: Refueling Floor

H.3.1.1 Refueling Floor – Fire Area 1

This area consists of one zone only.

Description

[redacted]

[redacted]

[redacted]

[redacted]

[redacted]

[redacted]

Safety-Related Equipment

This area contains safety-related cable trays, but only divisional associated cables are contained within them.

Protection Criteria and Measures

Only manual fire fighting equipment and adequate floor drainage are provided.

Combustible Materials

See the combustible loading Table H.3-2.

Fire Loading

See the combustible loading Table H.3-2.

Extinguishing and Detecting Capabilities

A Unit 1 and Unit 2 ultraviolet light detection system exists with local alarm (siren) annunciation and with local and remote (AEER/CR) alarm and trouble indication. Due to the limited concentration of combustibles and the fact that the cranes are locally operated, no automatic protection is provided. The credited manual fire fighting equipment is shown in Table H.3-2

Design-Basis Fire

The design-basis fire results in damage to safety-related cable trays which does not affect the safe shutdown of the reactor. A fire would not spread to other areas of the station.

H.3.2 Fire Area 2: Unit 1 Reactor Building

The Unit 1 reactor building has been divided into 21 zones for the purpose of the fire hazards analysis. These zones are listed in Table H.2-1 and shown in Figure H.2-1. Each zone is discussed below. Table H.3-1 lists the safety-related and radioactive equipment within each zone, and Table H.3-2 summarizes the combustible hazards and fire fighting capabilities present.

[redacted]

H.3.2.1 [redacted] - Fire Zone 2A, [redacted]

Description

[redacted]

[redacted]

Safety-Related Equipment

This zone does not contain any safety-related equipment.

Protection Criteria and Measures

Only manual fire protection equipment is provided.

Combustible Materials

See the combustible loading Table H.3-2.

Fire Loading

See the combustible loading Table H.3-2.

Extinguishing and Detecting Capabilities

The credited manual fire fighting equipment is shown in Table H.3-2.

NOTE: For hose station locations refer to the M-776 series of mechanical drawings. For detector locations, refer to the electrical, control and instrumentation drawings, 1E-0-3930 through 1E-0-3939 series.

Design-Basis Fire

The design-basis fire would be contained within this zone and would have no effect on safety-related equipment.

H.3.2.2 [redacted] - Fire Zone 2B1

Description

[redacted]

[redacted]

[redacted]

[redacted]

[redacted]

[redacted]

[redacted]

Safety-Related Equipment

This zone contains the following safety-related equipment: the standby gas treatment system; the standby gas treatment control panel; a 480-V motor-control center; standby liquid control equipment; and various safety-related cables.

Protection Criteria and Measures

A deluge system is provided for the standby gas treatment system. The cable trays for ESF Divisions 1 and 2 are no closer than 10 feet at their nearest point, with the north side of this zone containing Division 1 cabling and the south side Division 2 cabling. Ionization detectors are provided between divisional cable trays at the points of closest approach. Divisional or divisional associated cabling is routed in conduit when necessary to preserve the divisional separation. Cable fire stops are used through all zone boundary walls. Due to the low fire loading only automatic detection and manual fire protection is provided.

Combustible Materials

See the combustible loading Table H.3-2.

Fire Loading

See the combustible loading Table H.3-2.

Extinguishing and Detecting Capabilities

A temperature detector in the charcoal filter sounds an alarm in the control room. Manual charcoal deluge valves are operated locally and then solenoid operated valves are operated from the control room. The normally manual closed isolation valves upstream of the deluge valve, in all cases require local actions to initiate water flow. Ionization detectors are provided between divisional cable trays at the point of closest approach and in areas of high cable concentration. Upon actuation of these detectors, alarms are received both locally and in the control room. The credited manual fire fighting equipment is shown in Table H.3-2.

Design-Basis Fire

The design-basis fire would not spread from this zone due to a lack of continuity of combustibles. The physical separation between divisional or divisional associated cables and the lack of an external energy source between them, limits the maximum credible fire to a single division. The standby gas treatment system located in the Unit 2 reactor building serves as a backup to the Unit 1 system. A deluge system is provided to extinguish a fire in the standby gas treatment system.

H.3.2.3 [redacted] - Fire Zone 2B2

Description

[redacted]

[redacted]

[redacted]

[redacted]

[redacted]

[redacted]

[redacted]

Safety-Related Equipment

Safety-related cabling is contained within this zone.

Protection Criteria and Measures

The cable tray for ESF Divisions 1 and 2 are no closer than 5 feet from one another with the north side of this zone containing Division 1 cabling and the south side Division 2 cabling. Ionization detectors are provided between divisional cable trays

at the point of closest approach and in areas of high cable concentration. Divisional or divisional associated cabling is routed in conduit when necessary to preserve the divisional separation. Cable fire stops are used through all zone boundary walls. Only automatic detection with local and control room alarms and manual fire protection are provided.

Combustible Materials

See the combustible loading Table H.3-2.

Fire Loading

See the combustible loading Table H.3-2.

Extinguishing and Detecting Capabilities

An ionization detector is provided between divisional cable trays at the point of closest approach. Upon actuation of these detectors, alarms are received both locally and in the control room. The credited manual fire fighting equipment is shown in Table H.3-2.

Design-Basis Fire

The design-basis fire would not spread from this zone due to a lack of continuity of combustibles. The physical separation between divisional and divisional associated cables and the lack of an external energy source between them limits the maximum credible fire to a single division.

H.3.2.4 [redacted] - Fire Zone 2C

Description

[redacted]

[redacted]

[redacted]

[redacted]

[redacted]

[redacted]

Safety-Related Equipment

This zone contains various safety-related cables.

Protection Criteria and Measures

The cable trays for ESF Divisions 1 and 2 are no closer than 20 feet from one another with the north side of this zone containing Division 1 cabling and the south side Division 2 cabling. Divisional or divisional associated cabling is routed in conduit when necessary to preserve the divisional separation. Cable fire stops are used through all zone boundary walls. Ionization detectors are provided in this zone. Manual fire protection equipment is provided.

Combustible Materials

See the combustible loading Table H.3-2.

Fire Loading

See the combustible loading Table H.3-2.

Extinguishing and Detecting Capabilities

The credited manual fire fighting equipment is shown in Table H.3-2. Ionization detectors are provided to annunciate an alarm locally and in the control room.

Design-Basis Fire

The design-basis fire would not spread from this zone due to a lack of continuity of combustibles. The physical separation between divisional and divisional associated cables and the lack of an external energy source between them limits the maximum credible fire to a single division.

H.3.2.5 [redacted] - Fire Zone 2D

Description

[redacted]

[redacted]

[redacted]

[redacted]

[redacted]

[redacted]

Safety-Related Equipment

This zone contains the Unit 1 post-LOCA hydrogen mixer and various safety-related cables.

Protection Criteria and Measures

The cable trays for ESF Divisions 1 and 2 are no closer than 55 feet from one another with the north side of this zone containing Division 1 cabling and the south side of Division 2 cabling.

Divisional or divisional associated cabling is routed in conduit when necessary to preserve the divisional separation. Cable fire stops are used through all zone

boundary walls. Ionization detectors are provided in this zone. Due to low combustible loading and lack of an appreciable energy source external to the cabling, only manual fire protection is provided.

Combustible Materials

See the combustible loading Table H.3-2.

Fire Loading

See the combustible loading Table H.3-2.

Extinguishing and Detecting Capabilities

The credited manual fire fighting equipment is shown in Table H.3-2. Ionization detectors are provided to annunciate an alarm locally and in the control room.

Design-Basis Fire

The design-basis fire would not spread from this zone due to a lack of continuity of combustibles. The physical separation between divisional and divisional associated cables and the lack of an external energy source between them limits the maximum credible fire to a single division. The physical separation between the containment monitoring panels is such as to minimize the possibility of a fire affecting both panels. The Unit 2 post-LOCA hydrogen mixer is redundant to Unit 1 and will not be affected by a fire in this zone.

H.3.2.6 [redacted] - Fire Zone 2E

Description

[redacted]

[redacted]

[redacted]

[redacted]

[redacted]

[redacted]

Safety-Related Equipment

This zone contains the reactor level and pressure instrument panels A, B, C, and D; a 480-V safety-related motor control center; various safety-related cables; CRD modules and CRD hydraulic pipe rack; and the primary containment hydrogen and oxygen monitoring panels A and B. This zone also contains HPCS and RHR B valves.

Protection Criteria and Measures

The cable trays for ESF Divisions 1 and 2 are no closer than 35 feet from one another with the north side of this zone containing Division 1 cabling and the south side Division 2 cabling. Divisional or divisional associated cabling is routed in conduit when necessary to preserve the divisional separation. Cable fire stops are used through all zone boundary walls. Reactor level and pressure instrument panels A/C, and B/D are redundant to each other and located in opposite quadrants

to prevent exposure from a common fire potential. The containment atmosphere monitoring panels are located at opposite ends of the building to minimize the possibility of both panels being exposed to a common fire potential. Fyrquel EHC fluid is used in the reactor recirculation hydraulic control system. Only manual fire protection is provided due to the low fire loading.

Combustible Materials

See the combustible loading Table H.3-2.

Fire Loading

See the combustible loading Table H.3-2.

Extinguishing and Detecting Capabilities

The credited manual fire fighting equipment is shown in Table H.3-2. Ionization detectors are provided to detect a fire and annunciate an alarm locally and in the control room.

Design-Basis Fire

The design-basis fire would not spread from this zone due to a lack of continuity of combustibles. The physical separation between divisional and divisional associated cables and the lack of an external energy source between them limits the maximum credible fire to a single division. Physical separation is utilized to minimize the possibility that a fire would not affect both a primary containment atmosphere hydrogen and oxygen monitoring panel and its redundant counterpart.

H.3.2.7 [redacted] - Fire Zone 2F

Description

[redacted]

[redacted]

Safety-Related Equipment

This zone contains two safety-related motor-control centers and various safety-related cables.

Protection Criteria and Measures

The cable trays for ESF Divisions 1 and 2 are no closer than 17 feet from one another with the north side of this zone containing Division 1 cabling and the south side Division 2 cabling. Divisional or divisional associated cabling is routed in conduit when necessary to preserve the divisional separation. Cable fire stops are used through all zone boundary walls. The portion of a Division 2 cable tray from nodes 1081E to 1206E is wrapped with 3 inches of Kaowool which gives it a one and one half hour fire rating. The divisional motor control centers are located at

opposite ends of this zone to minimize the possibility of both being exposed by the same fire potential. Automatic fire detectors are provided. Manual fire protection equipment and floor drains are also provided. Unit 1 Division 3 safety-related cables 1HP021 and 1HP022 are protected by a three hour fire wrap such that the function of HPCS valve 1E22-F004 may be credited given a fire in this zone.

Combustible Materials

See the combustible loading Table H.3-2.

Fire Loading

See the combustible loading Table H.3-2.

Extinguishing and Detecting Capabilities

The ionization detectors sound an alarm locally and in the control room. The credited manual fire fighting equipment is shown in Table H.3-2.

Design-Basis Fire

The design-basis fire would not spread from this zone due to a lack of continuity of combustibles. The physical separation between divisional and divisional associated cables and the lack of an external energy source between them limits the maximum credible fire to a single division.

H.3.2.8 [redacted] - Fire Zone 2G

Description

[redacted]

[redacted]

[redacted]

[redacted]

[redacted]

[redacted]

[redacted]

[redacted]

Safety-Related Equipment

This zone contains two 480-V motor-control centers, the RHR heat exchangers, the jet pump instrument panels A and B, the reactor recirculation instrument panels A and B, the main steam flow instrument panels A and D, and various safety-related cables.

Protection Criteria and Measures

The cable trays for ESF Divisions 1 and 2 are no closer than 30 feet from one another with the north side of this zone containing Division 1 cabling and the south side Division 2 cabling. Divisional or divisional associated cabling is routed in conduit when necessary to preserve the divisional separation.

Cable fire stops are used through all zone boundary walls. The various redundant safety-related instrument panels and motor-control centers in this zone are located at opposite ends of the zone in order to minimize the possibility of redundant panels being exposed by the same fire potential. Automatic fire detection is provided. Manual fire protection and floor drains are also provided. Unit 1 Division 3 safety-related cables 1HP021 and 1HP022 are protected by a three hour fire wrap such that the function of HPCS valve 1E22-F004 may be credited given a fire in this zone.

Combustible Materials

See the combustible loading Table H.3-2.

Fire Loading

See the combustible loading Table H.3-2.

Extinguishing and Detecting Capabilities

The ionization detectors sound an alarm locally and in the control room. A sprinkler system in RR access area is provided. Initiation of the system sounds an alarm in the control room. The credited manual fire fighting equipment is shown in Table H.3-2.

Design-Basis Fire

The design-basis fire would not spread from this zone due to a lack of continuity of combustibles. The physical separation between divisional and divisional associated cables and the lack of an external energy source between them limits the maximum credible fire to a single division.

H.3.2.9 Unit 1 - [redacted], General Floor Area - Fire Zone 2H1

Description

[redacted]

Safety-Related Equipment

This zone contains four CSCS area coolers for cooling the ECCS pump cubicles, and various safety-related cables.

Protection Criteria and Measures

The cable trays for ESF Divisions 1 and 2 are no closer than 50 feet from one another. The north side of this zone contains Division 1 and the southeast side contains Division 2. Divisional or divisional associated cabling is routed in conduit when necessary to preserve the divisional separation. Cable fire stops are used through all zone boundary walls. The four CSCS area coolers are located in the four corners of this zone. Due to the low fire loading, only manual fire protection is provided.

Combustible Materials

See the combustible loading Table H.3-2.

Fire Loading

See the combustible loading Table H.3-2.

Extinguishing and Detecting Capabilities

Ionization detectors are provided to sound an alarm locally and in the control room. The credited manual fire fighting equipment is shown in Table H.3-2.

Design-Basis Fire

The design-basis fire would not spread from this zone due to a lack of continuity of combustibles. The physical separation between divisional and divisional associated cables and the lack of an external energy source between them limits the maximum credible fire to only one corner of this zone.

H.3.2.10 Unit 1 [redacted] - Fire Zone 2H2

Description

[redacted]

[redacted]

[redacted]

[redacted]

Safety-Related Equipment

This zone contains some ESF Division 3 cabling.

Protection Criteria and Measures

This zone is surrounded on all sides by concrete walls and contains cables belonging to only one division. Cable fire stops are used through all zone boundary walls. Ionization detectors and manual fire protection equipment are provided.

Combustible Materials

See the combustible loading Table H.3-2.

Fire Loading

See the combustible loading Table H.3-2.

Extinguishing and Detecting Capabilities

Ionization detectors are provided to sound an alarm locally and in the control room. The credited manual fire fighting equipment is shown in Table H.3-2.

Design-Basis Fire

The design-basis fire would not spread from this cubicle. A fire would only affect Division 3, leaving the redundant divisional cabling unaffected.

H.3.2.11 Unit 1 [redacted] - Fire Zone 2H3

Description

[redacted]

[redacted]

Safety Related Equipment

This zone contains RHR heat exchanger B and some Division 2 safety-related cables.

Protection Criteria and Measures

This zone is surrounded on all sides by concrete walls and contain equipment and cables related to only one division. Cable fire stops are used through all zone boundary walls. Manual fire protection equipment and ionization detectors are provided.

Combustible Materials

See the combustible loading Table H.3-2.

Fire Loading

See the combustible loading Table H.3-2.

Extinguishing and Detecting Capabilities

Ionization detectors are provided to sound an alarm locally and in the control room. The credited manual fire fighting equipment is shown in Table H.3-2.

Design-Basis Fire

The design-basis fire would not spread from this cubicle due to the low fire loading. A fire would only affect Division 2 cables and RHR Loop B; the other divisional cables and RHR Loop A will not be affected.

H.3.2.12 Unit 1 - [redacted] - Fire Zone 2H4

Description

[redacted]

Safety-Related Equipment

This zone contains a 250-Vdc motor-control center, the RCIC water leg pump, and various ESF Division 1 cables.

Protection Criteria and Measures

This zone is surrounded on all sides by concrete walls and contains equipment and cables related to only a single division. Cable fire stops are used through all zone boundary walls. Manual fire protection equipment and ionization detectors are provided.

Combustible Materials

See the combustible loading Table H.3-2.

Fire Loading

See the combustible loading Table H.3-2.

Extinguishing and Detecting Capabilities

Ionization detectors are provided to sound an alarm locally and in the control room. The credited manual fire fighting equipment is shown in Table H.3-2.

Design-Basis Fire

The design-basis fire would not spread from this cubicle due to a lack of continuity of combustibles. A fire would only affect Division 1 cables and the RCIC cables. The RHR and HPCS would be available as a backup.

H.3.2.13 Unit 1 [redacted] - Fire Zone 2H5

Description

[redacted]

[redacted]

[redacted]

Safety-Related Equipment

This zone contains the RHR heat exchanger A and various ESF Division 1 cables.

Protection Criteria and Measures

This zone is surrounded on all sides by concrete walls and contains equipment and cables related to only one division. Cable fire stops are used through all zone boundary walls. Manual fire protection equipment and ionization detectors are provided.

Combustible Materials

See the combustible loading Table H.3-2.

Fire Loading

See the combustible loading Table H.3-2.

Extinguishing and Detecting Capabilities

Ionization detectors are provided to sound an alarm locally and in the control room. The credited manual fire fighting equipment is shown in Table H.3-2.

Design-Basis Fire

The design-basis fire would not spread from this cubicle due to a lack of continuity of combustibles. The fire would only affect Division 1 cables and RHR Loop A leaving the other RHR loops and division cables unaffected.

H.3.2.14 Unit 1 [redacted] - Fire Zone 2I1

Description

[redacted]

Safety-Related Equipment

This zone contains various safety-related cables from all three divisions.

Protection Criteria and Measures

The cable trays for ESF Divisions 1, 2, and 3 are no closer than 50 feet from one another. The north side of the zone contains Division 1, the southeast side Division 2, and the southwest side Division 3. Divisional or divisional associated cabling is routed in conduit when necessary to preserve the divisional separation. Cable fire stops are used through all zone boundary walls. Ionization detectors are provided. Only manual fire protection is provided.

Combustible Materials

See the combustible loading Table H.3-2.

Fire Loading

See the combustible loading Table H.3-2.

Extinguishing and Detecting Capabilities

Ionization detectors are provided to sound an alarm locally and in the control room. The credited manual fire fighting equipment is shown in Table H.3-2.

Design-Basis Fire

The design-basis fire would not spread from this zone due to a lack of continuity of combustibles. The physical separation between divisional and divisional associated cables and the lack of an external energy source between them limits the maximum credible fire to a single division.

H.3.2.15 Unit 1 [redacted] - Fire Zone 2I2

Description

[redacted]

[redacted]

[redacted]

[redacted]

Safety-Related Equipment

This zone contains the HPCS pump, the HPCS water leg pump, the HPCS instrumentation panel, and various ESF Division 3 cables.

Protection Criteria and Measures

This zone is surrounded on all sides by concrete walls and contains equipment and cables related to only one division. Cable fire stops are used through all zone boundary walls. Manual fire protection equipment and ionization detectors are provided.

Combustible Materials

See the combustible loading Table H.3-2.

Fire Loading

See the combustible loading Table H.3-2.

Extinguishing and Detecting Capabilities

The credited manual fire fighting equipment is shown in Table H.3-2.
Fire detection is by ionization type smoke detectors in both the HPCS pump room and the CRD pump room, which alarm locally and in the control room.

Design-Basis Fire

The design-basis fire would not spread from this cubicle due to a lack of continuity of combustibles. A fire in this zone would not affect the two other safety divisions, nor would it affect the LPCS, ADS, or RHR systems.

H.3.2.16 Unit 1 - [redacted] - Fire Zone 2I3

Description

[redacted]

[redacted]

2H3. Because of the many openings, the ceiling slab is not fire rated.

This cubicle communicates with the area above (fire zone 2H3) and is ventilated in a similar manner. Temperatures are maintained between 65° F and 122° F.

Safety-Related Equipment

This zone contains RHR pumps B and C, the RHR water leg pump, RHR instrument panel, and various ESF Division 2 cables.

Protection Criteria and Measures

This zone is surrounded on all sides by concrete walls and contains equipment and cables related to only one division. Cable fire stops are used through all zone boundary walls. Manual fire protection equipment and ionization detectors are provided.

Combustible Materials

See the combustible loading Table H.3-2.

Fire Loading

See the combustible loading Table H.3-2.

Extinguishing and Detecting Capabilities

Ionization detectors are provided to sound an alarm locally and in the control room. The credited manual fire fighting equipment is shown in Table H.3-2.

Design-Basis Fire

The design-basis fire would not spread from this cubicle due to a lack of continuity of combustibles. A fire in this zone would not affect the two other safety divisions nor would it affect the redundant loop A of the RHR system.

H.3.2.17 Unit 1 - [redacted] - Fire Zone 2I4

Description

[redacted]

Safety-Related Equipment

This zone contains the LPCS pump; LPCS water leg pump; RCIC pump, turbine, and condenser; RCIC instrumentation panels; LPCS instrumentation panel; and various ESF Division 1 cables.

Protection Criteria and Measures

This zone is surrounded on all sides by concrete walls and contains equipment and cables related to only one division. Cable fire stops are used through all zone boundary walls. Manual fire protection equipment and ionization detectors are provided.

Combustible Materials

See the combustible loading Table H.3-2.

Fire Loading

See the combustible loading Table H.3-2.

Extinguishing and Detecting Capabilities

Ionization detectors are provided to sound an alarm locally and in the control room. The credited manual fire fighting equipment is shown in Table H.3-2.

Design-Basis Fire

The design-basis fire would not spread from this cubicle due to a lack of continuity of combustibles. A fire in this zone would not affect RHR loops B and C, the HPCS system, or Division 2 and 3 cables.

H.3.2.18 Unit 1 - [redacted] - Fire Zone 2I5

Description

[redacted]

Safety-Related Equipment

This zone contains RHR pump A, the RHR instrumentation panel A, and various ESF Division 1 cables.

Protection Criteria and Measures

This zone is surrounded on all sides by concrete walls and contains equipment and cables related to only one division. Cable fire stops are used through all zone boundary walls. Manual fire protection equipment and ionization detectors are provided.

Combustible Materials

See the combustible loading Table H.3-2.

Fire Loading

See the combustible loading Table H.3-2.

Extinguishing and Detecting Capabilities

Ionization detectors are provided to sound an alarm locally and in the control room. The credited manual fire fighting equipment is shown in Table H.3-2.

Design-Basis Fire

The design-basis fire would not spread from this cubicle due to a lack of continuity of combustibles. A fire in this zone would not affect the redundant RHR pumps B and C nor Division 2 and 3 cabling.

H.3.2.19 Unit 1 [redacted] - Fire Zone 2I6

Description

[redacted]

[redacted]

Safety-Related Equipment

This zone does not contain any safety-related equipment.

Protection Criteria and Measures

Due to the negligible combustible loading only manual fire protection equipment is provided.

Combustible Materials

See the combustible loading Table H.3-2.

Fire Loading

See the combustible loading Table H.3-2.

Extinguishing and Detecting Capabilities

Ionization detectors are provided to sound an alarm locally and in the control room. The credited manual fire fighting equipment is shown in Table H.3-2.

Design-Basis Fire

The design-basis fire would not spread from this zone due to the negligible fire loading and would not affect any safety-related equipment.

H.3.2.20 Unit 1 [redacted] - Fire Zone 2J

Description

[redacted]

[redacted]

Safety-Related Equipment

This zone contains the reactor pressure vessel, safety-related valves, the ADS valves, one set of main steam isolation valves, and various safety-related cables.

Protection Criteria and Measures

The cable trays for ESF Divisions 1 and 2 are no closer than 10 feet from one another with the north side of this zone containing Division 1 cabling and the south side Division 2 cabling. Divisional or divisional associated cabling is routed in conduit when necessary to preserve the divisional separation. Automatic ionization detectors which alarm locally and in the control room are provided. The RHR containment spray system can be used as a deluge system. Manual fire protection equipment is normally brought into the containment during maintenance. [redacted]

Combustible Materials

See the combustible loading Table H.3-2.

Fire Loading

See the combustible loading Table H.3-2.

Extinguishing and Detection Capabilities

See Protection Criteria and Measures.

Design-Basis Fire

The design-basis fire would not spread from this zone due to a lack of continuity of combustibles. The physical separation between divisional and divisional associated cables and the lack of an external energy source between them limits the maximum credible fire to a single division permitting the other division to function as a redundant backup. A redundant set of main steam isolation valves are located in zone 2K. These will not be affected by a fire in zone 2J.

H.3.2.21 Unit 1 - [redacted] - Fire Zone 2K

Description

[redacted]

[redacted]

Safety-Related Equipment

This zone contains safety-related conduit, electrical equipment, and the main steam and feedwater isolation valves.

Protection Criteria and Measures

This zone is surrounded by concrete walls and does not contain combustibles. Manual fire protection is provided. Local temperature detector is provided which measures MSIV leakage and would thus detect any temperature increase if a fire occurs in this area.

Combustible Materials

See the combustible loading Table H.3-2.

Fire Loading

See the combustible loading Table H.3-2.

Extinguishing and Detecting Capabilities

The credited manual fire fighting equipment is shown in Table H.3-2.

Design-Basis Fire

A design-basis fire is not considered due to an absence of combustibles.

H.3.3 Fire Area 3: Unit 2 Reactor Building

[redacted]

[redacted]

[redacted]

H.3.3.1 [redacted] - Fire Zone 3A [redacted]

Description

With the exception of orientation, this zone is similar in construction to fire zone 2A described in subsection H.3.2.1, except that two floor drains are provided in this zone.

Safety-Related Equipment

This zone does not contain any safety-related equipment

Protection Criteria and Measures

Only manual fire protection equipment is provided.

Combustible Materials

See the combustible loading Table H.3-2.

Fire Loading

See the combustible loading Table H.3-2.

Extinguishing and Detecting Capabilities

The credited manual fire fighting equipment is shown in Table H.3-2.

Design-Basis Fire

See Subsection H.3.2.1.

H.3.3.2 [redacted] - Fire Zone 3B1

Description

With the exception of orientation, this zone is similar in construction to fire zone 2B1. (See Subsection H.3.2.2.)

Safety-Related Equipment

This zone contains the following safety-related equipment: the standby gas treatment system; the standby gas treatment control panel; a 480-V motor-control center; standby liquid control equipment; and various safety-related cables.

Protection Criteria and Measures

A deluge system is provided for the standby gas treatment system. The cable trays for ESF Divisions 1 and 2 are no closer than 10 feet at their nearest point, with the north side of this zone containing Division 1 cabling and the south side Division 2 cabling. Ionization detectors are provided between divisional cable trays at the points of closest approach. Divisional or divisional associated cabling is routed in conduit when necessary to preserve the divisional separation. Cable fire stops are used through all zone boundary walls. Due to the low fire loading only automatic detection and manual fire protection is provided.

Combustible Materials

See the combustible loading Table H.3-2.

Fire Loading

See the combustible loading Table H.3-2.

Extinguishing and Detecting Capabilities

The credited manual fire fighting equipment is shown in Table H.3-2.

Design-Basis Fire

See Subsection H.3.2.2

H.3.3.3 [redacted] - Fire Zone 3B2

Description

With the exception of orientation, this zone is similar in construction to fire zone 2B2 described in Subsection H.3.2.3, except that five floor drains are provided in this zone.

Safety-Related Equipment

Safety-related cabling is contained within this zone.

Protection Criteria and Measures

The cable tray for ESF Divisions 1 and 2 are no closer than 5 feet from one another with the north side of this zone containing Division 1 cabling and the south side Division 2 cabling. Ionization detectors are provided between divisional cable trays at the point of closest approach and in areas of high cable concentration. Divisional or divisional associated cabling is routed in conduit when necessary to preserve the divisional separation. Cable fire stops are used through all zone boundary walls. Only automatic detection with local and control room alarms and manual fire protection are provided.

Combustible Materials

See the combustible loading Table H.3-2.

Fire Loading

See the combustible loading Table H.3-2.

Extinguishing and Detecting Capabilities

The credited manual fire fighting equipment is shown in Table H.3-2.

Design-Basis Fire

See Subsection H.3.2.3.

H.3.3.4 [redacted] - Fire Zone 3C

Description

With the exception of orientation, this zone is similar in construction to fire zone 2C. (See Subsection H.3.2.4.)

Safety-Related Equipment

This zone contains various safety-related cables

Protection Criteria and Measures

The cable trays for ESF Divisions 1 and 2 are no closer than 20 feet from one another with the north side of this zone containing Division 1 cabling and the south side Division 2 cabling. Divisional or divisional associated cabling is routed in conduit when necessary to preserve the divisional separation. Cable fire stops are

used through all zone boundary walls. Ionization detectors are provided in this zone. Manual fire protection equipment is provided.

Combustible Materials

See the combustible loading Table H.3-2.

Fire Loading

See the combustible loading Table H.3-2.

Extinguishing and Detecting Capabilities

The credited manual fire fighting equipment is shown in Table H.3-2.

Design-Basis Fire

See Subsection H.3.2.4.

H.3.3.5 Unit 2 - [redacted] - Fire Zone 3D

Description

With the exception of orientation, this zone is similar in construction to fire zone 2D. (See Subsection H.3.2.5.). This zone also includes the Setpoint Verification Device Room (Elev. 799' 8"). This room is monitored by an ionization type detector which alarms both locally and in the control room upon actuation.

Safety-Related Equipment

This zone contains various safety-related cables.

Protection Criteria and Measures

The cable trays for ESF Divisions 1 and 2 are no closer than 55 feet from one another with the north side of this zone containing Division 1 cabling and the south side of Division 2 cabling.

Divisional or divisional associated cabling is routed in conduit when necessary to preserve the divisional separation. Cable fire stops are used through all zone boundary walls. Ionization detectors are provided in this zone. Due to low combustible loading and lack of an appreciable energy source external to the cabling, only manual fire protection is provided.

Combustible Materials

See the combustible loading Table H.3-2.

Fire Loading

See the combustible loading Table H.3-2.

Extinguishing and Detecting Capabilities

The credited manual fire fighting equipment is shown in Table H.3-2.

Design-Basis Fire

See Subsection H.3.2.5. (However, Unit 2 hydrogen mixer is not in this zone.)

H.3.3.6 Unit 2 - [redacted] - Fire Zone 3E

Description

With the exception of orientation, this zone is similar in construction to fire zone 2E. (See Subsection H.3.2.6.)

Safety-Related Equipment

This zone contains the reactor level and pressure instrument panels A, B, C, and D; a 480-V safety-related motor control center; various safety-related cables; CRD modules and CRD hydraulic pipe rack; and the primary containment hydrogen and oxygen monitoring panels A and B and the Unit 2 hydrogen mixer).

Protection Criteria and Measures

The cable trays for ESF Divisions 1 and 2 are no closer than 35 feet from one another with the north side of this zone containing Division 1 cabling and the south side Division 2 cabling. Divisional or divisional associated cabling is routed in conduit when necessary to preserve the divisional separation. Cable fire stops are used through all zone boundary walls. Reactor level and pressure instrument panels A/C, and B/D are redundant to each other and located in opposite quadrants to prevent exposure from a common fire potential. The containment atmosphere monitoring panels are located at opposite ends of the building to minimize the possibility of both panels being exposed to a common fire potential. Fyrquel EHC fluid is used in the reactor recirculation hydraulic control system. Only manual fire protection is provided due to the low fire loading.

Combustible Materials

See the combustible loading Table H.3-2.

Fire Loading

See the combustible loading Table H.3-2.

Extinguishing and Detecting Capabilities

The credited manual fire fighting equipment is shown in Table H.3-2.

Design-Basis Fire

See Subsection H.3.2.6. (The Unit 2 hydrogen mixer is in this zone; however, a fire will not affect the redundant mixer.)

H.3.3.7 Unit 2 - [redacted] - Fire Zone 3F

Description

With the exception of orientation, this zone is similar in construction to fire zone 2F described in Subsection H.3.2.7 except that none of the Division 2 cable trays are provided with Kaowool wrap in this zone.

Safety-Related Equipment

This zone contains two safety-related motor-control centers and various safety-related cables.

Protection Criteria and Measures

The cable trays for ESF Divisions 1 and 2 are no closer than 17 feet from one another with the north side of this zone containing Division 1 cabling and the south side Division 2 cabling. Divisional or divisional associated cabling is routed in conduit when necessary to preserve the divisional separation. Cable fire stops are used through all zone boundary walls. The divisional motor control centers are located at opposite ends of this zone to minimize the possibility of both being exposed by the same fire potential. Automatic fire detectors are provided. Manual fire protection equipment and floor drains are also provided.

Combustible Materials

See the combustible loading Table H.3-2.

Fire Loading

See the combustible loading Table H.3-2.

Extinguishing and Detecting Capabilities

The credited manual fire fighting equipment is shown in Table H.3-2.

Design-Basis Fire

See Subsection H.3.2.7.

H.3.3.8 Unit 2 - [redacted] - Fire Zone 3G

Description

With the exception of the orientation, this zone is similar in construction to fire zone 2G. (See Subsection H.3.2.8.)

Safety-Related Equipment

This zone contains two 480-V motor-control centers, the RHR heat exchangers, the jet pump instrument panels A and B, the reactor recirculation instrument panels A and B, the main steam flow instrument panels A and D, and various safety-related cables

Protection Criteria and Measures

The cable trays for ESF Divisions 1 and 2 are no closer than 30 feet from one another with the north side of this zone containing Division 1 cabling and the south side Division 2 cabling. Divisional or divisional associated cabling is routed in conduit when necessary to preserve the divisional separation.

Cable fire stops are used through all zone boundary walls. The various redundant safety-related instrument panels and motor-control centers in this zone are located at opposite ends of the zone in order to minimize the possibility of redundant panels being exposed by the same fire potential. Automatic fire detection is provided. Manual fire protection and floor drains are also provided.

Combustible Materials

See the combustible loading Table H.3-2.

Fire Loading

See the combustible loading Table H.3-2.

Extinguishing and Detecting Capabilities

The credited manual fire fighting equipment is shown in Table H.3-2.
Since Zone 3G does not contain a railroad access, no automatic sprinkler system is provided.

Design-Basis Fire

See Subsection H.3.2.8.

H.3.3.9 Unit 2 - [redacted] - Fire Zone 3H1

Description

With the exception of orientation, this zone is similar in construction to fire zone 2H1. (See Subsection H.3.2.9.)

Safety-Related Equipment

See Subsection H.3.2.9.

Protection Criteria and Measures

See Subsection H.3.2.9.

Combustible Materials

See the combustible loading Table H.3-2.

Fire Loading

See the combustible loading Table H.3-2.

Extinguishing and Detecting Capabilities

The credited manual fire fighting equipment is shown in Table H.3-2.

Design-Basis Fire

See Subsection H.3.2.9

H.3.3.10 Unit 2 [redacted] - Fire Zone 3H2

Description

With the exception of orientation, this zone is similar in construction to fire zone 2H2 described in Subsection H.3.2.10, except that there are four 6-inch high concrete curbs around openings in the floor slab for this zone.

Safety-Related Equipment

This zone contains some ESF Division 3 cabling.

Protection Criteria and Measures

Manual fire protection equipment is provided.

Combustible Materials

See the combustible loading Table H.3-2.

Fire Loading

See the combustible loading Table H.3-2.

Extinguishing and Detecting Capabilities

The credited manual fire fighting equipment is shown in Table H.3-2.

Design-Basis Fire

The design-basis fire would not spread from this cubicle. A fire would only affect Division 3, leaving the redundant divisional cabling unaffected.

H.3.3.11 Unit 2 [redacted] - Fire Zone 3H3

Description

With the exception of orientation, this zone is similar in construction to fire zone 2H3. (See Subsection H.3.11.)

Safety-Related Equipment

This zone contains RHR heat exchanger B and some Division 2 safety-related cables.

Protection Criteria and Measures

This zone is surrounded on all sides by concrete walls and contain equipment and cables related to only one division. Cable fire stops are used through all zone boundary walls. Manual fire protection equipment and ionization detectors are provided.

Combustible Materials

See the combustible loading Table H.3-2.

Fire Loading

See the combustible loading Table H.3-2.

Extinguishing and Detecting Capabilities

The credited manual fire fighting equipment is shown in Table H.3-2.

Design-Basis Fire

See Subsection H.3.2.11.

H.3.3.12 Unit 2 [redacted] - Fire Zone 3H4

Description

With the exception of orientation, this zone is similar in construction to fire zone 2H4. (See Subsection H.3.2.12.)

Safety-Related Equipment

See Subsection H.3.2.12.

Protection Criteria and Measures

See Subsection H.3.2.12.

Combustible Materials

See the combustible loading Table H.3-2.

Fire Loading

See the combustible loading Table H.3-2.

Extinguishing and Detecting Capabilities

The credited manual fire fighting equipment is shown in Table H.3-2.

Design-Basis Fire

See Subsection H.3.2.12.

H.3.3.13 Unit 2 [redacted] - Fire Zone 3H5

Description

With the exception of orientation, this zone is similar in construction to fire zone 2H5. (See Subsection H.3.2.13.)

Safety-Related Equipment

This zone contains the RHR heat exchanger A and various ESF Division 1 cables

Protection Criteria and Measures

This zone is surrounded on all sides by concrete walls and contains equipment and cables related to only one division. Cable fire stops are used through all zone boundary walls. Manual fire protection equipment and ionization detectors are provided.

Combustible Materials

See the combustible loading Table H.3-2.

Fire Loading

See the combustible loading Table H.3-2.

Extinguishing and Detecting Capabilities

The credited manual fire fighting equipment is shown in Table H.3-2.

Design-Basis Fire

See Subsection H.3.2.13.

H.3.3.14 Unit 2 General Area - [redacted] - Fire Zone 3I1

Description

With the exception of orientation, this zone is similar in construction to fire zone 2I1. (See Subsection H.3.2.14.)

Safety-Related Equipment

This zone contains various safety-related cables from all three divisions.

Protection Criteria and Measures

The cable trays for ESF Divisions 1 and 2 are no closer than 30 feet from one another with the north side of this zone containing Division 1 cabling and the south side Division 2 cabling. Divisional or divisional associated cabling is routed in conduit when necessary to preserve the divisional separation.

Cable fire stops are used through all zone boundary walls. The various redundant safety-related instrument panels and motor-control centers in this zone are located at opposite ends of the zone in order to minimize the possibility of redundant panels being exposed by the same fire potential. Automatic fire detection is provided. Manual fire protection and floor drains are also provided.

Combustible Materials

See the combustible loading Table H.3-2.

Fire Loading

See the combustible loading Table H.3-2.

Extinguishing and Detecting Capabilities

The credited manual fire fighting equipment is shown in Table H.3-2.

Design-Basis Fire

See Subsection H.3.2.14.

H.3.3.15 Unit 2 [redacted] - Fire Zone 3I2

Description

With the exception of orientation, this zone is similar in construction to fire zone 2I2. (See Subsection H.3.2.15.)

Safety-Related Equipment

See Subsection H.3.2.15.

Protection Criteria and Measures

See Subsection H.3.2.13.

Combustible Materials

See the combustible loading Table H.3-2.

Fire Loading

See the combustible loading Table H.3-2.

Extinguishing and Detecting Capabilities

The credited manual fire fighting equipment is shown in Table H.3-2.

Design-Basis Fire

See Subsection H.3.2.15.

H.3.3.16 Unit 2 [redacted] - Fire Zone 3I3

Description

With the exception of orientation, this zone is similar in construction to fire zone 2I3. (See Subsection H.3.2.16.)

Safety-Related Equipment

This zone contains the ESF: Division-1 switchgears, motor-control centers, batteries, and dc power supplies.

Protection Criteria and Measures

This zone is surrounded on all sides by concrete walls and contains equipment and cables related to only one division. Cable fire stops are used through all zone boundary walls. Manual fire protection equipment and ionization detectors are provided.

Combustible Materials

See the combustible loading Table H.3-2.

Fire Loading

See the combustible loading Table H.3-2.

Extinguishing and Detecting Capabilities

The credited manual fire fighting equipment is shown in Table H.3-2.

Design-Basis Fire

See Subsection H.3.2.16.

H.3.3.17 Unit 2 [redacted] - Fire Zone 3I4

Description

With the exception of orientation, this zone is similar in construction to fire zone 2I4. (See Subsection H.3.2.17.)

Safety-Related Equipment

This zone contains the LPCS pump; LPCS water leg pump; RCIC pump, turbine, and condenser; RCIC instrumentation panels; LPCS instrumentation panel; and various ESF Division 1 cables.

Protection Criteria and Measures

This zone is surrounded on all sides by concrete walls and contains equipment and cables related to only one division. Cable fire stops are used through all zone boundary walls. Manual fire protection equipment and ionization detectors are provided.

Combustible Materials

See the combustible loading Table H.3-2.

Fire Loading

See the combustible loading Table H.3-2.

Extinguishing and Detecting Capabilities

The credited manual fire fighting equipment is shown in Table H.3-2.

Design-Basis Fire

See Subsection H.3.2.17.

H.3.3.18 Unit 2 [redacted] - Fire Zone 3I5

Description

With the exception of orientation, this zone is similar in construction to fire zone 2I5. (See Subsection H.3.2.18.)

Safety-Related Equipment

This zone contains RHR pump A, the RHR instrumentation panel A, and various ESF Division 1 cables.

Protection Criteria and Measures

This zone is surrounded on all sides by concrete walls and contains equipment and cables related to only one division. Cable fire stops are used through all zone boundary walls. Manual fire protection equipment and ionization detectors are provided.

Combustible Materials

See the combustible loading Table H.3-2.

Fire Loading

See the combustible loading Table H.3-2.

Extinguishing and Detecting Capabilities

The credited manual fire fighting equipment is shown in Table H.3-2.

Design-Basis Fire

See Subsection H.3.2.18.

H.3.3.19 Unit 2 [redacted] - Fire Zone 3I6

Description

With the exception of orientation, this zone is similar in construction to fire zone 2I6. (See Subsection H.3.2.19.)

Safety-Related Equipment

See Subsection H.3.2.19.

Protection Criteria and Measures

See Subsection H.3.2.19.

Combustible Materials

See the combustible loading Table H.3-2.

Fire Loading

See the combustible loading Table H.3-2.

Extinguishing and Detecting Capabilities

The credited manual fire fighting equipment is shown in Table H.3-2.

Design-Basis Fire

See Subsection H.3.2.19.

H.3.3.20 Unit 2 [redacted] - Fire Zone 3J

Description

With the exception of orientation, this zone is similar in construction to fire zone 2J. (See Subsection H.3.2.20.)

Safety-Related Equipment

This zone contains the reactor pressure vessel, safety-related valves, the ADS valves, one set of main steam isolation valves, and various safety-related cables.

Protection Criteria and Measures

The cable trays for ESF Divisions 1 and 2 are no closer than 10 feet from one another with the north side of this zone containing Division 1 cabling and the south side Division 2 cabling. Divisional or divisional associated cabling is routed in conduit when necessary to preserve the divisional separation. Automatic ionization detectors which alarm locally and in the control room are provided. The RHR containment spray system can be used as a deluge system. Manual fire protection equipment is normally brought into the containment during maintenance. [redacted]

Combustible Materials

See the combustible loading Table H.3-2.

Fire Loading

See the combustible loading Table H.3-2.

Extinguishing and Detecting Capabilities

The credited manual fire fighting equipment is shown in Table H.3-2.

Design-Basis Fire

See Subsection H.3.2.20.

H.3.3.21 Unit 2 [redacted] - Fire Zone 3K

Description

With the exception of orientation, this zone is similar in construction to fire zone 2K. (See Subsection H.3.2.21.)

Safety-Related Equipment

This zone contains safety-related conduit, electrical equipment, and the main steam and feedwater isolation valves.

Protection Criteria and Measures

This zone is surrounded by concrete walls and does not contain combustibles. Manual fire protection is provided. Local temperature detector is provided which measures MSIV leakage and would thus detect any temperature increase if a fire occurs in this area.

Combustible Materials

See the combustible loading Table H.3-2.

Fire Loading

See the combustible loading Table H.3-2.

Extinguishing and Detecting Capabilities

The credited manual fire fighting equipment is shown in Table H.3-2.

Design-Basis Fire

See Subsection H.3.2.21.

H.3.4 Fire Area 4: Auxiliary Building – Units 1 and 2

The auxiliary building is common to Units 1 and 2. It has been divided into 18 zones for the purpose of the fire hazards analysis. These zones are listed in Table H.2-1 and shown in Figure H.2-1. Each zone is discussed in the following. The entire building structure is constructed of protected, noncombustible materials. Table H.3-1 lists the safety-related and radioactive equipment combined within each zone, and Table H.3-2 summarizes the combustible hazards and fire fighting capabilities present.

H.3.4.1 [redacted] - Fire Zone 4A [redacted]

Description

[redacted]

[redacted]

[redacted]

[redacted]

[redacted]

Safety-Related Equipment

This zone contains HVAC safety-related equipment and ductwork, and the reactor building isolation dampers control panels.

Protection Criteria and Measures

A fire in this zone would be small and localized. Manual fire protection equipment and floor drainage are provided, and ionization detectors are provided in the switchgear area to annunciate an alarm locally and in the control room.

Combustible Materials

See the combustible loading Table H.3-2.

Fire Loading

See the combustible loading Table H.3-2.

Extinguishing and Detecting Capabilities

No automatic protection equipment is provided. Fire detection is provided in the switchgear area which alarms locally and in the control room. The credited manual fire fighting equipment is shown in Table H.3-2.

Design-Basis Fire

The design-basis fire would have no effect on safety-related equipment and would be contained within this zone due to the low combustible loading. A fire would not propagate to the zone below through the open stairway because of the low combustible loadings and the nature of the combustibles in both zones.

H.3.4.2 [redacted] - Fire Zone 4B [redacted]

Description

[redacted]

[redacted]

[redacted]

[redacted]

Safety-Related Equipment

This zone contains the following safety-related ventilation equipment including the necessary power, control, and instrumentation cabling:

a. auxiliary electric equipment room ventilation system,

b. control room ventilation system,

c. control room emergency makeup filters, and

d. reactor building isolation dampers.

It also contain, the standby gas vent monitoring panel.

Protection Criteria and Measures

Deluge systems are provided for the safety-related charcoal ventilation filters. The remaining combustible loading in this zone is low; therefore, a fire would be small and localized. Manual fire protection equipment and drainage systems are provided.

Combustible Materials

See the combustible loading Table H.3-2.

Fire Loading

See the combustible loading Table H.3-2.

Extinguishing and Detecting Capabilities

Temperature detectors are located inside of the control room supply air filters, auxiliary electric room supply air filters, control room emergency makeup filter, and primary containment purge air filters which sound an alarm in the control room on high temperature. Ionization type detectors are also provided in the switchgear area, and these alarm locally and in the control room upon actuation.

Deluge systems are provided for the charcoal filters. Manual charcoal deluge valves are operated locally and then solenoid operated valves are operated from the control room. The normally manual closed isolation valves upstream of the deluge valve, in all cases require local actions to initiate water flow. Due to the limited concentration of combustibles no automatic protection equipment is provided. The credited manual fire fighting equipment is shown in Table H.3-2.

Design-Basis Fire

A fire in a ventilation filter unit would render that unit inoperative; however, the fire could not credibly spread from a ventilation filter unit to another piece of equipment. Physically separation is utilized in this zone. Therefore, the maximum credible fire could not affect more than one ventilation train at a time. A fire would

not propagate to other levels through the open stairway because of the low combustible loadings and the nature of the combustibles in all areas concerned.

H.3.4.3 [redacted] - Fire Zone 4C1

Description

[redacted]

[redacted]

Safety-Related Equipment

The control room is the primary control center for the station. All safety-related systems, reactor shutdown, and cooling systems have indication and control in this zone. The Division 1 instrumentation and control cabling is spread above the louverall ceiling.

Protection Criteria and Measures

The control room is important to safe reactor operation. Because of the consequences that would result in the event of a design-basis fire, the defense-in-depth concept has been imposed in such a manner as to emphasize:

a. the minimization of any probability of ignition occurring, and

b. the rapid detection and extinguishment of any postulated fire.

The control room is continuously manned. The possibility of a fire occurring and developing into design-basis proportions without detection is highly unlikely.

The design criteria utilized for cable separation for the control room is described in Section 8.3. Barriers separate circuits from different divisions within a panel. A fire in the control room would be detected by the ionization detectors in the room and in the HVAC return duct, or by ionization detectors above the false ceiling, which alarm locally and in the control room.

Fixed automatic extinguishing systems are not supplied for the control room because the habitability of this room must be maintained. Fire protection is accomplished by a combination of good housekeeping, fire resistant cables, fire detection equipment, and hand-held fire extinguishing equipment.

Combustible Materials

See the combustible loading Table H.3-2.

Fire Loading

See the combustible loading Table H.3-2.

Extinguishing and Detecting Capabilities

Ionization detectors are provided for the control room in both the ductwork and the room itself. The credited manual fire fighting equipment is shown in Table H.3-2. Emergency breathing air is also provided at the Unit 1, Unit 2 and center desk operating areas.

Design-Basis Fire

In postulating a design-basis fire for the control room, it is assumed that all cables and panels are adversely affected regard less of existing spatial separation. The results of such a fire may be serious. However, the continuously manned nature of the control room, and the provided separation prevents the postulated fire from developing into design-basis proportions. The cabling is mainly for instrumentation and control. In any case, it is not credible to assume a design-basis fire because of the physical arrangement of the control room. The auxiliary equipment room contains the remote shutdown panels which have all the control necessary for a safe shutdown in the event of damage or evacuation of the main control room. All remote shutdown circuits are electrically isolated from the main control room and, therefore, are unaffected by a loss of the control room circuits.

H.3.4.4 [redacted] - Fire Zone 4C2

Description

[redacted]

A.

[redacted]

[redacted]

[redacted]

[redacted]

[redacted]

[redacted]

[redacted]

[redacted]

[redacted]

Safety-Related Equipment

This zone contains various safety-related cables.

Protection Criteria and Measures

Only manual fire protection and floor drains are provided. Fire detection is provided in the ventilation ductwork. A fire detection system is provided for this zone, which alarms locally and in the control room.

Combustible Materials
See the combustible loading Table H.3-2.

Fire Loading

See the combustible loading Table H.3-2.

Extinguishing and Detecting Capabilities

An ionization detector is provided in the ductwork. A fire detection system is provided for this zone. Actuation of the detector sounds an alarms locally and in the control room and stops the fans. The credited manual fire fighting equipment is shown in Table H.3-2.

Design-Basis Fire

The design-basis fire would be contained within this zone and have no effect on safety-related equipment.

H.3.4.5 [redacted] - Fire Zone 4C3

Description

[redacted]

[redacted]

[redacted]

[redacted]

[redacted]

[redacted]

[redacted]

Safety-Related Equipment

This zone contains ESF Division I and ESF Division 3 control and instrumentation cables for Unit 2.

Protection Criteria and Measures

Only manual fire protection and floor drains are provided. Fire detection is provided in the ventilation ductwork, and by ionization type detectors above the false ceiling which alarm locally and in the control room upon actuation.

Combustible Materials

See the combustible loading Table H.3-2..

Fire Loading

See the combustible loading Table H.3-2.

Extinguishing and Detecting Capabilities

Ionization type fire detection is provided in the ventilation ductwork. Actuation of the detector sounds an alarm in the control room and shuts off the fan. Ionization type detectors above the false ceiling are also provided, which alarm locally and in the control room upon actuation. The credited manual fire fighting equipment is shown in Table H.3-2.

Design-Basis Fire

The design-basis fire in this zone could result in damage to some ESF Division 1 control and instrumentation cables for Unit 2 or some ESF Division 3 control and instrumentation cables for Unit 2. However, because of the irregular shape of the zone, the relative locations of the ESF Division 1 and ESF Division 3 cables (in excess of 40 feet apart and around a corner), a fire will not affect both ESF Divisions simultaneously and, therefore, will not impair the safe shutdown capability of the plant. In addition, the ionization detection system will sound an alarm in the control room which will quickly bring personnel to extinguish any fire and prevent it from spreading. In all cases a design-basis fire will be contained within the zone.

H.3.4.6 [redacted] - Fire Zone 4C4

Description

[redacted]

[redacted]

[redacted]

[redacted]

[redacted]

Safety-Related Equipment

This zone primarily contains balance-of-plant cables, some of which are routed in ESF Division 1 cable pans, and several ESF Division 2 instrumentation cables (in individual conduits) for Units 1 and 2, which are associated with the computer room's temperature control system.

Protection Criteria and Measures

Due to the relatively high cable concentration fire detection is provided for the room (above the false ceiling). Manual fire protection equipment is provided.

Combustible Materials

See the combustible loading Table H.3-2.

Fire Loading

See the combustible loading Table H.3-2.

Extinguishing and Detecting Capabilities

Ionization type fire detection is provided in the computer room (above the false ceiling). Actuation of an area detector sounds an alarm locally and in the control room. The credited manual fire fighting equipment is shown in Table H.3-2.

Design-Basis Fire

The design-basis fire in this zone could result in damage to some ESF Division 2 instrumentation cables in Units 1 and 2. However, because damage to these cables will only affect the temperature control system for the computer room itself, which contains no other safety-related equipment, the safe shutdown capability of the plant will not be impaired. In addition an alarm in the control room will quickly bring personnel to extinguish any fire and prevent it from spreading. In all cases a design-basis fire will be contained within the zone.

H.3.4.7 [redacted] - Fire Zone 4C5

Description

[redacted]

[redacted]

Safety-Related Equipment

This zone contains ESF Division 1 control and instrumentation cables for Unit 2 and ESF Division 2 instrumentation cables (in individual conduits) for Units 1 and 2 which are associated with the security control center's temperature control system.

Protection Criteria and Measures

Due to the relatively high cable concentration, fire detection is provided for the room and its associated ductwork. Manual fire protection equipment is provided. Local zone ionization detectors are located above the false ceiling and alarm locally and in the control room.

Combustible Materials

See the combustible loading Table H.3-2.

Fire Loading

See the combustible loading Table H.3-2.

Extinguishing and Detecting Capabilities

Ionization type fire detection is provided in the security control center and in its ductwork. Actuation of an area or ductwork detector sounds an alarm in the control room. Actuation of an area zone detector sounds an alarm locally. Actuation of a ductwork detector also passes the air through a charcoal absorber. The credited manual fire fighting equipment is shown in Table H.3-2.

Design-Basis Fire

The design-basis fire in this zone could result in damage to some ESF Division 1 control and instrumentation cables for Unit 2 and some ESF Division 2 instrumentation cables for Units 1 and 2. However, because damage to the ESF Division 2 cables will only affect the temperature control system for the security control center alone, the remainder of ESF Division 2 will be available to safely shut

down the plant. (Note that other than the ESF Division 2 cables for the security system control center temperature control system, no Unit 1 cables are affected by the design-basis fire in this zone.) In addition, the security control center is continuously manned and provided with an ionization detection system so that any fire will be quickly dealt with and prevented from spreading. In all cases a design-basis fire will be contained within the zone.

H.3.4.8 Unit 1 [redacted] - Fire Zone 4D1

Description

[redacted]

[redacted]

[redacted]

[redacted]

Safety-Related Equipment

Fire Zone 4D1 consists of two subzones 4D1-1 and 4D1-2. Subzone 4D1-1 contains Division 1 control and instrumentation cables for Unit 1. Subzone 4D1-2 contains the Division 2 control and instrumentation cabling for Unit 1 leading into the control room.

Protection Criteria and Measures

Automatic fire detection and suppression are provided to prevent a serious fire from occurring. Fire walls are used to prevent any fires from spreading. Floor drains are provided to remove water from the suppression system.

Combustible Materials

See the combustible loading Table H.3-2.

Fire Loading

See the combustible loading Table H.3-2.

Extinguishing and Detecting Capabilities

The cable spreading room is equipped with an automatic preaction suppression system actuated by ionization detectors. These detectors are sensitive enough to alarm at the very inception of a fire when combustion products are first being released. Actuation of an ionization detector causes an alarm locally and in the control room and trips the deluge valve filling the system with water.

The cable spreading room suppression system is a combined spray and sprinkler system. Fusible link sprinkler and spray heads are located adjacent to each cable tray. A heat source, such as from a fire, is required for the sprinkler and spray head to actuate and flood the tray. This system is also pneumatically supervised; and damage to the system or actuation of the fusible link sprinkler and spray head actuates an alarm both locally and in the control room. If for some reason the ionization detection system was not in service or failed to function, the heat of a fire would open a head, causing a supervisory alarm, and the deluge valve could be manually tripped.

The system is also electrically supervised and alarms both locally and in the control room upon any failure. If there is a fire and the detectors do not function for any reason, the melting of the fusible links energizes an alarm both locally and in the control room by releasing the supervisory air pressure maintained in the piping.

The credited manual fire fighting equipment is shown in Table H.3-2.

Design-Basis Fire

The design-basis fire could possibly destroy the Division 2 control and instrumentation cabling for Unit 1 going into the control room. The plant could still be safely shut down and cooled down using Division 1. The fire loading is such that the fire would be contained in this zone. The automatic suppression system precludes a fire of this magnitude from occurring.

H.3.4.9 Unit 2 [redacted] - Fire Zone 4D2

Description

[redacted]

Safety-Related Equipment

Fire Zone 4D2 consists of two subzones 4D2-1 and 4D2-2. Subzone 4D2-1 contains Division 1 control and instrumentation cables for Unit 1. Subzone 4D2-2 contains the Division 2 control and instrumentation cabling for Unit 1 leading into the control room. Fire Zone 4D2 contains two Division 3 safety- related cables.

Protection Criteria and Measures

Automatic fire detection and suppression are provided to prevent a serious fire from occurring. Fire walls are used to prevent any fires from spreading. Floor drains are provided to remove water from the sprinkler system. Unit 2 Division 3 safety-related cables 2HP021 and 2HP022 are protected by a one-hour fire wrap with automatic detection and suppression such that the function of HPCS valve 2E22-F004 may be credited given a fire in this zone.

Combustible Materials

See the combustible loading Table H.3-2.

Fire Loading

See the combustible loading Table H.3-2.

Extinguishing and Detecting Capabilities

The credited manual fire fighting equipment is shown in Table H.3-2.

Design-Basis Fire

The design-basis fire could possibly destroy the Unit 2 Division 2 control and instrumentation cabling going into the control

H.3.4.10 [redacted] - Fire Zone 4D3 [redacted]

Description

[redacted]

[redacted]

[redacted]

[redacted]

[redacted]

[redacted]

[redacted]

Safety-Related Equipment

This area contains safety-related HVAC equipment which serves this zone as well as zones 4D1 and 4D2. This area also contains various safety related cables.

Protection Criteria and Measures

Automatic fire detection is provided for this zone. Due to the limited concentration of combustibles only manual fire protection equipment and adequate floor drainage are provided.

Combustible Materials

See the combustible loading Table H.3-2.

Fire Loading

See the combustible loading Table H.3-2.

Extinguishing and Detecting Capabilities

Ionization type fire detection which alarms locally and in the control room upon actuation is provided for this zone. The credited manual fire fighting equipment is shown in Table H.3-2.

Design-Basis Fire

The design-basis fire would have no effect on safety-related equipment. Damage to a portion of the reactor protection system would result in a Unit 1 reactor trip. The fire would be contained within this zone.

H.3.4.11 [redacted] - Fire Zone 4D4

Description

[redacted]

Safety-Related Equipment

See Subsection H.3.4.10.

Protection Criteria and Measures

See Subsection H.3.4.10.

Combustible Materials

See the combustible loading Table H.3-2.

Fire Loading

See the combustible loading Table H.3-2.

Extinguishing and Detecting Capabilities

The credited manual fire fighting equipment is shown in Table H.3-2.

Design-Basis Fire

Same as Subsection H.3.4.11 but for Unit 2.

H.3.4.12 Unit 1 [redacted] - Fire Zone 4E1

Description

[redacted]

[redacted]

[redacted]

[redacted]

[redacted]

Safety-Related Equipment

This zone contains various safety-related cables, control panels, relay panels, and the remote shutdown panel for Unit 1.

Protection Criteria and Measures

Automatic fire detection is provided in the room and in its ductwork. Fire walls are used to prevent the spread of fire. Fire protection is also accomplished by a combination of good housekeeping, fire resistant cables, fire detection equipment, and hand-held fire extinguishing equipment.

Combustible Materials

See the combustible loading Table H.3-2.

Fire Loading

See the combustible loading Table H.3-2.

Extinguishing and Detecting Capabilities

A redundant ionization detection system which sounds an alarm locally and in the control room is provided for this zone. An ionization detection circuit, in the ductwork also causes the air to be recirculated through charcoal absorber beds. The credited manual fire fighting equipment is shown in Table H.3-2.

Design-Basis Fire

A credible fire in this zone would be limited to an individual panel and would not produce sufficient heat or flames to spread the fire. The ionization detectors provided would actuate, alarming locally and in the control room, at the very inception of a fire bringing personnel to quickly extinguish the fire. A fire in this zone would be contained by the fire barriers.

H.3.4.13 Unit 2 [redacted] - Fire Zone 4E2

Description

[redacted]

Safety-Related Equipment

This zone contains various safety-related control panels, relay panels, and the remote shutdown panel for Unit 2.

Protection Criteria and Measures

Automatic fire detection is provided in the room and in its ductwork. Fire walls are used to prevent the spread of fire. Fire protection is also accomplished by a combination of good housekeeping, fire resistant cables, fire detection equipment, and hand-held fire extinguishing equipment.

Combustible Materials

See the combustible loading Table H.3-2.

Fire Loading

See the combustible loading Table H.3-2.

Extinguishing and Detecting Capabilities

The credited manual fire fighting equipment is shown in Table H.3-2.

Design-Basis Fire

See Subsection H.3.4.12.

H.3.4.14 Unit 1 [redacted] - Fire Zone 4E3 [redacted]

Description

[redacted]

[redacted]

[redacted]

[redacted]

[redacted]

[redacted]

[redacted]

[redacted]

[redacted]

[redacted]

[redacted]

Safety-Related Equipment

This zone contains various safety related cables and the ESF Division-2 switchgear, motor-control centers, batteries, and dc power supply.

Protection Criteria and Measures

Automatic fire detection and manual fire fighting are provided. Fire barriers are used to prevent the spread of fire.

Combustible Materials

See the combustible loading Table H.3-2.

Fire Loading

See the combustible loading Table H.3-2.

Extinguishing and Detecting Capabilities

Ionization type fire detectors that sound an alarm locally and in the control room are provided. The battery room contains a photo-electric detector common to the zone. The credited manual fire fighting equipment is shown in Table H.3-2.

Design-Basis Fire

The design-basis fire could remove the power for ESF-2; however, redundant ESF-1 would be unaffected. The maximum credible fire would be isolated to one panel and not produce sufficient heat or flame to spread the fire. The ionization or photo-electric detectors would actuate at the inception of a fire bringing personnel to quickly extinguish the fire. A fire in this zone would be contained by the fire barriers.

H.3.4.15 Unit 2 [redacted] - Fire Zone 4E4

Description

[redacted]

Safety-Related Equipment

This zone contains various safety related cables and the ESF Division-2 switchgear, motor-control centers, batteries, and dc power supply.

Protection Criteria and Measures

Automatic fire detection and manual fire fighting are provided. Fire barriers are used to prevent the spread of fire. Unit 2 Division 3 safety-related cables 2HP021 and 2HP022 are protected by a three-hour fire wrap such that the function of HPCS valve 2E22-F004 may be credited given a fire in this zone.

Combustible Materials

See the combustible loading Table H.3-2.

Fire Loading

See the combustible loading Table H.3-2.

Extinguishing and Detecting Capabilities

The credited manual fire fighting equipment is shown in Table H.3-2.

Design-Basis Fire

See Subsection H.3.4.14.

H.3.4.16 Unit 1 [redacted] - Fire Zone 4F1 [redacted]

Description

[redacted]

[redacted]

[redacted]

[redacted]

[redacted]

Safety-Related Equipment

This zone contains the ESF: Division-1 switchgears, motor-control centers, batteries, and dc power supplies.

Protection Criteria and Measures

Automatic fire detection and manual fire fighting are provided. Fire barriers are used to prevent the spread of fire.

Combustible Materials

See the combustible loading Table H.3-2.

Fire Loading

See the combustible loading Table H.3-2.

Extinguishing and Detecting Capabilities

Ionization type fire detectors that sound an alarm locally and in the control room are provided. The battery rooms contain photo-electric detectors common to the zone. The credited manual fire fighting equipment is shown in Table H.3-2.

Design-Basis Fire

The design-basis fire could remove the power for ESF-1; however, redundant ESF-2 would be unaffected. The maximum credible fire would be isolated to one panel and not produce sufficient heat or flame to spread the fire. The ionization or photo-electric detectors would actuate at the inception of a fire bringing personnel to quickly extinguish the fire. A fire in this zone would be contained by the fire barriers.

H.3.4.17 Unit 2 [redacted] - Fire Zone 4F2

Description

[redacted]

Safety-Related Equipment

This zone contains various safety related cables and the ESF: Division-1 switchgears, motor-control centers, batteries, and dc power supplies.

Protection Criteria and Measures

Automatic fire detection and manual fire fighting are provided. Fire barriers are used to prevent the spread of fire.

Combustible Materials

See the combustible loading Table H.3-2.

Fire Loading

See the combustible loading Table H.3-2.

Extinguishing and Detecting Capabilities

The credited manual fire fighting equipment is shown in Table H.3-2.

Design-Basis Fire

See Subsection H.3.4.16.

H.3.4.18 [redacted] - Fire Zone 4F3

Description

[redacted]

[redacted]

[redacted]

[redacted]

[redacted]

[redacted]

[redacted]

[redacted]

[redacted]

[redacted]

Safety-Related Equipment

This zone contains various ESF Division-1 cables for Units 1 and 2, which are located above the suspended ceiling. This zone contains two Division 3 safety related cables.

Protection Criteria and Measures

Automatic ionization detection and a preaction spray suppression system are provided for the cables above the suspended ceiling. Fire detection is provided in the ventilation ductwork for this zone. Manual fire protection and floor drains are provided. Unit 2 Division 3 safety-related cables [redacted] are protected by a three-hour fire wrap such that the function of [redacted] may be credited given a fire in this zone.

Combustible Materials

See the combustible loading Table H.3-2.

Fire Loading

See the combustible loading Table H.3-2.

Extinguishing and Detecting Capabilities

The ionization type detectors that are located in the ductwork sound an alarm in the control room. A preaction spray suppression system is located above the suspended ceiling to protect the cabling located there. An alarm sounds locally and in the control room. The credited manual fire fighting equipment is shown in Table H.3-2.

Design-Basis Fire

The design-basis fire in this zone would make several systems that are powered and controlled by ESF-1 inoperable. ESF-2 would be unaffected and still provide redundant systems. It is unlikely that a cable fire could destroy all of these cables or propagate substantially due to the automatic fire detection and suppression systems and the fact that this zone is usually occupied with personnel capable of extinguishing the fire.

H.3.5 Fire Area 5 - Turbine Building – Units 1 and 2

The turbine building is common to Units 1 and 2. It has been divided into 36 zones for the purpose of the fire hazards analysis. These zones are listed in Table H.2-1 and shown on Figure H.2-1. Each zone is discussed in the following subsections. Table H.3-1 lists the safety-related and radioactive equipment within each zone, and Table H.3-2 summarizes the combustible hazards and fire fighting capabilities present.

H.3.5.1 Unit 1 [redacted] - Fire Zone 5A1

Descriptions

[redacted]

[redacted]

[redacted]

[redacted]

[redacted]

[redacted]

[redacted]

[redacted]

[redacted]

Safety-Related Equipment

This zone does not contain any safety-related equipment.

Protection Criteria and Measures

Automatic sprinkler systems are provided to prevent a serious fire from occurring. Fire walls are used, where possible, to prevent any fires from spreading. Floor drains are provided to remove any oil leakage or sprinkler water from this zone.

Combustible Materials

See the combustible loading Table H.3-2.

Fire Loading
See the combustible loading Table H.3-2.

Extinguishing and Detecting Capabilities
All three rooms in this zone are equipped with independent automatic sprinkler systems each designed to produce a density of 0.3 gpm/ft^2 over 3000 ft^2 and 0.2 gpm/ft^2 over 10,000 ft^2. The sprinkler systems alarm both locally and in the control room upon system actuation. The credited manual fire fighting equipment is shown in Table H.3-2.

Design-Basis Fire

The design-basis fire could not credibly occur within this zone because the drain system would remove any oil leakage in the turbine driven reactor feed pump room. The sprinkler systems are installed to quickly extinguish any fire. A fire in this zone would have no effect on safety-related equipment.

H.3.5.2 Unit 2 [redacted] - Fire Zone 5A2

Description

[redacted]

Safety-Related Equipment

This zone does not contain any safety-related equipment.

Protection Criteria and Measures

Automatic sprinkler systems are provided to prevent a serious fire from occurring. Fire walls are used, where possible, to prevent any fires from spreading. Floor drains are provided to remove any oil leakage or sprinkler water from this zone.

Combustible Materials

See Subsection H.3.5.1.

Fire Loading

See the combustible loading Table H.3-2.

Extinguishing and Detecting Capabilities

The credited manual fire fighting equipment is shown in Table H.3-2.

Design-Basis Fire

See Subsection H.3.5.1.

H.3.5.3 [redacted] - Fire Zone 5A3

Description

[redacted]

[redacted]

[redacted]

[redacted]

[redacted]

[redacted]

[redacted]

[redacted]

[redacted]

[redacted]

Safety-Related Equipment

This zone contains safety related HVAC monitoring instrumentation.

Protection Criteria and Measures

The turbine is isolated from the auxiliary building by 3-hour fire barriers. Automatic preaction suppression systems are provided for the turbine bearings. Automatic CO_2 flooding is provided for each alternator-exciter, and manual CO_2 purging is provided for generator. Automatic smoke and heat vents are installed in the turbine roof. Guard pipes are used on the turbine oil piping and drains are provided to collect oil leakage. Manual backup protection is also provided. An excess flow check valve on the hydrogen fill line automatically isolates the storage tanks in the event of a line break. Hydrogen is vented off from the generator to outside the station through a hydraulic back pressure valve.

This zone contains 1 1/2" oxygen piping and Oxygen Flow Control Module 1(2)P73-P200 for the Unit 1 and Unit 2 Hydrogen Water Chemistry (HWC) Systems. All oxygen piping is protected against unmitigated leakage by an excess flow check valve installed at the oxygen storage site. A vent line to the Turbine building exterior is provided for each unit to reduce the potential of forming oxygen rich areas during performance of maintenance and surveillance to the oxygen piping or components.

Combustible Materials

See the combustible loading Table H.3-2.

Fire Loading

See the combustible loading Table H.3-2.

Extinguishing and Detecting Capabilities

(See Protection Criteria and Measures). The turbine bearing preaction sprinkler system deluge valve and the alternator-exciter CO_2 systems can be actuated either automatically (utilizing heat detectors) or manually. Both systems activate alarms locally and in the control room up on actuation. Generator hydrogen purity and temperature readings/alarms are monitored at the local panel and in the control room. The credited manual fire fighting equipment is shown in Table H.3-2.

Design-Basis Fire

The design-basis fire would be contained within the turbine building. It is possible for oil, in the unlikely event of a line rupture, to leak down to the zone below; however, that zone is completely protected by automatic suppression. The

automatic suppression are designed to extinguish an oil fire and the automatic smoke and heat vents would prevent heat from building up and causing any flash over.

H.3.5.4 [redacted] - Fire Zone 5A4

Description

[redacted]

[redacted]

[redacted]

[redacted]

Safety-Related Equipment

This zone primarily contains balance-of-plant cables; however, some ESF Division-2 control and instrumentation cables are present.

Protection Criteria and Measures

Automatic fire detection is provided due to the relatively high cable concentration. Because the number of safety-related cables and power cables in this zone is low, only manual fire protection is provided.

Combustible Materials

See the combustible loading Table H.3-2.

Fire Loading

See the combustible loading Table H.3-2.

Extinguishing and Detecting Capabilities

Automatic ionization detection which alarms locally and in the control room is provided for this zone. The credited manual fire fighting equipment is shown in Table H.3-2.

Design-Basis Fire

The design-basis fire could result in damage to some ESF-2 control and instrumentation cables; however, the redundant ESF-1 will not be affected. The

ionization detection system will sound an alarm locally and in the control room which will quickly bring personnel to extinguish any fire and prevent it from spreading.

H.3.5.5 Unit 1 [redacted] - Fire Zone 5B1

Description

[redacted]

[redacted]

[redacted]

[redacted]

[redacted]

[redacted]

[redacted]

[redacted]

[redacted]

[redacted]

[redacted]

[redacted]

[redacted]

[redacted]

Safety-Related Equipment

This zone contains Reactor Protection System (RPS) limit switches and associated cables for the Turbine Control Valves and Turbine Stop Valves.

Protection Criteria and Measures

The turbine oil lines are enclosed within guard pipes to prevent leakage. This zone contains sprinkler systems each with a design density of 0.3 gpm/ft^2 on all elevations in order to protect against the unlikely event of a turbine oil line rupture. Floor drains are provided on the upper elevation to remove any oil or water that may accumulate. The condenser pit area is designed to contain and prevent the spread of any oil or water that may accumulate. Manual back up protection is also provided.

Combustible Materials

See the combustible loading Table H.3-2.

Fire Loading

See the combustible loading Table H.3-2.

Extinguishing and Detecting Capabilities

Automatic sprinkler protection designed to produce a density of 0.3 gpm/ft^2 over 3,000 ft^2 and 0.2 gpm/ft^2 over 10,000 ft^2 is provided on all levels in this fire zone. Upon actuation, each sprinkler system alarms both locally and in the control room. The credited manual fire fighting equipment is shown in Table H.3-2.

Design Basis Fire

Any fires would be contained within this zone and have no effect on safety-related equipment. The automatic sprinkler systems are designed to quickly extinguish any fires.

H.3.5.6 Unit 2 [redacted] - Fire Zone 5B2

Description

[redacted]

Safety-Related Equipment

This zone contains Reactor Protection System (RPS) limit switches and associated cables for the Turbine Control Valves and Turbine Stop Valves.

Protection Criteria and Measures

The turbine oil lines are enclosed within guard pipes to prevent leakage. This zone contains sprinkler systems each with a design density of 0.3 gpm/ft^2 on all elevations in order to protect against the unlikely event of a turbine oil line rupture. Floor drains are provided on the upper elevation to remove any oil or water that may accumulate. The condenser pit area is designed to contain and prevent the spread of any oil or water that may accumulate. Manual back up protection is also provided.

Combustible Materials

See the combustible loading Table H.3-2.

Fire Loading

See the combustible loading Table H.3-2.

Extinguishing and Detecting Capabilities

The credited manual fire fighting equipment is shown in Table H.3-2.

Design-Basis Fire

See Subsection H.3.5.5.

H.3.5.7 [redacted] - Fire Zone 5B3 [redacted]

Description

[redacted]

[redacted]

[redacted]

[redacted]

[redacted]

[redacted]

[redacted]

[redacted]

Safety-Related Equipment

This zone does not contain any safety-related equipment.

Protection Criteria and Measures

An automatic deluge protection system is provided for each turbine oil tank, and sprinkler protection is provided for this entire zone. The oil tanks are suspended over a pit which will remove any leakage or water from the deluge system via the drain system. The floor is sloped to prevent oil from spreading.

Combustible Materials

See the combustible loading Table H.3-2.

Fire Loading

See the combustible loading Table H.3-2.

Extinguishing and Detecting Capabilities

High temperature and rate of rise detectors sound an alarm locally and in the control room and actuate the turbine oil tank deluge systems. Each deluge system may also be actuated manually. Sprinkler protection with a density of 0.3 gpm/ft^2 is provided for the entire zone. Upon actuation the sprinkler system also alarms locally and in the control room. The credited manual fire fighting equipment is shown in Table H.3-2.

Design-Basis Fire

The design-basis fire is not likely because the turbine oil tank pit would drain away any oil leakage. The deluge system and sprinkler system would quickly extinguish any fires. Therefore, a fire in this zone would have no effect on safety-related equipment.

H.3.5.8 [redacted] - Fire Zone 5B4

Description

[redacted]

[redacted]

[redacted]

[redacted]

[redacted]

[redacted]

[redacted]

[redacted]

[redacted]

[redacted]

Safety-Related Equipment

This zone does not contain equipment required to safely shut the plant down in the event of a fire.

Protection Criteria and Measures

Due to the limited combustible loading only manual fire fighting equipment is provided. Due to the limited combustible loading and lack of safety-related equipment, fire protection of exposed steel and automatic protection is not provided.

Combustible Materials

See the combustible loading Table H.3-2.

Fire Loading

See the combustible loading Table H.3-2.

Extinguishing and Detecting Capabilities

The credited manual fire fighting equipment is shown in Table H.3-2.

Design-Basis Fire

The design-basis fire in this zone does not affect any safe-shutdown equipment.

H.3.5.9 [redacted] - Fire Zone 5B5

Description

[redacted]

[redacted]

[redacted]

[redacted]

[redacted]

[redacted]

[redacted]

[redacted]

[redacted]

Safety-Related Equipment

This zone does not contain any safety-related equipment.

Protection Criteria and Measures

Due to the lack of safety-related equipment, fire protection of exposed steel and automatic fire protection are not provided. Only manual fire protection equipment is provided.

Combustible Materials

See the combustible loading Table H.3-2.

Fire Loading

See the combustible loading Table H.3-2.

Extinguishing and Detecting Capabilities

The credited manual fire fighting equipment is shown in Table H.3-2.

Design-Basis Fire

The design-basis fire would result from cable insulation burning. A fire in this zone would not affect any safety-related equipment.

H.3.5.10 Unit 2 [redacted] - Fire Zone 5B6

Description

[redacted]

Safety-Related Equipment

See Subsection H.3.5.9.

Protection Criteria and Measures

See Subsection H.3.5.9.

Combustible Materials

See the combustible loading Table H.3-2.

Fire Loading

See the combustible loading Table H.3-2.

Extinguishing and Detecting Capabilities

The credited manual fire fighting equipment is shown in Table H.3-2.

Design-Basis Fire

See Subsection H.3.5.9.

H.3.5.11 Unit 1 [redacted] - Fire Zone 5B7

Description

[redacted]

Safety-Related Equipment

This zone does not contain any safety-related equipment.

Protection Criteria and Measures

An automatic deluge system is designed to extinguish any fires. Curbing and drains are provided to prevent the spread of oil.

Combustible Materials

See the combustible loading Table H.3-2.

Fire Loading

See the combustible loading Table H.3-2.

Extinguishing and Detecting Capabilities

A high temperature or rate of rise detector sounds an alarm locally and in the control room, thereby actuating the deluge system. The deluge system may also be actuated manually. The credited manual fire fighting equipment is shown in Table H.3-2.

Design-Basis Fire

The design-basis fire requires the rupture of the seal oil unit. The curbing and drains would prevent the spread of oil. The smoke and heat vents would remove the combustion products, and the deluge system would extinguish the fire. A fire would have no effect on safety-related equipment.

H.3.5.12 Unit 2 [redacted] - Fire Zone 5B8

Description

[redacted]

Safety-Related Equipment

This zone does not contain any safety-related equipment.

Protection Criteria and Measures

An automatic deluge system is designed to extinguish any fires. Curbing and drains are provided to prevent the spread of oil.

Combustible Materials

See the combustible loading Table H.3-2.

Fire Loading

See the combustible loading Table H.3-2.

Extinguishing and Detecting Capabilities

The credited manual fire fighting equipment is shown in Table H.3-2.

Design-Basis Fire

See Subsection H.3.5.11.

H.3.5.13 Unit 1 [redacted] - Fire Zone 5B9

Description

[redacted]

[redacted]

[redacted]

[redacted]

[redacted]

[redacted]

[redacted]

[redacted]

Safety-Related Equipment

This zone does not contain any safety-related equipment.

Protection Criteria and Measures

An automatic sprinkler system is provided to extinguish any fires. Floor drains are provided to prevent oil from accumulating. Due to the low combustible loading, lack of safety-related equipment, and presence of sprinklers, fire protection for the steel is not provided.

Combustible Materials

See the combustible loading Table H.3-2.

Fire Loading

See the combustible loading Table H.3-2.

Extinguishing and Detecting Capabilities

Automatic sprinkler protection with a density of 0.3 gpm/ft^2 is provided. The sprinkler system alarms both locally and in the control room upon system actuation. The credited manual fire fighting equipment is shown in Table H.3-2.

Design-Basis Fire

The design-basis fire would largely come from electrical insulation within this zone. The lubrication oil will be removed by the floor drain system and any fire will be quickly extinguished by the sprinkler system. Thus the design-basis fire would be contained within this zone and have no effect on safety- related equipment.

H.3.5.14 Unit 2 [redacted] - Fire Zone 5B10

Description

[redacted]

Safety-Related Equipment

This zone does not contain any safety-related equipment.

Protection Criteria Measures

An automatic sprinkler system is provided to extinguish any fires. Floor drains are provided to prevent oil from accumulating. Due to the low combustible loading, lack of safety-related equipment, and presence of sprinklers, fire protection for the steel is not provided.

Combustible Materials

See the combustible loading Table H.3-2.

Fire Loading

See the combustible loading Table H.3-2.

Extinguishing and Detecting Capabilities

The credited manual fire fighting equipment is shown in Table H.3-2.

Design-Basis Fire

See Subsection H.3.5.13.

H.3.5.15 Unit 1 [redacted] 5B11 [redacted]

Description

[redacted]

Safety-Related Equipment

This zone does not contain safety-related equipment.

Protection Criteria and Measures

Due to the lack of safety-related equipment and normal lack of combustibles, the steel is not fire protected. Only manual fire fighting equipment is provided.

Combustible Materials

See the combustible loading Table H.3-2.

Fire Loading

See the combustible loading Table H.3-2.

Extinguishing and Detecting Capabilities

The credited manual fire fighting equipment is shown in Table H.3-2.

Design-Basis Fire

The design-basis fire would be contained in this zone and would have no effect on safety-related equipment.

H.3.5.16 Unit 2 [redacted] - Fire Zone 5B12

Description

[redacted]

Safety-Related Equipment

This zone does not contain safety-related equipment

Protection Criteria and Measures

Due to the lack of safety-related equipment and normal lack of combustibles, the steel is not fire protected. Only manual fire fighting equipment is provided.

Combustible Materials

See the combustible loading Table H.3-2.

Fire Loading

See the combustible loading Table H.3-2.

Extinguishing and Detecting Capabilities

The credited manual fire fighting equipment is shown in Table H.3-2.

Design-Basis Fire

See Subsection H.3.5.15.

H.3.5.17 [redacted] - Fire Zone 5B13 [redacted]

Description

[redacted]

[redacted]

[redacted]

[redacted]

[redacted]

[redacted]

[redacted]

[redacted]

[redacted]

Safety-Related Equipment

This zone contains safety-related panels [redacted]. These panels are provided for the control of the manual deluge system charcoal adsorber in the auxiliary electric equipment room.

Protection Criteria and Measures

Automatic fire detection which alarms both locally and in the control room is provided in this area. Manual fire fighting equipment is provided.

Combustible Materials

See the combustible loading Table H.3-2.

Fire Loading

See the combustible loading Table H.3-2.

Extinguishing and Detecting Capabilities

The credited manual fire fighting equipment is shown in Table H.3-2. Automatic ionization detection, which annunciates locally and in the control room, is provided. A photoelectric detector is installed in the battery room.

Design-Basis Fire

A credible fire in this zone would be limited to an individual panel or the HCVS batteries and would not produce sufficient heat or flames to cause the spread of the fire. The ionization detectors provided would activate at the very inception of a fire bringing personnel to quickly extinguish the fire.

H.3.5.18 Unit 1 [redacted] - Fire Zone 5C1 [redacted]

Description

[redacted]

[redacted]

[redacted]

[redacted]

Safety-Related Equipment

This zone does not contain any safety-related equipment.

Protection Criteria and Measures

Due to the lack of safety-related equipment and the normal lack of combustibles, the steel is not fire protected. Manual fire protection equipment is provided.

Combustible Materials

See the combustible loading Table H.3-2.

Fire Loading

See the combustible loading Table H.3-2.

Extinguishing and Detecting Capabilities

The credited manual fire fighting equipment is shown in Table H.3-2.

Design-Basis Fire

The design-basis fire would be contained in this zone and have no effect on safety-related equipment.

H.3.5.19 Unit 2 [redacted] - Fire Zone 5C2

Description

[redacted]

Safety-Related Equipment

See Subsection H.3.5.18.

Protection Criteria and Measures

Due to the lack of safety-related equipment and the normal lack of combustibles, the steel is not fire protected. This zone contains hydrogen piping for the Unit 1 and Unit 2 Hydrogen Water Chemistry (HWC) Systems. This line is protected against unmitigated leakage by an excess flow check valve installed at the hydrogen storage site. No combustible gas detectors are installed in this zone due to the absence of any valves or non-welded connections.

Combustible Materials

See the combustible loading Table H.3-2.

Fire Loading

See the combustible loading Table H.3-2.

Extinguishing and Detecting Capabilities

The credited manual fire fighting equipment is shown in Table H.3-2.

Design-Basis Fire

See Subsection H.3.5.18.

H.3.5.20 Unit 1[redacted] - Fire Zone 5C3

Description

[redacted]

[redacted]

[redacted]

[redacted]

[redacted]

Safety Related Equipment

This zone does not contain any safety-related equipment.

Protection Criteria and Measures

Automatic fire protection equipment is provided in this zone for the unlikely event of a rupture of a guarded turbine oil line. Backup manual protection is provided.

Combustible Materials

See the combustible loading Table H.3-2.

Fire Loading

See the combustible loading Table H.3-2.

Extinguishing and Detecting Capabilities

An automatic sprinkler system with a density of 0.3 gpm/ft^2 over 3000 ft^2 is provided. Actuation of the sprinkler system sounds an alarm locally and in the control room. The credited manual fire fighting equipment is shown in Table H.3-2.

Design-Basis Fire

This zone does not normally contain combustibles. Should an oil line from the turbine generator rupture, the sprinkler system is provided to extinguish any fire that may occur. A fire would not affect any safety-related equipment.

H.3.5.21 Unit 2 [redacted] - Fire Zone 5C4

Description

[redacted]

Safety-Related Equipment

This zone does not contain any safety-related equipment.

Protection Criteria and Measures

Automatic fire protection equipment is provided in this zone for the unlikely event of a rupture of a guarded turbine oil line. Backup manual protection is provided.

Combustible Materials

See the combustible loading Table H.3-2.

Fire Loading

See the combustible loading Table H.3-2.

Extinguishing and Detecting Capabilities

The credited manual fire fighting equipment is shown in Table H.3-2.

Design-Basis Fire

See Subsection H.3.5.20.

H.3.5.22 Unit 1, Number 2 [redacted] - Fire Zone 5C5

Description

[redacted]

[redacted]

[redacted]

[redacted]

[redacted]

Safety-Related Equipment

This zone does not contain any safety-related equipment.

Protection Criteria and Measures

Due to the low combustible loading and lack of safety-related equipment, only manual fire protection equipment and floor drains are provided.

Combustible Materials

See the combustible loading Table H.3-2.

Fire Loading

See the combustible loading Table H.3-2.

Extinguishing and Detecting Capabilities

The credited manual fire fighting equipment is shown in Table H.3-2.

Design-Basis Fire

This zone does not normally contain combustibles. Postulated fires would be contained in this zone and have no effect on safety-related equipment.

H.3.5.23 Unit 1, [redacted] - Fire Zone 5C6

Description

[redacted]

Safety-Related Equipment

This zone does not contain any safety-related equipment.

Protection Criteria and Measures

Due to the lack of safety-related equipment, only manual fire fighting equipment and floor drains are provided.

Combustible Materials

See the combustible loading Table H.3-2.

Fire Loading

See the combustible loading Table H.3-2.

Extinguishing and Detecting Capabilities

The credited manual fire fighting equipment is shown in Table H.3-2.

Design-Basis Fire

This zone does not normally contain combustibles. Postulated fires would be contained in this zone and have no effect on safety-related equipment.

H.3.5.24 Unit 2, [redacted] - Fire Zone 5C7

Description

[redacted]

Safety-Related Equipment

This zone does not contain any safety-related equipment

Protection Criteria and Measures

Due to the lack of safety-related equipment, only manual fire fighting equipment and floor drains are provided.

Combustible Materials

See the combustible loading Table H.3-2.

Fire Loading

See the combustible loading Table H.3-2.

Extinguishing and Detecting Capabilities

The credited manual fire fighting equipment is shown in Table H.3-2.

Design-Basis Fire

See Subsection H.3.5.23.

H.3.5.25 Unit 2 [redacted] - Fire Zone 5C8

Description

[redacted]

Safety-Related Equipment

This zone does not contain any safety-related equipment.

Protection Criteria and Measures

Due to the low combustible loading and lack of safety-related equipment, only manual fire protection equipment and floor drains are provided.

Combustible Materials

See the combustible loading Table H.3-2.

Fire Loading

See the combustible loading Table H.3-2.

Extinguishing and Detecting Capabilities

The credited manual fire fighting equipment is shown in Table H.3-2.

Design-Basis Fire

See Subsection H.3.5.22.

H.3.5.26 Unit 1 [redacted] - Fire Zone 5C9

Description

[redacted]

[redacted]

Safety-Related Equipment

This zone does not contain any safety-related equipment.

Protection Criteria and Measures

Due to the low fire loading and the lack of safety-related equipment, only manual fire fighting equipment and floor drains are provided.

Combustible Materials

See the combustible loading Table H.3-2.

Fire Loading

See the combustible loading Table H.3-2.

Extinguishing and Detecting Capabilities

The credited manual fire fighting equipment is shown in Table H.3-2.

Design-Basis Fire

This zone does not normally contain combustibles. Postulated fires would be contained in this zone and have no effect on safety-related equipment.

H.3.5.27 Unit 2 [redacted] - Fire Zone 5C10

Description

[redacted]

Safety-Related Equipment

This zone does not contain any safety-related equipment

Protection Criteria and Measures

Due to the low fire loading and the lack of safety-related equipment, only manual fire fighting equipment and floor drains are provided.

Combustible Materials

See the combustible loading Table H.3-2.

Fire Loading

See the combustible loading Table H.3-2.

Extinguishing and Detecting Capabilities

The credited manual fire fighting equipment is shown in Table H.3-2.

Design-Basis Fire

See Subsection H.3.5.26.

H.3.5.28 [redacted] - Fire Zone Zone 5C11

Description

[redacted]

[redacted]

[redacted]

[redacted]

[redacted]

[redacted]

[redacted]

[redacted]

[redacted]

[redacted]

[redacted]

[redacted]

[redacted]

[redacted]

[redacted]

[redacted]

Safety-Related Equipment

This zone contains a 125-V battery and its cables for Unit 2 ESF Division-1. Power and instrumentation cables for the ESF Division 1 and 2 diesel generators are located in the two large corridor adjacent to the diesel generator building.

Protection Criteria and Measures

Automatic ionization detectors are provided in regions of high cable concentration and where divisional cables approach each other. Physical separation is utilized between cables of different divisions. Manual fire protection equipment is provided.

In Zone 5C11, the cable tray crossing the corridor between the Division 2 standby diesel-generator room (fire zone 7B2) and the Division 2 ESF switchgear room (fire zone 4E3) is protected by a one-hour fire wrap and an automatic preaction fire suppression system has been installed above the divisional cable trays in this corridor. This zone contains hydrogen piping for the Unit 1 and Unit 2 Hydrogen Water Chemistry (HWC) Systems. These lines are protected against unmitigated leakage by an excess flow check valve installed at the hydrogen storage site. A single combustible gas detector is installed for each unit below the 735'-0" slab to identify small leaks from the hydrogen isolation valves and purge connections. These monitors are interlocked with the Hydrogen Isolation Panel 1(2)P73-P400 and the Hydrogen Injection Module 1(2)P73-P100 to isolate the respective unit's hydrogen gas supply line to minimize the potential hydrogen gas loss inside the Turbine Building. Alarms are also provided to the HWC Control Panel 1(2)P73-P500 and the Control Room Panel 1(2)N62-P600 annunciators whose setpoints are less than or equal to 25% and 50% of the hydrogen lower explosive limit in air (4% hydrogen).

Combustible Materials

See the combustible loading Table H.3-2.

Fire Loading

See the combustible loading Table H.3-2.

Extinguishing and Detecting Capabilities

Automatic ionization detectors which sound an alarm locally and in the control room are provided in regions of high cable concentration. The 125V Battery Room contains a photo-electric detector common to the Unit 2, Division 1 Switchgear Room Detection Zone which alarms locally and in the control room upon actuation. Both the Unit 1 and Unit 2 diesel generator corridors contain a preaction suppression system.

The credited manual fire fighting equipment is shown in Table H.3-2.

Design-Basis Fire

The design-basis fire would be contained within this zone due to the low loading. The fire could destroy the Unit 2 ESF-1 125-V battery and its associated cables. Such a fire would not affect the Unit 1 ESF-1 125-Vdc battery which is a secondary power source for the Unit 2 ESF-1 125-Vdc loads. Due to the physical separation and lack of continuity of combustible, the fire could only affect cables of one division.

H.3.5.29 Unit 1 [redacted] - Fire Zone 5D1 [redacted]

Description

[redacted]

Safety-Related Equipment

This zone contains the switchgear, motor-control center, 125-V battery and d-c power supply for Unit 1 ESF Division-3 (HPCS), and some ESF Division-3 cables.

Protection Criteria and Measures

Automatic fire detection and manual fire protection equipment are provided.

Combustible Materials

See the combustible loading Table H.3-2.

Fire Loading

See the combustible loading Table H.3-2.

Extinguishing and Detecting Capabilities

Ionization detectors are provided to sound an alarm locally and in the control room. The battery room contains a photo-electric detector common to the zone. The credited manual fire fighting equipment is shown in Table H.3-2.

Design-Basis Fire

The design-basis fire would be contained within this zone; however, it is assumed to render the HPCS system inoperative. The ionization or photo-electric detectors would actuate at the inception of a fire, alerting personnel to the fire.

H.3.5.30 Unit 2 [redacted] - Fire Zone 5D2

Description

[redacted]

Safety-Related Equipment

This zone contains the switchgear, motor-control center, 125-V battery and d-c power supply for Unit 1 ESF Division-3 (HPCS), and some ESF Division-3 cables.

Protection Criteria and Measures

Automatic fire detection and manual fire protection equipment are provided.

Combustible Materials

See the combustible loading Table H.3-2.

Fire Loading

See the combustible loading Table H.3-2.

Extinguishing and Detecting Capabilities

The credited manual fire fighting equipment is shown in Table H.3-2.

Design-Basis Fire

See Subsection H.3.5.29.

H.3.5.31 [redacted] - Fire Zone 5D3 [redacted]

Description

[redacted]

Safety-Related Equipment

This zone does not contain any safety-related equipment.

Protection Criteria and Measures

Due to the lack of safety-related equipment, only manual fire protection equipment is provided.

This zone contains 1" hydrogen piping for the Unit 1 Hydrogen Water Chemistry (HWC) System. This line is protected against unmitigated leakage by an excess flow check valve installed at the hydrogen storage site. No combustible gas detectors are installed in this zone due to the absence of any valves or non-welded connections

Combustible Materials

See the combustible loading Table H.3-2.

Fire Loading

See the combustible loading Table H.3-2.

Extinguishing and Detecting Capabilities

The credited manual fire fighting equipment is shown in Table H.3-2.

Design-Basis Fire

A fire in this zone would be contained within the zone and not affect any safety-related equipment. A fire could possibly spread through the open stairway to the zone below, however, a sprinkler system is provided in the zone below to extinguish any fires.

H.3.5.32 [redacted] - Fire Zone 5D4 [redacted]

Description

[redacted]

Safety-Related Equipment

This zone does not contain any safety-related equipment.

Protection Criteria and Measures

Due to the low fire loading and the lack of safety-related equipment, only manual fire protection equipment is provided.

This zone contains 1" hydrogen piping for the Unit 2 Hydrogen Water Chemistry (HWC) System. This line is protected against unmitigated leakage by an excess flow check valve installed at the hydrogen storage site. No combustible gas detectors are installed in this zone due to the absence of any valves or non-welded connections.

Combustible Materials

See the combustible loading Table H.3-2.

Fire Loading

See the combustible loading Table H.3-2.

Extinguishing and Detecting Capabilities

The credited manual fire fighting equipment is shown in Table H.3-2.

Design-Basis Fire

A fire in this zone would be contained within the zone and not affect any safety-related equipment. A fire could possibly spread through the open stairway to the zone below, however, a sprinkler system is provided in the zone below to extinguish any fires.

H.3.5.33 [redacted] - Fire Zone 5D5

Description

[redacted]

[redacted]

Safety-Related Equipment

This zone contains 4 safety-related Reactor Building differential pressure indicators 1(2)PDS-VR049A&B. However, these VR System components are not credited for safe shutdown during any fire. This zone contains two Division 3 safety related cables.

Protection Criteria and Measures

Due to the low fire loading and minimal safety-related equipment, only manual fire protection equipment and floor drains are provided.

Combustible Materials

See the combustible loading Table H.3-2.

Fire Loading

See the combustible loading Table H.3-2.

Extinguishing and Detecting Capabilities

The credited manual fire fighting equipment is shown in Table H.3-2. Included in this zone at the South East Corner is the HRSS HVAC Filter Train Deluge System. [redacted] high temperature alarm is received locally and in the control room. The HVAC train is located in a separate room, isolated from the rest of the zone.

Design-Basis Fire

The design-basis fire would be contained within the zone and have no effect on safety-related equipment.

H.3.5.34 [redacted] - Fire Zone 5D6 [redacted]

Description

[redacted]

Safety-Related Equipment

This zone does not contain any safety-related equipment.

Protection Criteria and Measures

Automatic sprinkler protection is provided. Floor drains are provided to remove oil spills. Backup manual fire fighting equipment is also provided.

Combustible Materials

See the combustible loading Table H.3-2.

Fire Loading

See the combustible loading Table H.3-2.

Extinguishing and Detecting Capabilities

An automatic sprinkler system designed with a density of 0.3 gpm/ft^2 over the entire zone is provided. Actuation of the sprinkler system sounds an alarm locally and in the control room. The credited manual fire fighting equipment is shown in Table H.3-2.

Design-Basis Fire

For the design-basis fire to occur there must be a rupture in both oil tanks; this is highly unlikely. The design-basis fire could be of such energy as not to be contained within these 3-hour rated walls. To prevent this floor drains are provided to remove any oil leakage and automatic sprinkler protection is provided to extinguish any fires. A fire in this zone would not affect any safety-related equipment.

H.3.5.35 Unit 1 [redacted] - Fire Zone 5E1 [redacted]

Description

[redacted]

[redacted]

[redacted]

[redacted]

[redacted]

[redacted]

Safety-Related Equipment

This zone does not contain any safety-related equipment.

Protection Criteria and Measures

Automatic sprinkler protection is provided for all four condensate pump cubicles and for the service aisle. Manual fire protection equipment is also provided. Fire walls are utilized to prevent the spread of fire. Floor drains and a sump are provided to collect any oil leakage.

This zone contains 1" hydrogen piping for the Unit 1 Hydrogen Water Chemistry (HWC) System. This line is protected against unmitigated leakage by an excess flow check valve installed at the hydrogen storage site. A single combustible gas detector is installed in the "B" Condensate/Condensate Booster Pump Room below the 687'-0" slab to identify small leaks from the hydrogen isolation valves, purge connection or injection equipment. This monitor is interlocked with the Hydrogen Isolation Panel 1P73-P400 and the Hydrogen Flow Control Module 1P73-P100 to isolate the hydrogen gas supply line to minimize the potential hydrogen gas loss inside the Turbine Building. Alarms are also provided to the HWC Control Panel 1P73-P500 and the Control Room Panel 1N62-P600 annunciators whose setpoints are less than or equal to 25% and 50% of the hydrogen lower explosive limit in air (4% hydrogen).

Combustible Materials

See the combustible loading Table H.3-2.

Fire Loading

See the combustible loading Table H.3-2.

Extinguishing and Detecting Capabilities

Automatic sprinkler protection with a density of 0.3 gpm/ft^2 is provided for the condensate booster pump cubicles and for the service aisle. Actuation of any sprinkler would sound an alarm locally and in the control room. The credited manual fire fighting equipment is shown in Table H.3-2.

Design-Basis Fire

A design-basis fire could possibly spread to adjacent zones; however, sprinkler protection is provided to prevent this from happening.

This zone contains the turbine building fire sump and oil separator. A large oil line rupture elsewhere in the turbine building could possibly cause the sump and separator to overflow. Automatic sprinkler protection is provided to protect against an oil fire within this zone.

H.3.5.36 Unit 2, [redacted] - Fire Zone 5E2

Description

[redacted]

Safety-Related Equipment

This zone does not contain any safety-related equipment.

Protection Criteria and Measures

Automatic sprinkler protection is provided for all four condensate pump cubicles and for the service aisle. Manual fire protection equipment is also provided. Fire walls are utilized to prevent the spread of fire. Floor drains and a sump are provided to collect any oil leakage. This zone contains 1" hydrogen piping for the Unit 2 Hydrogen Water Chemistry (HWC) System. This line is protected against unmitigated leakage by an excess flow check valve installed at the hydrogen storage site. A single combustible gas detector is installed in the "C" Condensate/Condensate Booster Pump Room below the 687'-0" slab to identify small leaks from the hydrogen isolation valves, purge connection or injection equipment. This monitor is interlocked with the Hydrogen

Isolation Panel 2P73-P400 and the Hydrogen Flow Control Module 2P73-P100 to isolate the hydrogen gas supply line to minimize the potential hydrogen gas loss inside the Turbine Building. Alarms are also provided to the HWC Control Panel 2P73-P500 and the Control Room Panel 2N62-P600 annunciators whose setpoints are less than or equal to 25% and 50% of the hydrogen lower explosive limit in air (4% hydrogen).

Combustible Materials

See the combustible loading Table H.3-2.

Fire Loading

See the combustible loading Table H.3-2.

Extinguishing and Detecting Capabilities

The credited manual fire fighting equipment is shown in Table H.3-2.

Design-Basis Fire

See Subsection H.3.5.35.

H.3.6 Fire Area 6: Radwaste Building Fire – Units 1 and 2

The radwaste building is common to Units 1 and 2. It has been divided into seven zones for the purpose of the fire hazards analysis. These zones are listed in Table H.2-1 and shown in Figure H.2-1. Each zone is discussed below. Table H.3-1 lists all safety-related and radioactive equipment within each zone, and Table H.3-2 summarizes the combustible hazards and fire fighting capabilities present.

H.3.6.1 [redacted] - Fire Zone 6A [redacted]

Description

[redacted]

[redacted]

Safety-Related Equipment

This zone does not contain any safety-related equipment.

Protection Criteria and Measures

Only manual fire protection equipment is provided.

Combustible Materials

See the combustible loading Table H.3-2.

Fire Loading

See the combustible loading Table H.3-2.

Extinguishing and Detecting Capabilities

The credited manual fire fighting equipment is shown in Table H.3-2.

Design-Basis Fire

The design-basis fire would be contained within this zone and would not affect any safety-related equipment.

H.3.6.2 [redacted] - Fire Zone 6B1 [redacted]

Description

[redacted]

[redacted]

Safety-Related Equipment

This zone does not contain any safety-related equipment.

Protection Criteria and Measures

Automatic fire detection with alarms locally and in the main control room and manual fire protection equipment are provided.

Combustible Materials

See the combustible loading Table H.3-2.

Fire Loading

See the combustible loading Table H.3-2.

Extinguishing and Detecting Capabilities

Ionization detectors are provided to sound an alarm locally and in the main control room. The credited manual fire fighting equipment is shown in Table H.3-2.

Design-Basis Fire

The design-basis fire would not affect safety-related equipment.

H.3.6.3 [redacted] - Fire Zone 6B2 [redacted]

Description

[redacted]

Safety-Related Equipment

This zone does not contain any safety-related equipment.

Protection Criteria and Measures

Automatic sprinkler protection is provided for the bale storage area and the truck bay area. Backup manual fire protection equipment is also provided. Automatic fire detection is provided in the north intermediate storage area utilizing a smoke detector over the cubicle area.

Combustible Materials

See the combustible loading Table H.3-2.

Fire Loading

See the combustible loading Table H.3-2.

Extinguishing and Detecting Capabilities

An automatic sprinkler system which alarms locally and in the control room upon actuation is provided. The credited manual fire fighting equipment is shown in Table H.3-2.

Design-Basis Fire

The design-basis fire would not affect any safety-related equipment.

Planned Modifications

The addition of automatic fire detection is planned for partial modification M-1-0-88-014-12.

H.3.6.4 [redacted] - Fire Zone 6B3

Description

[redacted]

[redacted]

[redacted]

Safety-Related Equipment

This zone does not contain any safety-related equipment.

Protection Criteria and Measures

There is no fire detection or fire protection equipment located in this fire zone due to the absence of combustible material and lack of safety-related equipment. Floor drains are provided and manual fire fighting equipment is available from an adjacent fire zone.

Combustible Materials

See the combustible loading Table H.3-2.

Fire Loading

See the combustible loading Table H.3-2.

Extinguishing and Detecting Capabilities

There is no fire detection or fire protection equipment located in this Fire Zone. Equipment is available though from adjacent zones.

Design-Basis Fire

There is normally no combustible material in this zone to burn.

H.3.6.5 [redacted] - Fire Zone 6C

Description

[redacted]

[redacted]

[redacted]

[redacted]

[redacted]

[redacted]

[redacted]

[redacted]

[redacted]

[redacted]

Safety-Related Equipment

See Subsection H.3.6.4.

Protection Criteria and Measures

See Subsection H.3.6.4.

Combustible Materials

See the combustible loading Table H.3-2.

Fire Loading

See the combustible loading Table H.3-2.

Extinguishing and Detecting Capabilities

There is no fire detection or fire protection equipment located in this Fire Zone. Equipment is available though from adjacent zones.

Design-Basis Fire

See Subsection H.3.6.4.

H.3.6.6 [redacted] - Fire Zone 6D

Description

[redacted]

[redacted]

Safety-Related Equipment

This zone does not contain any safety-related equipment.

Protection Criteria and Measures

Because of the low combustible loading and lack of safety-related equipment, fire protection is not provided for the structural steel, and only manual fire protection equipment and floor drains are provided. Ionization detectors are provided for this zone. Upon actuation, local and control room alarms are received.

This zone contains 1" hydrogen piping for the Unit 1 and Unit 2 Hydrogen Water Chemistry (HWC) Systems. These lines are protected against unmitigated leakage by an excess flow check valve installed at the hydrogen storage site. Two combustible gas detectors are mounted to each Hydrogen Flow Control Module 1(2)P73-P100 to identify small leaks from the panel mounted hydrogen valves and equipment. These monitors are interlocked with the respective Hydrogen Isolation Panel 1(2)P73-P400 and the Hydrogen Flow Control Module 1(2)P73-P100 to isolate the hydrogen gas supply line to minimize the potential hydrogen gas loss inside the Turbine

Building. Alarms are also provided to the HWC Control Panel 1(2)P73-P500 and the Control Room Panel 1(2)N62-P600 annunciators whose setpoints are less than or equal to 25% and 50% of the hydrogen lower explosive limit in air (4% hydrogen). A common vent line is provided from each Hydrogen Flow Control Module 1(2)P73-P100 to permit controlled filling and venting of the hydrogen piping prior to performing maintenance. This vent is routed to the Turbine Building exterior and contains a flame arrestor at its discharge.

Combustible Materials

See the combustible loading Table H.3-2.

Fire Loading

See the combustible loading Table H.3-2.

Extinguishing and Detecting Capabilities

Ionization detectors are provided in cable areas to sound an alarm locally and in the control room. The credited manual fire fighting equipment is shown in Table H.3-2.

Design-Basis Fire

The design-basis fire in this zone would not affect any safety-related equipment.

H.3.6.7 [redacted] - Fire Zone 6E

Description

[redacted]

[redacted]

Safety-Related Equipment

This zone contains safety-related equipment (MSIV equipment for leakage abandoned in this zone}.

Protection Criteria and Measures

Only manual fire protection equipment, fire walls, and floor drains are provided. Ionization detectors are provided in this zone. Upon actuation, local and control room alarms are received.

Combustible Materials

See the combustible loading Table H.3-2.

Fire Loading

See the combustible loading Table H.3-2.

Extinguishing and Detecting Capabilities

The credited manual fire fighting equipment is shown in Table H.3-2. Upon actuation, local and control room alarms are received.

Design-Basis Fire

The design-basis fire would have no effect on safe shutdown equipment.

H.3.7 Fire Area 7: Diesel-Generator Building - Unit 1

The Unit 1 diesel-generator building, fire area 7, has been divided into 15 fire zones. These are listed in Table H.2-1 and shown on Figure H.2-1. Each zone is discussed below. Table H.3-1 lists the safety-related and radioactive equipment

within each zone, and Table H.3-2 summarizes the combustible hazards and fire fighting capabilities present.

H.3.7.1 [redacted] - Fire Zone 7A1

Description

[redacted]

[redacted]

Safety-Related Equipment

This zone contains safety-related ventilation equipment for fire zones 7B1, 7B4, 7C1, 7C4, and various ESF Division 3 cables.

Protection Criteria and Measures

A fire in this area would be small and localized. Ionization detectors and manual fire protection equipment and adequate floor drainage are provided.

Combustible Materials

See the combustible loading Table H.3-2.

Fire Loading

See the combustible loading Table H.3-2.

Extinguishing and Detecting Capabilities

No automatic protection equipment is provided. Ionization detectors are provided to sound an alarm locally and in the control room. The credited manual fire fighting equipment is shown in Table H.3-2.

Design-Basis Fire

The design-basis fire could result in damage to the ventilation system serving the Unit 1 HPCS diesel generator increasing the ambient temperature in the HPCS diesel-generator room during diesel-generator operation. The elevated ambient temperature could have a possible adverse affect on the diesel's instrumentation causing the diesel to malfunction.

H.3.7.2 [redacted] - Fire Zone 7A2

Description

[redacted]

[redacted]

Safety-Related Equipment

This zone contains safety-related ventilation equipment for fire zones 7B2, 7B5, 7C2, 7C5, and various ESF Division 2 cables.

Protection Criteria and Measures

A fire in this area would be small and localized. Ionization detectors and manual fire protection equipment and adequate floor drainage are provided.

Combustible Materials

See the combustible loading Table H.3-2.

Fire Loading

See the combustible loading Table H.3-2.

Extinguishing and Detecting Capabilities

No automatic protection equipment is provided. Ionization detectors are provided to sound an alarm locally and in the control room. There is no manual fire fighting equipment in this fire zone. Equipment is available though from adjacent zones.

Design-Basis Fire

The design-basis fire could result in damage to the ventilation systems serving the Division 2 diesel generator and RHR service water pumps 1C and 1D increasing the ambient temperature in the Division 2 diesel-generator room during diesel-generator operation. The elevated ambient temperature could have a possible adverse affect on the diesel's instrumentation causing the diesel to malfunction.

H.3.7.3 [redacted] - Fire Zone 7A3

Description

[redacted]

[redacted]

Safety-Related Equipment

This zone contains safety-related ventilation equipment for fire zones 7B3, 7B6, 7C3, 7C6, and various ESF Division-1 cables.

Protection Criteria and Measures

A fire in this area would be small and localized. Ionization detectors and manual fire protection equipment and adequate floor drainage are provided.

Combustible Materials

See the combustible loading Table H.3-2.

Fire Loading

See the combustible loading Table H.3-2.

Extinguishing and Detecting Capabilities

No automatic protection equipment is provided. Ionization detectors are provided to sound an alarm locally and in the control room. The credited manual fire fighting equipment is shown in Table H.3-2.

Design-Basis Fire

The design-basis fire could result in damage to the ventilation systems serving the Division 1 diesel generator and RHR service water pumps 1A and 1B increasing the ambient temperature in the Division 1 diesel-generator room during diesel-generator operation. The elevated ambient temperature could have a possible adverse effect on the diesel's instrumentation causing the diesel to malfunction.

H.3.7.4 [redacted] - Fire Zone 7B1

Description

[redacted]

[redacted]

[redacted]

[redacted]

[redacted]

Safety-Related Equipment

This zone contains the HPCS diesel generator and the control, instrumentation, and power cabling necessary for its operation. The HPCS diesel generator provides standby power to the HPCS pump in case of a loss of offsite power.

Protection Criteria and Measures

Automatic fire detection and protection are provided to prevent a serious fire from occurring. Fire walls are used to prevent any fires from spreading. Drains are provided to prevent oil from accumulating. Spill curbs are located at each fire door to prevent oil from spreading past the zone.

Combustible Materials

See the combustible loading Table H.3-2.

Fire Loading

See the combustible loading Table H.3-2.

Extinguishing and Detecting Capabilities

Automatic CO_2 flooding protection is provided for this zone. An actuation signal from a high temperature detector sounds an alarm locally and in the control room, shuts off the supply and return fans, and actuates the CO_2 flooding system. The CO_2 flooding system can also be manually actuated locally (either electrically or mechanically).

In addition, the following damper openings to the room will close via electro-thermal link operation (thus isolating the room, providing a fire barrier and preventing the escape of CO_2 from the room, i.e. ensuring the proper concentration of CO_2 is maintained for extinguishing the fire).

a. To the day tank room

b. To the fuel storage tank room.

c. To the ventilation room supply air.

d. To the ventilation room return air.

The electro-thermal links operate off of either local temperature or an actuation signal from the local fire protection panel. Upon system reset, the dampers must be manually opened and new links installed. The credited manual fire fighting equipment is shown in Table H.3-2.

Design-Basis Fire

The design-basis fire could result in damage to the HPCS diesel generator removing Unit 1 standby capability for HPCS pump operation on loss of offsite power.

H.3.7.5 [redacted] - Fire Zone 7B2

Description

[redacted]

[redacted]

[redacted]

[redacted]

[redacted]

[redacted]

[redacted]

[redacted]

[redacted]

Safety-Related Equipment

This zone contains the Division 2 standby diesel generator and the control, instrumentation, and power cabling necessary for its operation. This diesel provides standby power for Unit 1 ESF-2.

Protection Criteria and Measures

Automatic fire detection and protection are provided to prevent a serious fire from occurring. Fire walls are used to prevent any fires from spreading. Drains are provided to prevent oil from accumulating. Spill curbs are located at each fire door to prevent oil from spreading past the door.

Combustible Materials

See the combustible loading Table H.3-2.

Fire Loading

See the combustible loading Table H.3-2.

Extinguishing and Detecting Capabilities

Automatic CO_2 flooding protection is provided for this zone. An actuation signal from a high temperature detector sounds and alarms locally and in the control room, shuts off the supply, and return fans, and activates the CO_2 flooding system. The CO_2 flooding system can also be manually actuated locally, either electrically or mechanically.

In addition, the following damper openings to the room will close via electro-thermal link operation (thus isolating the room, providing a fire barrier and preventing the escape of CO_2 from the room, i.e. ensuring the proper concentration of CO_2 is maintained for extinguishing the fire).

a. To the day tank room

b. To the fuel storage tank room.

c. To the ventilation room supply air.

d. To the ventilation room return air.

The electro-thermal links operate off of either local temperature or an actuation signal from the local fire protection panel. Upon system reset, the dampers must be manually opened and new links installed. The credited manual fire fighting equipment is shown in Table H.3-2.

Design-Basis Fire

The design-basis fire could result in damage to the Division 2 standby diesel generator removing one of four possible power sources for Unit 1 ESF-2.

H.3.7.6 [redacted] - Fire Zone 7B3

Description

[redacted]

[redacted]

Safety-Related Equipment

This zone contains the Division 1 standby diesel generator, common to both Units 1 and 2, and the control, instrumentation, and power cabling necessary for its operation. This diesel provides standby power for Unit 1 ESF-1 and Unit 2 ESF-1.

Protection Criteria and Measures

Automatic fire detection and protection are provided to prevent a serious fire from occurring. Fire walls are used to prevent any fires from spreading. Drains are provided to prevent oil from accumulating. Spill curbs are located at each fire door to prevent oil from spreading past the zone.

Combustible Materials

See the combustible loading Table H.3-2.

Fire Loading

See the combustible loading Table H.3-2.

Extinguishing and Detecting Capabilities

Automatic CO_2 flooding protection is provided for this zone. An actuation of the CO_2 flooding system from a high temperature detector sounds an alarm locally and in the control room, and shuts off the supply and return fans. The CO_2 flooding system can also be manually actuated locally either electrically or manually.

In addition, the following damper openings to the room will close via electro-thermal link operation (thus isolating the room, providing a fire barrier and preventing the escape of CO_2 from the room, i.e. ensuring the proper concentration of CO_2 is maintained for extinguishing the fire).

a. To the day tank room

b. To the fuel storage tank room.

c. To the ventilation room supply air.

d. To the ventilation room return air.

The electro-thermal links operate off of either local temperature or an actuation signal from the local fire protection panel. Upon system reset, the dampers must be manually opened and new links installed. The credited manual fire fighting equipment is shown in Table H.3-2.

Design-Basis Fire

The design-basis fire could result in damage to the Division 1 standby diesel generator, removing one of five possible power sources to Unit 1 ESF-1 and Unit 2 ESF-1.

H.3.7.7 [redacted] - Fire Zone 7B4

Description

[redacted]

[redacted]

Safety-Related Equipment

This zone contains the day tank for the HPCS diesel generator. The day tank supplies fuel to the HPCS diesel generator which supplies standby power to the HPCS pump in case of a loss of offsite power.

Protection Criteria and Measures

Automatic sprinkler protection with water flow alarm is provided to prevent the occurrence of a serious fire. Fire walls are used to limit the spread of fire to other areas. Floor drains are provided to prevent oil from accumulating, and curbing is provided to prevent oil from escaping in the event of a tank or line rupture.

Combustible Materials

See the combustible loading Table H.3-2.

Fire Loading

See the combustible loading Table H.3-2.

Extinguishing and Detecting Capabilities

An ordinary hazard automatic sprinkler system is provided for this zone. Actuation of the sprinkler system via a nozzle opening due to high temperature creates a flow which sounds an alarm locally and in the control room. The credited manual fire fighting equipment is shown in Table H.3-2.

Design-Basis Fire

For a fire to occur in this room there must be a leak or rupture in this Section III seismically supported oil tank and piping. This is extremely unlikely. Sprinkler protection is provided to prevent a fire in this zone from spreading to adjacent zones. A fire could render the HPCS diesel inoperable removing Unit 1 standby capacity for the HPCS pump in case of loss of offsite power.

H.3.7.8 [redacted] - Fire Zone 7B5

Description

[redacted]

Safety-Related Equipment

This zone contains the day tank for the Division 2 standby diesel generator. The day tank supplies fuel to the Division 2 diesel generator which supplies standby power to Unit 1 ESF-2.

Protection Criteria and Measures

Automatic sprinkler protection with water flow alarms is provided to prevent a serious fire from occurring. Firewalls are used to limit the spread of fire to other areas. Floor drains are provided to prevent oil from accumulating, and curbing is provided to prevent oil from escaping in the event of a tank or line failure.

Combustible Materials

See the combustible loading Table H.3-2.

Fire Loading

See the combustible loading Table H.3-2.

Extinguishing and Detecting Capabilities

An ordinary hazard automatic sprinkler system is provided for this zone. Actuation of the sprinkler via a nozzle opening system due to high temperature creates a flow which sounds an alarm locally and in the control room. The credited manual fire fighting equipment is shown in Table H.3-2.

Design-Basis Fire

For a fire to occur in this room there must be a leak or rupture in this Section III seismically supported oil tank and piping. This is extremely unlikely. Sprinkler protection is provided to prevent a fire in this zone from spreading to adjacent zones. A fire could render the Division 2 standby diesel inoperative, removing one of four possible power sources for Unit 1 ESF-2.

H.3.7.9 [redacted] - Fire Zone 7B6

Description

[redacted]

[redacted]

Safety-Related Equipment

This zone contains the day tank for the Division 1 standby diesel generator. The day tank supplies fuel to the Division 1 diesel generator which supplies standby power to Unit 1 ESF-1 and Unit 2 ESF-1.

Protection Criteria and Measures

Automatic sprinkler protection with water flow alarms is provided to prevent a serious fire from occurring. Firewalls are used to limit the spread of fire to other areas. Floor drains are provided to prevent the accumulation of oil, and curbing is provided to prevent oil from escaping in the event of a tank or line failure.

Combustible Materials

See the combustible loading Table H.3-2.

Fire Loading

See the combustible loading Table H.3-2.

Extinguishing and Detecting Capabilities

An ordinary hazard sprinkler system is provided for this zone. Actuation of the sprinkler system via a nozzle opening due to high temperature creates a flow which sounds an alarm locally and in the control room. The credited manual fire fighting equipment is shown in Table H.3-2.

Design-Basis Fire

For a fire to occur in this room there must be a leak or rupture in this Section III seismically supported oil tank and piping. This is extremely unlikely. Sprinkler protection is provided to prevent a fire in this zone from spreading to adjacent zones.

A fire could render the Division 1 standby diesel inoperative removing one of four possible power sources for Unit 1 ESF-1 and Unit 2 ESF-1.

H.3.7.10 [redacted] - Fire Zone 7C1

Description

[redacted] e exhaust fan is manually operated by a remote individual control switch.

Safety-Related Equipment

This zone contains the diesel fuel storage tank for the HPCS diesel generator which is used for standby power to the HPCS pump in case of a loss of offsite power.

Protection Criteria and Measures

Automatic sprinkler protection with water flow alarm is provided to prevent a serious fire from occurring. Curbing is used to contain oil from a tank leak or rupture and two sump pumps are provided. The sump pumps discharge to an outside oil separator. Fire walls are used to limit the spread of fire to other areas.

Combustible Materials

See the combustible loading Table H.3-2.

Fire Loading

See the combustible loading Table H.3-2.

Extinguishing and Detecting Capabilities

An extra hazard sprinkler system is provided for this zone. Actuation of the sprinkler system via a nozzle opening due to high temperature creates a flow which sounds an alarm locally and in the control room. The credited manual fire fighting equipment is shown in Table H.3-2.

Design-Basis Fire

For a fire to occur in this zone there must be a leak or rupture in this Section III seismically supported oil tank and piping. This is extremely unlikely. Sprinkler protection is provided to prevent a fire in this zone from spreading to adjacent zones.

H.3.7.11 [redacted] - Fire Zone 7C2

Description

[redacted]

[redacted]

Safety-Related Equipment

This zone contains the diesel fuel storage tank for the Division 2 standby diesel generator which is used as a source of standby power to ESF-2.

Protection Criteria and Measures

Automatic sprinkler protection with water flow alarm is provided to prevent a serious fire from occurring. Curbing is used to contain oil from a tank leak or rupture and two sump pumps are provided. The sump pumps discharge to an outside oil separator. Fire walls are used to limit the spread of fire to other areas.

Combustible Materials

See the combustible loading Table H.3-2.

Fire Loading

See the combustible loading Table H.3-2.

Extinguishing and Detecting Capabilities

An extra hazard sprinkler system is provided for this zone. Actuation of the sprinkler system via a nozzle opening due to high temperature creates a flow which sounds an alarm locally and in the control room. The credited manual fire fighting equipment is shown in Table H.3-2.

Design-Basis Fire

For a fire to occur in this zone there must be a leak or rupture in this Section III seismically supported oil tank and piping. This is extremely unlikely. Sprinkler protection is provided to prevent a fire in this zone from spreading to adjacent zones.

H.3.7.12 [redacted] - Fire Zone 7C3

Description

[redacted]

Safety-Related Equipment

This zone contains the diesel fuel storage tank for the Division 1 standby diesel generator which is used as a source of standby power to ESF-1.

Protection Criteria and Measures

Automatic sprinkler protection with water flow alarm is provided to prevent a serious fire from occurring. Curbing is used to contain oil from a tank leak or

rupture, and two sump pumps are provided. The sump pumps discharge to an outside oil separator. Fire walls are used to limit the spread of fire to other areas.

Combustible Materials

See the combustible loading Table H.3-2.

Fire Loading

See the combustible loading Table H.3-2.

Extinguishing and Detecting Capabilities

An extra hazard sprinkler system is provided for this zone. Actuation of the sprinkler system via a nozzle opening due to high temperature creates a flow which sounds and alarm locally and in the control room. The credited manual fire fighting equipment is shown in Table H.3-2.

Design-Basis Fire

For a fire to occur in this zone there must be a leak or rupture in this Section III seismically supported oil tank and piping. This is extremely unlikely. Sprinkler protection is provided to prevent a fire in this zone from spreading to adjacent zones.

H.3.7.13 [redacted] - Fire Zone 7C4

Description

[redacted]

[redacted]

Safety-Related Equipment

This zone contains the HPCS diesel cooling water pump and strainer without which the HPCS diesel cannot operate.

Protection Criteria and Measures

A fire in this zone would be small and localized. Ionization detectors, which alarm locally and in the control room, manual fire fighting equipment, and adequate floor drainage are provided.

Combustible Materials

See the combustible loading Table H.3-2.

Fire Loading

See the combustible loading Table H.3-2.

Extinguishing and Detecting Capabilities

No automatic protection equipment is required. Ionization detectors are provided to annunciate an alarm locally and in the control room. The credited manual fire fighting equipment is shown in Table H.3-2.

Design-Basis Fire

The design-basis fire could render the HPCS diesel generator inoperative, removing the standby capability for the Unit 1 HPCS pump in case of a loss of offsite power.

H.3.7.14 [redacted] - Fire Zone 7C5

Description

[redacted]

Safety-Related Equipment

This zone contains the Division 2 standby diesel-generator cooling water pump and strainer. Without these the Division 2 standby diesel generator cannot operate. This zone also contains the Division 2 RHR service water pumps and strainer.

Protection Criteria and Measures

A fire in this zone would be small and localized. Ionization detectors which alarm locally and in the control room, manual fire fighting equipment and adequate floor drainage are provided.

Combustible Materials

See the combustible loading Table H.3-2.

Fire Loading

See the combustible loading Table H.3-2.

Extinguishing and Detecting Capabilities

No automatic protection is required. Ionization detectors are provided to annunciate an alarm locally and in the control room. The credited manual fire fighting equipment is shown in Table H.3-2.

Design-Basis Fire

The design-basis fire could render the Division 2 standby diesel generator inoperative removing one of four possible power sources for the Unit 2 ESF-2. The design-basis fire could also render the Division 2 RHR service water pump inoperative, preventing the Division 2 portion of the RHR system from operating in the heat removal mode.

H.3.7.15 [redacted] - Fire Zone 7C6

Description

[redacted]

[redacted]

[redacted]

[redacted]

[redacted]

[redacted]

Safety-Related Equipment

This zone contains the Division 1 standby diesel-generator cooling water pump and strainer. Without these the Division 1 standby diesel generator cannot operate. This zone also contains the Division 1 RHR service water pumps and strainer.

Protection Criteria and Measures

A fire in this zone would be small and localized.
Ionization detectors which alarm locally and in the control room, manual fire fighting equipment and adequate floor drainage are provided.

Combustible Materials

See the combustible loading Table H.3-2.

Fire Loading

See the combustible loading Table H.3-2.

Extinguishing and Detecting Capabilities

No automatic protection is required. Ionization detectors are provided to annunciate an alarm locally and in the control room. The credited manual fire fighting equipment is shown in Table H.3-2.

Design-Basis Fire

The design-basis fire could render the Division 1 standby diesel generator inoperable, removing one of four possible power sources for Unit 1 ESF-1 and Unit 2 ESF-1. The design-basis fire could also render the Division 1 RHR service water pump inoperative, preventing the Division 1 portion of the RHR system from operating in the heat removal mode.

H.3.8 Fire Zone 8: Diesel-Generator Building – Unit 2

The Unit 2 diesel-generator building, fire area 8, has been divided into 11 fire zones. These are listed in Table H.2-1 and shown on Figure H.2-1. Each zone is discussed below. Table H.3-1 lists the safety-related and radioactive equipment in each zone, and Table H.3-2 summarizes the combustible hazards and fire fighting capabilities present.

H.3.8.1 [redacted] - Fire Zone 8A1

Description

[redacted]

[redacted]

[redacted]

Safety-Related Equipment

This zone contains safety-related ventilation equipment for fire zones 8B1, 8B3, 8C1, 8C3, and 8C5, and various ESF Division-3 cables.

Protection Criteria and Measures

A fire in this area would be small and localized. Ionization detectors are provided.

Combustible Materials

See the combustible loading Table H.3-2.

Fire Loading

See the combustible loading Table H.3-2.

Extinguishing and Detecting Capabilities

No automatic protection equipment is provided. Ionization detectors are provided to annunciate an alarm locally and in the control room. The credited manual fire fighting equipment is shown in Table H.3-2.

Design-Basis Fire

The design-basis fire could result in damage to the ventilation systems serving the Unit 2 HPCS diesel-generator increasing the ambient temperature in the HPCS diesel-generator room during diesel-generator operation. The elevated ambient temperature could have a possible adverse affect on the diesel's instrumentation causing the diesel to malfunction.

H.3.8.2 [redacted] - Fire Zone 8A2

Description

[redacted]

[redacted]

[redacted]

[redacted]

[redacted]

[redacted]

[redacted]

[redacted]

[redacted]

Safety-Related Equipment

This zone contains safety-related ventilation equipment for fire zones 8B2, 8B4, 8C2, and 8C4, and various ESF Division-2 cables.

Protection Criteria and Measures

A fire in this area would be small and localized. Therefore, only manual fire protection equipment and adequate floor drainage are provided. Ionization detectors are provided.

Combustible Materials

See the combustible loading Table H.3-2.

Fire Loading

See the combustible loading Table H.3-2.

Extinguishing and Detecting Capabilities

No automatic protection equipment is provided. Ionization detectors are provided to annunciate an alarm locally and in the control room. The credited manual fire fighting equipment is shown in Table H.3-2.

Design-Basis Fire

The design-basis fire could result in damage to the ventilation system serving the Division 2 diesel generator and RHR service water pump increasing the ambient temperature in the Division 2 diesel-generator room during diesel-generator operation. The elevated ambient temperature could have a possible adverse affect on the diesel's instrumentation causing the diesel to malfunction.

H.3.8.3 [redacted] - Fire Zone 8B1

Description

[redacted]

[redacted]

[redacted]

[redacted]

[redacted]

[redacted]

[redacted]

[redacted]

[redacted]

Safety-Related Equipment

This zone contains the HPCS diesel-generator and the control, instrumentation and power cabling necessary for its operation. The HPCS diesel-generator provides standby power to the HPCS pump in case of a loss of offsite power.

Protection Criteria and Measures

Automatic fire detection and protection are provided to prevent a serious fire from occurring. Fire walls are used to prevent any fires from spreading. Drains are provided to prevent oil from accumulating. Spill curbs are located at each fire door to prevent oil from spreading past the zone.

Combustible Materials

See the combustible loading Table H.3-2.

Fire Loading

See the combustible loading Table H.3-2.

Extinguishing and Detecting Capabilities

Automatic CO_2 flooding protection is provided for this zone. An actuation signal from a high temperature detector sounds an alarm locally and in the control room shuts off the supply and return fans, and actuates the CO_2 flooding system. The CO_2 flooding system can also be manually actuated locally either electrically or mechanically.

In addition, the following damper openings to the room will close via electro-thermal link operation (thus isolating the room, providing a fire barrier and preventing the escape of CO_2 from the room, i.e. ensuring the proper concentration of CO_2 is maintained for extinguishing the fire).

a. To the day tank room

b. To the fuel storage tank room.

c. To the ventilation room supply air.

d. To the ventilation room return air.

The electro-thermal links operate off of either local temperature or an actuation signal from the local fire protection panel. Upon system reset, the dampers must be

manually opened and new links installed. The credited manual fire fighting equipment is shown in Table H.3-2.

Design-Basis Fire

The design-basis fire could result in damage to the HPCS diesel-generator removing Unit 2 standby capability for HPCS pump operation on loss of offsite power.

H.3.8.4 [redacted] - Fire Zone 8B2

Description

[redacted]

[redacted]

[redacted]

[redacted]

Safety-Related Equipment

This zone contains the Division 2 standby diesel-generator and the control, instrumentation, and power cabling necessary for its operation. This diesel provides standby power for Unit 2 ESF-2.

Protection Criteria and Measures

Automatic fire detection and protection are provided to prevent a serious fire from occurring. Fire walls are used to prevent any fires from spreading. Drains are provided to prevent oil from accumulating. Spill curbs are located at each fire door to prevent oil from spreading past the zone.

Combustible Materials

See the combustible loading Table H.3-2.

Fire Loading

See the combustible loading Table H.3-2.

Extinguishing and Detecting Capabilities

Automatic CO_2 flooding protection is provided for this zone. An actuation signal from a high temperature detector sounds an alarm locally and in the control room, shuts down the supply and return fans, and activates the CO_2 flooding system. The CO_2 flooding system can also be manually actuated locally either electrically or mechanically.

In addition, the following damper openings to the room will close via electro-thermal link operation (thus isolating the room, providing a fire barrier and preventing the escape of CO_2 from the room, i.e. ensuring the proper concentration of CO_2 is maintained for extinguishing the fire).

a. To the day tank room

b. To the fuel storage tank room.

c. To the ventilation room supply air.

d. To the ventilation room return air.

The electro-thermal links operate off of either local temperature or an actuation signal from the local FP Panel. Upon system reset, the dampers must be manually opened and new links installed.

The credited manual fire fighting equipment is shown in Table H.3-2.

Design-Basis Fire

The design-basis fire could result in damage to the Division 2 standby diesel generator removing one of four possible power sources for Unit 2 ESF-2.

H.3.8.5 [redacted] - Fire Zone 8B3

Description

[redacted]

[redacted]

Safety-Related Equipment

This zone contains the day tank for the HPCS diesel generator. The day tank supplies fuel to the HPCS diesel generator which supplies standby power to the HPCS pump in case of a loss of offsite power.

Protection Criteria and Measures

Automatic sprinkler protection with water flow alarms is provided to prevent the occurrence of a serious fire. Fire walls are used to limit the spread of fire to other areas. Floor drains are provided to prevent oil from accumulating, and curbing is provided to prevent oil from escaping in the event of a tank or line rupture.

Combustible Materials

See the combustible loading Table H.3-2.

Fire Loading

See the combustible loading Table H.3-2.

Extinguishing and Detecting Capabilities

An ordinary hazard sprinkler system is provided for this zone. Actuation of the sprinkler system via a nozzle opening due to high temperature creates a flow which sounds an alarm locally and in the control room. The credited manual fire fighting equipment is shown in Table H.3-2.

Design-Basis Fire

For a fire to occur in this room there must be a leak or rupture in this Section III seismically supported oil tank and piping. This is extremely unlikely. Sprinkler protection is provided to prevent a fire in this zone from spreading to adjacent zones. A fire could render the HPCS diesel inoperable removing Unit 2 standby capacity for the HPCS pump in case of loss of offsite power.

H.3.8.6 [redacted] - Fire Zone 8B4

Description

[redacted]

Safety-Related Equipment

This zone contains the day tank for the Division 2 standby diesel generator. The day tank supplies fuel to the Division 2 diesel generator which supplies standby power to Unit 2 ESF-2.

Protection Criteria and Measures

Automatic sprinkler protection with water flow alarms is provided to prevent a serious fire from occurring. Firewalls are used to limit the spread of fires to other areas. Floor drains are provided to prevent oil from accumulating, and curbing is provided to prevent oil from escaping in the event of a tank or line rupture.

Combustible Materials

See the combustible loading Table H.3-2.

Fire Loading

See the combustible loading Table H.3-2.

Extinguishing and Detecting Capabilities

An ordinary hazard sprinkler system is provided for this zone. Actuation of the sprinkler system via a nozzle opening due to high temperature creates a flow, which sounds an alarm locally and in the control room. The credited manual fire fighting equipment is shown in Table H.3-2.

Design-Basis Fire

For a fire to occur in this room there must be a leak or rupture in this Section III seismically supported oil tank and piping. This is extremely unlikely. Sprinkler protection is provided to prevent a fire in this zone from spreading to adjacent zones. A fire could render the Division 2 standby diesel inoperative removing one of four possible power sources for Unit 2 ESF-2.

H.3.8.7 [redacted] - Fire Zone 8C1

Description

[redacted]

[redacted]

[redacted]

[redacted]

[redacted]

[redacted]

Safety-Related Equipment

This zone contains the diesel fuel storage tank for the HPCS diesel generator which is used for standby power to the HPCS pump in case of a loss of offsite power.

Protection Criteria and Measures

Automatic sprinkler protection with water flow alarms is provided to prevent a serious fire from occurring. Curbing is used to contain oil from a tank leak or rupture and two sump pumps are provided. The sump pumps discharge to an outside oil separator. Fire walls are used to limit the spread of fires to other areas.

Combustible Materials

See the combustible loading Table H.3-2.

Fire Loading

See the combustible loading Table H.3-2.

Extinguishing and Detecting Capabilities

An extra hazard sprinkler system provided for this zone. Actuation of the sprinkler system via a nozzle opening due to high temperature creates a flow which sounds an alarm locally and in the control room. The credited manual fire fighting equipment is shown in Table H.3-2.

Design-Basis Fire

For a fire to occur in this zone, there must be a leak or rupture in this Section III seismically supported oil tank and piping. This is extremely unlikely. Sprinkler protection is provided to prevent a fire in this zone from spreading to adjacent zones.

H.3.8.8 [redacted] - Fire Zone 8C2

Description

[redacted]

[redacted]

[redacted]

Safety-Related Equipment

This zone contains the diesel fuel storage tank for the Division 2 standby diesel generator which is used as a source of standby power to ESF-2.

Protection Criteria and Measures

Automatic sprinkler protection with water flow alarms is provided to prevent a serious fire from occurring. Curbing is used to contain oil from a tank leak or rupture and two sump pumps are provided. The sump pumps discharge to an outside oil seperator. Fire walls are used to limit the spread of fire to other areas.

Combustible Materials

See the combustible loading Table H.3-2.

Fire Loading

See the combustible loading Table H.3-2.

Extinguishing and Detecting Capabilities

An extra hazard sprinkler system is provided for this zone. Actuation of the sprinkler system via a nozzle opening due to high temperature creates a flow which sounds an alarm locally and in the control room. The credited manual fire fighting equipment is shown in Table H.3-2.

Design-Basis Fire

For a fire to occur in this zone there must be a leak or rupture in this Section III seismically supported oil tank and piping. This is extremely unlikely. Sprinkler protection is provided to prevent a fire in this zone from spreading to adjacent zones.

H.3.8.9 [redacted] - Fire Zone 8C3

Description

[redacted]

[redacted]

[redacted]

[redacted]

[redacted]

[redacted]

[redacted]

Safety-Related Equipment

This zone contains the HPCS diesel cooling water pump and strainer without which the HPCS diesel cannot operate.

Protection Criteria and Measures

A fire in this zone would be small and localized. Ionization detectors which alarm locally and in the control room, manual fire fighting equipment and adequate floor drainage are provided.

Combustible Materials

See the combustible loading Table H.3-2.

Fire Loading

See the combustible loading Table H.3-2.

Extinguishing and Detecting Capabilities

No automatic protection equipment is required. Ionization detectors are provided to annunciate an alarm locally and in the control room. The credited manual fire fighting equipment is shown in Table H.3-2.

Design-Basis Fire

The design-basis fire could render the HPCS diesel generator inoperative, removing the standby capability for the Unit 2 HPCS pump in case of a loss of offsite power.

H.3.8.10 [redacted] - Fire Zone 8C4

Description

[redacted]

[redacted]

[redacted]

Safety-Related Equipment

This zone contains the Division 2 standby diesel-generator cooling water pump and strainer. Without these, the Division 2 standby diesel generator cannot operate. This zone also contains the Division 2 RHR service water pumps and strainer.

Protection Criteria and Measures

A fire in this zone would be small and localized. Ionization detectors which alarm locally and in the control room, and manual fire fighting equipment and adequate floor drainage are provided.

Combustible Materials

See the combustible loading Table H.3-2.

Fire Loading

See the combustible loading Table H.3-2.

Extinguishing and Detecting Capabilities

No automatic protection is provided. Ionization detectors are provided to annunciate an alarm locally and in the control room. The credited manual fire fighting equipment is shown in Table H.3-2.

Design-Basis Fire

The design-basis fire could render the Division 2 standby diesel generator inoperative removing one of four possible power sources for Unit 2 ESF-2. The design-basis fire could also render the Division 2 RHR service water pump inoperative, preventing the Division 2 portion of the RHR system from operating in the heat removal mode.

H.3.8.11 [redacted] - Fire Zone 8C5

Description

[redacted]

[redacted]

[redacted]

[redacted]

[redacted]

Safety-Related Equipment

This zone contains the Division 1 RHR service water pumps and strainer, and various ESF Division-1 cables.

Protection Criteria and Measures

A fire in this zone would be small and localized due to the low combustible loading. Ionization detectors which alarm locally and in the control room, and manual fire fighting equipment and adequate floor drainage are provided.

Combustible Materials

See the combustible loading Table H.3-2.

Fire Loading

See the combustible loading Table H.3-2.

Extinguishing and Detecting Capabilities

No automatic protection is provided. Ionization detectors are provided to annunciate an alarm locally and in the control room. The credited manual fire fighting equipment is shown in Table H.3-2.

Design-Basis Fire

The design-basis fire could render the Division 1 RHR service water pump inoperative, preventing the Division 1 portion of the RHR system from operating in the heat removal mode.

H.3.9 Fire Area 9: [redacted]

The north service building (Fire Area 9) is adjacent to the Unit 2 Turbine Building (Fire Area 5). It is separated from fire zones 5B6 and 5C11 by a combination of reinforced concrete and masonry walls with 3 hour rated doors. The barrier has some small, unprotected penetrations that have evaluated. There is no safe shutdown or safety-related cables or components in Fire Area 9. Based on the barrier between Fire Area 5 and 9, the north service building does not pose an exposure to safe shutdown or safety-related cables or components in Fire Area 5. No further analysis is provided. Refer to previous revisions of the UFSAR for additional historical information on Fire Area 9.

H.3.10 Fire Area 10: Off-Gas Building Unit 1 and 2

The off-gas building is common to Units 1 and 2. It has been divided into nine zones for the purpose of the fire hazards analysis. These zones are listed in Table H.2-1 and shown on Figure H.2-1. Each zone is discussed in the following. Table H.3-1 lists the safety-related and radioactive equipment within each zone, and Table H.3-2 summarizes the combustible hazards and fire fighting capabilities present.

H.3.10.1 [redacted] - Fire Zone 10A1 [redacted]

Description

[redacted]

Safety-Related Equipment

This zone contains safety-related cable trays, but only divisional associated cables are contained within the trays.

Protection Criteria and Measures

Only automatic fire detection and manual fire protection equipment is provided.

Combustible Materials

See the combustible loading Table H.3-2.

Fire Loading

See the combustible loading Table H.3-2.

Extinguishing and Detecting Capabilities

The credited manual fire fighting equipment is shown in Table H.3-2. Automatic detection consists of ionization type detectors which alarm locally and in the control room.

Design-Basis Fire

The design-basis fire would be contained within this zone. The safety-related cable tray would be damaged; however, this would not affect the safe shutdown of the plant.

H.3.10.2 [redacted] - Fire Zone 10A2 [redacted]

Description

[redacted]

[redacted]

This zone is not ventilated.

Safety-Related Equipment

This zone does not contain any safety-related equipment.

Protection Criteria and Measures

Only manual fire protection equipment is provided.

Combustible Materials

See the combustible loading Table H.3-2.

Fire Loading

See the combustible loading Table H.3-2.

Extinguishing and Detecting Capabilities

The credited manual fire fighting equipment is shown in Table H.3-2.

Design-Basis Fire

The design-basis fire would be contained within this zone and would not affect any safety-related equipment.

H.3.10.3 [redacted] - Fire Zone 10B1 [redacted]

Description

[redacted]

[redacted]

[redacted]

Safety-Related Equipment

This zone contains safety-related cable trays, but only divisional associated cables are contained within the trays.

Protection Criteria and Measures

Due to the absence of safety-related equipment, only manual fire protection equipment is provided. This zone contains an automatic ionization detection system which alarms locally and in the control room.

Combustible Materials

See the combustible loading Table H.3-2.

Fire Loading

See the combustible loading Table H.3-2.

Extinguishing and Detecting Capabilities

The credited manual fire fighting equipment is shown in Table H.3-2. This zone contains an automatic ionization detection system, which alarms locally and in the control room.

Design-Basis Fire

The design-basis fire would be contained within this zone. The safety-related cable tray would be damaged; however, this would not affect the safe shutdown of the plant.

H.3.10.4 [redacted] - Fire Zone 10B2 [redacted]

Description

[redacted]

[redacted]

[redacted]

Safety-Related Equipment

This zone does not contain any safety-related equipment.

Protection Criteria and Measures

This zone does not normally contain combustibles; therefore, only manual fire protection equipment is provided.

Combustible Materials

See the combustible loading Table H.3-2

Fire Loading

See the combustible loading Table H.3-2.

Extinguishing and Detecting Capabilities

The credited manual fire fighting equipment is shown in Table H.3-2.

Design-Basis Fire

There are normally no combustible materials in this zone to burn.

H.3.10.5 [redacted] - Fire Zone 10B3 [redacted]

Description

[redacted]

[redacted]

Safety-Related Equipment

This zone does not contain any safety-related equipment.

Protection Criteria and Measures

This zone does not normally contain combustibles; therefore, only manual fire protection equipment is provided.

Combustible Materials

See the combustible loading Table H.3-2.

Fire Loading

See the combustible loading Table H.3-2.

Extinguishing and Detecting Capabilities

The credited manual fire fighting equipment is shown in Table H.3-2.

Design-Basis Fire

There are normally no combustible materials in this zone.

H.3.10.6 [redacted] - Fire Zone 10B4 [redacted]

Description

[redacted]

Safety-Related Equipment

This fire zone does not contain any safety related equipment.

Protection Criteria and Measures

This fire zone does not normally contain combustibles, therefore, only manual fire protection equipment is provided.

Combustible Materials

See the combustible loading Table H.3-2.

Fire Loading

See the combustible loading Table H.3-2.

Extinguishing and Detecting Capabilities

The credited manual fire fighting equipment is shown in Table H.3-2.

Design-Basis Fire

See Subsection H.3.10.5.

H.3.10.7 [redacted] - Fire Zone 10C1 [redacted]

Description

[redacted]

[redacted]

[redacted]

Safety-Related Equipment

This zone does not contain any safety-related equipment.

Protection Criteria and Measures

Other than ventilation gaskets and seals this zone does not normally contain combustibles; therefore, only manual fire protection equipment is provided. The charcoal filters are contained within seismically designed pressure vessels that are designed to withstand an internal hydrogen detonation.

Combustible Materials

See the combustible loading Table H.3-2.

Fire Loading

See the combustible loading Table H.3-2.

Extinguishing and Detecting Capabilities

The credited manual fire fighting equipment is shown in Table H.3-2.

Design-Basis Fire

There are normally no combustible materials other than ventilation gaskets and seals in this zone to burn. A fire would be contained within this zone and not affect safety-related equipment.

H.3.10.8 [redacted] - Fire Zone 10C2 [redacted]

Description

[redacted]

Safety-Related Equipment

This fire zone contains no safety related equipment.

Protection Criteria and Measures

Other than the ventilation gaskets and seals this fire zone contains no combustibles, therefore only manual fire protection equipment is provided. The charcoal filters are contained within seismically designed pressure vessels that are designed withstand an internal hydrogen detonation.

Combustible Materials

See the combustible loading Table H.3-2.

Fire Loading

See the combustible loading Table H.3-2.

Extinguishing and Detecting Capabilities

The credited manual fire fighting equipment is shown in Table H.3-2.

Design-Basis Fire

See Subsection H.3.10.7.

H.3.10.9 [redacted] - Fire Zone 10C3 [redacted]

Description

[redacted]

Safety-Related Equipment

This zone contains safety-related cable trays, but only divisional associated cables are contained within the trays.

Protection Criteria and Measures

Because of the low combustible loading and lack of safety-related equipment, only manual fire protection equipment and floor drains are provided.

Combustible Materials

See the combustible loading Table H.3-2.

Fire Loading

See the combustible loading Table H.3-2.

Extinguishing and Detecting Capabilities

The credited manual fire fighting equipment is shown in Table H.3-2.

Design-Basis Fire

The design-basis fire would be contained in this zone. The safety-related cable tray would be damaged; however, this would not affect the safe shutdown of the plant.

H.3.10.10 Fire Area 11: [redacted]

[redacted]

H.4 SAFE SHUTDOWN ANALYSIS

H.4.1 Introduction

H.4.1.1 Purpose

The purpose of this analysis is to demonstrate that for a fire in any single plant fire area/zone of LaSalle County Station at least one method exists to achieve and maintain a safe shutdown condition independent of that fire area/zone. For the purpose of this evaluation, hot and cold shutdown are defined as follows:

a. Hot Shutdown

A plant condition in which the reactor is subcritical, and the primary system temperature is sufficient to allow removal of decay heat by steam generation. This temperature is theoretically greater than 212° F; however, 300° to 350° F is the minimum practical range for this mode.

b. Cold Shutdown

A plant condition in which the reactor is subcritical and decay heat is removed by either the residual heat removal system or by other decay heat systems. The primary system temperature is reduced to below 212° F and the heat sink is a heat exchanger with a secondary coolant loop.

A safe hot shutdown condition is achieved when the following requirements are satisfied:

a. reactivity controlled,

b. decay heat removal established and reactor pressure controlled,

c. reactor coolant inventory makeup provided, and

d. system status monitoring provided.

Once the reactor is placed in a hot shutdown condition, station personnel are able to provide equipment lineups, connections, and/or temporary repairs as needed to achieve and maintain a cold shutdown condition within 72 hours.

H.4.1.2 Analysis Criterion

The criterion used for this safe shutdown analysis was that LaSalle should provide an alternate means, or demonstrate that a means exists, to ensure a safe shutdown capability independent of systems located within or potentially damaged by a fire in any single plant fire zone area.

This analysis shows that LaSalle County Station meets the staff requirements for minimum safe shutdown. This analysis incorporates the information requested by the NRC.

H.4.1.3 Evaluation Method

This evaluation was conducted as follows:

a. In evaluating ways to achieve and maintain a safe shutdown condition, several methods were examined to determine which required a minimum of power operated equipment. These minimum shutdown methods, as they are called in this evaluation, include a primary method that is operable from the control room and a separate alternate method that is operable from the remote shutdown panel. These methods are shown in Table H.4-1. Where local operator action was feasible, credit was taken for manual valve operation, local control of pumps, and visual local monitoring of essential instrumentation. The shutdown path utilizing the high pressure core spray (HPCS) system met the criterion for operation from the control room and is considered the basic method. This method utilizes the reactor protection system for reactivity control, the Division 2 SRV logic and the HPCS for depressurization, reactor water makeup, decay heat removal, and the residual heat removal (RHR) system Loop A for suppression pool cooling. The alternate shutdown method from the remote shutdown panel uses Division 1 SRV logic for depressurization, the reactor core isolation cooling (RCIC) system for reactor water makeup and decay heat removal, and the RHR Loop B for suppression pool cooling. UFSAR sections H.4.2 of this report describes the analysis done on these systems to ensure that hot shutdown can be achieved. For more detailed information on these systems refer to UFSAR sections 5.4 and 6.3. Essential mechanical, ventilation, and electrical components needed for both shutdown methods are listed in Tables H.4-2 through H.4-7 according to the fire zone in which they are physically located. These fire zones have been defined in the previous

sections of this report. Process instrumentation for the safe shutdown systems is identified in Table H.4-106.

b. Valves were evaluated for adverse spurious operation as discussed in section H.4.6. Those valves for which spurious operation was considered a concern and pre fire or post fire action was necessary are identified in Table H.4-111. Valves in safe shutdown systems that were considered for spurious operation are included in the Table H.4-2 and H.4-3. Valves in systems where spurious operation could result in reactor water inventory loss that were reviewed for cable separation are identified in Table H.4-123. Electrical Equipment associated with the valves identified in Table H.4-123 are listed in Table H.4-124.

c. Control room and auxiliary electric equipment room (AEER) ventilation systems are located in the separate units of LaSalle County Station. Therefore, the separation between the redundant trains of these two systems is discussed separately in Subsection H.4.3.

d. Subsection H.4.4 of this report discusses instrumentation used by the operator to monitor reactor, suppression pool and safe shutdown system conditions at both the remote shutdown panel and in the control room. Instrumentation cable are included in the analysis in subsection H.4.2.

e. Subsection H.4.5 discusses one method by which the reactor can be brought from a hot standby to a cold shutdown condition.

f. Further analysis was not done for fire zones that did not contain mechanical or electrical components needed for these two shutdown methods. Both the basic shutdown method and the alternate shutdown method were shown to be independent of these fire zones.

g. A more detailed analysis was performed for fire zones containing active components for both shutdown methods. The fire protection and safe shutdown equipment located in such fire zones were also identified. An acceptable way to achieve and maintain safe shutdown for either reactor unit independent of each fire zone was identified.

H.4.1.4 Safe Shutdown Equipment

a. Tables H.4-2 and H.4-3 list the mechanical equipment affecting safe shutdown and the valve positions for various modes of operation.

b. Table H.4-4 lists the ventilation equipment analyzed in this report which are required for both methods of shutdown. The effect of the loss of the control room and the AEER ventilation systems is discussed in Subsection H.4.3. The systems used to achieve hot shutdown which might be affected by the loss of other ventilation systems due to overheating in the associated fire zones, are listed in Table H.4-5.

c. Tables H.4-6 and H.4-7 list the electrical equipment (analyzed in Subsection H.4.2), separated into basic and alternate shutdown methods to indicate which method they affect. Some electrical equipment, however, affect both methods; the safe shutdown systems affected by such equipment are indicated in the exceptions column of the tables. The reactor cooling benchboard (1H13-P601/2H13-P601) and the auxiliary control panel (1PM01J/2PM01J) affect both modes equally and are listed in both tables. Loss due to fire of the reactor cooling benchboard is not a problem because the remote shutdown panel provides the (alternate) shutdown capability. Loss of auxiliary control panel (1PM01J/2PM01J) is discussed in Subsection H.4.2.38.

H.4.1.5 Basis and Assumptions

The basis for the safe shutdown analysis is that the systems installed to ensure post fire shutdown capability need not be designed to meet Seismic Category I criterion, single failure criterion, or other design basis accident criteria, except where required for other reasons, e.g., because of interface with or impact on existing safety systems, or because of adverse valve actions due to fire damage. The assumptions used are:

a. Complete loss of all safe shutdown cabling and equipment with area/zone in which there is a fire postulated except:

1. equipment and cabling protected by a fire barrier.

2. water filled components such as pipes, heat exchangers, etc.

b. Fire did not spread beyond the designated zone.

c. A postulated fire occurs simultaneously with loss of offsite power but is not assumed to occur simultaneously with other accident, events, or phenomena such as design-basis accident. The loss of offsite power occurs at the start of the fire event.

d. Credit is taken for reactor trip and verification of control rod insertion in the control room. Reactor trip can be initiated and verified prior to evacuation, should it be necessary. If a fire directly affects the control rod drive control circuits, the reactor can be scrammed by opening or checking open the output breakers for the RPS MG sets and the alternate power supply at the local control panels. Opening of the RPS MG set's output breakers will also close the main steam isolation valves.

e. Where motor-operated dampers are accessible, manual operation was assumed. Consequently, no attempt was made to ensure the operability of the motor-operator in such cases. Those dampers identified in this report have been backfitted with a locking device to provide for manual operation of the damper in the event that control power is lost. Manual locking devices were not provided for on those dampers whose failure condition is in the safe shutdown mode of operation.

f. Fire is not postulated concurrent with outages of components or systems.

H.4.2 Fire Area/Zone Hot Shutdown Analysis

The fire areas/zones which contain essential components of both shutdown methods indicated in Subsection H.4.1.3 are analyzed in Subsections H.4.2.1 through H.4.2.87. Those fire zones which do not contain components or cables for either of the shutdown methods are listed in Table H.4-8 and, as discussed in Subsection H.4.1.3 item f, were not analyzed.

Tables H.4-9 through H.4-101 and H.4-112 - H.4-122 list the mechanical equipment including ventilation equipment instrumentation, valves where spurious operation was considered a concern, electrical equipment, and cables within a specific fire zone which may affect the safe shutdown of the reactor. These tables include the shutdown mode to which each item is associated. "Alt." indicates the alternate

method, "Bas." indicates the basic method, and "Both" indicates equipment common to both shutdown methods.

It should be pointed out that cables which are not needed for either the basic or alternate shutdown modes but which have a common power source or a common raceway with cables needed for safe shutdown have coordinated short circuit protection such that the open, ground, or hot short of these cables will not affect the shutdown system for which a common power source or common raceway is shared.

In the fire zone hot shutdown analysis, the systems of concern are the high pressure core spray (HPCS) system, the reactor core isolation cooling (RCIC) system, the residual heat removal (RHR) system Loops A and B, and the automatic depressurization system (ADS) Divisions 1 and 2. The evaluation determines which of these systems may be affected by the fire directly or indirectly such as a fire in a diesel-generator room which could affect onsite power to particular systems. Also discussed are the alternate systems which could be used for safe shutdown. Each analysis shows that either HPCS or RCIC and either ADS Division 1 or ADS Division 2 are available respectively for depressurization, reactor water makeup, and decay heat removal and that either RHR Loop A or RHR Loop B is available for suppression pool cooling.

Each of these systems must interact with other systems in order to achieve a safe shutdown. Such interaction uses the following logic:

a. RCIC and HPCS maintain reactor water level and aid in removing decay heat initially.

b. Division 1 and Division 2 SRV valves depressurize the reactor and transfers the decay heat to the suppression pool thus causing the suppression pool to heat up.

No credit is taken for SRV valves that have LLS logic except for 1B21-F013S. The following Div 1 SRV valve operators do not have LLS logic and are shown to be available for safe shutdown when credit is taken for Div 1 SRV's; 1B21-F013F,H,L,M,R and V. The following Division 2 SRV valve operators do not have LLS and are shown to be available for safe shutdown when credit is taken for Division 2 ADS: 1B21-F013 V and R. Analysis shows the Division 2 operator for 1B21-F013S is also available even though it has LLS logic, SRV valves 1B21-F013H,K, and P are on the remote shutdown panel. Manual control switches are available for Division 1 ADS/SRVs in the control room. Manual switches for Division 2 ADS are in the AEER on 1(2)H13-P631.

Manual control of individual SRVs is accomplished from main control panel H13-P601, remote shutdown panel C61-P001, Div 1 ADS relay

panel H13-P628 (located in the Div 1 AEER), and from the Div 2 ADS relay panel H13-P631 (located in the Div 2 AEER).

Controlling individual SRVs using switches in ADS vertical boards H13-P628 and H13-P631 will energize the A solenoid (Div 1) or the B solenoid (Div 2). Energizing these solenoids directs compressed nitrogen from the 42-gal ADS accumulator to the SRVs pneumatic operator providing the motive force to open the SRV. The normal make-up for the ADS accumulators is the air receiver tank. Should a Loss-Of-Offsite Power (LOOP) occur, the IN compressors will not be available to re-fill the air receiver tank. Should the air receiver tank be exhausted, the bottle banks will supply make-up compressed gas.

Controlling individual SRVs using switches on main control room panel H13-P601 or remote shutdown panel C61-P001 will energize the C solenoid, which directs compressed gas from the 10-gal accumulator to the SRVs operator providing the motive force to open the SRV. The make-up for this accumulator is the air receiver tank. Should it be exhausted, then no back-up supply of compressed gas will be available. The safety mode (spring mode) of SRV operation would then control pressure.

c. The RHR system cools the suppression pool and transfers the heat to the RHR service water system via the RHR heat exchanger.

d. Diesel generators supply electrical power to the ESF switchgear in the event of a loss of offsite power.

e. Ventilation systems maintain the environmental conditions of various spaces where safety equipment are located.

f. Monitoring instruments indicate plant parameters to the operators, including reactor water level and pressure, suppression pool level and temperature and process system flow.

g. RWCU, MS, and other valve cables are included because of concern for spurious operation.

H.4.2.1 Fire Zone 2B1 [redacted]

Safe shutdown equipment located in Fire Zone 2B1 is listed in Table H.4-9. A fire in this zone could affect 480-volt MCC 136X-1 which powers the ventilation for Division 2 switchgear; therefore, it affects the RCIC system, RHR Loop B, and ADS Division 2. HPCS and ADS Division 1 are available for decay heat removal and

reactor water makeup; RHR Loop A is available for suppression pool cooling to assist in bringing the reactor to a hot shutdown condition. Instrumentation to monitor reactor and suppression pool parameters is independent of this zone.

H.4.2.2 Fire Zone 3B1 [redacted]

Safe shutdown equipment located in Fire Zone 3B1 is listed in Table H.4-10. A fire in this zone could affect 480-volt MCC 236X-1 which powers the ventilation for Division 2 switchgear; therefore, it affects the RCIC system (inboard isolation valve 2E51-F063 only), RHR Loop B, and ADS Division 2. HPCS and ADS Division 1 are available for decay heat removal and reactor water makeup; RHR Loop A is available for suppression pool cooling to assist in bringing the reactor to a hot shutdown condition. Instrumentation to monitor reactor and suppression pool parameters is independent of this zone.

H.4.2.3 Fire Zone 2B2 [redacted]

No essential safe shutdown compnents are located in this zone.

RWCU Demineralizer System Valves and cable are located in this zone as listed in Table H.4-112. Adverse spurious operation is not a concern because the RWCU system isolation valves 1G33-F001 and 1G33-F004 are independent of this zone.

H.4.2.4 Fire Zone 3B2 [redacted]

No essential safe shutdown compnents are located in this zone. RWCU Demineralizer System Valves and cable are located in this zone as listed in Table H.4-113. Adverse spurious operation is not a concern because the RWCU system isolation valves are independent of this zone.

H.4.2.5 Fire Zone 2C [redacted]

No essential safe shutdown compnents are located in this zone.

RWCU Demineralizer System drain and blowdown valves and cable are located in this zone as listed in Table H.4-114. Adverse spurious operation is not a concern because the RWCU system isolation valves 1G33-F001 and 1G33-F004 are independent of this zone.

H.4.2.6 Fire Zone 3C [redacted]

No essential safe shutdown compnents are located in this zone.

RWCU Demineralizer System drain and blowdown valves and cable are located in this zone and listed in Table H.4-115. Adverse spurious operation is not a concern because RWCU system isolation valves 2G33-F001 and 2G33-F004 are independent of this zone.

H.4.2.7 Fire Zone 2D [redacted]

Safe shutdown cabling located in Fire Zone 2D is listed in Table H.4-11. A fire in this zone could affect cabling for Division 2 switchgear ventilation; therefore, it affects the RCIC system, RHR Loop B, and ADS Division 2. Therefore, HPCS and ADS Division 1 are available for decay heat removal and reactor water makeup; RHR Loop A is available for suppression pool cooling to assist in bringing the reactor to a hot shutdown condition. Instrumentation to monitor reactor and suppression pool parameters is independent of this zone.

Reactor water inventory loss by simultaneous spurious operation of the head vent valves 1B21-F001 and 1B21-F002 is prevented by removing power to one of these valves.

Adverse spurious operation of the RWCU system valve cables in this fire zone is not a concern because RWCU system isolation valves 1G33-F001 and 1G33-F004 are independent of this fire zone.

H.4.2.8 Fire Zone 3D [redacted]

Safe shutdown cabling located in Fire Zone 3D is listed in Table H.4-12. A fire in this zone could affect cabling for Division 2 switchgear ventilation; therefore, it affects the RCIC system, (inboard isolation valve 2E51-F063 only), RHR Loop B, and ADS Division 2. Therefore, HPCS and ADS Division 1 are available for decay heat removal and reactor water makeup; RHR Loop A is available for suppression pool cooling to assist in bringing the reactor to a hot shutdown condition. Instrumentation to monitor reactor and suppression pool parameters is independent of this zone.

Reactor water inventory loss by simultaneous spurious operation of the head vent valves 2B21-F001 and 2B21-F002 is prevented by removing power to one of these valves.

Adverse spurious operation of the RWCU system valve cables in this fire zone is not a concern because RWCU system isolation valves 2G33-F001 and 2G33-F004 are independent of this fire zone.

H.4.2.9 Fire Zone 2E [redacted]

Fire Zone 2E was originally divided into two subzones using 20-foot separation. Fire subzone 2E-1 includes building column rows 9-12 and fire subzone 2E-2

includes building column rows 12-15. As documented in LaSalle SER Sections 9.5.4 and 9.5.6.6, a 50-foot separation is provided in this Reactor Building Fire Zone between components of redundant safe shutdown trains. Also, fire detection is provided. Due to the low fire loading and lack of contiguous combustibles, it is not credible to postulate a single fire affecting cable and equipment in both subzones.

H.4.2.9.1 Fire Subzone 2E-1

Safe shutdown equipment and cabling located in fire subzone 2E-1 are listed in Table H.4-13. A fire in this subzone could affect HPCS, RHR Loop B, ADS Division 2 and only RCIC isolation valve 1E51-F063. Cables for valve 1E51-F063 are in proximity to Fire Zone 2E-1 (below the floor), but they are not likely to be damaged by a fire in subzone 2E-1. Because 1E51-F063 is a fail as-is (normally open) valve, the operation of the RCIC system will not be affected by losing control of this valve in the event of fire. Therefore, the RCIC system and ADS Division 1 are available for decay heat removal and reactor water makeup; RHR Loop A is available for suppression pool cooling to assist in bringing the reactor to a hot shutdown condition.

Redundant reactor indication on PI 1C61-R011 and LI 1C61-R010 and suppression pool instrumentation are independent of this fire zone on the remote shutdown panel (See Section H.4.4). Suppression pool level indication is available in the control room.

Shielded cables prevent hot shorts from energizing the solenoids required to open the Division 2 ADS valves. Reactor water inventory loss by simultaneous spurious opening of head vent valves 1B21-F001 and 1B21-F002 is prevented by removing power to one of these valves. The spurious operation of Nitrogen Valve 1IN100 will not prevent safe shutdown. Two redundant scram discharge volume drain and vent valves are provided in each line. They are part of the highly reliable scram system. Therefore, adequate protection against spurious operation adverse to safe shutdown is provided.

H.4.2.9.2 Fire Subzone 2E-2

Safe shutdown equipment and cabling located in fire subzone 2E-2 are listed in Table H.4-14. A fire in this subzone could affect only the RCIC system, RHR Loop A, and ADS Division 1.

Therefore, HPCS and ADS Division 2 are available for decay heat removal and reactor water makeup; RHR Loop B is available for suppression pool cooling to assist in bringing the reactor to a hot shutdown condition. RPV level and pressure instrument panel B is available for monitoring.

Redundant reactor pressure and level indication on PR/LR 1B21-R884B is independent of this fire zone and thus 1B21-R884B can be used for a fire in Fire

Zones 2E1 or 2E2. Suppression pool level and temperature indication is available independent of this zone.

Shielded cables prevent hot shorts from energizing the solenoids required to open the Division 1 ADS and SRV valves as well as SRV valve 2B21-F013S. Adverse failure of RWCU system valve cables in this fire zone is not of concern because RWCU system isolation valve 1G33-F001 is independent of this fire zone. Adverse failure of the main steam line drain valve cable in this area is not of concern because main steam line drain valve 1B21-F016 is independent of this fire zone. Two redundant scram discharge volume drain and vent valves are provided in each line. They are part of the highly reliable scram system. Therefore, adequate protection against spurious operation adverse to safe shutdown is provided.

H.4.2.10 Fire Zone 3E, [redacted]

Fire Zone 3E was originally divided into two subzones using 20-foot separation. Fire subzone 3E-1 includes building column rows 15-18 and fire subzone 3E-2 includes building column rows 18-21. As documented in the LaSalle SER Section 9.5.4, 9.5.6.6, and 9.5.4 (Supplement 5), a 50-foot separation is provided in this Reactor Building Fire Zone between components of redundant safe shutdown trains except for VX and AP cables servicing the redundant battery room exhaust fans which have a 40-foot separation. The loss of these fans is alarmed in the control room. Sufficient administrative controls (for instance procedure LOP-VX-02) provide adequate temporary ventilation in case of the loss of these fans. Fire detection is provided. Cables for valves 2E51-F063 are in the proximity to Fire Zone 3E-1 (below the floor) but they are not likely to be damaged by a fire in subzone 3E-1. Due to the low fire loading and lack of contiguous combustibles, it is not credible to postulate a single fire affecting cable and equipment in both subzones.

H.4.2.10.1 Fire Subzone 3E-1

Safe shutdown equipment and cabling located in fire subzone 3E-1 are listed in Table H.4-15. A fire in this subzone could affect HPCS, RHR Loop B, ADS Division 2 and only RCIC isolation valve 2E51-F063. Because 2E51-F063 is a fail as-is (normally open) valve, the operation of the RCIC system will not be affected by losing control of this valve in the event of fire. Therefore, the RCIC system and ADS Division 1 are available for decay heat removal and reactor water makeup; RHR Loop A is available for suppression pool cooling to assist in bringing the reactor to a hot shutdown condition.

Redundant reactor pressure on PI 2C61-R011 and level on LI 2C61-R010 and suppression pool temperature indication are independent of this zone on the remote shutdown panel (see Section H.4.4). Suppression pool water level indication is available in the control room.

Shielded cables prevent hot shorts from energizing the solenoid required to open SRV valve 2B21-F013S. Reactor water inventory loss by simultaneous spurious operation of head vent valves 2B21-F001 and 2B21-F002 is prevented by removing power to one of these valves. Spurious operation of MO-2E12-F099A will not result in an adverse condition to safe shutdown. Spurious operation of valves 2IN100 and 2IN101 will not prevent safe shutdown. Adverse failure of RWCU system valve cables in this area is not a concern because redundant RWCU isolation valve 2G33-F004 is independent of this zone. Two redundant scram discharge volume drain and vent valves are provided in each line. They are part of the highly reliable scram system. Therefore, adequate protection against spurious operation adverse to safe shutdown is provided.

H.4.2.10.2 Fire Subzone 3E-2

Safe shutdown equipment and cabling located in fire subzone 3E-2 are listed in Table H.4-16. A fire in this subzone could affect only the RCIC system, RHR Loop A, and ADS Division 1. HPCS cables are routed through conduits embedded in the concrete wall separating the auxiliary building and the reactor building. The wall has sufficient thickness such that at least 6 inches of concrete coverage is provided to the conduit. This provides a 3-hour fire barrier for these cables.

Therefore, HPCS and ADS Division 2 are available for decay heat removal and reactor water makeup; RHR Loop B is available for suppression pool cooling to assist in bringing the reactor to a hot shutdown condition.

Redundant reactor pressure and level indication PR/LR 2B21-R884B and instrumentation to monitor suppression pool parameters are independent of this zone.

Shielded cables prevent hot shorts from energizing the solenoids required to open the Division 1 ADS and SRV valves as well as SRV valve 2B21-F013S. Adverse failure of main steam line drain valve cables in this area is not a concern because redundant main steam line drain valve 2B21-F016 is independent of this fire zone. Spurious operation of 2IN101 will not prevent safe shutdown. Adverse failure of RWCU system valve cables in this area is not a concern because redundant RWCU isolation valve 2G33-F001 is independent of this fire zone. Two redundant scram discharge volume drain and vent valves are provided in each line. They are part of the highly reliable scram system. Therefore, adequate protection against spurious operation adverse to safe shutdown is provided.

H.4.2.11 Fire Zone 2F [redacted]

Fire Zone 2F was divided into two subzones using 20-foot separation. Fire subzone 2F-1 includes building column rows 9-12 and fire subzone 2F-2 includes building column rows 12-15. As documented in the LaSalle SER Sections 9.5.4 and 9.5.6.6, and Region III Inspection Reports 82-13 and 82-19, a 50-foot separation is provided in this Reactor Building Fire Zone between components of redundant safe shutdown trains except for a single Division II conduit in 2F-1. This conduit is wrapped with a fire resistant material. Also fire detection is provided. Due to the low fire loading and the lack of contiguous combustibles it is not credible to postulate a single fire affecting cable and equipment in both subzones.

H.4.2.11.1 Fire Subzone 2F-1

The safe shutdown equipment and cabling located in fire subzone 2F-1 are listed in Table H.4-17. A fire in this subzone could affect RHR Loop B, ADS Division 2 and RCIC isolation valve 1E51-F063. If 1E51-F063 fails as-is (normally open) valve, the operation of the RCIC system will not be affected by losing control of this valve in the event of fire. If 1E51-F063 were to spuriously close, HPCS valve 1E22-F004 is still available. Therefore, HPCS, and ADS Division 1 are available for decay heat removal and reactor water makeup; RHR Loop A is available for suppression pool cooling to assist in bringing the reactor to a hot shutdown condition.

Redundant reactor pressure and level indication on PR/LR 1B21-R884A in the control room and suppression pool water temperature indication on 1TI-CM037 on the remote shutdown panel are independent of this fire zone. Suppression pool water level indication is available in the control room.

Shielded cables prevent hot shorts from energizing the solenoids required to open the Division 2 ADS valves. Reactor water inventory loss by simultaneous spurious operation of head vent valves 1B21-F001 and 1B21-F002 is prevented by removing power to one of these valves. Spurious operation of valve 1E12-F099A will not result in an adverse condition to safe shutdown. Adverse failure of RWCU system valve cables in this fire zone is not of concern because redundant RWCU system isolation valve 1G33-F004 is independent of this fire zone.

Spurious operation of reactor water sample valves 1B33-F019 and 1B33-F020 will not result in a condition adverse to safe shutdown. Adverse failure of MSL drain valve cables is not of concern because redundant main steam line isolation valve 1B21-F019 is independent of this fire zone. Spurious operation N_2 isolation valves 1IN100 and 1IN101 will not adversely affect safe shutdown.

In terms of the fire in the reactor building, the Division 3 cables in the stairwells pass near other divisional fire zones in the reactor building (such as 2F-1, 3F-1, 2G-1, 3G-1). Fire in these fire zones would not likely damage cables to division 3 safe

shutdown components like the HPCS 1E22-F004 valve. However, should manual operation of safe shutdown equipment become necessary for any fire in the reactor building, the operator performing the manual action may require an SCBA due to the possibility of smoke in the vicinity of the manual action.

H.4.2.11.2 Fire Subzone 2F-2

The safe shutdown equipment and cabling located in fire subzone 2F-2 are listed in Table H.4-18. A fire in this subzone could affect only the RCIC system, RHR Loop A, and ADS Division 1. Therefore, HPCS and ADS Division 2 are available for decay heat removal and reactor water makeup; RHR Loop B is available for suppression pool cooling to assist in bringing the reactor to a hot shutdown condition. Operation of valve 1E12-F008 is not required to achieve hot shutdown. For cold shutdown analysis see Subsection H.4.5.

Shielded cables prevent hot shorts from energizing the solenoids required to open the Division 1 ADS and SRV valves as well as SRV valve 1B21-F013S. Redundant reactor pressure and level indication on PR/LR 1B21-R884B in the control room and suppression pool level indication on 1LI-CM030 on the remote shutdown panel and suppression pool temperature indication on 1TR-CM038 are independent of this fire.

Spurious operation of 1E12-F053B will not adversely affect safe shutdown via RHR Loop B. Adverse failure of RWCU system valve cables is not of concern because redundant RWCU isolation valve 1G33-F001 is independent of this fire zone. Adverse failure of MSL drain valve cable is not of concern because main steam line drain valve 1B21-F016 is independent of this fire zone. Spurious operation of reactor water sample valve 1B33-F020 will not adversely affect safe shutdown. Spurious operation of nitrogen isolation valve 1IN101 will not affect safe shutdown. Two redundant scram discharge volume drain and vent valves are provided in each line. They are part of the highly reliable Scram system. Therefore, adequate protection against spurious operation adverse to safe shutdown is provided.

H.4.2.12 Fire Zone 3F [redacted]

Fire Zone 3F was originally divided into two subzones using 20-foot separation. Fire subzone 3F-1 includes building column rows 15-18 and fire subzone 3F-2 includes building column rows 18-21. As documented in the LaSalle SER Section 9.5.4, 9.5.6.6, and 9.5.4 (Supplement 5), a 50-foot separation is provided in this Reactor Building Fire Zone between components of redundant safe shutdown trains except for VX and AP cables servicing the redundant battery room exhaust fans which have a 40-foot separation. The loss of these fans is alarmed in the control room. Sufficient administrative controls (for instance procedure LOP-VX-02) provide adequate temporary ventilation in case of the loss of these fans. Fire detection is provided. Due to the low fire loading and the lack of contiguous

combustibles, it is not credible to postulate a single fire affecting cable and equipment in both subzones.

H.4.2.12.1 Fire Subzone 3F-1

The safe shutdown equipment and cabling located in fire subzone 3F-1 are listed in Table H.4-19. A fire in this subzone could affect RHR Loop B, ADS Division 2 and RCIC isolation valve 2E51-F063. Because 2E51-F063 is a fail as-is (normally open) valve, the operation of the RCIC system will not be affected by losing control of this valve in the event of fire. If 2E51-F063 were to spuriously close HPCS valve 2E22-F004 is still available. Therefore, HPCS, and ADS Division 1 are available for decay heat removal and reactor water makeup; RHR Loop A is available for suppression pool cooling to assist in bringing the reactor to a hot shutdown condition.

Shielded cables prevent hot shorts from energizing the solenoids required to open the Division 2 ADS as well as SRV valve 2B21-F013S . Reactor water inventory loss by simultaneous spurious operation of head vent valves 2B21-F001 and 2B21-F002 is prevented by removing power to one of these valves. Spurious operation of MO-2E12-F099A will not result in an adverse condition to safe shutdown. Adverse failure of RWCU system valve cables in this fire zone is not of concern because redundant RWCU isolation valves 2G22-F004 is independent. Spurious operation of reactor water sample valves 2B33-F019 and 2B33-F020 will not result in a condition adverse to safe shutdown. Adverse failure of MSL drain valve cables in this fire zone is not of concern because redundant main steam line drain isolation vavle 2B21-F019 is independent of this fire zone. Spurious operation N_2 isolation valves 2IN100 and 2IN101 will not adversely affect safe shutdown.

Redundant reactor pressure and level indication on PR/LR 2B21-R884A and suppression pool indication in the control room are independent of this fire zone.

In terms of the fire in the reactor building, the Division 3 cables in the stairwells pass near other divisional fire zones in the reactor building (such as 2F-1, 3F-1, 2G-1, 3G-1). Fire in these fire zones would not likely damage cables to division 3 safe shutdown components like the HPCS 2E22-F004 valve. However, should manual operation of safe shutdown equipment become necessary for any fire in the reactor building, the operator performing the manual action may require an SCBA due to the possibility of smoke in the vicinity of the manual action.

H.4.2.12.2 Fire Subzone 3F-2

The safe shutdown equipment and cabling located in fire subzone 3F-2 are listed in Table H.4-20. A fire in this subzone could affect only the RCIC system, RHR Loop A, and ADS Division 1. Therefore, HPCS and ADS Division 2 are available for decay heat removal and reactor water makeup; RHR Loop B is available for suppression pool cooling to assist in bringing the reactor to a hot shutdown

condition. Operation of valve 2E12-F008 is not required to achieve hot shutdown. For cold shutdown analysis, see Subsection H.4.5.

Shielded cables prevent hot shorts from energizing the solenoids required to open the Division 1 ADS and SRV valves as well as SRV valve 2B21-F013S. Redundant reactor pressure and level PR/LR 2B21-R884B in the control room and suppression pool indication 2TR-CM038 in the control room and suppression pool level indication on 2LI-CM030 on the remote shutdown panel are independent of this fire zone.

Spurious operation of 2E12-F053B will not adversely affect safe shutdown via RHR Loop B. Adverse failure of RWCU system valve cable is not of concern because redundant RWCU isolation valve 2G33-F001 is independent of this fire zone. Adverse failure of main steam line drain valve cables is not of concern because main steam line drain isolation valve 2B21-F016 is independent of this fire zone. Spurious operation of reactor water sample valve 2B33-F020 will not adversely affect safe shutdown. Spurious operation of nitrogen isolation valve 2IN101 will not affect safe shutdown. Two redundant scram discharge volume drain and vent valves are provided in each line. They are part of the highly reliable scram system. Therefore, adequate protection against spurious operation adverse to safe shutdown is provided.

H.4.2.13 Fire Zone 2G [redacted]

Fire Zone 2G was originally divided into two subzones using 20-foot separation. Fire subzone 2G-1 includes building column rows 9-12 and fire subzone 2G-2 includes building column rows 12-15. As documented in LaSalle SER Sections 9.5.4 and 9.5.6.6, a 50-foot separation is provided in this Reactor Building Fire Zone between components of redundant safe shutdown trains. Also, area fire detection is provided. Due to the low fire loading and lack of contiguous combustibles it is not credible to postulate a single fire affecting cable and equipment in both subzones.

H.4.2.13.1 Fire Subzone 2G-1

The safe shutdown equipment and cabling located in fire subzone 2G-1 is listed in Table H.4-21. A fire in this subzone could affect RHR Loop B, ADS Division 2 and cable to RCIC steam line valve 1E51-F063. RCIC steam line valve 1E51-F063 is normally open. If it were to spuriously close, safe shutdown could be achieved by opening 1E22-F004 to initiate HPCS. Therefore, HPCS and ADS Division 1 are available for decay heat removal and reactor water makeup; RHR Loop A is available for suppression pool cooling to assist in bringing the reactor to a hot shutdown condition.

Redundant suppression pool level indication on 1LR-CM028 (input from 1LT-CM032) in the control room is independent of this fire zone. Suppression pool

temperature and Reactor Level and Pressure indication is independent of this fire zone.

Adverse failure of RWCU system valve cable is not of concern because redundant RWCU isolation valve 1G33-F004 is independent of this fire zone. Adverse failure of main steam line drain valve cables is not of concern because main steam line drain isolation valves are 1B21-F016 and 1B21-F019 are independent of this fire zone.

In terms of the fire in the reactor building, the Division 3 cables in the stairwells pass near other divisional fire zones in the reactor building (such as 2F-1, 3F-1, 2G-1, 3G-1). Fire in these fire zones would not likely damage cables to division 3 safe shutdown components like the HPCS 1E22-F004 valve. [redacted]

H.4.2.13.2 Fire Subzone 2G-2

The safe shutdown equipment and cabling located in fire subzone 2G-2 are listed in Table H.4-22. A fire in this subzone could affect only the RCIC system, RHR Loop A, and ADS Division 1. The d-c control power feed to the remote shutdown panel from motor control center (MCC) 121Y has no affect on the operation of RHR Loop B. Therefore, RHR Loop B is still available for suppression pool cooling, and HPCS and ADS Division 2 are available for decay heat removal and reactor water makeup to assist in bringing the reactor to a hot shutdown condition.

Redundant suppression pool temperature indication on 1TR-CM038 in the control room and suppression pool level indication on 1LI-CM030 on the remote shutdown panel are independent of this fire zone. Reactor level and pressure are independent of this area as shown on Table H.4-105.

The spurious operation of 1E12-F053B would not affect safe shutdown using RHR loop B.

H.4.2.14 Fire Zone 3G [redacted]

Fire Zone 3G was originally divided into two subzones using 20-foot separation. Fire subzone 3G-1 includes building column rows 15-18 and fire subzone 3G-2 includes building column rows 18-21. As documented in the LaSalle SER Section 9.5.4, 9.5.6.6, and 9.5.4 (Supplement 5), a 50-foot separation is provided in this Reactor Building Fire Zone between components of redundant safe shutdown trains except for VX and AP cables servicing the redundant battery room exhaust fans which have a 40-foot separation. The loss of these fans is alarmed in the control room. Sufficient administrative controls (for instance procedure LOP-VX-02) provide adequate temporary ventilation in case of the loss of these fans. Fire

detection is provided. Due to the low fire loading and lack of contiguous combustibles, it is not credible to postulate a single fire affecting cable and equipment in both subzones.

H.4.2.14.1 Fire Subzone 3G-1

The safe shutdown equipment and cabling located in fire subzone 3G-1 are listed in Table H.4-23. A fire in this subzone could affect RHR Loop B, ADS Division 2, and RCIC steam line inboard valve 2E51-F063. RCIC steam line valve 2E51-F063 is normally open. If it were to spurious close, safe shutdown could be achieved by opening 2E22-F004 to initiate HPCS. HPCS and ADS Division 1 are available for decay heat removal and reactor water makeup; RHR Loop A is available for suppression pool cooling to assist in bringing the reactor to a hot shutdown condition.

Redundant suppression pool temperature indication is independent of this fire zone. Suppression pool level indication on 2LR-CM028 (input from 2LT-CM032) in the control room is independent of this fire zone. Reactor level and pressure are independent of this area as shown on Table H.4-104 and H.4-105.

Adverse failure of RWCU system valve cables is not of concern because redundant RWCU isolation valve 2G33-F004 is independent of this fire zone. Adverse failure of main steam line drain valve cable is not of concern because main steam line drain isolation valves are 2B21-F016 and 2B21-F019 are independent of this fire zone.

Spurious operation of 2E12-F099A would not affect safe shutdown using RHR Loop A.

In terms of the fire in the reactor building, the Division 3 cables in the stairwells pass near other divisional fire zones in the reactor building (such as 2F-1, 3F-1, 2G-1, 3G-1). Fire in these fire zones would not likely damage cables to division 3 safe shutdown components. [redacted]

H.4.2.14.2 Fire Subzone 3G-2

The safe shutdown equipment and cabling located in fire subzone 3G-2 are listed in Table H.4-24. A fire in this subzone could affect only the RCIC system, RHR Loop A, and ADS Division 1. The d-c control power feed to the remote shutdown panel from 250-Vdc motor control center (MCC) 221Y has no affect on the operation of RHR Loop B. HPCS cables are routed in a sleeve in the wall separating the auxiliary building and the reactor building. This is a 3-hour rated wall and provides fire protection for these cables. Therefore, RHR Loop B is still available for suppression pool cooling and HPCS and ADS Division 2 are available for decay heat

removal and reactor water makeup to assist in bringing the reactor to a hot shutdown condition.

Redundant suppression pool temperature indication on 2TR-CM038 in the control room is independent of this fire zone. Suppression pool level indication on 2LI-CM030 on the remote shutdown panel is independent of this fire zone.

Shielded cables prevent hot shorts from energizing the solenoids required to open the Division 1 ADS and SRV valves. Adverse failure of main steam line drain valve cable is not of concern because redundant main steam line drain isolation valve 2B21-F016 is independent of this fire zone. The spurious operation of 2E12-F053B would not affect safe shutdown using RHR Loop B. Adverse failure of RWCU system valve cables is not of concern because redundant RWCU system isolation valve 2G33-F001 is independent of this fire zone. Reactor level and pressure are independent of this area as shown on Table H.4-105.

H.4.2.15 Fire Zone 2H1 [redacted]

Fire Zone 2H1 was divided into two subzones using 20-foot separation. Fire subzone 2H1-1 includes building column rows 9-12 and fire subzone 2H1-2 includes building column rows 12-15. As documented in LaSalle SER Sections 9.5.4 and 9.5.6.6, a 50-foot separation is provided in this Reactor Building Fire Zone between components of redundant safe shutdown trains. Also, area fire detection is provided. Due to the low fire loading and lack of contiguous combustibles it is not credible to postulate a single fire affecting cable and equipment in both subzones.

H.4.2.15.1 Fire Subzone 2H1-1

The safe shutdown equipment and cabling located in fire subzone 2H1-1 are listed in Table H.4-25. A fire in this subzone could affect only HPCS, RHR Loop B, and ADS Division 2. Therefore, RCIC and ADS Division 1 will be available for decay heat removal and reactor water makeup. RHR Loop A is available for suppression pool cooling to assist in bringing the reactor to a hot shutdown condition. Instrumentation to monitor reactor parameters is independent of this zone.

Redundant suppression pool level indication on 1LI-CM032 and 1LR-CM028 in the control room is independent of this fire zone. Suppression pool temperature indication is independent of this fire zone.

H.4.2.15.2 Fire Subzone 2H1-2

The safe shutdown equipment and cabling located in fire subzone 2H1-2 are listed in Table H.4-26. A fire in this subzone could affect only the RCIC system, RHR Loop A, and ADS Division 1. Therefore, HPCS and ADS Division 2 are available for decay heat removal and reactor water makeup. RHR Loop B is available for

suppression pool cooling to assist in bringing the reactor to a hot shutdown condition.

Redundant suppression pool level indication on 1LI-CM030 on the remote shutdown panel is independent of this fire zone. Suppression pool temperature indication is independent of this fire zone. Instrumentation to monitor reactor parameters is independent of this fire zone.

H.4.2.16 Fire Zone 3H1 [redacted]

Fire Zone 3H1 was originally divided into two subzones using 20-foot separation. Fire subzone 3H1-1 includes building column rows 15-18 and fire subzone 3H1-2 includes building column rows 18-21. No cables or components necessary for safe shutdown are located within approximately 70 feet of another cable or component in the adjacent subzone. Also, fire detection is provided. Due to the low fire loading and lack of contiguous combustibles, it is not credible to postulate a single fire affecting cable and equipment in both subzones.

H.4.2.16.1 Fire Subzone 3H1-1

The safe shutdown equipment and cabling located in fire subzone 3H1-1 are listed in Table H.4-27. A fire in this subzone could affect only HPCS, RHR Loop B, and ADS Division 2. Therefore, RCIC and ADS Division 1 will be available for decay heat removal and reactor water makeup. RHR Loop A is available for suppression pool cooling to assist in bringing the reactor to a hot shutdown condition.

Redundant suppression pool level indication on 2LR-CM028 in the control room is independent of this fire zone. Suppression pool temperature indication is independent of this fire zone. Instrumentation to monitor reactor parameters is independent of this fire zone.

H.4.2.16.2 Fire Subzone 3H1-2

The safe shutdown equipment and cabling located in fire subzone 3H1-2 are listed in Table H.4-28. A fire in this subzone could affect only the RCIC system, RHR Loop A, and ADS Division 1. HPCS cables 2HP021 and 2HP022 are routed through conduits embedded in the concrete wall which forms part of the boundary for Fire Zone 3H1-2. This provides a 3-hour rated barrier for these cables and allows HPCS valve 2E22-F004 to be credited given a fire in this zone. Therefore, HPCS and ADS Division 2 are available for decay heat removal and reactor water makeup. RHR Loop B is available for suppression pool cooling to assist in bringing the reactor to a hot shutdown condition.

Redundant suppression pool level indication on 2LI-CM030 on the remote shutdown panel is independent of this fire zone. Suppression pool temperature indication is independent of this fire zone. Instrumentation to monitor reactor parameters is independent of this fire zone.

H.4.2.17 Fire Zone 2H2 [redacted]

The safe shutdown equipment and cabling located in Fire Zone 2H2 are listed in Table H.4-29. A fire in this zone could affect only components and cables associated with the basic shutdown method. Therefore, the alternative method, which is independent of this fire zone, can be used to bring the reactor to a hot shutdown condition. Instrumentation to monitor reactor and suppression pool parameters is independent of this fire zone.

H.4.2.18 Fire Zone 2H3 [redacted]

The safe shutdown equipment and cabling located in Fire Zone 2H3 is listed in Table H.4-30. A fire in this zone could only have an effect on components and cables associated with the alternate shutdown method. Therefore, the basic shutdown method, which is independent of this fire zone, can be used to bring the reactor to a hot shutdown condition. Instrumentation to monitor reactor and suppression pool parameters is independent of this fire zone.

H.4.2.19 Fire Zone 3H3 [redacted]

The safe shutdown equipment and cabling located in Fire Zone 3H3 are listed in Table H.4-31. A fire in this zone could only have an effect on components and cables associated with the alternate shutdown method. HPCS, RHR A, and ADS Division 1 are independent of this fire zone can be used to bring the reactor to a hot shutdown condition. Instrumentation to monitor reactor and suppression pool parameters is independent of this fire zone.

H.4.2.20 Fire Zone 2H4 [redacted]

The safe shutdown equipment and cabling located in Fire Zone 2H4 are listed in Table H.4-32. A fire in this zone could only affect the RCIC system, RHR Loop A, and ADS Division 1. The d-c control power feed to the remote shutdown panel from MCC 121Y has no affect on the operation of RHR Loop B. Therefore, RHR Loop B is still available for suppression pool cooling and HPCS and ADS Division 2 are available for decay heat removal and reactor water makeup to assist in bringing the reactor to a hot shutdown condition. Instrumentation to monitor reactor and suppression pool parameters is independent of this fire zone.

H.4.2.21 Fire Zone 3H4 [redacted]

The safe shutdown equipment and cabling located in Fire Zone 3H4 are listed in Table H.4-33. A fire in this zone could only affect the RCIC system and RHR Loop A. The d-c control power feed to the remote shutdown panel from MCC 221Y has no affect on the operation of RHR Loop B. Therefore, RHR Loop B is still available for suppression pool cooling and HPCS and ADS Division 1 and 2 are available for decay heat removal and reactor water makeup to assist in bringing the reactor to a hot shutdown condition. Instrumentation to monitor reactor and suppression pool parameters is independent of this fire zone.

H.4.2.22 Fire Zone 2H5 [redacted]

The safe shutdown equipment and cabling located in Fire Zone 2H5 are listed in Table H.4-34. A fire in this zone could only affect the RCIC system, RHR Loop A, and ADS Division 1. Therefore, HPCS and ADS Division 2 are available for decay heat removal and reactor water makeup. RHR Loop B is available for suppression pool cooling to assist in bringing the reactor to a hot shutdown condition. Redundant suppression pool level indication on 1LI-CM030 and temperature indication on 1TR-CM038 in the control room are independent of this fire zone. Instrumentation to monitor reactor parameters is independent of this fire zone.

H.4.2.23 Fire Zone 3H5 [redacted]

The safe shutdown equipment and cabling located in Fire Zone 3H5 are listed in Table H.4-35. A fire in this zone could only affect the RCIC system, RHR Loop A, and ADS Division 1. HPCS cables are routed through conduits embedded in concrete wall separating the auxiliary building and the reactor building. This provides a 3-hour rated barrier for these cables. Therefore, HPCS and ADS Division 2 are available for decay heat removal and reactor water makeup. RHR Loop B is available for suppression pool cooling to assist in bringing the reactor to a hot shutdown condition. Redundant suppression pool level indication on 2LI-CM030 on the remote shutdown panel and temperature indication on 2TR-CM038 in the control room are independent of this fire zone. Instrumentation to monitor reactor parameters is independent of this fire zone.

H.4.2.24 Fire Zone 2I1 [redacted]

Fire Zone 2I1 was divided into two subzones using 20-foot separation. Fire subzone 2I1-1 includes the portion of fire zone 2I1 located between building column rows 9-12 and fire subzone 2I1-2 includes that portion of fire zone 2I1 located between building column rows 12-15. As documented in the LaSalle SER Sections 9.5.4,

9.5.6, and 9.5.4 (Supplement 5), a 50-foot separation is provided in the Reactor Building Fire Zone between components of redundant safe shutdown trains except for the RHR Division II cables in 2I1-1 and Division I RHR Service Water Valve 1E12-F068A in 2I1-2 which are separated by about 20 feet. Valve 1E12-F068A is not needed for several hours following initiation of shutdown. Also automatic fire detection is provided. Due to the low fire loading and lack of contiguous combustibles it is not credible to postulate a single fire affecting cable and equipment in both subzones.

H.4.2.24.1 Fire Subzone 2I1-1

The equipment and cabling located in fire subzone 2I1-1 are listed in Table H.4-36. A fire in this subzone could affect only the HPCS system, RHR Loop B, and ADS Division 2. Therefore, RCIC and ADS Division 1 are still available for decay heat removal and reactor water makeup. RHR Loop A is available for suppression pool cooling to assist in bringing the reactor to a hot shutdown condition. Instrumentation to monitor reactor and suppression pool parameters is independent of this fire zone.

H.4.2.24.2 Fire Subzone 2I1-2

The safe shutdown equipment and cabling located in fire subzone 2I1-2 are listed in Table H.4-37. A fire in this subzone could only affect the RCIC system and RHR Loop A. Therefore, HPCS and both ADS Division 1 and Division 2 are available for decay heat removal and reactor water makeup. RHR Loop B is available for suppression pool cooling to assist in bringing the reactor to a hot shutdown condition. Redundant suppression pool temperature indication on 1TR-CM038 in the control room is independent of this fire zone. Suppression pool level indication is independent of this fire zone. Instrumentation to monitor reactor parameters is independent of this zone.

H.4.2.25 Fire Zone 3I1 [redacted]

Fire Zone 3I1 was divided into two subzones using 20-foot separation. Fire subzone 3I1-1 includes the portion of fire zone 3I1 located between building column rows 15-18 and fire subzone 3I1-2 includes that portion of fire zone 3I1 located between building column rows 18-21. As documented in the LaSalle SER Section 9.5.4, 9.5.6.6, and 9.5.4 (Supplement 5), a 50-foot separation is provided in the Reactor Building Fire Zone between components of redundant safe shutdown trains except for the RHR Division II cables in 3I1-1 and Division I RHR Service Water Valve 2E12-F068A in 3I1-2, which are separted by about 20 feet. Valve 2E12-F068A is not needed for several hours following initiation of shutdown. Also fire detection is provided. Due to the low fire loading and lack of contiguous combustibles, it is not credible to postulate a single fire affecting cable and equipment in both subzones.

H.4.2.25.1 Fire Subzone 3I1-1

The equipment and cabling located in fire subzone 3I1-1 are listed in Table H.4-38. A fire in this subzone could affect only the HPCS system, RHR Loop B, and ADS Division 2. Therefore, RCIC and ADS Division 1 are still available for decay heat removal and reactor water makeup. RHR Loop A is available for suppression pool cooling to assist in bringing the reactor to a hot shutdown condition. Instrumentation to monitor reactor and suppression pool parameters is independent of this fire zone.

H.4.2.25.2 Fire Subzone 3I1-2

The safe shutdown equipment and cabling located in fire subzone 3I1-2 are listed in Table H.4-39. A fire in this subzone could affect only the RCIC system and RHR Loop A. HPCS cables are routed through conduits embedded in concrete wall separating the auxiliary building and the reactor building. This provides a 3-hour rated barrier for these cables. Therefore, HPCS and both ADS Division 1 and Division 2 are available for decay heat removal and reactor water makeup. RHR Loop B is available for suppression pool cooling to assist in bringing the reactor to a hot shutdown condition. Redundant suppression pool temperature indication on 2TR-CM038 in the control room is independent of this fire zone. Suppression pool level indication is independent of this fire zone. Instrumentation to monitor reactor parameters is independent of this fire zone.

H.4.2.26 Fire Zone 2I2 [redacted]

The safe shutdown equipment and cabling located in Fire Zone 2I2 are listed in Table H.4-40. A fire in this zone could affect only components and cables associated with the basic method. Therefore, the alternate method, which is independent of this fire zone, can be used to bring the reactor to a hot shutdown condition. Instrumentation to monitor reactor and suppression pool parameters is independent of this area.

H.4.2.27 Fire Zone 3I2 [redacted]

The safe shutdown equipment and cabling located in Fire Zone 3I2 are listed in Table H.4-41. A fire in this zone could affect only components and cables associated with the basic shutdown method. Therefore, the alternate method, which is independent of this fire zone, can be used to bring the reactor to a hot shutdown condition. Instrumentation to monitor reactor and suppression pool parameters is independent of this fire zone.

H.4.2.28 Fire Zone 2I3 [redacted]

The safe shutdown equipment and cabling located in Fire Zone 2I3 are listed in Table H.4-42. A fire in this zone could affect only RHR Loop B and ADS Division 2. Therefore, both HPCS and RCIC, and ADS Division 1 are available for decay heat removal and reactor water makeup. RHR Loop A is available for suppression pool cooling to assist in bringing the reactor to a hot shutdown condition. Instrumentation to monitor reactor and suppression pool parameters is independent of this fire zone.

H.4.2.29 Fire Zone 3I3 [redacted]

The safe shutdown equipment and cabling located in Fire Zone 3I3 are listed in Table H.4-43. A fire in this zone could affect only RHR Loop B and ADS Division 2. Therefore, both HPCS and RCIC, and ADS Division 1 are available for decay heat removal and reactor water makeup. RHR Loop A is available for suppression pool cooling to assist in bringing the reactor to a hot shutdown condition. Instrumentation to monitor reactor and suppression pool parameters is independent of this fire zone.

H.4.2.30 Fire Zone 2I4 [redacted]

The safe shutdown equipment and cabling located in Fire Zone 2I4 are listed in Table H.4-44. A fire in this zone could affect only the RCIC system, RHR Loop A, and ADS Division 1. Therefore, HPCS and ADS Division 2 are available for decay heat removal and reactor water makeup. RHR Loop B is available for suppression pool cooling to assist in bringing the reactor to a hot shutdown condition. Instrumentation to monitor reactor and suppression pool parameters is independent of this fire zone.

H.4.2.31 Fire Zone 3I4 [redacted]

The safe shutdown equipment and cabling located in Fire Zone 3I4 are listed in Table H.4-45. A fire in this zone could affect only the RCIC system, RHR Loop A, and ADS Division 1. Therefore, HPCS and ADS Division 2 are available for decay heat removal and reactor water makeup. RHR Loop B is available for suppression pool cooling to assist in bringing the reactor to a hot shutdown condition. Instrumentation to monitor reactor and suppression pool parameters is independent of this fire zone.

H.4.2.32 Fire Zone 2I5 [redacted]

The safe shutdown equipment and cabling located in Fire Zone 2I5 are listed in Table H.4-46. A fire in this zone could affect only RHR Loop A and ADS Division 1. Therefore, both HPCS and RCIC, and ADS Division 2 are available for decay heat removal and reactor water makeup; RHR Loop B is available for suppression pool cooling to assist in bringing the reactor to a hot shutdown condition. Redundant suppression pool temperature indication on 1TR-CM038 in the control room is independent of this fire zone. Instrumentation to monitor reactor parameters is independent of this fire zone. Suppression pool level indication on 1LI-CM030 is independent of this area.

H.4.2.33 Fire Zone 3I5 [redacted]

The safe shutdown equipment and cabling located in Fire Zone 3I5 are listed in Table H.4-47. A fire in this zone could affect only RHR Loop A and ADS Division 1. HPCS cables are routed through conduits embedded in the concrete wall separating the auxiliary building and the reactor building. This provides a 3-hour rated barrier for these cables. Therefore, both HPCS and RCIC and ADS Division 2 are available for decay heat removal and reactor water makeup; RHR Loop B is available for suppression pool cooling to assist in bringing the reactor to a hot shutdown condition. Redundant suppression pool temperataure indication on 2TR-CM038 in the control room and suppression pool level on 2LI-CM030 on the remote shutdown panel are independent of this fire zone. Instrumentation to monitor reactor parameters is independent of this fire zone.

H.4.2.34 Fire Zone 2J [redacted]

The safe shutdown equipment and cabling located in Fire Zone 2J are listed in Table H.4-48. The primary containment is inerted during normal operation. This fire zone contains the inboard main steam isolation valves and safety/relief/ADS valves. Each ADS valve has two separate actuators which are powered individually from electrical Division 1 or Division 2. A fire in the vicinity of a safety/relief/ADS valve could affect both actuators on that valve. Because these valves are divided into two groups of either six or seven valves, with each valve powered from both electrical divisions and because groups are separated by a distance of greater than 20 feet, a fire can affect only one group of ADS valves. Therefore, at least six safety/relief valves, three of which are also ADS valves, survive the postulated fire. Only one ADS valve is needed during a normal shutdown, because one valve provides more than enough capacity to accomplish a hot shutdown. A fire in this zone could also affect the RCIC inboard isolation valve. Because this valve is fail as-is (normally open) valve, the loss of electrical control to this valve in the event of a fire will not likely affect the operation of the RCIC system. HPCS is available should a spurious closure of valve 1E51-F063 occur. Inboard MSIV are fail-safe

valves and will close in the event of a fire, which disables the controls to these valves. They can also be closed by opening the RPS MG set's output breakers. Therefore, HPCS, RCIC, and at least one group of safety/relief/ ADS valves are available for decay heat removal and reactor water makeup. Both RHR Loop A and RHR Loop B are available for suppression pool cooling to assist in bringing the reactor to a hot shutdown condition.

H.4.2.35 Fire Zone 3J [redacted]

The safe shutdown equipment and cabling located in Fire Zone 3J are listed in Table H.4-49. The primary containment is inerted during normal operation. This fire zone contains the inboard main steam isolation valves and safety/relief/ADS valves. Each ADS valve has two separate actuators which are powered individually from electrical Division 1 or Division 2. A fire in the vicinity of a safety/relief/ADS valve could affect both actuators on that valve. Because these valves are divided into two groups of six or seven valves, with each valve powered from both electrical divisions and because groups are separated by a distance of greater than 20 feet, a fire can affect only one group of ADS valves. Therefore, at least six safety/relief valves, three of which are also ADS valves, survive the postulated fire. Only one ADS valve is needed during a normal shutdown, because one valve provides more than enough capacity to accomplish a hot shutdown. A fire in this zone could also affect the RCIC inboard isolation valve (2E51-F063). Because this valve is a fail as-is (normally open) valve, the loss of electrical control to this valve in the event of a fire will not likely affect the operation of the RCIC system. HPCS is available should a spurious closure of the 2E51-F063 valve occur. Inboard MSIV are fail-safe valves and will close in the event of a fire which disables the controls to these valves. They can also be closed by opening the RPS MG set's output breakers. Therefore, HPCS, RCIC, and at least one group of safety/relief/ ADS valves are available for decay heat removal and reactor water makeup. Both RHR Loop A and RHR Loop B are available for suppression pool cooling to assist in bringing the reactor to a hot shutdown condition.

H.4.2.36 Fire Zone 2K [redacted]

The main steam line and main steam line drain outboard containment isolation valves are located in this fire zone as shown on Table H.4-116. Adverse failure of the main steam system valves is not of concern because the inboard MSIV's 1B21-F022A-D and main steam line drain valve 1B21-F016 are independent of this fire zone.

H.4.2.37 Fire Zone 3K [redacted]

The main steam line and main steam line drain outboard containment isolation valves are located in this fire zone as shown on Table H.4-117. Adverse failure of the main steam system valves is not of concern because the inboard MSIV's 2B21-

F022A-D and main steam line drain valve 2B21-F016 are independent of this fire zone.

H.4.2.38 Fire Zone 4C1 [redacted]

Unit 1:

The safe shutdown equipment and cabling located in Fire Zone 4C1 are listed in Table H.4-50. As discussed in UFSAR section 7.4.4, for most control room fires the reactor can be brought to a hot shutdown condition from the remote shutdown panel in the auxiliary electric equipment room by the operation of 1B21-F013 H, K and P and RCIC system for decay heat removal and reactor water makeup; RHR Loop B is available for suppression pool cooling. Redundant reactor and suppression pool indications are on the remote shutdown panel independent of the control room. However, a control room fire affecting the operational capability of the auxiliary control panel 1PM01J which contains controls and logic for the Division 1 and Division 2 diesel-generators (DG), the associated DG output breaker, and the Division 1 and Division 2 ESF switchgear feed breakers for 480 volt substations could affect the safe shutdown of the reactor from the remote shutdown panel due to a loss of a-c power. Therefore, a local control capability, which is independent of the control room, is provided for these electrical controls. It provides the capability for safe shutdown of the reactor from the remote shutdown panel. A local transfer switch and a redundant set of control circuit fuses are provided for these safe shutdown circuits. The redundant fuses are switched into the control circuits when the transfer switches are placed in their positions for local operation. These redundant fuses maintain control circuit continuity to the safe shutdown switchgear feed breaker controls and D-G control circuits in accordance with IE Information Notice No. 85-09. The valve spurious operation analysis is discussed in Section H.4.6. Only a single spurious valve opening was postulated where two valves were in series except for valves at a high-low pressure piping interface where spurious opening of all valves is postulated. Measures taken to prevent or defeat adverse valve failures are summarized in Table H.4-111.

Two redundant scram discharge volume drain and vent lines are provided in each line. They are part of the highly reliable scram system. Therefore, adequate protection against spurious operation adverse to safe shutdown is provided.

A fault in cable 1DC034 will not affect operability of the 125 VDC system.

Unit 2:

The safe shutdown equipment and cabling located in Fire Zone 4C1 are listed in Table H.4-51. As discussed in UFSAR section 7.4.4, for most control room fires, the reactor can be brought to a hot shutdown condition from the remote shutdown panel in the auxiliary electric equipment room by the operation of 2B21-F013 H, K and P

and RCIC system for decay heat removal and reactor water makeup; RHR Loop B is available for suppression pool cooling. However, a control room fire affecting the operational capability of the auxiliary control panel 2PM01J which contains controls and logic for the Division 1 and Division 2 diesel-generators (DG), the associated DG output breaker, and the Division 1 and Division 2 ESF switchgear feed breakers for 480 volt substations could affect the safe shutdown of the reactor from the remote shutdown panel due to a loss of a-c power. Therefore, local control capability, which is independent of the control room, is provided for these electrical controls. It provides the capability for safe shutdown of the reactor from the remote shutdown panel located in the auxiliary electric equipment room (Fire Zone 4E2). With the exception of the Division 2 RHR B pump and associated RHR service water C and D pump breakers, the Division 2 RHR B pump and associated RHR service water C and D pump breakers are provided with a local transfer switch, but are not equipped with a redundant set of control circuit fuses at the safe shutdown switchgear. These transfer switches utilize the same set of control circuit fuses for remote and local operation. The valve spurious operation analysis is discussed in Section H.4.6. Only a single spurious valve opening was postulated where two valves were in series except for valves at a high-low pressure piping interface where spurious opening of all valves is postulated. Measures taken to prevent or defeat adverse valve failures are summarized in Table H.4-111.

Two redundant scram discharge volume drain and vent valves are provided in each line. They are part of the highly reliable scram system. Therefore, adequate protection against spurious operation adverse to safe shutdown is provided.

H.4.2.39 Fire Zone 4C2 [redacted]

The safe shutdown equipment and cabling located in Fire Zone 4C2 are listed in Table H.4-52. A fire in this zone could affect only components and cables of the basic shutdown method. Therefore, the alternate method, which is independent of this fire zone can be used to bring the reactor to a hot shutdown condition. Instrumentation to monitor reactor and suppression pool parameters is independent of this fire zone.

H.4.2.40 Fire Zone 4C3 [redacted]

The safe shutdown equipment and cabling located in Fire Zone 4C3 are listed in Table H.4-53. A fire in this zone could affect only components and cables of the basic shutdown method. Therefore, the alternate method, which is independent of this fire zone can be used to bring the reactor to a hot shutdown condition. Instrumentation to monitor reactor and suppression pool parameters is independent of this fire zone.

H.4.2.41 Fire Zone 4C4 [redacted]

The safe shutdown cabling located in Fire Zone 4C4 are listed in Table H.4-125. A fire in this zone could affect only cables necessary for both Unit 1 and Unit 2 Division 2 RHR Service Water flow indication from RHR Service Water C&D Pumps. Therefore, RCIC, HPCS, ADS Division 1, ADS Division 2 are available for decay heat removal. RHR Loop A is available for suppression pool cooling to assist in bringing the reactor to a hot shutdown. Additionally, the control operator can determine the status of RHR cooling Loop B capabilty by observing the indicating status lights on the main control boards for system pumps and valves.

Instrumentation to monitor reactor and suppression pool parameters is independent of this fire zone.

H.4.2.42 Fire Zone 4D1 [redacted]

Fire Zone 4D1 was divided into two subzones. Fire subzone 4D1-1 is the cable riser aisle and fire subzone 4D1-2 is the cable spreading area. These two subzones are separated by a 3-hour fire rated (concrete block) wall so that a fire in one subzone does not affect the other.

H.4.2.42.1 Fire Subzone 4D1-1

The safe shutdown equipment and cabling located in fire subzone 4D1-1 are listed in Table H.4-54. A fire in this subzone could affect only the RCIC system, RHR Loop A, and ADS Division 1. Therefore, HPCS and ADS Division 2 are available for decay heat removal and RHR Loop B is available for suppression pool cooling to assist in bringing the reactor to a hot shutdown condition.

Shielded cables prevent hot shorts from energizing the solenoids required to open the Division 1 ADS and SRV valves as well as SRV valve 1B21-F013S. Redundant reactor pressure and level indication on PR/LR 1B21-R884B and suppression pool temperature indication on 1TR-CM038 in the control room and suppression pool level indication on 1LI-CM030 on the remote shutdown panel are independent of this fire zone.

Adverse failure of main steam line drain valve cable is not of concern because redundant main steam line drain isolation valve 1B21-F016 is independent of this fire zone. Spurious operation of 1E12-F053B would not affect safe shutdown using RHR loop B. Spurious operation of reactor water sample valve 1B33-F020 would not affect safe shutdown. Adverse failure of RWCU system valve cables is not of concern because redundant RWCU system isolation valve 1G33-F001 is independent of this fire zone.

H.4.2.42.2 Fire Subzone 4D1-2

The safe shutdown equipment and cabling located in fire subzone 4D1-2 are listed in Table H.4-55. A fire in this subzone could only affect the RCIC system, RHR Loop B, and ADS Division 2. Therefore, HPCS and ADS Division 1 are available for decay heat removal and reactor water makeup; RHR Loop A is available for suppression pool cooling in order to bring the reactor to a hot shutdown condition.

Redundant reactor pressure and level indication on PR/LR 1B21-R884A and suppression pool temperature indication on 1TI-CM037 on the remote shutdown panel and suppression pool level indication on 1LI-CM032 and 1LR-CM028 in the control room are independent of this fire zone.

Shielded cables prevent hot shorts from energizing the solenoids required to open the Division 2 ADS valves. Adverse failure of main steam line drain valve cable is not of concern because redundant main steam line valve 1B21-F019 is independent of this fire zone. Spurious operation of nitrogen steam isolation valves 1IN100 and 1IN101 will not affect safe shutdown. Spurious operation of reactor water sample valve 1B33-F019 will not affect safe shutdown. Spurious operation of MO-1E12-F099A will not affect safe shutdown using RHR loop A. Reactor water inventory loss by simultaneous spurious operation of head vent valves 1B21-F001 and 1B21-F002 is prevented by removing power to one of these valves. Adverse failure of RWCU system valve cable is not of concern because redundant RWCU isolation valve 1G33-F004 is independent of this fire zone. Two redundant scram discharge volume drain and vent valves are provided in each line. They are part of the highly reliable scram system. Therefore, adequate protection against spurious operation adverse to safe shutdown is provided.

H.4.2.43 Fire Zone 4D2 [redacted]

The safe shutdown equipment and cabling located in Fire Zone 4D2 are listed in Table H.4-56. A fire in this zone could only affect the RCIC system, RHR Loop B, and ADS Division 2. Unit 2 Division 3 safety-related cables 2HP021 and 2HP022 are protected by a one-hour fire wrap with automatic detection and suppression such that the function of HPCS valve 2E22-F004 may be credited given a fire in this zone. Therefore, HPCS and ADS Division 1 are available for decay heat removal and reactor water makeup; RHR Loop A is available for suppression pool cooling in order to bring the reactor to a hot shutdown condition.

Shielded cables prevent hot shorts from energizing the solenoids required to open the Division 2 ADS as well as SRV valve 2B21-F013S. Adverse failure of main steam line valve cable is not of concern because redundant main steam line valve 2B21-F019 is independent of this fire zone. Spurious operation of N2 isolation Valves 2IN100 and 2IN101 will not affect safe shutdown. Spurious operation of reactor water sample valve 2B33-F019 will not affect safe shutdown. Spurious operation of MO-2E12-F099A will not affect safe shutdown using RHR loop A.

Reactor water inventory loss by simultaneous spurious operation of head vent valves 2B21-F001 and 2B21-F002 is prevented by removing power to one of these valves. Adverse failure of RWCU system valve cables is not of concern because redundant RWCU isolation valve 2G33-F004 is independent of this fire zone.

Redundant reactor pressure and level indication on PR/LR 2B21-R884A and suppression pool temperature indication on 2TI-CM037 on the remote shutdown panel and suppression pool level indication on 2LI-CM032 in the control room are independent of this fire zone.

Two redundant scram discharge volume drain and vent valves are provided in each line. They are part of the highly reliable scram system. Therefore, adequate protection against spurious operation adverse to safe shutdown is provided.

H.4.2.44 Fire Zone 4D3 [redacted]

The safe shutdown equipment and cabling located in Fire Zone 4D3 are listed in Table H.4-57. A fire in this zone could affect only RHR Loop B and ADS Division 2. Therefore, both HPCS and RCIC, and ADS Division 1 are available for decay heat removal and reactor water makeup. RHR Loop A is available for suppression pool cooling to assist in bringing the reactor to a hot shutdown condition. The HPCS cables are embedded in the wall and are protected from fire in the fire zone.

Shielded cables prevent hot shorts from energizing the solenoids required to open the Division 2 ADS valves. Adverse failure of main steam line valve cables is not of concern because redundant main steam line valve 1B21-F019 is independent of this fire zone. Spurious operation of N2 isolation valves 1IN100 and 1IN101 will not affect safe shutdown. Spurious operation of reactor water sample valve 1B33-F019 will not affect safe shutdown. Spurious operation of valve 1E12-F099A will not affect safe shutdown using RHR loop A. Reactor water inventory loss by simultaneous spurious operation of head vent valves 1B21-F001 and 1B21-F002 is prevented by removing power to one of these valves.

Redundant reactor pressure and level indication on PR/LR 1B21-R884A and suppression pool temperature indication on 1TI-CM037 on the remote shutdown panel and suppression pool level indication on 1LI-CM032 and 1LR-CM028 are independent of this fire zone.

Two redundant scram discharge volume drain and vent valves are provided in each line. They are part of a highly reliable scram system. Therefore, adequate protection against spurious operation adverse to safe shutdown is provided.

H.4.2.45 Fire Zone 4D4 [redacted]

The safe shutdown equipment and cabling located in Fire Zone 4D4 are listed in Table H.4-58. A fire in this zone could affect only RCIC, RHR Loop A, and ADS Division 1. Therefore, HPCS and ADS Division 2 are available for decay heat removal and reactor water makeup. RHR Loop B is available for suppression pool cooling to assist in bringing the reactor to a hot shutdown condition. The HPCS cables are embedded in the wall and are protected from fire in the fire zone.

Shielded cables prevent hot shorts from energizing the solenoids required to open the Division 1 ADS and SRV valves as well as SRV valve 2B21-F013S. Adverse failure of main steam line drain valve cable is not of concern because redundant main steam line drain isolation valve 2B21-F016 is independent of this fire zone. Spurious operation of 2E12-F053B would not affect safe shutdown using RHR loop B. Spurious operation of reactor water sample valve 2B33-F020 would not affect safe shutdown. Adverse failure of RWCU system valve cable is not of concern because redundant RWCU system isolation valve 2G33-F001 is independent of this fire zone.

Redundant reactor pressure and level indication PR/LR 2B21-R884B and suppression pool temperature indication on 2TR-CM038 in the control room and suppression pool level indication on 2LI-CM030 on the remote shutdown panel are independent of this fire zone.

Two redundant scram discharge volume drain and vent valves are provided in each line. They are part of the highly reliable scram system. Therefore, adequate protection against spurious operation adverse to safe shutdown is provided.

H.4.2.46 Fire Zone 4E1 [redacted]

Fire Zone 4E1 will be divided into two subzones by a 3-hour fire rated barrier so that a fire in one subzone does not affect the other. The barrier contains a UL labeled (3-hour rated) steel roll-up type fire door, which is normally open, equipped with fusible thermal links in the event of a fire. The barrier also contains a large fire damper. The location of this barrier is shown in Figure H.4-1. Fire subzone 4E1-1 is located to the left of this barrier and fire subzone 4E1-2 is located to the right of this barrier.

H.4.2.46.1 Fire Subzone 4E1-1

The safe shutdown equipment and cabling located in fire subzone 4E1-1 are listed in Table H.4-59. A fire in this subzone could only affect the RCIC system, RHR Loop B, and ADS Division 2. Therefore, HPCS and ADS Division 1 are available for decay

heat removal and reactor water makeup. RHR Loop A is available for suppression pool cooling to assist in bringing the reactor to a hot shutdown condition.

Redundant reactor pressure and level indication on PR/LR 1B21-R884A and suppression pool level indication on 1LI-CM032 and 1LR-CM028 in the control room is independent of this fire zone.

The valve spurious operation analysis is discussed in Section H.4.6. Only a single spurious valve opening was postulated where two valves were in series except for valves at a high-low pressure interface where spurious opening of all valves is postulated. Measures taken to prevent or defeat adverse valve failures are summarized in Table H.4-111. Additionally, shielded cables prevent hot shorts from energizing the solenoids required to open the Division 2 ADS and SRV valves as well as SRV valve 1B21-F013S.

H.4.2.46.2 Fire Subzone 4E1-2

The safe shutdown equipment and cabling located in fire subzone 4E1-2 are listed in Table H.4-60. The remote shutdown panel is located in this fire subzone. Equipment and cables for the remote shutdown panel are indicated in Tables H.4-60 and H.4-69 by the letters RSP. The isolation of these circuits from the control room is illustrated on the electrical schematics. A fire in this subzone could affect the RCIC system, ADS Division 1, RHR Loop A, and RHR Loop B. This would leave the HPCS and ADS Division 2 available for decay heat removal and reactor water makeup. Such a postulated fire could affect the suppression pool cooling mode of both RHR A and B. Therefore, (1) separate controls are provided for the RHR B pump and the RHR 1C and 1D service water pumps to make them independent of fire subzone 4E1-2, (2) All RHR Loop B valves can be manually operated, and (3) RHR Service Water Loop B Pump operation can be verified at the local pressure indicator at the pump discharge. Thus RHR Loop B will be available for suppression pool cooling.

Redundant reactor pressure and level indication on PR/LR 1B21-R884B, suppression pool temperature indication on 1TR-CM038 and suppression pool level indication on 1LI-CM032 and 1LR-CM028 are independent of this fire zone.

The valve spurious operation analysis is discussed in Section H.4.6 and below. Only a single spurious valve opening was postulated where two valves were in series except for valves at a high-low pressure interface where spurious opening of all valves is postulated. Measures taken to prevent or defeat adverse failure are summarized in Table H.4-111.

To prevent the possibility that a fire at the remote shutdown panel or at the main control room (Section H.4.2.38) could cause spurious opening of both RHR suction cooling line isolation valves 1E12-F008 and 1E12-F009 while the reactor is at operating pressure and thereby expose low pressure RHR piping to reactor

pressure, the motor control center circuit breaker furnishing both motive and control power for valve 1E12-F008 will be locked to prevent spurious operation when the reactor is at operating pressure and temperature. A separate power supply is furnished for the indicating lights of valve 1E12-F008. Note than since these two isolation valves (1E12-F008 and 1E12-F009) are in series, only one of the two valves must have its associated power supply removed to eliminate the possibility that a fire could cause both valves to open simultaneously and thus expose the low pressure RHR piping to reactor pressure.

The primary safety objective of this modification is to prevent intersystem LOCA: wherever leakage through valves which isolate the reactor coolant pressure boundary (RCPB) may overpressurize a low pressure system. A satisfactory basis for resolving this issue on LaSalle was established with the Mechanical Engineering Branch (MEB). The LaSalle design provisions for preventing adverse effects from intersystem leakages, and the methods for detecting and testing for these leakages have been thoroughly reviewed with the NRC-MEB.

Additionally, a shielded cable in the Remote Shutdown Panel (RSP) 1C61-P001 prevents a hot short from energizing SRV's 1B21-F013H, 1B21-F013K and 1B21-F013P.

H.4.2.47 Fire Zone 4E2 [redacted]

Fire Zone 4E2 will be divided into two subzones by a 3-hour fire rated barrier so that a fire in one subzone does not affect the other. The barrier contains a UL labeled (3-hour rated) steel roll-up type fire door, which is normally open, equipped with fusible thermal links in the event of a fire. The barrier also contains a large fire damper. This barrier will separate the following Division 1 panels which are necessary for safe shutdown from the rest of the fire zone: 2H13-P628, 2H13-P621, and 2H13-P629. The barrier will run north-south from Column-Row 17 along a line just west of the door in the north wall of the room to Column-Row 16, and east-west along Column-Row 16 to the west wall. Fire subzone 4E2-1 will be the area in the north-west corner of the AEER containing the panels listed above. Fire subzone 4E2-2 will be the rest of the AEER.

H.4.2.47.1 Fire Subzone 4E2-1

The safe shutdown equipment and cabling located in fire subzone 4E2-1 are listed in Table H.4-61. A fire in this subzone could only affect the RCIC system, RHR Loop A, and ADS Division 1. Therefore, HPCS and ADS Division 2 are available for decay heat removal and reactor water makeup. RHR Loop B is available for suppression pool cooling to assist in bringing the reactor to a hot shutdown.

Redundant reactor pressure and level indication and suppression pool temperature indication is independent of this fire zone.

Suppression pool level indication on 2LR-CM028 in the control room is independent of this fire zone.

The valve spurious operation analysis is discussed in Section H.4.6. Only a single spurious valve opening was postulated where two valves were in series except for valves at a high-low pressure interface where spurious opening of all valves is postulated. Measures taken to prevent or defeat adverse valve failure are summarized in Table H.-111. Additionally, shielded control cables prevent hot shorts from energizing the solenoids required to open the Division 1 ADS and SRV valves as well as SRV valve 2B21-F013S. Also, a shielded cable in the RSP 1C61-P001 prevents a hot short from energizing SRV's 1B21-F013H, 1B21-F013K and 1B21-F013P.

H.4.2.47.2 Fire Subzone 4E2-2

The safe shutdown equipment and cabling located in fire subzone 4E2-2 are listed in Table H.4-62. The remote shutdown panel (RSP) is located in this fire subzone. Equipment and cables for the remote shutdown panel are indicated in Tables H.4-62 and H.4-70. The isolation of these circuits from the control room is illustrated on the electrical schematics. A fire in this subzone could affect the RCIC system, ADS Division 2, SRV Division 1, RHR Loop A, and RHR Loop B. Therefore, HPCS is available for reactor water makeup. Only three SRV Division 1 valves are on the RSP, therefore, ADS Division 1 valves are available for decay heat removal. The only RHR Loop A cables or equipment in this subzone necessary for safe shutdown is a flow indicator circuit on panel 2H13-P612. The control room operator can determine the status of RHR cooling capability by observing the indicating lights on the main control room panel 2H13-P601 for the RHR pump A and RHR service water pumps A and B, which will indicate that the pumps are running. In an event of failure of the flow indicator circuit due to a fire in this subzone, the control room operator can determine whether the flow has been established by monitoring the RHR pump A motor amperes on Amp Meter 2E12A-M1. The control circuitry of these pumps/indicating lights/amp meter is independent of the equipment installed in the auxiliary electrical equipment room. As discussed previously, the only RHR Loop A cables or equipment in this subzone is the flow indicator circuit. The control circuitry of valves associated with RHR Loop is not in this subzone and thereby independent of the equipment installed in the auxiliary electrical equipment room.

Therefore, RHR Loop A is available for suppression pool cooling to assist in bringing the reactor to a hot shutdown.

The valve spurious operation analysis is discussed in Section H.4.6 and below. Only a single spurious valve opening was postulated where two valves were in series except for valves at a high-low pressure interface where spurious opening of all valves is postulated. Measures taken to prevent or defeat adverse valve failures are

summarized in Table H.4-111. Shielded control cables prevent hot shorts from energizing the solenoids required to open the Division 2 ADS and Division 1 SRV valves as well as SRV valve 2B21-F013S.

To prevent the possibility that a fire at the remote shutdown panel or at the main control room (section H.4.2.38) could cause spurious opening of both RHR suction cooling line isolation valves 2E12-F008 and 2E12-F009 while the reactor is at operating pressure and thereby expose low pressure RHR piping to reactor pressure, the power supply to valve 2E12-F008 will be locked such that the valve cannot be opened spuriously when the reactor is at operating pressure and temperature. A separate power supply is furnished for the indicating lights of valve 2E12-F008. Note that since these two isolation valves (2E12-F008 and 2E12-F009) are in series, only one of the two valves must have its associated power supply removed to eliminate the possibility that a fire could cause both valves to open simultaneously and thus expose the low pressure RHR piping to reactor pressure.

The primary safety objective of this modification is to prevent intersystem LOCA: wherein leakage through valves which isolate the reactor coolant pressure boundary (RCPB) may overpressurize a low pressure system. A satisfactory basis for resolving this issue on LaSalle was established with the Mechanical Engineering Branch (MEB). The LaSalle design provisions for preventing adverse affects from intersystem leakages and the methods for detecting and testing for these leakages have been thoroughly reviewed by the NRC-MEB.

Redundant suppression pool indication is independent of this fire area. See Subsection H.4.4.1 and H.4.4.2 for Reactor Vessel indication.

H.4.2.48 Fire Zone 4E3 [redacted]

Fire Zone 4E3 was divided into two subzones. Fire subzone 4E3-1 is the cable riser aisle located between building column rows 13 and 15 and fire subzone 4E3-2 is the remainder of the essential switchgear room. Cabling in cable trays 372B (1BC), 372C (1BC), and 372D (1BD) in fire subzone 4E3-2 approaches within 12 feet of riser R-133 in fire subzone 4E3-1. Therefore, fire subzones 4E3-1 and 4E3-2 will be separated by a 3-hour rated fire barrier with a 3-hour fire door.

H.4.2.48.1 Fire Subzone 4E3-1

The safe shutdown equipment and cabling located in this fire subzone are listed in Table H.4-63. A fire in this subzone could affect only the RCIC system, RHR Loop A, and ADS Division 1 and the Unit 1 Division 1 SRV Bypass Switch for SRV's 1B21-F013H, 1B21-F013K and 1B21-F013P. Therefore, HPCS and ADS Division 2 are available for decay heat removal and reactor water makeup. RHR Loop B is available for suppression pool cooling to assist in bringing the reactor to a hot shutdown condition.

Redundant reactor pressure and level indication on PR/LR 1B21-R884B and suppression pool temperature indication on 1TR-CM038 in the control room and suppression pool level indication on 1LI-CM030 on the remote shutdown panel are independent of this fire zone.

Shielded cables prevent hot shorts from energizing the solenoids required to open the Division 1 ADS and SRV valves as well as SRV valve 1B21-F013S, 1B21-F013P and 1B21-F013K and 1B21-F013H. Adverse failure of main steam line valve cables is not of concern because redundant main steam line drain isolation valve 1B21-F016 is independent of this fire zone. Spurious operation of valve1E12-F053B would not affect safe shutdown using RHR loop B. Spurious operation of reactor sample valve 1B33-F020 would not affect safe shutdown. Adverse failure of RWCU system valve cables is not of concern because redundant RWCU system isolation valve 1G33-F001 is independent of this fire zone.

H.4.2.48.2 Fire Subzone 4E3-2

The safe shutdown equipment and cabling located in this fire subzone are listed in Table H.4-64. A fire in this subzone could affect only the RCIC system, RHR Loop B and ADS Division 2. The d-c control power to the remote shutdown panel from the 125-Vdc electrical equipment in this fire zone has no effect on ADS Division 1. Therefore, HPCS and ADS Division 1 are available for decay heat removal and reactor water makeup. RHR Loop A is available for suppression pool cooling to assist in bringing the reactor to a hot shutdown condition.

Redundant reactor pressure and level indication on PR/LR 1B21-R884A and suppression pool temperature indication is independent of this fire zone.

Suppression pool level indication on 1LI-CM032 and 1LR-CM028 in the control room is independent of this fire zone.

Two redundant scram discharge volume drain and vent valves are provided in each line. They are part of the highly reliable scram system. Therefore, adequate protection against spurious operation adverse to safe shutdown is provided.

Shielded cables prevent hot shorts from energizing the solenoids required to open the Division 2 ADS valves. Adverse failure of main steam line drain valve cables is not of concern because main steam line drain valve 1B21-F019 is independent of this fire zone. Spurious operation of Reactor Water Sample Valve 1B33-F019 will not affect safe shutdown. Adverse failure of RWCU system isolation valve cables is not of concern because RWCU system isolation valve 1G33-F004 is independent of this fire zone.

H.4.2.49 Fire Zone 4E4 [redacted]

Fire Zone 4E4 was divided into two subzones. Fire subzone 4E4-1 is the Division 1 cable riser aisle located between building column rows L-N and 17-18 and fire subzone 4E4-2 is the remainder of the essential switchgear room. Fire subzones 4E4-1 and 4E4-2 will be separated by a 3-hour rated fire barrier with a 3-hour fire door.

H.4.2.49.1 Fire Subzone 4E4-1

The safe shutdown equipment and cabling located in this fire subzone are listed in Table H.4-65. A fire in this subzone could affect only the RCIC system, RHR Loop A, and ADS Division 1 and the Unit 2 Division 1 SRV Bypass Switch for SRV's 2B21-F013H, 2B21-F013K and 2B21-F013P. . Therefore, HPCS and ADS Division 2 are available for decay heat removal and reactor water makeup. RHR Loop B is available for suppression pool cooling to assist in bringing the reactor to a hot shutdown condition.

Redundant reactor pressure and level indication PR/LR 2B21-R884B and suppression pool temperature indication using 2TR-CM038 are independent of this fire zone.

Suppression pool level indication on 2LI-CM030 on the remote shutdown panel is independent of this fire zone.

Shielded cables prevent hot shorts from energizing the solenoids required to open the Division 1 ADS and SRV valves as well as SRV valve 2B21-F013S and 2B21-F013H, 2B21-F013K and 2B21-F013P. . Adverse failure of main steam line drain valve cables is not of concern because main steam line drain isolation valve 2B21-F016 is independent of this fire zone. Spurious operation of reactor water sample valve 2B33-F020 would not affect safe shutdown. Adverse failure of RWCU system valve cable is not of concern because RWCU system isolation valve 2G33-F001 is independent of this fire zone. Spurious operation of 2E12-F053B would not affect safe shutdown using RHR Loop B.

H.4.2.49.2 Fire Subzone 4E4-2

The safe shutdown equipment and cabling located in this fire subzone are listed in Table H.4-66. A fire in this subzone could affect only the RCIC system, RHR Loop B and ADS Division 2. The d-c control power to the remote shutdown panel from the 125-Vdc electrical equipment in this fire zone has no effect on ADS Division 1. Unit 2 Division 3 safety-related cables 2HP021 and 2HP022 are protected by a three-hour fire wrap such that the function of HPCS valve 2E22-F004 may be credited given a fire in this zone. Therefore, HPCS and ADS Division 1 are available for decay heat removal and reactor water makeup. RHR Loop A is available for suppression pool cooling to assist in bringing the reactor to a hot shutdown condition.

Redundant reactor pressure and level indication on PR/LR 2B21-R884A and suppression pool temperature indication is independent of this fire zone.

Suppression pool level indication on 2LR-CM028 in the control room is independent of this fire zone.

Shielded cables prevent hot shorts from energizing the solenoids required to open the Division 2 ADS as well as SRV valve 2B21-F013S. Adverse failure of main steam line valve cable is not of concern because main steam line drain isolation valve 2B21-F019 is independet of this fire zone. Spurious operation of valve 2E12-F099A will not affect safe shutdown using RHR loop A. Spurious operation of reactor water sample valve 2B33-F019 will not affect safe shutdown. Adverse failure of RWCU system valve cables is not of concern because redundant RWCU system isolation valve 2G33-F004 is independent of this fire zone.

H.4.2.50 Fire Zone 4F1 [redacted]

The safe shutdown equipment and cabling located in this fire zone are listed in Table H.4-67. A fire in this zone could affect only the RCIC system, RHR Loop A, and ADS Division 1. Therefore, HPCS and ADS Division 2 are still available for decay heat removal and reactor water makeup. A loss of the d-c control power feed from distribution d-c panel 111Y to the remote shutdown panel has no effect on RHR Loop B. Therefore, it is available for suppression pool cooling to assist in bringing the reactor to a hot shutdown condition. The HPCS cables are embedded in the wall and are therefore protected from fire in this fire zone.

Redundant reactor pressure and level indication on PR/LR 1B21-R844B and suppression pool temperature indication on 1TR-CM038 in the control room and suppression pool level indication on 1LI-CM030 on the remote shutdown panel are independent of this area.

H.4.2.51 Fire Zone 4F2 [redacted]

The safe shutdown equipment and cabling located in this fire zone are listed in Table H.4-68. A fire in this zone could affect only the RCIC system, RHR Loop A, and ADS Division 1. Therefore, HPCS and ADS Division 2 are still available for decay heat removal and reactor water makeup. A loss of 125-Vdc control power feed distribution d-c panel 211Y and 250-Vdc power feed from MCC 221Y to the remote shutdown panel has no effect on RHR Loop B. Therefore, it is available for suppression pool cooling to assist in bringing the reactor to a hot shutdown condition. The HPCS cables are embedded in the wall and are therefore protected from fire in this fire zone.

Redundant reactor pressure and level indication on PR/LR 2B21-R884B and suppression pool temperature indication on 2TR-CM038 in the control room and

suppression pool level indication on 2LI-CM030 on the remote shutdown panel are independent of this fire zone.

Shielded cables prevent hot shorts from energizing the solenoids required to open the Division 1 ADS and SRV valves. Adverse failure of main steam line drain valve cable is not of concern because main steam line drain isolation valve 2B21-F016 is independent of this fire zone. Spurious operation of valve 2E12-F053B will not affect safe shutdown using RHR loop B. Adverse failure of RWCU system valve cables is not of concern because redundant RWCU system isolation valve 2G33-F001 is independent of this fire zone.

H.4.2.52 Fire Zone 4F3 [redacted]

A. Unit 1

The safe shutdown equipment and cabling located in Fire Zone 4F3 are listed in Table H.4-69. A fire in this area could affect only the RCIC system, RHR Loop A, and ADS Division 1 and the Unit 1 Division 1 SRV Bypass Switch for SRV's 1B21-F013H, 1B21-F013K and 1B21-F013P. Loss of the d-c control power feed from MCC's 121Y and 111Y to the remote shutdown panel has no effect on the operation of RHR Loop B; therefore, it is still available for suppression pool cooling, and HPCS and ADS Division 2 are available for decay heat removal and reactor water makeup to assist in bringing the reactor to a hot shutdown condition.

Redundant reactor pressure and level indication on PR/LR 1B21-R884B and suppression pool temperature indication on 1TR-CM038 in the control room and suppression pool level indication on 1LI-CM030 on the remote shutdown panel are independent of this fire zone.

Shielded cables prevent hot shorts from energizing the solenoids required to open the Division 1 ADS and SRV valves as well as SRV valve 1B21-F013S and 1B21-F013H, 1B21-F013K and 1B21-F013P. Adverse failure of main steam line drain valve cables is not of concern because main steam line drain isolation valve 1B21-F016 is independent of this fire zone. Spurious opration of valve 1E12-F053B will not affect safe shutdown using RHR loop B. Spurious operation of reactor water sample valve 1B33-F020 will not affect safe shutdown. Adverse failure of RWCU system valve cables is not of concern because RWCU system isolation valve 1G33-F001 is independent of this fire zone.

B. Unit 2:

The safe shutdown equipment and cabling located in Fire Zone 4F3 are listed in Table H.4-70. Unit 2 Division 3 safety-related cables 2HP021 and 2HP022 are protected by a three-hour fire wrap such that the function of HPCS valve 2E22-F004 may be credited given a fire in this zone. A fire in this area could affect only the RCIC system, RHR Loop A, and ADS Division 1 and the Unit 2 Division 1 SRV Bypass Switch for SRV's 2B21-F013H, 2B21-F013K and

2B21-F013P. Loss of the d-c control power feed from MCC 221Y and d-c distribution panel 211Y to the remote shutdown panel has no effect on the operation of RHR Loop B; therefore, it is still available for suppression pool cooling, and HPCS and ADS Division 2 are available for decay heat removal and reactor water makeup to assist in bringing the reactor to a hot shutdown condition.

Redundant reactor pressure and level indication PR/LR 2B21-R884B and suppression pool temperature indication on 2TR-CM038 in the control room is independent of this fire zone. Suppression pool level indication is independent of this fire zone.

Shielded cables prevent hot shorts from energizing the solenoids required to open the Division 1 ADS and SRV valves as well as SRV valve 2B21-F013S and SRV's 2B21-F013H, 2B21-F013K and 2B21-F013P.. Adverse failure of main steam line drain valve cables is not of concern because main steam line drain isolation valve 2B21-F016 is independent of this fire zone. Spurious operation of valve 2E12-F053B will not affect safe shutdown using RHR loop B. Spurious operation of reactor water sample valve 2B33-F020 will not affect safe shutdown. Adverse failure of RWCU system valve cable is not of concern because redundant RWCU system isolation valve 2G33-F001 is independent of this fire zone.

H.4.2.53 Fire Zone 5A4 [redacted]

A. Unit 1:

Cables to Unit 1 valves are located in this area as shown in Table H.4-118. The cables for RHR loop A are located in this fire zone. RHR B is available for suppression pool cooling. HPCS and ADS Division 1 and 2 are available for decay heat removal and reactor water makeup. The loss of RHR loop B service water pump flow indication and spurious operation of valve 1E12-F053B would not affect safe shutdown using RHR loop B for suppression cooling. See Section H.4.2.41 for an alternate way of determining pump status. Instrumentation to monitor reactor and suppression pool parameters is independent of this fire zone. Adverse failure of main steam line drain valve cable is not of concern because main steam line drain isolation valves of 1B21-F016 and 1B21-F019 are independent of this fire zone. Spurious operation of 1B33-F020 will not affect safe shutdown. Adverse failure of RWCU system valve cable is not of concern because RWCU system isolation valve 1G33-F001 is independent of this fire zone.

Two redundant scram discharge volume drain and vent valves are provided in each line. They are part of the highly reliable scram system. Therefore, adequate protection against spurious operation adverse to safe shutdown is provided.

B. Unit 2:

The safe shutdown and spurious operation cable and equipment located in this fire zone are listed in Table H.4-119. All systems are available for safe shut-down except RHR loop B service water flow indication. Adverse failure of main steam line isolation valves in cables is not of concern because main steam line isolation valves 2B21-F016 and 2B21-F019 are independent of this fire zone.

Two redundant scram discharge volume drain and vent valves are provided in each line. They are part of the highly reliable scram system. Therefore, adequate protection against spurious operation adverse to safe shutdown is provided.

H.4.2.54 Fire Zone 5B13

A. Unit 1:

No essential safe shutdown components are located in this zone.

Table H.4-120 shows that cable for valve 1B21-F021 is in this zone. Spurious operation of this valve will not affect safe shutdown because main steam line drain isolation valves 1B21-F016 and 1B21-F019 are independent of this fire zone.

Two redundant scram discharge volume drain and vent valves are provided in each line. They are part of the highly reliable scram system. Therefore, adequate protection against spurious operation adverse to safe shutdown is provided.

B. Unit 2:

No essential safe shutdown components are located in this zone.

Table H.4-121 shows cable to valve 2B21-F021 is in this zone. Spurious operation of this valve will not affect safe shutdown because main steam line drain isolation valves 2B21-F016 and 2B21-F019 are independent of this fire zone.

Two redundant scram discharge volume drain and vent valves are provided in each line. They are part of the highly reliable scram system. Therefore, adequate protection against spurious operation adverse to safe shutdown is provided.

H.4.2.55 Fire Zone 5C5 [redacted]

No essential safe shutdown components are located in this zone.

Table H.4-126 shows cable for valve 1B21-F021 is in this zone. Spurious operation of this valve will not affect safe shutdown because main steam line drain isolation valves 1B21-F016 and 1B21-F019 are independent of this fire zone.

H.4.2.56 Fire Zone 5C8 [redacted] in this zone. Table H.4-122 shows cable for valve 2B21-F021 is in this zone. Spurious operation of this valve will not affect safe shutdown because main steam line drain isolation valves 2B21-F016 and 2B21-F019 are independent of this fire zone.

H.4.2.57 Fire Zone 5C11 [redacted]

A. Unit 1:

The safe shutdown equipment and cabling located in Fire Zone 5C11 are listed in Table H.4-71. Of particular interest in this evaluation is the corridor separating the diesel-generator rooms (fire zones 7B1, 7B2, and 7B3) from the Division 1 and Division 2 essential switchgear rooms (fire zones 4F1 and 4E3). This corridor contains power and control cables for both Division 1 diesel generator and Division 2 diesel generator and for all four RHR service water pumps. Because of this close proximity, a destructive fire in this corridor could prevent bringing the reactor to a hot shutdown condition. A fire in the corridor, in addition to damaging the Division 1 cables, could damage the C02 panels and cables in the corridor, which could shutdown the ventilation system for the DG rooms. A 1 hour fire protection barrier has been applied to the cable tray crossing the corridor between the Division 2 standby diesel-generator room (fire zone 7B2) and the Division 2 ESF switchgear room (fire zone 4E3) and an automatic pre-action fire suppression system has been installed above the divisional cable trays in this corridor. Assuming, a fire (a) affects the Division 1 DG and RHR service water pumps 1A and 1B cables, (b) causes a spurious actuation of the CO2 system for the Division 2 DG room which results in a ventilation system shutdown and isolation, and (c) affects the CO2 or ventilation system cables for the Division 3 DG room which could result in a ventilation fan shutdown, will leave RCIC and ADS Division 2 available for decay heat removal and reactor water makeup and RHR Loop B available for suppression pool cooling in order to bring the reactor to a hot shutdown condition. Division 2 power will be restored by cross tieing the Unit 1 Div. 2 bus to the Unit 2 Div. 2 bus within 4 hours (i.e. The time RCIC is analyzed to operate without suppression pool cooling based on the Station Blackout Analysis, see UFSAR section 15.9.3). In addition, see attachment A of the suppression effects analysis in FPR section 6. A fire in the Division 2 diesel cabling, which could also affect RHR service water pumps 1C and 1D, will be contained within the cable tray by the fire protection barrier and will leave HPCS and ADS Division 1 available for decay heat removal and reactor water makeup and RHR Loop A available for suppression pool cooling in order to bring the reactor to a hot shutdown condition. Instrumentation to monitor reactor and suppression pool parameters is independent of this fire zone, except one cable of redundant reactor pressure indication on PR/LR 1B21-R884B.

Therefore redundant indication is available on reactor pressure and level indicator PR/LR 1B21-R884B.

Spurious operation of 1B21-F021 will not affect safe shutdown because main steam drain line isolation valves 1B21-F016 and 1B21-F019 are independent of this fire zone.

Two redundant scram discharge volume drain and vent valves are provided in each line. They are part of the highly reliable scram system. Therefore, adequate protection against spurious operation adverse to safe shutdown is provided.

B. Unit 2:

The safe shutdown equipment and cabling located in Fire Zone 5C11 are listed in Table H.4-72. Of particular interest in this evaluation is the corridor separating the diesel-generator rooms (fire zones 8B1 and 8B2), from the Division 1 and Division 2 essential switchgear rooms (fire zones 4F2 and 4E4-2). This corridor contains power and control cables for the Division 2 diesel generator and for all four RHR service water pumps. Because of this close proximity, a destructive fire in this corridor could prevent bringing the reactor to a hot shutdown condition. A fire in the corridor, in addition to damaging the Division 1 RHR service water pump cables, could damage the CO2 panels and cables in the corridor, which could shutdown the ventilation system for the DG rooms. A 1-hour fire protection barrier has been applied to the cable tray crossing the corridor between the Division 2 standby diesel-generator room (fire zone 8B2) and the Division 2 ESF switchgear room (fire zone 4E4-2) and an automatic Preaction water sprinkler has been installed above the divisional cable trays in this corridor. Assuming, a fire (a) affects the Division 1 RHR service water pumps 2A and 2B cables, (b) causes a spurious actuation of the CO2 system for the Division 2 DG room which results in a ventilation system shutdown and isolation, and (c) affects the CO2 or ventilation system cables for the Division 3 DG room which could result in a ventilation fan shutdown, will still leave RCIC and ADS Division 2 available for decay heat removal and reactor water makeup and RHR Loop B available for suppression pool cooling in order to bring the reactor to a hot shutdown condition. Division 2 power will be restored by cross tying the Unit 1 Div. 2 bus to the Unit 2 Div. 2 bus within 4 hours (i.e. The time RCIC is analyzed to operate without suppression pool cooling based on the Station Blackout Analysis, see UFSAR section 15.9.3). A fire in the Division 2 cable trays in the corridor, which could also affect RHR service water pumps 2C and 2D, will be contained within the cable tray by the fire protection barrier and will leave the HPCS and ADS Division 1 available for decay heat removal, and reactor water makeup and RHR Loop A available for suppression pool cooling in order to bring the reactor to a hot shutdown condition.

A fire in the turbine building ground floor area west at column row N and between column-rows 15-24 could affect the Division 1 battery room and power feed to Division 1 switchgear 241Y. Since the only Division 2 cable in this fire zone is

located in the corridor, and fire protected as explained above, HPCS and ADS Division 2 are still available for decay heat removal and reactor water makeup. RHR Loop B is available for suppression pool cooling to assist in bringing the reactor to a hot shutdown condition.

A fire in the Unit 2 corridor separating the Unit 2 diesel generator rooms from the switchgear rooms would affect only Unit 2 Division 1 cables. Therefore, HPCS and ADS Division 2 are still available for decay heat removal and reactor water makeup. RHR Loop B is available for suppression pool cooling to assist in bringing the reactor to a hot shutdown condition. Instrumentation to monitor reactor and suppression pool parameters is independent of this fire zone.

Spurious operation of 2B21-F021 will not affect safe shutdown because main steam drain line isolation valves 2B21-F016 and 2B21-F019 are independent of this fire zone.

Two redundant scram discharge volume drain and vent valves are provided in each line. They are part of the highly reliable scram system. Therefore, adequate protection against spurious operation adverse to safe shutdown is provided.

H.4.2.58 Fire Zone 5D1 [redacted]

The safe shutdown equipment and cabling located in Fire Zone 5D1 are listed in Table H.4-73. A fire in this zone could affect only components and cables associated with the basic shutdown method. Therefore, the alternate shutdown method, which is independent of this fire zone, can be used to bring the reactor to a hot shutdown condition. Instrumentation to monitor reactor and suppression pool parameters is independent of this fire zone.

H.4.2.59 Fire Zone 5D2 [redacted]

The safe shutdown equipment and cabling located in Fire Zone 5D2 are listed in Table H.4-74. A fire in this zone could affect only components and cables associated with the basic shutdown method. Therefore, the alternate shutdown method, which is independent of this fire zone, can be used to bring the reactor to a hot shutdown condition. Instrumentation to monitor reactor and suppression pool parameters is independent of this fire zone.

H.4.2.59a Fire Zone 5D5 [redacted]

The safe shutdown equipment and cabling located in Fire Zone 5D5 are listed in Table H.4-74a. A fire in this zone could affect only components and cables associated with this based shutdown method. Therefore, the alternate shutdown method, which is independent of this fire zone, can

be used to bring the reactor to a hot shutdown condition. Instrumentation to monitor reactor and suppression pool parameters is independent of this fire zone.

H.4.2.60 Fire Zone 7A1 [redacted]

The safe shutdown equipment and cabling located in Fire Zone 7A1 are listed in Table H.4-75. A fire in this zone could have an affect on components and cables associated with the basic shutdown method. Therefore, the alternate shutdown method, which is independent of this fire zone, can be used to bring the reactor to a hot shutdown condition. Instrumentation to monitor reactor and suppression pool parameters is independent of this fire zone.

H.4.2.61 Fire Zone 7A2 [redacted]

The safe shutdown and cabling located in Fire Zone 7A2 are listed in Table H.4-76. A fire in this area could affect only RHR Loop B and ADS Division 2. Therefore, HPCS, RCIC, and ADS Division 1 are available for decay heat removal and reactor water makeup. RHR Loop A is available for suppression pool cooling to assist in bringing the reactor to a hot shutdown condition. Instrumentation to monitor reactor and suppression pool parameters is independent of this fire zone.

H.4.2.62 Fire Zone 7A3 [redacted]

The safe shutdown equipment and cabling located in Fire Zone 7A3 is listed in Table H.4-77. A fire in this area could affect only the RCIC system, RHR Loop A, and ADS Division 1. Therefore, HPCS and ADS Division 2 are available for decay heat removal and reactor water makeup. RHR Loop B is available for suppression pool cooling to assist in bringing the reactor to a hot shutdown condition. Instrumentation to monitor reactor and suppression pool parameters is independent of this fire zone.

H.4.2.63 Fire Zone 7B1 [redacted]

The safe shutdown equipment and cabling located in Fire Zone 7B1 are listed in Table H.4-78. A fire in this zone could affect only components and cables associated with the basic shutdown method. Therefore, the alternate shutdown method, which is independent of this fire zone, can be used to bring the reactor to a hot shutdown condition. Instrumentation to monitor reactor and suppression pool parameters is independent of this fire zone.

H.4.2.64 Fire Zone 7B2 [redacted]

The safe shutdown equipment and cabling located in Fire Zone 7B2 are listed in Table H.4-79. A fire in this zone could affect only the RHR Loop B, and ADS Division 2. Therefore, both HPCS and the RCIC system and ADS Division 1 are available for decay heat removal and reactor water makeup. RHR Loop A is available for suppression pool cooling to assist in bringing the reactor to a hot shutdown condition. Instrumentation to monitor reactor and suppression pool parameters is independent of this fire zone.

H.4.2.65 Fire Zone 7B3 [redacted]

The safe shutdown equipment and cabling located in Fire Zone 7B3 are listed in Table H.4-80. A fire in this zone could affect only the RCIC system (the RCIC water leg pump only), RHR Loop A and ADS Division 1. Therefore, HPCS and ADS Division 2 are available for decay heat removal and reactor water makeup. RHR Loop B is available for suppression pool cooling to assist in bringing the reactor to a hot shutdown condition. Instrumentation to monitor reactor and suppression pool parameters is independent of this fire zone.

H.4.2.66 Fire Zone 7B4 [redacted]

The safe shutdown equipment and cabling located in Fire Zone 7B4 are listed in Table H.4-81. A fire in this zone could affect only the HPCS. Therefore, the alternate shutdown method, which is independent of this fire zone, can be used to bring the reactor to a hot shutdown condition. Instrumentation to monitor reactor and suppression pool parameters is independent of this fire zone.

H.4.2.67 Fire Zone 7B5 [redacted]

The safe shutdown equipment and cabling located in Fire Zone 7B5 are listed in Table H.4-82. A fire in this zone could affect only the RHR Loop B and ADS Division 2. Therefore, both HPCS and the RCIC system and ADS Division 1 are available for decay heat removal and reactor water makeup. RHR Loop A is available for suppression pool cooling to assist in bringing the reactor to a hot shutdown condition. Instrumentation to monitor reactor and suppression pool parameters is independent of this fire zone.

H.4.2.68 Fire Zone 7B6 [redacted]

The safe shutdown equipment and cabling located in Fire Zone 7B6 are listed in Table H.4-83. A fire in this zone could affect only the RCIC system (the RCIC water leg pump only), RHR Loop A and ADS Division 1. Therefore, HPCS and ADS

Division 2 are available for suppression pool cooling to assist in bringing the reactor to a hot shutdown condition. Instrumentation to monitor reactor and suppression pool parameters is independent of this fire zone.

H.4.2.69 Fire Zone 7C1 [redacted]

The safe shutdown equipment and cabling located in Fire Zone 7C1 are listed in Table H.4-84. A fire in this zone could affect only components and cables associated with the basic shutdown method. Therefore, the alternate shutdown method, which is independent of this fire zone, can be used to bring the reactor to a hot shutdown condition. Instrumentation to monitor reactor and suppression pool parameters is independent of this fire zone.

H.4.2.70 Fire Zone 7C2 [redacted]

The safe shutdown equipment and cabling located in Fire Zone 7C2 are listed in Table H.4-85. A fire in this zone could affect only the RHR Loop B and ADS Division 2. Therefore, both HPCS and the RCIC system and ADS Division 1 are available for decay heat removal and reactor water makeup. RHR Loop A is available for suppression pool cooling to assist in bringing the reactor to a hot shutdown condition. Instrumentation to monitor reactor and suppression pool parameters is independent of this fire zone.

H.4.2.71 Fire Zone 7C3 [redacted]

The safe shutdown equipment and cabling located in Fire Zone 7C3 are listed in Table H.4-86. A fire in this zone could affect only the RCIC system (the RCIC water leg pump only), RHR Loop A, and ADS Division 1. Therefore, HPCS and ADS Division 2 are available for decay heat removal and reactor water makeup. RHR Loop B is available for suppression pool cooling to assist in bringing the reactor to a hot shutdown condition. Instrumentation to monitor reactor and suppression pool parameters is independent of this fire zone.

H.4.2.72 Fire Zone 7C4 [redacted]

The safe shutdown equipment and cabling located in Fire Zone 7C4 are listed in Table H.4-87. A fire in this zone could affect only components and cables associated with the basic shutdown method. Therefore, the alternate shutdown method, which is independent of this fire zone, can be used to bring the reactor to a hot shutdown condition. Instrumentation to monitor reactor and suppression pool parameters is independent of this fire zone.

H.4.2.73 Fire Zone 7C5 [redacted]

The safe shutdown equipment and cabling located in Fire Zone 7C5 are listed in Table H.4-88. A fire in this area could affect only the RHR Loop B and ADS Division 2. Therefore, both HPCS and the RCIC system and ADS Division 1 are available for decay heat removal and reactor water makeup. RHR Loop A is available for suppression pool cooling to assist in bringing the reactor to a hot shutdown condition. Instrumentation to monitor reactor and suppression pool parameters is independent of this fire zone.

H.4.2.74 Fire Zone 7C6 [redacted]

The safe shutdown equipment and cabling located in Fire Zone 7C6 are listed in Table H.4-89. A fire in this area could only have an affect on the RCIC system (the RCIC water leg pump only), RHR Loop A, and ADS Division 1. Therefore, HPCS and ADS Division 2 are available for decay heat removal and reactor water makeup. RHR Loop B is available for suppression pool cooling to assist in bringing the reactor to a hot shutdown condition. Instrumentation to monitor reactor and suppression pool parameters is independent of this fire zone.

H.4.2.75 Fire Zone 8A1 [redacted]

The safe shutdown equipment and cabling located in Fire Zone 8A1 are listed in Table H.4-90. A fire in this zone could have an affect on components and cables associated with the basic shutdown method. Therefore, the alternate shutdown method, which is independent of this fire zone, can be used to bring the reactor to a hot shutdown condition. Instrumentation to monitor reactor and suppression pool parameters is independent of this fire zone.

H.4.2.76 Fire Zone 8A2 [redacted]

The safe shutdown equipment and cabling located in Fire Zone 8A2 are listed in Table H.4-91. A fire in this area could affect only RHR Loop B and ADS Division 2. Therefore, HPCS, RCIC, and ADS Division 1 are available for decay heat removal and reactor water makeup. RHR Loop A is available for suppression pool cooling to assist in bringing the reactor to a hot shutdown condition. Instrumentation to monitor reactor and suppression pool parameters is independent of this fire zone.

H.4.2.77 Fire Zone 8B1 [redacted]

The safe shutdown equipment and cabling located in Fire Zone 8B1 are listed in Table H.4-92. A fire in this zone could affect only the components and cables associated with the basic shutdown method. Therefore, the alternate shutdown method, which is independent of this fire zone, can be used to bring the reactor to a hot shutdown condition. Instrumentation to monitor reactor and suppression pool parameters is independent of this fire zone.

H.4.2.78 Fire Zone 8B2 [redacted]

The safe shutdown equipment and cabling located in Fire Zone 8B2 are listed in Table H.4-93. A fire in this zone could affect only the RHR Loop B and ADS Division 2. Therefore, both HPCS and the RCIC system and ADS Division 1 are available for decay heat removal and reactor water makeup. RHR Loop A is available for suppression pool cooling to assist in bringing the reactor to a hot shutdown condition. Instrumentation to monitor reactor and suppression pool parameters is independent of this fire zone.

H.4.2.79 Fire Zone 8B3 [redacted]

The safe shutdown equipment and cabling located in Fire Zone 8B3 are listed in Table H.4-94. A fire in this zone could affect only the HPCS which is part of the basic shutdown method. Therefore, the alternate shutdown method, which is independent of this fire zone, can be used to bring the reactor to a hot shutdown condition. Instrumentation to monitor reactor and suppression pool parameters is independent of this fire zone.

H.4.2.80 Fire Zone 8B4 [redacted]

The safe shutdown equipment and cabling located in Fire Zone 8B4 are listed in Table H.4-95. A fire in this zone could affect only the RHR Loop B and ADS Division 2. Therefore, both HPCS and the RCIC system and ADS Division 1 are available for decay heat removal and reactor water makeup. RHR Loop A is available for suppression pool cooling to assist in bringing the reactor to a hot shutdown condition. Instrumentation to monitor reactor and suppression pool parameters is independent of this fire zone.

H.4.2.81 Fire Zone 8C1 [redacted]

The safe shutdown equipment and cabling located in Fire Zone 8C1 are listed in Table H.4-96. A fire in this zone could affect only components and cables associated with the basic shutdown method. Therefore, the alternate shutdown method, which

is independent of this fire zone, can be used to bring the reactor to a hot shutdown condition. Instrumentation to monitor reactor and suppression pool parameters is independent of this fire zone.

H.4.2.82 Fire Zone 8C2 [redacted]

The safe shutdown equipment and cabling located in Fire Zone 8C2 are listed in Table H.4-97. A fire in this zone could affect only the RHR Loop B and ADS Division 2. Therefore, both HPCS and RCIC system and ADS Division 1 are available for decay heat removal and reactor water makeup. RHR Loop A is available for suppression pool cooling to assist in bringing the reactor to a hot shutdown condition. Instrumentation to monitor reactor and suppression pool parameters is independent of this fire zone.

H.4.2.83 Fire Zone 8C3 [redacted]

The safe shutdown equipment and cabling located in Fire Zone 8C3 are listed in Table H.4-98. A fire in this zone could affect only components and cables associated with the basic shutdown method. Therefore, the alternative shutdown method, which is independent of this fire zone, can be used to bring the reactor to a hot shutdown condition. Instrumentation to monitor reactor and suppression pool parameters is independent of this fire zone.

H.4.2.84 Fire Zone 8C4 [redacted]

The safe shutdown equipment and cabling located in Fire Zone 8C4 are listed in Table H.4-99. A fire in this area could affect only the RHR Loop B and ADS Division 2. Therefore, both HPCS and the RCIC system and ADS Division 1 are available for decay heat removal and reactor water makeup. RHR Loop A is available for suppression pool cooling to assist in bringing the reactor to a hot shutdown condition. Instrumentation to monitor reactor and suppression pool parameters is independent of this fire zone.

H.4.2.85 Fire Zone 8C5 [redacted]

The safe shutdown equipment and cabling located in Fire Zone 8C5 are listed in Table H.4-100. A fire in this area could only have an affect on RHR Loop A. Therefore, HPCS and ADS Division 1 and 2 are available for decay heat removal and reactor water makeup. RHR Loop B is available for suppression pool cooling to assist in bringing the reactor to a hot shutdown condition. Instrumentation to monitor reactor and suppression pool parameters is independent of this fire zone.

H.4.2.86 Unit 1 Fire Zones Containing Unit 2 Cables and Components

The Unit 1 fire zones 2G, 4F1, 7A3, 7B3, 7B6, 7C3, and 7C6 contain Unit 2 cables which are necessary for operation of diesel generator "O" which feeds electrical Division 1 in Unit 2. A fire in each of these fire zones could affect RCIC, ADS Division 1, and RHR Loop A. Therefore, HPCS and ADS Division 2 are available for decay heat removal, and reactor water makeup; RHR Loop B is available for suppression pool cooling to assist in bringing the reactor to a hot shutdown. Instrumentation to monitor reactor and suppression pool parameters is independent of this fire zone.

H.4.2.87 Auxiliary Building [redacted]

[redacted]

[redacted]

[redacted]

[redacted]

[redacted]

[redacted]

[redacted]

H.4.3 Ventilation

H.4.3.1 Unit 1 and Unit 2 [redacted] Ventilation System

[redacted]

A fire in Fire Zone 4C1 would not affect the AEER ventilation as no AEER ventilation system components or cables are located in this zone. Therefore, reactor shutdown from the remote shutdown panel in the AEER could still be accomplished.

[redacted]

[redacted]

These components and their respective separations are listed in Table H.4-102. This table also indicates which ventilation system is most likely to be available for safe shutdown following a fire affecting any of these components. In the event a fire does disable both ventilation systems, 8 to 10 hours (5 to 7 hours for 4E2-2) are available to restore ventilation to the AEER before the temperature in the room exceeds design limits.

The local control panels for the auxiliary electric equipment room ventilation system 0PL42J and 0PL43J are separated by 65 feet which is a sufficient distance to prevent them from being affected by the same fire, thus at least one panel will always be available. Fire damaged cable to the ventilation equipment can easily be replaced and the return air isolation dampers repaired within this time period in order to restore ventilation.

The 8 to 10 hour time period can be further extended by turning off additional lighting and deenergizing unnecessary BOP equipment panels. Therefore, the plant can still be brought to a safe shutdown condition in spite of a fire in the lower ventilation equipment floor.

Further analysis for any other components noted in Table H.4-102 is not required because a greater than 20 foot separation distance exists between any of these components and the components necessary to operate at least one ventilation system. Therefore, either the control room or the AEER will always be available to perform a safe shutdown of the reactor.

Fire Zone 5B13 contains cables for both AEER ventilation trains. The Train A and B cables are separated by a 2-hour rated wall with a 1 1/2-hour door as shown in UFSAR figure 9.5-1, Sheets 17 of 41 and 18 of 41. Therefore, both trains of control room ventilation and at least one train of AEER ventilation would be available for safe shutdown in the event of a fire in this zone. As stated above, 8 to 10 hours are available to restore ventilation to the AEER before the temperature in the room exceeds design limits.

H.4.3.2 Other Safe Shutdown Systems

Table H.4-5 identifies the safe shutdown ventilation system in addition to the control room and AEER ventilation discussed in Subsection H.4.3.1. Control and power cables to the fans identified in Table H.4-6 were included in the analysis. Control and power cables for dampers were not included except for the diesel generator room ventilation system. Safe shutdown ventilation is assured because operator action can be taken to fail the dampers in the safe shutdown position of

once through dampers. In some cases a modification was made to install a locking device to allow the operator to manually reposition the damper to the safe shutdown position.

[redacted].

H.4.4 Instrumentation

Instrumentation utilized is identified in Subsection H.4.2 and handled as part of that system. The following sections specifically discuss the instruments. Table H.4-103 lists instruments which are used by the operator to monitor reactor and suppression pool conditions. One instrument for each parameter can be monitored at the remote shutdown panel and at least one instrument for each parameter can be monitored in the control room. (Tables H.4-104 and H.4-105, H.4-107 and H.4-108 list the monitor location, intermediate panels, and the cables and cable routing (by fire zone) for each instrument.) Process Instruments and cables associated with safe shutdown system are identified in Table H.4-106.

H.4.4.1 Reactor Vessel Pressure

Table H.4-104 lists the redundant instruments for monitoring reactor vessel pressure. As shown by the cable routing, summarized in this table, no fire zone contains cables from the redundant instruments and, therefore, no single fire can damage cabling for both reactor vessel pressure instruments except in fire subzone 4E2-2. The remote shutdown Panel 2C61-P001 and Panel 2H13-P613 are in the same fire subzone 4E2-2. However, a local mechanical indicator (PI- 2B21-R004A) is available on Panel 2H22-P026 in fire subzone 3E-2.

H.4.4.2 Reactor Vessel Level

Table H.4-105 lists the redundant instruments for monitoring reactor vessel level. As shown by the cable routing, summarized on this table, no fire zone contains cables from the redundant instruments and, therefore, no single fire can damage cabling for both reactor vessel level instruments except in the fire subzone 4E2-2. [redacted]

H.4.4.3 Suppression Pool Temperature

Table H.4-107 lists the redundant instruments for monitoring suppression pool temperature. As shown by the cable routing, summarized on this table, no fire zone contains cables from the redundant instruments and, therefore, no single fire can damage cabling for both suppression pool temperature instruments.

H.4.4.4 Suppression Pool Level

Table H.4-108 lists the redundant instruments for monitoring suppression pool level. As shown by the cable routing, summarized on this table, no fire zone contains cables from the redundant instruments and, therefore, no single fire can damage cabling for both suppression pool level instruments.

H.4.4.5 Diagnostic Instrumentation

Safe shutdown system instrumentation is indentified in Table H.4-106.

H.4.4.6 Tank Level Instrumentation

H.4.4.6.1 Cycled Condensate Tank Level

Local mechanical level indicators 1(2)LI-CY003 are available at each cycled condensate tank.

Credit is taken for periodic monitoring of these indicators. UFSAR Section 5.4.6.3 states that there is sufficient water to remove decay heat for at least 8 hours in each cycled condensate tank.

H.4.4.6.2 Diesel Fuel Oil Day Tank Level

The cables associated with the day tank low level switch on the day tank which automatically starts the diesel fuel oil transfer pump are included in the analysis and identified in Table H.4-106.

H.4.4.7 Other Instruments

The remote shutdown panel also contains monitors for drywell temperature, and drywell pressure. These instruments are not required for the safe shutdown of the reactor, therefore, the loss of any of these instruments will not affect shutdown from the remote shutdown panel.

H.4.5 Cold Shutdown Analysis

To bring the reactor to a cold shutdown condition, depressurization to 135 psig or less is necessary so that the RHR system can be shifted to the shutdown cooling mode. Depressurization of the reactor can be accomplished with the systems utilized to maintain hot shutdown. [redacted] HR suction cooling valves 1E12-F008 (2E12-F008) are readily accessible and can be manually repositioned, after the postulated fire is extinguished, provided the decision is made to proceed to a cold shutdown condition. RHR suction valve 1E12-F009 (2E12-F009) and recirculation loop valves 1B33-F023A/B (2B33-F023 A or B), however, are inside primary containment and is not readily accessible, even though entry into primary containment is possible to manually operate the valve. Therefore, an attempt would normally be made to remotely operate the valve. Power and control cables for RHR suction valve 1E12-F009 (2E12-F009) are located in or traverse the following fire zones: 2F-1, 2G-1, 2J, 4C1, 4D1, 4D3, 4E1-1, 4E1-2, and 4E3-2 (3F-1, 3G-1, 3J, 4D2, 4E2 and 4E4-2). A fire in any one of these zones could damage a power or control cable for this RHR suction valves 1(2)E12-F009 thus nullifying its remote operability. An alternate feed to 1E12-F009 (2E12-F009) is provided. Alternate feed cables are located in fire zones 2E-2, 2F-2, 4F3, 4E1-2, 2J (3E-2 3F-2, 4F2, 4F3, 4E2-1, 3J). The alternate feed controled from the MCC and is independent of the primary feed except in fire zone 4E1-2 for Unit 1. A repair procedure is needed to repair cable damage in this fire zone.

Recirculation Loop A valves, 1B33-F023A (2B33-F023A) cables are physically separated from Recirculation Loop B valves 1B33-F023B (2B33-F023B) cables except in fire zone 4E2-2 for 2B33-F023A. In this fire zone a cold shutdown repair procedure must be developed to repair cable damage. Because the reactor can be maintained at hot shutdown, time is not a constraint for either a field repair to the cable or entry into primary containment fire zone 2J (3J) to manually open these valves. Since only repositioning of certain valves are necessary to change the RHR System from suppression pool cooling mode (hot shutdown) to shutdown cold mode (cold shutdown). The only additional alternatave shutdown repairs or actions necessary for cold shutdown involve valves. These actions are identified in this section above and in Table H.4-111. If for some reason a fire should totally disable either valve 1E12-F008 (2E12-F008) or valve 1E12-F009 (2E12-F009), the reactor can be brought to a cold shutdown condition by continuation of the mode used for hot shutdown. Therefore, the plant can be placed in a cold shutdown condition independent of any fire zone in the plant.

H.4.6 Valve Spurious Operations and Cable Separation Analysis

H.4.6.1 Identification of Valves

A review of the P&ID's was performed for LaSalle Units 1 & 2 to assess the impact of fire induced faults in valve cable on safe shutdown of the plant. Two classes of valves were considered in this analysis. The first class of valves includes those valves whose spurious operation or failure to operate could directly affect systems used to bring the plant to a shutdown condition. The second class of valves includes those valves whose spurious operation may allow loss of reactor inventory. Diagrams of the valve configurations examined can be found in Figure H.4-3 (Class I valves) and Figure H.4-4 (Class II valves).

This analysis considers electrically operated valves only, examples of which are Motor Operated Valves (MO), Solenoid Operated Valves (SO) and Air Operated Valves with electrical control (AO). Manually operated valves are assumed to be their normal position as shown on the P&ID's. Check valves are assumed to operated as designed. Systems which communicate with the reactor vessel and systems which provide hot and cold shutdown capability were both examined.

After identification of the valves, as many valves or valve combinations as possible were eliminated by the criteria discussed in Section H.4.6.2 item (1).

H.4.6.2 Evaluation

A valve or valve combination was resolved by application of one or more of the following acceptance criteria.

(1) A valve combination was not considered a concern in regard to spurious operation if any of the following conditions are met:

(a) There were two normally closed electrically operated valves in series and these valves did not constitute a high-low pressure interface (only a single spurious failure was postulated);

(b) There was at least one normally closed, manually operated valve in series;

(c) There was a mechanically operated check valve in the line which would prevent flow in the undesireable direction;

(d) The impact of the adverse valve operation would not degrade safe shutdown capability.

(2) For those valves that did not meet the above criteria, a cable separation analysis was performed to determine whether or not the valve was

adequately separated from its redundant counterpart. The same separation acceptance criteria as used for equipment in section H.4.2 was used in this analysis. This was accepted by the NRC as documented in the LaSalle SER, section 9.5. The cable routings are identified by fire zone in Tables H.4-9 through H.4-100 and H.4-111 through H.4- 122 for these valves where a cable separation analysis was necessary to resolve the concern. These valves are identified in Table H.4-2 and H.4-3 (Class I) and Table H.4-123 (Class II). The results of this cable separation analysis are documented in section H.4.2 by fire zone.

Those valves where the cable separation was not adequate are identified in Table H.4-111.

(3) For valve combinations where spurious operation was of concern and this valve combination was at a high-low pressure boundary, a detailed cable review of control and interlock cables was performed. The cable from at least one control switch or interlock for at least one valve in series must be independent of fire damage in the fire zone. See sections H.4.2.46 and H.4.2.47 for the RHR Suction Valves and H.4.6.3 for RCIC - RHR HX Steam Line Valves.

(4) For those valves that did not meet any of the above criteria, a prefire or post-fire action are proposed as identified in Table H.4-111 and Section H.4.2.

H.4.6.3 RCIC Steam Line/RHR Heat Exchanger High-Low Pressure Interface Analysis

Per the request of Region III, the High-Low Pressure Interface between the RCIC steam line and the RHR Heat Exchangers was examined.

1. Interface Description

Reactor steam is routed through a spectacle flange and two normally closed valves. Either the Division A or Division B heat exchanger may be used. The interface consists of the following components. These components are shown on UFSAR Figure 6.3-8, sheet 3.

To Div. A Heat Exchanger:	To Div. B Heat Exchanger:
1) E51-D324	1) E51-D324
2) E12-F052A	2) E12-F052B
3) E12-F087A and E12-F051A*	3) E12-F087B and E12-F051B*

*E12-F087A/B and E12-F051A/B are in parallel with each other.

High-low pressure protection is provided by (1) two redundant high steam pressure interlocks on each bypass valves E12-F087A/B which close the valve on high steam line pressure.

High-low pressure protection is also provided by spectacle flange E51-D324 whose blind end is inserted with the reactor pressurized.

2. Failure Modes

Failure of a power cable either by ground open or hot short would not effect the valve actuation logic. Therefore, no further analysis will be performed for power cable since the valve will fail in the as is condition if these cables are disabled. The cables from the limit switch to MCC are not included because no failure of the limit switch or its cable can cause the valve to move.

Relief Valves E12-F055A and B are gagged shut due to elimination of the steam condensing mode of RHR.

3. Acceptance Criteria

The failure being considered is the simultaneous spurious opening of both valves in series in the high-low pressure interface while the steam line pressure is above the pressure permissive setpoint.

If a control switch, interlock, or cable is present in a fire zone, it is assumed to fail in the most detrimental manner, i.e., provide a signal to the valve logic that would permit the valve to open if all other necessary signals were present.

4. Evaluation Results

A. Unit 1 Analysis

Table H.4.-109 identifies the cables and panels reviewed for separation.

TRAIN A

[redacted] (Fire Area 4C1)

The control switches for both valves are located on 1H13-P601 in the control room. Therefore, we assume that the control switch contacts close if a fire is postulated in this area. The high-low pressure boundary integrity is maintained because the logic and cables associated with the pressure permissive for 1E12-F087A are independent of this area. Also, the blind side of spectacle flange 1E51-D324 is installed.

[redacted] (Fire Areas 4E1-1 and 4E1-2)

Cables and logic for both valves are located in the AEER which has been divided into two subareas by the installation of a 3-hour fire-rated wall. This wall runs east-west from the east wall to the west wall of the AEER. It is between the second and third row of panels nearest the south wall. The Unit 1 AEER layout is shown on UFSAR Figure H.4-1. However, both panels associated with Train A 1H13-P621 and 1H13-P629 are in the same area (4E1-2). Therefore, it is postulated that both valves in Train A could open. This event is not detrimental because of the measures described in Section 5 of this analysis.

Other Plant Fire Areas

The control cable routing for both valves 1E12-F087A and 1E12-F052A are found in the following fire zones: 4F3 and 4D1-1. Simultaneous opening of this valve train is not detrimental because of measures described in Section 5 of this analysis.

TRAIN B

[redacted] (Fire Area 4C1)

The control switches for both valves are located on 1H13-P601 in the control room. Therefore, we assumed for a postulated fire in this area that the control switch contacts close. The high-low pressure boundary integrity is maintained because the logic and cables associated with the pressure permissive for 1E12-F087B are independent of this area. Also, the blind side of spectacle flange 1E51-D324 is installed.

[redacted] (Fire Areas 4E1-1 and 4E1-2)

Cables and logic for both valves are located in the AEER. The AEER has been divided into two subzones by the installation of a 3-hour fire-rated wall. This wall runs east-west from the east wall to the west wall of the AEER. It is between the second and third row of panels nearest the south wall. The Unit 1 AEER layout is shown on UFSAR Figure H.4-1. 1H13-P618 is separated by this wall from 2H13-P621 and 2C61-P001. Cable and logic associated with 2E12-F087B are in 4E1-1.

Other Plant Fire Areas

The control cable routing for both valves 1E12-F087B and 1E12-F052B are found in only the following fire zone, 2F. The control cables for 1E12-F087B and1E12-F052B are located in Subzone 2F-1. This separation into subzones 2F-1 and 2F-2 was accepted by the NRC staff.

B. Unit 2 Analysis

Table H.4-110 identified the cables and panels reviewed for separation.

TRAIN A

[redacted] (Fire Area 4C1)

The control switches for both valves are located on 2H13-P601 in the control room. Therefore, we assume that the control switches contacts close if a fire is postulated in this area. The high-low pressure boundary integrity is maintained because the logic and cables associated with the pressure permissive for 2E12-F087A are independent of this area. Also, the blind side of spectacle flange 2E51-D324 is installed.

[redacted] (Fire Areas 4E2-1 and 4E2-2)

Cables and logic for both valves are located in the AEER. The AEER has been divided into two subareas by the installation of a 3-hour fire-rated wall as described in UFSAR paragraph H.4.2.46. However, both panels associated with Train A 2H13-P621 and 2H13-P626 are in the same subarea (4E2-2). Therefore, it is postulated that both valves in Train A could open. This event is not detrimental because of the measures described in Section 5 of this analysis.

Other Plant Fire Areas

The control cable routing for both valves 2E12-F087A and 2E12-F052A are found in the following fire zone: 3G-2, 4F2, and 4F3. Simultaneous opening of this valve train is not detrimental because of measures described in Section 5 of this analysis.

TRAIN B

[redacted] (Fire Area 4C1)

The control switches for both valves are located on 2H13-P601 in the control room. Therefore, we assumed for a postulated fire in this area that the control switch contacts close. The high-low pressure boundary integrity is maintained because the logic and cables associated with the pressure permissive for 2E12-F087B are independent of this area. Also, the blind side of spectacle flange 2E51-D324 is installed.

[redacted] (Fire Areas 4E2-1 and 4E2-2)

Cables and logic for both valves are located in the AEER. The AEER has been divided into two subareas by the installation of a 3-hour fire-rated wall as described in the UFSAR, paragraph H.4.2.46. 2H13-P621 is separated by this wall from 2H13-P618 and 2C61-P001. Cable and logic associated with 2E12-F052B and 2E12-F087B in 4E2-2.

Other Plant Fire Areas

The control cable routing for both valves 2E12-F087B and 2E12-F052B are found in only the following fire zone, 3F. The control cables for 2E12-F087B and 2E12-F052B are located in Subzone 3F-1. This separation into subzones 3F-1 and 3F-2 was accepted by the NRC staff.

5. Modification

Valves 1(2)E51-F064 have been replaced by spectacle flanges 1(2)E51-D324 and valves 2E51-F091 has been removed. Installation of the spectacle flange 1(2)E51-D324 resolved issues with the valves in the RHR system that act as high low interface valves (e.g. 1E12-F087A and 2E12-F087A). Administrative controls shall be in place on both units to ensure that the blind flange side of the spectacles are in place during Operating Conditions 1, 2, and 3, or when reactor pressure is greater than 500 psig.

6. Applicable Schematic Diagrams*

	Schematic Diagrams*	Valve	
Unit 1			
a.	1E-1-4220 CG/1E-1-4220 AH	1E12-F087A	
b.	1E-1-4220 CF/1E-1-4220 AL	1E12-F087B	
c.	1E-1-4220 BX		1E12-F052A
d.	1E-1-4220 BY		1E12-F053B
Unit 2			
a.	1E-2-4220 CG/1E-2-4220 AH	2E12-F087A	
b.	1E-2-4220 CF/1E-2-4220 AL	2E12-F087B	
c.	1E-2-4220 BX		2E12-F052A
d.	1E-2-4220 BY		2E12-F053B

*These drawings are not part of the UFSAR. They are controlled by the Controlled Documents Program.

H.5 SUMMARY

The Nuclear Regulatory Commission has recommended that the principle of defense-in-depth be applied to fire protection. This defense-in-depth principle is aimed at achieving safety through an adequate balance in the following factors:

a. preventing fires from getting started,

b. detecting and quickly extinguishing such fires that do get started and limiting their damage, and

c. designing the plant to minimize the effect of fires on safety-related functions.

The design of LaSalle County Station has incorporated these three factors. Combustible materials are used minimally in plant construction and the storage of combustibles is normally limited to areas with automatic fire protection systems. Fire resistant cables are utilized throughout the station. Sensitive fire detection systems are installed in all areas of high cable concentration and where multidivisional cables approach within 20 feet of each other. Areas that have the potential for fires from oil or other combustibles are isolated from other areas of the station by suitable fire barriers or curbing, floor drains, and automatic sprinkler protection has been provided. All safety-related cabling has been physically separated into different divisions.

In summary, the LaSalle County Station design is predicated on the "defense-in-depth" concept. Conservative cable ampacities, cable tray fill limitations, and use of fire resistant materials aid in the prevention of fires. The extensive fire detection and extinguishing equipment systems and administrative plans, procedures are provided to quickly sense and extinguish any fires. Finally, the separation and segregation practices with equipment and electrical cables, specifically the separate cable spreading areas, and the minimal fire loadings prevent or mitigate severe potential fires thereby decreasing the possibility of the failure of redundant safety-related equipment.

H.6 STAFFING REQUIREMENTS FOR POST-FIRE SAFE SHUTDOWN

[redacted]

[redacted]

[redacted]

H.7 COMMUNICATIONS

"UFSAR Section 9.5.2.2 discusses the diversity in the LaSalle communications system. The distribution and diversity of the communication systems at LaSalle Station are spread out such that a single fire anywhere in the plant only affects a small portion of the system. The remaining portion of the system outside the affected fire zone is protected and it will be available and provide more than adequate coverage to Operations and Emergency personnel".

TABLE H.1-1

FIRE HAZARDS CHARACTERISTICS OF MATERIALS USED AT LSCS

MATERIAL	FLAME SPREAD	FUEL CONTRIBUTED	SMOKE DEVELOPED
Vinyl Asbestos Tile	30	0	415
Rubber Base	30	0	415
Acrylic Carpet	15	10	25
Silicone Foam	25	0-10	50
Thermafiber			
Safing Insulation	15	0	0
Mineral Fireproofing	15	0	0
Sound Attenuation Blanket	15	0	0
Accoustical Tile	15	15	5
Cement Plaster	5	0	0
Gypsum Board	15	15	0
Flexwood	15	5	0
Vinyl Wall Covering	15	5	10
Metal Siding With Fiberglass Insulation			
Finished Panel	5	0	0
Core Material	15	5	0

Note 1: Fire Hazards Characteristics for carpet installed in the Main Control Room and adjacent areas is covered in UFSAR Section 9.5.

TABLE H.2-1
(SHEET 1 OF 5)

FIRE AREA/ZONE DESCRIPTION

FIRE AREA/ZONE DESIGNATION	DESCRIPTION	FLOOR ELEVATION
[redacted]	[redacted]	[redacted]

TABLE H.2-1
(SHEET 2 OF 5)

FIRE AREA/ZONE DESIGNATION	DESCRIPTION	FLOOR ELEVATION
[redacted]	[redacted]	[redacted]

TABLE H.2-1
(SHEET 3 OF 5)

FIRE AREA/ZONE DESIGNATION	DESCRIPTION	FLOOR ELEVATION
[redacted]	[redacted]	[redacted]

TABLE H.2-1
(SHEET 4 OF 5)

FIRE AREA/ZONE DESIGNATION	DESCRIPTION	FLOOR ELEVATION
[redacted]	[redacted]	[redacted]

TABLE H.2-1
(SHEET 5 OF 5)

FIRE AREA/ZONE DESIGNATION	DESCRIPTION	FLOOR ELEVATION
[redacted]	[redacted]	[redacted]

TABLE H.3-1
(SHEET 1 OF 13)

SAFETY-RELATED AND RADIOACTIVE EQUIPMENT

FIRE AREA/ZONE	SAFETY-RELATED EQUIPMENT	RADIOACTIVE EQUIPMENT
[redacted]	[redacted]	[redacted]
[redacted]	[redacted]	[redacted]
[redacted]	[redacted]	[redacted]
[redacted]	[redacted]	[redacted]
[redacted]	[redacted]	[redacted]
[redacted]	[redacted]	[redacted]

TABLE H.3-1
(SHEET 2 OF 13)

FIRE AREA/ZONE	SAFETY-RELATED EQUIPMENT	RADIOACTIVE EQUIPMENT
[redacted]	[redacted]	[redacted]
[redacted]	[redacted]	[redacted]
[redacted]	[redacted]	[redacted]
[redacted]	[redacted]	[redacted]
[redacted]	[redacted]	[redacted]
[redacted]	[redacted]	[redacted]
[redacted]	[redacted]	[redacted]
[redacted]	[redacted]	[redacted]
[redacted]	[redacted]	[redacted]

TABLE H.3-1
(SHEET 3 OF 13)

FIRE AREA/ZONE	SAFETY-RELATED EQUIPMENT	RADIOACTIVE EQUIPMENT
[redacted]	[redacted]	[redacted]
[redacted]	[redacted]	[redacted]
[redacted]	[redacted]	[redacted]

TABLE H.3-1
(SHEET 4 OF 13)

FIRE AREA/ZONE	SAFETY-RELATED EQUIPMENT	RADIOACTIVE EQUIPMENT
[redacted]	[redacted]	[redacted]
[redacted]	[redacted]	[redacted]
[redacted]	[redacted]	[redacted]

TABLE H.3-1
(SHEET 5 OF 13)

FIRE AREA/ZONE	SAFETY-RELATED EQUIPMENT	RADIOACTIVE EQUIPMENT
[redacted]	[redacted]	[redacted]
[redacted]	[redacted]	[redacted]
[redacted]	[redacted]	[redacted]
[redacted]	[redacted]	[redacted]
[redacted]	[redacted]	[redacted]

TABLE H.3-1
(SHEET 6 OF 13)

FIRE AREA/ZONE.	SAFETY-RELATED EQUIPMENT	RADIOACTIVE EQUIPMENT
[redacted]	[redacted]	[redacted]

TABLE H.3-1
(SHEET 7 OF 13)

FIRE AREA/ZONE	SAFETY-RELATED EQUIPMENT	RADIOACTIVE EQUIPMENT
[redacted]	[redacted]	[redacted]

TABLE H.3-1
(SHEET 8 OF 13)

FIRE AREA/ZONE	SAFETY-RELATED EQUIPMENT	RADIOACTIVE EQUIPMENT
[redacted]		[redacted]
[redacted]	[redacted]	
[redacted]	[redacted]	

TABLE H.3-1
(SHEET 9 OF 13)

FIRE AREA/ZONE	SAFETY-RELATED EQUIPMENT	RADIOACTIVE EQUIPMENT
[redacted]		[redacted]
[redacted]	[redacted]	[redacted]

TABLE H.3-1
(SHEET 10 OF 13)

FIRE AREA/ZONE	SAFETY-RELATED EQUIPMENT	RADIOACTIVE EQUIPMENT
[redacted]	[redacted]	[redacted]
[redacted]	[redacted]	[redacted]
[redacted]	[redacted]	[redacted]
[redacted]	[redacted]	[redacted]
[redacted]	[redacted]	[redacted]
[redacted]	[redacted]	[redacted]
[redacted]	[redacted]	[redacted]
[redacted]	[redacted]	[redacted]
[redacted]	[redacted]	[redacted]
[redacted]	[redacted]	[redacted]

TABLE H.3-1
(SHEET 11 OF 13)

FIRE AREA/ZONE	SAFETY-RELATED EQUIPMENT	RADIOACTIVE EQUIPMENT
[redacted]	[redacted]	[redacted]
[redacted]	[redacted]	[redacted]
[redacted]	[redacted]	[redacted]

TABLE H.3-1
(SHEET 12 OF 13)

FIRE AREA/ZONE	SAFETY-RELATED EQUIPMENT	RADIOACTIVE EQUIPMENT 1
[redacted]	[redacted]	[redacted]

TABLE H.3-1
(SHEET 13 OF 13)

FIRE AREA/ZONE	SAFETY-RELATED EQUIPMENT	RADIOACTIVE EQUIPMENT
[redacted]	[redacted]	[redacted]

Combustible Loading and Extinguishing Capability
TABLE H.3-2
(SHEET 1 of 22)

FIRE AREA/ZONE	FIRE LOAD[1] See note 4	FLOOR AREA (Ft^2)	PRIMARY COMBUSTIBLE MATERIAL	FIRE DETECTION EQUIPMENT	FIRE PROTECTION EQUIPMENT
1	Low	41,385	Sealing tape and caulking; cable insulation; transient fire load of lube oil, grease, paper, rubber, cloth, lube oil	Ultraviolet Detection	7-firehose stations each with at least 50 ft. of 11/2 in. hose: This zone contains at least 5 dry chemical and 5 carbon dioxide portable fire extinguishers.
2A	Low	2030	Transient fire load of lube oil, paper, plastic, rubber, wood, cotton cloth, fiberglass	None	1-firehose station with at least 50 ft. of 1 1/2 in. hose.
2B1	Med	5250	Cable insulation, lube oil; transient fire load of lube oil, grease, fiberglass, rubber, paper	Temperature detector (Standby gas treatment charcoal filter) ionization detection	Local remote manual deluge system; at least 1-fire hose stations each with 100 ft. of 1 1/2 in. hose and 2 hose stations with 50 feet of 1 1/2 in hose. This zone contains 1 dry chemical and 1 CO2 portable fire extinguisher.
2B2	Low	4330	Cable insulation; lube oil; transient fire load of lube oil, fiberglass, paper, plastic	Ionization Detection	2-firehose stations-one with at least 50 ft and one with 100 ft of 1 1/2 in. hose; this zone contains 2 dry chemical portable fire extinguishers.
2C	Med See Note 2	5000	Cable insulation; lube oil; transient fire load of lube oil, rubber	Ionization Detection	3-firehose stations each with at least 50 ft. of 1 1/2 in. hose; this zone contains 1 carbon dioxide portable fire extinguisher and 1 dry chem. fire extinguisher.
2D	Low	14,000	Cable insulation; transient fire load of lube oil, rubber, paper, lube oil, fiberglass, plastic	Ionization Detection	2-firehose stations each with 100 ft. of 1 1/2 in. hose; 2-firehose stations each with at least 50 ft. of 1 ½ inch hose; 2 CO2 and 3 dry chemical portable fire extinguishers.
2E	Low	16,290	Cable insulation; a small quantity of hydrogen in portable compressed gas cylinders; plastic drain piping for the CRD-HCUs; Teflon flex hoses for the Hyd Scram Air Pilot Solenoid Valves 1C11-D001-117 & 1C11-D001-118, transient fire load of lube oil, rubber, paper, cotton cloth, fiberglass, lube oil, Teflon	Ionization Detection	At least 4-firehose stations each with at least 50 ft. of 1 1/2 in. hose; This zone and adjacent zones contain at least 4 carbon dioxide and 1 dry chemical portable fire extinguisher.

Combustible Loading and Extinguishing Capability
TABLE H.3-2
(SHEET 2 of 22)

FIRE AREA/ZONE	FIRE LOAD[1] See note 4	FLOOR AREA (Ft^2)	PRIMARY COMBUSTIBLE MATERIAL	FIRE DETECTION EQUIPMENT	FIRE PROTECTION EQUIPMENT
2F	Med See Note 2	17,000	Cable insulation; lube oil; transient fire load of lube oil, paper, fiberglass, cotton cloth, rubber, paper filters	Ionization Detection	3-firehose stations each with at least 50 ft. 2-fire hose stations each with 100ft 1 1/2 in. hose; This zone contains 3 dry chemical and 4 carbon dioxide portable fire extinguishers.
2G	Low	11,000	Cable insulation; transient fire load of lube oil, paper, fiberglass, rubber, lube oil, plastic	Ionization Detection; Wet pipe sprinkler system with initiation alarm in control room	Automatic sprinkler system in RR Access Area. 5-firehose stations each with at least 50 ft. of 1 1/2 in. hose; This zone contains 3 dry chemical and 3 carbon dioxide portable fire extinguishers.
2H1	Low	5000	Cable insulation; grease, transient fire load of lube oil, paper, fiberglass, lube oil.	Ionization Detection	4-firehose stations each with at least 50. ft. of 1 1/2 in. hose. This zone contains 2 dry chemical and 2 carbon dioxide portable fire extinguishers.
2H2	Low	1200	Cable insulation, transient load of lube oil, paper, plastic and rubber.	Ionization Detection	2-firehose stations each with at least 50 ft. of 1 1/2 in. hose (1 outside); This zone and adjacent zones contains 2 dry chemical portable fire extinguishers (1 outside).
2H3	Low	1200	Cable insulation; lube oil, paper	Ionization Detection	2-firehose stations each with at least 50 ft. of 1 1/2 in. hose (1 outside); This zone and adjacent zones contains 1 dry chemical portable and 1 carbon dioxide (outside) fire extinguisher.
2H4	Med	1200	Cable insulation; transient loading of lube oil grease, rubber, fiberglass, lube oil	Ionization Detection	2-firehose stations each with at least 50 ft. of 1 1/2 in. hose (1 outside); This zone and adjacent zones contains 2 dry chemical portable fire extinguishers (1 outside).
2H5	Low	1200	Cable insulation; lube oil, rubber, fiberglass	Ionization Detection	2-firehose stations each with at least 50 ft. of 1 1/2 in. hose (1 outside); This zone and adjacent zones contains 1 dry chemical and 1 CO2 (outside) portable fire extinguisher.

Combustible Loading and Extinguishing Capability
TABLE H.3-2
(SHEET 3 of 22)

FIRE AREA/ZONE	FIRE LOAD[1] See note 4	FLOOR AREA (Ft^2)	PRIMARY COMBUSTIBLE MATERIAL	FIRE DETECTION EQUIPMENT	FIRE PROTECTION EQUIPMENT
2I1	Low	4800	Transient fire load lube oil, Cable insulation, fiberglass, rubber, lube oil	Ionization Detection	4-firehose stations each with at least 50 ft. of 1 1/2 in. hose; This zone contains 2 dry chemical and 2 CO2 fire extinguishers.
2I2	Low	1200	Cable insulation; lube oil, grease, cotton cloth, rubber, fiberglass.	Ionization Detection	2-firehose stations each with at least 50 ft. of 1 1/2 in. hose (1 outside). This zone and adjacent zones contains 1 dry chemical and one CO2 (outside) fire extinguisher.
2I3	Low	1200	Cable insulation; lube oil, grease, rubber, fiberglass.	Ionization Detection	2-firehose stations each with at least 50 ft. of 1 1/2 in. hose (1 outside); This zone contains 2 dry chemical portable fire extinguisher (1 outside).
2I4	Low	1200	Cable insulation; lube oil, grease, paper, filter, neoprene, rubber	Ionization Detection	2-fire hose stations each with at least 50 ft. of 1 1/2 in. hose (1 outside); This zone and adjacent zones contains 1 dry chemical portable fire extinguisher.
2I5	Low	1200	Lube oil, cable insulation, rubber, fiberglass.	Ionization Detection	2-fire hose stations each with at least 50 ft. of 1 1/2 in. hose (1 outside); This zone and adjacent zones contains 1 dry chemical portable fire extinguisher.
2I6	Low	700	Lube oil; cable insulation, rubber.	Ionization Detection	1-fire hose station with at least 50 ft. of 1 1/2 in. hose in fire zone 2I4. 1 dry chemical portable fire extinguisher in zone 2I4.
2J	Low	5900	Cable insulation; lube oi1; transient fire load of lube oil, silicone, fiberglass reinforced silicone fabric.	Ionization Detection	RHR containment spray; manual equipment (during maintenance).
2K	Low	4000	Hydraulic Fluid	Local temperature detection for MSIV leakage. No detection	This zone contains 3 dry chemical fire extinguishers
3A	Low	1988	Transient fire load of lube oil, plastic, rubber, paper, cloth clothing, fiberglass, cellulose filter	None	Same as 2A

Combustible Loading and Extinguishing Capability
TABLE H.3-2
(SHEET 4 of 22)

FIRE AREA/ZONE	FIRE LOAD[1] See note 4	FLOOR AREA (Ft^2)	PRIMARY COMBUSTIBLE MATERIAL	FIRE DETECTION EQUIPMENT	FIRE PROTECTION EQUIPMENT
3B1	Low	5250	Transient fire load of lube oil, lube oil, grease, cable insulation, fiberglass, rubber, vinyl-polyester	Ionization Detection	Local remote manual deluge system; at least 1-fire hose stations each with 100 ft. of 1 ½ in. hose and 2 hose stations with 50 feet of 1 ½ in hose. This zone contains 1 dry chemical and 1 CO2 portable fire extinguisher.
3B2	Low	4380	Transient fire load of lube oil, paper, plastic, cable insulation, fiberglass, lube oil	Ionization Detection	2-firehose stations with 100 ft of 1 ½ in. hose; This zone contains at least 2 dry chemical portable fire extinguishers.
3C	Low	5000	Transient fire load of lube oil, cable insulation, rubber, cloth, lube oil	Ionization Detection	This zone contains 1 dry chemical and 1 carbon dioxide portable fire extinguisher.
3D	Med	14,000	Transient fire load of lube oil, cloth, cable insulation, rubber, paper, lube oil, fiberglass, plastic	Ionization Detection	2-firehose stations each with 100 ft. and 2-firehose stations each with at least 50 ft. of 1 ½ in. hose; This zone contains at least 3 dry chemical and 2 carbon dioxide portable fire extinguishers.
3E	Low	16,290	Cable insulation; paper, cotton cloth, rubber, fiberglass, lube oil, paper filter; small quantity hydrogen in compressed gas cylinders; plastic drain piping, transient fire load of lube oil	Ionization Detection	4-firehose stations each with at least 50 ft. of 1 ½ in. hose; This zone contains 4 carbon dioxide and 2 dry chemical portable fire extinguishers.
3F	Low	17,000	Transient fire load of lube oil, rubber, cable insulation, cotton cloth, paper, lube oil, fiberglass	Ionization Detection	3-firehose stations each with at least 50 ft., and 2-firehose stations each with 100 ft. 1 ½ in. hose; This zone contains 4 dry chemical and 3 carbon dioxide portable fire extinguishers.
3G	Low	11,000	Transient fire load of lube oil, rubber, cable insulation, cotton cloth, paper, lube oil, fiberglass	Ionization Detection	5-firehose stations each with at least 50 ft of 1 ½ in. hose; This zone contains 3 dry chemical and 3 carbon dioxide portable fire extinguishers.
3H1	Low	5600	Transient fire load of lube oil, rubber, cable insulation, grease, lube oil, fiberglass	Ionization Detection	4-firehose stations each with at least 50 ft of 1 ½ in. hose; This zone contains 2 dry chemical and 2 carbon dioxide portable fire extinguishers..

Combustible Loading and Extinguishing Capability
TABLE H.3-2
(SHEET 5 of 22)

FIRE AREA/ZONE	FIRE LOAD[1] See note 4	FLOOR AREA (Ft^2)	PRIMARY COMBUSTIBLE MATERIAL	FIRE DETECTION EQUIPMENT	FIRE PROTECTION EQUIPMENT
3H2	Low	1200	Paper, rubber.	Ionization Detection	2-firehose stations each with at least 50 ft. of 1 1/2 in. hose (1 outside); This zone and adjacent zones contains 2 dry chemical portable fire extinguishers (1 outside).
3H3	Low	1200	Cable insulation, fiberglass, rubber	Ionization Detection	2-firehose stations each with at least 50 ft. of 1 1/2 in. hose (1 outside); This zone and adjacent zones contains 1 dry chemical portable and 1 carbon dioxide (outside) fire extinguishers.
3H4	Low	1200	Cable insulation, lube oil, grease, fiberglass, rubber	Ionization Detection	2-firehose stations each with at least 50 ft. of 1 1/2 in. hose (1 outside); This zone and adjacent zones contains 2 dry chemical portable fire extinguishers (1 outside).
3H5	Low	1200	Cable insulation, fiberglass	Ionization Detection	2-firehose stations each with at least 50 ft. of 1 1/2 in. hose (1 outside); This zone and adjacent zones contains 1 dry chemical and CO2 (outside) fire extinguishers.
3I1	Low	4800	Transient fire load of lube oil, cable insulation, lube oil, fiberglass	Ionization Detection	4-firehose stations each with at least 50 ft. of 1 1/2 in. hose; This zone contains 2 dry chemical and 2 CO2 fire extinguishers.
3I2	Low	1200	Rubber, cable insulation, cotton cloth, paper, lube oil, fiberglass grease.	Ionization Detection	2-firehose stations each with at least 50 ft. of 1 1/2 in. hose (1 outside). This zone and adjacent zones contains 1 dry chemical and one CO2 (outside) fire extinguisher.
3I3	Low	1200	Cable insulation, lube oil, grease, fiberglass	Ionization Detection	2-firehose stations each with at least 50 ft. of 1 1/2 in. hose (1 outside); This zone contains 2 dry chemical portable fire extinguisher (1 outside).
3I4	Low	1200	Cable insulation, lube oil, grease, paper, filter, neoprene, cotton cloth, fiberglass, rubber	Ionization Detection	2-fire hose stations each with at least 50 ft. of 1 1/2 in. hose (1 outside); This zone and adjacent zones contains 1 dry chemical and one CO2 (outside) fire extinguisher.

FIRE AREA/ZONE	FIRE LOAD[1] See note 4	FLOOR AREA (Ft^2)	PRIMARY COMBUSTIBLE MATERIAL	FIRE DETECTION EQUIPMENT	FIRE PROTECTION EQUIPMENT
3I5	Low	1200	Lube oil, cable insulation, paper, fiberglass	Ionization Detection	2-fire hose stations each with at least 50 ft. of 1 1/2 in. hose (1 outside); This zone and adjacent zones contains 2 dry chemical portable fire extinguisher (1 outside).
3I6	Low	700	Lube oil, cable insulation, rubber	Ionization Detection	Same as 2I6 (with FZ 3I4 instead of FZ2I4)
3J	Low	5900	Transient fire load of lube oil, lube oil, cable insulation fiberglass reinforced silicone fabric	Ionization Detection	Same as 2J
3K	Low	4000	None	No Detection	This zone contains 3 dry chemical portable fire extinguishers.
4A	Low	29,000	Paper filter, cable insulation; transient fire loading of lube oil, rubber, paper, lube oil, pre-filter, fiberglass, cellulose filter.	Ionization Detection (Switchgear Area)	At least 7-firehose stations with 50 ft. of 1 1/2 in. hose; at least 1-firehose station with 100 ft. of 1 1/2 in. hose; This zone contains 6 carbon dioxide and 6 dry chemical portable fire extinguishers.
4B	Low	29,000	Cable insulation; paper filters, prefilters, HEPA filters, plastics; transient fire load of lube oil, fiberglass, rubber, paper, lube oil, sealants, gaskets	Temperature detectors (charcoal filters) Ionization Detection (Switchgear Area)	Manual deluge systems; at least 6-firehose stations with at least 50 ft. of 1 1/2 in. hose; This zone contains at least 6 dry chemical and 4 CO2 portable fire extinguishers.
4C1	Low	6720	Cable insulation, wood, paper, plastic, carpet, power/control instrumentation.	Ionization detection	2-firehose stations with 100 ft. of 1 1/2 in. hose (from outside); This zone contains 5 carbon dioxide, 2 dry chemical (1outside), and 3 pressurized water portable fire extinguishers; 2-CO_2 hose reels with 100 ft. each of hose (at exit doors).
4C2	Low	4593	Wood and plastics; cable insulation; transient fire load of lube oil, paper, cotton cloth, cleaning supplies, fiberglass, plastic, paint thinner, polyurethane foam, acrylic, carpet	Ionization Detection	1-fire hose station with at least 50 ft. of 1 1/2 in. hose; 1-firehose station with 100 ft. of 1 1/2 in. hose (outside); This zone contains 3 dry chemical portable fire extinguishers.

Combustible Loading and Extinguishing Capability
TABLE H.3-2
(SHEET 7 of 22)

FIRE AREA/ZONE	FIRE LOAD[1] See note 4	FLOOR AREA (Ft^2)	PRIMARY COMBUSTIBLE MATERIAL	FIRE DETECTION EQUIPMENT	FIRE PROTECTION EQUIPMENT
4C3	Low	5177	Wood; cable insulation; transient fire loads of lube oil, polyurethane foam, paper, plastic, cloth, fiberglass, carpet, plastic foam.	Ionization Detection	1-firehose station with l00 ft. of 1 1/2 in. hose; 1-CO_2 hose reel with l00 ft. of hose; This zone and adjacent zones contains at least 3 dry chemical portable fire extinguishers.
4C4	Low	1344	Cable insulation; transient fire load of lube oil, paper, wood, plastic	Ionization detection	1-fire hose station with 100 ft. of 1 1/2 in. hose (outside); 1-CO_2 hose reel with 100 ft. of hose; This zone contains and adjacent zones contain at least 1 dry chemical and 1 carbon dioxide portable fire extinguishers.
4C5	High	560	Cable insulation; transient fire load of lube oil, acrylics, plastics, cotton, cloth, cellulose filter, paper, carpet, charcoal	Ionization detection	l-fire hose station with 100 ft. of 1 1/2 in. hose; l-CO_2 hose reel with 100 ft of hose; This zone contains 1 carbon dioxide portable fire ext.
4D1	High	2875	Cable insulation	Ionization detection	Automatic preaction suppression system; 1-CO_2 hose reel with 100 ft. of hose (outside); This zone and adjacent zones contains at least 2 CO2 fire extinguishers (1outside); 1-firehose station with 100 ft. of 1 1/2 in. hose (outside).
4D2	Med	2755	Cable insulation	Ionization detection	Automatic preaction suppression system; 1-CO_2 hose reel with 100 ft. hose; This zone and adjacent zones contain at least 2 CO2 portable fire extinguishers (1 outside); 1 fire hose station with 100 ft. of 1 1/2 in. hose.
4D3	Med	3600	Cable insulation, transient fire load of lube oil, acrylic casing, grease	Ionization detection	1-CO_2 hose reel with 100 ft. of hose; This zone and adjacent zones contains 1 dry chemical and 1 carbon dioxide portable fire extinguishers; 1-firehose station with 100 ft. of 1 1/2 in. hose (outside).

Combustible Loading and Extinguishing Capability
TABLE H.3-2
(SHEET 8 of 22)

FIRE AREA/ZONE	FIRE LOAD[1] See note 4	FLOOR AREA (Ft^2)	PRIMARY COMBUSTIBLE MATERIAL	FIRE DETECTION EQUIPMENT	FIRE PROTECTION EQUIPMENT
4D4	Med	3646	Cable Insulation; transient fire load of lube oil, acrylic casing, grease, fiberglass	Ionization detection	1-CO_2 hose reel with 100 ft. of hose; This zone and adjacent zones contains 1 dry chemical and 1 carbon dioxide portable fire extinguishers; 1-firehose station with 100 ft. of 1 1/2 in. hose (outside).
4E1 4El-1 4El-2	Med See Note 2	714 1386	Cable insulation; transient fire load of lube oil	Ionization detection	1-firehose station with 100 ft of 1 1/2 in. hose; 1-CO_2 hose reel with 100 ft. hose; This zone contains 1 dry chemical (outside) and 2 carbon dioxide portable fire extinguishers (1 outside).
4E2 4E2-1 4E2-2	Med	442 1593	Cable Insulation; transient fire load of lube oil	Ionization detection	1-firehose station with 100 ft. of 1 1/4 in. hose; 1-CO_2 hose reel with 100 ft of hose; This zone and adjacent zones contain 1 dry chemical and 2 carbon dioxide (outside) portable fire extinguishers.
4E3 4E3-1 4E3-2	Med	319 3681	4E3-1 Cable insulation; transient fire load of lube oil 4E3-2 Cable insulation; transient fire load of lube oil, acrylic casings, paper	Ionization detection; Photo-thermal detection battery room	2 firehose stations with 100 ft. of 1 1/2 in. hose; 1-CO_2 hose reel with 100 ft. of hose; This zone and adjacent zones contain 1 dry chemical (outside) and 2 carbon dioxide portable fire extinguishers.
4E4 4E4-I 4E4-2	High Med	119 3881	4E4-1 Cable Insulation 4E4-2 Cable Insulation; transient fire load of lube oil, paper, fiberglass, acrylic casings	Ionization detection; Photo-thermal detection battery room	1-firehose station with 100 ft. each of 1 1/2 in. hose; 1-CO_2 hose reel with 100 ft. of hose; This zone and adjacent zones contain 1 dry chemical and 2 carbon dioxide portable fire extinguishers...
4F1	Med	3558	Cable insulation; transient fire load of lube oil, acrylic casings, paper, plastic covers, ventilation seals and gaskets.	Ionization detection; Photo-thermal detection battery room	2-firehose station with 100 ft. of 1 1/2 in. hose (outside); 1-CO_2 hose reel with 100 ft. hose (outside); This zone contain 2 dry chemical (outside) and 2 carbon dioxide portable fire extinguishers (1 outside).

Combustible Loading and Extinguishing Capability
TABLE H.3-2
(SHEET 9 of 22)

FIRE AREA/ZONE	FIRE LOAD[1] See note 4	FLOOR AREA (Ft^2)	PRIMARY COMBUSTIBLE MATERIAL	FIRE DETECTION EQUIPMENT	FIRE PROTECTION EQUIPMENT
4F2	Med	3520	Cable insulation; transient fire load of lube oil, paper, acrylic casings, plastic covers, fiberglass, ventilation seals and gaskets.	Ionization detection; Photo-thermal detection battery room	1-firehose station with 100 ft. of 1 1/2 in. hose; 1-firehose station with at least 50 ft. of 1 1/2 in. hose; 1-CO_2 hose reel with 100 ft. hose(all outside); This zone and adjacent zones contain 1 dry chemical and 3 CO2 fire extinguishers (all outside except 1 CO2)
4F3	Med See Note 2	5343	Cable insulation; ventilation seals and gaskets; transient fire load of lube oil, hydrogen, paper, cotton, cloth, plastic	Ionization detection	Automatic pre-action spray suppression system, 1-firehose station with 100 ft. of 1 1/2 in. hose; This zone contains at least 2 carbon dioxide and 1 dry chemical portable fire extinguishers.
5A1	Low	6000	Cable insulation; lube oil; transient fire load of lube oil, fiberglass, cotton, cloth, grease	Wet pipe sprinkler system with water flow alarm.	Automatic sprinkler system. 1-firehose station with 100 ft. of 1 1/2 in. hose (outside);
5A2	Low	6000	Cable insulation; lube oil; transient fire load of lube oil, grease, cotton, cloth	Wet pipe sprinkler system with water flow alarm.	Automatic sprinkler system. 1-firehose station with 100 ft. of 1 1/2 in. hose (outside); 1-CO_2 hose reel with 100 ft of hose.
5A3	Low	113,000	Cable insulation; turbine oil; transient fire load of lube oil, grease, hydrogen, paper, rubber, polyurethane foam, fiberglass, acrylic, plastic, lube oil, cellulose filter.	Temperature detectors	Pre-action system on turbine bearings; CO_2 flooding on alternator exciter; manual CO_2 purging on generator; at least 15-hose stations with 100 ft each of 1 1/2 in. hose; 1-firehose station with at least 50 ft. each of 1 1/2 in. hose; 4-CO_2 hose reels with 100 ft. of hose; automatic roof top smoke and heat vents; This zone contains at least 15 dry chemical and 6 carbon dioxide portable fire extinguishers. Also 2-150 lb. dry chemical units.

Combustible Loading and Extinguishing Capability
TABLE H.3-2
(SHEET 10 of 22)

FIRE AREA/ZONE	FIRE LOAD[1] See note 4	FLOOR AREA (Ft^2)	PRIMARY COMBUSTIBLE MATERIAL	FIRE DETECTION EQUIPMENT	FIRE PROTECTION EQUIPMENT
5A4	High	5300	Cable insulation; transient fire load of lube oil, fiberglass, paper	Ionization detection	At least 2-firehose stations with 100 ft. each of 1 1/2 in. hose; This zone contains 4 dry chemical portable fire extinguishers.
5B1	Low	29,400	Cable insulation, EPDM flexible hose.	Wet pipe sprinkler system with water flow alarm	Automatic sprinkler system; 7-firehose stations each with 100 ft. of 1 1/2 in. hose; This zone has 4 dry chemical portable fire extinguishers (all outside).
5B2	Low	29,400	Cable insulation, EPDM flexible hose	Wet pipe sprinkler system with water flow alarm.	Automatic sprinkler system; 5-firehose stations each with 100 ft. each of 1 1/2 in. hose. This zone contains 4 dry chemical portable fire extinguishers (all outside).
5B3	High	2540	Cable insulation; lube oil, transient fire load of lube oil, paper filter, cotton, cloth.	Temperature detectors	Automatic deluge system; room sprinkler system; at least 1-firehose station with 100 ft. of 1 1/2 in. hose; This zone contains at least 2 dry chemical portable fire extinguishers.
5B4	Low	16,500	Cable insulation; lube oil; hydraulic fluid; transient fire load of lube oil, wood, fiberglass, rubber, plastic, paper.	None	At least 3-firehose stations each with 100 ft. of 1 1/2 in. hose; This zone contains 4 dry chemical and 3 carbon dioxide portable fire extinguishers.

Combustible Loading and Extinguishing Capability
TABLE H.3-2
(SHEET 11 of 22)

FIRE AREA/ZONE	FIRE LOAD[1] See note 4	FLOOR AREA (Ft^2)	PRIMARY COMBUSTIBLE MATERIAL	FIRE DETECTION EQUIPMENT	FIRE PROTECTION EQUIPMENT
5B5	Low	14,500	Cable insulation; transient fire load of lube oil, cotton, cloth, rubber, fiberglass, lube oil.	None	At least 1-firehose station with 100 ft. of 1 1/2 in. hose; 2-firehose stations each with at least 50 ft. of 1 1/2 in. hose; 1-CO_2 hose reel with 100 ft. of hose. This zone contains at least 4 dry chemical and 1 carbon dioxide portable fire extinguisher.
5B6	Low	14,000	Cable insulation; transient fire load of lube oil, fiberglass, cotton, cloth, rubber, plastic, lube oil, flexible duct.	None	At least 1-firehose station with 100 ft. of 1 1/2 in. hose; 2-firehose stations each fire with at least 50 ft. of 1 1/2 in. hose; 1-CO_2 hose reel with 100 ft. of hose. This zone contains at least 4 dry chemical and 1 carbon dioxide portable fire extinguishers.
5B7	High	407	Lube oil; seal oil.	Temperature detector	Automatic deluge system; 1-firehose station with at least 50 ft. of 1 1/2 in. hose (outside). This zone and adjacent zones contain 1dry chemical portable extinguisher (outside).
5B8	High	450	lube oil; seal oil.	Temperature detector	Automatic deluge system; 1-firehose station with at least 50 ft. of 1 1/2 in. hose (outsde).. This zone and adjacent zones contain 1dry chemical portable extinguisher (outside).
5B9	Low	1883	Cable insulation; cloth; transient fire load of lube oil, rubber, lube oil, teflon.	Heat sensitive sprinkler initiation with water flow alarm	Automatic sprinkler system; 1-firehose station with at least 50 ft. of 1 1/2 in. hose (outside). This zone and adjacent zones contain 1dry chemical portable extinguisher (outside)..

Combustible Loading and Extinguishing Capability
TABLE H.3-2
(SHEET 12 of 22)

FIRE AREA/ZONE	FIRE LOAD[1] See note 4	FLOOR AREA (Ft^2)	PRIMARY COMBUSTIBLE MATERIAL	FIRE DETECTION EQUIPMENT	FIRE PROTECTION EQUIPMENT
5B10	Low	1883	Cable insulation; cotton, cloth; transient fire load of lube oil, rubber, lube oil, fiberglass.	(Same as 5B9)	(Same as 5B9 except 100 feet of hose)
5B11	Low	1800	Transient fire load of lube oil, plastic.	None	2-firehose stations each with 100 ft. of 1 1/2 in. hose (1 outside). This zone contains 1 dry chemical portable fire extinguisher.
5B12	Low	1800	Transient fire loading of lube oil.	None	2-firehose stations each with 100 ft. of 1 1/2 in. hose (1 outside); This zone contains 1 dry chemical portable fire extinguishers.

Combustible Loading and Extinguishing Capability
TABLE H.3-2
(SHEET 13 of 22)

FIRE AREA/ZONE	FIRE LOAD[1] See note 4	FLOOR AREA (Ft^2)	PRIMARY COMBUSTIBLE MATERIAL	FIRE DETECTION EQUIPMENT	FIRE PROTECTION EQUIPMENT
5B13-1 5B13-2	Med Med See Notes 2&3	8960 140	Cable insulation; transient fire load of lube oil, wood, plastic, fiberglass, acrylic plastic, paper	Ionization detection	At least 2-CO_2 hose reels each with 100 ft. of hose; at least 2-firehose stations each with 100 ft. of 1 1/2 in. hose. This zone contains 3 dry chemical and 2 carbon dioxide portable fire extinguishers.
5C1	Low	1936	Transient fire load of lube oil, rubber, HEPA filter, cable insulation	None	1-firehose station with at least 50 ft. of 1-1/2 in. hose; 1-firehose station with 100 ft. of 1-1/2 in. hose; This zone and adjacent zones contains 2 dry chemical portable fire extinguishers.
5C2	Low	1936	Cable insulation, wood, rubber, plastic, transient fire load of lube oil	None	(Same as 5C1)
5C3	Low	424	Transient fire load of lube oil, plastic, fiberglass	Heat sensitive sprinkler initiation with water flow alarm	Automatic sprinkler system, 2-firehose stations each with 100 ft. of 1 1/2 in. UL listed hose. This zone contains 1 dry chemical portable and 1 CO2 extinguishers.
5C4	Low	424	Fiberglass; transient fire load of lube oil	Heat sensitive sprinkler initiation with water flow alarm	Automatic sprinkler system, 2-firehose stations each with 100 ft. of 1 1/2 in. UL listed hose. This zone contains 1 dry chemical and 1 CO2 extinguishers.
5C5	Low	1367	Cable insulation, transient fire load of lube oil	None	1-firehose station with 100 ft. of 1-1/2 in. hose (outside).
5C6	Low	1340	Cable insulation, transient fire load of lube oil	None	1-firehose station with 100 ft. of 1-1/2 in. hose.
5C7	Low	1340	Transient fire load of lube oil	None	(Same as 5C6)
5C8	Low	1367	Transient fire load of lube oil	None	1-firehose station with 100 ft. of 1-1/2 in. hose.

Combustible Loading and Extinguishing Capability
TABLE H.3-2
(SHEET 14 of 22)

FIRE AREA/ZONE	FIRE LOAD[1] See note 4	FLOOR AREA (Ft^2)	PRIMARY COMBUSTIBLE MATERIAL	FIRE DETECTION EQUIPMENT	FIRE PROTECTION EQUIPMENT
5C9	Low	875	Cable insulation, transient fire load of lube oil	None	1-firehose station with 100 ft. of 1-1/2 in. hose; 1-CO_2 hose reel with 100 ft. of hose. This zone and adjacent zones contain 1 dry chemical portable extinguisher.
5C10	Low	875	Transient fire load of lube oil	None	(Same as 5C9)
5C11	Low	54,150	Cable insulation; lube oil; transient fire load of lube oil, paper filter, rubber, battery casings, hydrogen, cotton, cloth, plastic, fiberglass, paint thinner, wood	Ionization detection in areas of high cable concentration, Photo-thermal detection battery room	Preaction suppression system; at least 7 fire hose stations each with 100 ft. of 1-1/2 in. hose; 2-CO_2 hose reels with 100 feet each of UL listed hose. This zone contains at least 14 dry chemical and 11carbon dioxide portable fire extinguishers.
5D1	Med See Note 2	2250	Cable insulation; transient fire load of lube oil and battery casings, fiberglass, paper, acrylic plastic	Ionization detection, Photo-thermal detection battery room	This zone and adjacent zones contain 1 dry chemical and 1 carbon dioxide portable fire ext; 1-CO_2 hose reel with a minimum of 100 feet of hose; 1-fire hose station with 100 ft. of 1 ½ in. hose (from FZ5C11 downstairs).
5D2	Low	2250	Cable insulation; transient fire load of lube oil and battery casings, paper, fiberglass, acrylic plastic	Ionization detection, Photo-thermal detection battery room	This zone and adjacent zones contain 1 dry chemical and 1 carbon dioxide portable fire extinguisher; 1-CO_2 hose reel with 100 ft. of hose; 1-fire hose station with at least 50 ft. of 1 ½ in. hose (from FZ5C11 downstairs).
5D3	Low	17,000	Cable insulation; plastic, transient fire load of lube oil, lube oil, fiberglass, paper filter, rubber	None	At least 2-firehose stations each with 100 ft. of 1-1/2 in. hose; 2-firehose stations each with at least 50 ft. of 1-1/2 in. hose (1 outside); This zone contains 3 dry chemical and 2 carbon dioxide portable fire extinguishers.
5D4	Low	9000	Cable insulation; transient fire load of lube oil, lube oil, fiberglass	None	3-firehose stations each with at least 50 ft. of 1-1/2 in. hose (1 outside); This zone and adjacent zones contain 1 dry chemical and 1 carbon dioxide portable fire extinguisher.

Combustible Loading and Extinguishing Capability
TABLE H.3-2
(SHEET 15 of 22)

FIRE AREA/ZONE	FIRE LOAD[1] See note 4	FLOOR AREA (Ft^2)	PRIMARY COMBUSTIBLE MATERIAL	FIRE DETECTION EQUIPMENT	FIRE PROTECTION EQUIPMENT
5D5	Low	13,000	Cable insulation; transient fire load of lube oil, grease, fiberglass, plastics, rubber, lube oil, hydrogen	Temperature detector	Local remote deluge system; At least 1-firehose station with 100 ft. of 1-1/2 in. hose; 1-firehose station with at least 50 ft. of 1-1/2 in. hose; 1-CO_2 reel with 100 ft. of hose; This zone contains at least 1 dry chemical and 1 carbon dioxide portable fire extinguisher.
5D6	High	1421	Turbine oil	Heat sensitive sprinkler initiation with water flow alarm	Automatic sprinkler system; 1-firehose station with 100 ft. of 1-1/2 in. hose; 1-CO_2 hose station; This zone and adjacent zones contain 1 dry chemical portable extinguisher.
5E1	Low	8384	Cable insulation, lube oil; transient fire load of lube oil, paper, rubber, cotton, cloth, fiberglass, paper filter	Heat sensitive sprinkler initiation with water flow alarm	Automatic sprinkler system; 2-firehose stations each with at least 50 ft- of 1-1/2 in. hose; This zone contains 1 dry chemical and 1 carbon dioxide portable fire extinguisher (both hose and extinguisher outside).
5E2	Low	8384	(Same as 5E1)	(Same as 5E1)	(Same as 5E1)
6A	Low	17,000	Cable insulation; lube oil; transient fire load of lube oil, cloth, rubber, paper, fiberglass	None	4-firehose stations each with 100 ft. of 1-1/2 in. hose; This zone contains 4 dry chemical portable fire extinguishers.
6B1	Low	3000	Cable insulation; plastic, wood, paper, cloth	Ionization detection	1-firehose station with 100 ft. of 1 1/2 in. hose (outside); This zone contains 1 dry chemical and 1 carbon dioxide portable fire extinguisher.
6B2	Med	12,000	Cable insulation; lube oil; transient fire load of lube oil, rubber, paper, cotton, cloth, wood, fiberglass, charcoal, plastic	Heat sensitive sprinkler initiation with water flow alarm	Automatic sprinkler protection, at least 3-firehose stations each with 100 ft. of 1 1/2 in. hose; This zone contains 3 dry chemical portable fire extinguishers.

Combustible Loading and Extinguishing Capability
TABLE H.3-2
(SHEET 16 of 22)

FIRE AREA/ZONE	FIRE LOAD[1] See note 4	FLOOR AREA (Ft^2)	PRIMARY COMBUSTIBLE MATERIAL	FIRE DETECTION EQUIPMENT	FIRE PROTECTION EQUIPMENT
6B3	Low	1600	None	None	None
6C	Low	10,000	None	None	None.
6D	Low	18,000	Cable insulation; transient fire load of neoprene cable insulation, lube oil, rubber, paper, cotton, cloth, plastic	Ionization detection	At least 1-firehose stations each with 100 ft. of 1 1/2 in. hose; 4-firehose stations each with at least 50 ft. of 1 1/2 in. hose; This zone contains at least 4 dry chemical and 2 carbon dioxide portable fire extinguishers
6E	Low	50,000	Cable insulation; lube oil; transient fire load of lube oil, grease, fiberglass, rubber, paper, plastic, cloth	Ionization detection	At least 2-firehose stations each with 100 ft. of 1 1/2 in. hose; 9-firehose stations each with at least 50 ft. of 1 1/2 in. hose; This zone and adjacent zones contain at least 18 dry chemical portable fire extinguishers.
7A1	Low	1200	Cable insulation; transient fire load of lube oil, grease, cellulose filter, paper	Ionization Detection	1-firehose station with at least 50 ft. of 1 1/2 in. hose; This zone contains 1 dry chemical portable fire extinguisher.
7A2	Low	1800	Cable insulation; transient fire load of lube oil, grease, cellulose filter, paper	Ionization Detection	None
7A3	Low	1800	Cable insulation; transient fire load of lube oil, grease, cellulose filter	Ionization Detection	1 firehose station with at least 50 ft. of 1 1/2 in. hose; This zone contains 1 dry chemical portable fire extinguisher.
7B1	Low	1872	Lube oil; cable insulation; fiberglass, rubber, paper filter, cotton , cloth; transient fire load of lube oil	Temperature detector	Automatic CO_2 flooding, 1-firehose station each with 100 ft. of 1 1/2 in. hose (outside). This zone contains 1 dry chemical portable fire extinguisher.

Combustible Loading and Extinguishing Capability
TABLE H.3-2
(SHEET 17 of 22)

FIRE AREA/ZONE	DESIGN FIRE LOAD[1] See note 4	FLOOR AREA (Ft^2)	PRIMARY COMBUSTIBLE MATERIAL	FIRE DETECTION EQUIPMENT	FIRE PROTECTION EQUIPMENT
7B2	Low	1664	Lube oil; cable insulation; transient fire load of lube oil, paper filter, rubber, paper, cotton, cloth	Temperature detector	Automatic CO_2 flooding; 1-firehose station with 100 ft, of 1 1/2 in. hose (outside); This zone and adjacent zones contains 1 dry chemical portable fire extinguisher.
7B3	High	1736	Lube oil; cable insulation; transient fire load of lube oil, paper filter, rubber, fiberglass	Temperature detector	Automatic CO_2 flooding; 1-firehose station with 100 ft. of 1 1/2 in. hose (outside); This zone and adjacent zones contains 1 dry chemical portable fire extinguisher.
7B4	High	163	Diesel fuel oil	Wet pipe sprinkler system with water flow alarm	Wet Pipe Automatic Sprinkler System; 1-firehose station with at least 100 ft. of 1 ½ in. hose (outside); adjacent zones contain 1 dry chemical portable fire extinguisher.
7B5	High	154	Lube oil; diesel fuel oil	Wet pipe sprinkler system with water flow alarm	Wet Pipe Automatic Sprinkler System; 1-firehose station with at least 100 ft. of 1 ½ in. hose (outside); adjacent zones contain 1 dry chemical portable fire extinguisher.
7B6	High	154	Diesel fuel oil	Wet pipe sprinkler system with water flow alarm	Wet Pipe Automatic Sprinkler System; 1-firehose station with at least 100 ft. of 1 ½ in. hose (outside); adjacent zones contain 1 dry chemical portable fire extinguisher.
7C1	High	998	Cable insulation; diesel fuel oil	Wet pipe sprinkler system with water flow alarm	Wet Pipe Automatic Sprinkler System; 1-firehose station with at least 50 ft. of 1 ½ in. hose; adjacent zones contain 1 dry chemical portable fire extinguisher (both outside).
7C2	High	1014	Diesel fuel oil	Wet pipe sprinkler system with water flow alarm	Wet Pipe Automatic Sprinkler System; 1-firehose station with at least 50 ft. of 1 ½ in. hose; adjacent zones contain 1 dry chemical portable fire extinguisher (both outside)

Combustible Loading and Extinguishing Capability
TABLE H.3-2
(SHEET 18 of 22)

FIRE AREA/ZONE	FIRE LOAD[1] See note 4	FLOOR AREA (Ft^2)	PRIMARY COMBUSTIBLE MATERIAL	FIRE DETECTION EQUIPMENT	FIRE PROTECTION EQUIPMENT
7C3	High	967	Diesel fuel oil	Wet pipe sprinkler system with water flow alarm	Wet Pipe Automatic Sprinkler System; 2-firehose stations with at least 50 ft. of 1 ½ in. hose; adjacent zones contain 1 dry chemical portable fire extinguisher (both outside).
7C4	Low	1041	Cable insulation; transient fire load of lube oil, paper, lube oil	Ionization detection	1-firehose station with 100 ft. of 1 1/2 in. hose; 1 firehose station with at least 50 ft. of 1 1/2 in. hose; This zone and adjacent zones contains 1 dry chemical portable fire extinguisher.
7C5	Low	1104	Cable insulation; transient fire load of lube oil, grease, fiberglass, cotton, cloth, paper, lube oil	Ionization detection	3-firehose stations with at least 50 ft. of 1 1/2 in. hose; This zone contains 1 dry chemical portable fire extinguishers.
7C6	Low	1057	Cable insulation; transient fire load of lube oil, grease, fiberglass, paper, lube oil	Ionization detection	2-firehose stations with at least 50 ft, of 1 1/2 in. hose; This zone and adjacent zones contain at least 1 dry chemical portable fire extinguisher.
8A1	Low	1200	Cable insulation; transient fire load of lube oil, grease, cellulose filter	Ionization detection	1-firehose station with at least 50 ft. of 1 1/2 in. hose; This zone contains 1 dry chemical portable fire extinguisher.

Combustible Loading and Extinguishing Capability
TABLE H.3-2
(SHEET 19 of 22)

FIRE AREA/ZONE	DESIGN FIRE LOAD[1] See note 4	FLOOR AREA (Ft^2)	PRIMARY COMBUSTIBLE MATERIAL	FIRE DETECTION EQUIPMENT	FIRE PROTECTION EQUIPMENT
8A2	Low	2000	Cable insulation; transient fire load of lube oil, grease, paper, cellulose filter	Ionization detection	1-firehose station with at least 50 ft. of 1 1/2 in. hose; This zone contains 1 dry chemical portable fire extinguisher.
8B1	Low	1829	Cable insulation; transient fire load of lube oil, paper, rubber, paper filter, fiberglass, cotton, cloth, lube oil	Temperature detection	Automatic CO_2 flooding; 1-firehose station with 100 ft. of 1 1/2 in hose (outside TB); This zone and adjacent zones contain 1 dry chemical portable fire extinguisher.
8B2	Low	2003	Cable insulation; lube oil; transient fire load of lube oil, paper, rubber, paper filter, fiberglass, cotton, cloth	Temperature detection	Automatic CO_2 flooding; 1-firehose station with at least 50 ft. of 1 1/2 in. hose (outside); This zone and adjacent zones contains 1 dry chemical portable fire extinguisher.
8B3	High	163	Diesel fuel oil, lube oil, cable insulation	Wet pipe sprinkler system with water flow alarm	Automatic Sprinkler System; 1- firehose station with 100 ft. of 1 ½ in. hose; adjacent zones contain 1 dry chemical portable fire extinguisher.
8B4	High	154	Diesel fuel oil	Wet pipe sprinkler system with water flow alarm	Automatic Sprinkler System; 1- firehose station with at least 50 ft. of 1 ½ in. hose (outside); adjacent zones contain 1 dry chemical portable fire extinguisher.
8C1	High	997	Diesel fuel oil	Wet pipe sprinkler system with water flow alarm	Automatic Sprinkler System; 1- firehose station with at least 50 ft. of 1 ½ in. hose; adjacent zones contain 1 dry chemical portable fire extinguisher (Both outside).

Combustible Loading and Extinguishing Capability
TABLE H.3-2
(SHEET 20 of 22)

FIRE AREA/ZONE	FIRE LOAD[1] See note 4	FLOOR AREA (Ft^2)	PRIMARY COMBUSTIBLE MATERIAL	FIRE DETECTION EQUIPMENT	FIRE PROTECTION EQUIPMENT
8C2	High	1083	Diesel fuel oil	Wet pipe sprinkler system with water flow alarm	Automatic Sprinkler System; 1- firehose station with at least 50 ft. of 1 ½ in. hose; adjacent zones contain 1 dry chemical portable fire extinguisher (both outside).
8C3	Low	1033	Cable insulation; transient fire load of lube oil, grease, lube oil	Ionization detection	1-firehose station with at least 50 ft. of 1 1/2 in. hose; 1-firehose station with 100 ft. of 1 1/2 in. hose; This zone and adjacent zones contain 1 dry chemical portable fire extinguisher.
8C4	Low	1177	Cable insulation; transient fire load of lube oil, grease, fiberglass, paper, cotton, cloth, lube oil	Ionization detection	1-firehose stations with at least 50 ft. of 1 1/2 in. hose; This zone and adjacent zones contain 1 dry chemical and 1 carbon dioxide fire extinguisher.
8C5	Low	1069	Cable insulation; transient fire load of lube oil, fiberglass, paper, lube oil	Ionization detection	1-firehose station with at least 50 ft. of 1 1/2 in. hose (outside); The adjacent zone contains 1 dry chemical fire extinguisher.

Combustible Loading and Extinguishing Capability
TABLE H.3-2
(SHEET 21 of 22)

FIRE AREA/ZONE	DESIGN FIRE LOAD[1] See note 4	FLOOR AREA (Ft^2)	PRIMARY COMBUSTIBLE MATERIAL	FIRE DETECTION EQUIPMENT	FIRE PROTECTION EQUIPMENT
10A1	Low	3000	Cable insulation; transient fire load of lube oil, paper filter, lube oil	Ionization detection	1-firehose station with 100 ft. of 1 1/2 in. hose; This zone has 1 carbon dioxide portable fire extinguisher.
10A2	Low	6000	Transient fire load of lube oil, lube oil, rubber	None.	1-firehose station with 100 ft. of 1 1/2 in. hose; This zone contains 1 carbon dioxide portable fire extinguisher.
10B1	Low	6000	Cable insulation; lube oil; transient fire load of lube oil, paper, fiberglass, rubber	Ionization detection	3-firehose stations each with at least 50 ft.of 1 1/2 in. hose; This zone contains 1 dry chemical and 1 carbon dioxide portable fire extinguisher.
10B2	Low	300	Cable insulation	None	This zone and adjacent zones contain a firehose station with at least 50 ft. of 1 1/2 in. hose; 1-dry chemical and 1- carbon dioxide portable fire extinguisher (all outside).

Combustible Loading and Extinguishing Capability
TABLE H.3-2
(SHEET 22 of 22)

FIRE AREA/ZONE	DESIGN FIRE LOAD[1] See note 4	FLOOR AREA (Ft^2)	PRIMARY COMBUSTIBLE MATERIAL	FIRE DETECTION EQUIPMENT	FIRE PROTECTION EQUIPMENT
10B3	Low	500	None	None	This zone and adjacent zones contain 1-firehose station with at least 50 ft. of 1 1/2 in. hose; 1- dry chemical and 1-carbon dioxide portable fire extinguishers (all outside).
10B4	Low	500	None	None	Same as 10B3
10C1	High	1200	Charcoal	None	1-firehose station with at least 50 ft. of 1 1/2 in. hose; 1-dry chemical portable fire extinguisher (all outside).
10C2	High	1200	Charcoal	None	Same as 10C1
10C3	Low	5500	Cable insulation; lube oil; transient fire load of lube oil, paper	None	At least 2-firehose stations each with at least 50 ft. of 1 1/2 in. hose; This zone contains at least 2 dry chemical portable fire extinguishers.

NOTES:

1. Design Fire Load is based on 100% cable fill per Combustible Loading Calculation No. L-000776. See also SEAG 99-000577, Nexus Evaluation of Combustible Loading.
2. Combustible loading values based on the actual cable fill per Combustible Loading Calculation No. L-000776. See also SEAG 99-000577, Nexus Evaluation of Combustible Loading.
3. Design Fire Load includes fire load of battery room by combining Fire Zones 5B13-1 and 5B13-2 as identified in the Combustible Loading Calculation No. L-000776.
4. See Calculation L-000776 for the actual values of the fire load and the definitions of low, moderate and high as well as the total quantity of combustibles.
5. “At least” 50 feet of hose means that there could be approximately 50 feet or more hose.

TABLE H.4-1

PRIMARY SYSTEMS FOR SAFE SHUTDOWN OF REACTOR

PURPOSE	BASIC METHOD SYSTEMS	ALTERNATE METHOD.
[redacted]	[redacted]	[redacted]
[redacted]	[redacted]	[redacted]
[redacted]	[redacted]	[redacted]
[redacted]	[redacted]	[redacted]
[redacted]	[redacted]	[redacted]
[redacted]	[redacted]	[redacted]
[redacted]	[redacted]	[redacted]
[redacted]	[redacted]	[redacted]

TABLE H.4-2
(SHEET 1 OF 7)

BASIC SHUTDOWN METHOD-MECHANICAL EQUIPMENT LIST

COMPONENT	NUMBER	ELEVATION (feet)	COLUMN/ROW	FIRE AREA/ZONE	COMMENTS*

TABLE H.4-2
(SHEET 2 OF 7)

COMPONENT	NUMBER	ELEVATION (feet)	COLUMN/ROW	FIRE AREA/ZONE	COMMENTS*

TABLE H.4-2
(SHEET 3 OF 7)

COMPONENT	NUMBER	ELEVATION (feet)	COLUMN/ROW	FIRE AREA/ZONE	COMMENTS *
[redacted]	[redacted]	[redacted]	[redacted]	[redacted]	[redacted]
[redacted]	[redacted]	[redacted]	[redacted]	[redacted]	[redacted]
[redacted]	[redacted]	[redacted]	[redacted]	[redacted]	[redacted]
[redacted]	[redacted]	[redacted]	[redacted]	[redacted]	[redacted]
[redacted]	[redacted]	[redacted]	[redacted]	[redacted]	[redacted]
[redacted]	[redacted]	[redacted]	[redacted]	[redacted]	[redacted]
[redacted]	[redacted]	[redacted]	[redacted]	[redacted]	[redacted]

TABLE H.4-2
(SHEET 4 OF 7)

COMPONENT	NUMBER	ELEVATION (feet)	COLUMN/ROW	FIRE AREA/ZONE	COMMENTS*
[redacted]	[redacted]	[redacted]	[redacted]	[redacted]	[redacted]

TABLE H.4-2
(SHEET 5 OF 7)

COMPONENT	NUMBER	ELEVATION (feet)	COLUMN/ROW	FIRE AREA/ZONE	COMMENTS*

TABLE H.4-2
(SHEET 6 OF 7)

COMPONENT	NUMBER	ELEVATION (feet)	COLUMN/ROW	FIRE AREA/ZONE	COMMENTS*
[redacted]	[redacted]	[redacted]	[redacted]	[redacted]	[redacted]
[redacted]	[redacted]	[redacted]	[redacted]	[redacted]	[redacted]
[redacted]	[redacted]	[redacted]	[redacted]	[redacted]	[redacted]
[redacted]	[redacted]	[redacted]	[redacted]	[redacted]	[redacted]
[redacted]	[redacted]	[redacted]	[redacted]	[redacted]	[redacted]
[redacted]	[redacted]	[redacted]	[redacted]	[redacted]	[redacted]

TABLE H.4-2
(SHEET 7 OF 7)

COMPONENT	NUMBER	ELEVATION (feet)	COLUMN/ROW	FIRE AREA/ROW	COMMENTS*
[redacted]	[redacted]	[redacted]	[redacted]	[redacted]	[redacted]
[redacted]					
[redacted]					
[redacted]					
[redacted]					

TABLE H.4-3
(SHEET 1 OF 5)

ALTERNATE SHUTDOWN METHOD

MECHANICAL EQUIPMENT LIST

COMPONENT	NUMBER	ELEVATION (feet)	COLUMN/ROW	FIRE AREA/ZONE	COMMENTS*
[redacted]	[redacted]	[redacted]	[redacted]	[redacted]	[redacted]

TABLE H.4-3
(SHEET 2 OF 5)

COMPONENT	NUMBER	ELEVATION (feet)	COLUMN/ROW	FIRE AREA/ZONE	COMMENTS*
[redacted]	[redacted]	[redacted]	[redacted]	[redacted]	[redacted]
[redacted]	[redacted]	[redacted]	[redacted]	[redacted]	[redacted]
[redacted]	[redacted]	[redacted]	[redacted]	[redacted]	[redacted]
[redacted]	[redacted]	[redacted]	[redacted]	[redacted]	[redacted]
[redacted]	[redacted]	[redacted]	[redacted]	[redacted]	[redacted]
[redacted]	[redacted]	[redacted]	[redacted]	[redacted]	[redacted]
[redacted]	[redacted]	[redacted]	[redacted]	[redacted]	[redacted]
[redacted]	[redacted]	[redacted]	[redacted]	[redacted]	[redacted]
[redacted]	[redacted]	[redacted]	[redacted]	[redacted]	[redacted]
[redacted]	[redacted]	[redacted]	[redacted]	[redacted]	[redacted]
[redacted]	[redacted]	[redacted]	[redacted]	[redacted]	[redacted]
[redacted]	[redacted]	[redacted]	[redacted]	[redacted]	[redacted]
[redacted]	[redacted]	[redacted]	[redacted]	[redacted]	[redacted]
[redacted]	[redacted]	[redacted]	[redacted]	[redacted]	[redacted]
[redacted]	[redacted]	[redacted]	[redacted]	[redacted]	[redacted]
[redacted]	[redacted]	[redacted]	[redacted]	[redacted]	[redacted]
[redacted]	[redacted]	[redacted]	[redacted]	[redacted]	[redacted]
[redacted]	[redacted]	[redacted]	[redacted]	[redacted]	[redacted]
[redacted]	[redacted]	[redacted]	[redacted]	[redacted]	[redacted]

TABLE H.4-3
(SHEET 3 OF 5)

COMPONENT	NUMBER	ELEVATION(feet)	COLUMN/ROW	FIRE AREA/ZONE	COMMENTS *
[redacted]	[redacted]	[redacted]	[redacted]	[redacted]	[redacted]
[redacted]	[redacted]	[redacted]	[redacted]	[redacted]	[redacted]

TABLE H.4-3
(SHEET 4 OF 5)

COMPONENT	NUMBER	ELEVATION(feet)	COLUMN/ROW	FIRE AREA/ZONE	COMMENTS*
[redacted]	[redacted]	[redacted]	[redacted]	[redacted]	[redacted]

TABLE H.4-3
(SHEET 5 OF 5)

COMPONENT	NUMBER	ELEVATION(feet)	COLUMN/ROW	FIRE AREA/ZONE	COMMENTS*
[redacted]	[redacted]	[redacted]	[redacted]	[redacted]	[redacted]

[redacted]

TABLE H.4-4
(SHEET 1 OF 6)

VENTILATION EQUIPMENT LIST

SYSTEM	COMPONENT	NUMBER	FLOOR ELEVATION	COLUMN/ROW	FIRE AREA/ZONE	COMMENTS
A. Unit 1:						
Control	Return Air Isolation Damper	0VC15YA	786' 6"	L-N/15-16	4B	*
Room	Supply Air Isolation Damper	0VC18YA	786' 6"	L-N/13-I4	4B	*
	Supply Air Isolation Damper	0VC21YA	786' 6"	L-N/13-14	4B	*
	Supply Air Isolation Damper	0VC24YA	786' 6"	L-N/13-14	4B	*
	Supply Air Isolation Damper	0VC27YA	786' 6'	L-N/13-14	4B	*
	Supply Air Isolation Damper	0VC30YA	786' 6"	L-N/13-14	4B	*
	Return Air Isolation Damper	0VC15YB	786' 6"	L-N/15-16	4B	*
	Supply Air Isolation Damper	0VC18YB	786' 6"	L-N/16-17	4B	*
	Supply Air Isolation Damper	0VC21YB	786' 6"	L-N/16-17	4B	*
	Supply Air Isolation Damper	0VC24YB	786' 6"	L-N/16-17	4B	*
	Supply Air Isolation Damper	0VC27YB	786' 6"	L-N/16-17	4B	*
	Supply Air Isolation Damper	0VC30YB	786' 6"	L-N/16-17	4B	*
	Supply Fan	0VC01CA	786' 6'	N/13-14	4B	
	Supply Fan	0VC01CB	786' 6"	N/16-17	4B	
	Return Fan	0VC02CA	802'	N-R/13-14	4B	
	Return Fan	0VC02CB	802'	N-R/16-17	4B	
	Refrigeration Compressor	0VC05CA	802'	N-R/13-14	4B	
	Refrigeration Compressor	0VC05CB	802'	N-R/16-17	4B	
	Air-Cooled Condensing Unit	0VC04CA	802'	N/12-13	4B	
	Air-Cooled Condensing Unit	0VC04CB	802'	N/17-18	4B	
	Cooling Coil	0VC02AA	786' 6"	N/14	4B	
	Cooling Coil	0VC02AB	786' 6"	N/16-17	4B	
Auxiliary	Return Air Isolation Damper	0VE06YA	786' 6"	R-N/15-16	4B	*
Electric	Supply Air Isolation Damper	0VE16YA	786' 6"	L-N/13-14	4B	*
Equipment	Supply Air Isolation Damper	0VE17YA	786' 6"	L-N/13-14	4B	*
Room	Supply Air Isolation Damper	0VE18YA	786' 6"	L-N/13-14	4B	*
	Return Air Isolation Damper	0VE06YB	786' 6"	R-N/15-16	4B	*
	Supply Air Isolation Damper	0VE16YB	786' 6"	L-N/16-17	4B	*
	Supply Air Isolation Damper	0VE17YB	786' 6"	L-N/16-17	4B	*
	Supply Air Isolation Damper	0VE18YB	786' 6"	L-N/16-17	4B	*
	Supply Fan	0VE01CA	786' 6"	N/13-14	4B	
	Supply Fan	0VE01CB	786' 6"	N/16-17	4B	

TABLE H.4-4
(SHEET 2 OF 6)

SYSTEM	COMPONENT	NUMBER	FLOOR ELEVATION	COLUMN/ROW	FIRE AREA/ZONE	COMMENTS
Auxiliary	Return Fan	0VE02CA	786' 6"	N-R/13-14	4B	
Electric	Return Fan	0VE02CB	786' 6"	N-R/16-17	4B	
Equipment	Refrigeration Compressor	0VE04CA	802'	N-R/13-14	4B	
Room	Refrigeration Compressor	0VE04CB	802'	N-R/16-17	4B	
	Air-Cooled Condensing Unit	0VE03CA	802'	N/12-13	4B	
	Air-Cooled Condensing Unit	0VE03CB	802'	N/17-18	4B	
	Cooling Coil	0VE01AA	786' 6"	L-N/13-14	4B	
	Cooling Coil	0VE01AB	786' 6"	L-N/16-17	4B	
Div. 1	Damper	1VX14Y	710' 6"	J-L/10-11	4F1	
SWGR	Damper	1VX19YA	710' 6"	J-L/10-11	4F1	
	Damper	1VX26Y	710' 6"	J-L/10-11	4F1	
	Supply Fan	1VX01C	710' 6"	J-L/10-11	4F1	
	Exhaust Fan	1VX02C	710' 6"	L-N/12-13	4F1	
	Exhaust Fan	1VX03C	710' 6"	J-L/9-10	4F1	
Div. 2	Damper	1VX07Y	731' 0	J-L/10-11	4E3-2	
SWGR	Damper	1VX08Y	731' 0"	J-L/10-1l	4E3-2	
	Supply Fan	1VX04C	731' 0"	J-L/10-11	4E3-2	
	Exhaust Fan	1VX05C	731' 0"	L-N/12-13	4E3-2	
DG "0"	Damper	0VD01YA/B	731' 0"	F-G/8	7A3	*
	Damper	0VD02YA/B	731' 0"	G-J/6-8	7A3	*
	Damper	0VD03YA/B	731' 0"	G-J/6-8	7A3	*
	Supply Fan	0VD01C	731' 0"	F-G/6-8	7A3	
	Exhaust Fan	0VD02C	731' 0"	F-G/6-8	7A3	
DG "1A"	Damper	1VD09YA/B	731' 0"	J-L/8	7A2	*
	Damper	1VD10YA/B	731' 0"	G-J/6-8	7A2	*
	Damper	1VD11YA/B	731' 0"	G-J/6-8	7A2	*
	Supply Fan	1VD03C	731' 0"	J-L/6-8	7A2	
	Exhaust Fan	1VD04C	731' 0"	J-L/6-8	7A2	
HPCS DG	Damper	1VD01YA/B	731' 0'	L-N/6-8	7A1	*
	Damper	1VD02YA/B	731' 0"	L-N/6-8	7A1	*
	Damper	1VD03YA/B	731' 0"	L-N/6-8	7A1	*
	Supply Fan	1VD01C	73l' 0"	L-N/6-8	7A1	
	Exhaust Fan	1VD02C	731' 0"	L-N/6-8	7A1	
HPCS SWGR	Damper	1VD17Y	731' 0"	L-N/8-9	7A1	*
& Cooling	Damper	1VD18Y	731' 0"	L-N/8-9	7A1	*
Water						

TABLE H.4-4
(SHEET 3 OF 6)

SYSTEM	COMPONENT	NUMBER	FLOOR ELEVATION	COLUMN/ROW	FIRE AREA/ZONE	COMMENTS
HPCS SWGR	Damper	1VD19Y	731' 0"	L-N/8-9	7A1	*
& Cooling	Supply Fan	1VD05C	731' 0"	L-N/8-9	7A1	
Water	Return Fan	1VD06C	731' 0"	L-N/8-9	7A1	
	Exhaust Fan	1VD07C	731' 0"	L-N/8-9	7A1	
RHR 1A & 1B	Damper	1VY01Y	731' 0"	G/8-9	7A3	
Service	Damper	1VY02Y	731' 0"	G-J/8-9	7A3	
Water	Damper	1VY03Y	731' 0"	G-J/R-9	7A3	
	Supply Fan	1VY05C	731' 0"	G-J/8-9	7A3	
RHR 1C & 1D	Damper	1VY04Y	731' 0"	J/8-9	7A2	
Service	Damper	1VY05Y	731' 0"	G-J/8-9	7A2	
Water	Damper	1VY06Y	731' 0"	G-J/S-9	7A2	
	Supply Fan	1VY06C	731' 0"	G-J/8-9	7A2	
RHR A Cubicle	Supply Fan	1VY01C	694' 6"	F-G/14-15	2H1-2	
HPCS Cubicle	Supply Fan	1VY02C	694' 6"	F-G/9-10	2H1-1	
RHR B Cubicle	Supply Fan	1VY03C	694' 6"	C-D/9-10	2H1-1	
RCIC/LPCS Cubicle	Supply Fan	1VY04C	694' 6"	C-D/14-15	2H1-2	
B. Unit 2:						
Control	Return Air Isolation Damper	0VC15YA	786'6"	L-N/15-16	4B	*
Room	Supply Air Isolation Damper	0VC18YA	786'6"	L-N/13-14	4B	*
	Supply Air Isolation Damper	0VC21YA	786'6"	L-N/13-14	4B	*
	Supply Air Isolation Damper	0VC24YA	786'6"	L-N/13-14	4B	*
	Supply Air Isolation Damper	0VC27YA	786'6"	L-N/13-14	4B	*
	Supply Air Isolation Damper	0VC30YA	786'6"	L-N/13-14	4B	*
	Return Air Isolation Damper	0VC15YB	786'6"	L-N/15-16	4B	*
	Supply Air Isolation Damper	0VC18YB	786'6"	L-N/16-17	4B	*
	Supply Air Isolation Damper	0VC21YB	786'6"	L-N/16-17	4B	*
	Supply Air Isolation Damper	0VC24YB	786'6"	L-N/16-17	4B	*
	Supply Air Isolation Damper	0VC27YB	786'6"	L-N/16-17	4B	*
	Supply Air Isolation Damper	0VC30YB	786'6"	L-N/16-17	4B	*
	Supply Fan	0VC01CA	786'6"	N/13-14	4B	
	Supply Fan	0VC01CB	786'6"	N/16-17	4B	
	Return Fan	0VC02CA	802'	N-P/13-14	4B	

TABLE H.4-4
(SHEET 4 OF 6)

SYSTEM	COMPONENT	NUMBER	FLOOR ELEVATION	COLUMN/ROW	FIRE AREA/ZONE	COMMENTS
	Return Fan	0VC02CB	802'	N-R/16-17	4B	
	Refrigeration Compressor	0VC05CA	802'	N-R/13-14	4B	
	Refrigeration Compressor	0VC05CB	802'	N-R/16-17	4B	
	Air-Cooled Condensing Unit	0VC04CA	802'	N/12-13	4B	
	Air-Cooled Condensing Unit	0VC04CB	802'	N/17-18	4B	
	Cooling Coil	0VC02AA	786'6"	N/14	4B	
	Cooling Coil	0VC02AB	786'6"	N/16-17	4B	
Auxiliary	Return Air Isolation Damper	0VE06YA	786'6"	R-N/14-15	4B	*
Electric	Supply Air Isolation Damper	0VE16YA	786'6"	L-N/13-14	4B	*
Equipment	Supply Air Isolation Damper	0VE17YA	786'6"	L-N/13-14	4B	*
	Supply Air Isolation Damper	0VE18YA	786'6"	L-N/13-14	4B	*
	Return Air Isolation Damper	0VE06YB	786'6"	R-N/14-15	4B	*
	Supply Air Isolation Damper	0VE16YB	786'6"	L-N/16-17	4B	*
	Supply Air Isolation Damper	0VE17YB	786'6"	L-N/16-17	4B	*
	Supply Air Isolation Damper	0VE18YB	786'6"	L-N/16-17	4B	*
	Supply Fan	0VE01CA	786'6'	N/13-14	4B	
	Supply Fan	0VE01CB	786'6"	N/16-17	4B	
Auxiliary	Return Fan	0VE02CA	786'6"	N-R/13-14	4B	
Electric	Return Fan	0VE02CB	786'6"	N-R/16-17	4B	
Equipment	Refrigeration Compressor	0VE04CA	802'	N-R/13-14	4B	
Room	Refrigeration Compressor	0VE04CB	802'	N-R/16-17	4B	
	Air-Cooled Condensing Unit	0VE03CA	802'	N/12-13	4B	
	Air-Cooled Condensing Unit	0VE03CB	802'	N/17-18	4B	
	Cooling Coil	0VE01AA	786'6"	L-N/13-14	4B	
	Cooling Coil	0VE01AB	786'6"	L-N/16-17	4B	
Div. 1	Damper	2VX14Y	710'6"	J/19-20	4F2	
SWGR	Damper	2VX19YA	710'6"	J/19-20	4F2	
	Damper	2VX26Y	710'6"	J-L/20-21	4F2	
	Supply Fan	2VX01C	710'6"	J-L/19-20	4F2	
	Exhaust Fan	2VX02C	710'6"	N-R/17-18	5C11	
	Exhaust Fan	2VX03C	710'6"	J-L/21	4F2	
Div. 2	Damper	2VX07Y	731'0"	J-L/19-20	4E4-2	
SWGR	Damper	2VX08Y	731'0"	J-L/19-20	4E4-2	
	Supply Fan	2VX04C	731'0"	J-L/19-20	4E4-2	
	Exhaust Fan	2VX05C	731'0"	L-H/17-18	4E4-2	

TABLE H.4-4
(SHEET 5 OF 6)

SYSTEM	COMPONENT	NUMBER	FLOOR ELEVATION	COLUMN/ROW	FIRE AREA/ZONE	COMMENTS
DG "O"	Damper	0VD01YA/B	731'0"	F-G/8	7A3	*
	Damper	0VD02YA/B	731'0"	G-J/6-8	7A3	*
	Damper	0VD03YA/B	731'0"	G-J/6-8	7A3	*
	Supply Fan	0VD01C	731'0"	F-G/6-8	7A3	
	Exhaust Fan	0VD02C	731'0"	F-G/6-8	7A3	
DG "2A"	Damper	2VD09YA/B	736'6"	H-J/22	8A2	*
	Damper	2VD10YA/B	736'6"	J-L/23-24	8A2	*
	Damper	2VD11YA/B	748'6"	J-L/23-24	8A2	*
	Supply Fan	2VD03C	736'6"	H-J/22-20	8A2	
	Exhaust Fan	2VD04C	736'6"	R-J/23-24	8A2	
HPCS DG	Damper	2VD01YA/B	736'6"	L-N/22-23	8A1	*
	Damper	2VD02YA/B	736'6"	L-N/23-24	8A1	*
	Damper	2VD03YA/B	748'6"	L-N/23-24	8A1	*
	Supply Fan	2VD01C	736'6"	L-N/22-23	8A1	
	Exhaust Fan	2VD02C	736 6"	L-N/23-24	8A1	
HPCS SWGR	Damper	2VD17Y	736'6"	L-N/22	8A1	*
& Cooling	Damper	2VD18Y	736'6"	L-N/22	8A1	*
Water	Damper	2VD19Y	748'6"	L-N/22-23	8A1	*
	Supply Fan	2VD05C	736'6"	L-N/21-22	8A1	
	Return Fan	2VD06C	736'6"	L-N/21-22	8A1	
	Exhaust Fan	2VD07C	736'6"	L-N/21-22	8A1	
RHR 2A & 2B	Damper	2VY01Y	736'6"	L-N/23	8A1	
Service	Damper	2VY02Y	736'6"	L-N/23	8A1	
Water	Damper	2VY03Y	748'6"	L-N/22-23	8A1	
	Supply Fan	2VY05C	736'6"	N/23	8A1	
	Return Fan	2VY07C	736'6"	L-N/23-24	8A1	
RHR 2C & 2D	Damper	2VY04Y	736'6"	J-L/21-22	8A2	
Service	Damper	2VY05Y	736'6"	J-L/21-22	8A2	
Water	Damper	2VY06Y	748'6"	J-L/21-22	8A2	
	Supply Fan	2VY06C	736'6"	J-L/22-23	8A2	

TABLE H.4-4
(SHEET 6 OF 6)

SYSTEM	COMPONENT	NUMBER	FLOOR ELEVATION	COLUMN/ROW	FIRE AREA/ZONE	COMMENTS
RHR A Cubicle	Supply Fan	2VY01C	694' 6"	F-G/20-21	3H1-2	
HPCS Cubicle	Supply Fan	2VY02C	694'6"	F-G/15-I6	3H1-1	
RHR B Cubicle	Supply Fan	2VY03C	694'6"	C-D/15-16	3H1-1	
RCIC/LPCS Cubicle	Supply Fan	2VY04C	694'6"	C-D/20-21	3H1-2	

* ISOLATION DAMPER EQUIPPED WITH LOCKING DEVICE TO PROVIDE FOR MANUAL OPERATION OF DAMPER.

TABLE H.4-5
(SHEET 1 OF 2)

HOT SHUTDOWN SYSTEMS AFFECTED BY A LOSS OF SELECTED VENTILATION SYSTEMS

A. Unit 1:

VENTILATION SYSTEM	AFFECTED SYSTEMS
[redacted]	[redacted]
[redacted]	[redacted]
[redacted]	[redacted]
[redacted]	[redacted]
[redacted]	[redacted]
[redacted]	[redacted]
[redacted]	[redacted]
[redacted]	[redacted]
[redacted]	[redacted]
[redacted]	[redacted]
[redacted]	[redacted]
[redacted]	[redacted]

TABLE H.4-5
(SHEET 2 OF 2)

B. Unit 2:

VENTILATION SYSTEM	AFFECTED SYSTEMS
[redacted]	[redacted]
[redacted]	[redacted]
[redacted]	[redacted]
[redacted]	[redacted]
[redacted]	[redacted]
[redacted]	[redacted]
[redacted]	[redacted]
[redacted]	[redacted]
[redacted]	[redacted]
[redacted]	[redacted]
[redacted]	[redacted]
[redacted]	[redacted]
[redacted]	[redacted]

TABLE H.4-6
(SHEET 1 OF 4)

BASIC SHUTDOWN METHOD

ELECTRICAL EQUIPMENT LIST

NOMENCLATURE	NUMBER	ELEVATION (feet)	COLUMN/ROW	FIRE AREA/ ZONE	EXCEPTIONS (ALSO AFFECTED)
A. Unit 1:					

TABLE H.4-6
(SHEET 2 OF 4)

NOMENCLATURE	NUMBER	ELEVATION (feet)	COLUMN/ROW	FIRE AREA/ ZONE	EXCEPTIONS (ALSO AFFECTED)
[redacted]	[redacted]	[redacted]	[redacted]	[redacted]	[redacted]
B. Unit 2:					
[redacted]	[redacted]	[redacted]	[redacted]	[redacted]	[redacted]

TABLE H.4-6
(SHEET 3 OF 4)

NOMENCLATURE	NUMBER	ELEVATION (feet)	COLUMN/ROW	FIRE AREA/ ZONE	EXCEPTIONS (ALSO AFFECTED)

TABLE H.4-6
(SHEET 4 OF 4)

NOMENCLATURE	NUMBER	ELEVATION (feet)	COLUMN/ROW	FIRE AREA/ ZONE	EXCEPTIONS (ALSO AFFECTED)
[redacted]	[redacted]	[redacted]	[redacted]	[redacted]	[redacted]

TABLE H.4-7
(SHEET 1 OF 3)

ALTERNATE SHUTDOWN METHOD

ELECTRICAL EQUIPMENT LIST

NOMENCLATURE	NUMBER	ELEVATION (feet)	COLUMN/ROW	FIRE AREA/ZONE	EXCEPTIONS (ALSO AFFECTED)
A. Unit 1:					
[redacted]	[redacted]	[redacted]	[redacted]	[redacted]	[redacted]

TABLE H.4-7
(SHEET 2 OF 3)

NOMENCLATURE	NUMBER	ELEVATION (feet)	COLUMN/ROW	FIRE AREA/ZONE	EXCEPTIONS (ALSO AFFECTED)
[redacted]	[redacted]	[redacted]	[redacted]	[redacted]	[redacted]
[redacted]	[redacted]	[redacted]	[redacted]	[redacted]	
[redacted]	[redacted]	[redacted]	[redacted]	[redacted]	[redacted]
[redacted]	[redacted]	[redacted]	[redacted]	[redacted]	
[redacted]	[redacted]	[redacted]	[redacted]	[redacted]	[redacted]
[redacted]	[redacted]	[redacted]	[redacted]	[redacted]	
[redacted]	[redacted]	[redacted]	[redacted]	[redacted]	
[redacted]	[redacted]	[redacted]	[redacted]	[redacted]	
[redacted]	[redacted]	[redacted]	[redacted]	[redacted]	
[redacted]	[redacted]	[redacted]	[redacted]	[redacted]	
[redacted]	[redacted]	[redacted]	[redacted]	[redacted]	
[redacted]	[redacted]	[redacted]	[redacted]	[redacted]	
B. Unit 2:					
[redacted]	[redacted]	[redacted]	[redacted]	[redacted]	[redacted]
[redacted]	[redacted]	[redacted]	[redacted]	[redacted]

TABLE H.4-7
(SHEET 3 OF 3)

NOMENCLATURE	NUMBER	ELEVATION (feet)	COLUMN/ROW	FIRE AREA/ZONE	EXCEPTIONS (ALSO AFFECTED)
[redacted]	[redacted]	[redacted]	[redacted]	[redacted]	[redacted]

TABLE H.4-8
(SHEET 1 OF 2)

FIRE AREAS/ZONES NOT AFFECTING SAFE SHUTDOWN

FIRE ZONES		LOCATIONS
A. Unit 1:		
1	-	Refueling Floor
2A	-	Instrument Storage Room - Reactor Building
2I6	-	Drain Tank Room - Reactor Building
4A	-	Upper Ventilation Floor - Auxiliary Building
4C5	-	Security Control Center - Auxiliary Building
5A1	-	Unit 1 Turbine Driven Reactor Feed Pump Area - Turbine Building
5A3	-	Turbine Operating Floor and Heater Bay - Turbine Building
5B1	-	Unit 1 Heater Bays - Turbine Building
5B3	-	Turbine Oil Package Room - Turbine Building
5B4	-	Electrode Boiler Room - Turbine Building
5B5	-	Elevation 731 feet, 0 inch - Turbine Building
5B7	-	Unit 1 Hydrogen Seal Oil Unit - Turbine Building
5B9	-	Unit 1 Motor Driven Reactor Feed Pump Room - Turbine Building
5B11	-	Unit 1 Heater Aisle - Turbine Building
5C1	-	Unit 1 Valve Aisle - Turbine Building
5C3	-	Unit 1 Condenser Tube Pull Area - Turbine Building
5C6	-	Unit 1, Number 1 High Pressure Heater Cubicle - Turbine Building
5C9	-	Unit 1, Valve Room - Turbine Building
5D3	-	Demineralizer Zone - Turbine Building
5D5	-	Upper Basement Area - Turbine Building
5E1	-	Lower Basement - Turbine Building
FIRE AREA		
6	-	Radwaste Building
9	-	Service Building
10	-	Off-Gas Building
FIRE ZONES		
B. Unit 2:		
1*	-	Refueling Floor
3A	-	Instrument Storage Room - Reactor Building
3H2	-	HPCS Cubicle Elevation 694 feet 6 inches
3I6	-	Drain Tank Room - Reactor Building
4A*	-	Upper Ventilation Floor - Auxiliary Building
4C5*	-	Security Control Center - Auxiliary Building
5A2	-	Unit 2 Turbine Driven Reactor Feed Pump Area - Turbine Building

TABLE H.4-8
(SHEET 2 OF 2)

FIRE ZONES		LOCATIONS
B. Unit 2:		
5A3*	-	Turbine Operating Floor and Heater Bay Turbine Building
5B2	-	Unit 2 Heater Bays - Turbine Building
5B3*	-	Turbine Oil Package Room - Turbine Building
5B4*	-	Electrode Boiler Room - Turbine Building
5B6	-	Elevation 731 feet, 0 inch - Turbine Building
5B8	-	Unit 2 Hydrogen Seal Oil Unit - Turbine Building
5B10	-	Unit 2 Motor Driven Reactor Feed Pump Room - Turbine Building
5B12	-	Unit 2 Heater Aisle - Turbine Building
5C2	-	Unit 2 Valve Aisle - Turbine Building
5C4	-	Unit 2 Condenser Tube Pull Area - Turbine Building
5C7	-	Unit 2, Number 1 High Pressure Heater Cubicle - Turbine Building
5C10	-	Unit 2, Valve Room - Turbine Building
5D4	-	Heater Drain Tank Room - Turbine Building
	-	
5D6	-	Clean & Dirty Oil Tank Room - Turbine Building
5E2	-	Lower Basement - Turbine Building
FIRE AREA		
6*	-	Radwaste Building
9*	-	Service Building
10*	-	Off-Gas Building

* Indicates that this area is shared in common with Unit 1 and was reviewed in the safe shutdown analysis for both units.

TABLE H.4-9

SAFE SHUTDOWN EQUIPMENT LOCATED IN FIRE ZONE 2B1

[redacted]

TABLE H.4-10

SAFE SHUTDOWN EQUIPMENT LOCATED IN FIRE ZONE 3B1

[redacted]

TABLE H.4-11

SHEET 1 of 2

SAFE SHUTDOWN EQUIPMENT LOCATED IN FIRE ZONE 2D

[redacted]

Both*

TABLE H.4-11

SHEET 2 of 2

[redacted]

[redacted].

TABLE H.4-12

SHEET 1 of 2

SAFE SHUTDOWN EQUIPMENT LOCATED IN FIRE ZONE 3D

[redacted]

TABLE H.4-12

SHEET 2 of 2

[redacted]

TABLE H.4-13
(SHEET 1 of 2)

SAFE SHUTDOWN EQUIPMENT LOCATED IN FIRE ZONE 2E-1

[redacted]

TABLE H.4-13
(SHEET 2 of 2)

SAFE SHUTDOWN EQUIPMENT LOCATED IN FIRE ZONE 2E-1

[redacted]

TABLE H.4-14
(SHEET 1 of 2)

SAFE SHUTDOWN EQUIPMENT LOCATED IN FIRE ZONE 2E-2

[redacted]

TABLE H.4-14
(SHEET 2 of 2)

SAFE SHUTDOWN EQUIPMENT LOCATED IN FIRE ZONE 2E-2

[redacted]

TABLE H.4-15
(SHEET 1 of 2)

SAFE SHUTDOWN EQUIPMENT LOCATED IN FIRE ZONE 3E-1

[redacted]

TABLE H.4-15
(SHEET 2 of 2)

SAFE SHUTDOWN EQUIPMENT LOCATED IN FIRE ZONE 3E-1

[redacted]

TABLE H.4-16
(SHEET 1 of 2)

SAFE SHUTDOWN EQUIPMENT LOCATED IN FIRE ZONE 3E-2

[redacted]

TABLE H.4-16
(SHEET 2 of 2)

[redacted]

TABLE H.4-17
(SHEET 1 of 3)

SAFE SHUTDOWN EQUIPMENT LOCATED IN FIRE ZONE 2F-1

[redacted]

TABLE H.4-17
(SHEET 2 of 3)

COMPONENT	NUMBER	METHOD
[redacted]	[redacted]	[redacted]

TABLE H.4-17
(SHEET 3 of 3)

[redacted]

TABLE H.4-18
(SHEET 1 of 4)

SAFE SHUTDOWN EQUIPMENT LOCATED IN FIRE ZONE 2F-2

[redacted]

TABLE H.4-18
(SHEET 2 of 4)

COMPONENT	NUMBER	METHOD
[redacted]	[redacted]	[redacted]
[redacted]	[redacted]	[redacted]
[redacted]	[redacted]	[redacted]
[redacted]	[redacted]	[redacted]
[redacted]	[redacted]	[redacted]
[redacted]	[redacted]	[redacted]
[redacted]	[redacted]	[redacted]
[redacted]	[redacted]	[redacted]

TABLE H.4-18
(SHEET 3 of 4)

COMPONENT	NUMBER	METHOD
[redacted]	[redacted]	[redacted]
[redacted]	[redacted]	[redacted]
[redacted]	[redacted]	[redacted]
[redacted]	[redacted]	[redacted]
[redacted]	[redacted]	[redacted]
[redacted]	[redacted]	[redacted]
[redacted]	[redacted]	[redacted]
[redacted]	[redacted]	[redacted]
[redacted]	[redacted]	[redacted]
[redacted]	[redacted]	[redacted]
[redacted]	[redacted]	[redacted]

TABLE H.4-18
(SHEET 4 of 4)

COMPONENT	CABLE NUMBER	METHOD
[redacted]	[redacted]	[redacted]
[redacted]	[redacted]	[redacted]
[redacted]	[redacted]	[redacted]

TABLE H.4-19
(SHEET 1 of 3)

SAFE SHUTDOWN EQUIPMENT LOCATED IN FIRE ZONE 3F-1

[redacted]

TABLE H.4-19
(SHEET 2 of 3)

COMPONENT	NUMBER	METHOD
[redacted]	[redacted]	[redacted]
[redacted]	[redacted]	[redacted]
[redacted]	[redacted]	[redacted]

TABLE H.4-19
(SHEET 3 of 3)

[redacted]

TABLE H.4-20
(SHEET 1 of 4)

SAFE SHUTDOWN EQUIPMENT LOCATED IN FIRE ZONE 3F-2

[redacted]

TABLE H.4-20
(SHEET 2 of 4)

COMPONENT	CABLE NUMBER	METHOD
[redacted]	[redacted]	[redacted]
	[redacted]	[redacted]
	[redacted]	[redacted]
[redacted]	[redacted]	[redacted]
[redacted]	[redacted]	[redacted]
[redacted]	[redacted]	[redacted]
[redacted]		
	[redacted]	[redacted]
[redacted]	[redacted]	[redacted]
[redacted]	[redacted]	[redacted]
[redacted]	[redacted]	[redacted]
[redacted]	[redacted]	[redacted]

TABLE H.4-20
(SHEET 3 of 4)

COMPONENT	CABLE NUMBER	METHOD
[redacted]	[redacted]	[redacted]
[redacted]	[redacted]	[redacted]
[redacted]	[redacted]	[redacted]
[redacted]	[redacted]	[redacted]
[redacted]	[redacted]	[redacted]
[redacted]	[redacted]	[redacted]
[redacted]	[redacted]	[redacted]
[redacted]	[redacted]	[redacted]
[redacted]	[redacted]	[redacted]
[redacted]	[redacted]	[redacted]
[redacted]	[redacted]	[redacted]
[redacted]	[redacted]	[redacted]
[redacted]	[redacted]	[redacted]
[redacted]	[redacted]	[redacted]
[redacted]	[redacted]	[redacted]
[redacted]	[redacted]	[redacted]
[redacted]	[redacted]	[redacted]
[redacted]	[redacted]	[redacted]
[redacted]	[redacted]	[redacted]

TABLE H.4-20
(SHEET 4 of 4)

COMPONENT	CABLE NUMBER	METHOD
[redacted]	[redacted]	[redacted]
[redacted]	[redacted]	[redacted]
[redacted]	[redacted]	[redacted]
[redacted]	[redacted]	[redacted]
[redacted]	[redacted]	[redacted]
[redacted]	[redacted]	[redacted]
[redacted]	[redacted]	[redacted]
[redacted]	[redacted]	[redacted]
[redacted]	[redacted]	[redacted]
[redacted]	[redacted]	[redacted]
[redacted]	[redacted]	[redacted]
[redacted]	[redacted]	[redacted]
[redacted]	[redacted]	[redacted]
[redacted]	[redacted]	[redacted]
[redacted]	[redacted]	[redacted]
[redacted]	[redacted]	[redacted]
[redacted]	[redacted]	[redacted]
[redacted]	[redacted]	[redacted]
[redacted]	[redacted]	[redacted]

[redacted]

[redacted]

TABLE H.4-21
(SHEET 1 of 3)

SAFE SHUTDOWN EQUIPMENT LOCATED IN FIRE ZONE 2G-1

[redacted]

TABLE H.4-21
(SHEET 2 of 3)

COMPONENT	CABLE NUMBER	METHOD
[redacted]	[redacted]	[redacted]
[redacted]	[redacted]	[redacted]
[redacted]	[redacted]	[redacted]
[redacted]	[redacted]	[redacted]
[redacted]	[redacted]	[redacted]
[redacted]	[redacted]	[redacted]
[redacted]	[redacted]	[redacted]
[redacted]	[redacted]	[redacted]
[redacted]	[redacted]	[redacted]
[redacted]	[redacted]	[redacted]
[redacted]	[redacted]	[redacted]

TABLE H.4-21
(SHEET 3 of 3)

COMPONENT	CABLE NUMBER	METHOD
[redacted]	[redacted]	[redacted]
[redacted]	[redacted]	[redacted]
[redacted]	[redacted]	[redacted]

TABLE H.4-22
(SHEET 1 OF 4)

SAFE SHUTDOWN EQUIPMENT LOCATED IN FIRE ZONE 2G-2

[redacted]

TABLE H.4-22
(SHEET 2 OF 4)

COMPONENT	CABLE NUMBER	METHOD
[redacted]	[redacted]	[redacted]
[redacted]	[redacted]	[redacted]
[redacted]	[redacted]	[redacted]
[redacted]	[redacted]	[redacted]
[redacted]	[redacted]	[redacted]
[redacted]	[redacted]	[redacted]
[redacted]	[redacted]	[redacted]
[redacted]	[redacted]	[redacted]
[redacted]	[redacted]	[redacted]
[redacted]	[redacted]	[redacted]
[redacted]	[redacted]	[redacted]
[redacted]	[redacted]	[redacted]
[redacted]	[redacted]	[redacted]
[redacted]	[redacted]	[redacted]
[redacted]	[redacted]	[redacted]
[redacted]	[redacted]	[redacted]
[redacted]	[redacted]	[redacted]
[redacted]	[redacted]	[redacted]
[redacted]	[redacted]	[redacted]

TABLE H.4-22
(SHEET 3 OF 4)

COMPONENT	CABLE NUMBER	METHOD
[redacted]	[redacted]	[redacted]
[redacted]	[redacted]	[redacted]
[redacted]	[redacted]	[redacted]

TABLE H.4-22
(SHEET 4 OF 4)

COMPONENT	CABLE NUMBER	METHOD
[redacted]	[redacted]	[redacted]
[redacted]		
[redacted]		
[redacted]		

TABLE H.4-23
(SHEET 1 OF 3)

SAFE SHUTDOWN EQUIPMENT LOCATED IN FIRE ZONE 3G-1

[redacted]

TABLE H.4-23
(SHEET 2 OF 3)

COMPONENT	CABLE NUMBER	METHOD
[redacted]	[redacted]	[redacted]
[redacted]	[redacted]	[redacted]
[redacted]	[redacted]	[redacted]
[redacted]	[redacted]	[redacted]
[redacted]	[redacted]	[redacted]
[redacted]	[redacted]	[redacted]
[redacted]	[redacted]	[redacted]
[redacted]	[redacted]	[redacted]
[redacted]	[redacted]	[redacted]
[redacted]	[redacted]	[redacted]
[redacted]	[redacted]	[redacted]
[redacted]	[redacted]	[redacted]

TABLE H.4-23
(SHEET 3 OF 3)

COMPONENT	NUMBER	METHOD
[redacted]	[redacted]	[redacted]
[redacted]	[redacted]	[redacted]
[redacted]	[redacted]	[redacted]

TABLE H.4-24
(SHEET 1 OF 5)

SAFE SHUTDOWN EQUIPMENT LOCATED IN FIRE ZONE 3G-2

[redacted]

TABLE H.4-24
(SHEET 2 OF 5)

COMPONENT	CABLE NUMBER	METHOD
[redacted]	[redacted]	[redacted]
[redacted]	[redacted]	[redacted]
[redacted]	[redacted]	[redacted]
[redacted]	[redacted]	[redacted]
[redacted]	[redacted]	[redacted]
[redacted]	[redacted]	[redacted]
[redacted]	[redacted]	[redacted]
[redacted]	[redacted]	[redacted]
[redacted]	[redacted]	[redacted]
[redacted]	[redacted]	[redacted]
[redacted]	[redacted]	[redacted]
[redacted]	[redacted]	[redacted]
[redacted]	[redacted]	[redacted]
[redacted]	[redacted]	[redacted]
[redacted]	[redacted]	[redacted]
[redacted]	[redacted]	[redacted]
[redacted]	[redacted]	[redacted]
[redacted]	[redacted]	[redacted]
[redacted]	[redacted]	[redacted]
[redacted]	[redacted]	[redacted]
[redacted]	[redacted]	[redacted]
[redacted]	[redacted]	[redacted]
[redacted]	[redacted]	[redacted]
[redacted]	[redacted]	[redacted]
[redacted]	[redacted]	[redacted]
[redacted]	[redacted]	[redacted]

TABLE H.4-24
(SHEET 3 OF 5)

COMPONENT	CABLE NUMBER	METHOD
[redacted]	[redacted]	[redacted]
[redacted]	[redacted]	[redacted]
[redacted]	[redacted]	[redacted]

TABLE H.4-24
(SHEET 4 OF 5)

COMPONENT	CABLE NUMBER	METHOD
[redacted]	[redacted]	[redacted]
[redacted]	[redacted]	[redacted]
[redacted]	[redacted]	[redacted]
[redacted]	[redacted]	[redacted]
[redacted]	[redacted]	[redacted]
[redacted]	[redacted]	[redacted]
[redacted]	[redacted]	[redacted]
[redacted]	[redacted]	[redacted]

TABLE H.4-24
(SHEET 5 OF 5)

COMPONENT	CABLE NUMBER	METHOD
[redacted]	[redacted]	[redacted]
[redacted]	[redacted]	[redacted]
[redacted]	[redacted]	[redacted]

TABLE H.4-25
(SHEET 1 OF 2)

SAFE SHUTDOWN EQUIPMENT LOCATED IN FIRE ZONE 2H1-1

[redacted]

TABLE H.4-25
(SHEET 2 OF 2)

COMPONENT	CABLE NUMBER	METHOD
[redacted]	[redacted]	[redacted]
[redacted]	[redacted]	[redacted]
[redacted]	[redacted]	[redacted]
[redacted]	[redacted]	[redacted]
[redacted]	[redacted]	[redacted]
[redacted]	[redacted]	[redacted]
[redacted]	[redacted]	[redacted]
[redacted]	[redacted]	[redacted]
[redacted]	[redacted]	[redacted]
[redacted]	[redacted]	[redacted]
[redacted]	[redacted]	[redacted]

TABLE H.4-26

SAFE SHUTDOWN EQUIPMENT LOCATED IN FIRE ZONE 2H1-2

[redacted]

TABLE H.4-27
(SHEET 1 OF 2)

SAFE SHUTDOWN EQUIPMENT LOCATED IN FIRE ZONE 3H1-1

[redacted]

TABLE H.4-27
(SHEET 2 OF 2)

COMPONENT	CABLE NUMBER	METHOD
[redacted]	[redacted]	[redacted]
[redacted]	[redacted]	[redacted]
[redacted]	[redacted]	[redacted]

TABLE H.4-28

SAFE SHUTDOWN EQUIPMENT LOCATED IN FIRE SUBZONE 3H1-2

TABLE H.4-29

SAFE SHUTDOWN EQUIPMENT LOCATED IN FIRE ZONE 2H2

[redacted]

TABLE H.4-30

SAFE SHUTDOWN EQUIPMENT LOCATED IN FIRE ZONE 2H3

[redacted]

TABLE H.4-31

SAFE SHUTDOWN EQUIPMENT LOCATED IN FIRE ZONE 3H3

[redacted]

TABLE H.4-32
(SHEET 1 OF 3)

SAFE SHUTDOWN EQUIPMENT LOCATED IN FIRE ZONE 2H4

[redacted]

TABLE H.4-32
(SHEET 2 OF 3)

COMPONENT	CABLE NUMBER	METHOD
[redacted]	[redacted]	[redacted]
[redacted]	[redacted]	[redacted]
[redacted]	[redacted]	[redacted]
[redacted]	[redacted]	[redacted]
[redacted]	[redacted]	[redacted]
[redacted]	[redacted]	[redacted]
[redacted]	[redacted]	[redacted]
[redacted]	[redacted]	[redacted]
[redacted]	[redacted]	[redacted]

TABLE H.4-32
(SHEET 3 OF 3)

COMPONENT	CABLE NUMBER	METHOD
[redacted]	[redacted]	[redacted]
[redacted]	[redacted]	[redacted]
[redacted]	[redacted]	[redacted]
[redacted]	[redacted]	[redacted]
[redacted]	[redacted]	[redacted]

TABLE H.4-33
(SHEET 1 OF 2)
SAFE SHUTDOWN EQUIPMENT LOCATED IN FIRE ZONE 3H4

[redacted]

TABLE H.4-33
(SHEET 2 OF 2)

COMPONENT	CABLE NUMBER	METHOD
[redacted]	[redacted]	[redacted]
[redacted]	[redacted]	[redacted]
[redacted]	[redacted]	[redacted]
[redacted]	[redacted]	[redacted]
[redacted]	[redacted]	[redacted]
[redacted]	[redacted]	[redacted]

TABLE H.4-34

SAFE SHUTDOWN EQUIPMENT LOCATED IN FIRE ZONE 2H5

[redacted]

TABLE H.4-35
(SHEET 1 of 2)

SAFE SHUTDOWN EQUIPMENT LOCATED IN FIRE ZONE 3H5

[redacted]

[redacted]

TABLE H.4-35
(SHEET 2 of 2)

COMPONENT	CABLE NUMBER	METHOD
[redacted]	[redacted]	[redacted]
[redacted]		
[redacted]	[redacted]	[redacted]
[redacted]	[redacted]	[redacted]
[redacted]	[redacted]	[redacted]
[redacted]	[redacted]	[redacted]
[redacted]	[redacted]	[redacted]
[redacted]	[redacted]	[redacted]
	[redacted]	[redacted]
[redacted]	[redacted]	[redacted]
[redacted]	[redacted]	[redacted]
[redacted]	[redacted]	[redacted]
[redacted]	[redacted]	[redacted]

*[redacted]

TABLE H.4-36
(SHEET 1 of 1)

SAFE SHUTDOWN EQUIPMENT LOCATED IN FIRE SUBZONE 2I1-1

[redacted]

TABLE H.4-37

SAFE SHUTDOWN EQUIPMENT LOCATED IN FIRE SUBZONE 2I1-2

[redacted]

TABLE H.4-38
(SHEET 1 OF 2)

SAFE SHUTDOWN EQUIPMENT LOCATED IN FIRE SUBZONE 3I1-1

[redacted]

TABLE H.4-38
(SHEET 2 OF 2)

SAFE SHUTDOWN EQUIPMENT LOCATED IN FIRE SUBZONE 3I1-1

COMPONENT	CABLE NUMBER	METHOD
[redacted]	[redacted]	[redacted]
[redacted]	[redacted]	[redacted]
[redacted]	[redacted]	[redacted]
[redacted]	[redacted]	[redacted]
[redacted]	[redacted]	[redacted]
[redacted]	[redacted]	[redacted]
[redacted]	[redacted]	[redacted]
[redacted]	[redacted]	[redacted]
[redacted]	[redacted]	[redacted]

[redacted]

TABLE H.4-39
(SHEET 1 of 1)

SAFE SHUTDOWN EQUIPMENT LOCATED IN FIRE SUBZONE 3I1-2

[redacted]

[redacted]

[redacted]

TABLE H.4-40

SAFE SHUTDOWN EQUIPMENT LOCATED IN FIRE ZONE 2I2

[redacted]

TABLE H.4-41

SAFE SHUTDOWN EQUIPMENT LOCATED IN FIRE ZONE 3I2

[redacted]		
[redacted]	[redacted]	[redacted]
[redacted]	[redacted]	[redacted]
[redacted]	[redacted]	[redacted]
[redacted]	[redacted]	[redacted]
[redacted]		
[redacted]	[redacted]	[redacted]
[redacted]	[redacted]	[redacted]
[redacted]		
[redacted]	[redacted]	[redacted]
[redacted]	[redacted]	[redacted]
[redacted]	[redacted]	[redacted]
[redacted]	[redacted]	[redacted]
[redacted]	[redacted]	[redacted]
[redacted]	[redacted]	[redacted]
[redacted]	[redacted]	[redacted]
[redacted]	[redacted]	[redacted]
[redacted]	[redacted]	[redacted]
[redacted]	2HP039	Bas.

TABLE H.4-42

SAFE SHUTDOWN EQUIPMENT LOCATED IN FIRE ZONE 2I3

[redacted]

TABLE H.4-43

SAFE SHUTDOWN EQUIPMENT LOCATED IN FIRE ZONE 3I3

[redacted]

TABLE H.4-44
(SHEET 1 OF 2)

SAFE SHUTDOWN EQUIPMENT LOCATED IN FIRE ZONE 2I4

[redacted]

TABLE H.4-44
(SHEET 2 OF 2)

SAFE SHUTDOWN EQUIPMENT LOCATED IN FIRE ZONE 2I4

COMPONENT	CABLE NUMBER	METHOD
[redacted]	[redacted]	[redacted]
[redacted]	[redacted]	[redacted]
[redacted]	[redacted]	[redacted]
[redacted]	[redacted]	[redacted]
[redacted]	[redacted]	[redacted]
[redacted]	[redacted]	[redacted]
[redacted]	[redacted]	[redacted]

TABLE H.4-45
(SHEET 1 OF 2)

SAFE SHUTDOWN EQUIPMENT LOCATED IN FIRE ZONE 3I4

[redacted]

TABLE H.4-45
(SHEET 2 OF 2)

COMPONENT	CABLE NUMBER	METHOD
[redacted]	[redacted]	[redacted]
[redacted]	[redacted]	[redacted]
[redacted]	[redacted]	[redacted]
[redacted]	[redacted]	[redacted]
[redacted]	[redacted]	[redacted]
[redacted]	[redacted]	[redacted]
[redacted]	[redacted]	[redacted]
[redacted]	[redacted]	[redacted]
[redacted]	[redacted]	[redacted]
[redacted]	[redacted]	[redacted]

TABLE H.4-46

SAFE SHUTDOWN EQUIPMENT LOCATED IN FIRE ZONE 2I5

[redacted]

TABLE H.4-47
(SHEET 1 OF 2)

SAFE SHUTDOWN EQUIPMENT LOCATED IN FIRE ZONE 3I5

[redacted]

TABLE H.4-47
(SHEET 2 OF 2)

SAFE SHUTDOWN EQUIPMENT LOCATED IN FIRE ZONE 3I5

COMPONENT	NUMBER	METHOD
[redacted]	[redacted]	[redacted]
[redacted]	[redacted]	[redacted]
[redacted]	[redacted]	[redacted]
[redacted]	[redacted]	[redacted]

[redacted]

TABLE H.4-48
(SHEET 1 OF 3)

SAFE SHUTDOWN EQUIPMENT LOCATED IN FIRE ZONE 2J

[redacted]

TABLE H.4-48
(SHEET 2 OF 3)

COMPONENT	CABLE NUMBER	METHOD
[redacted]	[redacted]	[redacted]
[redacted]		
[redacted]	[redacted]	[redacted]
[redacted]	[redacted]	[redacted]

TABLE H.4-48
(SHEET 3 OF 3)

COMPONENT	CABLE NUMBER	METHOD
[redacted]	[redacted]	[redacted]
[redacted]	[redacted]	[redacted]
[redacted]	[redacted]	[redacted]
[redacted]	[redacted]	[redacted]
[redacted]	[redacted]	[redacted]
[redacted]	[redacted]	[redacted]
[redacted]	[redacted]	[redacted]
[redacted]	[redacted]	[redacted]
[redacted]	[redacted]	[redacted]
[redacted]	[redacted]	[redacted]
[redacted]	[redacted]	[redacted]

[redacted]

TABLE H.4-49
(SHEET 1 OF 4)

SAFE SHUTDOWN EQUIPMENT LOCATED IN FIRE ZONE 3J

[redacted]

[redacted]	[redacted]	[redacted]
[redacted]	[redacted]	[redacted]
[redacted]	[redacted]	[redacted]
[redacted]	[redacted]	[redacted]
[redacted]	[redacted]	[redacted]
[redacted]	[redacted]	[redacted]
[redacted]	[redacted]	[redacted]
[redacted]	[redacted]	[redacted]
[redacted]	[redacted]	[redacted]
[redacted]	[redacted]	[redacted]
[redacted]	[redacted]	[redacted]
[redacted]	[redacted]	[redacted]
[redacted]	[redacted]	[redacted]
[redacted]	[redacted]	[redacted]

TABLE H.4-49
(SHEET 2 OF 4)

SAFE SHUTDOWN EQUIPMENT LOCATED IN FIRE ZONE 3J
[redacted]

COMPONENT	NUMBER	METHOD
[redacted]	[redacted]	[redacted]
[redacted]	[redacted]	[redacted]
[redacted]	[redacted]	[redacted]
[redacted]	[redacted]	[redacted]
[redacted]	[redacted]	[redacted]
[redacted]	[redacted]	[redacted]
[redacted]	[redacted]	[redacted]
[redacted]	[redacted]	[redacted]
[redacted]	[redacted]	[redacted]
[redacted]	[redacted]	[redacted]
[redacted]	[redacted]	[redacted]
[redacted]	[redacted]	[redacted]
[redacted]	[redacted]	[redacted]
[redacted]	[redacted]	[redacted]
[redacted]	[redacted]	[redacted]
[redacted]	[redacted]	[redacted]
[redacted]	[redacted]	[redacted]
[redacted]	[redacted]	[redacted]
[redacted]	[redacted]	[redacted]
[redacted]	[redacted]	[redacted]
[redacted]	[redacted]	[redacted]
[redacted]	[redacted]	[redacted]
[redacted]	[redacted]	[redacted]

TABLE H.4-49
(SHEET 3 OF 4)

COMPONENT	NUMBER	METHOD
[redacted]	[redacted]	[redacted]
[redacted]	[redacted]	[redacted]
[redacted]	[redacted]	[redacted]
[redacted]	[redacted]	[redacted]
[redacted]	[redacted]	[redacted]
[redacted]	[redacted]	[redacted]
[redacted]	[redacted]	[redacted]

TABLE H.4-49
(SHEET 4 OF 4)

COMPONENT	NUMBER	METHOD
[redacted]	[redacted]	[redacted]
[redacted]	[redacted]	[redacted]
[redacted]	[redacted]	[redacted]
[redacted]	[redacted]	[redacted]
[redacted]	[redacted]	[redacted]
[redacted]	[redacted]	[redacted]
[redacted]	[redacted]	[redacted]
[redacted]	[redacted]	[redacted]
[redacted]	[redacted]	[redacted]
[redacted]	[redacted]	[redacted]

[redacted]

[redacted]

TABLE H.4-50
(SHEET 1 OF 8)

SAFE SHUTDOWN EQUIPMENT LOCATED IN FIRE ZONE 4C1

[redacted]

TABLE H.4-50
(SHEET 2 OF 8)

COMPONENT	CABLE NUMBER	METHOD
[redacted]	[redacted]	[redacted]

TABLE H.4-50
(SHEET 3 OF 8)

COMPONENT	CABLE NUMBER	METHOD
[redacted]	[redacted]	[redacted]
[redacted]	[redacted]	[redacted]
[redacted]	[redacted]	[redacted]
[redacted]	[redacted]	[redacted]
[redacted]	[redacted]	[redacted]
[redacted]	[redacted]	[redacted]
[redacted]	[redacted]	[redacted]
[redacted]	[redacted]	[redacted]
[redacted]	[redacted]	[redacted]
[redacted]	[redacted]	[redacted]
[redacted]	[redacted]	[redacted]
[redacted]	[redacted]	[redacted]
[redacted]	[redacted]	[redacted]
[redacted]	[redacted]	[redacted]
[redacted]	[redacted]	[redacted]
[redacted]	[redacted]	[redacted]
[redacted]	[redacted]	[redacted]
[redacted]	[redacted]	[redacted]
[redacted]	[redacted]	[redacted]

TABLE H.4-50
(SHEET 4 OF 8)

COMPONENT	CABLE NUMBER	METHOD
[redacted]	[redacted]	[redacted]
[redacted]	[redacted]	[redacted]
[redacted]	[redacted]	[redacted]
[redacted]	[redacted]	[redacted]
[redacted]	[redacted]	[redacted]
[redacted]	[redacted]	[redacted]
[redacted]	[redacted]	[redacted]
[redacted]	[redacted]	[redacted]
[redacted]	[redacted]	[redacted]
[redacted]	[redacted]	[redacted]
[redacted]	[redacted]	[redacted]
[redacted]	[redacted]	[redacted]
[redacted]	[redacted]	[redacted]
[redacted]	[redacted]	[redacted]
[redacted]	[redacted]	[redacted]
[redacted]	[redacted]	[redacted]
[redacted]	[redacted]	[redacted]

TABLE H.4-50
(SHEET 5 OF 8)

COMPONENT	CABLE NUMBER	METHOD
[redacted]	[redacted]	[redacted]
[redacted]	[redacted]	[redacted]
[redacted]	[redacted]	[redacted]
[redacted]	[redacted]	[redacted]
[redacted]	[redacted]	[redacted]
[redacted]	[redacted]	[redacted]
[redacted]	[redacted]	[redacted]
[redacted]	[redacted]	[redacted]
[redacted]	[redacted]	[redacted]
[redacted]	[redacted]	[redacted]
[redacted]	[redacted]	[redacted]
[redacted]	[redacted]	[redacted]
[redacted]	[redacted]	[redacted]
[redacted]	[redacted]	[redacted]
[redacted]	[redacted]	[redacted]
[redacted]	[redacted]	[redacted]
[redacted]	[redacted]	[redacted]
[redacted]	[redacted]	[redacted]
[redacted]	[redacted]	[redacted]

TABLE H.4-50
(SHEET 6 OF 8)

COMPONENT	CABLE NUMBER	METHOD
[redacted]	[redacted]	[redacted]
[redacted]	[redacted]	[redacted]
[redacted]	[redacted]	[redacted]
[redacted]	[redacted]	[redacted]
[redacted]	[redacted]	[redacted]
[redacted]	[redacted]	[redacted]
[redacted]	[redacted]	[redacted]
[redacted]	[redacted]	[redacted]
[redacted]	[redacted]	[redacted]
[redacted]	[redacted]	[redacted]
[redacted]	[redacted]	[redacted]
[redacted]	[redacted]	[redacted]
[redacted]	[redacted]	[redacted]
[redacted]	[redacted]	[redacted]
[redacted]	[redacted]	[redacted]
[redacted]	[redacted]	[redacted]
[redacted]	[redacted]	[redacted]
[redacted]	[redacted]	[redacted]
[redacted]	[redacted]	[redacted]

TABLE H.4-50
(SHEET 7 OF 8)

COMPONENT	CABLE NUMBER	METHOD
[redacted]	[redacted]	[redacted]
[redacted]	[redacted]	[redacted]
[redacted]	[redacted]	[redacted]
[redacted]	[redacted]	[redacted]
[redacted]	[redacted]	[redacted]
[redacted]	[redacted]	[redacted]
[redacted]	[redacted]	[redacted]
[redacted]	[redacted]	[redacted]
[redacted]	[redacted]	[redacted]
[redacted]	[redacted]	[redacted]
[redacted]	[redacted]	[redacted]
[redacted]	[redacted]	[redacted]
[redacted]	[redacted]	[redacted]
[redacted]	[redacted]	[redacted]
[redacted]	[redacted]	[redacted]
[redacted]	[redacted]	[redacted]
[redacted]	[redacted]	[redacted]
[redacted]	[redacted]	[redacted]
[redacted]	[redacted]	[redacted]
[redacted]	[redacted]	[redacted]

TABLE H.4-50
(SHEET 8 OF 8)

COMPONENT	CABLE NUMBER	METHOD
[redacted]	[redacted]	
[redacted]	[redacted]	[redacted]
[redacted]	[redacted]	[redacted]
[redacted]	[redacted]	[redacted]
[redacted]	[redacted]	[redacted]
[redacted]	[redacted]	[redacted]
[redacted]	[redacted]	[redacted]
[redacted]	[redacted]	[redacted]
[redacted]	[redacted]	[redacted]

[redacted]

TABLE H.4-51
(SHEET 1 of 8)

SAFE SHUTDOWN EQUIPMENT LOCATED IN FIRE ZONE 4C1

[redacted]

[redacted]

[redacted]

TABLE H.4-51
(SHEET 2 of 8)

COMPONENT	CABLE NUMBER	METHOD
[redacted]	[redacted]	[redacted]
[redacted]	[redacted]	[redacted]
[redacted]	[redacted]	[redacted]
[redacted]	[redacted]	[redacted]
[redacted]	[redacted]	[redacted]
[redacted]	[redacted]	[redacted]
[redacted]	[redacted]	[redacted]
[redacted]	[redacted]	[redacted]
[redacted]	[redacted]	[redacted]
[redacted]	[redacted]	[redacted]
[redacted]	[redacted]	[redacted]
[redacted]	[redacted]	[redacted]
[redacted]	[redacted]	[redacted]
[redacted]	[redacted]	[redacted]
[redacted]	[redacted]	[redacted]
[redacted]	[redacted]	[redacted]

TABLE H.4-51
(SHEET 3 of 8)

COMPONENT	CABLE NUMBER	METHOD
[redacted]	[redacted]	[redacted]
[redacted]	[redacted]	[redacted]
[redacted]	[redacted]	[redacted]
[redacted]	[redacted]	[redacted]
[redacted]	[redacted]	[redacted]
[redacted]	[redacted]	[redacted]
[redacted]	[redacted]	[redacted]
[redacted]	[redacted]	[redacted]
[redacted]	[redacted]	[redacted]
[redacted]	[redacted]	[redacted]
[redacted]	[redacted]	[redacted]
[redacted]	[redacted]	[redacted]
[redacted]	[redacted]	[redacted]
[redacted]	[redacted]	[redacted]
[redacted]	[redacted]	[redacted]
[redacted]	[redacted]	[redacted]

TABLE H.4-51
(SHEET 4 of 8)

COMPONENT	CABLE NUMBER	METHOD
[redacted]	[redacted]	[redacted]
[redacted]	[redacted]	[redacted]
[redacted]	[redacted]	[redacted]
[redacted]	[redacted]	[redacted]
[redacted]	[redacted]	[redacted]
[redacted]	[redacted]	[redacted]
[redacted]	[redacted]	[redacted]
[redacted]	[redacted]	[redacted]
[redacted]	[redacted]	[redacted]
[redacted]	[redacted]	[redacted]
[redacted]	[redacted]	[redacted]
[redacted]	[redacted]	[redacted]
[redacted]	[redacted]	[redacted]
[redacted]	[redacted]	[redacted]
[redacted]	[redacted]	[redacted]

TABLE H.4-51
(SHEET 5 of 8)

COMPONENT	CABLE NUMBER	METHOD
[redacted]	[redacted]	[redacted]
[redacted]	[redacted]	
[redacted]	[redacted]	
[redacted]	[redacted]	[redacted]
[redacted]	[redacted]	[redacted]
[redacted]	[redacted]	[redacted]
[redacted]	[redacted]	[redacted]
[redacted]	[redacted]	[redacted]
[redacted]	[redacted]	[redacted]
[redacted]	[redacted]	[redacted]
[redacted]	[redacted]	[redacted]
[redacted]	[redacted]	[redacted]
[redacted]	[redacted]	[redacted]
[redacted]	[redacted]	[redacted]
[redacted]	[redacted]	[redacted]

TABLE H.4-51
(SHEET 6 of 8)

COMPONENT	CABLE NUMBER	METHOD
[redacted]	[redacted]	[redacted]
[redacted]	[redacted]	[redacted]
[redacted]	[redacted]	[redacted]
[redacted]	[redacted]	[redacted]
[redacted]	[redacted]	[redacted]
[redacted]	[redacted]	[redacted]
[redacted]	[redacted]	[redacted]
[redacted]	[redacted]	[redacted]
[redacted]	[redacted]	
[redacted]	[redacted]	
[redacted]	[redacted]	
[redacted]	[redacted]	[redacted]
[redacted]	[redacted]	[redacted]
[redacted]	[redacted]	[redacted]
[redacted]	[redacted]	[redacted]
[redacted]	[redacted]	[redacted]
[redacted]	[redacted]	[redacted]

TABLE H.4-51
(SHEET 7 of 8)

[redacted]

TABLE H.4-51
(SHEET 8 of 8)

[redacted]

[redacted]

TABLE H.4-52
(SHEET 1 OF 2)

SAFE SHUTDOWN EQUIPMENT LOCATED IN FIRE ZONE 4C2

[redacted]

TABLE H.4-52
(SHEET 2 OF 2)

COMPONENT	CABLE NUMBER	METHOD
[redacted]	[redacted]	[redacted]

TABLE H.4-53
(SHEET 1 OF 2)

SAFE SHUTDOWN EQUIPMENT LOCATED IN FIRE ZONE 4C3

[redacted]

TABLE H.4-53
(SHEET 2 OF 2)

COMPONENT	CABLE NUMBER	METHOD
[redacted]	[redacted]	[redacted]
[redacted]	[redacted]	[redacted]
[redacted]	[redacted]	[redacted]
[redacted]	[redacted]	[redacted]
[redacted]	[redacted]	[redacted]

TABLE H.4-54
(SHEET 1 OF 7)

SAFE SHUTDOWN EQUIPMENT LOCATED IN FIRE SUBZONE 4D1-1

[redacted]

TABLE H.4-54
(SHEET 2 OF 7)

COMPONENT	CABLE NUMBER	METHOD
[redacted]	[redacted]	[redacted]
	[redacted]	[redacted]
[redacted]	[redacted]	[redacted]
[redacted]	[redacted]	[redacted]
[redacted]	[redacted]	[redacted]

TABLE H.4-54
(SHEET 3 OF 7)

[redacted]

TABLE H.4-54
(SHEET 4 OF 7)

COMPONENT	CABLE NUMBER	METHOD
[redacted]	[redacted]	[redacted]
[redacted]	[redacted]	[redacted]
[redacted]	[redacted]	[redacted]
[redacted]	[redacted]	[redacted]
[redacted]	[redacted]	[redacted]
[redacted]	[redacted]	[redacted]
[redacted]	[redacted]	[redacted]
[redacted]	[redacted]	[redacted]
[redacted]	[redacted]	[redacted]
[redacted]	[redacted]	[redacted]
[redacted]	[redacted]	[redacted]
[redacted]	[redacted]	[redacted]

TABLE H.4-54
(SHEET 5 OF 7)

COMPONENT	NUMBER	METHOD
[redacted]	[redacted]	[redacted]
[redacted]	[redacted]	[redacted]
[redacted]	[redacted]	[redacted]
[redacted]	[redacted]	[redacted]
[redacted]	[redacted]	[redacted]
[redacted]	[redacted]	[redacted]
[redacted]	[redacted]	[redacted]
[redacted]	[redacted]	[redacted]
[redacted]	[redacted]	[redacted]
[redacted]	[redacted]	[redacted]
[redacted]	[redacted]	[redacted]

TABLE H.4-54
(SHEET 6 OF 7)

COMPONENT	CABLE NUMBER	METHOD
[redacted]	[redacted]	[redacted]
[redacted]	[redacted]	[redacted]
[redacted]	[redacted]	[redacted]
[redacted]	[redacted]	[redacted]
[redacted]	[redacted]	[redacted]
[redacted]	[redacted]	[redacted]
[redacted]	[redacted]	[redacted]
[redacted]	[redacted]	[redacted]
[redacted]	[redacted]	[redacted]
[redacted]	[redacted]	[redacted]
[redacted]	[redacted]	[redacted]
[redacted]	[redacted]	[redacted]
[redacted]	[redacted]	[redacted]
[redacted]	[redacted]	[redacted]
[redacted]	[redacted]	[redacted]
[redacted]	[redacted]	[redacted]
[redacted]	[redacted]	[redacted]
[redacted]	[redacted]	[redacted]

TABLE H.4-54
(SHEET 7 OF 7)

COMPONENT	CABLE NUMBER	METHOD
[redacted]	[redacted]	[redacted]
[redacted]	[redacted]	[redacted]
[redacted]	[redacted]	[redacted]
[redacted]	[redacted]	[redacted]
[redacted]	[redacted]	[redacted]
[redacted]	[redacted]	[redacted]
[redacted]	[redacted]	[redacted]
[redacted]	[redacted]	[redacted]

[redacted]

[redacted]

TABLE H.4-55
(SHEET 1 OF 4)

SAFE SHUTDOWN EQUIPMENT LISTED IN FIRE SUBZONE 4D1-2

[redacted]

TABLE H.4-55
(SHEET 2 OF 4)

COMPONENT	CABLE NUMBER	METHOD
[redacted]	[redacted]	[redacted]
[redacted]	[redacted]	[redacted]
[redacted]	[redacted]	[redacted]

TABLE H.4-55
(SHEET 3 OF 4)

COMPONENT	CABLE NUMBER	METHOD
[redacted]	[redacted]	[redacted]
[redacted]	[redacted]	[redacted]
[redacted]	[redacted]	[redacted]
[redacted]	[redacted]	[redacted]
[redacted]	[redacted]	[redacted]
[redacted]	[redacted]	[redacted]
[redacted]	[redacted]	[redacted]
[redacted]	[redacted]	[redacted]
[redacted]	[redacted]	[redacted]
[redacted]	[redacted]	[redacted]
[redacted]	[redacted]	[redacted]
[redacted]	[redacted]	[redacted]
[redacted]	[redacted]	[redacted]
[redacted]	[redacted]	[redacted]

TABLE H.4-55
(SHEET 4 OF 4)

COMPONENT	CABLE NUMBER	METHOD
[redacted]	[redacted]	[redacted]
[redacted]	[redacted]	[redacted]
[redacted]	[redacted]	[redacted]
[redacted]	[redacted]	[redacted]
[redacted]	[redacted]	[redacted]
[redacted]	[redacted]	[redacted]
[redacted]	[redacted]	[redacted]
[redacted]	[redacted]	[redacted]
[redacted]	[redacted]	[redacted]
[redacted]	[redacted]	[redacted]

[redacted]

TABLE H.4-56
(SHEET 1 OF 4)

SAFE SHUTDOWN EQUIPMENT LOCATED IN FIRE SUBZONE 4D2

[redacted]

TABLE H.4-56
(SHEET 2 OF 4)

COMPONENT	CABLE NUMBER	METHOD
[redacted]	[redacted]	[redacted]
[redacted]	[redacted]	[redacted]
[redacted]	[redacted]	[redacted]
[redacted]	[redacted]	[redacted]
[redacted]	[redacted]	[redacted]
[redacted]	[redacted]	[redacted]
[redacted]	[redacted]	[redacted]
[redacted]	[redacted]	[redacted]
[redacted]	[redacted]	[redacted]
[redacted]	[redacted]	[redacted]
[redacted]	[redacted]	[redacted]
[redacted]	[redacted]	[redacted]
[redacted]	[redacted]	[redacted]
[redacted]	[redacted]	[redacted]
[redacted]	[redacted]	[redacted]
[redacted]	[redacted]	[redacted]

TABLE H.4-56
(SHEET 3 OF 4)

COMPONENT	CABLE NUMBER	METHOD
[redacted]	[redacted]	[redacted]
[redacted]	[redacted]	[redacted]
[redacted]	[redacted]	[redacted]
[redacted]	[redacted]	[redacted]
[redacted]	[redacted]	[redacted]
[redacted]	[redacted]	[redacted]
[redacted]	[redacted]	[redacted]
[redacted]	[redacted]	[redacted]
[redacted]	[redacted]	[redacted]
[redacted]	[redacted]	[redacted]
[redacted]	[redacted]	[redacted]
[redacted]	[redacted]	[redacted]
[redacted]	[redacted]	[redacted]
[redacted]	[redacted]	[redacted]
[redacted]	[redacted]	[redacted]

TABLE H.4-56
(SHEET 4 OF 4)

COMPONENT	CABLE NUMBER	METHOD
[redacted]	[redacted]	[redacted]
[redacted]	[redacted]	[redacted]
[redacted]	[redacted]	
[redacted]	[redacted]	[redacted]
[redacted]	[redacted]	[redacted]
[redacted]	[redacted]	[redacted]
[redacted]	[redacted]	[redacted]
[redacted]	[redacted]	[redacted]
[redacted]	[redacted]	[redacted]
[redacted]	[redacted]	[redacted]
[redacted]	[redacted]	[redacted]
[redacted]	[redacted]	[redacted]
[redacted]	[redacted]	[redacted]
[redacted]	[redacted]	[redacted]
[redacted]	[redacted]	[redacted]
[redacted]	[redacted]	[redacted]
[redacted]	[redacted]	[redacted]
[redacted]	[redacted]	[redacted]
[redacted]	[redacted]	[redacted]
[redacted]	[redacted]	[redacted]
[redacted]	[redacted]	[redacted]
[redacted]	[redacted]	[redacted]

[redacted]

TABLE H.4-57
(SHEET 1 of 5)

SAFE SHUTDOWN EQUIPMENT LOCATED IN FIRE ZONE 4D3

[redacted]

TABLE H.4-57
(SHEET 2 of 5)

COMPONENT	CABLE NUMBER	METHOD
[redacted]	[redacted]	[redacted]
[redacted]	[redacted]	[redacted]
[redacted]	[redacted]	[redacted]
[redacted]	[redacted]	[redacted]
[redacted]	[redacted]	[redacted]
[redacted]	[redacted]	[redacted]
[redacted]	[redacted]	[redacted]
[redacted]	[redacted]	[redacted]
[redacted]	[redacted]	[redacted]
[redacted]	[redacted]	[redacted]
[redacted]	[redacted]	[redacted]
[redacted]	[redacted]	[redacted]
[redacted]	[redacted]	[redacted]
[redacted]	[redacted]	[redacted]
[redacted]	[redacted]	[redacted]
[redacted]	[redacted]	[redacted]

TABLE H.4-57
(SHEET 3 of 5)

SAFE SHUTDOWN EQUIPMENT LOCATED IN FIRE ZONE 4D3

COMPONENT	CABLE NUMBER	METHOD
[redacted]	[redacted]	[redacted]
[redacted]	[redacted]	[redacted]
[redacted]	[redacted]	[redacted]
[redacted]	[redacted]	[redacted]
[redacted]	[redacted]	[redacted]
[redacted]	[redacted]	[redacted]
[redacted]	[redacted]	[redacted]
[redacted]	[redacted]	[redacted]
[redacted]	[redacted]	[redacted]
[redacted]	[redacted]	[redacted]
[redacted]	[redacted]	[redacted]
[redacted]	[redacted]	[redacted]
[redacted]	[redacted]	[redacted]
[redacted]	[redacted]	[redacted]
[redacted]	[redacted]	[redacted]
[redacted]	[redacted]	[redacted]
[redacted]	[redacted]	[redacted]
[redacted]	[redacted]	[redacted]
[redacted]	[redacted]	[redacted]
[redacted]	[redacted]	[redacted]
[redacted]	[redacted]	[redacted]

TABLE H.4-57
(SHEET 4 of 5)

[redacted]

[redacted]

TABLE H.4-57
(SHEET 5 of 5)

[redacted]

TABLE H.4-58
(SHEET 1 OF 6)

SAFE SHUTDOWN EQUIPMENT LOCATED IN FIRE ZONE 4D4

[redacted]

TABLE H.4-58
(SHEET 2 OF 6)

COMPONENT	CABLE NUMBER	METHOD
[redacted]	[redacted]	[redacted]
[redacted]	[redacted]	[redacted]
[redacted]	[redacted]	[redacted]
[redacted]	[redacted]	[redacted]
[redacted]	[redacted]	[redacted]
[redacted]	[redacted]	[redacted]
[redacted]	[redacted]	[redacted]
[redacted]	[redacted]	[redacted]
[redacted]	[redacted]	[redacted]
[redacted]	[redacted]	[redacted]
[redacted]	[redacted]	[redacted]
[redacted]	[redacted]	[redacted]
[redacted]	[redacted]	[redacted]
[redacted]	[redacted]	[redacted]
[redacted]	[redacted]	[redacted]
[redacted]	[redacted]	[redacted]
[redacted]	[redacted]	[redacted]

TABLE H.4-58
(SHEET 3 OF 6)

COMPONENT	CABLE NUMBER	METHOD
[redacted]	[redacted]	[redacted]
[redacted]	[redacted]	[redacted]
[redacted]	[redacted]	[redacted]
[redacted]	[redacted]	[redacted]
[redacted]	[redacted]	[redacted]
[redacted]	[redacted]	[redacted]
[redacted]	[redacted]	[redacted]
[redacted]	[redacted]	[redacted]
[redacted]	[redacted]	[redacted]
[redacted]	[redacted]	[redacted]
[redacted]	[redacted]	[redacted]
[redacted]	[redacted]	[redacted]
[redacted]	[redacted]	[redacted]
[redacted]	[redacted]	[redacted]

TABLE H.4-58
(SHEET 4 OF 6)

COMPONENT	CABLE NUMBER	METHOD
[redacted]	[redacted]	[redacted]
[redacted]	[redacted]	[redacted]
[redacted]	[redacted]	[redacted]
[redacted]	[redacted]	[redacted]
[redacted]	[redacted]	[redacted]
[redacted]	[redacted]	[redacted]
[redacted]	[redacted]	[redacted]
[redacted]	[redacted]	[redacted]
[redacted]	[redacted]	[redacted]
[redacted]	[redacted]	[redacted]
[redacted]	[redacted]	[redacted]
[redacted]	[redacted]	[redacted]
[redacted]	[redacted]	[redacted]
[redacted]	[redacted]	[redacted]
[redacted]	[redacted]	[redacted]

TABLE H.4-58
(SHEET 5 OF 6)

COMPONENT	CABLE NUMBER	METHOD
[redacted]	[redacted]	[redacted]
[redacted]	[redacted]	[redacted]
[redacted]	[redacted]	[redacted]
[redacted]	[redacted]	[redacted]
[redacted]	[redacted]	[redacted]
[redacted]	[redacted]	[redacted]
[redacted]	[redacted]	[redacted]
[redacted]	[redacted]	
[redacted]	[redacted]	
[redacted]	[redacted]	
[redacted]	[redacted]	
[redacted]	[redacted]	[redacted]
[redacted]	[redacted]	[redacted]
[redacted]	[redacted]	[redacted]
[redacted]	[redacted]	[redacted]
[redacted]	[redacted]	[redacted]
[redacted]	[redacted]	[redacted]
[redacted]	[redacted]	[redacted]
[redacted]	[redacted]	[redacted]
[redacted]	[redacted]	[redacted]

TABLE H.4-58
(SHEET 6 OF 6)

[redacted]

[redacted]

TABLE H.4-59
(SHEET 1 OF 5)

SAFE SHUTDOWN EQUIPMENT LOCATED IN FIRE SUBZONE 4E1-1

[redacted]

TABLE H.4-59
(SHEET 2 OF 5)

Component	Number	Method
[redacted]	[redacted]	[redacted]
[redacted]	[redacted]	[redacted]
[redacted]	[redacted]	[redacted]
[redacted]	[redacted]	[redacted]
[redacted]	[redacted]	[redacted]
[redacted]	[redacted]	[redacted]
[redacted]	[redacted]	[redacted]
[redacted]	[redacted]	[redacted]
[redacted]	[redacted]	[redacted]
[redacted]	[redacted]	[redacted]
[redacted]	[redacted]	[redacted]

TABLE H.4-59
(SHEET 3 OF 5)

Component	Cable Number	Method
[redacted]	[redacted]	[redacted]
[redacted]	[redacted]	[redacted]
[redacted]	[redacted]	[redacted]
[redacted]	[redacted]	[redacted]
[redacted]	[redacted]	[redacted]
[redacted]	[redacted]	[redacted]
[redacted]	[redacted]	[redacted]
[redacted]	[redacted]	[redacted]
[redacted]	[redacted]	[redacted]
[redacted]	[redacted]	[redacted]

TABLE H.4-59
(SHEET 4 OF 5)

Component	Cable Number	Method
[redacted]	[redacted]	[redacted]
[redacted]	[redacted]	[redacted]
[redacted]	[redacted]	[redacted]

TABLE H.4-59
(SHEET 5 OF 5)

[redacted]

TABLE H.4-60
(SHEET 1 OF 9)

SAFE SHUTDOWN EQUIPMENT LOCATED IN FIRE SUBZONE 4E1-2

[redacted]

TABLE H.4-60
(SHEET 2 OF 9)

Component	Cable Number	Method
[redacted]	[redacted]	[redacted]
[redacted]	[redacted]	[redacted]
[redacted]	[redacted]	[redacted]
[redacted]	[redacted]	[redacted]
[redacted]	[redacted]	[redacted]
[redacted]	[redacted]	[redacted]
[redacted]	[redacted]	[redacted]
[redacted]	[redacted]	[redacted]
[redacted]	[redacted]	[redacted]
[redacted]	[redacted]	[redacted]
[redacted]	[redacted]	[redacted]
[redacted]	[redacted]	[redacted]
[redacted]	[redacted]	[redacted]
[redacted]	[redacted]	[redacted]
[redacted]	[redacted]	[redacted]
[redacted]	[redacted]	[redacted]
[redacted]	[redacted]	[redacted]

TABLE H.4-60
(SHEET 3 OF 9)

Component	Cable Number	Method
[redacted]	[redacted]	[redacted]
[redacted]	[redacted]	[redacted]
[redacted]	[redacted]	[redacted]
[redacted]	[redacted]	[redacted]
[redacted]	[redacted]	[redacted]
[redacted]	[redacted]	[redacted]
[redacted]	[redacted]	[redacted]
[redacted]	[redacted]	[redacted]
[redacted]	[redacted]	[redacted]
[redacted]	[redacted]	[redacted]
[redacted]	[redacted]	[redacted]
[redacted]	[redacted]	[redacted]
[redacted]	[redacted]	[redacted]
[redacted]	[redacted]	[redacted]
[redacted]	[redacted]	[redacted]

TABLE H.4-60
(SHEET 4 OF 9)

Component	Cable Number	Method
[redacted]	[redacted]	[redacted]
[redacted]	[redacted]	[redacted]
[redacted]	[redacted]	[redacted]
[redacted]	[redacted]	[redacted]
[redacted]	[redacted]	[redacted]
[redacted]	[redacted]	[redacted]
[redacted]	[redacted]	[redacted]
[redacted]	[redacted]	[redacted]
[redacted]	[redacted]	[redacted]
[redacted]	[redacted]	[redacted]
[redacted]	[redacted]	[redacted]
[redacted]	[redacted]	[redacted]
[redacted]	[redacted]	[redacted]
[redacted]	[redacted]	[redacted]
[redacted]	[redacted]	[redacted]

TABLE H.4-60
(SHEET 5 OF 9)

[redacted]

TABLE H.4-60
(SHEET 6 OF 9)

Component	Cable Number	Method
[redacted]	[redacted]	[redacted]
[redacted]	[redacted]	[redacted]
[redacted]	[redacted]	[redacted]
[redacted]	[redacted]	[redacted]
[redacted]	[redacted]	[redacted]
[redacted]	[redacted]	[redacted]
[redacted]	[redacted]	[redacted]
[redacted]	[redacted]	[redacted]
[redacted]	[redacted]	[redacted]
[redacted]	[redacted]	[redacted]
[redacted]	[redacted]	[redacted]
[redacted]	[redacted]	[redacted]
[redacted]	[redacted]	[redacted]
[redacted]	[redacted]	[redacted]
[redacted]	[redacted]	[redacted]

TABLE H.4-60
(SHEET 7 OF 9)

[redacted]

TABLE H.4-60
(SHEET 8 OF 9)

Component	Cable Number	Method
[redacted]	[redacted]	[redacted]
[redacted]	[redacted]	[redacted]
[redacted]	[redacted]	[redacted]
[redacted]	[redacted]	[redacted]
[redacted]	[redacted]	[redacted]
[redacted]	[redacted]	[redacted]
[redacted]	[redacted]	[redacted]
[redacted]	[redacted]	[redacted]
[redacted]	[redacted]	[redacted]

TABLE H.4-60
(SHEET 9 OF 9)

[redacted]

TABLE H.4-61
(SHEET 1 of 4)

SAFE SHUTDOWN EQUIPMENT LOCATED IN FIRE SUBZONE 4E2-1

[redacted]

TABLE H.4-61
(SHEET 2 of 4)

TABLE H.4-61
(SHEET 3 of 4)

TABLE H.4-61
(SHEET 4 of 4)

	2RI247	Alt.
[redacted]	[redacted]	[redacted]
[redacted]	[redacted]	[redacted]
[redacted]	[redacted]	[redacted]
[redacted]	[redacted]	[redacted]
[redacted]	[redacted]	[redacted]
[redacted]	[redacted]	[redacted]
[redacted]	[redacted]	[redacted]
[redacted]	[redacted]	[redacted]
[redacted]	[redacted]	[redacted]
[redacted]	[redacted]	[redacted]
[redacted]	[redacted]	[redacted]
[redacted]	[redacted]	[redacted]
[redacted]	[redacted]	[redacted]
[redacted]	[redacted]	[redacted]
[redacted]	[redacted]	[redacted]
[redacted]	[redacted]	[redacted]

[redacted]

TABLE H.4-62
(SHEET 1 of 8)

SAFE SHUTDOWN EQUIPMENT LOCATED IN FIRE SUBZONE 4E2-2

[redacted]

TABLE H.4-62
(SHEET 2 of 8)

COMPONENT	CABLE NUMBER	METHOD
[redacted]	[redacted]	[redacted]
[redacted]	[redacted]	[redacted]
[redacted]	[redacted]	[redacted]
[redacted]	[redacted]	[redacted]
[redacted]	[redacted]	[redacted]
[redacted]	[redacted]	[redacted]
[redacted]	[redacted]	[redacted]
[redacted]	[redacted]	[redacted]
[redacted]	[redacted]	[redacted]
[redacted]	[redacted]	[redacted]
[redacted]	[redacted]	[redacted]

TABLE H.4-62
(SHEET 3 of 8)

COMPONENT	CABLE NUMBER	METHOD
[redacted]	[redacted]	[redacted]
[redacted]	[redacted]	[redacted]
[redacted]	[redacted]	[redacted]
[redacted]	[redacted]	[redacted]
[redacted]	[redacted]	[redacted]
[redacted]	[redacted]	[redacted]
[redacted]	[redacted]	[redacted]
[redacted]	[redacted]	[redacted]
[redacted]	[redacted]	[redacted]
[redacted]	[redacted]	[redacted]
[redacted]	[redacted]	[redacted]

TABLE H.4-62
(SHEET 4 of 8)

COMPONENT	CABLE NUMBER	METHOD
[redacted]	[redacted]	[redacted]
[redacted]	[redacted]	[redacted]
[redacted]	[redacted]	[redacted]
[redacted]	[redacted]	[redacted]
[redacted]	[redacted]	[redacted]
[redacted]	[redacted]	[redacted]
[redacted]	[redacted]	[redacted]
[redacted]	[redacted]	[redacted]
[redacted]	[redacted]	[redacted]
[redacted]	[redacted]	[redacted]
[redacted]	[redacted]	[redacted]

TABLE H.4-62
(SHEET 5 of 8)

COMPONENT	CABLE NUMBER	METHOD
[redacted]	[redacted]	[redacted]
[redacted]	[redacted]	[redacted]
[redacted]	[redacted]	[redacted]
[redacted]	[redacted]	[redacted]
[redacted]	[redacted]	[redacted]
[redacted]	[redacted]	[redacted]
[redacted]	[redacted]	
[redacted]	[redacted]	
[redacted]	[redacted]	[redacted]
[redacted]	[redacted]	[redacted]
[redacted]	[redacted]	[redacted]
[redacted]	[redacted]	[redacted]

TABLE H.4-62
(SHEET 6 of 8)

[redacted]

TABLE H.4-62
(SHEET 7 of 8)

[redacted]

TABLE H.4-62
(SHEET 8 of 8)

[redacted]

[redacted]

TABLE H.4-63
(SHEET 1 of 7)

SAFE SHUTDOWN EQUIPMENT LOCATED IN FIRE SUBZONE 4E3-1

[redacted]

TABLE H.4-63
(SHEET 2 of 7)

COMPONENT	CABLE NUMBER	METHOD
[redacted]	[redacted]	[redacted]
[redacted]	[redacted]	[redacted]
[redacted]	[redacted]	[redacted]

TABLE H.4-63
(SHEET 3 of 7)

[redacted]

TABLE H.4-63
(SHEET 4 of 7)

COMPONENT	CABLE NUMBER	METHOD
[redacted]	[redacted]	[redacted]
[redacted]	[redacted]	[redacted]
[redacted]	[redacted]	[redacted]
[redacted]	[redacted]	[redacted]
[redacted]	[redacted]	[redacted]
[redacted]	[redacted]	[redacted]
[redacted]	[redacted]	[redacted]
[redacted]	[redacted]	[redacted]
[redacted]	[redacted]	[redacted]
[redacted]	[redacted]	[redacted]
[redacted]	[redacted]	[redacted]
[redacted]	[redacted]	[redacted]

TABLE H.4-63
(SHEET 5 of 7)

COMPONENT	CABLE NUMBER	METHOD
[redacted]	[redacted]	[redacted]
[redacted]	[redacted]	[redacted]
[redacted]	[redacted]	[redacted]
[redacted]	[redacted]	[redacted]
[redacted]	[redacted]	[redacted]
[redacted]	[redacted]	[redacted]
[redacted]	[redacted]	[redacted]
[redacted]	[redacted]	[redacted]
[redacted]	[redacted]	[redacted]
[redacted]	[redacted]	[redacted]
[redacted]	[redacted]	[redacted]
[redacted]	[redacted]	[redacted]

TABLE H.4-63
(SHEET 6 of 7)

COMPONENT	CABLE NUMBER	METHOD
[redacted]	[redacted]	[redacted]
[redacted]	[redacted]	[redacted]
[redacted]	[redacted]	[redacted]
[redacted]	[redacted]	[redacted]
[redacted]	[redacted]	[redacted]
[redacted]	[redacted]	[redacted]
[redacted]	[redacted]	[redacted]
[redacted]	[redacted]	[redacted]
[redacted]	[redacted]	[redacted]
[redacted]	[redacted]	[redacted]
[redacted]	[redacted]	[redacted]
[redacted]	[redacted]	[redacted]

TABLE H.4-63
(SHEET 7 of 7)

COMPONENT	CABLE NUMBER	METHOD
[redacted]	[redacted]	[redacted]
[redacted]	[redacted]	
[redacted]	[redacted]	[redacted]
[redacted]	[redacted]	[redacted]
[redacted]	[redacted]	[redacted]
[redacted]	[redacted]	[redacted]
[redacted]	[redacted]	[redacted]
[redacted]	[redacted]	[redacted]
[redacted]	[redacted]	

[redacted]

TABLE H.4-64
(SHEET 1 of 7)

SAFE SHUTDOWN EQUIPMENT LOCATED IN FIRE ZONE 4E3-2

[redacted]

[redacted]

[redacted]

TABLE H.4-64
(SHEET 2 of 7)

COMPONENT	CABLE NUMBER	METHOD
[redacted]	[redacted]	[redacted]
	[redacted]	[redacted]
[redacted]	[redacted]	[redacted]
[redacted]		
[redacted]		
[redacted]		
[redacted]		
[redacted]		
[redacted]		
[redacted]		
[redacted]		
[redacted]		

TABLE H.4-64
(SHEET 3 of 7)

COMPONENT	CABLE NUMBER	METHOD
[redacted]	[redacted]	[redacted]
[redacted]	[redacted]	[redacted]
[redacted]	[redacted]	[redacted]

TABLE H.4-64
(SHEET 4 of 7)

[redacted]

TABLE H.4-64
(SHEET 5 of 7)

COMPONENT	CABLE NUMBER	METHOD
[redacted]	[redacted]	[redacted]
[redacted]	[redacted]	[redacted]
[redacted]	[redacted]	[redacted]
[redacted]	[redacted]	[redacted]
[redacted]	[redacted]	[redacted]
[redacted]	[redacted]	[redacted]
[redacted]	[redacted]	[redacted]
[redacted]	[redacted]	[redacted]
[redacted]	[redacted]	[redacted]
[redacted]	[redacted]	[redacted]
[redacted]	[redacted]	[redacted]
[redacted]	[redacted]	[redacted]
[redacted]	[redacted]	[redacted]

TABLE H.4-64
(SHEET 6 of 7)

COMPONENT	CABLE NUMBER	METHOD
[redacted]	[redacted]	[redacted]
[redacted]	[redacted]	[redacted]
[redacted]	[redacted]	[redacted]
[redacted]	[redacted]	[redacted]
[redacted]	[redacted]	[redacted]
[redacted]	[redacted]	[redacted]
[redacted]	[redacted]	[redacted]
[redacted]	[redacted]	[redacted]
[redacted]	[redacted]	[redacted]
[redacted]	[redacted]	[redacted]
[redacted]	[redacted]	[redacted]
[redacted]	[redacted]	[redacted]
[redacted]	[redacted]	[redacted]

TABLE H.4-64
(SHEET 7 of 7)

[redacted]

[redacted]

TABLE H.4-65
(SHEET 1 OF 5)

SAFE SHUTDOWN EQUIPMENT LOCATED IN FIRE SUBZONE 4E4-1

[redacted]

TABLE H.4-65
(SHEET 2 OF 5)

COMPONENT	CABLE NUMBER	METHOD
[redacted]	[redacted]	[redacted]
[redacted]	[redacted]	[redacted]
[redacted]	[redacted]	[redacted]

TABLE H.4-65
(SHEET 3 OF 5)

COMPONENT	CABLE NUMBER	METHOD
[redacted]	[redacted]	[redacted]
[redacted]	[redacted]	[redacted]
[redacted]	[redacted]	[redacted]
[redacted]	[redacted]	[redacted]
[redacted]	[redacted]	[redacted]
[redacted]	[redacted]	[redacted]
[redacted]	[redacted]	[redacted]
[redacted]	[redacted]	[redacted]
[redacted]	[redacted]	[redacted]
[redacted]	[redacted]	[redacted]
[redacted]	[redacted]	
[redacted]	[redacted]	[redacted]
[redacted]	[redacted]	[redacted]
[redacted]	[redacted]	[redacted]

TABLE H.4-65
(SHEET 4 OF 5)

COMPONENT	CABLE NUMBER	METHOD
[redacted]	[redacted]	[redacted]
[redacted]	[redacted]	[redacted]
[redacted]	[redacted]	[redacted]
[redacted]	[redacted]	[redacted]
[redacted]	[redacted]	[redacted]
[redacted]	[redacted]	[redacted]
[redacted]	[redacted]	[redacted]
[redacted]	[redacted]	[redacted]
[redacted]	[redacted]	[redacted]
[redacted]	[redacted]	[redacted]
[redacted]	[redacted]	[redacted]
[redacted]	[redacted]	[redacted]
[redacted]	[redacted]	[redacted]
[redacted]	[redacted]	[redacted]
[redacted]	[redacted]	[redacted]
[redacted]	[redacted]	
[redacted]	[redacted]	

TABLE H.4-65
(SHEET 5 OF 5)

COMPONENT	CABLE NUMBER	METHOD
[redacted]	[redacted]	
[redacted]	[redacted]	[redacted]
[redacted]	[redacted]	[redacted]
[redacted]	[redacted]	[redacted]
[redacted]	[redacted]	

[redacted]

TABLE H.4-66
(SHEET 1 OF 6)

SAFE SHUTDOWN EQUIPMENT LOCATED IN FIRE SUBZONE 4E4-2

[redacted]

TABLE H.4-66
(SHEET 2 OF 6)

COMPONENT	CABLE NUMBER	METHOD
[redacted]	[redacted]	[redacted]
[redacted]	[redacted]	[redacted]
[redacted]	[redacted]	[redacted]
[redacted]	[redacted]	[redacted]
[redacted]	[redacted]	[redacted]

TABLE H.4-66
(SHEET 3 OF 6)

COMPONENT	CABLE NUMBER	METHOD
[redacted]	[redacted]	[redacted]
[redacted]	[redacted]	[redacted]
[redacted]	[redacted]	[redacted]
[redacted]	[redacted]	[redacted]
[redacted]	[redacted]	[redacted]
[redacted]	[redacted]	[redacted]
[redacted]	[redacted]	[redacted]
[redacted]	[redacted]	[redacted]
[redacted]	[redacted]	[redacted]
[redacted]	[redacted]	[redacted]
[redacted]	[redacted]	[redacted]
[redacted]	[redacted]	[redacted]
[redacted]	[redacted]	[redacted]
[redacted]	[redacted]	[redacted]
[redacted]	[redacted]	[redacted]
[redacted]	[redacted]	[redacted]

TABLE H.4-66
(SHEET 4 OF 6)

COMPONENT	CABLE NUMBER	METHOD
[redacted]	[redacted]	[redacted]
[redacted]	[redacted]	[redacted]
[redacted]	[redacted]	[redacted]
[redacted]	[redacted]	[redacted]
[redacted]	[redacted]	[redacted]
[redacted]	[redacted]	[redacted]
[redacted]	[redacted]	[redacted]
[redacted]	[redacted]	[redacted]
[redacted]	[redacted]	[redacted]
[redacted]	[redacted]	[redacted]
[redacted]	[redacted]	[redacted]

TABLE H.4-66
(SHEET 5 OF 6)

COMPONENT	CABLE NUMBER	METHOD
[redacted]		
[redacted]	[redacted]	[redacted]
[redacted]	[redacted]	[redacted]
[redacted]	[redacted]	[redacted]

TABLE H.4-66
(SHEET 6 OF 6)

COMPONENT	CABLE NUMBER	METHOD
[redacted]	[redacted]	[redacted]
[redacted]	[redacted]	[redacted]
[redacted]	[redacted]	[redacted]
[redacted]	[redacted]	[redacted]
[redacted]	[redacted]	[redacted]
[redacted]	[redacted]	[redacted]
[redacted]	[redacted]	[redacted]
[redacted]	[redacted]	[redacted]
[redacted]	[redacted]	[redacted]
[redacted]	[redacted]	[redacted]
[redacted]	[redacted]	[redacted]
[redacted]	[redacted]	[redacted]

[redacted]

TABLE H.4-67
(SHEET 1 OF 6)

SAFE SHUTDOWN EQUIPMENT LOCATED IN FIRE ZONE 4F1

[redacted]

[redacted]	[redacted]	[redacted]
[redacted]	[redacted]	[redacted]
[redacted]	[redacted]	[redacted]

TABLE H.4-67
(SHEET 2 OF 6)

COMPONENT	CABLE NUMBER	METHOD
[redacted]	[redacted]	[redacted]
[redacted]	[redacted]	[redacted]
[redacted]	[redacted]	[redacted]

TABLE H.4-67
(SHEET 3 OF 6)

COMPONENT	CABLE NUMBER	METHOD
[redacted]	[redacted]	[redacted]
[redacted]	[redacted]	[redacted]
[redacted]	[redacted]	[redacted]

TABLE H.4-67
(SHEET 4 OF 6)

COMPONENT	CABLE NUMBER	METHOD
[redacted]	[redacted]	[redacted]
[redacted]	[redacted]	[redacted]
[redacted]	[redacted]	[redacted]
[redacted]	[redacted]	[redacted]
[redacted]	[redacted]	[redacted]
[redacted]	[redacted]	[redacted]
	[redacted]	
[redacted]	[redacted]	[redacted]
[redacted]	[redacted]	[redacted]
[redacted]	[redacted]	[redacted]
[redacted]	[redacted]	[redacted]
[redacted]	[redacted]	[redacted]

TABLE H.4-67
(SHEET 5 OF 6)

COMPONENT	CABLE NUMBER	METHOD
[redacted]	[redacted]	[redacted]
[redacted]	[redacted]	
[redacted]	[redacted]	[redacted]
[redacted]	[redacted]	[redacted]
[redacted]	[redacted]	[redacted]
[redacted]	[redacted]	[redacted]
[redacted]	[redacted]	[redacted]
[redacted]	[redacted]	[redacted]
[redacted]	[redacted]	[redacted]
[redacted]	[redacted]	[redacted]
[redacted]	[redacted]	[redacted]
[redacted]	[redacted]	[redacted]
[redacted]	[redacted]	[redacted]
[redacted]	[redacted]	[redacted]
[redacted]	[redacted]	[redacted]
[redacted]	[redacted]	[redacted]
[redacted]	[redacted]	[redacted]

TABLE H.4-67
(SHEET 6 OF 6)

[redacted]

*

[redacted]

TABLE H.4-68
(SHEET 1 OF 7)

SAFE SHUTDOWN EQUIPMENT LOCATED IN FIRE ZONE 4F2

[redacted]

[redacted]	[redacted]	[redacted]
[redacted]	[redacted]	[redacted]
[redacted]	[redacted]	[redacted]
[redacted]	[redacted]	[redacted]

TABLE H.4-68
(SHEET 2 OF 7)

COMPONENT	CABLE NUMBER	METHOD
[redacted]	[redacted]	[redacted]
[redacted]	[redacted]	[redacted]
[redacted]	[redacted]	[redacted]
[redacted]	[redacted]	[redacted]
[redacted]	[redacted]	[redacted]
[redacted]	[redacted]	[redacted]
[redacted]	[redacted]	[redacted]
[redacted]	[redacted]	[redacted]
[redacted]	[redacted]	[redacted]
[redacted]	[redacted]	[redacted]

TABLE H.4-68
(SHEET 3 OF 7)

COMPONENT	CABLE NUMBER	METHOD
[redacted]	[redacted]	[redacted]
[redacted]	[redacted]	[redacted]
[redacted]	[redacted]	[redacted]
[redacted]	[redacted]	[redacted]
[redacted]	[redacted]	[redacted]
[redacted]	[redacted]	[redacted]
[redacted]	[redacted]	[redacted]
[redacted]	[redacted]	[redacted]
[redacted]	[redacted]	[redacted]
[redacted]	[redacted]	[redacted]
[redacted]	[redacted]	[redacted]
[redacted]	[redacted]	[redacted]
[redacted]	[redacted]	[redacted]
[redacted]	[redacted]	[redacted]
[redacted]	[redacted]	[redacted]
[redacted]	[redacted]	[redacted]
[redacted]	[redacted]	[redacted]
[redacted]	[redacted]	[redacted]
[redacted]	[redacted]	[redacted]
[redacted]	[redacted]	[redacted]
[redacted]	[redacted]	[redacted]

TABLE H.4-68
(SHEET 4 OF 7)

COMPONENT	CABLE NUMBER	METHOD
[redacted]	[redacted]	[redacted]
[redacted]	[redacted]	[redacted]
[redacted]	[redacted]	[redacted]
[redacted]	[redacted]	[redacted]
[redacted]	[redacted]	[redacted]
[redacted]	[redacted]	[redacted]
[redacted]	[redacted]	[redacted]
[redacted]	[redacted]	[redacted]
[redacted]	[redacted]	[redacted]
[redacted]	[redacted]	[redacted]
[redacted]	[redacted]	[redacted]
[redacted]	[redacted]	[redacted]
[redacted]	[redacted]	[redacted]
[redacted]	[redacted]	[redacted]
[redacted]	[redacted]	[redacted]
[redacted]	[redacted]	[redacted]

TABLE H.4-68
(SHEET 5 OF 7)

COMPONENT	CABLE NUMBER	METHOD
[redacted]	[redacted]	[redacted]
[redacted]	[redacted]	[redacted]
[redacted]	[redacted]	[redacted]
[redacted]	[redacted]	[redacted]
[redacted]	[redacted]	[redacted]
[redacted]	[redacted]	[redacted]
[redacted]	[redacted]	[redacted]
[redacted]	[redacted]	[redacted]
[redacted]	[redacted]	[redacted]
[redacted]	[redacted]	[redacted]
[redacted]	[redacted]	[redacted]
[redacted]	[redacted]	[redacted]
[redacted]	[redacted]	[redacted]
[redacted]	[redacted]	[redacted]

TABLE H.4-68
(SHEET 6 OF 7)

COMPONENT	CABLE NUMBER	METHOD
[redacted]	[redacted]	[redacted]
[redacted]	[redacted]	[redacted]
[redacted]	[redacted]	[redacted]
[redacted]	[redacted]	[redacted]
[redacted]	[redacted]	[redacted]
[redacted]	[redacted]	[redacted]
[redacted]	[redacted]	[redacted]
[redacted]	[redacted]	[redacted]
[redacted]	[redacted]	[redacted]
[redacted]	[redacted]	[redacted]
[redacted]	[redacted]	[redacted]
[redacted]	[redacted]	[redacted]
[redacted]	[redacted]	[redacted]
[redacted]	[redacted]	[redacted]
[redacted]	[redacted]	[redacted]
[redacted]	[redacted]	[redacted]
[redacted]	[redacted]	[redacted]
[redacted]	[redacted]	[redacted]
[redacted]	[redacted]	[redacted]
[redacted]	[redacted]	[redacted]

TABLE H.4-68
(SHEET 7 OF 7)

[redacted]

TABLE H.4-69
(SHEET 1 OF 9)

SAFE SHUTDOWN EQUIPMENT LOCATED IN FIRE ZONE 4F3

[redacted]

TABLE H.4-69
(SHEET 2 OF 9)

COMPONENT	NUMBER	METHOD
[redacted]	[redacted]	[redacted]
[redacted]	[redacted]	[redacted]
[redacted]	[redacted]	[redacted]
[redacted]	[redacted]	[redacted]
[redacted]	[redacted]	[redacted]

TABLE H.4-69
(SHEET 3 OF 9)

[redacted]

	1RH418	Bas.
[redacted]	[redacted]	[redacted]

TABLE H.4-69
(SHEET 4 OF 9)

COMPONENT	NUMBER	METHOD
[redacted]	[redacted]	[redacted]
[redacted]	[redacted]	[redacted]
[redacted]	[redacted]	[redacted]

TABLE H.4-69
(SHEET 5 OF 9)

COMPONENT	NUMBER	METHOD
[redacted]	[redacted]	[redacted]
[redacted]	[redacted]	[redacted]
[redacted]	[redacted]	[redacted]
[redacted]	[redacted]	[redacted]
[redacted]	[redacted]	[redacted]
[redacted]	[redacted]	[redacted]
[redacted]	[redacted]	[redacted]
[redacted]	[redacted]	[redacted]

TABLE H.4-69
(SHEET 6 OF 9)

COMPONENT	NUMBER	METHOD
[redacted]	[redacted]	[redacted]
[redacted]	[redacted]	[redacted]
[redacted]	[redacted]	[redacted]
[redacted]	[redacted]	[redacted]
[redacted]	[redacted]	[redacted]
[redacted]	[redacted]	[redacted]
[redacted]	[redacted]	[redacted]
[redacted]	[redacted]	[redacted]
[redacted]	[redacted]	[redacted]
[redacted]	[redacted]	[redacted]
[redacted]	[redacted]	[redacted]

TABLE H.4-69
(SHEET 7 OF 9)

COMPONENT	CABLE NUMBER	METHOD
[redacted]	[redacted]	[redacted]
[redacted]	[redacted]	[redacted]
[redacted]	[redacted]	[redacted]
[redacted]	[redacted]	[redacted]
[redacted]	[redacted]	[redacted]
[redacted]	[redacted]	[redacted]
[redacted]	[redacted]	[redacted]
[redacted]	[redacted]	[redacted]
[redacted]	[redacted]	[redacted]
[redacted]	[redacted]	[redacted]
[redacted]	[redacted]	[redacted]
[redacted]	[redacted]	[redacted]
[redacted]	[redacted]	[redacted]
[redacted]	[redacted]	[redacted]
[redacted]	[redacted]	[redacted]

TABLE H.4-69
(SHEET 8 OF 9)

COMPONENT	CABLE NUMBER	METHOD
[redacted]	[redacted]	[redacted]
[redacted]	[redacted]	[redacted]
[redacted]	[redacted]	[redacted]
[redacted]	[redacted]	[redacted]
[redacted]	[redacted]	[redacted]
[redacted]	[redacted]	[redacted]
[redacted]	[redacted]	[redacted]
[redacted]	[redacted]	[redacted]
[redacted]	[redacted]	[redacted]
[redacted]	[redacted]	[redacted]
[redacted]	[redacted]	[redacted]
[redacted]	[redacted]	[redacted]

TABLE H.4-69
(SHEET 9 OF 9)

COMPONENT	CABLE NUMBER	METHOD
[redacted]	[redacted]	
[redacted]	[redacted]	[redacted]
[redacted]	[redacted]	
[redacted]	[redacted]	

[redacted]

TABLE H.4-70
(SHEET 1 OF 8)

SAFE SHUTDOWN EQUIPMENT LOCATED IN FIRE ZONE 4F3

[redacted]

TABLE H.4-70
(SHEET 2 OF 8)

COMPONENT	CABLE NUMBER	METHOD
[redacted]	[redacted]	[redacted]
[redacted]	[redacted]	[redacted]
[redacted]	[redacted]	[redacted]

TABLE H.4-70
(SHEET 3 OF 8)

COMPONENT	CABLE NUMBER	METHOD
[redacted]	[redacted]	[redacted]
[redacted]	[redacted]	[redacted]
[redacted]	[redacted]	[redacted]
[redacted]	[redacted]	[redacted]
[redacted]	[redacted]	[redacted]
[redacted]	[redacted]	[redacted]
[redacted]	[redacted]	[redacted]
[redacted]	[redacted]	[redacted]
[redacted]	[redacted]	[redacted]
[redacted]	[redacted]	[redacted]
[redacted]	[redacted]	[redacted]
[redacted]	[redacted]	[redacted]
[redacted]	[redacted]	[redacted]
[redacted]	[redacted]	[redacted]
[redacted]	[redacted]	[redacted]
[redacted]	[redacted]	[redacted]

TABLE H.4-70
(SHEET 4 OF 8)

COMPONENT	CABLE NUMBER	METHOD
[redacted]	[redacted]	[redacted]
[redacted]	[redacted]	[redacted]
[redacted]	[redacted]	[redacted]
[redacted]	[redacted]	[redacted]
[redacted]	[redacted]	[redacted]
[redacted]	[redacted]	[redacted]
[redacted]	[redacted]	[redacted]
[redacted]	[redacted]	[redacted]
[redacted]	[redacted]	[redacted]
[redacted]	[redacted]	[redacted]
[redacted]	[redacted]	[redacted]
[redacted]	[redacted]	[redacted]
[redacted]	[redacted]	[redacted]
[redacted]	[redacted]	[redacted]

TABLE H.4-70
(SHEET 5 OF 8)

COMPONENT	CABLE NUMBER	METHOD
[redacted]	[redacted]	[redacted]
[redacted]	[redacted]	[redacted]
[redacted]	[redacted]	[redacted]
[redacted]	[redacted]	[redacted]
[redacted]	[redacted]	[redacted]
[redacted]	[redacted]	[redacted]
[redacted]	[redacted]	[redacted]
[redacted]	[redacted]	[redacted]

TABLE H.4-70
(SHEET 6 OF 8)

COMPONENT	CABLE NUMBER	METHOD
[redacted]	[redacted]	[redacted]
[redacted]	[redacted]	[redacted]
[redacted]	[redacted]	[redacted]
[redacted]	[redacted]	[redacted]
[redacted]	[redacted]	[redacted]
[redacted]	[redacted]	[redacted]
[redacted]	[redacted]	[redacted]
[redacted]	[redacted]	[redacted]
[redacted]	[redacted]	[redacted]
[redacted]	[redacted]	[redacted]
[redacted]	[redacted]	[redacted]
[redacted]	[redacted]	[redacted]

TABLE H.4-70
(SHEET 7 OF 8)

COMPONENT	CABLE NUMBER	METHOD
[redacted]	[redacted]	[redacted]
[redacted]	[redacted]	[redacted]
[redacted]	[redacted]	[redacted]
[redacted]	[redacted]	[redacted]
[redacted]	[redacted]	[redacted]
[redacted]	[redacted]	[redacted]
[redacted]	[redacted]	[redacted]
[redacted]	[redacted]	[redacted]
[redacted]	[redacted]	
[redacted]	[redacted]	
[redacted]	[redacted]	
[redacted]	[redacted]	[redacted]
[redacted]	[redacted]	[redacted]
[redacted]	[redacted]	[redacted]
[redacted]	[redacted]	[redacted]
[redacted]	[redacted]	[redacted]

TABLE H.4-70
(SHEET 8 OF 8)

[redacted]

TABLE H.4-71
(SHEET 1 OF 3)

SAFE SHUTDOWN EQUIPMENT LOCATED IN FIRE ZONE 5C11

[redacted]

TABLE H.4-71
(SHEET 2 OF 3)

COMPONENT	CABLE NUMBER	METHOD
[redacted]	[redacted]	[redacted]
[redacted]	[redacted]	[redacted]
[redacted]	[redacted]	[redacted]
[redacted]	[redacted]	[redacted]
[redacted]	[redacted]	[redacted]
[redacted]	[redacted]	[redacted]
[redacted]	[redacted]	[redacted]
[redacted]	[redacted]	[redacted]
[redacted]	[redacted]	[redacted]
[redacted]	[redacted]	[redacted]
[redacted]	[redacted]	[redacted]
[redacted]	[redacted]	[redacted]

TABLE H.4-71
(SHEET 3 OF 3)

COMPONENT	CABLE NUMBER	METHOD
[redacted]	[redacted]	[redacted]
[redacted]	[redacted]	[redacted]
[redacted]	[redacted]	[redacted]
[redacted]	[redacted]	[redacted]
[redacted]	[redacted]	[redacted]
[redacted]	[redacted]	[redacted]
[redacted]	[redacted]	[redacted]
[redacted]	[redacted]	[redacted]
[redacted]	[redacted]	[redacted]

[redacted]

TABLE H.4-72
(SHEET 1 OF 3)

SAFE SHUTDOWN EQUIPMENT LOCATED IN FIRE ZONE 5C11

[redacted]

[redacted]	[redacted]	[redacted]
[redacted]	[redacted]	[redacted]
[redacted]		
[redacted]	[redacted]	[redacted]
[redacted]	[redacted]	[redacted]
	[redacted]	[redacted]
[redacted]		
[redacted]	[redacted]	[redacted]
[redacted]	[redacted]	[redacted]
[redacted]	[redacted]	[redacted]
[redacted]	[redacted]	[redacted]

TABLE H.4-72
(SHEET 2 OF 3)

COMPONENT	CABLE NUMBER	METHOD
[redacted]	[redacted]	[redacted]
[redacted]	[redacted]	[redacted]
[redacted]	[redacted]	[redacted]
[redacted]	[redacted]	[redacted]
[redacted]	[redacted]	[redacted]
[redacted]	[redacted]	[redacted]
[redacted]	[redacted]	[redacted]
[redacted]	[redacted]	[redacted]
[redacted]	[redacted]	[redacted]
[redacted]	[redacted]	[redacted]
[redacted]	[redacted]	[redacted]
[redacted]	[redacted]	[redacted]

TABLE H.4-72
(SHEET 3 OF 3)

COMPONENT	CABLE NUMBER	METHOD
[redacted]	[redacted]	[redacted]
[redacted]	[redacted]	[redacted]
[redacted]	[redacted]	[redacted]
[redacted]	[redacted]	[redacted]

[redacted]

[redacted]

[redacted]

[redacted]

[redacted]

TABLE H.4-73
(SHEET 1 OF 3)

SAFE SHUTDOWN EQUIPMENT LOCATED IN FIRE ZONE 5D1

[redacted]

TABLE H.4-73
(SHEET 2 OF 3)

COMPONENT	CABLE NUMBER	METHOD
[redacted]	[redacted]	[redacted]
[redacted]	[redacted]	[redacted]
[redacted]	[redacted]	[redacted]
[redacted]	[redacted]	[redacted]
[redacted]	[redacted]	[redacted]
[redacted]	[redacted]	[redacted]
[redacted]	[redacted]	[redacted]
[redacted]	[redacted]	[redacted]
[redacted]	[redacted]	[redacted]
[redacted]	[redacted]	[redacted]

TABLE H.4-73
(SHEET 3 OF 3)

COMPONENT	CABLE NUMBER	METHOD
[redacted]	[redacted]	[redacted]
[redacted]	[redacted]	[redacted]
[redacted]	[redacted]	[redacted]
[redacted]	[redacted]	[redacted]
[redacted]	[redacted]	[redacted]
[redacted]	[redacted]	[redacted]
[redacted]	[redacted]	[redacted]
[redacted]	[redacted]	[redacted]

TABLE H.4-74
(SHEET 1 OF 3)

SAFE SHUTDOWN EQUIPMENT LOCATED IN FIRE ZONE 5D2

[redacted]

TABLE H.4-74
(SHEET 2 OF 3)

COMPONENT	CABLE NUMBER	METHOD
[redacted]	[redacted]	[redacted]
[redacted]	[redacted]	[redacted]
[redacted]	[redacted]	[redacted]
[redacted]	[redacted]	[redacted]
[redacted]	[redacted]	[redacted]
[redacted]	[redacted]	[redacted]
[redacted]	[redacted]	[redacted]
[redacted]	[redacted]	[redacted]
[redacted]	[redacted]	[redacted]
[redacted]	[redacted]	[redacted]
[redacted]	[redacted]	[redacted]
[redacted]	[redacted]	[redacted]
[redacted]	[redacted]	[redacted]

TABLE H.4-74
(SHEET 3 OF 3)

COMPONENT	CABLE NUMBER	METHOD
[redacted]	[redacted]	[redacted]
[redacted]	[redacted]	[redacted]
[redacted]	[redacted]	[redacted]
[redacted]	[redacted]	[redacted]
[redacted]	[redacted]	[redacted]
[redacted]	[redacted]	[redacted]
[redacted]	[redacted]	[redacted]
[redacted]	[redacted]	[redacted]
[redacted]	[redacted]	[redacted]

TABLE H.4-74a
(SHEET 1 OF 1)

SAFE SHUTDOWN EQUIPMENT LOCATED IN FIRE ZONE 5D5

[redacted]

TABLE H.4-75
(SHEET 1 OF 2)

SAFE SHUTDOWN EQUIPMENT LOCATED IN FIRE ZONE 7A1

[redacted]

TABLE H.4-75
(SHEET 2 OF 2)

[redacted]

[redacted]	[redacted]	[redacted]
[redacted]	[redacted]	[redacted]
	[redacted]	[redacted]
[redacted]	[redacted]	[redacted]
[redacted]	[redacted]	[redacted]
[redacted]	[redacted]	[redacted]
[redacted]	[redacted]	[redacted]
	[redacted]	[redacted]
[redacted]	[redacted]	[redacted]

TABLE H.4-76
(SHEET 1 OF 2)

SAFE SHUTDOWN EQUIPMENT LOCATED IN FIRE ZONE 7A2

[redacted]

TABLE H.4-76
(SHEET 2 OF 2)

COMPONENT	CABLE NUMBER	METHOD
[redacted]	[redacted]	[redacted]
[redacted]	[redacted]	[redacted]
	[redacted]	[redacted]
[redacted]	[redacted]	[redacted]
[redacted]	[redacted]	[redacted]

TABLE H.4-77
(SHEET 1 OF 2)

SAFE SHUTDOWN EQUIPMENT LOCATED IN FIRE ZONE 7A3

[redacted]

TABLE H.4-77
(SHEET 2 OF 2)

[redacted]

[redacted]	[redacted]	[redacted]
[redacted]	[redacted]	[redacted]
[redacted]	[redacted]	[redacted]
[redacted]	[redacted]	[redacted]
[redacted]	[redacted]	[redacted]
[redacted]	[redacted]	[redacted]
[redacted]	[redacted]	[redacted]
[redacted]	[redacted]	[redacted]

TABLE H.4-78
(SHEET 1 OF 3)

SAFE SHUTDOWN EQUIPMENT LOCATED IN FIRE ZONE 7B1

[redacted]

TABLE H.4-78
(SHEET 2 OF 3)

COMPONENT	CABLE NUMBER	METHOD
[redacted]	[redacted]	[redacted]
[redacted]	[redacted]	[redacted]
[redacted]	[redacted]	[redacted]

TABLE H.4-78
(SHEET 3 OF 3)

COMPONENT	CABLE NUMBER	METHOD
[redacted]	[redacted]	[redacted]
[redacted]	[redacted]	[redacted]
[redacted]	[redacted]	[redacted]
[redacted]	[redacted]	[redacted]
[redacted]	[redacted]	[redacted]
[redacted]	[redacted]	[redacted]
[redacted]	[redacted]	[redacted]
[redacted]	[redacted]	[redacted]

TABLE H.4-79
(SHEET 1 OF 3)

SAFE SHUTDOWN EQUIPMENT LOCATED IN FIRE ZONE 7B2

[redacted]

TABLE H.4-79
(SHEET 2 OF 3)

COMPONENT	CABLE NUMBER	METHOD
[redacted]	[redacted]	[redacted]
[redacted]	[redacted]	[redacted]
[redacted]	[redacted]	[redacted]
[redacted]	[redacted]	[redacted]
[redacted]	[redacted]	[redacted]

TABLE H.4-79
(SHEET 3 OF 3)

[redacted]

TABLE H.4-80
(SHEET 1 OF 3)

SAFE SHUTDOWN EQUIPMENT LOCATED IN FIRE ZONE 7B3

[redacted]

TABLE H.4-80
(SHEET 2 OF 3)

COMPONENT	CABLE NUMBER	METHOD
[redacted]	[redacted]	[redacted]
[redacted]	[redacted]	[redacted]
[redacted]	[redacted]	[redacted]
[redacted]	[redacted]	[redacted]
[redacted]	[redacted]	[redacted]

TABLE H.4-80
(SHEET 3 OF 3)
UNIT 2 CABLES

[redacted]

TABLE H.4-81

SAFE SHUTDOWN EQUIPMENT LOCATED IN FIRE ZONE 7B4

[redacted]

TABLE H.4-82

SAFE SHUTDOWN EQUIPMENT LOCATED IN FIRE ZONE 7B5

[redacted]

[redacted]

[redacted]

[redacted]

[redacted]

[redacted]

[redacted]

[redacted]

TABLE H.4-83

SAFE SHUTDOWN EQUIPMENT LOCATED IN FIRE ZONE 7B6

[redacted]

TABLE H.4-84

SAFE SHUTDOWN EQUIPMENT LOCATED IN FIRE ZONE 7C1

[redacted]

TABLE H.4-85

SAFE SHUTDOWN EQUIPMENT LOCATED IN FIRE ZONE 7C2

[redacted]

TABLE H.4-86

SAFE SHUTDOWN EQUIPMENT LOCATED IN FIRE ZONE 7C3

[redacted]

TABLE H.4-87
(SHEET 1 OF 2)

SAFE SHUTDOWN EQUIPMENT LOCATED IN FIRE ZONE 7C4

[redacted]

TABLE H.4-87
(SHEET 2 OF 2)

COMPONENT	CABLE NUMBER	METHOD
[redacted]	[redacted]	[redacted]
[redacted]	[redacted]	[redacted]
[redacted]	[redacted]	[redacted]
[redacted]	[redacted]	[redacted]
[redacted]	[redacted]	[redacted]
[redacted]	[redacted]	[redacted]
[redacted]	[redacted]	[redacted]
	[redacted]	[redacted]

TABLE H.4-88

SAFE SHUTDOWN EQUIPMENT LOCATED IN FIRE ZONE 7C5

[redacted]

TABLE H.4-89

SAFE SHUTDOWN EQUIPMENT LOCATED IN FIRE ZONE 7C6

[redacted]

TABLE H.4-90
(SHEET 1 OF 2)

SAFE SHUTDOWN EQUIPMENT LOCATED IN FIRE ZONE 8A1

[redacted]

TABLE H.4-90
(SHEET 2 OF 2)

[redacted]

[redacted]	[redacted]	[redacted]
[redacted]	[redacted]	[redacted]
[redacted]	[redacted]	[redacted]

[redacted]

[redacted]	[redacted]	[redacted]
[redacted]	[redacted]	[redacted]
[redacted]	[redacted]	[redacted]
[redacted]	[redacted]	[redacted]
[redacted]	[redacted]	[redacted]
[redacted]	[redacted]	[redacted]
[redacted]	[redacted]	[redacted]
[redacted]	[redacted]	[redacted]
[redacted]	[redacted]	[redacted]

TABLE H.4-91
(SHEET 1 OF 2)

SAFE SHUTDOWN EQUIPMENT LOCATED IN FIRE ZONE 8A2

[redacted]

TABLE H.4-91
(SHEET 2 OF 2)

COMPONENT'	CABLE NUMBER	METHOD
[redacted]	[redacted]	[redacted]
[redacted]	[redacted]	[redacted]
[redacted]	[redacted]	[redacted]

TABLE H.4-92
(SHEET 1 OF 3)

SAFE SHUTDOWN EQUIPMENT LOCATED IN FIRE ZONE 8B1

[redacted]

TABLE H.4-92
(SHEET 2 OF 3)

COMPONENT	CABLE NUMBER	METHOD
[redacted]	[redacted]	[redacted]
[redacted]	[redacted]	[redacted]
[redacted]	[redacted]	[redacted]
[redacted]	[redacted]	[redacted]
[redacted]	[redacted]	[redacted]
[redacted]	[redacted]	[redacted]
[redacted]	[redacted]	[redacted]
[redacted]	[redacted]	[redacted]
[redacted]	[redacted]	[redacted]
[redacted]	[redacted]	[redacted]

TABLE H.4-92
(SHEET 3 OF 3)

[redacted]

TABLE H.4-93
(SHEET 1 OF 2)

SAFE SHUTDOWN EQUIPMENT LOCATED IN FIRE ZONE 8B2

[redacted]

TABLE H.4-93
(SHEET 2 OF 2)

COMPONENT	CABLE NUMBER	METHOD
[redacted]	[redacted]	[redacted]
[redacted]	[redacted]	[redacted]
[redacted]	[redacted]	[redacted]
[redacted]	[redacted]	[redacted]
[redacted]	[redacted]	[redacted]
[redacted]	[redacted]	[redacted]
[redacted]	[redacted]	[redacted]
[redacted]	[redacted]	[redacted]
[redacted]	[redacted]	[redacted]
[redacted]	[redacted]	[redacted]
[redacted]	[redacted]	[redacted]
[redacted]	[redacted]	[redacted]
[redacted]	[redacted]	[redacted]
[redacted]	[redacted]	[redacted]
[redacted]	[redacted]	[redacted]

TABLE H.4-94

SAFE SHUTDOWN EQUIPMENT LOCATED IN FIRE ZONE 8B3

[redacted]

TABLE H.4-95

SAFE SHUTDOWN EQUIPMENT LOCATED IN FIRE ZONE 8B4

[redacted]

TABLE H.4-96

SAFE SHUTDOWN EQUIPMENT LOCATED IN FIRE ZONE 8C1

[redacted]

[redacted]	[redacted]	[redacted]
[redacted]	[redacted]	[redacted]
[redacted]	[redacted]	[redacted]

[redacted]

[redacted]	[redacted]	[redacted]
[redacted]		

[redacted]

[redacted]	[redacted]	[redacted]
[redacted]	[redacted]	[redacted]
[redacted]	[redacted]	[redacted]

TABLE H.4-97

SAFE SHUTDOWN EQUIPMENT LOCATED IN FIRE ZONE 8C2

[redacted]

TABLE H.4-98
(SHEET 1 OF 2)

SAFE SHUTDOWN EQUIPMENT LOCATED IN FIRE ZONE 8C3

[redacted]

TABLE H.4-98
(SHEET 2 OF 2)

COMPONENT	CABLE NUMBER	METHOD
[redacted]	[redacted]	[redacted]
[redacted]	[redacted]	[redacted]
[redacted]	[redacted]	[redacted]
[redacted]	[redacted]	[redacted]
[redacted]	[redacted]	[redacted]
[redacted]	[redacted]	[redacted]
[redacted]	[redacted]	[redacted]

TABLE H.4-99

SAFE SHUTDOWN EQUIPMENT LOCATED IN FIRE ZONE 8C4

[redacted]

[redacted]	[redacted]	[redacted]
[redacted]	[redacted]	[redacted]
[redacted]	[redacted]	[redacted]
[redacted]	[redacted]	[redacted]
[redacted]	[redacted]	[redacted]
[redacted]	[redacted]	[redacted]

[redacted]

[redacted]	[redacted]	[redacted]
[redacted]		

[redacted]

[redacted]	[redacted]	[redacted]
[redacted]	[redacted]	[redacted]
[redacted]	[redacted]	[redacted]
[redacted]	[redacted]	[redacted]
[redacted]	[redacted]	[redacted]

TABLE H.4-100

SAFE SHUTDOWN EQUIPMENT LOCATED IN FIRE ZONE 8C5

[redacted]

TABLE H.4-101
(SHEET 1 OF 8)

SAFE SHUTDOWN EQUIPMENT LOCATED IN FIRE ZONE 4B

[redacted]

TABLE H.4-101
(SHEET 2 OF 8)

COMPONENT	NUMBER	METHOD
[redacted]	[redacted]	[redacted]

TABLE H.4-101
(SHEET 3 OF 8)

[redacted]

TABLE H.4-101
(SHEET 4 OF 8)

COMPONENT	CABLE NUMBER	METHOD
[redacted]	[redacted]	[redacted]
[redacted]	[redacted]	[redacted]
[redacted]	[redacted]	[redacted]
[redacted]	[redacted]	[redacted]
[redacted]	[redacted]	[redacted]
[redacted]	[redacted]	[redacted]
[redacted]	[redacted]	[redacted]

TABLE H.4-101
(SHEET 5 OF 8)

[redacted]

TABLE H.4-101
(SHEET 6 OF 8)

COMPONENT	NUMBER	METHOD
[redacted]	[redacted]	[redacted]
[redacted]		
[redacted]	[redacted]	[redacted]
[redacted]	[redacted]	[redacted]
[redacted]	[redacted]	[redacted]

TABLE H.4-101
(SHEET 7 OF 8)

COMPONENT	NUMBER	METHOD
[redacted]	[redacted]	[redacted]
[redacted]	[redacted]	[redacted]
[redacted]		
[redacted]	[redacted]	[redacted]
[redacted]	[redacted]	[redacted]
[redacted]	[redacted]	[redacted]
[redacted]	[redacted]	[redacted]
[redacted]	[redacted]	[redacted]
[redacted]	[redacted]	[redacted]
[redacted]	[redacted]	[redacted]
[redacted]	[redacted]	[redacted]
[redacted]	[redacted]	[redacted]
[redacted]	[redacted]	[redacted]
[redacted]	[redacted]	[redacted]
[redacted]	[redacted]	[redacted]

TABLE H.4-101
(SHEET 8 OF 8)

COMPONENT	NUMBER	METHOD
[redacted]	[redacted]	[redacted]
[redacted]	[redacted]	[redacted]
[redacted]	[redacted]	[redacted]
[redacted]	[redacted]	[redacted]
[redacted]	[redacted]	[redacted]
[redacted]	[redacted]	[redacted]
[redacted]	[redacted]	[redacted]
[redacted]	[redacted]	[redacted]
[redacted]	[redacted]	[redacted]
[redacted]	[redacted]	[redacted]

TABLE H.4-102
(SHEET 1 OF 2)

RELATIVE DISTANCES BETWEEN CRITICAL COMPONENTS IN FIRE ZONE 4B

A. Unit 1:

COMPONENT*	OPL15J	OPL16J	OPL42J	OPL43J	OVC15YA/B	OVE06YA/B
0PL15J	-	< 20ft	< 20ft	> 20ft	< 20ft	< 20ft
0PL16J	< 20ft	-	< 20ft	> 20ft	< 20ft	> 20ft
0PL42J	< 20ft	< 20ft	-	> 20ft	< 20ft	> 20ft
0PL43J	> 20ft	> 20ft	> 20ft	-	> 20ft	> 20ft
0VC15YA/B	< 20ft	< 20ft	< 20ft	> 20ft	-	< 20ft
0VE06YA/B	< 20ft	> 20ft	< 20ft	> 20ft	> 20ft	-
Available Ventilation System (s)	AEER Unit 2 Train	Control Room Unit 1 Train**	AEER Unit 2 Train	Both Control Room Trains & AEER Unit 2 Train	Both AEER Trains	Control Room Unit 1 Train

* See Table H.4-101 for Component Name

** Further discussed in Subsection H.4.3

TABLE H.4-102
(SHEET 2 OF 2)

COMPONENT*	OPL15J	OPL16J	OPL42J	OPL43J	OVC15YA/B	OVE06YA/B
0PL15J	-	< 20ft	< 20ft	> 20ft	< 20ft	< 20ft
0PL16J	< 20ft	-	< 20ft	> 20ft	***	> 20ft
0PL42J	< 20ft	< 20ft	-	> 20ft	<20 ft	> 20ft
0PL43J	> 20ft	> 20ft	> 20ft	-	> 20ft	> 20ft
0VC15YA/B	< 20ft	< 20ft	< 20ft	> 20ft	-	< 20ft
0VE06YA/B	< 20ft	>20 ft	< 20ft	> 20ft	> 20ft	-
Available Ventilation System(s)	AEER Unit 2 Train	AEER Unit 2 Train	AEER Unit 2 Train	Both AEER Control Room Trains & AEER Unit 2 Train	Control Unit 2 Train	Room Unit 2 Train

* See Table H.4-101 for Component Name
** Further discussed in Subsection H.4.3
*** < 20ft to damper OVC15YA, 24 ft to damper OVC15YB

TABLE H.4-103

GENERAL SAFE SHUTDOWN INSTRUMENTATION

PARAMETER	INSTRUMENT NUMBER	MONITOR LOCATION
A. Unit 1:		
Reactor Vessel Pressure	PT 1C61-R011	AEER
Reactor Vessel Pressure	PR 1B21-R884A PR 1B21-R884B	Control Room
Reactor Vessel Level	LT 1C61-R010	AEER
Reactor Vessel Level	LR 1B21-R884A LR 1B21-R884B	Control Room
Suppression Pool Water Level	1LT-CM183	AEER
Suppression Pool Water Temperature	1TE-CM037	AEER
Suppression Pool Water Level	1LT-CM032	Control Room
Suppression Pool Water Temperature	1TE-CM057J, K, N, R	Control Room
B. Unit 2:		
Reactor Vessel Pressure	PF 2C61-R011	AEER
Reactor Vessel Pressure	PR 2B21-R884A PR 2B21-R884B	Control Room
Reactor Vessel Level	LI 2C61-R010	AEER
Reactor Vessel Level	LR 2B21-R884A LR 2B21-R884B	Control Room
Reactor Vessel Level	LI-2B21-N705A LT-2B21-N405A	Div. 1 AEER Room
	LI-2B21-N709A LT-2B21-N409A	Div 3 SWGR Room
	LI-2B21-N709B LT-2B21-N409B	Div 3 SWGR Room
Suppression Pool Water Level	2LT-CM183	AEER
Suppression Pool Water Temperature	2TE-CM037	AEER
Suppression Pool Water Level	2LT-CM032	Control Room
Suppression Pool Water Temperature	2TE-CM057J, K, N, R	Control Room

TABLE H.4-104
(SHEET 2 OF 2)
REACTOR VESSEL PRESSURE

A. Unit 1:

COMPONENT	ALTERNATE METHOD	BASIC METHOD	OTHER
Transmitter	PT 1C61-N006	PT 1B21-N051B	PT IB21-N051A
Indicator	PT 1C61-R011	PR/LR 1B21-R884B	PR/LR 1B21-R884A
Monitor Location (Room)	AEER	Control	Control Room (4C1)
Monitor Location (Panel)	1C61-P001	1H13-P601	
Intermediate Panels	1H22-P026	1H22-P027	1H22-P004
		1H13-P613	

INSTRUMENT CABLE ROUTING

METHOD CABLE ROUTING	ALTERNATE FIRE ZONE*	BASIC FIRE ZONE*	METHOD CABLE	OTHER FIRE ZONE*
1RS012	2E-2		1NB099	4E1-2
	2F-2			4F1
	4D1-l			4F3
	4E3-l			2E-1
	4F3			
1NB358			1NB354	2E-l
		2F-1		2E-2
		4D3		2F-2
		4D1-2		4D1-1
		4E3-2		4E1-2
		4El-1		4E3-1
				4F3
1NB356		4El-1	1NB134	4Cl
		4E3-2		4D1-1
		4D1-2		4E3-1
				4F1
				4F3
			1NB355	4C1
				4D1-1
				4E3-1
				4F3

TABLE H.4-104
(SHEET 2 OF 2)

B. Unit 2:

COMPONENT	ALTERNATE METHOD	BASIC METHOD	OTHER
Transmitter	2B21-.N006	LT 2B21-N051B	PT 2B21-N051A
Indicator	2C61-R011	PR/LR 2B21-884B	PR/LR 2B21-R884A
Monitor Location (Room)	AEER (4E2-2)	Control (4Cl)	Control (4Cl)
Monitor Location (Panel)	2C61-P001	2H13-P601	
Intermediate Panels	Local	2H22-.P027(3E-1) 2H13-P613(4E2-2)	2H22-P004

INSTRUMENT CABLE ROUTING

METHOD CABLE ROUTING	ALTERNATE FIRE ZONE*	BASIC FIRE ZONE*	METHOD CABLE	OTHER FIRE ZONE*
2RS020	4F2		2NB099	4E2-2
	4F3			4F2
2RS011	3E-2			4F3
	3F-2		2NB354	3E-1
	4E4-1			3E-2
	4D4			3F-2
	4F3			4D4
	4E2-2			
2NB098		4E4-2		4E2-2
		4E2-2		4E4-1
				4F3
2NB358		3E-1	2RH417	4Cl
		3F-1		4D4
		4D2		4E4-1
		4E4-2		4F2
		4E2-2		4F3
2NB356		4E4-2	2NB355	4Cl
		4D2		4D4
		4E2-2		4E2-2
				4E4-1
				4F3

* Fire Zones listed are those fire zones through which the cables pass.

TABLE H.4-105
(SHEET 1 OF 3)

REACTOR VESSEL LEVEL

A. Unit 1:

COMPONENT	ALTERNATE METHOD	BASIC METHOD	OTHER
Transmitter	LT 1B21-N026DA	LT 1B21-N026BA	LT 1B21 -N026E
Indicator	LI 1C61-R010	PR/LR 1B21-R884B	PR/LR 1B21-R884A
Monitor Location (Room)	AEER (4E1-2)	Control (4C1)	Control (4C1)
Monitor Location (Panel)	1C61-P00l(4E1-2)	1H13-P601 (4Cl)	1H13-P601 (4C1)
Intermediate Panels	1H22-P026 (2E-2)	1H22-P027 (2E-1)	1H22-P026 (2E-2)
		1H13-P613 (4E1-1)	1H13-P612 (4El-2)

INSTRUMENT CABLE ROUTING

METHOD CABLE NO.	ALTERNATE FIRE ZONE*	BASIC FIRE ZONE*	METHOD CABLE NO.	OTHER FIRE ZONE
1RS011	2E-2		1NB099	4El-2
	2F-2			4F1
	4D1-1			4F3
	4E3-1		1NBE18	
	4F3			2E-2
				2F-2
lNB357		2E-1		4D1-1
		2F-1		4E1-2
		4D3		4E3-1
		4D1-2		4F3
		4E3-2	1NB134	4C1
		4E1-1		4D1-1
1NB356		4E1-1		4E3-1
		4E3-2		4F1
		4D1-2		4F3
		4Cl		
1RS020	4E1-2		1NB355	4D1-1
	4F1			4E1-2
	4F3			4E3-1
				4F3
				4Cl
1NB098		4E3-2		
		4E1-1		
1NB137		4E3-2		
		4C1		
		4D1-2		
		4D3		

* Fire Zones listed are those fire zones through which the cable pass.

TABLE H.4-105
(SHEET 2 OF 3)

REACTOR VESSEL LEVEL

B. Unit 2:

COMPONENT	ALTERNATE METHOD	BASIC METHOD	OTHER
Transmitter	LT 2B21-NO26DA	LT 2B21-NO26BA	LT 2B21-N026E
Indicator	LI 2C61-R010	PR/LR 2B21-R884B	PR/LR 2B21-R884A
Monitor Location (Room)	AEER (4E2-2)	Control (4C1)	Control (4C1)
Monitor Location (Panel)	2C61-P001 (4E2-2)	2H13-P601 (4C1)	2H13-P601 (4C1)
Intermediate Panels	2H22-P026 (3E-2)	2H22-P027 (3E-1)	2H22-P026 (3E-2)
		2H13-P613 (4E2-2)	2H13-P612 (4E2-2)
Additional Instrumentation			LI-2B21-N705A
			LT-2B21-N405A
			LI-2B21-N709A
			LT-2B21-N409A
			LI-2B21-N709B
			LT-2B21-N409B

INSTRUMENT CABLE ROUTING

METHOD CABLE NO.	ALTERNATE FIRE ZONE*	BASIC FIRE ZONE*	METHOD CABLE NO.	OTHER FIRE ZONE
2RS020	4F2		2NB099	4E2-2
	4F3			4F2
	4E2-2			4F3
2RS011	3E-2		2NBE18	
	3F-2			3E-2
	4E4-1			4D4
	4D4			4E2-2
	4F3			4E4-1
	4E2-2			4F3
2NB098		4E4-2		
		4E2-2		
2NB357		3E-1	2NB134	4C1
		3F-1		4D4
		4D2		4E4-1
		4E4-2		4F2
		4E2-2		4F3
			2NB355	4C1
2NB356		4E2-2		4D4
		4D2		4E2-2

* Fire Zones listed are those fire zones through which cable pass.

TABLE H.4-105
(SHEET 3 OF 3)

METHOD CABLE NO.	ALTERNATE FIRE ZONE*	BASIC FIRE ZONE*	METHOD CABLE NO.	OTHER FIRE ZONE
2NB137		4E4-2		4E4-1
		4E4-2		4F3
		4E2-2	2NBE40	3E-2
		4C1		3F-2
		4D2		4D4
				4E4-1
				4F3
			2NBE42	4C3
				4D4
				4F2
				5D2
			2NBE43	4C3
				4D4
				4F2
				5D2

* Fire Zones listed are those fire zones through which the cable pass.

TABLE H.4-106
(SHEET 1 OF 3)

PROCESS INSTRUMENTATION AND CONNECTING CABLES

a. Unit 1:

INSTRUMENTATION		CABLES
Basic Method		
1. HPCS Flow		
FT 1E22-N005		1HP054
FI 1E22-R603		1HP055
2. RHR A&B Service Water Flow		
FT 1E12-N007A		1RH404
FI 1E12-R602A		1RH403
3. RHR A Flow		
FT 1E12-N015A		1RH404
FI 1E12-R603A		1RH403
Alternate Method		
1. RCIC Flow		
A. FT 1E51-N003		1RI130
FI 1C61-R002	At Remote Panel	1RI134
FIC 1C61-R001		1RI136
1Y 1C61-K001		
B. FY 2E51-K601		1RI133
FIC 2E51-R600	Control Room	1RI135
FI 2E51-R606		1RI131
		1RI132
2. RHR C&D Service Water Flow		
FT 1E12-N007B		1RH500
FI 1E12-R602B	CR	1RH502
FI 1E12-R507	RSP	1RH482
3. RHR B Flow		
FT 1E12-N015B	Note 1	
FI 1E12-R603B	CR	
FT 1C61-N001		
FI 1C61-R005	RSP	1RS010

TABLE H.4-106
(SHEET 2 OF 3)

INSTRUMENTATION		CABLES
DG DAY TANK LEVEL SWITCHES		
l. DG "0" FUEL TRANSFER PUMP		
0LS-DO004		1DO037
2. DG "1A" FUEL TRANSFER PUMP		
1LS-DO004		1DO040
3. HPCS DG FUEL TRANSFER PUMP		
1LS-DO011		1DO043
b. Unit 2:		
1. HPCS Flow		
FT 2E22-N005		2HP054
FI 2E22-R603		2HP055
2. RHR A&B Service Water Flow		
FT 2E12-N007A		2RH404
FI 2E12-R602A		2RH403
3. RHR A Flow		
FT 2E12-N015A		2RH404
FI 2E12-R603A		2RH403
Alternate Method		
1. RCIC Flow		
A. FT 2E51-N003		2RI130
FI 2C61-R002	At Remote Panel	2RI134
FIG 2C61-R001		2RI136
1Y 2C61-K001		
B. FY 2E51-K601		2RI133
FIC 2E51-R600	Control Room	2RI135
FI 2E51-R606		2RI131
		2RI132

TABLE H.4-106
(SHEET 3 OF 3)

		CABLES
2. RHR C&D Service Water Flow		Note 2
FT 2E12-N007B		2RH500
FI 2E12-R602B (CR)		2RH502
FI 2E12-R507 (RSP)		2RH482
3. RHR B Flow		Note 2
FT 2E12-N015B	(CR)	2RH073
FI 2E12-R603B		2RH075
FT 2C61-N001	(RSP)	2RS010
FI 2C61-R005		

DG DAY TANK LEVEL SWITCHES

1. DG "0" FUEL TRANSFER PUMP	
0LS-DO004	1DO037
2. DG "2A" FUEL TRANSFER PUMP	
2LS-DO004	2DO040
3. HPCS DG FUEL TRANSFER PUMP	
2LS-DO01I	2DO043

NOTES

1. For Unit 1, only cable to RSP is identified and analyzed. This is consistent with the assumption that the CR is lost and RSP used. On Unit 2, cable to the control room indicator is analyzed for separation. This is in excess of what the above assumption requires.

2. See Section H.4.2.46.2.

TABLE H.4-107
(SHEET 1 OF 5)

SUPPRESSION POOL WATER TEMPERATURE

A. Unit 1:

COMPONENT	ALTERNATE METHOD	BASIC METHOD
Transmitter	1TE-CM037	1TE-CM057J 1TE-CM057K 1TE-CM057N 1TE-CM057R
Monitor Location (Room)	AEER	Control Room
Monitor Location (Panel)	1C61-P001	1PM13J
Intermediate Panels	None	1PLF6J
Indicator	1TI-CM037	1TR-CM038A

INSTRUMENT CABLE ROUTING

CABLE ROUTING	FIRE ZONE	FIRE ZONE
1CM415	2I1-2 2I5 2H5 2G-2 2F-2 4D1-1 4E3-1 4F3 4E1-2	

TABLE H.4-107
(SHEET 2 OF 5)

INSTRUMENT CABLE ROUTING (Cont'd)

CABLE ROUTING	FIRE ZONE	FIRE ZONE
1RS020	4F1	
	4F3	
	4E1-2	
1CM153		2J
1CM155		2J
1CM156		2E-1
1CM157		2J
1CM158		2E-1
1CM159		2J
1CM169		2J
1CM171		2J
1CM181		2J
1CM183		2J
1CM180		2E-1
1CM182		2E-1
1CM168		2E-1
1CM170		2E-1
1CM152		2E-1
1CM154		2E-1
1CM178		2E-1
		2F-1
		4D3
		4D1-2
		4Cl

TABLE H.4-107
(SHEET 3 OF 5)

INSTRUMENT CABLE ROUTING (Cont'd)

CABLE ROUTING	FIRE ZONE	FIRE ZONE
1CM179		2E-1
		2F-1
		4D3
		4D1-2
		4Cl

TABLE H.4-107
(SHEET 4 OF 5)

B. Unit 2:

COMPONENT	ALTERNATE METHOD	BASIC METHOD
Transmitter	2TE-CM037	2TE-CM057J 2TE-CM057K 2TE-CM057N 2TE-CM057R
Monitor Location (Room)	AEER	Control Room
Monitor Location (Panel)	2C61-P001	2PM13J
Intermediate Panels	None	2PLF6J
Indicator	2TI-CM037	2TR-CM038A

INSTRUMENT CABLE ROUTING

CABLE ROUTING	FIRE ZONE	FIRE ZONE
2CM415	3I1-2	
	3I5	
	3H5	
	3G-2	
	3F-2	
	4D4	
	4E4-1	
	4F2	
	4F3	
	4E2-2	
2RS020	4F2	
	4F3	

TABLE H.4-107
(SHEET 5 OF 5)

INSTRUMENT CABLE ROUTING (Cont'd)

CABLE ROUTING	FIRE ZONE	FIRE ZONE
2CM153		3J
2CM155		3J
2CM156		3E-1
2CM157		3J
2CM158		3E-1
2CM159		3J
2CM169		3J
2CM171		3J
2CM181		3J
2CM183		3J
2CM180		3E-1
2CM182		3E-1
2CM168		3E-1
2CM170		3E-1
2CM152		3E-1
2CM154		3E-1
2CM178		3E-1
		3F-1
		4D2
		4C1
2CM179		3E-1
		3F-1
		4D2
		4C1

TABLE H.4-108
(SHEET 1 OF 4)

SUPPRESSION POOL WATER LEVEL

A. Unit 1:

COMPONENT	ALTERNATE METHOD	BASIC METHOD
Transmitter	1LT-CM183	1LT-CM032
Monitor Location (Panel)	1C61-P001	1H13-P601
Intermediate Panels	None	None
Indicator	1LI-CM030	1LI-CM032 / 1LR-CM028

INSTRUMENT CABLE ROUTING

CABLE ROUTING	FIRE ZONE	FIRE ZONE
1CM416	2H1-1	
	2G-1	
	2F-1	
	4D3	
	4D1-2	
	4El-1	
	4E1-2	
1RS023	4E3-2	
	4E1-1	
	4E1-2	
1CM022		2H1-2
		2I-I5
		2G-2
		2F-2
		4D1-1
		4Cl
1CM433		4C1

TABLE H.4-108
(SHEET 2 OF 4)

INSTRUMENT CABLE ROUTING (Cont'd)

CABLE ROUTING	FIRE ZONE	FIRE ZONE
1CM024		4C1
1LV050		4F1
		4F3
		4E3-1
		4Dl-1
		4Cl

TABLE H.4-108
(SHEET 3 OF 4)

B. UNIT 2:

COMPONENT	ALTERNATE METHOD	BASIC METHOD
Transmitter	2LT-CM183	2LT-CM032
Monitor Location (Panel)	2C61-P001	2PM16J
Monitor Location (Room)	AEER	Control Room
Intermediate Panel	None	None
Indicator	2LI-CM030	2LR-CM028

INSTRUMENT CABLE ROUTING

CABLE ROUTING	FIRE ZONE	FIRE ZONE
2CM416	3H1-1	
	3G-1	
	3F-1	
	4D2	
	4E4-2	
	4E2-2	
2RS023	4E2-2	
	4E4-2	
2CM022		3H1-2
		3H5
		3G-2
		3F-2
		4D4
		4C1

TABLE H.4-108
(SHEET 4 OF 4)

INSTRUMENT CABLE ROUTING (Cont'd)

CABLE ROUTING	FIRE ZONE	FIRE ZONE
2CM024		4Cl
2LV050		4C1
		4D4
		4E4-1
		4F2

TABLE H.4-109

CABLE AND PANEL LIST - UNIT 1

TRAIN A

Connection	Cable No.	
1E12-F087A		
1H13-P601 to 1H13-P629	1RH229(1)	
1H13-P629 to MCC 135Y-1	1RH228	
1H22-P018 to 1H13-P629	1RH267(1)	Press Permissive-K60A
1E12-F052A		
1H13-P601 to 1H13-P629	1RH221*	
1H13-P629 to MCC 135Y-1	1RH220*	

TRAIN B

1E12-F087B		
1H13-P601 to 1H13-P618	1RH233(1)	
1H13-P618 to MCC 136Y-2	1RH232*	
1H22-P021 to 1H13-P618	1RH266(1)	Press Permissive
MCC 112Y to 1H13-P616	1RI174(2)	K60B
1E12-F052B		
1H13-P601 to 1H13-P618	1RH225*	
1H13-P618 to 1C61-P001	1RH224*	
1C61-P001 to MCC136Y-2	1RH385*	

*Short in this cable postulated to open valve

(1) Multiple failure of two identified cables needed to open valve.
(2) DC power to permissive signal; deenergize to close K60B.

TABLE H.4-110

Cable and Panel List - Unit 2

TRAIN A

Connection	Cable No.	
2E12-F087A		
2H13-P601 to 2H13-P629	2RH229[(1)]	
2H13-P629 to MCC 235Y-1	2RH228*	
2H22-P018 to 2H13-P629	2RH267[(1)]	Press Permissive-K60A
2E12-F052A		
2H13-P601 to 2H13-P629	2RH221*	
2H13-P629 to MCC 235Y-1	2RH220*	

TRAIN B

2E12-F087B		
2H13-P601 to 2H13-P618	2RH233[(1)]	
2H13-P618 to MCC 236Y-2	2RH232*	
2H22-P021 to 2H13-P618	2RH266[(1)]	Press Permissive
MCC 212Y to 2H13-P618	2RI174[(2)]	K60B
2E12-F052B		
2H13-P601 to 2H13-P618	2RH225*	
2H13-P618 to 2C61-P001	2RH224*	
2C61-P001 to MCC 236Y-2	2RH385*	

*Short in this cable postulated to open valve

(1) Multiple failure of two identified cables needed to open valve.
(2) DC power to permissive signal; deenergize to close K60B.

TABLE H.4-111

UNITS 1 & 2

POTENTIAL SPURIOUS VALVE OPERATIONS THAT COULD AFFECT HOT SHUTDOWN RESULTING IN PREFIRE OR POST FIRE ACTION

(Sheet 1 of 5)

VALVE	SYSTEM	P&ID	CONCERN WITH MALFUNCTION	RESOLUTION
[redacted]	[redacted]	[redacted]	[redacted]	[redacted]
				[redacted]

TABLE H.4-111

UNITS 1 & 2
POTENTIAL SPURIOUS VALVE OPERATIONS THAT
COULD AFFECT HOT SHUTDOWN
RESULTING IN PREFIRE OR POST FIRE ACTION

(Sheet 2 of 5)

VALVE	SYSTEM	P&ID	CONCERN WITH MALFUNCTION	RESOLUTION
[redacted]	[redacted]	[redacted]	[redacted]	[redacted]
[redacted]	[redacted]	[redacted]	[redacted]	[redacted]

TABLE H.4-111
UNITS 1&2

POTENTIAL SPURIOUS VALVE OPERATIONS THAT
COULD AFFECT HOT SHUTDOWN
RESULTING IN PREFIRE OR POST FIRE ACTION

(Sheet 3 of 5)

VALVE	SYSTEM	P&ID	CONCERN WITH MALFUNCTION	RESOLUTION
[redacted]	[redacted]	[redacted]	[redacted]	[redacted]
[redacted]	[redacted]	[redacted]	[redacted]	[redacted]

TABLE H.4-111

UNITS 1&2

POTENTIAL SPURIOUS VALVE OPERATIONS THAT
COULD AFFECT HOT SHUTDOWN
RESULTING IN PREFIRE OR POST FIRE ACTION

(Sheet 4 of 5)

VALVE	SYSTEM	P&ID	CONCERN WITH MALFUNCTION	RESOLUTION
[redacted]	[redacted]	[redacted]	[redacted]	[redacted]
[redacted]	[redacted]	[redacted]	[redacted]	[redacted]
			[redacted]	[redacted]

TABLE H.4-111

UNITS 1&2

POTENTIAL SPURIOUS VALVE OPERATIONS THAT COULD AFFECT HOT SHUTDOWN RESULTING IN PREFIRE OR POST FIRE ACTION

(Sheet 5 of 5)

VALVE	SYSTEM	P&ID	CONCERN WITH MALFUNCTION	RESOLUTION
[redacted]	[redacted]	[redacted]	[redacted]	[redacted]
[redacted]	[redacted]	[redacted]	[redacted]	[redacted]
[redacted]	[redacted]	[redacted]	[redacted]	[redacted]
[redacted]	[redacted]	[redacted]	[redacted]	[redacted]

TABLE H.4-112

SAFE SHUTDOWN EQUIPMENT LOCATED IN FIRE ZONE 2B2

[redacted]

[redacted]

[redacted]

TABLE H.4-113

SAFE SHUTDOWN EQUIPMENT LOCATED IN FIRE ZONE 3B2

[redacted]

[redacted]

[redacted]

TABLE H.4-114

SAFE SHUTDOWN EQUIPMENT LOCATED IN FIRE ZONE 2C

[redacted]

[redacted]

[redacted]

TABLE H.4-115

SAFE SHUTDOWN EQUIPMENT LOCATED IN FIRE ZONE 3C

[redacted]

[redacted]

[redacted]

TABLE H.4-116

SAFE SHUTDOWN EQUIPMENT LOCATED IN FIRE ZONE 2K

[redacted]

[redacted]

TABLE H.4-117

SAFE SHUTDOWN EQUIPMENT LOCATED IN FIRE ZONE 3K

[redacted]

[redacted]

[redacted]

TABLE H.4-118
(SHEET 1 OF 2)

SAFE SHUTDOWN EQUIPMENT LOCATED IN FIRE ZONE 5A4

[redacted]

TABLE H.4-118
(SHEET 2 OF 2)

SAFE SHUTDOWN EQUIPMENT LOCATED IN FIRE ZONE 5A4

COMPONENT	NUMBER	METHOD
[redacted]	[redacted]	[redacted]
[redacted]	[redacted]	[redacted]

TABLE H.4-119

SAFE SHUTDOWN EQUIPMENT LOCATED IN FIRE ZONE 5A4

[redacted]

[redacted]

[redacted]

TABLE H.4-120

SAFE SHUTDOWN EQUIPMENT LOCATED IN FIRE ZONE 5B13

[redacted]

[redacted]

TABLE H.4-121

SAFE SHUTDOWN EQUIPMENT LOCATED IN FIRE ZONE 5B13

[redacted]

[redacted]

TABLE H.4-122

SAFE SHUTDOWN EQUIPMENT LOCATED IN FIRE ZONE 5C8

[redacted]

[redacted]

TABLE H.4-123

Valves considered in Cable Separation Analysis because concern over Spurious Operation resulting in Loss of Reactor water inventory and Physical Location of the Valve.

[redacted]

TABLE H.4-124

Electrical Equipment Associated With Valves Listed
in Table H.4-123

[redacted]

[redacted]

[redacted]

TABLE H.4-125

SAFE SHUTDOWN EQUIPMENT LOCATED IN FIRE ZONE 4C4

[redacted]

TABLE H.4-126

SAFE SHUTDOWN EQUIPMENT LOCATED IN FIRE ZONE 5C5

[redacted]

TABLE H.4-127

SAFE SHUTDOWN EQUIPMENT LOCATED IN FIRE ZONE 3H2

[redacted]

TABLE H.4-128

SAFE SHUTDOWN EQUIPMENT LOCATED IN FIRE ZONE 5B1

[redacted]

TABLE H.4-129

SAFE SHUTDOWN EQUIPMENT LOCATED IN FIRE ZONE 5B9

[redacted]

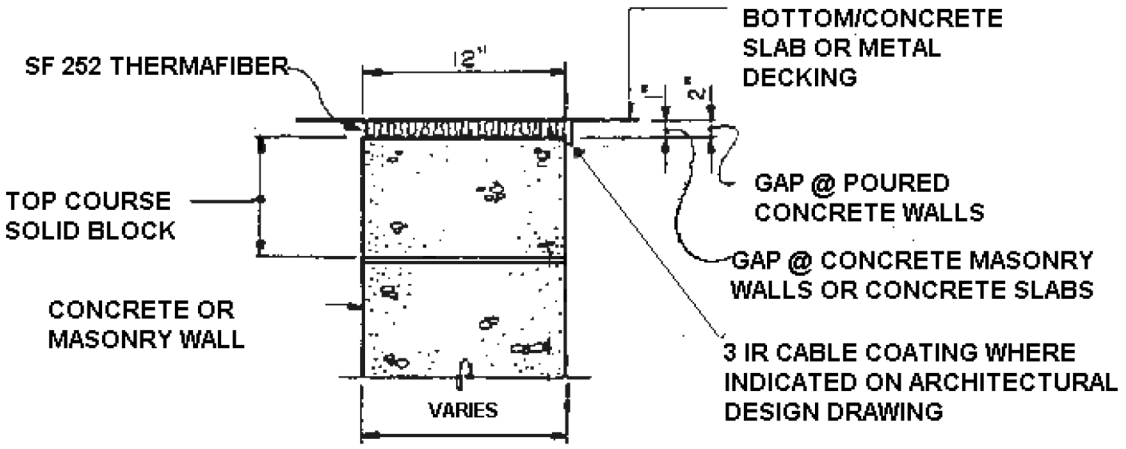

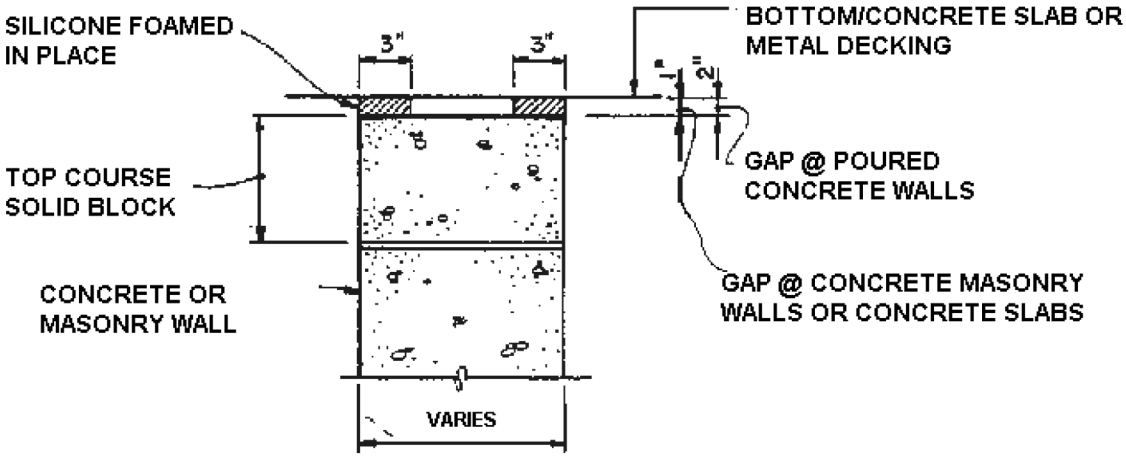

LASALLE COUNTY STATION FIRE PROTECTION REPORT
FIGURE H.1-1 FIRE SEALS

M-5

Rev. 8
April 2018

[redacted]

LEGEND : SEE M-4

NORTH

GRAPHIC SCALE

LA SALLE COUNTY STATION

FIGURE H.2-1

FIRE AREA/ZONE LOCATIONS

(SHEET 1 of 10)

[redacted]

Rev. 8
April 2018

[redacted]

LA SALLE COUNTY STATION

FIGURE H.2-1

FIRE AREA/ZONE LOCATIONS

(SHEET 2 of 10)

[redacted]

LASALLE COUNTY STATION

FIGURE H.2-1

FIRE AREA/ZONE LOCATIONS
(SHEET 3 OF 10)

REVISION 13

LA SALLE COUNTY STATION

FIGURE H.2-1

FIRE AREA/ZONE LOCATIONS

(SHEET 4 of 10)

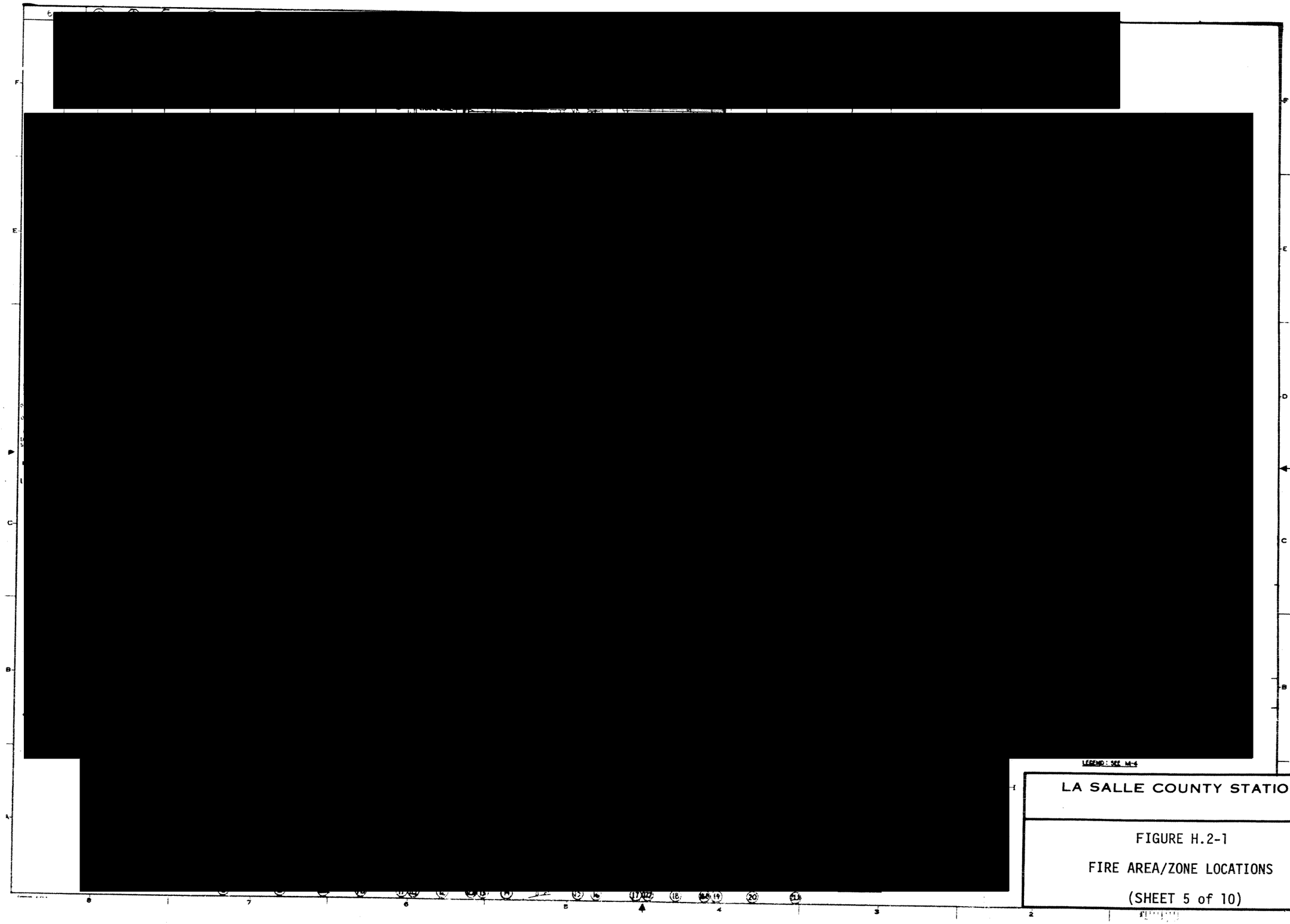

LA SALLE COUNTY STATION

FIGURE H.2-1

FIRE AREA/ZONE LOCATIONS

(SHEET 5 of 10)

M-10

[redacted]

LA SALLE COUNTY STATION

FIGURE H.2-1

FIRE AREA/ZONE LOCATIONS

(SHEET 6 of 10)

[redacted]

LA SALLE COUNTY STATION

FIGURE H.2-1

FIRE AREA/ZONE LOCATIONS

(SHEET 7 of 10)

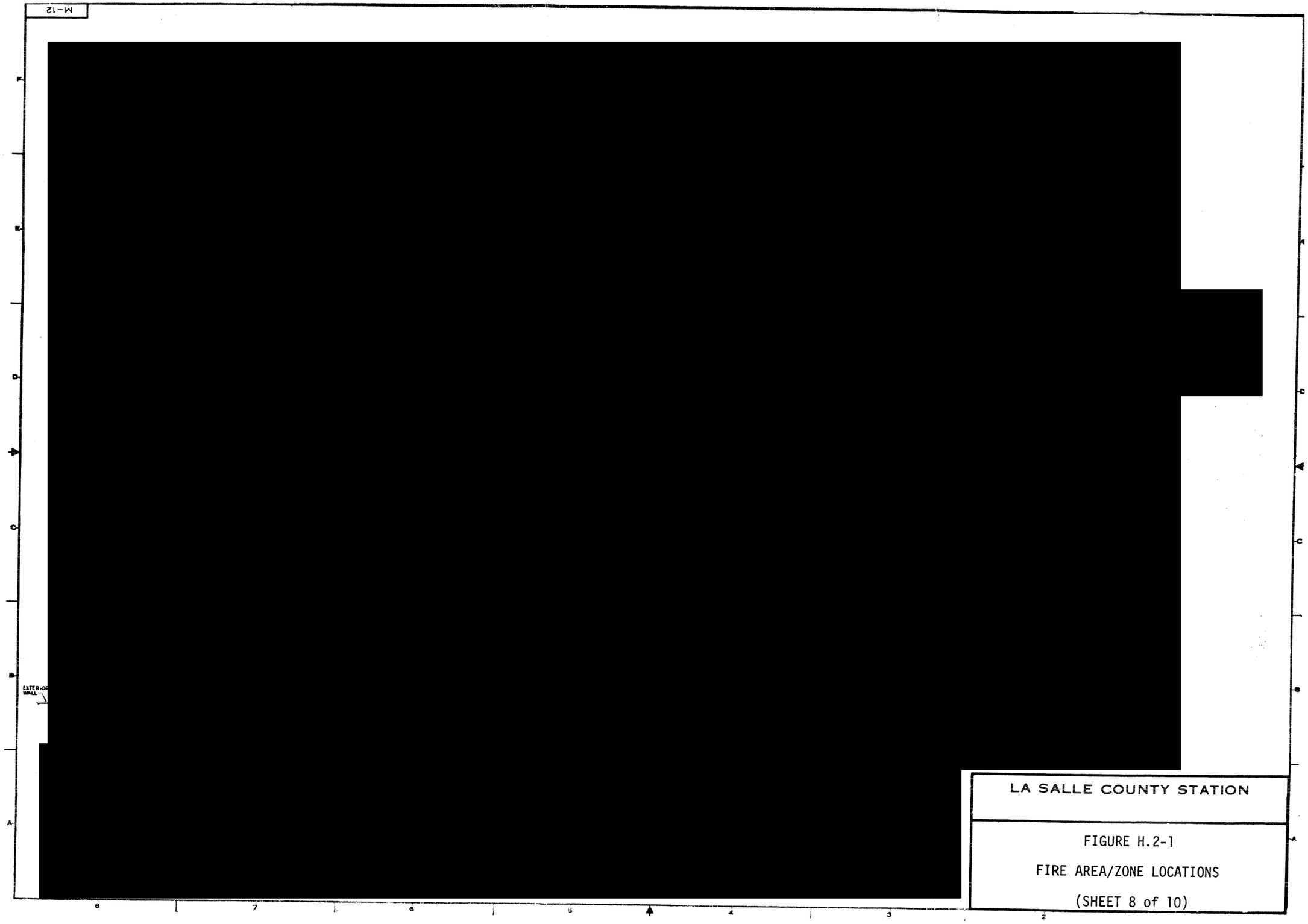

LA SALLE COUNTY STATION

FIGURE H.2-1

FIRE AREA/ZONE LOCATIONS

(SHEET 8 of 10)

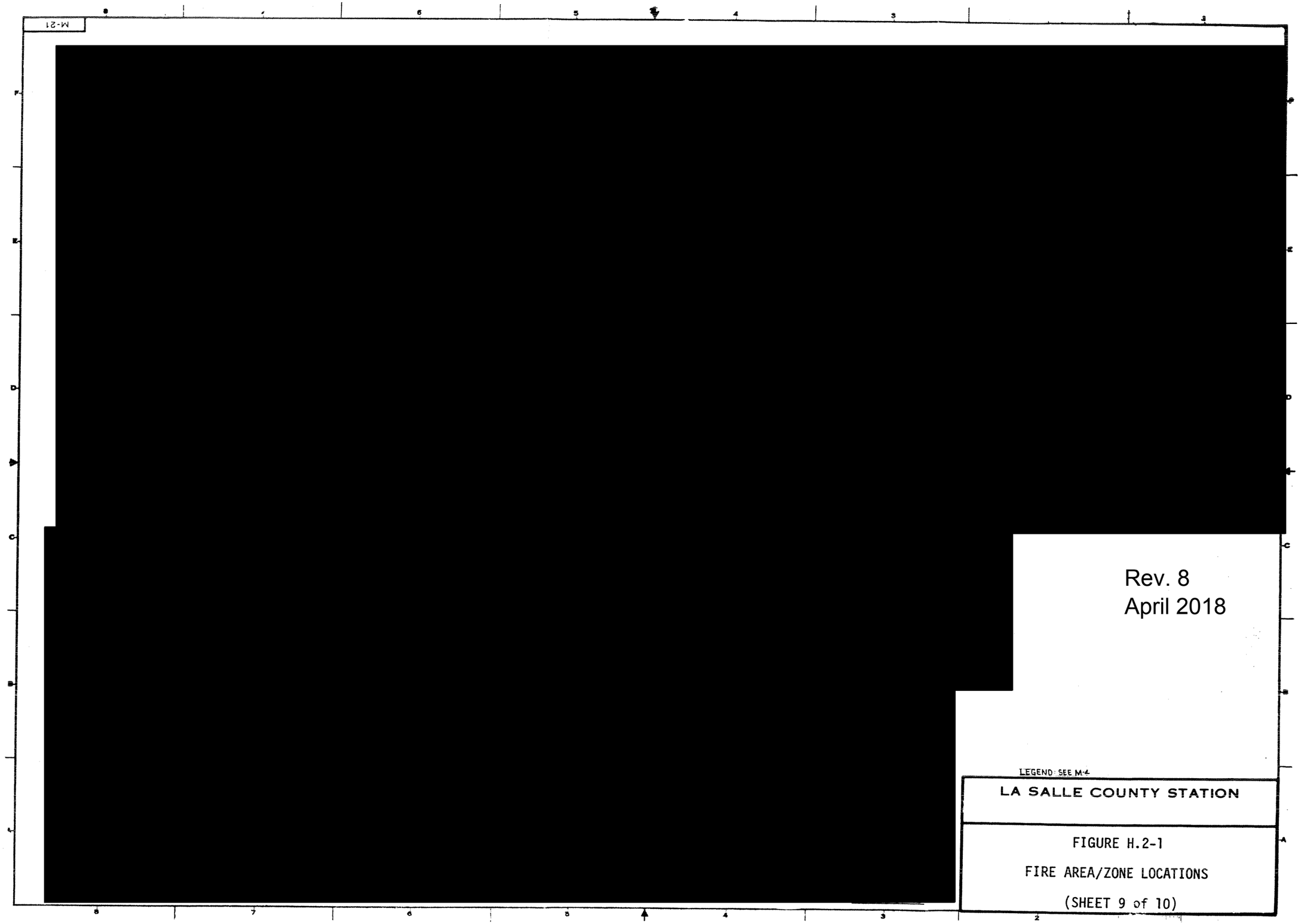

Rev. 8
April 2018

LEGEND: SEE M-4

LA SALLE COUNTY STATION

FIGURE H.2-1

FIRE AREA/ZONE LOCATIONS

(SHEET 9 of 10)

[redacted]

Rev. 8
April 2018

LASALLE COUNTY STATION

FIGURE H.2-1

FIRE AREA/ZONE
(SHEET 10 OF 10)

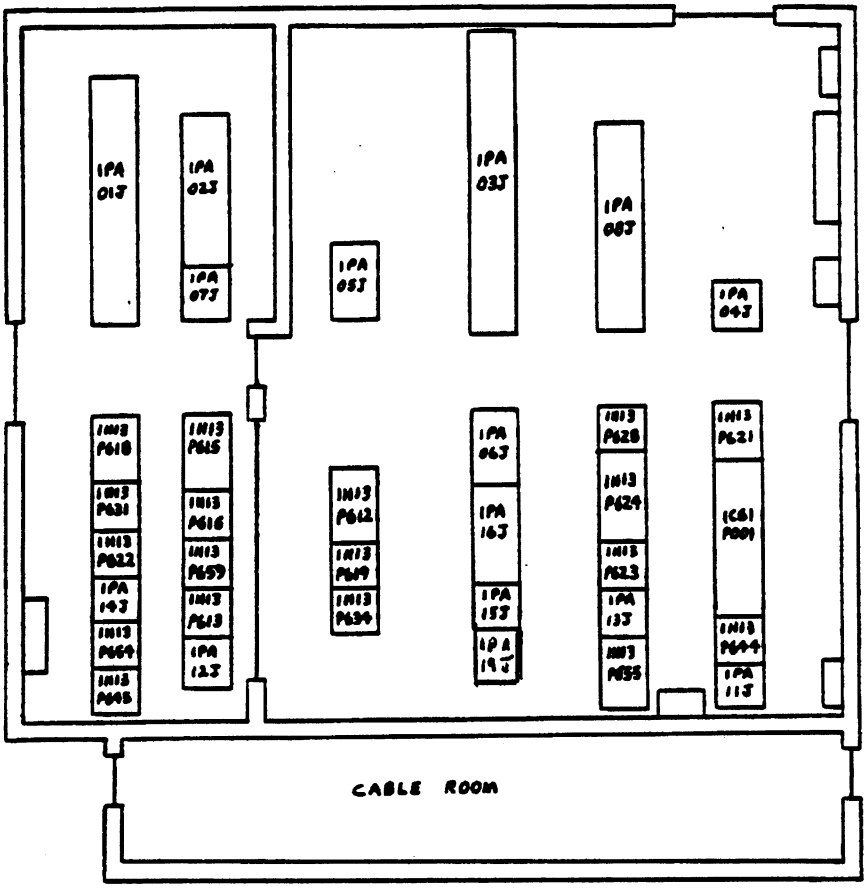

LASALLE COUNTY STATION FIRE PROTECTION REPORT
FIGURE H.4-1 (UNIT 1) AUXILIARY ELECTRIC EQUIPMENT ROOM LAYOUT

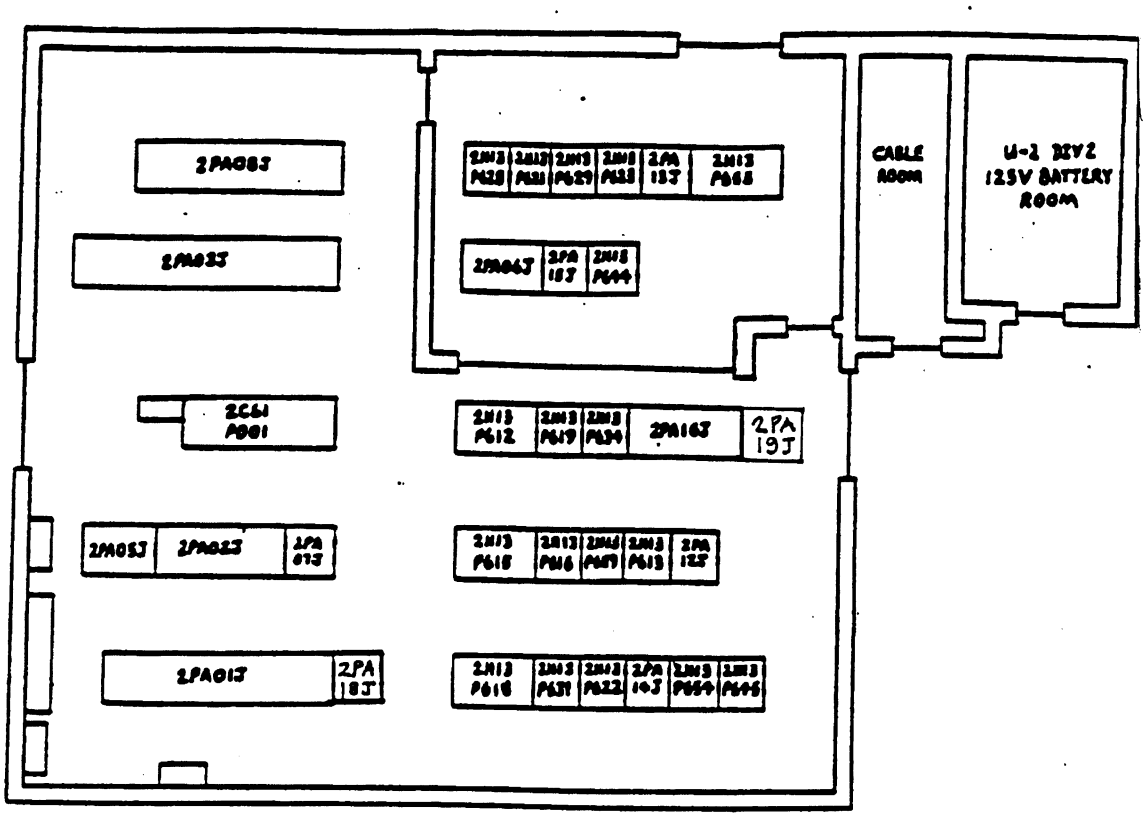

LASALLE COUNTY STATION FIRE PROTECTION REPORT
FIGURE H.4-2 UNIT 2 AUXILIARY ELECTRIC EQUIPMENT ROOM LAYOUT

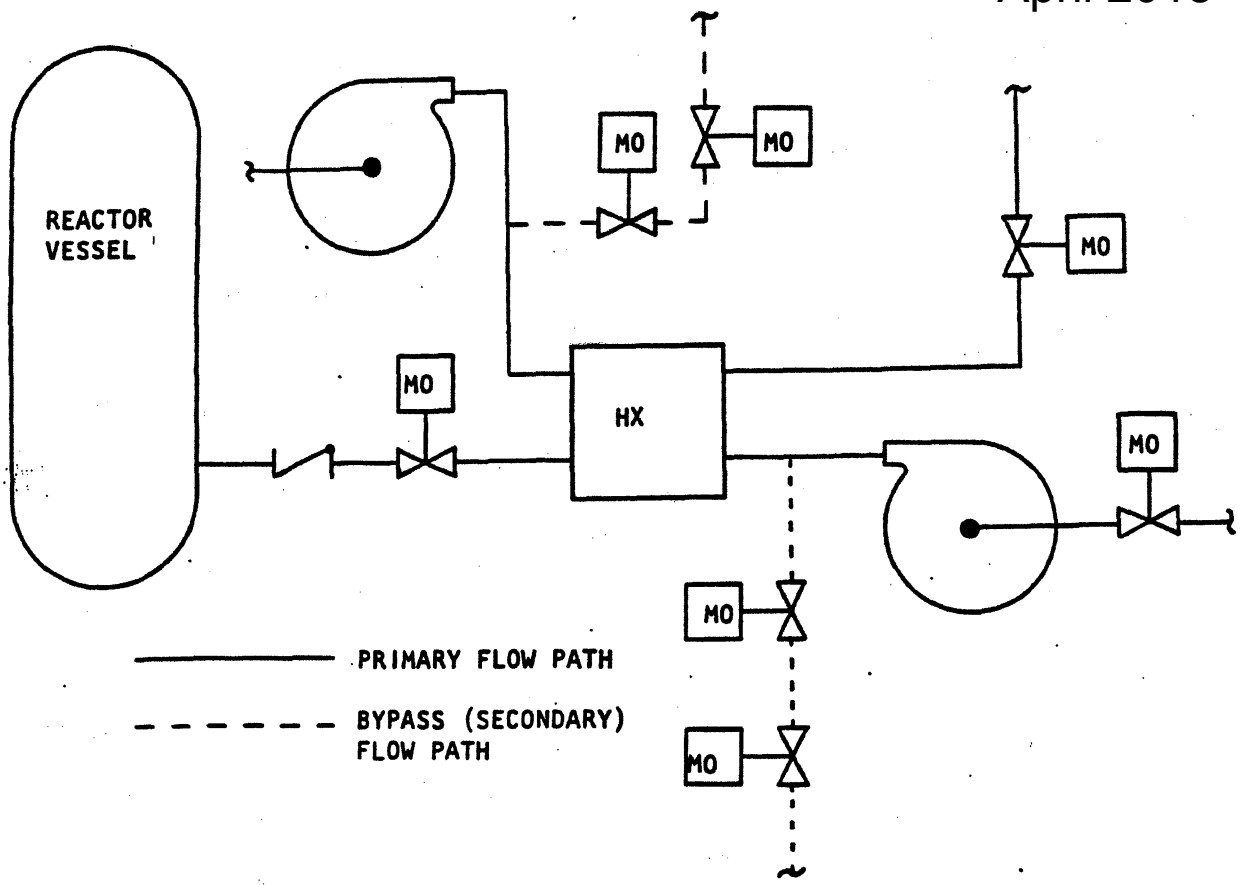

GENERAL NOTES FOR FIGURE H.4-3

1. Valves in the primary flow path for the safe shutdown system considered must remain in their normally open position or must operate to open.

2. Valves in lines that bypass the safe shutdown system must remain in their normally closed position or must operate to close. Where multiple valves are in series, the postulated simultaneous failure of all valves in series is considered necessary for system failure.

All systems which require fluid flow for safe shutdown are considered including HPCS, RCIC, RHR, Diesel Fuel Oil, Diesel Cooling Water, RHR Service Water, etc.

LA SALLE COUNTY STATION

FIGURE H.4-3

VALVES WHOSE SPURIOUS OPERATION COULD DEGRADE OPERABILITY OF SAFE SHUTDOWN SYSTEMS

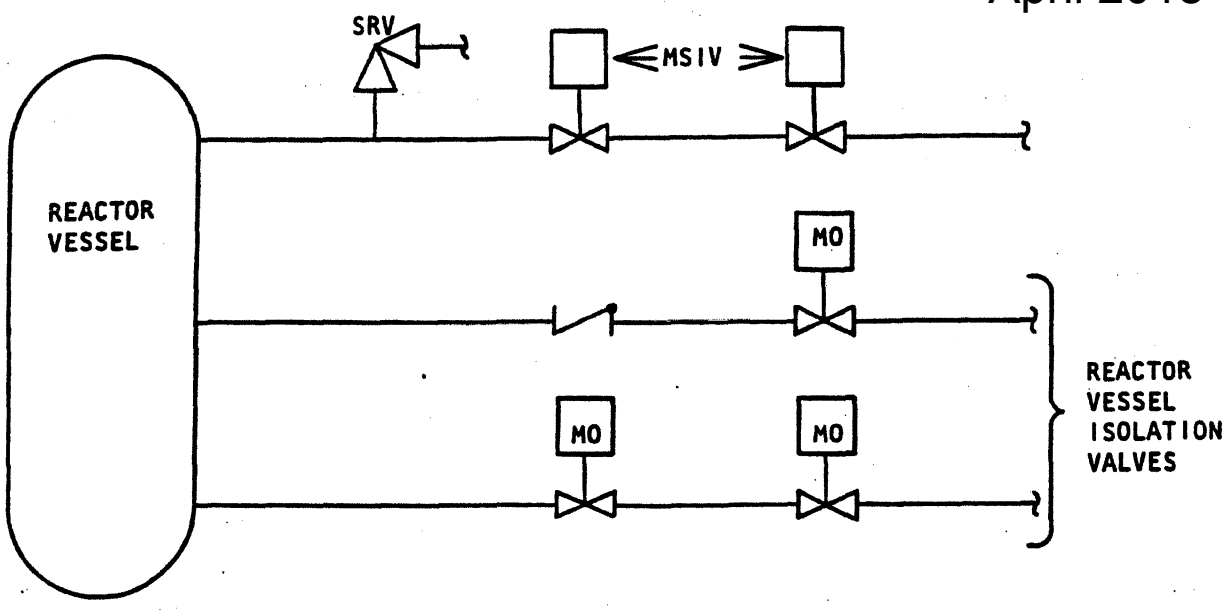

GENERAL NOTES FOR FIGURE H.4-4

1. Where a mechanical check valve is in series with a motor operated valves, the check valve is assumed to preserve the isolation function independent of any operation of electrically operated valves downstream.

2. Where multiple valves in series perform the isolation function, the simultaneous opening of all valves must be postulated before system failure is assumed.

3. All main steam branch lines downstream of the outboard MSIV are not considered. The MSIV's are fail close lines and are assumed to be closed for an Appendix R safe shutdown event.

4. Valves in valve stem leakage lines are not considered. Leakage through a valve stem is assumed to be very small. These lines are a maintenance aid to locate small valve packing leaks.

All systems that communicate with the reactor vessel were considered including SRV's, MS, HPCS, LPCI, RHR, RCIC, RWCU, FW, CRD.

LA SALLE COUNTY STATION

FIGURE H.4-4

VALVES WHOSE SPURIOUS OPERATION COULD CAUSE LOSS OF REACTOR INVENTORY

LaSalle County Nuclear Station

Fire Protection Report

(FPR)

Volume 2

LaSalle County Nuclear Station

Fire Protection Report (FPR)

3. Appendix R/ Post Safe Shutdown Compliance Review

10CFR 50 APPENDIX R

1. INTRODUCTION AND SCOPE

This Appendix applies to licensed nuclear power electric generating stations that were operating prior to January 1, 1979, except to the extent set forth in paragraph 50.48(b) of this part. With respect to certain generic issues for such facilities it sets forth fire protection features required to satisfy Criterion 3 of Appendix A to this part.[5]

Criterion 3 of Appendix A to this part specifies that "Structures, systems, and components important to safety shall be designed and located to minimize, consistent with other safety requirements, the probability and effect of fires and explosions."

With considering the effects of fire, those systems associated with achieving and maintaining safe shutdown conditions assume major importance to safety because damage to them can lead to core damage resulting from loss of coolant through boiloff.

The phrases "IMPORTANT TO SAFETY", or "SAFETY- RELATED" will be used throughout this Appendix R as applying to all safety functions. The phrase "SAFE SHUTDOWN" will be used throughout this Appendix R as applying to both hot and cold shutdown functions.

REMARKS

Appendix R specifically applies to licensed nuclear power electric generating stations that were operating prior to January 1, 1979. The original SER states in Section 9.5.8, "Although the fire protection rule (Appendix R) does not apply to La Salle, based on our review and evaluation of the LaSalle fire protection program, we conclude that LaSalle meets all the requirements of Appendix R. "

The intent of this review is to document that the objective of Appendix R is met for LaSalle County Generating Station (LSCS), Units 1 and 2. This follows a request raised on November 22, 1983, by the NRC staff during the Unit 2 license proceedings and was the subject of the letter dated November 28, 1983, from CECo (D. L. Farrar) to the NRC (H. R. Denton). This letter states in part: "At the November 22, 1983 meeting in Bethesda the NRC staff questioned whether LaSalle County Station meets the requirements of 10CFR Part 50, Appendix R. While Appendix R, by its terms, does not apply to LaSalle Count Station because neither unit at LaSalle County Station was operating prior to January 1, 1979.... and the SER ..... states that the rule does not apply to LaSalle, to the best of our knowledge and belief LaSalle County Station meets Appendix R, subject to (certain identified and accepted deviations). Given the significance of the Fire Protection Systems, we have seen and expect to continue to see interpretations by the staff of certain non-explicit provisions of Appendix R. To the extent that we are made aware of these interpretations, we will continue to assess the adequacy of our Fire Protection Systems and justify their continued acceptability."

The bases for CECo's conclusion that LSCS meets Appendix R are the following:

1. the FSAR review, including Questions and Response, against Appendix A of the BTP 9.5-1.
2. the Safety Evaluation Report (SER) and supplements.
3. correspondence with the NRC regarding fire protection issues.

Since there is no rule governing fire protection at nuclear generating stations in operation after January 1, 1979, Appendix R was used to provide Guidance in assessing certain fire protection concerns. This report documents the assessment of LaSalle's Fire Protection Program against Appendix R. Previously identified deviations, with reference to which of the above 3 bases that was used to accept the deviation, are included.

As for Safe Shutdown Analysis, the Operating Licenses for LaSalle County Station Unit 1 and Unit 2 requires, in part, that the licensee implement and maintain all provisions of the approved fire protection program as described in the licensees UFSAR, and as approved in NUREG-0519, Safety Evaluation Report, dated March 1981 through Supplement No. 8 and all associated amendments. The license conditions also indicates that the licensee may make changes to the approved fire protection program without prior approval of the NRC only if those changes would not adversely affect the ability to achieve and maintain safe shutdown in the event of a fire. NRC SER Section 9.5.8, "Appendix R Statement", states, in part, that although the fire protection rule (Appendix R) does not apply to LaSalle County Station, based on the NRC staffs review and evaluation of the licensees fire protection program that all the requirements of Appendix R are met. Safety Evaluation Report (SER), NUREG-0519 Supplement No. 7, Section 9.5.8, indicated that the licensee provided a commitment in a letter dated November 28, 1983, to meet the requirements of Appendix R with deviations identified and accepted by the NRC staff. It should be noted however, that LaSalle Station never committed to requirements of Appendix R in the stated letter. The SER Supplement No. 5 also indicated that based on the NRC evaluation, the staff concluded that the licensees fire protection program, with accepted deviations for SSD, met the guidelines No. 5 also indicated that based on the NRC evaluation, the staff concluded that the licensees fire protection program, with accepted deviations for SSD, met the guidelines contained in Appendix A to Branch Technical Position No. ASB 9.5-1, the technical requirements of Appendix R to 10 CFR 50, and Criterion III of the General Design Criteria, and were therefore acceptable.

10CFR 50 APPENDIX R

Because fire may affect safe shutdown systems and because the loss of function of systems used to mitigate the consequences of design basis accidents under post fire conditions does not per se impact public safety, the need to limit fire damage to systems required to achieve and maintain safe shutdown conditions is greater than the need to limit fire damage to those systems required to mitigate the consequences of design basis accidents. Three levels of fire damage limits are established according to the safety functions of structures, systems, or component:

Safety Function	Fire Damage Limits
Hot Shutdown... One train of equipment necessary to achieve hot shutdown from either the control room or emergency control station(s) must be maintained free of the damage by a single fire, including an exposure fire.	
Cold Shutdown. Both trains or equipment necessary to achieve cold shutdown may be damaged by a single fire, including an exposure fire, but damage must be limited so that at least one train can be repaired or made operable within 72 hours using onsite capability.	
Design Basis Accidents... Both trains of equipment necessary for mitigation of consequences following design basis accidents may be damaged by a single exposure fire.	

REMARKS

10CFR 50 APPENDIX R	REMARKS
The most stringent fire damage limit shall apply for those systems that fall into more than one category. Redundant systems used to mitigate the consequences of other design basis accidents but not necessary for safe shutdown may be lost to a single exposure fire. However, protection shall be provided so that a fire within only one such system will not damage the redundant system.	
II. GENERAL REQUIREMENTS	
A. Fire Protection Program	Refer to the SER, Supplement No. 7, Section 9.5.8, which states, "As stated in our Safety Evaluation Report, the Commission on May 23, 1980 issued a Memorandum and Order (CLI-80-21) which states that, the combination of the Guidance contained in Appendix A to Branch Technical Position, ASB 9.5-1 and the requirements set forth in this Rule (Appendix R) define the essential elements for an acceptable fire protection program..." Based on the commitments provided in CECo's November 28, 1983, letter to the NRC, the NRC concluded that CECo's fire protection program is in accordance with our (NRC's) guidelines and is, therefore acceptable".
A fire protection program shall be established at each nuclear power plant. The program shall establish the fire protection policy for the protection of structure, systems, and components important to safety at each plant and the procedures, equipment, and personnel required to implement the program at the plant site.	LaSalle County Station's fire protection program is based on the documents listed below: 1. Appendix A to BTP APCSB 9.5-1 for plants under construction. 2. Nuclear Plant Fire Protection Functional Responsibilities, Administrative Controls and Quality Assurance, dated August 29, 1977. See response to Question 010.33 in the FSAR. 3. Appendix R to 10CFR Part 50 4 Various NFPA codes or sections of NFPA codes to establish specific acceptance criteria.
The fire protection program shall be under the direction of an individual who has been delegated authority commensurate with the responsibilities of the position and who has available staff personnel knowledgeable in both fire protection and nuclear safety.	The fire protection program is under the direction of the Station Manager. For a more detailed outline of responsibilities refer to CC-AA-211, Fire Protection Program. In addition, site and / or corporate qualified fire protection engineers are available to provide guidance, direction and assistance relating to fire protection concerns as detailed in station and corporate procedures.

10CFR 50 APPENDIX R	REMARKS
The fire protection program shall extend the concept of defense-in-depth to fire protection in fire areas important to safety, with the following objectives: a. to prevent fires from starting: b. to detect rapidly, control, and extinguish promptly those fires that do occur; c. to provide protection for structures, systems, components important to safety so that a fire that is not promptly extinguished by the fire suppression activities will not prevent the safe shutdown of the plant.	
B. Fire Hazards Analysis A fire hazards analysis shall be performed by qualified fire protection and reactor system engineers to (1) consider potential in situ and transient fire hazards; (2) determine the consequences of fire in any location in the plant on the ability to safety shut down the reactor or on the ability to minimize and control the release of radioactivity to the environment and (3) specify measures for fire prevention, fire detection, fire suppression, and fire containment and alternative shutdown capability as required for each fire area containing structures, systems and components important to safety in accordance with NRC guidelines and regulations.	A Fire Hazards Analysis and a Safe Shutdown Analysis were performed and are documented in Appendix H of the Fire Protection Report. 1. All potential in situ and transient fire hazards were analyzed. SectionH.1.2.a and Section H.3 of the Fire Protection Report define transient fire hazards as equivalent to the fire load of a 55 gallon drum of lubricating oil. Additionally, the fire hazards presented by storage of concentrations of anti-C clothing are specifically considered. This load was used in the analysis in areas where transient fire loading could occur. Ventilation conditions were not included in this analysis. 2. The consequences of a fire in any location of the plant were analyzed and the ability to safely shut down the plant was determined in the Safe Shutdown Analysis. 3. Specific measures for fire prevention, detection, suppression and containment are listed in the Fire Hazards Analysis. Alternative shutdown capability is addressed in the Safe Shutdown Analysis.

10CFR 50 APPENDIX R	REMARKS
C. Fire Prevention Features	
Fire Protection features shall meet the following general requirements for all fire areas that contain or present a fire hazard to structures, systems or components important to safety.	
1. In situ fire hazards shall be identified and suitable protection provided.	The Fire Hazards Analysis in Appendix H identifies the fire hazards and protection provided for each fire zone in the plant.
2. Transient fire hazards associated with normal operation, maintenance, repair, or modification activities shall be identified and eliminated where possible. Those transient fire hazards that cannot be eliminated shall be controlled and suitable protection provided.	Transient fire hazards were assumed to be equivalent in Btu content to the fire load of a 55 gallon drum of lubricating oil. Additionally, the fire hazards presented by storage of anti-C clothing are considered. These transient loads were used in the analysis in areas where transient fire loadings could occur. Refer to the FPR, Section H.1.2, Part a, and the fire zone descriptions in Section H.3.
3. Fire detection systems, portable extinguishers, and standpipe and hose stations shall be installed.	

10CFR 50 APPENDIX R	REMARKS
	The fire detection systems are designed per NFPA 72D (see the UFSAR page 9.5-9). The number and location of detectors is per NFPA 72E (see the UFSAR, section 9.5.1.2.5). A report on fire detector systems at LaSalle County Station is entitled, “Analysis of Fire Detector Locations at La Salle County Station”, reports No.1 through No. 4, dated February, March and May 1984 and transmitted by T.E.Watts to G. J. Diederich with letter dated May 29, 1984. Refer to the FSAR Question/Response No. 010.45 concerning the layout of the main control room fire system panel. Portable fire extinguishers have been provided throughout the station in accordance with NFPA 10. (See the UFSAR, section 9.5.1.2.1) Deviations from the NFPA "codes of record" are documented and justified in the Fire Protection Report. A report on the standpipe and hose stations at LaSalle County Station is entitled “Evaluation of the LaSalle County Station Fire Water Distribution and Standpipe System” dated February 1984 and transmitted from T.E. Watts to G. J Diederich with letter dated April 23, 1984. The design of the standpipe is per NFPA 14 (see the UFSAR, section 9.5.1.2.1)
4. Fire Barriers or automatic suppression systems or both shall be installed as necessary to protect redundant systems or components necessary for safe shutdown.	Fire barriers and suppression systems are installed as determined necessary by the Fire Hazard Analysis and Safe Shutdown Analysis in Appendix H of the FPR.
5. A site fire brigade shall be established, trained, and equipped and shall be on site at all times.	A fire brigade is established, trained and equipped and will be on site at all times. For further details concerning the fire brigade, see section III.H of this review.

10CFR 50 APPENDIX R

REMARKS

6. Fire detection and suppression systems shall be designed, installed, maintained, and tested by personnel properly qualified by experience and training in fire protection systems.

The following companies and personnel have designed, installed, maintained and tested the fire detection and suppression systems:

Exelon Engineering, Maintenance, and Operations	Johnson Controls INC.
Sargent & Lundy Engineers	Chemetron
Viking Fire Protection Co	Foley & Morrison
Schirmer Engineering Corp.	Peerless Pumps
Marsh & McLennan Protection Consultants	Cummins

7. Surveillance procedures shall be established to ensure that fire barriers are in place and that fire suppression systems and components are operable.

Surveillance procedures are provided to ensure fire barriers separating redundant equipment important to post fire safe shutdown are in place and that fire suppression systems are operable.

D. Alternative or Dedicated Shutdown Capability

In areas where the fire protection features cannot ensure safe shutdown capability in the event of a fire in that area, alternative or dedicated safe shutdown capability shall be provided.

There are two primary trains of "normal redundant" systems analyzed for post fire safe shutdown at LaSalle, "basic" and "alternate." The basic train utilizes HPCS, ADS Div 2, and RHR Loop A. The alternate train utilizes RCIC, ADS Div 1, and RHR Loop B. For all fire zones at LaSalle, except those crediting "alternative" shutdown, post fire safe shutdown is achieved from the Control Room using an available combination of the "normal redundant" systems in accordance with normal, abnormal and emergency operating procedures. Per Appendix R, alternative shutdown capability is provided by rerouting, relocating or modifying existing systems. The fire zones crediting "alternative" shutdown capability are listed below:

4C1 - Control Room
4E1 - Auxiliary Electric Equipment Room – Unit 1
4E2 - Auxiliary Electric Equipment Room – Unit 2
5C11- Turbine Building Ground Floor –Elevation 710’ (EDG Corridors)

Therefore, in addition to the normal, abnormal, and emergency operating procedures, specific post fire safe shutdown procedures, are provided for these zones. "Dedicated" shutdown capability is provided by installing new structures and systems for the function of post-fire shutdown. LaSalle County Station does not have dedicated shutdown systems. The locking out of power to valves 1/2E12-F008 and 1/2E12-F087A to prevent spurious operation and the credit taken for manual operation of motor-operated valves, HVAC dampers and panels and monitoring capability are listed in the letter from T.E. Watts to G. J. Diederich dated April 23, 1984 and letters from J. W. Dingler to R.F Janecek dated April 3, 1985 and March 15, 1985, and are not considered alternative shutdown capability. Procedures have been developed to implement these manual operations. However, fixed automatic suppression systems in these fire zones are not required (as described in Section III.G of this report). Refer to issue 8a of the letter from C.W. Schroeder to H.R.

Denton dated November 23, 1983, describing the commitment LaSalle has made to use craft capability to manually operate certain HVAC dampers in the event of a fire.

In the case of fire zone 5C11, the NRC closed Unresolved Item 96011-20 related to a potential fire in an Emergency Diesel Generator (EDG) corridor that could cause all the CO2 suppression panels in the corridor to actuate. Once actuated, the CO2 panels spuriously close the associated EDG room ventilation making all EDGs inoperable. LaSalle Station resolved the issue by using procedures LOA-AP-101(201) to crosstie to the unaffected unit to achieve cold shutdown. A UFSAR change was prepared and a safety evaluation was issued. The NRC reviewed the submittal and closed the issue. The NRC acceptability of fire zone 5C11 for Safe Shutdown is discussed in Section 6 of the Fire Protection Report. This section contains the NRC closure of the Unresolved Item 50-373/374/96011-20 regarding fire in the emergency diesel generator corridors. Note that a fire will only affect either the Unit 1 or Unit 2 EDG corridors but not both at the same time.

CFR 50 APPENDIX	LASALLE CONFORMANCE	REMARKS
III. SPECIFIC REQUIREMENTS		
A. Water Supplies for Fire Suppression Systems	Comply.	Primary Reference - "Evaluation of the LaSalle County Station Fire Protection Water Distribution and Standpipe system" dated February 1984 and transmitted from T.E. Watts to G. J. Diedrich with letter dated April 23, 1984.
Two separate water supplies shall be provided to furnish necessary water volume and pressure to the fire main loop.	Comply with intent.	The water supply system consists of two diesel fire pumps which are rated at 315 ft TDH at 135 psig. Refer to UFSAR Section 9.5.1.2.1 , Page 9.5-6, Para. 1 and the original SER Section 9.5.1.1, Para. 1 and SER Supplement No. 8 Section 9.5.1.1.
Each supply shall consist of a storage tank, pump, piping, and appropriate isolation and control valves.	Comply. Refer to UFSAR Section 9.5.1.2.1., Page 9.5-7, Para. 2 and the original SER, Section 9.5.1.1, Para. 1	A storage tank is not used. An unlimited supply of water is available from the lake. Refer to UFSAR Section 9.5.1.2.1. Page 9.5-7, Para. 3.
Two separate redundant suctions in one or more intake structures from a large body of water (river, lake, etc.) will satisfy the requirements for two separate water storage tanks.	Comply. Refer to UFSAR Section 9.5.1.2.1., Page 9.5-7, Para. 2 and the original SER, Section 9.5.1.1, Page 9.13, Para. 1	Each fire pump independently takes its suction from a seismically designed water tunnel which has multiple intakes from the cooling lake.
These supplies shall be maintained so that a failure of one supply will not result in a failure of the other supply.	Comply. Refer to UFSAR Section 9.5.1.2.1., Page 9.5-6, Para. 1 and the SER Supplement No. 8, section 9.5.1.1. Also see the report, "Evaluation of the LaSalle County Station Fire Protection Water Distribution and Standpipe System" for more details	The pumps are located at opposite ends of the lake screen house in rooms enclosed by 3 hour fire barriers and are protected by automatic sprinkler systems.
Each supply of the fire water distribution system shall be capable of providing for a period of two hours the maximum expected water demands as determined by the fire hazards analysis for safety-related areas or other areas that present a fire exposure hazard to safety-related areas.		The maximum suppression system demand in safety-related areas is at least 1000 gpm plus 500 gpm for hose streams for a total demand of at least 1500 gpm. Either of the two diesel fire pumps can supply this demand through the 14-inch underground main fire loop for a period of time exceeding two hours.

10CFR 50 APPENDIX	LASALLE CONFORMANCE	REMARKS
When storage tanks are used for combined service-water/ fire-water uses the minimum volume of dedicated tanks or by some physical means such as vertical standpipe for other water service. Administration controls, including locks for tank outlet valves, are acceptable as the only means to ensure minimum water volume.	Not Applicable.	Storage tanks are not used.
Other water systems used as one of the two fire water supplies shall be permanently connected to the fire main system and shall be capable of automatic alignment to the fire main system.	Comply. Refer to UFSAR Section 9.5.1.2.1, Page 9.5-6, Para. 1 and Page 9.5-7, Para.1	The same underground fire main loop is supplied by separate header connections to each of the two diesel fire pumps.
Pumps, controls and power supplies in these systems shall satisfy the requirements for the main fire pumps. The use of other water systems for fire protection shall not be incompatible with their functions required for safe plant shutdown, failure of the other system shall not degrade the fire main system.	Comply. Refer to the SER Supplement No.8, Section 9.5.1.1 part entitled "Acceptability of the Service Water Pumps as Fire Pumps".	Although not required by Appendix R, the service water system provides a third means of supplying water to the main fire loop. The service water pumps would only be used in the event that both diesel fire pumps are unavailable at the same time.
B. Sectional Isolation Valves		
Sectional isolation valves such as post indicator valves or key operated valves shall be installed in the fire main loop to permit isolation of portions of the main fire loop for maintenance or repair without interrupting the entire water supply.	Comply. Refer to UFSAR Section 9.5.1.2.1, Page 9.5-7, Para. 4.	Sectional post indicating isolation valves are strategically located in the underground fire main loop to permit maintenance without impairing the entire distribution system.
C. Hydrant Isolation Valves		
Valves shall be installed to permit isolation of outside hydrants from the fire main for maintenance or repair without interrupting the water supply to automatic or manual fire suppression systems in any area containing or presenting a fire hazard to safety-related or safe shutdown equipment.	Comply. Refer to UFSAR Section 9.5.1.2.1, Page 9.5-7, Para. 4.	Hydrant isolation valves are provided to permit maintenance without impairing the entire distribution system. Each hydrant has a key-operated valve.

10CFR 50 APPENDIX	LASALLE CONFORMANCE	REMARKS
D. Manual Suppression		
Standpipe and hose systems shall be installed so that at least one effective hose stream will be able to reach any location that contains or presents an exposure fire hazard to structures, systems, or components important to safety.	Comply. Refer to UFSAR Section 9.5.1.2.1, Page 9.5-8, Para. 3 and the original SER, Section 9.5.1.2, Para 4 & 5. Our compliance is based on measuring the routing of hoses on general arrangement drawings, taking into account corners and obstacles.	Standpipe and hose stations are provided in all plant areas except portions of the steam and radwaste tunnels and the primary containment. The pipe tunnels do not contain combustibles and the containment is inerted during normal plant operation.
Access to permit effective functioning of the fire brigade shall be provided to all areas that contain or present an exposure fire hazard to structures, systems, or components important to safety.	Comply. Refer to the Fire Plans, Section 5.i.	
Standpipe and hose stations, shall be inside PWR containment's and BWR containments that are not inerted.	Not Applicable.	Containment is inerted during normal operation. See UFSAR Section 9.5.9 describing the Containment Inerting System.
Standpipe and hose stations inside containment may be connected to a high quality water supply of sufficient quantity and pressure other than the fire main loop if plant specific features prevent extending the fire main supply inside containment.	Not Applicable - There are no standpipe or hose stations inside the containment.	
For BWR drywells, standpipe and hose stations shall be placed outside the drywell with adequate lengths of hose to reach any location inside the drywell with an effective hose stream.	Comply. Refer to UFSAR Figure 9.5-1 for hose stations located outside containment. See UFSAR Section 9.5.1.2.1. Page 9.5.8, Para. 3 and response to Question 010.60 in the FSAR, which states "Standpipe and hose stations with sufficient hose will be provided outside the containment access to ensure that all areas of containment can be reached."	[redacted]

10CFR 50 APPENDIX	LASALLE CONFORMANCE	REMARKS
E. Hydrostatic Hose Tests		
Fire hose shall be hydrostatically tested at a pressure of 150 psi or 50 psi above maximum fire main operating pressure, whichever is greater. Hose stored in outside hose houses shall be tested annually.	Comply. Refer to LMS-FP-7, "Fire Hose Hydrostatic Test". Also SER 0519.	Normal pressure is 136 psig. Fire hoses are hydrostatically tested to 250 psi, which is more than the required 50 psi above the normal system operating pressure. Hose in outside hose houses is tested annually.
Interior standpipe hose shall be tested every three years.	Step D.3 for ITS requires five years after purchase date and every two years thereafter. Deviation- Accepted.	Deviation accepted in the SER, Supplement No. 2, which states that the testing of interior hoses shall be performed no later than five years after purchase date, then at eight years and every two years thereafter.
F. Automatic Fire Detection		
Automatic fire detection systems shall be installed in areas of the plant that contain or present an exposure fire hazard to safe shutdown or safety related systems or components.	Deviation - Refer to SER, Supplement No. 2, Section 9.5.8, Article 3.	Primary Reference - "Analysis of Fire Detector Locations at LaSalle County Station" reports No. 1 through No. 4, dated February, March and May 1984 and transmitted from T.E. Watts to G.J. Diederich with letter dated May 29, 1984. See UFSAR Appendix H.3 (FHA) for provision of automatic detection systems. Zones 4A, 4B, 5C11 contain spot detection and the SSER states that a deviation is not required because they contain fire detection previously approved by the NRC. Zones 2K/3K and 5B4 contain no detection because of low combustibles. Refer to the November 3, 1981. letter from L.O. DelGeorge to A. Schwencer and the subsequent SER, Supplement No. 2, Section 9.5.8 for acceptance.

10CFR 50 APPENDIX	LASALLE CONFORMANCE	REMARKS
		As described in the FPR Table H.3-1 & H.3.6.7, fire zone 6E contains spot detection and does not present an exposure hazard to safe shutdown or safety related equipment. In addition, zones 5C5 and 5C8 contain cables for valves 1(2) B21-F021 which were analyzed because of potential spurious operation. However, as determined the UFSAR/FHA, fire detection is not warranted in these zones based on the actual hazards (e.g. lack of combustibles) and because a redundant isolation valve is independent of these zones.
These fire detection systems shall be capable of operating with or without offsite power.	Comply. Refer to UFSAR Section 9.5.1.2.1, Page 9.5-8, Para. 5 and original SER, Section 9.5.1.4, Para. 3	The fire detection system is normally powered from 120-Vac with automatic transfer to 125-Vdc on loss of power.
G. Fire Protection of Safe Shutdown Capability 1. Fire protection features shall be provided for structures, systems and components important to safe shutdown. These features shall be capable of limiting fire damage so that: a. One train of system necessary to achieve and maintain hot shutdown conditions from either the control room or emergency control station(s) is free of fire damage and	Comply. Refer to FPR Sections H.4.2.38 for control room shutdown equipment availability in the event of a fire and H.4.2.44 and H.4.2.45 for remote shutdown panel equipment availability in the event of a fire.	The manual operation identified in the FSAR Question 010.74 addresses the motor operated valves 1/2E12-F068A in fire zones 2I1 and 3I1. Those valves control the service water discharge for the RHR heat exchangers. The RHR system is not needed until 1 hours and 40 minutes after suppression pool heatup begins if the reactor is maintained at operating pressure by the SRV's. If there is no loss of offsite power, this valve is not needed until the unit is brought to cold shutdown. During this time either offsite power can be restored (if lost simultaneously with the fire), in which case reactor cooling can be provided using non-safety-related equipment in

10CFR 50 APPENDIX	LASALLE CONFORMANCE	REMARKS
		the turbine building; repairs can be made to components in either redundant RHR train; or the valve can be operated manually. This valve is located approximately 20 feet from redundant RHR system cables. Because this valve is not needed for several hours as discussed above and can be manually operated, the separation was found to be acceptable as documented in the SER, Supplement No. 5, Section 9.5.4. Also refer to Attachment No. 2 of the letter dated April 23, 1984 from T.E.Watts to G. J. Diederich, identifying that manual operation may be required for these valves.
b. Systems necessary to achieve and maintain cold shutdown from either the control or emergency control station(s) can be repaired within 72 hours	Comply.	The two areas where credit has been taken for repairs are identified in FPR Sections H.4.3 and H.4.5. The repair in Section H.4.3 addresses the auxiliary electric equipment room's and control room's ventilation system equipment. In the letter dated November 3, 1981, from CECo to the NRC, CECo outlined the deviation. Subsequently, the SER, Supplement No.2, in Section 9.5.8, under the Safe Shutdown section, stated, "We could not identify any deviation from our requirements. Therefore, we concluded that no deviations are required." Also refer to the original SER, Section 9.5.4, and Supplement No. 1 errata, which deleted fire zone 4B from Section 9.5.4. The repair in Section H.4.5 addresses the realignment of the suction cooling valves 1(2)E12-F009 and 1(2)B33-F023A located in the containment. These valves were not evaluated in the hot shutdown analysis and must be repositioned to shift the RHR system to the shutdown cooling mode after depressurization. Appendix R allows 72 hours if a field repair to

10CFR 50 APPENDIX	LASALLE CONFORMANCE	REMARKS
		the control cable becomes necessary. The reactor can be maintained at hot shutdown and eventually can be brought to cold shutdown by the continuation of this mode of operation. The repair of 2B33-F023A is addressed in the J. W. Dingler letters to R. F. Janecek dated April 13, 1985 and March 15, 1985. Refer to Attachment Nos. 1 and 2 of the letter dated April 23, 1984 from T.E. Watts to G. J. Diederich identifying that a repair to the power and control cables or manual operation of these valves may be required. Repair procedures have been developed and are available at the station.
2. Except as provided for in paragraph G.3 of this section, where cables or equipment, including associated non-safety circuits that could prevent operation or cause maloperation due to hot shorts, open circuits, or shorts to ground, of redundant trains of systems necessary to achieve and maintain hot shutdown conditions are located within the same fire area outside of primary containment, one of the following means of ensuring that one of the redundant trains is free of fire damage shall be provided:	Comply with intent: Refer to FPR Section H.4 for analysis demonstrating that one of the redundant trains of safe shutdown equipment is free of fire damage.	For Current Transformer (CT) circuits for the 4kV breakers feeding 480 VAC SWGR 135X/Y (235X/Y), SWGR 136X/Y (236X/Y0, RHR 1A (2A) Pump and RHR 1B (2B) Pump may be susceptible to a hot short failure mode that would result in tripping the overcurrent relays associated with the circuits during a postulated fire in the control room. LaSalle Station credits manual operator actions to defeat the overcurrent trips to the affected breakers in operating abnormal procedures LOA-FX-101 and LOA-FX-201 during a control room fire where the equipment is locally operated. (Reference: IR # 433828)

10CFR 50 APPENDIX	LASALLE CONFORMANCE	REMARKS
a. Separation of cables and equipment and associated non-safety circuits of redundant trains by a fire barrier having a 3-hour rating. Structural steel forming a part of or supporting such fire barriers shall be protected to provide fire resistance equivalent to that required of the barrier;	Comply with intent: Rated fire barriers separating zones containing safe shutdown systems or equipment are adequate and acceptable for the hazards as originally approved in the FHA / UFSAR. For example, though the construction of a wall, floor or ceiling assembly is 3-hour rated (e.g., poured concrete or concrete block), certain components within the barrier may only be rated for 1.5 or 2 hours (e.g., fire door with glazed window, structural steel fire proofing, etc.). In addition, for the same reasons, a barrier may have different fire ratings on opposite sides of the barrier. Refer to SER Section 9.5.2 for barrier approval. Also refer to FSAR Question 010.34 Comply: In zone 4E4 a three-hour fire wrap is provided to protect Division 3 cables associated with HPCS valve 2E22-F004. Comply: In zone 4F3 a three-hour fire wrap is provided to protect Division 3 cables associated with HPCS valve 2E22-F004. Comply: In zone 2F a three-hour fire wrap is provided to protect Division 3 cables associated with HPCS valve 1E22-F004. Comply: In zone 2G a three-hour fire wrap is provided to protect Division 3 cables associated with HPCS valve 1E22-F004.	The acceptance criteria for fire rated barriers is shown in the response to the question 010.35 in the FSAR and briefly described below: Doors - All doors are UL labeled, tested or reviewed to verify that their ratings are consistent with the barriers in which they are installed. Refer also to the Fire Test Report No. NC709-1, 83 NK28184 prepared by U.L. for the 3-piece Pioneer door frames. Steel - Pyrocrete 102: Primary design for floor assembly protection is based on UL D 901 & 902. When there is no exact application test, the amount of coverage used complied with the manufacturer's recommendations to meet the requirements of the hourly rating within each zone. Columns were covered in accordance with UL X-716 or X-719. The structural steel is protected if both of the following two guidelines are met; 1. The fire loading within the fire zone is greater than 10,000 Btu per square foot. 2. The collapse of structural steel affects safe shutdown. The steel is coated to provide protection consistent with the fire loading within each fire zone; up to 80,000 Btu per square foot equals 1-hour fire protection, up to 160,000 Btu per square foot equals 2-hour fire protection and above 160,000 Btu per square foot equals 3-hour fire protection.

10CFR 50 APPENDIX	LASALLE CONFORMANCE	REMARKS
		For situations when the construction configuration differs from the U.L. tested details, a conservative thickness was installed per the manufacturer's recommendation. This approach is based upon the accepted practice in the oil refining industry. When Unit 1 was fire protected, all exposed steel was protected. It was determined during the time of the Unit 1 Fire Protection installation that the auxiliary steel, steel that is not required for the support of the structure, need not be protected. Therefore, for Unit 2 some of the auxiliary steel was left uncoated. Concrete Block Masonry - The hourly ratings are per the "Fire Resistance Rating" publication by the American Insurance Association. Fire Dampers/Doors - These are approved and tested in accordance with UL-555 and UL-108. Wall and Floor Penetration Seals- These are tested in accordance with ASTM E119. Refer to Section M of this report for additional information regarding the Fire Barrier Cable Penetrations Seal Qualification. Koawool Insulation A test was performed in 1979 to evaluate the performance of Koawool as a fire shield. The report, prepared by Construction Technology Laboratories, is entitled "Fire Protection Cable Tray Fire Test" and dated June 1979. Darmatt TSI fire barriers have been replaced with Darmatt. The Darmatt installations at LaSalle were approved in the "SAFETY EVALUATION BY THE OFFICE OF NUCLEAR REACTOR REGULATION RELATED TO DARMATT KM-1 FIRE BARRIER SYSTEMS".

Interam wrap
The 3M Interam Type E-54 fire wrap is an acceptable 1 hour and 3 hour fire barrier based on existing qualification reports and test data (ASTM E-119 Fire Test, Hose Stream tests, etc.). Furthermore, the 3M Type E-54 fire wrap possesses endothermic properties and shall not be treated as a combustible. Per the Technical Evaluation of 3M Interam one and three hour Fire Protective Wraps Applied to Electrical Circuits (June1999), the E-50 series of 3M Interam base material has passed the ASTM E-136 testing requirements for noncombustible materials. It has also passed the ASTM E-84 testing requirements for surface flame spread (with a flame spread rating of 0.7). The ASTM E-136 testing was conducted at Omega Point Laboratories in January of 1995; project 14540-99235 (CTP-2004) and the ASTM E-84 testing was conducted at Underwriter's Laboratories report file R10125, project 82NK 21937.

It is recognized that deviations from the tested fire wrap configuration will occur. Generic Letter 86-10 also recognizes this fact and allows for technically justified deviations. Any deviations that occur during the installation will be evaluated by engineering based on the criteria discussed in Generic Letter 86-10 (e.g. continuity of the fire barrier, adequacy of the barrier thickness, etc) prior to acceptance of this installation

10CFR 50 APPENDIX	LASALLE CONFORMANCE	REMARKS
b. Separation of cable and equipment and associated non-safety circuits of redundant trains by a horizontal distance of more than 20 feet with no intervening combustible or fire hazards. In addition, fire detectors and an automatic fire suppression system shall be installed in the fire areas; or	Comply with intent: Redundant cables in the reactor buildings are separated by approximately 20 to 50 feet in various fire zones and automatic suppression is not provided. However, as approved by the NRC in SSER 2 and SSER 5, the configuration is acceptable.	No fire zone utilizes this protection (e.g., 20 foot plus detection and suppression). The reactor building utilizes spatial separation without an automatic fixed fire suppression system (See SER, Supplement No. 5, Section 9.5.4 and the November 3, 1981 letter from L. O. DelGeorge to A. Schwencer and the SER, Supplement No. 2.).
c. Enclosure of cable and equipment and associated non-safety circuits of one redundant train in a fire barrier having a one-hour rating. In addition, fire detectors and an automatic fire suppression system shall be in the fire area;	Comply: In zone 5C11, a 1-hour fire wrap with automatic detection and suppression is provided in diesel generator corridors. Comply with intent: A 1-hour fire wrap is provided in fire zone 2F to ensure specific redundant cables are separated by at least 50 feet in the Unit 1 reactor building. Comply: In zone 4D2 a one-hour fire wrap with automatic detection and suppression is provided to protect Division 3 cables associated with HPCS valve 2E22-F004.	The only fire zones which utilize a type of this protection are: 5C11 - The diesel generator corridor for Units 1 and 2. 2F - This is in the Unit 1 Reactor Building. One cable tray is located approximately 40 feet from a redundant cable. This cable tray was wrapped on all four sides with Kaowool to a point more than 50 feet away from the redundant cable. No suppression was installed. Refer to the November 3, 1981, letter from L.O. DelGeorge to A. Schwencer, Item 3b, and the subsequent SER, Supplement No. 2, Section 9.5.8, which responded that, "The applicant submitted deviations in this area, and we reviewed the information submitted. We could not identify any deviation from our requirements. Therefore, we conclude that no deviations are required." 4D2 – This is the Unit 2 Division 2 Essential Switchgear Room. Only Division 3 safety-related cables 2HP021 and 2HP022 are protected such that the function of HPCS valve 2E22-F004 may be credited given a fire in this zone.
Inside non-inerted containments one of the fire protection means specified above or one of the following fire protection means shall be provided:	Not Applicable	Under normal operations the containment is inerted. Also see UFSAR Section 9.5.9 describing the Containment Inerting System.

10CFR 50 APPENDIX	LASALLE CONFORMANCE	REMARKS
d. Separation of cables and equipment and associated non-safety circuits of redundant trains by a horizontal distance of more than 20 feet with no intervening combustibles or fire hazards;		
e. Installation of fire detectors and an automatic fire suppression system in the fire area; or		
f. Separation of cables and equipment and associated non-safety circuits of redundant trains by a non-combustible radiant energy shield.		
3. Alternative or dedicated shutdown capability and its associated circuits, independent of cables, systems or components in the area, room or zone under consideration, shall be provided;		LaSalle does not utilize dedicated shutdown capability. See Section 2.D of this report for the definitions of alternative and dedicated shutdown. For each fire zone utilizing alternative shutdown capability a brief description is summarized here and in the Safe Shutdown Analysis (SSA).

10CFR 50 APPENDIX	LASALLE CONFORMANCE	REMARKS
a. Where the protection of systems whose function is required for hot shutdown does not satisfy the requirements of Para. G.2 of this section: or	Comply: The following fire zones utilize alternative shutdown capability: 4C1 - Control Room 4E1 - AEER Unit1 4E2 - AEER Unit 2 5C11- Turbine Building Ground Floor – Elevation 710' (EDG Corridors)	Control Room - A fire in this fire zone could affect panels 1PM01J and 2PM01J. Each panel contains control and logic for the Division 1 and Division 2 diesel generators. Therefore, local control capability independent of these panels is provided for the electrical controls. Auxiliary Electric Equipment Room (Units 1 & 2) - A fire in this fire zone could affect both divisions of RHR. Therefore, separate controls independent of this fire zone are provided for the RHR B pump and the RHR C and D service water pumps. All alternative shutdown circuits with transfer switch capability are provided with redundant fuses per NRC Information Notice 85-09. EDG Corridors- A fire in this fire zone could cause all the CO2 suppression panels in the corridor to actuate. Once actuated, the CO2 panels spuriously close the associated EDG room ventilation making all EDGs on the affected unit inoperable. LOA-AP-101(201) is used to crosstie to the unaffected unit.
b. Where redundant trains for systems required for hot shutdown located in the same fire area may be subject to damage from fire suppression activities or from the rupture or inadvertent operation of fire suppression systems.	Comply: Alternative shutdown capability is provided in the zones listed above. A suppression effects analysis has been performed to ensure that the actuation of fire suppression systems in one zone does not affect independent safe shutdown components in another zone. See J.D. Behn to H. L. Massin letter dated January 3, 1987. For the EDG Corridors the suppression effects analysis covers the CO2 systems and the Spray System.	UFSAR question 010.37 addresses runoff from fire protection systems for safety related equipment. UFSAR Attachment J addresses the moderate energy line break analysis and any required spray shields. The site suppression effects analysis in the fire protection report addresses inadvertent actuation of automatic fire suppression systems on safety-related equipment.
In addition, fire detection and a fixed fire suppression system shall be installed in the area, room, or zone under consideration.	Comply with intent: Fixed suppression systems are not installed in 4C1, 4E1, and 4E2. However, the Control Room configuration was accepted by the NRC in Section 9.5.6.1 of the OSER, and the AEER configurations were accepted in the 'errata" to Section 9.5.6.2 of the OSER. Water suppression is installed in the EDG corridors to protect cables for the hazards that are present.	

10CFR 50 APPENDIX	LASALLE CONFORMANCE	REMARKS
H. Fire Brigade		
A site brigade trained and equipped for fire fighting shall be established to ensure adequate manual fire fighting capability for all areas of the plant containing structures, systems, or components important to safety.	Comply. Refer to CC-AA-211, "FIRE PROTECTION PROGRAM".	
The fire brigade shall be at least five members on each shift.	Comply. Refer to CC-AA-211, "FIRE PROTECTION PROGRAM".	
The brigade leader and at least two brigade members shall have sufficient training in or knowledge of plant safety-related systems to understand the effects of fire and fire suppressants on safe shutdown capability.	Comply. Refer to OP-AA-201-005, "FIRE BRIGADE QUALIFICATION".	The fire brigade leader and at least two members are required to have completed Non-Licensed Operator Training <u>or</u> possess an equivalent level of knowledge obtained through other training and/or experience <u>or</u> possess a Reactor Operator License.
The qualification of fire brigade members shall include an annual physical examination to determine their ability to perform strenuous fire fighting activities.	Comply. Refer to OP-AA-201-005, "FIRE BRIGADE QUALIFICATION".	Physical examinations are performed on an annual basis (e.g., once per calendar year) to determine the fire brigade members ability to perform strenuous activity.
The shift supervisor shall not be a member of the fire brigade. The brigade leader shall be competent to assess the potential safety consequences for a fire and advise control room personnel. Such competence by the brigade leader may be evidenced by possession of an operator's license or equivalent knowledge of plant safety-related systems.	Comply. Refer to CC-AA-211, "FIRE PROTECTION PROGRAM", and OP-AA-201-005, "FIRE BRIGADE QUALIFICATION".	The Fire Brigade does not include any members of the shift crew necessary for safe shutdown or other essential functions. The Fire Brigade Leader is competent via training or knowledge, as described above, to advise control room personnel on the impact of the fire (e.g., equipment affected).

10CFR 50 APPENDIX	LASALLE CONFORMANCE	REMARKS
The minimum equipment provided for the brigade shall consist of personal protection equipment such as turnout coats, boots, gloves, hard hats, emergency communications equipment, portable lights, portable ventilation equipment, and portable extinguishers.	Comply. Refer to "FIRE PLANS", Para. 4 and LMP-FP-16, "FIRE BRIGADE EQUIPMENT AVAILABILITY CHECK".	Equipment for the fire brigade is staged throughout the plant.
Self-contained breathing apparatus using full-face positive-pressure masks approved by NIOSH (National Institute for Occupational Safety and Health-approval formerly given by the U.S. Bureau of Mines) shall be provided for fire brigade, damage control, and control room personnel.	Comply. The fire brigade uses SCBA's that meet the intent.	
At least 10 masks shall be available for fire brigade personnel.	Comply. Refer RP-LA-825-1002.	
Control room personnel may be furnished breathing air by a manifold system piped from a storage reservoir if practical.	Comply. Refer to LRP-1310-2, "OPERATION AND USE OF THE CONTROL ROOM BREATHING AIR SYSTEM".	
Service or rated operating life shall be a minimum of one-half hour for the self-contained units.	Comply. Self-contained breathing apparatus (SCBA) are rated for at least 30 minutes (Refer to RP-LA-825-1002.	
At least a 1-hour supply of breathing air in extra bottles shall be located onsite for each self-contained breathing unit.	Comply. Two extra bottles rated for at least 30 minutes each are provided for each fire brigade SCBA RP-LA-825-1002.	

10CFR 50 APPENDIX	LASALLE CONFORMANCE	REMARKS
In addition, an onsite 6- hour supply of reserve air shall be provided and arranged to permit quick and complete replenishment of exhausted supply air bottles as they are returned.	Comply. Refer to RP-LA-825-1002. This requirement is fulfilled by maintaining either an operable SCBA air compressor, a 6 hour supply of reserve air in the form of a cascade air cylinder charging system or a 6 hour supply of reserve air in the form of spare, sufficiently charged, NIOSH approved, SCBA air cylinders dedicated to fire fighting/damage control.	
If compressors are used as a source of breathing air, only units approved for breathing air shall be used; compressors shall be operable assuming a loss of offsite power.	. Comply. The air compressor is "approved for use" to replenish supply air bottles, and is equipped with a cascade system to ensure the provision of reserve air in the event of a loss of off-site power.	
Special care must be taken to locate the compressor in areas free of dust and contaminants.	Comply. The air compressor is equipped with an air filter and CO monitor to ensure air quality.	
I. Fire Brigade Training		
The fire brigade training program shall ensure that the capability to fight potential fires is established and maintained. The program shall consist of an initial classroom instruction, fire fighting practice, and fire drills.	Comply. Refer to CC-AA-211 "FIRE PROTECTION PROGRAM", OP-AA-201-005, FIRE BRIGADE QUALIFICATION", OP-AA-201-003, "FIRE DRILL PERFORMANCE, and the Exelon Mid-West Regional Operating Group (MWROG) Fire Brigade Training Manual.	
1. Instruction		
a. The initial classroom instruction shall include:	Comply. Refer to the Exelon MWROG Fire Brigade Training Manual and to Item 5 of the letter from L.O. DelGeorge to A. Schwencer dated November 3, 1981, and the subsequent SER, Supplement No. 2. Section 9.5.8. Also refer to "Fire Plans", Para. 2.	This SER states: "In subsequent discussions with the applicant on its training program, we determined that the applicant's program did not deviate from our requirements. Therefore we find the fire brigade training program acceptable."
(1) introduction of the plant fire fighting plan with specific identification of each individual's responsibilities.		Paragraph 2 of "FIRE PLANS" states: "Since the Fire Brigade is versatile and well trained in the use of all plant fire fighting equipment, individual fire fighting duties are not pre-assigned. These duties will be assigned as necessary by the fire chief either at the fire scene or while enroute to the fire scene."

10CFR 50 APPENDIX	LASALLE CONFORMANCE	REMARKS
(2) identification of the type and location of fire hazards and associated types of fires that could occur in the plant.	Comply. Refer to the Exelon MWROG Fire Brigade Training Manual.	
(3) The toxic and corrosive characteristics of expected products of combustion.	Comply. Refer to the Exelon MWROG Fire Brigade Training Manual.	
(4) Identification of the location of fire fighting equipment for each fire area and familiarization with the layout of the plant, including access and egress routes to each area.	Comply. Refer to the Exelon MWROG Fire Brigade Training Manual.	
(5) The proper use of available fire fighting equipment and the correct method of fighting each type of fire.	Comply. Refer to the Exelon MWROG Fire Brigade Training Manual.	
The types of fires covered should include fires in energized electrical equipment, fires in cables and cable trays, hydrogen fires, fires involving flammable and combustible liquids or hazardous process chemicals, fires resulting from construction or modifications (welding), and record file fires.	Comply. Refer to the Exelon MWROG Fire Brigade Training Manual.	All types of fires are covered, although no specific emphasis is placed on fires resulting from welding and record files.

10CFR 50 APPENDIX	LASALLE CONFORMANCE	REMARKS
(6) The proper use of communication, fighting, ventilation, and emergency breathing equipment.	Comply. Refer to the Exelon MWROG Fire Brigade Training Manual.	
(7) The proper method for fighting fires inside buildings and confined spaces.	Comply. Refer to the Exelon MWROG Fire Brigade Training Manual.	
(8) The direction and coordination of the fire fighting activities (fire brigade leaders only).	Comply. Refer to the Exelon MWROG Fire Brigade Training Manual.	
(9) Detailed review of fire fighting strategies and procedures.	Comply. Refer to the Exelon MWROG Fire Brigade Training Manual.	
(10) Review of the latest plant modifications and corresponding changes in fire fighting plans. NOTE: Items (9) and (10) may be deleted from the training of no more than two of the non-operations personnel who may be assigned to the fire brigade.	Comply. Pre-plans are included in the refresher training provided in accordance with the Exelon MWROG Fire Brigade Training Manual. Important plant modifications are covered in Non-Licensed Operator continuing training.	

10CFR 50 APPENDIX	LASALLE CONFORMANCE	REMARKS
b. The instruction shall be provided by qualified individuals who are knowledgeable, experienced, and suitably trained in fighting the types of fires that could occur in the plant and in using the types of equipment available in the nuclear power plant.	Comply. Refer to OP-AA-201-005, "Fire Brigade Qualification," for instructor qualifications. In addition, training may also be provided by the Site Fire Marshal who is knowledgeable and experienced in fighting the types of fires that could occur in the plant.	
c. Instruction shall be provided to all fire brigade members and fire brigade leaders.	Comply. Refer to OP-AA-201-005, "Fire Brigade Qualification".	
d. Regular planned meetings shall be held at least every 3 months for all brigade members to review changes in the fire protection program and other subjects as necessary.	Comply. Regular meetings are held in conjunction with fire drill critiques, quarterly refresher training sessions, and NLO continuing training. Also refer to Item 5 of the letter from L.O. DelGeorge to A. Schwencer dated November 3, 1981, and the subsequent SER, Supplement No. 2. Section 9.5.8.	The SER states: "In subsequent discussions with the applicant on its training program, we determined that the applicant's program did not deviate from our requirements. Therefore we find the fire brigade training program acceptable."
e. Periodic refresher training sessions shall be held to repeat the classroom instruction program for all brigade members over a two-year period. These sessions may be concurrent with the regular planned meetings.	Comply. Refer to OP-AA-201-005, Fire Brigade Qualification" and the Exelon MWROG Fire Brigade Training Manual. Also refer to Item 5 of the letter from L.O. DelGeorge to A. Schwencer dated November 3, 1981, and the subsequent SER, Supplement No. 2. Section 9.5.8. Also refer to OP-AA-201.	See previous remark. In addition, the plant fire brigade training / qualification program is more comprehensive than that originally approved in the SER.
2. Practice Practice sessions shall be held for each shift fire brigade on the proper method of fighting the various types of fires that could occur in a nuclear power plant. These sessions shall provide brigade members with experience in actual fire extinguishment and the use of emergency breathing apparatus under strenuous conditions encountered in fire fighting. These practice sessions shall be provided at least once per year for each fire brigade member.	Comply. Refer to OP-AA-201-005, Fire Brigade Qualification". Also refer to Item 5 of the letter from L.O. DelGeorge to A. Schwencer dated November 3, 1981, and the subsequent SER, Supplement No. 2. Section 9.5.8.	This SER states: "In subsequent discussions with the applicant on its training program, we determined that the applicant's program did not deviate from our requirements. Therefore we find the fire brigade training program acceptable."

10CFR 50 APPENDIX	LASALLE CONFORMANCE	REMARKS
3. Drills		
a. Fire brigade drills shall be performed in the plant so that the fire brigade can practice as a team.	Comply. Refer to OP-AA-201-003, "Fire Drill Performance".	OP-AA-201-003 provides the direction and methodology for conducting drills so the brigade can practice as a team.
b. Drills shall be performed at regular intervals not exceed 3 months for each shift fire brigade.	Comply. Refer to OP-AA-201-003, "Fire Drill Performance". Also refer to Item 5 of the letter from L.O. DelGeorge to A. Schwencer dated November 3, 1981, and the subsequent SER, Supplement No. 2. Section 9.5.8.	Fire drills are conducted quarterly for each operations shift brigade.
Each fire brigade member should participate in each drill, but must participate in at least two drills per year.	Comply. Refer to OP-AA-201-005, "Fire Brigade Qualification".	OP-AA-201-005 requires participation in at least two drills for a member to maintain qualified for the upcoming calendar year.
A sufficient number of these drills, but not less than one for each shift fire brigade per year, shall be unannounced to determine the fire fighting readiness of the plant fire brigade, brigade leader, and fire protection systems and equipment.	Comply. Refer to OP-AA-201-003, "Fire Drill Performance".	At least one drill each year is unannounced for each shift brigade.
Persons planning and authorizing an unannounced drill shall ensure that the responding shift fire brigade members are not aware that a drill is being planned until it is begun. Unannounced drills shall not be scheduled closer than four weeks.	Comply. Refer to OP-AA-201-003, "Fire Drill Performance".	Unannounced drills are not announced to the fire brigade members prior to performing the drill and are not scheduled closer than four weeks apart for each shift brigade.
At least one drill per year shall be performed on a "back shift" for each shift fire brigade.	Comply. Refer to OP-AA-201-003, "Fire Drill Performance".	

10CFR 50 APPENDIX	LASALLE CONFORMANCE	REMARKS
c. The drills shall be preplanned to establish the training objectives of the drill	Comply. Refer to OP-AA-201-003, "Fire Drill Performance".	
and shall be critiqued to determine how well the training objectives have been met.	Comply. Refer to OP-AA-201-003, "Fire Drill Performance".	
Unannounced drills shall be planned and critiqued by members of the management staff responsible for plant safety and fire protection.	Comply. Refer to OP-AA-201-003, "Fire Drill Performance".	All drills are critiqued by the Fire Marshal (or designee) and Operations Shift Personnel.
Performance deficiencies of a fire brigade or of individual fire brigade members shall be remedied by scheduling additional training for the brigade or members. Unsatisfactory drill performance shall be followed by repeat drill within 30 days.	Comply. Refer to OP-AA-201-003, "Fire Drill Performance".	Deficiencies are required to be corrected immediately following the drill (e.g., during the critique) or tracked to resolution. Unacceptable performance requires remediation within 30 days.
d. At 3-year intervals, a randomly selected unannounced drill shall be critiqued by qualified individuals independent of the licensee's staff. A copy of the written report from such individuals shall be available for NRC review.	Comply. Refer to OP-AA-201-003, "Fire Drill Performance".	
e. Drills shall as a minimum include the following:		
(1) Assessment of fire alarm effectiveness, time required to notify and assemble fire brigade, and selection, placement and use of equipment, and fire fighting strategies.	Comply. Refer to OP-AA-201-003, "Fire Drill Performance".	

10CFR 50 APPENDIX	LASALLE CONFORMANCE	REMARKS
(2) Assessment of each brigade member's knowledge of his or her role in the fire fighting strategy for the area assumed to contain the fire.	Comply. OP-AA-201-003, "Fire Drill Performance".	
Assessment of the brigade member's conformance with established fire fighting procedures and use of fire fighting equipment, including self-contained emergency breathing apparatus, communication equipment, and ventilation equipment to the extent practicable.	Comply. Refer to OP-AA-201-003, "Fire Drill Performance".	
(3) The simulated use of fire fighting equipment required to cope with the situation and type of fire selected for the drill.	Comply. Refer to OP-AA-201-003, "Fire Drill Performance".	
The area and type of fire chosen for the drill should differ from those used in the previous drill so that brigade members are trained in fighting fires in various plant areas.	Comply. Refer to OP-AA-201-003, "Fire Drill Performance". (Section 4.9)	Drill records validate this requirement
The situation selected should simulate the size and arrangement of a fire that could reasonably occur in the area selected, allowing for fire development due to the time required to respond, to obtain equipment and organize for the fire assuming loss of automatic suppression capability.	Comply. Refer to OP-AA-201-003, "Fire Drill Performance".	

10CFR 50 APPENDIX	LASALLE CONFORMANCE	REMARKS
(4) Assessment of brigade leader's direction of the fire fighting effort as to thoroughness, accuracy, and effectiveness.	Comply. Refer to OP-AA-201-003, "Fire Drill Performance".	
4. Records		
Individual records of training provided to each fire brigade member, including drill critiques, shall be maintained for at least three years to ensure that each member receives training in all parts of the training program. These records of training shall be available for NRC review.	Comply. Refer to OP-AA-201-003, "Fire Drill Performance."	Training records are maintained by the Training Department. Drill records are forwarded to Central File.
Retraining or broaden training for fire fighting within buildings shall be scheduled for all those brigade members whose performance records show deficiencies.	Comply. Refer to OP-AA-201-003, "Fire Drill Performance".	Unacceptable performance requires remediation, including additional training, if necessary.
J. Emergency Lighting		
Emergency lighting units with at least an 8-hour battery power supply shall be provided in all areas needed for operation of safe shutdown equipment and in access and egress routes thereto.	Comply: Emergency lighting units with at least an 8-hour battery power supply are provided in areas needed for operation of safe shutdown equipment and in access and egress routes thereto	Refer to TRM 3.7.n.2

10CFR 50 APPENDIX	LASALLE CONFORMANCE	REMARKS
K. Administrative Controls		
Administrative Controls shall be established to minimize fire hazards in areas containing structures, systems, and components important to safety.	Refer to the documents listed below.	LaSalle County Station has established procedures to control the use of flammable liquids, lumber and other combustibles, welding and cutting, housekeeping and cleanliness and other potential fire hazards. Detailed fire fighting strategies have been developed for fire zones which contain or expose safety-related equipment.
These controls shall establish procedures to:		
1. Govern the handling and limitations of the use of ordinary combustible materials, combustible and flammable gases and liquids, high efficiency particulate air and charcoal filters, dry ion exchange resins, or other combustible supplies in safety-related areas.	Comply. Refer to OP-AA-201-009, Control of Transient Combustible Material and response to Question 010.61 in the FSAR.	
2. Prohibit the storage of combustibles in safety-related areas or establish designated storage areas with appropriate fire protection.	Comply. Refer to OP-AA-201-009, Control of Transient Combustible Material.	
3. Govern the handling of and limit transient fire loads such as combustible and flammable liquids, wood, and plastic products, or other combustible materials in buildings containing safety-related systems or equipment during all phases of operating and especially during maintenance, modification, or refueling operations.	Comply. Refer to OP-AA-201-009, Control of Transient Combustible Material and response to Question 010.39 in the FSAR.	
	Comply. Refer to OP-AA-201-009, Control of Transient Combustible Material.	
	Comply. Refer to OP-AA-201-009, Control of Transient Combustible Material.	

10CFR 50 APPENDIX	LASALLE CONFORMANCE	REMARKS
4. Designate the onsite staff member responsible for the inplant fire protection review of proposed work activities to identify potential transient fire hazards and specify required additional fire protection in the work activity procedure.	Comply. Refer to CC-AA-211, "FIRE PROTECTION PROGRAM". Fire Marshals role is in OP-AA-101-103, "Roles and Responsibilities of Off-Shift Personnel".	The onsite staff member responsible for the in-plant review of proposed work to ensure fire protection and administrative control requirements are identified and adhered to is the Maintenance Planner and Work Supervisor, with support from the Fire Marshal, as necessary.
5. Govern the use of ignition source by use of a flame permit system to control welding, flame cutting, brazing, or soldering operations. A separate permit shall be issued for each area where work is to be done.	Comply. Refer to OP-AA-201-004, "Fire Prevention for Hot Work" and OP-AA-201-006, Control of Temporary Heat Sources.	Brazing is covered under open flame. Soldering is covered under OP-AA-201-006.
If work continues over more than one shift, the permit shall be valid for not more than 24 hours when the plant is operating or for the duration of a particular job during plant shutdown.	Comply. Refer to OP-AA-201-004, "Fire Prevention for Hot Work".	Hot work permits are required to be re-authorized every shift.
6. Control the removal from the area of all waste, debris, scrap, oil spills, or other combustibles resulting from the work activity, immediately following completion of the activity, or at the end of each work shift, whichever comes first.	Comply. Refer to OP-AA-201-001, "Fire Marshal Tours" only requires weekly tours, MA-AA-716-026, "STATION HOUSEKEEPING MATERIAL CONDITION PROGRAM."	Also refer to OP-AA-201-009 section B.8 for removal of material at the end of each shift.
7. Maintain the periodic housekeeping inspections to ensure continued compliance with these administrative controls.	Comply. Refer to MA-AA-716-026, "STATION HOUSEKEEPING MATERIAL CONDITION PROGRAM".	

10CFR 50 APPENDIX	LASALLE CONFORMANCE	REMARKS
8. Control the use of specific combustibles in safety-related areas during maintenance, modification, or refueling operations (such as laydown blocks or scaffolding) shall be treated with flame retardant.	Comply. Refer to OP-AA-201-009, “Control of Transient Combustible Material”.	
Equipment or supplies (such as new fuel) shipped in untreated combustible packing containers may be unpacked in safety-related areas if required for valid operating reasons. However, all combustible materials shall be removed from the area immediately following the unpacking.	Comply. Refer to OP-AA-201-009, “Control of Transient Combustible Material”.	
Such transient combustible material, unless stored in approved containers, shall not be left unattended during lunch breaks, shift changes, or other similar periods.	Comply. Refer to OP-AA-201-009, “Control of Transient Combustible Material”.	
Loose combustible packing material such as wood or paper excelsior, or polyethylene sheeting shall be placed in metal containers with tight-fitting self-closing metal covers.	Comply. Refer to OP-AA-201-009, “Control of Transient Combustible Material”.	Small amounts of combustibles are treated as transients
9. Control actions to be taken by an individual discovering a fire. For example, notification of control room, attempt to extinguish fire, and actuation of local fire suppression systems.	Comply. Refer to LAP 911-1, "REPORTING EMERGENCIES" . In addition, general actions upon fire discovery are covered during NGET training.	Small amounts of combustibles are treated as transients

10CFR 50 APPENDIX	LASALLE CONFORMANCE	REMARKS
10. Control actions to be taken by the control room operator to determine the need for brigade assistance upon report of a fire or receipt of alarm on control room annunciator panel, for example, announcing location of fire over PA system, sounding fire alarms, and notifying the shift supervisor and the fire brigade leader of the type, size, and locations of the fire.	Comply. Refer to LOA-FP-001, 101, and 201.	
11. Control actions to be taken by the fire brigade after notification by the control room operator of a fire; for example, assembling in a designated location, receiving directions from the fire brigade leader, and discharging specific fire fighting responsibilities including selection and transportation of fire fighting equipment to fire location, selection of protective equipment, operating instructions for use of fire suppression systems, and use of preplaned strategies for fighting fires in specific areas.	Comply. Refer to LOA-FP-001, 101 & 102. Pre-plans are provided for use by the Fire Brigade Leader.	Since the Fire Brigade is versatile and well trained in the use of all plant fire fighting equipment, individual fire fighting duties are not pre-assigned. These duties will be assigned as necessary by the fire chief either at the fire scene or while enroute to the fire scene.
12. Define the strategies for fighting fires in all safety-related areas and areas presenting a hazard to safety-related equipment. These strategies shall designate:	Comply. Refer to LaSalle Pre-Fire Plans.	
a. Fire Hazards in each area covered by the specific prefire plans.	Comply. Refer to LaSalle Pre-Fire Plans.	

10CFR 50 APPENDIX	LASALLE CONFORMANCE	REMARKS
b. Fire extinguishers best suited for controlling the fires associated with the fire hazards in that area and the nearest location of these extinguishants.	Comply. Refer to LaSalle Pre-Fire Plans.	
c. Most favorable direction from which to attack a fire in each area in view of ventilation direction, access hallways, stairs and doors that are most likely to be free of fire, and best station or elevation for fighting the fire.	Comply. Refer to LaSalle Pre-Fire Plans.	
All access and egress routes that involve locked doors should be specifically identified in the procedure with the appropriate precautions and methods for access specified.	Comply. Refer to LaSalle Pre-Fire Plans.	
d. Plant systems that should be managed to reduce the damage potential during a local fire and the location of local and remote controls for such management (e.g., any hydraulic or electrical systems in the zone covered by the specific fire fighting procedure that could increase the hazards in the area because of over pressurization or electrical hazards).	Comply. Refer to LaSalle Pre-Fire Plans.	
e. Vital heat-sensitive system components that need to be kept cool while fighting a local fire. Particularly hazardous combustibles that need cooling should be designated.	Comply. Refer to LaSalle Pre-Fire Plans.	

10CFR 50 APPENDIX	LASALLE CONFORMANCE	REMARKS
f. Organization of fire fighting brigades and the assignment of special duties according to job title so that all fire fighting functions are covered by any complete shift personnel complement. These duties include command control of the brigade, transporting fire suppression and support equipment to the scenes, applying the extinguishment to the fire, communication with the control room, and coordination with outside fire departments.	Comply with intent. Refer to LAP 200-2, Operations Shift Compliment and Functions.	Since the Fire Brigade is versatile and well trained in the use of all plant fire fighting equipment, individual fire fighting duties are not pre-assigned. These duties will be assigned as necessary by the fire chief either at the fire scene or while enroute to the fire scene.
g. Potential radiological and toxic hazards in fire zones.	Comply. Refer to LaSalle Pre-Fire Plans.	
h. Ventilation system operation that ensures desired plant air distribution when the ventilation flow is modified for fire containment or smoke clearing operations.	Comply. Refer to LaSalle Pre-Fire Plans.	
i. Operations requiring control room and shift engineer coordination or authorization.	Comply. Refer to LaSalle Pre-Fire Plans.	
j. Instructions for plant operators and general plant personnel during fire.	Comply. Refer to LOA-FP-101(201)	
L. Alternative and Dedicated Shutdown Capability		
1. Alternative or dedicated shutdown capability provided for a specific fire area shall be able to (a) achieve and maintain subcritical reactivity conditions in the reactor;	Comply. Refer to FPR Section H.4, "SAFE SHUTDOWN ANALYSIS", Subsections H.4.1.2, H.4.1.3(a), H.4.2, H.4.3 and Tables H.4-1, H.4-3, H.4-7, and SSER 0 through 8. For the EDG Corridors refer to Subsection H.4.2.57 and FPR Section 6, Attachment A.	See Section 2.D of this report for the definitions of Alternative and Dedicated Shutdown Capability.

10CFR 50 APPENDIX	LASALLE CONFORMANCE	REMARKS
(b) maintain reactor coolant inventory; (c) achieve and maintain hot standby conditions for a PWR (hot shutdown for a BWR); (d) achieve cold shutdown conditions within 72 hours; and (e) maintain cold shutdown conditions thereafter. During the postfire shutdown, the reactor coolant system process variables shall be maintained within those predicted for a loss of normal a.c. power and the fission product boundary integrity shall not be affected; i.e., there shall be no fuel clad damage, rupture of any primary coolant boundary, or rupture of the containment boundary.		
2. The performance goals for the shutdown functions shall be:		
a. The reactivity control function shall be capable of achieving and maintaining cold shutdown reactivity conditions.	Comply. Refer to FPR Sections H.4.1.1, second half, item a (for hot shutdown), H.4.1.5, item d, FPR H.4.5. For a fire in an EDG Corridor, FPR Section 6, Attachment A provides details for maintaining the reactivity conditions.	Credit is taken for reactor trip and verification of control rod insertion in the control room. Reactor trip can be initiated and verified prior to evacuation, should it be necessary. If a fire directly affects the control rod drive circuits, the reactor can be scramed by opening or checking open the output breakers for the RPS MG sets and the alternative power supply at the local panels. Opening of the RPS MG sets' output breakers will also close the main steam isolation valves. For a fire in a EDG Corridor, hot shutdown is achieved by automatic reactor scram with full isolations from the Main Control Room.
b. The reactor coolant makeup function shall be capable of maintaining the reactor coolant level above the top of the core for BWR's and within the level indication in the pressurizer for PWR's.	Comply. Refer to FPR Sections H.4.1.1, second half, item c, and H.4.2, item a. For a fire in an EDG Corridor, FPR Section 6, Attachment A provides details for maintaining the reactor coolant makeup function.	RCIC and HPCS maintain reactor water level and aid in removing heat initially. For a fire in a EDG Corridor, RCIC and the Safety Relief Valves (i.e. ADS) are used to maintain hot shutdown by controlling reactor vessel level and pressure. RCIC would be manually started from the Main Control Room or auto start on a reactor water low level signal.

10CFR 50 APPENDIX	LASALLE CONFORMANCE	REMARKS
c. The reactor heat removal function shall be capable of achieving and maintaining decay heat removal. For a fire in an EDG Corridor, FPR Section 6, Attachment A provides details for maintaining the heat removal function.	Comply. Refer to FPR Sections H.4.1.1, second half, item b, and H.4.2, items b and c. For a fire in a EDG Corridor, FPR Section 6, Attachment A provides details for maintaining the heat removal function. AC power to equipment necessary for achieving and maintaining cold shutdown established by cross-tying the opposite unit SAT or EDG in accordance with LOA-AP-101(201).	ADS/SRV controls reactor pressure and transfers the decay heat to the suppression pool to heat up. The RHR system cools the suppression pool and transfers the heat to the RHR service water system via the RHR heat exchanger. For a fire in a EDG Corridor, RHR will be used in the same manner except power to the opposite unit SAT or EDG in accordance with LOA-AP-101(201).
d. The process monitoring function shall be capable of providing direct readings of the process variables necessary to perform and control the above functions. For a fire in an EDG Corridor, FPR Section 6, Attachment A provides details for maintaining the process monitoring function.	Comply. Refer to Generic Letter 84-09, Section 1X, "INSTRUMENTATION NECESSARY FOR ALTERNATIVE SHUTDOWN". Item a - Reactor Water Level and Pressure. Refer to Tables H.3-103, H.4-104 and 105 in the FPR and Sections H.4.4.1 and H.4.4.2. Item b - Suppression pool level and temperature. Refer to the SER, Supplement No. 7, Section 9.5.6.1 and Tables H.4-107 and 108 in the FPR and Sections H.4.4.3 and H.4.4.4. Item c - Emergency or isolation condenser. Not applicable to LSCS. Item d - Diagnostic instrumentation for shutdown systems. Refer to Table H.4-106 in the FPR. Item e - Level indication for all tanks used. Level indication for the cycled condensate storage tank is addressed in procedure LOP-RX-03 and FPR H.4.4.6.1. The diesel oil day tank's level transmitters are included in the safe shutdown analysis. Refer to FPR Table H.4-106, and FPR H.4.4.6.2.	
e. The supporting functions shall be capable of providing the process cooling, lubrication, etc., necessary to permit the operation of equipment used for safe shutdown functions.	Comply. Supporting functions are included in the components listed in Tables H.4.2 through H.4.7 of the FPR. Essential cables for these support functions were considered in the analysis.	Major supporting functions include the following: The diesel generators supply electrical power to the ESF switchgear in the event of a loss of offsite power. Ventilation systems will maintain environmental conditions of various spaces where safety-related equipment is located. Refer to the FPR, Section H.4.2. For a fire in a EDG Corridor, power to the opposite unit SAT or EDG in accordance with LOA-AP-101(201).

10CFR 50 APPENDIX	LASALLE CONFORMANCE	REMARKS
3. The shutdown capability for specific fire areas may be unique for each such area, or it may be one unique combination of systems for all such areas. In either case, the alternative shutdown capability shall be independent of the specific fire area(s) and shall accommodate post fire conditions where offsite power is not available for 72 hours.	Comply. Refer to FPR, Section H.4.1.1, last paragraph, and Sections H.4.1.2, H.4.3 and H.4.4. and H.4.1.5.c For a fire in a EDG Corridor, FPR Section 6, Attachment A provides details for safe shutdown capability. AC power to equipment necessary for achieving and maintaining cold shutdown established by cross-tying the opposite unit SAT or EDG in accordance with LOA-AP-101(201).	
Procedures shall be in effect to implement this capability.	Comply, Specific post fire safe shutdown procedures have been developed for the Control Room and AEER. LOA-FX-101(201). For a fire in a EDG Corridor, AC power to equipment necessary for achieving and maintaining cold shutdown established by cross-tying the opposite unit SAT or EDG in accordance with LOA-AP-101(201).	The only fire zones where alternative shutdown capability is credited are the following: 4C1 - Control Room 4E1 - Auxiliary Electric Equipment Room Unit 1 4E2 - Auxiliary Electric Equipment Room Unit 2 5C11- Turbine Building Ground Floor –Elevation 710' (EDG Corridors)
4. If the capability to achieve and maintain cold shutdown will not be available because of fire damage, the equipment and systems comprising the means to achieve and maintain the hot standby or hot shutdown condition shall be capable of maintaining such conditions until cold shutdown can be achieved. If such equipment and systems will not be capable of being powered by both onsite and offsite electric power systems because of fire damage, an independent onsite power system shall be provided.	Comply. Refer to FPR, Section H.4.5, "COLD SHUTDOWN ANALYSIS". For a fire in a EDG Corridor, FPR Section 6, Attachment A provides details for achieving cold shutdown. AC power to equipment necessary for achieving and maintaining cold shutdown established by cross-tying the opposite unit SAT or EDG in accordance with LOA-AP-101(201).	
The number of operating shift personnel, exclusive of fire brigade members, required to operate such equipment and systems shall be onsite at all times.	Comply. Refer to CC-AA-211, "FIRE PROTECTION PROGRAM".	

10CFR 50 APPENDIX	LASALLE CONFORMANCE	REMARKS
5. Equipment and systems comprising the means to achieve and maintain cold shutdown conditions shall not be damaged by fire; or the fire damage in such equipment and systems shall be limited to that the systems can be made operable and cold shutdown can be achieved within 72 hours.	Comply. Refer to FPR, Safe Shutdown Analysis Section H.4.5	
Material for such repairs shall be readily available onsite and procedures shall be in effect to implement such repairs.	Comply: Required repair material is readily available and periodically checked in accordance with LOS-FX-A1,and repair procedures are provided.	
If such equipment and systems used prior to 72 hours after the fire will not be capable of being powered by both onsite and offsite electrical power systems because of fire damage an independent onsite power system shall be provided. Equipment and systems used after 72 hours may be powered by offsite power only.	Comply. Refer to FPR Safe Shutdown Analysis, section H.4	

10CFR 50 APPENDIX	LASALLE CONFORMANCE	REMARKS
6. Shutdown systems installed to ensure post fire shutdown capability need not be designed to meet seismic Category 1 criteria, single failure criteria, or other design basis accident criteria, except where required for other reasons, e.g., because of interface with an impact on existing safety systems, or because of adverse valve actions due to fire damage.	Comply. Refer to FPR Sections H.4.1.5 "BASIS AND ASSUMPTIONS", first paragraph.	
7. The safe shutdown equipment and systems for each fire area shall be known to be isolated from associated non-safety circuits in the fire areas so that hot shorts, open circuits, or shorts to ground in the associated circuits will not prevent operation of the safe shutdown equipment.	Comply. Refer to FPR Section H.4.2, page H.4-5, third paragraph from top and original SER, Section 9.5.3, last paragraph.	These references state that cables which are not needed for either the basic or alternate shutdown modes but which have a common power source or a common raceway with cables needed for safe shutdown have coordinated short circuit protection such that the open, ground or hot short of these cables will not affect the shutdown system for which a common power source or common raceway is shared.
The separation and barriers between trays and conduits containing associated circuits of one safe shutdown division and trays and conduits containing associated circuits or safe shutdown division cables from the redundant division, or the isolation of these associated circuits from the safe shutdown equipment, shall be such that a postulated fire involving associated circuits will not prevent safe shutdown.	Comply: LaSalle has coordinated fault protection. Therefore, there are no common power source or common enclosure-associated circuits. Potential spurious valve operations have been analyzed. Refer to the letters from J.W. Dingler to R.F. Janecek dated April 3, 1985 and March 15, 1985 and FPR Section H.4.2. Spurious operation of breakers is addressed in the safe shutdown procedures LOA-FX-101(201). Associated circuit concerns are addressed in the letter from C.H.Furlow to H.L Massin dated April 6, 1987.	

10CFR 50 APPENDIX	LASALLE CONFORMANCE	REMARKS
M. Fire Barrier Cable Penetration Seal Qualifiaction		
Penetration seal designs shall utilize only noncombustible materials and shall be qualified by tests that are comparable to tests used to rate fire barriers.	Comply. Refer to FPR Subsections H.1.2.c, SER 9.5.2.1 and the response to Question 010.35, Part 3 in the FSAR.	
The acceptance criteria for the tests shall include:		
1. The cable fire barrier penetration seal has withstood the fire endurance test without passage of flame or ignition of cables on the unexposed side for a period of time equivalent to the fire resistance rating required of the barrier:	Comply. Refer to FPDDP Volume 3, Book 3, Tab V for the listing of TECH-SIL, BISCO and TRANSCO Test Reports.	Refer to the letter from T.E. Watts to C. W. Schroeder dated January 9, 1984. Penetration seals at LaSalle are comprised of standard industry fire stop materials (i.e., gypsum, cerafiber, grout, silicone foam, etc.). In accordance with the June 24, 1983 letter from ComEd to Region III, installed penetration seal configurations are either identical or similar to at least one tested configuration.
2. The temperature levels recorded for the unexposed side are analyzed and demonstrate that the maximum temperature is sufficiently below the cable insulation ignition temperature; and	Comply. Refer to the FMR Report No. 0F0A1C, Para. 1.6.2	
3. The fire barrier penetration seal remains intact and does not allow projection of water beyond the unexposed surface during the hose stream test.	Comply. Refer to the FMR Report No.0F0A1C, Para. 1.6.2	
N. Fire Doors		
Fire doors shall be self-closing or provided with closing mechanisms and shall be inspected semi-annually to verify that automatic hold-open, release, and closing mechanisms and latches are operable.	Comply. Refer to UFSAR, Section 9.5.1.1.3, the letter from C. E. Sargent to A. Schwencer dated December 18, 1981, and the LSCS Technical Requirements Manual section 3.7.0.5	

10CFR 50 APPENDIX	LASALLE CONFORMANCE	REMARKS
One of the following measures shall be provided to ensure they will protect the opening as required in case of fire:	Comply: The TRM 3.7.o ensures that fire rated doors in fire barriers separating safety related fire areas or separating portions of redundant systems important to safe shutdown within a fire area are verified operable by:	
1. Fire doors shall be kept closed and electrically supervised at a continuously manned location;	• Verifying the operability of the fire door supervision system by performing a channel functional test at least once per 31 days.	
2. Fire doors shall be locked and inspected weekly to verify that the doors are in the closed position.	• Verifying the position of each locked closed fire door at least once per 7 days. TRM 3.7.0.3	
3. Fire doors shall be provide with automatic hod-open and release mechanisms and inspected daily to verify that doorways are free of obstructions; or	• Verifying that doors with automatic hold-open and release devices are free of obstructions at least once per 24 hours. TRM 3.7.0.2	
4. Fire doors shall be kept closed and inspected daily to verify that they are in the closed position.	• Verifying the position of each closed fire door at least once per 24 hours. TRM 3.7.0.1	
The fire brigade leader shall have ready access to keys for any locked fire doors.	Comply. Fire brigade leader has a key to locked fire doors in the power block.	
Areas protected by automatic total flooding gas suppression systems shall have electrically supervised self-closing fire doors or shall satisfy option 1 above.	Comply with intent:	

10CFR 50 APPENDIX	LASALLE CONFORMANCE	REMARKS
	The only safe shutdown / safety related areas protected with total flooding CO2 are the Diesel Generator Rooms. The doors opening to the day tank rooms are locked. The two small doors leading to the ventilation ducts (779 and 780) in Unit 1 and all five roll-up doors (469, 471, 477, 503, and 505) are locked. The three self-closing fire doors located between the DG rooms (470, 474, 504) are unlocked to allow for personnel safety egress. The three self-closing fire doors leading from the DG rooms to the corridors (475, 476, 506) are locked on the side leading into the diesel generator rooms. For reasons of safety egress, personnel are allowed to exit into the diesel generator corridor. The five hatches (one in each DG room) have electronic surveillance. These position switches have been tied into the DG rooms ventilation system's local control panels and the control panel is checked routinely during shiftly rounds.	As a result of the personnel safety concerns, not all doors in the DG rooms are locked or electrically supervised. However, the doors are controlled in accordance with the TRM (e.g., previous TS) surveillance criteria, and NRC acceptance for fire door supervision documented in Section 9.5.8 of SSER 2 acknowledges that fire doors controlled in accordance with the TS surveillance requirements is acceptable (e.g., satisfies the intent of Appendix R Section III.N.) Therefore, no deviation to III.N exists. (Refer to FPR Change # LF2000-001)

10CFR 50 APPENDIX	LASALLE CONFORMANCE	REMARKS
O. Oil Collection System for Reactor Coolant Pump The reactor coolant pump shall be equipped with an oil collection system if the containment is not inerted during normal operation. The oil collection system shall be so designed, engineered, and installed that failure will not lead to fire during normal or design basis accident conditions and that there is reasonable assurance that the system will withstand the Safe Shutdown Earthquake. Such collection systems shall be capable of collecting lube oil from all potential pressurized and unpressurized leakage sites in the reactor coolant pump lube oil systems. Leakage shall be collected and drained to a vented closed container that can hold the entire lube oil system inventory. A flame arrestor is required in the vent if the flash point characteristics of the oil present the hazard of fire flashback. Leakage points to be protected shall include lift pump and piping, overflow lines, lube oil cooler, oil fill and drain lines and plugs, flanged connections on oil lines, and lube oil reservoirs where such features exist on the reactor coolant pumps. The drain lines shall be large enough to accommodate the largest potential oil leak.	Not Applicable	The containment is inerted during normal operation. Refer to the UFSAR, Section 9.5.9, describing the Containment Inerting System.

4. Safe Shutdown Timelines

1. Safe Shutdown Timelines Description
2. 72 Hr. Timeline (Figure 4-1, page 1 of 4)
3. Timeline for Operator No. 1 (Figure 4-1, page 2 of 4)
4. Timeline for Operator No. 2 (Figure 4-1, page 3 of 4)
5. Timeline for Operator No. 3 (Figure 4-1, page 4 of 4)

EXELON NUCLEAR LA SALLE STATION
FIRE PROTECTION REPORT (Rev 8)
Figure 4-1, Page 1 of 4
72-Hour Safe Shutdown Timeline
Main Control Room Fire and Evacuation Scenario

[redacted]

EXELON NUCLEAR LA SALLE STATION
FIRE PROTECTION REPORT (Rev 8)
Figure 4-1, Page 2 of 4
72-Hour Safe Shutdown Timeline
Main Control Room Fire and Evacuation Scenario

[redacted]

EXELON NUCLEAR LA SALLE STATION
FIRE PROTECTION REPORT (Rev 8)
72-Hour Safe Shutdown Timeline
Figure 4-1, Page 3 of 4
Main Control Room Fire and Evacuation Scenario

[redacted]

EXELON NUCLEAR LA SALLE STATION
FIRE PROTECTION REPORT (Rev 8)
72-Hour Safe Shutdown Timeline
Figure 4-1, Page 4 of 4
Main Control Room Fire and Evacuation Scenario

[redacted]

Staffing Requirements for Post-Fire Safe Shutdown

With respect to manpower for post fire safe shutdown, the most limiting scenario that can

[redacted]

5. NFPA Code Conformance

    1. LaSalle NFPA Code List
    2. LaSalle NFPA Code Deviation Summary Matrix
    3. Deleted Deviations (Attachment A)

Code of Record Index

NFPA CODE	EDITION	TITLE
4	1971	Organization for Fire Service
4A	1969	Fire Department Organization
6	1974	Industrial Fire Loss Prevention
7	1974	Fire Emergencies Management
8	1974	Management Responsibility for Effects of Fire on Operations
10	1975	Portable Fire Extinguishers
11	1975	Foam Extinguishing Systems
11A	1970	High Expansion Foam Systems
11B	1074	Synthetic Foam and Combined Agent Systems
12	1973	Carbon Dioxide Extinguishing Systems
12A	1973	Halogenated Fire Extinguishing Agent Systems - Halon 1301
12B	1973	Halon 1211 Systems
13	1976	Installation of Sprinkler Systems
13A	1981	Recommended Practice for the Inspection, Testing and Maintenance of Sprinkler Systems
14	1974	Installation of Standpipe and Hose Systems
15	1973	Water Spray Fixed Systems for Fire Protection
16	1973	Foam Water Sprinkler and Spray Systems
20	1974	Installation of Centrifugal Fire Pumps
24	1973	Outside Protection
26	1958	Supervision of Valves
27	1975	Private Fire Brigades
30	1973	Flammable and Combustible Liquids Code
37	1975	Installation and Use of Stationary Combustion Engines and Gas Turbines
50A	1973	Gaseous Hydrogen Systems

Code of Record Index

NFPA CODE	EDITION	TITLE
51B	1971	Cutting and Welding Processes
69	1973	Explosion Prevention Systems
70	1980	National Electrical Code
72D	1975	Installation, Maintenance and Use of Proprietary Protective Signaling Systems
72E	1974	Automatic Fire Detectors
80	1975	Fire Doors and Windows
94A	1975	Installation of Air Conditioning and Ventilating Systems
92M	1972	Waterproofing and Draining of Floors
197	1966	Training Standard on Initial Fire Attack
204	1968	Guide for Smoke and Heat Venting
220	1975	Building Construction - Standard Types
232	1975	Protection of Records
232	1980	Protection of Records
251	1972	Fire Tests, Building Construction and Materials
253	1978	Floor Radiant Panel Test
258	1976	Measuring Smoke Generated by Solid Materials
259	1976	Potential Heat, Building Materials
803	1978	Fire Protection for Nuclear Power Plants
1962	1979	Care, Use and Maintenance of Fire Hose Including Connections and Nozzles
	1976	NFPA Handbook, 14th Edition

LaSalle Station Fire Protection Report Revision 8
LaSalle NFPA Code Deviation Summary Matrix

Deviation Number	Paragraph Number	Paragraph not in Compliance	Justification / Resolution	Resolved or Justified	Action Required
4			LSCS utilized this document as a guide along with many others during the formulation of the fire brigade training program and fire protection program. This document is designed for "Public", Private," and "Industrial" Fire Departments. LSCS has an "Industrial Fire Brigade" which is governed by NFPA 27. NFPA 4 does not apply specifically to LSCS.	x	
4A			This code was not reviewed since it is not applicable to LSCS.	x	
6			This code was not reviewed since it is not applicable to LSCS. This code is no longer published by NFPA.	x	
7			LSCS uses no dedicated fire vehicles.	x	

8	IV IV.d	Loss Evaluation The starting point for the flow of this management information on loss possibilities should be in a summary prepared for each operating department, plant, or property. The summary would start with a list of buildings or operating units. Such a list would not attempt to show every building and would simply ignore small buildings and small operating units which could hardly affect major operations of the enterprise. For each of these buildings or units, the following information should be shown. Approximate Value of Building and Contents. For this purpose it is not necessary to have exact figures, but simply figures close enough to show the order of loss possibility.	Dollar values are not placed on equipment. However, the loss of equipment would be insignificant to the amount of money required to purchase replacement power. This paragraph is not valid for power plant concerns.	x	
10-1	1-4.3 1-4.4 1-4.8 3-2 3-3	Refer to Code of Record. This deviation replaces original deviations 10-1 through 10-4.	In general, fire extinguishers are provided in accordance with NFPA 10 requirements (i.e., conspicuously located, readily accessible, along normal path of travel, mounted at a height in accordance with their style and weight, and appropriate class for the required hazards). In addition, accessibility is informally monitored and corrected by the site Fire Marshal during periodic plant tours, fire extinguishers are not required or credited to ensure post fire safe shutdown, therefore, any minor deviations regarding extinguisher provision are acceptable.	x	

10-6	4-3.1	Frequency. Extinguishers shall be inspected monthly, or at more frequent intervals when circumstances require.	Extinguishers in high radiation areas are inspected on a 24-month schedule. This is an acceptable deviation to ensure personnel exposure is maintained "ALARA."		
10-7	4-4.1	Frequency. Extinguishers shall be subjected to maintenance not more than one year apart or when specifically indicated by an inspection.	1) Extinguishers in high radiation areas are inspected on an 24-month schedule. This is an acceptable deviation to ensure personnel exposure is maintained " ALARA." 2) LaSalle adopts a requirement from NFPA 10-2002 Standard for Portable Fire Extinguishers. The hydrostatic retest shall be conducted within the calendar year of the specified test interval. In no case shall an extinguisher be recharged if it is beyond its specified retest date.	x	
11			This code was not reviewed. There are no foam systems installed at LSCS.	x	
11A			This code was not reviewed. There are no high expansion foam systems installed at LSCS.	x	
11B			This code was not reviewed. There is no synthetic foam and combined agent systems installed at LSCS.	x	

12-4	171	Inspection and Tests. At least annually, all carbon dioxide systems shall be thoroughly inspected and tested for proper operation by competent personnel.	CO2 systems are thoroughly tested every 24 months. An 24-month rather than annual surveillance frequency is an acceptable deviation because: • Every 24 months, a system functional test (i.e., puff test) is performed for both systems protecting both safety and non-safety systems. This includes both total flooding systems and hose reel stations, and ensures the system is thoroughly tested for proper operation. In addition, the valves are verified to cycle properly and all electrical actuation/alarms are checked. • Annual inspections are not practical with the plant running on an 24-month cycle. • The 24-month frequency satisfies current ATR and NEIL, and original Technical Specification, criteria for demonstrating operability. • CO2 systems related to the VD dampers are thoroughly tested every 48 months. Performing a 48-month surveillance rather than annual surveillance frequency is an acceptable deviation because LaSalle damper testing frequencies are based on results of Performance Based Evaluations such as EC 362093 and EC 362029. Each change in surveillance test frequency results in an effectiveness evaluation to review changes in failure rates based on the frequency of the surveillance. Since the failure rates have remained under 1% the deviation is acceptable.	x	

12-8	221

12-8 (Continued)	251	General. The distribution system for applying carbon dioxide to enclosed hazards shall be designed with due consideration for the materials involved and the nature of the enclosure since these items may required various discharge times and rates of application.			
	253	Extended Rate of Application. Where leakage is appreciable and the design concentration must be obtained quickly and maintained for an extended period of time, carbon dioxide provided for leakage compensation may be applied at a reduced rate.			
	2531	This type of system is particularly applicable to enclosed rotating electrical apparatus, such as generators, motors and convertors, but it may also be used on ordinary total flooding applications where suitable.			
	2532	The minimum design concentration shall be obtained within the time limits specified in Section 252.			
	2533	The extended rate of discharge shall be sufficient to maintain the minimum concentration.			
	2534	For enclosed rotating electrical equipment a minimum concentration of 30% shall be maintained for the deceleration period, but not less than 20 minutes.			

12A-1	1140	Duration of Protection. It is important that an effective agent concentration not only be achieved but that it be maintained for a sufficient period of time to allow effective emergency action by trained personnel. This is equally important in all classes of fires since a persistent ignition source (e.g., an arc, heat source, oxyacetylene torch or "deep seated" fire) can lead to a reoccurrence of the initial event once the agent has dissipated. Halon extinguishing systems normally provide protection for a period of minutes but are exceptionally effective for certain applications. Water supplies for standard sprinklers, on the other hand, are normally designed to provide protection for one-half to 4 hours duration but sprinklers may be less effective in controlling many fires. The designer, the buyer, and the emergency force in particular should be fully aware of the advantages and limitations of each, the residual risks being assumed and the proper emergency procedures.	The test results for the QA archives room system indicate that the Halon concentration attained at 13 feet above the floor (the approximate height of the combustibles) was 5.7%. The concentration was maintained above 5% for about 2.5 minutes. Chemetron and Viking provided the information and calculations for the QA archives room, which was approved by NML (the insurance company). In addition, a fire in the QA archives room has no impact on post fire safe shutdown. Therefore, this deviation is acceptable and no further action required. The Halon Concentration Test results are located in procedure LST 84-38.	x	

12A-3	1340	Approval of Installations. The completed system shall be tested by qualified personnel to meet the approval of the authority having jurisdiction. These tests shall be adequate to determine that the system has been properly installed and will function as intended. Only listed or approved equipment and devices shall be used in the system.	The tests performed for the QA archive room system was acceptable to NML. However, they indicated that the Halon 1301 concentration was not adequate at the height of the combustibles. Also, the control panel is not UL listed for agent releasing-type systems. Refer to justification for deviation 12A-1 regarding acceptability of the concentration. The control panel uses a custom design relay panel to release the halon. This entire system is functionally tested periodically to demonstrate operability. Therefore, the control panel is acceptable.	x	

12A-4	1420	Automatic Detection. Automatic detection shall be by any listed or approved method or device that is capable of detecting and indicating heat, flame, smoke, combustible vapors, or an abnormal condition in the hazard such as process trouble that is likely to produce fire.	Smoke detectors for the QA Archives system are not in accordance with NFPA 72E-1974. The detectors for this system are located in the path of the supply airflow into the room (i.e., air velocity greater than 100 fpm). The two smoke detectors were relocated to where the ambient air velocity does not exceed 100 fpm. There is still a strong airflow through the room, however, the configuration is acceptable because the facility is also protected by an on-site fire brigade and a fire in the QA archives room has no impact on post fire safe shutdown.	x	

12A-5	1431	Operation shall be by listed or approved mechanical, electrical, or pneumatic means. An adequate and reliable source of energy shall be used.	There is no indication that the manual/electric discharge devices for the QA archives room are UL or FM Approved. Although they are not UL Listed, these discharge devices have adequate testing and maintenance to ensure system function. Therefore, the deviation is acceptable and no further action is necessary.	x	

12A-6	1434	The normal manual control for actuation shall be located so as to be conveniently and easily accessible at all times, including the time of fire. This control shall cause the complete system to operate in its normal fashion.	The OR system has its manual actuation device located in the protected area. Although the OR systems manuals are located to be seen during egress, they may not be accessible during a fire. However, all paper is located in metal storage cabinets, the room and building is not normally occupied, the facility is also protected by an on-site fire brigade, and a fire in the OR room has no impact on post fire safe shutdown. Therefore, this deviation is acceptable.	x	

12A-9	1440	Supervision. Supervision of automatic systems is advisable where the possible loss because of any delay in actuation may be high and/or where the detection or control systems are so extensive and complex that they cannot be readily checked by visual or other inspection. Where supervision is provided, it shall be so arranged that there will be immediate indication of failure. The extent and type of supervision shall be approved by the authority having jurisdiction.	QA Archives halon release solenoid circuits are not supervised (OR circuits are supervised). This is not a recommendation and not a requirement. Manual release stations are only pilot light supervised. No trouble sounder is activated to call attention to this failure. This deviation is acceptable because: • It is not a requirement that the solenoid circuits be supervised. • Fire detection circuits are supervised with alarm and annunciation in the main control room. The control room operator would send the fire brigade to the area immediately. Any additional action would be done by the fire brigade. • A fire in any area protected by halon has no impact on post fire safe shutdown.	x	
12A-11	1452	Alarms shall be provided to give positive warning of a discharge or pending discharge where a hazard to personnel may exist.	Indicating devices are provided in the corridor outside the QA archives room. This deviation is acceptable because: • The room is normally unoccupied. • The hazard is appropriately labeled with warning signs. • The pre-discharge alarm in the corridor can be heard inside the room.	x	
12A-14	1510	Quantities. The amount of Halon 1301 in the system shall be at least sufficient for the largest single hazard protected or group of hazards which are to be protected simultaneously.	Refer to Deviation 12A-1 for justification.	x	

12A-16	1631	The piping system shall be securely supported with due allowance for agent thrust forces, thermal expansion and contraction and shall not be subjected to mechanical, chemical, vibration or other damage. ANSI B-31.1.0 shall be consulted for guidance on this matter. Where explosions are likely, the piping shall be attached to supports that are least likely to be displaced.	The intent of this section is to ensure that rigid hangers are used. For the QA system piping above the ceiling is supported by C-Clamps and a threaded rod. A rigid hanger is provided at the beginning and end of the pipe. The remainder of the hangers are not rigid hangers. The OR system is adequately supported. Therefore, the supports are acceptable.	x	
12A-17	1653	Discharge nozzles shall be permanently marked to identify the nozzle and to show the equivalent single orifice diameter regardless of shape and number of orifices. This equivalent diameter shall refer to the orifice diameter of the "standard" single orifice type nozzle having the same flow rate as the nozzle in question. The marking shall be readily discernible after installation. The "standard" orifice is an orifice having a rounded entry with coefficient of discharge not less than 0.98 and flow characteristics as given in Table 2. For equivalent orifice diameters, the code given in Table 1 may be used.	The OR systems nozzle codes do not agree with the as-built drawing codes. The nozzles were tested during the pre-op (i.e., as installed condition), therefore, this deviation is acceptable.	x	

12A-23	2420	Solid Surface Fires. Almost all flammable solids begin burning on the surface. In many materials, such as unfilled plastics (without filler materials), surface combustion is the only type that occurs. These fires are readily extinguished with low concentrations, (e.g. 5%) of Halon 1301. Although glowing embers may remain at the surface of the fuel following extinguishment of flames, these embers will be completely extinguished within a short time (e.g. 10 minutes) provided the Halon 1301 concentration is maintained around the fuel for this time. (Called "soaking" time).	The archives room system did not maintain concentration longer than 2.5 minutes at high elevations where hazards are present. See Deviation 12A-1for justification.	x	
12A-24	2510	Halon 1301 concentration requirements established in Sections 2300 and 2400 are converted into agent weight requirements through mathematical computations considering the volume of the hazard and the specific volume of superheated Halon 1301 vapor. In addition to the concentration requirements, additional quantities of agent may be required to compensate for unencloseable openings, forced ventilation or other special conditions which would affect the extinguishing efficiency.	Even though tests were performed and accepted by NML, the test results were not in compliance for the QA systems. See Deviation 12A-1 for justification.	x	

12A-27	1715	At least semi-annually, the weight and pressure of refillable containers shall be checked. If a container shows a loss in net weight of more than 5 percent or a loss of pressure (adjusted for temperature) of more than 10 percent, it shall be refilled or replaced.	Halon tests are conducted annually under LaSalle surveillance LMS-FP-17. See EC 396738 for the evaluation.	x	
12B			This code was not reviewed. There are no Halon 1211 Systems installed at LSCS.	x	
13-3	1-9.1	Working plans shall be submitted for approval to the authority having jurisdiction before any equipment is installed or remodeled.	Viking never submitted new calculations and as-builts to NML for approval prior to the changes. Plans and/or calculations have been reviewed by qualified fire protection engineers. Refer to "Evaluation of LaSalle County Station Fire Protection Water Distribution and Standpipe Systems," dated February, 1984.	x	

13-4	3-7.2	For sprinklers in storage racks, see NFPA Std. rack storage of materials, No. 231C-1974.	Zone 9E (i.e., Old Service Building basement) contains a rack storage system. Review of NFPA 231C was not performed at the request of H.L. Massin, Commonwealth Edison and B.L. Pandit, S&L. Since there is no rack storage in areas containing safety related equipment or cables, or areas containing equipment required for post fire safe shutdown, no further action is required.	x	
13-8	3-10.3.1 3-10 .3.3.2	Auxiliary drains shall be provided when a change in piping direction prevents drainage of sections of branch lines or mains through the main drain valve. When capacity of trapped sections of pipe is more than 5 gallons, the auxiliary drain shall consist of a 1-inch valve complete with nipple and cap or brass plug.	The 1-inch valve is not provided in the plant, e.g., the machine shop sprinkler system. This system provides coverage for different elevations and drains through a plug. Since water damage is not a concern, system is capable of being drained through the plug.	x	
13-9	3-10.4.4	Drain pipes when exposed shall be fitted with a turned down elbow.	Drain pipe extending through wall from the Tech. Support Building is not provided with an elbow. This deviation because it does not impact system operability and/or post fire safe shutdown.	x	

13-10	3-12.1.3	If fittings are of cast iron, extra heavy pattern shall be used in sizes larger than 2" where the normal pressure in the piping system exceeds 175 psi.	Numerous gages on the system side of the alarm check valve sometimes indicate pressures above 175 psig. Refer to PIF L1997-2502 and Chron DG97-001168 for justification. Certain F-1 and G-1 wet pipe Alarm Valves have an alternate detail per mod EC# 338219 to install a 1/8" hole in the clapper for pressure relief. Since the valve was not tested with the hole, the UL listing is void. As evaluated in EC# 338219 and associated safety evaluation screening, the function of the valve is not impaired. Therefore, this deviation is acceptable.	x	

13-11	3-13.1.1 3-13.2.1 3-13.2.2	All valves on connections to water supplies and in pipes to sprinkler shall be approved indicating valves, unless a non-indicating valve, such as an underground gate valve with approved roadway box complete with tee wrench is accepted by the authority having jurisdiction. Each system shall be provided with an approved indicating valve so located as to control all sources of water supply except fire department connections when arranged as specified in 2-7-3. At least one approved indicating valve shall be installed in each source of water supply except fire department connections.	The OS&Y valves are not approved; valves are adequate for service because: • They a commercial grade. • Properly maintained to provide reasonable assurance of operability (i.e., cycled and lubricated annually). • A single valve failure will not result in the failure of the fire protection water supply. Certain F-1 and G-1 wet pipe Alarm Valves have an alternate detail per mod EC# 338219 to install a 1/8" hole in the clapper for pressure relief. Since the valve was not tested with the hole, the UL listing is void. As evaluated in EC# 338219 and associated safety evaluation screening, the function of the valve is not impaired. Therefore, this deviation is acceptable .	x	
13-12	3-14.6.1	On branch lines there shall be at least one hanger on each length of pipe except as provided in paragraphs 3-14.6.2 to 3-14.6.6 inclusive.	Numerous deficiencies exist with missing hangers. Refer to the "Sprinkler System Hanger Walkdown Report" (LAP-220-5, Attachment B, Operability Concern Screening Form), Rev. 0 (1) dated March 26 (27), 1997 for justification of "as-built" hanger deviations for sprinkler systems protecting areas containing safety related equipment. Hanger deficiencies in other areas are acceptable because: • A fire in the area has no impact post fire safe shutdown. • Sprinkler systems are visually inspected periodically. • The sprinkler systems are periodically tested in their "as-built" condition to demonstrate operability.	x	

13-14	3-14.6.3	The unsupported length between the end sprinkler and the last hanger shall not be more than 36 inches for 1 inch pipe or 48 inches for 1-1/4 inch pipe. When these limits are exceeded, the pipe shall be extended beyond the end sprinkler and supported by an additional hanger.	Zones 9C2 and 9C1 have unsupported pipe which requires additional hangers. These zones do not contain safety related equipment and have no impact on post fire safe shutdown. See Deviation 13-12 for justification.	x	
13-17	3-15.8	Sprinklers which are so located as to be subject to mechanical injury shall be protected with approved guards.	Guards are not provided for sprinklers under the day tanks. This deviation is acceptable because the possibility of sprinkler damage is reduced by the limited space beneath the tank.	x	

13-18	4-1.1.1	The basic principles for providing proper protection are namely:…(3) minimum interference to discharge patterns by beams, bracing, girders, trusses, piping, lighting fixtures, and air conditioning ducts. Timbers, uprights, hangers, piping, lighting fixtures, ducts, etc. are likely to interfere with the proper distribution of water from sprinklers. Therefore, sprinklers should be so located or spaced that any interference is held to a minimum. The required clearance between such members and sprinklers is dependent upon the size of the obstruction to water distribution. The clearances should not be less than those specified between sprinklers and truss members in paragraphs 4-2.4.1 and 4-2.4.5.	Sprinkler discharge patterns are partially obstructed in certain areas. Sprinklers are for area protection and not for localized coverage. As such the following deviations were noted: 1) In the technical support building, the muffler and the light will obstruct coverage in both rooms. Building 11 houses the TSC diesel and the security diesel in separate rooms with each room protected by a complete area automatic sprinkler system. There are four heads total in each room. The spacing of the sprinklers within each room provide adequate overlapping coverage for the entire room despite the partial obstruction by the exhaust mufflers. The suspended lighting will not impeded sprinkler discharge. Adequate protection and coverage is provided for the hazard and the rooms. 2) In Zone 6B2, the first sprinkler line south of Column 19 is directly over a cable tray. The third line north of Column 17 is directly over an HVAC duct. In the Radwaste bldg. zone on elev. 706', sprinklers are provided at ceiling level above the cable tray and HVAC duct. Sprinklers on adjacent branch lines are unobstructed and provide adequate coverage to the floor area. This arrangement provides adequate protection at the ceiling level and for the floor area below. 3) In Zone 9C2, HVAC ductwork blocks coverage along Column 29 and from BB to DD. The line at the midpoint between CC and DD is obstructed by an HVAC duct. In the old Service bldg. on elev. 710', the storeroom area is protected by a complete area automatic sprinkler system. There are three branch lines covering the entire storeroom. Sprinklers on the center branch line are situated above HVAC ducts, however, the adjacent branch lines provide adequate coverage for the floor area below. This arrangement provides adequate protection for the storeroom.	x	

13-18 (Continued)			4) In Zone 7C1, a large junction box, located adjacent to the second sprinkler on the line west of Column N, will obstruct coverage. In the HPCS fuel oil storage tank room, complete area automatic sprinkler protection is provided. There is one sprinkler head with a partially obstructed spray pattern in the far west end of the room, however, adjacent sprinklers to the north, south and the east will provide adequate coverage for the hazards, transfer pump & storage tank, and the room. 5) In Zone 7C2, a piece of double-channel unistrut adjacent to the sprinkler on the northwest corner of the room obstructs coverage. In the Div. 2 DG fuel oil storage tank room, complete area automatic sprinkler protection is provided. There is one sprinkler head adjacent to a hanger that may partially obstruct the spray pattern in the far northwest corner of the room. Adjacent sprinklers to the south and east will provide adequate coverage for the hazards, transfer pump & storage tank, and the room. 6) In Zone 7C3, same comment as in (5) above. In the Div. 1 DG fuel oil storage tank room, complete area automatic sprinkler protection is provided. Obstruction by hangers or conduit are minimal and will not impede adequate sprinkler spray coverage for the hazards, transfer pump & storage tank, and the room. 7) In the diesel generator corridor, cable trays prevent coverage to the floor. The Unit 1 and 2 DG corridors are protected by ceiling level automatic sprinklers that extend down into the cable trays and below a large >4' wide HVAC duct. This arrangement provides adequate coverage for the protected hazard which is the cable trays.		

13-18 (Continued)			8) The Unit 1 (A) diesel fire pump room in the lake screenhouse has a fire protection line immediately below the sprinkler line. The A diesel fire pump room is protected by a complete area sprinkler system consisting of two rows of sprinklers. One branch line is situated directly above a 12" fire main and has a partially obstructed head in the vicinity of the muffler. The 12" fire main does not impede the sprinkler spray pattern. Adjacent sprinklers will provide adequate coverage in the vicinity of the muffler. This arrangement provides adequate protection for the hazard and the room. 9) In the Unit 2 (B) diesel fire pump room, the diesel exhaust muffler blocks sprinkler coverage. The B diesel fire pump room is protected by a complete area sprinkler system consisting of two rows of sprinklers. One branch line has a partially obstructed head in the vicinity of the muffler. Adjacent sprinklers will provide adequate coverage in the vicinity of the muffler. This arrangement provides adequate protection for the hazard and the room. 10) In Zone 2G, the railroad access trackway, sprinklers are located 6 inches above the cable tray. Supports for equipment and angle irons also obstruct coverage in the zone. In the Unit 1 Reactor bldg. elev. 710', two rows of sprinklers are provided around the ceiling level opening at the trackway. The sprinklers extend above cable trays and also provide some coverage for the floor area below. This arrangement provides adequate coverage for the ceiling level hazard, i.e., cable tray and also directs partial spray coverage for the floor area. This is considered adequate protection for the hazards in the area.		

13-18 (Continued)			11) The problem also occurs in the cable spreading rooms (401 & 402), but severe coverage will be obstructed and dry spots will exist. A piece of unistrut also obstructs coverage. The Unit 1 and 2 cable spreading rooms are protected by automatic preaction sprinkler systems at the ceiling level and for the cable trays. Minor obstruction by hangers and supports exist, but do not impede water spray coverage for the trays. This arrangement provides adequate protection for the hazard and the rooms. 12) Zones 5B1 and 5B2 have so many obstructions that coverage at the floor is inadequate. To provide coverage on the floor would require a major redesign of the system and would provide additional sprinklers below all obstructions. The Unit 1 and 2 Turbine bldg. Heater bays contain piping, cable trays, and conduit within the shield wall area. Automatic sprinkler systems are provided on all elevations to achieve reasonable protection and coverage based on the overall room and equipment configuration within the zone(s). It is not the intent nor feasible to provide complete coverage for the floor area in these congested areas. The existing coverage is adequate and can be supplemented by the plant fire brigade if warranted. 13) The same situation as in (12) exists in Zones 5B2 and 5C3. The Unit 1 condenser tube pull area (5C3) has automatic sprinkler protection at the ceiling level and is open with no major obstructions to provide adequate spray coverage for the entire floor area below.		

13-19	4-2.1.2 4-2.1.3 4-2.1.4	For ordinary hazard occupancies, except high piled stock, the distance between the branch lines shall not exceed 15 feet. For extra hazard occupancy, the distance between the branch lines and between sprinklers on the branch lines shall not exceed 12 feet. The distance from the walls to the end sprinklers on the branch lines shall not exceed 1/2 of the allowable distance between sprinklers on the branch lines. The distance from the walls to the end branch lines shall not exceed 1/2 the allowable distance between the branch lines.	No corrective action required other than that specified by T.E. Watts' letter to G.J. Diederich, dated April 23, 1984. SEC reviewed hydraulic calculations and as-built drawings to evaluate sprinkler system adequacy (see SEC letters to S&L dated January 11, 1984; January 26, 1984; February 9, 1984; February 16, 1984; and February 29, 1984).	X	
13-20	4-2.2.2 4-2.2.3	For all types of construction the protection area per sprinkler shall not exceed 130 ft^2, except that in buildings used for high piled storage… The protection area per sprinkler shall not exceed 90 ft^2 for any type of building construction, except protection area per sprinkler shall not exceed 100 ft^2 where the system is hydraulically designed.	Minor deviations exist. Same justification as for Deviation 13-19.	X	

13-21	4-2.4.6	Deflectors of sprinklers in bays shall be at sufficient distances from the beams, as shown in Table 4-2.4.6 and Figure 4-2.4.6 to avoid obstruction to the sprinkler discharge pattern. Otherwise the spacing of sprinklers on opposite sides of the beams shall be measured from the beam and the distance shall not exceed 1/2 of the allowable distance between sprinklers.	1) In Zone 4D1, a sprinkler near Column 14 on the last line inside the room is too close to the beam. 2) In Zone 4D2, a sprinkler line that is 11 feet 3 inches west of Column J has a beam obstructing sprinkler(s). 3) In Zone 9C2, the sprinklers located midway between CC and DD are obstructed by a beam. 4) In the technical support center-DG building, a beam obstructs the sprinkler on branch line #2. Relocation/addition of sprinklers to provide proper coverage on both sides of obstruction(s). The station agreed at the August 1985 meeting to contact SNED and NST for further assistance and determine which safe shutdown areas require additional fire suppression capability. Comment: See AIR 373-251-86-00047.	X X X X	

13-21a	4-3.2.2	Deflectors of sprinklers under beams shall be located 1 inch to 4 inches below beams and not more than 20 inches below combustible or noncombustible roof or floor decks.	1) In Zone 4D1, the sprinkler head installed 4'-1" south of Column 15 and 13' west of Row L is located approximately 27 inches below the noncombustible floor deck. (Ref. J-2910 Drawing No. 15 and Structural Drawing No. S-577).	X	
13-22	4-3.4.1	Deflectors of sprinklers in bays formed by members, such as beams framed into girders, resulting in panels up to 300 ft^2 shall be located 1 inch to 18 inches below combustible or non combustible roof or floor decks.	1) In Zone 4D1 on the first line east of Column N, the second sprinkler counting from the south has a deflector at 3 feet - 4 inches down. The third sprinkler, counting from the south, has a deflector 1 foot - 11 inches down. 2) On the first line west of Column L, the second sprinkler counting from the north as a deflector at 2 feet - 2 inches below the ceiling. 3) The first sprinkler from the south on the first 2 lines west of Column J has a deflector 2 feet - 1 inch down.	X x x	

13-22	4-3.4.1 (Cont'd)		The above sprinklers should be relocated to within 18 inches allowable: relocation of sprinkler to avoid obstruction(s).		
	4-3.4.2	Deflectors of sprinklers under the members, such as under beams framed into girders, forming panels up to 300 ft^2 shall be located 1 inch to 4 inches below such members and not more than 22 inches below combustible or non-combustible roof or floor decks.	4) Zone 4D2: All sprinklers adjacent to Column 16 and those adjacent to Column 17 have deflectors 3 feet - 2 inches below ceiling, and must be relocated to within 18 inches allowable.	x	
			5) Zone 5B3: Sprinklers west of Column 5 have deflectors that are 36 inches below the ceiling. Sprinklers provided under beams with deflectors 28 inches down. The sprinklers on the line running north and south are 24 inches down.	x	
			Above sprinklers should be relocated and additional sprinklers provided for the area east of Column 5.		
			6) Zone 9C2: All sprinkler deflectors are 25 inches below ceiling. Should be relocated to within 18 inches of ceiling.	x	
			7) Diesel fire pump rooms deflectors are 25-1/2 inches below ceiling; should be relocated.	x	
			8) Zones 5B1 and 5B2: Deflector distances from the grated ceiling are acceptable and no corrective action is required. However, numerous sprinklers require heat collector plates. These plates are required to be placed under the grating.	x	

13-22	4-3.4.2 (Cont'd)		At the August 1985 meeting, the station agreed to contact SND and Nuclear Services Technical for further assistance and determine which safe shutdown areas require additional fire suppression capability. Comment: See AIR 373-251-86-00047. For the Diesel Fire Pump Rooms in the screenhouse, Calculation L-003384 and EC # 373385 provide the basis for acceptance of the sprinkler locations.	x	

13-23A	4-4.13	Ducts. Sprinklers shall be installed beneath ducts over four feet wide unless ceiling sprinklers can be spaced in accordance with Table 4-2.4.6.	For the MAF ventilation system, sprinklers are installed above HVAC ducts greater than 48” in two places in MAF 2nd floor . The MAF HVAC is served by a 3” diameter sprinkler inlet header with ½” nozzles (18 total) in two parallel 1 inch to 1-1/2” inch diameter branch lines protecting the north and south sides of the HVAC units. The sprinkler system is designed to use 235 gallons of water with a sprinkler density of 0.1 gpm per sq. feet, although the MAF is not a credited fire zone in the FPR for safe shutdown. Drawing M-6409 shows the Main Access Facility (MAF) HVAC room is located on the 2nd Floor (concrete floor) with a south wall (leading to the outside). The east and west walls also lead to the outside. The north wall consists of a two hour fire barrier, which restricts fire spread to the rest of the MAF. The north wall provides more than adequate coverage for the combustibles in the HVAC room. All the HVAC systems are mounted on 3.5 inch thick solid concrete pedestals that would protect the concrete floor from any fire under the HVAC system. The compressors are mounted on the pedestals underneath the units but the compressors contain between 2 and 5 gallons of oil each in well contained sumps. There is one 6” diameter floor drain in the room. Based on the configuration of the barriers and the amount of combustibles under the HVAC, the lack of additional sprinkler heads under the HVAC will not result in a spread of fire to other areas of the MAF.		

13-23	4-4.11	Sprinklers shall be installed under decks and galleries which are over 4 feet wide. Slatting of decks and walkways or the use of open gratings as a substitute for such sprinklers is not acceptable.	The Unit 1 Turbine Bldg. Heater bay contains piping, cable trays, and conduit within the shield wall area. Automatic sprinkler systems are provided on all elevations to achieve reasonable protection and coverage based on the overall room and equipment configuration within this zone. It is not the intent nor feasible to provide complete coverage for the floor area in this congested area. There are no safe shutdown components or cables in this zone, and the site fire brigade can supplement the system. Therefore, the existing coverage is adequate.	x	
13-24	4-5.4	Sprinkler deflectors shall be at a distance from walls and ceilings not more than 6 inches or less than 4 inches unless special construction arrangements make a different position advisable for prompt operation and effective distribution.	The sidewall sprinklers in Office #153 (Fire Zone 9C2) are less than 4 inches from the ceiling. This minor deviation is acceptable because a fire in this room has no impact of post fire safe shutdown.	x	

13-26	7-1.2	Unless an alternate means of identification is provided by owner, the installer shall properly identify a hydraulically designed automatic sprinkler system by a permanently attached placard indicating the location, and the basis of design. Such signs shall be placed at the controlling alarm valve, or dry pipe valve, for the system containing the hydraulically designed layout.	Table provided to station is an alternative means. Letter between T.E. Watts and G. Diederich on April 23, 1984 documented this response to paragraph 7-1.2. No further action required. All sprinkler systems are identified by system number and location. Hydraulic information is maintained in the "Fire Protection Program Documentation Package." Reference "Evaluation of LaSalle County Fire Protection Water Distribution and Standpipe System," Report dated February 1984.	x	
13-27	7-2.4.5	The total quantity of water and the pressure required shall be noted at a common reference point for each system.	Table discussed above supplies such information. No further action required. Refer to Deviation 13-26 for justification.	x	
13-28	7-2.3 7-3.3	The summary sheet shall contain the following information, when applicable. Detailed work sheets or computer printout sheets shall contain the following information…	Minor variations to list of items: however, intent of code was met. No further action required. Refer to Deviation 13-26 for justification.	x	
13-30	7-3.5	The following standard abbreviation and symbols shall be used on the calculation for M:…	Minor deviations; intent has been met.	x	

13-32	3-6.1 4-2.2.3	Refer to code. Refer to code.	The extra hazard sprinkler systems installed in the Unit 1 and Unit 2 Motor Driven Reactor Feed Pump (MDRFP) Rooms deviate because three sprinkler heads in each room are fed from a 1.25 inch pipe and the "area of protection" at one location in each room exceeds 90ft2. Refer to Chron # DG 97-001119 for details and the review that determined this deviation is acceptable.	x	

13A-2	2-4.2.1	The pump should be operated every week at rated speed	The pumps are operated and inspected monthly. Refer to Downers Grove Doc ID #DG99-000027 for justification.	x	
13A-4	2-6 2-6.1	Riser Flow Tests Water flow tests should be made quarterly from water supply test pipes (main drain valves). Test at the main drain valves includes noting of pressure gage readings with unrestricted flow of water with the drain valve wide open, as compared with the reading with the drain valve closed. If the readings vary materially from those previously established or from normal readings, the condition should be investigated. These tests are intended to show whether or not the normal water supply is available on the system and to indicate the possible presence of closed valves or other obstructions in the supply pipe.	Main drain tests are performed on an annual basis. Refer to Downers Grove Chron Letter 214483, dated 7-7-95, for deviation justification.	x	

13A-8	2-7.3.1	Quarterly, each post indicator valve should be opened until spring or torsion is felt in the rod assuring that the rod has not become detached from the valve. Valves should be backed on-quarter turn from the wide open position to prevent jamming.	Post-indicator valves are cycled annually. This deviation is acceptable because positions are administratively controlled and periodically inspected, and annual cycling satisfies ATR, NEIL, and original Tech Spec criteria for demonstrating operability.	x	
13A-10	2-7.4.2	The location of each such valve should be clearly indicated by a sign on a nearby wall or by a marker. The sign should also indicate direction of valve opening, clockwise or counter-clockwise.	There are no indicating signs. This is a recommendation, not a requirement of the code. Post indicators for valves are painted red and have information on the valve. In addition, valves are periodically inspected, roadway boxes are verified readily accessible, trained fire brigade members and system operators are available and familiar with valve locations, and all valves also operate in a consistent manner and open in the same direction. Therefore, this deviation is acceptable.	x	

13A-13	3-3.1.1	A representative sample of sprinklers should normally consist of a minimum of two per floor or individual riser, and in any case not less than four, or 1% of the number of sprinklers per individual sprinkler system, whichever is greater.	Spare sprinkler heads are not maintained at the riser. They are maintained in the warehouse (i.e., stores). Therefore, since the sprinklers are readily available, the intent of this recommendation is satisfied, and the deviation is acceptable. A representative sample of sprinkler heads of the same size and temperature range as the ones installed is maintained in the storeroom. However in some cases the sprinkler vendor may discontinue a sprinkler head. In this case an acceptable replacement sprinkler head with an equivalent temperature range and size is procured	x	
13A-15	4-1.1	The sprinkler contractor provides instructional literature describing operation and proper maintenance of fire protection devices. This instructional literature should be posted near the system riser.	Literature is not posted near system. This deviation is acceptable because the operator has the procedure and other references available file.	x	

13A-17	4-4	Gages			
	4-4.1	Gages on wet-pipe sprinkler systems should be checked monthly to ensure that normal water supply pressure is being maintained. Gages on pre-action and deluge systems should be inspected weekly to ensure that normal air and water pressures are being maintained.	Gages are on all sprinkler system types are checked during quarterly surveillance's. An independent air compressor is provided for each pre-action system to provide supervise air pressure and piping integrity. Loss of air pressure is continuously monitored by the plant, and failure of the air compressor system would not prevent the suppression system from operating to maintain minimum air pressure. Therefore, inspection for minimum air pressure has no impact on the system performance and is acceptable. Over pressurization of wet pipe systems is addressed in the justification for Deviation 13-10. Therefore, quarterly checks are an acceptable deviation.	x	

13A-20	4-12 4-12.1	Deluge, Pre-action and Automatic On-Off Pre-action Systems Complete charters are furnished by the installing company, showing the proper method of operating and testing these systems. Only competent mechanics fully instructed with respect to the details and operation of such systems should be employed in their repair and adjustment. It is highly advisable for the owner to arrange with the installing company for at least annual inspection and testing of the equipment.	Vendor manuals are kept on file at the station and are referenced in various procedures. Station personnel are trained to perform surveillance/maintenance of these systems. Vendors do not do inspection/testing. Station personnel are adequately trained.	x	
13A-21	4-12.3	Test detection systems semi-annually and alarms quarterly according to the procedures suggested by the manufacturer.	The Diesel Generator CO2 total flooding detection systems are tested annually. Refer to Downers Grove Doc ID #s DG-99-000028 and 000145 for justification. All other detection systems are tested every two years. Refer to EC 394900.	x	

13A-22	5-4.2	Sprinkler systems should be examined internally at periodic intervals for obstructions. Where unfavorable conditions such as those itemized above are found, the system should be examined at 5-year intervals after installation or possibly sooner. Where conditions are favorable, dry-pipe systems should be examined at 10-year intervals after installation.	No procedure currently exists for internal examinations. This deviation is acceptable because: • This is a recommendation, not a requirement of the code. • Obstruction inspections are conducted on an as-needed basis as indicated by unusual performance of normal surveillance and testing. • All flow test results are reviewed to identify conditions that may warrant further investigation.	x	
	5-4.3	Dry-pipe systems found obstructed should be flushed and re-examined at intervals of not more than five years.	• All fire suppression equipment is subject to impairment procedure, which would require appropriate testing and investigation after any impairment. • Underground piping is flushed periodically by opening hydrants along the yard loop. • Internal examinations would be made when needed as indicated by the surveillance program.	x	

13A-23	5-7

13A-25	5-8.4	The fire pump should be operated for the large volume flows, as maximum pressure is desirable. Burlap bags should be used to collect dislodged material as is done in the investigation of yard mains, and each flow should be continued long enough to show the condition of the piping interior. After a test, leave all valves open and locked or sealed.	Burlap bags are not used for fire pump flow testing. The justification for deviation 5-8.3 is also applicable to this deviation.	x	

13A-28	7-3	Parts	Action	Frequency	Section Nos.	x	
		Water Flow	Inspection	Monthly	4-12.3		
		Alarms	Inspection	Monthly	2-5.1		
		Hydrants	Test (Open & Close)	Semi-Annual	2-5.3		
		Maintenance					
		Dry Pipe Valve					
		Air Pressure	Inspection	Weekly	Chapt.4		
		Water Pressure					
		Enclosure	Inspection	Daily-Cold	4-8.2.5		
		Weather					
		Priming Water	Inspection	Quarterly	4-8.2.8		
		Level Dry Pipe Valves	Trip Test	Annual	1-6.1		
		Spring					
		Dry Pipe Valves	Full Flow Trip Test	3 yrs.-	4-8.4		
		Spring					
		Low Point Drains	Test	Fall	4-8.2.8		
		Quick-Opening Devices	Test	Semi-Annual	4-11.1		
		Pump					
		Centrifugal	Test-Operate	Weekly	2-4.2.2		
		Test-Reduced Water		Weekly	2-4.2.2		
		Pressure Start		Weekly	2-4.2.2		
		Test Capacity		Yearly	2-4.2.5		

13A-28	7-3 (Cont'd)	**Remarks:** Inspection and maintenance records are maintained in station files. Station programs do not exactly comply with Table 7-3; however, records are kept of all maintenance inspection and testing.—Testing frequencies are in compliance with Table 7-3, except in regard to flushing pipe, main drain test, valve inspections and gauge inspections. Refer to deviations 13A-4, 13A-8, 13A-10, 13A-17, 13A-22 for details on variances from Table 7-3. 7-3. Testing frequencies are revised based on the results of Performance Based Evaluations that are prepared in accordance with company procedures. Performance Based methods are used for extending surveillance frequencies based on test results and test history. Each change in surveillance test frequency results in an effectiveness evaluation to review changes in failure rates based on the frequency extension. Extensions can only be granted for up to the next NFPA maintenance period (e.g. weekly to monthly or semi-annual to annual).		x	
14-1	161	Closets and cabinets used to contain fire hose shall be sufficient to permit the installation of the necessary equipment at hose stations, and so designed as not to interfere with the prompt use of the hose valves, the hose, and other equipment at the time of fire within the cabinet, the hose valves shall be located such that there is at least 1 inch between any part of the cabinet and the handle of the valve when the valve is in any position from fully open to fully closed.	The following hose stations deviate from the minimum clearance requirements: F-118; F-178; F-309; F-402, F-243, FB241, F-168; F-313; FB-382 Water is flowed from all hose stations at lest once every 3 years. According to the station Fire Marshal, this surveillance has demonstrated that there are no hose stations at LaSalle that cannot be readily opened due to the clearance (or lack thereof) between the valve handle and the cabinet (or hose reel). Therefore, this deviation is acceptable.	x	

14-2	322	The number of hose stations for Class II service in each building at each section of a building divided by firewalls shall be such that all portions of each story of the building is within 30 feet of a nozzle when attached to not more than 100 feet of hose.	The following hose stations should have additional 50 feet of listed hose: F-159; F-359; F-400 F-160; F-360; F-200; F-397 F-161 requires an additional 25 feet of hose. The following zones require an additional hose stations within 100 feet of listed hose, at location specified below: 5B1 at Columns S&10 Elev. 662' - 4" 5B1 at Columns X&8 Elev. 710' - 6" 5B2 at Columns W&19 Elev. 710' - 6" 5B2 at Columns S&20 Elev. 662' - 4" The station stated at the August 1985 meeting that they will walkdown the identified areas to verify whether additional hose and hose stations are required. Station will advise SNED of findings. Comment: See AIR 373-251-86-00046.	X	
14-5	413	Valves of approved indicating type shall be provided at the main riser for controlling branch lines to hose outlets so that in the event that the branch is broken during the fire, the fire department may shut off this branch, conserving the water for their use.	Isolation valves are not listed. They are 150# Crane Co. gate valves. Valves are adequate for use. The justification for Deviation 13-11 is also applicable to this deviation. Therefore, this deviation is acceptable.	x	

14-6	421	Each hose outlet provided for the use of building occupants (Class II & III services) shall be equipped with not more than 100 feet of approved small fire hose attached and ready for use.	Hose is not limited to 150'. Hose stations are not for use by building occupants. Rather, they are only to be used by fire brigade members trained to use the available equipment, as necessary, to address a fire. The 150 feet of hose is required in some locations to allow coverage of all floor areas. Therefore, this deviation is acceptable.	x	
14-8	432	Each rack for small hose shall be provided with a label affixed to include "Fire Hose for Use by Occupants" and operating instructions.	The station stated at the March 1985 meeting the current hose reels are adequate for their intended use. Signs are not provided. A trained fire brigade is established to fight fire. Therefore, this deviation is acceptable.	x	

14-9	442	Where the pressure at any standpipe outlet exceeds 100 psig, an approved device shall be installed at the outlet to reduce the pressure with required floor at the outlet 100 psig.	Approved pressure reducing devices should be installed. The plant has a fire brigade trained in use of high-pressure fire hoses up to 200 psig; two fire brigade members can man the fire hose; nozzles used are fog type except in fuel storage area. The station stated at the August 1985 meeting they are aware of the available pressure, but do not agree that pressure-reducing devices are needed. The station stated two trained fire brigade members can safely handle hose equipped with the fog-type nozzles. The refueling floor does not have fog-type nozzles because of the potential criticality problem; however, the available pressure does not exceed 100 psi. The station considers this deviation resolved with no further action required.	x	
14-10	451	Nozzles shall be of an approved type and have a discharge (K) coefficient not exceeding 7.5.	Nozzles at LSCS are Elkhart with a discharge coefficient of 12.5. NFPA 14 assumes that 1-1/2 inch hoses are used by untrained building occupants. As a result, the maximum flow is restricted. Plant personnel are instructed not to use fire hose. Only trained fire brigade members use the fire hose. They are trained to handle larger flows such as these that flow through a nozzle with a K over 7.5. Therefore, this deviation is acceptable.	x	

14-12	621	Connections to each water supply except to fire department connections, shall be provided with an approved indicating type valve and check valve located close to the supply, as at tank, pump and in connection from waterworks system.	Non-listed valves are used. Valves are adequate for use. NRC and NML are aware of condition. Refer to Deviation 13-11 for justification. Therefore, this deviation is acceptable.	x	

14-13	622	Valves shall be provided to permit isolating a standpipe without interrupting the supply to other risers from the same source of supply.	The following hose stations have standpipes without isolation valves: F-121; F-126; FB-117; F-114; FB-110; F-104; F-321; FB-317; FB-405. The station has a documented impairment program and administrative control requirements that require compensatory measures when systems are impaired. The compensatory measures are an adequate means of temporary fire protection when areas are without hose station protection. Therefore, this deviation is acceptable.	x	

14-14	624	Where the standpipes are supplied from a yard main or header in another building, the connection shall be provided with an approved indicating type valve outside at a safe distance from the building or at the header.	Non-listed valves are used throughout the plant. Valves provide indication and are adequate for service as designed. Refer to Deviation 13-11 for justification. Therefore, this deviation is acceptable.	x	
14-14	625	Valves shall be of the approved extra heavy flanged pattern where the system pressure exceeds 175 psig.	Normal system working pressures do not exceed 175 psi except for at elevation 663' and 677' in the Turbine Building where pressures could reach up to 186 psig (since the fire pumps can only produce approximately 164 psi at churn). This is less than 10% over the maximum required 175 psig. The fire protection system pressure is monitored by various alarms that alarm in the control room. Therefore, any potential failure due to excessive pressure will be promptly identified and acted upon. Therefore, this deviation is acceptable.	x	
14-15	651	The pipe hangers shall be approved type, so arranged that they will sustain the loads and retain the piping securely in position. They shall be used in sufficient number to prevent vibration in the piping when the standpipe is in use.	The following hose stations appeared to be inadequately supported: F-180; F-203; FB-214; FB-217; FB-227; FB-244; F-301; F-362; FB-380; FB-391 However, the station's hangers are quality hangers of the same variety supplied for the nuclear safety-related piping. Moreover, the piping has not experienced any water hammer and is designed to sustain dynamic loads. The station considers this deviation resolved.	x	

14-16	661	An approved 3-1/2 inch dial spring pressure gage shall be connected with each discharge pipe from fire pump and public waterworks, at the pressure tank, at the air pump supplying pressure tank, and at the top of each standpipe.	The main purpose of gauges is verification of proper pressure during the water flow test (for acceptance of installation). Temporary gages may be installed during flow testing, as necessary. Therefore, this deviation is acceptable.	x	
15-1	2031	Care shall be taken in the application of nozzle types. Distance of "throw" or location of nozzle from surface shall be limited by the nozzle's discharge characteristic. Care shall also be taken in the selection of nozzles to obtain waterways which are not easily obstructed by debris, sediment, sand, etc. in the water. Requirements for strainers and their placement are described in 2110 and 4110.	Single nozzle covering entire height on the SAT's and the Unit 1 & 2 auxiliary transformers is suspect. However, The purpose of the deluge system is to contain and control a transformer fire (i.e., limit damage to a single transformer) in combination with barriers installed between the transformers and manual fire suppression capability. In addition, a fire involving an outside transformer has no impact on post fire safe shutdown. Therefore, the "as installed" configuration / deviation is acceptable, and modifications to assure the system completely meets NFPA 15 design criteria will not provide a substantial increase in plant safety.	x	

15-2	4033b(3)	Spherical or horizontal cylindrical surfaces below the vessel equator cannot be considered wettable from run down, unless engineering data to the contrary is available.	There are no nozzles located below the bottom half of the hydrogen seal oil tanks. However, the deviation is acceptable because: • A fire in the area containing the oil tank has no impact on post fire safe shutdown. • The principle purpose of the water spray system is to control a postulated fire and prevent its spread to adjacent safety related areas, and • Water spray nozzles are provided above and around the tank. Therefore, the present system is adequate for its purpose and modifications to assure the system completely meets NFPA 15 design criteria will not provide a substantial increase in plant safety. See AIR 373-251-00045 for additional information.	x	

15-3	4033b(4)	Where projections will obstruct water spray coverage, including run down or slippage on vertical surfaces, additional nozzles shall be installed around the projections to maintain the wetting pattern which otherwise would be seriously interrupted.	Two obstructions exist at the hydrogen seal oil unit (Unit 1) Fluorescent light located underneath nozzle(s). 2) Platform obstructs nozzle(s) discharge pattern. . Also, in Zone 5B3, two pipes obstruct nozzle discharge to the turbine oil tanks. However, the deviation is acceptable because: • A fire in the area containing the oil tanks have no impact on post fire safe shutdown. • The principle purpose of the water spray system is to control a postulated fire and prevent its spread to adjacent safety related areas, and • Water spray nozzles are provided above and around the tank. Therefore, the present system is adequate for its purpose and modifications to assure the system completely meets NFPA 15 design criteria will not provide a substantial increase in plant safety. See AIR 373-251-00045 for additional information.	x	

15-4	4033d(1)	Transformer protection shall contemplate essentially complete impingement on all exterior surfaces, except underneath surfaces which in lieu thereof may be protected by horizontal projection. The water shall be applied at a rate not less than 0.25 gpm/ft^2 of projected area of rectangular prism envelope for the transformer and its appurtenances and not less than 0.15gpm/ft^2 on the expected non-absorbing ground surface area of exposure. Spaces greater than 12 inches in width between radiators, etc., shall be individually protected.	The deluge systems protecting the transformers are not designed to transmit required density and provide water impingement to all exterior surfaces. Accessory equipment is not wetted. The justification for Deviation 15-1 also applies to this deviation.	x	

15-6	4072	Spray nozzles may be placed in any position necessary to obtain proper coverage of the protected area. Positioning of nozzles with respect to surfaces to be protected, or to fires to be controlled or extinguished, shall be guided by the particular nozzle design and the character of water spray produced. The effect of wind and fire draft on very small drop sizes or on larger drop sizes with initial nozzle velocity shall be considered, since these factors will limit the distance between nozzle and surface, and will limit the effectiveness of exposure protection, fire control or extinguishment. Care shall be taken in positioning nozzles that water spray does not miss the targeted surface and reduce the efficiency or calculated discharge rate. Care shall also be exercised in placement of spray nozzles protecting pipe lines handling flammable liquids under pressure, where such protection is intended to extinguish or control fires resulting from leak or ruptures.	Minor deficiencies were identified: 1) Last nozzle for the Unit 1 DG corridor cable trays (located between Columns F and G) is too far from the wall to provide complete coverage. 2) In Fire Zone 5C11 (Unit2 EDG Corridor) a nozzle located at Column R and 22 is approximately 3 feet - 0 inches away from the end of the cable tray. 3) The Unit 1 hydrogen seal oil unit has one nozzle set at a different angle than all the other nozzles. Recommend repositioning the nozzle. 4) The Units 1 & 2 cable spreading room nozzles are installed at various angles. 5) A tray located between Column 14 and 15 and L and N in Zone 4F3 is not covered, also tray 234E1YK, located between Columns L and J and Column 14 is not completely protected. 6) The transformers varied between similar transformers. 7) In fire zone 5C11 (Unit 1 DG Corridor) the westernmost sprinkler head is partially blocked on the south side by a conduit. This is acceptable because the sprinkler addresses the hazard, which is the potential for fire spread from the bus duct north and west of the sprinkler and above the double door leading into the corridor. However, these deviations are acceptable because: • A fire in the area containing the lube oil, hydrogen seal oil tanks, and transformers have no impact on post fire safe shutdown. • For the Cable Spreading Room, Diesel Corridor and Over Lab Area (4F3), redundant post fire safe shutdown capability independent of the zone is provided, and the arrangements provide adequate protection for the hazards and the zones. • The principle purpose of the water spray systems are to control a postulated fire and prevent its spread to adjacent safety related areas. Therefore, the present systems are adequate for their purpose and modifications to assure the system completely meets NFPA 15 design criteria will not provide a substantial increase in plant safety.	x	

15-8	4082(D)	Provision shall be made for test gauges at or near the highest or most remote nozzle on each major separate section of the system. At least one gauge connection shall be provided at or near the nozzle calculated as having the least pressure under normal flow conditions.	Gauges are not required but a tap is required in case pressure measurements are needed. Deviation is acceptable because a tee with a gauge can be placed at an elbow, as necessary.	x	
15-9	4101	System piping shall be adequately supported. All supports in the fire area should be protected by the system. In any area where possibility of explosion may be recognized, special care shall be taken to support the piping from portions of the structure least unable to disrupt.	Deviations in the following: 1) Hanger nut on hanger immediately outside the Unit 2 DG corridor fire doors, in Zone 3G, is backward. The nut must be installed underneath the pipe ring. 2) Hanger is missing on the line at Column L between Column 13 and 14 (Zone 4F3). 3) Hangers on the drop for the line at Column 17 between Columns I and L must be relocated to avoid obstructing spray discharge (Unit 2 cable spreading room). 4) The drop lines for the Unit 2 H_2 seal oil unit are not supported. 5) A hanger for a line in the Unit 1 cable spreading room located at Column 14 between Column J and L was moved and strapped to the pipe. 6) A support for a unit cable spreading room drop line is missing at location - between 15 and 16 and L and J. Refer to Deviation 13-12 for justification of hanger deficiencies. Therefore, these deviations have been corrected AND / OR are acceptable.	x x x x x x	

15-11	6012	Strainers, except individual nozzle strainers, shall be thoroughly inspected after each operation or flow test and cleaned if necessary. Routing inspection and cleaning shall be performed annually and more frequently if necessary, based on experience.	Strainers are inspected periodically (i.e., once per 3 years). This satisfied the intent of the requirement and is acceptable.	x	
15-12	6013	All piping shall be examined at regular intervals to determine condition and proper drainage. Frequency of inspections will be dependent upon local conditions and shall be at intervals of not more than 1 year.	Piping is inspected every 18 months. This deviation is acceptable because it satisfies NEIL, ATR, and previous Tech Spec inspection criteria for demonstrating operability.	x	
15-15	6016	Manual tripping devices and valves, including OS&Y gate and post-indicator valves, shall be operated at least annually.	Tripping devices are not tested annually, but every 18 months. This deviation is acceptable because the 18 month frequency satisfies NEIL, ATR, and previous Tech Spec inspection criteria for demonstrating operability.	x	

15-16	6018	All spray nozzles shall be inspected for proper positioning, external loading, and corrosion, and cleaned if necessary at intervals of not more than 12 months or more frequently if necessary, based on experience. Local conditions may require such inspection and cleaning more frequently and may require internal inspection. After each operation open spray nozzles equipped with individual screens shall be removed and the spray nozzle and screen cleaned, unless observation under flow conditions indicates this is not necessary.	Piping and nozzles are inspected at 18 month intervals. This is deviation is acceptable because he frequency satisfies NEIL, ATR, and previous Tech Spec inspection criteria for demonstrating operability.	x	
15-17	6019	Underground lead-in connections to system risers shall be flushed at least annually, in accordance with 5001.	Mains and lead-ins are flushed annually. All underground piping and lead-ins are subject to the site impairment procedure, so any work, damage or repairs that may introduce foreign materials will be reviewed by station fire protection, and proper protection implemented. Therefore, this deviation is acceptable	x	

15-18	7010	Hydraulic calculations shall be prepared on forms that include a summary sheet, deleted work sheets, and a graph sheet.	Although the calculation documentation may not fully comply with this requirement, the calculation results and design drawings were reviewed and found to meet the intent of the code by providing the necessary data in an alternate format. Reference "Evaluation of LaSalle County Station Fire Protection Water Distribution and Standpipe System," Report dated February, 1984. Therefore, this deviation is acceptable. In addition, new Hydraulic Calculation (L-002808) demonstrates the flow and pressure are met from the discharge of the Fire Pumps through the underground header loop and up to each of the main alarm valves in sprinkler systems installed at LaSalle Station. Calculation L-002808 complies with the current station procedures for preparation of design analysis. These procedures are more stringent than the NFPA requirements for summary sheets, deleted worksheets and graph sheets. Therefore LaSalle Station is in compliance with the intent of the NFPA code.	x	
15-21	8051	The heat detection system shall be designed to cause actuation of the special system water control valve within 20 seconds under expected fire conditions. Under test conditions when exposed to a standard heat source, the system shall operate within 40 seconds. These are to be considered as maximum response times subject to the considerations described in 8011 and 8031.	Unit, auxiliary, and system transformers have no sensitivity measurement, as well as the turbine oil tanks and the high and low pressure turbine bearings. The fire detection circuits at LSCS are deliberately desensitized in order to override usual ambient conditions. Therefore, this deviation is acceptable.	x	
16			This code was not reviewed. There are no foam-water sprinkler and spray systems installed at LSCS.	x	

20-1	2-6.1	A pressure gauge having a dial not less than 3-1/2 inches in diameter shall be connected near the discharge casting with a 1/4-inch gage valve.	It was recommended that the gauge be installed to the discharge casting, this would simplify readings, but the existing gauge is adequate. The following report explained justification for no corrective action. The report "Evaluation of LSCS Fire Protection Water Distribution and Standpipe System" was accepted by the NRC.	x	
20-2	2-9.4	A listed check valve shall be installed in the pump discharge assembly.	Existing check valve is adequate and accepted by NRC and NML. In addition to the justification provided in Deviation 15-1, the simpler direct attachment to the discharge casting lessens the possibility of failure of the pipe and fittings between the casting and the gauge as installed. Therefore, this deviation is acceptable.	x	
20-3	2-9.5	A listed indicating gate valve shall be installed on the fire protection system side of the check valve.	Existing valve, a Crane Co. (J-2565-02) valve, is adequate and acceptable to NRC and NML. The gate valve is used for discharge side only, since inlet side for vertical shaft turbine type pump is submerged. Therefore, this deviation is acceptable.	x	
20-4	2-9.7.1	A clearance of not less than one inch shall be provided around pipes which pass through walls or floors.	Installation did not maintain required clearance. Existing piping is relatively flexible and can accommodate differential movement without overstressing pipe. Therefore, this deviation is acceptable.	x	

20-6	2-10.3.3	Where the hose valve header is located outside, or at a distance from the pump, and there is danger of freezing, a listed indicating gate valve and drain valve or ball drip shall be located in the pipe line to the hose header. The valve shall be at a point in the line close to the pump.	Valves are not listed; no ball drop valve, but a drain valve exists. Valves are adequate. Refer to Deviation 13-11 for justification on non-listed valves.	x	
20-10	8-2.7.4	An outlet shall be provided for the waste water line from the heat exchanger, and the discharge line shall not be less than one size larger than the inlet line. The outlet line shall be short, shall provide discharge into a visible open waste cone, and shall have no valves in it.	No open cone provided. Sight glass provided to verify flow. Therefore, deviation is acceptable.	x	
20-12	9-1.5.1(e)	To assure dependable operation of the engine and its controller, the controlling equipment shall be arranged to automatically start the pump at least once a week.	Fire pump is tested monthly. Refer to Deviation 13A-2 for justification.	x	

20-12a	9-1.5.1(c)	Each controller in multiple pump units shall incorporate a sequential timing device to prevent any one pump from starting simultaneously with any other pump. If water requirements call for more than one pump to operate, the units shall start at intervals of five to ten seconds…"	The LaSalle DFP start logic is staged by sensed pressure, with the first DFP starting at 123 psig, and the second one at 118 psig. This is not sequencing by a specific time (5 to 10 seconds). Instead, the LaSalle DFP and sequencing logic has been specified by it's current pressure staged logic since initial plant licensing, and is currently required by the Technical Requirements Manual (TRM). Based on the current LaSalle sequencing logic, it has been determined that water hammer or piping pressure transients are not a significant potential. This is due to the slow start ramps of DFP versus electric motor driven pumps, and that a pump start on demand involves an open pipe system with pressure dropping. In addition, none of the hydraulic conditions which lead to water hammer is present, and piping overpressure protection (relief valves) were below the piping design pressures. Instrumented monitoring of a DFP pump start was performed, recording the pump start time, which exceeds 4-5 seconds (as confirmation that the start ramp is much slower than typically associated with water hammer conditions, of less than 1-2 seconds). See AT # 846788 for more discussion.	x	
20-13	12-1.1 12-1.2 12-1.4.3	The pump manufacturer shall have an engineer present at the field acceptance tests when requested by the installing contractor. The field acceptance test results shall be as good as the manufacturer's certified shop test characteristic curve for the pump being tested within the accuracy limits of the test equipment. …Pump shall be started and brought up to rated speed without interruption due to opening of circuit breaker or other cause.	NML and the NRC are aware of conditions surrounding the field acceptance test. (See post-Unit 2 licensing correspondence.) LST 83-290 for "OB" pump and LST 83-259 for "OA" pump have been reviewed and found adequate.	x	

20-14	9-1.5.1(c)	NFPA 20-1974 Edition, which discusses the requirements for "Sequence Starting" of automatic engine drive controllers for centrifugal fire pumps. Specifically, this section of the code reads " Each controller in multiple pump units shall incorporate a sequential timing device to prevent any one pump from starting simultaneously with any other pump. If water requirements call for more than one pump to operate, the units shall start at intervals of five to ten seconds. Failure of a leading pump to start shall not prevent subsequent pumps from starting."	The technical basis is as follows: The premise for the delayed initiation is the prevention of a water hammer from occurring. This concern is addressed in that the one diesel fire pump starts when the system pressure drops to 124 psig and the second diesel fire pump actually starts when the system pressure drops to 120 psig. Plant test data shows that it takes on the order of 6 seconds for the fire pump to come up to pressure against a header pressure of about 180 psig after the diesel driver starts (manual start). It should also be noted that there are also two jockey pumps (one normally in operation) discharging approx. 75 gpm at 370' discharge head (160 psig) to maintain FP system header pressure. An intermediate jockey pump with flow capacity of approx. 225 gpm also at a discharge head of 370' starts at 150 psi and runs for 15 minutes or until pressure is restored, whichever is longer. Therefore, it is not likely that there would be voids in the piping. Given the relatively slow start ramp, and the fact that pressure must be on a decreasing trend for the second pump to start, a legitimate actuation (2nd pump start), necessitates that flow is in transient from the pump(s) to the system piping. The pump starts need to first turn pressure from a decreasing trend to an increasing trend. With a flow path in the system pressure is not susceptible to shock waves such as release into a closed volume. Pump discharge piping is 12" diameter and each pump discharge ties into a 14" diameter common header. Fluid velocity in the 12" lines at 2500 gpm is about 7.2 ft/sec. Velocity at 5000 gpm (assuming both pumps at rated flow) in 14" line is about 11.9 ft/sec. The elevation difference from pump discharge to elev. 849' is about 133' (about 58 psi drop) whereas the discharge head of the diesel fire pumps is 315' at 2500 gpm; discharge pressure of jockey pumps' is 370'. Piping head losses due to flow in the FP system are typically small when compared to the elevation difference between the diesel fire pump discharge and refuel floor elevations, which is the worst case scenario. The pump heads and flow capacities are high enough to ensure that the FP system will remain sufficiently pressurized such that voiding even at the upper most 849' elev. will not occur. Based on a review of the seven water hammer mechanisms that can result in severe loads, from the EPRI Water Hammer handbook, if there is no voiding, there are no other applicable water hammer mechanisms. Since water is essentially non-compressible as soon as the pump impeller begins to turn it pushes water through the discharge piping, exiting at the point where the fluid is exiting the system. Pressure will build as the pumps start but does not exceed pump shutoff heads which are less than the design pressure of the FP piping system. The diesel fire pump discharge piping is also protected by relief valves with a setpoint below the piping design pressure. Based on this information and the current configuration of the pumps it is unlikely that a water hammer event would occur.	x	

24-11	5901	The use of hydrants and hose for purposes other than fire protection shall be prohibited.	Fire protection water is used to provide supplemental cooling to the bus ducts in accordance with operating procedures. Refer to Downer Grove Document ID #DG99-000612 for the justification. This deviation is acceptable.	x	
26-2	101(b)	One or a combination of the following methods of valve supervision is considered essential…	Not all valves are electrically supervised. FP water supply valves are locked open, and this is not a listed method. The NRC has accepted the locked valves in SER NUREG 0519, March 1981, pages 9-4 and errata. Therefore, this deviation is acceptable.	x	
26-3	101(d)	…coupled with weekly recorded inspections…	Valves in the flow path are locked and inspected quarterly. Refer to Downers Grove Doc ID# DG99-000613 for justification. This deviation is, therefore, acceptable.	x	
26-5	301	A systematic weekly inspection shall be made of each valve…	Valves are inspected quarterly. Refer to Deviation 26-3 for justification.	x	

26-6	402	Notification of the intent to close a valve shall be reported at least 24 hours in advance, if possible…	24-hour notification is not always possible or practical. Proper notifications are made per impairment procedures. Therefore, this deviation is acceptable.	x	
26-11	Section 1001 (a&b)	General Notification Systems	Station impairment procedure does not comply exactly with this section. However, it has been approved by NEIL and is, therefore, acceptable.	x	
26-13	1002(a) and 1002(b)	Valve Index Board	LaSalle does not have such a board. Fire Marshall keeps a log of impairments, which is acceptable to NML. Therefore, this deviation is acceptable.	x	
26-14	Section 120	General precautions to be taken while fire protection equipment is shut off for repairs or alterations.	Does not comply exactly but meets the intent. Impairment procedure requires the Fire Marshall to determine what precautions are to be taken during such an incident. Therefore, this deviation is acceptable.	x	
27-1	34	Identification. Members of the brigade should be given some appropriate identification (a card or badge, for example) for a number of purposes. These include assistance in reaching the plant in an emergency and identification by plant guards for movement within the plant or parts of it where fire brigade duties have to be performed.	Fire brigade personnel are not given specific "fire identification" as brigade personnel are required to respond in full protective clothing, which would be adequate identification. In addition, the station has a minimum of five fire brigade members on site at all times. Therefore there is no need to provide members with badges/cards which would assist them in getting to the plant from a location off the premises. Therefore, this deviation is acceptable.	x	
27-4	51	Drills to Provide Practice. Practice drills should be held to check the ability of members to perform the operations they are expected to carry out with the fire equipment provided. Drills should occasionally be held under adverse weather conditions to work out special procedures needed under these conditions. See 70, Equipment.	Drills are not performed in adverse weather conditions, since fire fighting at LaSalle is normally performed inside the building. The drill program satisfies NRC criteria and, therefore, this deviation is acceptable.	x	

27-5	52	Operation of Equipment. In drills, equipment should be operated whenever possible. For example, portable extinguishers should be actually discharged, respiratory protective equipment should be operated and water should be turned into hose lines.	Actual extinguisher discharge and water through hose-line drills are not performed in the plant due to the possible deleterious effects of dry chemicals and water on equipment. Protective clothing and SCBA are typically donned during drills. Hoses are pulled from the reels when the brigade leader requires hoses. In addition, fire brigade members operate equipment (i.e., hoses and extinguishers) annually during fire brigade training. Therefore, this deviation is acceptable.	x	
30-1	2343	Flammable or combustible liquid storage tanks located inside of buildings, except in one-story buildings designed and protected for flammable or combustible liquid storage, shall be provided with an automatic-closing heat-actuated valve on each withdrawal connection below the liquid level, except for connections used for emergency disposal, to prevent continued flow in the event of fire in the vicinity of the tank. This function may be incorporated in the valve required in 2342, and if a separate valve is provided it shall be located adjacent to the valve required in 2342.	Automatic heat actuated valves are not used for tank withdrawal which are below the liquid level. All flammable and combustible liquid storage tanks located inside buildings at LaSalle are designed and protected for combustible liquid storage. Specifically: • Each room is enclosed by walls, floors, and ceilings having a fire resistive rating of not less than 3 hours. • Personnel openings are provided with Class A fire doors. • All of these rooms have floor drains, which discharge into an enclosed sump pump. • Provisions are provided for ventilation. • All piping and valves to and from these tanks are steel. • All rooms are provided with an automatic sprinkler system. • There is no other storage in these rooms except for the tank and contents. Therefore, based on the above, modifications to provide a heat actuated valves will not substantially increase plant safety and the deviation is acceptable.	x	
37-1	202	Engines which are installed in structures or at outside locations shall have adequate emergency lighting as well as normal lighting.	Emergency lighting is provided for diesel generators and fire pumps. Security diesel and tech. support center diesels provide their own lighting - no dc emergency lighting exists. However, in the event that the lighting is lost in these areas, portable battery powered lights are available, as necessary, to provide lighting for this building.	x	

37-2	321.b	Engines of 100 hp or more shall have an automatic engine shutdown device for high lubricating oil temperature.	The diesel fire pumps, and the tech. support and security diesels do not have this device or an alarm. This device or alarm is normally not an accessory to diesels in the security diesel's size range. The diesel fire pump is addressed by NFPA 20, and is excluded from the requirements of NFPA 37, as indicated in the purpose and scope paragraph 103. High lubricating oil temperature shut down or alarms are not usually required or provided for prime movers for emergency power systems. This is evidenced by the lack of such a requirement in the current NFPA 110, "Standard for Emergency and Standby Power Systems," 1993 Edition. The tech support and security diesels also have a high water temperature alarm and shut down, low lubricating oil pressure alarm and shut down an automatic shut down for engine over-speed, and a manual shut down. Therefore, this deviation is acceptable.	x	
37-4	502	Day Tanks shall be of steel with welded joints constructed with the following metal thicknesses: Not Galvan. Galvan. Capacity Mfgs Std Mfgs Std (gal) No. Gauge No. 10 or less 18 20 11 to 180 16 18 181 to 275 14 16 276 to 550 12 14	The 750 gallon and 1700 gallon day tanks for the emergency diesels have been stamped by ASME. The diesel fire pump day tanks have been approved by UL. The technical support and security diesels are not stamped, but appear adequate in construction. According to NFPA 30, Section 1060, these tanks are acceptable, as they do not constitute a recognized hazard to life or adjoining property.	x	

37-5	801	Instructions for starting, stopping, operating and routine maintenance shall be supplied with each engine and shall be conspicuously posted on or near the equipment.	Instructions for starting/stopping/operating engines are available in designated areas so they can be used by trained personnel. The instructions are not posted near the equipment because the procedures are controlled documents.	x	
50A-1	432	Piping and tubing shall conform to American National Standard Code for Pressure Piping, Petroleum Refinery Piping, ANSI B31.3 (1973).	S&L uses ASME/ANSI B31.1, power piping code, liquid carbonic is committed to NFPA 50-A. The piping is adequate for its intended use.	x	
50A-3	71	For installations which require any operation of equipment by the user, legible instructions shall be maintained at operating locations.	Operating instructions are not kept at the operating location, but are available to operating personnel. They are brought out with each trained operator when this system is operated.	x	
51B-1	423	Where practicable, all combustibles shall be relocated at least 35 feet from the work site. Where relocation is impracticable, combustibles shall be protected with flame-proof covers or otherwise shielded with metal or asbestos guards/curtains.	LaSalle is in compliance. Per NFPA 51B-2009, section 5.4.2-15, In instances where the scope of work and tools used to conduct hot work are known to be incapable of generating slag, sparks, spatter or similar mobile sources of ignition capable of leaving the immediate area of the applied hot work, the PAI shall be permitted to do the following: (a) Reduce the distances and areas to distances and areas that are considered fire safe for the intended operation but the areas shall not be reduced more than within 10 feet of the 35 feet zone. This is an Exelon administrative requirement in OP-AA-201-004. (b) Describe those distances and areas on the hot work permit	x	
69-1973			This code was not reviewed since it is not applicable to LSCS.	x	
70			By definition, Section 90-2 b5 (Scope not covered) states the NEC NFPA 70 is not applicable to a utility building used for the purpose of generating electricity. The electrical design of LaSalle County Station is governed by an extensive array of (A-E) Architectural Engineer Standards, Utility Standards, and various Industry Standards, such as IEEE, and NEMA. The general public is not exposed to the electrical hazards of a plant of this type.	x	

72D-1	1121	The proprietary system shall be arranged to receive and record all signals received at its central supervising station and to…	Individual trouble alarms are received at the main fire alarm control panel for each zone. The individual trouble alarms are also communicated to the Plant Process Computer Fire Detection Displays in the Main Control Room.	x	
72D-2	1121	Signals shall be transmitted to the fire department.	Signals are not automatically transmitted to the Off-Site fire department. However, this deviation is acceptable because: [redacted]	[redacted]	

72D-3	1121 and 1212	Recording devices shall be designed and arranged to automatically provide a permanent record of the incoming signal and date and time of receipt.	Alarms received by the PPC will be logged as messages in a retrievable archive. Also, the fire panel stores the last 1000 events in the on-board buffer.	x	
72D-4	1221	Guards and other employees not required to operate the system shall not be admitted to the central supervising station where signals are recorded.	Security measures limit access to the control and auxiliary electrical equipment room to authorized personnel only.	x	
72D-5	1223	Operation and supervision shall be the primary functions of the operators…	Operation and supervision of the fire protection alarm system is not the primary function of control room operators. However, the control room operators are trained to respond to all alarms as appropriate to the situation. This setup has been accepted by the authorities having jurisdiction, the NRC and insurance carrier. Therefore, this deviation is acceptable.	x	

72D-6	1232(a) through (d)	Test-frequency	Frequency of detector testing is acceptable (refer to deviation 13A-21). Refer to the individual system code evaluations and/or deviation for details on frequency of testing. Refer to NFPA 12, 12A, 13, 13A, 15 and 20 for further details.	x	
72D-7	1241	Provide reports of signals.	Does not apply to station FP.	x	
72D-8	2022	All devices…shall be approved for the purposes for which they are intended.	The Halon discharge stations and control panels for QA archive rooms are not UL or FM listed. The Halon control panels are UL listed, but not for agent releasing type systems. Although not UL listed, these devices are of standard industrial grade. Maintenance and testing are done on the system to ensure system function. No further action is necessary. Refer to deviations 12A-3 & 12A-5 for further justification.	x	
72D-9	2024	Maintenance agreements.	CECo does not have a maintenance agreement. However, CECo maintenance personnel adequately perform their activities, and the vendor is routinely brought on-site to assist with troubleshooting, when necessary. Therefore, this deviation is acceptable.	x	
72D-10	2275 and 2276	A rectifier shall be energized by an isolating transformer having a supply circuit of not more than 250 Volts.	The battery charger is designed to operate at 480V AC and supply the required battery charging voltage and current. Plant maintenance personnel are trained to maintain and test this equipment at the installed voltages. Use of 480V AC is common in the plant, and therefore, would not pose an unusual hazard to maintenance personnel. Therefore, this deviation is acceptable.	x	

72D-11	2411	…distinctive trouble signal.	Fire Alarms received in the control room on the PPC displays cause a plant annunciator alarm/window to actuate. They also actuate the "urgent" computer alarm audible device. Trouble alarms also cause the plant annunciator alarm/window to actuate, but they also actuate the "caution" computer alarm audible device.	x	
72D-13	2451(a)	…The following features or facilities located in the supervisory station need not be supervised. The station circuits for alarm bells and registers which are controlled by devices which have their operating circuits electrically supervised.	The circuit between the 1/2FP04JA and the PPC/Control room Fire Detection Displays is a supervised network connection, which will indicate a communication failure on the PPC displays (the "FIRE" button on all PPC displays will change to CYAN, indicating "bad" status for the link). A loss of power to the 1/2FP04JA will also cause a "failure" of this communication link, and will result in similar indications.	x	
72D-14	2631	Sprinkler supervisory signals.	Separate supervisory signals are not provided for valve supervision. Tampering of electrically supervised control valves results in a trouble alarm that is immediately investigated by operating. Therefore, this deviation is acceptable.	x	

72D-15	3533	"The equipment shall be inspected monthly and maintained in proper operating conditions."	The equipment is not inspected monthly specifically for this purpose. However, the equipment is subject to periodic testing, and the main fire panels are monitored during routine operator rounds and fire marshal tours. Refer to NFPA 12, 12A, 13, 13A, 15, and 20 for alarm system component testing. The detection systems are also subject to impairment procedures, which would require appropriate testing and inspection of the system after any impairment. Therefore, this deviation is acceptable.	x	
72E	See Various Codes in Attachment 1		See Attachment 1 for deviations and justifications associated with fire detection.	x	
72E-2	7.3.15	“Smoke detectors shall be tested semiannually in accordance with the manufacturer’s instructions”.	“All smoke detection systems are tested every two years. Refer to EC 394900”.	x	

80-2	1-6.3	Authorities having jurisdiction shall be consulted as to the size of oversize doors which may be deemed acceptable in a given location.	Oversize certificates were sent to site.	x	
80-3	1-7.1	Only labeled wired glass, not less than 1/4-inch thick, labeled for fire protection rating and installed in approved steel frames, shall be used.	Stairway doors with "B" label 1-1/2 hour rating have wire glass glazing. The glass was provided with the "B" labeled door, therefore, the glass is acceptable for use.	x	
80-4	1-10.3 and 2-5.1	The design and construction shall meet the requirements of 2-5.1. 2-5.1 states "Only labeled steel door frames shall be used."	This relates to channel iron frames. Not all assemblies for fire doors are labeled or listed. Doors which are not labeled have been UL tested by CECo, thereby satisfying the door construction standards. Comment: See AIR 373-251-86-00044.	x x	

80-5	2-5.4 2-8.4.4 2-8.7.1 14-2.4.1 NFPA 80-2007	The clearance between the door and frame and between meeting edges of doors swinging in pairs shall not exceed 1/8-inch. The clearance between the bottom of the door and a raised noncombustible sill shall not exceed 3/8-inch. Where there is not sill, the maximum clearance between the bottom of the door and the floor shall not exceed 3/4-inch. All closing mechanisms shall be adjusted to overcome the resistance of the latch mechanism so that positive latching is achieved on each door operation. The door shall swing easily and freely and shall be equipped with a closing device to cause the door to close and latch each time it is opened. The closing mechanism shall not have a hold-open feature Self-closing devices shall be kept in proper working condition at all times. Although LaSalle is committed to NFPA 80-1975, newer codes may be use to purchase new fire doors. Section 6-4.8, Gasketing, states, "Gasketing on fire doors or frames shall be furnished only in accordance with the published listings of the door, frame, or gasketing material manufacturer".	Fire door installations were re-reviewed in Nexus Report 96-100 in 1996. A number of minor deviations from NFPA 80 were identified. However, the report concluded that all doors were OPERABLE (Refer to NTSC letter dated February 5, 1997). Therefore, all door deviations are considered minor in nature and are acceptable. The following resolution applies to deviations 2-8.4.4, 2-8.7.1 and 14-2.4.1 EC Evaluation #339805, Fire Door Acceptance Criteria" was written to address issues related to minor deficiencies on the fire doors at Exelon Nuclear Stations. Evaluation #339805 provides the station position on maintaining fire doors under operating plant conditions including situations where high differential pressures exist across the door which may prevent the doors from closing and latching. Evaluation #339805 is deemed acceptable for use at LaSalle Station. EC 370364, "Evaluate The Use Of Gasketing /Automatic Door Bottoms On LaSalle Fire Doors" was written to address deviations in gasketing applied to existing LaSalle Fire Doors.	x	

80-9	2-8.4.2	A closing device shall be installed on every fire door.	A closing device is not installed on the dutch doors the maintenance shop. This deviation is acceptable because: • The door is normally closed. • A fire in the maintenance shop has no impact on safety related equipment or post fire safe shutdown.	x	
80-15	4-3.2 4-5.2 4-5.3.5 4-5.5.2	Mounting bolts shall pass through walls. Fire door hardware shall include tracks, hangers, track brackets, bumpers, binders, pull handles, stay rolls, and center latch assembly for center parting doors. When box-type track is used, the number of track brackets provided shall be such that a bracket is located directly over each hanger when the door is closed, on each end, and such intermediate brackets so that the bracket centers shall not exceed 39-1/2-inches. Bolts securing brackets shall be installed through the wall except as provided in 4-3.2. Composite fire doors shall have one front binder near the sill, one or more intermediate front binders, and one or more intermediate rear binders.	Doors 666 and 700 deviate from these requirements. This deviation is acceptable because: • The doors are located in the Old Service Building. • A fire in the Old Service Building has no impact on safety related equipment or post fire safe shutdown.	x	

80-22	Chapter 11	11-2, 11-3.1, 11-4.1, 11-4.1.1, 11-4.2,	Installation of shutter not in accordance with manufacturer's instructions and closing mechanisms not functional. Shutters are installed in the maintenance shop. This deviation is acceptable because: • The door is normally closed. • A fire in the maintenance shop has no impact on safety related equipment or post fire safe shutdown.	X	
80-28	14-2.4.2	Doors normally held in the open position and equipped with automatic closing devices shall be operated at frequent intervals to insure proper operation.	The only normally open fire doors that are not operated at frequent intervals is the door to the Turbine Lube Oil Room (from the Turbine Building side). This doors does not separate areas containing safety related equipment or equipment required for post fire safe shutdown, and is maintained in accordance with NGG work control procedures, therefore, this minor deviation is acceptable.	x	

80-30	2-8.2.2.1	Only labeled locks and latches or labeled fire exit hardware (panic devices) meeting both life safety requirements and FP regulations shall be used.	LaSalle has installed Security Locks on some Fire Doors in order to meet Security Requirements in case of a Security Event at LaSalle Station. During times when a Security Event is possible, some Fire Doors may be locked to prevent personnel passage. The Fire Protection features may not be labeled on Security locks, bolts, latches or barricades for obvious reasons. Whenever personnel egress is required from locations where potential exists for a Security Event, personnel will be instructed on when and how to egress. In cases where security doors are locked, there are multiple other egress paths with labeled and tested locks and latches available on doors that may be used to get out of a building. Therefore, it is expected that personnel can exit a building safely during a fire.	x	

90A-1	1-2 1-2.1	Purpose This standard is intended to prescribe minimum requirements based on reasonable provisions for safety to life and property from fire. These requirements are intended to: a. Restrict the spread of smoke through duct systems in a building or into a building from outside.	Some HVAC systems automatically shutdown on smoke detection from the return duct. These systems are for Auxiliary Buildings Offices (VA), Machine Shop (VJ), Laboratory Areas (VL), Auxiliary Building Vent. Equipment Room (VV) and the Service Building (VS). The Control Room and Auxiliary Electric Equipment Room Systems can be placed in 100% outside air purge mode by station personnel upon detection of a fire. The Control Room System switch is located in the Main Control Room and the Auxiliary Electric Equipment Room switch is located immediately outside of Units 1 and 2 AEER's. See also FPPDP Volume 3, Book 2, Fire Protection Reports - Fire dampers are required for smoke removal and system operation. In addition, the Control Room and Auxiliary Electric Equipment Room automatically pass the return and outside air through the charcoal filter on smoke detection from the return and outside air duct.	x	
90A-2	1-3.1	Air Filters a. A Class 1 air filter is one which, when clean, does not contribute fuel when attacked by flame and emits only negligible amounts of smoke when tested by the Standard for Air Filters Units (UL 900-1971).	Charcoal absorbers are not applicable to UL-900-1971. Fire suppression systems are provided for mitigating internal charcoal fires. Air filters use to be specified as Class 1, however, effective May 1, 2012, Underwriters Laboratories (UL) no longer classifies air filters as Class 1 or 2 under UL standards.	x	

90A-5	2-6 2-6.1	Electric Wiring and Equipment Electric Wiring and equipment shall be installed in accordance with the National Electrical Code (NFPA 70-1975).	LaSalle County Station is not committed to NEC. See separate review of NFPA-70. Also NFPA-70 does not apply to nuclear plants nor are nuclear plants included.	x	
90A-6	2-7.2	Mechanical refrigeration used with air duct systems shall be installed in accordance with nationally recognized safety practices. Installations conforming to the American Safety Code for Mechanical Refrigeration (ANSI B9.1-1971) shall be considered as meeting these requirements.	Refrigerant vent lines are piped to discharge outside the building. In general, complies with installation requirements except that separate ventilation systems are not provided for refrigerant machinery rooms. Arrangement and sizes of ducts and airflow rates based on other plant requirements, e.g., air needs to be exhausted through stack for rad monitoring purposes.	x	
90A-9	3-3.3.3	Fire dampers shall be installed at each direct or ducted opening into or out of enclosures required under 3-3.3.1.	The only deviation to this section is the air shaft at the radwaste building, elevation 687 feet 0 inch, where no fire damper is provided. Lack of fire dampers will not adversely impact 1) the ability to shut down the reactor and maintain it in a safe shutdown condition (because post fire safe shutdown equipment is not located on either side of the barrier), 2) residual heat removal, 3) the release radioactive material, and 4) the consequences of an accident. Therefore, this deviation is acceptable.	x	

90A-10	3-3.7.2.2	Fire doors, fire dampers, and ceiling dampers shall be installed in accordance with the conditions of their approval and the manufacturer's instructions.	Turbine building floor dampers 1/2VT59YA-YD: Eight floor-mounted dampers were identified by SEC as improperly installed. The current installation of these dampers does not appear to meet UL criteria or the original design. Two 1-1/2 hour dampers are mounted in series. Perimeter angle supports exist on one side of the damper only and appear to be welded to both the floor opening and the fire damper, restricting damper expansion. The dampers are located in the floor separating fire zones within Turbine Building Fire Area 5 and do not separate redundant equipment important to post fire safe shutdown. Therefore, since slight buckling of the dampers would have no impact on post fire safe shutdown even if a fire went unsuppressed for an extended period of time, the deviation is acceptable.	x	
90A-11	3-3.8.1	When ducts pass through walls, floors, or partitions required to have a fire resistance rating, the opening in the construction around the duct shall not exceed one-half inch average clearance on all sides and shall be filled solidly with an approved material such as concrete, masonry or mineral fiber.	Duct penetrating the fire boundaries are provided with fire dampers. The fire damper sleeves have clearance of 1/2-inch on all sides. The clearances are sealed all around by steel angle or plate.	x	

90A-12	4-2	Smoke Control - Special Situations - A building having two or more stories or zones required to be separated by construction that will restrict the spread of smoke or fire and a.In which it is determined that evacuation time is excessive, or b.in which evacuation is not practical because occupants are incapable of self-preservation because of age, physical or mental disability, or because of security measures not under occupant control shall have the duct systems arranged so that, in the event of a fire, flow of smoke from the fire zone will be inhibited from spreading to required interior ways of exit access, interior enclosed stairs and ramps, interior exit passageways, and designed refuge areas. Such an arrangement may involve air conditioning systems alone or in combination with other systems such as emergency venting, pressurizing system and fire suppression system, taking into account possible stack and wind effect of multistory buildings. Smoke control systems are required to be engineered for the specific occupancy and building design. This shall not preclude the use of other engineered approaches to provide equivalent protection to life and property when acceptable to the authority having jurisdiction. Appendix B include considerations and guidelines for smoke control systems.	HVAC systems are not engineered as smoke control systems, but are primarily for equipment cooling and general ventilation. With the degree of refuge areas available, evacuation time is not excessive and occupants are not incapable of self-preservation. The VE and VC systems can be operated at 100% outside air if required to assist in smoke removal. Therefore, the deviation is acceptable.	x	

90A-13	4-3 4-3.1	Automatic Shutdown Except as required by provisions of 4-2, in systems between 2,000 cfm and 15000 cfm capacity, fans shall be arranged to shut down automatically when the temperature of the air in the system becomes excessive, as from a fire. For this purpose, approved fixed temperature thermostatic devices shall be provided as follows: a. With a setting not in excess of 136F, at a suitable location in the return air stream prior to exhausting from the building or being diluted by outside air, and b. With a setting not in excess of 50°F, above the maximum operating temperature, at a suitable location in the main supply duct on the downstream side of the filters. Either the thermostatic device shall be of a type that is manually reset or the control system shall be so arranged that some manual operation is required to restart the fan after the thermostatic device has operated. Smoke detectors approved for duct installation may be used in lieu of thermostatic devices. Exception: In lieu of the automatic fan shutdown, systems may incorporate automatic exhaust when acceptable to the authority having jurisdiction.	The HVAC systems do not automatically shutdown on excessive or high air temperature. The systems can be manually shutdown on high temperature alarm from the temperature sensors provided in the serviced areas. Some recirculating HVAC systems are provided with smoke detectors in the return air duct, arranged to shut down the fan automatically on smoke detection. Safety related areas are provided with area smoke detectors (exceptions have been noted) which alarm locally and in the Control Room to allow the operator to control the HVAC system when found necessary. Due to undesirable effects of premature shutdown of safety related systems, the ventilation systems which operate with 100% outside air all the time, do not automatically shutdown on excessive air temperature nor air smoke detection. However, these systems can be manually shutdown on high temperature or smoke detection if found absolutely necessary.	x	

90A-14	4.3.2	Except as required by provisions of 4-2, in systems of over 15,000 cfm capacity, smoke detectors approved for duct installation shall be installed and arranged to automatically shut down fans. For this purpose, the detectors shall be provided as follows: a. at a suitable location in return air stream prior to exhausting from the building or being diluted by outside air, and b. at a suitable location in the main supply duct on the downstream side of the filters. Smoke dampers (see 1-3.15) shall be installed to isolate the air handling equipment (including filters) from the remainder of the system so as to restrict circulations of smoke, and arranged to close automatically when the system is not in operation, and also by operation of the smoke detecting apparatus and by the manual emergency fan stop. Exception: In lieu of the automatic exhaust when acceptable to the authority having jurisdiction.	Same as the response for 4-3.1. Smoke dampers are not provided; however, most systems which have filters have isolation dampers downstream of the fans which will close when the fans are stopped.	x	
90A-24	3-3.3.3	Fire Dampers shall be installed at each dirct or ducted opening into or out of enclosures required under 3.3.3.1 Enclosures of Vertical Shafts.	Fire Dampers are not installed on all vertical shafts leading into the Auxiliary and Turbine Building at LaSalle Station. (See UFSAR Section 9.5.1.1.3) The vertical shafts without dampers have no significant fire load within the shaft. A fire in this shaft will not challenge fire barriers or gain access to locations containing safe shutdown SSC's.		

90A-25	A-7	Each fire door and damper should be examined once per year, giving attention to hinges or other moving parts, to see that it is in good operable condition.	LaSalle damper testing frequencies are based on results of Performance Based Evaluations such as EC 362093 and EC 362029. Each change in surveillance test frequency results in an effectiveness evaluation to review changes in failure rates based on the frequency of the surveillance.		

92M			Although it has been removed from the current NFPA Handbooks, LSCS complies with this NFPA Code. This NFPA Code was used as a guide.	x	
197			This code deals with the use of 1-1/2-inch and 2-1/2-inch hose lines, in conjunction with fire department apparatus. The code does not apply to fire fighting or fire brigade operations. Brigade personnel are instructed in the handling and use of fire hoses in conjunction with the fire fighting operations, which include exposure protection and fire attack. Regular drills and training verify this.	x	
204-1	300 301 302	General Curtain boards (draft curtains) are essential for proper venting as they bank up heat and smoke within the curtained area, resulting in a pressure differential which directs the heat and smoke toward the vents for relief. It has been established that vents are ineffective without curtain boards, since only the heat and smoke near the vents will be vented. In sprinklered properties, curtain boards serve an important purpose since banked-up heat within the curtained area will speed the operation of automatic sprinklers. In the case of flash fires, heat is retarded by curtain boards from spreading throughout the building an opening sprinklers unnecessarily.	No curtain boards provided in LaSalle Turbine Building and other buildings. Curtain boards are especially useful in buildings with low ceilings to delay the rapid smoke-logging of the space. Since the Turbine Building ceiling is relatively high, a large volume of the building is available as a potential smoke layer. This principle is recognized in the latest edition of NFPA 204 (1983) where draft curtains are not necessarily required.	x	

204-4	430 431	Ice and Snow Conditions Removal of ice and snow from vents should be scheduled as part of the regular snow removal program.	When the unit is in operation, ice and snow on the roof would be melted due to normal build-up of heat on the turbine floor. When the unit is not in operation, the oil hazards associated with the does not exist. Therefore, this is not a concern.	x	
220			NFPA 220 merely provides definitions. Whenever classes of construction are specifically addressed in other codes, these definitions would apply and would be addressed at that time. This NFPA code should be listed for reference only.	x	

232A-1	3022C	A file room with openings protected by approved file room doors, suitable for the surrounding exposure offers protection against the fire hazard outside the room.	An approved file room/vault door was specified by ECN SDLO-26. This door should be installed. ACTION: A U.L. Listed Class A (3 Hr.) fire door with a 250°F temperature limitation for 30 minutes is installed. The temperature limitation is the temperature rise (unexposed side) of not more than 250°F at the end of 30 minutes. A file door consists of an assembly of an insulated door closing into and interlocking with an insulated frame which is effective in withstanding a standardized fire of controlled extent and severity for at least 1 hour without exceeding an interior temperature of 350°F. This would be during or after the fire exposure and measured 36 inches from the unexposed face of the door or 6-inches to the side from the door joints when installed in accordance with the manufacturers' instructions. According to LSCS-UFSAR, Section H.3-222 Rev. 0, April 1984 for the Service Building upper basement - fire zone 9D1, the average fire loading for this zone surrounding the archive room, including a transient fire load equivalent to 55 gallons of lube oil, is 21,800 BTU/FT^2. This is equivalent to a fire severity of 16 minutes or approximately half of the fire exposure of the U.L. Listed Class A door. 350°F is regarded as a suitable limit for paper records. As such the existing fire door provides an acceptable level of protection against a fire on this elevation assuming no intervention by the fire brigade.	x	

232A-2	3121	File rooms shall not exceed 50,000 ft^3 in volume and the height shall not exceed 12 feet.	Calculations showing the 14-foot 6-inch height walls will safely withstand the fire loading without failure, have been performed.	x	
232A-3	3132	Proper design and construction of a file room include not only its qualities as a flame barrier and as a heat retardant, but also its ability to avoid settling and consequent cracking, and its ability to maintain the integrity of the file room structure under the stresses and impacts to which it may be subjected during a fire, including impact from falling objects and stresses, strains, and erosion due to sudden cooling with fire hose streams. Proper design includes: determination of classification, choice of materials, bonding of the walls, floors, and roof of the file room to each other and to the building, load capacity, etc.	The 3 interior walls of the QA Records Storage Room are constructed of nominal 12-inch concrete block units, with a rating of 4 hours as shown on Station Drawings A-21 and A-22. The walls are built directly on the floor slab which is constructed of 18-inch reinforced concrete. Although the wall is not bonded at the top, it is considered structurally stable since it was constructed as a 3 hour fire wall as part of the original building design. The joint at the connection of the ceiling to the wall is filled with at least a 2 hour penetration seal as described in the UFSAR. The existing wall is considered adequate to resist passage of the fire from outside the room, and prevent the fire inside the room exposing other building areas, as described in the UFSAR. Also, each smoke detector in the room is covering less than the maximum spacing, thereby increasing relative sensitivity.	x	

232A-7	3234b	If any wall of the building is of suitable construction to form part of the file room enclosure, the walls or walls of the file room at the intersection with the building wall shall, when practicable, be bonded into it for the full height and width of the file room wall or walls. When such bonding is not practicable, the wall or walls of the file room shall be (a) rabbeted into the building wall for their full height and width to a depth of not less than 4 inches or (b) be bonding may consist of keys the full width of the file room wall and let into the building wall not less than 4 inches. These keys are to be not less than three (3) brick courses in height, spaced not to exceed 1 feet on centers, the lower key to be at the floor and the upper key at the ceiling, and with all joints between the keys and the building wall thoroughly filled with mortar or cement grout.	The requirements for bonding the ceiling impacts in Sections 3132, 3231a, and 3235 have not been met. These angles should be added against both faces of the masonry wall. The walls are not bonded to the building wall. The 1976 Edition of NFPA 232 has modified this requirement to only require this if it is practical. Since these walls are already installed, it would be necessary to remove existing block at the intersection of these walls in order to bond it. The present arrangement is satisfactory. Refer to Deviation 232A-3 for additional information.	x	
232A-8	3235	Bonding of File Room Walls, Floor and Roof. File room walls of masonry units shall be laid with angles and corner well bonded throughout their height. Where the floor construction of the building forms the roof of the file room the joint between the same and the tope of the side walls shall be tightly finished and thoroughly filled with mortar or cement grout. Wedging with slate to be provided where required by conditions to insure adequate bonding.	Refer to Deviation 232A-3 for justification.	x	

232A-13	3313	Wiring shall be so arranged that both wires of the circuit shall be disconnected when the lights are out. Main switches shall be outside the room and provided with a red pilot light.	All conduit is threaded. Circuit power is limited to that supplying power to the ceiling fluorescent lights. The overhead lights are covered. Current codes allow circuits within the room if they are power limited. The configuration in QA Archive Room meets the intent of this paragraph, therefore, the deviation is acceptable.	x	

232A-14	3321	Heating shall be by hot water or steam. When steam heating is used, the coils or radiators shall be so located as to avoid the possibility of any records coming in contact with them. Piping should preferably be placed overhead. Where the pipe is carried through the wall, the hole shall be made as small as practicable, the pipe provided with a close fitting, noncombustible sleeve and the space around the outside of the sleeve shall be completely filled with cement grouting. Floors and roofs of file rooms shall not be pierced for piping. Open flame heaters, electrical heaters, etc., shall not be employed.	Electric heating coils, although specifically excluded, were selected for this room because neither steam nor hot water heat is used in the station design. Power supply circuits for the electric heaters are power limited with magnetic and thermal protection for breakers to protect against the possibility of a heater malfunction. The heating coils are located inside noncombustible metal ductwork which is hung from the ceiling above the files so they are not directly exposed to the coils. Records are stored in fully enclosed metal cabinets. A Halon 1301 total flooding fire suppression system is also furnished to protect the record storage room. This system is activated by a cross zone ionization detection system which will sense a fire in its initial stages of development. With the cross zone ionization detection system, the first detector would be activated and sound a trouble alarm, thereby alerting personnel to a problem early. Through the physical separation of the records and the electric heating coils, the supply circuit protection, the ionization early warning detectors and alarms, and the Halon 1301 fire suppression system, it is believed that even with the deviation from the standard, the QA archives room and the records stored within it are satisfactorily protected against potential severe fire damage due to a heater malfunction. The cost of relocating the heating and cooling coils outside the room would be excessive for the marginal improvement that would be obtained in protection from fire hazards. This deviation is acceptable as designed.	x	

232A-15	3311	Ventilation of interior shall be through door openings.	See paragraph 3332-33 remarks.	x	
232A-16	3332-33	It is sometimes imperative that a ventilation system be provided. Therefore, it should be recognized that the presence of the system addresses to the possibility of entrance of fire or paper damaging heat from outside the file room. To minimize this possibility, the system should be installed in accordance with the "Standard for the Installation of Air Conditioning and Ventilating Systems, NFPA No. 90A, 1975 Edition, and the following safeguards should be taken: the system should be independent of any other ventilating system; all air-conditioning apparatus, fans, filters, etc, should be located outside the file room; each duct should be provided with an adjustable fire damper equipped with approved automatic means for closing it and shutting down fans in event of fire outside or inside the file room. Ducts should be so located so as to avoid the possibility of records coming in contact with them, preferably on the ceiling, where a duct is carried through a file room wall its installation should be such that it will not impair the ability of the vault to protect its contents against fire (and heat) from outside the room.	In ANSI N45.2.9, Section 5.6, ventilation and heating requirements are specifically mandated to minimize the risk of damage from adverse environmental conditions. For this reason, HVAC equipment is installed in the room to control its environmental conditions to meet the microfilm manufacturer's recommendations. The present design is acceptable.	x	

232A-17	3411	Filing equipment shall be noncombustible throughout. All records shall be stored in fully enclosed containers so far as possible. If complete enclosure of certain records is impracticable, shelving having only the front open may be used, but loose papers should not be filed on open shelving. Cubical contents of individual compartments of shelving should have a volume of not more than 10 ft^3, preferably less.	So far as possible, all records are stored in fully enclosed noncombustible containers. Therefore, minor deviations are acceptable.	x	
232A-18	3412	Arrangement of filing devices within the room shall be such that they will be in short sections and with ample aisles between so as to retard the spread of fire. If open-front shelving is used, the sections of shelving should be broken up with fully enclosed containers to form fire stops.	So far as possible, all records are stored in fully enclosed noncombustible containers. Therefore, minor deviations are acceptable.	x	
232A-19	3413	Open-front containers shall be located at least 36 in. away from door and window openings; fully enclosed containers at least 6 in. away.	So far as possible, all records are stored in fully enclosed noncombustible containers. Therefore, minor deviations are acceptable.	x	

232A-20	3421	The room shall be under responsible supervision from opening until closing time, and inspections shall be made daily, particularly before closing time, to insure that all containers are closed, no records left on top of desks, containers, or elsewhere exposed, all waste paper removed, and all doors, windows and containers closed.	Access to the locked file room is by personnel from Central File with a key. Central File personnel stay in the room until the task is completed.	x	
232A-21	3432	General cleanliness shall be of the highest type.	Housekeeping is monitored by central file personnel. The room is inspected at least weekly to verify there are no exposed combustibles. Housekeeping is good. Cabinets are normally closed.	x	

232A-23	3521	Automatic fire detecting systems installed in accordance with the recommendations of NFPA signaling systems standards are valuable in giving warning of fire inside file rooms. The systems should be relied upon only when there is assurance that the alarms will bring prompt response at all times.	The fire detection system was designed per NFPA 72D and 72E. See these reviews. Also refer to Deviation 12A-4.	x	
232B-2	2-4	Size. For the purpose of restricting the quantity of vital records exposed to destruction by fire in a single enclosure and to reduce the possibility of fire originating within the vault, a vault shall not exceed 5,000 ft^3 (142 m^3) in volume and the interior height shall not exceed 12 feet (3.7 meters). NOTE: For conditions requiring storage of a larger volume of vital records, see Sections 2-14 and 3-1.5.	The vault dimensions are 51 feet 4-3/4-inches x 64 feet 4-3/4-inches x 7 feet 6 inches which is a volume of 24,823 ft^3. However, the oversize vault requirements (or equivalent) are met. See Section 2-14.	x	
232B-3	2-7.5.1	Walls of vaults shall have no openings other than those necessary for access, electric lighting, power-limited circuits, and sprinkler piping. (See 2-14.1)	The wall is penetrated for the Halon 1301 piping system, as well as light fixture conduits. Penetrations are appropriately sealed. Also, see deviation 232B-4.	x	

232B-4	2-7.5.4	Wall penetrations for electric lighting and limited energy circuits shall be as small as possible and shall be grouted, potted, or otherwise sealed for the thickness of the wall to prevent smoke, heat, flame, or water penetration. Conduit, if used, shall be sealed inside and outside.	Conduits are not sealed internally. This is acceptable because they are near the doorway, away from storage, and there is no hazardous occupancy adjacent to the room.	x	
232B-6	2-12.2	The records in the filing equipment shall be not less than 3 in. (76 mm) above the floor of the vault.	Records are only one inch of the ground. This is not considered a serious deviation, as the possibility of water damage in the vault is remote.	x	
232B-7	2-12.3	The vault shall be under responsible supervision from opening until closing time and inspections shall be made daily, particularly before closing time, to ensure that all containers are closed, no records left on top of containers or elsewhere exposed, all waste papers removed, and vault doors closed and locked.	Surveillance/housekeeping procedures exist to inspect the vault at specified times. This is not considered a serious deficiency, because access to the vault is through a normally locked combination-lock vault door, and access is limited to people specifically having business in the vault. These people are instructed to store all records in file cabinets when their business is completed.	x	
232B-8	2-12.4	Vaults shall not be used as working spaces. Persons other than those authorized to handle the records shall not be permitted in the vaults.	Table and chairs are noncombustible and are used to look at material in the room, but is not a work station.	x	
232B-9	2-12.5	General housekeeping shall be of the highest order.	See paragraph 2-12.3 remarks.	x	

232B-11	2-14.1	Where the volume of "vital" records exceeds that which can be stored in a record vault of maximum permissible size (5,000 ft^3), they may be protected by providing an oversize vault of 25,000 ft^3, designed and constructed as a standard vault and equipped with automatic sprinkler protection in accordance with NFPA 13.	The vault is 24,800 ft^3 in volume, and is an oversize vault, as defined. A Halon system is, however, used instead of a sprinkler system. The Halon system is an acceptable alternative to the sprinkler system.	x	
232B-13	5-3.1	To adequately protect records in a non-fire resistive building, the devices required shall be determined by the total weight of combustibles per floor, as shown in Table 5-3.	An analysis was not performed. NRC Reg. Guide 1.88 dictates these requirements. It should be noted that although the exterior of the Outside Storage Vault is not fire-rated, it is a typical metal side warehouse and the vault is a 2-hour fire-rated structure.	x	
251			Code No. 251 establishes testing procedures and acceptance criteria for the assignment of hourly fire-resistance ratings to building materials and assemblies. Underwriter Laboratories is the primary source of fire-resistance rating documentation for materials at LaSalle County Station. UL Testing Procedure 263 and ASTM E-199 are identical to NFPA 251. However, some ratings have been extrapolated from existing data by manufacturers as accepted industry practice. Therefore, NFPA 251 cannot be regarded as the sole source for determining fire-resistance ratings.	x	

253			The NFPA 253 Radiant Panel Test is referenced in a manufacturer's report on carpeting as a response to questions from S&L regarding the carpet's fire resistance characteristics. Sargent & Lundy included this information in the Fire Hazards Analysis only to complement the original selection criteria for the control room carpeting based on UL flame propagation index ratings. A commitment to meet NFPA 253 was not made. Therefore, a review of this test is not appropriate.	x	
258			This code was not committed to specifically. LaSalle did not specifically commit to NFPA 258, "Measuring Smoke Generated by Solid Materials". However, as referenced in section 9.5.1.1.5 of the LaSalle UFSAR, LaSalle Station complies with NEIL (Nuclear Electric Insurance Limited) standards. NEIL provides the standards for interior design materials and smoke testing. Since NEIL requirements are based in part on NFPA, ASTM and ANSI requirements, LaSalle complies with the intent of the NFPA code.	x	
259			Specific parameters of the test in Code 259 are not committed to in the LaSalle County Station FSAR. LaSalle did not specifically commit to NFPA 259-1976, "An Evaluation of Potential Heat, and Building Materials". However, as referenced in section 9.5.1.1.5 of the LaSalle UFSAR, LaSalle Station complies with NEIL (Nuclear Electric Insurance Limited) standards. NEIL provides the standards for interior design materials and smoke testing. Since NEIL requirements are based in part on NFPA, ASTM and ANSI requirements, LaSalle complies with the intent of the NFPA code.	x	

803-1	2-3	For primary and secondary facilities, the cost of lost revenue and replacement power in addition to property loss shall be factored into the fire hazards analysis for determining the cost/benefit ratio for selecting the appropriate fire protection systems.	NML, the insurance company, does consider the aspects of financial implementation of the property loss program. LSCS has been evaluated against these standards.	x	
803-2	3-2	For the purpose of assessing the fire loading, an inventory of all flammable and combustible materials shall be made for each fire area, identifying the location, type, quantity and form of the materials. The materials shall be classified into: c) Combustible Radioactive Substances. Typical examples of radioactive substances external to the reactor are: Sealed radioactive material, such as irradiated and/or plutonium containing fueled elements, irradiated control rods, neutron sources, etc. Unsealed radioactive material, such as ion exchanger fillings and filter cartridges which have become loaded with radioactive substances, radwaste materials, etc.	Fire Hazards Analysis, LSCS-FSAR Appendix H, provides the inventory of items in para. 3-2(a) and 3.2(b). LSCS-FSAR meets the requirements indicated here. Any combustible radioactive materials, such as contaminated clothing, would be removed to the radwaste building for processing.	x	
803-3	5-3	Wall and structural components, thermal insulation materials, radiation shielding materials, and soundproofing shall be noncombustible, limited combustible or listed by a nationally recognized testing laboratory for flame spread, smoke, and fuel contribution, of 25 or less in its use configuration.	Material selection was based upon NRC and insurance requirements. Not all materials have these test figures available. NRC does not include smoke development ratings and also excludes some materials.	x	

803-4	6-2.2	Where vertical fire barriers are required, stairwells, elevators, and trash chutes shall be enclosed in an approved fire rated enclosure of 2-hour construction with approved automatic or self-closing doors.	Elevators in the reactor building are not rated. Since the reactor buildings are split in half for safe-shutdown purposes, and redundant safe-shutdown trains do not come within 50 feet of each other, this is not a problem.	x	
803-5	7-3.1.6	Enclosed stairwells shall be designed to minimize smoke infiltration during a fire. Note: Stairwells serve as escape routes and fire fighting access routes. A suitable method of ensuring a smoke-free stairwell is using a slight pressure for the stairwell ventilation system.	The service building stairwells are penetrated by doors. No ventilation is provided for the stairwell, so the stairwell cannot be kept under a slight positive pressure. Comment: The intent of the code is met.	x	
803-6	7-3.1.9	The power supply and controls for mechanical ventilation systems shall be located outside the fire area served by the system for protected from fire damage.	In certain cases, power supply and local control panels may be in areas served. However, the systems are normally shut down by ionization detection; therefore, locating controls outside the areas serves no useful purpose.	x	

803-9	8-2	Prevention Measures for Buildings. The plant shall be equipped with an approved lightening protection system. (See NFPA 78)	LSCS does not have an approved lightening protection system. The metal vent stack is grounded to the structural steel. However, side or roof strikes may occur and no special protection is provided. Comment: Lightening protection program accepted by NML Report (6/17-19, 1985).	x	
803-10	9-8	The fire control panel shall contain, as a minimum, the following readouts: (f) Data acquisition system for recording of signals.	1(2)FP04JA has a buffer for storing 1000 events. The alarms and troubles are also recorded by the Plant Process Computer as messages in a retrievable archive.		x
803-12	7-3.3.1	Air entry filters shall have noncombustible filter media. They shall produce a minimum amount of smoke (UL Class I).	Pre-filters are not UL Class I. However, deviation is acceptable because filters satisfy NEIL requirements. Air filters use to be specified as Class 1, however, effective May 1, 2012, Underwriters Laboratories (UL) no longer classifies air filters as Class 1 or 2 under UL standards.	x	

1962-7	6-1.3 6-1.4	Records of fire department hose shall be recorded in books, on printed cards, or computerized as specified by the authority having jurisdiction. In fire departments, hose records may be kept as part of the department's or individual company's complete equipment inventory, thereby simplifying records and reports. Records for hose on racks, on reels, or in enclosures may be kept at the hose location or at a control location such as the building engineer's office on the premises where the hose is located.	Records are not kept on cards and they are not computerized. The records are kept on file as part of the completed surveillance. These records are stored in a central file and the archives room. This method meets the intent of Section 6-1.	x	
1962-8	6-2.1	The acceptance information shall include: (a) Assigned identification number. (b) Manufacturer and part number. (c) Vendor. (d) Size (internal diameter of waterway). (e) Length. (f) Type of hose, i.e., single jacket, double jacket. (g) Construction, i.e., all synthetic, cotton synthetic. (h) Date received and date put in service.	While LSCS does not record all of this information in their surveillance records, the record system does conform with the intent of 6-1. In addition, all hoses were purchased from Fire Hose Corp., and a complete hose description is given in Section 2-2.	x	
1962-24	9.2	Hose. The hose shall meet the requirements of NFPA 1961. "Standard for Fire Hose."	Hoses are presently purchased to UL/FM requirements.	x	

1962-25	9.3	Couplings. The coupling threads and gaskets shall meet the requirements of NFPA 194, "Standard for Screw Threads and Gaskets for Fire Hose Connections."	Couplings are presently purchased to UL/FM requirements.	x	
NFPA Handbook 14th Edition			The LaSalle County Station FSAR complies with Table 6-8A which lists the relationship between fire loading in Btu/ft^2 and the severity of fire anticipated described in terms of time.	x	

Attachment 1
Deviation Number: 72E-1

Paragraph Number: NFPA 72E sections 2-5, 2-6, 3-4, 3-5, 4-4, 4-5 and 6-3.

Paragraph not in Compliance: The detector spacing and locations at LaSalle is not in literal compliance with the requirements in NFPA 72E-1974.

Justification / Resolution: The location and spacing of detectors at LaSalle, including the safety related areas such as the AEER and SWGR Rooms (Fire Zones 4E1, 4E2, 4E3, 4E4, 4F1, and 4F2), is adequate from both a technical and regulatory basis, as follows:

Technical Basis:

The technical basis for the placement, location and spacing of the detectors, including considerations of air flows and air change rates, etc., is documented in the "Analysis of Fire Detector Locations at LaSalle County Station" (SEC Project No. 83118). Specifically, with respect to analyzing the detector location and spacing, the following basic NFPA principles from the NFPA code of record (NFPA 72E-1974) and the edition of the NFPA code current at the time of the analysis (I.e., NFPA 72E-1982) were applied:

- The location and spacing of smoke detectors shall result from an evaluation based on engineering judgement supplemented by the guidelines detailed in this standard. Ceiling shape and surfaces, ceiling height, configuration of contents, burning characteristics of combustible material present, and ventilation are some of the conditions that shall be considered (NFPA 72E Section 4-3.1).

- Where the intent is to protect from a specific hazard, the detector(s) may be installed closer to the hazard in a position where the detector will readily intercept the smoke (NFPA 72E Section 4-3.1.1).

The analysis of the installed systems included evaluation of the detector spacing and location versus the air flow and air changes and, as documented in the analysis, the evaluation demonstrated favorable compliance with the guidelines for high air movement areas. As a result, modifications (i.e., detector addition and/or relocation) were warranted (and completed) in various fire zones (e.g., 4E3, 4E4, and 4F2) to ensure that the spacing and location was adequate. In addition, the analysis concluded that the spacing and location of the

detectors in other zones were adequate (i.e., no modifications to change the detector placement, spacing, or location were warranted).

The detector locations and hazards have not significantly changed since the 1984 analysis was performed; therefore, the current fire detection system design is adequate.

Regulatory Basis:

The analysis of the placement, location and spacing of the detectors referred to above was performed and submitted in 1984 at the request of, and accepted by, the NRC, to satisfy Condition E.1 of Attachment 1 to the LaSalle Unit 2 Operating License NPF-18, Attachment 1, Item E.1, which stated that prior to exceeding 5% of rated full power operation:

"The licensee shall conduct a review of the adequacy of its fire detector system installation. This evaluation shall specifically address the number and location of fire detectors, and ventilation effects on the ability of the detectors to sense a fire. The licensee shall initiate compensatory measures in areas found deficient to assure adequate fire detection capability. These compensatory measures will remain in place until permanent modifications to correct any deficiencies are made to the detection system."

The commitment was made to address specific NRC questions made during a fire protection inspection regarding fire detector design, including the number and location of detectors with respect to NFPA 72E, the location of detectors in rooms with high air flow, and areas (e.g., switchgear and auxiliary electrical equipment rooms) in which detector activation does not result in automatic trip of supply fans. These concerns were tracked via NRC inspection report items 50-373/83-44-09, 50-374/83-48-15, 50-373/83-44-10, and 50-374/83-48-16 pending, in part, the licensee's submittal of an analysis of the effects of high air flows on the actuation of fire detectors. Condition E on Attachment A of the License Condition was tracked as Open Item 374/81-00-56. The detector analysis was submitted on March 9 and June 1, 1984. Item E.1 on Attachment 1 to the LaSalle Unit 2 Operating License NPF-18 was closed in NRC Inspection Report 374/84-05.

EC #357831 also evaluates the placement of fire detectors below the ceiling in Fire Zone 4E4. Fire Zone 4E4 is one of the plant fire zones that have this deviation from the NFPA Codes.

Deleted Deviations

NFPA Code	Deviation No.	Reason
10	2, 3, 4	Combined with 10-1.
10	5, 6, 8, 9, 10, 11, 12, 13	Items corrected (i.e., procedures revised, maintenance personnel qualified, etc.), station is in compliance.
12	1, 2, 3, 5, 6, 7	Items corrected (i.e., EDG CO2 system upgraded, procedures revised, etc.), station is in compliance.
12A	2	Warning signs provided, station is in compliance.
12A	7	Emergency actuation means provided for OR vault, station is in compliance.
12A	8	Name plates provided for halon switch functions, station is in compliance.
12A	10, 12	Discharge alarms are provided for halon systems, station is in compliance.
12A	13	Suitable safeguards (i.e., warning signs) provided, station is in compliance.
12A	15	Nameplate correct, station is in compliance.
12A	18	Halon systems are tested annually, station is in compliance.
12A	19	Systems adequately maintained, station is in compliance.
12A	20	Pressure is adjusted for temperature, station is in compliance.
12A	21, 22, 25, 26	Central File halon system abandoned in place (no longer applicable).
13	1	Items corrected, station is in compliance.
13	2	Code provided to station, station is in compliance.
13	5	1/2 inch brass bushings installed, station is in compliance.
13	6	Test pipe corrected, station is in compliance.
13	7	Nipple replaced and system is drainable, station is in compliance.
13	13	Item corrected, station is in compliance.
13	15	Maintenance item routinely corrected, station is in compliance.
13	16	Pendant head provided, station is in compliance.
13	25	System restored to service, admin procedures control impairments, station is in compliance.
13	29, 31	M&MPC hydraulic calculations satisfy intent, station is in compliance.
13A	1, 3	Procedures revised, station is in compliance.
13A	5	Valves are tagged and inspected, station is in compliance.
13A	6	Valves found mispositioned are reported (CAP) and procedures govern impairments, station is in compliance.
13A	7	Valves are lubricated annually, station is in compliance.
13A	9	Hydrants periodically checked with T-Handle, station is in compliance.
13A	11	Station surveillance checks sprinkler heads, station is in compliance.
13A	12	Extra high temperature sprinklers are not used at LaSalle (i.e., not a deviation).
13A	14	Sprinkler guards are not provided at LaSalle, station is in compliance.
13A	16	Hangers are periodically inspected, station is in compliance.
13A	18, 19	Air compressors included in routine maintenance program and lubricated as necessary, station is in compliance.
13A	26	Main drains, inspector test, hydrants and yard loop periodically flushed, station is in compliance.
13A	27	Impairment procedure ensures equipment is in working order when returned to service, station is in compliance.
14	3	Hose stations are not obstructed, station is in compliance.
14	4	Not applicable to power plant, station is in compliance.
14	7	Hose stations are UL listed, station is in compliance.
14	11	Pressures cannot exceed 200 psi, station is in compliance.

Deleted Deviations

NFPA Code	Deviation No.	Reason
14	17	Hose stations repaired, station is in compliance.
15	5	Nozzles not aimed at bushings, station is in compliance.
15	7	Drain re-pitched, station is in compliance.
15	10	Heat detectors are used when they trip water spray system, station is in compliance.
15	13	Water supplies are kept in operating condition, station is in compliance.
15	14	Open head systems, except are charcoal filters, are flow tested. Wetting charcoal overrides benefit of test. Station is in compliance.
15	19	Heat detectors are corrected, station is in compliance.
15	20	Manual pull stations are protected, station is in compliance.
20	5	Flow meter provided, station is in compliance.
20	7	Air release valve installed, station is in compliance.
20	8	Governor set with high quality tach, station is in compliance.
20	9	Cooling piping corrected, station is in compliance.
24	1	SW cross tie check valves can be isolated, station is in compliance.
24	2	All "control" valves are tagged and locked, not sealed, station is in compliance.
24	3	Equipment in hydrant house satisfies authority having jurisdiction, station is in compliance.
24	4	Nozzles are approved type, station is in compliance.
24	5, 6, 7	Procedures revised, station is in compliance.
24	8, 9, 10	ANSI flush procedure used during initial installation, station is in compliance.
26	1	Valve returned to service, station is in compliance.
26	4	Valves are tagged, station is in compliance.
26	7	Impairment procedures ensures valves are properly tested when returned to service, station is in compliance.
26	8, 9, 10	Fire protection valves are appropriately sealed, locked and/or supervised, tagged or labeled, and administratively controlled (station is in compliance).
26	12	OOS tags are used for valves, station is in compliance.
26	15	Valve restored to service and impairment procedure ensures fire watches are established for impaired valves, station is in compliance.
27	2	Fire Marshal and Trainers obtain assistance form outside agencies, as needed, station is in compliance.
27	3	Training facilities and classrooms are provided, station is in compliance.
27	6	Station is in compliance.
27	7	First aid equipment is provided, station is in compliance.
27	8	Spare equipment available, station is in compliance.
27	9	Vehicles not required, station is in compliance.
27	10	Supplied are available on-site, station is in compliance.
30	2, 3, 5, 6, 7, 8, 9, 10, 11, 12	Flammable and combustible liquids admin control procedure revised, station is in compliance.
30	4	Ductwork corrected, station is in compliance.
37	3	Covered by Deviation 37-2.
50A	2	Power lines buried, station is in compliance.
50A	4, 5	Surveillance revised, station is in compliance.
50A	6	Fire brigade trained on hydrogen fires, station is in compliance.
51B	1, 2, 3, 4, 5, 6, and 7	Hot work procedure revised, station is in compliance.
72D	12	EDG CO2 supervised, station is in compliance.

Deleted Deviations

NFPA Code	Deviation No.	Reason
80	1	Fire doors are UL labeled, station is in compliance.
80	7, 8, 10, 11, 13, 14, 19, 21	Combined with similar Deviation 80-5.
80	12	Fusible link replaced (also not considered a deviation).
80	16, 17, 18	Combined with similar deviation 80-15.
80	20	Self-closing devices housed to protect mechanism, station is in compliance.
80	23, 24, 25, 26, 27	Station procedures and pm programs ensure that doors are repaired in a timely manner and that doors (including hardware and self closing devices) are properly installed, lubricated (as necessary), kept clear from obstructions, and kept in working order.
80	29	Fusible link not painted, station is in compliance.
90A	3	Damper access doors labeled, station is in compliance.
90A	4	All air filter (except charcoal) specified Class 1, station is in compliance.
90A	7, 8	Closed to similar Deviation 90A-9 (all other required HVAC penetrations provided with dampers).
204	2, 3	Smoke and heat vents are periodically tested, station is in compliance.
232A	4, 5, 6,	Fire seal installed, station is in compliance.
232A	9, 10	Closed to similar Deviation 232A-1.
232A	11	Door can be unlocked from inside, station is in compliance.
232A	12	Self-closer provided, station is in compliance.
232A	22	Smoking prohibited (reasonable assurance that matches are not used), station is in compliance.
232B	1	Plans were prepared by licensed engineer, station is in compliance.
232B	5	Cabinets are non-combustible, station is in compliance.
232B	10	Smoking prohibited (reasonable assurance that matches are not used), station is in compliance.
232B	12	Cabinets are non-combustible, station is in compliance.
803	7	FHA is periodically updated, station is in compliance.
803	8	Admin procedure developed for handling flammable gases, station is in compliance.
803	11	Plant outages consider fire protection, station is in compliance.
1962	1, 2, 3, 4, 5, 6, 11, 12, 13, 14, 15, 16, 17, 18, 19, 22, 23	Maintenance procedures revised to address deviations, station is in compliance.
1962	9, 10	Hoses replaced after use, station is in compliance.
1962	20, 21	Special equipment is used in testing hose and couplings, station is in compliance.

LaSalle County Nuclear Station

Fire Protection Report (FPR)

6. An Analysis of the Effects of Initiation of Fire Suppression Systems on Safe Shutdown Equipment at LaSalle County Station

AN ANALYSIS OF THE EFFECTS

OF

INITIATION OF FIRE SUPPRESSION SYSTEMS

ON

SAFE SHUTDOWN EQUIPMENT

AT

LA SALLE COUNTY STATION

Date Last Updated: February 2016 Rev. 8

I. INTRODUCTION

This analysis addresses the effects of manual, automatic, or inadvertent actuation of the fire suppression systems on zones containing safe shutdown equipment. It includes the effects of discharge from deluge and sprinkler systems, as well as from fire hoses. It is assumed that the effects produced by spraying with any of the fire suppression methods above would bound any effects of spraying with an extinguisher. Loss of offsite power is assumed in all cases.

The zones in the following buildings were analyzed:

Reactor Building
Auxiliary Building
Turbine Building
Emergency Diesel Generator Building
Radwaste Building
North Service Building
Off-Gas Filter Building

Safe shutdown equipment could be adversely affected by actuation, or consequences of actuation, of the aqueous fire suppression systems. The following three types of impingement were considered:

(1) Spray from deluge of sprinkler systems
(2) Hose stream
(3) Resultant flooding

II. METHODOLOGY

A zone by zone approach was used.

Zones are as defined in Table H.2-1 and Figure H.2-1 of Appendix H (Fire Hazards Analysis) of the Fire Protection Report.

Safe shutdown equipment in each zone is as previously identified in Section H.4 of Appendix H (Safe Shutdown Analysis) of the UFSAR. Generally, most zones were found to contain only one division of safe shutdown equipment. The LaSalle safe shutdown analysis shows that a fire in a single fire zone will not disable both redundant safe shutdown trains. Therefore, loss of a single fire zone under postulated intentional or inadvertent suppression system operation is acceptable for this analysis.

Each zone was analyzed regarding its content of safe shutdown equipment, the fire suppression systems employed, and the potential for loss of safe shutdown equipment due to activation of the fire suppression system(s). Also examined were the means of ridding the zone of accumulated fire protection water. Generally, fire

protection water would be carried away by floor drains, open hatchways, and stairwells directing flow to lower levels. Flooding potential exists only in the lower levels of the plant, but in no case was any flooding found to prevent safe shutdown of the plant.

Zones containing safe shutdown equipment were also examined for possible impact from the actuation of fire suppression systems in adjacent zones.

Gas suppression hoses for CO2 were analyzed, but their discharge lines are not pressurized in safety related areas. Multiple events would have to take place to achieve an inadvertent discharge. The CO2 is contained in a 10 ton tank in the turbine building. The hoses can only be pressurized by opening the master tank discharge valve and the local pilot valve to the hose. Therefore, inadvertent discharge is unlikely. The diesel generator room CO2 systems were analyzed and summaried for the applicable fire zones within this analysis.

III. **ASSUMPTIONS**

It was assumed that offsite power was lost and that this event coincided with the actuation of manual and/or automatic fire protection systems in only one zone of the plant. Credit was taken for plant staff action in that is was assumed that any automatic sprinkler of deluge suppression would be interrupted within 25 minutes, and that any additional protection measures would be provided manually. It was assumed that valves sprayed by a hose stream would remain in their given position, and that water would spread from one unisolated zone to another (e.g.: water flow through floor drains, under doors, through open doorways, and down stairwells and hatches).

The following flow rates are assumed per FSAR Q&R 10.37 and Section IV.E of the "Evaluation of the LaSalle County Station Fire Protection Water Distribution and Standpipe System", February 1984:

Deluge systems	0.3 gpm/ft^2	
Sprinkler systems	0.3 gpm/ft^2	for any 3000 ft^2 area.
	0.2 gpm/ft^2	for any 10000 ft^2 area under the turbine-generator operating floor in vicinity of the turbine oil piping and anywhere oil is likely to spread in the event of an oil line break.
Hose stations	300 gpm per zone	

IV. ANALYSIS

Area 1

This area is the reactor building refueling floor. No safe shutdown components are housed in this area. Fire protection is provided by several hose stations located in this area. Any accumulated fire protection water would be carried away by floor drains, or fall through slab openings to Zones 2B1, 2B2, 3B1, and 3B2 where drain capacities are adequate to handle any runoff. This area also has stairways which lead to zones 2B1, 2B2, 3B1 and 3B2.

Zone 2A

This zone houses the instrument storage room. No safe shutdown equipment is located in this zone. Fire protection is provided by a hose station in this zone. Accumulated fire protection water would either be carried away by floor drains or leave this zone via an open hatchway or stairway, both of which open to Zone 2B2 which houses no safe shutdown components and has adequate drain capacity to handle any runoff.

Zone 2B1

[redacted]nd fire protection is provided by hose stations. Also, a manual internal deluge system is located within the Division 2 stand-by gas treatment system located in this zone. Accumulated fire protection water would be carried away by floor drains and/or flow through an open hatch or stairwell which leads to Zone 2D where the drainage system is adequate to remove any runoff from Zone 2B1. Only Division 2 equipment will be affected by initiation of fire protection systems in this zone. Thus, the plant can be safely shut down using the remaining safe shutdown train.

Zones 2B2, 2C

These zones house no safe shutdown equipment. Fire protection is provided by hose stations. Any accumulated fire protection water would be carried away by floor drains or fall through slab openings. In either case, no safe shutdown equipment would be jeopardized. Stairs connect Zone 2B2 to Zone 2C, and Zone 2C to Zone 2D.

Zone 2D

This zone at elevation 786'-6" houses Division 2 safe shutdown cables. Fire protection is provided by hose stations. Any accumulated fire suppression water would be carried away by floor drains or fall through opening in the floor slabs to Zones 2E-1 and 2E-2 where drainage is adequate to remove any runoff form Zone

2D. Thus, the consequences of initiation of manual fire protection measures would be no more severe than the design-basis fire. Also, stairwells connect Zone 2D to Zones 2E-1 and 2E-2.

Zones 2E-1, 2E-2

[redacted] Fire protection is provided by hose stations. Any accumulated fire protection water would be carried away by floor drains or flow from Zone 2E-1 or 2E-2 to Zone 2F-1 or 2F-2 respectively through slab openings. In the event that equipment is disabled by fire protection measures, only one train of safe shutdown would be affected and the plant could be safely shut down. Also, stairwells connect Zones 2E-1 and 2E-2 to Zones 2F-1 and 2F-2 respectively.

Zones 2F-1 and 2F-2

[redacted] Hose stations provide the fire protection for these zones. Any accumulated fire protection water would be carried away by floor drains or fall through slab openings from Zones 2F-1 and 2F-2 to zones 2G-1 and 2G-2 respectively, where drain capacities are adequate to handle any runoff. Also these zones are connected by stairwells. Actuation of fire suppression systems in one of the subject zones could only disable one safe shutdown division. Thus, the consequences of initiation of manual fire protection measures would be no worse than the design-basis fire.

Zones 2G-1, 2G-2

[redacted]
Fire protection is provided by hose stations for both zones and also by an automatic sprinkler system over the rail access area in Zone 2G-2. Any accumulated fire protection water would be removed by floor drains or fall through slab opening from Zone 2G-1 to Zones 2H1-1, 2H2 and/or 2H3 and from Zones 2G-2 to 2H4 and/or 2H5. Zones 2G-1 and 2G-2 are also connected to Zones 2H2 & 2H3 and 2H4 & 2H5 by stairways respectively.

Spray shields could be used in Zone 2H4 to protect the 250-Vdc MCC #1DC06E, the CSCS equipment cooling system control panel #1PL35J, and the RCIC water leg pump #1E51-C003 from being disabled by water falling through the slab openings in Zone 2G-2 above. However, since only Division 1 safe shutdown equipment could be disabled by actuation of fire suppression systems in Zone 2G-2, the remaining safe shutdown train would be used to safely shut down the plant. Therefore, spray

shields are not necessary in this case. Similar circumstances exist for Zones 2H5, 2I4, and 2I5.

In the event of actuation of fire suppression systems in either one of the subject zones, only one safe shutdown train would be affected. Thus, the remaining train could be used to safely shut down the plant.

Zones 2H1-1 and 2H1-2

These two zones are found on elevation 694'-6" of the Unit-1 reactor building. Zones 2H1-1 and 2H1-2 house Divisions 2&3 and Division 1 safe shutdown equipment respectively. Fire protection is provided by hose stations. Any accumulated fire suppression water would be carried away by floor drains, floor grating or fall through slab openings from Zone 2H1-1 or 2H1-2 into basement sump Zone 2I1-1 or 2I1-2 respectively where this water will remain. In the event that safe shutdown equipment is disabled by fire protection measures, only one safe shutdown train would be affected. The remaining safe shutdown train would be available to bring the plant to a safe shut down.

Zones 2H2, 2H3, 2H4, 2H5

Zones 2H2, 2H3, 2H4, and 2H5 are the HPCS cubicle, the RHR heat exchanger B cubicle, and the RCIC/LPCS cubicle, and the RHR heat exchanger A cubicle respectively. Zone 2H2 houses Division 3 safe shutdown cables, and Zone 2H3 houses Division 2 safe shutdown equipment. Zones 2H4 and 2H5 both house Division 1 safe shutdown equipment. Fire hoses provide the fire protection for these Zone(s). Accumulated fire protection water in Zone 2H2, 2H3, 2H4, or 2H5 will be carried away by floor drains, fall through slab openings, and flow down stairwells and remain in basement sump Zone(s) 2I2, 2I3, 2I4, or 2I5 & 2I6 respectively. Since these basement zones house Divisions 3, 2, and Division 1 safe shutdown equipment respectively, only one safe shutdown division could be disabled by actuation of fire suppression systems in either of the subject zones. Safe shutdown can be achieved using the remaining safe shutdown train.

Zones 2I1-1, 2I1-2

These two zones comprise a general area in the basement of the Unit-1 reactor building. Zone 2I1-1 houses Divisions 2 and 3 safe shutdown cables and valves, and Division 1 safe shutdown cables and valves are housed in Zone 2I1-2. Fire protection is provided by hose stations. Walls and watertight doors isolate these zones from all other zones. As well as holding all fire protection water directly discharged into them, these zones act as catch basins for fire suppression water discharged in some other zones at higher elevation as well. Since the safe shutdown cables and components of any one of the subject zones at higher elevations are well separated from that of the other's, and since water retained in these zones will not

build up to the depth necessary to disable both safe shutdown trains, at least one safe shutdown path will be available to shut down the plant.

Zones 2I2, 2I3, 2I4, 2I5, 2I6

[redacted] Zones 2I2 and 2I3 contain Division 3 and 2 safe shutdown equipment respectively. Both Zones 2I4 and 2I5 house Division 1 safe shutdown components. No safe shutdown equipment is housed in Zone 2I6. Each of these basement sump zones is isolated by physical barriers and water tight doors, with the exception of Zone 2I6, which is accessible from Zone 2I4. Fire protection is provided by hose stations. Fire suppression water discharged into any one of these isolated zones would remain in that zone and potentially disable the associated division of safe shutdown equipment. Since only one safe shutdown division would be lost, the remaining safe shutdown train could be used to shut down the plant.

Zone 2J

This zone is the Unit-1 primary containment. Division 1 and Division 2 safe shutdown related valves and cables are housed in this zone. No aqueous fire suppression systems are present as this zone is isolated and inerted for protection during operation. Therefore, loss of either division of safe shutdown due to aqueous fire suppression system actuation during plant operation is not credible.

Zone 2K

This zone is the Unit-1 steam tunnel. No safe shutdown equipment is housed in this zone. Fire protection is provided by hose stations. Any accumulated fire suppression water would be carried away by floor drains.

Zone 3A

This zone houses the sipping instrument room. No safe shutdown equipment is located in this zone. Fire protection is provided by a hose station located in this zone. Accumulated fire protection water would either be carried away by floor drains or leave this zone via a slab opening or a stairway, both of which open to non-safety-related Zone 2B2 which has adequate drain capacity to handle any runoff.

Zone 3B1

This zone houses Division 2 safe shutdown equipment, and fire protection is provided by hose stations. Also, a manual internal deluge system is located within the Division 2 stand-by gas treatment system located in this zone. Accumulated fire protection water would be carried away by floor drains and possibly though an open

hatch or stairwell which leads to Zone 3D where the drainage system is adequate to remove any runoff. Only Division 2 safe shutdown equipment would be affected by actuation of fire protection systems in Zone 3B1. Thus, the remaining shutdown train would be available to shut down the plant.

Zones 3B2, 3C

These zones house no safe shutdown equipment. Fire protection is provided by hose stations. Any accumulated fire protection water would be carried away by floor drains or fall through slab openings. In either case, no safe shutdown equipment would be jeopardized. Stairs connect Zone 2B2 to Zone 2C, and Zone 2C to Zone 2D.

Zone 3D

[redacted] Fire protection is provided by hose stations. Any accumulated fire suppression water would be carried away by floor drains or fall through openings in the floor slabs to Zones 3E-1 and 3E-2, where drainage is adequate to remove any runoff from Zone 3D. Thus, the consequences of initiation of manual fire protection measures would be no more severe than the design-basis fire. Also stairwells connect Zone 3D to Zones 3E-1 and 3E-2.

Zone 3E-1 and 3E-2

[redacted] Zones 3E-1 and 3E-2 house Division 2 & 3 and Division 1 safe shutdown equipment respectively. Fire protection is provided by hose stations. Any accumulated fire protection water would be carried away by floor drains or flow from Zone 3E-1 or 3E-2 to Zone 3F-1 or 3F-2 through slab openings. In the event that fire suppression measures in one of the subject zones disables equipment, only one train of safe shutdown would be affected, and the plant could be safely shut down. Also, stairwells connect Zones 3E-1 and 3E-2 to Zones 3F-1 and 3F-2 respectively.

Zones 3F-1, 3F-2

[redacted] Zones 3F-1 and 3F-2 contain Division 2 and 1 safe shutdown equipment respectively. Zone 3F-1 also houses two Division 3 safe shutdown cables; however, these cables are protected by a three hour fire wrap and will be unaffected by fire protection measures. Hose stations provide the fire protection for these zones. Any accumulated fire protection water would be carried away by floor drains or fall through slab opening from Zones 3F-1 and 3F-2 to Zones 3G-1 and 3G-2 respectively, where drain capacities are adequate to handle any runoff. Also, these zones are connected by stairwells. Actuation of fire suppression systems in one of

the subject zones could only disable one safe shutdown division. Thus, the consequences of initiation of manual fire protection measures would be no worse than the design-basis fire.

Zones 3G-1, 3G-2

[redacted]
Fire protection is provided by hose stations. Any accumulated fire protection water would be removed by floor drains or fall through slab openings from Zone 3G-1 to Zones 3H1-1, 3H-2, and/or 3H3 and from Zone 3G-2 to Zone 3H4 and/or 3H5. Zones 3G-1 and 3G-2 are connected to Zones 3H2 & 3H3 and 3H4 & 3H5 respectively by stairways.

Spray shields were installed in Zone 3H4 to protect the 250-Vdc MCC #2DC06E, the CSCS equipment cooling system control panel #2PL35J, and the RCIC water leg pump #2E51-C003 from being disabled by water falling through the slab openings in Zone 3G-2 above. However, since only Division 1 safe shutdown equipment would be disabled by actuation of fire suppression systems in Zone 3G-2, the remaining safe shutdown train could be used to safely shut down the plant. Therefore, spray shields are not necessary in this case. Similar circumstances exist for Zones 3H5, 3I4, and 3I5.

In the event of actuation of fire suppression systems in either one of the subject zones, only one safe shutdown train would be affected. Thus, the remaining train could be used to safely shut down the plant.

Zones 3H1-1, 3H1-2

[redacted] Fire protection is provided by hose stations. Any accumulated fire suppression water would be carried away by floor drains, floor grating or fall through slab openings from Zone 3H1-1 or 3H1-2 into basement sump, Zone 3I1-1 or 3I1-2 respectively where this water will remain. In the event that safe shutdown equipment in one of the subject zones is disabled by fire protection measures, the remaining safe shutdown train would be available to safely shut down the plant.

Zones 3H2, 3H3, 3H4, 3H5

[redacted] Zone 3H2 houses no safe shutdown equipment, but Zone 3H3 houses Division 2 safe shutdown equipment. Zones 3H4 and 3H5 both house Division 1

safe shutdown equipment. Fire hoses provide the fire protection for these zones. Accumulated fire protection water in zone 3H2, 3H3, 3H4, and 3H5 will be carried away by floor drains, fall through slab openings, and flow down stairwells and remain in the basement sump Zone(s) 3I2, 3I3, 3I4, or 3I5 & 3I6 respectively. Since these basement zones house Division 3, 2, and Division 1 safe shutdown equipment respectively, only one division of safe shutdown will be disabled by actuation of fire suppression systems in either of the subject zones. Safe shutdown can be achieved using the remaining safe shutdown train.

Zones 3I1-1, 3I1-2

[redacted] Fire protection is provided by hose stations. Walls and watertight doors isolate these zones from all other zones. As well as holding all fire protection water directly discharged into them, these zones act as catch basins for fire suppression water discharged in some other zones at higher elevations as well. Since the safe shutdown cables and components of one of the subject zones are well separated from that of the other's, and since water retained in these zones will not build up to the depth necessary to disable both safe shutdown trains, at least one safe shutdown path will be available to shut down the plant.

Zones 3I2, 3I3, 3I4, 3I5, 3I6

[redacted] Both zones 3I2 and 3I3 contain Division 3 and 2 safe shutdown equipment respectively. Zones 3I4 and 3I5 house Division 1 safe shutdown components. No safe shutdown components are housed in Zone 3I6. Each of these basement sump zones is isolated by physical barriers and watertight doors. The only exception is zone 3I6 which is accessible from Zone 3I4. Fire protection is provided by hose stations. Fire suppression water discharged into any one of these isolated zones would remain in that zone and potentially disabled the associated division of safe shutdown equipment. Since only one safe shutdown division would be lost, the remaining safe shutdown train could be used to shut down the plant.

Zone 3J

[redacted] No aqueous fire suppression systems are present as this zone is isolated and inerted for protection during operation. Therefore, loss of either division of safe shutdown due to aqueous fire suppression system actuation during plant operation is not credible.

Zone 3K

This zone is the Unit-2 steam tunnel. No safe shutdown equipment is housed in this zone. Fire protection is provided by hose stations. Any accumulated fire suppression water would be carried away by floor drains.

Zone 4A

This zone is the auxiliary building upper ventilation equipment floor. No safe shutdown equipment is housed in this zone. Fire protection is provided by hose stations. Any accumulated fire protection water would be carried away by floor drains or fall through slab openings down to Zone 4B where drain capacity is adequate to handle any runoff. Additionally, this zone is connected to stairwells leading to Zone 5C11/6E.

Zone 4B

This zone is the auxiliary building lower ventilation equipment floor. Division 2 safe shutdown components are housed in this zone. Fire protection is provided by hose stations and, for various pieces of equipment, internal deluge systems are present. Accumulated fire protection water will be removed by floor and/or equipment drains, or fall through slab openings to non-safe-shutdown-related areas of the turbine building where drainage is adequate to remove any runoff. Since only Division 2 equipment could be lost due to initiation of fire protection measures, the remaining safe shutdown train would be available to safely shut down the plant. Also, stairwells connect this zone to Zones 5C11 and 6E.

Redundant HVAC systems for the control room are located in this zone. The HVAC systems have redundant ionization detectors located in the minimum outside air path. Upon smoke detection, the outside air is automatically directed through the emergency make-up filter train with charcoal absorber. Redundant ionization detectors are provided in the return air duct of the HVAC system which initate a circuit on smoke detection to recirculate the ventilation air through a recirculation charcoal absorber, and annunciate on the fire protection panel inside the control room. Area ionization detectors are also provided in the control room. The charcoal filters, which are normally isolated from the rest of the system by dampers and bypassed, have heat sensitive line type resistance detectors in them. Upon high heat detection, these detectors annunciate in the control room. In the event that a charcoal filter fire would be detected, the associated ventilation system could be shut down, fire protection measures could be initiated, and the redundant ventilation unit could be used exclusively. If the control room would need to be abandoned for any reason, safe shutdown could still be achieved via the safe shutdown panels which are located in Zones 4E1-2 and 4E2-2.

Zone 4C1

[redacted]. Fire protection is provided by hose stations housed in adjacent zones. Zone 4C1 has no floor drains, and only minimal drainage is provided in adjacent Zone 4C5. Assuming the control room is rendered inoperable, safe shutdown could still be achieved using the remote shutdown panels located in Zones 4E1-2 and 4E2-2. Thus, the consequences of initiation of fire protection measures would be no more severe than the design-basis fire. Accumulated fire suppression water would eventually drain away through open doors into adjacent zones of the turbine and auxiliary buildings where drains are adequate to handle any runoff.

Zone 4C2, 4C3, 4C4

[redacted] Fire protection for these zones is provided by hose stations. Some of the water discharged into any one of these zones will either be carried away by floor drains (except in Zone 4C4). Some of the water will remain in these zones, or flow into non-safe-shutdown-related Zone 5A3. Also, stairwells connect zone 4C2 to Zone 4D3 and Zone 4C3 to zones 4D4 and 5A4. Eventually, the water will enter zones 5C11 and 6E. Since each of these zones either contains no safe shutdown equipment or only safe shutdown cables, only Division 3 could be affected by initiation of fire protection measures in one of the subject zones. Thus, the remaining safe shutdown train would be available to safely shut down the plant.

Zone 4C5

[redacted] No safe shutdown components are located in this zone. Fire protection is provided by a hose station. Since minimal drain capacity is available in this zone, excess fire suppression water will flow into Zone 4C1, the control room, which houses Division 1, 2, and 3 safe shutdown components, but has no floor drains. Even though flooding both of these zones due to activation of fire suppression systems in Zone 4C5 is not credible, in the event that both zones are lost, safe shutdown could still be achieved using the remote shutdown panels located in Zones 4E1-2 and 4E2-2.

Zones 4D1-1, 4D1-2, 4D2

[redacted]. Zone 4D2 also houses two Division 3 safe shutdown cables; however, these

cables are protected by a one hour fire wrap and will be unaffected by fire protection measures. Fire protection for each zone is provided by hose stations and automatic preaction suppression systems. In any one zone, accumulated fire protection water would be carried away by floor drains or flow into adjacent zones of the auxiliary and turbine buildings where drainage capacity is adequate to prevent excess water from a cable spreading room for knocking out safe shutdown equipment in the adjacent zones. Only one safe shutdown division could be affected by activation of fire protection systems in any one of the subject zones. Thus, the remaining safe shutdown train would be available to safely shut down the plant.

Zones 4D3, 4D4

[redacted] Fire protection is provided by hose stations. Any accumulated fire protection water will be carried away by floor drains or flow into adjacent zones of the turbine and auxiliary building where floor drains are adequate to safely remove any runoff. In the event that equipment is disabled by the initiation of fire protection measures in one of the subject zones, only one safe shutdown train would be affected and the plant could be safely shut down. Also, Zones 4D3 and 4D4 are connected to Zones 4E3-2 and 4E4-2 by stairwells.

Zones 4E1-1, 4E1-2

[redacted] Fire protection is provided by hose stations. Any accumulated fire protection water would be carried away by floor drains or flow into other adjacent zones in the auxiliary and turbine buildings where drainage is adequate to remove this excess water before any damage to safe shutdown systems in these adjacent zones would occur. Only one safe shutdown division could be affected by the initiation of fire protection measures in one of the subject zones. Thus, the plant could still be safely shut down.

Zones 4E2-1, 4E2-2

[redacted] Fire hose stations provide the fire protection for these zones. Any accumulated fire protection water would be carried away by floor drains or flow into other adjacent zones of the turbine and auxiliary buildings where drainage is adequate to remove this excess water before any damage to safe shutdown systems in these adjacent zones would occur. Only one safe shutdown division could be affected by the actuation of fire suppression systems in one of the subject zones. The remaining safe shutdown train would be available to shut down the plant.

Zones 4E3-1 and 4E3-2

[redacted] Fire protection is provided by hose stations. Any accumulated fire suppression water would by carried away by floor drains or flow into adjacent zones of the turbine and auxiliary buildings where drain capacity is adequate to remove any runoff from the subject zones. Also a stairwell connects Zones 4E3-2 and 4F1. In the event that equipment is disabled due to initiation of fire protection measures, only one division of safe shutdown could be affected. The remaining safe shutdown train would be available to bring the plant to a safe shutdown condition.

Zones 4E4-1 and 4E4-2

[redacted]. Fire hoses provide fire protection for these zones. Any accumulated fire suppression water would by carried away by floor drains or flow into adjacent zones of the auxiliary and turbine buildings where floor drains are adequate to remove any runoff. One safe shutdown train would be available to safely shut down the plant in the event of the loss of safe shutdown equipment due to activation of fire protection measures in one of the subject zones.

Zones 4F1, 4F2

[redacted]. Fire protection is provided by hose stations. Accumulated fire protection water in either zone would by removed by floor drains or flow into adjacent zones in the auxiliary and turbine buildings where drainage is adequate to handle any runoff. Only Division 1 equipment could be lost due to activation of fire protection systems in one of the subject zones. Thus, the remaining safe shutdown train would be available to safely shut down the plant.

Zone 4F3

[redacted] However, Division 3 safe shutdown cables are protected by a three hour fire wrap and will be unaffected by fire protection measures. Fire protection is provided by hose stations and a preaction suppression system over the cable trays. Any accumulated fire suppression water will be carried away by floor drains or flow into adjacent Division 1 safe-

shutdown-related Zones 4F1 and 4F2 or Zone 5C11 which houses Division 1 and 2 safe shutdown components. Only Division 1 equipment could be lost due to initiation of fire protection measures in the subject zone. The remaining safe shutdown train would be available to safely shut down the plant.

Zones 5A1, 5A2

[redacted] Neither zone houses safe shutdown equipment. Fire protection is provided by automatic sprinkler systems throughout and also by hose stations. Any accumulated fire protection water would by carried away by floor drains, floor openings or flow into other non-safety-related zones where drainage is adequate to remove any runoff.

Zones 5A3, 5A4

[redacted] Neither zone houses safe shutdown equipment. Fire protection in each zone is provided by fire hose stations, and also in Zone 5A3 by a preaction sprinkler system on the Unit 1 & 2 turbine bearings. Floor drains in each zone are adequate to remove any accumulated fire protection water. Stairwells connect Zone 5A3 to several non-safety-related zones of the turbine building. Also stairs in Zone 5A4 lead to Zone 5B13.

Zone 5B1, 5B2

[redacted]. Fire protection for each zone is provided by hose stations and by automatic sprinkler systems located throughout the majority of the two zones. For the most part, fire suppression water will be carried away by drains or fall to lower elevation within these zones. Elevation 662'-4" in each zone, which is accessible only by ladders from above or through a water tight door, serves as a catch basin for fire protection water. Fire suppression water falling on certain stair landings could flow under doors to various other zones in the turbine building. However, since this amount is negligible when compared to the drainage capacity in these other zones, and since none of these zones house safety-related equipment, this runoff poses no threat to safe shutdown.

Zone 5B3

[redacted] Safe shutdown equipment is not housed in this zone. Fire protection is provided by hose stations, and automatic deluge and wet pipe sprinkler systems. Any accumulated fire protection water would either be carried away by drains or flow into adjacent non-safety-related zones where drains are capable of handling any runoff.

Zone 5B4

[redacted] No safe shutdown equipment is housed in this zone. Fire hoses provide fire protection for this zone. Accumulated fire protection water would be carried away by floor drains or flow/fall to other non-safety-related zones of the turbine building where adequate drain capacity is available. Stairwells connect this zone to Zone 5C11.

Zone 5B5, 5B6

[redacted] No safe shutdown equipment is housed in either zone. Fire protection is provided by hose stations. Accumulated fire protection water would by carried away by drains or flow/fall to other non-safety-related areas where drain systems are capable of removing any runoff. These zones are connected by stairwells to lower elevations of the turbine building.

Zones 5B7, 5B8

[redacted] Neither zone houses safe shutdown equipment. Both of these zones are protected by fire hoses and automatic deluge systems. Accumulated fire protection water will either be carried away by floor drains or flow/fall into other non-safety-related zones within the turbine building where drainage capacities are adequate to remove any runoff.

Zones 5B9, 5B10, 5B11, 5B12

[redacted] None of these zones houses safe shutdown components. Fire protection is provided by fire hose stations, and also for Zones 5B9 and 5B10 by wet pipe sprinkler systems. Accumulated fire suppression water would either be carried away by floor drains or flow/fall via doorways or open hatches to other non-safety-related zones where drainage is adequate to remove any runoff.

Zone 5B13

[redacted]. Fire protection is provided by hose stations. The Unit-1 and Unit-2 sides of this zone are separated by double fire doors and a stairwell which leads down to Zone 5C11. Any accumulated fire suppression water would be carried away by floor drains in this zone. Thus, the initiation of fire protection measures would produce consequences no more severe than the design-basis fire.

Zone 5C1, 5C2

[redacted]. No safe shutdown equipment is contained in these zones. Fire protection is provided by hose stations. Any accumulated fire protection water would be carried away by floor drains.

Zones 5C3, 5C4

[redacted]. No safe shutdown equipment is housed in these zones. Fire protection is provided by hose stations and automatic sprinkler systems. Any accumulated fire protection water will be removed by drains or flow from zone 5C3 and 5C4 into adjacent non-safety-related Zones 5B1 and 5B2 respectively, where drainage is adequate to handle any runoff.

Zones 5C5, 5C6, 5C7, 5C8, 5C9, 5C10

[redacted]
None of these zones houses safe shutdown equipment. Fire protection is provided by hose stations. Floor drains are adequate to remove any accumulated fire suppression water.

Zone 5C11

[redacted] Fire protection is provided by hose stations throughout this zone and also by a preaction suppression system in the diesel generator corridors.

Fire suppression water discharged in the Unit-1 corridor could flow into Zones 7C1 and 7C2 via floor drains. The resultant flooding could disable the Division 3 HPCS DG fuel transfer pump #1D002P in Zone 7C1 and the Division 2 DG "1A" fuel transfer pump #1D001P in Zone 7C2. Similarly, fire suppression water discharged in the Unit-2 corridor could flow into Zones 8C1 and 8C2 via floor drains. The resultant flooding could disable both the Division 3 HPCS DG fuel transfer pump #2D002P and solenoid valve #2D0014 in zone 8C1 and both the Division 2 DG "2A" fuel transfer pump #2D001P and the associated solenoid valve #2D0004 in Zone 8C2. Thus, since Division 1 power and control cables housed in the corridors could be lost due to fire and Division 2 and Division 3 DG fuel transfer pumps could be lost due to flooding, safe shutdown of the plant could be in jeopardy. All other

fire suppression water discharged in this zone would flow into other zones where drainage is adequate to remove any runoff. To address this problem, specific floor drains in the diesel generator corridor were plugged.

Fire suppression measures in the DG corridors could inadvertently disable one or more of the DG room CO_2 control panels. There is a separate independent DG room CO_2 control panel for each DG room. DG room CO_2 control panels 0C003JA, 0C002JA, 0C001J, 0C003JB, and 0C002JB are associated with Zones 7B1, 7B2, 7B3, 8B1, and 8B2 respectively. The unit 1 DG corridor contains panels 0C003JA, 0C002JA, 0C001J while the unit 2 DG corridor contains panels 0C003JB, and 0C002JB. In the event that a DG room CO_2 control panel is disabled, CO_2 could be discharged in the associated DG room and associated dampers would automatically close. Due to the arrangement of the fuel loading in both corridors being primary cable tray insulation of the ceiling level, it is anticipated that no more than 1 control panel would be damaged by a fire. Due to the separation distance between the panels, the total automatic Preaction suppression system in the corridor, as well as the installed smoke detection and response by the plant fire brigade, damage would be limited to one panel. Fire dampers that were closed as a result of the CO_2 discharged could be manually opened, as well as portable equipment established as necessary and doors opened to aid in the disposition of heat due to the operation of the diesel engine. See Attachment A for more details (letter sent to the NRC and NRC closure of the issue).

Zones 5D1, 5D2

[redacted] Fire protection is provided by hose stations. Accumulated fire suppression water would be carried away by floor drains and stairwell to zone 6E. A stairwell connects each of these zones to Zone 6E. Only Division 3 safe shutdown equipment could be affected due to initiation of fire protection measures in one of the subject zones. Thus, the remaining safe shutdown train would be available to shut down the plant.

Zones 5D3, 5D4

[redacted] None of these zones contain safe shutdown equipment, and in each case fire protection is provided by fire hoses. Floor drains are adequate to remove any accumulated fire protection water from these zones. Stairwells connect Zones 5D3 and 5D4 to Zones 5E1 and 5E2 respectively.

Zone 5D5

[redacted]. Floor drains are

adequate to remove any accumulated fire protection water from this zone. Only Division 3 safe shutdown equipment could be affected due to initiation of fire protection in this zone. Thus, the remaining safe shutdown train would be available to shut down the plant.

Zone 5D6

[redacted]. No safe shutdown equipment is housed in this zone. Fire protection is provided by hose stations and an automatic sprinkler system. Any accumulated fire protection water will be carried away by floor drains.

Zones 5E1, 5E2

[redacted] Neither of these zones house safe shutdown equipment. Fire protection is provided by hose stations, and by automatic sprinkler systems throughout both zones except in the heater drain pump rooms. Since these are basement zones, and loss of offsite power is assumed, drain and sump capacity are neglected. Any accumulated fire protection water will remain in theses zones.

Area 6

[redacted] and none of its seven zones house safe shutdown equipment. Fire protection is provided by hose stations throughout Area 6 and also by automatic sprinklers over portions of Zones 6B2 and 6B3. Accumulated fire suppression water will either be carried away by floor drains, or flow/fall into various non-safety-related zones within the solid radwaste or turbine building where drains are adequate to remove any runoff.

Zones 7A1, 7A2, 7A3

[redacted]. Floor drains in the three zones are adequate to remove any accumulated fire suppression water. Activation of fire suppression systems in any of these zones could only affect one safe shutdown division. Therefore, the remaining safe shutdown train would be available to safely shutdown train would by available to safely shut down the plant.

Zones 7B1, 7B2, 7B3

[redacted]

[redacted] Fire hoses provide the fire protection for these zones. Any accumulated fire protection water would be carried away by floor drains. Initiation of fire protection measures in one of the subject zones could only affect one safe shutdown division. Thus, the remaining safe shutdown train would be available to safely shut down the plant.

Zones 7B4, 7B5, 7B6

[redacted] Fire protection is provided by hose stations and automatic sprinklers for each zone. Zones 7B1, 7B2, and 7B3 are adjacent to Zones 7B4, 7B5, and 7B6 respectively. Zones 7B4, 7B5, and 7B6 and their associated adjacent zones house Division 3, 2, and 1 safe shutdown components respectively. Accumulated fire suppression water in any one of the subject zones will be carried away by the floor drains in that zone, and any runoff will be removed by floor drains in the respective associated zone. Since initiation of fire suppression systems in one of the subject zones could affect only one division of safe shutdown equipment, the remaining safe shutdown train would be available to safely shut down the plant.

Zones 7C1, 7C2, 7C3, 7C4, 7C5, 7C6

[redacted] Zones 7C4, 7C5, and 7C6 are the HPCS diesel, Division 2 RHR service water, and Division 1 RHR service water pump rooms respectively, and these zones house Division 3, 2, and 1 safe shutdown equipment respectively. Fire protection is provided by fire hose stations, and for Zones 7C1, 7C2, and 7C3 automatic sprinkler systems are also provided. Since these are basement zones, and loss of offsite power is assumed, drain and sump capacity is neglected. Fire suppression water released into any one of these zones will accumulate in that zone due to the fact that the only means of egress from these zones is through water tight doors, up stairs with landings elevated six feet and six inches above the main floor elevation, or up ladders. In the event of initiation of fire protection measures in one of the subject zones, only one safe shutdown division could be affected. Thus, the remaining safe shut down train would be available to bring the plant to a safe shutdown.

Zones 8A1, 8A2

[redacted] Fire protection for these zones is provided by hose stations. Floor drains in the two zones are adequate to remove any accumulated fire

suppression water. Activation of fire suppression systems in any one of these zones will only affect one safe shutdown train. Therefore, the remaining safe shutdown train would be available to safely shut down the plant.

Zones 8B1, 8B2

[redacted]. Fire protection is provided by hose stations. Any accumulated fire protection water would be carried away by floor drains. Initiation of fire protection measures in one of the subject zones could only affect one safe shutdown train. Thus, the remaining safe shutdown train would be available for safe shutdown.

Zones 8B3, 8B4

[redacted] Fire protection is provided by hose stations and sprinklers for each zone. Zones 8B1 and 8B2 are adjacent to Zones 8B3 and 8B4 respectively. Zones 8B3 and 8B4 and their associated adjacent zones house Division 3 and 2 safe shutdown components respectively. Division 1 safe shutdown components are also housed in Zone 8B1. Accumulated fire suppression water in any one of the subject zones will be carried away by the floor drains in the respective associated zone. Initiation of fire suppression systems in one of the subject zones could affect only one safe shutdown train. Therefore, the remaining safe shutdown train would be available to safely shut down the plant.

Zones 8C1, 8C2, 8C3, 8C4, 8C5

[redacted] Fire protection is provided by hose stations, and for Zones 8C1 and 8C2 automatic sprinkler systems are also provided. Since these are basement zones and loss of offsite power is assumed, drain and sump capacities are neglected. Fire suppression water released into any one of these zones will accumulate in that zone due to the fact that the only means of egress from these zones is through water tight doors, up stairs with landing elevated 6'-6" above main floor elevation, or up ladders. In the event of initiation of fire protection measures in one of the subject zones, only one safe shutdown division could be affected. Thus, the remaining safe shutdown train would be available to bring the plant to a safe shutdown.

Area 9

[redacted]. Fire protection is provided by fire hose stations throughout Area 9 and also by sprinkler systems. Any accumulated fire suppression water would be carried away by floor drains or flow into fire zones 5B6 or 5C11 where drains are adequate to remove any runoff.

Area 10

[redacted] Fire protection is provided by hose stations located on each elevation. The actuation of fire suppression systems in any one zone in Area 10 will either have no impact on other zones or impact only adjacent zones within Area 10. Any fire suppression water discharged in Area 10 will eventually drain to the sump located in Zone 10C3. Access to other areas of the plant is through air locks at elevation 710'-6".

V. MODIFICATIONS PERFORMED

Elevation 710'-6" Fire Zone 5C11, diesel generator corridor Units 1 & 2. The Division 2 (Fire Zone 7B2 and 8B2) floor drain in each corridor were covered such that fire suppression water from each corridor is prohibited from entering the drain and discharging to the sump pump on the elevation below. Pre-fire plans for the fire brigade state that the stairwell doors at J-9 for Unit 1 and J-21 for Unit 2 can be opened to allow excess water to drain from the corridor. The water is collected by the auxiliary building drains at the bottom of the stairwell and no safe shutdown equipment is impacted. This action prevents the loss of the Division 2 fuel oil transfer pump needed for safe shut down.

VI. CONCLUSIONS

Since the required modification (as presented in Section V of this analysis) were installed, it is concluded that initiation of either manual or automatic fire protection measures in any plant zone will not preclude safe shutdown of the plant.

ATTACHMENT A

page 1 of 8

1. Letter to the Nuclear Regulatory Commission from W.T. Subalusky (ComEd) " SUPPLEMENTAL RESPONSE TO UNRESOLVED ITEM 96011-20" dated February 24, 1997.

   Note: The original signed letter is on file. For convenience an electronic copy of the letter is provided in this attachment. The letter consists of five pages.

2. NRC Closure of Unresolved Item #96011-20.

February 24, 1997

United States Nuclear Regulatory Commission
Attention: Document Control Desk
Washington, D.C. 20555

Subject: **SUPPLEMENTAL RESPONSE TO UNRESOLVED ITEM 96011-20**

References:

1. **G. E. Grant Letter to W. T. Subalusky, dated November 15, 1996, Transmitting NRC Inspection Report 373/374-96011**

2. **W.T. Subalusky Letter to United States Nuclear Regulatory Commission, dated December 20, 1996, Transmitting ComEd Response to NRC Inspection Report No. 50-373/96011; 50-374/96011 (DRP) and Notice of Violation**

The enclosed attachment contains LaSalle County Station's supplemental response to Unresolved Item 96011-20.

This supplemental response is provided to address the consequences of a fire in a diesel generator corridor that resulted in the loss of the associated Unit System Auxiliary Transformer and the Emergency Diesel Generators located adjacent to the corridor.

If there are any questions or comments concerning this letter, please refer them to me at (815) 357-6761, extension 3600.

Respectfully,

W. T. Subalusky
Site Vice President
LaSalle County Station

Enclosure

cc: A. B. Beach, NRC Region III Administrator
M. P. Huber, NRC Senior Resident Inspector - LaSalle
D. M. Skay, Project Manager - NRR - LaSalle
DCD - Licensing (Hardcopy: Electronic:)
Central File

ATTACHMENT
RESPONSE TO NOTICE OF VIOLATION
NRC INSPECTION REPORT
373/374-96011

Unresolved Item 96011-20:

The inspectors noted an issue open from 1987 to July 1996. The issue related to a potential fire in a corridor where control panels for all three EDGs were located. The fire could render all three division EDGs inoperable. The action taken in 1987 was initiation of an hourly fire watch and origination of a modification request to install physical protective barriers. However, due to concerns with fire retardant materials, the modification package was put on hold in 1991 and was canceled in September of 1996.

The basis for canceling the modification was establishment of an alternative shutdown path: core cooling by the reactor core isolation cooling system, which did not require EDG operation. Other longer term actions, such as cooling the suppression pool, would be handled by cross-tying the emergency busses to the other unit. This assumption and the analysis was previously approved by the NRC for the Station Blackout issue.

The inspectors questioned the licensee on the adequacy of the compensatory actions in place from 1987 to 1996 and what guidance would have been available to the operators had a fire occurred during this nine-year period. The focus of the inspectors' concerns was on why the licensee required the EDGs to operate, as 10 CFR Part 50, Appendix R, did not require a licensee to assume that offsite power was lost, unless the fire caused it to be. The licensee stated that assuming loss of offsite power was a conservative measure. However, neither the original (1987) fire hazard analysis contained in Appendix H of the UFSAR, nor the revision proposed in 1996, stated that a conservative assumption of loss of offsite power had been applied. Therefore, the inspectors inquired whether the licensee had confirmed that offsite power cables either would or would not be affected by a fire in the zone.

Conclusions: The lack of compensatory actions for a nine-year period could be a significant failure to take adequate corrective actions. The significance, however, depended on whether offsite power would be affected for a fire in the EDG corridor. Although the licensee claimed that loss of offsite power was a conservative assumption, this was not reflected in either the original fire hazards analysis nor in the 1996 revision. The inspectors requested that the licensee respond in writing providing evidence to support the assertion that a fire in the EDG corridor would not result in loss of normal power to the affected components. This is considered an unresolved item, pending the licensee's response (50-373/96011-20(DRS); 50-374/96011-20(DRS)).

Supplemental Response:

Both the original and current UFSAR assume a postulated fire occurs simultaneously with loss of offsite power. This assumption is conservative because offsite power is not affected by a fire in every fire zone, and the normal safe shutdown systems are powered by the emergency buses.

As discussed further below, safe shutdown is assured for all fire conditions in the diesel corridors required to be postulated per 10 CFR 50, Appendix R, including loss of offsite power to either unit. If normal offsite power is unavailable, required power is provided by the EDGs located adjacent to the corridor. If both offsite power and the EDGs are not available for any reason, including fire damage, required power is provided by the emergency dc system and the opposite unit normal and emergency power supplies (i.e., SAT and EDG). The emergency dc and opposite unit power supplies are not affected by a fire in either corridor. In addition, each corridor is protected with automatic suppression and detection.

In July, 1996, UFSAR Section H.4.2.57 (Safe Shutdown Analysis for Fire Zone 5C11) and associated tables were revised to reflect the systems and power supplies that are (and were) available for safe shutdown in the event of a fire in a diesel generator corridor. The revision documents the systems available for mitigating the potential loss of the power supplied from the System Auxiliary Transformer (SAT) and the Emergency Diesel Generators (EDGs) located adjacent to the corridor. The systems available (i.e., Reactor Core Isolation Cooling (RCIC), Automatic Depressurization System (ADS), and Residual Heat Removal (RHR)) are credited for performing their normal design function. The method utilizes the direct current (dc) mode of the RCIC system to maintain hot shutdown until the power necessary for achieving and maintaining cold shutdown (i.e., RHR) is provided from the opposite unit SAT or EDG. A fire in either corridor does not affect the opposite Unit SAT, EDG, or the ability to cross-tie the power supplies from one unit to the other.

The potential for a single fire in the Unit 1 diesel corridor to result in a loss of the Unit 1 SAT and the 0 / 1A / 1B EDGs is due to the fact that the CO2 Control Panels for the EDGs and the feed from the Unit 1 SAT are located in the Unit 1 corridor. The potential for a single fire in the Unit 2 diesel corridor to result in a loss of the Unit 2 SAT and the 2A / 2B EDGs is due to the fact that the CO2 Control Panels for the EDGs and the feed from the Unit 2 SAT are located in the Unit 2 corridor. The control panels for the EDG's are located in the individual EDG rooms (and, therefore, separate fire zones).

Though no single circuit failure could actuate more than one EDG CO2 system, it was postulated that a single fire could "short out" the panels / circuits in one corridor and cause the CO2 systems to spuriously actuate in the EDG rooms located adjacent to the corridor. In this postulated scenario, the EDGs could be disabled because the ventilation system for each room would be disabled by the CO2 trip.

In the event that a single fire in a diesel generator corridor causes (or had caused) a loss of the Unit SAT and the 0 / 1A / 1B or 2A / 2B (i.e., Unit 1, Unit 2, respectively) EDGs, safe shutdown from the Control Room will be (and would have been) achieved utilizing RCIC, ADS, and RHR, in accordance with standard normal, off-normal, and emergency operating procedures, as follows:

- Hot shutdown achieved by automatic reactor scram with full isolations.

- Hot shutdown maintained by controlling vessel level and pressure with RCIC and the Safety Relief Valves (i.e., ADS). RCIC would be manually started from the Control Room in accordance with LOP-RI-02 (Operation of the Reactor Core Isolation Cooling System for Level Control). RCIC also auto starts on a reactor water low level signal. RCIC would be operated in the dc mode until ac power is established.

- AC power to equipment necessary for achieving and maintaining cold shutdown established by cross-tying the opposite unit SAT or EDG in accordance with LOA-AP-101 / 201.

- Cold shutdown achieved and maintained with RHR.

The fact that the RCIC room cooler is not (would not have been) available until ac power is restored is acceptable because the RCIC system can operate for at least 4 hours without exceeding the RCIC system temperature qualification limits and the cross-tie can be established in a timely manner (i.e., less than 1-hour). Operating procedures for establishing the cross-tie during a loss of power to either unit are available. Specifically, LOA-AP-101 (Unit 1) and LOA-AP-201 (Unit 2) have been available since May of 1996. Prior to these procedures, LOA-AP-07, “Loss of Auxiliary Electrical Power”, and LOA-AP-08, “Total Loss of AC Power”, were available to the operators for the restoration of power.

As a result, power to the components required for achieving and maintaining safe shutdown are (and would have been) available for a fire in either corridor, and one train of systems needed to achieve and maintain safe shutdown are (and have been) protected from fire damage and spurious CO2 trip.

Summary of NRC Closure of Unresolved Item # 96011-20

LaSalle
Inspection No. 97-04, 97-04 Report Date: 6/26/97
Region: 3 Severity Level: NC

As discussed in NRC inspection report 50-373/374/96011, the NRC inspectors noted a licensee-identified issue open from 1987 to July 1996 related to a potential fire in an EDG corridor (Fire Zone 5C1 1), which could render all Unit 1 or Unit 2 EDGs inoperable. Specifically, a fire in the Unit 1 or Unit 2 EDG corridor could cause carbon dioxide fire protection system control panels for the adjacent diesel generator rooms to spuriously actuate. As a result, all EDGs adjacent to the affected corridor would be rendered inoperable due to inadequate ventilation although the licensee's fire hazards analysis contained in the Updated Final Safety
Analysis Report (UFSAR) relied upon the EDGs for safe shutdown.

The action taken in 1987 was initiation of an hourly fire watch and a modification request to install physical protective barriers for the carbon dioxide fire protection system control panels. However, due to concerns with fire retardant materials (Thermo-lag) the modification package was put on hold in 1991 and was canceled in September 1996.

The licensee's basis for canceling the modification was the establishment of an alternative shutdown path; hot shutdown maintained by controlling vessel level and pressure with the reactor core isolation cooling (RCIC) system and the automatic depressurization system (ADS), which did not require EDG operation; and long-term actions, such as suppression pool cooling, accommodated by cross-tieing emergency buses to the other unit's system auxiliary transformer (SAT) or EDGs.

The inspectors requested that the licensee provide evidence to support an assertion that a fire in the EDG
corridor would not result in a loss of normal power to affected components.

The licensee provided the following information:

UFSAR section H.4.2.57, "Safe Shutdown Analysis for Fire Zone 5C11 ," and associated tables were revised to add a new safe shutdown path in the event of a fire in Fire Zone 5C11 (EDG corridor) to satisfy the requirements of 10 CFR 50, Appendix R**,** "Fire Protection Program for Nuclear Power Facilities Operating Prior to January 1, 1979."

Procedures had been in place for operations to establish unit cross-ties to either unit.

Normal offsite power was supplied from the SATs to the safety-related 4.16 kV buses.

The diesel generator corridors are provided with fire detection and automatic suppression water systems.

The primary combustibles in the diesel generator corridors consist of electrical cable insulation routed in solid bottom and open top cable trays.

The impact of a fire in an exposed cable tray relative to the bus ducts is minimized by the physical location of the exposed cable trays to the bus ducts, in addition to the automatic detection and suppression systems.

The inspectors reviewed the licensee's actions in response to the identification of the problem in 1987 against 10 CFR 50, Appendix R requirements.

Summary of NRC Closure of Unresolved Item # 96011-20 (continued)

Although not formally documented or recognized by the licensee until July 1996, the alternative shutdown capability requirements of paragraph III.G.3 were met since an alternative shutdown path existed. However, the inspectors determined that the criteria specified by paragraph III.G.3 had not been satisfied until the
licensee updated the UFSAR to identify an adequate alternative safe shutdown path. This was completed in July 1996. 10 CFR 50.71 (e) required, in part, that the UFSAR be periodically updated to include the latest information developed. However, from 1987 to July 1996, **the licensee failed to appropriately update the UFSAR following identification that in the event of a fire in the EDG corridor, the adjacent EDGs would be rendered inoperable which was a violation of 10 CFR 50.71 (e).** However, because this violation was based upon activities of the licensee prior to the events leading to the extended plant shutdown and satisfied the criteria in Section VII.B.2, "Violations Identified During Extended Shutdowns or Work Stoppages," of the "General Statement of Policy and Procedures for NRC Enforcement Actions" (Enforcement Policy), NUREG-1 600, an NOV is not being issued (NCV 50-373/374/97004-03).

LaSalle County Nuclear Station

Fire Protection Report (FPR)

7. Fire Wraps/Ampacity Ratings

    1. Darmatt KM-1 Safety Evaluations/Correspondence

UNITED STATES
NUCLEAR REGULATORY COMMISSION
WASHINGTON, D.C. 20555-0001

November 20, 1995

Provided by
NUS Information Services
EQDB•FOMIS•LIS•NIIS•NOMIS
RAPID®•TDIS•TRENDS

Mr. D. L. Farrar, Manager
Nuclear Regulatory Services
Commonwealth Edison Company
Executive Towers West III
1400 Opus Place, Suite 500
Downers Grove, IL 60515

SUBJECT: SAFETY EVALUATION OF 1-HOUR FIRE-RATED DARMATT KM-1 FIRE BARRIER SYSTEM APPLICATION AT THE LASALLE COUNTY STATION (TAC NOS. M85563 AND M85564)

Dear Mr. Farrar:

By letter dated April 6, 1994, Commonwealth Edison Company (ComEd, the licensee) informed the staff that it intended to replace the Thermo-Lag 330-1 fire barriers at LaSalle County Station, Units 1 and 2, with the Darmatt KM-1 fire barrier system. In addition, the licensee submitted its fire test plan for the proposed replacement fire barrier system. By letters dated May 18 and June 22, 1994, the staff requested additional information concerning the test plan, the test laboratory, and the quality controls for the test program. By letters dated June 2 and July 14, 1994, the licensee responded to these requests.

By letter dated September 8, 1994, the licensee submitted a report entitled "Test Report for a 1-Hour Fire Test on Darmatt KM-1 Fire Protection System for Site Configurations at the LaSalle Nuclear Power Plant." The purpose of this test was to qualify the replication of a plant-specific raceway configuration protected by the Darmatt KM-1 fire barrier system to the fire endurance testing and acceptance criteria of Generic Letter 86-10, Supplement 1, "Fire Endurance Test Acceptance Criteria for Fire Barrier Systems Used to Separate Redundant Safe Shutdown Trains Within the Same Fire Area." By letter dated November 17, 1994, the staff requested additional information regarding test specimen construction, thermocouple placement, and certain observations made during the test. By letter dated June 2, 1995, the licensee responded to this request. Finally, during a conference call with the licensee on August 1, 1995, the staff requested clarifications. The licensee responded by letter dated August 28, 1995.

We have completed our review of the endurance test report and the supplemental supporting information. On the basis of our review, we have concluded that the fire test assembly met the acceptance criteria specified in GL 86-10,

9511270272 951120
PDR ADOCK 05000373
F PDR

DF01

Supplement 1. Our safety evaluation (SE) is enclosed. The ampacity derating and seismic capabilities evaluations are not included in the enclosed SE. These SEs will be provided to you by separate correspondence at a later date.

Sincerely,

Original signed by

Robert M. Latta, Project Manager
Project Directorate III-2
Division of Reactor Projects - III/IV
Office of Nuclear Reactor Regulation

Docket Nos. 50-373, 50-374

Enclosure: Safety Evaluation

cc w/encl: See next page

DISTRIBUTION:
~~Docket File~~
PUBLIC
PDIII-2
J. Roe (JWR)
R. Latta
R. Capra
C. Moore
OGC 0-15 B18
ACRS T-2 E26
B. Clayton, RIII
S. West 0-8 D1
D. Oudinot 0-8 D1
P. Madden 0-8 D1
C. McCracken 0-8 D1
M. Gamberoni

DOCUMENT NAME: LASALLE\LA85563.LTR
To receive a copy of this document, indicate in the box: "C" = Copy without enclosures "E" = Copy with enclosures "N" = No copy

OFFICE	LA:PDIII-2	C	PM:PDIII-2	E	D:PDIII-2	E				
NAME	C. Moore		R. Latta		R. Capra					
DATE	11/6/95		11/7/95		11/20/95					

OFFICIAL RECORD COPY

UNITED STATES
NUCLEAR REGULATORY COMMISSION
WASHINGTON, D.C. 20555-0001

SAFETY EVALUATION BY THE OFFICE OF NUCLEAR REACTOR REGULATION

RELATED TO DARMATT KM-1 FIRE BARRIER SYSTEMS

COMMONWEALTH EDISON COMPANY

LASALLE COUNTY STATION, UNITS 1 AND 2

DOCKET NOS. 50-373 AND 50-374

1.0 INTRODUCTION

Commonwealth Edison Company (ComEd, the licensee) installed Thermo-Lag 330-1 (Thermo-Lag) fire barriers at LaSalle County Station, Units 1 and 2 (LaSalle), to separate redundant safe shutdown electrical systems in accordance with Section III.G of Appendix R to 10 CFR Part 50. Concerns regarding the fire-resistive capability of Thermo-Lag led the U.S. Nuclear Regulatory Commission (NRC) to establish a special review team in 1992, and subsequently to develop a plan of action to address Thermo-Lag issues. In an effort to assess the amount of Thermo-Lag at each plant, in December 1993, the staff sent a request for additional information to licensees regarding Generic Letter (GL) 92-08 pursuant to 10 CFR Part 50.54(f). The licensee provided the requested information by letter dated February 10, 1994. In that response, the licensee stated that Thermo-Lag was used in two applications at each unit to provide 1-hour fire-resistive protection for one power cable tray and one control cable tray. These cable trays also include several air drops. The licensee stated that it did not intend to demonstrate the adequacy of the Thermo-Lag fire barriers and that it was considering using alternative fire barrier materials to meet the requirements of Appendix R.

By letter dated April 6, 1994, the licensee informed the staff that it intended to replace its Thermo-Lag fire barriers with a Darmatt KM-1 (Darmatt) fire barrier system. In addition, this letter provided the licensee's test plan for its proposed replacement fire barrier system. By letters dated May 18 and June 22, 1994, the staff requested additional information concerning the test plan, the testing laboratory, and the quality controls for the test program. By letters dated June 2 and July 14, 1994, the licensee responded to these requests.

By letter dated September 8, 1994, the licensee submitted a report entitled "Test Report for a 1-hour Fire Test on Darmatt KM-1 Fire Protection System for Site Configurations at the LaSalle Nuclear Power Plant." The purpose of this test was to qualify the replication of a plant-specific raceway configuration

Enclosure

9511270277 951120
PDR ADOCK 05000373
F PDR

protected by the Darmatt fire barrier system to the fire endurance testing and acceptance criteria of Generic Letter 86-10, Supplement 1, "Fire Endurance Test Acceptance Criteria for Fire Barrier Systems Used to Separate Redundant Safe Shutdown Trains Within the Same Fire Area." By letter dated November 17, 1994, the staff requested additional information regarding test specimen construction, thermocouple placement, and certain observations made during the test. By letter dated June 2, 1995, the licensee responded to this request. Finally, during a conference call with the licensee on August 1, 1995, the staff requested clarifications. The licensee responded by letter dated August 28, 1995.

2.0 EVALUATION

All dimensions, quantities, and other units of measure stated in this evaluation are nominal values.

2.1 General Fire Barrier System Description

The primary component of the Darmatt fire barrier system, which was manufactured by Darchem Engineering Ltd., was a semirigid endothermic reactive insulating board of 5/8-inch thickness and a surface density of 3.1 pounds per square foot. The boards were manufactured from a mixture of commercially available raw materials and were cut into pieces, panels, as needed for installation. Other components included the ceramic fiber boards, the pre-molded conduit sections, the ceramic fiber paper, the ceramic fiber blanket insulation, the expanding gaskets, the silicone rubber cloth, and the conduit mix. The ceramic fiberboard, about 2/3-inch thick with a surface density ranging from 13 to 18 pounds per square foot, was used only on the inner most layer of the cable tray side rails or the inner layer of the supports. The pre-molded conduit sections consisted of two 5-inch diameter precast half-rounds of the same composition as the insulating board. The ceramic fiber paper, 1/8-inch thick, was placed directly under the cable tray. The expanding paper gasket, Fiberfrax expanding paper, of 1/8-inch thickness, was installed at panel joints and expands to fill small gaps. The silicone rubber cloth, a silicone rubber-coated glass cloth reinforced with an Inconel wire mesh, was wrapped around the outer layer of Darmatt panels. The conduit mix, Darmatt Thermal Filler, was of the same composition as the insulating boards and was used to fill gaps that were too large for the paper gaskets.

2.2 Fire Endurance Test Program

The licensee designed and constructed an electrical raceway test assembly that was intended to replicate a plant-specific LaSalle configuration. The test assembly was covered with the 1-hour fire-rated Darmatt KM-1 fire barrier system. The licensee indicated that the resulting test specimen represented a composite of existing plant-specific configurations currently protected by Thermo-Lag and that the test results were expected to bound the plant-specific conditions. The original equipment supplier of Darmatt was the Favordale

Engineering Group of Darchem Engineering Ltd (Darchem/Favordale), a Transco sub-vendor in Darlington, England. The licensee contracted Transco Products Inc. (Transco), of Chicago, Illinois, to provide their expertise of fire protection systems. The test program was conducted as described below.

2.2.1 Test Laboratory and Quality Assurance

The fire endurance test was performed at the Faverdale Technology Centre Limited, Darlington, England. The accreditation of testing laboratories is performed in England by the National Measurement Accreditation Service (NAMAS). NAMAS is a Department of Trade and Industry Registrar for raw materials and commercial products, which acts on behalf of the Secretary of State for Trade and Industry and has the authority for the granting, maintaining, renewing, or terminating of accreditation. NAMAS performs surveillance visits yearly and reassessment inspections every 3 or 4 years. In early 1994, NAMAS performed a reassessment inspection at Faverdale and renewed its laboratory accreditation.

In May 1994, the licensee performed quality assurance audits of Transco and of Darchem/Faverdale. The areas covered by the audit included design control; software quality assurance; calibrations; material control and dedication; document control and procedure adequacy; nonconformance and corrective action; internal and external audits; records; installer training and certification; and handling, shipping, and storage of materials. On the basis of its audits, the licensee identified six unresolved items. In a letter of July 15, 1994, which was part of the letter of September 8, 1994, the licensee stated that corrective actions for these unresolved items had been completed.

2.2.2 Description of Test Specimens and Installation of Fire Barrier Material

The electrical raceway test assembly consisted of a cable tray, conduits, a junction box (JB), and an airdrop. The assembly did not include cable fill. With the exception of the JB, two conduits, one tray hanger, and one I-beam, which represented intervening components (i.e., thermal shorts), the test assembly was covered with the 1-hour fire-rated Darmatt KM-1 fire barrier system as described below. Darchem/Favordale installed the Darmatt fire barrier system. Faverdale Technology Center performed the quality control inspections of the raceway fabrication and of the Darmatt installation. The licensee witnessed and verified these construction activities, as documented in the letter of July 14, 1994. The licensee also provided to the staff the installation procedure entitled TIQAP 9.20 LS, Revision 1. This document was used as a guideline for the installation of the Darmatt system at LaSalle. The staff reviewed the letter of June 2, 1995, in which the licensee described how Darmatt was installed on the test specimens, and concluded that the procedures used to install the Darmatt system on the test specimens seemed to be consistent with the installation guidelines contained in TIQAP 9.20 LS, Revision 1.

2.2.2.1 Cable Tray

Test Specimen 1 was a 30-inch-wide solid-bottom steel cable tray. It was 4 inches deep and about 12 feet long with a 2-inch rung spacing. This tray entered through a vertical concrete furnace wall and ran parallel to the back furnace wall for about 7 feet. This tray section was installed so that it was 1 inch from the back furnace wall and 12 inches below the furnace ceiling. The tray then made a 90-degree horizontal turn and ran horizontally about 3 feet, where it penetrated the front wall of the furnace. The cable tray was supported from the concrete ceiling by Unistrut hangers.

The 7-foot horizontal section of the tray and a portion of the 90-degree horizontal bend were enclosed in a structural box-type frame constructed from L-shaped steel angles (2 inches by 2 inches by 1/4 inch thick). The cable tray fire barrier frame enclosure was two-sided (the frame dimensions were 21 inches high by 33 1/2 inches wide). The furnace concrete wall and ceiling formed the other two sides of the protective envelope system boundary. The frame was attached to the concrete with 3/4-inch Hilti "Quick Bolt II" anchors spaced about every 18 inches along the frame and no more than 2 inches from each corner. Anchor pins for holding the Darmatt fire barrier material in place were spaced and welded to the frame about every 6 inches. Before attaching the frame to the concrete ceiling and to the concrete back wall of the furnace, strips of expanding paper gasket were installed along the frame where it came into contact with the concrete. The frame was sized to accommodate two cable trays stacked vertically, but it contained only one tray which occupied the lower portion of the fire barrier enclosure. The two-sided fire barrier system was constructed of two layers of Darmatt fire barrier panels that were cut to size and attached to the frame. The inner layer panels on the vertical face of the enclosure were impaled over the anchor pins and secured with one speed clip washer over each pin, and the bottom panels (horizontal orientation) were lined with a single layer of ceramic fiber paper. These panels were installed with the ceramic paper in contact with the steel frame. Before installing the outer layer panels, each panel was fitted with silicone rubber outer cloth, which was wrapped around the panel and held in place by staples. J-hooks were installed along the panel edges and spaced about every 6 inches. The cloth-covered panels were impaled over the anchor pins, with the staples and the J-hooks on the outside, and secured with one speed clip washer over each pin. A stainless steel lacing wire was used to tie adjacent panel J-hooks in pairs, thus securing the joints and seams between these panels. The minimum air gap between the cable tray and the inner unexposed surface of the Darmatt fire barrier enclosure was about 5 inches.

The straight section (about 36 inches) of the cable tray, which exited the cable tray enclosure, was protected on four sides with Darmatt fire barrier panels (two layers on the top and bottom of the tray and three layers on the side rails). The Darmatt panels were applied directly to the cable tray. On the cable tray side rails, the innermost layer consisted of a ceramic fiberboard. The inner Darmatt panel fitted to the bottom of the cable tray had a layer of ceramic paper attached to the panel where it came into contact

with the tray. The preferred installation sequence was to install the top panel first, then the side panels, followed by the bottom panel. After the side panels were connected loosely to the top panel with wires laced around adjacent J-hooks, the bottom panel was secured in place. The panels were then permanently secured by tightening the lacing wire on the adjacent J-hooks. The cloth-covered outer layer was installed in an identical manner.

2.2.2.2 Ceiling-Mounted Conduit

Test Specimen 2 was a 3/4-inch diameter steel conduit 72 inches long. It was attached to the concrete ceiling of the furnace and spanned the width of the furnace. The purpose of this conduit was to interface and intervene with the cable tray fire barrier enclosure. This conduit penetrated the cable tray fire barrier enclosure and ran perpendicular to the cable tray enclosure against the furnace ceiling for about 36 inches, where it penetrated the front wall of the furnace.

The conduit was enclosed in an L-shaped steel angle structural frame for a distance of about 36 inches between the furnace wall and the point where it entered the cable tray enclosure. The frame (2 1/2 inches high by 5 inches wide) was attached to the concrete ceiling of the furnace with 3/4-inch Hilti "Quick Bolt II" anchors spaced about every 18 inches along the frame and 2 inches from each corner. Fire barrier anchor pins were welded to and spaced along the frame about every 6 inches. Before the frame was attached to the furnace concrete ceiling, strips of expanding paper gasket were installed along the frame where it came in contact with the concrete. The furnace ceiling formed the protective envelope on one side of the frame. The remaining three sides were protected with two layers of Darmatt fire barrier panels that were cut to size and installed on the frame. The first layer panels were impaled over the anchor pins and secured with one speed clip washer over each pin. Before installation, the second layer panels were wrapped with silicone rubber cloth. The cloth was held in place with staples. J-hook fasteners, spaced about every 6 inches, were installed along the panel edges, which interfered with adjacent panels. The cloth-covered panels were impaled over the anchor pins, with the staples and the J-hooks on the outside, and secured with one speed clip washer over each pin. After the bottom panels were fitted to the frame, the side panels and the bottom panels were connected together with stainless steel wire laced around adjacent J-hooks. The panel joints and seams were then permanently secured by tightening the lacing wire on the adjacent J-hooks. The minimum air gap was about 1 3/4 inches between the conduit surface and the inner unexposed side surface of the Darmatt fire barrier enclosure and 1 inch from the bottom.

2.2.2.3 Mid-Level Conduit

Test Specimen 3 was a 3/4-inch diameter steel conduit, 38 inches long, that ran parallel to the furnace ceiling and parallel to the cable tray side rail. This conduit was routed outside the cable tray enclosure open space for about 36 inches, where it penetrated the front wall of the furnace.

The conduit was enclosed in one layer of Darmatt premolded, semicircular panel sections (2-inch nominal thickness with a 5-inch outside diameter) applied directly over the conduit. The semicircular sections were secured together with lacing wires spaced about 9 inches along the barrier length and no more than 2 inches from each circumferential joint in the barrier system. Silicone rubber cloth was then wrapped around the conduit panels and secured to the panels with stainless steel bands spaced about 9 inches on center. In the horizontal span of this conduit, about 12-inches from the two-sided cable tray enclosure, a 1-inch section was unprotected. This break simulated a thermal short into the enclosure.

2.2.2.4 Junction Box and Air Drop Conduit

Test Specimen 4 was a steel 12-inch by 12-inch by 3-inch JB. It was attached to the front furnace wall adjacent to the cable tray. A 3/4-inch diameter steel conduit exited the top of the JB, made a short radius 90-degree bend and terminated about 1-inch above the cable tray. A bare No. 8 American Wire Gauge (AWG) copper conductor dropped from the end of the air drop conduit into the cable tray. The JB was attached to the concrete wall of the furnace with 3/4-inch Hilti "Quick Bolt II" anchors.

The furnace's concrete wall formed the protective envelope on one side. The remaining sides of the JB were protected with the Darmatt fire barrier panels installed using the same installation method described for Test Specimen 2. The minimum air gap was about 2 inches between the JB sides and the inner unexposed surface of the Darmatt fire barrier enclosure and about 3/4-inch between the front of the JB and the fire barrier enclosure. The overall dimensions of the JB fire barrier enclosure were 15 1/2 inches high by 18 1/2 inches wide by 5 1/2 inches deep.

Because of the close proximity of the air drop conduit to the cable tray envelope, it was necessary to notch the outer layer of the Darmatt system protecting the cable tray to accommodate the conduit. Once the outer layer of the tray wrap was notched, two layers of Darmatt were installed on the air drop conduit using methods similar to those used to apply the four-sided fire barrier enclosure to the cable tray.

2.2.2.5 Joint Detail

Edges of the panels on strips of test specimens (straight and semicircular) were selectively lined with strips of expanding paper gasket in such a manner that after installation of the panels, there was a gasket at the interface of each butt joint, each adjacent joint, and each longitudinal or circumferential joint. Expanding gaskets were either preattached to panel section edges or installed during test specimen construction. Gaps larger than 1/8 inch were filled with one additional strip of expanding gasket paper or thermal filler.

2.2.2.6 Material and Installation Deviations

In its letters of September 8, 1994, and June 2, 1995, the licensee indicated that certain minor material and installation deviations that may occur in the field fabrication of these barriers were deliberately included in the test program. These deviations included: (1) fire barrier material end not covered with silicone cloth, (2) cloth stapled to the exterior of the panel instead of wrapped around the panel, and (3) minor outer-layer gaps not filled with thermal filler or conduit mix. The licensee indicated that if these deviations were to occur in field installations, they would be bounded by the tested specimen.

2.2.3 Thermocouple Placement, Acceptance Criteria, and Hose Stream Test Methodology

GL 86-10, Supplement 1, states that fire endurance ratings are demonstrated by testing fire barrier assemblies in accordance with the provisions of the applicable sections of National Fire Protection Association (NFPA) Standard 251, "Standard Methods of Fire Tests of Building Construction and Materials," and American Society for Testing and Materials (ASTM) Standard E-119, "Fire Test of Building Construction and Materials." The licensee followed the guidance in GL 86-10, Supplement 1.

The temperature of the test specimen components was measured by glass-covered, 24-gauge, C20 type K thermocouples. The placement and the grouping of the thermocouples on the various test specimens and the methods used for averaging them for qualification purposes followed the guidance of GL 86-10, Supplement 1, except for the air drop conduit and its transition into the cable tray. Specifically, the test specimens were instrumented in the following manner: thermocouples every 6 inches on the exterior surface of each tray side rail between the side rail and the fire barrier material; a bare No. 8 AWG copper conductor routed down the center of the cable tray and attached to the top of the tray rungs with thermocouples attached to the conductor at 6-inch intervals; thermocouples spaced every 6 inches on the exterior conduit surface between the conduit and the unexposed surface of the fire barrier material; a No. 8 AWG bare copper conductor routed inside the conduits with thermocouples attached to the conductor at 6-inch intervals; thermocouples attached inside to each face of the JB surface at its geometric centers; one thermocouple on the JB within 1 inch of the air drop penetration; and a No. 8 AWG bare copper conductor routed inside the air drop with three thermocouples attached to the conductor at 6-inch intervals. Each thermocouple was either soldered to the bare copper conductor or attached to the test specimen component by means of a stainless steel rivet and washer.

GL 86-10, Supplement 1, specifies that the fire endurance qualification test for fire barrier materials applied to a raceway or a component is successful if the following temperature criteria are met:

- The average unexposed side temperature of the fire barrier system, as measured by thermocouples placed on the exterior surface of the component, does not exceed 250 °F (139 °C) above the initial temperature.

- The temperature rise of any single thermocouple does not exceed the maximum allowable temperature rise of 325 °F (181 °C) above the initial temperature.

- The fire barrier system remains intact during the fire exposure and water hose stream test without developing any openings through which the protected component is visible.

The licensee followed these temperature rise acceptance criteria.

Following the fire exposure, the test plan required the specimens to be subjected to a fog hose stream test for a period of 5 minutes. The test report specified that the stream was delivered from a 2 1/2-inch (nominal) diameter hose with a 1 1/2-inch spray discharge nozzle and a 30° spray angle, a nozzle pressure of 75 pounds per square inch (psi), and a flow of 75 gallons per minute (gpm), at a distance of 5 feet from the center point of the test specimen. This hose stream test met the criteria of GL 86-10, Supplement 1.

2.2.4 Test Results and Observations

On June 16, 1994, the test assembly was subjected to a 1-hour fire endurance test and to a hose stream test in accordance with the guidance of GL 86-10, Supplement 1, and ASTM E-119. With an initial ambient temperature of 54 °F, the temperature acceptance criteria were 304 °F for the average temperature rise and 379 °F for maximum single point temperature rise. The staff reviewed the temperatures of the test specimens recorded during the test, as documented in the letter of September 8, 1994, and concluded that the maximum recorded temperature of each test specimen did not exceed 203 °F (average) or 237 °F (single point). On the basis of the reported thermocouple test data, the staff concluded that the test assembly met the temperature rise acceptance criteria specified in GL 86-10, Supplement 1.

After the completion of the hose stream test, a visual inspection of the test specimens was performed. The following observations were made: (1) The fire barrier system appeared to be intact. It did not burn through and was not breached by the hose stream. The test report included photographs that confirm these general observations. (2) The color of the silicone glass cloth covering the outer layer of the Darmatt system had changed from dark grey to light grey and the cloth had sagged along the underside of the longest straight cable tray section. All of the glass cloth had remained in place and was not dislodged by the hose stream test. (3) The expanding paper gaskets expanded in some areas to fill the voids that developed during the fire endurance test, and small portions along the various joints were dark brown in color. (4) Some of the expanding paper gasket material was dislodged during the hose stream test. (5) The inner panels had discolored in several areas and the gasket material also had some discoloration in certain areas. On the

basis of the reported hose stream test results, the staff concluded that the test assembly met the hose stream test acceptance criteria specified in GL 86-10, Supplement 1.

2.3 Comparison of Test Assembly to In-Plant Configurations

The Thermo-Lag fire barriers were originally installed at LaSalle to satisfy an operating license condition and a licensing commitment as specified in the Updated Safety Analysis Report (USAR), Appendix H, Section H.4, "Safe Shutdown Analysis Report." Thermo-Lag was used to protect one power cable tray and one control cable tray at each unit. These power and control cable trays are located in the corridor that separates the diesel generator rooms from the essential switchgear rooms. This plant area is located in the turbine building and is common to both units.

The Unit 1 cable tray (which contains power cables), is 30 inches wide by 4 inches deep by 27 feet long, and is located on elevation 732'-0" of the turbine building (plan elevation 710'-6" between column lines 8 and 9 and J and L). The Unit 1 cable tray (which contains control cables), is 30 inches wide by 6 inches high by 25 feet long and is located on elevation 730'-8" of the turbine building. The trays are stacked on top of each other for about 8 feet. At each end of the run, the trays make a 90-degree turn and run parallel but at different elevations. Based on the fire test results, it appears that an individual Darmatt fire barrier tray enclosure constructed using the same attributes as Test Specimen 1 (individual tray enclosure) and installed on each tray individually will provide the same level of fire resistance as the tested barrier configuration.

The Unit 2 cable tray (which contains power cables), is 30 inches wide by 4 inches high by 30 feet long and is located on elevation 732'-9" of the turbine building (plan elevation 710'-6", between column lines 21 and 22 and J and L). The Unit 2 cable tray (which contains control cables) is 30 inches wide by 6 inches high by 30 feet long and is located on elevation 731'-3" of the turbine building. The trays are stacked on top of each other for 18 feet. On that span, concrete walls form two sides of the envelope on the upper cable tray (which contains power cables). At each end of this run the trays make a 90-degree turn and run parallel but at different elevations. Based on the fire test results, it appears that a two-sided Darmatt fire barrier system constructed using the same attributes as Test Specimen 1 (two-sided enclosure) and installed on the in-plant stacked tray configuration specified above will provide the same level of fire resistance as the tested barrier configuration.

The licensee only submitted information on the LaSalle cable tray configurations protected with Darmatt. The staff, therefore, did not compare the other test specimens to in-plant configurations.

3.0 CONCLUSION

On the basis of its review and evaluation, the staff concluded that the fire endurance test of the 1-hour fire-rated Darmatt KM-1 fire barrier test specimens described above was conducted in accordance with the methodology and acceptance criteria specified in GL 86-10, Supplement 1. The staff also concluded that the 1-hour fire-rated Darmatt KM-1 fire barriers installed at LaSalle described above were bounded by the plant-specific fire test specimens as to materials, methods of assembly, dimensions, and configurations and are, therefore, acceptable.

Principal Contributors: Danielle Oudinot
Patrick Madden

Date: November 20, 1995

DL 96-000768

UNITED STATES
NUCLEAR REGULATORY COMMISSION
WASHINGTON, D.C. [redacted]

March 29, 1996

Mr. D. L. Farrar
Manager, Nuclear Regulatory Services
Commonwealth Edison Company
Executive Towers West III
1400 Opus Place, Suite 500
Downers Grove, IL 60515

SUBJECT: EVALUATION OF THE CONSEQUENCES OF POSTULATED FAILURE OF 1-HOUR FIRE RATED DERMATT KM-1 FIRE BARRIER UNDER SEISMIC LOADING AT LASALLE COUNTY STATION, UNITS 1 AND 2 (TAC NOS. M85563 AND M85564)

Dear Mr. Farrar:

By letter dated April 6, 1994, Commonwealth Edison Company (ComEd) informed the staff that it intended to replace the Thermo-Lag 330-1 fire barriers at LaSalle County Station, Units 1 and 2, with the Darmatt KM-1 fire barrier system. The staff has completed its review of the consequences of the postulated failure of Dermatt KM-1 fire barrier under seismic loading as related to its usage in the diesel generator corridors of LaSalle, Units 1 and 2. The staff concludes that in the case of the detachment and fall of the fire barrier pieces from the cable trays under a postulated seismic event, none of the safety-related structures, systems, and components in the vicinity of the cable trays will be affected to an extent whereby they can not perform their safety functions. The staff also concluded that ComEd has properly considered the weight of the fire-barrier system in ensuring the seismic adequacy of the affected cable trays, cable-tray supports and their anchorages. Our evaluation is enclosed. The ampacity derating evaluation is still under review and will be provided to you by separate correspondence.

Sincerely,

Donna M. Skay

Donna M. Skay, Project Manager
Project Directorate III-2
Division of Reactor Projects - III/IV
Office of Nuclear Reactor Regulation

Docket Nos. 50-373, 50-374

Enclosure: Evaluation

cc w/encl: see next page

D6 96 000768

D. L. Farrar
Commonwealth Edison Company

cc:

Phillip P. Steptoe, Esquire
Sidley and Austin
One First National Plaza
Chicago, Illinois 60603

Assistant Attorney General
100 West Randolph Street
Suite 12
Chicago, Illinois 60601

U.S. Nuclear Regulatory Commission
Resident Inspectors Office LaSalle Station
2605 N. 21st Road
Marseilles, Illinois 61341-9756

Chairman
LaSalle County Board of Supervisors
LaSalle County Courthouse
Ottawa, Illinois 61350

Attorney General
500 South Second Street
Springfield, Illinois 62701

Chairman
Illinois Commerce Commission
Leland Building
527 East Capitol Avenue
Springfield, Illinois 62706

Illinois Department of Nuclear Safety
Office of Nuclear Facility Safety
1035 Outer Park Drive
Springfield, Illinois 62704

Regional Administrator
U.S. NRC, Region III
801 Warrenville Road
Lisle, Illinois 60532-4351

LaSalle Station Manager
LaSalle County Station
Rural Route I
P.O. Box 220
Marseilles, Illinois 61341

LaSalle County Station
Unit Nos. 1 and 2

Robert Cushing
Chief, Public Utilities Division
Illinois Attorney General's Office
100 West Randolph Street
Chicago, Illinois 60601

Michael I. Miller, Esquire
Sidley and Austin
One First National Plaza
Chicago, Illinois 60603

Document Control Desk-Licensing
Commonwealth Edison Company
1400 Opus Place, Suite 400
Downers Grove, Illinois 60515

12 7k 00-763

EVALUATION OF CONSEQUENCES OF POSTULATED FAILURE OF 1-HOUR FIRE RATED DERMATT KM-1 FIRE BARRIER UNDER SEISMIC LOADING LASALLE COUNTY STATION, UNITS 1 AND 2

INTRODUCTION

By letter dated April 6, 1994 (Ref. 1), Commonwealth Edison Company (the licensee) informed the staff that it intended to replace its Thermo-Lag fire barriers in the Diesel Generator corridors of both units of its LaSalle County Station with a Dermatt KM-1 (DKM1) fire barrier system. In addition, this letter provided the licensee's test plan for its replacement fire barrier system. The test plan did not include any testing related to the seismic resistance of the fire barrier system. In response to a staff's request for additional information (Ref. 2), the licensee stated: "For the purpose of evaluating the performance of the DMK1 material for its as-installed application at LaSalle Co. (Station), no credit has been taken with respect to the capability of the material to remain intact during a postulated seismic event."

This evaluation addresses the consequences of failure of the as-installed DMK1 fire barrier during a postulated seismic event on the (fire) protected raceways and other safety-related components in the vicinity of the raceways. The evaluation also addresses the adequacy of the supports of the protected raceways under the postulated seismic event.

EVALUATION

The DMK1 fire barrier system; consisting of 5/8 in. thick DKM1 board, ceramic fibre board, ceramic paper, reinforced silicon wrapping cloth, J-hooks, inconel wires and gaskets, has been installed on two 30 in. wide cable trays in each unit of the LaSalle County Station. The DMK1 fire barrier system replaces the Thermo-Lag fire barrier system. The two sets of cable trays contain the safety-related power and control cables. The cable trays are located in Diesel Generator corridors. The most damageable safety-related components in the immediate vicinity of the cable trays are HVAC ducts, cable-tray covers, a bus duct, and a cable conduit. The small diameter piping carrying fire water is not considered as safety-related because a fire and seismic scenario is not postulated.

After a number of discussions, the licensee estimated the as-installed weight of the DMK1 fire barrier system on the 30x6 inch cable tray as 34.9 ± 4.5% = 36.5 pounds per linear foot (upperbound), including the conservatively estimated weights of the system's components. Based on the worst case scenario of detachment of a large piece (≈ 30x5 inch) of DMK1 weighing 15 lbs., the licensee computed the impact forces on the intervening safety-related components. The localized maximum deflection of the HVAC sheet-metal top between the welded stiffeners was calculated as 2 inches. The force on

ENCLOSURE

D6 96 000768

the 1 inch long fillet weld of the stiffener was calculated as 184 lbs., while the allowable load was calculated as 1800 lbs. The maximum ductility ratio of the cable-tray cover under the impact was found to be 3. Appendix A of SRP Section 3.5.3 permits a ductility ratio of 10. Considering the conservatism used in the calculations, and the stresses and ductility ratios falling within the allowable limits, the staff concludes that the failure of the as-installed panel during a postulated seismic event will not jeopardize the safety functions of the safety-related components in the vicinity of the cable trays.

The licensee also reevaluated the adequacy of the cable trays, their supports and anchorages utilizing the fire barrier weight of 35.5 + 2# (to account for the weight of the residual Thermo-Lag material) = 38.3 pounds per linear foot to ensure that the stresses and deformations are within the established allowables. The staff finds the licensee's reevaluation acceptable.

CONCLUSION

Based on the review of the licensee's submittals and responses to the staff's requests for additional information, the ECGB staff concludes that in case of the detachment (and fall) of the fire barrier pieces from the cable trays, in the Diesel Generator corridors, under a postulated seismic event, none of the safety-related structures, systems, and components in the vicinity of the cable trays will be affected to an extent whereby they cannot perform their safety functions. The staff also assured itself that the licensee has properly considered the weight of the fire-barrier system in ensuring the seismic adequacy of the affected cable trays, cable-tray supports and their anchorages.

References

1. Letter from Martin Wolk (Commonwealth Edison) to NRC, "Commonwealth Edison Company Response to NRC Request for Additional Information Pertaining to Thermo-Lag Test Program," Dated April 6, 1994.

2. Letter from R. Querio (Commonwealth Edison) to NRC, "Response to NRC Request for Additional Information Regarding Use of Dermatt KM-1 in a Seismic Event."

UNITED STATES
NUCLEAR REGULATORY COMMISSION
WASHINGTON, D.C. 20555-0001

December 22, 1999

Mr. Oliver D. Kingsley, President
Nuclear Generation Group
Commonwealth Edison Company
Executive Towers West III
1400 Opus Place, Suite 500
Downers Grove, IL 60515

SUBJECT: CLOSURE OF AMPACITY DERATING ISSUES FOR FIRE BARRIERS AT LASALLE COUNTY STATION, UNITS 1 AND 2 (TAC NOS. MA3323 AND MA3324)

Dear Mr. Kingsley:

By letter dated April 23, 1997, the NRC issued a letter closing Generic Letter (GL) 92-08, "Thermo-Lag 330-1 Fire Barriers" for LaSalle County Station. The letter stated that there were open issues related to ampacity derating which emerged as a result of the staff's GL 92-08 review.

The staff has completed its review of ComEd's analytical approach for ampacity derating determination at LaSalle County Station. The staff concludes that all of the ampacity related concerns have been resolved for LaSalle County Station, Units 1 and 2, and ComEd has provided an adequate technical basis to ensure that all of the fire barrier enclosed cables are operating within acceptable limits. Therefore, the staff concludes that there are no outstanding concerns with respect to GL 92-08 ampacity derating issues. The basis for this determination is contained in the enclosed Safety Evaluation.

Sincerely,

Donna M. Skay

Donna M. Skay, Project Manager, Section 2
Project Directorate III
Division of Licensing Project Management
Office of Nuclear Reactor Regulation

Docket Nos. 50-373, 50-374

Enclosure: Safety Evaluation

cc w/encl: See next page

RECEIVED
DEC 29 1999
By BK
99-452

7-17

O. Kingsley
Commonwealth Edison Company

LaSalle County Station
Units 1 and 2

cc:

Phillip P. Steptoe, Esquire
Sidley and Austin
One First National Plaza
Chicago, Illinois 60603

Assistant Attorney General
100 W. Randolph St. Suite 12
Chicago, Illinois 60601

U.S. NRC-LaSalle Resident Inspectors Office
2605 N. 21st Road
Marseilles, Illinois 61341-9756

Chairman
LaSalle County Board of Supervisors
LaSalle County Courthouse
Ottawa, Illinois 61350

Attorney General
500 S. Second Street
Springfield, Illinois 62701

Chairman
Illinois Commerce Commission
527 E. Capitol Avenue, Leland Building
Springfield, Illinois 62706

Illinois Department of Nuclear Safety
Office of Nuclear Facility Safety
1035 Outer Park Drive
Springfield, Illinois 62704

Regional Administrator
U.S. NRC, Region III
801 Warrenville Road
Lisle, Illinois 60532-4351

Commonwealth Edison Company
LaSalle Station Manager
2601 N. 21st Road
Marseilles, Illinois 61341-9757

Robert Cushing, Chief, Public Utilities Division
Illinois Attorney General's Office
100 W. Randolph Street
Chicago, Illinois 60601

Document Control Desk-Licensing
Commonwealth Edison Company
1400 Opus Place, Suite 400
Downers Grove, Illinois 60515

Commonwealth Edison Company
Site Vice President - LaSalle
2601 N. 21st Road
Marseilles, Illinois 61341-9757

Mr. David Helwig
Senior Vice President
Commonwealth Edison Company
Executive Towers West III
1400 Opus Place, Suite 900
Downers Grove, Illinois 60515

Mr. Gene H. Stanley
PWR Vice President
Commonwealth Edison Company
Executive Towers West III
1400 Opus Place, Suite 900
Downers Grove, Illinois 60515

Mr. Christopher Crane
BWR Vice President
Commonwealth Edison Company
Executive Towers West III
1400 Opus Place, Suite 900
Downers Grove, Illinois 60515

Mr. R. M. Krich
Vice President - Regulatory Services
Commonwealth Edison Company
Executive Towers West III
1400 Opus Place, Suite 500
Downers Grove, Illinois 60515

Commonwealth Edison Company
Reg. Assurance Supervisor - LaSalle
2601 N. 21st Road
Marseilles, Illinois 61341-9757

Ms. Pamela B. Stroebel
Senior Vice President and General Counsel
Commonwealth Edison Company
P.O. Box 767
Chicago, Illinois 60690-0767

UNITED STATES
NUCLEAR REGULATORY COMMISSION
WASHINGTON, D.C. 20555-0001

SAFETY EVALUATION BY THE OFFICE OF NUCLEAR REACTOR REGULATION

RELATED TO GENERIC LETTER 92-08, "THERMO-LAG 330-1 FIRE BARRIERS"

COMMONWEALTH EDISON COMPANY

LASALLE COUNTY STATION, UNITS 1 AND 2

DOCKET NOS. 50-373 AND 50-374

1.0 BACKGROUND

Listed below is a brief outline of the history associated with the staff's review of LaSalle's fire barrier analyses:

5/18/94: The staff issued a Request for Additional Information (RAI) to obtain information on the licensee fire barrier test program (letter from A. Gody, Jr. to D. L. Farrar dated May 18, 1994).

6/2/94: Commonwealth Edison Company's response describes its ampacity derating methodology.

11/17/94: Second RAI issued by the staff requested information regarding licensee ampacity calculation.

6/2/95: Licensee response included Calculation No. 4266/19G52 dated March 4, 1994, for analysis of a combination Darmatt and Thermo-Lag fire barrier configurations (1 – 30 inch wide by 4 inch height cable tray and 1 – 30 inch wide by 6 inch height cable tray for each nuclear unit).

10/25/95: Third RAI issued by the staff requested information regarding Calculation No. 4266/19G52.

12/22/95 Commonwealth Edison Company submitted its response to the October 25, 1995, RAI regarding the ampacity derating analyses performed for the LaSalle County Station, Units 1 and 2, installations.

Although one staff question was addressed in the licensee submittal dated December 22, 1995, there remained a number of open issues and concerns regarding licensee Calculation G-63. The subject Calculation was also the subject of similar staff inquiries for the licensee's Braidwood and Byron Nuclear Stations. The staff's review of the LaSalle installations remained open pending completion of its review for Braidwood and Byron.

ENCLOSURE

2.0 EVALUATION

Listed below are the questions provided to the licensee in the staff's October 25, 1995, RAI and the licensee's responses as stated in their December 22, 1995, letter. Following that is the staff's analysis.

2.1 Question 1

The licensee's analysis, as documented in Attachment B of the June 2, 1995, submittal, Sargent & Lundy (S&L) Calculation 4266/19G52, Revision 0, "Ampacity Derating for Combination Thermo-Lag 330-1 Material and Darmatt Firewrap," begins with an assumption that the open top industry ampacity tables provide an accurate representation of the ampacity values, which will result in a 90 degree Celsius cable conductor hot spot temperature in an open top tray. It is generally recognized that for most, although not all cases, the subject tables provide a modest margin on operating ampacity.

Given this margin, the licensee methodology effectively assumes a lower bound value for the baseline heat load, and hence, would be expected to determine by calculation an upper bound value for the internal cable-to-cable tray thermal resistance factor. This result arises because the external resistance factors are fixed in accordance with the correlations used, and the driving temperature drop is fixed by the assumed values of cable and ambient temperature. Once the value of ampacity, i.e., heat load, is fixed then the internal resistance can be determined for the particular configuration. Hence, using a lower bound ampacity value with a downward bias would have a nonconservative effect because the higher internal resistance estimate would lower the baseline ampacity value thereby lowering the overall ampacity derating factor for the fire barrier system.

For the subject licensee analysis, the effect of this approach would be minimal given the nature of the tray type specified, i.e., the solid bottom cable tray. In fact, the industry ampacity tables provide an accurate estimate of the open top ampacities for a solid bottom tray due to the nature of Stolpe's original experiments.

The approach used to determine the internal resistance between the cables and the surface of a covered cable tray were based on the referenced 1982 ampacity experiments which used solid bottom cable trays. Therefore, the subject analysis is limited to the solid bottom cable tray application. In fact, the 1982 American Power Conference paper, "Tests at Braidwood Station on the Effects of Fire Stops on the Ampacity Rating of Power Cables," makes note of the fact that the industry ampacity tables were found to be nonconservative for some of the tested configurations.

Based on the above discussion, the licensee is requested to confirm that all of the cable trays under consideration for LaSalle County Station are solid bottom trays of the type used in the original tests performed for Braidwood Station as reported in the subject 1982 paper. If other types of cable trays are applicable for LaSalle County Station, then a specific and detailed justification for the applicability of the licensee methodology should be submitted by the licensee.

Licensee Response

All of the cable trays under consideration for LaSalle County Station are solid bottom trays of the type used in the original tests performed for Braidwood Station, and are governed by the methodology provided to the NRC staff in its submittal dated June 2, 1995.

Staff Analysis

The information provided by the licensee fully resolves the staff's concerns.

2.2 Question 2

The subject calculation (S&L Calculation 4266/19G52, Revision 0, "Ampacity Derating for Combination Thermo-Lag 330-1 Material and Darmatt Firewrap") is inconsistent with a similar calculation, ComEd Calculation G-63, Revision 2, "Darmatt Firewrap Material Cable Ampacity Derating Factor Calculation," dated January 23, 1995, and has the following discrepancies:

a. The subject Calculation does not include a thermal resistance factor associated with an assumed air gap between the firewrap and the cable tray. Calculation G-63 assumes a 1/16 inch air gap between the firewrap and the cable tray.

b. The input data parameter in the subject Calculation for the thermal conductivity of Thermo-Lag 330-1 material is 0.1 Btu/Hr-Ft-degree R (Rankine). Thermal Science Inc., Brochure 7.14, "Fire Resistive and Fire Retardant Subliming Coating System," specifies a thermal conductivity value of 0.1 Btu/Hr ft^2 °F/ft.

c. The input data parameter in the subject Calculation for the emissivity of the Darmatt surface is 0.6. Calculation G-63 specifies a emissivity value for the Darmatt surface of 0.7.

The licensee is requested to address the above apparent discrepancies and to revise its analysis accordingly.

Licensee Response

Calculation 4266/19G52, Revision 0, calculates the ampacity derating factor for a fire barrier installation that models a 1-hour fire barrier of Thermo-Lag 330-1 enveloped by an additional 1-hour fire barrier of Darmatt KM-1. This was done with the conservative assumption that no Thermo-Lag 330-1 would be removed with the installation of the Darmatt KM-1, when in actuality, essentially all Thermo-Lag has been removed except for some residual amount of the material remaining in Uni-Strut channels. This residual material is covered with the Darmatt material. The ampacity derating evaluation provides the basis to conclude that the affected power cables will perform their intended safety function with a modeled two-hour fire barrier. Accordingly, the calculation is considered to be conservative for the actual 1-hour fire barrier installation and is considered to acceptably represent this as-installed application.

a. Since the Thermo-Lag has been removed, the use of the Thermo-Lag thermal conductivity value for calculating the equivalent thickness of fire barrier material, results in essentially the same equivalent thickness for a 1-hour fire barrier, in comparison to the use of the thermal conductivity of air in Calculation G-63, Revision 2 (i.e., t = 1.531 inches vs. t = 1.508 inches, respectively). This is considered to be acceptable.

b. The thermal conductivity input value of 0.1 Btu/Hr-Ft °R was provided in a March 29, 1980, Thermal Science, Inc., letter to S&L, and was accordingly used as input to Calculation 4266/19G52, Revision 0. The units provided are consistent with the heat transfer equations used to determine the resistance of the fire wrap in °R-ft-hr/Btu in the calculation. These equations were taken from the calculation reference #4, "Heat Transfer Data Book," Schenectady, New York, General Electric Company, 1977, Kaminsky. D. A. (editor), for calculating the thermal resistance of the Thermo-Lag 330-1. Therefore, this input value is acceptable for Calculation 4266/19G52, Revision 0.

c. The emissivity value of 0.6 was based on early product data provided for the Darmatt KM-1 Fire Protection System, for the LaSalle County Station application, and it was the value specified at the time of Calculation 4266/19G52, Revision 0, preparation (March 1994). Subsequently, with the continued development of the Darmatt KM-1 Fire Protection System, the product data was revised in July 1994 to include an emissivity value of 0.7. This was used as input for Calculation G-63. The use of 0.6 is conservative in determining the radiation heat transfer from the surface of the wrapped tray for establishing the ampacity derating factor value.

It is recognized that incorporating the new data into the calculation would result in a calculation that may be more current with respect to input values. However, because of the conservatism in the calculation, this would not result in a significant change in the conclusion of the calculation nor a change in the ampacity derating factor determined for LaSalle County Station. Therefore, a revision to the calculation is not warranted at this time.

Staff Analysis

The information provided by the licensee for Calculation G-63 was considered to be incomplete given staff concerns associated with the ampacity derating reviews for Braidwood and Byron Stations that were outstanding at the time. Subsequent to the December 22, 1995, letter ComEd submitted additional information related to concerns associated with the reviews for Braidwood and Byron. The staff, in conjunction with its contractor, Sandia National Laboratories, has reviewed the additional information and concluded that it resolves the staff's concerns. The staff's review and the contractor's report are documented in a letter to ComEd dated November 2, 1999. This information resolved the open items as discussed below.

The licensee developed Calculation G-63 to determine the ampacity derating parameters for cable tray and conduit fire barrier configurations cladded with Thermo-Lag and Darmatt material in the standard design as described in IEEE Standard P848.

Calculation G-63 utilized with limited validation the following approach:

1. For conduits, first the baseline case of a conduit without any fire cladding was evaluated using heat transfer analysis to determine an ampacity value. This process was repeated using a similar thermal model which included the effects of the cladding material thereby representing the cladded case. The results of the two cases are then used to calculate an ampacity derating factor.

2. For cable trays, a similar analysis as outlined in (1) above is performed except that the baseline case uses a covered cable tray. The baseline case analysis also factors in the industry standard ampacity table values and earlier ampacity tests which were performed by the licensee to support the initial plant design and construction. This base case is then used to establish the net thermal resistance between the cables and the surface of the cable tray. In the cladded tray analysis, the added thermal insulation due to the cladding is incorporated into the external heat transfer behavior. The results of the two cases are then used to calculate an ampacity derating factor.

Overall, the staff found that the subject calculation possessed a net level of conservatism and was acceptable for ampacity derating determinations.

Disposition of Outstanding Concerns

Based on the additional information received and the review by Sandia National Laboratory which is documented in an enclosure to the November 2, 1999, letter to ComEd, the staff has made the following conclusions regarding the licensee's responses to Question 2, above:

a. The staff has concluded that the licensee adequately addressed the error in air gap treatment in a revision of Calculation G-63.

b. The licensee confirmed that the thermal conductivity input value was the correct value for Calculation No. 4266/19G52.

c. The information provided by the licensee fully resolves the staff's concerns.

Given that the licensee's methodology utilizes the appropriate industry test data and there are conservative features to ensure that the results are reasonable, the staff finds that the available information supports the conclusion that the fire barrier protected cables at LaSalle County Station, Units 1 and 2, are operating within acceptable ampacity limits for the applicable configurations.

3.0 CONCLUSIONS

From the above evaluation, the staff concludes that for LaSalle County Station, all of the ampacity related concerns have been resolved and the licensee has provided an adequate technical basis to ensure that all of the fire barrier enclosed cables are operating within acceptable ampacity limits. Therefore, the staff finds that there are no outstanding safety concerns with respect to GL 92-08 ampacity derating issues.

Principal Contributor: R. Jenkins, NRR

Dated:

7-24