BVPS ANNUAL EXERCISE 1991

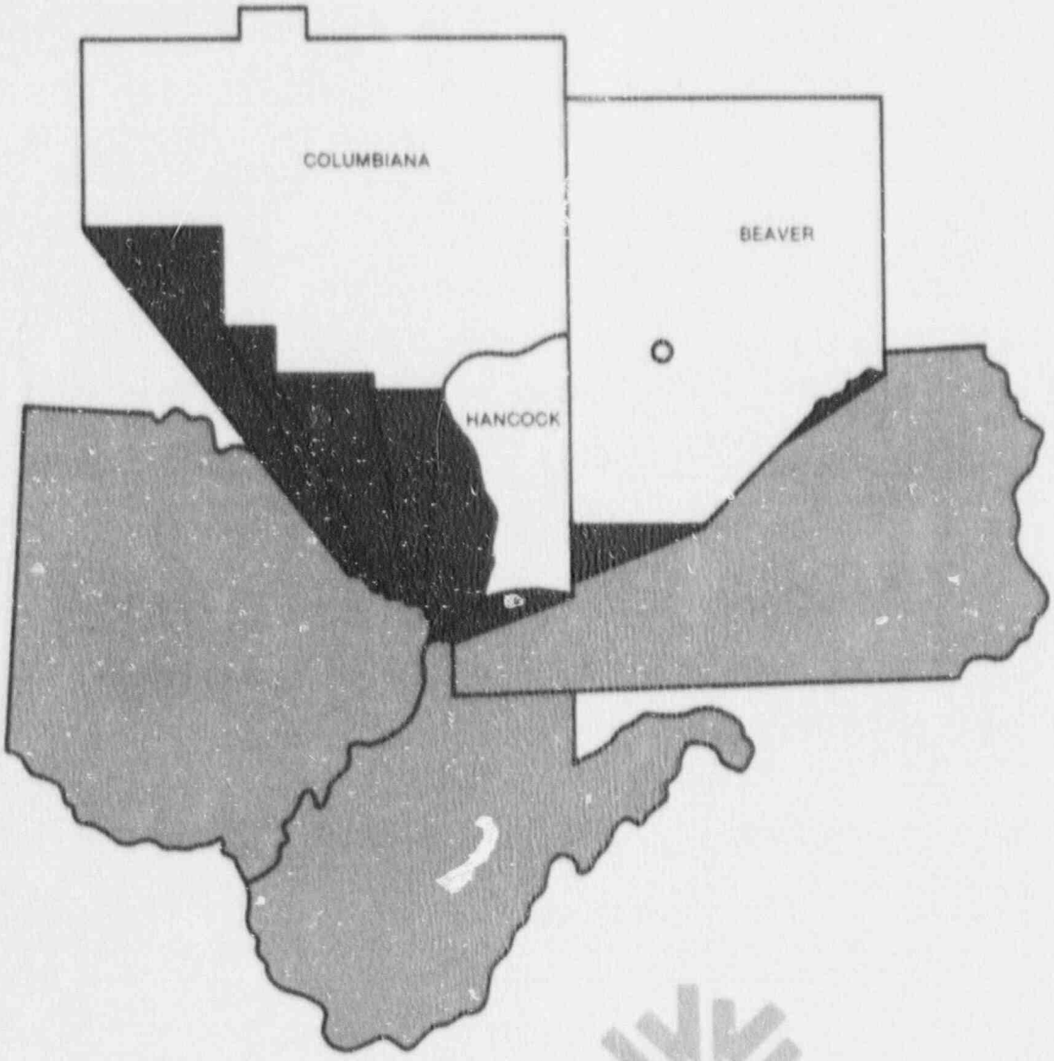

Duquesne Light

Duquesne Light

Nuclear Group
P.O. Box 4
Shippingport, PA 15077-0004

Telephone (412) 393-6000

DUQUESNE LIGHT COMPANY

BEAVER VALLEY POWER STATION

1991 ANNUAL EMERGENCY PREPAREDNESS EXERCISE

FOREWORD

This exercise package has been developed to provide the basis for the conduct of a simulated radiological accident at the Beaver Valley Power Station Unit 1 facility located in Beaver County, Pennsylvania, through which the capabilities and effectiveness of the Emergency Response Plans for the Duquesne Light Company can be evaluated. This package is to be utilized by the exercise controllers and observers of the Federal, State and Local agencies, as well as the Utility, to initiate, control and evaluate the activities of the participants in the exercise.

The Duquesne Light Company approves this document as the standard for conduct in performance of the February 27,1991 Annual Emergency Preparedness Exercise.

J. D. Sieber
Vice President
Nuclear Group

DUQUESNE LIGHT COMPANY

BEAVER VALLEY POWER STATION

1991 ANNUAL EMERGENCY PREPAREDNESS EXERCISE

--TABLE OF CONTENTS--

--TABLE OF CONTENTS CONT.--

INTRODUCTION

Section I

Section I

INTRODUCTION

In the interest of verifying that the health and safety of the general public in the Beaver, Columbiana and Hancock County areas are protected in the event of an accident at the Beaver Valley Power Station (BVPS), it is necessary for the Duquesne Light Company (DLC) to conduct an Annual Emergency Preparedness Exercise. The role of the Federal government at such an exercise is to evaluate the capabilities of the Utility, to provide the necessary protection for ensuring the health and safety of the public in the event of an accident at the BVPS Facility.

The Annual Exercise which is scheduled to be conducted on February 27, 1991 will be an "Onsite Only" Exercise, however, partial mobilization of State and Local personnel is expected. Exercise "players" will not have prior knowledge of the nature of the simulated incident or any parts thereof such as, radiological plume release information including times, content, size and weather pattern used. The exercise itself should allow Duquesne Light individuals who are assigned responsibilities in a radiological emergency to demonstrate whether they are adequately trained to perform according to current emergency preparedness plans and procedures.

This package has been developed to assist the exercise controllers and observers in the conduct and evaluation of the Annual Exercise. This package contains all of the information and data necessary to properly conduct the Annual Exercise in an efficient and coordinated manner and is broken down as shown in the Table of Contents, page i.

NOTE: As exercise efforts progress, minor changes may be required to this scenario package. Any changes will be identified during pre-exercise meetings.

Participants

Section I

(Part A)

Section I

ANNUAL EXERCISE PARTICIPANTS

Duquesne Light Company, Beaver Valley Power Station

* Limited participation in the areas of information, decision making and protective action recommendations is planned by the following State and Local agencies.

1. Pennsylvania Emergency Management Agency
2. Department of Environmental Resources/Bureau of Radiation Protection - Pennsylvania
3. Ohio Emergency Management Agency and State Department of Health
4. West Virginia Office of Emergency Services and State Department of Health
5. Beaver County Emergency Management Agency
6. Columbiana County Emergency Management Agency
7. Hancock County Office of Emergency Services

Date and Time
of
Exercise

Section I

(Part B)

Section I

EXERCISE DATE AND TIME

In compliance with NUREG-0654/FEMA - REP-1, Rev. 1 and associated federal regulations governing continuing evaluation of radiological emergency response plans and preparedness for nuclear power plants, Duquesne Light Company will conduct an "Onsite Only" Annual Emergency Preparedness Exercise on Wednesday, February 27, 1991.

The exercise has been developed to initiate response actions beginning at 0930 hrs. on February 27, 1991. The exercise has been designed to test most of the major aspects of the Station's emergency preparedness program (refer to the exercise objectives, Section II) throughout the course of the day. Anticipated response actions are expected to occupy the exercise participant's time throughout the day.

The date and times associated with the conduct of this exercise have been agreed upon by Duquesne Light Company, the states of Pennsylvania, Ohio and West Virginia, and Beaver, Columbiana and Hancock Counties as well as the Nuclear Regulatory Commission and the Federal Emergency Management Agency.

Overall Schedule
of
Events

Section I

(Part C)

Section I

OVERALL SCHEDULE OF EVENTS

Tuesday, February 26,1991

A. Time: 1300 Hrs.

Location: Simulator Bldg, Classroom 3/4 (2nd Floor)

Purpose: Controller Meeting

Wednesday, February 27, 1991

A. Time: 0800 hrs.

Location: Simulator Bldg, Classroom 3/4 (2nd Floor)

Purpose: Orientation for TSC/EOF personnel

B. Time: 0900 hrs.

Location: Plant (CR, ROC, OSC)

Purpose: Orientation for Plant personnel.

Wednesday, February 27, 1991

A. 0900 hrs. Exercise Controllers will provide the Control Room, Radcon and Maintenance personnel with their players briefing at this time.

B. 0930 hrs. BVPS Annual Exercise Commences and Initial Conditions are provided to the Plant Operators (for detailed exercise sequence of events refer to sections V and VI).

C. 0940 hrs. An individual becomes injured and it is determined that he is also contaminated.

C.	0955 hrs. (Approx.)	Declaration of an Unusual Event due to a contaminated/injured man.
D.	1050 hrs.	A liquid release occurs to the Ohio River from the RWST.
E.	1105 hrs.	Declaration of an Alert due to the activity in the liquid release to the River.
F.	1200 hrs.	Time is available for lunch.
G.	1230 hrs.	A 400 GPM RCS leak occurs in containment.
H.	1300 hrs.	A crew exiting containment can not get the airlock doors closed.
I.	1315 hrs.	Declaration of a Site Area Emergency due to the RCS leak and loss of containment integrity.
J.	1320 hrs.	Call for Site Assembly.
K.	1340 hrs.	Call for a Site Accountability.
L.	1415 hrs.	Containment airlock is repaired.
M.	1500 hrs.	The 1991 BVPS Annual Exercise concludes.

Thursday, February 28, 1991

A.	1400 hrs.	Station critique of the exercise is held at the Simulator Building, Classroom 3/4 (2nd Floor). (observed by the NRC).
B.	1515 hrs.	NRC critique of the exercise is held at the Simulator Building, Classroom 3/4 (2nd Floor). (for DLC Management).

Controllers & Locations

Section I

(Part D)

Section I

Controllers and Location

Due to the inherent escalation of events and group involvement throughout the exercise, some of the controllers will transfer to alternate locations as the response escalates. It has been tentatively broken down in the following manner, however, depending on the actual response actions of the participants and the amount of "free play" allowed by controllers, some of these positions may alter during the conduct of the exercise.

Section I

Unusual Event

a. Onsite Lead Controller -C. Jenkins

b. Control Room

- Operations Management -C. Hynes
- Operations Management -T. Bean
- Roving -G. Mckee

c. Radiological Operations Center (ROC)

- Operations Management -J. Freund

d. Key Plant Locations

- Injured man -D. Kozak -R. Moser
- RWST -B. Brady
- Water Monitoring Team -J. Lebda

e. Offsite Locations

- Aliquippa Hospital -B. Drew

Alert Time Period

a. Onsite Lead Controller -C. Jenkins

b. Control Room

- Operations Management -C. Hynes
- Operations Management -T. Bean
- Roving -G. McKee
- Roving -D. Kozak

Section I

Alert Time Period (continued)

c. Key Plant Locations

- Containment crew	-D. Murko
- FW-P-1A oil leak	-G. Guzak
- Radiography Source	-J. Breslin

d. Inplant Radcon

- Radiological Operations Center (ROC)	-J. Freund
- RMS Panel	-T. Sidora
- Roving	-R. Moser
- Roving	-M. Shaw
- Roving	-J. Fontaine

e. Inplant Chemistry

-Chem. Lab/Roving	-D. Hoffman

f. Inplant Security

- Central Alarm Station (CAS)	-N. DiPietro
- Roving	-B. Souder
- Roving	-L. Miklavic
- Roving	-J. Gagliano

g. DLCo Corporate News Center

- Press Releases/Roving	-R. Fedin

Section I

Alert Time Period (continued)

i. Operations Support Center (OSC)

- OSC/Operations -M. Adams
- Roving -G. Guzak
- Roving -D. Murcko
- Roving -D. Carothers
- Roving -D. Hosmer

j. ERF Lead Controller -H. Szklinski

k. Technical Support Center (TSC)

- Management -B. Mahan
- Communications -C. Bibbee
- PVC -M. Hamel
- Chemistry -J. Kalinyak
- Security -B. Souder
- Engineering Assessment -B. Etzel

l. EA & DP Area

- Dose Projections -M. Duranko

m. Emergency Operations Facility (EOF)

- Management -J. Marietta

Section I

Site Area Time Period

a. Onsite Lead Controller -C. Jenkins

b. Control Room

- Operations Management -C. Hynes
- Operations Management -T. Bean
- Roving -G. McKee
- Roving -D. Kozak

c. Key Plant Locations

- Airlock -D. Hosmer
  -J. Fontaine
- Diesel #2 -D. Carothers

d. Inplant Radcon

- ROC -J. Freund
- RMS Panel -T. Sidora
- Roving -R. Moser
- Roving -B. Brady
- Roving -J. Lebda
- Roving -B. Drew
- Roving - J. Breslin

Section I

Site Area Time Period (continued)

e. Inplant Chemistry

- Chemistry Labs/Roving -D. Hoffman

f. Inplant Security

- Central Alarm Station (CAS) -N. DiPietro
- Assembly/Accountability/Roving -L. Miklavic
- Roving -B. Souder
- Roving -J. Gagliano

g. Operations Support Center (OSC)

- OSC/Operations -M. Adams
- Roving -D. Murcko
- Roving -G. Gizak
- Roving -

h. ERF Lead Controller -H. Szklinski

i. Technical Support Center (TSC)

- Management -W. Mahan
- PVC -M. Hamel
- Chemistry -J. Kalinyak
- Security -B. Souder
- Engineering Assessment -B. Etzel

Section I

Site Area Time Period (continued)

j. EA & DP Area

- Dose Projections -M. Duranko

k. Emergency Operations Facility (EOF)

- Management -J. Marietta

l. DLCc Joint Public Information Center

- Press Releases/Roving -R. Fedin

List of Abbreviations

Section I

(Part E)

Section I

EMERGENCY PREPAREDNESS ABBREVIATIONS

ACP	Access Control Point
ARERAS	Atmospheric Radioactive Effluent Release Assessment System
BCEMA	Beaver County Emergency Management Agency
BVPS	Beaver Valley Power Station
CCEMA	Columbiana County Emergency Management Agency
CFR	Code of Federal Regulations
DBA	Design Basis Accident
DEP	Director of Emergency Planning
DER/BRP	Department of Environmental Resources/Bureau of Radiation Protection (Pennsylvania)
DLC	Duquesne Light Company
DOE	Department of Energy (US)
EAL	Emergency Action Level
ENS	Emergency Notification System
EOC	Emergency Operations Center
EOF	Emergency Operations Facility
EPA	Environmental Protection Agency
EPZ	Emergency Planning Zone
ERF	Emergency Response Facility
ERFCS	Emergency Response Facility Computer System
FEMA	Federal Emergency Management Agency

Section I

EMERGENCY PREPAREDNESS ABBREVIATIONS (continued)

FSAR	Final Safety Analysis Report
HCOES	Hancock County Office of Emergency Services
INPO	Institute of Nuclear Power Operations
JPIC	Jiont Public Information Center
LEARN	Law Enforcement Activity Radio Network
LCO	Limiting Condition for Operations
LOCA	Loss of Coolant Accident
LPZ	Low Population Zone
MIDAS	Meteorological Information Dose Acquisition System
NDL	Nuclear Data Link
NRC	Nuclear Regulatory Commission (US)
NWS	National Weather Services
OEMA	Ohio Emergency Management Agency
ORC	Offsite Review Committee
OSC	Operations Support Center
OSC	Onsite Safety Committee
PAG	Protective Action Guides
PEMA	Pennsylvania Emergency Management Agency
PVC	Plant Variable Computer
RACES	Radio Amateur Civil Emergency System
ROC	Radiological Operations Center
SAPS	Shippingport Atomic Power Station
SPDS	Safety Parameter Display System

Section I

EMERGENCY PREPAREDNESS ABBREVIATIONS (continued)

SPING	Stationary Particulate, Iodine, Noble Gas Monitoring System
TCP	Traffic Control Point
TSC	Technical Support Center
WVOES	West Virginia Office of Emergency Services
X/Q	Wind Dispersion Factor (Chi/Q)

DUQUESNE LIGHT COMPANY

Beaver Valley Power Station

1991

Annual Emergency Preparedness Exercise

**** Scope & Objectives ****

ONSITE SCOPE AND OBJECTIVES

PART A

Duquesne Light Company

Beaver Valley Power Station

1991 Annual Emergency Preparedness Exercise

SCOPE:

The 1991 exercise, scheduled to be conducted on February 27, 1991 will simulate accident events culminating in a radiological accident from the Beaver Valley Power Station Unit #1, located in Beaver County, Shippingport, Pennsylvania. The exercise will involve events that test the effectiveness of the Station's Emergency Preparedness Program including the activation and utilization of all onsite emergency response facilities. This "Onsite Only" exercise will include partial-scale mobilization by State and local emergency personnel and resources in Pennsylvania, Ohio and West Virginia.

In order to establish the scope and boundaries of the 1991 BVPS emergency exercise scenario, a definitive set of objectives had to be developed. These objectives not only are used to ascertain the required input to the exercise sequence of events, but also to establish evaluation critique areas to be graded by the exercise controllers and observers during actual conduct of the exercise. The following objectives are to be used for this purpose.

NOTE: The objectives listed with an asterisk (*) to the left indicates that objective is used as both a scenario development objective and a controller/observer evaluation objective. The other listed objectives are strictly to be used as evaluation objectives to enhance the grading criteria.

A. Overall Onsite Objectives

* 1. Demonstrate understanding of Emergency Action Levels (EALs) and the ability to recognize and classify emergency conditions properly.

2. Demonstrate adequate and effective information flow between BVPS Emergency Response Facilities (ERFs) and proper utilization of emergency response equipment.

3. Demonstrate at all BVPS emergency response facilities the ability to maintain accurate record keeping and logging of data, information, message transmittals and status boards.

4. Demonstrate the ability to establish and maintain solid accident management command and control authority and maintain continuity of authority in all BVPS emergency facilities throughout the exercise.

* 5. Demonstrate the ability to determine and implement appropriate protective action recommendations to protect Site personnel based on plant parameters.

6. Demonstrate the ability to mobilize corporate level support in response to the incident.

7. Demonstrate effective rumor control techniques.

* 8. Demonstrate emergency termination and recovery capabilities. (Recovery will be limited to discussions with respect to immediate emergency re-entry needs and long term management aspects).

9. Demonstrate an effective exercise critique program to include participating players, controllers and observers.

* 10. Deficiences identified in past exercises or inspections have been addressed and corrected, and will be demonstrated if applicable.

B. Operations Objectives

* 1. Demonstrate the Control Room's ability to recognize operations symptoms and parameters indicative of degrading plant conditions.

2. Demonstrate the Control Rooms ability to respond to emergency situations using appropriate Abnormal Operating Procedures (AOPs) and Emergency Operating Procedures (EOPs).

* 3. Demonstrate the ability to initially classify emergency conditions and properly activate the necessary emergency response facilities and personnel.

4. Demonstrate efficient and effective 24-hour communications capability to notify onsite and offsite personnel to include use of phone systems, audible alarms, public address systems, and/or visual alarms.

5. Demonstrate effective communications/informational flow from the Control Room to other emergency response facilities.

* 6. Demonstrate the operating shift's capability to assemble and dispatch emergency squads/teams in response to in-plant problems.

* 7. Demonstrate the capability to shift authorities and responsibilities from the on-shift emergency organization to the onsite (TSC) and offsite (EOF) emergency organizations upon their activation.

C. Radiological Control Objectives

1. Demonstrate the ability to provide adequate radiation protection services while maintaining personnel exposures ALARA through the utilization of appropriate procedures.

* 2. Demonstrate radiological controls necessary to remove a contaminated injured individual from an accident scene and to assist the medical team in minimizing the consequences of the contaminated individual.

* 3. Demonstrate the ability to conduct radiological surveys for airborne and/or liquid releases.

* 4. Demonstrate the ability of onshift Radcon personnel to calculate dose projections based on a liquid release and provide appropriate information/recommendations to the Emergency Director.

5. Demonstrate the ability to assist the Emergency Director and Emergency Recovery Manager with radiological emergency protective action recommendations for onsite employees.

6. Demonstate the ability to determine habitability of the Control Room, Operations Support Center, Radiological Operations Center, Technical Support Center, and the Emergency Operations Facility during emergency conditions.

D. Environmental Assessment and Dose Projection Objectives

1. Demonstrate the ability to coordinate and direct offsite radiological monitoring.

2. Demonstrate the ability to coordinate analysis of simulated airborne or liquid samples and direct radiation measurements in the environment.

* 3. Perform timely and accurate offsite dose projections concerning radiological releases.

4. Demonstrate the ability to interact with offsite agency personnel in resolving questions associated with dose projections.

E. Chemistry Objectives

1. Demonstrate the ability of the Chemistry Department to obtain samples in support of accident assessment activities.

2. Demonstrate the ability to assess data obtained as a result of sampling activities.

3. Demonstrate the ability to assist with factoring sample results into the overall assessment process.

F. Security Objectives

1. Demonstrate maintenance of site security operations throughout the exercise, and the ability to establish and control security access control points.

* 2. Demonstrate timely and efficient means for allowing station access to local offsite supporting agencies (ambulance support).

* 3. Demonstrate security escort capabilities.

4. Demonstrate the ability to provide appropriate security access control for the ERF once activated.

* 5. Demonstrate the ability to perform personnel Assembly/Accountability for the BVPS site.

G. Corporate Communications Objectives

1. Demonstrate the timely and accurate release of information to the public.

2. Demonstrate the distribution of verbal information via news briefings.

3. Demonstrate the staffing of the various public information emergency response facilities.

4. Demonstrate the distribution of hard copy information via news announcements.

5. Demonstrate the control and follow-up of misinformation originating from the news media.

6. Test the capabilities of the utility to respond to telephone inquiries from the media, electric utility industry, and the general public.

7. Demonstrate the involvement of senior company management in the notification of news information.

8. Demonstrate distribution of news information to all company employees.

OFFSITE SCOPE AND OBJECTIVES

PART B

Due to the 1991 Annual Exercise being conducted as an "Onsite Only" Exercise, this section does not apply. Limited participation by offsite organizations will occur, however, no specific Offsite Objectives were developed or included in this package.

Precautions & Limitations

Section III

Section III

PRECAUTIONS AND LIMITATIONS

This section provides information for all Exercise Controllers and Observers related to the rules and guidelines to be followed throughout the conduct of this exercise. Prior to initiation of the exercise, a pre-exercise briefing will be held to review the entire exercise process with all the Exercise Controllers and Observers identified in the Introduction Section of this package.

A. Should, at any time during the course of the conduct of this exercise, an actual emergency situation arise, all activities and communications related to the exercise will be suspended. It will be the responsibility of any Exercise Controller or Observer that becomes aware of an actual emergency to suspend exercise response in his/her immediate area and to inform the Lead Exercise Controllers of the situation. Upon notification of an actual emergency, the Lead Exercise Controllers will notify all other Controllers/Observers to suspend all exercise activities.

B. Should, at any time during the course of the conduct of this exercise, an Exercise Controller or Observer witness an exercise participant undertake any action which would, in the opinion of the Controller/Observer, place either an individual or component in an unsafe condition, the Controller/Observer is responsible for intervening in the individuals actions and terminating the unsafe activity immediately. Upon termination of the activity, the Controller/Observer is responsible for contacting the Lead Exercise Controllers and informing them of the situation. The Lead Exercise Controllers will make a determination at that point whether to continue, place a temporary hold on, or terminate the exercise.

C. No pressurization of fire hoses, discharging of fire extinguishers, or initiation of any fire suppression systems will be required for the Annual Scenario.

Section III

PRECAUTIONS AND LIMITATIONS (continued)

D. Manipulation of any plant operating systems, valves, breakers or controls in response to this exercise are only to be simulated. There is to be no alteration of any plant operating equipment, systems or circuits during the response to this exercise.

E. All repair activities associated with the scenario will be simulated with extreme caution emphasized around operating equipment.

F. All telephone communications, radio transmissions and public address announcements related to the exercise must begin and end with the statement, "This is an exercise (or drill)." Should a Controller or Observer witness an exercise participant not observing this practice, it is the Controllers/Observers responsibility to remind the individual of the need to follow this procedure.

G. Any motor vehicle response to this exercise, whether it be ambulance, fire fighting equipment, police/security vehicles or field monitoring teams, should observe all normal motor vehicle operating laws including posted speed limits, stop lights/signs, one way streets, etc.

H. Should any onsite security actions be required in response to this exercise, exercise participants are to cooperate as directed, and security representatives are to be prudent and tolerant in their actions.

I. Exercise participants are to inject as much realism into the exercise as is consistent with its safe performance; however, caution must be used to prevent overreaction.

Section III

PRECAUTIONS AND LIMITATIONS (continued)

J. Care must be taken to assure that any non-participating individuals who may observe exercise activities or overhear exercise communications are not misled into believing that an actual emergency exists. Any Exercise Controller or Observer who is aware of an individual or group of individuals in the immediate vicinity who may have become alarmed or confused about the situation, should approach that individual or group and explain the nature of the exercise and its intent.

K. Meteorological, operational and radiological data will be supplied by Controllers. Realtime data will be used only at the direction of a Controller.

L. If you disagree with data provided by a Controller, discuss this quietly and if time permits he/she may contact the Lead Controller but theirs is the final word.

M. Exercises often involve high radiation and airborne problems. Treat them as if they are real and act accordingly. Do not be confused by the fact that Controller/Observers are exempt from acting as if high levels exist. No one is exempt from normal station radiological practices.

N. Use your logs, status boards, etc. as much as possible to document your drill related actions. Remember: "Put it in writing." All such documents are considered to be QA drill records and at the end of the drill should be put in the envelopes provided in various emergency centers.

O. Partial participation in the areas of notifications, dissemination of information, decision making and protective action recommendations are planned by the States and Counties. Controllers will provide a listing of Offsite agencies actually to be contacted.

Section III

PRECAUTIONS AND LIMITATIONS (continued)

P. If you feel the exercise has revealed deficiencies in emergency plans, procedures, training or equipment, bring this to the attention of a Controller or write it down and give it to a Controller/Observer. Do not trust that you will remember the problem later.

Q. Remember: Speak out loud and identify your key actions and decisions and do not assume that a simulated or unobserved action worked. This seems artificial but it is essential to the conduct and evaluation of the drill.

R. Plant operational parameters will be preprogrammed into the Plant Variable Computer (PVC). Realtime data will not be used in the exercise, unless specified by controllers.

S. Since operational and radiological data follows a predetermined course to accomplish objectives for the exercise, players should not limit their attempts at problem solving to the situations posed to them. Alternative solutions are encouraged and should be brought to the attention of the controller in their respective areas. Controllers will note alternatives, but may have to direct a course of action to stay within the scenario.

Events Summary

Section IV

Section IV

EVENTS SUMMARY

Any emergency exercise must have a significant effort put forth in research and development to ensure that the events depicted are as realistically possible as can be simulated through the use of cue cards, signs, etc. For discussion purposes, these events can generally be broken down into two categories:

1. Human Error, and

2. Equipment Malfunction.

The first, human error, is the easiest and more flexible of the two categories to identify in a scenario; however, no one likes to assume that they will make mistakes, especially of the magnitude to cause significant plant damage or offsite consequences. This does not, however, preclude using this means to provide input into the scenario, since the possibility for human error does exist based on the amount of human judgement involved in implementing emergency response actions for off-normal plant events.

The second category, equipment malfunction, is much harder to incorporate into a scenario, especially where it is needed to cause plant damage that creates a serious problem to the offsite environment. This is true because of the tremendous effort placed on equipment reliability and redundancy during design, fabrication and installation of systems at nuclear power facilities. The Safety Analysis Report, written for all nuclear facilities, including the Beaver Valley Power Station, analyzes the capabilities of plant systems to maintain control over radioactive material within the plant during all types of off-normal plant incidents. Thus, in order to incorporate equipment-related problems into the scenario, some unrealistic assumptions must be made.

Additionally, the public's perception of the exercise scenario often times leads them to believe that these events may very well be probable. However, it should be known that if the events in the exercise scenario presented within were at all possible, an unanswered safety question would exist and actions would be taken to rectify the situation.

Section IV

EVENTS SUMMARY (continued)

Thus, in order to achieve a sequence of events tha' will lead to a significant plant problem, the exercise scenario must contain an incredible plant situation, and unlikely series of equipment failures, or an improbable operator error combined with equipment failures. For this scenario in particular, the following assumptions have been made in order to force the participants into an unusually high level of response activities that may never normally be required.

Justification & Basis
for
Events

Section IV

(Part A)

Section IV

JUSTIFICATION AND BASIS FOR EVENTS

As indicated in the Written Summary (Part B of this Section), the exercise scenario utilized a combination of many events to achieve escalation to a Site Area Emergency classification. Based on this understanding, the following Emergency Action Levels (EALs) were used to upgrade the emergency classification from an Unusual Event, to an Alert and to a Site Area Emergency. It should be noted that the Scenario Development Committee has chosen only a few of the applicable EAL's and the Exercise Players may use alternate EAL's to achieve the final end point in the scenario.

Justification and Basis for Events

Section IV

1) Unusual Event

A. Initiating Condition (EAL)- (TAB 29) Miscellaneous

Criterion B - Contaminated injured personnel transported to a hospital.

EPP/IMPLEMENTING PROCEDURE — EPP/I-1
RECOGNITION AND CLASSIFICATION — TAB 29 BV-1
OF EMERGENCY CONDITIONS — (1 OF 2)

ATTACHMENT 3

MISCELLANEOUS

UNUSUAL EVENT (A OR B OR C)

A. CRITERION: Watercraft Strikes Primary Intake Structure and Results in a Reduction in Reactor Plant or Turbine Plant River Water Flow.

INDICATORS: (1 AND 2)

1. Confirmed Report By Plant Personnel That a Watercraft Has Struck the Primary Intake Structure.

2. (a or b)

a. Reduction of Reactor Plant River Water Flow as Indicated By Pressure Reduction on PI-RW-113A and/or 113B (sustained pressure < 20 psig).

b. Reduction of Turbine Plant River Water Flow as Indicated by a Sustained Pressure Reduction (Ann A6-11B "RAW Water Pump Disch Press Low" < 15 psig).

B. CRITERION: Contaminated Injured Personnel Transported to a Hospital.

INDICATORS: (1 AND 2)

1. Decontamination Efforts in Accordance With EPP/IP 5.2 are Unsuccessful or Not Advisable Based on Injuries to the Personnel.

2. Vehicle Transporting Contaminated Injured Personnel Departs From Site.

NOTE: Declaration of UNUSUAL EVENT Shall Be Made When it Becomes Known That the Wound/Injury is Contaminated and Will Not be Decontaminated. If Decontamination Efforts are Ongoing, the Declaration Will Be Made When the Vehicle Departs From the Site.

Justification and Basis for Events

Section IV

1) Unusual Event

B. Initiating Condition (EAL)- (TAB 1) Radioactive Effluent

Criterion B - Any unplanned release of liquid radioactivity in excess of 10 CFR 20 limits for 15 minutes or longer to the Ohio River.

ATTACHMENT 3

RADIOACTIVE EFFLUENT

UNUSUAL EVENT (CONT.)

2. Field survey or EPP dose projections using actual meteorology indicate EAB dose rates greater than 0.05 mrem/hr for 60 minutes or longer.

B. CRITERION: Any UNPLANNED RELEASE of Liquid Radioactivity in Excess of 10 CFR 20 MPC Limits for 15 Minutes or Longer to the Ohio River.

INDICATORS: (1 or 2)

1. (a or b) The conditions below indicate that the release may have exceeded the above CRITERION and indicates the need to assess the release with EPP/IP-2.7 (or EPP/IP-2.7.1):

   a. A VALID HIGH Alarm on RM-RW-100.

   b. A VALID HIGH-HIGH Alarm exists on RM-LW-104 or RM-LW-116 and the release is not isolated.

   NOTE: If the alarm is sustained for greater than 15 minutes with the release not isolated and the EPP/IP-2.7 (or EPP/IP-2.7.1) assessment cannot be completed within this period then the declaration must be made based on the VALID alarm condition.

2. Confirmed report of an unmonitored release of radioactivity to the Ohio River from an onsite source.

   NOTE: Sample analysis results and evaluation per EPP/IP-2.7 (or EPP/IP-2.7.1) will form the basis of an escalation to an ALERT for this condition.

Justification and Basis for Events

Section IV

2) Alert

A. Initiating Condition (EAL)- (Tab 2) In-Plant Radiation Levels

Criterion B - Any unplanned release of liquid radioactivity to the Ohio River such that the drinking water radioactivity in communities downstream of BVPS could exceed the 12 times the EPA Primary Drinking Water Standards.

EPP/IMPLEMENTING PROCEDURE
RECOGNITION AND CLASSIFICATION
OF EMERGENCY CONDITIONS

EPP/I-1
TAB 2 BV-1
(1 OF 3)

ATTACHMENT 3

IN-PLANT RADIATION LEVELS

UNUSUAL EVENT

Not Applicable

ALERT (A OR B OR C)

NOTE: In the INDICATORS below, the monitor alarm setpoint does not correspond to concentrations or dose rates 1000 x normal. As used here, the alarms serve only to initiate necessary surveys.

A. CRITERION: Degradation in the Control of Radioactive Material that Results in Unexpected Increases of Radiation Dose Rate by a Factor of 1000 Over Normal Levels in Areas Other Than Exclusion Areas, as Determined by Field Surveys.

INDICATORS: (1 or 2)

1. Field Surveys Performed in Response to VALID High or High-High Alarms on Installed or Portable Area Radiation Monitors Indicate That the General Area Dose Rate in the Affected Area Has Increased by a Factor of 1000 or Greater Above Normal Rates.

   NOTE: If Field Surveys Cannot be Performed Within 15 Minutes, the Declaration Must be Made Based on the Affected Area Radiation Monitor Indicating ≥ 1000 Times Normal.

2. Report of Actual or Suspected Damage to an Irradiated Fuel Assembly.

Justification and Basis for Events

Section IV

3) Site Area Emergency

A. Initiating Condition (EAL)- (Tab 5) RCS Leakage.

Criterion B - RCS Leakage exceeds 50 GPM and Containment failure indicated.

EPP/IMPLEMENTING PROCEDURE — EPP/I-1
RECOGNITION AND CLASSIFICATION — TAB 5 BV-1
OF EMERGENCY CONDITIONS — (3 OF 3)

ATTACHMENT 3

RCS LEAKAGE

SITE AREA EMERGENCY (A OR B)

A. CRITERION: LOCA in Progress Which Has Resulted in a Severe Challenge to a Plant Function Needed to Protect The Public.

INDICATORS:

1. STA/NSOF/Ops Personnel Report a VALID CSF Status Tree RED PATH TERMINUS Exists.

B. CRITERION: RCS Leakage Exceeds 50 gpm and CONTAINMENT FAILURE Indicated.

INDICATORS: (1 AND 2)

1. Refer to TAB 5 "RCS Leakage" ALERT Indicators.

2. Evidence of CONTAINMENT FAILURE.

GENERAL EMERGENCY

A. CRITERION: LOCA in Progress Which Has Resulted in The Loss of 2 of 3 Fission Product Barriers With The Potential Loss of The Third.

INDICATORS: (1 or 2)

1. Actions of FR-C.1 (RED PATH) are INEFFECTIVE.

2. (a AND b)

a. STA/NSOF/Ops Personnel Report a VALID CSF Status Tree RED PATH TERMINUS for Core Cooling.

b. Evidence of CONTAINMENT FAILURE.

Justification and Basis for Events

First, it is important to realize (especially for the plant participants and observers) that the scenario is not there to test the Operator's knowledge of the plant. It definitely should be as realistic and as comprehensive as possible. However, no scenario can provide the detailed information or exact time sequence that will actually occur during a similar plant event unless the exercise is run using a Control Room simulator. Even then, much of the data and observations must come from in-plant locations other than the Control Room where, again, cue sheets or signs must be used and, thus, the simulation is far from realistic. What the scenario should do is provide enough impetus to test not only the Operators, but also, the rest of the response organizations on their knowledge of the Emergency Plans, implementing and/or Standard Operating Procedures, and how each must interface with the other.

Second, it should be understood that many varied conditions must be assumed initially in order to provide answers to expected Operator or Engineering responses that will occur following each event in the scenario. This is important since their attitude during the exercise can affect the attitude and perception of the overall response given an exact or detailed summary of why their suggestion won't work to mitigate the event, they will react as if the situation is more realistic and, armed with this new information, attack the problem more eagerly. This eagerness and willingness-to-respond attitude has proven in the past to be transferred to the offsite participants. On the other hand, if they are given a "no, this won't work" answer, they get disgruntled and disgusted with the scenario, won't know where to look next and won't care since they'll expect the same answer. This definitely has a detrimental transfer effect on how communications flow and how the interface with offsite agencies occurs. For this reason, a comprehensive set of initial plant conditions has been developed and, no matter how unrealistic it appears to be in the beginning of the exercise, this will soon be forgotten once they are into the exercise and each of these in turn plays an active role in providing input into Operator and Engineering response actions.

In addition, the exercise scenario was designed to inject as much realism into the postulated events as is consistent with safe performance. Non-participating individuals who may observe the exercise, listen to communications or review this exercise package may be misled into believing an actual emergency of this type would occur at Beaver Valley Power Station with similar results to offsite areas. To resolve this situation, the following information is provided to resolve any major concerns which could develop based on scenario content.

Written Summary

Section IV

(Part B)

WRITTEN SUMMARY

Beaver Valley Power Station Unit 1 is running at 100% power and has been on line for 150 days. It is near the end of core life. Unit 2 is in a refueling outage and all its fuel is stored in the spent fuel pool.

The following equipment problems exist at Unit 1. The 1A charging pump is out of service (OOS) due to a speed increaser problem. The #2 emergency diesel generator is OOS due to replacement of the turbocharger intercooler. After a make-up to the 1A accumulator, Chemistry was unable to purge the sample header. It has been determined that trip valve TV-SS-109 A1 has failed closed and a containment entry will be necessary to effect repairs.

The following are the status of other Unit 1 evolutions. The 1B charging pump is running with the 1C in standby. Because the #2 diesel is OOS, the #1 diesel was rolled over at 0405 hrs. and the test is due again before 1205 hrs. to satisfy the Tech Spec. A relay crew is working in the 138 kV switchyard doing pilot wire trip calibration. Radiography is expected to commence at about 1200 hrs. on the 713' Turbine Mezzanine level. This is to inspect piping associated with the blowdown heat exchanger FW-E-9. As a result of this work the blowdown system is not in service but secondary water chemistry is within specifications. Work is continuing on the removal of scaffold from the refueling water storage tank (QS-TK-1) after repairs to the insulation. Unit 1 is in normal electrical arrangement and is supplying power to both units. The weather conditions for the day will be as read on the Site meteorological equipment and will not be pre-programmed into the MIDAS system.

The 1991 Annual Exercise begins at 0930 hrs. At 0935 hrs. an entry team begins a briefing to prepare to enter containment to repair TV-SS-109 A1. At 0940 hrs. one of the workers removing scaffolding from QS-TK-1 falls and injures himself. At the same time the pipe he was holding falls striking and breaking a level transmitter on the tank. This results in a spray of refueling water (which runs to a catch basin that leads to the Ohio River). The man is now injured and contaminated. A call is placed to the Control Room and the Emergency Squad is activated. It arrives on the scene at about 0954 hrs. and determines that offsite medical support will be required. The Control Room requests an ambulance and notifies the hospital to expect a contaminated/injured person. By about 1018 hrs. the EMTs assume responsibility for the victim.

WRITTEN SUMMARY (cont)

There are two reasons for the declaration of an Unusual Event. It can either be called due to the liquid release to the environment (EPP/IP I-1 Tab 1) or the contaminated/injured person (EPP/IP I-1 Tab 29). The Unusual Event should be declared at about 0955 hrs.

At 1050 hrs. in preparation for the radiography, the radiographer and his Rad Tech escort are positioning the source pig. The pig falls to the floor and breaks open and the source (100 Ci of Iridium 192) comes free from its cable and bounces through a cable tray opening in the floor. It comes to rest on top of the insulation of valve BD 290 about 8' above the Turbine Building basement floor (its location will be unknown to the players until they locate it by the dose rate). By about 1105 hrs. an Alert should be declared based on EPP/IP I-1 Tab 2-loss of control of radioactive materials that results in radiation levels that increase 1000 times over normal. Rad Con begins to develop a plan for the location and recovery of the source.

The declaration of the Alert results in a call to activate the onsite Emergency Response Facilities including the TSC, OSC and ROC. This activation should be complete by about 1135 hrs. and these facilities begin assisting in the management of the problems and in dealing with the offsite notifications.

At 1135 hrs. an operator enters the #1 emergency diesel room and finds a local alarm for low lube oil temperature. He calls the Control Room to inform them and they indicate that they have not received an annunciator for the problem. The #1 diesel is declared out of service and the station now is without emergency backup AC power.

At 1230 hrs. the Control Room receives indications of high charging flow. Unknown to the operators is the fact that a 400 gpm LOCA has begun. At 1231 hrs. operators begin an emergency 5% per minute shutdown of the reactor. Within minutes Hi alarms are received on several area radiation monitors in containment. At 1245 hrs. the maintenance team in containment (their entry was simulated at about 1030 hrs) is exiting (also simulated) and unknown to them there is damage to a wedge on the inner airlock door resulting in an incomplete seal. At 1300 hrs., the crew in the airlock (simulated) receives a light that indicates they can open the outer door. Unknown to them, the inner door leakage (containment pressure in rising due to the LOCA) has helped to equalize the pressure. The airlock has in fact been slightly overpressurized and as the outer door is unlatched, the pressure blows the door open with enough force to knock the door out of alignment and it cannot be closed.

WRITTEN SUMMARY (cont)

A release from containment to the environment has begun via the Supplemental Leak Collection and Release System (SLCRS). However, dose projections will show negligible dose rates at the EAB and this will later be verified by the reports of the Field Monitoring Teams.

At about 1315 a Site Area Emergency is declared based on EPP/IP I-1 Tab 5 with RCS leakage greater than 50 gpm and indicated containment failure. This declaration results in the activation of the EOF and a call for Site assembly and accountability (which should be complete by about 1410 hrs). The EOF should be fully activated and functional by about 1345 hrs.

By 1325 hrs. the #1 diesel has reached the minimum oil temperature of 90 degrees F and Operations can begin to ready it for service. By 1355 hrs. the diesel generator is operable and a source of emergency AC power is now available. At 1415 hrs. a repair crew reports that the outer airlock door is closed and sealed. Within a few minutes the ventilation radiation monitors return to normal indicating that the release has ended. After recovery effort discussions, the Exercise terminates at about 1500 hrs.

Onsite Sequence
of
Events

Section V

Section VII

PROMPTING MATERIAL

The use of the prompting material provided in this section is predicated on the need to incorporate into this exercise the latitude to allow as much "free play" and "undirected response" on the part of the exercise participants, consistant with the ability to stage an emergency situation on the scale necessary to satisfy the objectives of all agencies involved. To this extent, the use of Cue Signs and Cue Information Sheets, has been adopted to provide the necessary vital information to the exercise participants, minimizing the questions and answers interactions between Exercise Controllers and the exercise participants.

CS- Cue Sign- An 8 1/2" x 11" or larger sheet of paper, posted to indicate conditions in a particular area of the plant or on a piece of equipment.

CIS - Cue Information Sheet- An 8 1/2" x 11" or larger sheet of paper, handed to an exercise participant to reflect a sequence of changing plant parameters for a given period of time. This sheet may have single or multiple initiating instructions, data or information. The players will receive only the upper portion of this sheet with the controller having the entire sheet with the expected player actions on the bottom.

PROP - Various materials used to support the scenario, (ex., injury make-up kit).

When disseminating the prompting material, each Exercise Controller should follow the written exercise scenario to ensure that the material being provided is given at the appropriate time in relation to the other exercise events.

Initial Conditions:

- A significant difficulty to over come in any scenario is preventing the exercise participants from resolving simulated problems prior to allowing response organizations, both onsite and offsite, to activate. The purpose for developing Initial Conditions, Onsite Sequence of Events and Offsite Sequence of Events is to alleviate this situation to some extent. To set the stage for the 1991 Annual Exercise, the following Initial Plant Conditions will be used.

- Beaver Valley Power Station Unit #1 is in Mode 1 (100% power) for 150 days and is at the end of core life.

- Beaver Valley Power Station Unit #2 is in a refueling outage with all fuel out of the reactor and stored in the spent fuel pool.

- System operations is reporting low system availability and has requested Beaver Valley Unit #1 to remain at power.

- A Relay crew is working in the 138 KV Switchyard doing Pilot Wire Trip Calibration.

- Charging Pump CH-P-1A is OOS due to speed increaser being rebuilt. CH-P-1B is running and CH-P-1C is on standby.

- Diesel Generator EE-EG-2 is OOS for turbo charger intercooler replacement. Midnight rolled EE-EG-1 at 0405 hrs. per O.S.T. 1.36.19. Next O.S.T. Diesel roll due by 1205 hrs.

- At 0800 hrs. Operations completed make-up > 1% to SI-TK-1A. Operations notified Chemistry to sample the Accumulators per Tech. Spec. 3.5.1. Chemistry notified the Control Room that they were unable to purge the sample header and that there was no flow in the sample line. Upon investigation, Operations determines that trip valve TV-SS-109 A1 has failed closed and that a Containment entry is necessary. TV-SS-109 A2 has been failed shut in compliance with Tech. Specs.

- Meteorological conditions for the day of the Exercise will be as read on all Site Met. Instrumentation and all working MIDAS Terminals (no canned data).

- Radiography is planned for 1200 hrs. on 713' turbine Mezzanine on piping associated with FW-E-9 (Blowdown Heat Exchanger) following weld repairs (pipe upstream from BD-295). SG Blowdown not in service and SG cation concentrations are in spec. and stable.

- The station is in normal onsite electrical system arrangement with power being supplied to both Units.

- RWST insulation work has been completed and scaffolding removal has begun.

- The PVC computer is preprogrammed with Exercise data on the designated spare groups.

- The shift Operating Report and Nuclear Control Operators Report will be provided to appropriate Control Room personnel as a shift turnover at the start of the Exercise. Also, similar turnovers will occur in Radcon, Maintenance, Security and Chemistry.

Offsite Sequence
of
Events

Section VI

NOTE: 1991 is an onsite only exercise, however, partial participation by the States and Counties will occur. Participation will include communications, at a minimum, with some offsite personnel at BVPS. No formal Offsite Sequence of Events has been provided.

Prompting Material

Section VII

Prompting Material

CIS/CUE Information Sheet

CS/CUE Sign

Prop/Materials used to Support

The Scenario (ex. Injury Make-up Kit)

(Part A)

Section VII

PROMPTING MATERIAL

The use of the prompting material provided in this section is predicated on the need to incorporate into this exercise the latitude to allow as much "free play" and "undirected response" on the part of the exercise participants, consistant with the ability to stage an emergency situation on the scale necessary to satisfy the objectives of all agencies involved. To this extent, the use of Cue Signs and Cue Information Sheets, has been adopted to provide the necessary vital information to the exercise participants, minimizing the questions and answers interactions between Exercise Controllers and the exercise participants.

CS- Cue Sign- An 8 1/2" x 11" or larger sheet of paper, posted to indicate conditions in a particular area of the plant or on a piece of equipment.

CIS - Cue Information Sheet- An 8 1/2" x 11" or larger sheet of paper, handed to an exercise participant to reflect a sequence of changing plant parameters for a given period of time. This sheet may have single or multiple initiating instructions, data or information. The players will receive only the upper portion of this sheet with the controller having the entire sheet with the expected player actions on the bottom.

PROP - Various materials used to support the scenario, (ex., injury make-up kit).

When disseminating the prompting material, each Exercise Controller should follow the written exercise scenario to ensure that the material being provided is given at the appropriate time in relation to the other exercise events.

Controller Free Play

Section VII

(Part B)

Section VII

Controller Free Play

As stated previously, free play is an essential part of conducting an emergency exercise. The exercise package must be designed to allow for various response actions to occur in a naturally spawned progression. For this reason, various datum must be provided to the exercise controllers so that they are in a position to feed bits of information to the exercise participants when they ask for it. For obvious reasons, most of the data pertaining to the emergency cannot be directly read from the plant instruments or gages, thus the need for data sheets, tables, charts and diagrams which allow the exercise controller to play the part of the normally used instruments and gages.

Not all parameters, however, can be derived or listed that may be questioned at some point in time during conduct of the exercise. To combat this problem, the exercise coordinators have attempted to place knowledgeable individuals in specific locations (see Section I, Controllers and Locations) to answer those questions that may not have been provided on the data sheets or cue cards.

These simulated readings, events and conditions are provided throughout the course of the exercise to trigger the exercise actions. The exercise play will depend upon responses, decisions and implementing actions taken by the exercise players, particularly the management and operations groups. This free play method will allow for testing of vital key elements of the various Emergency Plans involved, as well as to exercise personnel judgement and spontaneous response to realistic situations, the ability to reach decisions on appropriate courses of action, and the actual implementation of these decisions.

Section VII

Controller Free Play (continued)

The pre-prepared data included in this section has been broken down into the following areas:

* Plant Operations
* PVC Data
* In-plant Radiation Levels
* Radiochemical Analysis Data
* Weather Data
* Dose Assessment Data
* Field Monitoring Data
* Injured Persons Medical Data
* Visual Aids Data
* Corporate Communications Information

NOTE: Controllers may find it necessary to free play data not provided in the following data sheets. Controllers, however, must insure that the overall scenario direction remains intact.

Time: 0900

CIS No: 01

BEAVER VALLEY POWER STATION
1991 EMERGENCY PREPAREDNESS EXERCISE
CUE INFORMATION SHEET

Message for: Control Room, Radcon, Maint., Security, Chemistry

Message: Attached are the Ir [illegible] Conditions for the Unit #1 1991 Annual Exercise. A [illegible], ttached are the appropriate turnover logs.

FOR CONTROLLERS USE ONLY

Controller Notes: Provide additional information for turnover.

Actions Expected: None.

DUQUESNE LIGHT COMPANY
Beaver Valley Unit No. 1
SHIFT OPERATING REPORT

S1-1

DATE 2-27-91
0000-0800

Plant Status - 0001

Operating Mode 1 Generator MW Gross 820 Net 785
Reactor Power Level 100 (%, AMP, CPS) B RP & TPRW pumps operating B
RCS Pressure 2235 PSIG Tavg 576.1 F

General Summary of Station Operation

Turnover @ 2330
-SW-P-1A OOS Cause unknown
-EE-EG-2 OOS Turbo charger intercooler OPCC work started
time CST 1.36.19 complete SAT due by 0430 per
Tech Specs

0130 chemist reports Cs 630 ppm

0400 CST 1.36.19 complete SAT Next CST due by
1200 per Tech Spec

0430 Commenced Cool of SI-TK-1A

0700 Chemistry reports cannot obtain sample of SI-TK-1A
problem tracked in TV-SC-1001A Main Control Tech
Spec Sample due by 1330

0800 Relay crew in Switchyard for pilot wire trip calls
complete by 1000 hrs

NSS (0000-0800)

DUQUESNE LIGHT COMPANY
Beaver Valley Unit No. 1
NUCLEAR CONTROL OPERATORS REPORT

S1-4

DATE 2-27-91
0000-0800

Plant Status - 0001

Operating Mode 1 Boron Concentration 620 PPM
Generator Gross MW 820 Reactor Power 100 (% AMP, CPS)
Controlling Rod Bank D Height 225 STEPS
RCS Pressure 2235 PSIG Tavg 576 F

TIME	
2330	Commenced turnover
	- CH-P-1A ccs speed increase
	- EE-EG-2 ccs turbo charger intercooler work to commence on daylight. OST 1.36.19 completed SAT due for completion by 0430 per tech spec
0000	Turnover complete
0000	All Emergency loads verified on the AE bus
0130	Chemist reports Cb 620 ppm
0400	OST 1.36.19 complete SAT (EE-EG-1 operability) next OST run due by 1205 per tech spec
0630	Commenced filling of ST-TK-1A S1-41 open
	Stopped filling of ST-TK-1A final volume total 37% ≥ 1% sample per tech spec due. Chemistry notified S1-41 verified closed.
0800	Relay crew in switchyard for pilot wire trip calibration. Expect completion by 1000 hrs
EE	
0700	Chemistry report on Cb in ST-TK-1A sample boron problem tracked to TK-55-169 A1 MWR written. Tech Spec sample due by 1230.

RO (0000-0800)

PO (0000-0800)

ANSS Review (0000-0800)

Time: 0929

CIS No: 02

BEAVER VALLEY POWER STATION
1991 EMERGENCY PREPAREDNESS EXERCISE
CUE INFORMATION SHEET

Message for: Control Room (please announce over Page Party)

Message: "This is a drill" The Annual Exercise for BVPS Unit 1 has begun. Page Party line #2 and Pax 5128 are reserved for drill related conversations. "This is a drill" (repeat)

FOR CONTROLLERS USE ONLY

Controller Notes: This message should be read over the station Page Party system with the Unit 1/2 cross connect switch engaged.

Actions Expected: Message to be read to both Units.

Time: 0935

CIS No: 03

BEAVER VALLEY POWER STATION
1991 EMERGENCY PREPAREDNESS EXERCISE
CUE INFORMATION SHEET

Message for: Maintenance crew going into containment

Message: See attached MWR for additional information.

FOR CONTROLLERS USE ONLY

Controller Notes: Provide data as necessary.

Actions Expected: Discuss Radcon concerns and begin to obtain equipment.

BEAVER VALLEY POWER STATION WORK REQUEST

NUMBER	PRIORITY	REPAIR MODE	EQ ITEM	IST PUMP/VLV	ORANGE TAG NO.	DOS LOG NO.	CAUTION TAG
000000	1	7	Y (N)	Y (N)	01234	N/A	N/A
	QA CAT. 1	TEST MODE 7	TYPE C (Y) N				

UNIT	SYSTEM NO.	EQUIPMENT MARK NO.	HPRD CODE	BLDG.	ELEVATION	BLDG. LOC.	TASK NO.
01	14A	TV-SS-109A1	VALVOP	RCB	713	N/A	N/A

EQUIPMENT FUNCTION DESCRIPTION: Sample Valve for SI-TK-1A - Inside CNMT Isol. TRP Valve.

MANUFACTURER: Masoneilan MODEL: 38-9 SERIAL NO.: H-49378-234-20

REQUEST DATE	TECH SPEC DATE	TIME	TECH SPEC NO.	OPER ITEM NO.	ORIGINATING SUPERVISOR	EMP. NO.
022791	022791		3.5.1	N/A	Joe Supervisor	5432

INITIAL PROBLEM/FAILURE DESCRIPTION: Chemistry attempted to sample SI-TK-1A but could not get any flow. Upon investigation it was determined that TV-SS-109A1 has failed closed.

SECTION 1 ORIGINATOR

LEAD GROUP	I/C	C.C.	ACTIVITY NO.	CW	ORDER	ASME XI	SUPPORT FORMS
(MS) SECURITY COMPUTER ELEC MECH RELAY CONST	1	013	5321099	0	00000	Y (N)	(Y) N

CLEARANCE REQUIRED	QC REVIEW	HOUSEKEEPING	RWP REQUIRED	OTHER SUPPORT
(Y) N 123456	(Y) N 4876	IP/O	(Y) N 02615	(Y) N Test Crew

PROCEDURES: CMP 1-75-234

INSTRUCTIONS: - obtain previous Pre-load Data
- Replace Diaphragm
- Set up Actuator per CMP1-75-234 using previous preload Data

MAINTENANCE PLANNER	EMP. NO.
Joe Planner	0001
MAINTENANCE SUPERVISOR	**EMP. NO.**
Cecil Supervisor	0002
SHIFT SUPERVISOR (AUTHORIZATION TO DO WORK)	**EMP. NO.**

REFERENCE DRAWINGS: OM F&M-1 TECH MANUAL: 7.63-126 / 7.67-78 DATE: 02/27/91

SECTION 2 REVIEW

WORK PERFORMED: CONT. Y N

WORK START DATE | TIME | NEW COMPONENT NAME TAG INFO.

CAUSE OF FAILURE: CONT. Y N

CORRECTIVE ACTION: CONT. Y N

CORRECTIVE MANHOURS | PLANNED MANHOURS | QC COVERAGE

CDER NO.

MATE LOGGED Y

ORANGE TAG REMOVED Y | EQUIPMENT FAILURE Y N | HPRD REPORT REQUIRED Y N

	SIGNATURE	DATE	EMP. NO.
WORK PARTY LEADER (WORK COMP., MATE/TOOLS/MATERIAL RETURNED, AREA CLEAN)			
MAINTENANCE FOREMAN (WORK REVIEWED ACCEPTABLE)			
SHIFT SUPERVISOR (EQUIPMENT NOT FUNCTIONALLY ACCEPTABLE)			
SHIFT SUPERVISOR (EQUIPMENT FUNCTIONALLY ACCEPTABLE)			

SECTION 3 WORK PARTY

NPRD VALVOP

POST MAINTENANCE TESTING

AIR OPERATED VALVE/DAMPER

MWR 000000

CHECK	INITIAL/ DATE	PRE-OPERATIONAL TESTS	PROCEDURE/COMMENTS	COMPLETION INITIAL/DATE
	N/A	CHECK LUBRICATION		
✓	J.P.	CHECK OPERATOR ALIGNMENT	Align operator per CMP 1-75-234	
✓	J.P.	CHECK COVER BOLTS TIGHT/ TORQUED		
✓	J.P.	CHECK AIR TUBING FOR KINKS DIMPLES/LEAKAGE		
	N/A	CHECK I/P CONVERTER CALIBRATION		
	N/A	CHECK ASME SECTION XI CODE REQUIREMENTS		
✓	J.P.	CHECK GOOD HOUSEKEEPING		
✓	J.P.	CHECK PARTS DOCUMENTATION/ COMMERCIAL DEDICATION		
✓	J.P.	Verify Valve strokes Properly		
✓	J.P.	Verify Limit switches function Properly		

		OPERATIONAL TESTS	PROCEDURE/COMMENTS	
		CHECK VALVE STROKE/TIME		
✓	J.P.	CHECK TYPE C REQUIREMENTS		
		CHECK FOR SEAT LEAKAGE		
✓	J.P.	CHECK LOCAL/REMOTE INDICATION		
		CHECK FOR LEAKAGE AT TEMPERATURE/PRESSURE		
		CHECK ALL MODES OF CONTROL HAND/AUTO/STANDBY		
		CHECK VALVE LOOP CONTROL VERIFICATION		

COMMENTS

RTL #A9.675A
RCM FORM 8.1
SECTION 12 (FRONT)
(6/90)

RWP/RACP REQUEST No. 0000

UNIT [X] 1 [ ] 2

[ ] MECH. MAINT. [ ] ELEC. MAINT. [ ] ENGINEERING [ ] CONSTRUCTION
[ ] OPERATIONS [ ] SECURITY [ ] TESTING [X] MCRs
[ ] CRAFT [ ] RADCON [ ] CHEMISTRY [ ] OTHER

REQUEST SUBMITTED BY Joe Planner PHONE 9852 DATE 2/27/91 TIME ____

RWP/RACP TO BE READY BY: DATE ____ TIME ____

DIRECTIONS/INFORMATION FOR COMPLETING RWP/RACP REQUEST

Information - brief - use mark numbers and equipment numbers, e.g. repair LW-P-8

WORK TASK/REASON FOR ENTRY: Repair TV-SS-V941

Provide exact location. PAB, Containment, Cubicle Elevation

ITEM/EQUIPMENT LOCATION: Bldg. TV-SS-V941 Elev. RC-B Cubicle 7/3

Specify what criteria work task is to be done under, include number of specific function. This may assist you in tracking a specific job at a later time.

WORK TASK UNDER: [X] MWR NO. 000000 [ ] PMP NO. ____
[ ] DCP NO. ____ [ ] MSP NO. ____ [ ] OTHER ____
EQUIPMENT CLEARANCE: [ ] NO [X] YES

The work description is to be supplied by the supervisor who has the responsibility for the work. Include sufficient detail to alert Radcon of the potential of any radiological hazards. The nature of the work, especially such aspects as opening normally closed systems, removing or installing shielding, work activities such as welding, grinding, sanding, sawing, use of compressed air must also be specified. Include work task steps.

DESCRIPTION OF WORK TO BE PERFORMED:
- Isolate Air
- Remove & Replace Diaphragm
- set up Actuator & limit switches
- stroke Valve.

A [ ] WELDING/BURNING
B [ ] CUTTING
C [ ] GRINDING
D [ ] BREECHING A SYSTEM
E [ ] DRAINING A SYSTEM
F [ ] FUEL POOL or CAVITY WORK

(continue on reverse side)

(if blocks D, E, or F are checked, RAD-CON to complete Hot Particle Review on reverse side)

TO BE COMPLETED BY INDIVIDUAL REQUESTING RWP/RACP

MAN-REM ESTIMATE FOR WORK TASK

NUMBER OF INDIVIDUALS AND JOB CLASSIFICATION		ANTICIPATED TIME IN RADIATION FIELD (hrs)		EXPOSURE RATE (mR/hr)		ESTIMATED EXPOSURE (mR)
2 mcRs	x	1	x		=	
	x		x		=	
QC / Inspector	x	1/2	x		=	
RAD TECH(s)	x		x		=	

WORK SUPERVISOR Joe Planner DATE ____

HIGHEST ESTIMATED INDIVIDUAL EXPOSURE: ____ mR MAN-REM ESTIMATE ____ mR
ESTIMATE COMPILED BY: ____ DATE: ____

ALARA Review is required if man-rem estimate exceeds 200 mrem per worker or 1000 mrem for the work party.

EXPOSURE GREATER THAN INITIAL VALUES: [ ] NO [ ] YES
If YES, the work group supervisor is to complete RCM Form 8.1 Sec.16 which indicates those actions taken to assure that exposure received will be ALARA (see SAP 23).
Also, initiate an ALARA review per RP 8.5. ALARA Review No. ____

RCF review before RWP is written.

RWP REQUEST REVIEWED BY: ____ DATE ____ TIME ____

Writing the RWP and issuing it for work.

IMPLEMENTED BY: ____ DATE ____ TIME ____
RWP NUMBER ASSIGNED: ____

FOR RADCON USE ONLY

DUQUESNE LIGHT COMPANY

FORM [illegible]

DATE _____ STATION BVPS #1 S.O. NO _____

EQUIPMENT REQUESTED 123456

TV-SS-109A1

SCOPE OF WORK - Troubleshoot failed closed valve.
- Replace Diaphragm.

Do Not Tag A.R.

APPROVED BY _____ SYSTEM OPERATOR _____ NAME AND TITLE _____ NAME AND TITLE _____ NAME AND TITLE

WORK TO START DATE _____ TIME _____ TIME REQUIRED 4HR

PERMIT ORIGINATED BY Joe Planner NAME AND TITLE I&C Planner FOR MCR's TO BE IN CHARGE OF WORKING PARTY

SCOPE OF WORK CORRECT AS DESCRIBED _____ IN CHARGE OF WORKING PARTY _____ SAFETY SUPERVISOR

STEPS TAKEN TO CLEAR ELECTRICALLY _____

STEPS TAKEN TO CLEAR MECHANICALLY _____

TESTED FOR VOLTAGE ☐ YES ☐ NO BY _____

NO. OF GROUNDS APPLIED _____ BY _____

NO. OF GROUNDS REMOVED _____ BY _____

NUMBER OF TAGS ISSUED		NUMBER OF TAGS RETURNED	
RED DANGER	YELLOW CAUTION	RED DANGER	YELLOW CAUTION
GREEN GROUND	PURPLE OPERATING	GREEN GROUND	PURPLE OPERATING

CLEARED AND BLOCKED BY	CHECKED AND ACCEPTED BY SAFETY MAN	CHECK AND ACCEPTED BY PERSON IN CHARGE OF WORKING PARTY

EQUIPMENT (READY/NOT READY)*FOR SERVICE _____ IN CHARGE OF WORKING PARTY _____ DATE _____ TIME _____

EQUIPMENT ACCEPTED AS (READY/NOT READY)*FOR SERVICE _____ DATE _____ TIME _____

EQUIPMENT ACCEPTED AS (READY/NOT READY)*FOR SERVICE _____ DATE _____ TIME _____

EQUIPMENT ACCEPTED AS (READY/NOT READY)*FOR SERVICE _____ DATE _____ TIME _____

*CIRCLE ONE THAT APPLIES

GENERAL CONDITIONS

WARNING: NO WORK SPECIFIED IN THIS PERMIT SHALL BE STARTED UNTIL AFTER THE PERMIT HAS BEEN SIGNED AS "CLEARED AND BLOCKED" AND "CHECKED AN ACCEPTED." CLEARING OF ALL EQUIPMENT IN PREPARATION FOR WORK IS TO BE DONE BY THE STATION OPERATING ORGANIZATION. ELECTRIC EQUIPMENT IS TO BE TREATED AS ALIVE AT ALL TIMES UNLESS POSITIVELY KNOWN TO BE DEAD. NO EQUIPMENT IS TO BE WORKED ON EXCEPT THAT SPECIFIED IN THE PERMIT, AND IDENTIFIED BY THE PERMIT CA[illegible]. CLEARANCE MUST BE CHECKED EACH DAY WITH THE STATION OPERATING ORGANIZATION BEFORE STARTING [illegible]. SPECIAL CONDITIONS ARISING DURING THE PROGRESS OF THE WORK MUST BE TAKEN UP WITH THE STATIO[illegible] [illegible]G ORGANIZATION AND THEIR INSTRUCTIONS FOLLOWED. IF THE PREMISES ARE LEFT TEMPORARILY, A CHECK MUST BE MADE WITH THE STATION OPERATING ORGA[illegible] [illegible]N BEFORE PROCEEDING WITH FURTHER WORK. AFTER COMPLETION OF THE WORK, ALL DETAILS OF VACATING THE LOCATION MUST BE ATTENDED TO BY [illegible] [illegible]VISING THE STATION OPERATING ORGANIZATION TO REMOV[illegible] CLEARANCES IF IT IS FOUND NECESSARY TO RETURN, PROCEDURE MUST BE FOLLOWED AS WHEN FIR[illegible] [illegible] WORK.

Time: 0940

CIS No: 04

BEAVER VALLEY POWER STATION
1991 EMERGENCY PREPAREDNESS EXERCISE
CUE INFORMATION SHEET

Message for: Construction worker at RWST

Message: You are removing scaffolding from the RWST, lose your balance while removing a bar and fall backward to the ground Your injuries are as indicated. You hear a loud "Clang" as the bar hits a transmitter on the tank and water sprays out. Your left arm gets wet from a puddle on the ground before you can get out of the way.

FOR CONTROLLERS USE ONLY

Controller Notes: Provide data as requested. The Page Party near the RWST does not work for drill purposes, do not allow the call to be made from this Page.

Actions Expected: Other construction worker should call for help.

Time: 0940

CIS No: 05

BEAVER VALLEY POWER STATION
1991 EMERGENCY PREPAREDNESS EXERCISE
CUE INFORMATION SHEET

Message for: Control Room

Message: The following annunciators are in alarm:
ANN-A6-21
ANN-A1-26
Status Light C-3 on PNL-62

FOR CONTROLLERS USE ONLY

Controller Notes: LT-QS-100A level transmitter has been broken on the RWST.

Actions Expected: Follow alarm response procedures and determine cause.

Time: 0954

CIS No: 06*

BEAVER VALLEY POWER STATION
1991 EMERGENCY PREPAREDNESS EXERCISE
CUE INFORMATION SHEET

Message for: E. Squad at injured man

Message: The controller has information on the condition of the injured man. This will be provided upon request.

FOR CONTROLLERS USE ONLY

Controller Notes: Provide only such information as specifically requested and only if earned by actions.

Actions Expected:
1. Give first aid as needed.
2. Determine if contamination is present with either.
3. Contact Control Room and request an ambulance
4. Remove injured man from the area.

Time: 1000

CIS No: 07

BEAVER VALLEY POWER STATION
1991 EMERGENCY PREPAREDNESS EXERCISE
CUE INFORMATION SHEET

Message for: Crew at RWST

Message: You are successful in isolating the RWST leak. The release has stopped.

FOR CONTROLLERS USE ONLY

Controller Notes: Provide data as requested.

Actions Expected: Report this information to the Control Room.

Time: 1018

CIS No: 08*

BEAVER VALLEY POWER STATION
1991 EMERGENCY PREPAREDNESS EXERCISE
CUE INFORMATION SHEET

Message for: Ambulance crew

Message: The controller has information on the condition of the injured man. This information will be provided upon request. Transport the injured man to Aliquippa Hospital.

FOR CONTROLLERS USE ONLY

Controller Notes: Provide only information that is specifically requested and earned by actions.

Actions Expected: Provide advanced medical treatment.

Time: 1020

CIS No: 09X

BEAVER VALLEY POWER STATION
1991 EMERGENCY PREPAREDNESS EXERCISE
CUE INFORMATION SHEET

Message for: Emergency Director in Control Room

Message: Declare an Unusual Event on EPP/I-1 TAB 29, Criterion B or EPP/IP TAB 1, Criterion B.2

FOR CONTROLLERS USE ONLY

Controller Notes: To be used only if the emergency has not been called by 1020. If discussion are underway for declaration this CIS may be held for and additional time period.

Actions Expected: Declare an Unusual Event, direct the AA to commence approprate notifications.

Time: 1040

CIS No: 10

BEAVER VALLFY POWER STATION
1991 EMERGENCY PREPAREDNESS EXERCISE
CUE INFORMATION SHEET

Message for: Operator at Feedwater Pump

Message: You observe a flexible coupling on the oil return line to the resevoir on FW-P-1A leaking. The oil sight glass indicates low oil level in the resevoir.

FOR CONTROLLERS USE ONLY

Controller Notes: Provide additional information as requested.

Actions Expected: Contact Control Room. Obtain oil from the oil room for addition to the resevoir.

Time: 1050

CIS No: 11

BEAVER VALLEY POWER STATION
1991 EMERGENCY PREPAREDNESS EXERCISE
CUE INFORMATION SHEET

Message for: Rad. Tech. with Radiographer

Message: As you and the radiographer are positioning the source pig, it falls and breaks open. You see a small piece of metal bounce across the floor and fall down a pipe penetration.

FOR CONTROLLERS USE ONLY

Controller Notes: Provide data upon request.

Actions Expected: The Rad. Tech. should tell the radiographer to inform the Control Room and he should evaluate the situation

Time: 1103

CIS No: 12 *

BEAVER VALLEY POWER STATION
1991 EMERGENCY PREPAREDNESS EXERCISE
CUE INFORMATION SHEET

Message for: Aliquippa Hospital

Message: The controller will provide addional information upon request.

FOR CONTROLLERS USE ONLY

Controller Notes: Provide radiological and medical data as requested.

Actions Expected: Provide advanced medical support.

Time: 1115

CIS No: 13X

BEAVER VALLEY POWER STATION
1991 EMERGENCY PREPAREDNESS EXERCISE
CUE INFORMATION SHEET

Message for: Control Room

Message: An operator should be dispatched to conduct O.S.T. 1.36.19 on EE-EG-1 at this time.

FOR CONTROLLERS USE ONLY

Controller Notes: None.

Actions Expected: Dispatch operator to Diesel.

Time: 1125

CIS No: 14X

BEAVER VALLEY POWER STATION
1991 EMERGENCY PREPAREDNESS EXERCISE
CUE INFORMATION SHEET

Message for: Control Room

Message: Declare an Alert based on EPP/I-1, TAB 2, Criterion A.

FOR CONTROLLERS USE ONLY

Controller Notes: To be used only if the emergency has not been called by 1125. If discussions are underway for declaration this CIS may be held for an additional period of time.

Actions Expected: Declare the Alert and direct the appropriate notifications.

Time: 1130

CIS No: 15

BEAVER VALLEY POWER STATION
1991 EMERGENCY PREPAREDNESS EXERCISE
CUE INFORMATION SHEET

Message for: Operator at Diesel #1

Message: The local "Low Lube Oil Temp" alarm is in on EE-EG-1 Engine Control Panel.

FOR CONTROLLERS USE ONLY

Controller Notes: Upon inquiry, the oil temp. is reading 75 degree F instead of the required 115 degrees F.

Actions Expected: Call Control Room with information.

Time: 1145

CIS No: 16X

BEAVER VALLEY POWER STATION
1991 EMERGENCY PREPAREDNESS EXERCISE
CUE INFORMATION SHEET

Message for: ROC Personnel

Message: You have just received a call from the hospital that the injured man is resting comfortably and will be kept for further observation.

FOR CONTROLLERS USE ONLY

Controller Notes: None

Actions Expected: Inform emergency organization.

Time: 1155

CIS No: 17

BEAVER VALLEY POWER STATION
1991 EMERGENCY PREPAREDNESS EXERCISE
CUE INFORMATION SHEET

Message for: Controller for OSC crew at Diesel #1

Message: Problem on Diesel is due to contactor faults. If electricians trouble shoot properly they will find an open lead at the Heater. If this is not found early in the repairs, do not introduce it into the scenario. The Diesel must be returned to service by 1255 to allow time to heat-up the oil which will take approx. 25 minutes.

FOR CONTROLLERS USE ONLY

Controller Notes: Also, the Alarm switch to the Control Room, Temp. Switch and Emmersion Heater Contact have failed. Total time OOS is 1.5 hrs. plus 25 minutes for oil heat-up.

Actions Expected: Ensure that operations disables the diesel to permit troubleshooting.

Time: 1200

CIS No: 18

BEAVER VALLEY POWER STATION
1991 EMERGENCY PREPAREDNESS EXERCISE
CU INFORMATION SHEET

Message for: All Controllers

Message: Advise key coordinators in your area that time is now available for lunch rotation.

FOR CONTROLLERS USE ONLY

Controller Notes: None

Actions Expected: Lunch rotation should commence.

Time: 1215

CIS No: 19X

BEAVER VALLEY POWER STATION
1991 EMERGENCY PREPAREDNESS EXERCISE
CUE INFORMATION SHEET

Message for: Control Room

Message: Disable the Auto-start feature of EE-EG-1 to prevent damage on start-up due to the low lube oil temp.

FOR CONTROLLERS USE ONLY

Controller Notes: Provide this CIS if this action has not occurred prior to 1215. This will prevent Diesel start-up upon the RCS leak SI signal.

Actions Expected: Disable Diesel.

Time: 1230

CIS No: 20

BEAVER VALLEY POWER STATION
1991 EMERGENCY PREPAREDNESS EXERCISE
CUE INFORMATION SHEET

Message for: Control Room

Message: The Following Annunciators are in alarm:
ANN-A3-58 Charging Pump Disch Flow High-Low

FOR CONTROLLERS USE ONLY

Controller Notes: A 400 GPM RCS leak has just occurred.

Actions Expected: Per annunciator response procedures.

Time: 1231

CIS No: 21

BEAVER VALLEY POWER STATION
1991 EMERGENCY PREPAREDNESS EXERCISE
CUE INFORMATION SHEET

Message for: Maintenance crew on 717' Containment

Message: You all heard a loud roar and see steam and water coming from the "B" RCP Motor Cubicle next to you.

FOR CONTROLLERS USE ONLY

Controller Notes: A 400 GPM RCS leak has just occurred.

Actions Expected: Leave the area and exit Containment.

Time: 1233

CIS No: 22

BEAVER VALLEY POWER STATION
1991 EMERGENCY PREPAREDNESS EXERCISE
CUE INFORMATION SHEET

Message for: Control Room

Message: The following annunciators are in alarm:
ANN-A4-71 Rad monitor High

FOR CONTROLLERS USE ONLY

Controller Notes: RM-202 and 204 are in alarm due to the RCS leak.

Actions Expected: None.

Time: 1235

CIS No: 23

BEAVER VALLEY POWER STATION
1991 EMERGENCY PREPAREDNESS EXERCISE
CUE INFORMATION SHEET

Message for: Control Room

Message: The following annunciators are in alarm:
ANN-A1-35 CNMNT Partial Press High-Low CH1
ANN-A1-43 CNMNT Partial Press High-Low CH2
ANN-A1-36 CNMNT Partial Press High-High CH1
ANN-A1-44 CNMNT Partial Press High-High CH2
ANN-A3-53 Volume Control Tank Level Hi-Low

FOR CONTROLLERS USE ONLY

Controller Notes: Containment Press is 10.80 PSIA
VCT Low level 15%

Actions Expected: Inform the NSOF

Time: 1235

CIS No: 24X

BEAVER VALLEY POWER STATION
1991 EMERGENCY PREPAREDNESS EXERCISE
CUE INFORMATION SHEET

Message for: OSC Team at Feedwater Pump

Message: The temporary repair to the coupling has been successfully installed.

FOR CONTROLLERS USE ONLY

Controller Notes: None.

Actions Expected: Inform the OSC.

Time: 1237

CIS No: 25

BEAVER VALLEY POWER STATION
1991 EMERGENCY PREPAREDNESS EXERCISE
CUE INFORMATION SHEET

Message for: Control Room

Message: The following annunciators are in alarm:
All expected Reactor trip/Turbine Trip Annunciators
First out Annunciator was ANN-A5-32 "Pressurizer Press Low"

FOR CONTROLLERS USE ONLY

Controller Notes: None

Actions Expected: Per EOP E-0

Time: 1240

CIS No: 26

BEAVER VALLEY POWER STATION
1991 EMERGENCY PREPAREDNESS EXERCISE
CUE INFORMATION SHEET

Message for: Maintenance crew at airlock

Message: You are now at the airlock and open the inner door, enter the airlock and close the inner door.

FOR CONTROLLERS USE ONLY

Controller Notes: Upon closing the inner door, the inner door limit switch "makes" early allowing the breach lock to close with the inner door ajar (a wedge has torn loose).

Actions Expected: None.

Time: 1255

CIS No: 27

BEAVER VALLEY POWER STATION
1991 EMERGENCY PREPAREDNESS EXERCISE
CUE INFORMATION SHEET

Message for: Control Room

Message: CIA and SI have been reset

FOR CONTROLLERS USE ONLY

Controller Notes: None

Actions Expected: None

Time: 1255

CIS No: 28

BEAVER VALLEY POWER STATION
1991 EMERGENCY PREPAREDNESS EXERCISE
CUE INFORMATION SHEET

Message for: Maintenance crew at Diesel #1

Message: The loose contacts have been found and repaired and you can now begin to heat-up the oil.

FOR CONTROLLERS USE ONLY

Controller Notes: It will take 30 minutes to heat-up the oil to 90 degree which is the lower temp. limit for starting the Diesel.

Actions Expected: Begin to heat-up oil.

Time: 1300

CIS No: 29

BEAVER VALLEY POWER STATION
1991 EMERGENCY PREPAREDNESS EXERCISE
CUE INFORMATION SHEET

Message for: Maintenance crew in airlock

Message: The pressure equalization light is on and you may begin to open the outer door.

FOR CONTROLLERS USE ONLY

Controller Notes: Containment and airlock pressure has equalized with normal atmoshperic pressure (14.7 psia) due to the RCS leak.

Actions Expected: Begin to open outer door.

Time: 1303

CIS No: 30

BEAVER VALLEY POWER STATION
1991 EMERGENCY PREPAREDNESS EXERCISE
CUE INFORMATION SHEET

Message for: Maintenance crew in airlock

Message: As you open the outer door, it blows open hitting the door stops and all of you are knocked off your feet and have ear aches. You also hear a hissing sound coming from the inner door. The Continuos Air Monitor (CAM) in the airlock area is alarming.

FOR CONTROLLERS USE ONLY

Controller Notes: The airlock had a slight positive pressure which blew open the door, due to a leak in the inner door from the torn wedge. Outer door will not close, off alignment.

Actions Expected: Call Control Room and try to close outer door.

Time: 1303

CIS No: 31

BEAVER VALLEY POWER STATION
1991 EMERGENCY PREPAREDNESS EXERCISE
CUE INFORMATION SHEET

Message for: Security in CAS

Message: As you watch the crew exiting containment, you see the outer door blow open hitting the door stops and the crew knocked off their feet.

FOR CONTROLLERS USE ONLY

Controller Notes: Provide additional visual information from the monitor.

Actions Expected: Report to supervision.

Time: 1325

CIS No: 32

BEAVER VALLEY POWER STATION
1991 EMERGENCY PREPAREDNESS EXERCISE
CUE INFORMATION SHEET

Message for: Maintenance crew at Diesel

Message: The oil temp. has reached 50 degrees. You can start O.S.T. 1.36.19.

FOR CONTROLLERS USE ONLY

Controller Notes: Once the O.S.T. is completed, the Diesel will work and can be considered operable.

Actions Expected: Perform O.S.T.

Time: 1340

CIS No: 33X

BEAVER VALLEY POWER STATION
1991 EMERGENCY PREPAREDNESS EXERCISE
CUE INFORMATION SHEET

Message for: Emergency Director in TSC

Message: Declare a Site Area Emergency based on EPP/I-1 Tab 5, Criterion B.

FOR CONTROLLERS USE ONLY

Controller Notes: To be used only if the emergency has not been called by 1340. If discussion are underway for declaration this CIS may be held for and additional time period.

Actions Expected: Declare an SAE and direct the appropriate notifications to be commenced.

Time: 1345

CIS No: 34

BEAVER VALLEY POWER STATION
1991 EMERGENCY PREPAREDNESS EXERCISE
CUE INFORMATION SHEET

Message for: OSC team at airlock

Message: The controllers will provide information upon request.

FOR CONTROLLERS USE ONLY

Controller Notes: Provide information.

Actions Expected: Repair airlock.

Time: 1355

CIS No: 35

BEAVER VALLEY POWER STATION
1991 EMERGENCY PREPAREDNESS EXERCISE
CUE INFORMATION SHEET

Message for: OSC team at Diesel

Message: O S.T. 1.36.19 has been successfully completed.

FOR CONTROLLERS USE ONLY

Controller Notes: None.

Actions Expected: Inform Control Room.

Time: 1415

CIS No: 36

BEAVER VALLEY POWER STATION
1991 EMERGENCY PREPAREDNESS EXERCISE
CUE INFORMATION SHEET

Message for: OSC Crew at airlock door

Message: You have been successful in closing and sealing the outer airlock door.

FOR CONTROLLERS USE ONLY

Controller Notes: None.

Actions Expected: Inform the Control Room, OSC, and ROC.

Time: 1445

CIS No: 37X

BEAVER VALLEY POWER STATION
1991 EMERGENCY PREPAREDNESS EXERCISE
CUE INFORMATION SHEET

Message for: ERF Controllers

Message: Inform players to begin termination/recovery discussions.

FOR CONTROLLERS USE ONLY

Controller Notes: Provide this CIS only if discussions are not underway

Actions Expected: Player should commence discussions.

Time: 1500

CIS No: 38X

BEAVER VALLEY POWER STATION
1991 EMERGENCY PREPAREDNESS EXERCISE
CUE INFORMATION SHEET

Message for: All Controllers

Message: Terminate the exercise and continue clean-up and records collection. Request all players return supplies to appropriate locations. Issue exercise termination over OP's and Rad curcuits and to all participating offsite agencies.

FOR CONTROLLERS USE ONLY

Controller Notes: This CIS is to handed out only when the EOF lead Controller determines that the conditions for the exercise termination have been meet.

Actions Expected: Notify all personnel via communications systems.

Prepared Plant Data

Section VII

(Part C)

Plant Operations

Section VII

(Part C.1)

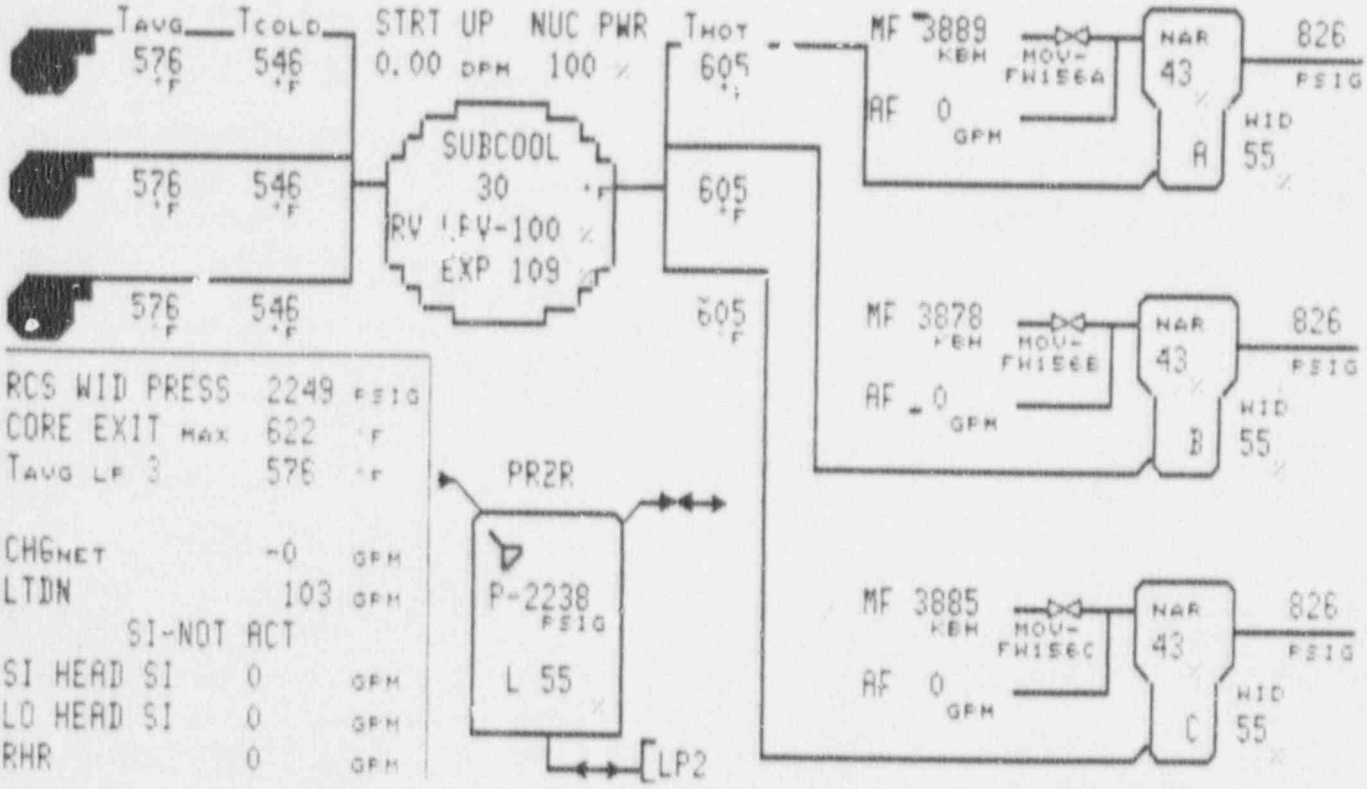

CONTAINMENT			
Press. (PSIA)	9.45	Temp. (F)	96.9
RHR	NO	Sump (In)	0
Quench Spray	NO	Recirc Spray	NO
HHSI	NO	CIA	NO
LHSI	NO	CIB	NO

ELECTRICAL			
SSST 1A	OK	SSST 1B	OK
AE	OK	DF	OK
8 N	OK	9 P	OK
DG #1	AVAIL	DG #2	OOS
Batteries	OK	Vital Buses	OK

Time 0930

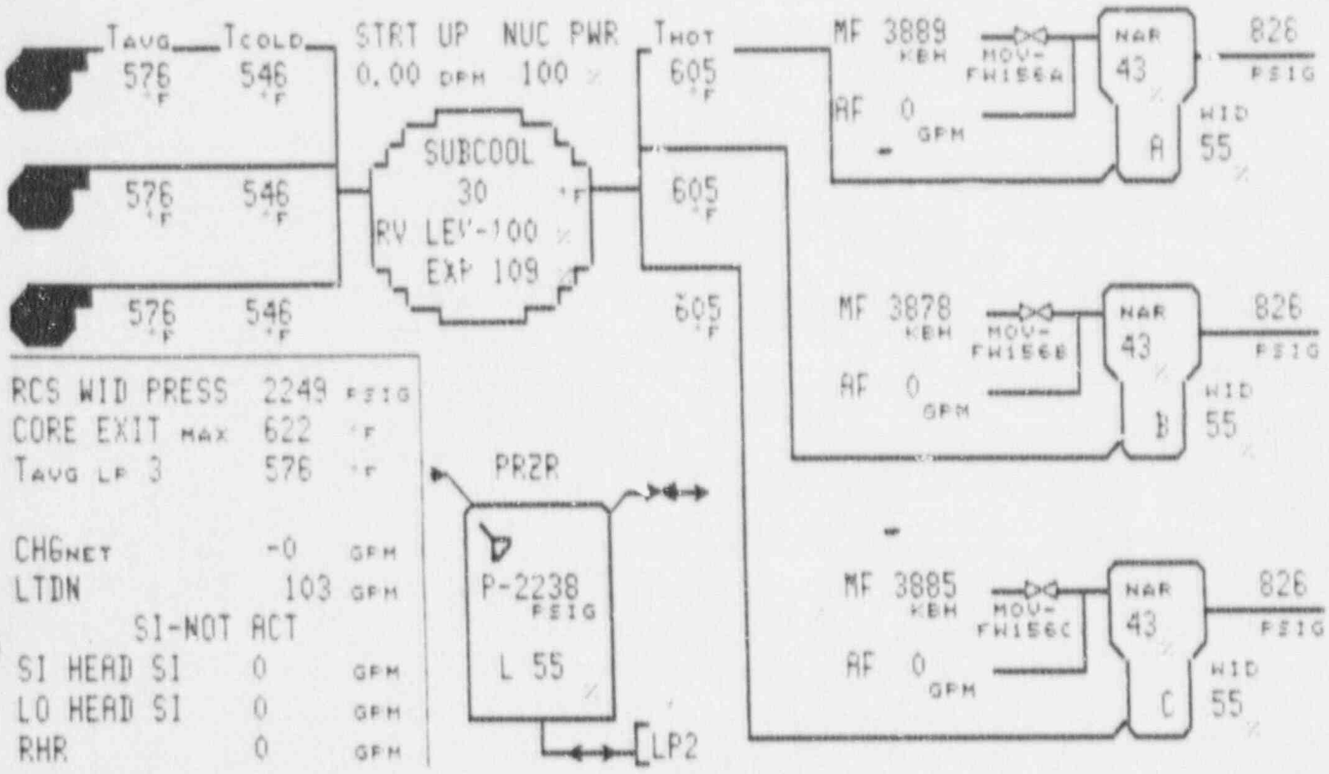

CONTAINMENT				ELECTRICAL			
Press. (PSIA)	9.45	Temp. (F)	96.9	SSST 1A	OK	SSST 1B	OK
RHR	NO	Sump (In)	0	AE	OK	DF	OK
Quench Spray	NO	Recirc Spray	NO	8 N	OK	9 P	OK
HHSI	NO	CIA	NO	DG #1	AVAIL	DG #2	OOS
LHSI	NO	CIB	NO	Batteries	OK	Vital Buses	OK

Time 0933

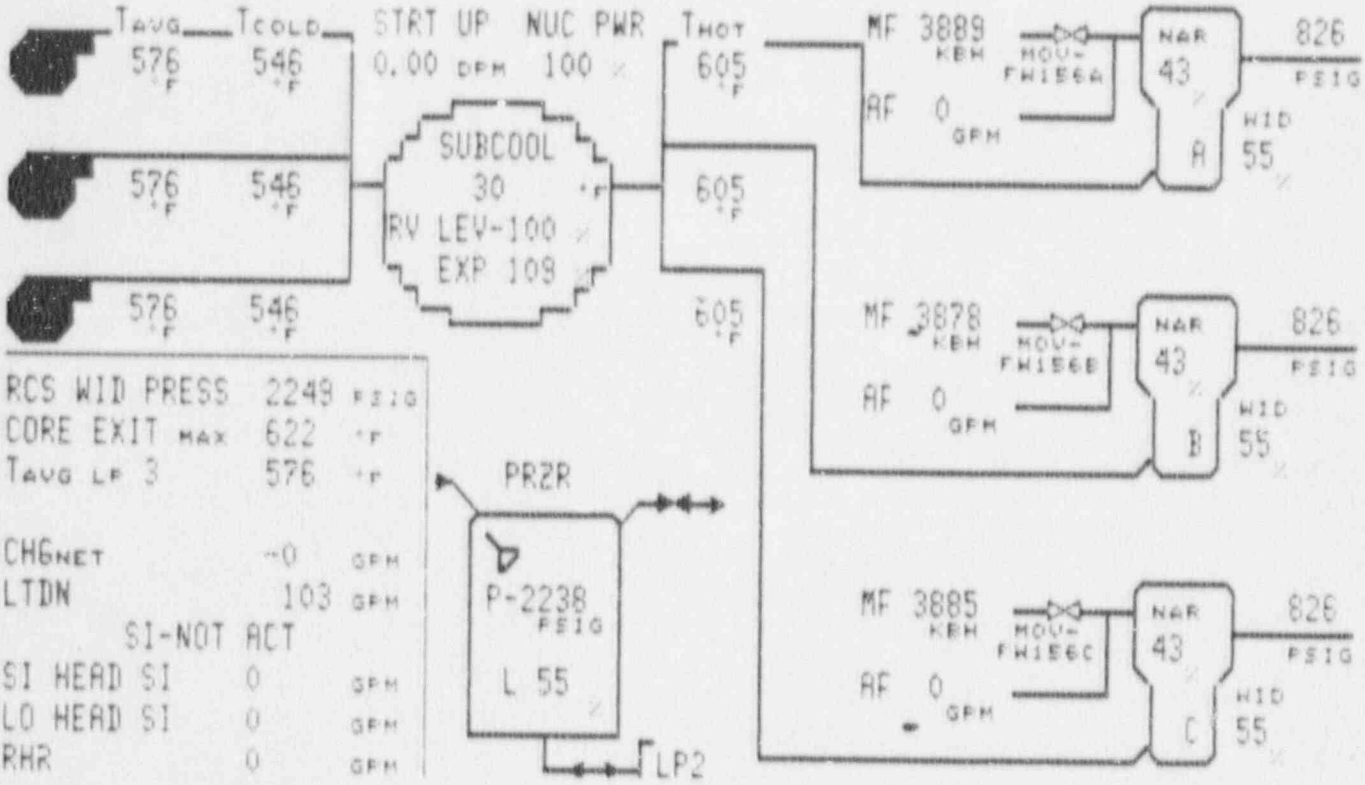

CONTAINMENT				ELECTRICAL			
Press. (PSIA)	9.45	Temp. (F)	96.9	SSST 1A	OK	SSST 1B	OK
RHR	NO	Sump (In)	0	AE	OK	DF	OK
Quench Spray	NO	Recirc Spray	NO	8 N	OK	9 P	OK
HHST	NO	CIA	NO	DG #1	AVAIL	DG #2	OOS
LHSI	NO	CIB	NO	Batteries	OK	Vital Buses	OK

Time 0936

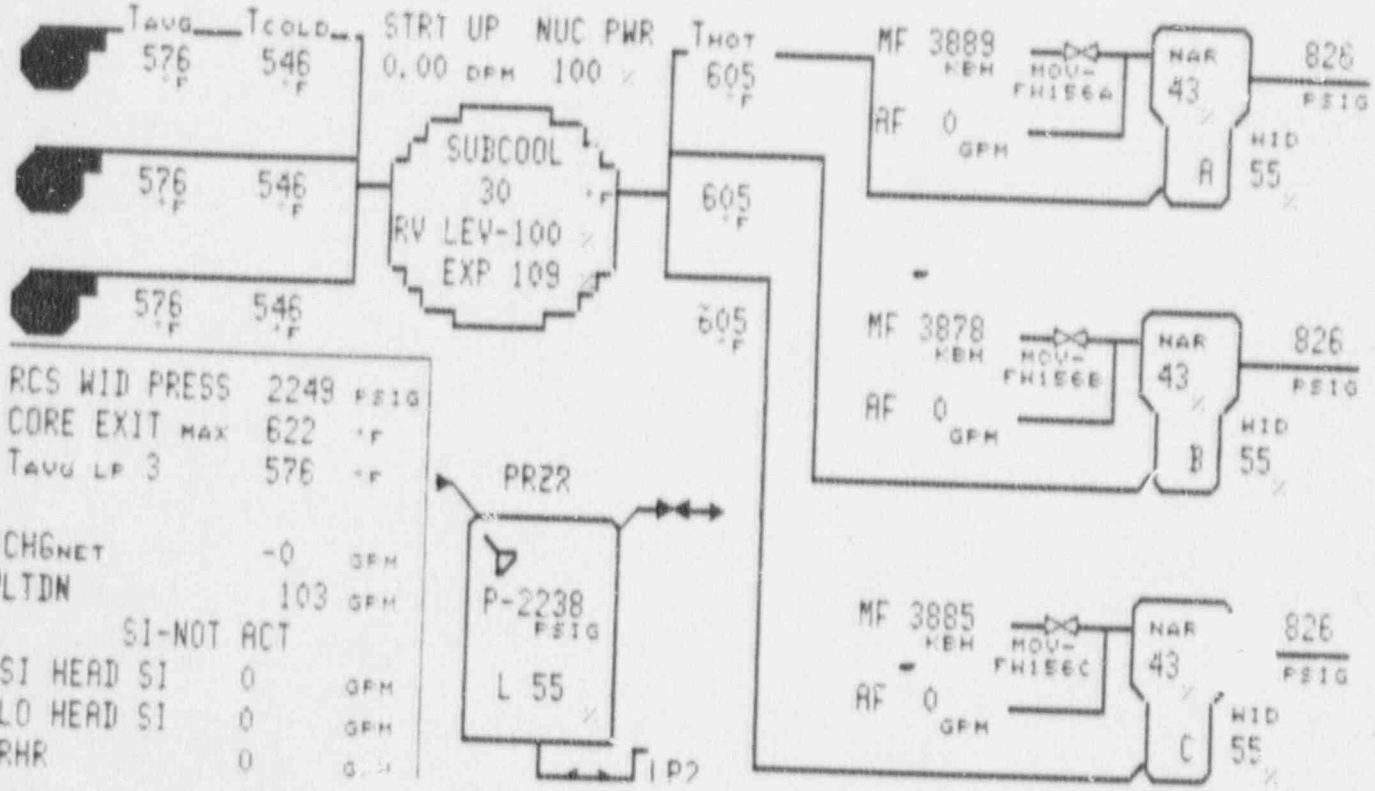

CONTAINMENT				ELECTRICAL			
Press. (PSIA)	9.45	Temp. (F)	96.9	SSST 1A	OK	SSST 1B	OK
RHR	NO	Sump (In)	0	AE	OK	DF	OK
Quench Spray	NO	Recirc Spray	NO	8 N	OK	9 P	OK
HHSI	NO	CIA	NO	DG #1	AVAIL	DG #2	OOS
LHSI	NO	CIB	NO	Batteries	OK	Vital Buses	OK

Time 0939

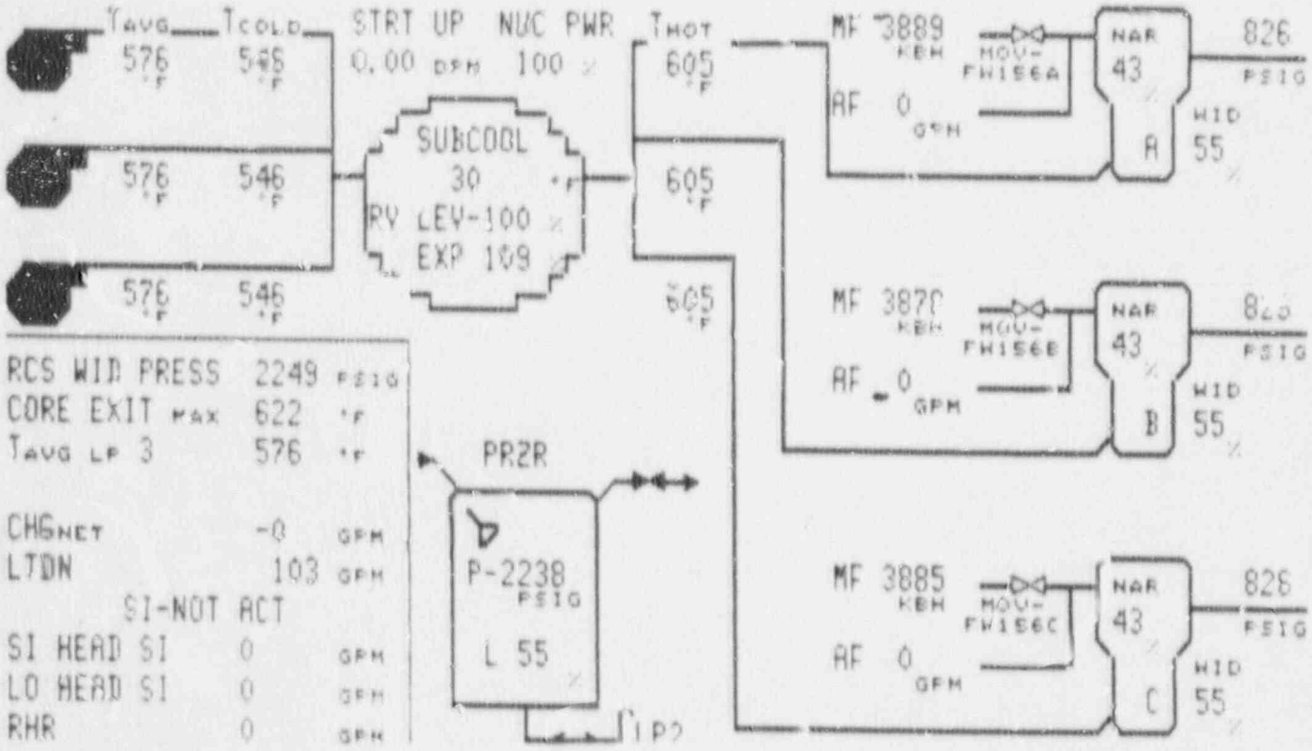

CONTAINMENT				ELECTRICAL			
Press. (PSIA)	9.45	Temp. (F)	96.9	SSST 1A	OK	SSST 1B	OK
RHR	NO	Sump (In)	0	AE	OK	DF	OK
Quench Spray	NO	Recirc Spray	NO	8 N	OK	9 P	OK
HHSI	NO	CIA	NO	DG #1	AVAIL	DG #2	OOS
LHSI	NO	CIB	NO	Batteries	OK	Vital Buses	OK

Time 0942

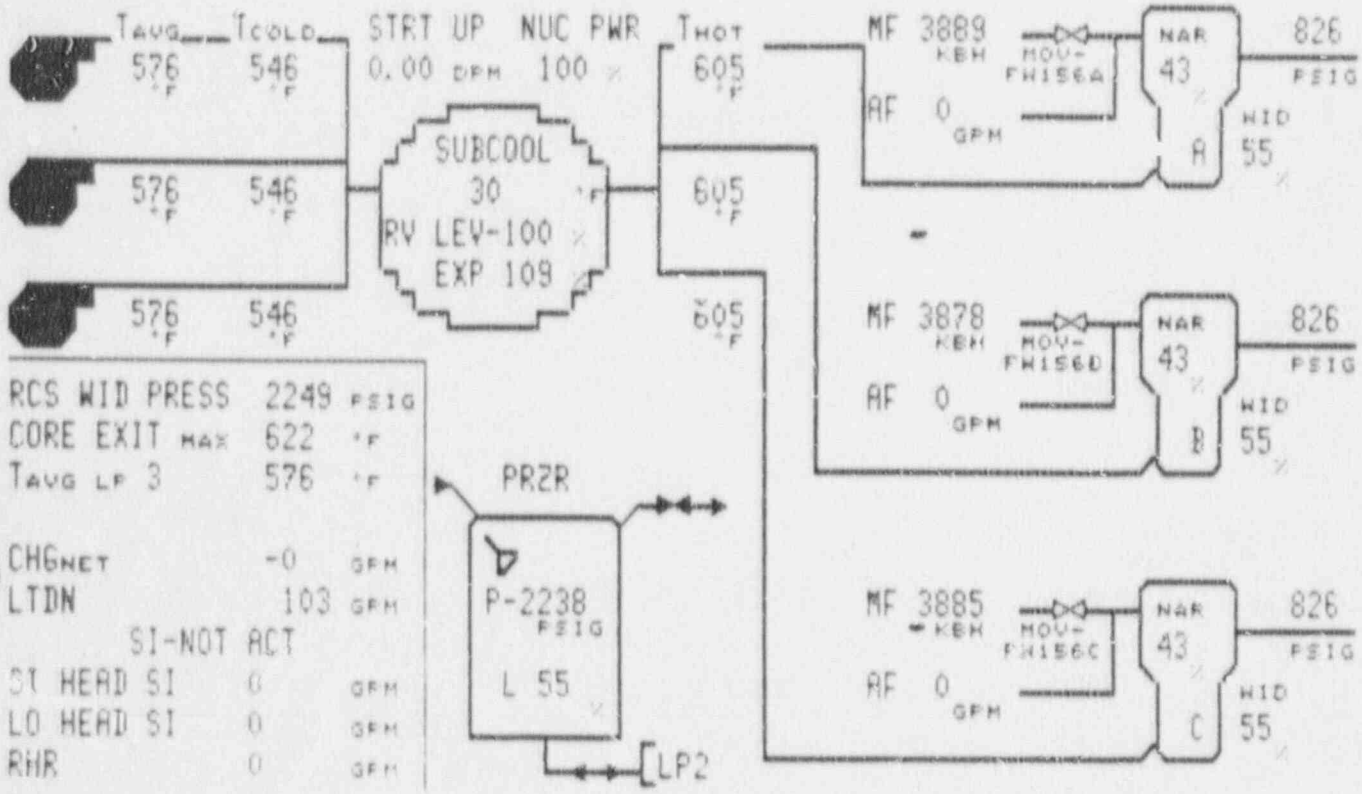

CONTAINMENT				ELECTRICAL			
Press. (PSIA)	9.45	Temp. (F)	96.9	SSST 1A	OK	SSST 1B	OK
RHR	NO	Sump (In)	0	AE	OK	DF	OK
Quench Spray	NO	Recirc Spray	NO	8 N	OK	9 P	OK
HHSI	NO	CIA	NO	DG #1	AVAIL	DG #2	OOS
LHSI	NO	CIB	NO	Batteries	OK	Vital Buses	OK

Time 0945

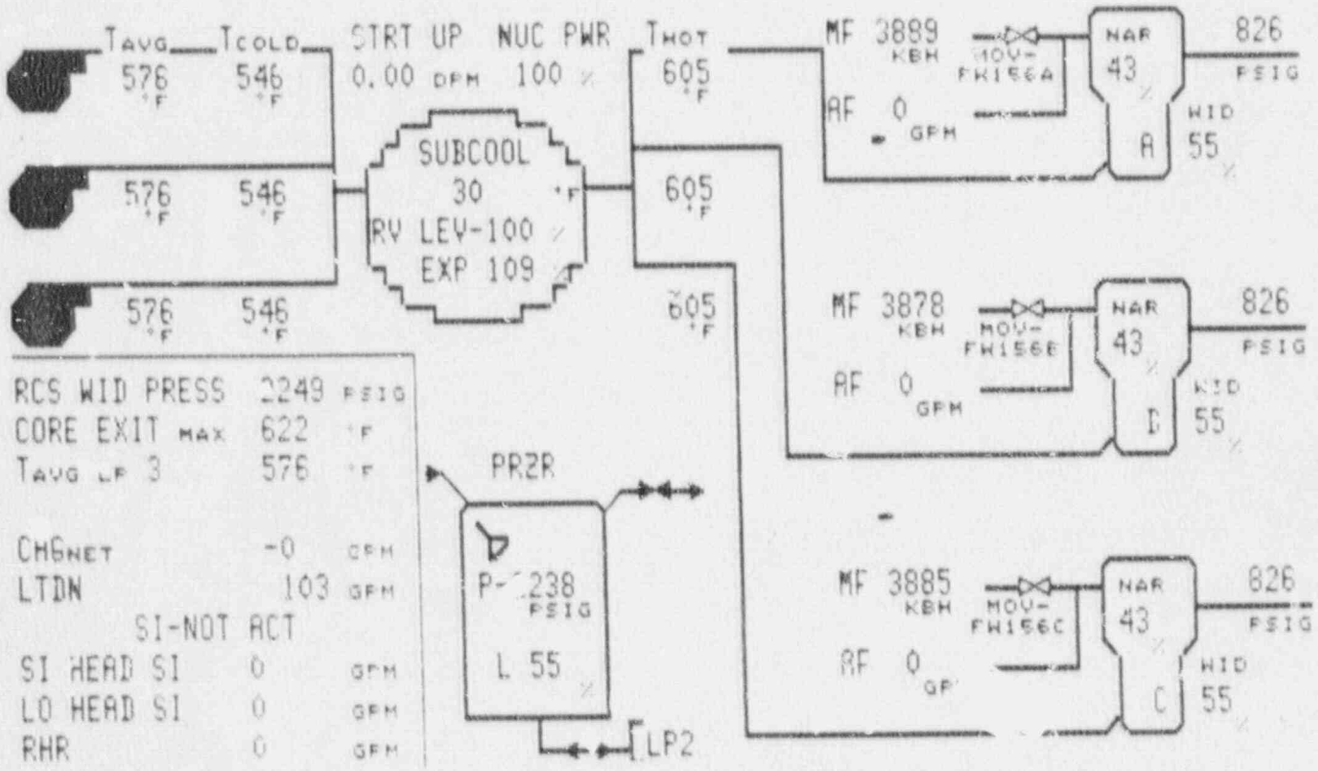

CONTAINMENT				ELECTRICAL			
Press. (PSIA)	9.45	Temp. (F)	96.9	SSST 1A	OK	SSST 1B	OK
RHR	NO	Sump (In)	0	AE	OK	DF	OK
Quench Spray	NO	Recirc Spray	NO	8 N	OK	9 P	OK
HHSI	NO	CIA	NO	DG #1	AVAIL	DG #2	OOS
LHSI	NO	CIB	NO	Batteries	OK	Vital Buses	OK

Time 0948

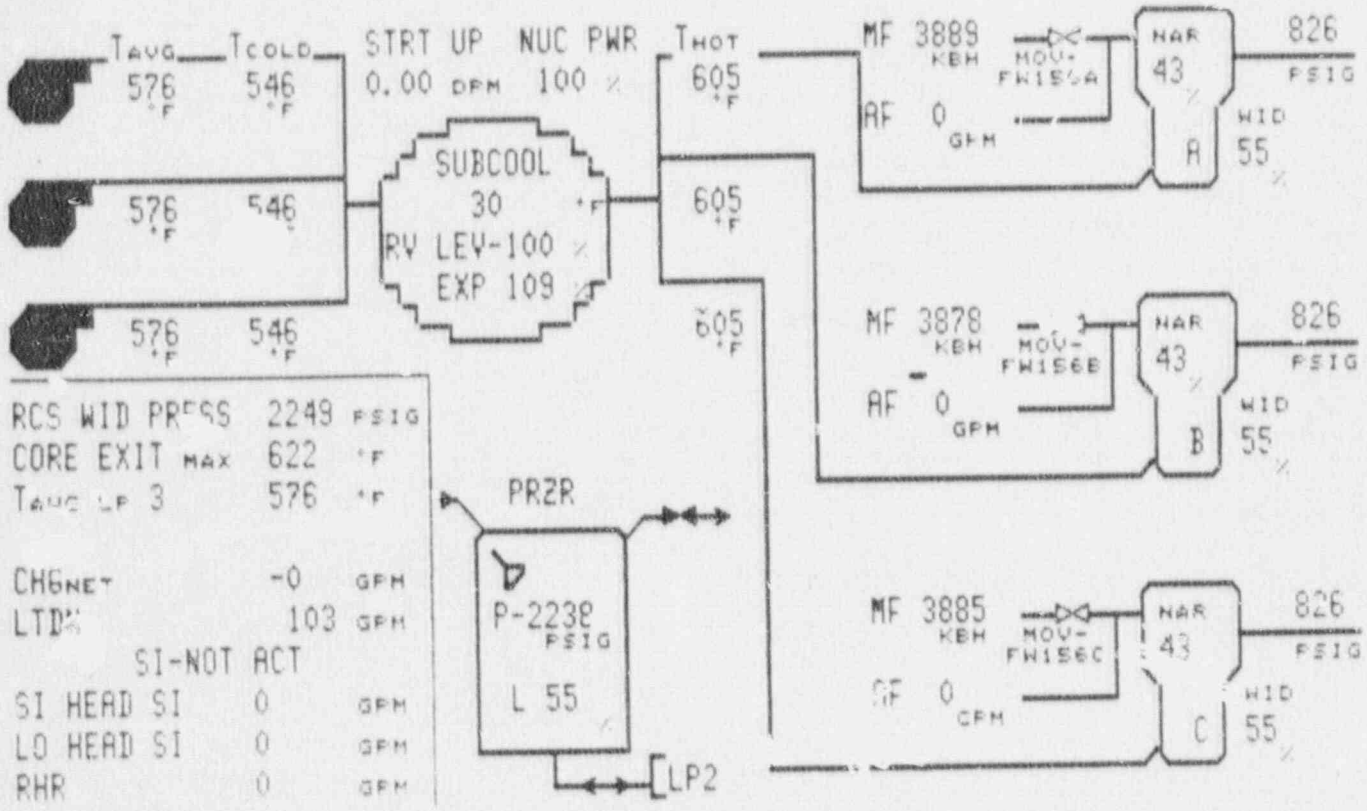

CONTAINMENT				ELECTRICAL			
Press. (PSIA)	9.45	Temp. (F)	96.9	SSST 1A	OK	SSST 1B	OK
RHR	NO	Sump (In)	0	AE	OK	DF	OK
Quench Spray	NO	Recirc Spray	NO	8 N	OK	9 P	OK
HHSI	NO	CIA	NO	DG #1	AVAIL	IG #2	OOS
LHSI	NO	CIB	NO	Batteries	OK	Vital Buses	OK

Time 0951

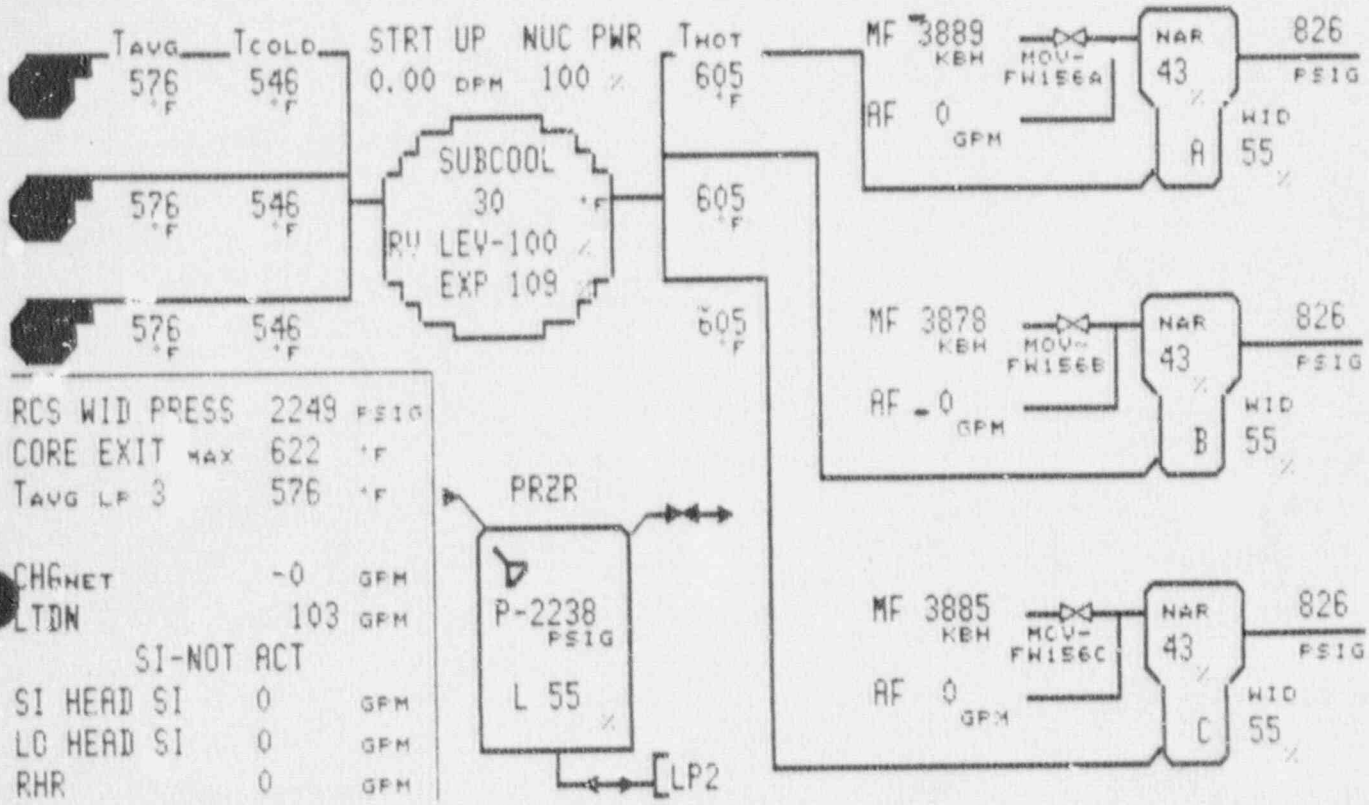

CONTAINMENT				ELECTRICAL			
Press. (PSIA)	9.45	Temp. (F)	96.9	SSST 1A	OK	SSST 1B	OK
RHR	NO	Sump (In)	0	AE	OK	DF	OK
Quench Spray	NO	Recirc Spray	NO	8 N	OK	9 P	OK
HHSI	NO	CIA	NO	DG #1	AVAIL	DG #2	OOS
LHSI	NO	CIB	NO	Batteries	OK	Vital Buses	OK

Time 0954

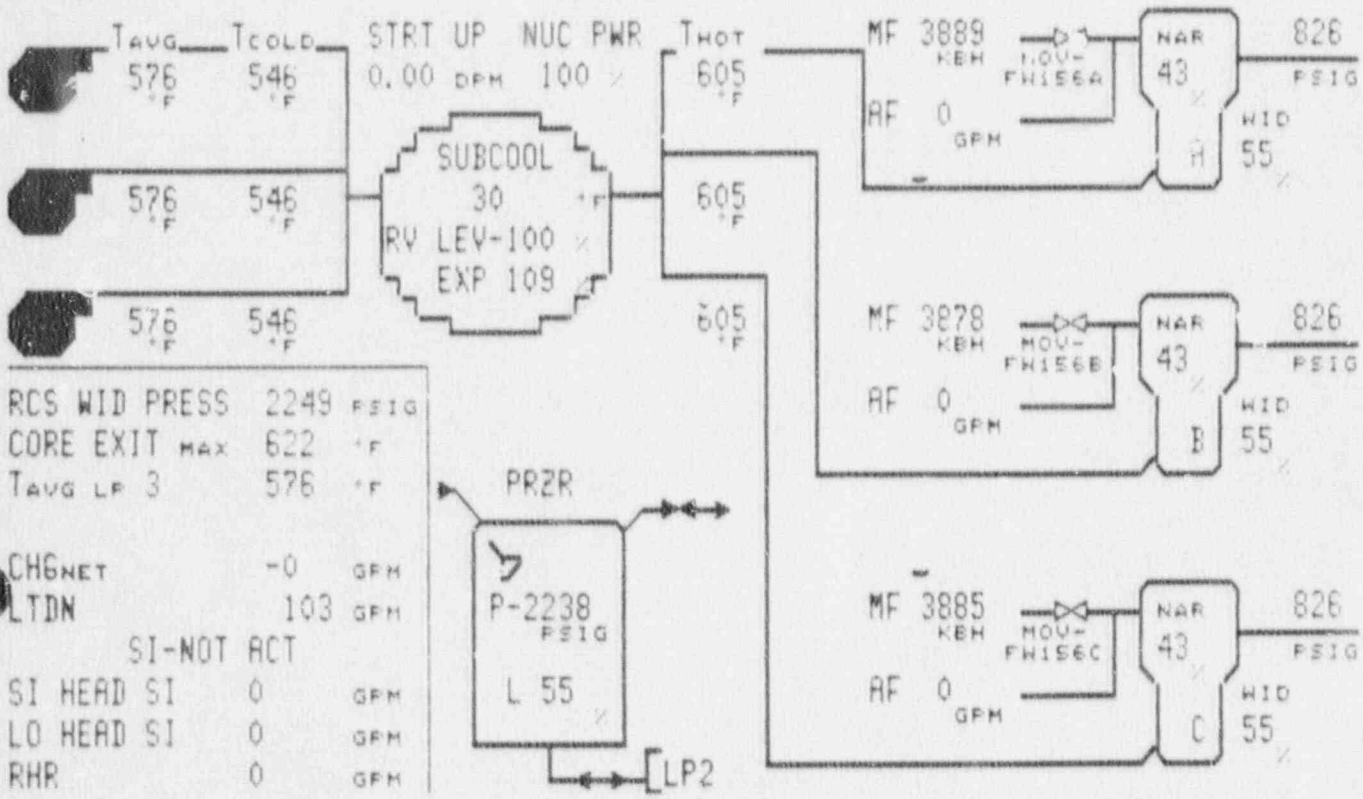

CONTAINMENT				ELECTRICAL			
Press. (PSIA)	9.45	Temp. (F)	96.9	SSST 1A	OK	SSST 1B	OK
RHR	NO	Sump (In)	0	AE	OK	DF	OK
Quench Spray	NO	Recirc Spray	NO	8 N	OK	9 P	OK
HHSI	NO	CIA	NO	DG #1	AVAIL	DG #2	OOS
LHSI	NO	CIB	NO	Batteries	OK	Vital Buses	OK

Time 0957

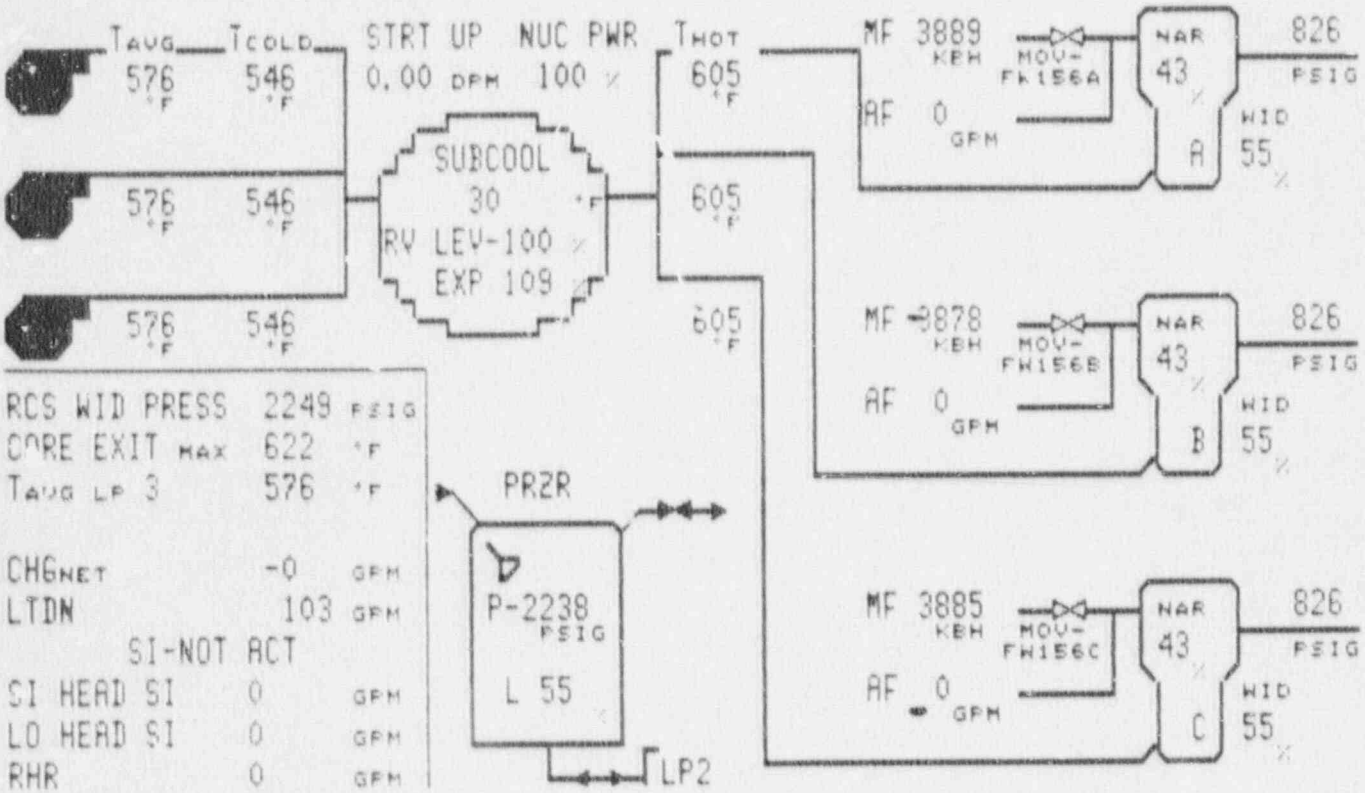

CONTAINMENT				ELECTRICAL			
Press. (PSIA)	9.45	Temp. (F)	96.9	SSST 1A	OK	SSST 1B	OK
RHR	NO	Sump (In)	0	AE	OK	DF	OK
Quench Spray	NO	Recirc Spray	NO	8 N	OK	9 P	OK
HHSI	NO	CIA	NO	DG #1	AVAIL	DG #2	OOS
LHSI	NO	CIB	NO	Systems	OK	Vital Buses	OK

Time 1000

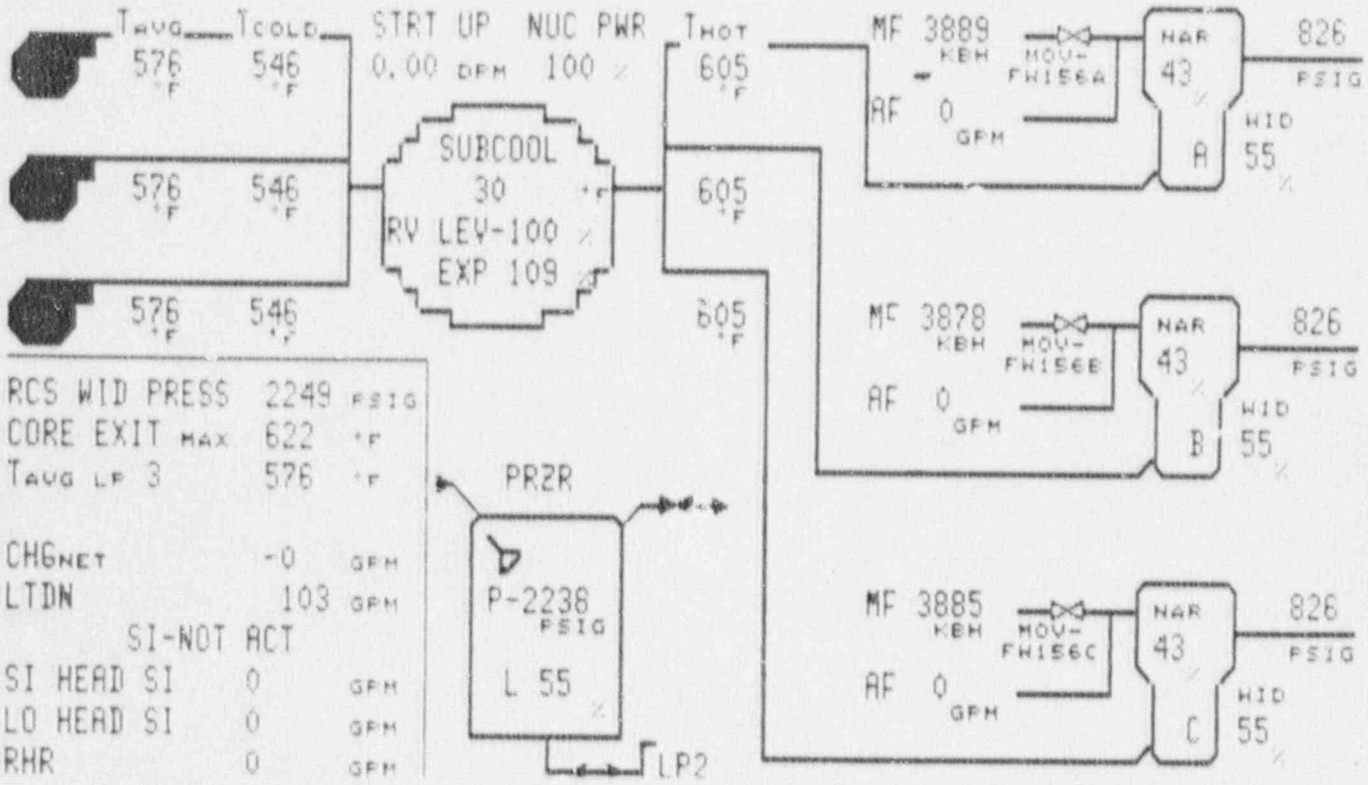

CONTAINMENT				ELECTRICAL			
Press. (PSIA)	9.45	Temp. (F)	96.9	SSST 1A	OK	SSST 1B	OK
RHR	NO	Sump (In)	0	AE	OK	DF	OK
Quench Spray	NO	Recirc Spray	NO	8 N	OK	9 P	OK
HHSI	NO	CIA	NO	DG #1	AVAIL	DG #2	OOS
LHSI	NO	CIB	NO	Batteries	OK	Vital Buses	OK

Time 1003

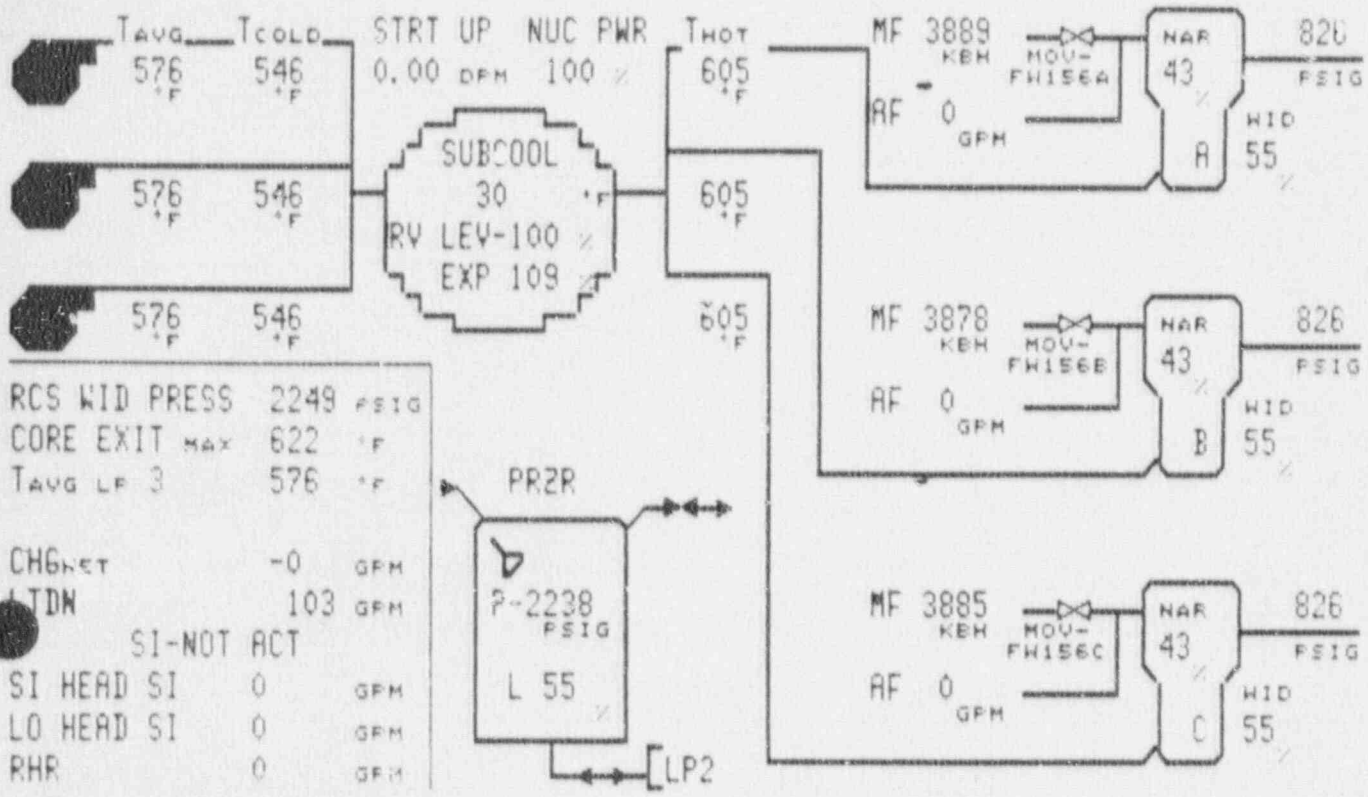

CONTAINMENT				ELECTRICAL			
Press. (PSIA)	9.45	Temp. (F)	96.9	SSST 1A	OK	SSST 1B	OK
RHR	NO	Sump (In)	0	AE	OK	DF	OK
Quench Spray	NO	Recirc Spray	NO	8 N	OK	9 P	OK
HHSI	NO	CIA	NO	DG #1	AVAIL	DG #2	OOS
LHSI	NO	CIB	NO	Batteries	OK	Vital Buses	OK

Time 1006

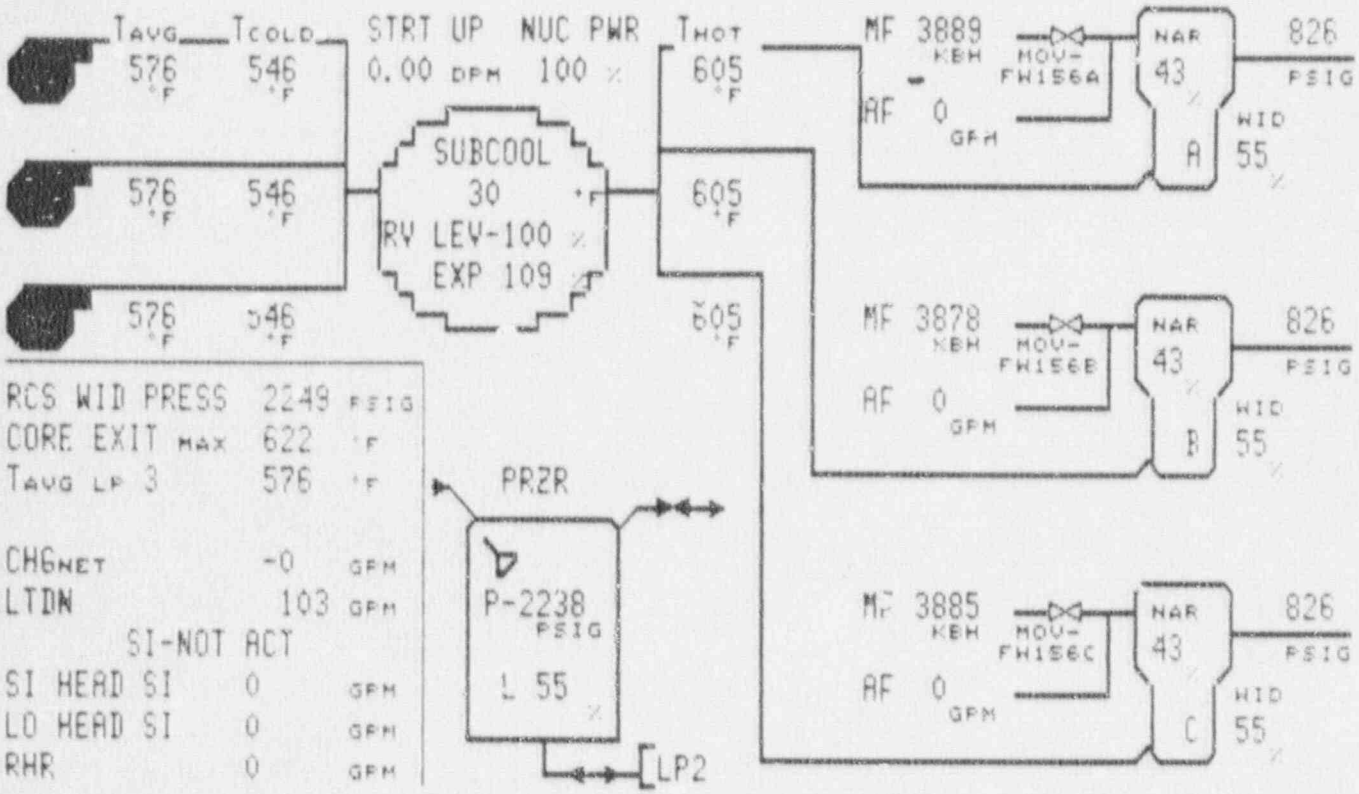

CONTAINMENT				ELECTRICAL			
Press. (PSIA)	9.45	Temp. (F)	96.9	SSST 1A	OK	SSST 1B	OK
RHR	NO	Sump (In)	0	AE	OK	DF	OK
Quench Spray	NO	Recirc Spray	NO	8 N	OK	9 P	OK
HHSI	NO	CIA	NO	DG #1	AVAIL	DG #2	DOS
LHST	NO	CIB	NO	Batteries	OK	Vital Buses	OK

Time 1009

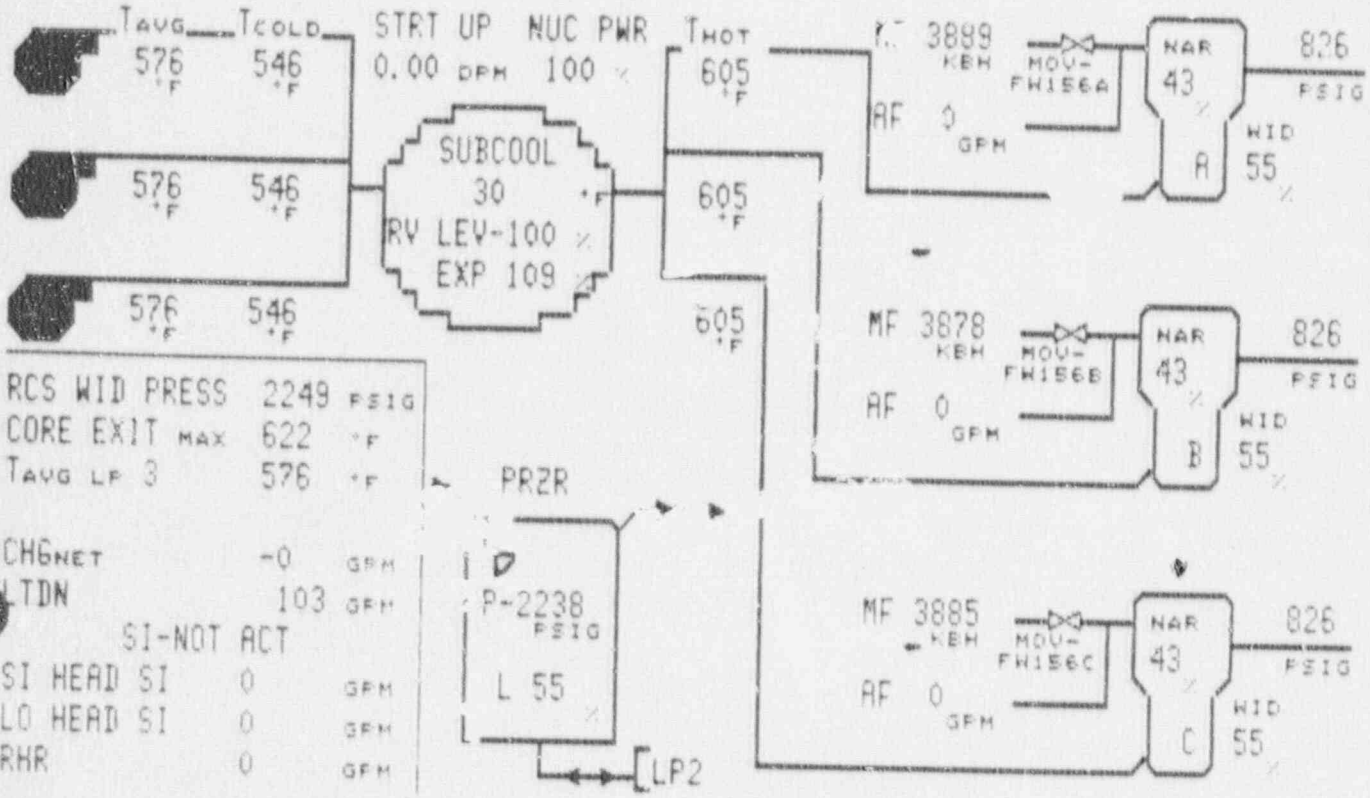

CONTAINMENT				ELECTRICAL			
Press. (PSIA)	9.45	Temp. (F)	96.9	SSST 1A	OK	SSST 1B	OK
RHR	NO	Sump (In)	0	AE	OK	DF	OK
Quench Spray	[illegible]	Recirc Spray	NO	8 N	OK	9 P	OK
HHSI	[illegible]	CIA	NO	DG #1	AVAIL	DG #2	OOS
LHSI	NO	CIB	NO	Batteries	OK	Vital Buses	OK

Time 1012

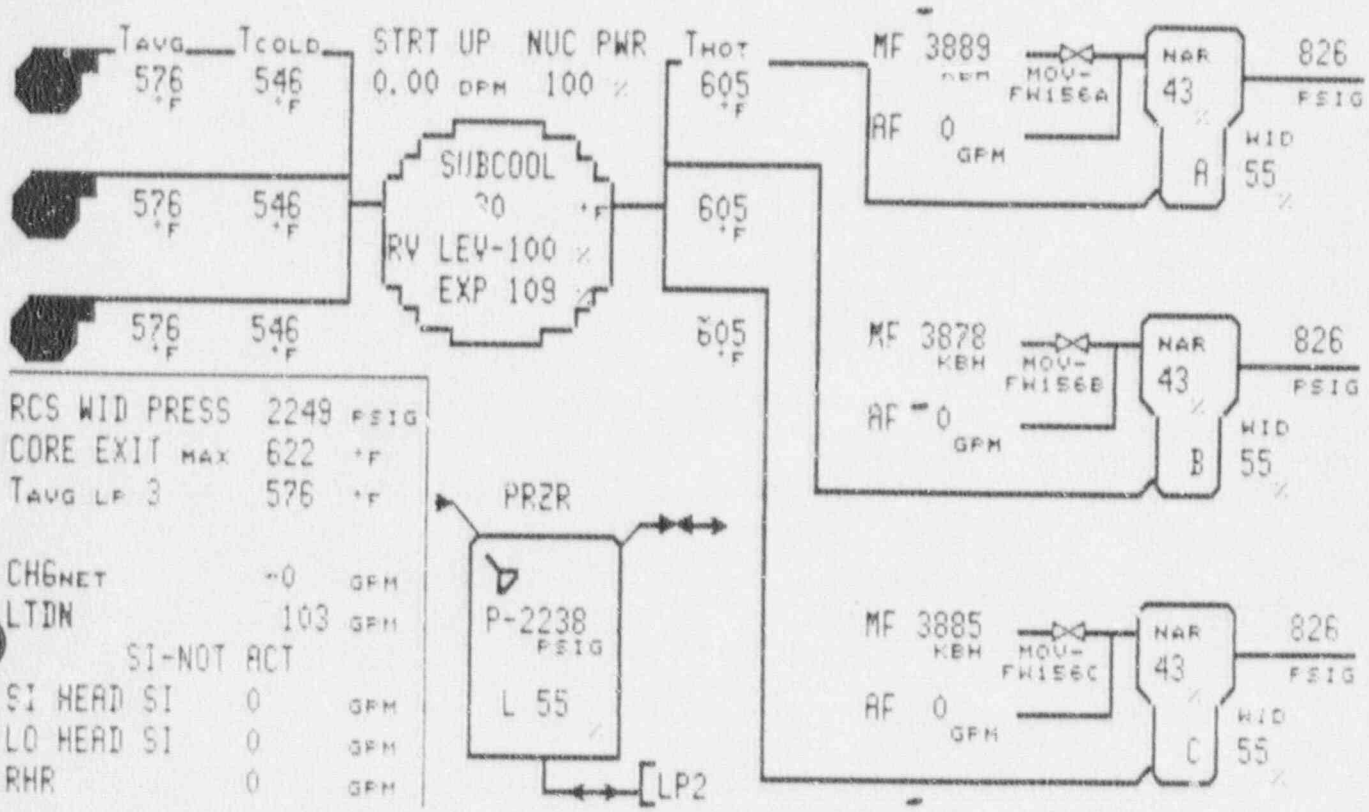

CONTAINMENT				ELECTRICAL			
Press. (PSIA)	9.45	Temp. (F)	96.9	SSST 1A	OK	SSST 1B	OK
RHR	NO	Sump (In)	0	AE	OK	DF	OK
Quench Spray	NO	Recirc Spray	NO	8 N	OK	9 P	OK
HHSI	NO	CIA	NO	DG #1	AVAIL	DG #2	OOS
LHSI	NO	CIB	NO	Batteries	OK	Vital Buses	OK

Time 1015

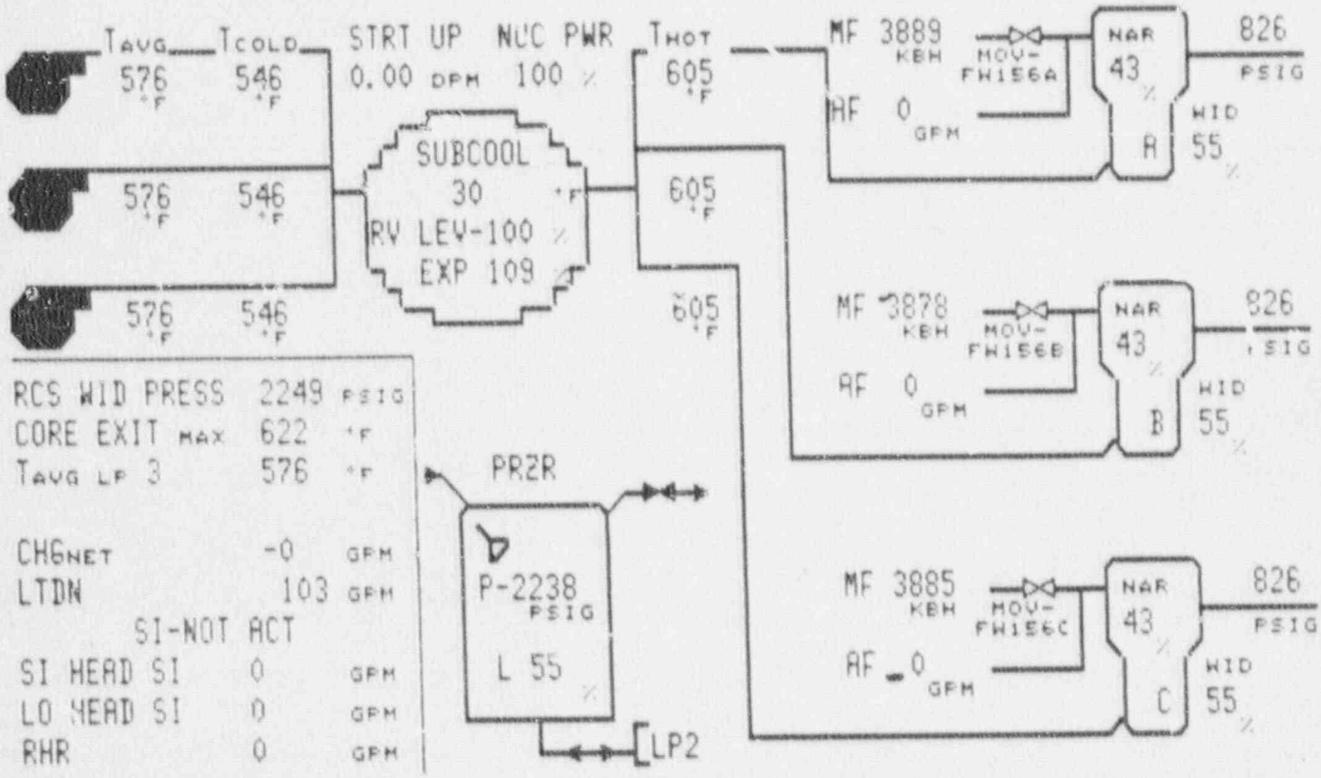

CONTAINMENT				ELECTRICAL			
Press. (PSIA)	9.45	Temp. (F)	96.9	SSST 1A	OK	SSST 1B	OK
RHR	NO	Sump (In)	0	AE	OK	DF	OK
Quench Spray	NO	Recirc Spray	NO	8 N	OK	9 P	OK
HHSI	NO	CIA	NO	DG #1	AVAIL	DG #2	OOS
LHSI	NO	CIB	NO	Batteries	OK	Vital Buses	OK

Time 1018

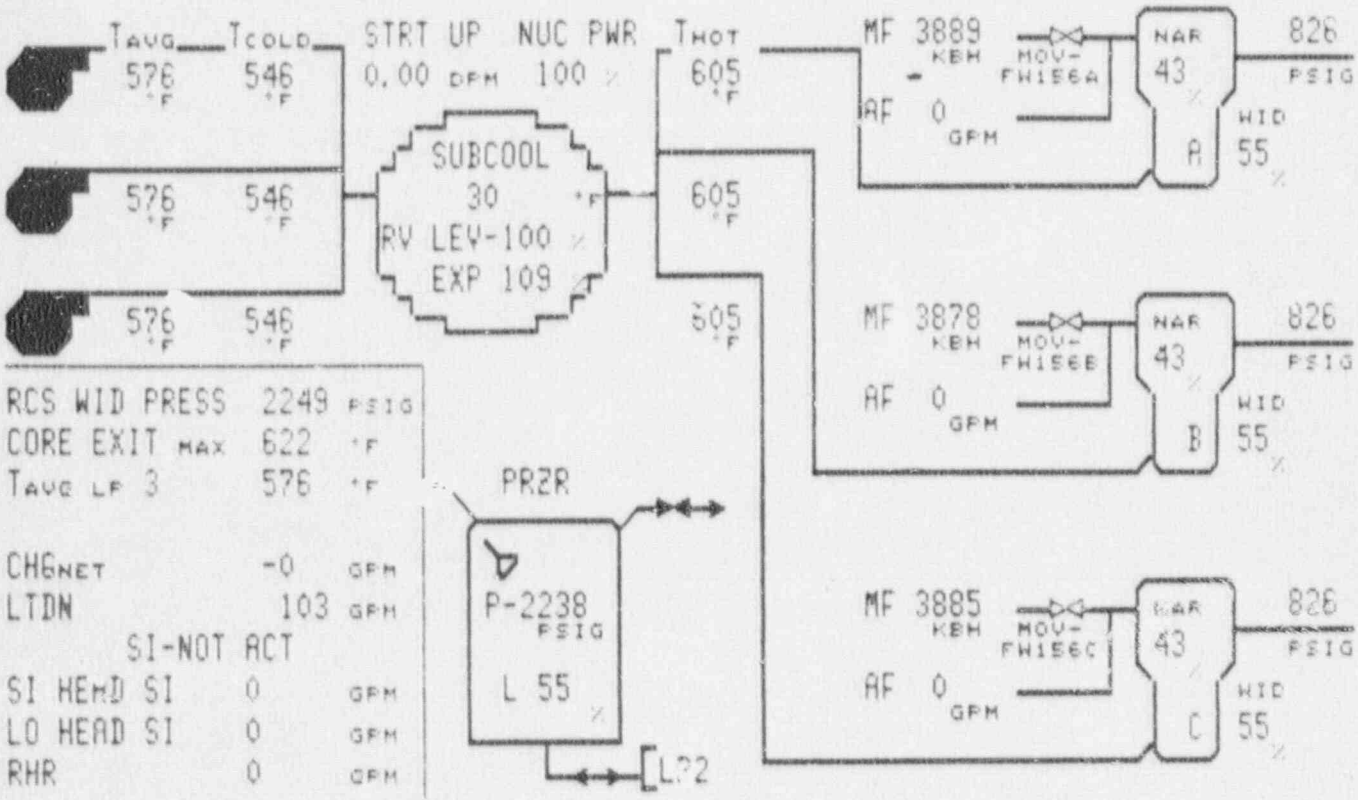

CONTAINMENT				ELECTRICAL			
Press. (PSIA)	9.45	Temp. (F)	96.9	SSST 1A	OK	SSST 1B	OK
RHR	NO	Sump (In)	0	LE	OK	DF	OK
Quench Spray	NO	Recirc Spray	NO	8 N	OK	9 P	OK
HHSI	NO	CIA	NO	DG #1	AVAIL	DG #2	OOS
LHSI	NO	CIB	NO	Batteries	OK	Vital Buses	OK

Time 1021

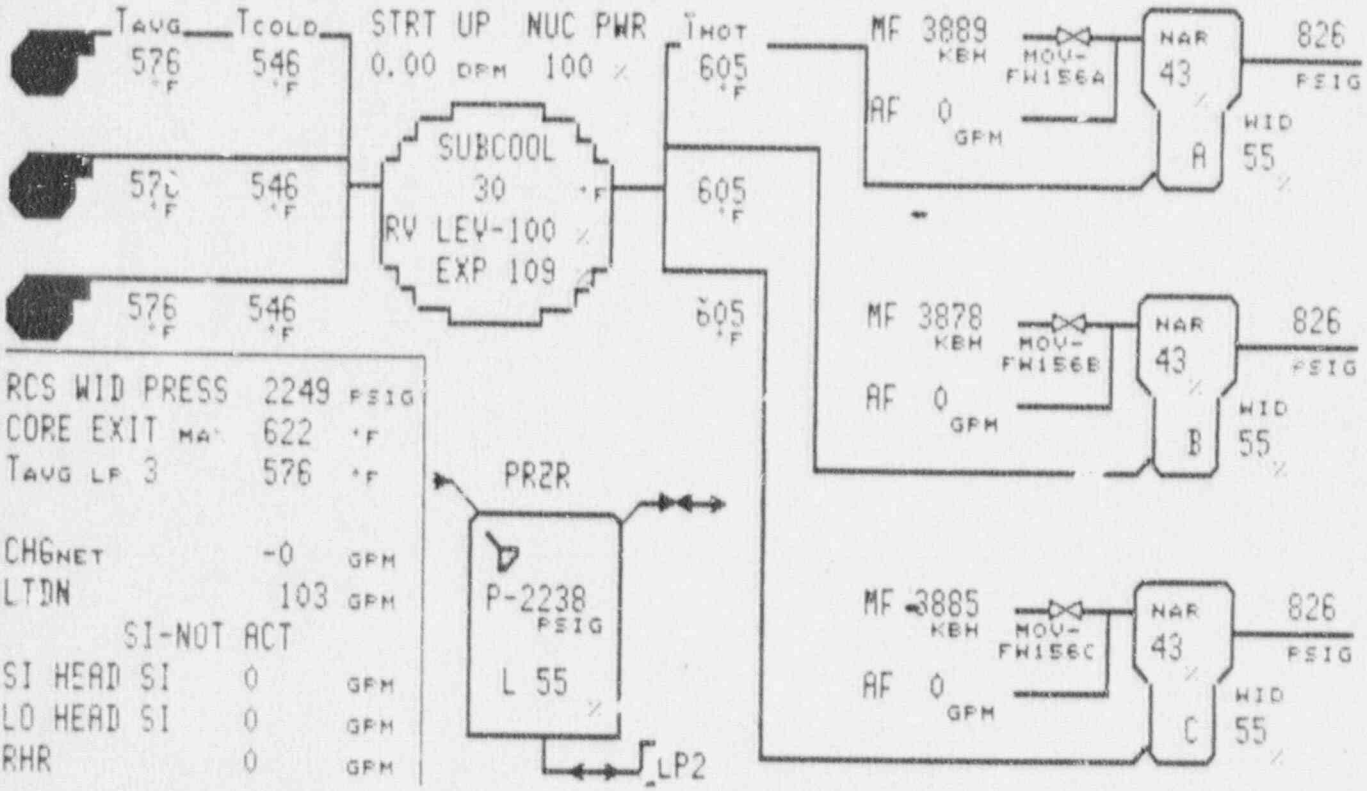

CONTAINMENT				ELECTRICAL			
Press. (PSIA)	9.45	Temp. (F)	96.9	SSST 1A	OK	SSST 1B	OK
RHR	NO	Sump (In)	0	AE	OK	DF	OK
Quench Spray	NO	Recirc Spray	NO	8 N	OK	9 P	OK
HHSI	NO	CIA	NO	DG #1	AVAIL	DG #2	OOS
LHSI	NO	CIB	NO	Batteries	OK	Vital Buses	OK

Time 1024

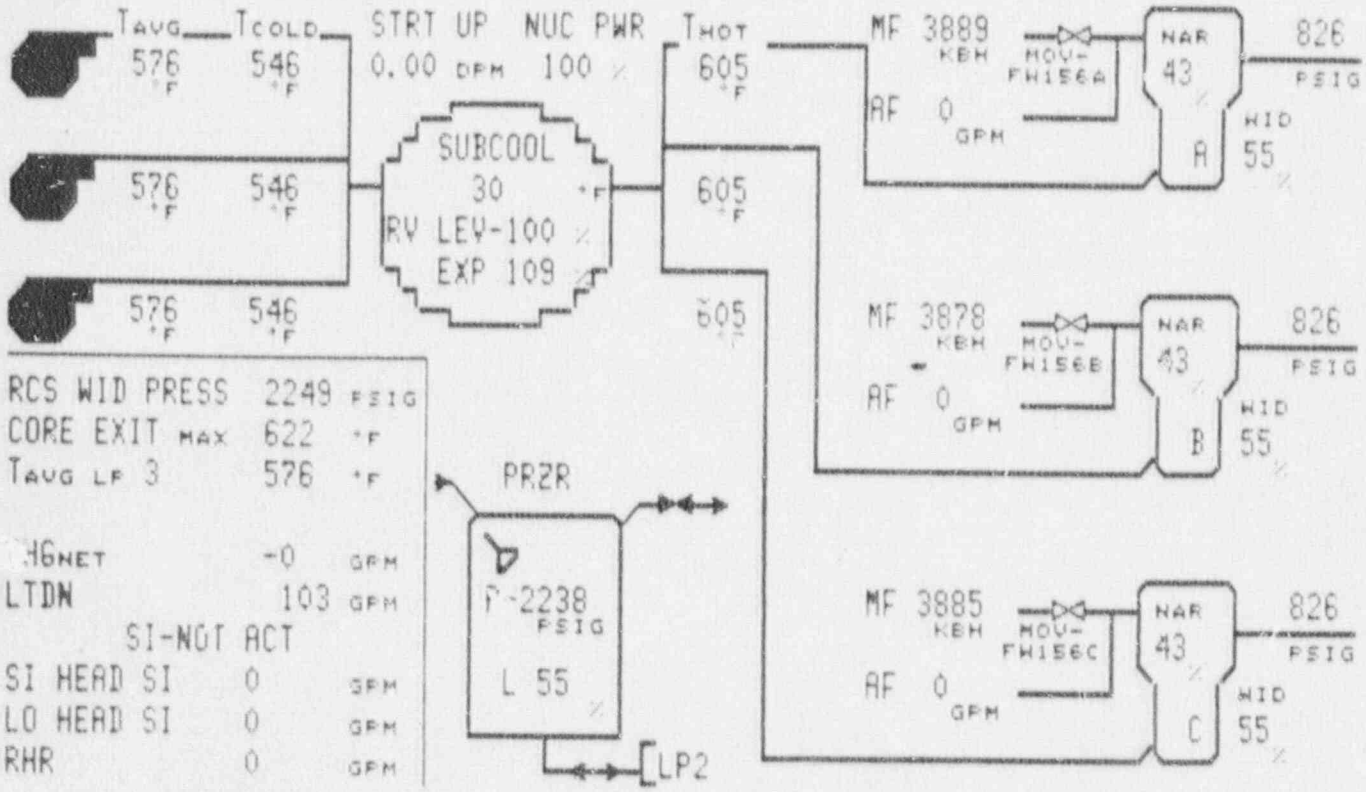

CONTAINMENT				ELECTRICAL			
Press. (PSIA)	9.45	Temp. (F)	96.9	SSST 1A	OK	SSST 1B	OK
RHR	NO	Sump (In)	0	AE	OK	DF	OK
Quench Sprav	NO	Recirc Spray	NO	8 N	OK	9 P	OK
HHSI	NO	CIA	NO	DG #1	AVAIL	DG #2	OOS
LHSI	NO	CIB	NO	Batteries	OK	Vital Buses	OK

Time 1027

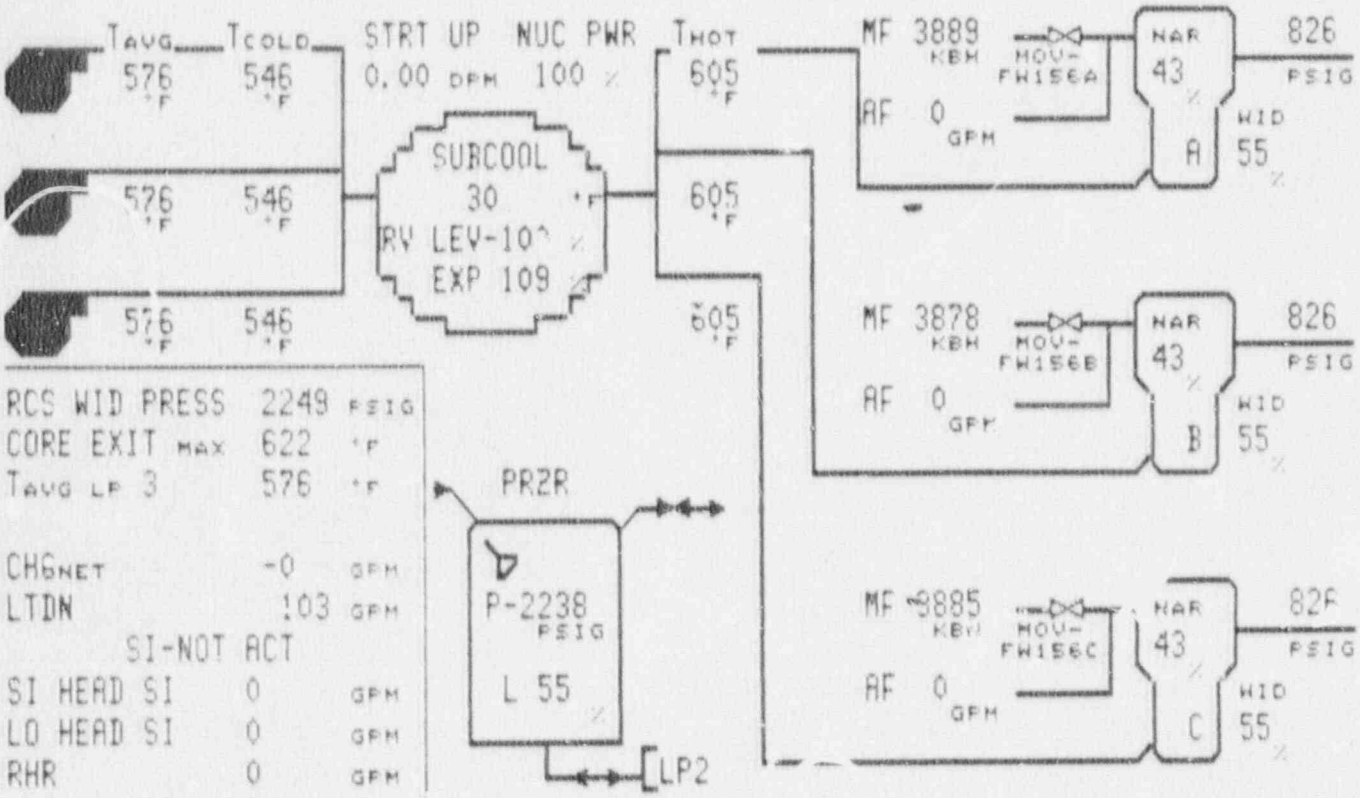

CONTAINMENT				ELECTRICAL			
Press. (PSIA)	9.45	Temp. (F)	96.9	SSST 1A	OK	SSST 1B	OK
RHR	NO	Sump (In)	0	AE	OK	DF	OK
Quench Spray	NO	Recirc Spray	NO	8 N	OK	9 P	OK
HHSI	NO	CIA	NO	DG #1	AVAIL	DG #2	OOS
LHSI	NO	CIB	NO	Batteries	OK	Vital Buses	OK

Time 1030

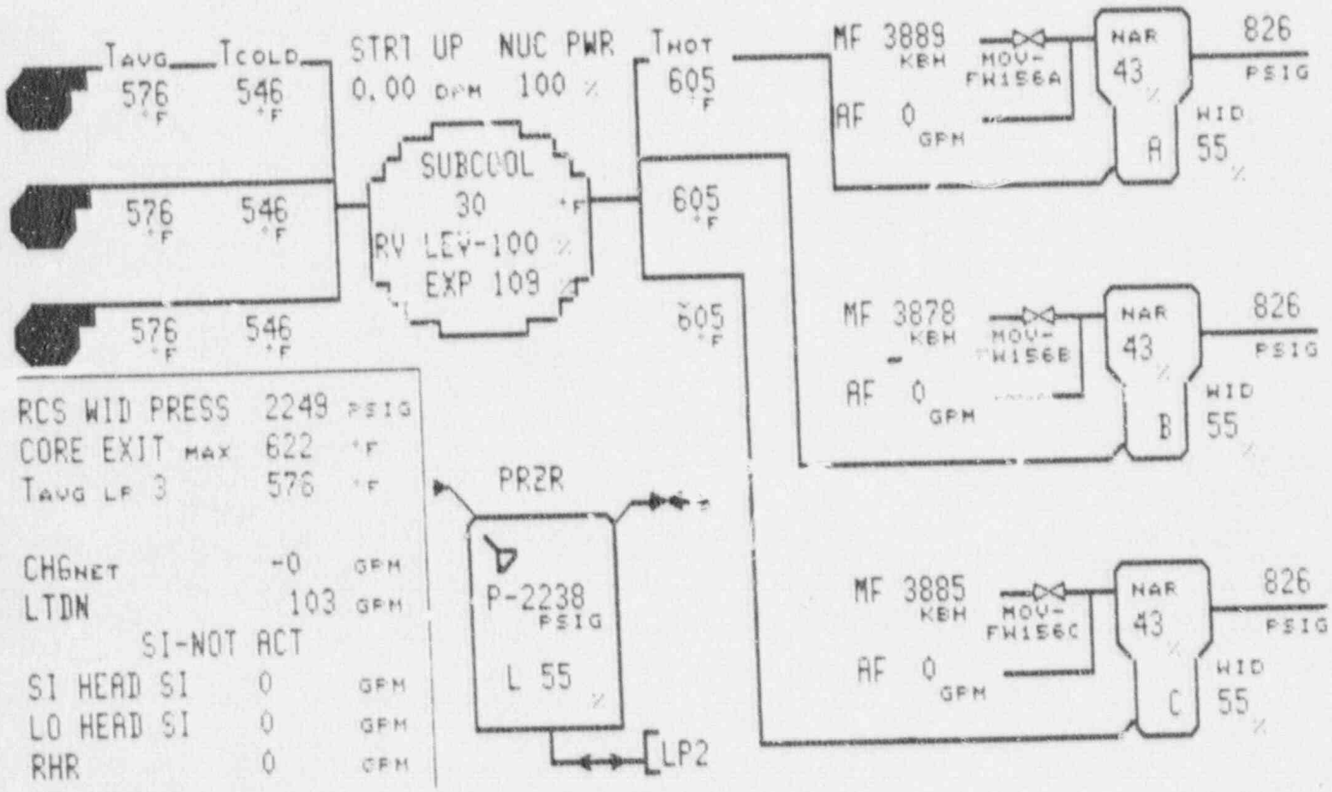

CONTAINMENT				ELECTRICAL			
Press. (PSIA)	9.45	Temp. (F)	96.9	SSST 1A	OK	SSST 1B	OK
RHR	NO	Sump (In)	0	AE	OK	DF	OK
Quench Spray	NO	Recirc Spray	NO	8 N	OK	9 P	OK
HHSI	NO	CIA	NO	DG #1	AVAIL	DG #2	OOS
LHSI	NO	CIB	NO	Batteries	OK	Vital Buses	OK

Time 1033

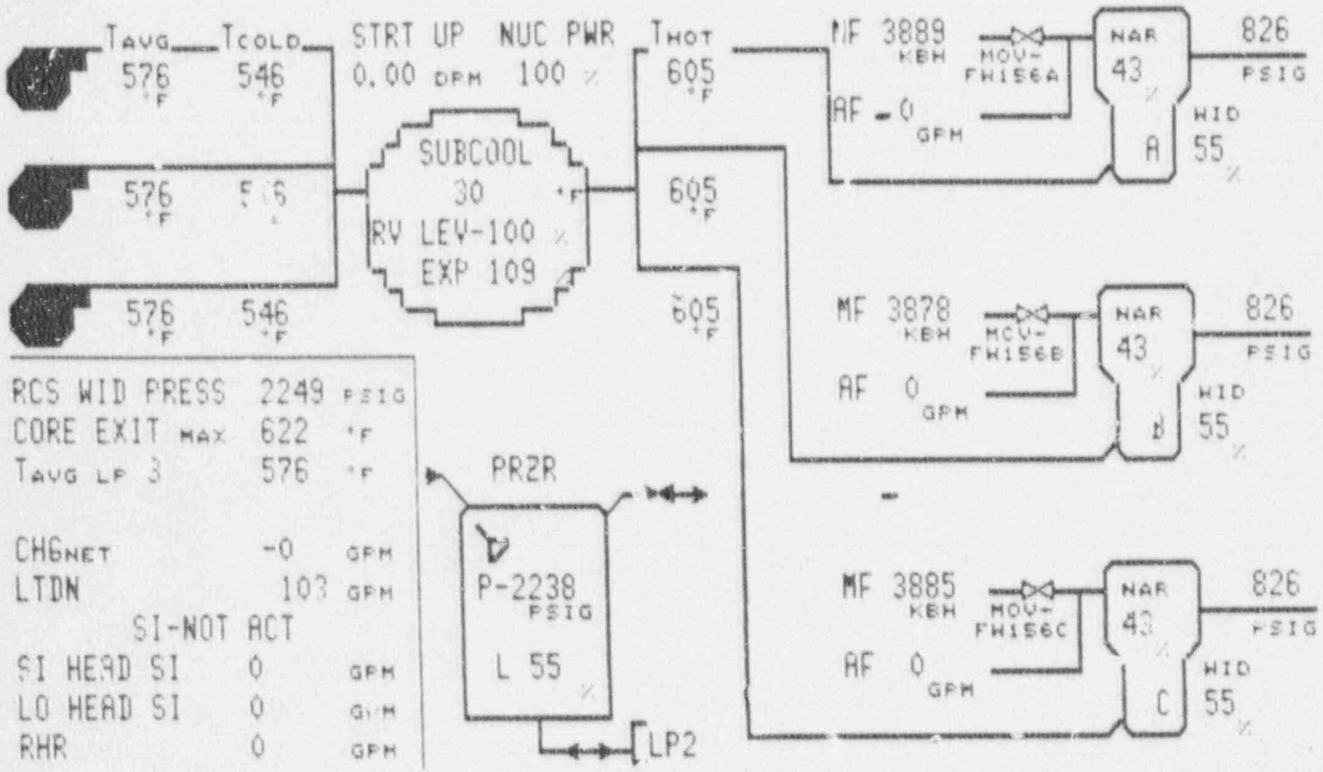

CONTAINMENT				ELECTRICAL			
Press. (PSIA)	9.45	Temp. (F)	96.9	SSST 1A	OK	SSST 1B	OK
RHR	NO	Sump (In)	0	AE	OK	DF	OK
Quench Spray	NO	Recirc Spray	NO	8 N	OK	9 P	OK
HHSI	NO	CIA	NO	DG #1	AVAIL	DG #2	OOS
LHSI	NO	CIB	NO	Batteries	OK	Vital Buses	OK

Time 1036

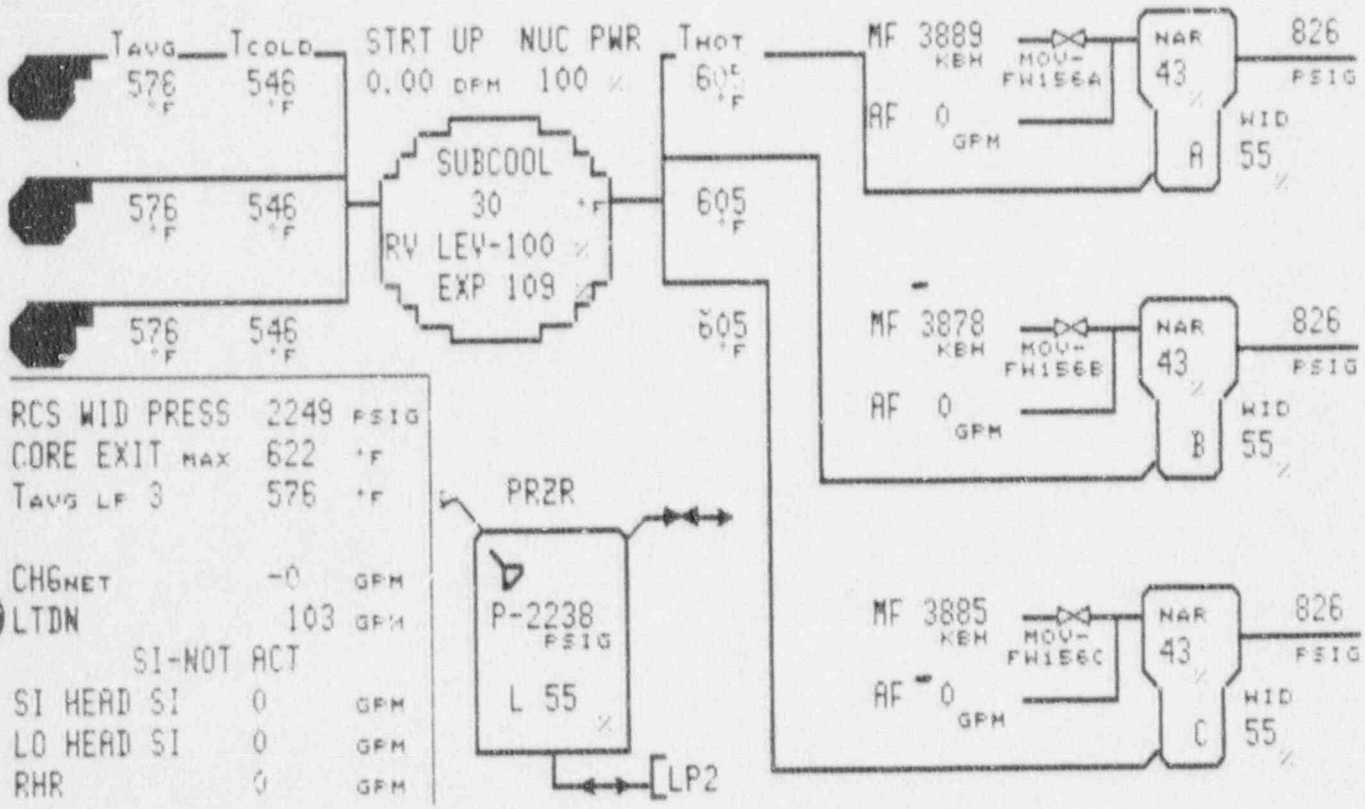

CONTAINMENT				ELECTRICAL			
Press. (PSIA)	9.45	Temp. (F)	96.9	SSST 1A	OK	SSST 1B	OK
RHR	NO	Sump (In)	0	AE	OK	DF	OK
Quench Spray	NO	Recirc Spray	NO	8 N	OK	9 P	OK
HHSI	NO	CIA	NO	DG #1	AVAIL	DG #2	OOS
LHSI	NO	CIB	NO	Batteries	OK	Vital Buses	OK

Time 1039

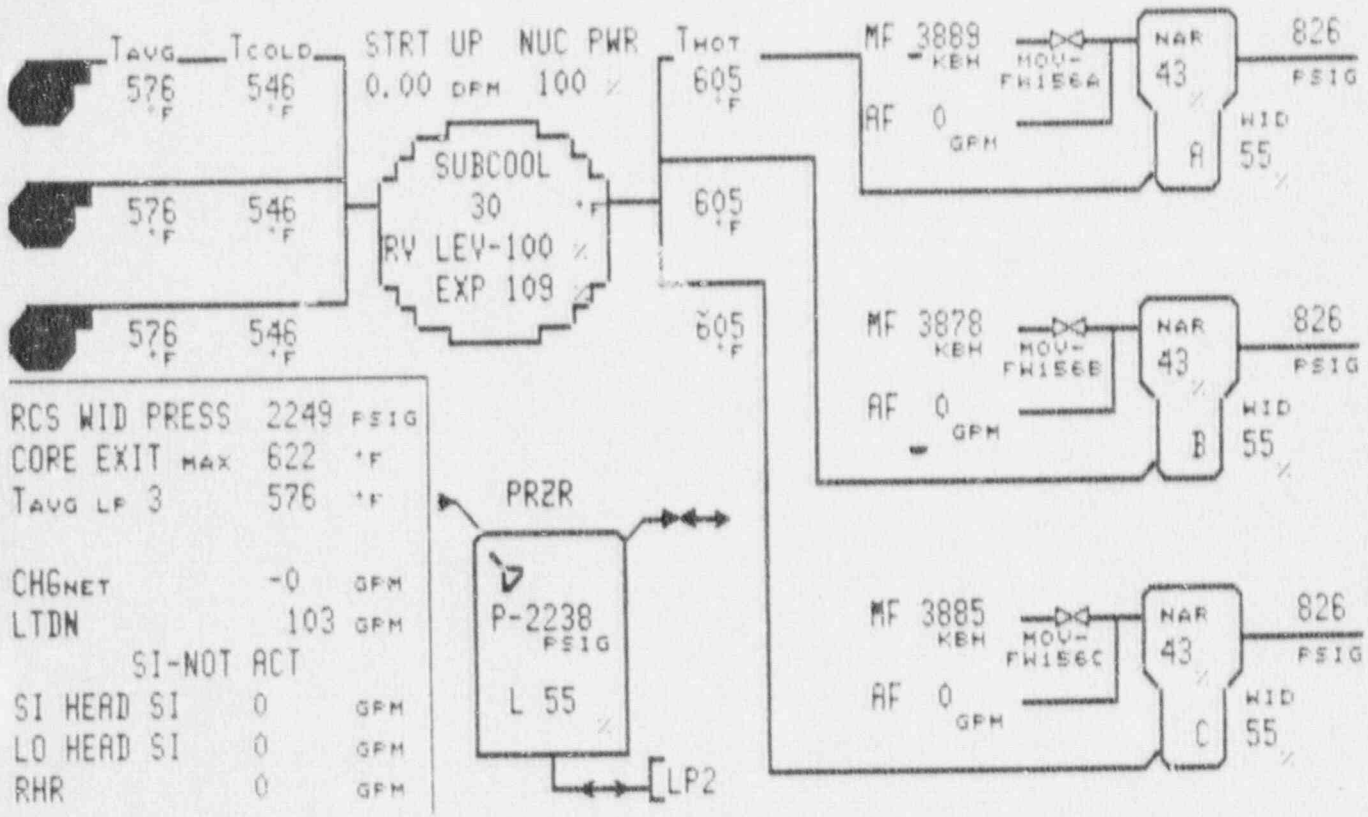

CONTAINMENT				ELECTRICAL			
Press. (PSIA)	9.45	Temp. (F)	96.9	SSST 1A	OK	SSST 1B	OK
RHR	NO	Sump (In)	0	AE	OK	DF	OK
Quench Spray	NO	Recirc Spray	NO	8 N	OK	9 P	OK
HHSI	NO	CIA	NO	DG #1	AVAIL	DG #2	OOS
LHSI	NO	CIB	NO	Batteries	OK	Vital Buses	OK

Time 1042

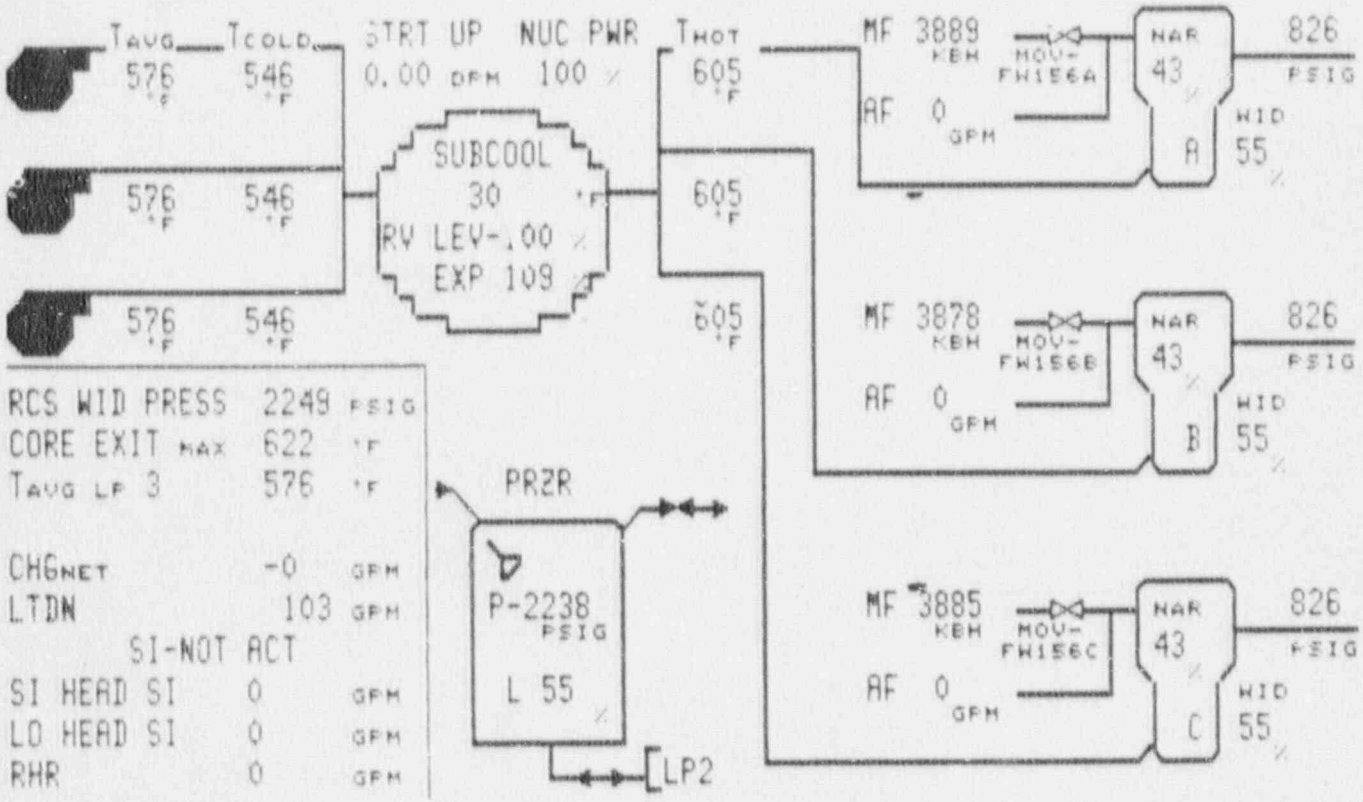

CONTAINMENT				ELECTRICAL			
Press. (PSIA)	9.45	Temp. (F)	96.9	SSST 1A	OK	SSST 1B	OK
RHR	NO	Sump (In)	0	AE	OK	DF	OK
Quench Spray	NO	Recirc Spray	NO	8 N	OK	9 P	OK
HHSI	NO	CIA	NO	DG #1	AVAIL	DG #2	OOS
LHSI	NO	CIB	NO	Batteries	OK	Vital Buses	OK

Time 1045

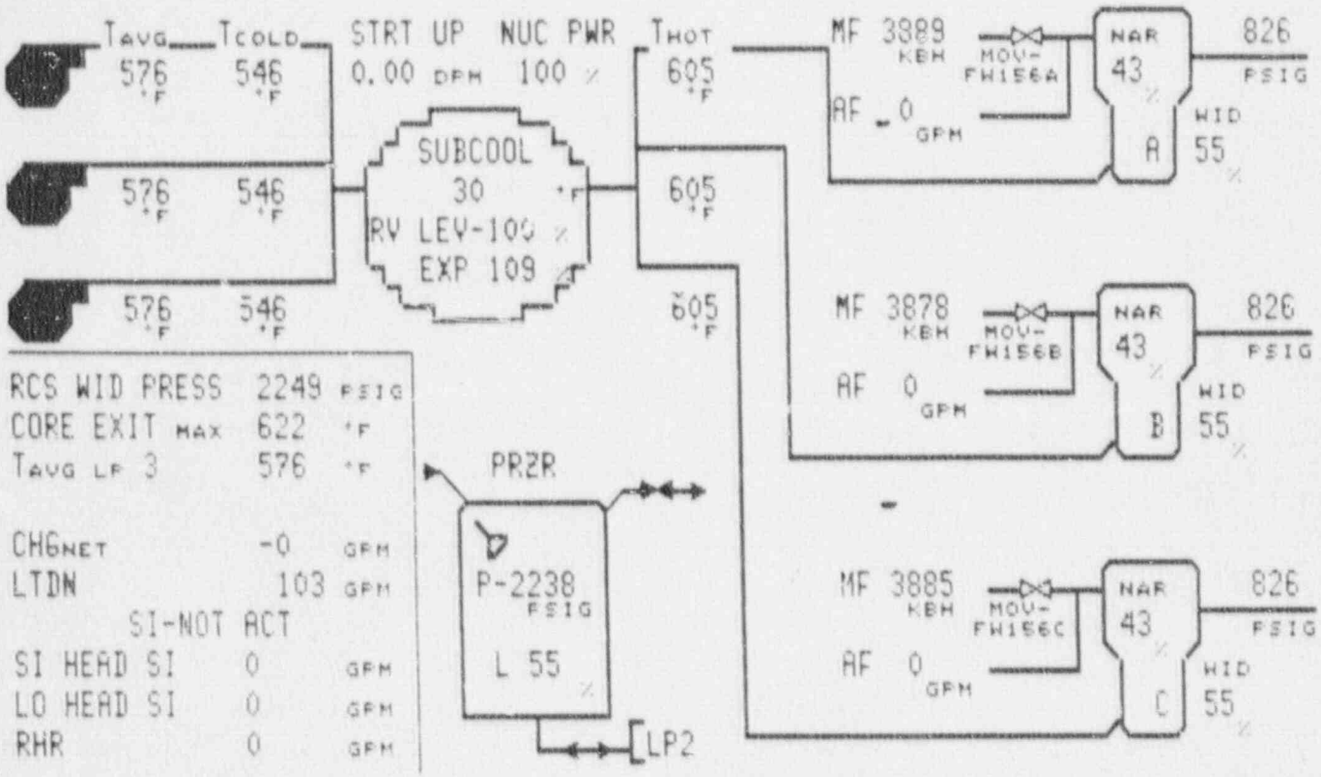

CONTAINMENT				ELECTRICAL			
Press. (PSIA)	9.45	Temp. (F)	96.9	SSST 1A	OK	SSST 1B	OK
RHR	NO	Sump (In)	0	AE	OK	DF	OK
Quench Spray	NO	Recirc Spray	NO	8 N	OK	9 P	OK
HHSI	NO	CIA	NO	DG #1	AVAIL	DG #2	OOS
LHSI	NO	CIB	NO	Batteries	OK	Vital Buses	OK

Time 1048

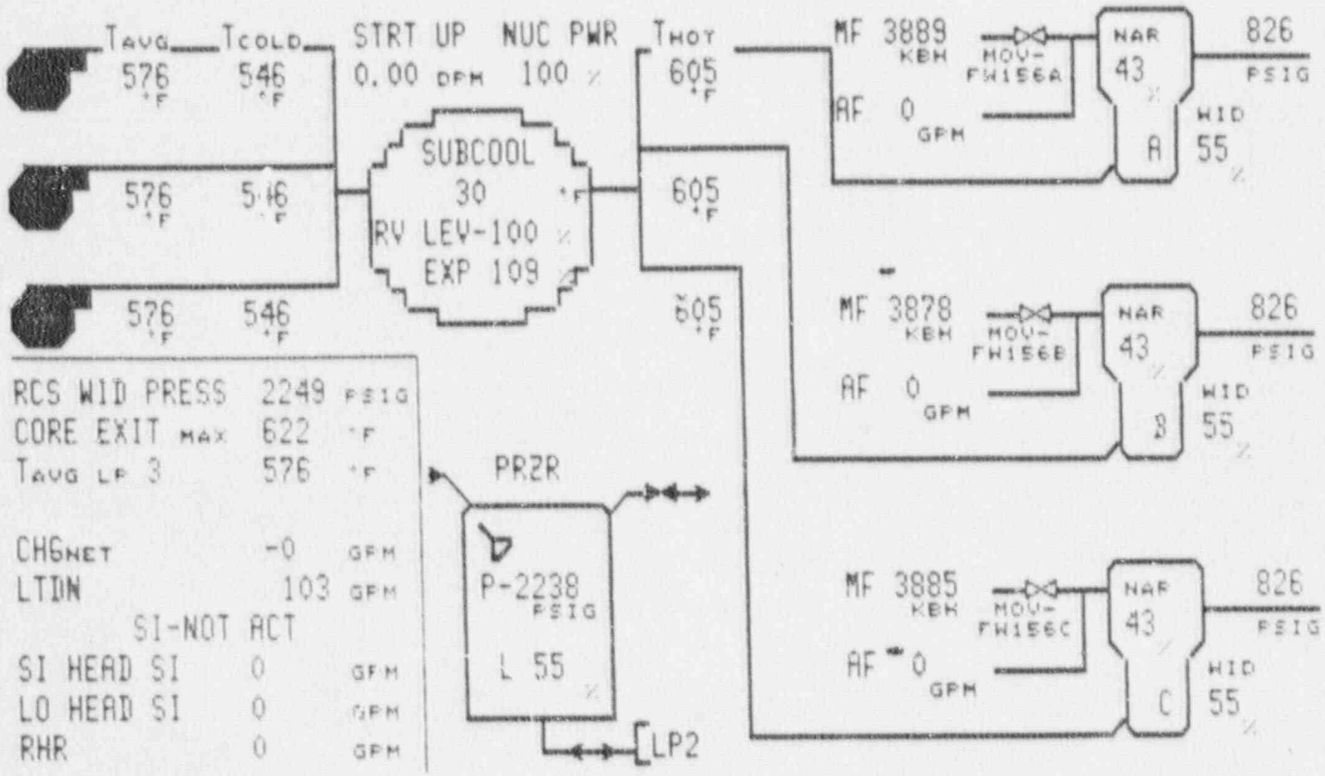

CONTAINMENT				ELECTRICAL			
Press. (PSIA)	9.45	Temp. (F)	96.9	SSST 1A	OK	SSST 1B	OK
RHR	NO	Sump (In)	0	AE	OK	DF	OK
Quench Spray	NO	Recirc Spray	NO	8 N	OK	9 P	OK
HHSI	NO	CIA	NO	DG #1	AVAIL	DG #2	OOS
LHSI	NO	CIB	NO	Batteries	OK	Vital Buses	OK

Time 1051

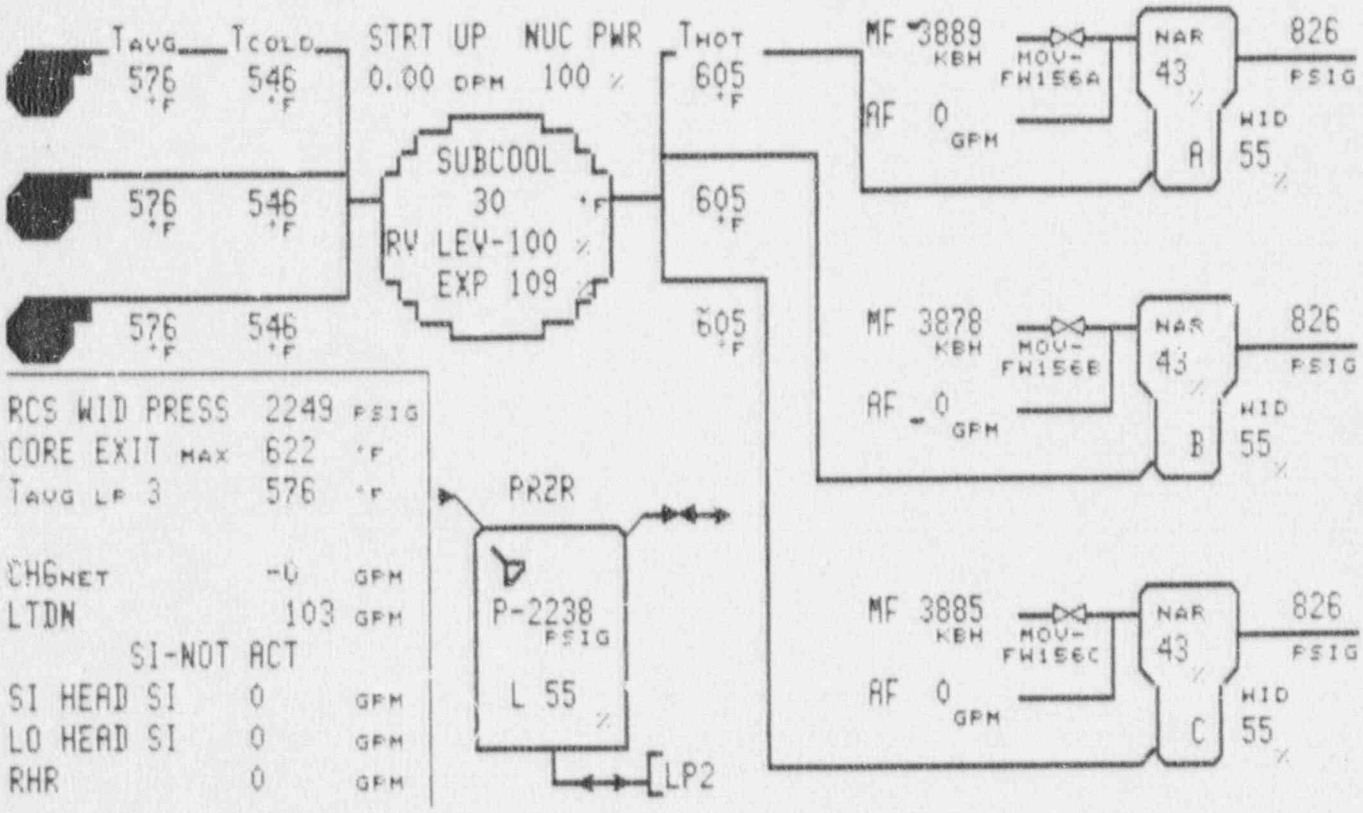

CONTAINMENT				ELECTRICAL			
Press. (PSIA)	9.45	Temp. (F)	96.9	SSST 1A	OK	SSST 1B	OK
RHR	NO	Sump (In)	0	AE	OK	DF	OK
Quench Spray	NO	Recirc Spray	NO	8 N	OK	9 P	OK
HHSI	NO	CIA	NO	DG #1	AVAIL	DG #2	OOS
LHSI	NO	CIB	NO	Batteries	OK	Vital Buses	OK

Time 1054

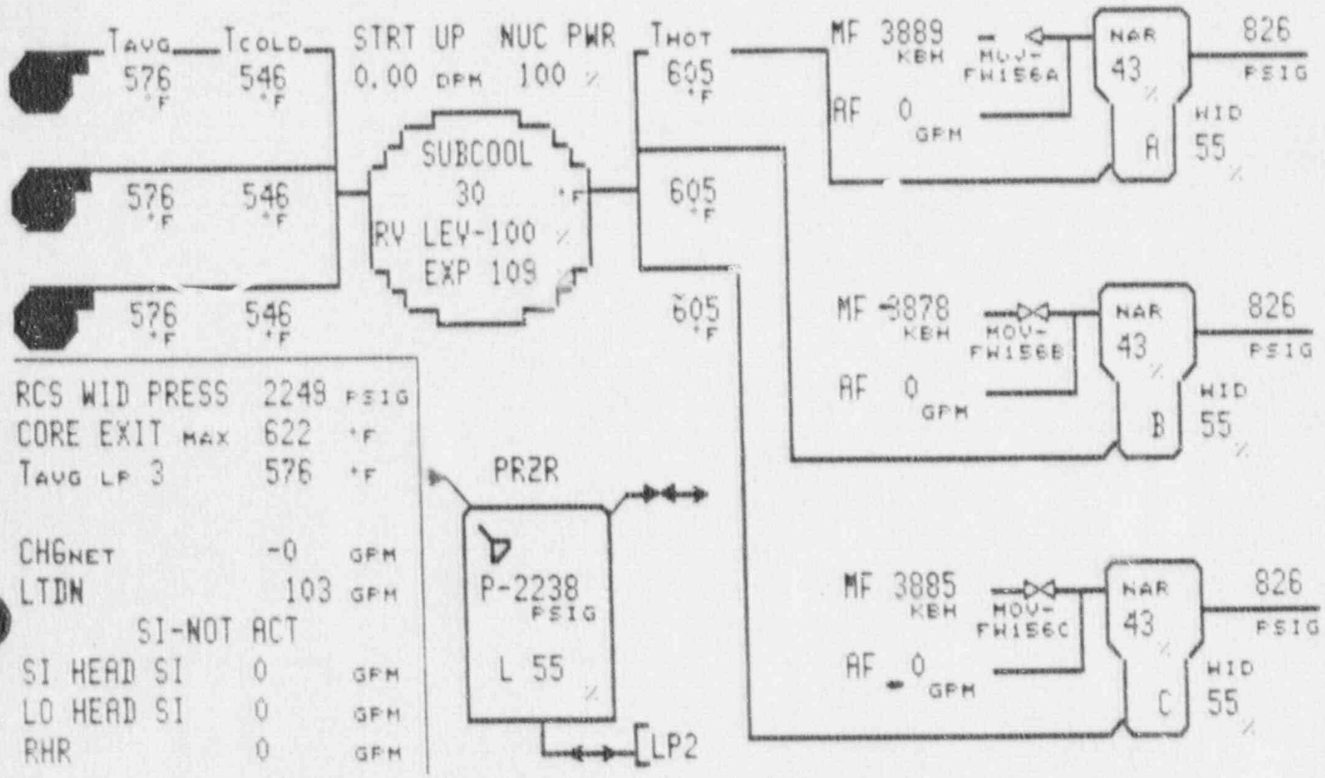

CONTAINMENT				ELECTRICAL			
Press. (PSIA)	9.45	Temp. (F)	96.9	SSST 1A	OK	SSST 1B	OK
RHR	NO	Sump (In)	0	AE	OK	DF	OK
Quench Spray	NO	Recirc Spray	NO	8 N	OK	9 P	OK
HHST	NO	CIA	NO	DG #1	AVAIL	DG #2	OOS
LHS	NO	CIB	NO	Batteries	OK	Vital Buses	OK

Time 1057

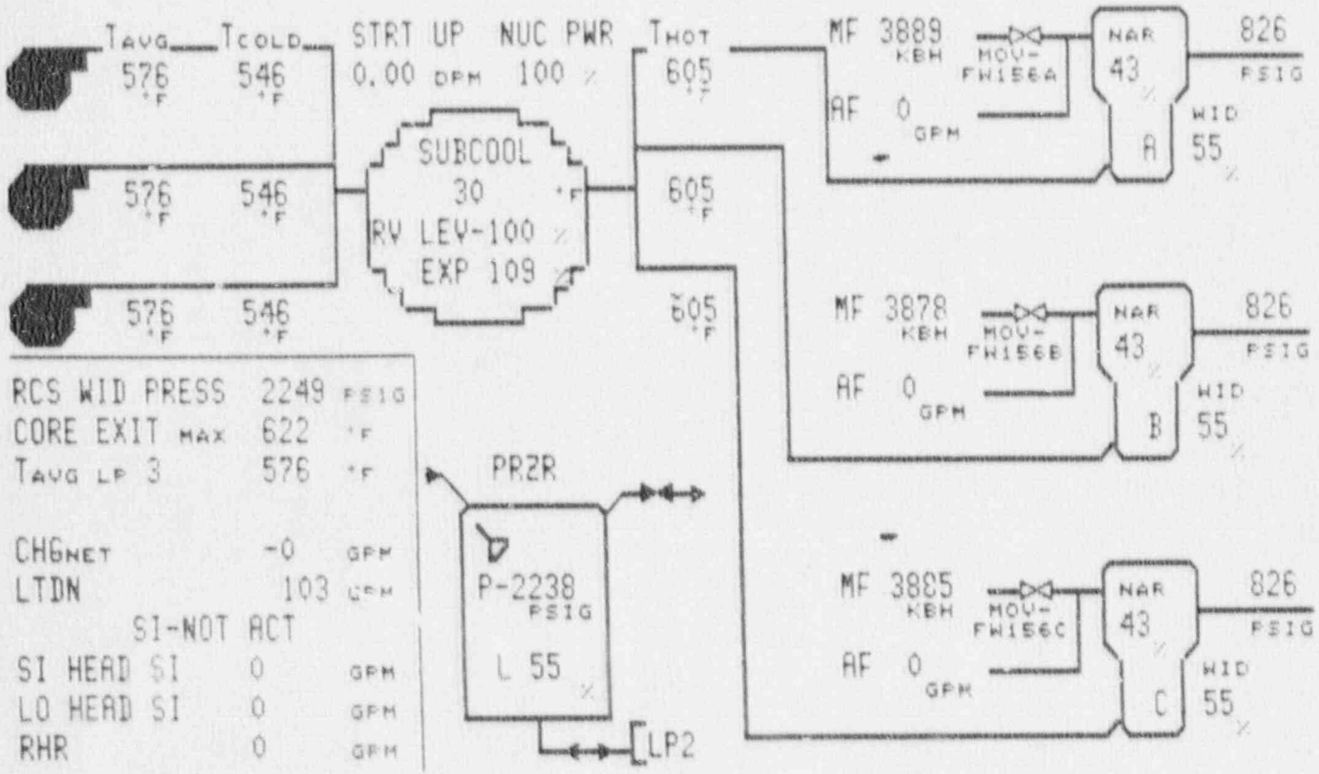

CONTAINMENT				ELECTRICAL			
Press. (PSIA)	9.45	Temp. (F)	96.9	SSST 1A	OK	SSST 1B	OK
RHR	NO	Sump (In)	0	AE	OK	DF	OK
Quench Spray	NO	Recirc Spray	NO	8 N	OK	9 P	OK
HHSI	NO	CIA	NO	DG #1	AVAIL	DG #2	OOS
LHSI	NO	CIB	NO	Batteries	OK	Vital Buses	OK

Time 1100

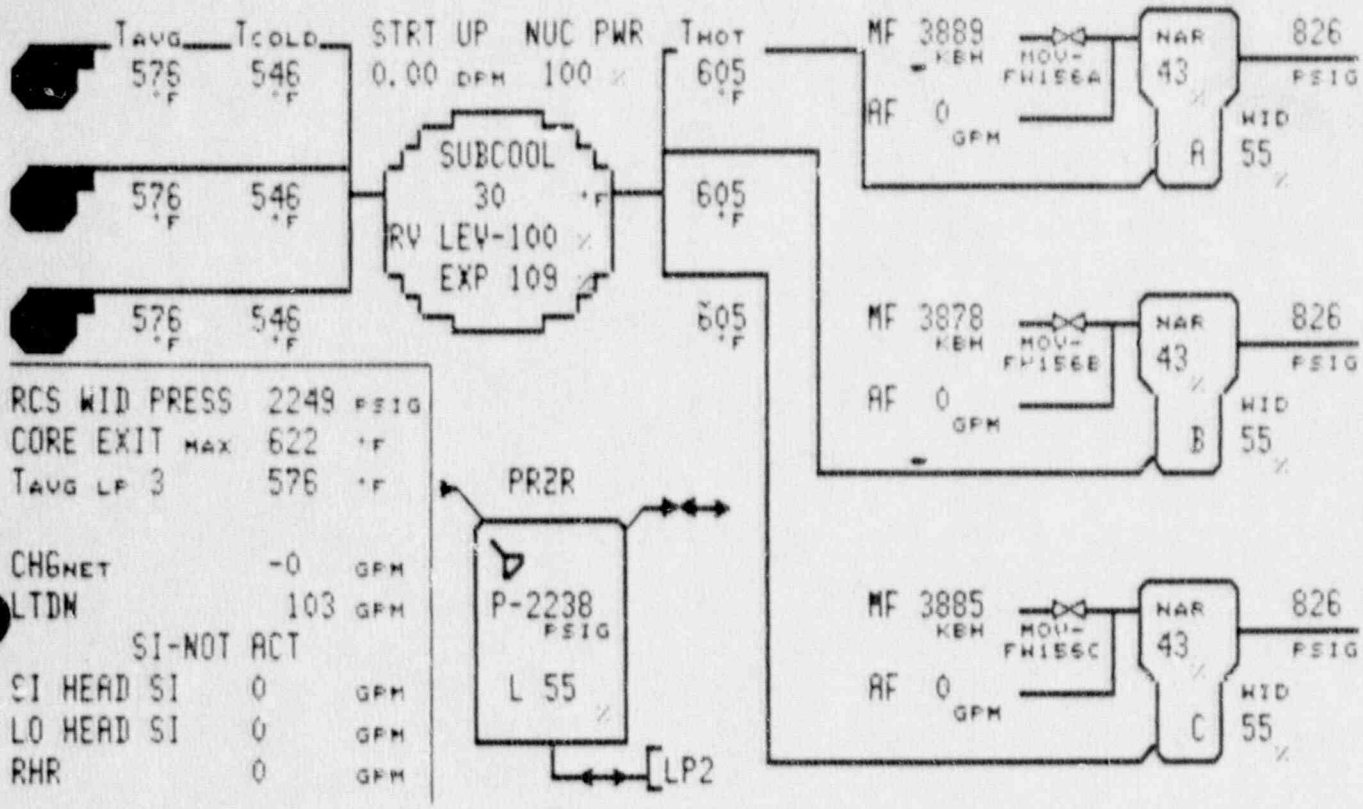

CONTAINMENT				ELECTRICAL			
Press. (PSIA)	9.45	Temp. (F)	96.9	SSST 1A	OK	SSST 1B	OK
RHR	NO	Sump (In)	0	AE	OK	DF	OK
Quench Spray	NO	Recirc Spray	NO	8 N	OK	9 P	OK
HHSI	NO	CIA	NO	DG #1	AVAIL	DG #2	OOS
LHSI	NO	CIB	NO	Batteries	OK	Vital Buses	OK

Time 1103

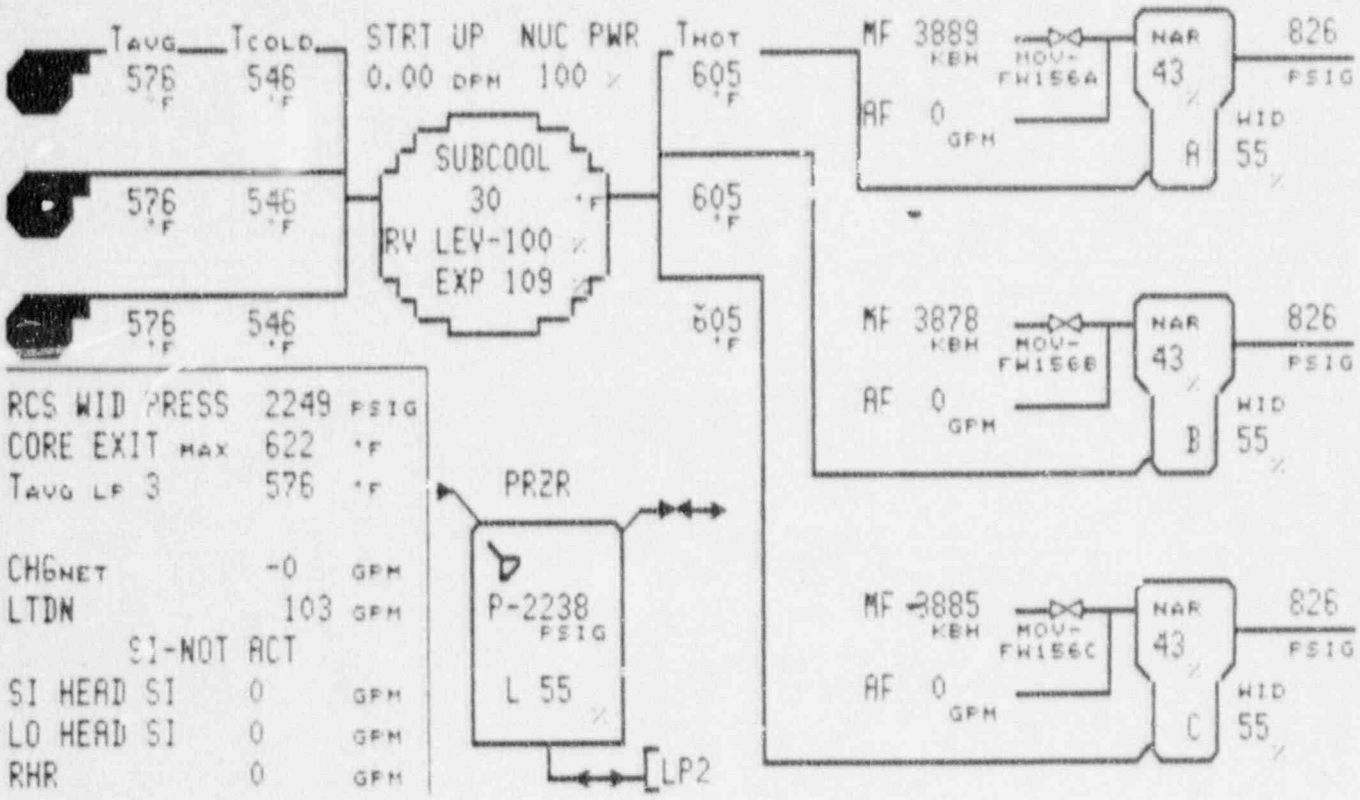

CONTAINMENT				ELECTRICAL			
Press. (PSIA)	9.45	Temp. (F)	96.9	SSST 1A	OK	SSST 1B	OK
RHR	NO	Sump (In)	0	AE	OK	DF	OK
Quench Spray	NO	Recirc Spray	NO	8 N	OK	9 P	OK
HHSI	NO	CIA	NO	DG #1	AVAIL	DG #2	OOS
LHSI	NO	CIB	NO	Batteries	OK	Vital Buses	OK

Time 1106

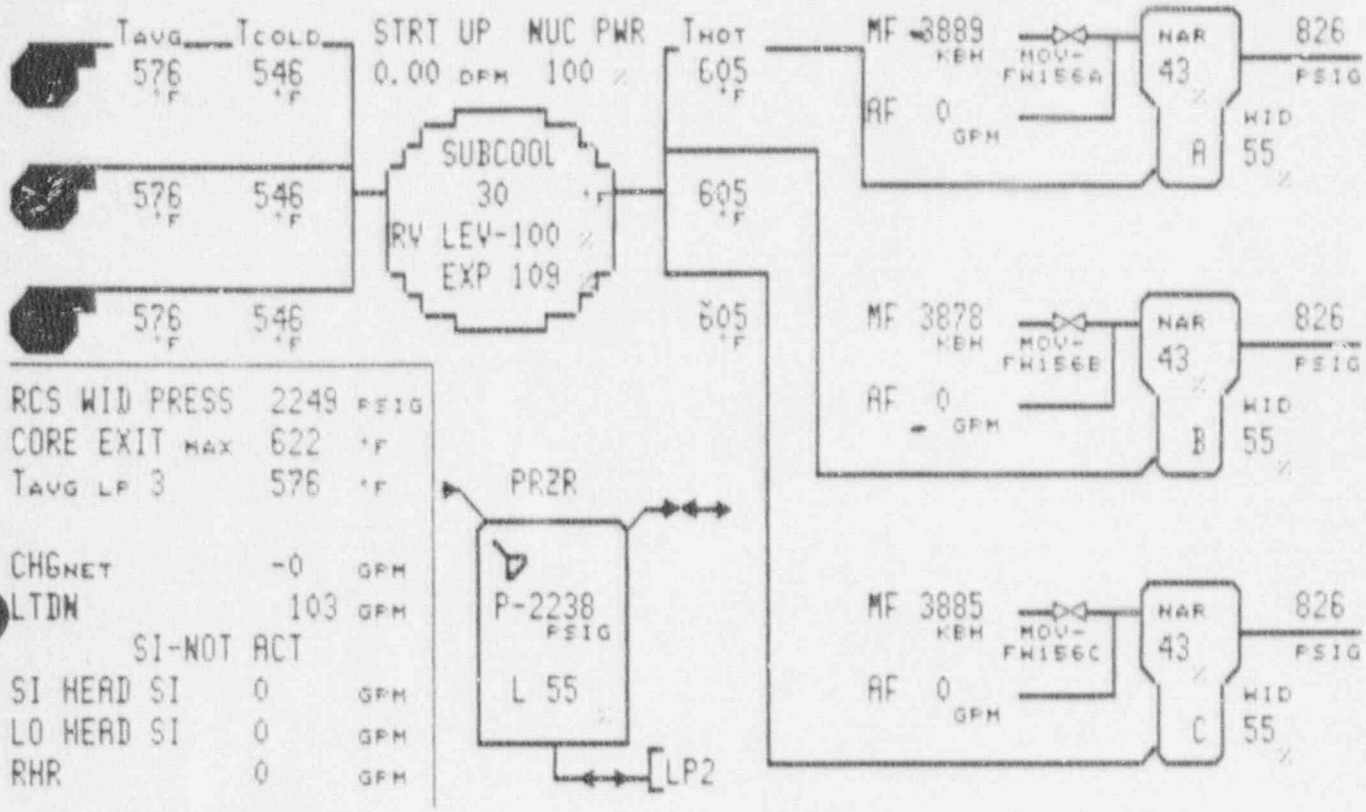

CONTAINMENT				ELECTRICAL			
Press. (PSIA)	9.45	Temp. (F)	96.9	SSST 1A	OK	SSST 1B	OK
RHR	NO	Sump (In)	0	AE	OK	DF	OK
Quench Spray	NO	Recirc Spray	NO	8 N	OK	9 P	OK
HHSI	NO	CIA	NO	DG #1	AVAIL	DG #2	OOS
LHSI	NO	CIB	NO	Batteries	OK	Vital Buses	OK

Time 1109

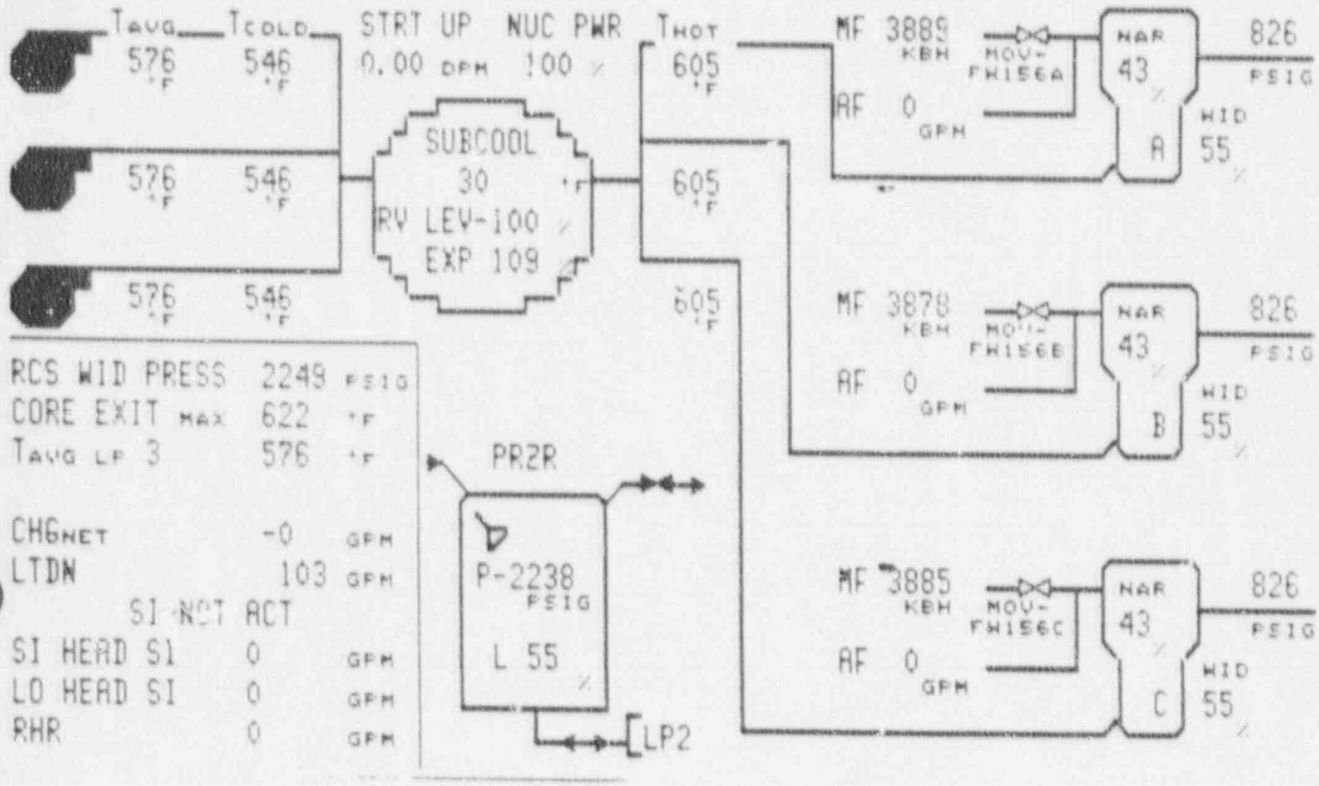

CONTAINMENT				ELECTRICAL			
Press. (PSIA)	9.45	Temp. (F)	96.9	SSST 1A	OK	SSST 1B	OK
RHR	NO	Sump (In)	0	AE	OK	DF	OK
Quench Spray	NO	Recirc Spray	NO	8 N	OK	9 P	OK
HHSI	NO	CIA	NO	DG #1	AVAIL	DG #2	OOS
LHSI	NO	CIB	NO	Batteries	OK	Vital Buses	OK

Time 1112

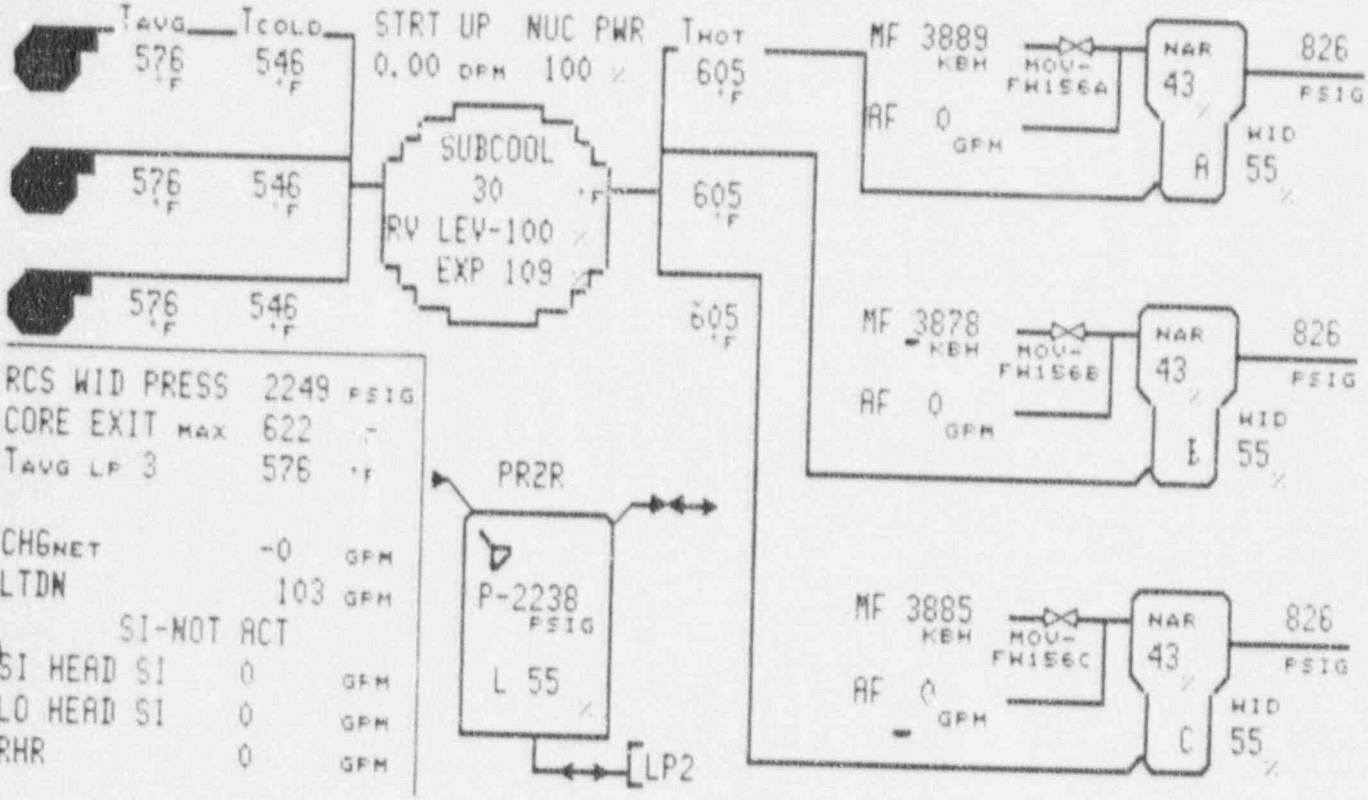

CONTAINMENT				ELECTRICAL			
Press. (PSIA)	9.45	Temp. (F)	96.9	SSST 1A	OK	SSST 1B	OK
RHR	NO	Sump (In)	0	AE	OK	DF	OK
Quench Spray	NO	Recirc Spray	NO	8 N	OK	9 P	OK
HHSI	NO	CIA	NO	DG #1	AVAIL	DG #2	OOS
LHSI	NO	CIB	NO	Batteries	OK	Vital Buses	OK

Time 1115

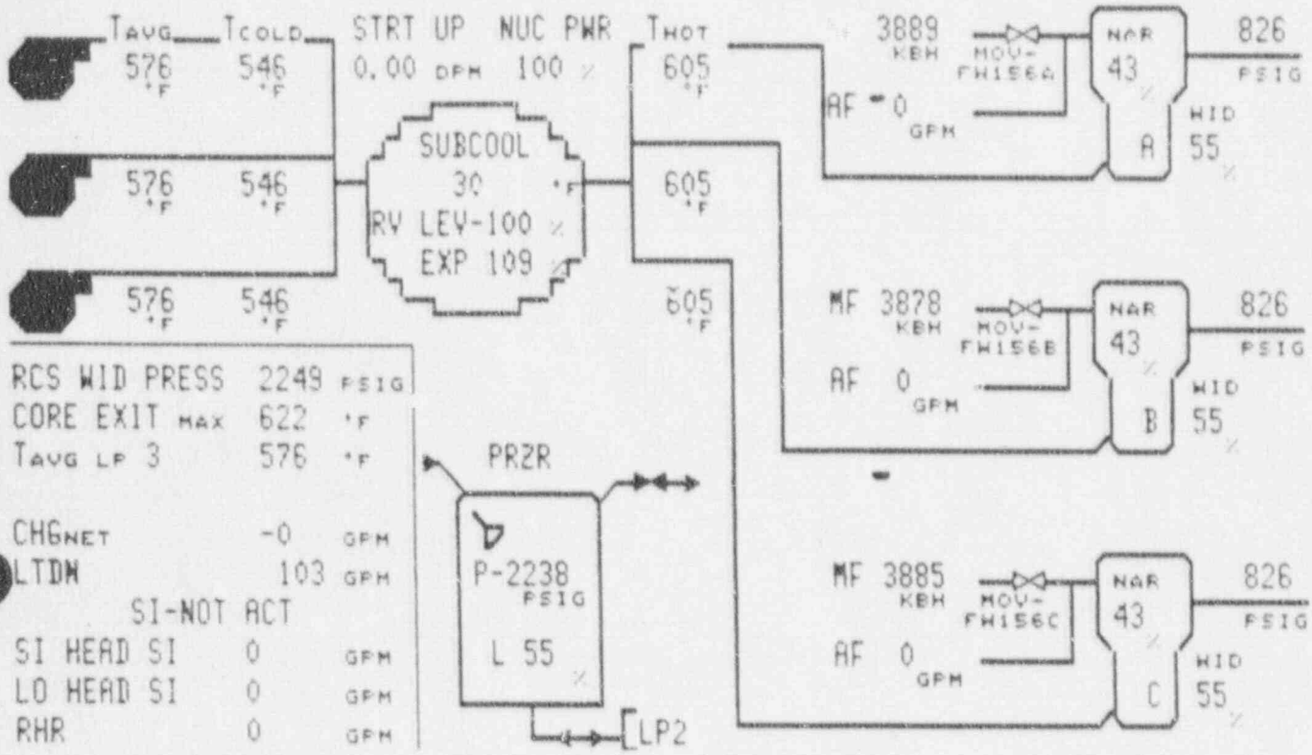

CONTAINMENT				ELECTRICAL			
Press. (PSIA)	9.45	Temp. (F)	96.9	SSST 1A	OK	SSST 1B	OK
RHR	NO	Sump (In)	0	AE	OK	DF	OK
Quench Spray	NO	Recirc Spray	NO	8 N	OK	9 P	OK
HHSI	NO	CIA	NO	DG #1	AVAIL	DG #2	OOS
LHSI	NO	CIB	NO	Batteries	OK	Vital Buses	OK

Time 1118

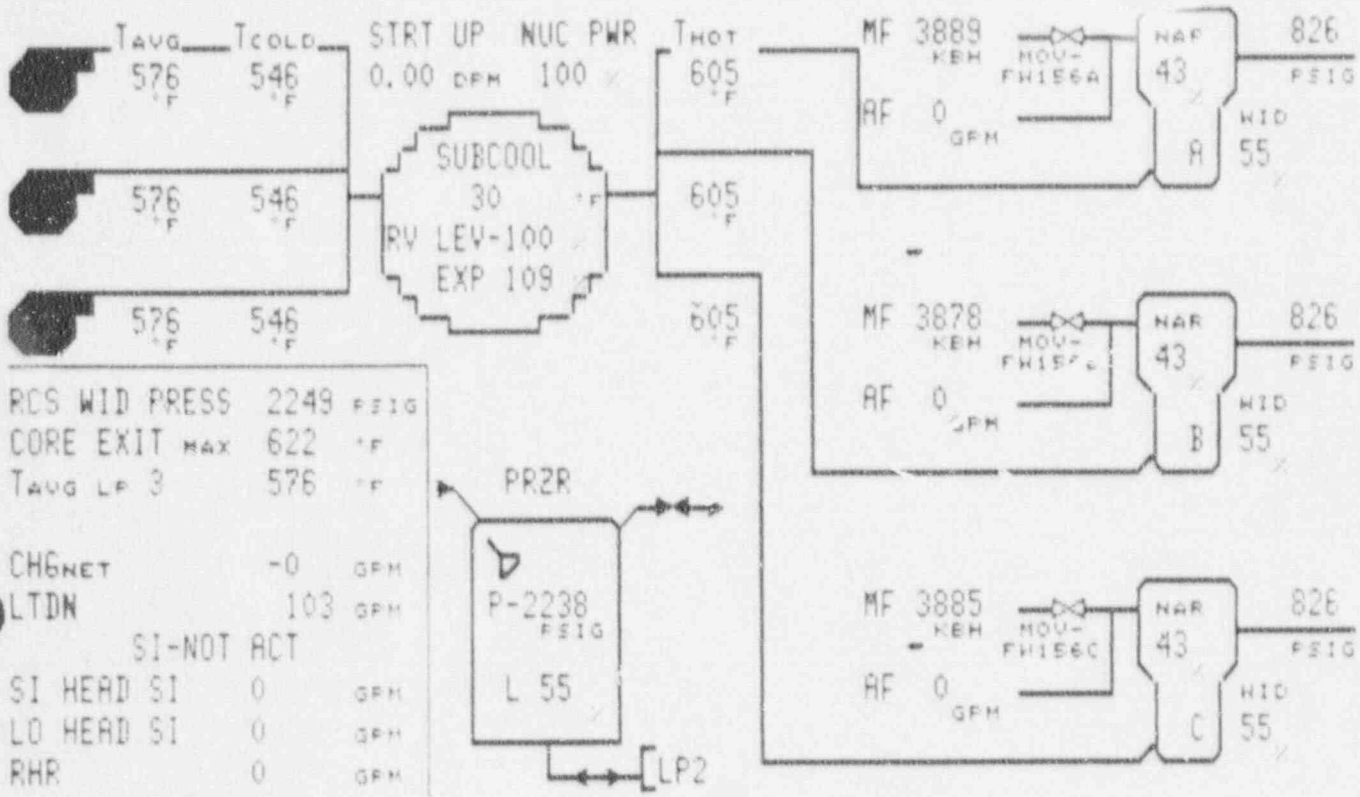

CONTAINMENT				ELECTRICAL			
Press. (PSIA)	9.45	Temp. (F)	96.9	SSST 1A	OK	SSST 1B	OK
RHR	NO	Sump (In)	0	AE	OK	DF	OK
Quench Spray	NO	Recirc Spray	NO	8 N	OK	9 P	OK
HHSI	NO	CIA	NO	DG #1	AVAIL	DG #2	OOS
LHSI	NO	CIB	NO	Batteries	OK	Vital Buses	OK

Time 1121

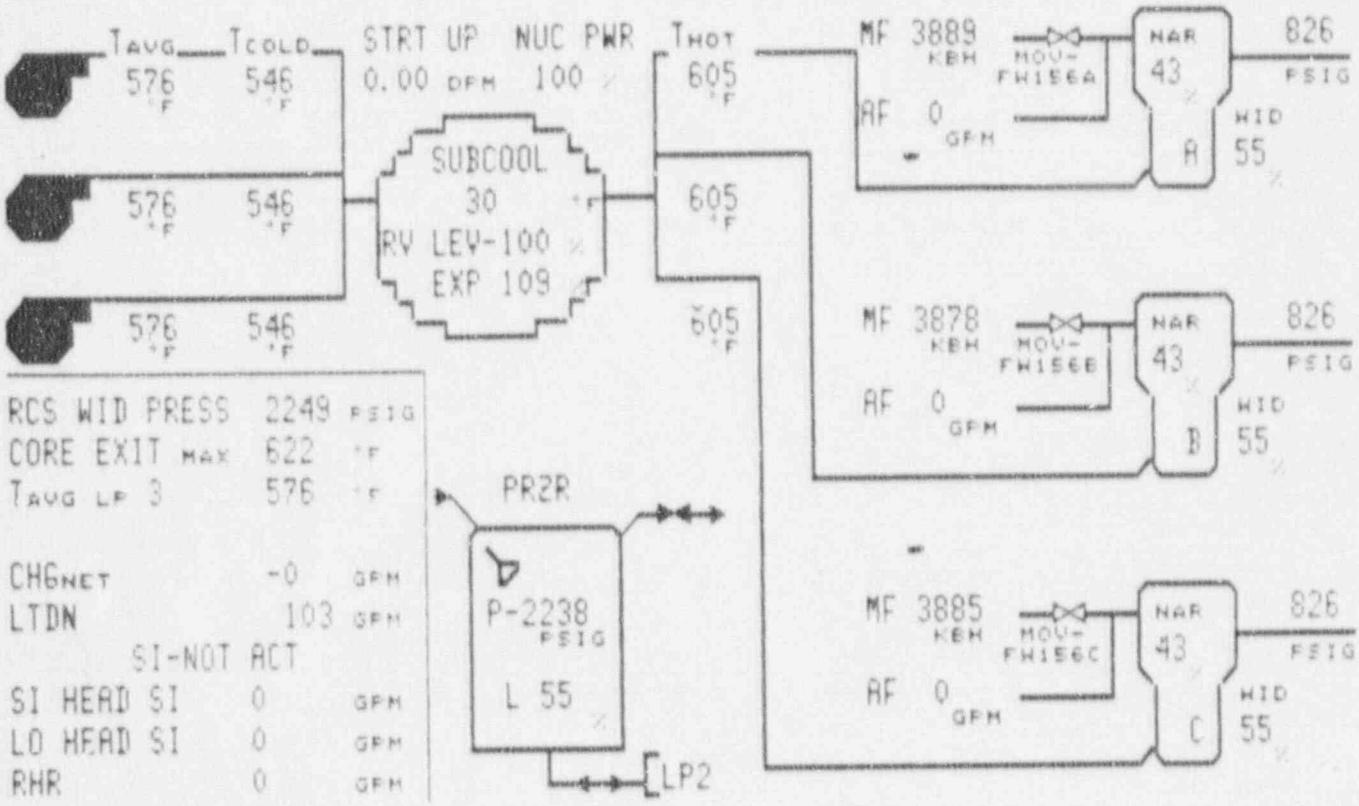

CONTAINMENT				ELECTRICAL			
Press. (PSIA)	9.45	Temp. (F)	96.9	SSST 1A	OK	SSST 1B	OK
RHR	NO	Sump (In)	0	AE	OK	DF	OK
Quench Spray	NO	Recirc Spray	NO	8 N	OK	9 P	OK
HHSI	NO	CIA	NO	DG #1	AVAIL	DG #2	OOS
LHSI	NO	CIB	NO	Batteries	OK	Vital Buses	OK

Time 1124

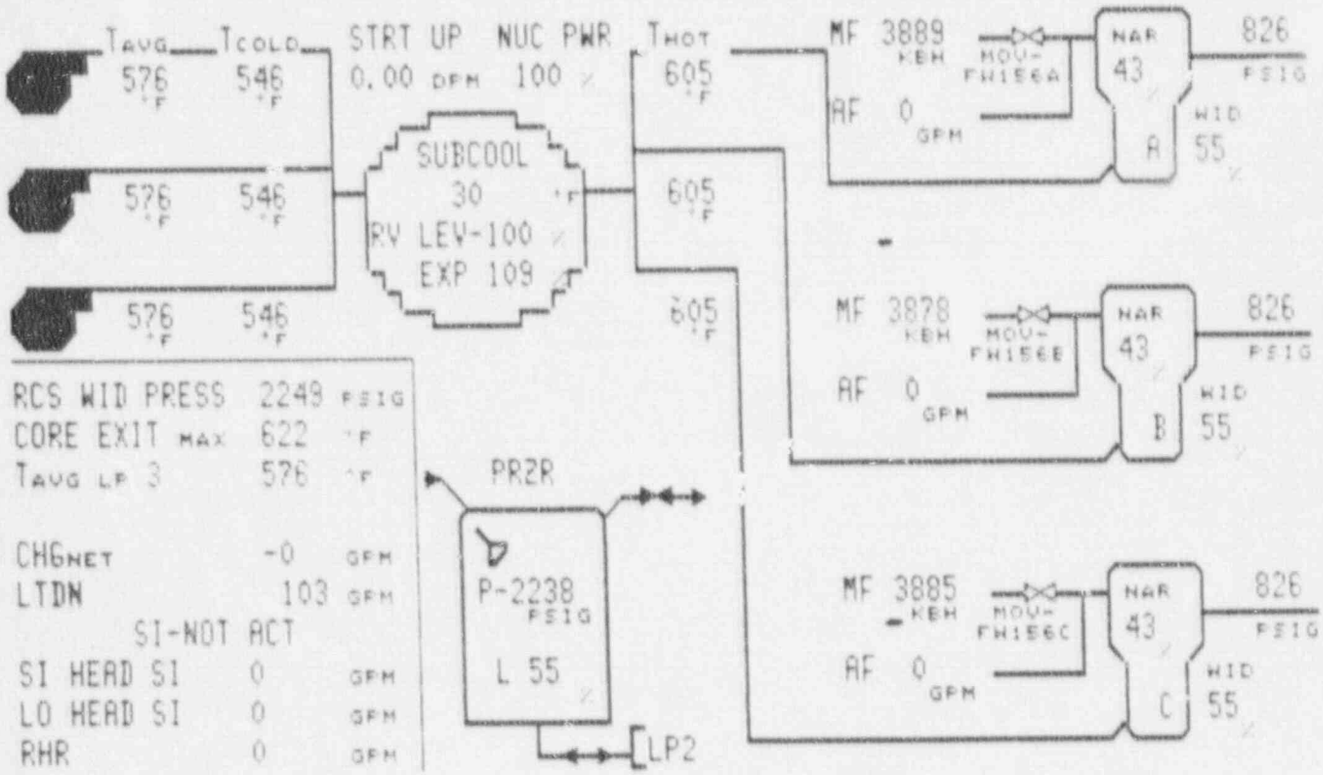

CONTAINMENT				ELECTRICAL			
Press. (PSIA)	9.45	Temp. (F)	96.9	SSST 1A	OK	SSST 1B	OK
RHR	NO	Sump (In)	0	AE	OK	DF	OK
Quench Spray	NO	Recirc Spray	NO	8 N	OK	9 P	OK
HHSI	NO	CIA	NO	DG #1	AVAIL	DG #2	OOS
LHSI	NO	CIB	NO	Batteries	OK	Vital Buses	OK

Time 1127

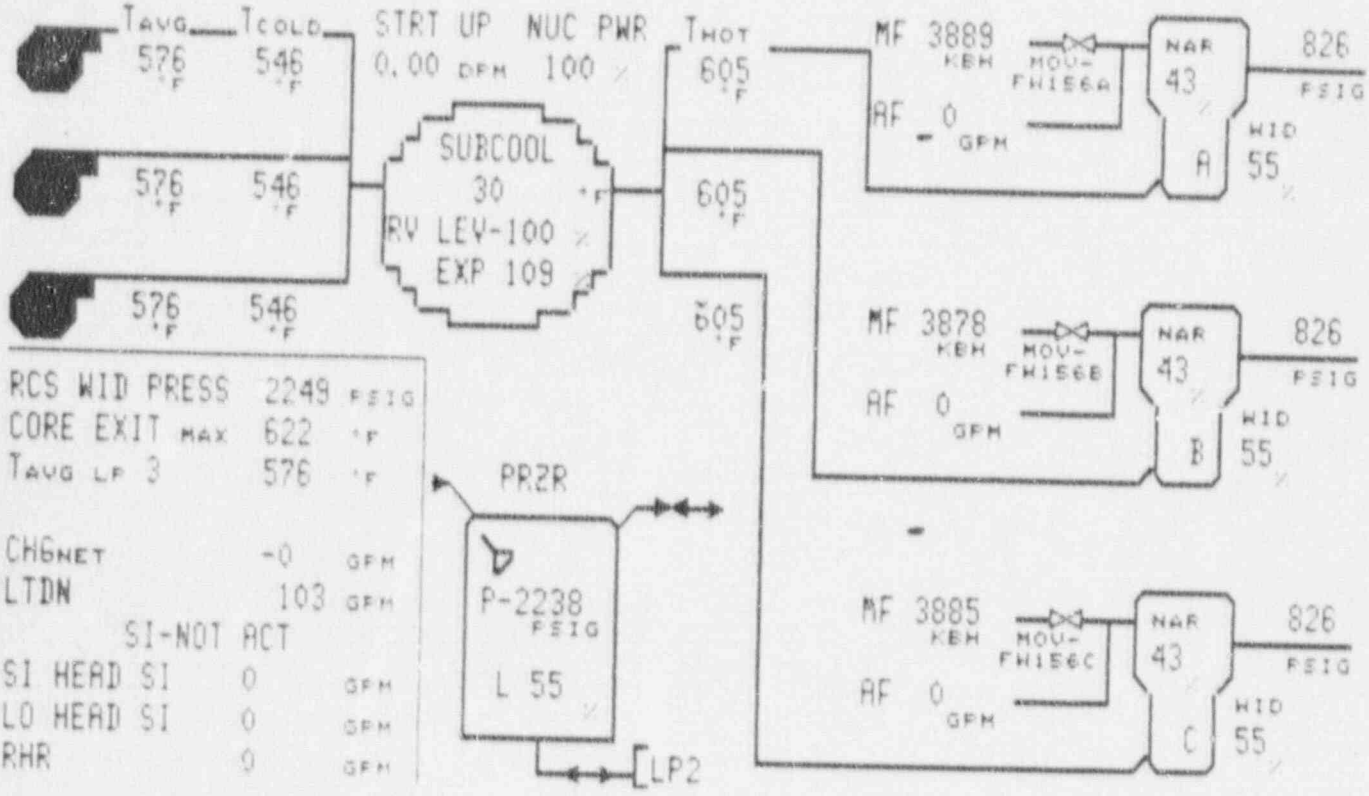

CONTAINMENT				ELECTRICAL			
Press. (PSIA)	9.45	Temp. (F)	96.9	SSST 1A	OK	SSST 1B	OK
RHR	NO	Sump (In)	0	AE	OK	DF	OK
Quench Spray	NO	Recirc Spray	NO	8 N	OK	9 P	OK
HHSI	NO	CIA	NO	DG #1	AVAIL	DG #2	OOS
LHSI	NO	CIB	NO	Batteries	OK	Vital Buses	OK

Time 1130

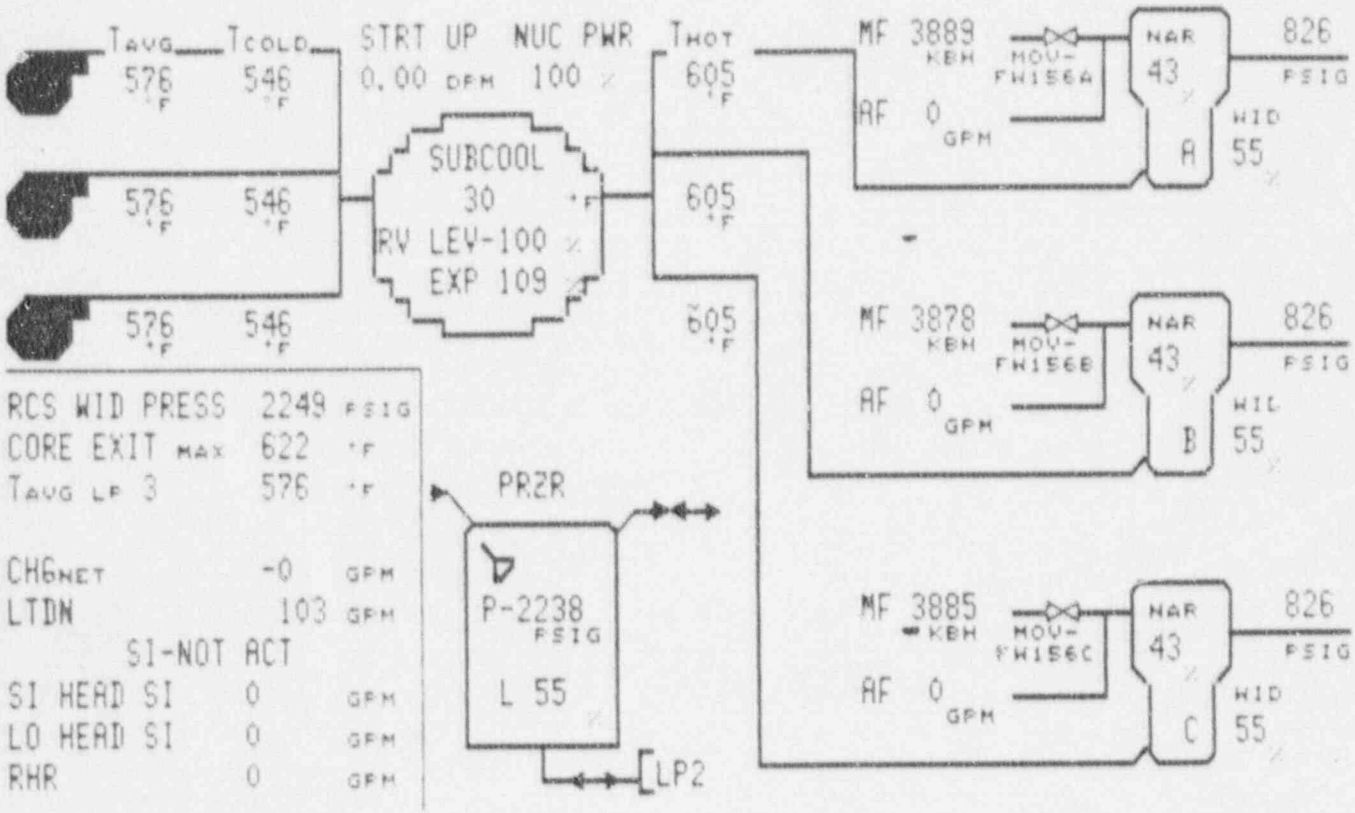

CONTAINMENT				ELECTRICAL			
Press. (PSIA)	9.45	Temp. (F)	96.9	SSST 1A	OK	SSST 1B	OK
RHR	NO	Sump (In)	0	AE	OK	DF	OK
Quench Spray	NO	Recirc Spray	NO	8 N	OK	9 P	OK
HHSI	NO	CIA	NO	DG #1	OOS	DG #2	OOS
LHSI	NO	CIB	NO	Batteries	OK	Vital Buses	OK

Time 1133

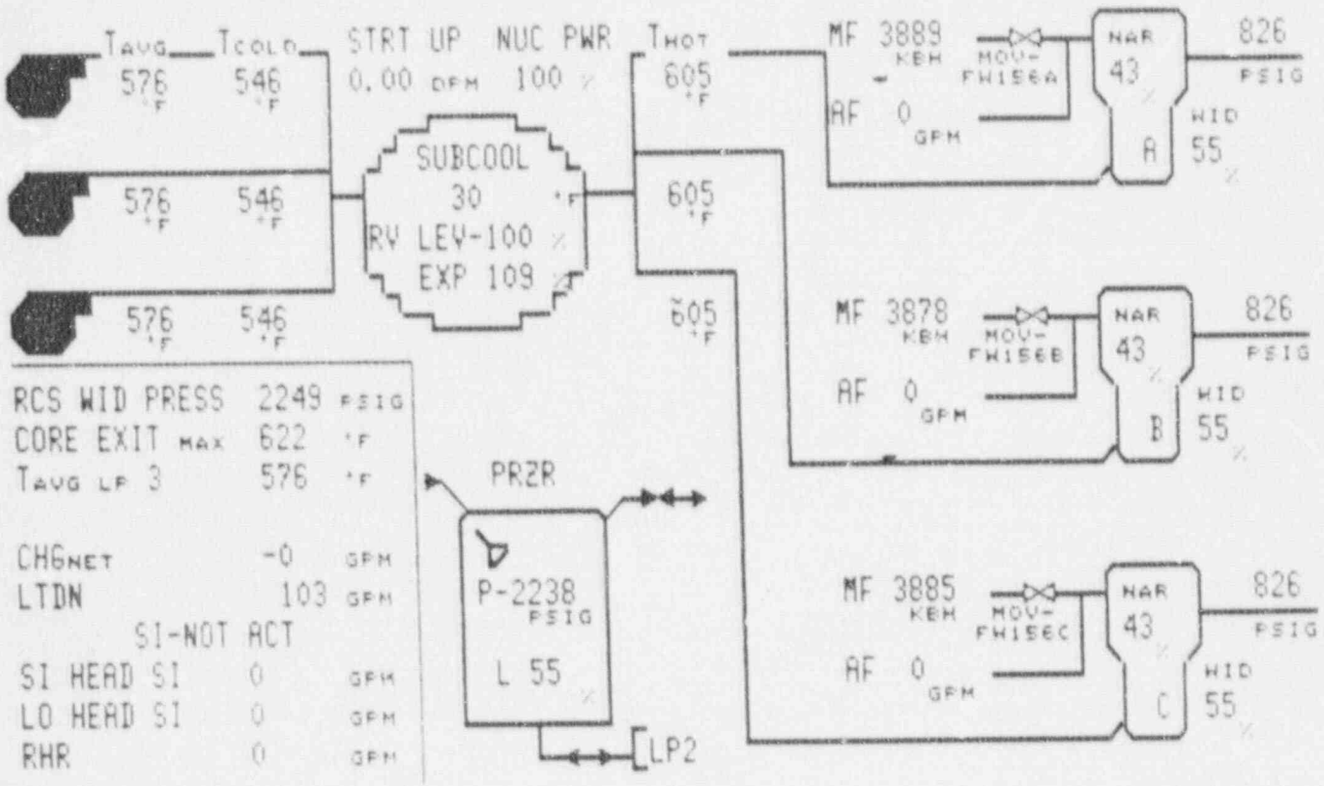

CONTAINMENT				ELECTRICAL			
Press. (PSIA)	9.45	Temp. (F)	96.9	SSST 1A	OK	SSST 1B	OK
RHR	NO	Sump (In)	0	AE	OK	DF	OK
Quench Spray	NO	Recirc Spray	NO	8 N	OK	9 P	OK
HHSI	NO	CIA	NO	DG #1	OOS	DG #2	OOS
LHSI	NO	CIB	NO	Batteries	OK	Vital Buses	OK

Time 1136

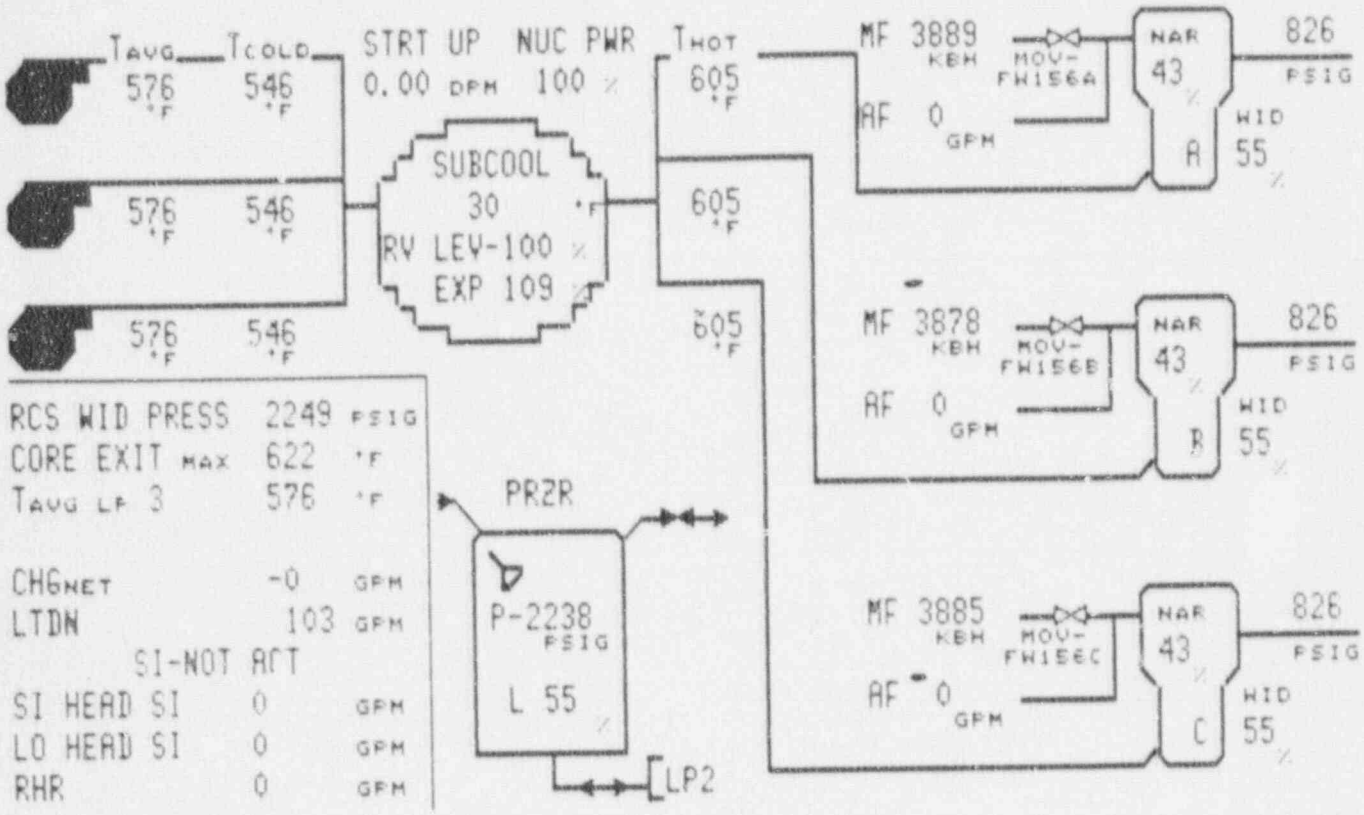

CONTAINMENT				ELECTRICAL			
Press. (PSIA)	9.45	Temp. (F)	96.9	SSST 1A	OK	SSST 1B	OK
RHR	NO	Sump (In)	0	AE	OK	DF	OK
Quench Spray	NO	Recirc Spray	NO	8 N	OK	9 P	OK
HHSI	NO	CIA	NO	DG #1	OOS	DG #2	OOS
LHSI	NO	CIB	NO	Batteries	OK	Vital Buses	OK

Time 1139

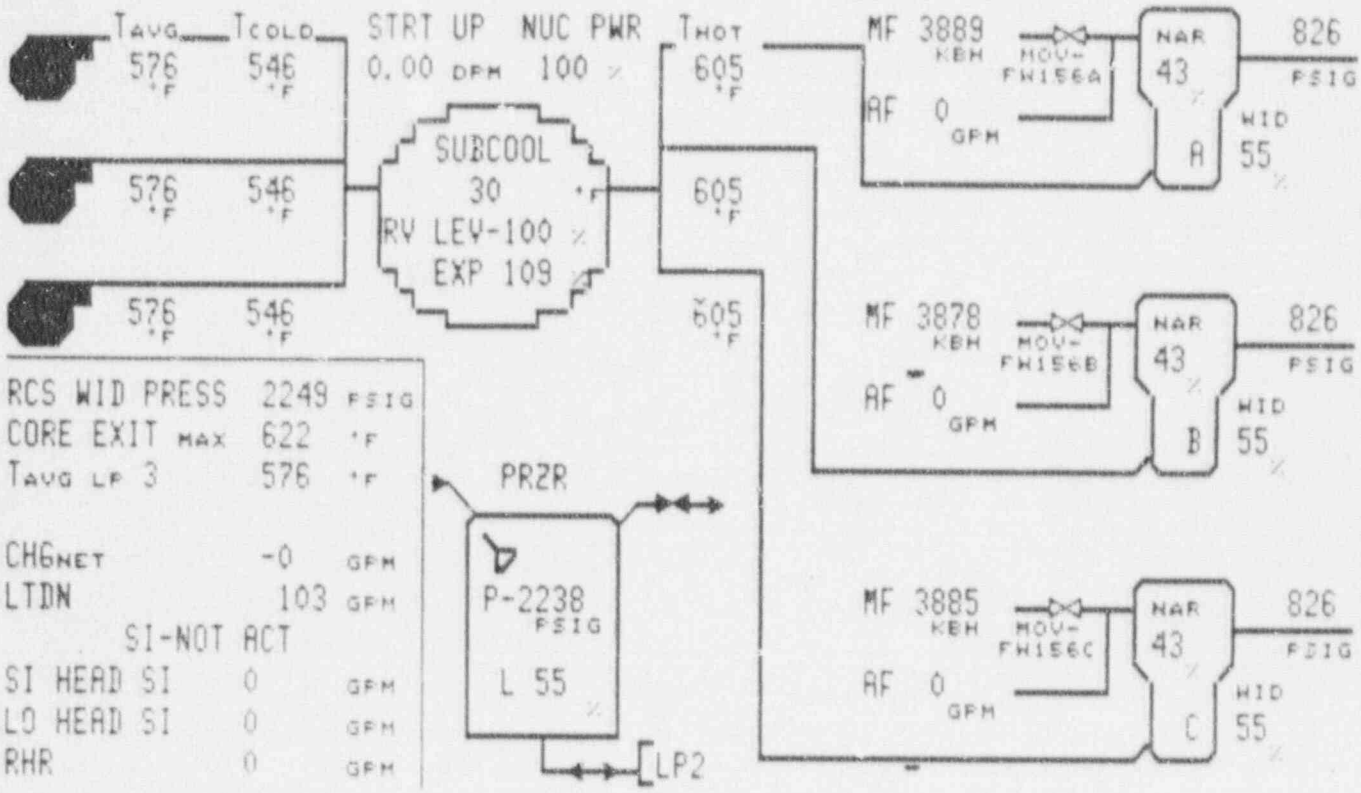

CONTAINMENT				ELECTRICAL			
Press. (PSIA)	9.45	Temp. (F)	96.9	SSST 1A	OK	SSST 1B	OK
RHR	NO	Sump (In)	0	AE	OK	DF	OK
Quench Spray	NO	Recirc Spray	NO	8 N	OK	9 P	OK
HHSI	NO	CIA	NO	DG #1	OOS	DG #2	OOS
LHSI	NO	CIB	NO	Batteries	OK	Vital Buses	OK

Time 1142

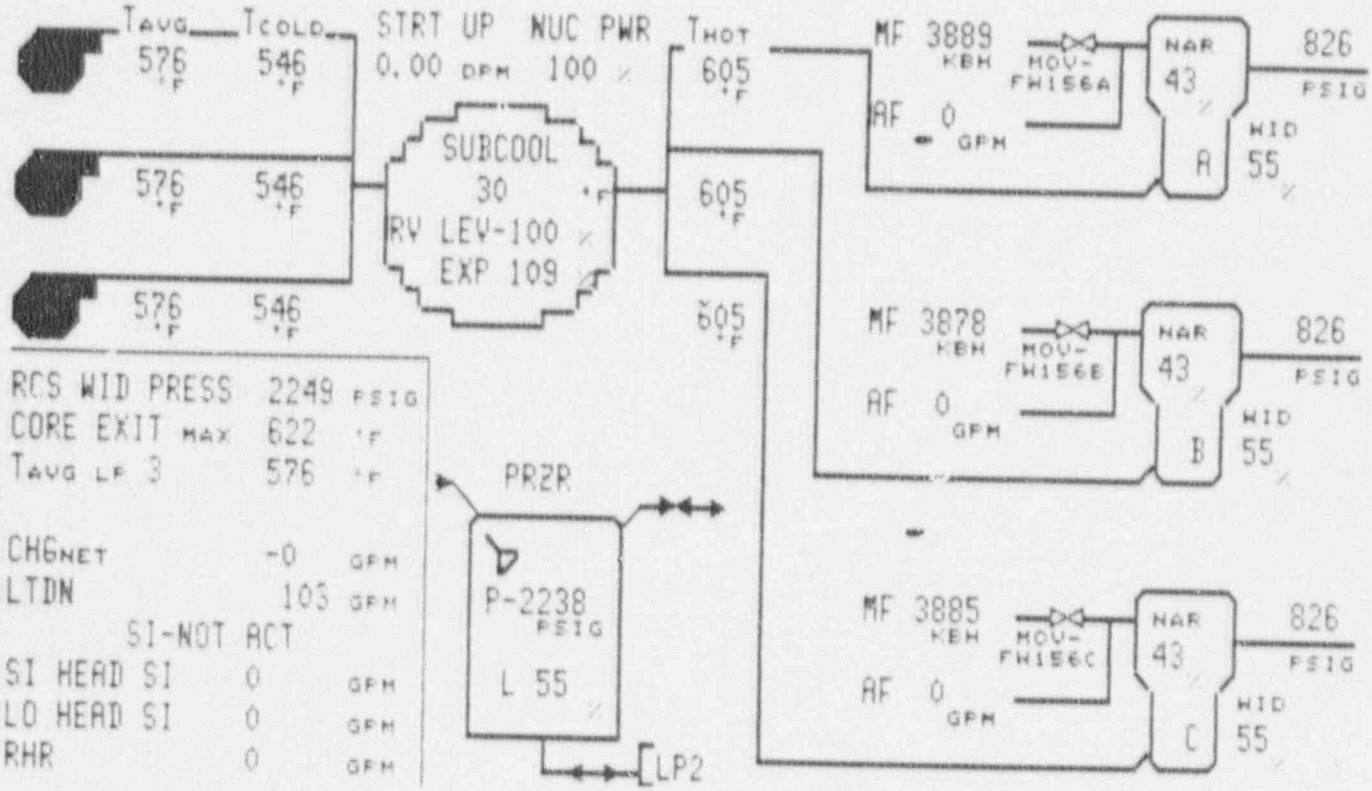

CONTAINMENT				ELECTRICAL			
Press. (PSIA)	9.45	Temp. (F)	96.9	SSST 1A	OK	SSST 1B	OK
RHR	NO	Sump (In)	0	AE	OK	DF	OK
Quench Spray	NO	Recirc Spray	NO	8 N	OK	9 P	OK
HHSI	NO	CIA	NO	DG #1	OOS	DG #2	OOS
LHSI	NO	CIB	NO	Batteries	OK	Vital Buses	OK

Time 1145

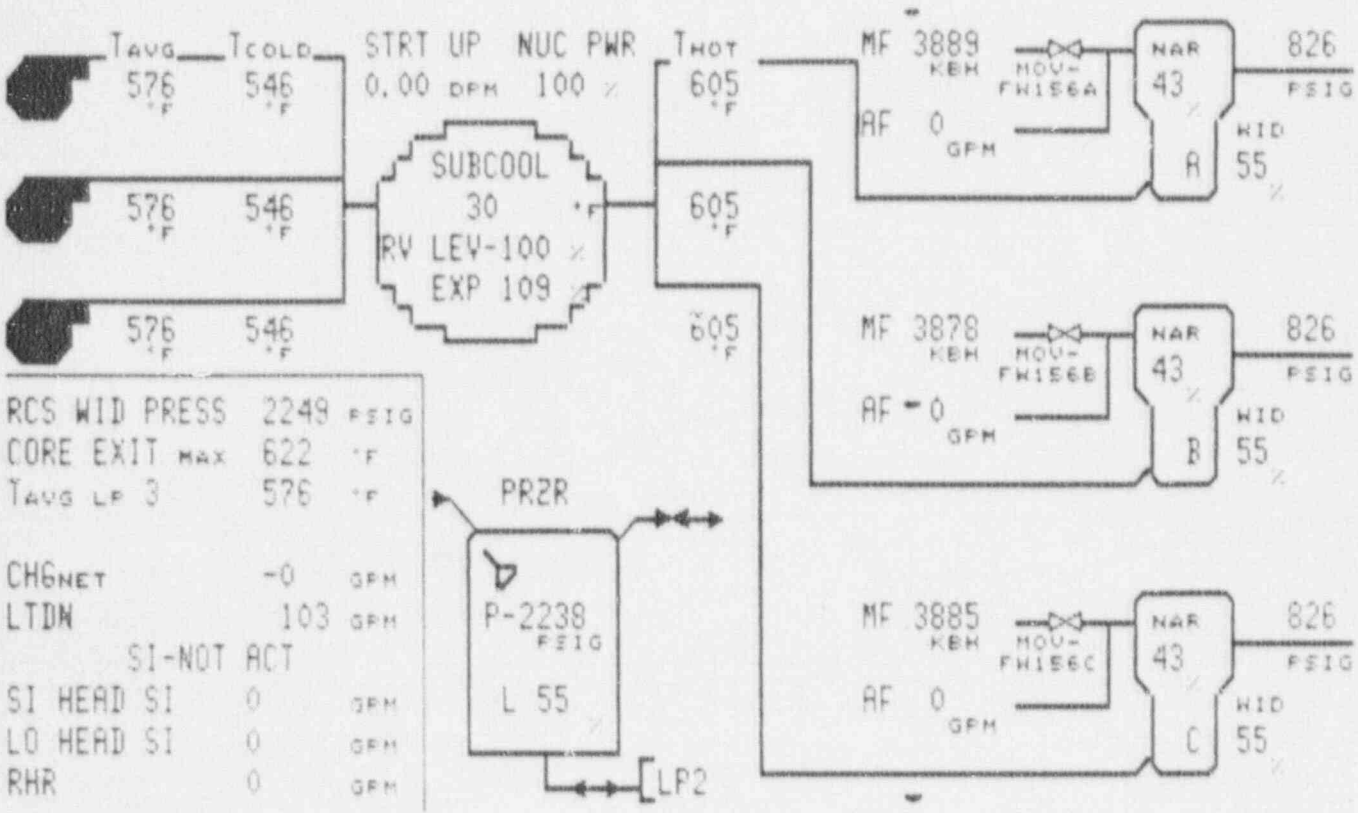

CONTAINMENT				ELECTRICAL			
Press. (PSIA)	9.45	Temp. (F)	96.9	SSST 1A	OK	SSST 1B	OK
RHR	NO	Sump (In)	0	AE	OK	DF	OK
Quench Spray	NO	Recirc Spray	NO	8 N	OK	9 P	OK
HHSI	NO	CIA	NO	DG #1	OOS	DG #2	OOS
LHSI	NO	CIB	NO	Batteries	OK	Vital Buses	OK

Time 1148

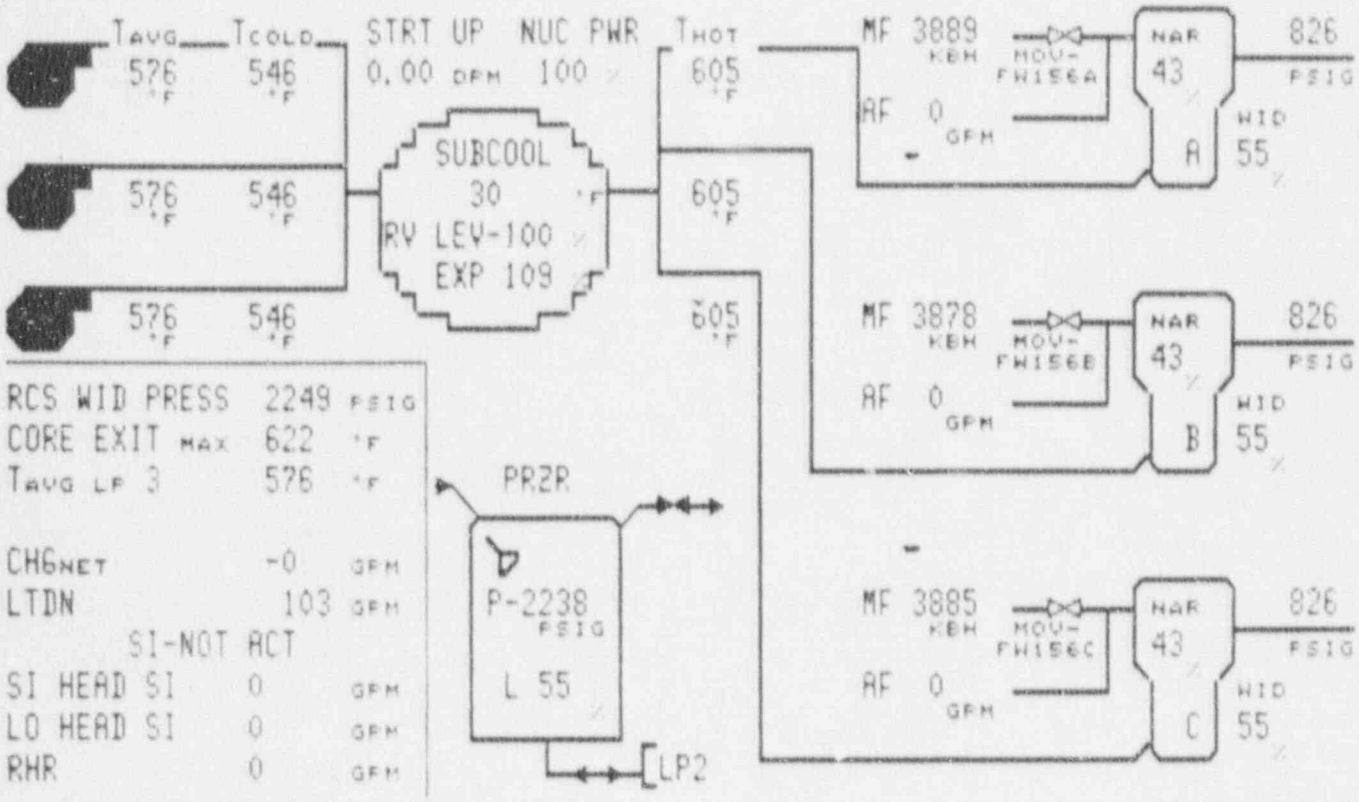

CONTAINMENT				ELECTRICAL			
Press. (PSIA)	9.45	Temp. (F)	96.9	SSST 1A	OK	SSST 1B	OK
RHR	NO	Sump (In)	0	AE	OK	DF	OK
Quench Spray	NO	Recirc Spray	NO	8 N	OK	9 P	OK
HHSI	NO	CIA	NO	DG #1	OOS	DG #2	OOS
LHSI	NO	CIB	NO	Batteries	OK	Vital Buses	OK

Time 1151

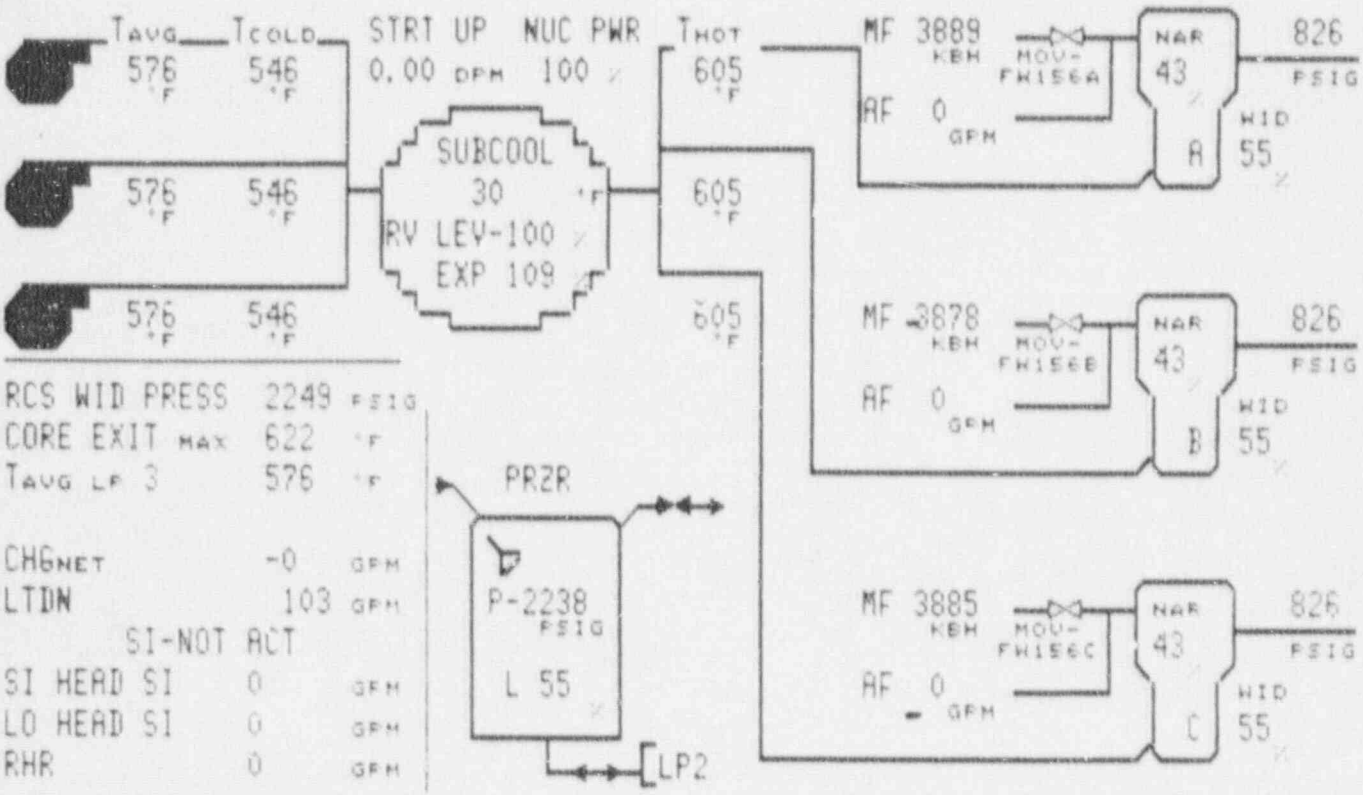

CONTAINMENT				ELECTRICAL			
Press. (PSIA)	9.45	Temp. (F)	96.9	SSST 1A	OK	SSST 1B	OK
RHR	NO	Sump (In)	0	AE	OK	DF	OK
Quench Spray	NO	Recirc Spray	NO	8 N	OK	9 P	OK
HHSI	NO	CIA	NO	DG #1	OOS	DG #2	OOS
LHSI	NO	CIB	NO	Batteries	OK	Vital Buses	OK

Time 1154

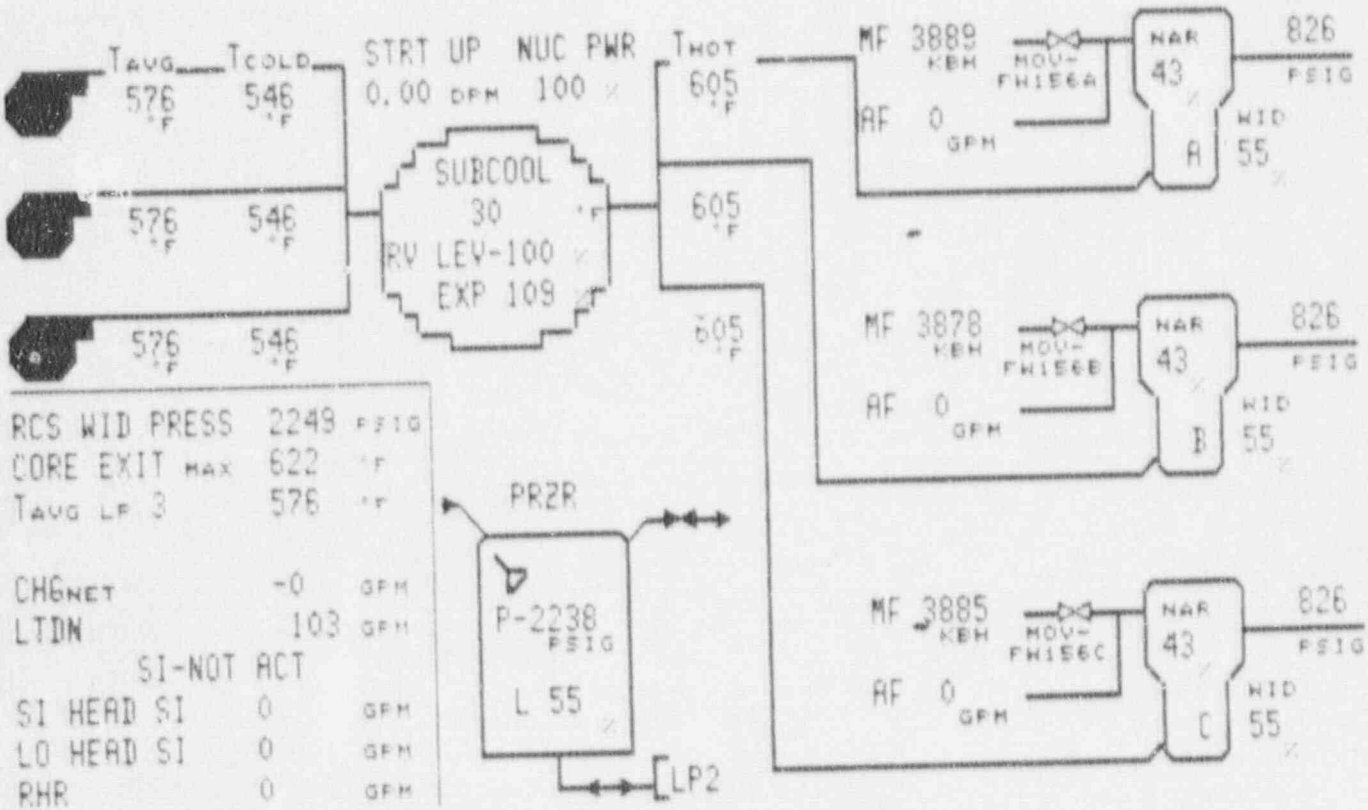

CONTAINMENT				ELECTRICAL			
Press. (PSIA)	9.45	Temp. (F)	96.9	SSST 1A	OK	SSST 1B	OK
RHR	NO	Sump (In)	0	AE	OK	DF	OK
Quench Spray	NO	Recirc Spray	NO	8 N	OK	9 P	OK
HHSI	NO	CIA	NO	DG #1	OOS	DG #2	OOS
LHSI	NO	CIB	NO	Batteries	OK	Vital Buses	OK

Time 1157

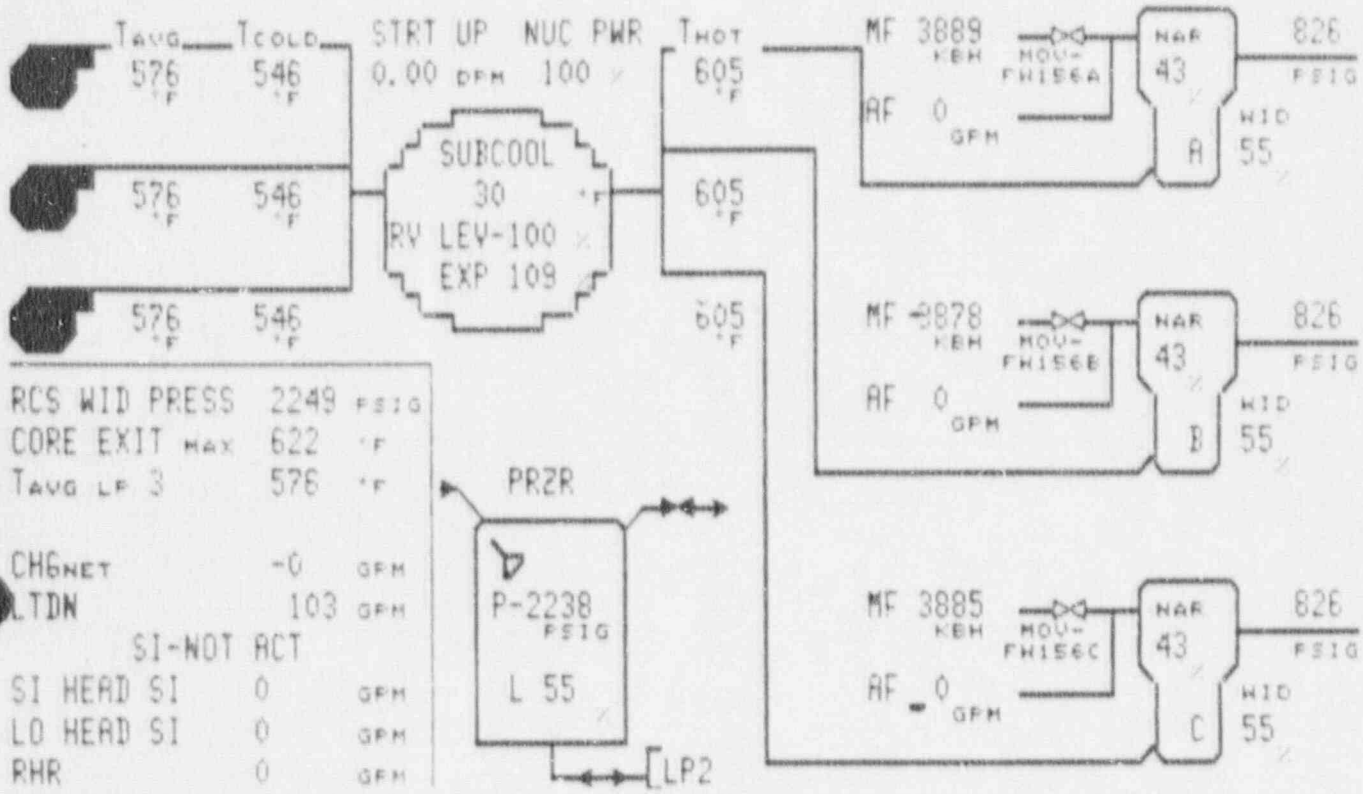

CONTAINMENT				ELECTRICAL			
Press. (PSIA)	9.45	Temp. (F)	96.9	SSST 1A	OK	SSST 1B	OK
RHR	NO	Sump (In)	0	AE	OK	DF	OK
Quench Spray	NO	Recirc Spray	NO	8 N	OK	9 P	OK
HHSI	NO	CIA	NO	DG #1	OOS	DG #2	OOS
LHSI	NO	CIB	NO	Batteries	OK	Vital Buses	OK

Time 1200

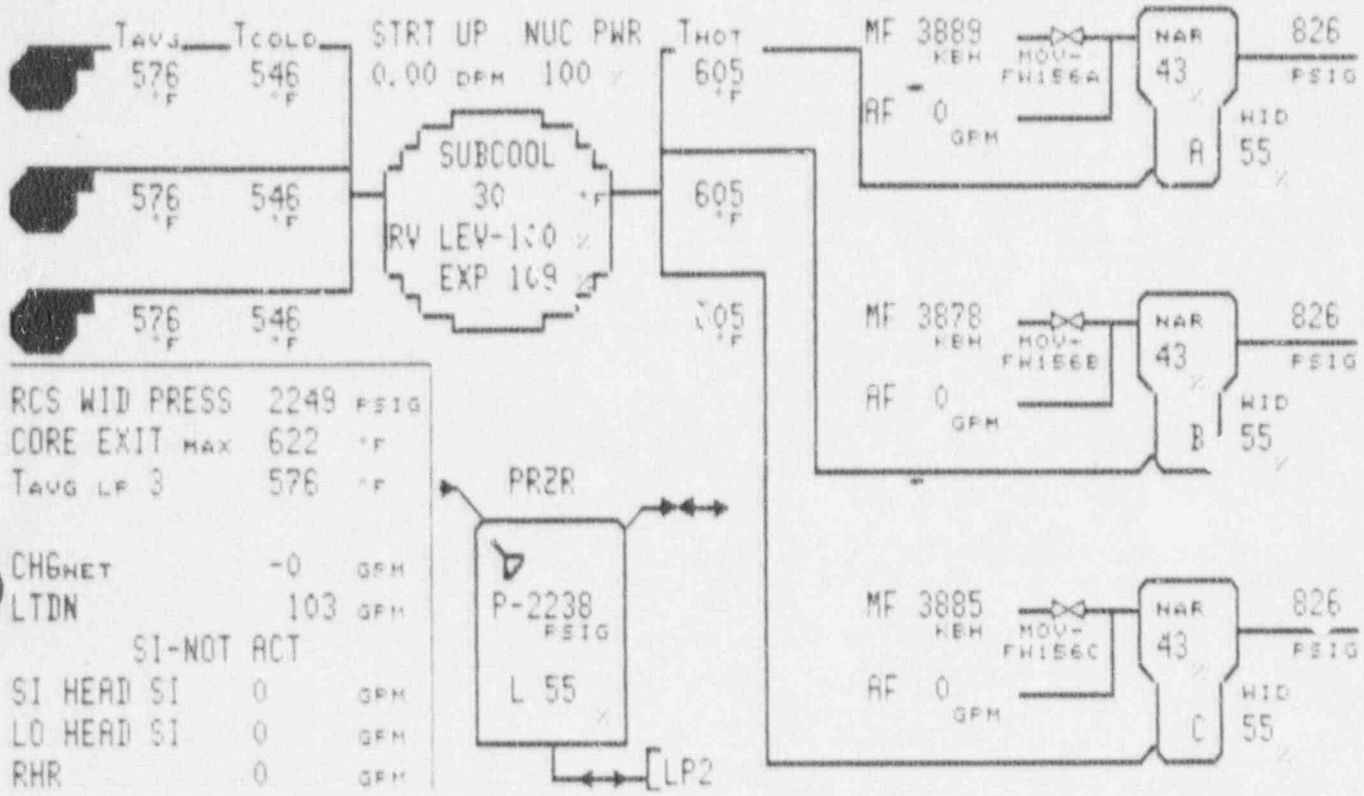

CONTAINMENT				ELECTRICAL			
Press. (PSIA)	9.45	Temp. (F)	96.9	SSST 1A	OK	SSST 1B	OK
RHR	NO	Sump (In)	0	AE	OK	DF	OK
Quench Spray	NO	Recirc Spray	NO	8 N	OK	9 P	OK
HHSI	NO	CIA	NO	DG #1	OOS	DG #2	OOS
LHSI	NO	CIB	NO	Batteries	OK	Vital Buses	OK

Time 1203

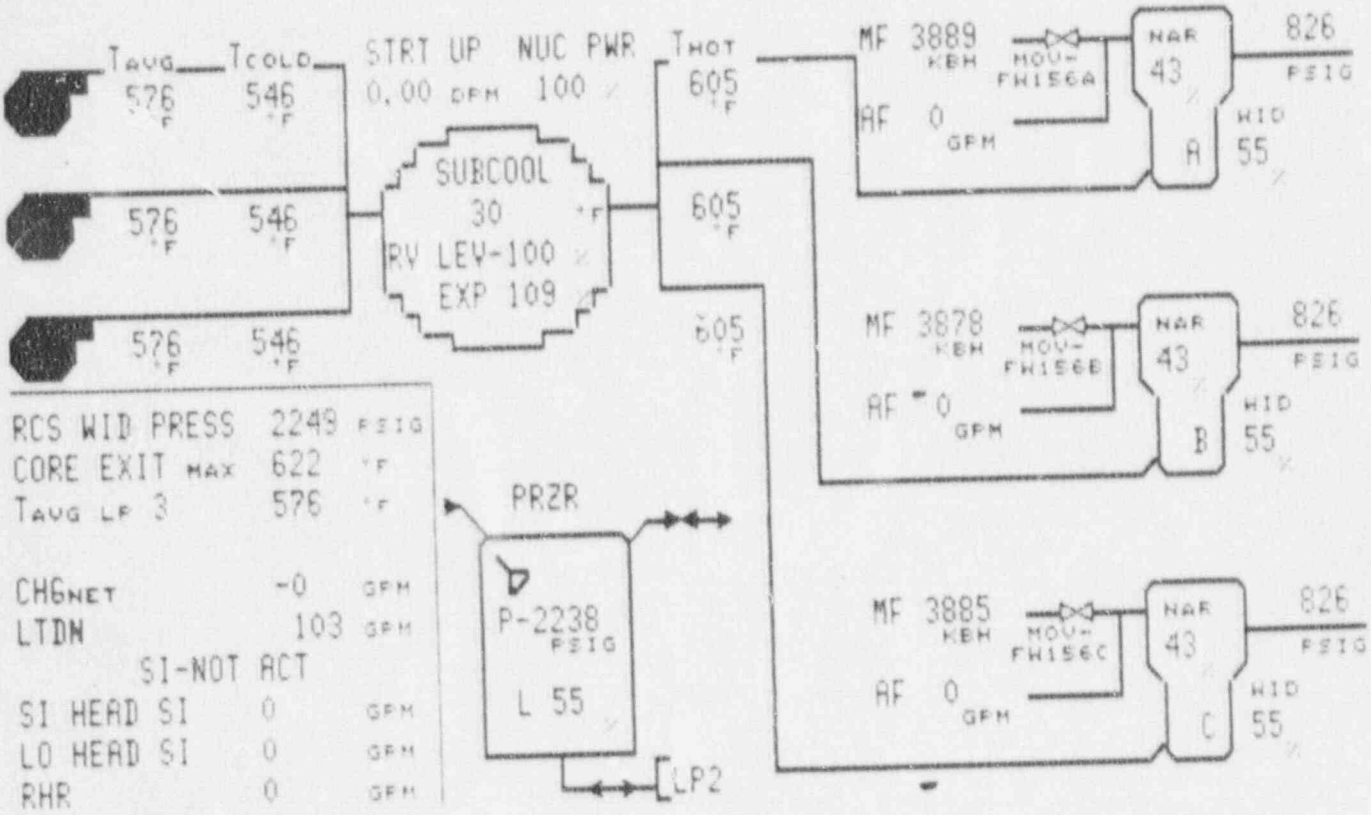

CONTAINMENT				ELECTRICAL			
Press. (PSIA)	9.45	Temp. (F)	96.9	SSST 1A	OK	SSST 1B	OK
RHR	NO	Sump (In)	0	AE	OK	DF	OK
Quench Spray	NO	Recirc Spray	NO	8 N	OK	9 P	OK
HHSI	NO	CIA	NO	DG #1	OOS	DG #2	OOS
LHSI	NO	CIB	NO	Batteries	OK	Vital Buses	OK

Time 1206

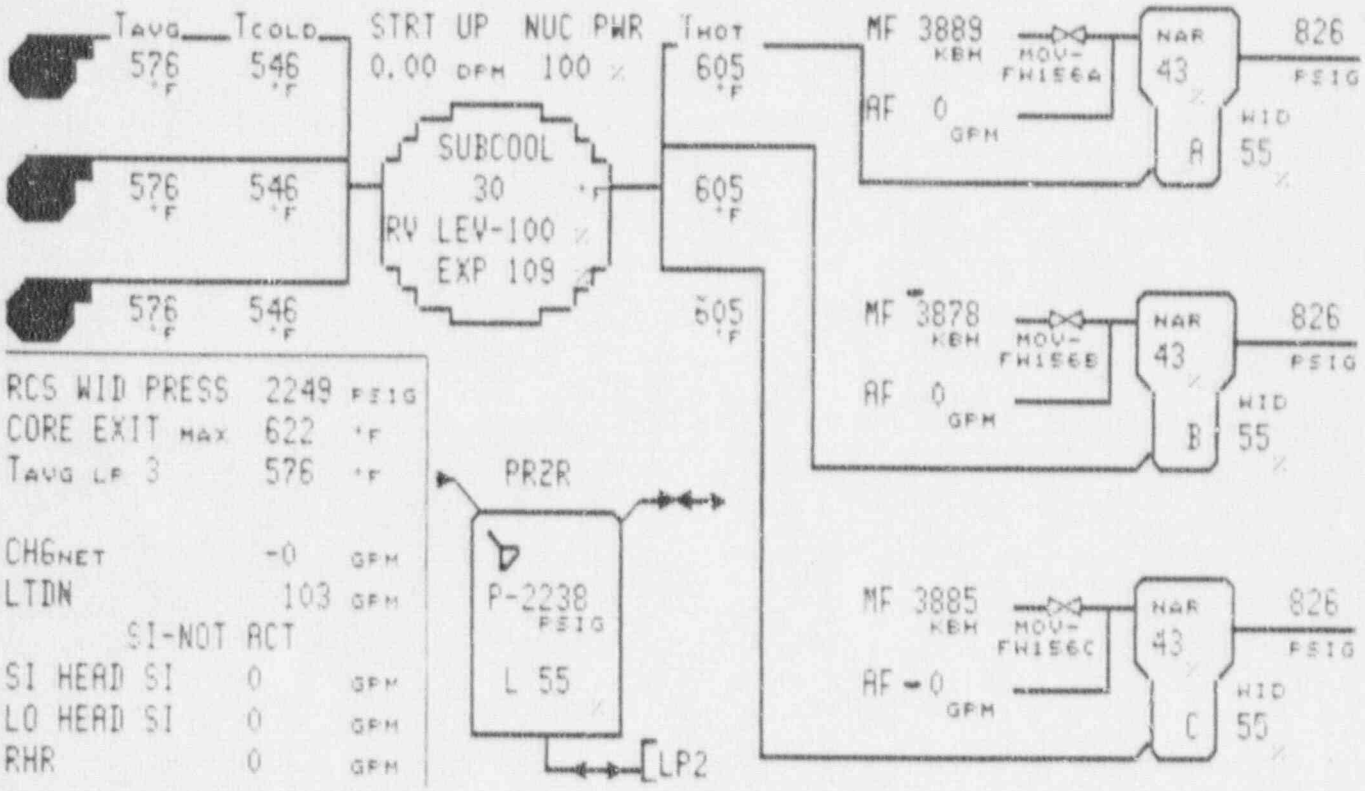

CONTAINMENT				ELECTRICAL			
Press. (PSIA)	9.45	Temp. (F)	96.9	SSST 1A	OK	SSST 1B	OK
RHR	NO	Sump (In)	0	AE	OK	DF	OK
Quench Spray	NO	Recirc Spray	NO	8 N	OK	9 P	OK
HHSI	NO	CIA	NO	DG #1	OOS	DG #2	OOS
LHSI	NO	CIB	NO	Batteries	OK	Vital Buses	OK

Time

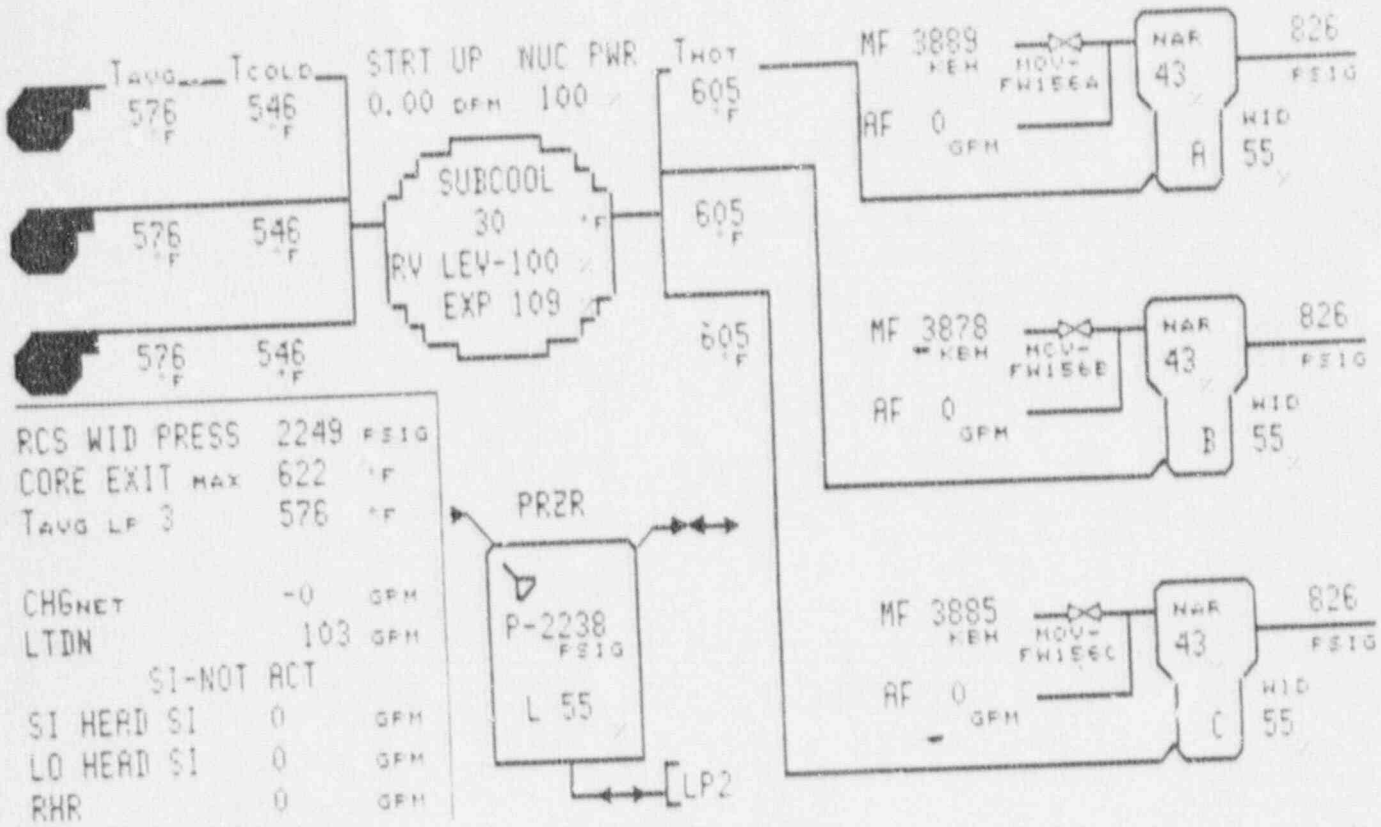

CONTAINMENT				ELECTRICAL			
Press. (PSIA)	9.45	Temp. (F)	96.9	SSST 1A	OK	SSST 1B	OK
RHR	NO	Sump (In)	0	AE	OK	DF	OK
Quench Spray	NO	Recirc Spray	NO	8 N	OK	9 P	OK
HHSI	NO	CIA	NO	DG #1	OOS	DG #2	OOS
LHSI	NO	CIB	NO	Batteries	OK	Vital Buses	OK

Time 1212

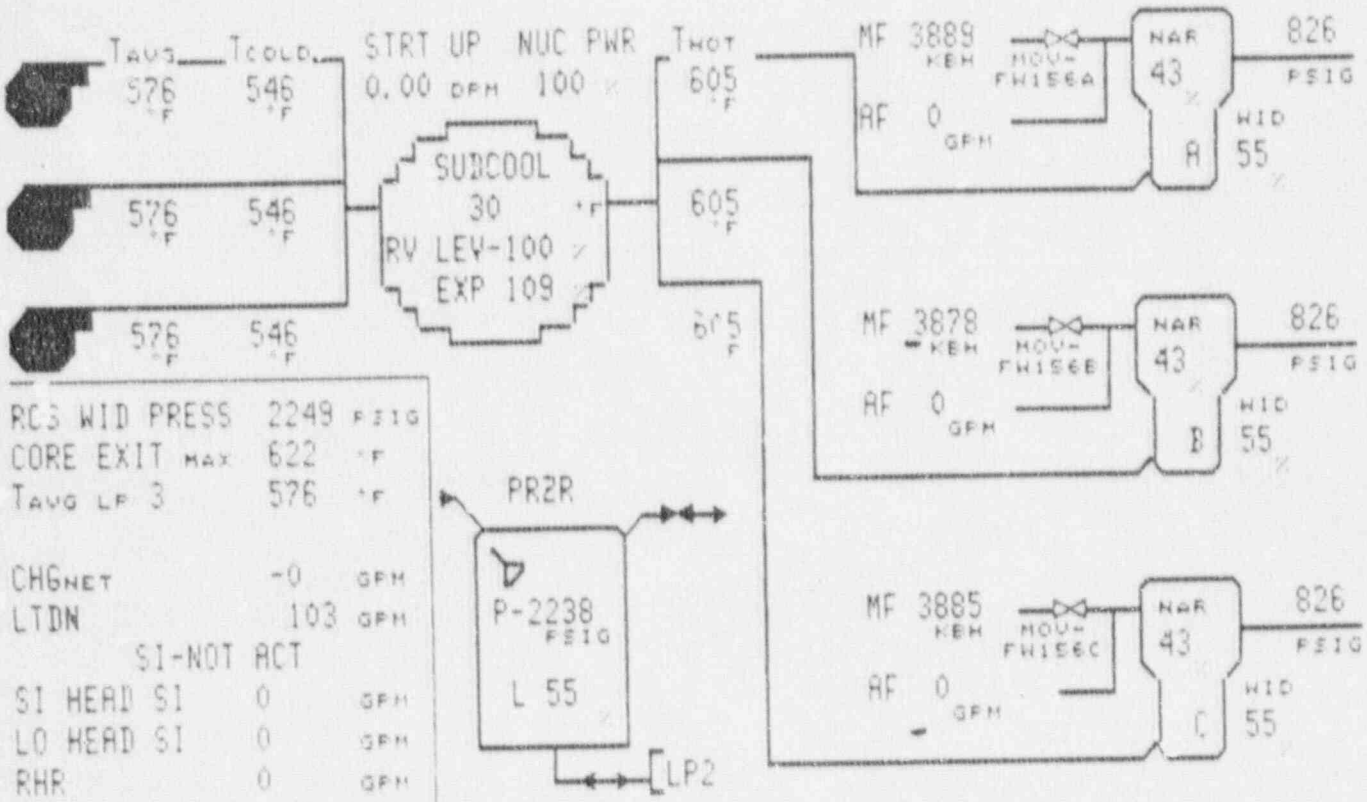

CONTAINMENT				ELECTRICAL			
Press. (PSIA)	9.45	Temp. (F)	96.9	SSST 1A	OK	SSST 1B	OK
RHR	NO	Sump (In)	0	AE	OK	DF	OK
Quench Spray	NO	Recirc Spray	NO	8 N	OK	9 P	OK
HHSI	NO	CIA	NO	DG #1	OOS	DG #2	OOS
LHSI	NO	CIB	NO	Batteries	OK	Vital Buses	OK

Time 1215

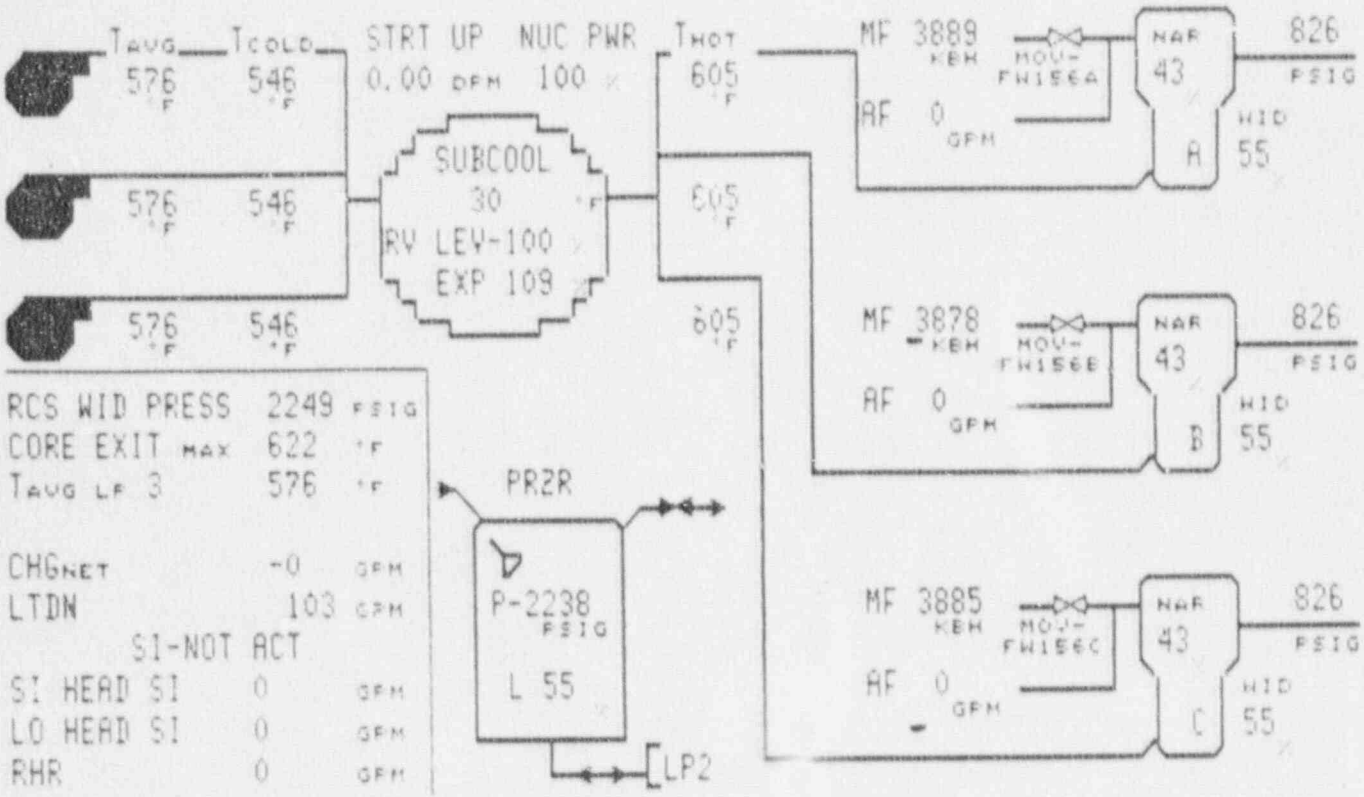

CONTAINMENT				ELECTRICAL			
Press. (PSIA)	9.45	Temp. (F)	96.9	SSST 1A	OK	SSST 1B	OK
RHR	NO	Sump (In)	0	AE	OK	DF	OK
Quench Spray	NO	Recirc Spray	NO	8 N	OK	9 P	OK
HHSI	NO	CIA	NO	DG #1	OOS	DG #2	OOS
LHSI	NO	CIB	NO	Batteries	OK	Vital Buses	OK

Time 1218

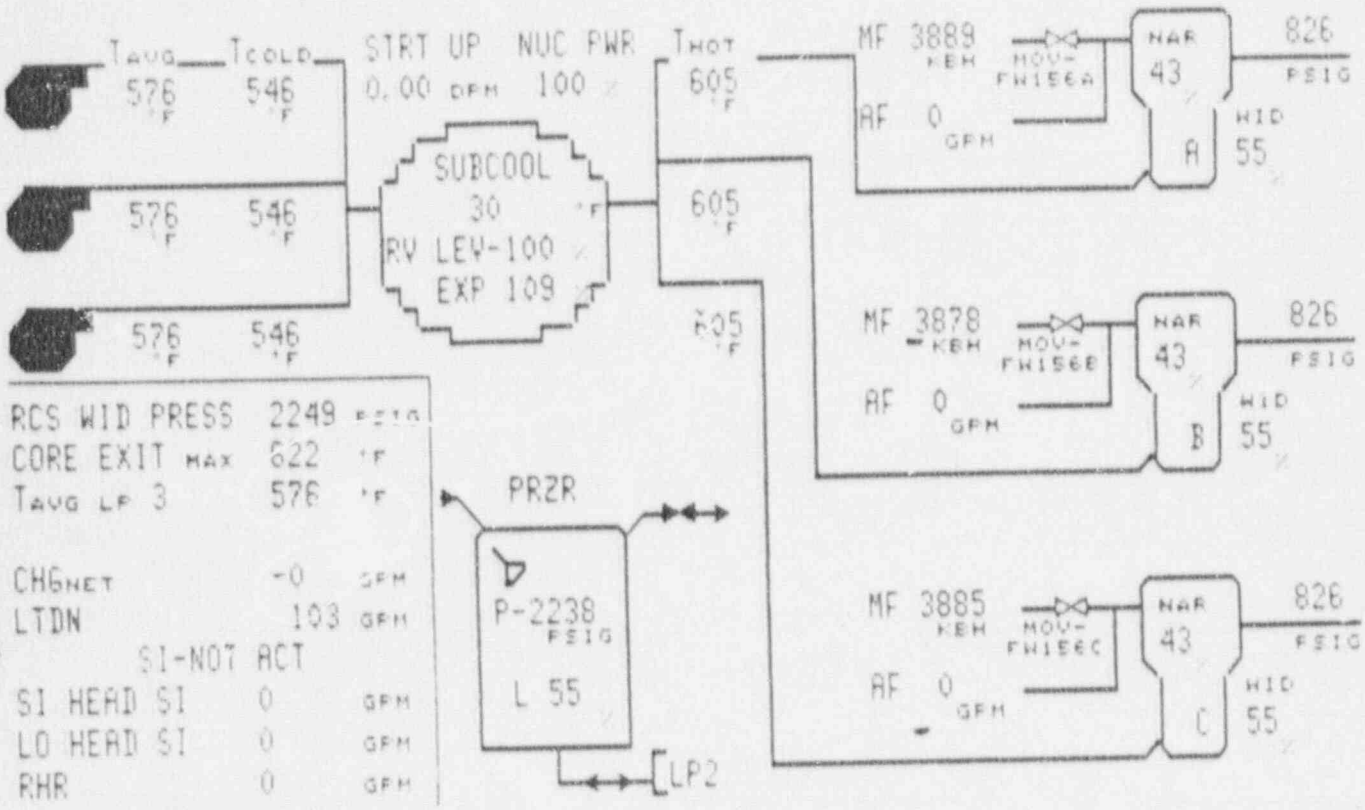

CONTAINMENT			
Press. (PSIA)	9.45	Temp. (F)	96.9
RHR	NO	Sump (In)	0
Quench Spray	NO	Recirc Spray	NO
HHSI	NO	CIA	NO
LHSI	NO	CIB	NO

ELECTRICAL			
SSST 1A	OK	SSST 1B	OK
AE	OK	DF	OK
8 N	OK	9 P	OK
DG #1	OOS	DG #2	OOS
Batteries	OK	Vital Buses	OK

Time 1221

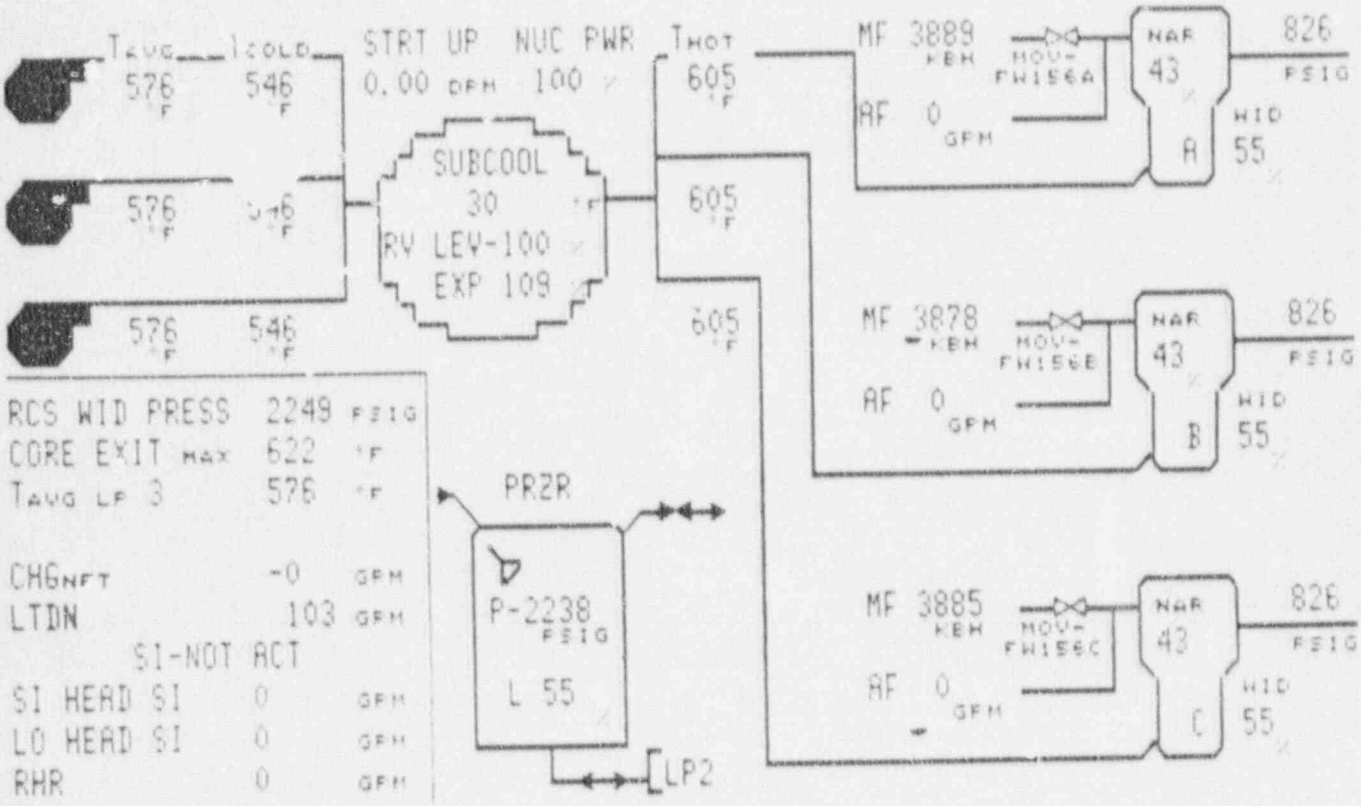

CONTAINMENT				ELECTRICAL			
Press. (PSIA)	9.45	Temp. (F)	96.9	SSST 1A	OK	SSST 1B	OK
RHR	NO	Sump (In)	0	AE	OK	DF	OK
Quench Spray	NO	Recirc Spray	NO	8 N	OK	9 P	OK
HHSI	NO	CIA	NO	DG #1	OOS	DG #2	OOS
LHSI	NO	CIB	NO	Batteries	OK	Vital Buses	OK

Time 1224

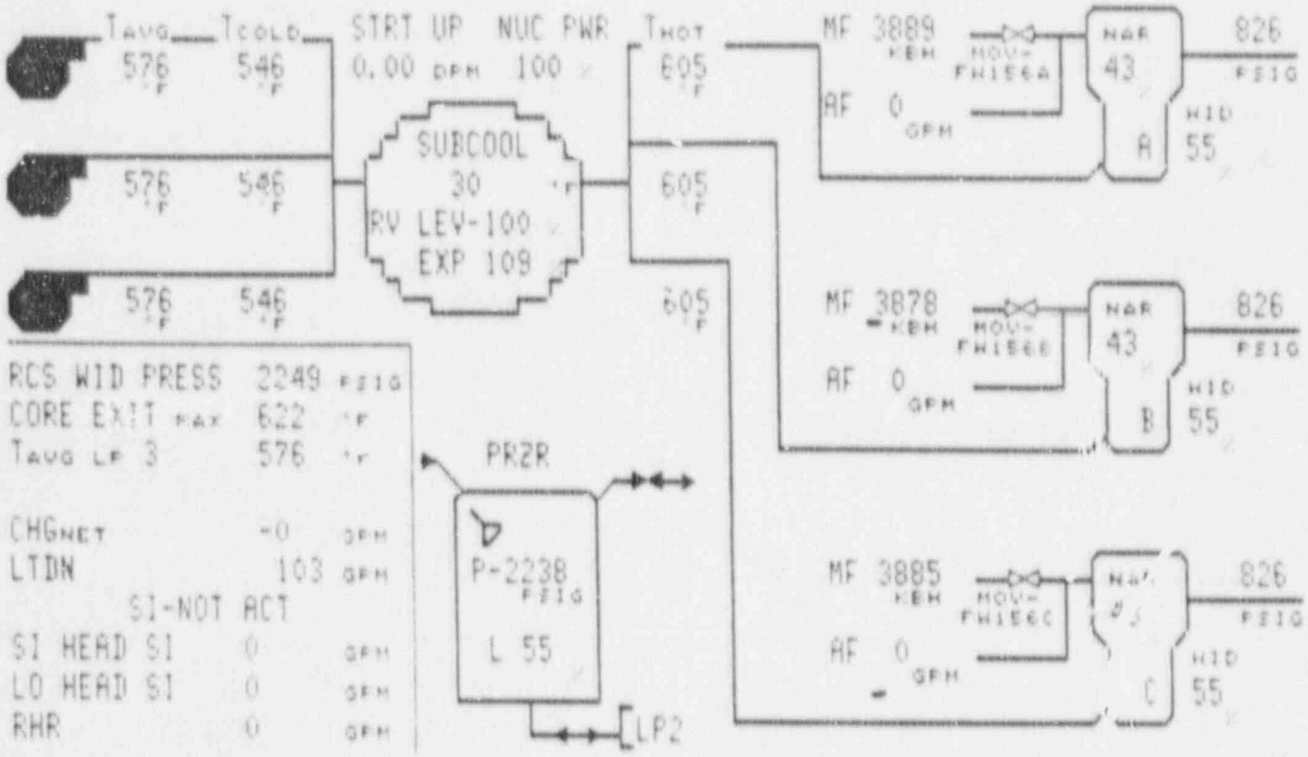

CONTAINMENT				ELECTRICAL			
Press. (PSIA)	9.45	Temp. (F)	96.9	SSST 1A	OK	SSST 1B	OK
RHR	NO	Sump (In)	0	AE	OK	DF	OK
Quench Spray	NO	Recirc Spray	NO	8 N	OK	9 P	OK
HHSI	NO	CIA	NO	DG #1	OOS	DG #2	OOS
LHSI	NO	CIB	NO	Batteries	OK	Vital Buses	OK

Time 1227

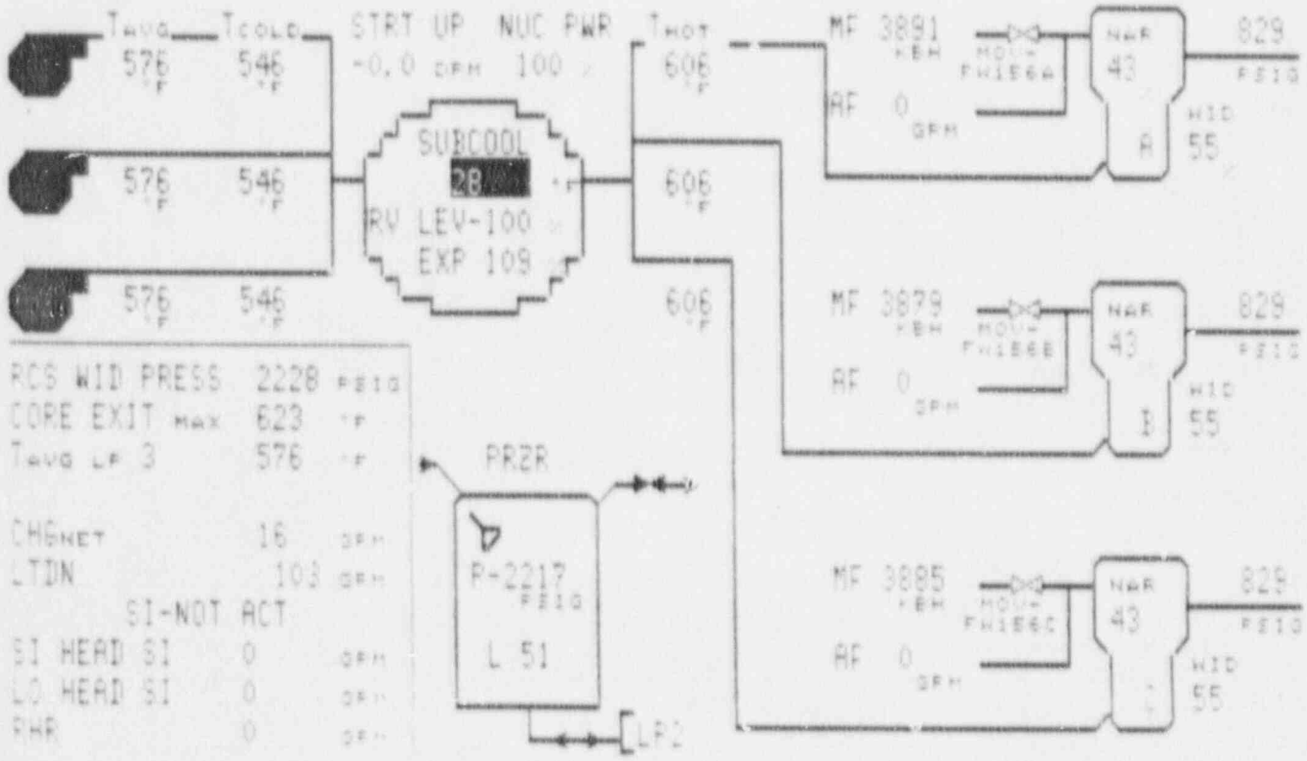

CONTAINMENT				ELECTRICAL			
Press. (PSIA)	9.45	Temp. (F)	96.9	SSST 1A	OK	SSST 1B	OK
RHR	NO	Sump (In)	0	AE	OK	DF	OK
Quench Spray	NO	Recirc Spray	NO	8 N	OK	9 P	OK
HHSI	NO	CIA	NO	DG #1	OOS	DG #2	OOS
LHSI	NO	CIB	NO	Batteries	OK	Vital Buses	OK

Time 1230

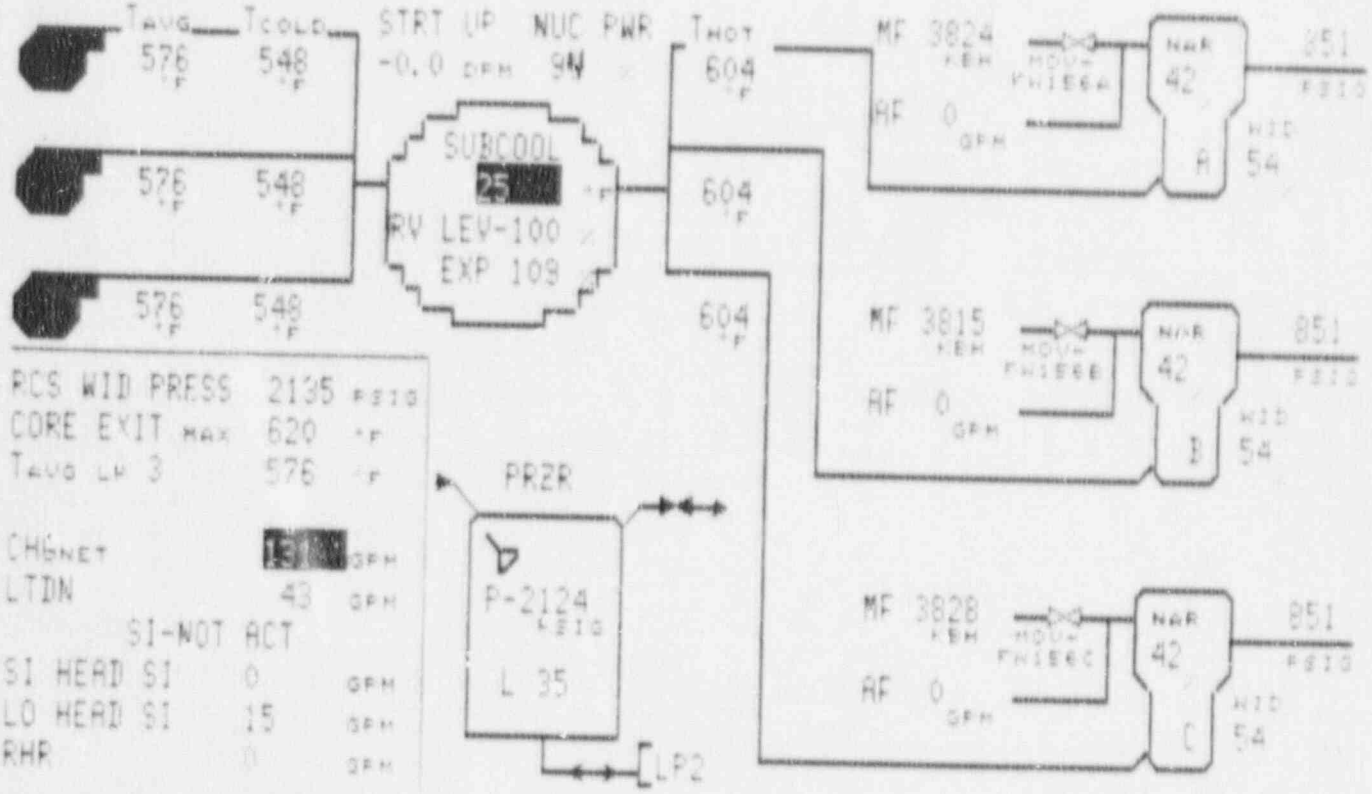

CONTAINMENT				ELECTRICAL			
Press. (PSIA)	10.24	Temp. (F)	98.2	SSST 1A	OK	SSST 1B	OK
RHR	NO	Sump (In)	0.1	AE	OK	DF	OK
Quench Spray	NO	Recirc Spray	NO	8 N	OK	9 P	OK
HHSI	NO	CIA	NO	DG #1	OOS	DG #2	OOS
LHSI	NO	CIB	NO	Batteries	OK	Vital Buses	OK

Time 1233

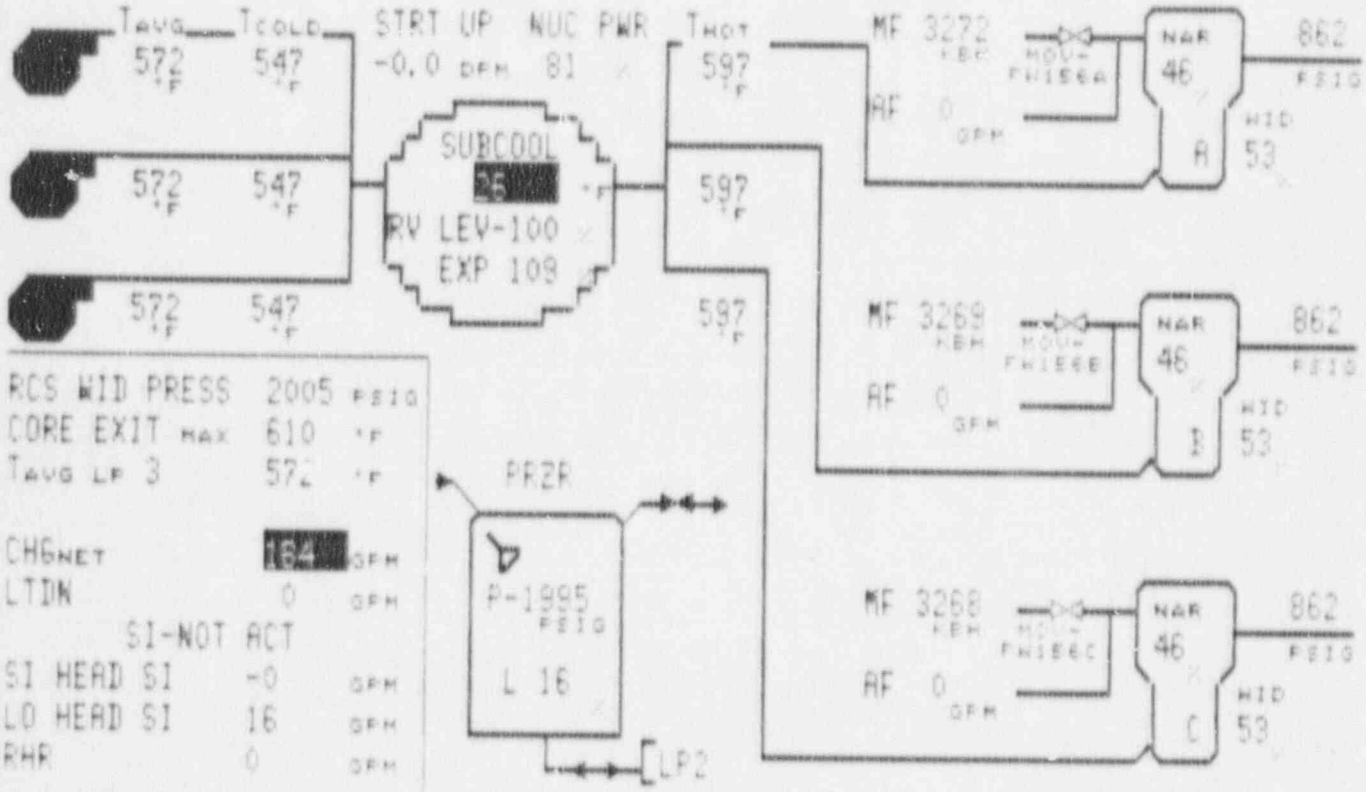

CONTAINMENT				ELECTRICAL			
Press. (PSIA)	11.03	Temp. (F)	99.5	SSST 1A	OK	SSST 1B	OK
RHR	NO	Sump (In)	0.3	AE	OK	DF	OK
Quench Spray	NO	Recirc Spray	NO	8 N	OK	9 P	OK
HHSI	NO	CIA	NO	DG #1	OOS	DG #2	OOS
LHSI	NO	CIB	NO	Batteries	OK	Vital Buses	OK

Time 1236

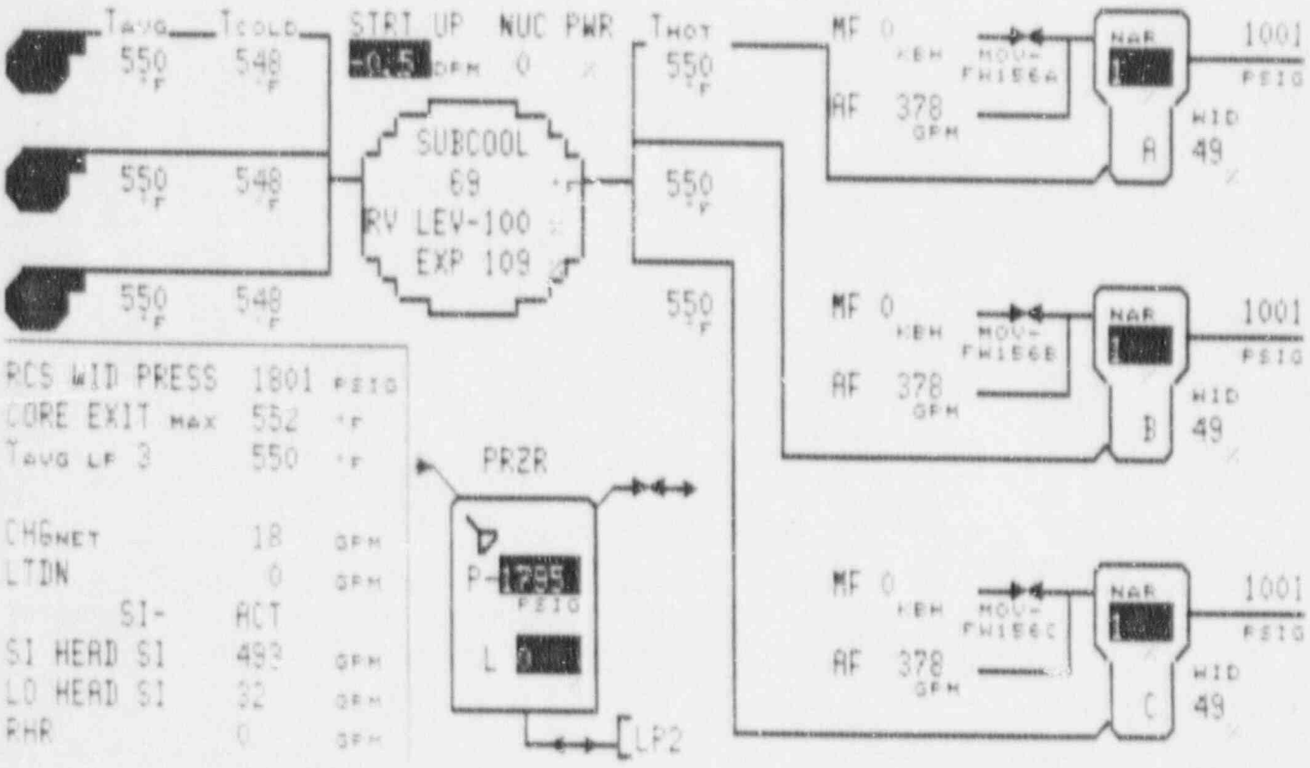

CONTAINMENT			
Press. (PSIA)	11.82	Temp. (F)	100.9
RHR	NO	Sump (In)	0.6
Quench Spray	NO	Recirc Spray	NO
HHSI	YES	CIA	YES
LHSI	NO	CIB	NO

ELECTRICAL			
SSST 1A	OK	SSST 1B	OK
AE	OK	DF	OK
8 N	OK	9 P	OK
DG #1	OOS	DG #2	OOS
Batteries	OK	Vital Buses	OK

Time 1239

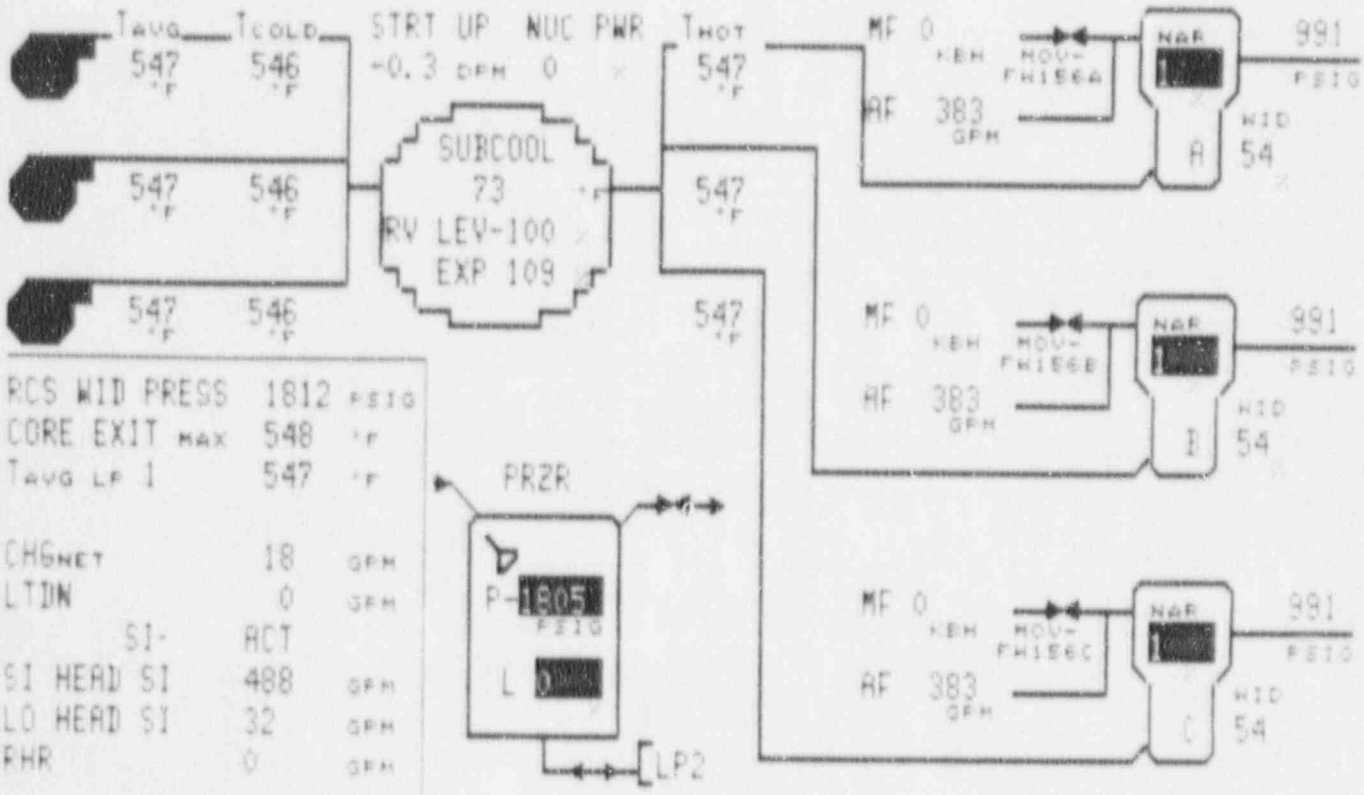

CONTAINMENT				ELECTRICAL			
Press. (PSIA)	12.35	Temp. (F)	102.2	SSST 1A	OK	SSST 1B	OK
RHR	NO	Sump (In)	0.8	AE	OK	DF	OK
Quench Spray	NO	Recirc Spray	NO	8 N	OK	9 P	OK
HHSI	YES	CIA	YES	DG #1	OOS	DG #2	OOS
LHSI	NO	CIB	NO	Batteries	OK	Vital Buses	OK

Time 1242

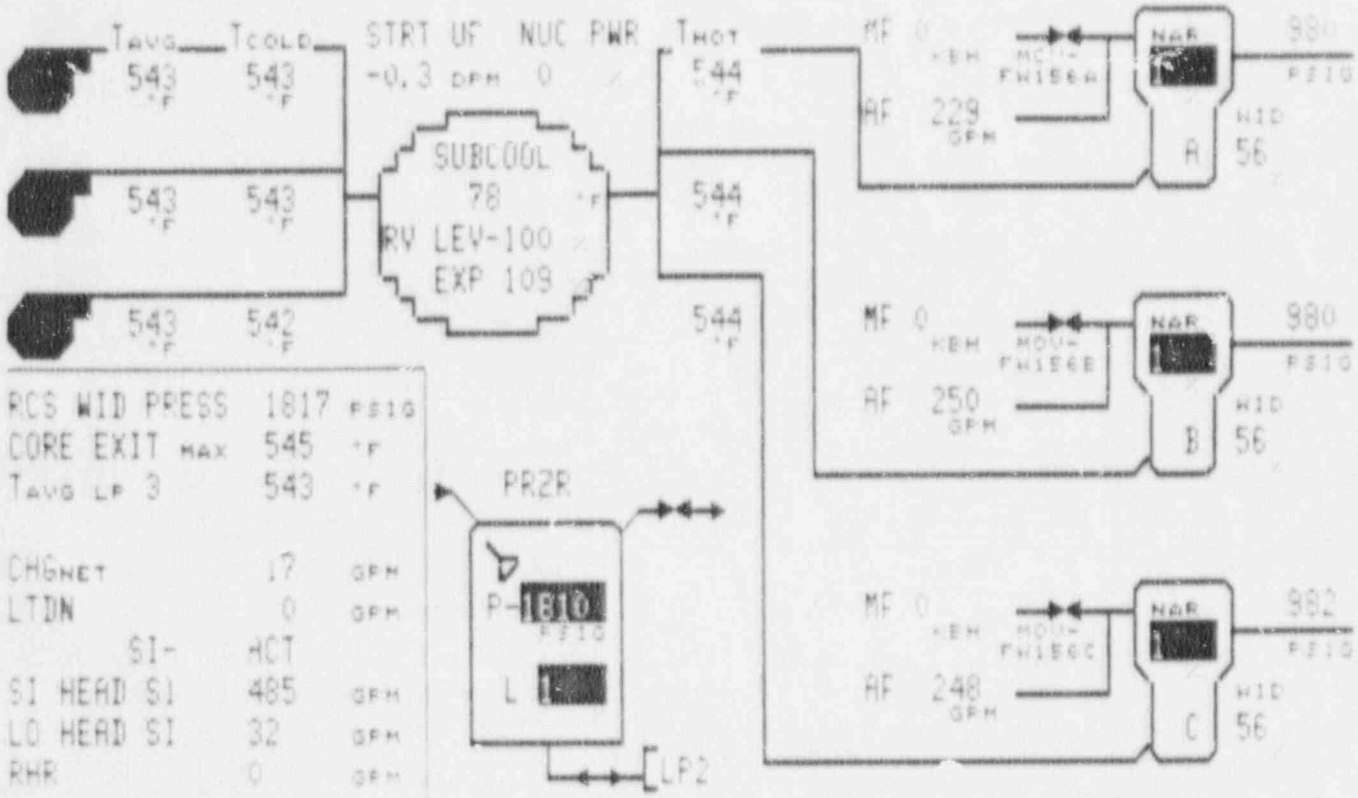

CONTAINMENT				ELECTRICAL			
Press. (PSIA)	12.88	Temp. (F)	103.5	SSST 1A	OK	SSST 1B	OK
RHR	NO	Sump (In)	1.0	AE	OK	DF	OK
Quench Spray	NO	Recirc Spray	NO	8 N	OK	9 P	OK
HHSI	YES	CIA	YES	DG #1	OOS	DG #2	OOS
LHSI	NO	CIB	NO	Batteries	OK	Vital Buses	OK

Time 1245

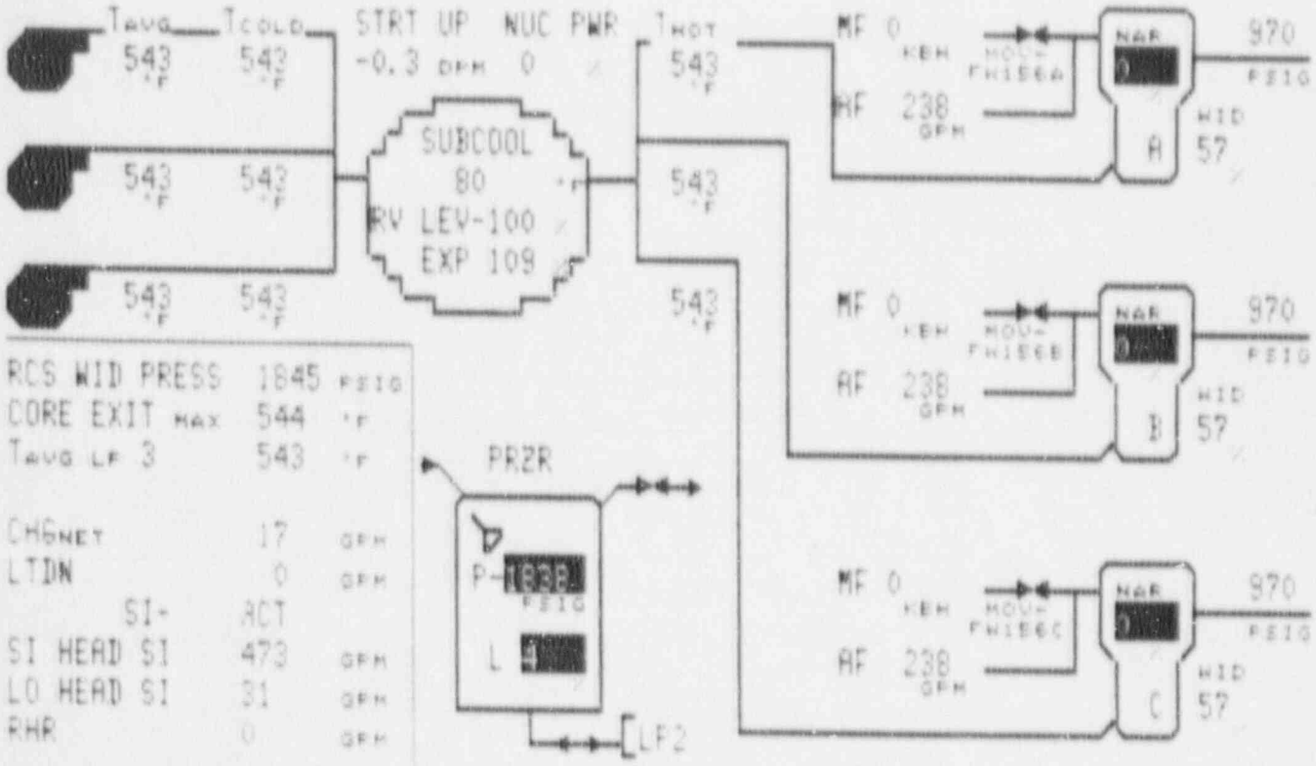

CONTAINMENT				ELECTRICAL			
Press. (PSIA)	13.41	Temp. (F)	104.6	SSST 1A	OK	SSST 1B	OK
RHR	NO	Sump (In)	1.2	AE	OK	DF	OK
Quench Spray	NO	Recirc Spray	NO	8 N	OK	9 P	OK
HHSI	YES	CIA	YES	DG #1	OOS	DG #2	OOS
LHSI	NO	CIB	NO	Batteries	OK	Vital Buses	OK

Time 1248

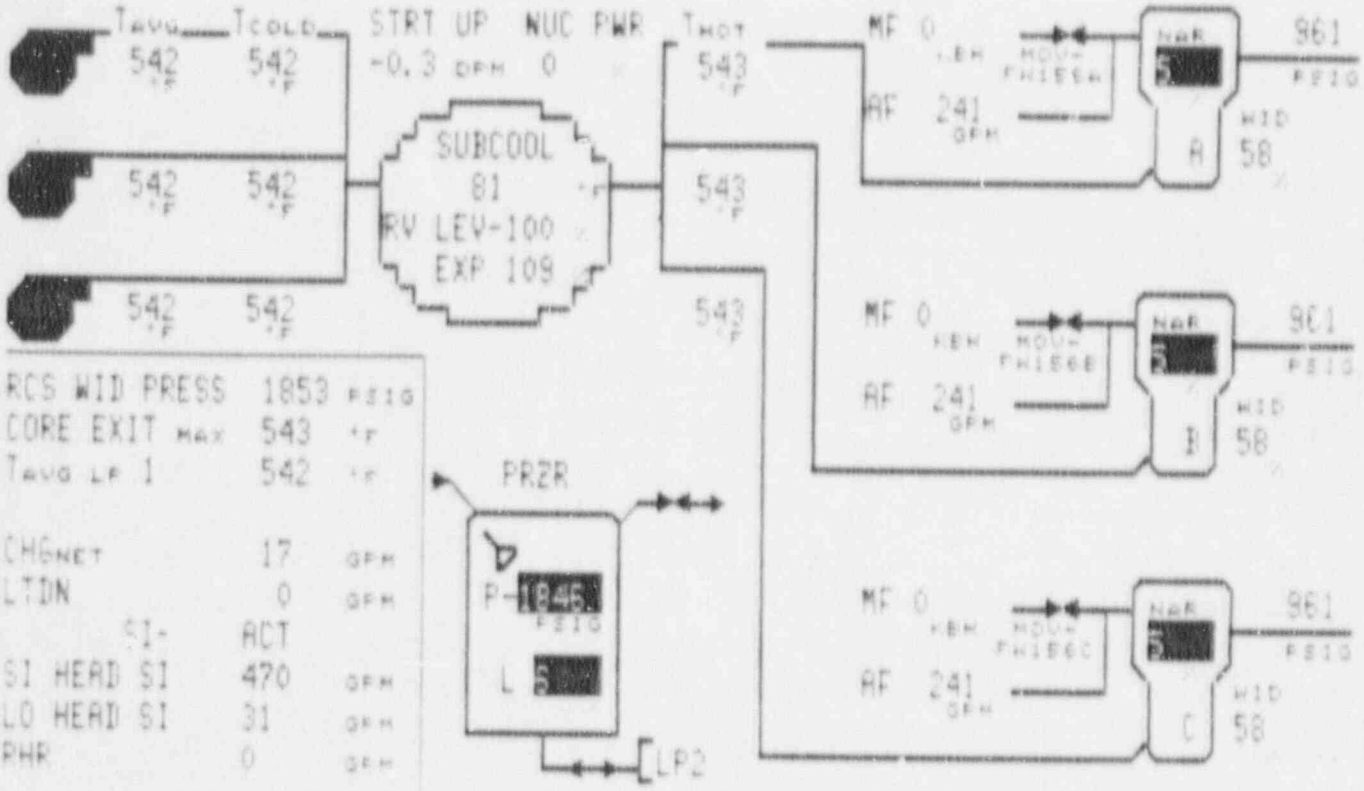

CONTAINMENT				ELECTRICAL			
Press. (PSIA)	13.94	Temp. (F)	105.7	SSST 1A	OK	SSST 1B	OK
RHR	NO	Sump (In)	1.4	AE	OK	DF	OK
Quench Spray	NO	Recirc Spray	NO	8 N	OK	9 P	OK
HHSI	YES	CIA	YES	DG #1	OOS	DG #2	OOS
LHSI	NO	CIB	NO	Batteries	OK	Vital Buses	OK

Time 1251

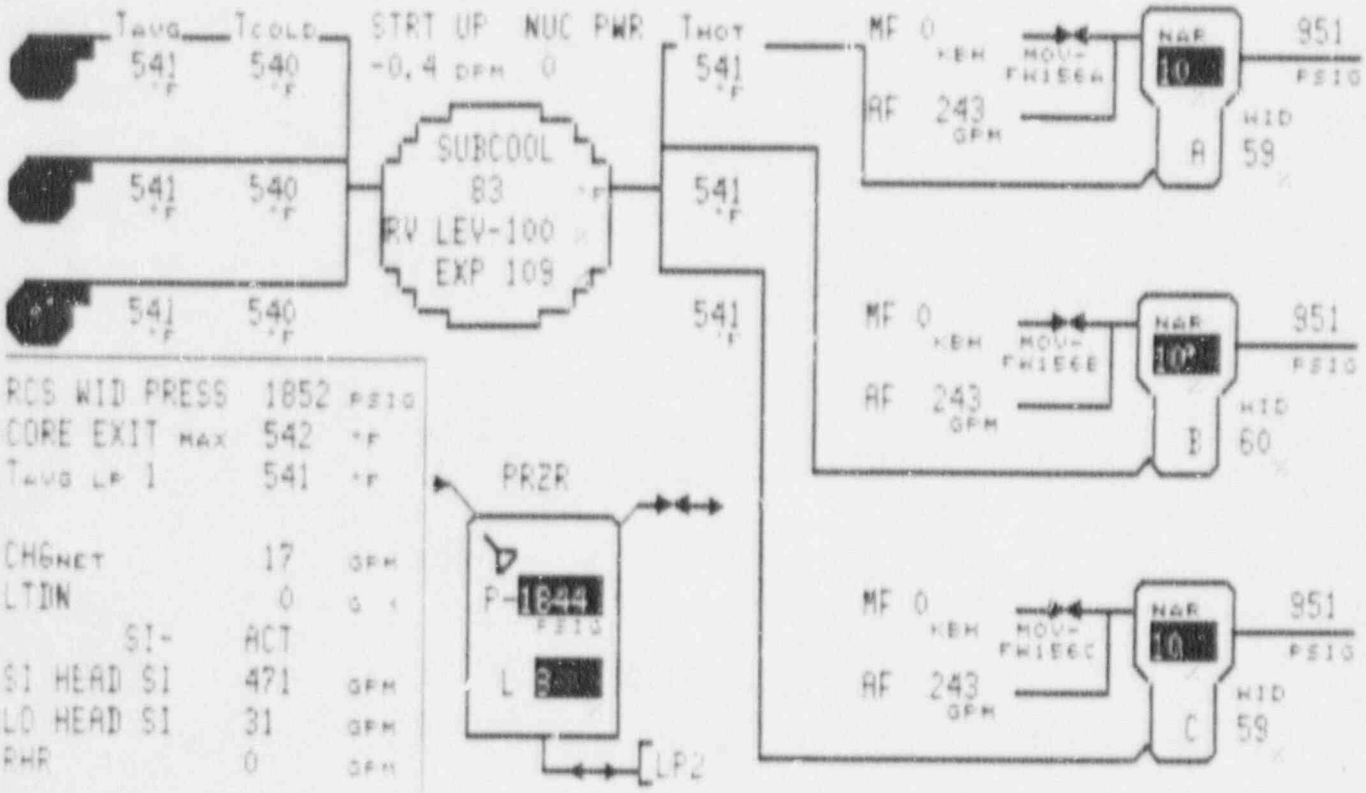

CONTAINMENT				ELECTRICAL			
Press. (PSIA)	14.20	Temp. (F)	106.8	SSST 1A	OK	SSST 1B	OK
RHR	NO	Sump (In)	1.7	AE	OK	DF	OK
Quench Spray	NO	Recirc Sprry	NO	8 N	OK	9 P	OK
HHSI	YES	CIA	YES	DG #1	OOS	DG #2	OOS
LHSI	NO	CIB	NO	Batteries	OK	Vital Buses	OK

Time 1254

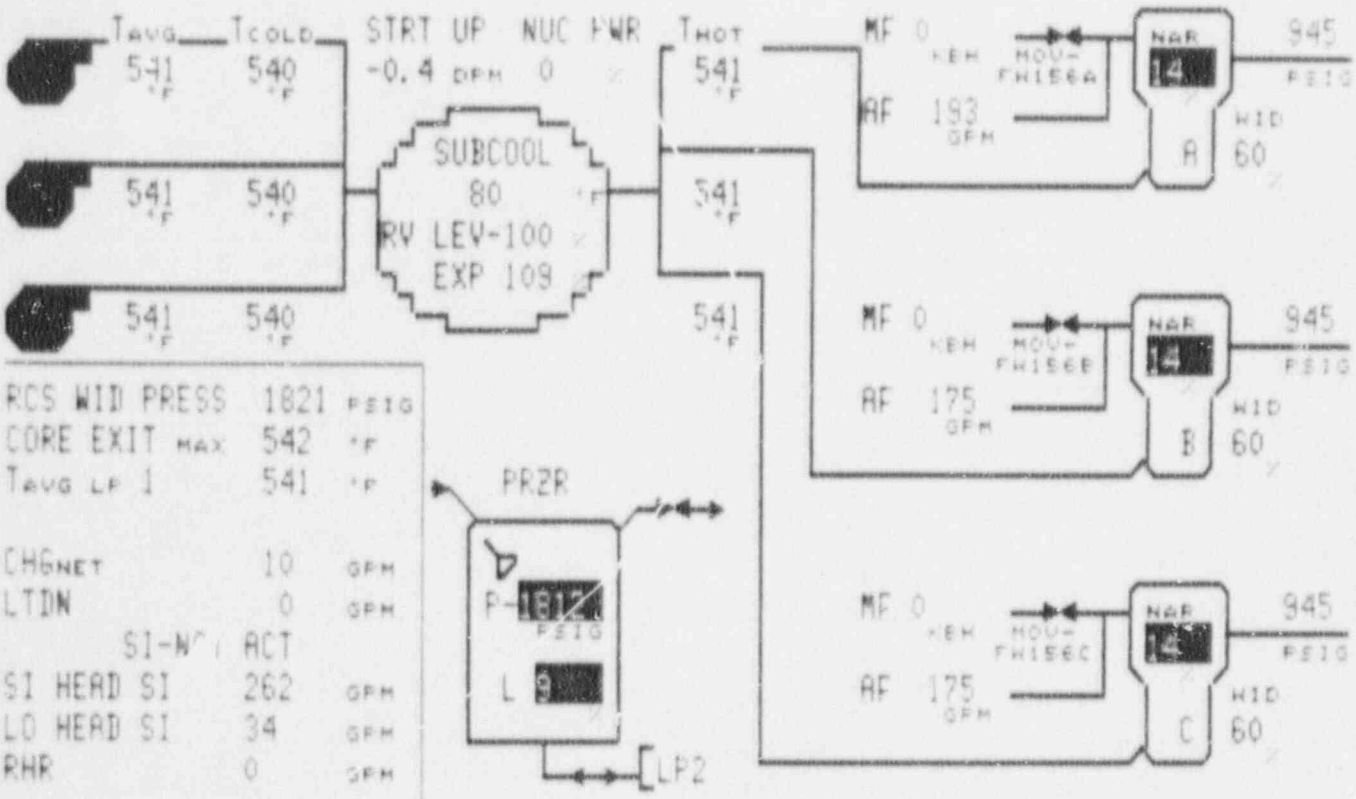

CONTAINMENT				ELECTRICAL			
Press. (PSIA)	14.47	Temp. (F)	107.9	SSST 1A	OK	SSST 1B	OK
RHR	NO	Sump (In)	1.9	AE	OK	DF	OK
Quench Spray	NO	Recirc Spray	NO	8 N	OK	9 P	OK
HHSI	YES	CIA	NO	DG #1	OOS	DG #2	OOS
LHSI	NO	CIB	NO	Batteries	OK	Vital Buses	OK

Time 1257

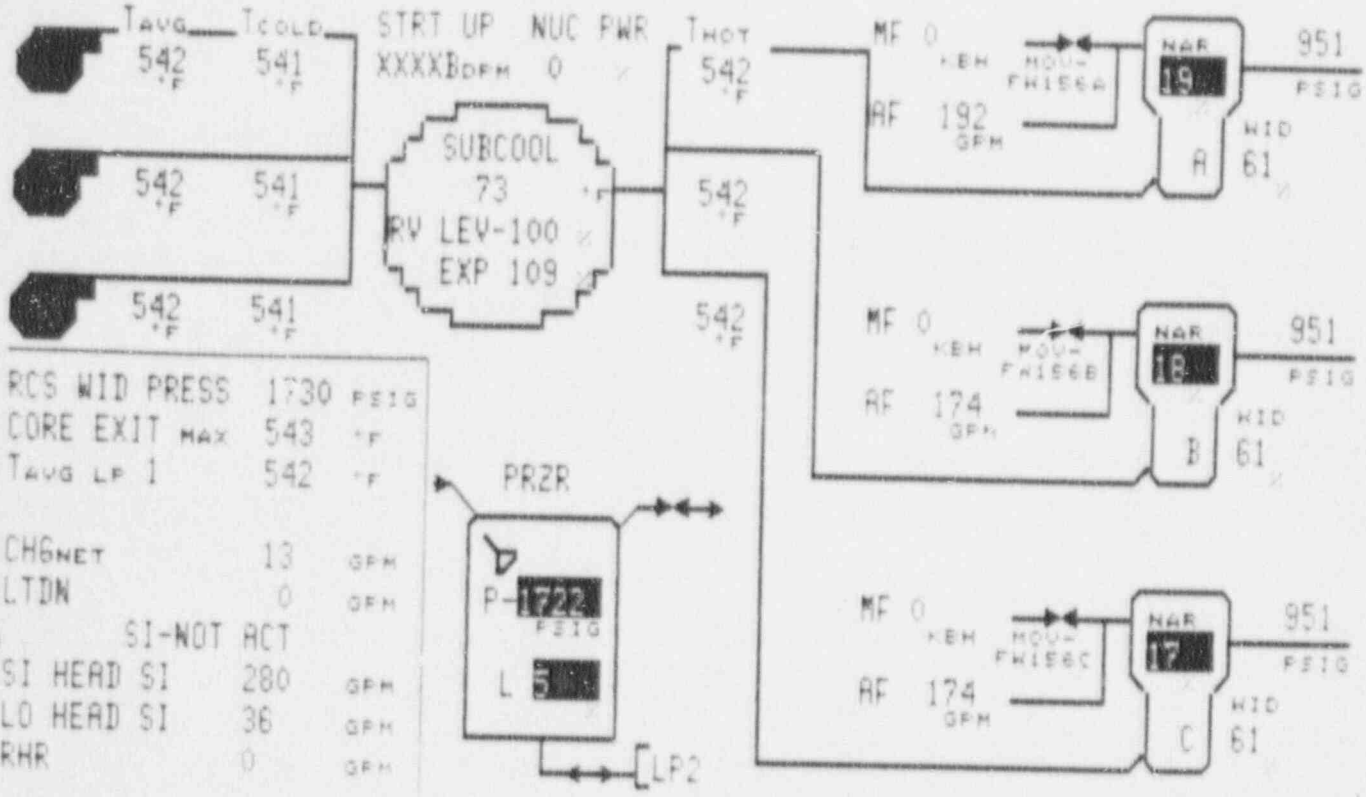

CONTAINMENT				ELECTRICAL			
Press. (PSIA)	14.72	Temp. (F)	109.1	SSST 1A	OK	SSST 1B	OK
RHR	NO	Sump (In)	2.1	AE	OK	DF	OK
Quench Spray	NO	Recirc Spray	NO	8 N	OK	9 P	OK
HHSI	YES	CIA	NO	DG #1	OOS	DG #2	OOS
LHSI	NO	CIB	NO	Batteries	OK	Vital Buses	OK

Time 1300

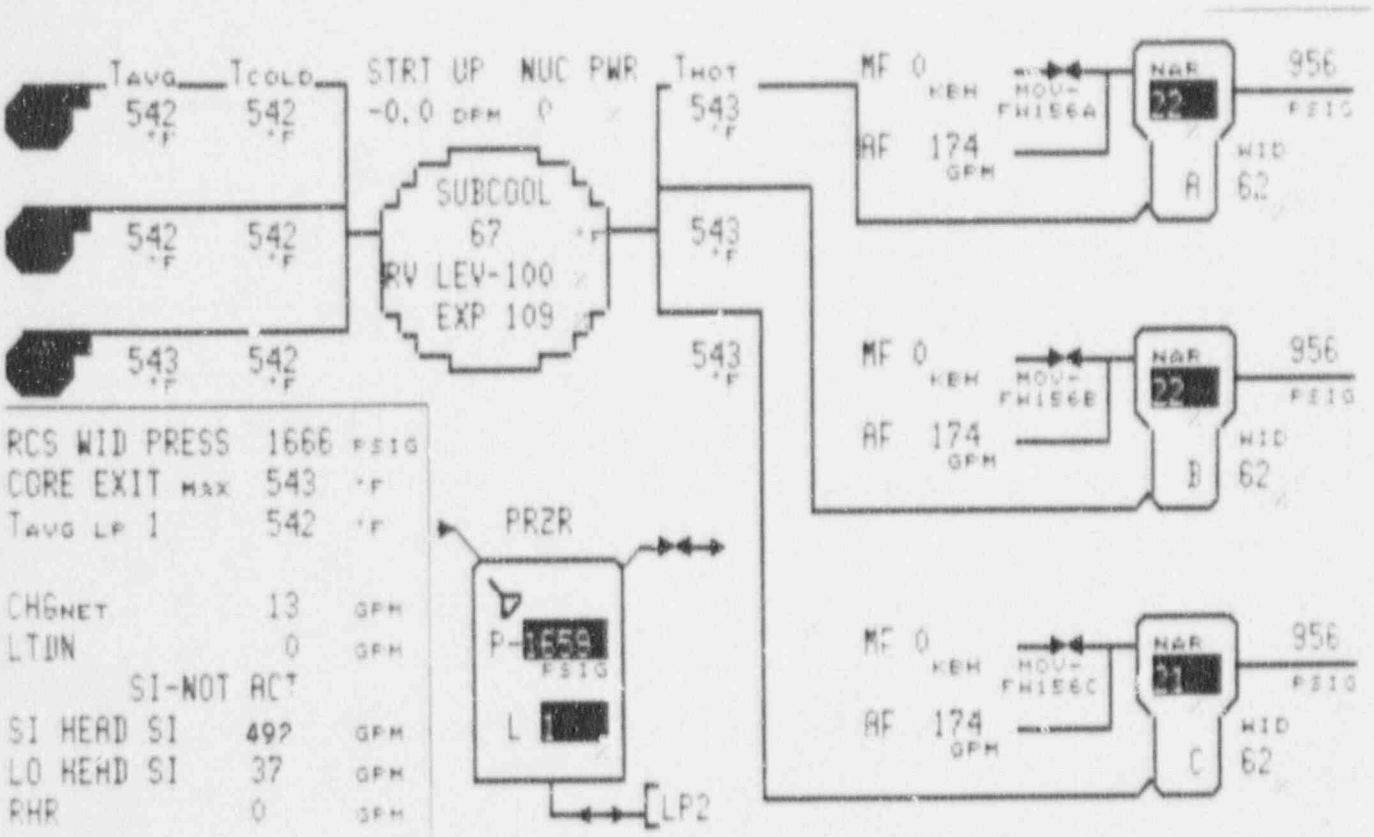

CONTAINMENT				ELECTRICAL			
Press. (PSIA)	14.99	Temp. (F)	110.0	SSST 1A	OK	SSST 1B	OK
RHR	NO	Sump (In)	2.2	AE	OK	DF	OK
Quench Spray	NO	Recirc Spray	NO	8 N	OK	9 P	OK
HHSI	YES	CIA	NO	DG #1	OOS	DG #2	OOS
LHSI	NO	CIB	NO	Batteries	OK	Vital Buses	OK

Time 1303

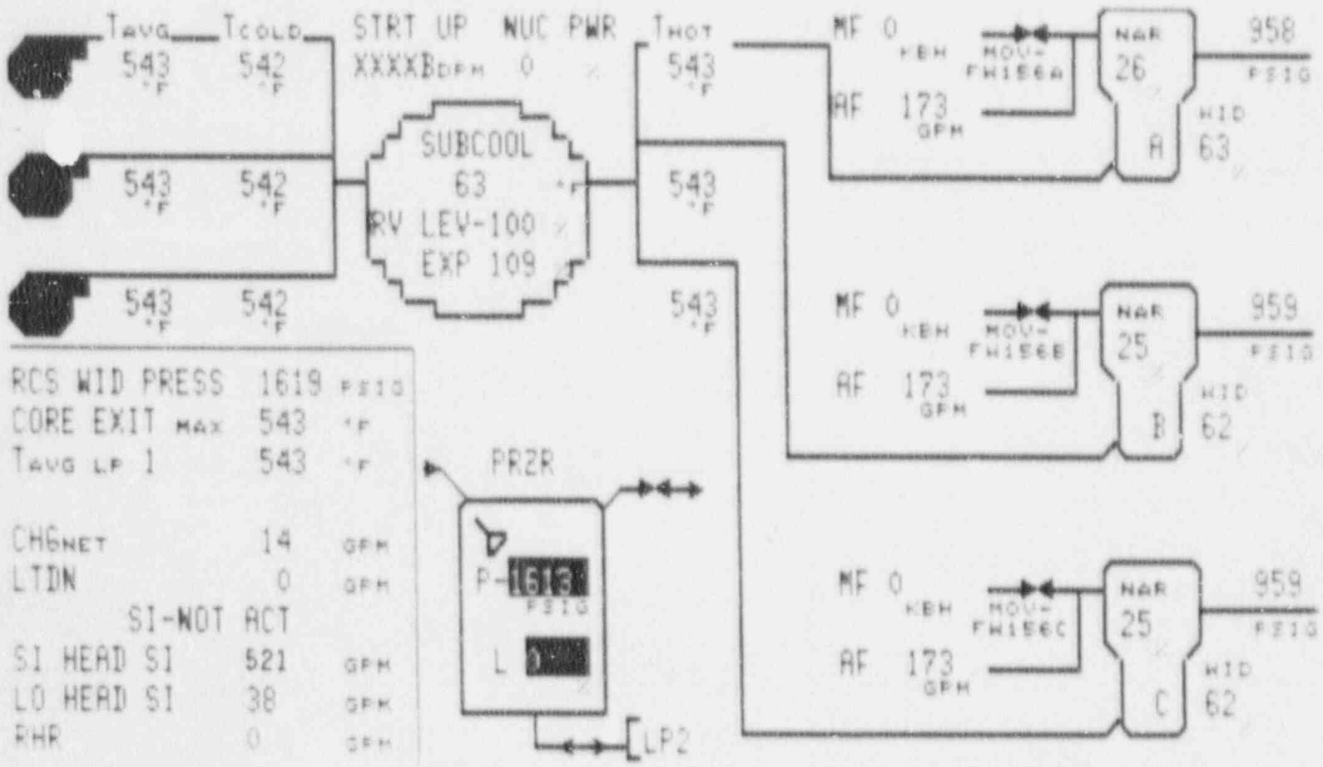

CONTAINMENT				ELECTRICAL			
Press. (PSIA)	15.01	Temp. (F)	110.9	SSST 1A	OK	SSST 1B	OK
RHR	NO	Sump (In)	2.3	AE	OK	DF	OK
Quench Spray	NO	Recirc Spray	NO	8 N	OK	9 P	OK
HHSI	YES	CIA	NO	DG #1	OOS	DG #2	OOS
LHSI	NO	CIB	NO	Batteries	OK	Vital Buses	OK

Time 1306

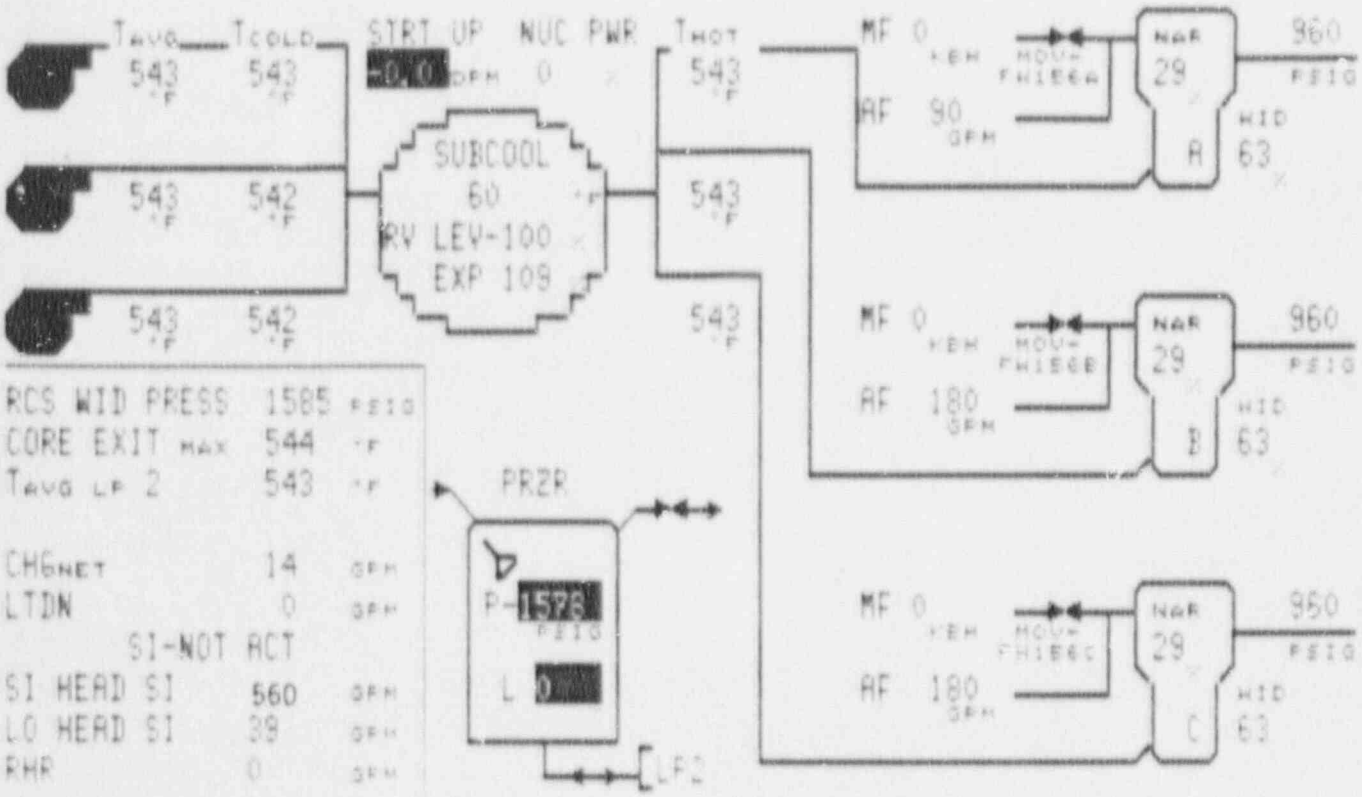

CONTAINMENT				ELECTRICAL			
Press. (PSIA)	15.03	Temp. (F)	111.7	SSST 1A	OK	SSST 1B	OK
RHR	NO	Sump (In)	2.4	AE	OK	DF	OK
Quench Spray	NO	Recirc Spray	NO	8 N	OK	9 P	OK
HHSI	YES	CIA	NO	DG #1	OOS	DG #2	OOS
LHSI	NO	CIB	NO	Batteries	OK	Vital Buser	OK

Time 1309

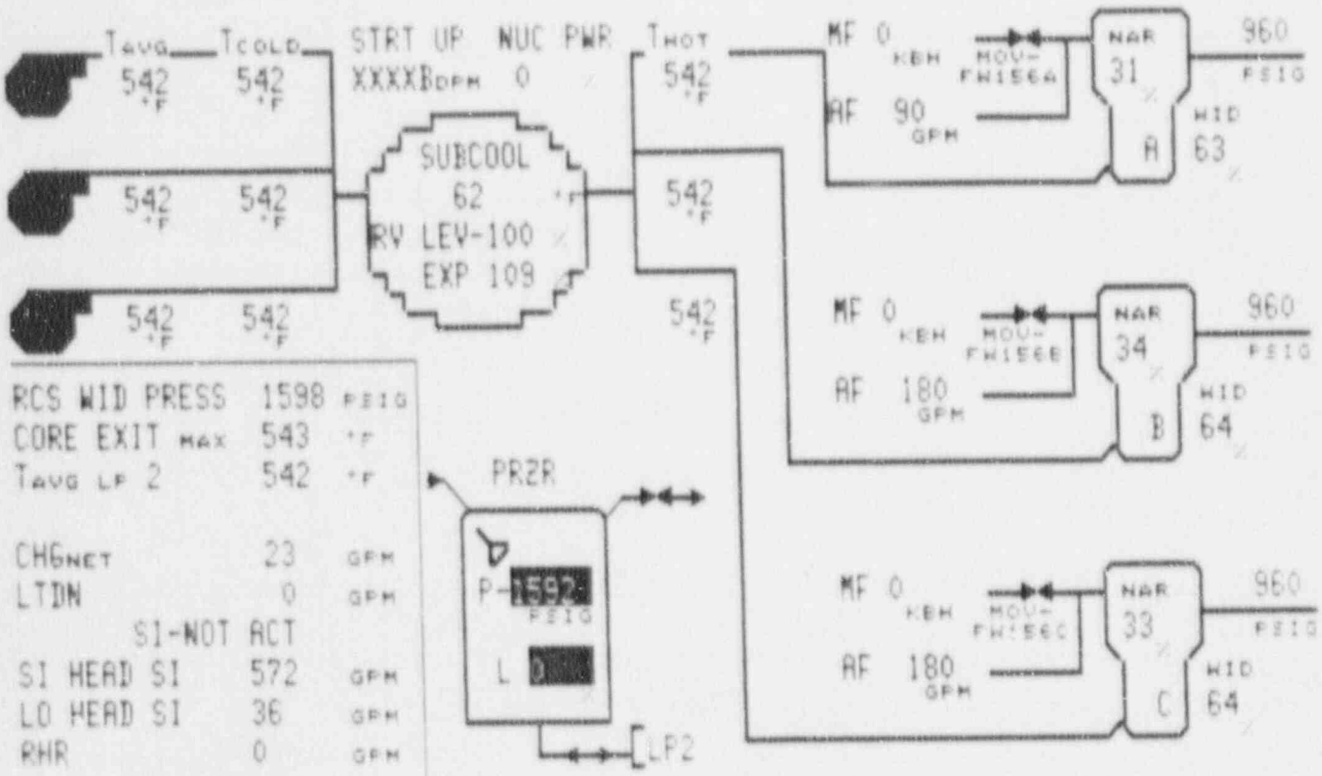

CONTAINMENT				ELECTRICAL			
Press. (PSIA)	15.04	Temp. (F)	112.6	SSST 1A	OK	SSST 1B	OK
RHR	NO	Sump (In)	2.6	AE	OK	DF	OK
Quench Spray	NO	Recirc Spray	NO	8 N	OK	9 P	OK
HHSI	YES	CIA	NO	DG #1	OOS	DG #2	OOS
LHSI	NO	CIB	NO	Batteries	OK	Vital Buses	OK

Time 1312

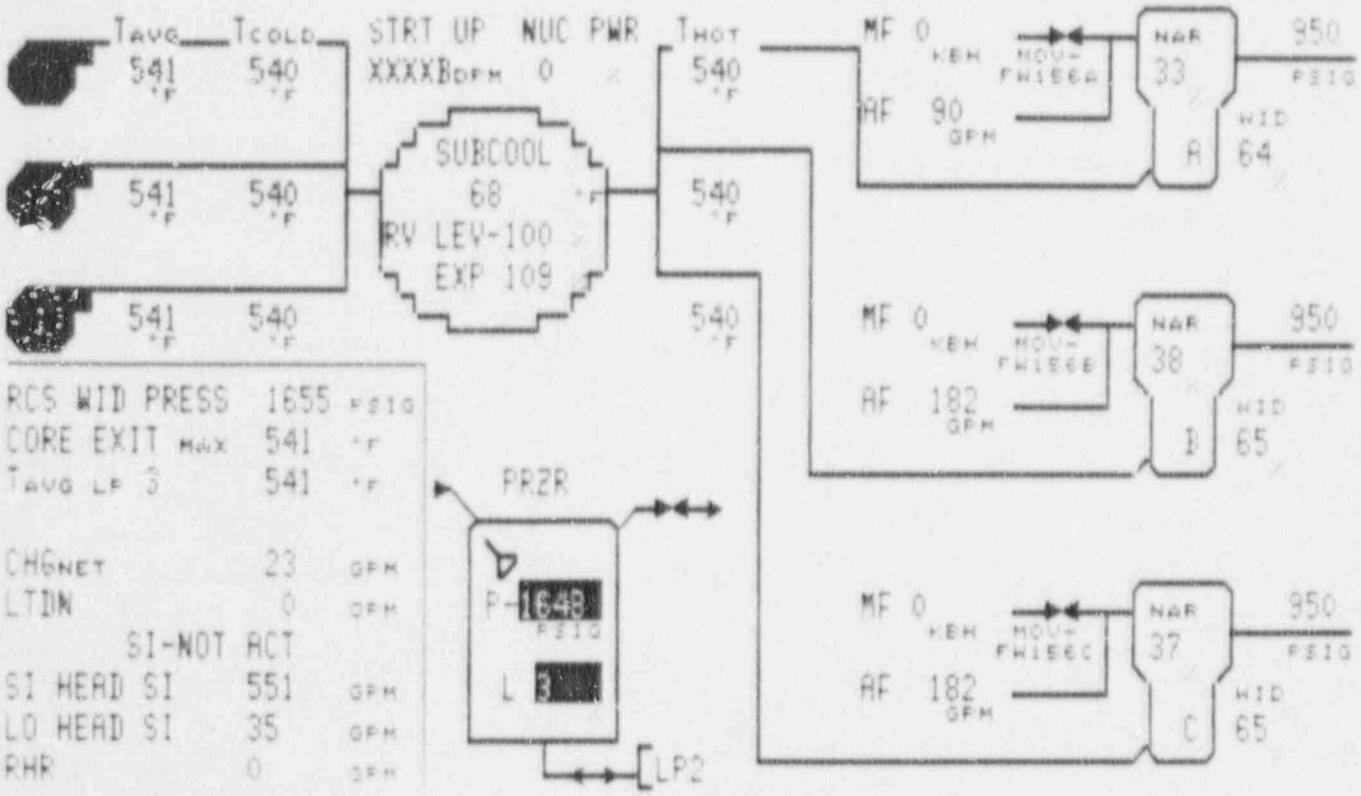

CONTAINMENT				ELECTRICAL			
Press. (PSIA)	15.05	Temp. (F)	113.5	SSST 1A	OK	SSST 1B	OK
RHR	NO	Sump (In)	2.7	AE	OK	DF	OK
Quench Spray	NO	Recirc Spray	NO	8 N	OK	9 P	OK
HHSI	YES	CIA	NO	DG #1	OOS	DG #2	OOS
LHSI	NO	CIB	NO	Batteries	OK	Vital Buses	OK

Time 1315

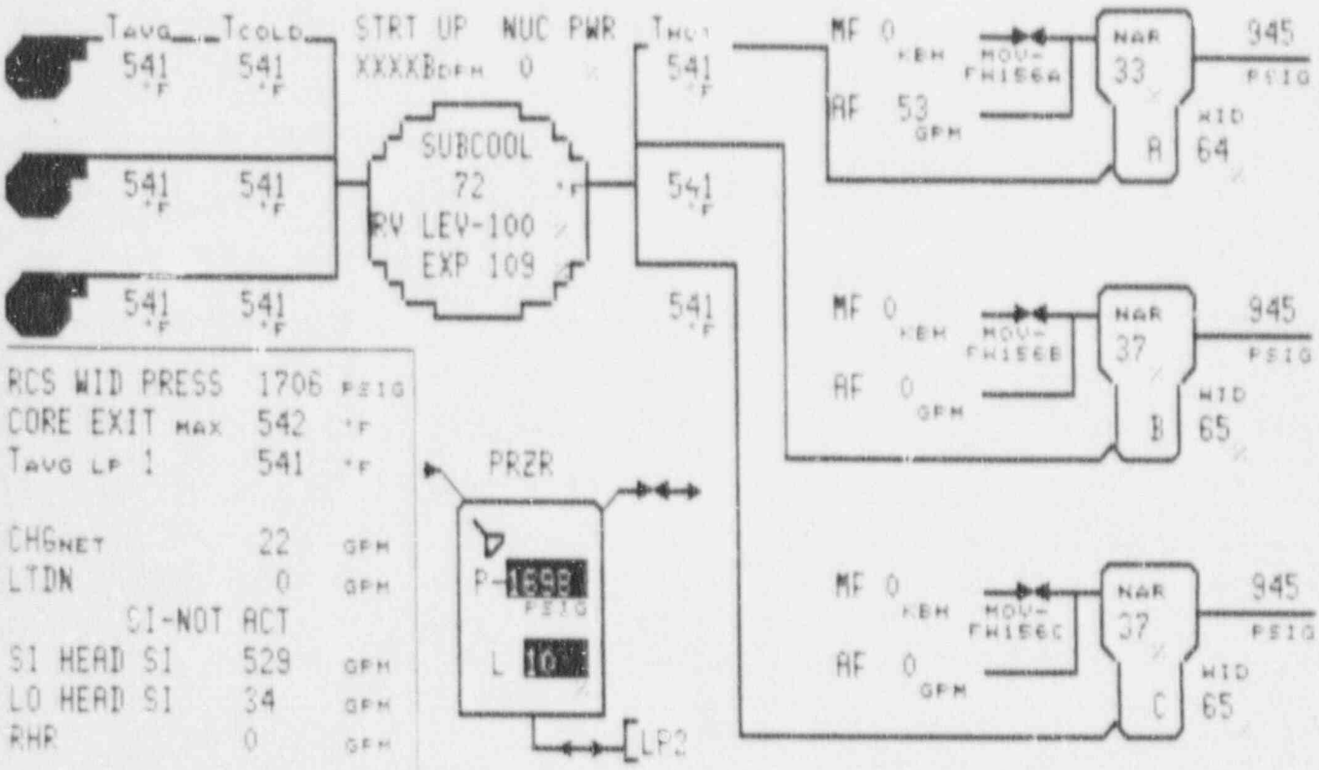

CONTAINMENT				ELECTRICAL			
Press. (PSIA)	15.07	Temp. (F)	114.2	SSST 1A	OK	SSST 1B	OK
RHR	NO	Sump (In)	2.8	AE	OK	DF	OK
Quench Spray	NO	Recirc Spray	NO	8 N	OK	9 P	OK
HHSI	YES	CIA	NO	DG #1	OOS	DG #2	OOS
LHSI	NO	CIB	NO	Batteries	OK	Vital Buses	OK

Time 1318

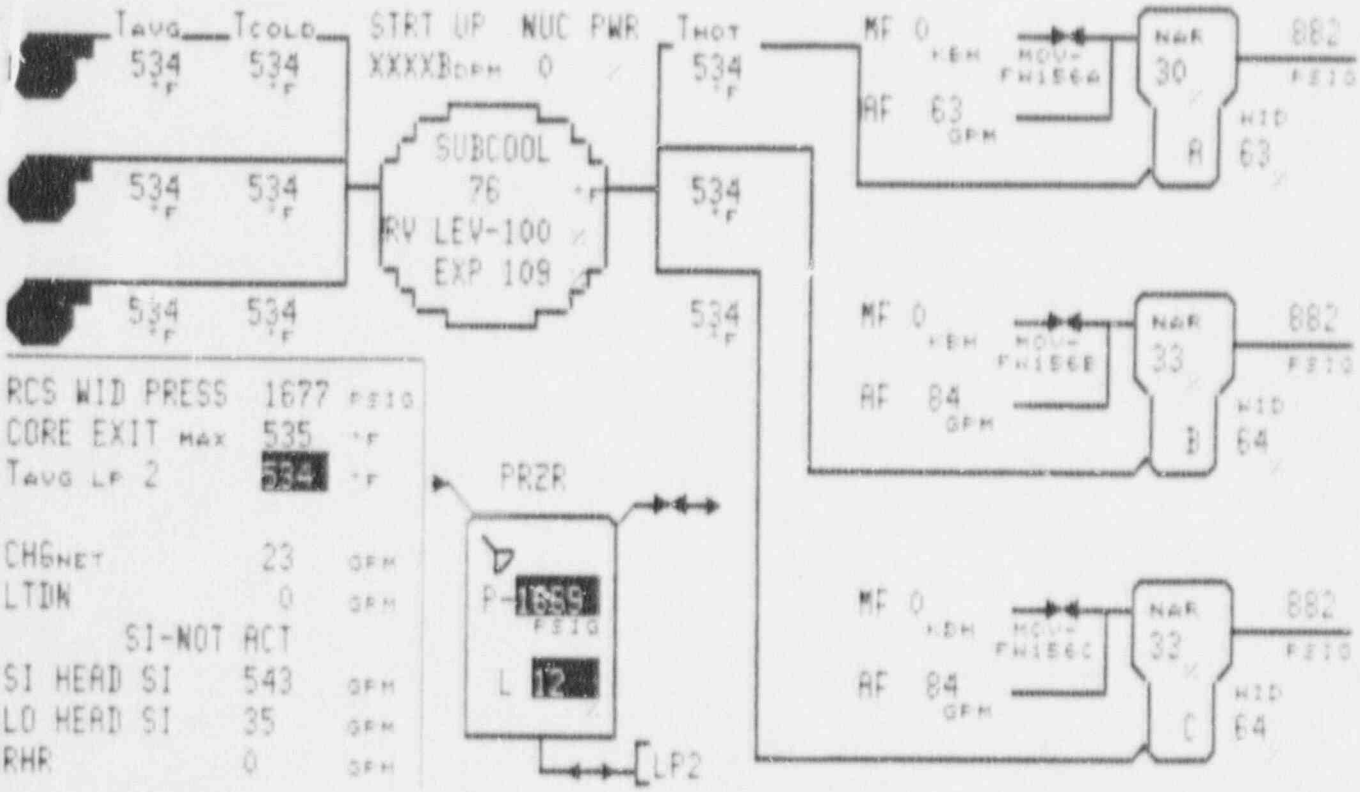

CONTAINMENT				ELECTRICAL			
Press. (PSIA)	15.08	Temp. (F)	114.8	SSST 1A	OK	SSST 1B	OK
RHR	NO	Sump (In)	3.0	AE	OK	DF	OK
Quench Spray	NO	Recirc Spray	NO	8 N	OK	9 P	OK
HHSI	YES	CIA	NO	DG #1	OOS	DG #2	OOS
LHSI	NO	CIB	NO	Batteries	OK	Vital Buses	OK

Time 1321

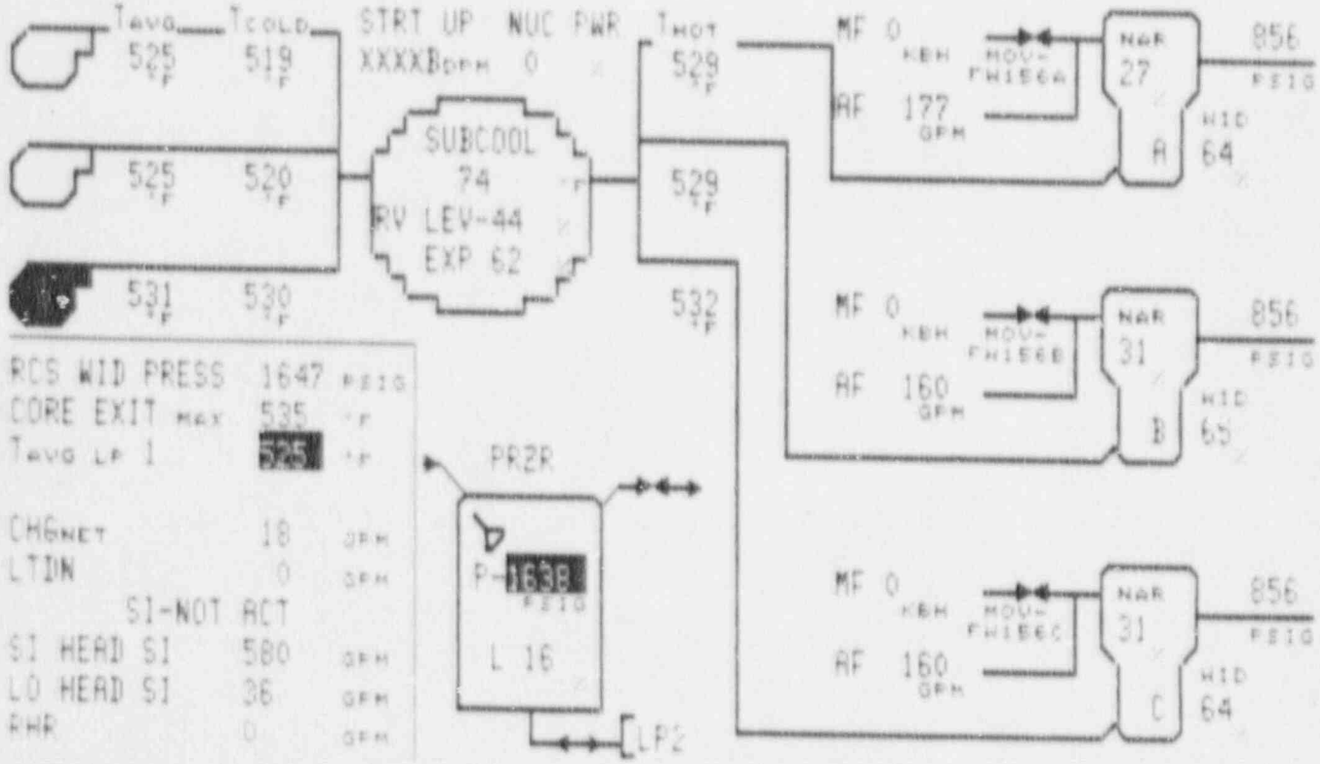

CONTAINMENT				ELECTRICAL			
Press. (PSIA)	15.09	Temp. (F)	115.5	SSST 1A	OK	SSST 1B	OK
RHR	NO	Sump (In)	3.1	AE	OK	DF	OK
Quench Spray	NO	Recirc Spray	NO	8 N	OK	9 F	OK
HHSI	YES	CIA	NO	DG #1	OOS	DG #2	OOS
LHSI	NO	CIB	NO	Batteries	OK	Vital Buses	OK

Time 1324

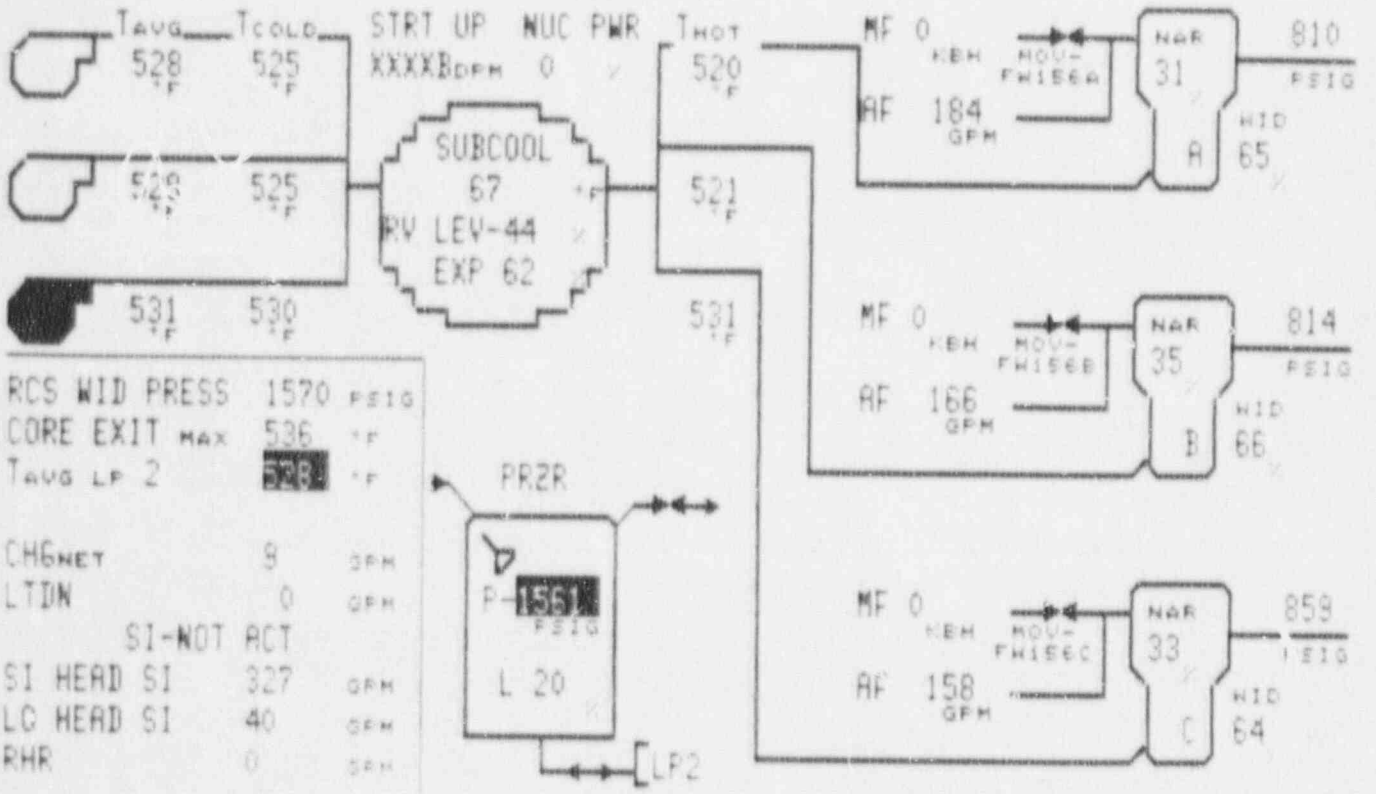

CONTAINMENT				ELECTRICAL			
Press. (PSIA)	15.10	Temp. (F)	116.1	SSST 1A	OK	SSST 1B	OK
RHR	NO	Sump (In)	3.2	AE	OK	DF	OK
Quench Spray	NO	Recirc Spray	NO	8 N	OK	9 P	OK
HHSI	YES	CIA	NO	DG #1	OOS	DG #2	OOS
LHSI	NO	CIB	NO	Batteries	OK	Vital Buses	OK

Time 1327

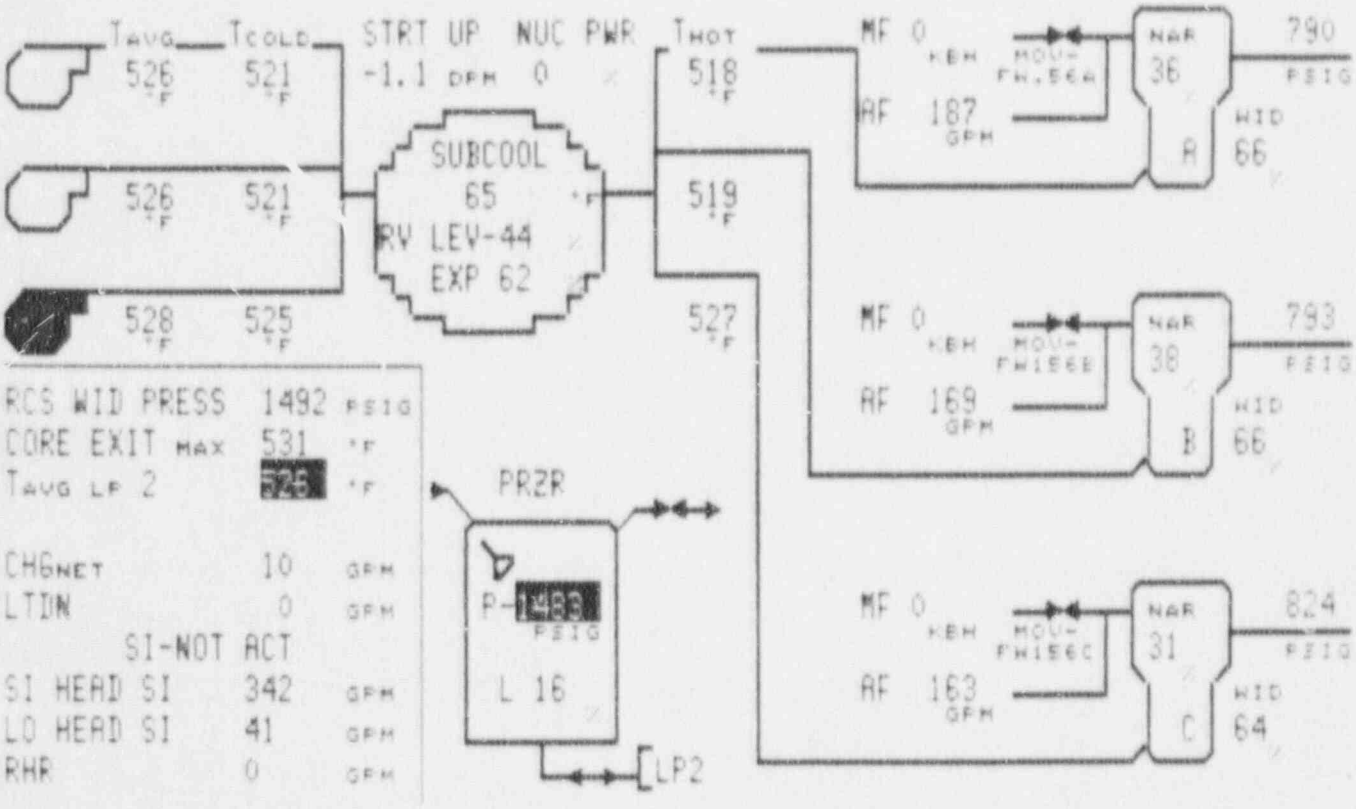

CONTAINMENT				ELECTRICAL			
Press. (PSIA)	15.11	Temp. (F)	116.8	SSST 1A	OK	SSST 1B	OK
RHR	NO	Sump (In)	3.3	AE	OK	DF	OK
Quench Spray	NO	Recirc Spray	NO	8 N	OK	9 P	OK
HHSI	YES	CIA	NO	DG #1	OOS	DG #2	OOS
LHSI	NO	CIB	NO	Batteries	OK	Vital Buses	OK

Time 1330

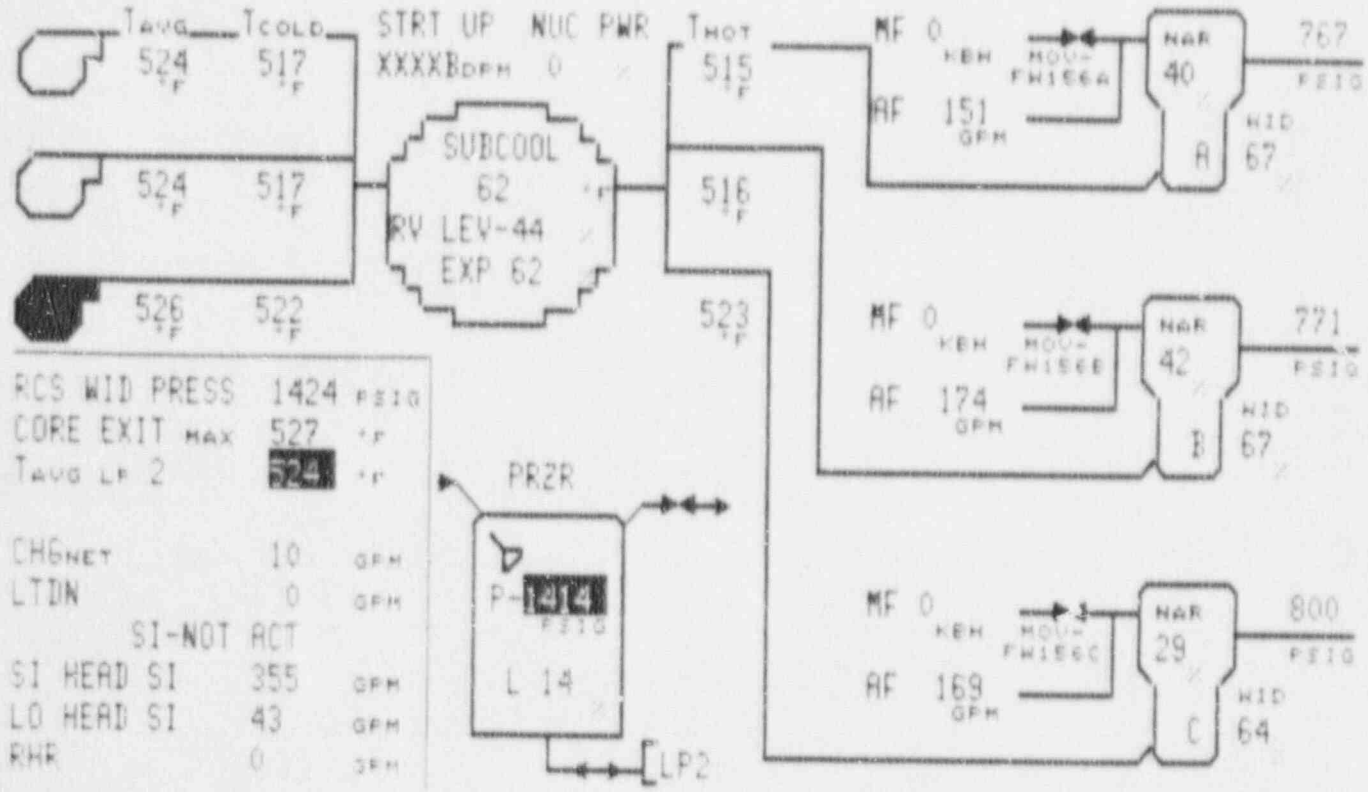

CONTAINMENT				ELECTRICAL			
Press. (PSIA)	15.11	Temp. (F)	117.2	SSST 1A	OK	SSST 1B	OK
RHR	NO	Sump (In)	3.4	AE	OK	DF	OK
Quench Spray	NO	Recirc Spray	NO	8 N	OK	9 P	OK
HHSI	YES	CIA	NO	DG #1	OOS	DG #2	OOS
LHSI	NO	CIB	NO	Batteries	OK	Vital Buses	OK

Time 1333

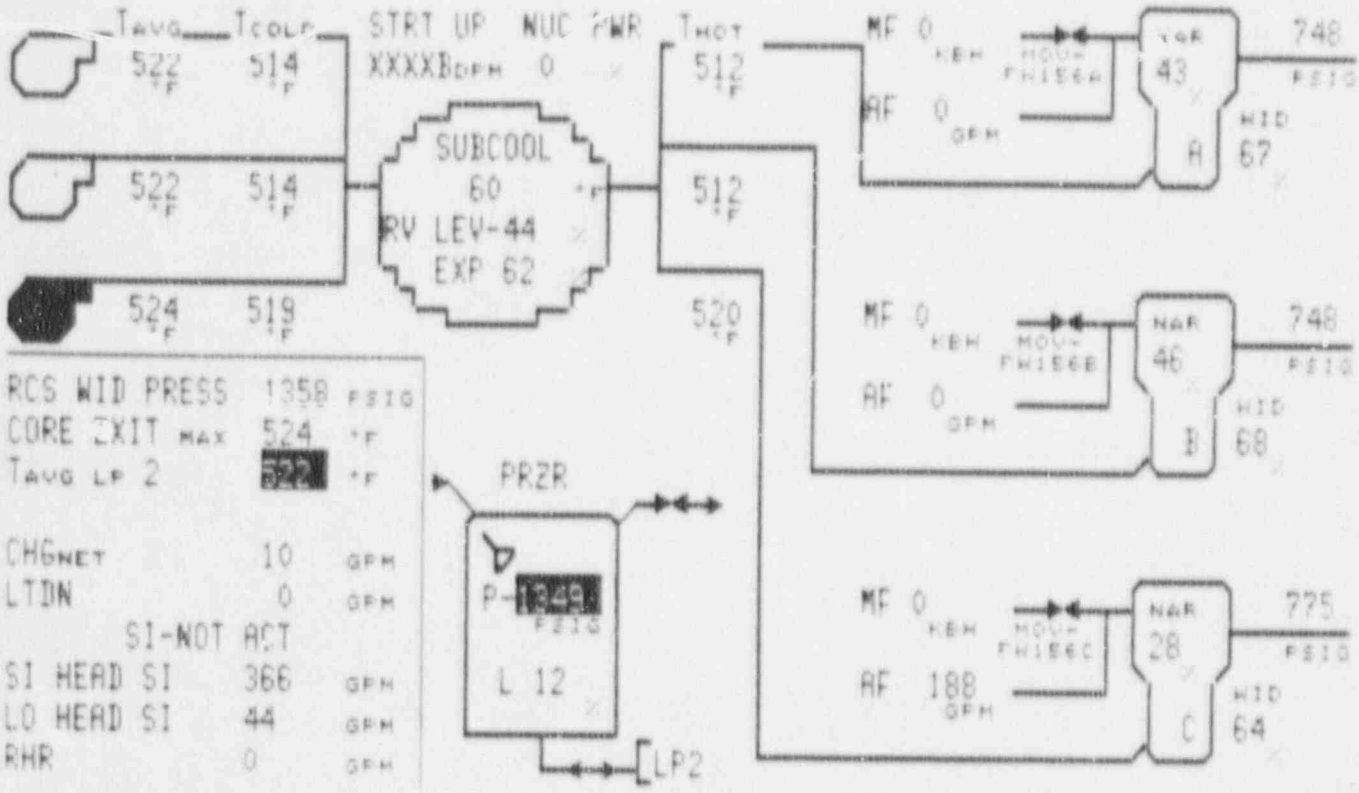

CONTAINMENT				ELECTRICAL			
Press. (PSIA)	15.12	Temp. (F)	117.7	SSST 1A	OK	SSST 1B	OK
RHR	NO	Sump (In)	3.6	AE	OK	DF	OK
Quench Spray	NO	Recirc Spray	NO	8 N	OK	9 P	OK
HHSI	YES	CIA	NO	DG #1	OOS	DG #2	OOS
LHSI	NO	CIB	NO	Batteries	OK	Vital Buses	OK

Time 1336

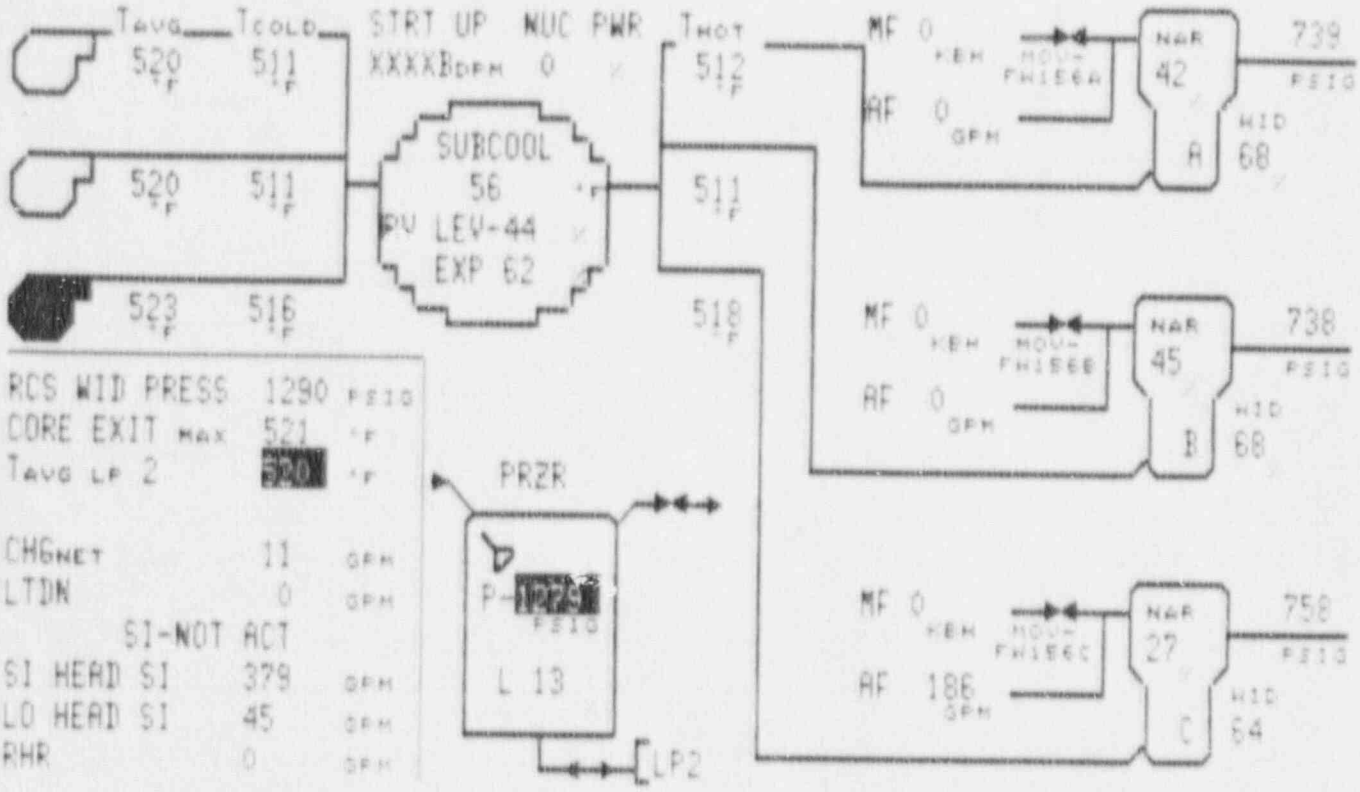

CONTAINMENT				ELECTRICAL			
Press. (PSIA)	15.12	Temp. (F)	118.1	SSST 1A	OK	SSST 1B	OK
RHR	NO	Sump (In)	3.7	AE	OK	DF	OK
Quench Spray	NO	Recirc Spray	NO	8 N	OK	9 P	OK
HHSI	YES	CIA	NO	DG #1	OOS	DG #2	OOS
LHSI	NO	CIB	NO	Batteries	OK	Vital Buses	OK

Time 1339

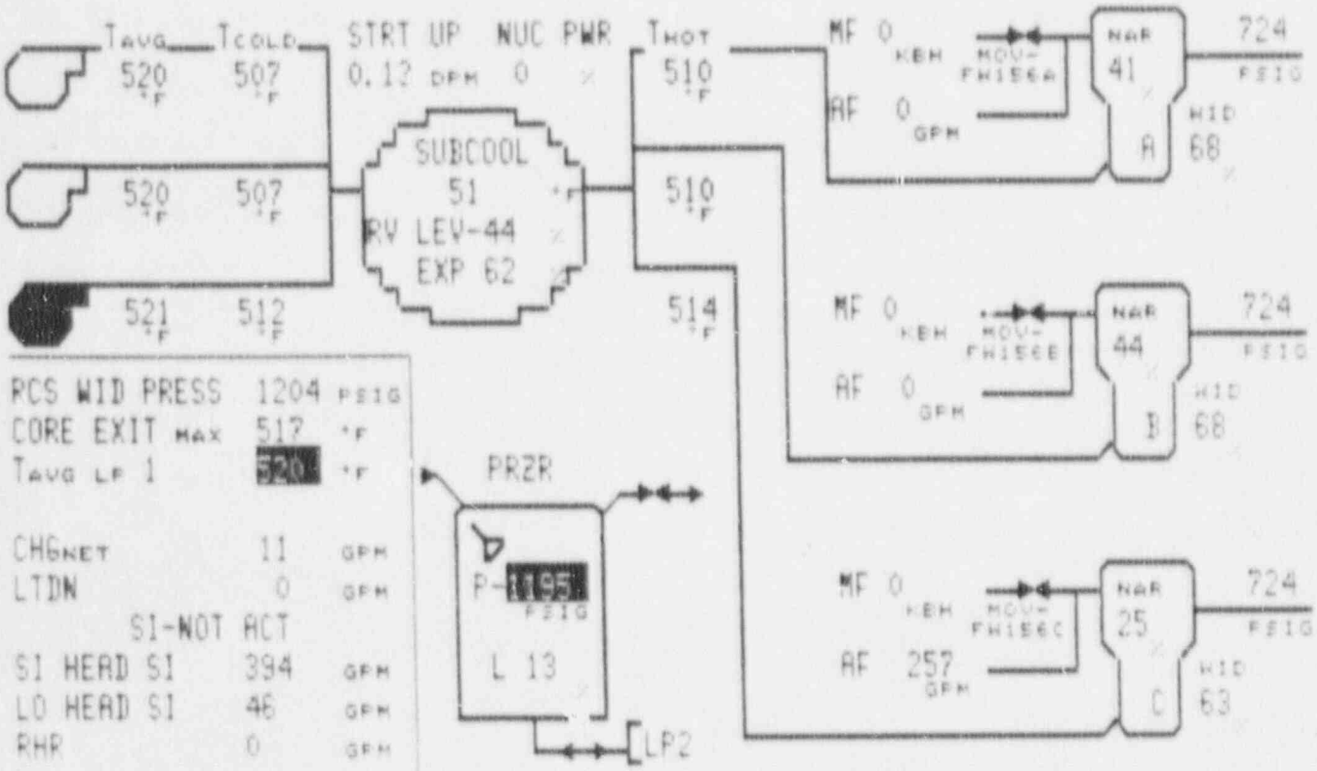

CONTAINMENT				ELECTRICAL			
Press. (PSIA)	15.13	Temp. (F)	118.6	SSST 1A	OK	SSST 1B	OK
RHR	NO	Sump (In)	3.8	AE	OK	DF	OK
Quench Spray	NO	Recirc Spray	NO	8 N	OK	9 P	OK
HHSI	YES	CIA	NO	DG #1	OOS	DG #2	OOS
LHSI	NO	CIB	NO	Batteries	OK	Vital Buses	OK

Time 1342

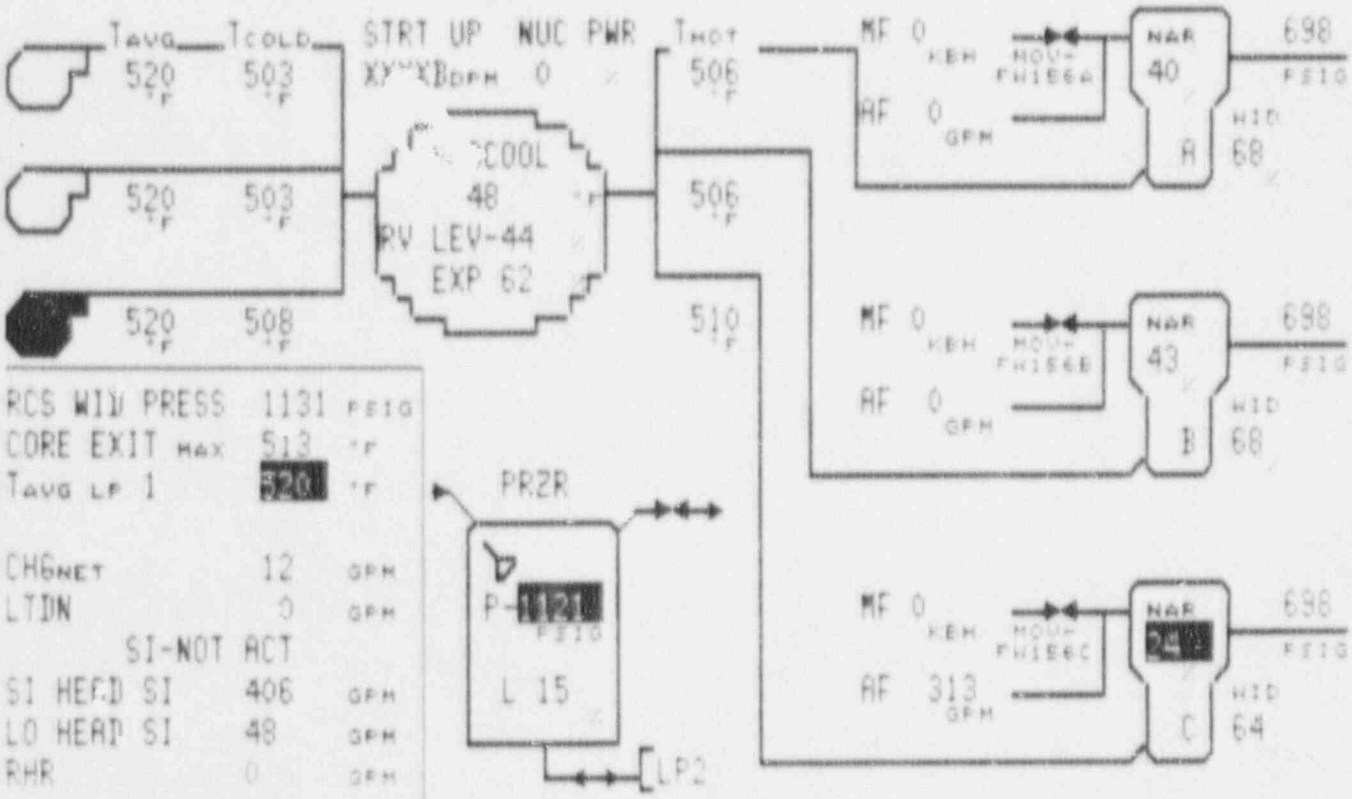

CONTAINMENT				ELECTRICAL			
Press. (PSIA)	15.14	Temp. (F)	119.0	SSST 1A	OK	SSST 1B	OK
RHR	NO	Sump (In)	3.9	AE	OK	DF	OK
Quench Spray	NO	Recirc Spray	NO	8 N	OK	9 P	OK
HHSI	YES	CIA	NO	DG #1	OOS	DG #2	OOS
LHSI	NO	CIB	NO	Batteries	OK	Vital Buses	OK

Time 1345

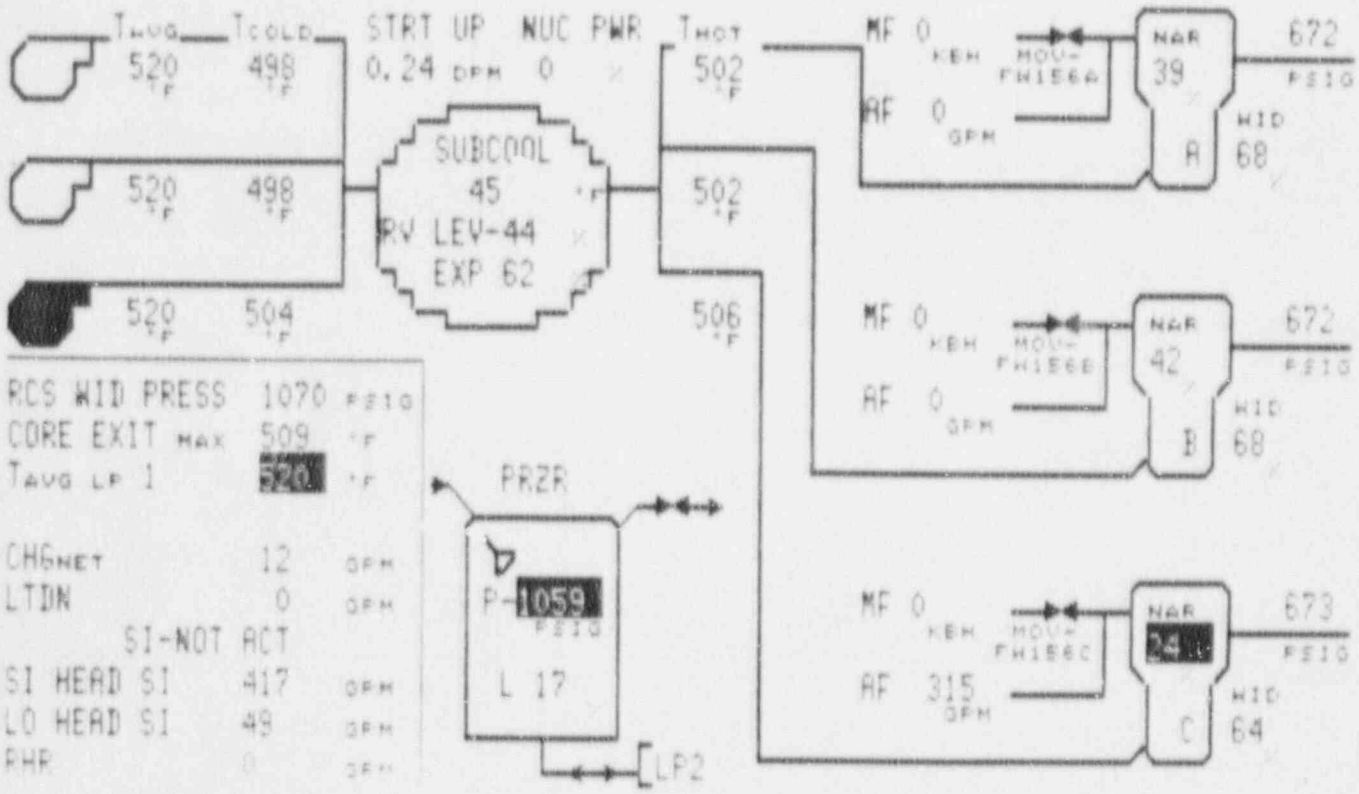

CONTAINMENT				ELECTRICAL			
Press. (PSIA)	15.14	Temp. (F)	119.2	SSST 1A	OK	SSST 1B	OK
RHR	NO	Sump (In)	4.0	AE	OK	DF	OK
Quench Spray	NO	Recirc Spray	NO	8 N	OK	9 P	OK
HHSI	YES	CIA	NO	DG #1	OOS	DG #2	OOS
LHSI	NO	CIB	NO	Batteries	OK	Vital Buses	OK

Time 1348

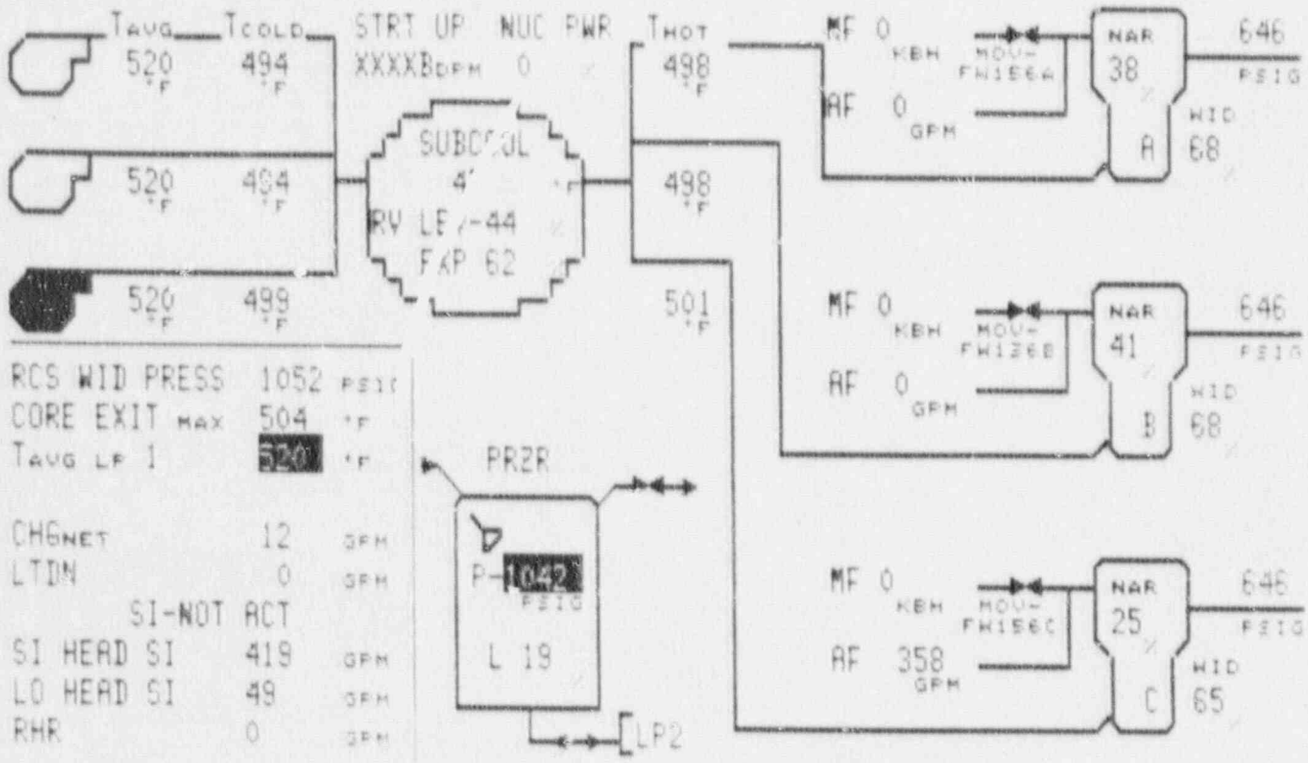

CONTAINMENT

Press. (PSIA)	15.15	Temp. (F)	119.4
RHR	NO	Sump (In)	4.1
Quench Spray	NO	Recirc Spray	NO
HHSI	YES	CIA	NO
LHSI	NO	CIB	NO

ELECTRICAL

SSST 1A	OK	SSST 1B	OK
AE	OK	DF	OK
8 N	OK	9 P	OK
DG #1	OOS	DG #2	OOS
Batteries	OK	Vital Buses	OK

Time 1351

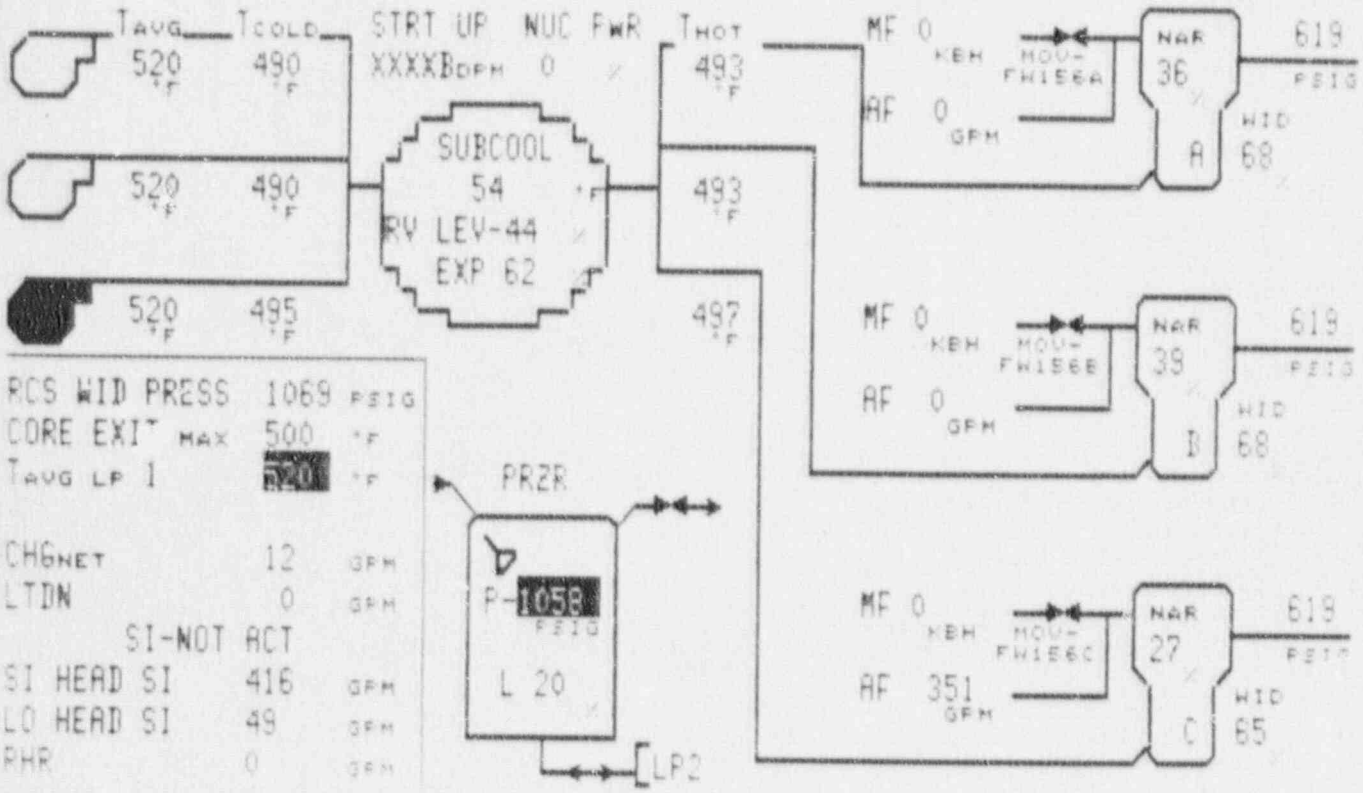

CONTAINMENT				ELECTRICAL			
Press. (PSIA)	15.16	Temp. (F)	119.7	SSST 1A	OK	SSST 1B	OK
RHR	NO	Sump (In)	4.2	AE	OK	DF	OK
Quench Spray	NO	Recirc Spray	NO	8 N	OK	9 P	OK
HHSI	YES	CIA	NO	DG #1	OOS	DG #2	OOS
LHSI	NO	CIB	NO	Batteries	OK	Vital Buses	OK

Time 1354

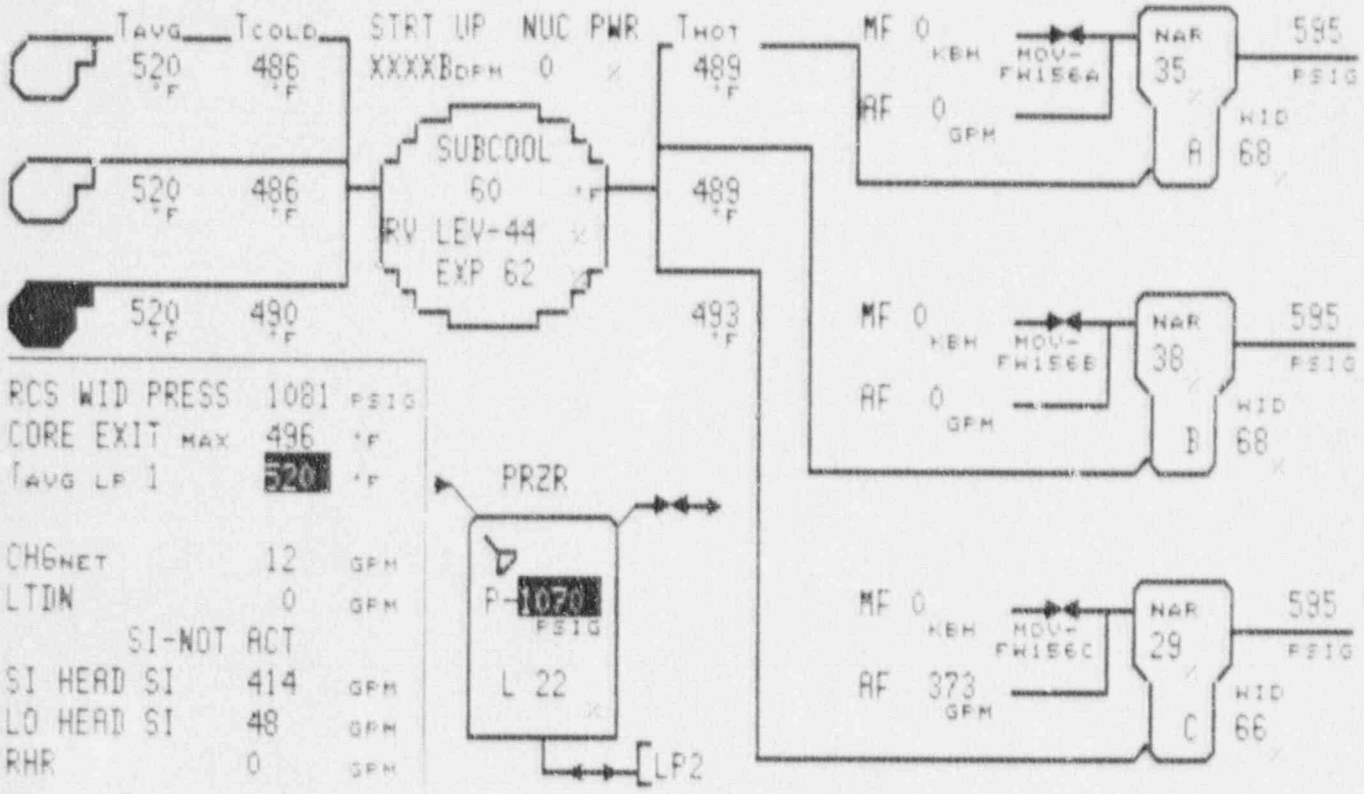

CONTAINMENT				ELECTRICAL			
Press. (PSIA)	15.16	Temp. (F)	119.9	SSST 1A	OK	SSST 1B	OK
RHR	NO	Sump (In)	4.3	AE	OK	DF	OK
Quench Spray	NO	Recirc Spray	NO	8 N	OK	9 P	OK
HHSI	YES	CIA	NO	DG #1	AVAIL	DG #2	OOS
LHSI	NO	CIB	NO	Batteries	OK	Vital Buses	OK

Time 1357

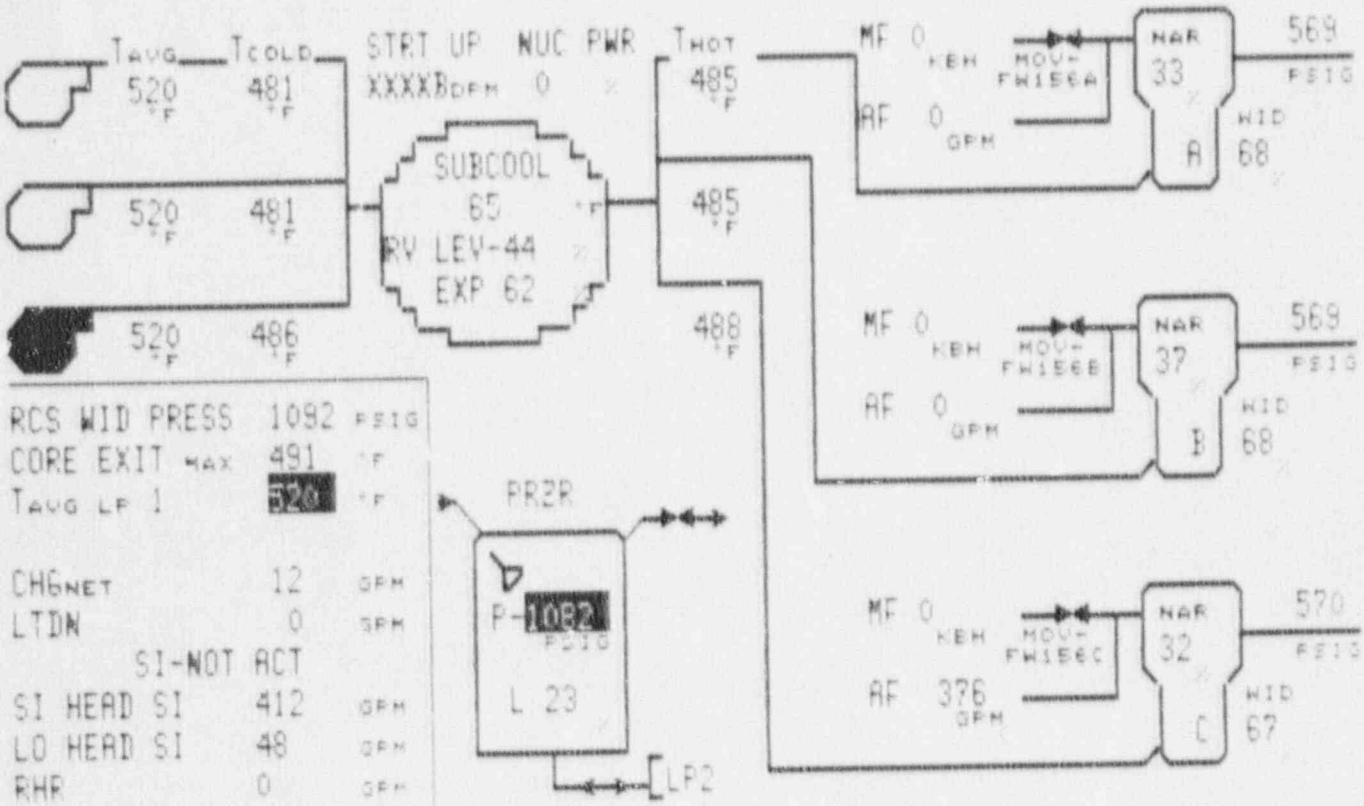

CONTAINMENT				ELECTRICAL			
Press. (PSIA)	15.17	Temp. (F)	120.1	SSST 1A	OK	SSST 1B	OK
RHR	NO	Sump (In)	4.3	AE	OK	DF	OK
Quench Spray	NO	Recirc Spray	NO	8 N	OK	9 P	OK
RHSI	YES	CIA	NO	DG #1	AVAIL	DG #2	OOS
LHSI	NO	CIB	NO	Batteries	OK	Vital Buses	OK

Time 1400

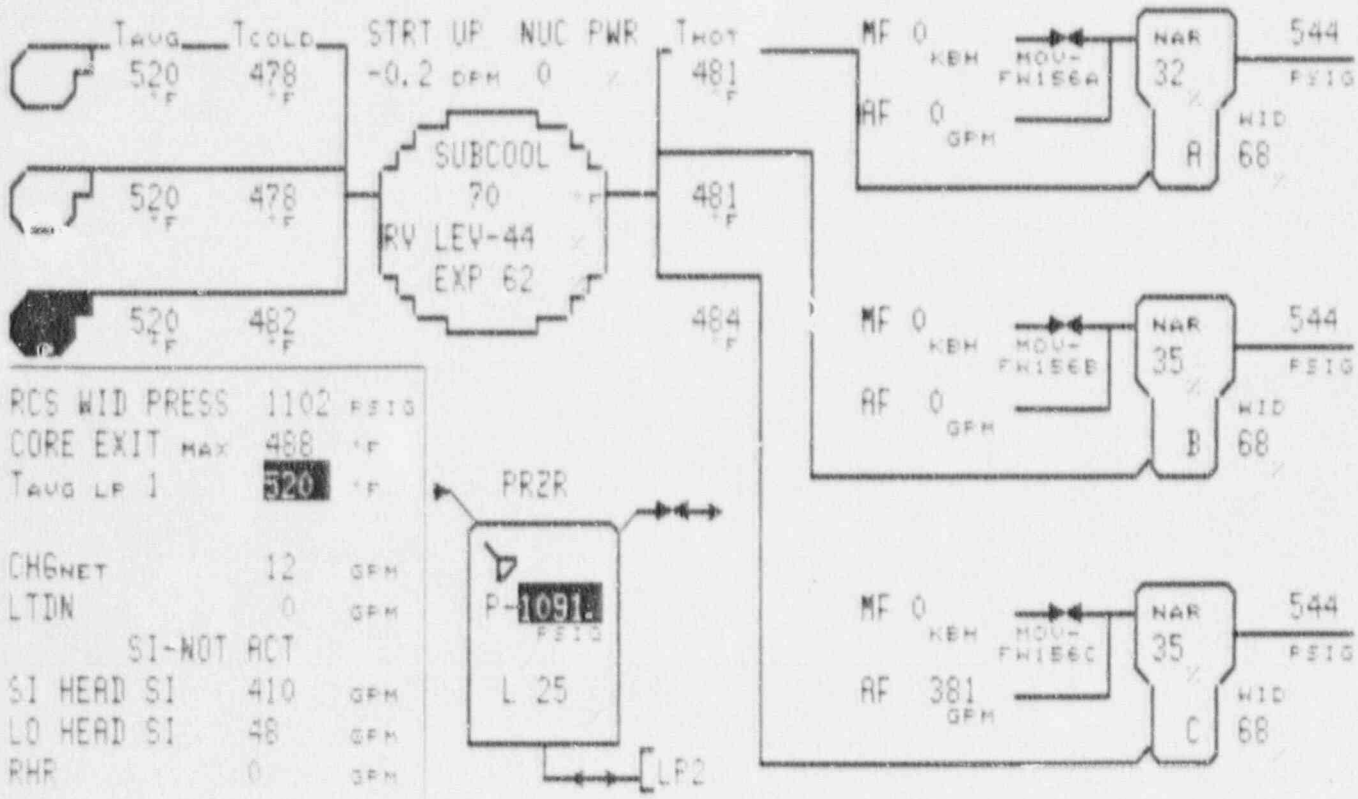

CONTAINMENT				ELECTRICAL			
Press. (PSIA)	15.17	Temp. (F)	120.2	SSST 1A	OK	SSST 1B	OK
RHR	NO	Sump (In)	4.4	AE	OK	DF	OK
Quench Spray	NO	Recirc Spray	NO	8 N	OK	9 P	OK
HHSI	YES	CIA	NO	DG #1	AVAIL	DG #2	OOS
LHSI	NO	CIB	NO	Batteries	OK	Vital Buses	OK

Time 1403

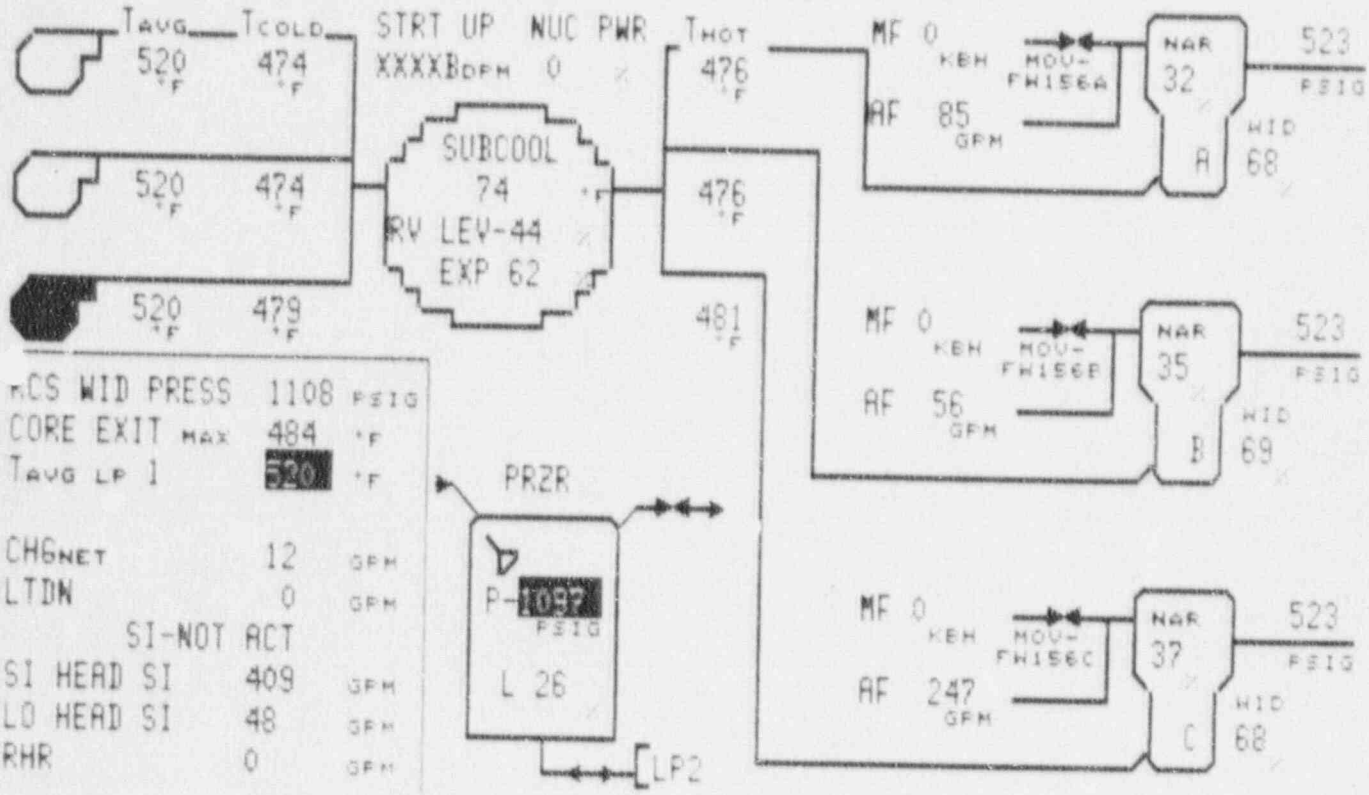

CONTAINMENT				ELECTRICAL			
Press. (PSIA)	15.18	Temp. (F)	120.3	SSST 1A	OK	SSST 1B	OK
RHR	NO	Sump (In)	4.4	AE	OK	DF	OK
Quench Spray	NO	Recirc Spray	NO	8 N	OK	9 P	OK
HHSI	YES	CIA	NO	DG #1	AVAIL	DG #2	OOS
LHSI	NO	CIB	NO	Batteries	OK	Vital Buses	OK

Time 1406

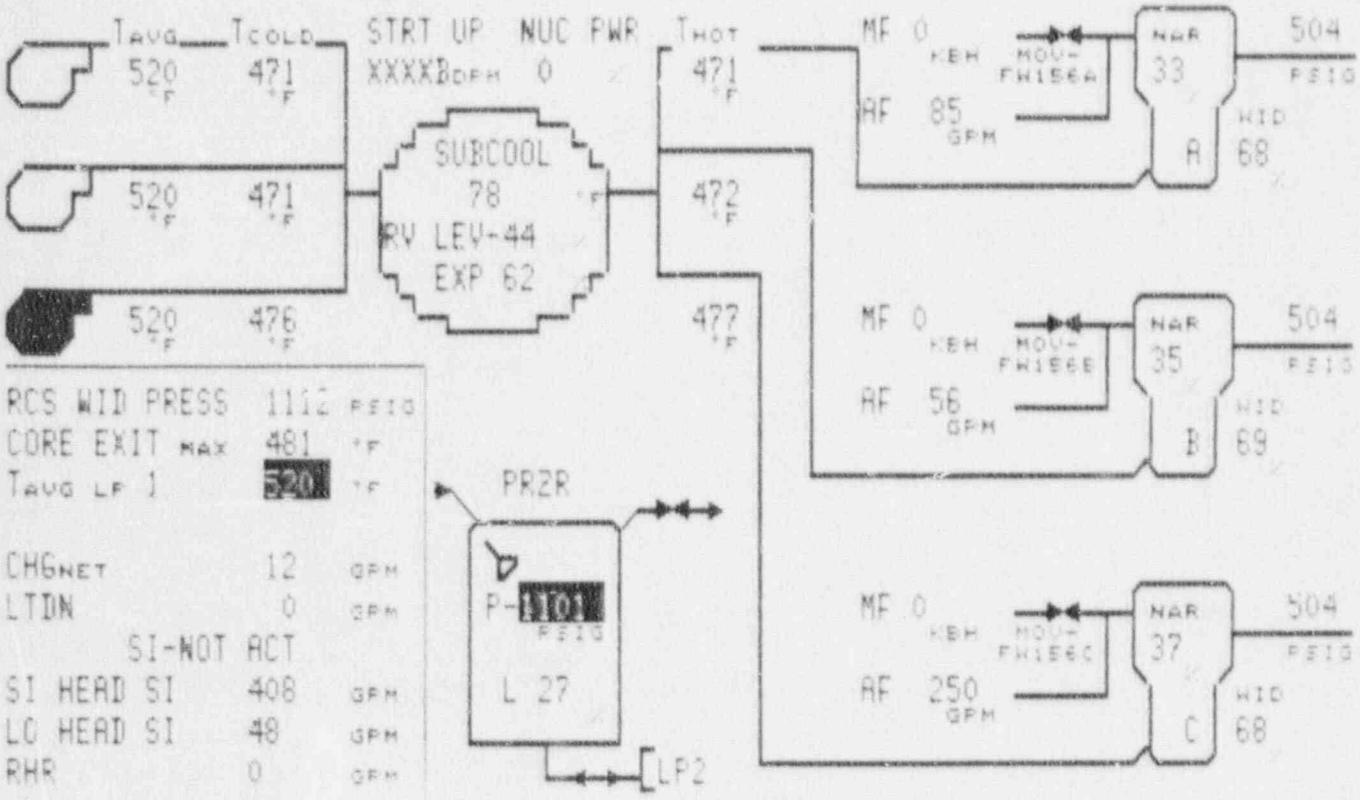

CONTAINMENT				ELECTRICAL			
Press. (PSIA)	15.18	Temp. (F)	120.4	SSST 1A	OK	SSST 1B	OK
RHR	NO	Sump (In)	4.5	AE	OK	DF	OK
Quench Spray	NO	Recirc Spray	NO	8 N	OK	9 P	OK
HHSI	YES	CIA	NO	DG #1	AVAIL	DG #2	OOS
LHSI	NO	CIB	NO	Batteries	OK	Vital Buses	OK

Time 1409

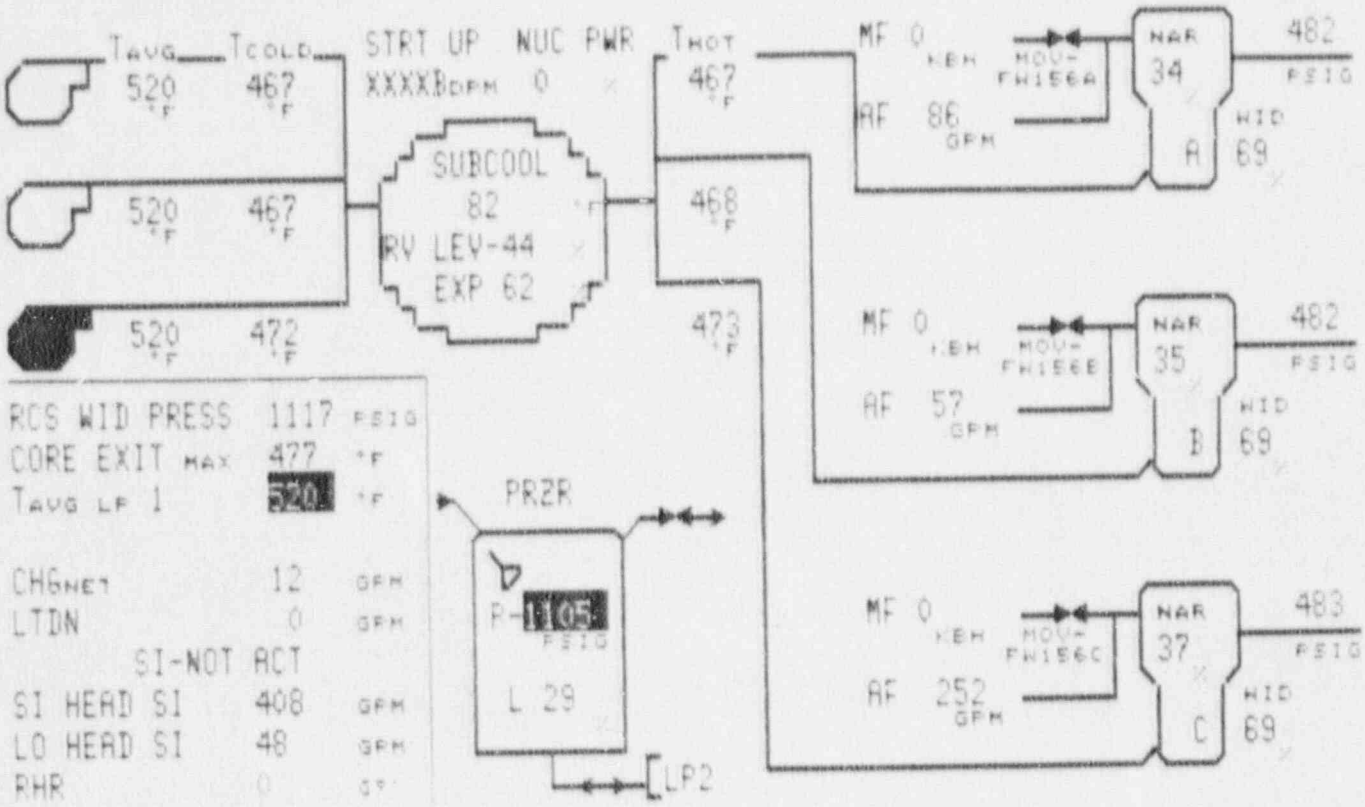

CONTAINMENT				ELECTRICAL			
Press. (PSIA)	15.19	Temp. (F)	120.5	SSST 1A	OK	SSST 1B	OK
RHR	NO	Sump (In)	4.5	AE	OK	DF	OK
Quench Spray	NO	Recirc Spray	NO	8 N	OK	9 P	OK
HHSI	YES	CIA	NO	DG #1	AVAIL	DG #2	OOS
LHSI	NO	CIB	NO	Batteries	OK	Vital Buses	OK

Time 1412

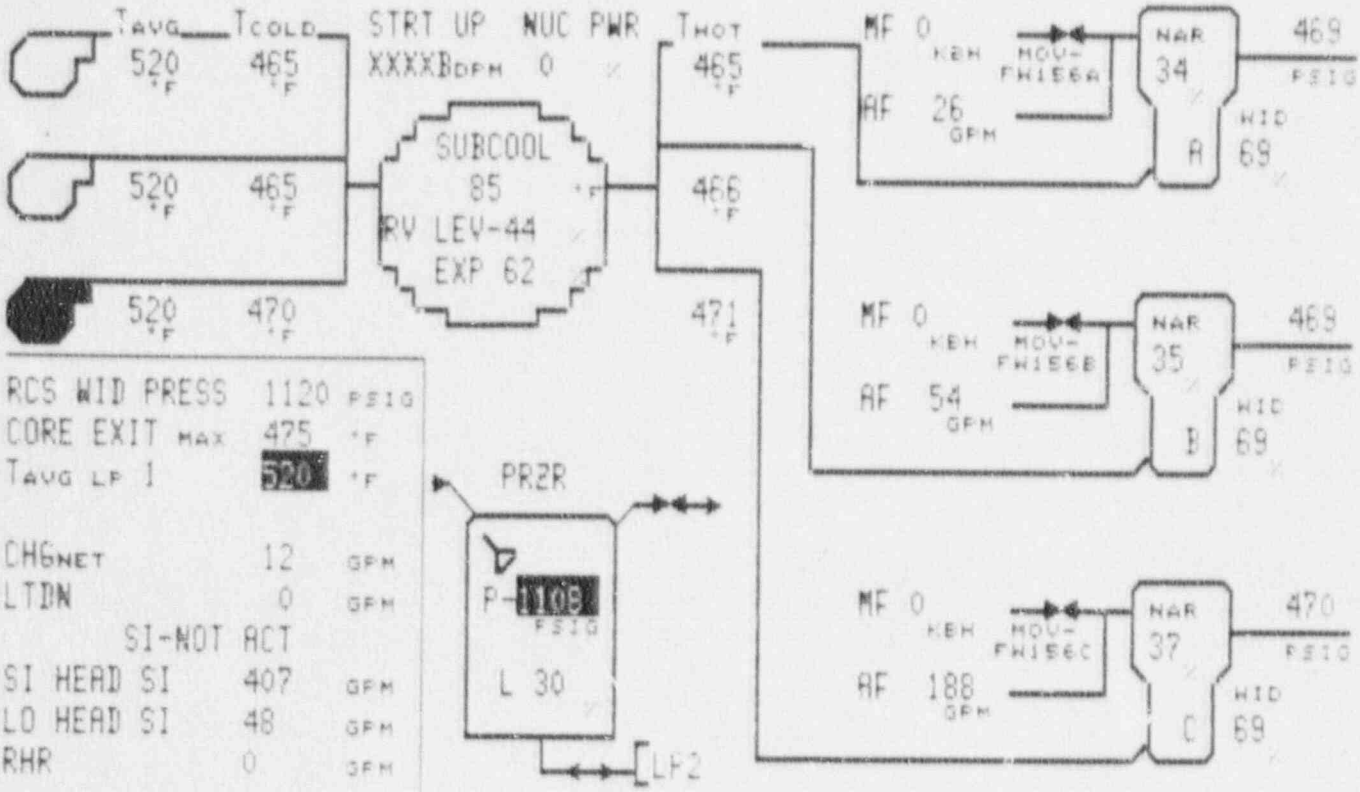

CONTAINMENT				ELECTRICAL			
Press. (PSIA)	15.19	Temp. (F)	120.6	SSST 1A	OK	SSST 1B	OK
RHR	NO	Sump (In)	4.6	AE	OK	DF	OK
Quench Spray	NO	Recirc Spray	NO	8 N	OK	9 P	OK
HHSI	YES	CIA	NO	DG #1	AVAIL	DG #2	OOS
LHSI	NO	CIB	NO	Batteries	OK	Vital Buses	OK

Time 1415

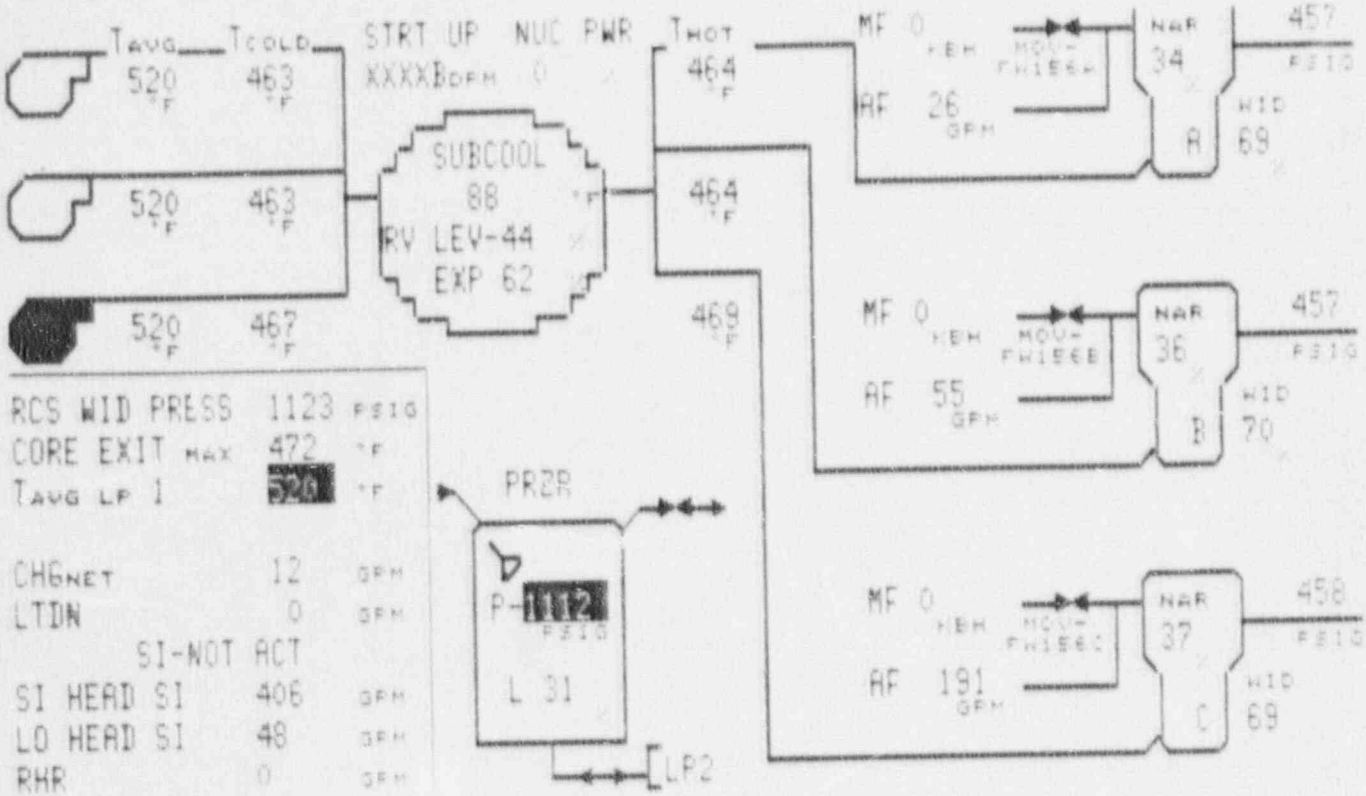

CONTAINMENT				ELECTRICAL			
Press. (PSIA)	15.20	Temp. (F)	120.7	SSST 1A	OK	SSST 1B	OK
RHR	NO	Sump (In)	4.6	AE	OK	DF	OK
Quench Spray	NO	Recirc Spray	NO	8 N	OK	9 P	OK
HHSI	YES	CIA	NO	DG #1	AVAIL	DG #2	OOS
LHSI	NO	CIB	NO	Batteries	OK	Vital Buses	OK

Time 1418

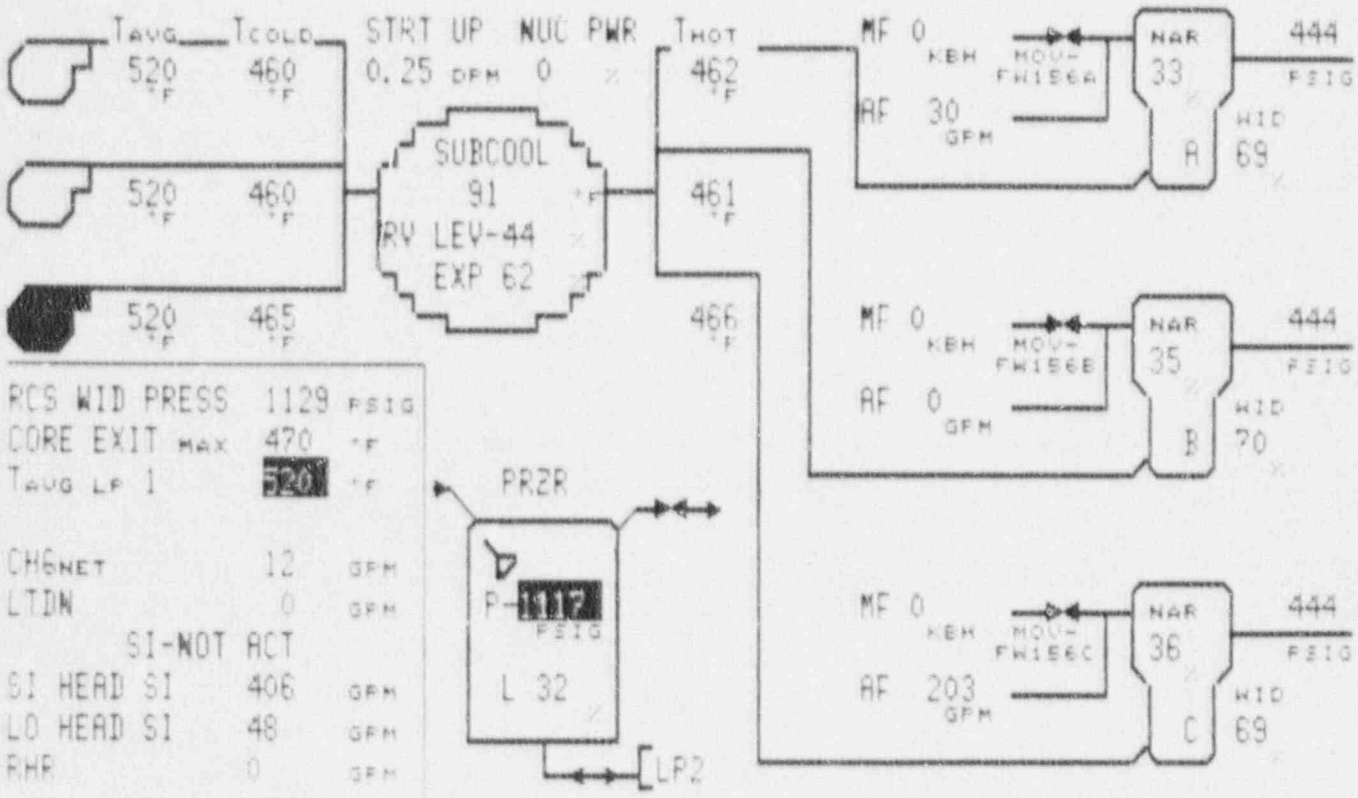

CONTAINMENT				ELECTRICAL			
Press. (PSIA)	15.20	Temp. (F)	120.7	SSST 1A	OK	SSST 1B	OK
RHR	NO	Sump (In)	4.6	AE	OK	DF	OK
Quench Spray	NO	Recirc Spray	NO	8 N	OK	9 P	OK
HHSI	YES	CIA	NO	DG #1	AVAIL	DG #2	OOS
LHSI	NO	CIB	NO	Batteries	OK	Vital Buses	OK

Time 1421

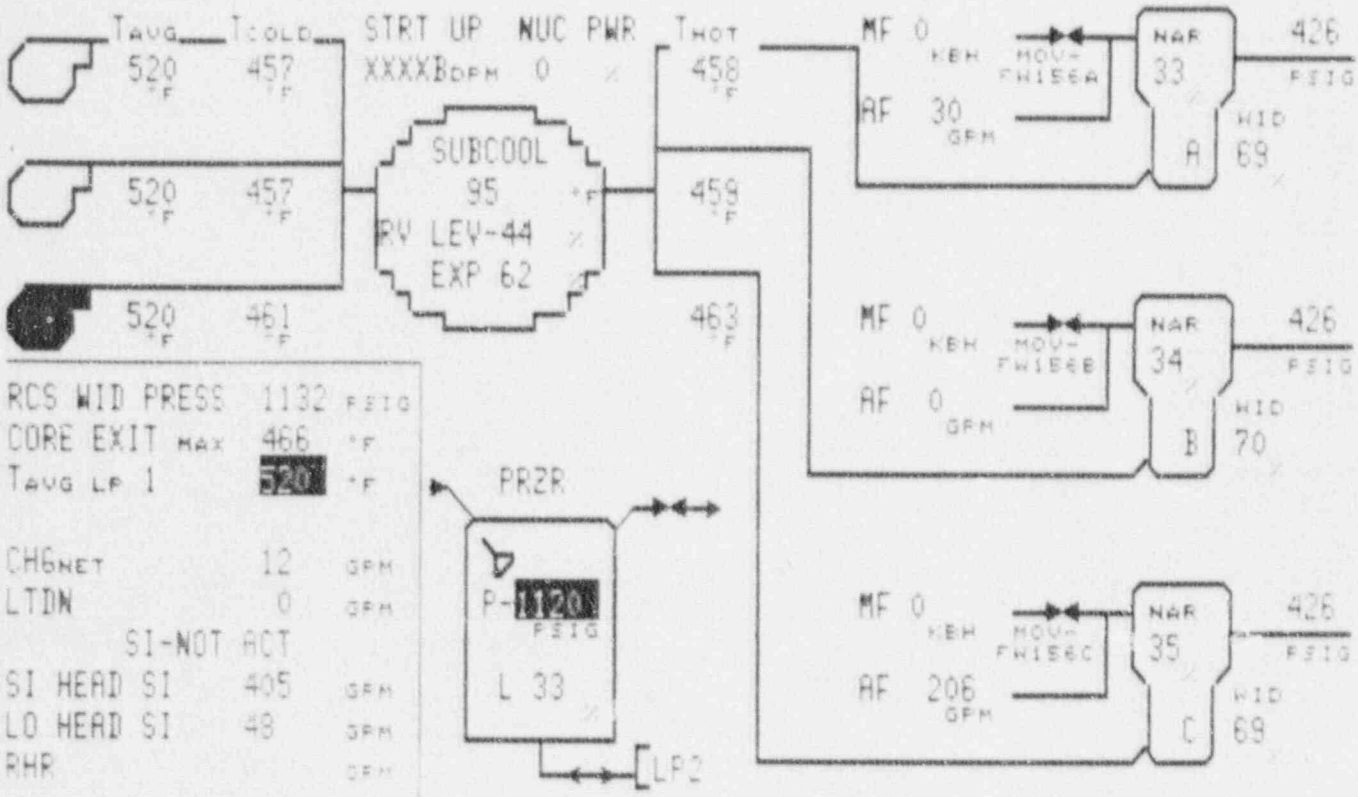

CONTAINMENT				ELECTRICAL			
Press. (PSIA)	15.21	Temp. (F)	120.8	SSST 1A	OK	SSST 1B	OK
RHR	NO	Sump (In)	4.7	AE	OK	DF	OK
Quench Spray	NO	Recirc Spray	NO	8 N	OK	9 P	OK
HHSI	YES	CIA	NO	DG #1	AVAIL	DG #2	OOS
LHSI	NO	CIB	NO	Batteries	OK	Vital Buses	OK

Time 1424

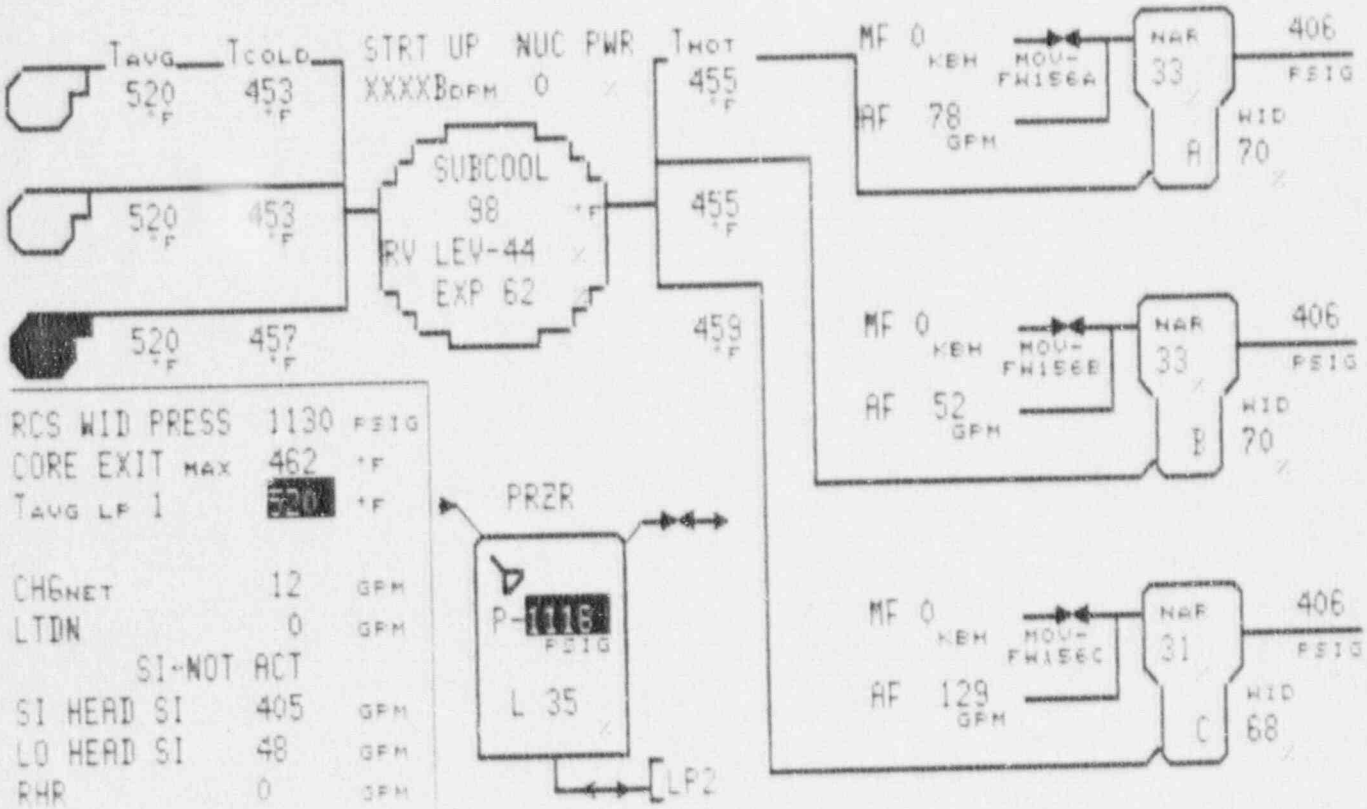

CONTAINMENT				ELECTRICAL			
Press. (PSIA)	15.21	Temp. (F)	120.8	SSST 1A	OK	SSST 1B	OK
RHR	NO	Sump (In)	4.7	AE	OK	DF	OK
Quench Spray	NO	Recirc Spray	NO	8 N	OK	9 P	OK
HHSI	YES	CIA	NO	DG #1	AVAIL	DG #2	OOS
LHSI	NO	CIB	NO	Batteries	OK	Vital Buses	OK

Time 1427

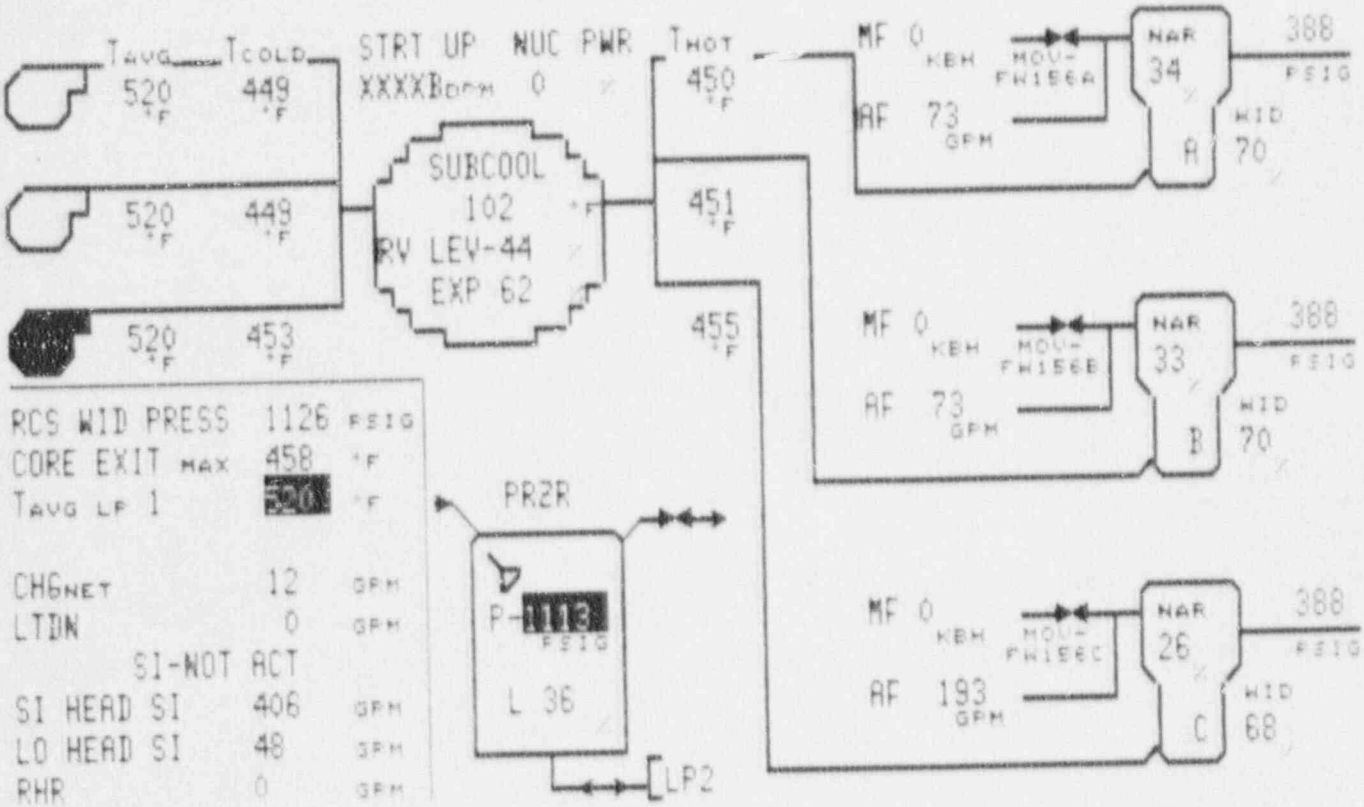

CONTAINMENT				ELECTRICAL			
Press. (PSIA)	15.22	Temp. (F)	120.9	SSST 1A	OK	SSST 1B	OK
RHR	NO	Sump (In)	4.7	AE	OK	DF	OK
Quench Spray	NO	Recirc Spray	NO	8 N	OK	9 P	OK
HHSI	YES	CIA	NO	DG #1	AVAIL	DG #2	OOS
LHSI	NO	CIB	NO	Batteries	OK	Vital Buses	OK

Time 1430

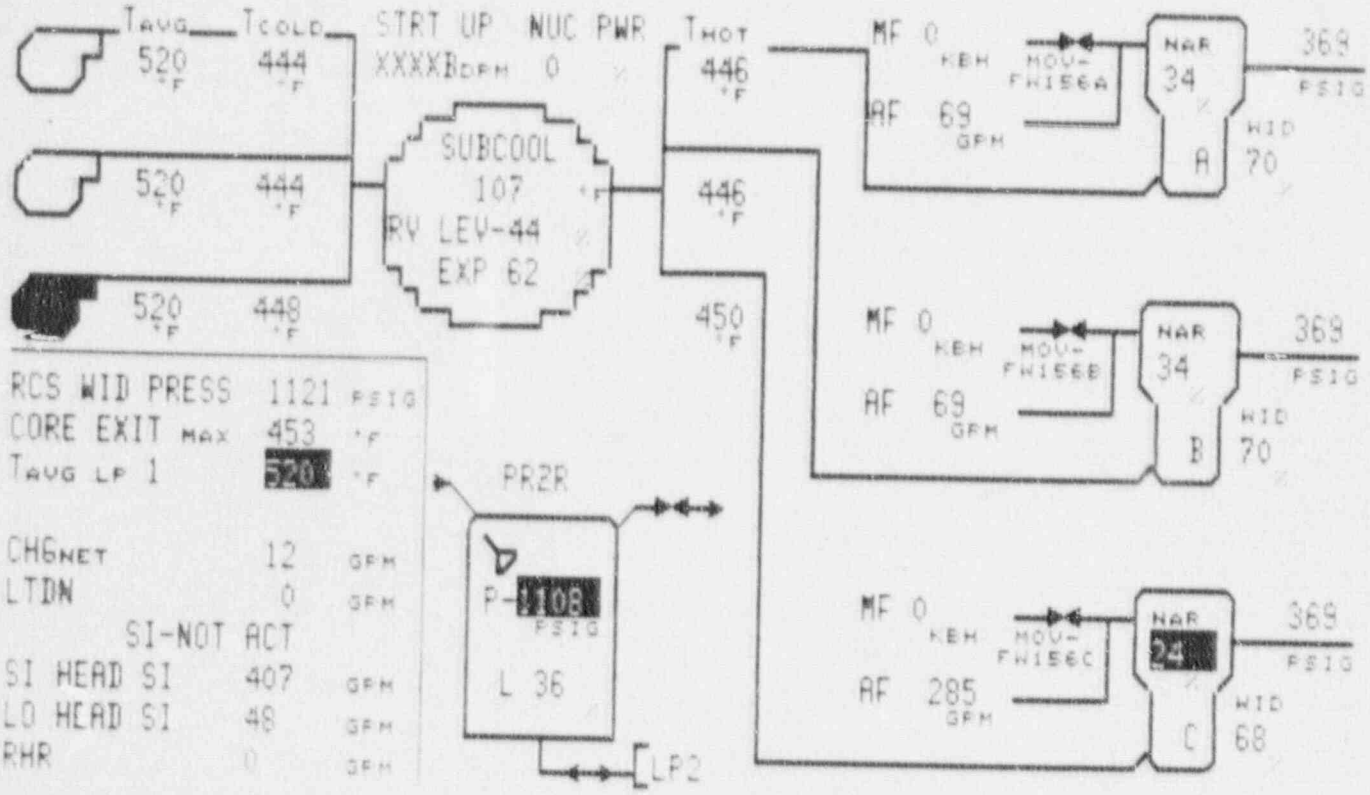

CONTAINMENT				ELECTRICAL			
Press. (PSIA)	15.23	Temp. (F)	120.9	SSST 1A	OK	SSST 1B	OK
RHR	NO	Sump (In)	4.8	AE	OK	DF	OK
Quench Spray	NO	Recirc Spray	NO	8 N	OK	9 P	OK
HHSI	YES	CIA	NO	DG #1	AVAIL	DG #2	OOS
LHSI	NO	CIB	NO	Batteries	OK	Vital Buses	OK

Time 1433

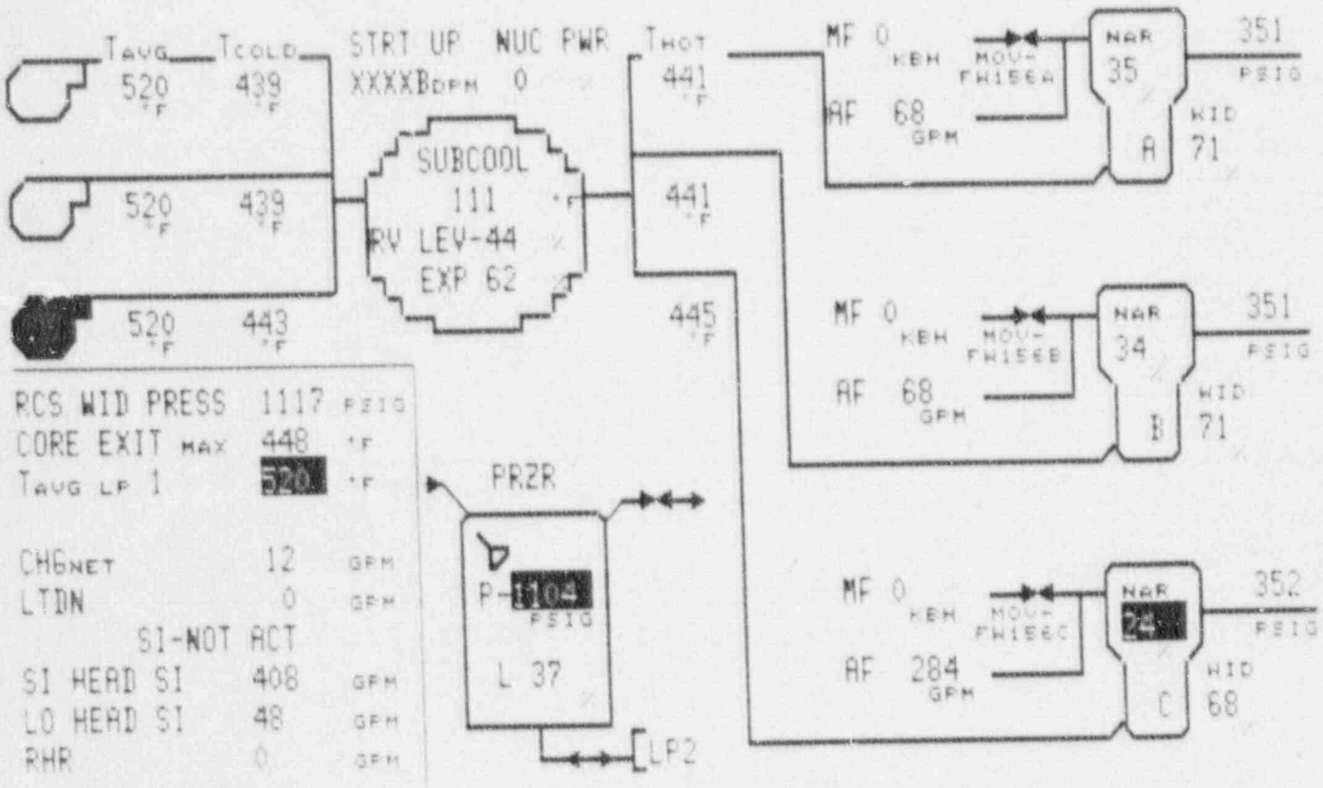

CONTAINMENT				ELECTRICAL			
Press. (PSIA)	15.23	Temp. (F)	121.0	SSST 1A	OK	SSST 1B	OK
RHR	NO	Sump (In)	4.8	AE	OK	DF	OK
Quench Spray	NO	Recirc Spray	NO	8 N	OK	9 P	OK
HHSI	YES	CIA	NO	DG #1	AVAIL	DG #2	OOS
LHSI	NO	CIB	NO	Batteries	OK	Vital Buses	OK

Time 1436

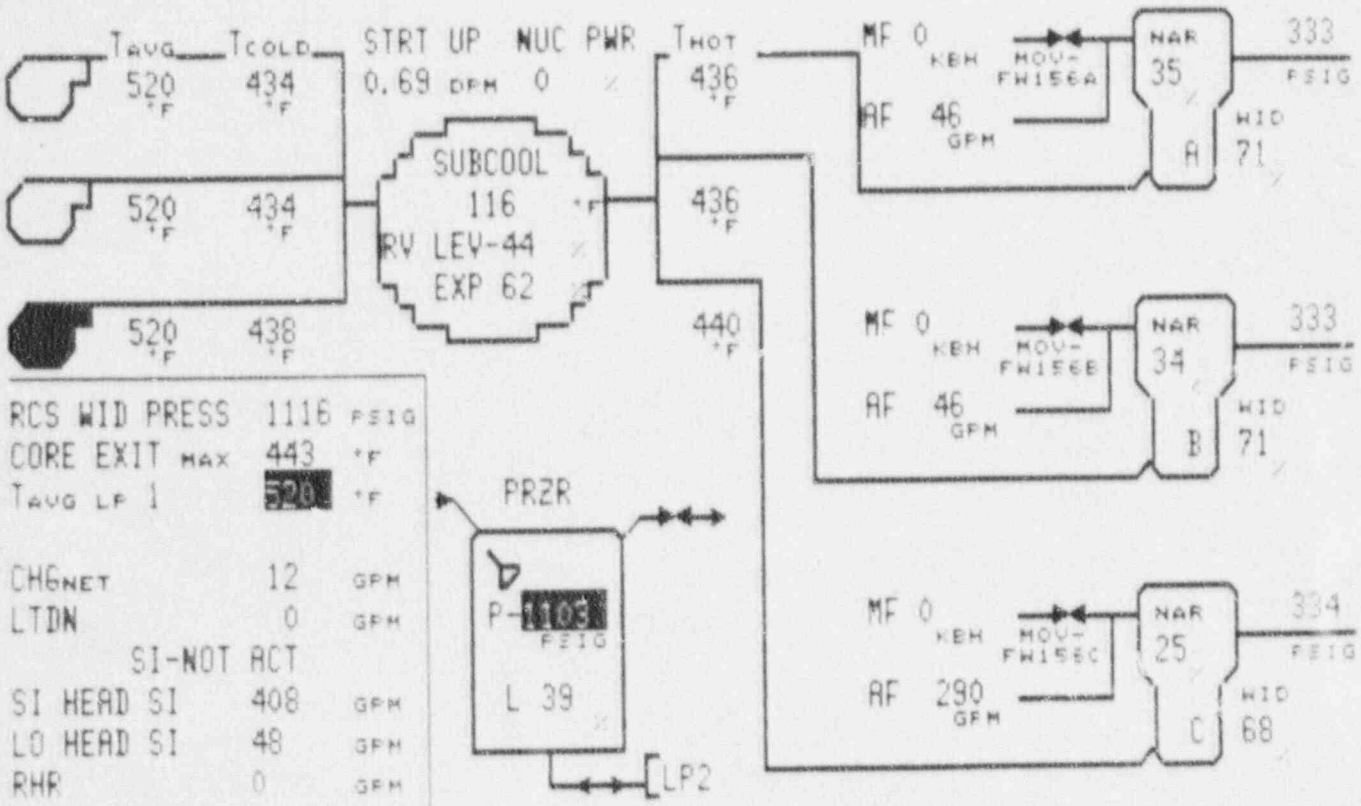

CONTAINMENT				ELECTRICAL			
Press. (PSIA)	15.24	Temp. (F)	121.0	SSST 1A	OK	SSST 1B	OK
RHR	NO	Sump (In)	4.8	AE	OK	DF	OK
Quench Spray	NO	Recirc Spray	NO	8 N	OK	9 P	OK
IHSI	YES	CIA	NO	DG #1	AVAIL	DG #2	OOS
LHSI	NO	CIB	NO	Batteries	OK	Vital Buses	OK

Time 1439

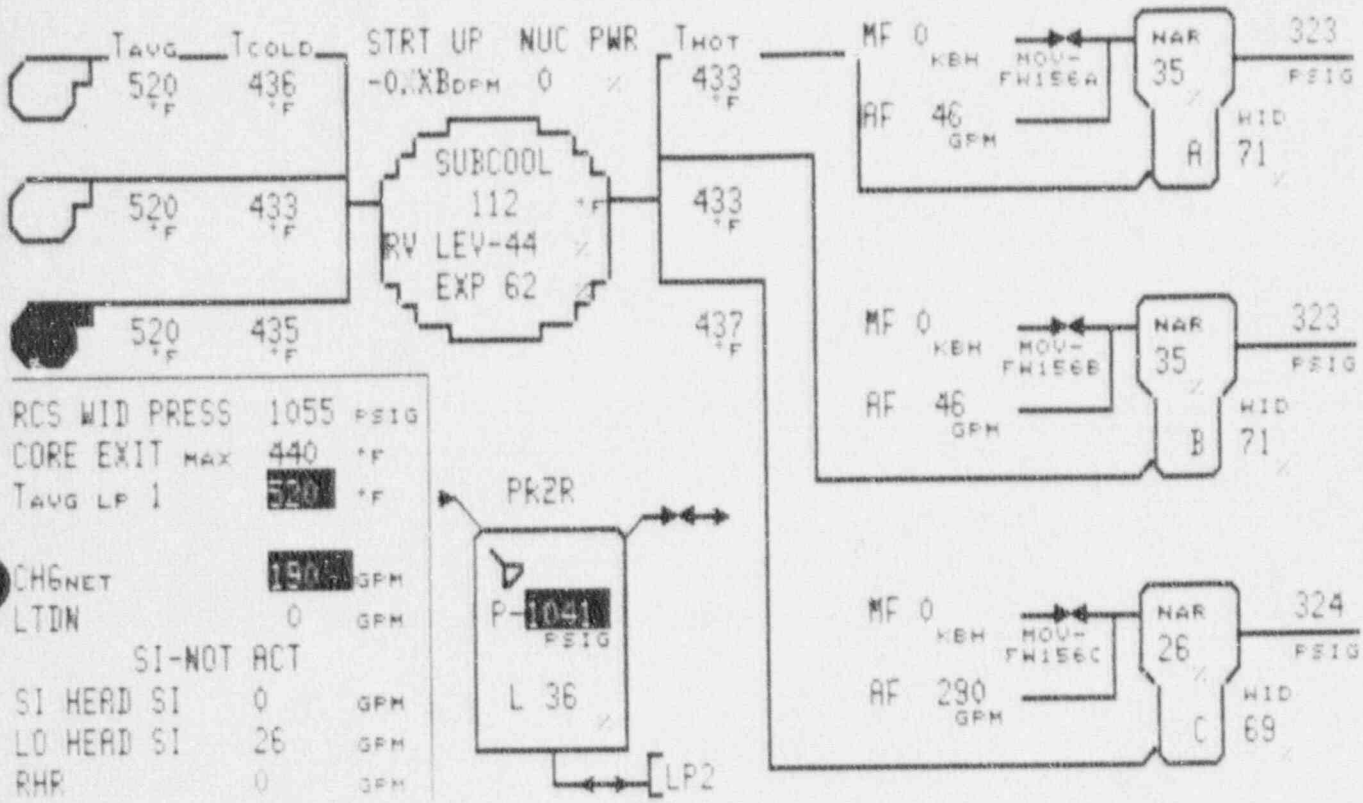

CONTAINMENT				ELECTRICAL			
Press. (PSIA)	15.24	Temp. (F)	121.1	SSST 1A	OK	SSST 1B	OK
RHR	NO	Sump (In)	4.9	AE	OK	DF	OK
Quench Spray	NO	Recirc Spray	NO	8 N	OK	9 P	OK
HHSI	NO	CIA	NO	DG #1	AVAIL	DG #2	OOS
LHSI	NO	CIB	NO	Batteries	OK	Vital Buses	OK

Time 1442

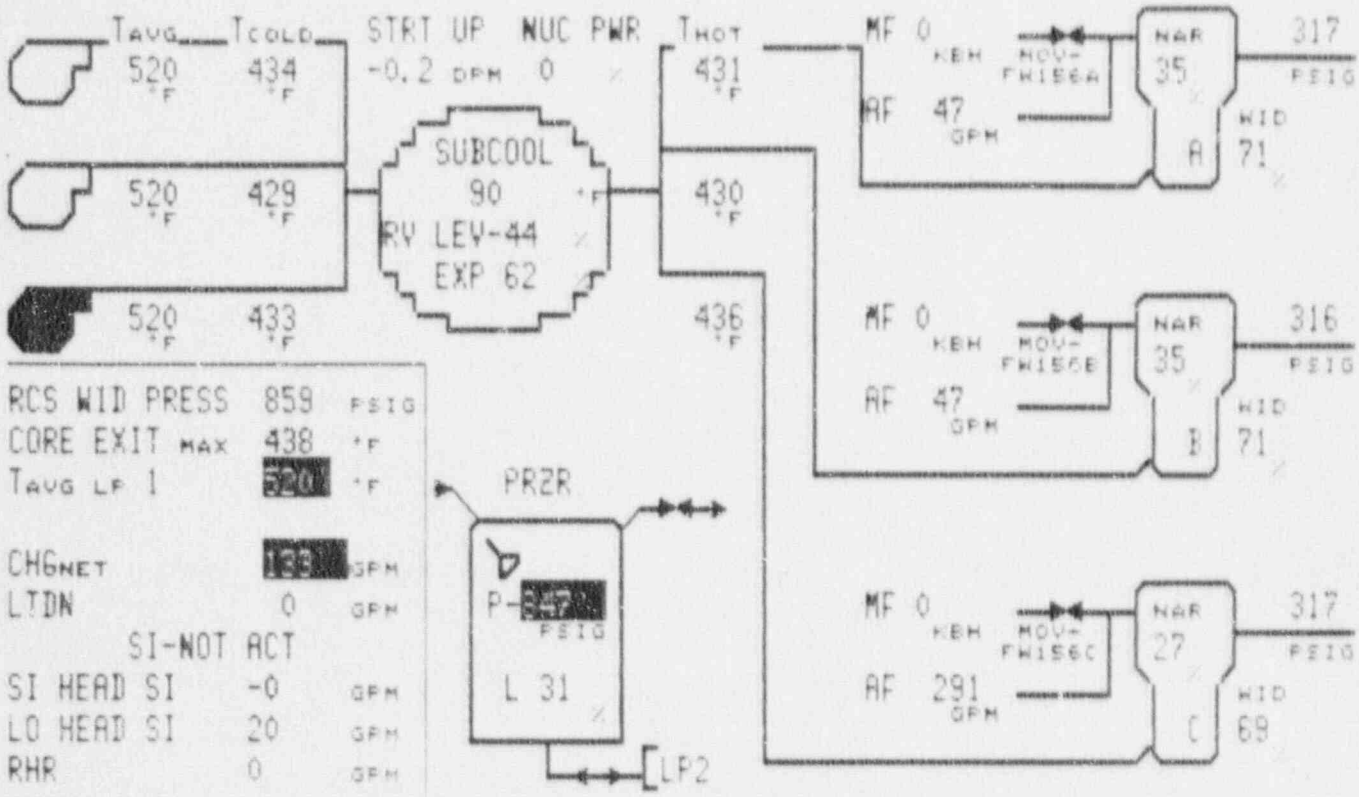

CONTAINMENT				ELECTRICAL			
Press. (PSIA)	15.25	Temp. (F)	121.1	SSST 1A	OK	SSST 1B	OK
RHR	NO	Sump (In)	4.9	AE	OK	DF	OK
Quench Spray	NO	Recirc Spray	NO	8 N	OK	9 P	OK
HHSI	NO	CIA	NO	DG #1	AVAIL	DG #2	OOS
LHSI	NO	CIB	NO	Batteries	OK	Vital Buses	OK

Time 1445

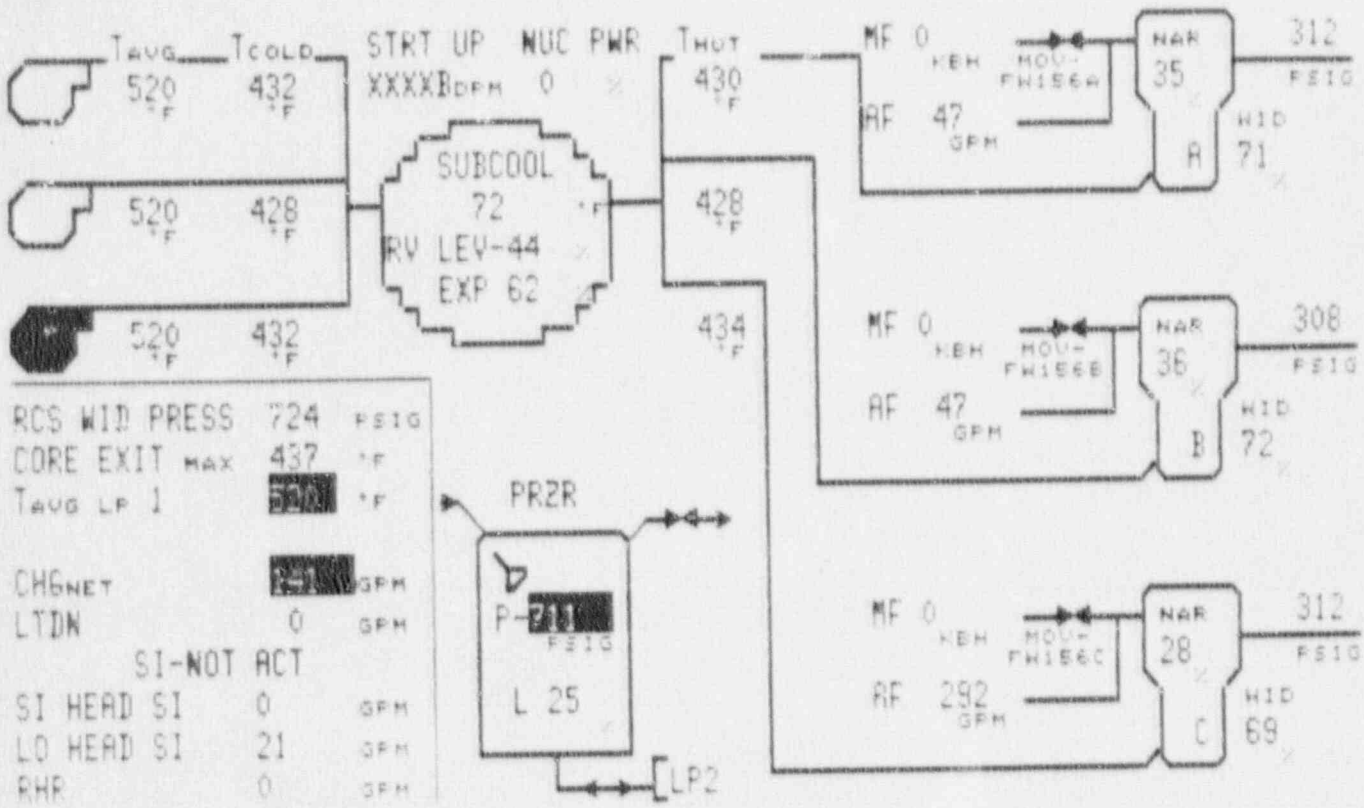

CONTAINMENT				ELECTRICAL			
Press. (PSIA)	15.27	Temp. (F)	121.1	SSST 1A	OK	SSST 1B	OK
RHR	NO	Sump (In)	4.9	AE	OK	DF	OK
Quench Spray	NO	Recirc Spray	NO	8 N	OK	9 P	OK
HHSI	NO	CIA	NO	DG #1	AVAIL	DG #2	OOS
LHSI	NO	CIB	NO	Batteries	OK	Vital Buses	OK

Time 1448

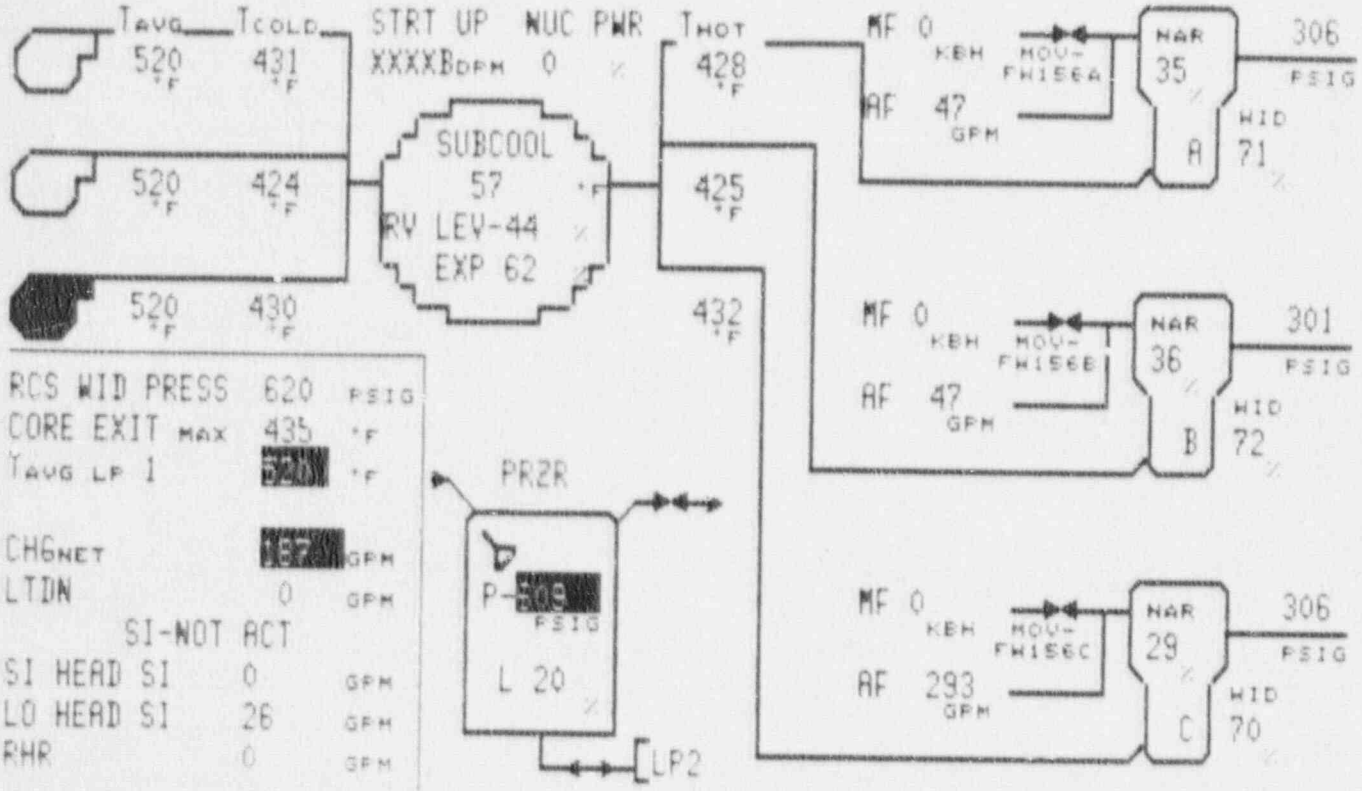

CONTAINMENT				ELECTRICAL			
Press. (PSIA)	15.28	Temp. (F)	121.2	SSST 1A	OK	SSST 1B	OK
RHR	NO	Sump (In)	5.0	AE	OK	DF	OK
Quench Spray	NO	Recirc Spray	NO	8 N	OK	9 P	OK
HHSI	NO	CIA	NO	DG #1	AVAIL	DG #2	OOS
LHSI	NO	CIB	NO	Batteries	OK	Vital Buses	OK

Time 1451

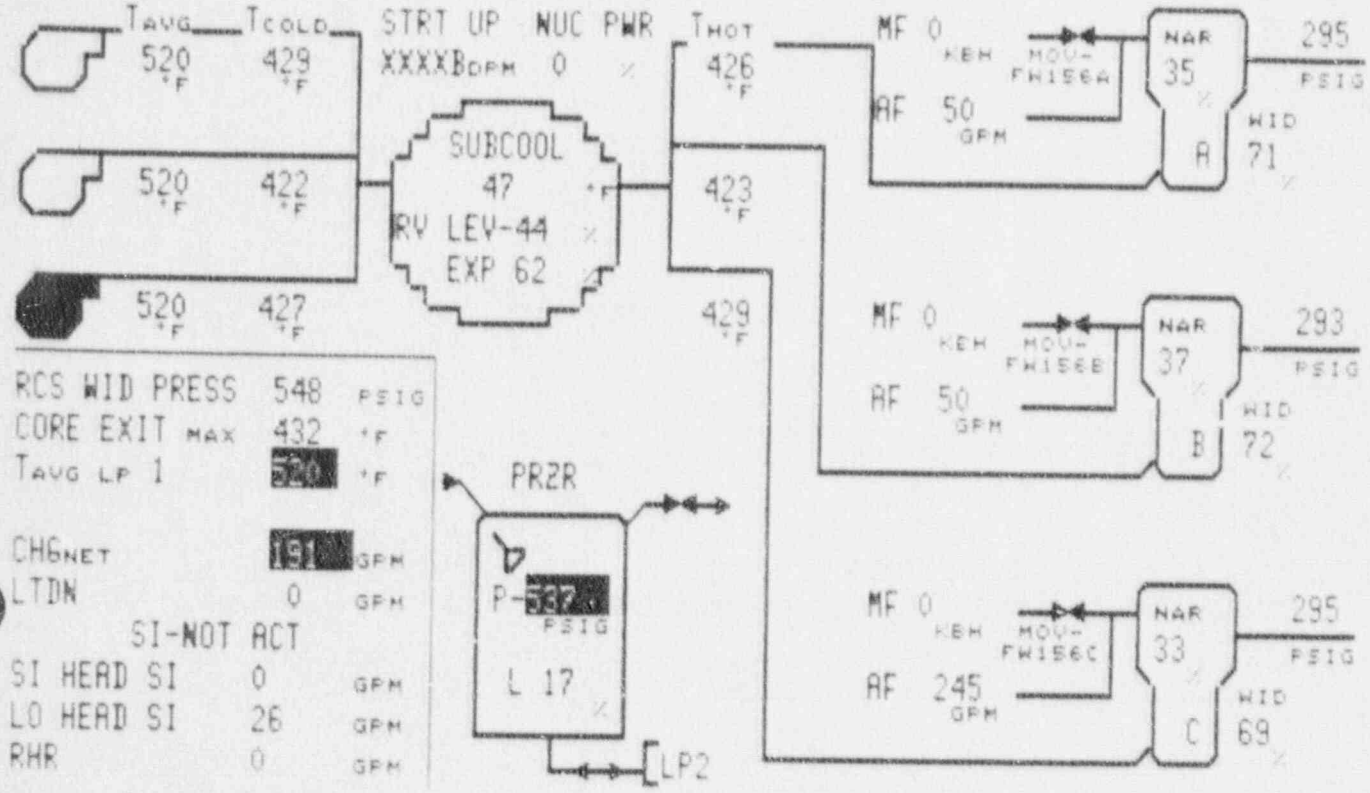

CONTAINMENT				ELECTRICAL			
Press. (PSIA)	15.29	Temp. (F)	121.2	SSST 1A	OK	SSST 1B	OK
RHR	NO	Sump (In)	5.0	AE	OK	DF	OK
Quench Spray	NO	Recirc Spray	NO	8 N	OK	9 P	OK
HHSI	NO	CIA	NO	DG #1	AVAIL	DG #2	OOS
LHSI	NO	CIB	NO	Batteries	OK	Vital Buses	OK

Time 1454

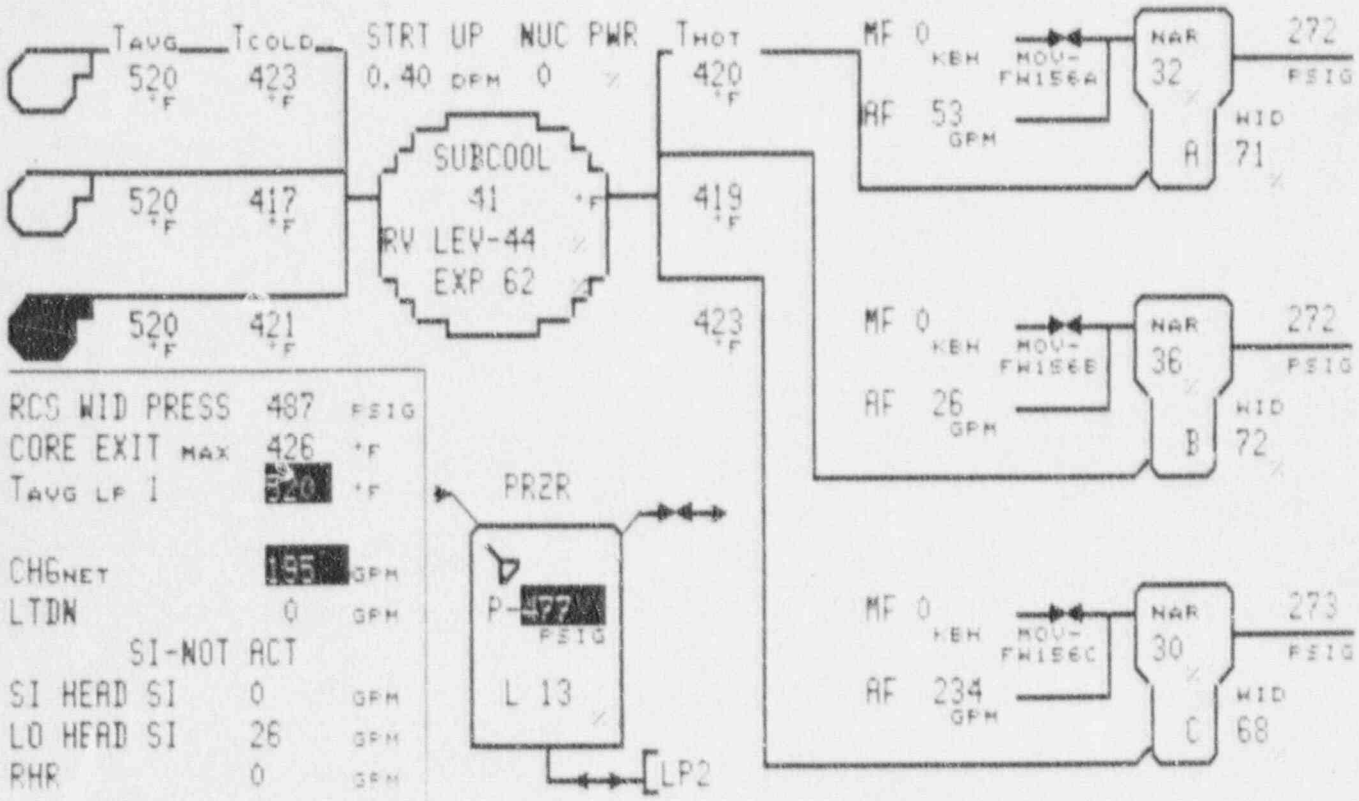

CONTAINMENT				ELECTRICAL			
Press. (PSIA)	15.30	Temp. (F)	121.2	SSST 1A	OK	SSST 1B	OK
RHR	NO	Sump (In)	5.0	AE	OK	DF	OK
Quench Spray	NO	Recirc Spray	NO	8 N	OK	9 P	OK
HHSI	NO	CIA	NO	DG #1	AVAIL	DG #2	OOS
LHSI	NO	CIB	NO	Batteries	OK	Vital Buses	OK

Time 1457

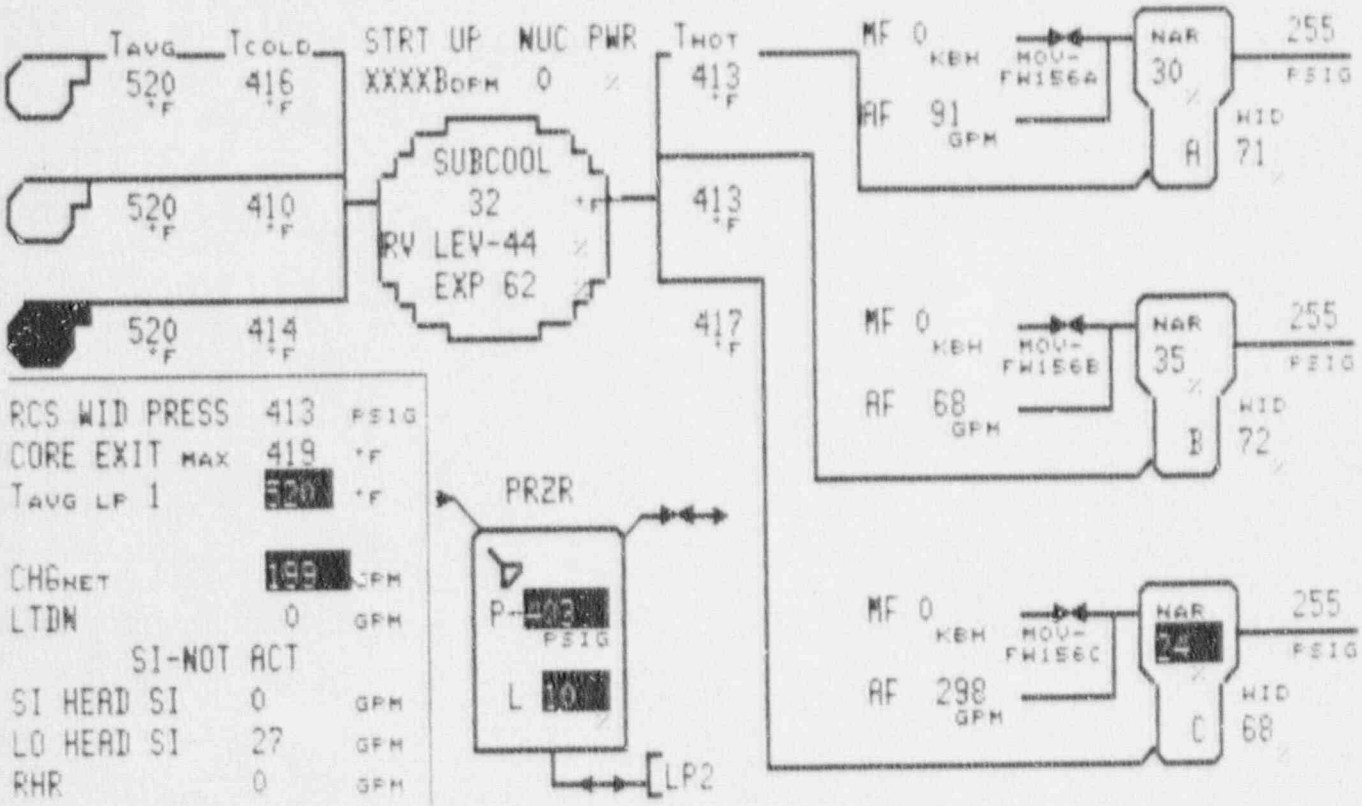

CONTAINMENT				ELECTRICAL			
Press. (PSIA)	15.31	Temp. (F)	121.2	SSST 1A	OK	SSST 1B	OK
RHR	NO	Sump (In)	5.0	AE	OK	DF	OK
Quench Spray	NO	Recirc Spray	NO	8 N	OK	9 P	OK
HHSI	NO	CIA	NO	DG #1	AVAIL	DG #2	OOS
LHSI	NO	CIB	NO	Batteries	OK	Vital Buses	OK

Time 1500

Plant Variable Computer

Data

Package

Section VII

(Part C.2)

TIME	0930	0933	0936	0939	0942	0945	0948
RCS Hotleg A T0419A Deg. F	605	605	605	605	605	605	605
RCS Hotleg B T0439A Deg. F	605	605	605	605	605	605	605
RCS Hotleg C T0459A Deg. F	605	605	605	605	605	605	605
RCS Coldleg A T0406A Deg. F	545	545	545	545	545	545	545
RCS Coldleg B T0426A Deg. F	545	545	545	545	545	545	545
RCS Coldleg C T0446A Deg. F	545	545	545	545	545	545	545
RCS Flow A F0400C Percent	100	100	100	100	100	100	100
RCS Flow B F0421C Percent	100	100	100	100	100	100	100
RCS Flow C F0442C Percent	100	100	100	100	100	100	100
VCT Level L2704A Percent	38	38	38	38	38	38	38

RCS Group I

TIME	0930	0933	0936	0939	0942	0945	0948
Source Range N0031A CPS	1.00	1.00	1.00	1.00	1.00	1.00	1.00
Power Range N0051A Percent	99	99	99	99	99	99	99
T/C Peak MXICTX Deg. F	621	621	621	621	621	621	621
T/C Average AVICTCX Deg. F	607	607	607	607	607	607	607
Deg Subcooling T3200A Deg. F	30	30	30	30	30	30	30
Inter Range N0035A CPS	10E-3	10E-3	10E-3	10E-3	10E-3	10E-3	10E-3

RCS Group I

TIME	0930	0933	0936	0939	0942	0945	0948
SG Pressure A P0402A PSIG	825	825	825	825	825	825	825
SG Pressure B P0422A PSIG	825	825	825	825	825	825	825
SG Pressure C P0442A PSIG	825	825	825	825	825	825	825
SG Level A L0403A (W.R.)	55	55	55	55	55	55	55
SG Level A L0402A (N.R.)	43	43	43	43	43	43	43
SG Level B L0423A (W.R.)	55	55	55	55	55	55	55
SG Level B L0422A (N.R.)	43	43	43	43	43	43	43
SG Level C L0443A (W.R.)	55	55	55	55	55	55	55
SG Level C L0442A (N.R.)	43	43	43	43	43	43	43

Steam Generator Group II

TIME	0930	0933	0936	0939	0942	0945	0948
Steam Flow A F0405A KBH	3877	3877	3877	3877	3877	3877	3877
Steam Flow B F0425A KBH	3877	3877	3877	3877	3877	3877	3877
Steam Flow C F0443A KBH	3877	3877	3877	3877	3877	3877	3877
PD WST TK 10 L3000A FT	28.3	28.3	28.3	28.3	28.3	28.3	28.3
Aux FD Flow A F0601A GPM	0	0	0	0	0	0	0
Aux FD Flow B F0602A GPM	0	0	0	0	0	0	0
Aux FD Flow C F0603A GPM	0	0	0	0	0	0	0

Steam Generator Group II

TIME	0930	0933	0936	0939	0942	0945	0948
Cont Pressure P1000A PSIA	9.45	9.45	9.45	9.45	9.45	9.45	9.45
Cont Temp T2460A DEG F	96.9	96.9	96.9	96.9	96.9	96.9	96.9
Cont Sump Lvl L0750A IN	0	0	0	0	0	0	0
Hydrogen C0201A Percent	0	0	0	0	0	0	0

Containment Group III

TIME	0930	0933	0936	0939	0942	0945	0948
SI Accum Lvl L0610A Percent	78	78	78	78	78	78	78
SI Accum Lvl L0620A Percent	78	78	78	78	78	78	78
SI Accum Lvl L0630A Percent	78	78	78	78	78	78	78
RWST Level L0500A IN	606	606	606	606	606	606	605

Safety Injection Group IV

TIME	0930	0933	0936	0939	0942	0945	0948
PZR Level L0480A Percent	54	54	54	54	54	54	54
PZR Temp (WTR) T0480A DEG F	649	649	649	649	649	649	649
PZR Temp (STM) T0481A DEG F	650	650	650	650	650	650	650
RCS Pressure P0499A PSIG	2228	2228	2228	2228	2228	2228	2228
PRT Level L0485A Percent	69	69	69	69	69	69	69
PZR Pressure P0480A PSIG	2217	2217	2217	2217	2217	2217	2217

Pressurizer Group V

TIME	0930	0933	0936	0939	0942	0945	0948
RCP 1A Y3421D On/Off	ON	ON	ON	ON	ON	ON	ON
RCP 1B Y3422D On/Off	ON	ON	ON	ON	ON	ON	ON
RCP 1C Y3423D On/Off	ON	ON	ON	ON	ON	ON	ON
MSIV Position OR001X O/C	OPEN	OPEN	OPEN	OPEN	OPEN	OPEN	OPEN
MSIV Position OR003X O/C	OPEN	OPEN	OPEN	OPEN	OPEN	OPEN	OPEN
MSIV Position OR005X O/C	OPEN	OPEN	OPEN	OPEN	OPEN	OPEN	OPEN

RCP/MSIV Group VI

TIME	0930	0933	0936	0939	0942	0945	0948
Battery 1 Y0774A Volts	130	130	130	130	130	130	130
Battery 2 Y0775A Volts	130	130	130	130	130	130	130
Battery 3 Y0776A Volts	130	130	130	130	130	130	130
Battery 4 Y0777A Volts	130	130	130	130	130	130	130
Battery 5 Y0778A Volts	130	130	130	130	130	130	130

Battery Group VII

TIME	0930	0933	0936	0939	0942	0945	0948
PAB PT VS101A Y0704A CPM	600	600	600	600	200	200	200
PAB GS VS101B R0033A CPM	60	60	60	60	40	40	40
PAB TRA VS102A Y0731A CPM	60	60	60	60	60	60	60
PAB TRB VS102B Y0732A CPM	50	50	50	50	50	50	50
SLCRS P VS107A Y0710A CPM	200	200	200	200	200	200	200
SLCRS G VS107B Y0711A CPM	40	40	40	40	40	40	40
SAFE VNT VS105 Y0727A CPM	70	70	70	70	70	70	70
WGDT Vlt VS106 Y0728A CPM	150	150	150	150	150	150	150
FHB TRA VS103A Y0706A CPM	90	90	90	90	90	90	90
FHB TRB VS103B Y0709A CPM	60	60	60	60	60	60	60

Effluent Group VIII

TIME	0930	0933	0936	0939	0942	0945	0948
RCB PRG VS104A Y0707A CPM	BAD	BAD	BAD	BAD	BAD	BAD	BAD
RCB PRG VS104B Y0708A CPM	BAD	BAD	BAD	BAD	BAD	BAD	BAD
WG PART GW108A Y0721A CPM	70	70	70	70	70	70	70
WG GAS GW108B R0032A CPM	300	300	300	300	300	300	300
REC HX RW100A Y0725A CPM	BAD	BAD	BAD	BAD	BAD	BAD	BAD
REC HX RW100B Y0726A CPM	BAD	BAD	BAD	BAD	BAD	BAD	BAD
REC HX RW100C Y0729A CPM	BAD	BAD	BAD	BAD	BAD	BAD	BAD
REC HX RW100D Y0730A CPM	BAD	BAD	BAD	BAD	BAD	BAD	BAD
REC HX RW100 Y0705A CPM	60	60	60	60	60	60	60
CCW HX RW101 Y0713A CPM	60	60	60	60	60	60	60

Effluent Group VIII

TIME	0930	0933	0936	0939	0942	0945	0948
CONT EJT SV100 R0029A CPM	50	50	50	50	50	50	50
LIQ WSTE LW104 R0030A CPM	7E3	7E3	7E3	7E3	7E3	7E3	7E3
CON DRNS LW116 Y0717A CPM	500	500	500	500	500	500	500

Effluent Group VIII

TIME	0930	0933	0936	0939	0942	0945	0948
RCB PT RM215A Y0718A CPM	1E3	1E3	1E3	1E3	1E3	1E3	1E3
RCB GS RM215B R0028A CPM	2.5E3	2.5E3	2.5E3	2.5E3	2.5E3	2.5E3	2.5E3
Letdown CH101A R0036A CPM	1.5E3	1.5E3	1.5E3	1.5E3	1.5E3	1.5E3	1.5E3
Letdown CH101B R0037A CPM	1.5E3	1.5E3	1.5E3	1.5E3	1.5E3	1.5E3	1.5E3
Mult P RM217A Y0719A CPM	200	200	200	200	200	200	200
Mult G RM217B Y0720A CPM	150	150	150	150	150	150	150
Ax St Cd AS100 R0031A CPM	60	60	60	60	60	60	60
S/G Bdwn BD100 R0034A CPM	BAD	BAD	BAD	BAD	BAD	BAD	BAD
S/G Bdwn SS100 Y0712A CPM	BAD	BAD	BAD	BAD	BAD	BAD	BAD
CC CCR100 Y0715A CPM	800	800	800	800	800	800	800

Process Group IX

TIME	0920	0933	0936	0939	0942	0945	0948
GW Tnk GW101 Y0733A CPM	BAD	BAD	BAD	BAD	BAD	BAD	BAD

Process Group IX

TIME	0930	0933	0936	0939	0942	0945	0948
Airlock RM201 Y0734A MR/HR	0.3	0.3	0.3	0.3	0.3	0.3	0.3
CrnWall RM202 Y0735A MR/HR	4.0	4.0	4.0	4.0	4.0	4.0	4.0
Manp Crn RM203 Y0716A MR/HR	BAD	BAD	BAD	BAD	BAD	BAD	BAD
Incor Rm RM204 Y0722A MR/HR	4.0	4.0	4.0	4.0	4.0	4.0	4.0
Dcon Bld RM205 R0020A MR/HR	8.0	8.0	8.0	8.0	8.0	8.0	8.0
New Fuel RM206 R0021A MR/HR	0.4	0.4	0.4	0.4	0.4	0.4	0.4
FHB Crn RM207 R0022A MR/HR	0.8	0.8	0.8	0.8	0.8	0.8	0.8
Sol Wst RM208 R0024A MR/HR	0.5	0.5	0.5	0.5	0.5	0.5	0.5
722PB NE RM209 R0023A MR/HR	0.4	0.4	0.4	0.4	0.4	0.4	0.4
752 PAB RM210 R0025A MR/HR	0.3	0.3	0.3	0.3	0.3	0.3	0.3

Area Group X

TIME	0930	0933	0936	0939	0942	0945	0948
722PB SE RM211 Y0723A MR/HR	2.0	2.0	2.0	2.0	2.0	2.0	2.0
Chem Smp RM212 Y0724A MR/HR	0.4	0.4	0.4	0.4	0.4	0.4	0.4
Cntrl Rm RM213 R0026A MR/HR	0.1	0.1	0.1	0.1	0.1	0.1	0.1
Hot Lab RM214 R0027A MR/HR	0.3	0.3	0.3	0.3	0.3	0.3	0.3
Cntl Rm RM218A R0072A MR/HR	.01	.01	.01	.01	.01	.01	.01
Cntl Rm RM218B R0073A MR/HR	.01	.01	.01	.01	.01	.01	.01
RCB HI RM219A R0070A R/HR	1.0	1.0	1.0	1.0	1	1	1
RCB HI RM219B R0071A R/HR	1.0	1.0	1.0	1.0	1	1	1

Area Group X

TIME	0951	0954	0957	1000	1003	1006	1009
RCS Hotleg A T0419A Deg. F	605	605	605	605	605	605	605
RCS Hotleg B T0439A Deg. F	605	605	605	605	605	605	605
RCS Hotleg C T0459A Deg. F	605	605	605	605	605	605	605
RCS Coldleg A T0406A Deg. F	545	545	545	545	545	545	545
RCS Coldleg B T0426A Deg. F	545	545	545	545	545	545	545
RCS Coldleg C T0446A Deg. F	545	545	545	545	545	545	545
RCS Flow A F0400C Percent	100	100	100	100	100	100	100
RCS Flow B F0421C Percent	100	100	100	100	100	100	100
RCS Flow C F0442C Percent	100	100	100	100	100	100	100
VCT Level L2704A Percent	38	38	38	38	38	38	38

RCS Group I

TIME	0951	0954	0957	1000	1003	1006	1009
Source Range N0031A CPS	1.00	1.00	1.00	1.00	1.00	1.00	1.00
Power Range N0051A Percent	99	99	99	99	99	99	99
T/C Peak MXICTX Deg. F	621	621	621	621	621	621	621
T/C Average AVICTCX Deg. F	607	607	607	607	607	607	607
Deg Subcooling T3200A Deg. F	30	30	30	30	30	30	30
Inter Range N0035A CPS	10E-3	10E-3	10E-3	10E-3	10E-3	10E-3	10E-3

RCS Group I

TIME	0951	0954	0957	1000	1003	1006	1009
SG Pressure A P0402A PSIG	825	825	825	825	825	825	825
SG Pressure B P0422A PSIG	825	825	825	825	825	825	825
SG Pressure C P0442A PSIG	825	825	825	825	825	825	825
SG Level A L0403A (W.R.)	55	55	55	55	55	55	55
SG Level A L0402A (N.R.)	43	43	43	43	43	43	43
SG Level B L0423A (W.R.)	55	55	55	55	55	55	55
SG Level B L0422A (N.R.)	43	43	43	43	43	43	43
SG Level C L0443A (W.R.)	55	55	55	55	55	55	55
SG Level C L0442A (N.R.)	43	43	43	43	43	43	43

Steam Generator Group II

TIME	0951	0954	0957	1000	1003	1006	1009
Steam Flow A F0405A KBH	3877	3877	3877	3877	3877	3877	3877
Steam Flow B F0425A KBH	3877	3877	3877	3877	3877	3877	3877
Steam Flow C F0443A KBH	3877	3877	3877	3877	3877	3877	3877
PD WST TK 10 L3000A FT	28.3	28.3	28.3	28.3	28.3	28.3	28.3
Aux FD Flow A F0601A GPM	0	0	0	0	0	0	0
Aux FD Flow B F0602A GPM	0	0	0	0	0	0	0
Aux FD Flow C F0603A GPM	0	0	0	0	0	0	0

Steam Generator Group II

TIME	0951	0954	0957	1000	1003	1006	1009
Cont Pressure P1000A PSIA	9.45	9.45	9.45	9.45	9.45	9.45	9.45
Cont Temp T2460A DEG F	96.9	96.9	96.9	96.9	96.9	96.9	96.9
Cont Sump Lvl L0750A IN	0	0	0	0	0	0	0
Hydrogen C0201A Percent	0	0	0	0	0	0	0

Containment Group III

TIME	0951	0954	0957	1000	1003	1006	1009
SI Accum Lvl L0610A Percent	78	78	78	78	78	78	78
SI Accum Lvl L0620A Percent	78	78	78	78	78	78	78
SI Accum Lvl L0630A Percent	78	78	78	78	78	78	78
RWST Level L0500A IN	605	605	605	604	604	604	604

Safety Injection Group IV

TIME	0951	0954	0957	1000	1003	1006	1009
PZR Level L0480A Percent	54	54	54	54	54	54	54
PZR Temp (WTR) T0480A DEG F	649	649	649	649	649	649	649
PZR Temp (STM) T0481A DEG F	650	650	650	650	650	650	650
RCS Pressure P0499A PSIG	2228	2228	2228	2228	2228	2228	2228
PRT Level L0485A Percent	69	69	69	69	69	69	69
PZR Pressure P0480A PSIG	2217	2217	2217	2217	2217	2217	2217

Pressurizer Group V

TIME	0951	0954	0957	1000	1003	1006	1009
RCP 1A Y3421D On/Off	ON	ON	ON	ON	ON	ON	ON
RCP 1B Y3422D On/Off	ON	ON	ON	ON	ON	ON	ON
RCP 1C Y3423D On/Off	ON	ON	ON	ON	ON	ON	ON
MSIV Position OR001X O/C	OPEN	OPEN	OPEN	OPEN	OPEN	OPEN	OPEN
MSIV Position OR003X O/C	OPEN	OPEN	OPEN	OPEN	OPEN	OPEN	OPEN
MSIV Position OR005X O/C	OPEN	OPEN	OPEN	OPEN	OPEN	OPEN	OPEN

RCP/MSIV Group VI

TIME	0951	0954	0957	1000	1003	1006	1009
Battery 1 Y0774A Volts	130	130	130	130	130	130	130
Battery 2 Y0775A Volts	130	130	130	130	130	130	130
Battery 3 Y0776A Volts	130	130	130	130	130	130	130
Battery 4 Y0777A Volts	130	130	130	130	130	130	130
Battery 5 Y0778A Volts	130	130	130	130	130	130	130

Battery Group VII

TIME	0951	0954	0957	1000	1003	1006	1009
PAB PT VS101A Y0704A CPM	200	200	200	200	600	600	600
PAB GS VS101B R0033A CPM	40	40	40	40	60	60	60
PAB TRA VS102A Y0731A CPM	60	60	60	60	60	60	60
PAB TRB VS102B Y0732A CPM	50	50	50	50	50	50	50
SLCRS P VS107A Y0710A CPM	200	200	200	200	200	200	200
SLCRS G VS107B Y0711A CPM	40	40	40	40	40	40	40
SAFE VNT VS105 Y0727A CPM	70	70	70	70	70	70	70
WGDT Vlt VS106 Y0728A CPM	150	150	150	150	150	150	150
FHB TRA VS103A Y0706A CPM	90	90	90	90	90	90	90
FHB TRB VS103B Y0709A CPM	60	60	60	60	60	60	60

Effluent Group VIII

TIME	0951	0954	0957	1000	3	1006	1009
RCB PRG VS104A Y0707A CPM	BAD	BAD	BAD	BAD	BAD	BAD	BAD
RCB PRG VS104B Y0708A CPM	BAD	BAD	BAD	BAD	BAD	BAD	BAD
WG PART GW108A Y0721A CPM	70	70	70	70	70	70	70
WG GAS GW108B R0032A CPM	300	300	300	300	300	300	300
REC HX RW100A Y0725A CPM	BAD	BAD	BAD	BAD	BAD	BAD	BAD
REC HX RW100B Y0726A CPM	BAD	BAD	BAD	BAD	BAD	BAD	BAD
REC HX RW100C Y0729A CPM	BAD	BAD	BAD	BAD	BAD	BAD	BAD
REC HX RW100D Y0730A CPM	BAD	BAD	BAD	BAD	BAD	BAD	BAD
REC HX RW100 Y0705A CPM	60	60	60	60	60	60	60
CCW HX RW101 Y0713A CPM	60	60	60	60	60	60	60

Effluent Group VIII

TIME	0951	0954	0957	1000	1003	1006	1009
CONT EJT SV100 R0029A CPM	50	50	50	50	50	50	50
LIQ WSTE LW104 R0030A CPM	7E3	7E3	7E3	7E3	7E3	7E3	7E3
CON DRNS LW116 Y0717A CPM	500	500	500	500	500	500	500

Effluent Group VIII

TIME	0951	0954	0957	1000	1003	1006	1009
RCB PT RM215A Y0718A CPM	1E3	1E3	1E3	1E3	1E3	1E3	1E3
RCB GS RM215B R0028A CPM	2.5E3	2.5E3	2.5E3	2.5E3	2.5E3	2.5E3	2.5E3
Letdown CH101A R0036A CPM	1.5E3	1.5E3	1.5E3	1.5E3	1.5E3	1.5E3	1.5E3
Letdown CH101B R0027A CPM	1.5E3	1.5E3	1.5E3	1.5E3	1.5E3	1.5E3	1.5E3
Mult P RM217A Y0719A CPM	200	200	200	200	200	200	200
Mult G RM217B Y0720A CPM	150	150	150	150	150	150	150
Ax St Cd AS100 R0031A CPM	60	60	60	60	60	60	60
S/G Bdwn BD100 R0034A CPM	BAD	BAD	BAD	BAD	BAD	BAD	BAD
S/G Bdwn SS100 Y0712A CPM	BAD	BAD	BAD	BAD	BAD	BAD	BAD
CC CCR100 Y0715A CPM	800	800	800	800	800	800	800

Process Group IX

TIME	0951	0954	0957	1000	1003	1006	1009
GW Tnk GW101 Y0733A CPM	BAD	BAD	BAD	BAD	BAD	BAD	BAD

Process Group IX

TIME	0951	0954	0957	1000	1003	1006	1009
Airlock RM201 Y0734A MR/HR	0.3	0.3	0.3	0.3	0.3	0.3	0.3
CrnWall RM202 Y0735A MR/HR	4.0	4.0	4.0	4.0	4.0	4.0	4.0
Manp Crn RM203 Y0716A MR/HR	BAD	BAD	BAD	BAD	BAD	BAD	BAD
Incor Rm RM204 Y0722A MR/HR	4.0	4.0	4.0	4.0	4.0	4.0	4.0
Dcon Bld RM205 R0020A MR/HR	8.0	8.0	8.0	8.0	8.0	8.0	3.0
New Fuel RM206 R0021A MR/HR	0.4	0.4	0.4	0.4	0.4	0.4	0.4
FHB Crn RM207 R0022A MR/HR	0.8	0.8	0.8	0.8	0.8	0.8	0.8
Sol Wst RM208 R0024A MR/HR	0.5	0.5	0.5	0.5	0.5	0.5	0.5
722PB NE RM209 R0023A MR/HR	0.4	0.4	0.4	0.4	0.4	0.4	0.4
752 PAB RM210 R0025A MR/HR	0.3	0.3	0.3	0.3	0.3	0.3	0.3

Area Group X

TIME	0951	0954	0957	1000	1003	1006	1009
722PB SE RM211 Y0723A MR/HR	2.0	2.0	2.0	2.0	2.0	2.0	2.0
Chem Smp RM212 Y0724A MR/HR	0.4	0.4	0.4	0.4	0.4	0.4	0.4
Cntrl Rm RM213 R0026A MR/HR	0.1	0.1	0.1	0.1	0.1	0.1	0.1
Hot Lab RM214 R0027A MR/HR	0.3	0.3	0.3	0.3	0.3	0.3	0.3
Cntl Rm RM216A R0072A MR/HR	.01	.01	.01	.01	.01	.01	.01
Cntl Rm RM218B R0071A MR/HR	.01	.01	.01	.01	.01	.01	.01
RCB HI RM219A R0070A R/HR	1	1	1	1	1	1	1
RCB HI RM219B R0071A R/HR	1	1	1	1	1	1	1

Area Group X

TIME	1012	1015	1018	1021	1024	1027	1030
RCS Hotleg A T0419A Deg. F	605	605	605	605	605	605	605
RCS Hotleg B T0439A Deg. F	605	605	605	605	605	605	605
RCS Hotleg C T0459A Deg. F	605	605	605	605	605	605	605
RCS Coldleg A T0406A Deg. F	545	545	545	545	545	545	545
RCS Coldleg B T0426A Deg. F	545	545	545	545	545	545	545
RCS Coldleg C T0446A Deg. F	545	545	545	545	545	545	545
RCS Flow A F0400C Percent	100	100	100	100	100	100	100
RCS Flow B F0421C Percent	100	100	100	100	100	100	
RCS Flow C F0442C Percent	100	100	100	100	100	100	100
VCT Level L2704A Percent	38	38	38	38	38	38	38

RCS Group I

TIME	1012	1015	1018	1021	1024	1027	1030
Source Range N0031A CPS	1.00	1.00	1.00	1.00	1.00	1.00	1.00
Power Range N0051A Percent	99	99	99	99	99	99	99
T/C Peak MXICTX Deg. F	621	621	621	621	621	621	621
T/C Average AVICTCX Deg. F	607	607	607	607	607	607	607
Deg Subcooling T3200A Deg. F	30	30	30	30	30	30	30
Inter Range N0035A CPS	10E-3	10E-3	10E-3	10E-3	10E-3	10E-3	10E-3

RCS Group I

TIME	1012	1015	1018	1021	1024	1027	1030
SG Pressure A P0402A PSIG	825	825	825	825	825	825	825
SG Pressure B P0422A PSIG	825	825	825	825	825	825	825
SG Pressure C P0442A PSIG	825	825	825	825	825	825	825
SG Level A L0403A (W.R.)	55	55	55	55	55	55	55
SG Level A L0402A (N.R.)	43	43	43	43	43	43	43
SG Level B L0423A (W.R.)	55	55	55	55	55	55	55
SG Level B L0422A (N.R.)	43	43	43	43	43	43	43
SG Level C L0443A (W.R.)	55	55	55	55	55	55	55
SG Level C L0442A (N.R.)	43	43	43	43	43	43	43

Steam Generator Group II

TIME	1012	1015	1018	1021	1024	1027	1030
Steam Flow A F0405A KBH	3877	3877	3877	3877	3877	3877	3877
Steam Flow B F0425A KBH	3877	3877	3877	3877	3877	3877	3877
Steam Flow C F0443A KBH	3877	3877	3877	3877	3877	3877	3877
PD WST TK 10 L3000A FT	28.3	28.3	28.3	28.3	28.3	28.3	28.3
Aux FD Flow A F0601A GPM	0	0	0	0	0	0	0
Aux FD Flow B F0602A GPM	0	0	0	0	0	0	0
Aux FD Flow C F0603A GPM	0	0	0	0	0	0	0

Steam Generator Group II

TIME	1012	1015	1018	1021	1024	1027	1030
Cont Pressure P1000A PSIA	9.45	9.45	9.45	9.45	9.45	9.45	9.45
Cont Temp T2460A DEG F	96.9	96.9	96.9	96.9	96.9	96.9	96.9
Cont Sump Lvl L0750A IN	0	0	0	0	0	0	0
Hydrogen C0201A Percent	0	0	0	0	0	0	0

Containment Group III

TIME	1012	1015	1018	1021	1024	1027	1030
SI Accum Lvl L0610A Percent	78	78	78	78	78	78	78
SI Accum Lvl L0620A Percent	78	78	78	78	78	78	78
SI Accum Lvl L0630A Percent	78	78	78	78	78	78	78
RWST Level L0500A IN	604	604	604	604	604	604	604

Safety Injection Group IV

TIME	1012	1015	1018	1021	1024	1027	1030
PZR Level L0480A Percent	54	54	54	54	54	54	54
PZR Temp (WTR) T0480A DEG F	649	649	649	649	649	649	649
PZR Temp (STM) T0481A DEG F	650	650	650	650	650	650	650
RCS Pressure P0499A PSIG	2228	2228	2228	2228	2228	2228	2228
PRT Level L0485A Percent	69	69	69	69	69	69	69
PZR Pressure P0480A PSIG	2217	2217	2217	2217	2217	2217	2217

Pressurizer Group V

TIME	1012	1015	1018	1021	1024	1027	1030
RCP 1A Y3421D On/Off	ON	ON	ON	ON	ON	ON	ON
RCP 1B Y3422D On/Off	ON	ON	ON	ON	ON	ON	ON
RCP 1C Y3423D On/Off	ON	ON	ON	ON	ON	ON	ON
MSIV Position OR001X O/C	OPEN	OPEN	OPEN	OPEN	OPEN	OPEN	OPEN
MSIV Position OR003X O/C	OPEN	OPEN	OPEN	OPEN	OPEN	OPEN	OPEN
MSIV Position OR005X O/C	OPEN	OPEN	OPEN	OPEN	OPEN	OPEN	OPEN

RCP/MSIV Group VI

TIME	1012	1015	1018	1021	1024	1027	1030
Battery 1 Y0774A Volts	130	130	130	130	130	130	130
Battery 2 Y0775A Volts	130	130	130	130	130	130	130
Battery 3 Y0776A Volts	130	130	130	130	130	130	130
Battery 4 Y0777A Volts	130	130	130	130	130	130	130
Battery 5 Y0778A Volts	130	130	130	130	130	130	130

Battery Group VII

TIME	1012	1015	1018	1021	1024	1027	1030
PAB PT VS101A Y0704A CPM	600	600	600	600	600	600	600
PAB GS VS101B R0033A CPM	60	60	60	60	60	60	60
PAB TRA VS102A Y0731A CPM	60	60	60	60	60	60	60
PAB TRB VS102B Y0732A CPM	50	50	50	50	50	50	50
SLCRS P VS107A Y0710A CPM	200	200	200	200	200	200	200
SLCRS G VS107B Y0711A CPM	40	40	40	40	40	40	40
SAFE VNT VS105 Y0727A CPM	70	70	70	70	70	70	70
WGDT Vlt VS106 Y0728A CPM	150	150	150	150	150	150	150
FHB TRA VS103A Y0706A CPM	90	90	90	90	90	90	90
FHB TRB VS103B Y0709A CPM	60	60	60	60	60	60	60

Effluent Group VIII

TIME	1012	1015	1018	1021	1024	1027	1030
RCB PRG VS104A Y0707A CPM	BAD	BAD	BAD	BAD	BAD	BAD	BAD
RCB PRG VS104B Y0708A CPM	BAD	BAD	BAD	BAD	BAD	BAD	BAD
WG PART GW108A Y0721A CPM	70	70	70	70	70	70	70
WG GAS GW108B R0032A CPM	300	300	300	300	300	300	300
REC HX RW100A Y0725A CPM	BAD	BAD	BAD	BAD	BAD	BAD	BAD
REC HX RW100B Y0726A CPM	BAD	BAD	BAD	BAD	BAD	BAD	BAD
REC HX RW100C Y0729A CPM	BAD	BAD	BAD	BAD	BAD	BAD	BAD
REC HX RW100D Y0730A CPM	BAD	BAD	BAD	BAD	BAD	BAD	BAD
REC HX RW100 Y0705A CPM	60	60	60	60	60	60	60
CCW HX RW101 Y0713A CPM	60	60	60	60	60	60	60

Effluent Group VIII

TIME	1012	1015	1018	1021	1024	1027	1030
CONT EJT SV100 R0029A CPM	50	50	50	50	50	50	50
LIQ WSTE LW104 R0030A CPM	7E3	7E3	7E3	7E3	7E3	7E3	7E3
CON DRNS LW116 Y0717A CPM	500	500	500	500	500	500	500

Effluent Group VIII

TIME	1012	1015	1018	1021	1024	1027	1030
RCB PT RM215A Y0718A CPM	1E3	1E3	1E3	1E3	1E3	1E3	1E3
RCB GS RM215B R0028A CPM	2.5E3	2.5E3	2.5E3	2.5E3	2.5E3	2.5E3	2.5E3
Letdown CH101A R0036A CPM	1.5E3	1.5E3	1.5E3	1.5E3	1.5E3	1.5E3	1.5E3
Letdown CH101B R0037A CPM	1.5E3	1.5E3	1.5E3	1.5E3	1.5E3	1.5E3	1.5E3
Mult P RM217A Y0719A CPM	200	200	200	200	200	200	200
Mult G RM217B Y0720A CPM	150	150	150	150	150	150	150
Ax St Cd AS100 R0031A CPM	60	60	60	60	60	60	60
S/G Bdwn BD100 R0034A CPM	BAD	BAD	BAD	BAD	BAD	BAD	BAD
S/G Bdwn SS100 Y0712A CPM	BAD	BAD	BAD	BAD	BAD	BAD	BAD
CC CCR100 Y0715A CPM	800	800	800	800	800	800	800

Process Group IX

TIME	1012	1015	1018	1021	1024	1027	1030
GW Tnk GW101 Y0733A CPM	BAD	BAD	BAD	BAD	BAD	BAD	BAD

Process Group IX

TIME	1012	1015	1018	1021	1024	1027	1030
Airlock RM201 Y0734A MR/HR	0.3	0.3	0.3	0.3	0.3	0.3	0.3
CrnWall RM202 Y0735A MR/HR	4.0	4.0	4.0	4.0	4.0	4.0	4.0
Manp Crn RM203 Y0716A MR/HR	BAD	BAD	BAD	BAD	BAD	BAD	BAD
Incor Rm RM204 Y0722A MR/HR	4.0	4.0	4.0	4.0	4.0	4.0	4.0
Dcon Bld RM205 R0020A MR/HR	8.0	8.0	8.0	8.0	8.0	8.0	8.0
New Fuel RM206 R0021A MR/HR	0.4	0.4	0.4	0.4	0.4	0.4	0.4
FHB Crn RM207 R0022A MR/HR	0.8	0.8	0.8	0.8	0.8	0.8	0.8
Sol Wst RM208 R0024A MR/HR	0.5	0.5	0.5	0.5	0.5	0.5	0.5
722PB NE RM209 R0023A MR/HR	0.4	0.4	0.4	0.4	0.4	0.4	0.4
752 PAB RM210 R0025A MR/HR	0.3	0.3	0.3	0.3	0.3	0.3	0.3

Area Group X

TIME	1012	1015	1018	1021	1024	1027	1030
722PB SE RM211 Y0723A MR/HR	2.0	2.0	2.0	2.0	2.0	2.0	2.0
Chem Smp RM212 Y0724A MR/HR	0.4	0.4	0.4	0.4	0.4	0.4	0.4
Cntrl Rm RM213 R0026A MR/HR	0.1	0.1	0.1	0.1	0.1	0.1	0.1
Hot Lab RM214 R0027A MR/HR	0.3	0.3	0.3	0.3	0.3	0.3	0.3
Cntl Rm RM218A R0072A MR/HR	.01	.01	.01	.01	.01	.01	.01
Cntl Rm RM218B R0073A MR/HR	.01	.01	.01	.01	.01	.01	.01
RCB HI RM219A R0070A R/HR	1	1	1	1	1	1	1
RCB HI RM219B R0071A R/HR	1	1	1	1	1	1	1

Area Group X

TIME	1033	1036	1039	1042	1045	1048	1051
RCS Hotleg A T0419A Deg. F	605	605	605	605	605	605	605
RCS Hotleg B T0439A Deg. F	605	605	605	605	605	605	605
RCS Hotleg C T0459A Deg. F	605	605	605	605	605	605	605
RCS Coldleg A T0406A Deg. F	545	545	545	545	545	545	545
RCS Coldleg B T0426A Deg. F	545	545	545	545	545	545	545
RCS Coldleg C T0446A Deg. F	545	545	545	545	545	545	545
RCS Flow A F0400C Percent	100	100	100	100	100	100	100
RCS Flow B F0421C Percent	100	100	100	100	100	100	100
RCS Flow C F0442C Percent	100	100	100	100	100	100	100
VCT Level L2704A Percent	38	38	38	38	38	38	38

RCS Group I

TIME	1033	1036	1039	1042	1045	1048	1051
Source Range N0031A CPS	1.00	1.00	1.00	1.00	1.00	1.00	1.00
Power Range N0051A Percent	99	99	99	99	99	99	99
T/C Peak MXICTX Deg. F	621	621	621	621	621	621	621
T/C Average AVICTCX Deg. F	607	607	607	607	607	607	607
Deg Subcooling T3200A Deg. F	30	30	30	30	30	30	30
Inter Range N0035A CPS	10E-3	10E-3	10E-3	10E-3	10E-3	10E-3	10E-3

RCS Group I

TIME	1033	1036	1039	1042	1045	1048	1051
SG Pressure A P0402A PSIG	825	825	825	825	825	825	825
SG Pressure B P0422A PSIG	825	825	825	825	825	825	825
SG Pressure C P0442A PSIG	825	825	825	825	825	825	825
SG Level A L0403A (W.R.)	55	55	55	55	55	55	55
SG Level A L0402A (N.R.)	43	43	43	43	43	43	43
SG Level B L0423A (W.R.)	55	55	55	55	55	55	55
SG Level B L0422A (N.R.)	43	43	43	43	43	43	43
SG Level C L0443A (W.R.)	55	55	55	55	55	55	55
SG Level C L0442A (N.R.)	43	43	43	43	43	43	43

Steam Generator Group II

TIME	1033	1036	1039	1042	1045	1048	1051
Steam Flow A F0405A KBH	3877	3877	3877	3877	3877	3877	3877
Steam Flow B F0425A KBH	3877	3877	3877	3877	3877	3877	3877
Steam Flow C F0443A KBH	3877	3877	3877	3877	3877	3877	3877
PD WST TK 10 L3000A FT	28.3	28.3	28.3	28.3	28.3	28.3	28.3
Aux FD Flow A F0601A GPM	0	0	0	0	0	0	0
Aux FD Flow B F0602A GPM	0	0	0	0	0	0	0
Aux FD Flow C F0603A GPM	0	0	0	0	0	0	0

Steam Generator Group II

TIME	1033	1036	1039	1042	1045	1048	1051
Cont Pressure P1000A PSIA	9.45	9.45	9.45	9.45	9.45	9.45	9.45
Cont Temp T2460A DEG F	96.9	96.9	96.9	96.9	96.9	96.9	96.9
Cont Sump Lvl L0750A IN	0	0	0	0	0	0	0
Hydrogen C0201A Percent	0	0	0	0	0	0	0

Containment Group III

TIME	1033	1036	1039	1042	1045	1048	1051
SI Accum Lvl L0610A Percent	78	78	78	78	78	78	78
SI Accum Lvl L0620A Percent	78	78	78	78	78	78	78
SI Accum Lvl L0630A Percent	78	78	78	78	78	78	78
RWST Level L0500A IN	604	604	604	604	604	604	604

Safety Injection Group IV

TIME	1033	1036	1039	1042	1045	1048	1051
PZR Level L0480A Percent	54	54	54	54	54	54	54
PZR Temp (WTR) T0480A DEG F	649	649	649	649	649	649	649
PZR Temp (STM) T0481A DEG F	650	650	650	650	650	650	650
RCS Pressure P0499A PSIG	2228	2228	2228	2228	2228	2228	2228
PRT Level L0485A Percent	69	69	69	69	69	69	69
PZR Pressure P0480A PSIG	2217	2217	2217	2217	2217	2217	2217

Pressurizer Group V

TIME	1033	1036	1039	1042	1045	1048	1051
RCP 1A Y3421D On/Off	ON	ON	ON	ON	ON	ON	ON
RCP 1B Y3422D On/Off	ON	ON	ON	ON	ON	ON	ON
RCP 1C Y3423D On/Off	ON	ON	ON	ON	ON	ON	ON
MSIV Position OR001X O/C	OPEN	OPEN	OPEN	OPEN	OPEN	OPEN	OPEN
MSIV Position OR003X O/C	OPEN	OPEN	OPEN	OPEN	OPEN	OPEN	OPEN
MSIV Position OR005X O/C	OPEN	OPEN	OPEN	OPEN	OPEN	OPEN	OPEN

RCP/MSIV Group VI

TIME	1033	1036	1039	1042	1045	1048	1051
Battery 1 Y0774A Volts	130	130	130	130	130	130	130
Battery 2 Y0775A Volts	130	130	130	130	130	130	130
Battery 3 Y0776A Volts	130	130	130	130	130	130	130
Battery 4 Y0777A Volts	130	130	130	130	130	130	130
Battery 5 Y0778A Volts	130	130	130	130	130	130	130

Battery Group VII

TIME	1033	1036	1039	1042	1045	1048	1051
PAB PT VS101A Y0704A CPM	600	600	600	600	600	600	600
PAB GS VS101B R0033A CPM	60	60	60	60	60	60	60
PAB TRA VS102A Y0731A CPM	60	60	60	60	60	60	60
PAB TRB VS102B Y0732A CPM	50	50	50	50	50	50	50
SLCRS P VS107A Y0710A CPM	200	200	200	200	200	200	200
SLCRS G VS107B Y0711A CPM	40	40	40	40	40	40	40
SAFE VNT VS105 Y0727A CPM	70	70	70	70	70	70	70
WGDT Vlt VS106 Y0728A CPM	150	150	150	150	150	150	150
FHB TRA VS103A Y0706A CPM	90	90	90	90	90	90	90
FHB TRB VS103B Y0709A CPM	60	60	60	60	60	60	60

Effluent Group VIII

TIME	1033	1036	1039	1042	1045	1048	1051
RCB PRG VS104A Y0707A CPM	BAD	BAD	BAD	BAD	BAD	BAD	BAD
RCB PRG VS104B Y0708A CPM	BAD	BAD	BAD	BAD	BAD	BAD	BAD
WG PART GW108A Y0721A CPM	70	70	70	70	70	70	70
WG GAS GW108B R0032A CPM	300	300	300	300	300	300	300
REC HX RW100A Y0725A CPM	BAD	BAD	BAD	BAD	BAD	BAD	BAD
REC HX RW100B Y0726A CPM	BAD	BAD	BAD	BAD	BAD	BAD	BAD
REC HX RW100C Y0729A CPM	BAD	BAD	BAD	BAD	BAD	BAD	BAD
REC HX RW100D Y0730A CPM	BAD	BAD	BAD	BAD	BAD	BAD	BAD
REC HX RW100 Y0705A CPM	60	60	60	60	60	60	60
CCW HX RW101 Y0713A CPM	60	60	60	60	60	60	60

Effluent Group VIII

TIME	1033	1036	1039	1042	1045	1048	1051
CONT EJT SV100 R0029A CPM	50	50	50	50	50	50	50
LIQ WSTE LW104 R0030A CPM	7E3	7E3	7E3	7E3	7E3	7E3	7E3
CON DRNS LW116 Y0717A CPM	500	500	500	500	500	500	500

Effluent Group VIII

TIME	1033	1036	1039	1042	1045	1048	1051
RCB PT RM215A Y0718A CPM	1E3	1E3	1E3	1E3	1E3	1E3	1E3
RCB GS RM215B R0028A CPM	2.5E3	2.5E3	2.5E3	2.5E3	2.5E3	2.5E3	2.5E3
Letdown CH101A R0036A CPM	1.5E3	1.5E3	1.5E3	1.5E3	1.5E3	1.5E3	1.5E3
Letdown CH101B R0037A CPM	1.5E3	1.5E3	1.5E3	1.5E3	1.5E3	1.5E3	1.5E3
Mult P RM217A Y0719A CPM	200	200	200	200	200	200	200
Mult S RM217B Y0720A CPM	150	150	150	150	150	150	150
Ax St Cd AS100 R0031A CPM	60	60	60	60	60	60	60
S/G Bdwn BD100 R0034A CPM	BAD	BAD	BAD	BAD	BAD	BAD	BAD
S/G Bdwn SS100 Y0712A CPM	BAD	BAD	BAD	BAD	BAD	BAD	BAD
CC CCR100 Y0715A CPM	800	800	800	800	800	800	800

Process Group IX

TIME	1033	1036	1039	1042	1045	1048	1051
GW Tnk GW101 Y0733A CPM	BAD	BAD	BAD	BAD	BAD	BAD	BAD

Process Group IX

TIME	1033	1036	1039	1042	1045	1048	1051
Airlock RM201 Y0734A MR/HR	0.3	0.3	0.3	0.3	0.3	0.3	0.3
CrnWall RM202 Y0735A MR/HR	4.0	4.0	4.0	4.0	4.0	4.0	4.0
Manp Crn RM203 Y0716A MR/HR	BAD	BAD	BAD	BAD	BAD	BAD	BAD
Incor Rm RM204 Y0722A MR/HR	4.0	4.0	4.0	4.0	4.0	4.0	4.0
Decon Bld RM205 R0020A MR/HR	8.0	8.0	8.0	8.0	8.0	8.0	8.0
New Fuel RM206 R0021A MR/HR	0.4	0.4	0.4	0.4	0.4	0.4	0.4
FHB Crn RM207 R0022A MR/HR	0.8	0.8	0.8	0.8	0.8	0.8	0.8
Sol Wst RM208 R0024A MR/HR	0.5	0.5	0.5	0.5	0.5	0.5	0.5
722PB NE RM209 R0023A MR/HR	0.4	0.4	0.4	0.4	0.4	0.4	0.4
752 PAB RM210 R0025A MR/HR	0.3	0.3	0.3	0.3	0.3	0.3	0.3

Area Group X

TIME	1033	1036	1039	1042	1045	1048	1051
722PB SE RM211 Y0723A MR/HR	2.0	2.0	2.0	2.0	2.0	2.0	2.0
Chem Smp RM212 Y0724A MR/HR	0.4	0.4	0.4	0.4	0.4	0.4	[illegible]
Cntrl Rm RM213 R0026A MR/HR	0.1	0.1	0.1	0.1	0.1	0.1	0.1
Hot Lab RM214 R0027A MR/HR	0.3	0.3	0.3	0.3	0.3	0.3	0.3
Cntl Rm RM218A R0072A MR/HR	.01	.01	.01	.01	.01	.01	.01
Cntl Rm RM218B R0073A MR/HR	.01	.01	.01	.01	.01	.01	.01
RCB HI RM219A R0070A R/HR	1	1	1	1	1	1	1
RCB HI RM219B R0071A R/HR	1	1	1	1	1	1	1

Area Group X

TIME	1054	1057	1100	1103	1106	1109	111
RCS Hotleg A T0419A Deg. F	605	605	605	605	605	605	605
RCS Hotleg B T0439A Deg. F	605	605	605	605	605	605	605
RCS Hotleg C T0459A Deg. F	605	605	605	605	605	605	605
RCS Coldleg A T0406A Deg. F	545	545	545	545	545	545	545
RCS Coldleg B T0426A Deg. F	545	545	545	545	545	545	545
RCS Coldleg C T0446A Deg. F	545	545	545	545	545	545	545
RCS Flow A F0400C Percent	100	100	100	100	100	100	100
RCS Flow B F0421C Percent	100	100	100	100	100	100	100
RCS Flow C F0442C Percent	100	100	100	100	100	100	100
VCT Level L2704A Percent	38	38	38	38	38	38	38

RCS Group I

TIME	1054	1057	1100	1103	1106	1109	1112
Source Range N0031A CPS	1.00	1.00	1.00	1.00	1.00	1.00	1.00
Power Range N0051A Percent	99	99	99	99	99	99	99
T/C Peak MXICTX Deg. F	621	621	621	621	621	621	621
T/C Average AVICTCX Deg. F	607	607	607	607	607	607	607
Deg Subcooling T3200A Deg. F	30	30	30	30	30	30	30
Inter Range N0035A CPS	10E-3	10E-3	10E-3	10E-3	10E-3	10E-3	10E-3

RCS Group I

TIME	1054	1057	1100	1103	1106	1109	1112
SG Pressure A P0402A PSIG	825	825	825	825	825	825	825
SG Pressure B P0422A PSIG	825	825	825	825	825	825	825
SG Pressure C P0442A PSIG	825	825	825	825	825	825	825
SG Level A L0403A (W.R.)	55	55	55	55	55	55	55
SG Level A L0402A (N.R.)	43	43	43	43	43	43	43
SG Level B L0423A (W.R.)	55	55	55	55	55	55	55
SG Level B L0422A (N.R.)	43	43	43	43	43	43	43
SG Level C L0443A (W.R.)	55	55	55	55	55	55	55
SG Level C L0442A (N.R.)	43	43	43	43	43	43	43

Steam Generator Group II

TIME	1054	1057	1100	1103	1106	1109	1112
Steam Flow A F0405A KBH	3877	3877	3877	3877	3877	3877	3877
Steam Flow B F0425A KBH	3877	3877	3877	3877	3877	3877	3877
Steam Flow C F0443A KBH	3877	3877	3877	3877	3877	3877	3877
PD WST TK 10 L300CA FT	28.3	28.3	28.3	28.3	28.3	28.3	28.3
Aux FD Flow A F0601A GPM	0	0	0	0	0	0	0
Aux FD Flow B F0602A GPM	0	0	0	0	0	0	0
Aux FD Flow C F0603A GPM	0	0	0	0	0	0	0

Steam Generator Group II

TIME	1054	1057	1100	1103	1106	1109	1112
Cont Pressure P1000A PSIA	9.45	9.45	9.45	9.45	9.45	9.45	9.45
Cont Temp T2460A DEG F	96.9	96.9	96.6	96.9	96.9	96.9	96.9
Cont Sump Lvl L0750A IN	0	0	0	0	0	0	0
Hydrogen C0201A Percent	0	0	0	0	0	0	0

Containment Group III

TIME	1054	1057	1100	1103	1106	1109	1112
SI Accum Lvl L0610A Percent	78	78	78	78	78	78	78
SI Accum Lvl L0620A Percent	78	78	78	78	78	78	78
SI Accum Lvl L0630A Percent	78	78	78	78	78	78	78
RWST Level L0500A IN	604	604	604	604	604	604	604

Safety Injection Group IV

TIME	1054	1057	1100	1103	1106	1109	1112
PZR Level L0480A Percent	54	54	54	54	54	54	54
PZR Temp (WTR) T0480A DEG F	649	649	649	649	649	649	649
PZR Temp (STM) T0481A DEG F	650	650	650	650	650	650	650
RCS Pressure P0499A PSIG	2228	2228	2228	2228	2228	2228	2228
PRT Level L0485A Percent	69	69	69	69	69	69	69
PZR Pressure P0480A PSIG	2217	2217	2217	2217	2217	2217	2217

Pressurizer Group V

TIME	1054	1057	1100	1103	1106	1109	1112
RCP 1A Y3421D On/Off	ON	ON	ON	ON	ON	ON	ON
RCP 1B Y3422D On/Off	ON	ON	ON	ON	ON	ON	ON
RCP 1C Y3423D On/Off	ON	ON	ON	ON	ON	ON	ON
MSIV Position OR001X O/C	OPEN	OPEN	OPEN	OPEN	OPEN	OPEN	OPEN
MSIV Position OR003X O/C	OPEN	OPEN	OPEN	OPEN	OPEN	OPEN	OPEN
MSIV Position OR005X O/C	OPEN	OPEN	OPEN	OPEN	OPEN	OPEN	OPEN

RCP/MSIV Group VI

TIME	1054	1057	1100	1103	1106	1109	1112
Battery 1 Y0774A Volts	130	130	130	130	130	130	130
Battery 2 Y0775A Volts	130	130	130	130	130	130	130
Battery 3 Y0776A Volts	130	130	130	130	130	130	130
Battery 4 Y0777A Volts	130	130	130	130	130	130	130
Battery 5 Y0778A Volts	130	130	130	130	130	130	130

Battery Group VII

TIME	1054	1057	1100	1103	1106	1109	1112
PAB PT VS101A Y0704A CPM	600	600	600	600	600	600	600
PAB GS VS101B R0033A CPM	60	60	60	60	60	60	60
PAB TRA VS102A Y0731A CPM	60	60	60	60	60	60	60
PAB TRB VS102B Y0732A CPM	50	50	50	50	50	50	50
SLCRS P VS107A Y0710A CPM	200	200	200	200	200	200	200
SLCRS G VS107B Y0711A CPM	40	40	40	40	40	40	40
SAFE VNT VS105 Y0727A CPM	70	70	70	70	70	70	70
WGDT Vlt VS106 Y0728A CPM	150	150	150	150	150	150	150
FHB TRA VS103A Y0706A CPM	90	90	90	90	90	90	90
FHB TRB VS103B Y0709A CPM	60	60	60	60	60	60	60

Effluent Group VIII

TIME	1054	1057	1100	1103	1106	1109	1112
RCP PRG VS104A Y0707A CPM	BAD	BAD	BAD	BAD	BAD	BAD	BAD
RCB PRG VS104B Y0708A CPM	BAD	BAD	BAD	BAD	BAD	BAD	BAD
WG PART GW108A Y0721A CPM	70	70	70	70	70	70	70
WG GAS GW108B R0032A CPM	300	300	300	300	300	300	300
REC HX RW100A Y0725A CPM	BAD	BAD	BAD	BAD	BAD	BAD	BAD
REC HX RW100B Y0726A CPM	BAD	BAD	BAD	BAD	BAD	BAD	BAD
REC HX RW100C Y0729A CPM	BAD	BAD	BAD	BAD	BAD	BAD	BAD
REC HX RW100D Y0730A CPM	BAD	BAD	BAD	BAD	BAD	BAD	BAD
REC HX RW100 Y0705A CPM	60	60	60	60	60	60	60
CCW HX RW101 Y0713A CPM	60	60	60	60	60	60	60

Effluent Group VIII

TIME	1054	1057	1100	1103	1106	1109	1112
CONT EJT SV100 R0029A CPM	50	50	50	50	50	50	50
LIQ WSTE LW104 R0030A CPM	7E3	7E3	7E3	7E3	7E3	7E3	7E3
CON DRNS LW116 Y0717A CPM	500	500	500	500	500	500	500

Effluent Group VIII

TIME	1054	1057	1100	1103	1106	1109	1112
RCB PT RM215A Y0718A CPM	1E3	1E3	1E3	1E3	1E3	1E3	1E3
RCB GS RM215B R0028A CPM	2.5E3	2.5E3	2.5E3	2.5E3	2.5E3	2.5E3	2.5E3
Letdown CH101A R0036A CPM	1.5E3	1.5E3	1.5E3	1.5E3	1.5E3	1.5E3	1.5E3
Letdown CH101B R0037A CPM	1.5E3	1.5E3	1.5E3	1.5E3	1.5E3	1.5E3	1.5E3
Mult P RM217A Y0719A CPM	200	200	200	200	200	200	200
Mult G RM217B Y0720A CPM	150	150	150	150	150	150	150
Ax St Cd AS100 R0031A CPM	60	60	60	60	60D	60	60
S/G Bdwn BD100 R0034A CPM	BAD	BAD	BAD	BAD	BAD	BAD	BAD
S/G Bdwn SS100 Y0712A CPM	BAD	BAD	BAD	BAD	BAD	BAD	BAD
CC CCR100 Y0715A CPM	800	800	800	800	800	800	800

Process Group IX

TIME	1054	1057	1100	1103	1106	1109	1112
GW Tnk GW101 Y0733A CPM	BAD	BAD	BAD	BAD	BAD	BAD	BAD

Process Group IX

TIME	1054	1057	1100	1103	1106	1109	1112
Airlock RM201 Y0734A MR/HR	0.3	0.3	0.3	0.3	0.3	0.3	0.3
CrnWall RM202 Y0735A MR/HR	4.0	4.0	4.0	4.0	4.0	4.0	4.0
Manp Crn RM203 Y0716A MR/HR	BAD	BAD	BAD	BAD	BAD	BAD	BAD
Incor Rm RM204 Y0722A MR/HR	4.0	4.0	4.0	4.0	4.0	4.0	4.0
Decon Bld RM205 R0020A MR/HR	8.0	8.0	8.0	8.0	8.0	8.0	8.0
New Fuel RM206 R0021A MR/HR	0.4	0.4	0.4	0.4	0.4	0.4	0.4
FHB Crn RM207 R0022A MR/HR	0.8	0.8	0.8	0.8	0.8	0.8	0.8
Sol Wst RM208 R0024A MR/HR	0.5	0.5	0.5	0.5	0.5	0.5	0.5
722PB NE RM209 R0023A MR/HR	0.4	0.4	0.4	0.4	0.4	0.4	0.4
752 PAB RM210 R0025A MR/HR	0.3	0.3	0.3	0.3	0.3	0.3	0.3

Area Group X

TIME	1054	1057	1100	1103	1106	1109	1112
722PB SE RM211 Y0723A MR/HR	2.0	2.0	2.0	2.0	2.0	2.0	2.0
Chem Smp RM212 Y0724A MR/HR	0.4	0.4	0.4	0.4	0.4	0.4	
Cntrl Rm RM213 R0026A MR/HR	0.1	0.1	0.1	0.1	0.1	0.1	
Hot Lab RM214 R0027A MR/HR	0.3	0.3	0.3	0.3	0.3	0.3	0.
Cntl Rm RM218A R0072A MR/HR	.01	.01	.01	.01	.01	.01	.01
Cntl Rm RM218B R0073A MR/HR	.01	.01	.01	.01	.01	.01	.01
RCB HI RM219A R0070A R/HR	1	1	1	1	1	1	1
RCB HI RM219B R0071A R/HR	1	1	1	1	1	1	1

Area Group X

TIME	1115	1118	1121	1124	1127	1130	1133
RCS Hotleg A T0419A Deg. F	605	605	605	605	605	605	605
RCS Hotleg B T0439A Deg. F	605	605	605	605	605	605	605
RCS Hotleg C T0459A Deg. F	605	605	605	605	605	605	605
RCS Coldleg A T0406A Deg. F	545	545	545	545	545	545	54[illegible]
RCS Coldleg B T0426A Deg. F	545	545	545	545	545	545	545
RCS Coldleg C T0446A Deg. F	545	545	545	545	545	545	545
RCS Flow A F0400C Percent	100	100	100	100	100	100	100
RCS Flow B F0421C Percent	100	100	100	100	100	100	100
RCS Flow C F0442C Percent	100	100	100	100	100	100	100
VCT Level L2704A Percent	38	38	38	38	38	38	38

RCS Group I

TIME	1115	1118	1121	1124	1127	1130	1133
Source Range N0031A CPS	1.00	1.00	1.00	1.00	1.00	1.00	1.00
Power Range N0051A Percent	99	99	99	99	99	99	99
T/C Peak MXICTX Deg. F	621	621	621	621	621	621	621
T/C Average AVICTCX Deg. F	607	607	607	607	607	607	607
Deg Subcooling T3200A Deg. F	30	30	30	30	30	30	30
Inter Range N0035A CPS	10E-3	10E-3	10E-3	10E-3	10E-3	10E-3	10E-3

RCS Group I

TIME	1115	1118	1121	1124	1127	1130	1133
SG Pressure A P0402A PSIG	825	825	825	825	825	825	825
SG Pressure B P0422A PSIG	825	825	825	825	825	825	825
SG Pressure C P0442A PSIG	825	825	825	825	825	825	825
SG Level A L0403A (W.R.)	55	55	55	55	55	55	55
SG Level A L0402A (N.R.)	43	43	43	43	43	43	43
SG Level B L0423A (W.R.)	55	55	55	55	55	55	55
SG Level B L0422A (N.R.)	43	43	43	43	43	43	43
SG Level C L0443A (W.R.)	55	55	55	55	55	55	55
SG Level C L0442A (N.R.)	43	43	43	43	43	43	43

Steam Generator Group II

TIME	1115	1118	1121	1124	1127	1130	1133
Steam Flow A F0405A KBH	3877	3877	3877	3877	3877	3877	3877
Steam Flow B F0425A KBH	3877	3877	3877	3877	3877	3877	3877
Steam Flow C F0443A KBH	3877	3877	3877	3877	3877	3877	3877
PD WST TK 10 L3000A FT	28.3	28.3	28.3	28.3	28.3	28.3	28.3
Aux FD Flow A F0601A GPM	0	0	0	0	0	0	0
Aux FD Flow B F0602A GPM	0	0	0	0	0	0	0
Aux FD Flow C F0603A GPM	0	0	0	0	0	0	0

Steam Generator Group II

TIME	1115	1118	1121	1124	1127	1130	1133
Cont Pressure P1000A PSIA	9.45	9.45	9.45	9.45	9.45	9.45	9.45
Cont Temp T2460A DEG F	96.9	96.9	96.9	96.9	96.9	96.9	96.9
Cont Sump Lvl L0750A IN	0	0	0	0	0	0	0
Hydrogen C0201A Percent	0	0	0	0	0	0	0

Containment Group III

TIME	1115	1118	1121	1124	1127	1130	1133
SI Accum Lvl L0610A Percent	78	78	78	78	78	78	78
SI Accum Lvl L0620A Percent	78	78	78	78	78	78	78
SI Accum Lvl L0630A Percent	78	78	78	78	78	78	78
RWST Level L0500A IN	604	604	604	604	604	604	604

Safety Injection Group IV

TIME	1115	1118	1121	1124	1127	1130	1133
PZR Level L0480A Percent	54	54	54	54	54	54	54
PZR Temp (WTR) T0480A DEG F	649	649	649	649	649	649	649
PZR Temp (STM) T0481A DEG F	650	650	650	650	650	650	650
RCS Pressure P0499A PSIG	2228	2228	2228	2228	2224	2228	2228
PRT Level L0485A Percent	69	69	69	69	69	69	69
PZR Pressure P0480A PSIG	2217	2217	2217	2217	2217	2217	2217

Pressurizer Group V

TIME	1115	1118	1121	1124	1127	1130	1133
RCP 1A Y3421D On/Off	ON	ON	ON	ON	ON	ON	ON
RCP 1B Y3422D On/Off	ON	ON	ON	ON	ON	ON	ON
RCP 1C Y3423D On/Off	ON	ON	ON	ON	ON	ON	ON
MSIV Position OR001X O/C	OPEN	OPEN	OPEN	OPEN	OPEN	OPEN	OPEN
MSIV Position OR003X O/C	OPEN	OPEN	OPEN	OPEN	OPEN	OPEN	OPEN
MSIV Position OR[illegible]3X O/C	OPEN	OPEN	OPEN	OPEN	OPEN	OPEN	OPEN

RCP/MSIV Group VI

TIME	1115	1118	1121	1124	1127	1130	1133
Battery 1 Y0774A Volts	130	130	130	130	130	130	130
Battery 2 Y0775A Volts	130	130	130	130	130	130	130
Battery 3 Y0776A Volts	130	130	130	130	130	130	130
Battery 4 Y0777A Volts	130	130	130	130	130	130	130
Battery 5 Y0778A Volts	130	130	130	130	130	130	130

Battery Group VII

TIME	1115	1118	1121	1124	1127	1130	1133
PAB PT VS101A Y0704A CPM	600	600	600	600	600	600	600
PAB GS VS101B R0033A CPM	60	60	60	60	60	60	60
PAB TRA VS102A Y0731A CPM	60	60	60	60	60	60	60
PAB TRB VS102B Y0732A CPM	50	50	50	50	50	50	50
SLCRS P VS107A Y0710A CPM	200	200	200	200	200	200	200
SLCRS G VS107B Y0711A CPM	40	40	40	40	40	40	40
SAFE VNT VS105 Y0727A CPM	70	70	70	70	70	70	70
WGDT Vlt VS106 Y0728A CPM	150	150	150	150	150	150	150
FHB TRA VS103A Y0706A CPM	90	90	90	90	90	90	90
FHB TRB VS103B Y0709A CPM	60	60	60	60	60	60	60

Effluent Group VIII

TIME	1115	1118	1121	1124	1127	1130	1133
RCB PRG VS104A Y0707A CPM	BAD	BAD	BAD	BAD	BAD	BAD	BAD
RCB PRG VS104B Y0708A CPM	BAD	BAD	BAD	BAD	BAD	BAD	BAD
WG PART GW108A Y0721A CPM	70	70	70	70	70	70	70
WG GAS GW108B R0032A CPM	300	300	300	300	300	300	300
REC HX RW100A Y0725A CPM	BAD	BAD	BAD	BAD	BAD	BAD	BAD
REC HX RW100B Y0726A CPM	BAD	BAD	BAD	BAD	BAD	BAD	BAD
REC HX RW100C Y0729A CPM	BAD	BAD	BAD	BAD	BAD	BAD	BAD
REC HX RW100D Y0730A CPM	BAD	BAD	BAD	BAD	BAD	BAD	BAD
REC HX RW100 Y0705A CPM	60	60	60	60	60	60	60
CCW HX RW101 Y0713A CPM	60	60	60	60	60	60	60

Effluent Group VIII

TIME	1115	1118	1121	1124	1127	1130	1133
CONT EJT SV100 R0029A CPM	50	50	50	50	50	50	50
LIQ WSTE LW104 R0030A CPM	7E3	7E3	7E3	7E3	7E3	7E3	7E3
CON DRNS LW116 Y0717A CPM	500	500	500	500	500	500	500

Effluent Group VIII

TIME	1115	1118	1121	1124	1127	1130	1133
RCB PT RM215A Y0718A CPM	1E3	1E3	1E3	1E3	1E3	1E3	1E3
RCB GS RM215B R0028A CPM	2.5E3	2.5E3	2.5E3	2.5E3	2.5E3	2.5E3	2.5E3
Letdown CH101A R0036A CPM	1.5E3	1.5E3	1.5E3	1.5E3	1.5E3	1.5E3	1.5E3
Letdown CH101B R0037A CPM	1.5E3	1.5E3	1.5E3	1.5E3	1.5E3	1.5E3	1.5E3
Mult P RM217A Y0719A CPM	200	200	200	200	200	200	200
Mult G RM217B Y0720A CPM	150	150	150	150	150	150	150
Ax St Cd AS100 R0031A CPM	60	60	60	60	60	60	60
S/G Bdwn BD100 R0034A CPM	BAD	BAD	BAD	BAD	BAD	BAD	BAD
S/G Bdwn SS100 Y0712A CPM	BAD	BAD	BAD	BAD	BAD	BAD	BAD
CC CCR100 Y0715A CPM	800	800	800	800	800	800	800

Process Group IX

TIME	1115	1118	1121	1124	1127	1130	1133
GW Tnk GW101 Y0733A CPM	BAD	BAD	BAD	BAD	BAD	BAD	BAD

Process Group IX

TIME	1115	1118	1121	1124	1127	1130	1133
Airlock RM201 Y0734A MR/HR	0.3	0.3	0.3	0.3	0.3	0.3	0.3
CrnWall RM202 Y0735A MR/HR	4.0	4.0	4.0	4.0	4.0	4.0	4.0
Manp Crn RM203 Y0716A MR/HR	BAD	BAD	BAD	BAD	BAD	BAD	BAD
Incor Rm RM204 Y0722A MR/HR	4.0	4.0	4.0	4.0	4.0	4.0	4.0
Dcon Bld RM205 R0020A MR/HR	8.0	8.0	8.0	8.0	8.0	8.0	8.0
New Fuel RM206 R0021A MR/HR	0.4	0.4	0.4	0.4	0.4	0.4	0.4
FHB Crn RM207 R0022A MR/HR	0.8	0.8	0.8	0.8	0.8	0.8	0.8
Sol Wst RM208 R0024A MR/HR	0.5	0.5	0.5	0.5	0.5	0.5	0.5
722PB NE RM209 R0023A MR/HR	0.4	0.4	0.4	0.4	0.4	0.4	0.4
752 PAB RM210 R0025A MR/HR	0.3	0.3	0.3	0.3	0.3	0.3	0.3

Area Group X

TIME	1115	1118	1121	1124	1127	1130	1133
722PB SE RM211 Y0723A MR/HR	2.0	2.0	2.0	2.0	2.0	2.0	2.0
Chem Smp RM212 Y0724A MR/HR	0.4	0.4	0.4	0.4	0.4	0.4	0.4
Cntrl Rm RM213 R0026A MR/HR	0.1	0.1	0.1	0.1	0.1	0.1	0.1
Hot Lab RM214 R0027A MR/HR	0.3	0.3	0.3	0.3	0.3	0.3	0.3
Cntl Rm RM218A R0072A MR/HR	.01	.01	.01	.01	.01	.01	.01
Cntl Rm RM218B R0073A MR/HR	.01	.01	.01	.01	.01	.01	.01
RCB HI RM219A R0070A R/HR	1	1	1	1	1	1	1
RCB HI RM219B R0071A R/HR	1	1	1	1	1	1	1

Area Group X

TIME	1136	1139	1142	1145	1148	1151	1154
RCS Hotleg A T0419A Deg. F	605	605	605	605	605	605	605
RCS Hotleg B T0439A Deg. F	605	605	605	605	605	605	605
RCS Hotleg C T0459A Deg. F	605	605	605	605	605	605	605
RCS Coldleg A T0406A Deg. F	545	545	545	545	545	545	545
RCS Coldleg B T0426A Deg. F	545	545	545	545	545	545	545
RCS Coldleg C T0446A Deg. F	545	545	545	545	545	545	545
RCS Flow A F0400C Percent	100	100	100	100	100	100	100
RCS Flow B F0421C Percent	100	100	100	100	100	100	100
RCS Flow C F0442C Percent	100	100	100	100	100	100	100
VCT Level L2704A Percent	38	38	38	38	38	38	38

RCS Group I

TIME	1136	1139	1142	1145	1148	1151	1154
Source Range N0031A CPS	1.00	1.00	1.00	1.00	1.00	1.00	1.00
Power Range N0051A Percent	99	99	99	99	99	99	99
T/C Peak MXICTX Deg. F	621	621	621	621	621	621	621
T/C Average AVICTCX Deg. F	607	607	607	607	607	607	607
Deg Subcooling T3200A Deg. F	30	30	30	30	30	30	30
Inter Range N0035A CPS	10E-3	10E-3	10E-3	10E-3	10E-3	10E-3	10E-3

RCS Group I

TIME	1136	1139	1142	1145	1148	1151	1154
SG Pressure A P0402A PSIG	825	825	825	825	825	825	825
SG Pressure B P0422A PSIG	825	825	825	825	825	825	825
SG Pressure C P0442A PSIG	825	825	825	825	825	825	825
SG Level A L0403A (W.R.)	55	55	55	55	55	55	55
SG Level A L0402A (N.R.)	43	43	43	43	43	43	43
SG Level B L0423A (W.R.)	55	55	55	55	55	55	55
SG Level B L0422A (N.R.)	43	43	43	43	43	43	43
SG Level C L0443A (W.R.)	55	55	55	55	55	55	55
SG Level C L0442A (N.R.)	43	43	43	43	43	43	43

Steam Generator Group II

TIME	1136	1139	1142	1145	1148	1151	1154
Steam Flow A F0405A KBH	3877	3877	3877	3877	3877	3877	3877
Steam Flow B F0425A KBH	3877	3877	3877	3877	3877	3877	3877
Steam Flow C F0443A KBH	3877	3877	3877	3877	3877	3877	3877
PD WST TK 10 L3000A FT	28.3	28.3	28.3	28.3	28.3	28.3	28.3
Aux FD Flow A F0601A GPM	0	0	0	0	0	0	0
Aux FD Flow B F0602A GPM	0	0	0	0	0	0	0
Aux FD Flow C F0603A GPM	0	0	0	0	0	0	0

Steam Generator Group II

TIME	1136	1139	1142	1145	1148	1151	1154
Cont Pressure P1000A PSIA	9.45	9.45	9.45	9.45	9.45	9.45	9.45
Cont Temp T2460A DEG F	96.9	96.9	96.9	96.9	96.9	96.9	96.9
Cont Sump Lvl L0750A IN	0	0	0	0	0	0	0
Hydrogen C0201A Percent	0	0	0	0	0	0	0

Containment Group III

TIME	1136	1139	1142	1145	1148	1151	1154
SI Accum Lvl L0610A Percent	78	78	78	78	78	78	78
SI Accum Lvl L0620A Percent	78	78	78	78	78	78	78
SI Accum Lvl L0630A Percent	78	78	78	78	78	78	78
RWST Level L0500A IN	604	604	604	604	604	604	604

Safety Injection Group IV

TIME	1136	1139	1142	1145	1148	1151	1154
PZR Level L0480A Percent	54	54	54	54	54	54	54
PZR Temp (WTR) T0480A DEG F	649	649	649	649	649	649	649
PZR Temp (STM) T0481A DEG F	650	650	650	650	650	650	650
RCS Pressure P0499A PSIG	2228	2228	2228	2228	2228	2228	2228
PRT Level L0485A Percent	69	69	69	69	69	69	69
PZR Pressure P0480A PSIG	2217	2217	2217	2217	2217	2217	2217

Pressurizer Group V

TIME	1136	1139	1142	1145	1148	1151	1154
RCP 1A Y3421D On/Off	ON	ON	ON	ON	ON	ON	ON
RCP 1B Y3422D On/Off	ON	ON	ON	ON	ON	ON	ON
RCP 1C Y3423D On/Off	ON	ON	ON	ON	ON	ON	ON
MSIV Position OR001X O/C	OPEN	OPEN	OPEN	OPEN	OPEN	OPEN	OPEN
MSIV Position OR003X O/C	OPEN	OPEN	OPEN	OPEN	OPEN	OPEN	OPEN
MSIV Position OR005X O/C	OPEN	OPEN	OPEN	OPEN	OPEN	OPEN	OPEN

RCP/MSIV Group VI

TIME	1136	1139	1142	1145	1148	1151	1154
Battery 1 Y0774A Volts	130	130	130	130	130	130	130
Battery 2 Y0775A Volts	130	130	130	130	130	130	130
Battery 3 Y0776A Volts	130	130	130	130	130	130	130
Battery 4 Y0777A Volts	130	130	130	130	130	130	130
Battery 5 Y0778A Volts	130	130	130	130	130	130	130

Battery Group VII

TIME	1136	1139	1142	1145	1148	1151	1154
PAB PT VS101A Y0704A CPM	600	600	600	600	600	600	600
PAB GS VS101E R0033A CPM	60	60	60	60	60	60	60
PAB TRA VS102A Y0731A CPM	60	60	60	60	60	60	60
PAB TRB VS102B Y0732A CPM	50	50	50	50	50	50	50
SLCRS P VS107A Y0710A CPM	200	200	200	200	200	200	200
SLCRS G VS107B Y0711A CPM	40	40	40	40	40	40	40
SAFE VNT VS105 Y0727A CPM	70	70	70	70	70	70	70
WGDT Vlt VS106 Y0728A CPM	150	150	150	150	150	150	150
FHB TRA VS103A Y0706A CPM	90	90	90	90	90	90	90
FHB TRB VS103B Y0709A CPM	60	60	60	60	60	60	60

Effluent Group VIII

TIME	1136	1139	1142	1145	1148	1151	1154
RCB PRG VS104A Y0707A CPM	BAD	BAD	BAD	BAD	BAD	BAD	BAD
RCB PRG VS104B Y0708A CPM	BAD	BAD	BAD	BAD	BAD	BAD	BAD
WG PART GW108A Y0721A CPM	70	70	70	70	70	70	70
WG GAS GW108B R0032A CPM	300	300	300	300	300	300	300
REC HX RW100A Y0725A CPM	BAD	BAD	BAD	BAD	BAD	BAD	BAD
REC HX RW100B Y0726A CPM	BAD	BAD	BAD	BAD	BAD	BAD	BAD
REC HX RW100C Y0729A CPM	BAD	BAD	BAD	BAD	BAD	BAD	BAD
REC HX RW100D Y0730A CPM	BAD	BAD	BAD	BAD	BAD	BAD	BAD
REC HX RW100 Y0705A CPM	60	60	60	60	60	60	60
CCW HX RW101 Y0713A CPM	60	60	60	60	60	60	60

Effluent Group VIII

TIME	1136	1139	1142	1145	1148	1151	1154
CONT EJT SV100 R0029A CPM	50	50	50	50	50	50	50
LIQ WSTE LW104 R0030A CPM	7E3	7E3	7E3	7E3	7E3	7E3	7E3
CON DRNS LW116 Y0717A CPM	500	500	500	500	500	500	500

Effluent Group VIII

TIME	1136	1139	1142	1145	1148	1151	1154
RCB PT RM215A Y0718A CPM	1E3	1E3	1E3	1E3	1E3	1E3	1E3
RCB GS RM215B R0028A CPM	2.5E3	2.5E3	2.5E3	2.5E3	2.5E3	2.5E3	2.5E3
Letdown CH101A R0036A CPM	1.5E3	1.5E3	1.5E3	1.5E3	1.5E3	1.5E3	1.5E3
Letdown CH101B R0037A CPM	1.5E3	1.5E3	1.5E3	1.5E3	1.5E3	1.5E3	1.5E3
Mult P RM217A Y0719A CPM	200	200	200	200	200	200	200
Mult G RM217B Y0720A CPM	150	150	150	150	150	150	150
Ax St Cd AS100 R0031A CPM	60	60	60	60	60	60	60
S/G Bdwn BD100 R0034A CPM	BAD	BAD	BAD	BAD	BAD	BAD	BAD
S/G Bdwn SS100 Y0712A CPM	BAD	BAD	BAD	BAD	BAD	BAD	BAD
CC CCR100 Y0715A CPM	800	800	800	800	800	800	800

Process Group IX

TIME	1136	1139	1142	1145	1148	1151	1154
GW Tnk GW101 Y0733A CPM	BAD	BAD	BAD	BAD	BAD	BAD	BAD

Process Group IX

TIME	1136	1139	1142	1145	1148	1151	1154
Airlock RM201 Y0734A MR/HR	0.3	0.3	0.3	0.3	0.3	0.3	0.3
CrnWall RM202 Y0735A MR/HR	4.0	4.0	4.0	4.0	4.0	4.0	4.0
Manp Crn RM203 Y0716A MR/HR	BAD	BAD	BAD	BAD	BAD	BAD	BAD
Incor Rm RM204 Y0722A MR/HR	4.0	4.0	4.0	4.0	4.0	4.0	4.0
Dcon Bld RM205 R0020A MR/HR	8.0	8.0	8.0	8.0	8.0	8.0	8.0
New Fuel RM206 R0021A MR/HR	0.4	0.4	0.4	0.4	0.4	0.4	0.4
FHB Crn RM207 R0022A MR/HR	0.8	0.8	0.8	0.8	0.8	0.8	0.8
Sol Wst RM208 R0024A MR/HR	0.5	0.5	0.5	0.5	0.5	0.5	0.5
722PB NE RM209 R0023A MR/HR	0.4	0.4	0.4	0.4	0.4	0.4	0.4
752 PAB RM210 R0025A MR/HR	0.3	0.3	0.3	0.3	0.3	0.3	0.3

Area Group X

TIME	1136	1139	1142	1145	1148	1151	1154
722PB SE RM211 Y0723A MR/HR	2.0	2.0	2.0	2.0	2.0	2.0	2.0
Chem Smp RM212 Y0724A MR/HR	0.4	0.4	0.4	0.4	0.4	0.4	0.4
Cntrl Rm RM213 R0026A MR/HR	0.1	0.1	0.1	0.1	0.1	0.1	0.1
Hot Lab RM214 R0027A MR/HR	0.3	0.3	0.3	0.3	0.3	0.3	0.3
Cntl Rm RM218A R0072A MR/HR	.01	.01	.01	.01	.01	.01	.01
Cntl Rm RM218B R0073A MR/HR	.01	.01	.01	.01	.01	.01	.01
RCB HI RM219A R0070A R/HR	1	1	1	1	1	1	1
RCB HI RM219B R0071A R/HR	1	1	1	1	1	1	1

Area Group X

TIME	1157	1200	1203	1206	1209	1212	1215
RCS Hotleg A T0419A Deg. F	605	605	605	605	605	605	605
RCS Hotleg B T0439A Deg. F	605	605	605	605	605	605	605
RCS Hotleg C T0459A Deg. F	605	605	605	605	605	605	605
RCS Coldleg A T0406A Deg. F	545	545	545	545	545	545	545
RCS Coldleg B T0426A Deg. F	545	545	545	545	545	545	545
RCS Coldleg C T0446A Deg. F	545	545	545	545	545	545	545
RCS Flow A F0400C Percent	100	100	100	100	100	100	100
RCS Flow B F0421C Percent	100	100	100	100	100	100	100
RCS Flow C F0442C Percent	100	100	100	100	100	100	100
VCT Level L2704A Percent	38	38	38	38	38	38	38

RCS Group I

TIME	1157	1200	1203	1206	1209	1212	1215
Source Range N0031A CPS	1.00	1.00	1.00	1.00	1.00	1.00	1.00
Power Range N0051A Percent	99	99	99	99	99	99	99
T/C Peak MXICTX Deg. F	621	621	621	621	621	621	621
T/C Average AVICTCX Deg. F	607	607	607	607	607	607	607
Deg Subcooling T3200A Deg. F	30	30	30	30	30	30	30
Inter Range N0035A CPS	10E-3	10E-3	10E-3	10E-3	10E-3	10E-3	10E-3

RCS Group I

TIME	1157	1200	1203	1206	1209	1212	1215
SG Pressure A P0402A PSIG	825	825	825	825	825	825	825
SG Pressure B P0422A PSIG	825	825	825	825	825	825	825
SG Pressure C P0442A PSIG	825	825	825	825	825	825	825
SG Level A L0403A (W.R.)	55	55	55	55	55	55	55
SG Level A L0402A (N.R.)	43	43	43	43	43	43	43
SG Level B L0423A (W.R.)	55	55	55	55	55	55	55
SG Level B L0422A (N.R.)	43	43	43	43	43	43	43
SG Level C L0443A (W.R.)	55	55	55	55	55	55	55
SG Level C L0442A (N.R.)	43	43	43	43	43	43	43

Steam Generator Group II

TIME	1157	1200	1203	1206	1209	1212	1215
Steam Flow A F0405A KBH	3877	3877	3877	3877	3877	3877	3877
Steam Flow B F0425A KBH	3877	3877	3877	3877	3877	3877	3877
Steam Flow C F0443A KBH	3877	3877	3877	3877	3877	3877	3877
PD WST TK 10 L3000A FT	28.3	28.3	28.3	28.3	28.3	28.3	28.3
Aux FD Flow A F0601A GPM	0	0	0	0	0	0	0
Aux FD Flow B F0602A GPM	0	0	0	0	0	0	0
Aux FD Flow C F0603A GPM	0	0	0	0	0	0	0

Steam Generator Group II

TIME	1157	1200	1203	1206	1209	1212	1215
Cont Pressure P1000A PSIA	9.45	9.45	9.45	9.45	9.45	9.45	9.45
Cont Temp T2460A DEG F	96.9	96.9	96.9	96.9	96.9	96.9	96.9
Cont Sump Lvl L0750A IN	0	0	0	0	0	0	0
Hydrogen C0201A Percent	0	0	0	0	0	0	0

Containment Group III

TIME	1157	1200	1203	1206	1209	1212	1215
SI Accum Lvl L0610A Percent	78	78	78	78	78	78	78
SI Accum Lvl L0620A Percent	78	78	78	78	78	78	78
SI Accum Lvl L0630A Percent	78	78	78	78	78	78	78
RWST Level L0500A IN	604	604	604	604	604	604	604

Safety Injection Group IV

TIME	1157	1200	1203	1206	1209	1212	1215
PZR Level L0480A Percent	54	54	54	54	54	54	54
PZR Temp (WTR) T0480A DEG F	649	649	649	649	649	649	649
PZR Temp (STM) T0481A DEG F	650	650	650	650	650	650	650
RCS Pressure P0499A PSIG	2228	2228	2228	2228	2228	2228	2228
PRT Level L0485A Percent	69	69	69	69	69	69	69
PZR Pressure P0480A PSIG	2217	2217	2217	2217	2217	2217	2217

Pressurizer Group V

TIME	1157	1200	1203	1206	1209	1212	1215
RCP 1A Y3421D On/Off	ON	ON	ON	ON	ON	ON	ON
RCP 1B Y3422D On/Off	ON	ON	ON	ON	ON	ON	ON
RCP 1C Y3423D On/Off	ON	ON	ON	ON	ON	ON	ON
MSIV Position OR001X O/C	OPEN	OPEN	OPEN	OPEN	OPEN	OPEN	OPEN
MSIV Position OR003X O/C	OPEN	OPEN	OPEN	OPEN	OPEN	OPEN	OPEN
MSIV Position OR005X O/C	OPEN	OPEN	OPEN	OPEN	OPEN	OPEN	OPEN

RCP/MSIV Group VI

TIME	1157	1200	1203	1206	1209	1212	1215
Battery 1 Y0774A Volts	130	130	130	130	130	130	130
Battery 2 Y0775A Volts	130	130	130	130	130	130	130
Battery 3 Y0776A Volts	130	130	130	130	130	130	130
Battery 4 Y0777A Volts	130	130	130	130	130	130	130
Battery 5 Y0778A Volts	130	130	130	130	130	130	130

Battery Group VII

TIME	1157	1200	1203	1206	1209	1212	1215
PAB PT VS101A Y0704A CPM	600	600	600	600	600	600	600
PAB GS VS101B R0033A CPM	60	60	60	60	60	60	60
PAB TRA VS102A Y0731A CPM	60	60	60	60	60	60	60
PAB TRB VS102B Y0732A CPM	50	50	50	50	50	50	50
SLCRS P VS107A Y0710A CPM	200	200	200	200	200	200	200
SLCRS G VS107B Y0711A CPM	40	40	40	40	40	40	40
SAFE VNT VS105 Y0727A CPM	70	70	70	70	70	70	70
WGDT Vlt VS106 Y0728A CPM	150	150	150	150	150	150	150
FHB TRA VS103A Y0706A CPM	90	90	90	90	90	90	90
FHB TRB VS103B Y0709A CPM	60	60	60	60	60	60	60

Effluent Group VIII

TIME	1157	1200	1203	1206	1209	1212	1215
RCB PRG VS104A Y0707A CPM	BAD	BAD	BAD	BAD	BAD	BAD	BAD
RCB PRG VS104B Y0708A CPM	BAD	BAD	BAD	BAD	BAD	BAD	BAD
WG PART GW108A Y0721A CPM	70	70	70	70	70	70	70
WG GAS GW108B R0032A CPM	300	300	300	300	300	300	300
REC HX RW100A Y0725A CPM	BAD	BAD	BAD	BAD	BAD	BAD	BAD
REC HX RW100B Y0726A CPM	BAD	BAD	BAD	BAD	BAD	BAD	BAD
REC HX RW100C Y0729A CPM	BAD	BAD	BAD	BAD	BAD	BAD	BAD
REC HX RW100D Y0730A CPM	BAD	BAD	BAD	BAD	BAD	BAD	BAD
REC HX RW100 Y0705A CPM	60	60	60	60	60	60	60
CCW HX RW101 Y0713A CPM	60	60	60	60	60	60	60

Effluent Group VIII

TIME	1157	1200	1203	1206	1209	1212	1215
CONT EJT SV100 R0029A CPM	50	50	50	50	50	50	50
LIQ WSTE LW104 R0030A CPM	7E3	7E3	7E3	7E3	7E3	7E3	7E3
CON DRNS LW116 Y0717A CPM	500	500	500	500	500	500	500

Effluent Group VIII

TIME	1157	1200	1203	1206	1209	1212	1215
RCB PT RM215A Y0718A CPM	1E3	1E3	1E3	1E3	1E3	1E3	1E3
RCB GS RM215B R0028A CPM	2.5E3	2.5E3	2.5E3	2.5E3	2.5E3	2.5E3	2.5E3
Letdown CH101A R0036A CPM	1.5E3	1.5E3	1.5E3	1.5E3	1.5E3	1.5E3	1.5E3
Letdown CH101B R0037A CPM	1.5E3	1.5E3	1.5E3	1.5E3	1.5E3	1.5E3	1.5E3
Mult P RM217A Y0719A CPM	200	200	200	200	200	200	200
Mult G RM217B Y0720A CPM	150	150	150	150	150	150	150
Ax St Cd AS100 R0031A CPM	60	60	60	60	60	60	60
S/G Bdwn BD100 R0034A CPM	BAD	BAD	BAD	BAD	BAD	BAD	BAD
S/G Bdwn SS100 Y0712A CPM	BAD	BAD	BAD	BAD	BAD	BAD	BAD
CC CCR100 Y0715A CPM	800	800	800	800	800	800	800

Process Group IX

TIME	1157	1200	1203	1206	1209	1212	1215
GW Tnk GW101 Y0733A CPM	BAD	BAD	BAD	BAD	BAD	BAD	BAD

Process Group IX

TIME	1157	1200	1203	1206	1209	1212	1215
Airlock RM201 Y0734A MR/HR	0.3	0.3	0.3	0.3	0.3	0.3	0.3
CrnWall RM202 Y0735A MR/HR	4.0	4.0	4.0	4.0	4.0	4.0	4.0
Manp Crn RM203 Y0716A MR/HR	BAD	BAD	BAD	BAD	BAD	BAD	BAD
Incor Rm RM204 Y0722A MR/HR	4.0	4.0	4.0	4.0	4.0	4.0	4.0
Dcon Bld RM205 R0020A MR/HR	8.0	8.0	8.0	8.0	8.0	8.0	8.0
New Fuel RM206 R0021A MR/HR	0.4	0.4	0.4	0.4	0.4	0.4	0.4
FHB Crn RM207 R0022A MR/HR	0.8	0.8	0.8	0.8	0.8	0.8	0.8
Sol Wst RM208 R0024A MR/HR	0.5	0.5	0.5	0.5	0.5	0.5	0.5
722PB NE RM209 R0023A MR/HR	0.4	0.4	0.4	0.4	0.4	0.4	0.4
752 PAB RM210 R0025A MR/HR	0.3	0.3	0.3	0.3	0.3	0.3	0.3

Area Group X

TIME	1157	1200	1203	1206	1209	1212	1215
722PB SE RM211 Y0723A MR/HR	2.0	2.0	2.0	2.0	2.0	2.0	2.0
Chem Smp RM212 Y0724A MR/HR	0.4	0.4	0.4	0.4	0.4	0.4	0.4
Cntrl Rm RM213 R0026A MR/HR	0.1	0.1	0.1	0.1	0.1	0.1	0.1
Hot Lab RM214 R0027A MR/HR	0.3	0.3	0.3	0.3	0.3	0.3	0.3
Cntl Rm RM218A R0072A MR/HR	.01	.01	.01	.01	.01	.01	.01
Cntl Rm RM218B R0073A MR/HR	.01	.01	.01	.01	.01	.01	.01
RCB HI RM219A R0070A R/HR	1	1	1	1	1	1	1
RCB HI RM219B R0071A R/HR	1	1	1	1	1	1	1

Area Group X

TIME	1218	1221	1224	1227	1230	1233	1236
RCS Hotleg A T0419A Deg. F	605	605	605	605	606	604	597
RCS Hotleg B T0439A Deg. F	605	605	605	605	606	604	597
RCS Hotleg C T0459A Deg. F	605	605	605	605	606	604	597
RCS Coldleg A T0406A Deg. F	545	545	545	545	546	548	54.
RCS Coldleg B T0426A Deg. F	545	545	545	545	546	548	547
RCS Coldleg C T0446A Deg. F	545	545	545	545	546	548	547
RCS Flow A F0400C Percent	100	100	100	100	100	100	100
RCS Flow B F0421C Percent	100	100	100		100	100	100
RCS Flow C F0442C Percent	100	100	100	100	100	100	100
VCT Level L2704A Percent	38	38	38	38	33	15	5

RCS Group I

TIME	1218	1221	1224	1227	1230	1233	1236
Source Range N0031A CPS	1.00	1.00	1.00	1.00	1.00	1.00	1.00
Power Range N0051A Percent	99	99	99	99	99	94	81
T/C Peak MXICTX Deg. F	621	621	621	621	623	620	610
T/C Average AVICTCX Deg. F	607	607	607	607	608	605	595
Deg Subcooling T3200A Deg. F	30	30	30	30	28	25	26
Inter Range N0035A CPS	10E-3	10E-3	10E-3	10E-3	10E-3	10E-3	10E-3

RCS Group I

TIME	1218	1221	1224	1227	1230	1233	1236
SG Pressure A P0402A PSIG	825	825	825	825	829	851	862
SG Pressure B P0422A PSIG	825	825	825	825	829	851	862
SG Pressure C P0442A PSIG	825	825	825	825	829	851	862
SG Level A L0403A (W.R.)	55	55	55	55	55	54	53
SG Level A L0402A (N.R.)	43	43	43	43	43	42	46
SG Level B L0423A (W.R.)	55	55	55	55	55	54	53
SG Level B L0422A (N.R.)	43	43	43	43	43	42	46
SG Level C L0443A (W.R.)	55	55	55	55	55	54	53
SG Level C L0442A (N.R.)	43	43	43	43	43	42	46

Steam Generator Group II

TIME	1218	1221	1224	1227	1230	1233	1236
Steam Flow A F0405A KBH	3877	3877	3877	3877	3891	3824	3272
Steam Flow B F0425A KBH	3877	3877	3877	3877	3879	3815	3269
Steam Flow C F0443A KBH	3877	3877	3877	3877	3885	3828	3268
PD WST TK 10 L3000A FT	28.3	28.3	28.3	28.3	28.3	28.3	28.3
Aux FD Flow A F0601A GPM	0	0	0	0	0	0	0
Aux FD Flow B F0602A GPM	0	0	0	0	0	0	0
Aux FD Flow C F0603A GPM	0	0	0	0	0	0	0

Steam Generator Group II

TIME	1218	1221	1224	1227	1230	1233	1236
Cont Pressure P1000A PSIA	9.45	9.45	9.45	9.45	9.45	10.24	11.03
Cont Temp T2460A DEG F	96.9	96.9	96.9	96.9	96.9	98.2	99.5
Cont Sump Lvl L0750A IN	0	0	0	0	0	0.1	0.3
Hydrogen C0201A Percent	0	0	0	0	0	0	0

Containment Group III

TIME	1218	1221	1224	1227	1230	1233	1236
SI Accum Lvl L0610A Percent	78	78	78	78	78	78	78
SI Accum Lvl L0620A Percent	78	78	78	78	78	78	78
SI Accum Lvl L0630A Percent	78	78	78	78	78	78	78
RWST Level L0500A IN	604	604	604	604	604	604	604

Safety Injection Group IV

TIME	1218	1221	1224	1227	1230	1233	1236
PZR Level L0480A Percent	54	54	54	54	51	35	16
PZR Temp (WTR) T0480A DEG F	649	649	649	649	649	644	636
PZR Temp (STM) T0481A DEG F	650	650	650	650	650	645	637
RCS Pressure P0499A PSIG	2228	2228	2228	2228	2228	2135	2005
PRT Level L0485A Percent	69	69	69	69	69	69	69
PZR Pressure P0480A PSIG	2217	2217	2217	2217	2217	2124	1995

Pressurizer Group V

TIME	1218	1221	1224	1227	1230	1233	1236
RCP 1A Y3421D On/Off	ON	ON	ON	ON	ON	ON	ON
RCP 1B Y3422D On/Off	ON	ON	ON	ON	ON	ON	ON
RCP 1C Y3423D On/Off	ON	ON	ON	ON	ON	ON	ON
MSIV Position OR001X O/C	OPEN	OPEN	OPEN	OPEN	OPEN	OPEN	OPEN
MSIV Position OR003X O/C	OPEN	OPEN	OPEN	OPEN	OPEN	OPEN	OPEN
MSIV Position OR005X O/C	OPEN	OPEN	OPEN	OPEN	OPEN	OPEN	OPEN

RCP/MSIV Group VI

TIME	1218	1221	1224	1227	1230	1233	1236
Battery 1 Y0774A Volts	130	130	130	130	130	130	130
Battery 2 Y0775A Volts	130	130	130	130	130	130	130
Battery 3 Y0776A Volts	130	130	130	130	130	130	130
Battery 4 Y0777A Volts	130	130	130	130	130	130	130
Battery 5 Y0778A Volts	130	130	130	130	130	130	130

Battery Group VII

TIME	1218	1221	1224	1227	1230	1233	1236
PAB PT VS101A Y0704A CPM	600	600	600	600	600	600	600
PAB GS VS101B R0033A CPM	60	60	60	60	60	60	60
PAB TRA VS102A Y0731A CPM	60	60	60	60	60	60	60
PAB TRB VS102B Y0732A CPM	50	50	50	50	50	50	50
SLCRS P VS107A Y0710A CPM	200	200	200	200	200	200	200
SLCRS G VS107B Y0711A CPM	40	40	40	40	40	40	40
SAFE VNT VS105 Y0727A CPM	70	70	70	70	70	70	70
WGDT Vlt VS106 Y0728A CPM	150	150	150	150	150	150	150
FHB TRA VS103A Y0706A CPM	90	90	90	90	90	90	90
FHB TRB VS103B Y0709A CPM	60	60	60	60	60	60	60

Effluent Group VIII

TIME	1218	1221	1224	1227	1230	1233	1236
RCB PRG VS104A Y0707A CPM	BAD	BAD	BAD	BAD	BAD	BAD	BAD
RCB PRG VS104B Y0708A CPM	BAD	BAD	BAD	BAD	BAD	BAD	BAD
WG PART GW108A Y0721A CPM	70	70	70	70	70	70	70
WG GAS GW108B R0032A CPM	300	300	300	300	300	300	300
REC HX RW100A Y0725A CPM	BAD	BAD	BAD	BAD	BAD	BAD	BAD
REC HX RW100B Y0726A CPM	BAD	BAD	BAD	BAD	BAD	BAD	BAD
REC HX RW100C Y0729A CPM	BAD	BAD	BAD	BAD	BAD	BAD	BAD
REC HX RW100D Y0730A CPM	BAD	BAD	BAD	BAD	BAD	BAD	BAD
REC HX RW100 Y0705A CPM	60	60	60	60	60	60	60
CCW HX RW101 Y0713A CPM	60	60	60	60	60	60	60

Effluent Group VIII

TIME	1218	1221	1224	1227	1230	1233	1236
CONT EJT SV100 R0029A CPM	50	50	50	50	50	50	50
LIQ WSTE LW104 R0030A CPM	7E3	7E3	7E3	7E3	7E3	7E3	7E3
CON DRNS LW116 Y0717A CPM	500	500	500	500	500	500	500

Effluent Group VIII

TIME	1218	1221	1224	1227	1230	1233	1236
RCB PT RM21[illegible]A Y0718A CPM	1E3	1E3	1E3	1E3	1.1E3	1.2E3	1.3E3
RCB GS RM215B R0028A CPM	2.5E3	2.5E3	2.5E3	2.5E3	3.8E3	5.6E3	8.4E3
Letdown CH101A R0036A CPM	1.5E3	1.5E3	1.5E3	1.5E3	1.5E3	1.5E3	1.5E3
Letdown CH101B R0037A CPM	1.5E3	1.5E3	1.5E3	1.5E3	1.5E3	1.5E3	1.5E3
Mult P RM217A Y0719A CPM	200	200	200	200	200	200	200
Mult G RM217B Y0720A CPM	150	150	150	150	150	150	150
Ax St Cd AS100 R0031A CPM	60	60	60	60	60	60	60
S/G Bdwn BD100 R0034A CPM	BAD	BAD	BAD	BAD	BAD	BAD	BAD
S/G Bdwn SS100 Y0712A CPM	BAD	BAD	BAD	BAD	BAD	BAD	BAD
CC CCR100 Y0715A CPM	800	800	800	800	800	800	800

Process Group IX

TIME	1218	1221	1224	1227	1230	1233	1236
GW Tnk GW101 Y0733A CPM	BAD	BAD	BAD	BAD	BAD	BAD	BAD

Process Group IX

TIME	1218	1221	1224	1227	1230	1233	1236
Airlock RM201 Y0734A MR/HR	0.3	0.3	0.3	0.3	0.3	0.3	0.3
CrnWall RM202 Y0735A MR/HR	4.0	4.0	4.0	4.0	5.0	6.0	8.0
Manp Crn RM203 Y0716A MR/HR	BAD	BAD	BAD	BAD	BAD	BAD	BAD
Incor Rm RM204 Y0722A MR/HR	4.0	4.0	4.0	4.0	5.0	6.0	8.0
Decon Bld RM205 R0020A MR/HR	8.0	8.0	8.0	8.0	8.0	8.0	8.0
New Fuel RM206 R0021A MR/HR	0.4	0.4	0.4	0.4	0.4	0.4	0.4
FHB Crn RM207 R0022A MR/HR	0.8	0.8	0.8	0.8	0.8	0.8	0.8
Sol Wst RM208 R0024A MR/HR	0.5	0.5	0.5	0.5	0.5	0.5	0.5
722PB NE RM209 R0023A MR/HR	0.4	0.4	0.4	0.4	0.4	0.4	0.4
752 PAB RM210 R0025A MR/HR	0.3	0.3	0.3	0.3	0.3	0.3	0.3

Area Group X

TIME	1218	1221	1224	1227	1230	1233	1236
722PB SE RM211 Y0723A MR/HR	2.0	2.0	2.0	2.0	2.0	2.0	2.0
Chem Smp RM212 Y0724A MR/HR	0.4	0.4	0.4	0.4	0.4	0.4	0.4
Cntrl Rm RM213 R0026A MR/HR	0.1	0.1	0.1	0.1	0.1	0.1	0.1
Hot Lab RM214 R0027A MR/HR	0.3	0.3	0.3	0.3	0.3	0.3	0.3
Cntl Rm RM218A R0072A MR/HR	.01	.01	.01	.01	.01	.01	.01
Cntl Rm RM218B R0073A MR/HR	.01	.01	.01	.01	.01	.01	.01
RCB HI RM219A R0070A R/HR	1	1	1	1	1	1	1
RCB HI RM219B R0071A R/HR	1	1	1	1	1	1	1

Area Group X

TIME	1239	1242	1245	1248	1251	1254	1257
RCS Hotleg A T0419A Deg. F	550	547	544	543	543	541	541
RCS Hotleg B T0439A Deg. F	550	547	544	543	543	541	541
RCS Hotleg C T0459A Deg. F	550	547	544	543	543	541	541
RCS Coldleg A T0406A Deg. F	548	546	543	543	542	540	540
RCS Coldleg B T0426A Deg. F	548	546	543	543	542	540	540
RCS Coldleg C T0446A Deg. F	548	546	542	543	542	540	540
RCS Flow A F0400C Percent	100	100	100	100	100	100	100
RCS Flow B F0421C Percent	100	100	100	100	100	100	100
RCS Flow C F0442C Percent	100	100	100	100	100	100	100
VCT Level L2704A Percent	20	38	43	43	43	43	43

RCS Group I

TIME	1239	1242	1245	1248	1251	1254	1257
Source Range N0031A CPS	1.00	1.00	1.00	10E4	7E3	4E3	2.13E3
Power Range N0051A Percent	0	0	0	0	0	0	0
T/C Peak MXICTX Deg. F	552	548	545	544	543	542	542
T/C Average AVICTCX Deg. F	545	541	539	539	537	536	536
Deg Subcooling T3200A Deg. F	69	73	78	80	81	83	80
Inter Range N0035A CPS	10E-5	6.6E-7	3.3E-8	10E-9	10E-10	10E-11	10E-11

RCS Group I

TIME	1239	1242	1245	1248	1251	1254	1257
SG Pressure A P0402A PSIG	1001	991	980	970	961	951	945
SG Pressure B P0422A PSIG	1001	991	980	970	961	951	945
SG Pressure C P0442A PSIG	1001	991	982	970	961	951	945
SG Level A L0403A (W.R.)	49	54	56	57	58	59	60
SG Level A L0402A (N.R.)	1	1	1	0	5	10	14
SG Level B L0423A (W.R.)	49	54	56	57	58	60	60
SG Level B L0422A (N.R.)	1	1	1	0	5	10	14
SG Level C L0443A (W.R.)	49	54	56	57	58	59	60
SG Level C L0442A (N.R.)	1	1	1	0	5	10	14

Steam Generator Group II

TIME	1239	1242	1245	1248	1251	1254	1257
Steam Flow A F0405A KBH	0	0	0	0	0	0	0
Steam Flow B F0425A KBH	0	0	0	0	0	0	0
Steam Flow C F0443A KBH	0	0	0	0	0	0	0
PD WST TK 10 L3000A FT	28.3	28.1	27.9	27.5	27.0	26.6	26.2
Aux FD Flow A F0601A GPM	378	383	229	238	241	243	193
Aux FD Flow B F0602A GPM	378	383	250	238	241	243	175
Aux FD Flow C F0603A GPM	378	383	248	238	241	243	175

Steam Generator Group II

TIME	1239	1242	1245	1248	1251	1254	1257
Cont Pressure P1000A PSIA	11.82	12.35	12.88	13.41	13.94	14.20	14.47
Cont Temp T2460A DEG F	100.9	102.2	103.5	104.5	105.7	106.8	107.9
Cont Sump Lvl L0750A IN	0.6	0.8	1.0	1.2	1.4	1.7	1.9
Hydrogen C0201A Percent	0	0	0	0	0	0	0

Containment Group III

TIME	1239	1242	1245	1248	1251	1254	1257
SI Accum Lvl L0610A Percent	78	78	78	78	78	78	[illegible]
SI Accum Lvl L0620A Percent	78	78	78	78	78	78	78
SI Accum Lvl L0630A Percent	78	78	78	78	78	78	78
RWST Level L0500A IN	604	602	600	598	596	593	590

Safety Injection Group IV

TIME	1239	1242	1245	1248	1251	1254	1257
PZR Level L0480A Percent	0	0	1	4	5	8	9
PZR Temp (WTR) T0480A DEG F	621	621	622	623	624	624	622
PZR Temp (STM) T0481A DEG F	622	622	623	624	625	625	623
RCS Pressure P0499A PSIG	1801	1812	1817	1845	1853	1852	1821
PRT Level L0485A Percent	69	69	69	69	69	69	69
PZR Pressure P0480A PSIG	1795	1805	1810	[illegible]	1846	1844	1812

Pressurizer Group V

TIME	1239	1242	1245	1248	1251	1254	1257
RCP 1A Y3421D On/Off	ON	ON	ON	ON	ON	ON	ON
RCP 1B Y3422D On/Off	ON	ON	ON	ON	ON	ON	ON
RCP 1C Y3423D On/Off	ON	ON	ON	ON	ON	ON	ON
MSIV Position OR001X O/C	OPEN	OPEN	OPEN	OPEN	OPEN	OPEN	OPEN
MSIV Position OR003X O/C	OPEN	OPEN	OPEN	OPEN	OPEN	OPEN	OPEN
MSIV Position OR005X O/C	OPEN	OPEN	OPEN	OPEN	OPEN	OPEN	OPEN

RCP/MSIV Group VI

TIME	1239	1242	1245	1248	1251	1254	1257
Battery 1 Y0774A Volts	130	130	130	130	130	130	130
Battery 2 Y0775A Volts	130	130	130	130	130	130	130
Battery 3 Y0776A Volts	130	130	130	130	130	130	130
Battery 4 Y0777A Volts	130	130	130	130	130	130	130
Battery 5 Y0778A Volts	130	130	130	130	130	130	130

Battery Group VII

TIME	1239	1242	1245	1248	1251	1254	1257
PAB PT VS101A Y0704A CPM	600	600	600	600	600	600	600
PAB GS VS101B R0033A CPM	60	60	60	60	60	60	60
PAB TRA VS102A Y0731A CPM	60	60	60	60	60	60	60
PAB TRB VS102B Y0732A CPM	50	50	50	50	50	50	50
SLCRS P VS107A Y0710A CPM	200	200	200	200	200	200	200
SLCRS G VS107B Y0711A CPM	40	40	40	40	40	40	40
SAFE VNT VS105 Y0727A CPM	70	70	70	70	70	70	70
WGDT Vlt VS106 Y0728A CPM	150	150	150	150	150	150	150
FHB TRA VS103A Y0706A CPM	90	90	90	90	90	90	90
FHB TRB VS103B Y0709A CPM	60	60	60	60	60	60	60

Effluent Group VIII

TIME	1239	1242	1245	1248	1251	1254	1257
RCB PRG VS104A Y0707A CPM	BAD	BAD	BAD	BAD	BAD	BAD	BAD
RCB PRG VS104B Y0708A CPM	BAD	BAD	BAD	BAD	BAD	BAD	BAD
WG PART GW108A Y0721A CPM	70	70	70	70	70	70	70
WG GAS GW108B R0032A CPM	300	300	300	300	300	300	300
REC HX RW100A Y0725A CPM	BAD	BAD	BAD	BAD	BAD	BAD	BAD
REC HX RW100B Y0726A CPM	BAD	BAD	BAD	BAD	BAD	BAD	BAD
REC HX RW100C Y0729A CPM	BAD	BAD	BAD	BAD	BAD	BAD	BAD
REC HX RW100D Y0730A CPM	BAD	BAD	BAD	BAD	BAD	BAD	BAD
REC HX RW100 Y0705A CPM	60	60	60	60	60	60	60
CCW HX RW101 Y0713A CPM	60	60	60	60	60	60	60

Effluent Group VIII

TIME	1239	1242	1245	1248	1251	1254	1257
CONT EJT SV100 R0029A CPM	50	50	50	50	50	50	50
LIQ WSTE LW104 R0030A CPM	7E3	7E3	7E3	7E3	7E3	7E3	7E3
CON DRNS LW116 Y0717A CPM	500	500	500	500	500	500	500

Effluent Group VIII

TIME	1239	1242	1245	1248	1251	1254	1257
RCB PT RM215A Y0718A CPM	1.5E3	1.4E3	1.4E3	1.4E3	1.3E3	1.3E3	1.3E3
RCB GS RM215B R0028A CPM	1.3E3	1.2E4	1.2E4	1.2E4	1.2E4	1.1E4	1.1E4
Letdown CH101A R0036A CPM	1.5E3	1.5E3	1.4E3	1.4E3	1.4E3	1.3E3	1.3E3
Letdown CH101B R0037A CPM	1.5E3	1.5E3	1.4E3	1.4E3	1.4E3	1.3E3	1.3E3
Mult P RM217A Y0719A CPM	200	200	200	200	200	200	200
Mult G RM217B Y0720A CPM	150	150	150	150	150	150	150
Ax St Cd AS100 R0031A CPM	60	60	60	60	60	60	60
S/G Bdwn BD100 R0034A CPM	BAD	BAD	BAD	BAD	BAD	BAD	BAD
S/G Bdwn SS100 Y0712A CPM	BAD	BAD	BAD	BAD	BAD	BAD	BAD
CC CCR100 Y0715A CPM	800	800	800	800	800	800	800

Process Group IX

TIME	1239	1242	1245	1248	1251	1254	1257
GW Tnk GW101 Y0733A CPM	BAD	BAD	BAD	BAD	BAD	BAD	BAD

Process Group IX

TIME	1239	1242	1245	1248	1251	1254	1257
Airlock RM201 Y0734A MR/HR	0.3	0.3	0.3	0.3	0.3	0.3	0.3
CrnWall RM202 Y0735A MR/HR	10.0	12.0	15	18	22	26	30
Manp Crn RM203 Y0716A MR/HR	BAD	BAD	BAD	BAD	BAD	BAD	BAD
Incor Rm RM204 Y0722A MR/HR	10	12	15	18	22	26	30
Decon Bld RM205 R0020A MR/HR	8.0	8.0	8.0	8.0	8.0	8.0	8.0
New Fuel RM206 R0021A MR/HR	0.4	0.4	0.4	0.4	0.4	0.4	0.4
FHB Crn RM207 R0022A MR/HR	0.8	0.8	0.8	0.8	0.8	0.8	0.8
Sol Wst RM208 R0024A MR/HR	0.5	0.5	0.5	0.5	0.5	0.5	0.5
722PB NE RM209 R0023A MR/HR	0.4	0.4	0.4	0.4	0.9	0.9	0.9
752 PAB RM210 R0025A MR/HR	0.3	0.3	0.3	0.3	0.3	0.3	0.3

Area Group X

TIME	1239	1242	1245	1248	1251	1254	1257
722PB SE RM211 Y0723A MR/HR	2.0	2.0	2.0	2.0	2.0	2.0	2.0
Chem Smp RM212 Y0724A MR/HR	0.4	0.4	0.4	0.4	0.4	0.4	0.4
Cntrl Rm RM213 R0026A MR/HR	0.1	0.1	0.1	0.1	0.1	0.1	0.1
Hot Lab RM214 R0027A MR/HR	0.3	0.3	0.3	0.3	0.3	0.3	0.3
Cntl Rm RM218A R0072A MR/HR	.01	.01	.01	.01	.01	.01	.01
Cntl Rm RM218B R0073A MR/HR	.01	.01	.01	.01	.01	.01	.01
RCB HI RM219A R0070A R/HR	1	1	1	1	1	1	1
RCB HI RM219B R0071A R/HR	1	1	1	1	1	1	1

Area Group X

TIME	1300	1303	1306	1309	1312	1315	1318
RCS Hotleg A T0419A Deg. F	542	543	543	543	542	540	541
RCS Hotleg B T0439A Deg. F	542	543	543	543	542	540	541
RCS Hotleg C T0459A Deg. F	542	543	543	543	542	540	541
RCS Coldleg A T0406A Deg. F	541	542	542	543	542	540	541
RCS Coldleg B T0426A Deg. F	541	542	542	542	542	540	541
RCS Coldleg C T0446A Deg. F	541	542	542	542	542	540	541
RCS Flow A F0400C Percent	100	100	100	100	100	100	100
RCS Flow B F0421C Percent	100	100	100	100	100	100	100
RCS Flow C F0442C Percent	100	100	100	100	100	100	100
VCT Level L2704A Percent	43	43	43	43	43	43	43

RCS Group I

TIME	1300	1303	1306	1309	1312	1315	1318
Source Range N0031A CPS	2.13E3	2.13E3	2.13E3	2.13E3	2.13E3	2.13E3	2.13E3
Power Range N0051A Percent	0	0	0	0	0	0	0
T/C Peak MXICTX Deg. F	543	543	543	544	543	541	542
T/C Average AVICTCX Deg. F	537	537	537	537	536	534	535
Deg Subcooling T3200A Deg. F	73	67	63	60	62	68	72
Inter Range N0035A CPS	10E-11	10E-11	10E-11	10E-11	10E-11	10E-11	10E-11

RCS Group I

TIME	1300	1303	1306	1309	1312	1315	1318
SG Pressure A P0402A PSIG	951	956	958	960	960	950	945
SG Pressure B P0422A PSIG	951	956	959	960	960	950	945
SG Pressure C P0442A PSIG	951	956	959	960	960	950	945
SG Level A L0403A (W.R.)	61	62	63	63	63	64	64
SG Level A L0402A (N.R.)	19	22	26	29	31	33	33
SG Level B L0423A (W.R.)	61	62	62	63	64	65	65
SG Level B L0422A (N.R.)	18	22	25	29	34	38	37
SG Level C L0443A (W.R.)	61	62	62	63	64	65	65
SG Level C L0442A (N.R.)	17	21	25	29	33	37	37

Steam Generator Group II

TIME	1300	1303	1306	1309	1312	1315	1318
Steam Flow A F0405A KBH	0	0	0	0	0	0	0
Steam Flow B F0425A KBH	0	0	0	0	0	0	0
Steam Flow C F0443A KBH	0	0	0	0	0	0	0
PD WST TK 10 L3000A FT	25.8	25.5	25.2	24.9	24.6	24.3	24.1
Aux FD Flow A F0601A GPM	192	174	173	90	90	90	53
Aux FD Flow B F0602A GPM	174	174	173	180	180	182	0
Aux FD Flow C F0603A GPM	174	174	173	180	180	182	0

Steam Generator Group II

TIME	1300	1303	1306	1309	1312	1315	1318
Cont Pressure P1000A PSIA	14.72	14.99	15.01	15.03	15.04	15.05	15.07
Cont Temp T2460A DEG F	109.1	110.0	110.9	111.7	112.6	113.5	114.2
Cont Sump Lvl L0750A IN	2.1	2.2	2.3	2.4	2.6	2.7	2.8
Hydrogen C0201A Percent	0	0	0	0	0	0	0

Containment Group III

TIME	1300	1303	1306	1309	1312	1315	1318
SI Accum Lvl L0610A Percent	78	78	78	78	78	78	78
SI Accum Lvl L0620A Percent	78	78	78	78	78	78	78
SI Accum Lvl L0630A Percent	78	78	78	78	78	78	78
RWST Level L0500A IN	589	588	586	584	581	579	577

Safety Injection Group IV

TIME	1300	1303	1306	1309	1312	1315	1318
PZR Level L0480A Percent	5	1	0	0	0	3	10
PZR Temp (WTR) T0480A DEG F	615	610	606	603	604	609	613
PZR Temp (STM) T0481A DEG F	616	611	607	604	605	610	614
RCS Pressure P0499A PSIG	1730	1666	1619	1585	1598	1655	1706
PRT Level L0485A Percent	69	69	69	69	69	69	69
PZR Pressure P0480A PSIG	1722	1659	1613	1578	1592	1648	1698

Pressurizer Group V

TIME	1300	1303	1306	1309	1312	1315	1318
RCP 1A Y3421D On/Off	ON	ON	ON	ON	ON	ON	ON
RCP 1B Y3422D On/Off	ON	ON	ON	ON	ON	ON	ON
RCP 1C Y3423D On/Off	ON	ON	ON	ON	ON	ON	ON
MSIV Position OR001X O/C	OPEN	OPEN	OPEN	OPEN	OPEN	OPEN	OPEN
MSIV Position OR003X O/C	OPEN	OPEN	OPEN	OPEN	OPEN	OPEN	OPEN
MSIV Position OR005X O/C	OPEN	OPEN	OPEN	OPEN	OPEN	OPEN	OPEN

RCP/MSIV Group VI

TIME	1300	1303	1306	1309	1312	1315	1318
Battery 1 Y0774A Volts	130	130	130	130	130	130	130
Battery 2 Y0775A Volts	130	130	130	130	130	130	130
Battery 3 Y0776A Volts	130	130	130	130	130	130	130
Battery 4 Y0777A Volts	130	130	130	130	130	130	130
Battery 5 Y0778A Volts	130	130	130	130	130	130	130

Battery Group VII

TIME	1300	1303	1306	1309	1312	1315	1318
PAB PT VS101A Y0704A CPM	600	600	600	600	600	600	600
PAB GS VS101B R0033A CPM	60	60	60	60	60	60	60
PAB TRA VS102A Y0731A CPM	60	60	60	60	60	60	60
PAB TRB VS102B Y0732A CPM	50	50	50	50	50	50	50
SLCRS P VS107A Y0710A CPM	200	200	200	200	200	200	200
SLCRS G VS107B Y0711A CPM	40	70	70	70	70	70	70
SAFE VNT VS105 Y0727A CPM	70	160	160	160	160	160	160
WGDT Vlt VS106 Y0728A CPM	150	150	150	150	150	150	150
FHB TRA VS103A Y0706A CPM	90	90	90	90	90	90	90
FHB TRB VS103B Y0709A CPM	60	60	60	60	60	60	60

Effluent Group VIII

TIME	1300	1303	1306	1309	1312	1315	1318
RCB PRG VS104A Y0707A CPM	BAD	BAD	BAD	BAD	BAD	BAD	BAD
RCB PRG VS104B Y0708A CPM	BAD	BAD	BAD	BAD	BAD	BAD	BAD
WG PART GW108A Y0721A CPM	70	70	70	70	70	70	70
WG GAS GW108B R0032A CPM	300	300	300	300	300	300	300
REC HX RW100A Y0725A CPM	BAD	BAD	BAD	BAD	BAD	BAD	BAD
REC HX RW100B Y0726A CPM	BAD	BAD	BAD	BAD	BAD	BAD	BAD
REC HX RW100C Y0729A CPM	BAD	BAD	BAD	BAD	BAD	BAD	BAD
REC HX RW100D Y0730A CPM	BAD	BAD	BAD	BAD	BAD	BAD	BAD
REC HX RW100 Y0705A CPM	60	60	60	60	60	60	60
CCW HX RW101 Y0713A CPM	60	60	60	60	60	60	60

Effluent Group VIII

TIME	1300	1303	1306	1309	1312	1315	1318
CONT EJT SV109 R0029A CPM	50	50	50	50	50	50	50
LIQ WSTE LW104 R0030A CPM	7E3	7E3	7E3	7E3	7E3	7E3	7E3
CON DRNS LW116 Y0717A CPM	500	500	500	500	500	500	500

Effluent Group VIII

TIME	1300	1303	1306	1309	1312	1315	1318
RCB PT RM215A Y0718A CPM	1.2E3	1.2E3	1.2E3	1.2E3	1.1E3	1.1E3	1.1E3
RCB GS RM215B R0028A CPM	1.1E4	1.1E4	1.0E4	1.0E4	9.8E3	9.6E3	9.4E3
Letdown CH101A R0036A CPM	1.3E3	1.2E3	1.2E3	1.2E3	1.2E3	1.1E3	1.1E3
Letdown CH101B R0037A CPM	1.3E3	1.2E3	1.2E3	1.2E3	1.2E3	1.1E3	1.1E3
Mult P RM217A Y0719A CPM	200	200	200	200	200	200	200
Mult G RM217B Y0720A CPM	150	150	150	150	150	150	150
St Cd AS100 [illegible]1A	60	60	60	60	60	60	60
S/G Bdwn BD100 R0034A CPM	BAD	BAD	BAD	BAD	BAD	BAD	BAD
S/G Bdwn SS100 Y0712A CPM	BAD	BAD	BAD	BAD	BAD	BAD	BAD
CC CCR100 Y0715A CPM	800	800	800	800	800	800	800

Process Group IX

TIME	1300	1303	1306	1309	1312	1315	1318
GW Tnk GW101 Y0733A CPM	BAD	BAD	BAD	BAD	BAD	BAD	BAD

Process Group IX

TIME	1300	1303	1306	1309	1312	1315	1318
Airlock RM201 Y0734A MR/HR	0.3	0.5	0.5	0.5	0.5	0.5	0.5
CrnWall RM202 Y0735A MR/HR	33	36	40	42	44	46	49
Manp Crn RM203 Y0716A MR/HR	BAD	BAD	BAD	BAD	BAD	BAD	BAD
[illegible]ncor Rm RM204 Y [illegible]722A MR/HR	33	36	40	42	44	46	49
[illegible]Dcon Bld RM205 R0020A MR/HR	8.0	8.0	8.0	8.0	8.0	8.0	8.0
New Fuel RM206 R0021A MR/HR	0.4	0.4	0.4	0.4	0.4	0.4	0.4
FHB Crn RM207 R0022A MR/HR	0.8	0.8	0.8	0.8	0.8	0.8	0.8
Sol Wst RM208 R0024A MR/HR	0.5	0.5	0.5	0.5	0.5	0.5	0.5
722PB NE RM209 R0023A MR/HR	0.9	0.9	0.9	0.9	0.4	0.4	0.4
752 PAB RM210 R0025A MR/HR	0.3	0.3	0.3	0.3	0.3	0.3	0.3

Area Group X

TIME	1300	1303	1306	1309	1312	1315	1318
722PB SE RM211 Y0723A MR/HR	2.0	2.0	2.0	2.0	2.0	2.0	2.0
Chem Smp RM212 Y0724A MR/HR	0.4	0.4	0.4	0.4	0.4	0.4	0.4
Cntrl Rm RM213 R0026A MR/HR	0.1	0.1	0.1	0.1	0.1	0.1	0.1
Hot Lab RM214 R0027A MR/HR	0.3	0.3	0.3	0.3	0.3	0.3	0.3
Cntl Rm RM218A R0072A MR/HR	.01	.01	.01	.01	.01	.01	.01
Cntl Rm RM218B R0073A MR/HR	.01	.01	.01	.01	.01	.01	.01
RCB HI RM219A R0070A R/HR	1	1	1	1	1	1	1
RCB HI RM219B R0071A R/HR	1	1	1	1	1	1	1

Area Group X

TIME	1321	1324	1327	1330	1333	1336	1339
RCS Hotleg A T0419A Deg. F	534	529	520	518	515	512	512
RCS Hotleg B T0439A Deg. F	534	529	521	519	516	512	511
RCS Hotleg C T0459A Deg. F	534	532	531	527	523	520	518
RCS Coldleg A T0406A Deg. F	534	519	525	521	517	514	511
RCS Coldleg B T0426A Deg. F	534	520	525	521	517	514	511
RCS Coldleg C T0446A Deg. F	534	530	530	525	522	519	516
RCS Flow A F0400C Percent	100	0	15	15	15	15	15
RCS Flow B F0421C Percent	100	0	15	15	15	15	15
RCS Flow C F0442C Percent	100	100	130	130	130	130	130
VCT Level L2704A Percent	43	43	43	43	43	43	43

RCS Group I

TIME	1321	1324	1327	1330	1333	1336	1339
Source Range N0031A CPS	2.13E3	2.13E3	2.13E3	2.13E3	2.13E3	2.13E3	2.13E3
Power Range N0051A Percent	0	0	0	0	0	0	0
T/C Peak MXICTX Deg. F	535	535	536	531	527	524	521
T/C Average AVICTCX Deg. F	530	530	531	526	521	519	515
Deg Subcooling T3200A Deg. F	76	74	67	65	62	60	56
Inter Range N0035A CPS	10E-11	10E-11	10E-11	10E-11	10E-11	10E-11	10E-11

RCS Group I

TIME	1321	1324	1327	1330	1333	1336	1339
SG Pressure A P0402A PSIG	882	856	810	790	767	748	739
SG Pressure B P0422A PSIG	882	856	814	793	771	748	738
SG Pressure C P0442A PSIG	882	856	859	824	800	775	758
SG Level A L0403A (W.R.)	63	64	65	66	67	67	68
SG Level A L0402A (N.R.)	30	27	31	36	40	43	42
SG Level B L0423A (W.R.)	64	65	66	66	67	68	68
SG Level B L0422A (N.R.)	33	31	35	38	42	46	45
SG Level C L0443A (W.R.)	64	64	64	64	64	64	64
SG Level C L0442A (N.R.)	33	31	33	31	29	28	27

Steam Generator Group II

TIME	1321	1324	1327	1330	1333	1336	1339
Steam Flow A F0405A KBH	0	0	0	0	0	0	0
Steam Flow B F0425A KBH	0	0	0	0	0	0	0
Steam Flow C F0443A KBH	0	0	0	0	0	0	0
PD WST TK 10 L3000A FT	24.0	23.9	23.6	23.3	23.0	22.7	22.6
Aux FD Flow A F0601A GPM	63	177	184	187	151	0	0
Aux FD Flow B F0602A GPM	84	160	166	169	174	0	0
Aux FD Flow C F0603A GPM	84	160	158	163	169	188	186

Steam Generator Group II

TIME	1321	1324	1327	1330	1333	1336	1339
Cont Pressure P1000A PSIA	15.08	15.09	15.10	15.11	15.11	15.12	15.12
Cont Temp T2460A DEG F	114.8	115.5	116.1	116.8	117.2	117.7	118.1
Cont Sump Lvl L0750A IN	3.0	3.1	3.2	3.3	3.4	3.6	3.7
Hydrogen C0201A Percent	0	0	0	0	0	0	0

Containment Group III

TIME	1321	1324	1327	1330	1333	1336	1339
SI Accum Lvl L0610A Percent	78	78	78	78	78	78	78
SI Accum Lvl L0620A Percent	78	78	[illegible]	78	78	78	78
SI Accum Lvl L0630A Percent	78	78	[illegible]	[illegible]	78	78	78
RWST Level L0500A IN	574	572	570	568	567	565	564

Safety Injection Group IV

TIME	1321	1324	1327	1330	1333	1336	1339
PZR Level L0480A Percent	12	16	20	16	14	12	13
PZR Temp (WTR) T0480A DEG F	612	610	602	595	588	582	574
PZR Temp (STM) T0481A DEG F	613	611	603	596	589	583	575
RCS Pressure P0499A PSIG	1677	1647	1570	1492	1424	1358	1290
PRT Level L0485A Percent	69	69	69	69	69	69	69
PZR Pressure P0480A PSIG	1669	1638	1561	1483	1414	1349	1279

Pressurizer Group V

TIME	1321	1324	1327	1330	1333	1336	1339
RCP 1A Y3421D On/Off	ON	OFF	OFF	OFF	OFF	OFF	OFF
RCP 1B Y3422D On/Off	ON	OFF	OFF	OFF	OFF	OFF	OFF
RCP 1C Y3423D On/Off	ON	ON	ON	ON	ON	ON	ON
MSIV Position OR001X O/C	OPEN	OPEN	OPEN	OPEN	OPEN	OPEN	OPEN
MSIV Position OR003X O/C	OPEN	OPEN	OPEN	OPEN	OPEN	OPEN	OPEN
MSIV Position OR005X O/C	OPEN	OPEN	OPEN	OPEN	OPEN	OPEN	OPEN

RCP/MSIV Group VI

TIME	1321	1324	1327	1330	1333	1336	1339
Battery 1 Y0774A Volts	130	130	130	130	130	130	130
Battery 2 Y0775A Volts	130	130	130	130	130	130	130
Battery 3 Y0776A Volts	130	130	130	130	130	130	130
Battery 4 Y0777A Volts	130	130	130	130	130	130	130
Battery 5 Y0778A Volts	130	130	130	130	130	130	130

Battery Group VII

TIME	1321	1324	1327	1330	1333	1336	1339
PAB PT VS101A Y0704A CPM	600	600	600	600	600	600	600
PAB GS VS101B R0033A CPM	60	60	60	60	60	60	60
PAB TRA VS102A Y0731A CPM	60	60	60	60	60	60	60
PAB TRB VS102B Y0732A CPM	50	50	50	50	50	50	50
SLCRS P VS107A Y0710A CPM	200	200	200	200	200	200	200
SLCRS G VS107B Y0711A CPM	70	70	70	70	70	70	70
SAFE VNT VS105 Y0727A CPM	160	160	160	160	160	160	160
WGDT Vlt VS106 Y0728A CPM	150	150	150	150	150	150	150
FHB TRA VS103A Y0706A CPM	90	90	90	90	90	90	90
FHB TRB VS103B Y0709A CPM	60	60	60	60	60	60	60

Effluent Group VIII

TIME	1321	1324	1327	1330	1333	1336	1339
RCB PRG VS104A Y0707A CPM	BAD	BAD	BAD	BAD	BAD	BAD	BAD
RCB PRG VS104B Y0708A CPM	BAD	BAD	BAD	BAD	BAD	BAD	BAD
WG PART GW108A Y0721A CPM	70	70	70	70	70	70	70
WG GAS GW108B R0032A CPM	300	300	300	300	300	300	300
REC HX RW100A Y0725A CPM	BAD	BAD	BAD	BAD	BAD	BAD	BAD
REC HX RW100B Y0726A CPM	BAD	BAD	BAD	BAD	BAD	BAD	BAD
REC HX RW100C Y0729A CPM	BAD	BAD	BAD	BAD	BAD	BAD	BAD
REC HX RW100D Y0730A CPM	BAD	BAD	BAD	BAD	BAD	BAD	BAD
REC HX RW100 Y0705A CPM	60	60	60	60	60	60	60
CCW HX RW101 Y0713A CPM	60	60	60	60	60	60	60

Effluent Group VIII

TIME	1321	1324	1327	1330	1333	1336	1339
CONT EJT SV100 R0029A CPM	50	50	50	50	50	50	50
LIQ WSTE LW104 R0030A CPM	7E3	7E3	7E3	7E3	7E3	7E3	7E3
CON DRNS LW116 Y0717A CPM	500	500	500	500	500	500	500

Effluent Group VIII

TIME	1321	1324	1327	1330	1333	1336	1339
RCB PT RM215A Y0718A CPM	1.1E3	1.1E3	1.0E3	990	960	940	920
RCB GS RM215B R0028A CPM	9.1E3	8.9E3	8.7E3	8.5E3	8.3E3	8.1E3	7.9E3
Letdown CH101A R0036A CPM	1.1E3	1.1E3	1.0E3	990	990	960	940
Letdown CH101B R0037A CPM	1.1E3	1.1E3	1.0E3	990	990	960	940
Mult P RM217A Y0719A CPM	200	200	200	200	200	200	200
Mult G RM217B Y0720A CPM	150	150	150	150	150	150	150
Ax St Cd AS100 R0031A CPM	60	60	60	60	60	60	60
S/G Bdwn BD100 R0034A CPM	BAD	BAD	BAD	BAD	BAD	BAD	BAD
S/G Bdwn SS100 Y0712A CPM	BAD	BAD	BAD	BAD	BAD	BAD	BAD
CC CCR100 Y0715A CPM	800	800	800	800	800	800	800

Process Group IX

TIME	1321	1324	1327	1330	1333	1336	1339
GW Tnk GW101 Y0733A CPM	BAD	BAD	BAD	BAD	BAD	BAD	BAD

Process Group IX

TIME	1321	1324	1327	1330	1333	1336	1339
Airlock RM201 Y0734A MR/HR	0.5	0.5	0.5	0.5	0.5	0.5	0.5
CrnWall RM202 Y0735A MR/HR	51	54	56	60	59	57	56
Manp Crn RM203 Y0716A MR/HR	BAD	BAD	BAD	BAD	BAD	BAD	BAD
Incor Rm RM204 Y0722A MR/HR	51	54	56	60	59	57	56
Decon Bld RM205 R0020A MR/HR	8.0	8.0	8.0	8.0	8.0	8.0	8.0
New Fuel RM206 R0021A MR/HR	0.4	0.4	0.4	0.4	0.4	0.4	0.4
FHB Crn RM207 R0022A MR/HR	0.8	0.8	0.8	0.8	0.8	0.8	0.8
Sol Wst RM208 R0024A MR/HR	0.5	0.5	0.5	0.5	0.8	0.8	0.8
722PB NE RM209 R0023A MR/HR	0.4	0.4	0.4	0.4	0.4	0.4	0.4
752 PAB RM210 R0025A MR/HR	0.3	0.3	0.3	0.3	0.3	0.3	0.3

Area Group X

TIME	1321	1324	1327	1330	1333	1336	1339
722PB SE RM211 Y0723A MR/HR	2.0	2.0	2.0	2.0	2.0	2.0	2.0
Chem Smp RM212 Y0724A MR/HR	0.4	0.4	0.4	0.4	0.4	0.4	0.4
Cntrl Rm RM213 R0026A MR/HR	0.1	0.1	0.1	0.1	0.1	0.1	0.1
Hot Lab RM214 R0027A MR/HR	0.3	0.3	0.3	0.3	0.3	0.3	0.3
Cntl Rm RM218A R0072A MR/HR	.01	.01	.01	.01	.01	.01	.01
Cntl Rm RM218B R0073A MR/HR	.01	.01	.01	.01	.01	.01	.01
RCB HI RM219A R0070A R/HR	1	1	1	1	1	1	1
RCB HI RM219B R0071A R/HR	1	1	1	1	1	1	1

Area Group X

TIME	1342	1345	1348	1351	1354	1357	1400
RCS Hotleg A T0419A Deg. F	510	506	502	498	493	489	485
RCS Hotleg B T0439A Deg. F	510	506	502	498	493	489	485
RCS Hotleg C T0459A Deg. F	514	510	506	501	497	493	488
RCS Coldleg A T0406A Deg. F	507	503	498	494	490	486	481
RCS Coldleg B T0426A Deg. F	507	503	498	494	490	486	481
RCS Coldleg C T0446A Deg. F	512	508	504	499	495	490	486
RCS Flow A F0400C Percent	15	15	15	15	15	15	15
RCS Flow B F0421C Percent	15	15	15	15	15	15	15
RCS Flow C F0442C Percent	130	130	130	130	130	130	130
VCT Level L2704A Percent	43	43	43	43	43	43	43

RCS Group I

TIME	1342	1345	1348	1351	1354	1357	1400
Source Range N0031A CPS	2.13E3	2.13E3	2.13E3	2.13E3	2.13E3	2.13E3	2.13E3
Power Range N0051A Percent	0	0	0	0	0	0	0
T/C Peak MXICTX Deg. F	517	513	509	504	500	496	491
T/C Average AVICTCX Deg. F	512	509	505	500	495	491	487
Deg Subcooling T3200A Deg. F	51	48	45	47	54	60	65
Inter Range N0035A CPS	10E-11	10E-11	10E-11	10E-11	10E-11	10E-11	10E-11

RCS Group I

TIME	1342	1345	1348	1351	1354	1357	1400
SG Pressure A P0402A PSIG	724	698	672	646	619	595	569
SG Pressure B P0422A PSIG	724	698	672	646	619	595	569
SG Pressure C P0[illegible] PSIG	724	698	673	646	619	595	570
SG Level A L0403A (W.R.)	68	68	68	68	68	68	68
SG Level A L0402A (N.R.)	41	40	39	38	36	35	33
SG Level B L0423A (W.R.)	68	68	68	68	68	68	68
SG Level B L0422A (N.R.)	44	43	42	41	39	38	37
SG Level C L0443A (W.R.)	63	64	64	65	65	66	67
SG Level C L0442A (N.R.)	25	24	24	25	27	29	32

Steam Generator Group II

TIME	1342	1345	1348	1351	1354	1357	1400
Steam Flow A F0405A KBH	0	0	0	0	0	0	0
Steam Flow B F0425A KBH	0	0	0	0	0	0	0
Steam Flow C F0443A KBH	0	0	0	0	0	0	0
PD WST TK 10 L3000A FT	22.5	22.3	22.1	21.9	21.7	21.5	21.3
Aux FD Flow A F0601A GPM	0	0	0	0	0	0	0
Aux FD Flow B F0602A GPM	0	0	0	0	0	0	0
Aux FD Flow C F0603A GPM	257	313	315	358	351	373	376

Steam Generator Group II

TIME	1342	1345	1348	1351	1354	1357	1400
Cont Pressure P1000A PSIA	15.13	15.14	15.14	15.15	15.16	15.16	15.17
Cont Temp T2460A DEG F	118.6	119.0	119.2	119.4	119.7	119.9	120.1
Cont Sump Lvl L0750A IN	3.8	3.9	4.0	4.1	4.3	4.3	4.3
Hydrogen C0201A Percent	0	0	0	0	0	0	0

Containment Group III

TIME	1342	1345	1348	1351	1354	1357	1400
SI Accum Lvl L0610A Percent	78	78	78	78	78	78	78
SI Accum Lvl L0620A Percent	78	78	78	78	78	78	78
SI Accum Lvl L0630A Percent	78	78	78	78	78	78	78
RWST Level L0500A IN	562	560	559	557	556	554	553

Safety Injection Group IV

TIME	1342	1345	1348	1351	1354	1357	1400
PZR Level L0480A Percent	13	15	17	19	20	22	23
PZR Temp (WTR) T0480A DEG F	567	558	551	550	551	553	554
PZR Temp (STM) T0481A DEG F	568	559	552	551	552	554	555
RCS Pressure P0499A PSIG	1204	1131	1070	1052	1069	1081	1092
PRT Level L0485A Percent	69	69	69	69	69	69	69
PZR Pressure P0480A PSIG	1195	1121	1059	1042	1058	1070	1082

Pressurizer Group V

TIME	1342	1345	1348	1351	1354	1357	1400
RCP 1A Y3421D On/Off	OFF	OFF	OFF	OFF	OFF	OFF	OFF
RCP 1B Y3422D On/Off	OFF	OFF	OFF	OFF	OFF	OFF	OFF
RCP 1C Y3423D On/Off	ON	ON	ON	ON	ON	ON	ON
MSIV Position OR001X O/C	OPEN	OPEN	OPEN	OPEN	OPEN	OPEN	OPEN
MSIV Position OR003X O/C	OPEN	OPEN	OPEN	OPEN	OPEN	OPEN	OPEN
MSIV Position OR005X O/C	OPEN	OPEN	OPEN	OPEN	OPEN	OPEN	OPEN

RCP/MSIV Group VI

TIME	1342	1345	1348	1351	1354	1357	1400
Battery 1 Y0774A Volts	130	130	130	130	130	130	130
Battery 2 Y0775A Volts	130	130	130	130	130	130	130
Battery 3 Y0776A Volts	130	130	130	130	130	130	130
Battery 4 Y0777A Volts	130	130	130	130	130	130	130
Battery 5 Y0778A Volts	130	130	130	130	130	130	130

Battery Group VII

TIME	1342	1345	1348	1351	1354	1357	1400
PAB PT VS101A Y0704A CPM	600	600	600	600	600	600	600
PAB GS VS101B R0033A CPM	60	60	60	60	60	60	60
PAB TRA VS102A Y0731A CPM	60	60	60	60	60	60	60
PAB TRB VS102B Y0732A CPM	50	50	50	50	50	50	50
SLCRS P VS107A Y0710A CPM	200	200	200	200	200	200	200
SLCRS G VS107B Y0711A CPM	70	70	70	70	70	70	70
SAFE VNT VS105 Y0727A CPM	160	160	160	160	160	160	160
WGDT Vlt VS106 Y0728A CPM	150	150	150	150	150	150	150
FHB TRA VS103A Y0706A CPM	90	90	90	90	90	90	90
FHB TRB VS103B Y0709A CPM	60	60	60	60	60	60	60

Effluent Group VIII

TIME	1342	1345	1348	1351	1354	1357	1400
RCB PRG VS104A Y0707A CPM	BAD	BAD	BAD	BAD	BAD	BAD	BAD
RCB PRG VS104B Y0708A CPM	BAD	BAD	BAD	BAD	BAD	BAD	BAD
WG PART GW108A Y0721A CPM	70	70	70	70	70	70	70
WG GAS GW108B R0032A CPM	300	300	300	300	300	300	300
REC HX RW100A Y0725A CPM	BAD	BAD	BAD	BAD	BAD	BAD	BAD
REC HX RW100B Y0726A CPM	BAD	BAD	BAD	BAD	BAD	BAD	BAD
REC HX RW100C Y0729A CPM	BAD	BAD	BAD	BAD	BAD	BAD	BAD
REC HX RW100D Y0730A CPM	BAD	BAD	BAD	BAD	BAD	BAD	BAD
REC HX RW100 Y0705A CPM	60	60	60	60	60	60	60
CCW HX RW101 Y0713A CPM	60	60	60	60	60	60	60

Effluent Group VIII

TIME	1342	1345	1348	1351	1354	1357	1400
CONT EJT SV100 R0029A CPM	50	50	50	50	50	50	50
LIQ WSTE LW104 R0030A CPM	7E3	7E3	7E3	7E3	7E3	7E3	7E3
CON DRNS LW116 Y 717A CPM	500	500	500	500	500	500	500

Effluent Group VIII

TIME	1342	1345	1348	1351	1354	1357	1400
RCB PT RM215A Y0718A CPM	900	880	860	840	820	800	780
RCB GS RM215B R0028A CPM	7.8E3	7.6E3	7.4E3	7.2E3	7.1E3	6.9E3	6.8E3
Letdown CH101A R0036A CPM	920	900	880	860	840	820	800
Letdown CH101B R0037A CPM	920	900	880	860	840	820	800
Mult P RM217A Y0719A CPM	200	200	200	200	200	200	200
Mult G RM217B Y0720A CPM	150	150	150	150	150	150	150
Ax St Cd AS100 R0031A CPM	60	60	60	60	60	60	60
S/G Bdwn BD100 R0034A CPM	BAD	BAD	BAD	BAD	BAD	BAD	BAD
S/G Bdwn SS100 Y0712A CPM	BAD	BAD	BAD	BAD	BAD	BAD	BAD
CC CCR100 Y0715A CPM	800	800	800	800	800	800	800

Process Group IX

TIME	1342	1345	1348	1351	1354	1357	1400
GW Tnk GW101 Y0733A CPM	BAD	BAD	BAD	BAD	BAD	BAD	BAD

Process Group 1X

TIME	1342	1345	1348	1351	1354	1357	1400
Airlock RM201 Y0734A MR/HR	0.5	0.5	0.5	0.5	0.5	0.5	0.5
CrnWall RM202 Y0735A MR/HR	55	53	52	51	50	49	48
Manp Crn RM203 Y0716A MR/HR	BAD	BAD	BAD	BAD	BAD	BAD	BAD
Incor Rm RM204 Y0722A MR/HR	55	53	52	51	50	49	48
Incon Bld RM205 R0020A MR/HR	8.0	8.0	8.0	8.0	8.0	8.0	8.0
New Fuel RM206 R0021A MR/HR	0.4	0.4	0.4	0.4	0.4	0.4	0.4
FHB Crn RM207 R0022A MR/HR	0.8	0.8	0.8	0.8	0.8	0.8	0.8
Sol Wst RM208 R0024A MR/HR	0.8	0.8	0.8	0.8	0.5	0.5	0.5
722PB NE RM209 R0023A MR/HR	0.4	0.4	0.4	0.4	0.4	0.4	0.4
752 PAB RM210 R0025A MR/HR	0.3	0.3	0.3	0.3	0.3	0.3	0.3

Area Group X

TIME	1342	1345	1348	1351	1354	1357	1400
722PB SE RM211 Y0723A MR/HR	2.0	2.0	2.0	2.0	2.0	2.0	2.0
Chem Smp RM212 Y0724A MR/HR	0.4	0.4	0.4	0.4	0.4	0.4	0.4
Cntrl Rm RM213 R0026A MR/HR	0.1	0.1	0.1	0.1	0.1	0.1	0.1
Hot Lab RM214 R0027A MR/HR	0.3	0.3	0.3	0.3	0.3	0.3	0.3
Cntl Rm RM218A R0072A MR/HR	.01	.01	.01	.01	.01	.01	.01
Cntl Rm RM218B R0073A MR/HR	.01	.01	.01	.01	.01	.01	.01
RCB HI RM219A R0070A R/HR	1	1	1	1	1	1	1
RCB HI RM219B R0071A R/HR	1	1	1	1	1	1	1

Area Group X

TIME	1403	1406	1409	1412	1415	1418	1421
RCS Hotleg A T0419A Deg. F	481	476	471	467	465	464	462
RCS Hotleg B T0439A Deg. F	481	476	472	468	466	464	461
RCS Hotleg C T0459A Deg. F	484	481	477	473	471	469	466
RCS Coldleg A T0406A Deg. F	478	474	471	467	465	463	460
RCS Coldleg B T0426A Deg. F	478	474	471	467	465	463	460
RCS Coldleg C T0446A Deg. F	482	479	476	472	470	467	465
RCS Flow A F0400C Percent	15	15	15	15	15	15	15
RCS Flow B F0421C Percent	15	15	15	15	15	15	15
RCS Flow C F0442C Percent	130	130	130	130	130	130	130
VCT Level L2704A Percent	43	43	43	43	43	43	43

RCS Group I

TIME	1403	1406	1409	1412	1415	1418	1421
Source Range N0031A CPS	2.13E3	2.13E3	2.13E3	2.13E3	2.13E3	2.13E3	2.13E3
Power Range N0051A Percent	0	0	0	0	0	0	0
T/C Peak MXICTX Deg. F	488	484	481	477	475	472	470
T/C Average AVICTCX Deg. F	485	481	479	475	474	471	470
Deg Subcooling T3200A Deg. F	70	74	78	82	85	88	91
Inter Range N0035A CPS	10E-11	10E-11	10E-11	10E-11	10E-11	10E-11	10E-11

RCS Group I

TIME	1403	1406	1409	1412	1415	1418	1421
SG Pressure A P0402A PSIG	544	523	504	482	469	457	444
SG Pressure B P0422A PSIG	544	523	504	482	469	457	444
SG Pressure C P0442A PSIG	544	523	504	483	470	458	444
SG Level A L0403A (W.R.)	68	68	68	69	69	69	69
SG Level A L0402A (N.R.)	32	32	33	34	34	34	33
SG Level B L0423A (W.R.)	68	69	69	69	69	70	70
SG Level B L0422A (N.R.)	35	35	35	35	35	36	35
SG Level C L0443A (W.R.)	68	68	68	69	69	69	69
SG Level C L0442A (N.R.)	35	37	37	37	37	37	36

Steam Generator Group II

TIME	1403	1406	1409	1412	1415	1418	1421
Steam Flow A F0405A KBH	0	0	0	0	0	0	0
Steam Flow B F0425A KBH	0	0	0	0	0	0	0
Steam Flow C F0443A KBH	0	0	0	0	0	0	0
PD WST TK 10 L3000A FT	21.1	20.8	20.6	20.4	20.1	20.0	19.8
Aux FD Flow A F0601A GPM	0	85	85	86	26	26	30
Aux FD Flow B F0602A GPM	0	56	56	57	54	55	0
Aux FD Flow C F0603A GPM	381	247	250	252	188	191	203

Steam Generator Group II

TIME	1403	1406	1409	1412	1415	1418	1421
Cont Pressure P1000A PSIA	15.17	15.18	15.18	15.19	15.19	15.20	15.20
Cont Temp T2460A DEG F	120.2	120.3	120.4	120.5	120.6	120.7	120.7
Cont Sump Lvl L0750A IN	4.4	4.4	4.5	4.5	4.6	4.6	4.6
Hydrogen C0201A Percent	0	0	0	0	0	0	0

Containment Group III

TIME	1403	1406	1409	1412	1415	1418	1421
SI Accum Lvl L0610A Percent	78	78	78	78	78	78	78
SI Accum Lvl L0620A Percent	78	78	78	78	78	78	78
SI Accum Lvl L0630A Percent	78	78	78	78	78	78	78
RWST Level L0500A IN	551	550	548	547	546	544	543

Safety Injection Group IV

TIME	1403	1406	1409	1412	1415	1418	1421
PZR Level L0480A Percent	25	26	27	29	30	31	32
PZR Temp (WTR) T0480A DEG F	555	556	556	556	556	557	558
PZR Temp (STM) T0481A DEG F	556	557	557	557	557	558	559
RCS Pressure P0499A PSIG	1102	1108	1112	1117	1120	1123	1129
PRT Level L0485A Percent	69	69	69	69	69	69	69
PZR Pressure P0480A PSIG	1091	1097	1101	1105	1108	1112	1117

Pressurizer Group V

TIME	1403	1406	1409	1412	1415	1418	1421
RCP 1A Y3421D On/Off	OFF	OFF	OFF	OFF	OFF	OFF	OFF
RCP 1B Y3422D On/Off	OFF	OFF	OFF	OFF	OFF	OFF	OFF
RCP 1C Y3423D On/Off	ON	ON	ON	ON	ON	ON	ON
MSIV Position OR001X O/C	OPEN	OPEN	OPEN	OPEN	OPEN	OPEN	OPEN
MSIV Position OR003X O/C	OPEN	OPEN	OPEN	OPEN	OPEN	OPEN	OPEN
MSIV Position OR005X O/C	OPEN	OPEN	OPEN	OPEN	OPEN	OPEN	OPEN

RCP/MSIV Group VI

TIME	1403	1406	1409	1412	1415	1418	1421
Battery 1 Y0774A Volts	130	130	130	130	130	130	130
Battery 2 Y0775A Volts	130	130	130	130	130	130	130
Battery 3 Y0776A Volts	130	130	130	130	130	130	130
Battery 4 Y0777A Volts	130	130	130	130	130	130	130
Battery 5 Y0778A Volts	130	130	130	130	130	130	130

Battery Group VII

TIME	1403	1406	1409	1412	1415	1418	1421
PAB PT VS101A Y0704A CPM	600	600	600	600	600	600	600
PAB GS VS101B R0033A CPM	60	60	60	60	60	60	60
PAB TRA VS102A Y0731A CPM	60	60	60	60	60	60	60
PAB TRB VS102B Y0732A CPM	50	50	50	50	50	50	50
SLCRS P VS107A Y0710A CPM	200	200	200	200	200	200	200
SLCRS G VS107B Y0711A CPM	70	70	70	70	70	70	40
SAFE VNT VS105 Y0727A CPM	160	160	160	160	160	160	70
WGDT Vlt VS106 Y0728A CPM	150	150	150	150	150	150	150
FHB TRA VS103A Y0706A CPM	90	90	90	90	90	90	90
FHB TRB VS103B Y0709A CPM	60	60	60	60	60	60	60

Effluent Group VIII

TIME	1403	1406	1409	1412	1415	1418	1421
RCB PRG VS104A Y0707A CPM	BAD	BAD	BAD	BAD	BAD	BAD	BAD
RCB PRG VS104B Y0708A CPM	BAD	BAD	BAD	BAD	BAD	BAD	BAD
WG PART GW108A Y0721A CPM	70	70	70	70	70	70	70
WG GAS GW108B R0032A CPM	300	300	300	300	300	300	300
REC HX RW100A Y0725A CPM	BAD	BAD	BAD	BAD	BAD	BAD	BAD
REC HX RW100B Y0726A CPM	BAD	BAD	BAD	BAD	BAD	BAD	BAD
REC HX RW100C Y0729A CPM	BAD	BAD	BAD	BAD	BAD	BAD	BAD
REC HX RW100D Y0730A CPM	BAD	BAD	BAD	BAD	BAD	BAD	BAD
REC HX RW100 Y0705A CPM	60	60	60	60	60	60	60
CCW HX RW101 Y0713A CPM	60	60	60	60	60	60	60

Effluent Group VIII

TIME	1403	1406	1409	1412	1415	1418	1421
CONT EJT SV100 R0029A CPM	50	50	50	50	50	50	50
LIQ WSTE LW104 R0030A CPM	7E3	7E3	7E3	7E3	7E3	7E3	7E3
CON DRNS LW116 Y0717A CPM	500	500	500	500	500	500	500

Effluent Group VIII

TIME	1403	1406	1409	1412	1415	1418	1421
RCB PT RM215A Y0718A CPM	760	750	730	710	700	680	660
RCB GS RM215B R0028A CPM	6.6E3	6.4E3	6.3E3	6.2E3	6.0E3	5.9E3	5.7E3
Letdown CH101A R0036A CPM	780	760	750	730	710	700	680
Letdown CH101B R0037A CPM	780	760	750	730	710	700	680
Mult P RM217A Y0719A CPM	200	200	200	200	200	200	200
Mult G RM217B Y0720A CPM	150	150	150	150	150	150	150
Ax St Cd AS100 R0031A CPM	60	60	60	60	60	60	60
S/G Bdwn BD100 R0034A CPM	BAD	BAD	BAD	BAD	BAD	BAD	BAD
S/G Bdwn SS100 Y0712A CPM	BAD	BAD	BAD	BAD	BAD	BAD	BAD
CC CCR100 Y0715A CPM	800	800	800	800	800	800	800

Process Group IX

TIME	1403	1406	1409	1412	1415	1418	1421
GW Tnk GW101 Y0733A CPM	BAD	BAD	BAD	BAD	BAD	BAD	BAD

Process Group IX

TIME	1403	1406	1409	1412	1415	1418	1421
Airlock RM201 Y0734A MR/HR	0.5	0.5	0.5	0.5	0.5	0.4	0.3
CrnWall RM202 Y0735A MR/HR	46	45	44	43	42	41	40
Manp Crn RM203 Y0716A MR/HR	BAD	BAD	BAD	BAD	BAD	BAD	BAD
Incor Rm RM204 Y0722A MR/HR	46	45	44	43	42	41	40
Decon Bld RM205 R0020A MR/HR	8.0	8.0	8.0	8.0	8.0	8.0	8.0
New Fuel RM206 R0021A MR/HR	0.4	0.4	0.4	0.4	0.4	0.4	0.4
FHB Crn RM207 R0022A MR/HR	0.8	0.8	0.8	0.8	0.8	0.8	0.8
Sol Wst RM208 R0024A MR/HR	0.5	0.5	0.5	0.5	0.5	0.5	0.5
722PB NE RM209 R0023A MR/HR	0.4	0.4	0.4	0.4	0.4	0.4	0.4
752 PAB RM210 R0025A MR/HR	0.3	0.3	0.3	0.3	0.3	0.3	0.3

Area Group X

TIME	1403	1406	1409	1412	1415	1418	1421
722PB SE RM211 Y0723A MR/HR	2.0	2.0	2.0	2.0	2.0	2.0	2.0
Chem Smp RM212 Y0724A MR/HR	0.4	0.4	0.4	0.4	0.4	0.4	0.4
Cntrl Rm RM213 R0026A MR/HR	0.1	0.1	0.1	0.1	0.1	0.1	0.1
Hot Lab RM214 R0027A MR/HR	0.3	0.3	0.3	0.3	0.3	0.3	0.3
Cntl Rm RM218A R0072A MR/HR	.01	.01	.01	.01	.01	.01	.01
Cntl Rm RM218B R0073A MR/HR	.01	.01	.01	.01	.01	.01	.01
RCB HI RM219A R0070A R/HR	1	1	1	1	1	1	1
RCB HI RM219B R0071A R/HR	1	1	1	1	1	1	1

Area Group X

TIME	1424	1427	1430	1433	1436	1439	1442
RCS Hotleg A T0419A Deg. F	458	455	450	446	441	436	433
RCS Hotleg B T0439A Deg. F	459	455	451	446	441	436	433
RCS Hotleg C T0459A Deg. F	463	459	455	450	445	440	437
RCS Coldleg A T0406A Deg. F	457	453	449	444	439	434	436
RCS Coldleg B T0426A Deg. F	457	453	449	444	439	434	433
RCS Coldleg C T0446A Deg. F	461	457	453	448	443	438	435
RCS Flow A F0400C Percent	15	15	15	15	15	15	15
RCS Flow B F0421C Percent	15	15	15	15	15	15	15
RCS Flow C F0442C Percent	130	130	130	130	130	130	130
VCT Level L2704A Percent	43	43	43	43	43	43	43

RCS Group I

TIME	1424	1427	1430	1433	1436	1439	1442
Source Range N0031A CPS	2.13E3	2.13E3	2.13E3	2.13E3	2.13E3	2.13E3	2.13E3
Power Range N0051A Percent	0	0	0	0	0	0	0
T/C Peak MXICTX Deg. F	466	462	458	453	448	443	440
T/C Average AVICTCX Deg. F	466	462	458	453	448	443	440
Deg Subcooling T3200A Deg. F	95	98	102	107	111	116	112
Inte Range N0035A CPS	10E-11	10E-11	10E-11	10E-11	10E-11	10E-11	10E-11

RCS Group I

TIME	1424	1427	1430	1433	1436	1439	1442
SG Pressure A P0402A PSIG	426	406	388	369	351	333	323
SG Pressure B P0422A PSIG	426	406	388	369	351	333	323
SG Pressure C P0442A PSIG	426	406	388	369	352	334	324
SG Level A L0403A (W.R.)	69	70	70	70	71	71	71
SG Level A L0402A (N.R.)	33	33	34	34	35	35	35
SG Level B L0423A (W.R.)	70	70	70	70	71	71	71
SG Level B L0422A (N.R.)	34	33	33	34	34	34	35
SG Level C L0443A (W.R.)	69	68	68	68	68	68	69
SG Level C L0442A (N.R.)	35	31	26	24	24	25	26

Steam Generator Group II

TIME	1424	1427	1430	1433	1436	1439	1442
Steam Flow A F0405A KBH	0	0	0	0	0	0	0
Steam Flow B F0425A KBH	0	0	0	0	0	0	0
Steam Flow C F0443A KBH	0	0	0	0	0	0	0
FD WST TK 10 L3000A FT	19.6	19.5	19.4	19.2	18.9	18.7	18.4
Aux FD Flow A F0601A GPM	30	78	73	69	68	46	46
Aux FD Flow B F0602A GPM	0	52	73	69	68	46	46
Aux FD Flow C F0603A GPM	206	129	193	285	284	290	290

Steam Generator Group II

TIME	1424	1427	1430	1433	1436	1439	1442
Cont Pressure P1000A PSIA	15.21	15.21	15.22	15.23	15.23	15.24	15.24
Cont Temp T2460A DEG F	120.8	120.8	120.9	120.9	121.0	121.0	121.1
Cont Sump Lvl L0750A IN	4.7	4.7	4.7	4.8	4.8	4.8	4.9
Hydrogen C0201A Percent	0	0	0	0	0	0	0

Containment Group III

TIME	1424	1427	1430	1433	1436	1439	1442
SI Accum Lvl L0610A Percent	78	78	78	78	78	78	78
SI Accum Lvl L06[illegible] Percent	78	78	78	78	78	78	78
SI Accum Lvl L0630A Percent	78	78	78	78	78	78	78
RWST Level L0500A IN	541	540	538	537	535	534	534

Safety Injection Group IV

TIME	1424	1427	1430	1433	1436	1439	1442
PZR Level L0480A Percent	33	35	36	36	37	39	36
PZR Temp (WTR) T0480A DEG F	558	558	557	557	556	556	549
PZR Temp (STM) T0481A DEG F	559	559	558	558	557	557	550
RCS Pressure P0499A PSIG	1132	1130	1126	1121	1117	1116	1055
PRT Level L0485A Percent	69	69	69	69	69	69	69
PZR Pressure P0480A PSIG	1120	1118	113	1108	1104	1103	1041

Pressurizer Group V

TIME	1424	1427	1430	1433	1436	1439	1442
RCP 1A Y3421D On/Off	OFF	OFF	OFF	OFF	OFF	OFF	OFF
RCP 1B Y3422D On/Off	OFF	OFF	OFF	OFF	OFF	OFF	OFF
RCP 1C Y3423D On/Off	ON	ON	ON	ON	ON	ON	ON
MSIV Position OR001X O/C	OPEN	OPEN	OPEN	OPEN	OPEN	OPEN	OPEN
MSIV Position OR003X O/C	OPEN	OPEN	OPEN	OPEN	OPEN	OPEN	OPEN
MSIV Position OR005X O/C	OPEN	OPEN	OPEN	OPEN	OPEN	OPEN	OPEN

RCP/MSIV Group VI

TIME	1424	1427	1430	1433	1436	1439	1442
Battery 1 Y0774A Volts	130	130	130	130	130	130	130
Battery 2 Y0775A Volts	130	130	130	130	130	130	130
Battery 3 Y0776A Volts	130	130	130	130	130	130	130
Battery 4 Y0777A Volts	130	130	130	130	130	130	130
Battery 5 Y0778A Volts	130	130	130	130	130	130	130

Battery Group VII

TIME	1424	1427	1430	1433	1436	1439	1442
PAB PT VS101A Y0704A CPM	600	600	600	600	600	600	600
PAB GS VS101B R0033A CPM	60	60	60	60	60	60	60
PAB TRA VS102A Y0731A CPM	60	60	60	60	60	60	60
PAB TRB VS102B Y0732A CPM	50	50	50	50	50	50	50
SLCRS P VS107A Y0710A CPM	200	200	200	200	200	200	200
SLCRS G VS107B Y0711A CPM	40	40	40	40	40	40	40
SAFE VNT VS105 Y0727A CPM	70	70	70	70	70	70	70
WGDT Vlt VS106 Y0728A CPM	150	150	150	150	150	150	150
FHB TRA VS103A Y0706A CPM	90	90	90	90	90	90	90
FHB TRB VS103B Y0709A CPM	60	60	60	60	60	60	60

Effluent Group VIII

TIME	1424	1427	1430	1433	1436	1439	1442
RCB PRG VS104A Y0707A CPM	BAD	BAD	BAD	BAD	BAD	BAD	BAD
RCB PRG VS104B Y0708A CPM	BAD	BAD	BAD	BAD	BAD	BAD	BAD
WG PART GW108A Y0721A CPM	70	70	70	70	70	70	70
WG GAS GW108B R0032A CPM	300	300	300	300	300	300	300
REC HX RW100A Y0725A CPM	BAD	BAD	BAD	BAD	BAD	BAD	BAD
REC HX RW100B Y0726A CPM	BAD	BAD	BAD	BAD	BAD	BAD	BAD
REC HX RW100C Y0729A CPM	BAD	BAD	BAD	BAD	BAD	BAD	BAD
REC HX RW100D Y0730A CPM	BAD	BAD	BAD	BAD	BAD	BAD	BAD
REC HX RW100 Y0705A CPM	60	60	60	60	60	60	60
CCW HX RW101 Y0713A CPM	60	60	60	60	60	60	60

Effluent Group VIII

TIME	1424	1427	1430	1433	1436	1439	1442
CONT EJT SV100 R0029A CPM	50	50	50	50	50	50	50
LIQ WSTE LW104 R0030A CPM	7E3	7E3	7E3	7E3	7E3	7E3	7E3
CON DRNS LW116 Y0717A CPM	500	500	500	500	500	500	500

Effluent Group VIII

TIME	1424	1427	1430	1433	1436	1439	1442
RCB PT RM215A Y0718A CPM	650	630	620	600	590	580	570
RCB GS RM215B R0028A CPM	5.6E3	5.5E3	5.4E3	5.2E3	5.1E3	5.0E3	4.9E3
Letdown CH101A R0036A CPM	660	650	630	620	610	600	580
Letdown CH101B R0037A CPM	660	650	630	620	610	600	580
Mult P RM217A Y0719A CPM	200	200	200	200	200	200	200
Mult G RM217B Y0720A CPM	150	150	150	150	150	150	150
Ax St Cd AS100 R0031A CPM	60	60	60	60	60	60	60
S/G Bdwn BD100 R0034A CPM	BAD	BAD	BAD	BAD	BAD	BAD	BAD
S/G Bdwn SS100 Y0712A CPM	BAD	BAD	BAD	BAD	BAD	BAD	BAD
CC CCR100 Y0715A CPM	800	800	800	800	800	800	800

Process Group IX

TIME	1424	1427	1430	1433	1436	1439	1442
GW Tnk GW101 Y0733A CPM	BAD	BAD	BAD	BAD	BAD	BAD	BAD

Process Group IX

TIME	1424	1427	1430	1433	1436	1439	1442
Airlock RM201 Y0737A MR/HR	0.3	0.3	0.3	0.3	0.3	0.3	0.3
CrnWall RM202 Y0735A MR/HR	39	39	38	37	36	35	34
Manp Crn RM203 Y0716A MR/HR	BAD	BAD	BAD	BAD	BAD	BAD	BAD
Incor Rm RM204 Y0722A MR/HR	39	39	38	37	36	35	34
Decon Bld RM205 R0020A MR/HR	8.0	8.0	8.0	8.0	8.0	8.0	8.0
New Fuel RM206 R0021A MR/HR	0.4	0.4	0.4	0.4	0.4	0.4	0.4
FHB Crn RM207 R0022A MR/HR	0.8	0.8	0.8	0.8	0.8	0.8	0.8
Sol Wst RM208 R0024A MR/HR	0.5	0.5	0.5	0.5	0.5	[illegible]	0.5
722PB NE RM209 R0023A MR/HR	0.4	0.4	0.4	0.4	0.4	0.4	0.4
752 PAB RM210 R0025A MR/HR	0.3	0.3	0.3	0.3	0.3	0.3	0.3

Area Group X

TIME	1424	1427	1430	1433	1436	1439	1442
722PB SE RM211 Y0723A MR/HR	2.0	2.0	2.0	2.0	2.0	2.0	2.0
Chem Smp RM212 Y0724A MR/HR	0.4	0.4	0.4	0.4	0.4	0.4	0.4
Cntrl Rm RM213 R0026A MR/HR	0.1	0.1	0.1	0.1	0.1	0.1	0.1
Hot Lab RM214 R0027A MR/HR	0.3	0.3	0.3	0.3	0.3	0.3	0.3
Cntl Rm RM218A R0072A MR/HR	.01	.01	.01	.01	.01	.01	.01
Cntl Rm RM218B R0073A MR/HR	.01	.01	.01	.01	.01	.01	.01
RCB HI RM219A R0070A R/HR	1	1	1	1	1	1	1
RCB HI RM219B R0071A R/HR	1	1	1	1	1	1	1

Area Group X

TIME	1445	1448	1451	1454	1457	1500	
RCS Hotleg A T0419A Deg. F	431	430	428	426	420	413	
RCS Hotleg B T0439A Deg. F	430	428	425	423	419	413	
RCS Hotleg C T0459A Deg. F	436	434	432	429	423	417	
RCS Coldleg A T0406A Deg. F	434	432	431	429	423	416	
RCS Coldleg B T0426A Deg. F	429	428	424	4[illegible]2	417	410	
RCS Coldleg C T0446A Deg. F	433	432	430	427	421	414	
RCS Flow A F0400C Percent	15	15	15	15	15	15	
RCS Flow B F0421C Percent	15	15	15	15	15	15	
RCS Flow C F0442C Percent	130	130	130	130	130	130	
VCT Level L2704A Percent	43	43	43	43	43	43	

RCS Group I

TIME	1445	1448	1451	1454	1457	1500	
Source Range N0031A CPS	2.13E3	2.13E3	2.13E3	2.13E3	2.13E3	2.13E3	
Power Range N0051A Percent	0	0	0	0	0	0	
T/C Peak MXICTX Deg. F	438	437	435	432	426	419	
T/C Average AVICTCX Deg. F	438	437	435	432	426	419	
Deg Subcooling T3200A Deg. F	90	72	57	47	41	32	
Inter Range N0035A CPS	10E-11	10E-11	10E-11	10E-11	10E-11	10E-11	

RCS Group I

TIME	1445	1448	1451	1454	1457	1500	
SG Pressure A P0402A PSIG	317	312	306	295	272	255	
SG Pressure B P0422A PSIG	316	308	301	293	272	255	
SG Pressure C P0442A PSIG	317	312	306	295	273	255	
SG Level A L0403A (W.R.)	71	71	71	71	71	71	
SG Level A L0402A (N.R.)	35	35	35	35	32	30	
SG Level B L0423A (W.R.)	71	72	72	72	72	72	
SG Level B L0422A (N.R.)	35	36	36	37	36	35	
SG Level C L0443A (W.R.)	69	69	70	69	68	68	
SG Level C L0442A (N.R.)	27	28	29	33	30	24	

Steam Generator Group II

TIME	[illegible]5	1448	1451	1454	1457	1500	
Steam Flow A F0405A KBH	0	0	0	0	0	0	
Steam Flow B F0425A KBH	0	0	0	0	0	0	
Steam Flow C F0443A KBH	0	0	0	0	0	0	
PD WST TK 10 L3000A FT	18.2	17.9	17.7	17.5	17.3	17.1	
Aux FD Flow A F0601A GPM	47	47	47	50	53	91	
Aux FD Flow B F0602A GPM	47	47	47	50	26	68	
Aux FD Flow C F0603A GPM	291	292	293	245	234	298	

Steam Generator Group II

TIME	1445	1448	1451	1454	1457	1500	
Cont Pressure P1000A PSIA	15.25	15.27	15.28	15.29	15.30	15.31	
Cont Temp T2460A DEG F	121.1	121.1	121.2	121.2	121.2	121.2	
Cont Sump Lvl L0750A IN	4.9	4.9	5.0	5.0	5.0	5.0	
Hydrogen C0201A Percent	0	0	0	0	0	0	

Containment Group III

TIME	1445	1448	1451	1454	1457	1500	
SI Accum Lvl L0610A Percent	78	78	78	78	78	78	
SI Accum Lvl L0620A Percent	78	78	78	78	78	78	
SI Accum Lvl L0630A Percent	78	78	78	78	78	78	
RWST Level L0500A IN	534	534	534	534	534	534	

Safety Injection Group IV

TIME	1445	1448	1451	1454	1457	1500	
PZR Level L0480A Percent	31	25	20	17	13	10	
PZR Temp (WTR) T0480A DEG F	525	505	487	473	462	445	
PZR Temp (STM) T0481A DEG F	526	506	488	473	463	446	
RCS Pressure P0499A PSIG	859	724	620	548	487	413	
PRT Level L0485A Percent	69	69	69	69	69	69	
PZR Pressure P0480A PSIG	847	711	609	537	47[illegible]	403	

Pressurizer Group V

TIME	1445	1448	1451	1454	1457	1500	
RCP 1A Y3421D On/Off	OFF	OFF	OFF	OFF	OFF	OFF	
RCP 1B Y3422D On/Off	OFF	OFF	OFF	OFF	OFF	OFF	
RCP 1C Y3423D On/Off	ON	ON	ON	ON	ON	ON	
MSIV Position OR001X O/C	OPEN	OPEN	OPEN	OPEN	OPEN	OPEN	
MSIV Position OR003X O/C	OPEN	OPEN	OPEN	OPEN	OPEN	OPEN	
MSIV Position OR005X O/C	OPEN	OPEN	OPEN	OPEN	OPEN	OPEN	

RCP/MSIV Group VI

TIME	1445	1448	1451	1454	1457	1500	
Battery 1 Y0774A Volts	130	130	130	130	130	130	
Battery 2 Y0775A Volts	130	130	130	130	130	130	
Battery 3 Y0776A Volts	130	130	130	130	130	130	
Battery 4 Y0777A Volts	130	130	130	130	130	130	
Battery 5 Y0778A Volts	130	130	130	130	130	130	

Battery Group VII

TIME	1445	1448	1451	1454	1457	1500	
PAB PT VS101A Y0704A CPM	600	600	600	600	600	600	
PAB GS VS101B R0033A CPM	60	60	60	60	60	60	
PAB TRA VS102A Y0731A CPM	60	60	60	60	60	60	
PAB TRB VS102B Y0732A CPM	50	50	50	50	50	50	
SLCRS P VS107A Y0710A CPM	200	200	200	200	200	200	
SLCRS G VS107B Y0711A CPM	40	40	40	40	40	40	
SAFE VNT VS105 Y0727A CPM	70	70	70	70	70	70	
WGDT Vlt VS106 Y0728A CPM	150	150	150	150	150	150	
FHB TRA VS103A Y0706A CPM	90	90	90	90	90	90	
FHB TRB VS103B Y0709A CPM	60	60	60	60	60	60	

Effluent Group VIII

TIME	1445	1448	1451	1454	1457	1500	
RCB PRG VS104A Y0707A CPM	BAD	BAD	BAD	BAD	BAD	BAD	
RCB PRG VS104B Y0708A CPM	BAD	BAD	BAD	BAD	BAD	BAD	
WG PART GW108A Y0721A CPM	70	70	70	70	70	70	
WG GAS GW108B R0032A CPM	300	300	300	300	300	300	
REC HX RW100A Y0725A CPM	BAD	BAD	BAD	BAD	BAD	BAD	
REC HX RW100B Y0726A CPM	BAD	BAD	BAD	BAD	BAD	BAD	
REC HX RW100C Y0729A CPM	BAD	BAD	BAD	BAD	BAD	BAD	
REC HX RW100D Y0730A CPM	BAD	BAD	BAD	BAD	BAD	BAD	
REC HX RW100 Y0705A CPM	60	60	60	60	60	60	
CCW HX RW101 Y0713A CPM	60	60	60	60	60	60	

Effluent Group VIII

TIME	1445	1448	1451	1454	1457	1500	
CONT EJT SV100 R0029A CPM	50	50	50	50	50	50	
LIQ WSTE LW104 R0030A CPM	7E3	7E3	7E3	7E3	7E3	7E3	
CON DRNS LW116 Y0717A CPM	500	500	500	500	500	500	

Effluent Group VIII

TIME	1445	1448	1451	1454	1457	1500	
RCB PT RM215A Y0718A CPM	560	550	540	530	520	520	
RCB GS RM215B R0028A CPM	4.9E3	4.8E3	4.7E3	4.6E3	4.5E3	4.5E3	
Letdown CH101A R0036A CPM	570	570	560	550	540	540	
Letdown CH101B R0037A CPM	570	570	560	550	540	540	
Mult P RM217A Y0719A CPM	200	200	200	200	200	200	
Mult G RM217B Y0720A CPM	150	150	150	150	150	150	
Ax St Cd AS100 R0031A CPM	60	60	60	60	60	60	
S/G Bdwn BD100 R0034A CPM	BAD	BAD	BAD	BAD	BAD	BAD	
S/G Bdwn SS100 Y0712A CPM	BAD	BAD	BAD	BAD	BAD	BAD	
CC CCR100 Y0715A CPM	800	800	800	800	800	800	

Process Group IX

TIME	1445	1448	1451	1454	1457	1500	
GW Tnk GW101 Y0733A CPM	BAD	BAD	BAD	BAD	BAD	BAD	

Process Group IX

TIME	1445	1448	1451	1454	1457	1500	
Airlock RM201 Y0734A MR/HR	0.3	0.3	0.3	0.3	0.3	0.3	
CrnWall RM202 Y0735A MR/HR	34	33	32	31	31	30	
Manp Crn RM203 Y0716A MR/HR	BAD	BAD	BAD	BAD	BAD	BAD	
Incor Rm RM204 Y0722A MR/HR	34	33	32	31	31	30	
Decon Bld RM205 R0020A MR/HR	8.0	8.0	8.0	8.0	8.0	8.0	
New Fuel RM206 R0021A MR/HR	0.4	0.4	0.4	0.4	0.4	0.4	
FHB Crn RM207 R0022A MR/HR	0.8	0.8	0.8	0.8	0.8	0.8	
Sol Wst RM208 R0024A MR/HR	0.5	0.5	0.5	0.5	0.5	0.5	
722PB NE RM209 R0023A MR/HR	0.4	0.4	0.4	0.4	0.4	0.4	
752 PAB RM210 R0025A MR/HR	0.3	0.3	0.3	0.3	0.3	0.3	

Area Group X

TIME	1445	1448	1451	1454	1457	1500	
722PB SE RM211 Y0723A MR/HR	2.0	2.0	2.0	2.0	2.0	2.0	
Chem Smp RM212 Y0724A MR/HR	0.4	0.4	0.4	0.4	0.4	0.4	
Cntrl Rm RM213 R0026A MR/HR	0.1	0.1	0.1	0.1	0.1	0.1	
Hot Lab RM214 R0027A MR/HR	0.3	0.3	0.3	0.3	0.3	0.3	
Cntl Rm RM218A R0072A MR/HR	.01	.01	.01	.01	.01	.01	
Cntl Rm RM218B R0073A MR/HR	.01	.01	.01	.01	.01	.01	
RCB HI RM219A R0070A R/HR	1	1	1	1	1	1	
RCB HI RM219B R0071A R/HR	1	1	1	1	1	1	

Area Group X

In-Plant Rad Level

Data

Package

Section VII

(Part C.3)

BVPS UNIT NO. 1 RADIATION MONITORING SYSTEM (RMS)

MONITORING		FUNCTION		MONITOR LOCATION
1.	VS-101A,B	AUX. BLDG. VENTILATION AND CONTAINMENT PURGE	(GAS & PARTICULATE)	752" AUX. BLDG.
	VS-109	AUX. BLDG. VENTILATION AND CONTAINMENT PURGE	(GAS, PART. & IODINE)*	752' AUX. BLDG.
	VS-111	AUX. BLDG. VENTILATION AND CONTAINMENT PURGE	(GAS)*	768' AUX. BLDG.
2.	VS-102A,B	AUXILIARY BUILDING VENTILATION	(GAS)	752' AUX BLDG.
3.	VS-103A,B	FUEL BUILDING VENTILATION	(GAS)	768' FUEL BLDG.
4.	VS-104A,B	CONTAINMENT PURGE EXHAUST (NOT IN SERVICE DURING OPERATION)		CNMT. PURGE DUCT
5.	VS-105	LEAK COLLECTION AREAS	(GAS)	752' AUX. BLDG.
6.	VS-106	WASTE GAS DECAY TANK VAULT	(GAS)	752' AUX. BLDG.
7.	VS-107A,B	SUPPLEMENTARY LEAK COLLECTION SYSTEM	(GAS & PARTICULATE	752' AUX. BLDG.
	VS-110	SUPPLEMENTARY LEAK COLLECTION SYSTEM	(GAS, PART. & IODINE)*	752' AUX. BLDG.
	VS-112	SUPPLEMENTARY LEAK COLLECTION SYSTEM	(GAS)+	768' AUX. BLDG.
8.	GW-108A,B	PROCESS VENT EFFLUENT	(GAS & PARTICULATE)	752' AUX. BLDG.
	GW 109	PROCESS VENT EFFLUENT	(GAS & PART. & IODINE)*	752' AUX. BLDG.
	GW 110	PROCESS VENT EFFLUENT	(GAS & PARTICULATE)+	768' AUX. BLDG.
9.	RM 215A,B	CONTAINMENT ATMOSPHERE	(GAS & PARTICULATE)	752' AUX. BLDG.
10.	RM 217A,B	MULTI-SAMPLE MONITOR PAB AREAS	(GAS & PARTICULATE)	752' AUX. BLDG.
11.	MS-100A	"A" STEAM GENERATOR STEAM RELIEF EFFLUENT	(STEAM)	M.S. VALVE RM. ROOF
12.	MS-100B	"B" STEAM GENERATOR STEAM RELIEF EFFLUENT	(STEAM)	M.S. VALVE RM. ROOF
13.	MS-100C	"C" STEAM GENERATOR STEAM RELIEF EFFLUENT	(STEAM)	M.S. VALVE RM. ROOF
14.	MS-101	AUX. FEEDWATER PUMP TURBINE EXHAUST	(STEAM)	M.S. VALVE RM. ROOF
15.	AS-100	AUX. STEAM CONDENSATE	(LIQUID)	735' AUX. BLDG.
16.	BD-100	STEAM GENERATOR BLOWDOWN	(LIQUID)	768' SAFEGUARDS
17.	SS-100	STEAM GENERATOR BLOWDOWN	(LIQUID)	735' AUX. BLDG.
18.	CCR-100	COMPONENT COOLING WATER	(LIQUID)	722' AUX. BLDG.
19.	RW-100	RIVER WATER FOR COMPONENT COOLING AND RECIRC. SPRAY HEAT EXCHANGERS	(LIQUID)	697' TURB. BLDG
20.	RW-100A,B,C,D	RECIRC. SPARY HEAT EXCHANGERS RIVER WATER	(LIQUID)	722' SAFEGUARDS
21.	RW-101	COMPONENT COOLING HEAT EXCHANGER RIVER WATER	(LIQUID)	735' AUX. BLDG.
22.	CH-101A,B	REACTOR COOLANT LETDOWN	(LIQUID)	722' AUX. BLDG.
23.	LW-104	LIQUID WASTE EFFLUENT	(LIQUID)	722' AUX. BLDG.
24.	LW-116	LIQUID WASTE EFFLUENT	(LIQUID)	722' AUX. BLDG.

* Special Particulate, iodine, Noble Gas - SPING
\+ SA9/SA10 Units

BVPS UNIT NO. 1 RADIATION MONITORING SYSTEM (RMS) (Continued)

MONITORING		FUNCTION		MONITOR LOCATION
25.	DA-100	AUXILIARY FEEDWATER AREA	(LIQUID)	722' SAFEGUARDS
26.	SV-100	CONDENSER AIR EJECTOR	(GAS)	713' TURB. BLDG.
27.	RM-201	AREA RADIATION		OUTSIDE AIRLOCK
28.	RM-202	AREA RADIATION		767' CONTAINMENT
29.	RM-203	AREA RADIATION - CONTAINMENT FUEL MANIPULATOR CRANE		767' CONTAINMENT
30.	RM-204	AREA RADIATION - INCORE INSTRUMENT ROOM		738' CONTAINMENT
31.	RM-205	AREA RADIATION		735' DECON BLDG.
32.	RM-206	AREA RADIATION - NEW FUEL STORAGE		752' FUEL BLDG.
33.	RM-207	AREA RADIAITON - FUEL POOL BRIDGE		767' FUEL BLDG.
34.	RM-208	AREA RADIATION		735' SOLID WASTE
35.	RM-209	AREA RADIATION		722' AUX. BLDG.
36.	RM-210	AREA RADIATION		752' AUX. BLDG.
37.	RM-211	AREA RADIATION		722' AUX. BLDG.
38.	RM-212	AREA RADIAITON - CHEMISTRY SAMPLE AREA		735' AUX. BLDG.
39.	RM-213	AREA RADIATION		CONTROL ROOM
40.	RM-214	AREA RADIATION		RADIOCHEM. LAB
41.	RM-218A,B	AREA RADIATION		CONTROL ROOM
42.	RM-219A,B	AREA RADIATION - CONTAINMENT HIGH RANGE		767' CONTAINMENT

* Special Particulate, iodine, Noble Gas - [illegible]
\+ SA9/SA10 Units

RMS Monitors

The following monitors are not effected by exercise events however, their readings are programmed into the PVC computer. For this reason their readings can not be given "as read" because the background values on the exercise day may vary from pre-programmed values and the difference could cause confusion. Give the readings shown but only after the Tech at the RMS panel has taken the proper action to obtain a reading.

RM 203-Not in Service (NIS)
RM 205-8.0 mR/hr
RM 206-0.4 mR/hr
RM 207-0.8 mR/hr
RM 208-0.5 mR/hr
RM 209-0.4 mR/hr
RM 210-10 mR/hr
RM 211-2.0 mR/hr
RM 212-0.4 mR/hr
RM 213-0.1 mR/hr
RM 214-0.3 mR/hr
RM 218 A&B-0.01 mR/hr
RM 219 A&B <1.0 R/hr
VS 101A-600 cpm
VS 101B -60 cpm
VS 102 -60 cpm
VS 102B -50 cpm
VS 103A-90 cpm
VS 103B-60 cpm
VS 104-A&B NIS
VS 106-150 cpm
GW 108A-70 cpm
GW 108B-300 cpm
RM 217A-200 cpm
RM 217B-150 cpm
AS 100-60 cpm (standby)
BD 100-out of service
SS 100-out of service
RW 100-60 cpm
RW 100 A-D standby
RW 101-60 cpm
LW 104-7000 cpm
LW 116- 500 cpm
SV 100- 50 cpm
GW 101 out of service

The following monitors are neither effected by exercise events nor are they pre-programmed into the PVC computer. Their values can be "as read" on the exercise day.

VS 109 all channels
VS 111 SA10, SA9
GW 109 all channels
GW 110 SA10,SA9
MS 100 A,B,C
MS 101
BD 101
DA 100

RMS Monitors

The following monitors are needed for exercise events. Their readings from 0930 to 1224 hrs. are given below. At 1227 hrs take their readings from the spreadsheets beginning on the next page.

RM 201- 0.3 mR/hr
RM 202-4.0 mR/hr
RM 204-4.0 mR/hr
RM 215A-1000 cpm
RM 215B-2500 cpm
VS 105-70 cpm
VS 107A-200 cpm
VS 107B-40 cpm
VS 110 channels 5,7,9-0 cpm
VS 112 SA10-10.7 cpm
SA9-1.7 cpm
CH 101 A&B-1500 cpm

RMS DATA

TIME>	units	1227	1230	1233	1236	1239	1242	1245	1248	1251	254	1257
MONITOR												
RM 201	mR/hr	0.3	0.3	0.3	0.3	0.3	0.3	0.3	0.3	0.3	0.3	0.3
RM 202	mR/hr	4	5	6	8	10	12	15	18	22	26	30
RM 204	mR/hr	4	5	6	8	10	12	15	18	22	26	30
RM 215A	cpm	1.0E+03	1.1E+03	1.2E+03	1.3E+03	1.5E+03	1.4E+03	1.4E+03	1.4E+03	1.3E+03	1.3E+03	1.3E+03
RM 215B	cpm	2.5E+03	3.8E+03	5.6E+03	8.4E+03	1.3E+04	1.2E+04	1.2E+04	1.2E+04	1.2E+04	1.1E+04	1.1E+04
VS 105	cpm	70	70	70	70	70	70	70	70	70	70	70
VS 107A	cpm	200	200	200	200	200	200	200	200	200	200	200
VS 107B	cpm	40	40	40	40	40	40	40	40	40	40	40
VS 110												
ch 5	cpm	0	0	0	0	0	0	0	0	0	0	0
ch 7	cpm	0	0	0	0	0	0	0	0	0	0	0
ch 9	cpm	0	0	0	0	0	0	0	0	0	0	0
VS 112												
SA10	cpm	10.7	10.7	10.7	10.7	10.7	10.7	10.7	10.7	10.7	10.7	10.7
SA9	cpm	1.7	1.7	1.7	1.7	1.7	1.7	1.7	1.7	1.7	1.7	1.7
CH 101A	cpm	1.5E+03	1.5E+03	1.5E+03	1.5E+03	1.5E+03	1.5E+03	1.4E+03	1.4E+03	1.4E+03	1.3E+03	1.3E+03
CH 101B	cpm	1.5E+03	1.5E+03	1.5E+03	1.5E+03	1.5E+03	1.5E+03	1.4E+03	1.4E+03	1.4E+03	1.3E+03	1.3E+03

CONTROLLER NOTE: The analog decades of the RMS cannot be read to the accuracy calculated by the spreadsheet program. VS-110 & 112 have digital displays. Use the rounding off method shown to give other data.

.1 to 1 round to nearest .05
1 to 10 round to nearest .5
10 to 100 round to nearest 5
100 to 1000 round to nearest 50
1000 to 10,000 round to nearest 500
10,000 to 100,000 round to nearest 5,000
100,000 to 1,000,000 round to nearest 50,000

INDICATES HIGH ALARM

RMS DATA

TIME>	1300	1303	1306	1309	1312	1315	1318	1321	1324	1327	1330	1333
MONITOR												
RM 201	0.3	0.5	0.5	0.5	0.5	0.6	0.5	0.5	0.5	0.5	0.5	0.5
RM 202	33	36	40	42	44	46	49	51	54	56	60	59
RM 204	33	36	40	42	44	46	49	51	54	56	60	59
RM 215A	1.2E+03	1.2E+03	1.2E+03	1.2E+03	1.1E+03	1.1E+03	1.1E+03	1.1E+03	1.0E+03	1.0E+03	9.9E+02	9.6E+02
RM 215B	1.1E+04	1.1E+04	1.0E+04	1.0E+04	9.8E+03	9.6E+03	9.4E+03	9.1E+03	8.9E+03	8.7E+03	8.5E+03	8.3E+03
VS 105	70	160	160	160	160	160	160	160	160	160	160	160
VS 107A	200	200	200	200	200	200	200	200	200	200	200	200
VS 107B	40	70	70	70	70	70	70	70	70	70	70	70
VS 110												
ch 5	0	27.5	27.5	27.5	27.5	27.5	27.5	27.5	27.5	27.5	27.5	27.5
ch 7	0	0	0	0	0	0	0	0	0	0	0	0
ch 9	0	0	0	0	0	0	0	0	0	0	0	0
VS 112												
SA10	10.7	10.7	10.7	10.7	10.7	10.7	10.7	10.7	10.7	10.7	10.7	10.7
SA9	1.7	1.7	1.7	1.7	1.7	1.7	1.7	1.7	1.7	1.7	1.7	1.7
CH 101A	1.3E+03	1.2E+03	1.2E+03	1.2E+03	1.2E+03	1.1E+03	1.1E+03	1.1E+03	1.1E+03	1.0E+03	1.0E+03	9.9E+02
CH 101B	1.3E+03	1.2E+03	1.2E+03	1.2E+03	1.2E+03	1.1E+03	1.1E+03	1.1E+03	1.1E+03	1.0E+03	1.0E+03	9.9E+02

TIME>	1336	1339	1342	1345	1348	1351	1354	1357	1400	1403	1406	1409
MONITOR												
RM 201	0.5	0.5	0.5	0.5	0.5	0.5	0.5	0.5	0.5	0.5	0.5	0.5
RM 202	57	56	55	53	52	51	50	49	48	46	45	44
RM 204	57	56	56	53	52	51	50	49	48	46	45	44
RM 215A	9.4E+02	9.2E+02	9.0E+02	8.8E+02	8.6E+02	8.4E+02	8.2E+02	8.0E+02	7.8E+02	7.6E+02	7.5E+02	7.3E+02
RM 215B	8.1E+03	7.9E+03	7.8E+03	7.6E+03	7.4E+03	7.2E+03	7.1E+03	6.9E+03	6.8E+03	6.6E+03	6.4E+03	6.3E+03
VS 105	160	160	160	160	160	160	160	160	160	160	160	160
VS 107A	200	200	200	200	200	200	200	200	200	200	200	200
VS 107B	70	70	70	70	70	70	70	70	70	70	70	70
VS 110												
ch 5	27.5	27.5	27.5	27.5	27.5	27.5	27.5	27.5	27.5	27.5	27.5	27.5
ch 7	0	0	0	0	0	0	0	0	0	0	0	0
ch 9	0	0	0	0	0	0	0	0	0	0	0	0
VS 112												
SA10	10.7	10.7	10.7	10.7	10.7	10.7	10.7	10.7	10.7	10.7	10.7	10.7
SA9	1.7	1.7	1.7	1.7	1.7	1.7	1.7	1.7	1.7	1.7	1.7	1.7
CH 101A	9.6E+02	9.4E+02	9.2E+02	9.0E+02	8.8E+02	8.6E+02	8.4E+02	8.2E+02	8.0E+02	7.8E+02	7.6E+02	7.5E+02
CH 101B	9.6E+02	9.4E+02	9.2E+02	9.0E+02	8.8E+02	8.6E+02	8.4E+02	8.2E+02	8.0E+02	7.8E+02	7.6E+02	7.5E+02

RMS DATA

TIME>	1412	1415	1418	1421	1424	1427	1430	1433	1436	1439	1442	1445
MONITOR												
RM 201	0.5	0.5	0.4	0.3	0.3	0.3	0.3	0.3	0.3	0.3	0.3	0.3
RM 202	43	42	41	40	39	39	38	37	36	35	34	34
RM 204	43	42	41	40	39	39	38	37	[illegible]	35	34	34
RM 215A	7.1E+02	7.0E+02	6.8E+02	6.6E+02	6.5E+02	6.3E+02	6.2E+02	6.0E+02	5.9E[illegible]	5.8E+02	5.7E+02	5.6E+02
RM 215B	6.2E+03	6.0E+03	5.9E+03	5.7E+03	5.6E+0[illegible]	5.5E+0[illegible]	5.4E+03	5.2E+03	5.1E+03	5.0E+03	4.9E+03	4.9E+03
VS 105	160	160	160	70	70	70	70	70	70	70	70	70
VS 107A	200	200	200	200	200	200	200	200	200	200	200	200
VS 107B	70	70	70	40	40	40	40	40	40	40	40	40
VS 110												
ch 5	27.5	27.5	27.5	0	0	0	0	0	0	0	0	0
ch 7	0	0	0	0	0	0	0	0	0	0	0	0
ch 9	0	0	0	0	0	0	0	0	0	0	0	0
VS 112												
SA10	10.7	10.7	10.7	10.7	10.7	10.7	10.7	10.7	10.7	10.7	10.7	10.7
SA9	1.7	1.7	1.7	1.7	1.7	1.7	1.7	1.7	1.7	1.7	1.7	1.7
CH 101A	7.3E+02	7.1E+02	[illegible]	6.8E+02	[illegible]	6[illegible]02	6.3[illegible]	6.2E+02	6.1E+02	6.0E+02	5.8E+02	5.7E+02
CH 101B	7.3E+02	7.1E+02	[illegible]	6.8E+02	6.[illegible]	6.5E+02	6.3E+02	6.2E+02	6.1E+02	6.0E+02	5.8E+02	5.7E+02

TIME>	1448	1451	1[illegible]	1457	1500
MONITOR					
RM 201	0.3	0.3	0.3	0.3	0.3
RM 202	33	32	31	31	30
RM 204	33	32	31	31	30
RM 215A	5.5E+02	5.4E+02	5.3E+02	5.2E+02	5.2E+02
RM 215B	4.8E+03	4.7E+03	4.6E+03	4.5E+03	4.5E+03
VS 105	70	70	70	70	70
VS 107A	200	200	200	200	200
VS 107B	40	40	40	40	40
VS 110					
ch 5	0	0	0	0	0
ch 7	0	0	0	0	0
ch 9	0	0	0	0	0
VS 112					
SA10	10.7	10.7	10.7	10.7	10.7
SA9	1.7	1.7	1.7	1.7	1.7
CH 101A	5.7E+02	5.6E+02	5.5E+02	5.4E+02	5.3E+02
CH 10[illegible]	[illegible]5+02	5.6E+02	5.5E+02	5.4E+02	5.3E+02

RWST (QS-TK-1) PROBLEM

Location and Isotopic

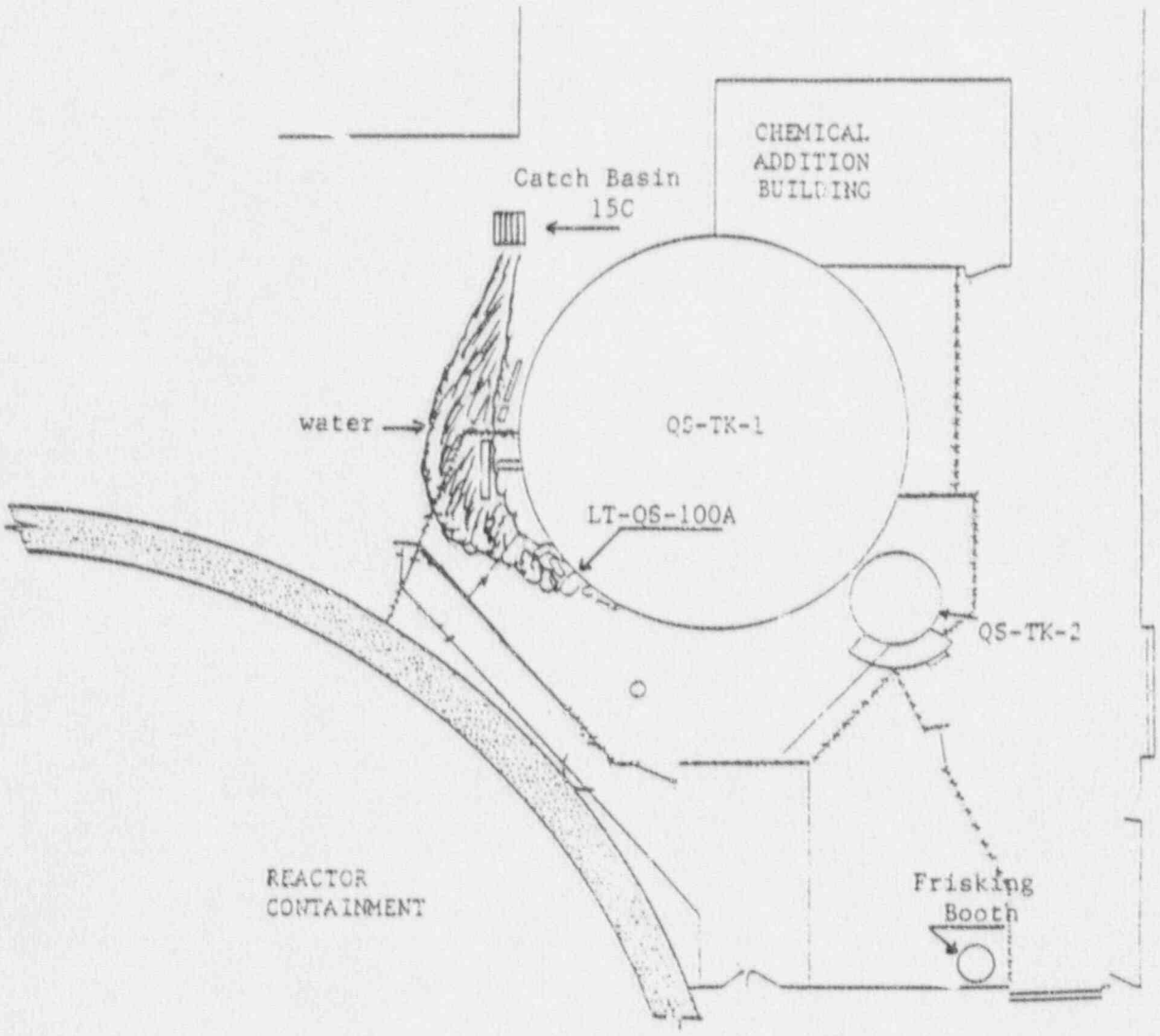

ISOTOPIC

Co 58	7.75 E-5 uCi/cc
Co 60	4.32 E-5 uCi/cc
Cs 137	3.80 E-6 uCi/cc
H-3	5.00 E-1 uCi/cc

RADIOGRAPHY ACCIDENT

A radiographer, with a Rad Tech escort, is setting up to do a shot of piping associated with FW-E-9 (the blowdown heat exchanger) on the 713' level of the turbine building. At approximately 1050 hrs. as the source pig is being lifted into position, it falls to the floor and breaks open. The source capsule (approx. 100 Ci of Ir 192) breaks off the cable pigtail and bounces through a cable tray opening in the floor. It comes to rest on top of the insulation of valve BD-290 about 8 to 9 feet above the turbine basement floor (693' level). The source's location will be unknown to the players who will have to locate it by the dose rate readings. A small piece of stainless steel rod will be placed on top of the valve to simulate the capsule. The only radiation levels readable from the 713' level will be 225 mR/hr of shine through the cable tray opening. The readings given below are to be used with the following isodose map showing selected distances. The readings are for areas that are in line of sight of BD-290. Any intervening steel or concrete will provide shielding. However, controllers may give some rad level above background to indicate scatter. CONTROLLERS NOTE: Be certain to locate BD-290 before the exercise begins so as to know when a player is or is not in line of sight of the valve.

DOSE RATE vs DISTANCE

dose rate	distance (ft)	dose rate	distance (ft)
90 R/hr	1	40 mR/hr	50
22.5 R/hr	2	25 mR/hr	60
10 R/hr	3	18 mR/hr	70
5.6 R/hr	4	14 mR/hr	80
3.6 R/hr	5	10 mR/hr	90
2.5 R/hr	6	9 mR/hr	100
1.8 R/hr	7	7 mR/hr	110
1.4 R/hr	8	6 mR/hr	120
1.1 R/hr	9	5.5 mR/hr	130
900 mR/hr	10	4.5 mR/hr	140
225 mR/hr	20	4 mR/hr	150
100 mR/hr	30	2 mR/hr	200
60 mR/hr	40	1.5 mR/hr	250

RADIOGRAPHY ACCIDENT
Isodose Lines

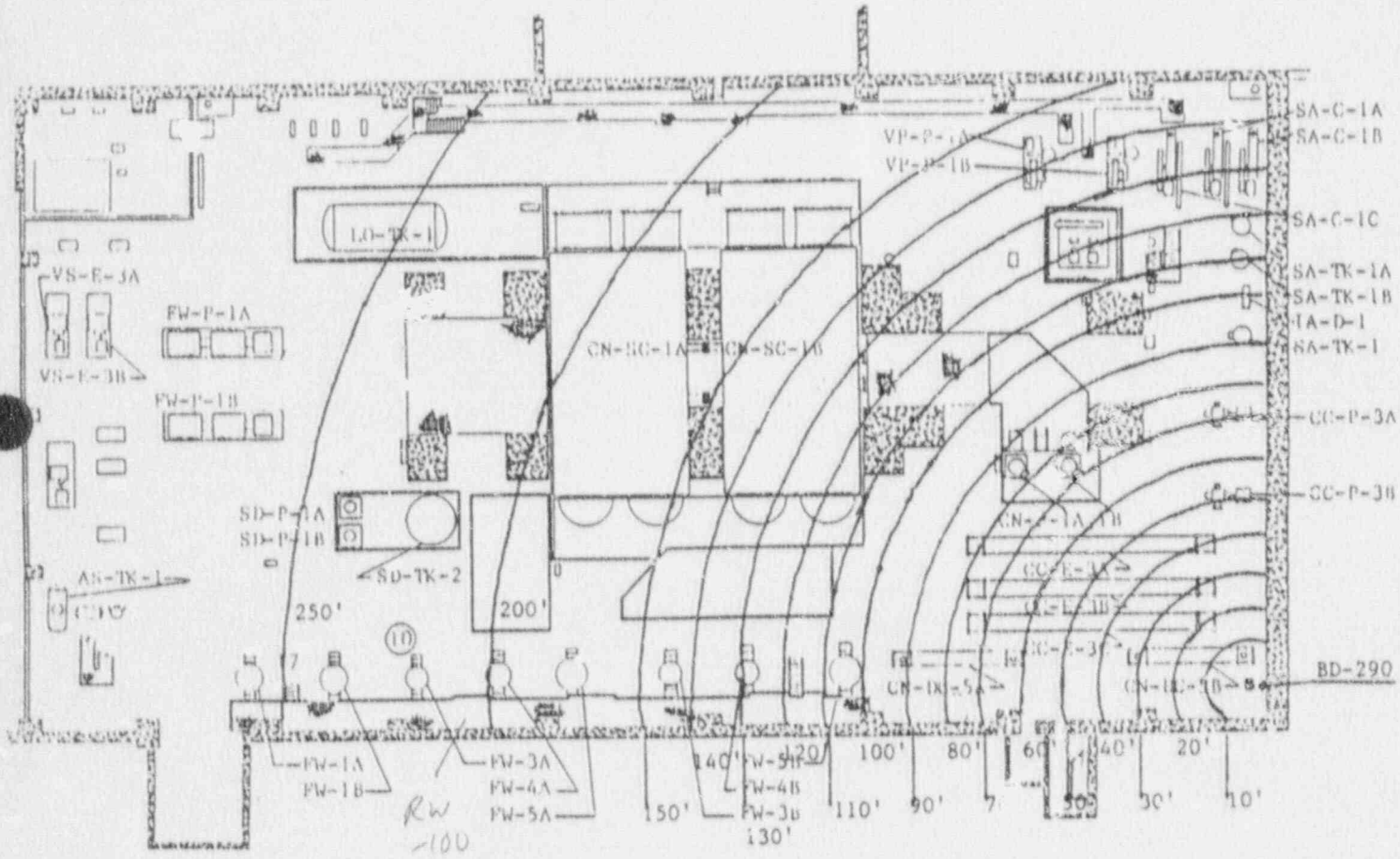

TURBINE BUILDING BASEMENT FLOOR 693' 6"

RADIOGRAPHY ACCIDENT

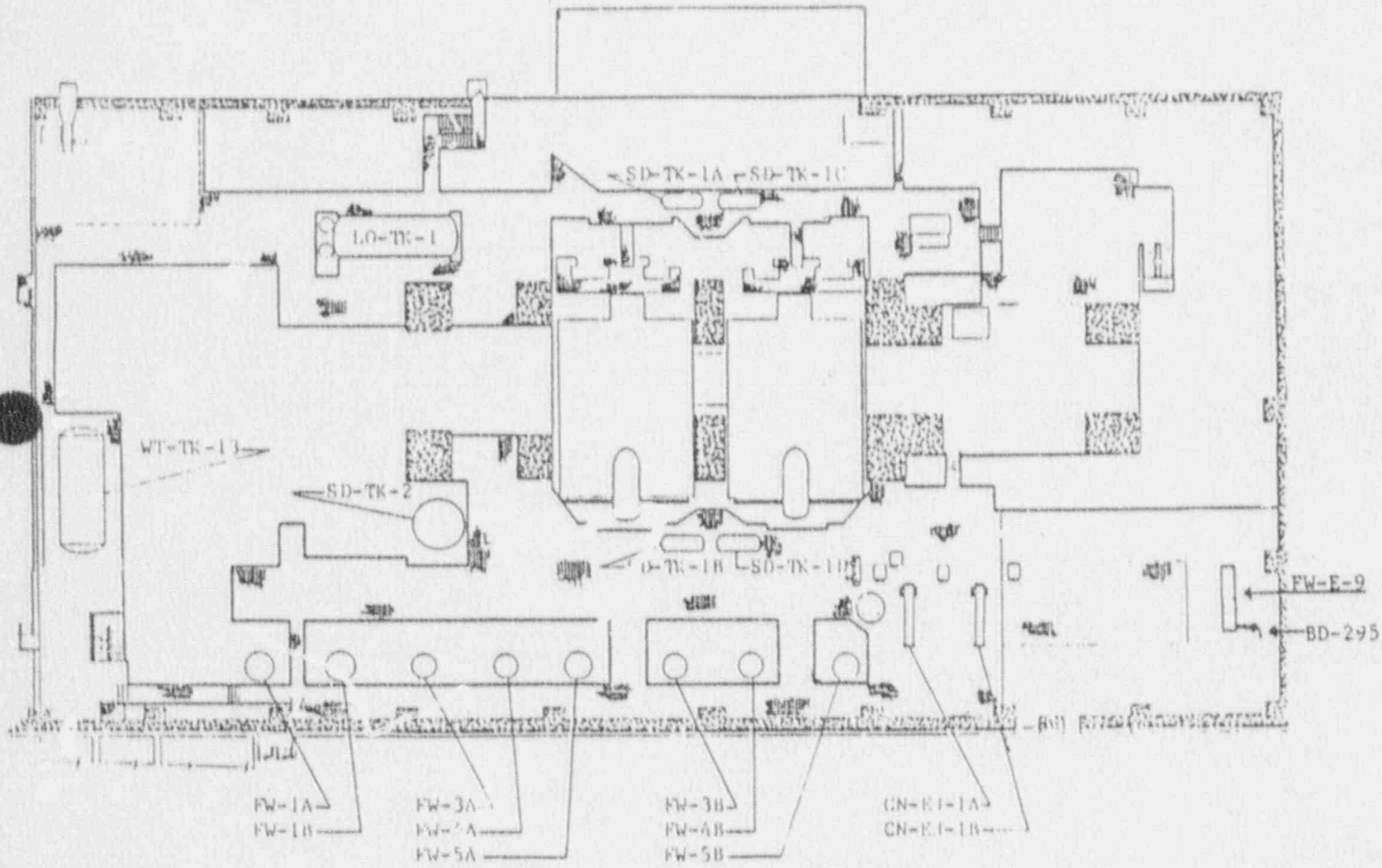

TURBINE BUILDING MEZZANINE FLOOR 713'6

Dose Rate Conversions for Minute & Second

Use the chart below to assign whole body dose according to the time spent in the radiation field. This can also be used to assign extremity dose for anyone who approaches the Iridium source to retrieve it with some type of retrieval tool.

mR/hr	mR/min	mR/sec
90000 (90 R/hr)	1500	25
22500 (22.5 R/hr)	375	6.3
10000 (10 R/hr)	167	2.8
5600 (5.6 R/hr)	93	1.6
3600 (3.6 R/hr)	60	1.0
2500 (2.5 R/hr)	42	
1800 (1.8 R/hr)	30	
1400 (1.4 R/hr)	23	
1100 (1.1 R/hr)	18	
900	15	
225	3.8	
100	1.7	
60	1.0	
40	0.7	

Airlock Problem

Airborne Isotopic: (for grab sample or continuous air monitor taken during the release)

Co 58 3.04E-9 uCi/cc
Co 60 3.36E-10 uCi/cc
Cs 137 1.65E-9 uCi/cc

I 131 1.01E-9 uCi/cc
I 133 3.12E-10 uCi/cc

Kr 83m 2.45E-6 uCi/cc
Kr 85m 5.23E-5 uCi/cc
Kr 85 2.35E-5 uCi/cc
Kr 87 3.67E-6 uCI/cc
Kr 88 1.30E-6 uCi/cc
Xe 133 4.17E-6 uCi/cc
Xe 133m 4.71E-7 uCi/cc
Xe 135 6.66E-6 uCi/cc
Xe 135m 6.35E-6 uCi/cc

Dose Rate: (during the release-keyed to the airlock map)

Area A-5 mR/hr closed window (CW), 20 mR/hr open window (OW)
Area B-3 mR/hr CW, 12 mR/hr OW
Area C-1 mR/hr CW, 4 mR/hr OW
Area D-0.3 mR/hr CW, 1.2 mR/hr OW

All areas after the release 0.1 mR/hr-CW and OW the same.

Reading with an ion chamber such as an RO 2 or RO 2A

Contamination: (keyed to the air lock map)

Area A-49000 cpm/100 cm^2 (also inside the airlock)
Area B-25000 cpm/100 cm^2
Area C-10000 cpm/100 cm^2
Area D- 1000 cpm/100 cm^2

Readings with an HP210 probe and an RM 14, E140N or similar instrument.

Airlock Problem

Isotopic for SPING gas bomb if it is taken during the release
(Supplemental Leak Collection and Release System -SLCRS)

Kr 83m	1.00E-8	uCi/cc
Kr 85m	5.45E-8	uCi/cc
Kr 85	3.10E-7	uCi/cc
Kr 87	2.50E-8	uCi/cc
Kr 88	8.25E-8	uCi/cc
Xe 133m	8.30E-8	uCi/cc
Xe 133	7.20E-7	uCi/cc
Xe 135m	1.10E-8	uCi/cc
Xe 135	9.00E-8	uCi/cc

Airlock Problem

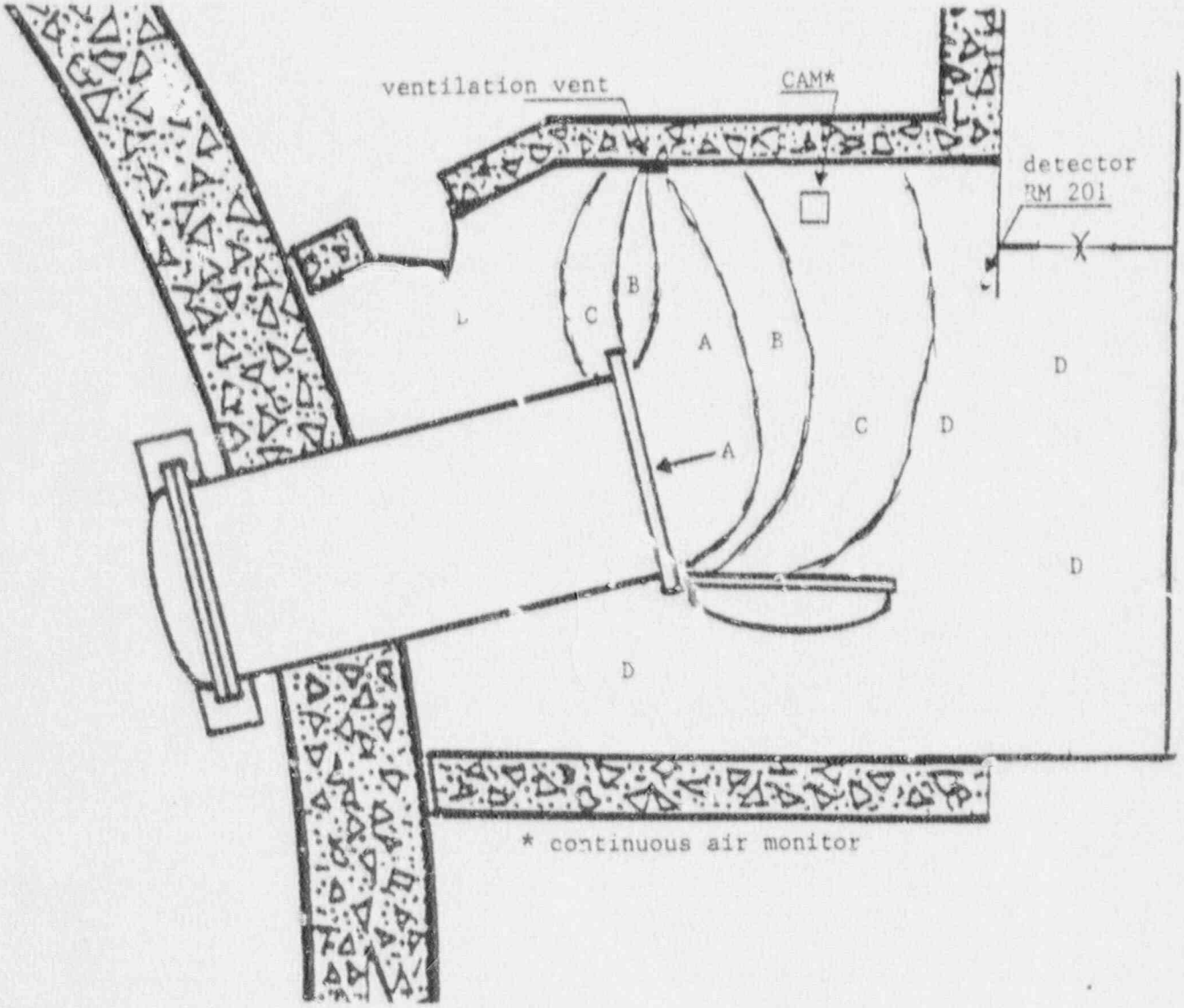

RTL #A9.675A
RCM FORM 8.1
SECTION 12 (FRONT)
(6/90)

RWP/RACP REQUEST No. 0000

UNIT ☑ 1 ☐ 2

☐ MECH. MAINT. ☐ ELEC. MAINT. ☐ ENGINEERING ☑ CONSTRUCTION
☐ OPERATIONS ☐ SECURITY ☐ TESTING ☐ MCRs
☐ CRAFT ☐ RADCON ☐ CHEMISTRY ☐ OTHER

REQUEST SUBMITTED BY: Joe Carpenter PHONE: 1234 DATE: 2/20/91 TIME: 15:00

RWP/RACP TO BE READY BY: DATE: 2/27/91 TIME: 0800

DIRECTIONS/INFORMATION FOR COMPLETING RWP/RACP REQUEST

Information - brief - use mark numbers and equipment numbers, e.g. repair LW-P-8

WORK TASK/REASON FOR ENTRY: Remove Scaffolding

Provide exact location: PAB, Containment, Cubicle Elevation

ITEM/EQUIPMENT LOCATION: Bldg. QS-TK-1 Elev. 735'6" Cubicle

Specify what criteria work task is to be done under, include number of specific function. This may assist you in tracking a specific job at a later time.

WORK TASK UNDER: ☑ MWR NO. 56781 ☐ PMP NO. ____
☐ DCP NO. ____ ☐ MSP NO. ____ ☐ OTHER ____
EQUIPMENT CLEARANCE: ☒ NO ☐ YES

The work description is to be supplied by the supervisor who has the responsibility for the work. Include sufficient detail to alert Radcon of the potential of any radiological hazards. The nature of the work, especially such aspects as opening normally closed systems, removing or installing shielding, work activities such as welding, grinding, sanding, sawing, use of compressed air must also be specified; include work task steps.

DESCRIPTION OF WORK TO BE PERFORMED:
Remove Heat Trace
Repair Scaffolding.

A ☐ WELDING/BURNING
B ☐ CUTTING
C ☐ GRINDING
D ☐ BREECHING A SYSTEM
E ☐ DRAINING A SYSTEM
F ☐ FUEL POOL or CAVITY WORK

(continue on reverse side)

(If blocks D, E, or F are checked, RAD-CON to complete Hot Particle Review on reverse side)

TO BE COMPLETED BY INDIVIDUAL REQUESTING RWP/RACP

MAN-REM ESTIMATE FOR WORK TASK

NUMBER OF INDIVIDUALS AND JOB CLASSIFICATION		ANTICIPATED TIME IN RADIATION FIELD (hrs)		EXPOSURE RATE (mR/hr)		ESTIMATED EXPOSURE (mR)
2 CARPENTERS	x	8	x		=	
	x		x		=	
Q.C.	x		x		=	
RAD TECH(s)	x		x		=	

WORK SUPERVISOR ____ DATE ____

HIGHEST ESTIMATED INDIVIDUAL EXPOSURE: ____ mR MAN-REM ESTIMATE ____ mR
ESTIMATE COMPILED BY: ____ DATE: ____

ALARA Review is required if man-rem estimate exceeds 200 mrem per worker or 1000 mrem for the work party.

EXPOSURE GREATER THAN INITIAL VALUES: ☐ NO ☐ YES
If YES, the work group supervisor is to complete RCM Form 8.1 Sec.16 which indicates those actions taken to assure that exposure received will be ALARA (see SAP 23).
Also, initiate an ALARA review per RP 3.5. ALARA Review No. ____

RCF review before RWP is written.

RWP REQUEST REVIEWED BY: ____ DATE ____ TIME ____

Writing the RWP and issuing it for work.

IMPLEMENTED BY: ____ DATE ____ TIME ____
RWP NUMBER ASSIGNED: ____

FOR RADCON USE ONLY

RTL #A9.67L
RCM FORM 8.1
SECTION 12 (FRONT)
(6/90)

RWP/RACP REQUEST №

UNIT ☐ 1 ☐ 2

☐ MECH. MAINT. ☐ ELEC. MAINT. ☑ ENGINEERING ☐ CONSTRUCTION
☐ OPERATIONS ☐ SECURITY ☐ TESTING ☐ MCRs
☐ CRAFT ☐ RADCON ☐ CHEMISTRY ☐ OTHER

REQUEST SUBMITTED BY: Ralph Engineering PHONE 5678 DATE 2/25/91 TIME 1110

RWP/RACP TO BE READY BY: DATE 2/27/91 TIME 0800

TO BE COMPLETED BY INDIVIDUAL REQUESTING RWP/RACP

DIRECTIONS/INFORMATION FOR COMPLETING RWP/RACP REQUEST

Information - brief - use mark numbers and equipment numbers, e.g. repair LW-P-8	WORK TASK/REASON FOR ENTRY: Radiography on FW-E-9
Provide exact location: PAB, Containment, Cubicle Elevation	ITEM/EQUIPMENT LOCATION: Bldg. Turbine Bldg Elev. 712'6" Cubicle MEZZANINE
Specify what criteria work task is to be done under, include number of specific function. This may assist you in tracking a specific job at a later time.	WORK TASK UNDER: ☑ MWR NO. 27777 ☐ PMP NO. ____ ☐ DCP NO. ____ ☐ MSP NO. ____ ☐ OTHER ____ EQUIPMENT CLEARANCE: ☑ NO ☐ YES
The work description is to be supplied by the supervisor who has the responsibility for the work. Include sufficient detail to alert Radcon of the potential of any radiological hazards. The nature of the work, especially such aspects as opening normally closed systems, removing or installing shielding, work activities such as welding, grinding, sanding, sawing, use of compressed air must also be specified; include work task steps.	DESCRIPTION OF WORK TO BE PERFORMED: Perform Radiography on weld repairs to elbow located between FW-E-9 & 1BD-295 (continue on reverse side) (if blocks D, E, or F are checked, RAD-CON to complete Hot Particle Review on reverse side)

A ☐ WELDING/BURNING
B ☐ CUTTING
C ☐ GRINDING
D ☐ BREECHING A SYSTEM
E ☐ DRAINING A SYSTEM
F ☐ FUEL POOL or CAVITY WORK

MAN-REM ESTIMATE FOR WORK TASK

NUMBER OF INDIVIDUALS AND JOB CLASSIFICATION	ANTICIPATED TIME IN RADIATION FIELD (hrs)	EXPOSURE RATE (mR/hr)	ESTIMATED EXPOSURE (mR)
2 Technicians	x 2	x ____	= ____
____	x ____	x ____	= ____
Q.C. ____	x ____	x ____	= ____
RAD TECH(s) ____	x ____	x ____	= ____

WORK SUPERVISOR ____ DATE ____

HIGHEST ESTIMATED INDIVIDUAL EXPOSURE: ____ mR MAN-REM ESTIMATE ____ mR
ESTIMATE COMPILED BY: ____ DATE: ____

FOR RADCON USE ONLY

ALARA Review is required if man-rem estimate exceeds 200 mrem per worker or 1000 mrem for the work party.	EXPOSURE GREATER THAN INITIAL VALUES: ☐ NO ☐ YES. If YES, the work group supervisor is to complete RCM Form 8.1 Sec.16 which indicates those actions taken to assure that exposure received will be ALARA (see SAP 23). Also initiate an ALARA review per RP 8.5. ALARA Review No. ____
RCF review before RWP is written.	RWP REQUEST REVIEWED BY: ____ DATE ____ TIME ____
Writing the RWP and issuing it for work.	IMPLEMENTED BY: ____ DATE ____ TIME ____ RWP NUMBER ASSIGNED: ____

Radiochemical Analysis

Data

Package

Section VII

(Part C.4)

Radiochemistry Data

(Activities are in uCi/g)

Isotope	Normal Operating Activity	Post Trip Activity
I-131	1.872 E-4	1.582 E-3
I-132	5.227 E-3	1.046 E-2
I-133	2.547 E-3	9.124 E-3
I-134	9.252 E-3	1.820 E-2
I-135	4.930 E-3	1.127 E-2
Ar-41	1.179 E-1	4.909 E-1
Kr-85M	1.503 E-3	6.213 E-3
Kr-87	3.212 E-3	2.332 E-2
Kr-88	3.938 E-3	3.261 E-2
Xe-133	2.794 E-3	5.851 E-3
Xe-133M	5.309 E-4	6.540 E-4
Xe-135	7.906 E-3	6.936 E-2
Xe-135M	1.226 E-2	1.481 E-1
Be- 7	1.690 E-4	5.848 E-4
F-18	7.985 E-2	1.165 E-1
Na-24	1.242 E-3	1.061 E-2
Cr-51	2.476 E-3	3.281 E-2
Mn-54	3.361 E-4	1.192 E-2
Mn-56	4.146 E-3	1.086 E-2
Co-58	2.303 E-3	1.828 E-2
Fe-59	1.829 E-4	1.028 E-3
Co-60	2.770 E-4	3.722 E-3
Rb-88	1.044 E-2	2.035 E-2
Zr-95	1.221 E-3	1.307 E-2
Nb-95	1.628 E-3	1.702 E-2
Mo-99	1.506 E-4	4.532 E-4
Tc-99m	1.506 E-4	4.512 E-4
Cs-137	4.033 E-6	4.554 E-6
Cs-138	1.255 E-2	2.258 E-2

Weather

Data

Package

Section VII

(Part C.5)

Meteorological Data

Actual meteorological condtions will be used during conduct of the Exercise. Met. Data will be available from all working MIDAS terminals and a weather forecast can be obtained by calling the National Weather Service at their designated number.

Dose Assessment

Data

Package

Section VII

(Part C.6)

Dose Projections

The Atmospheric Radioactive Effluent Release Assessment System (ARERAS) is the computer hardware by which dose projections are primarily done at BVPS Units #1 & 2, with hand calculations being the backup method. ARERAS runs the Meteorological Information and Dose Assessment System (MIDAS) software which calculates the dose projection results.

MIDAS has access to real-time site meteorology, real-time gaseous effluent radiation monitor data, environmental Rueter-Stokes monitors, and accident assessment files to determine projected doses from any release point at either BVPS Unit #1 or #2.

During drills/exercises, all meteorological and effluent radiation monitor data (for the appropriate Unit) necessary for dose projections are usually preprogrammed into MIDAS workspace files to allow for near real-time situations. However, since the radiological consequences of the release are minimal, actual meteorlogical conditions for the day of the Exercise will be used.

For the RWST release to the Ohio River, liquid dose projections can be calculated on MIDAS. It will be determined that the release has exceeded the NRC MPC limits (but not the EPA MPC limits) and and simce the release time is greater than 15 minutes, an Unusual Event must be declared. Also, Radcon should call and dispatch teams to the Midland Water Treatment Plant.

For this Exercise, the radioactive release through the Airlock will be collected by the Supplementary Leak Collection And Release System (SLCRS), pass through the filter banks (ventilation automatically diverts to the filter banks on CIA) and be released to the environment.

A MIDAS dose projection has been included as an <u>example</u> of the MIDAS format for presenting data. This data was developed using an RCS LOCA Accident, 27 CPM on RM-VS-110/CH 5 (low range), a windspeed of 0.1 MPH, FG stability and a wind direction from 240 degrees. (The very conservative meteorological conditions were used to determine the highest possible offsite doses.) <u>The dose projection data contained in this package will not match the dose projections developed during the Exercise, since the actual meteorological conditions being used will be different.</u> However, the data generated during the Exercise will be similar to the format in this package.

Due to the low coolant activity (no fuel damage), no Field Monitoring Team readings are being provided, and no plume will be found.

The MIDAS "Class A Model" or hand calculations may be used during the exercise for a quick accident assessment.

Due to time constrictions and demand on the computer system, the "MIDAS Class B" model may not be used. If the Class B model is demonstrated, it will be late in the exercise and the data provided for the Class A model will be sufficient for the Class B model.

MIDAS - RWST DOSE PROJECTION

EPP/IP-2.7
Attachments 2,3,7,8
Equivalent

DUQUESNE LIGHT COMPANY
Beaver Valley Power Station

UNIT 1

LIQUID RELEASE ASSESSMENT

Nuclide	Concentration,uCi/cc Input	Decayed	NRC MPC Fraction	EPA MPC Fraction
CO-58	7.768E-05	7.754E-05	8.529E-01	2.559E+02
CO-60	4.317E-05	4.317E-05	1.425E+00	4.317E+02
CS-137	3.800E-06	3.800E-06	1.900E-01	1.900E+01
H-3	5.000E-01	5.000E-01	1.650E+02	2.500E+04
		TOTAL	1.675E+02	2.571E+04
		DILUTED TOTAL	1.628E+02	7.289E-02

Release Start:
Release Stop:
Release Duration: 0 Minutes

Sample Time:
Sample Location: Tank or Piping
Decay Period: 270 Minutes

Release Rate: 7.000E+01 gpm
C.T. Blowdown U1,U2: 1.0 1.0 gpm
Ohio River Flow: 2.469E+07 gpm

```
*****************************************************
* USNRC MPC AT ENTRY TO RIVER EXCEEDED - DECLARE    *
* UNUSUAL EVENT IF RELEASE DURATION EXCEEDS 15      *
* MINUTES.                                          *
*****************************************************
```

NOTE: See Procedure EPP/IP-2.7.1 For Action to be Taken if There is More Than One Release Ongoing. This Procedure Must be Repeated for Each Such Release Point.

Calculated By	Checked By/ Date/Time

MIDAS - RAD. MONITOR INPUTS

```
EMERGENCY RELEASE OPTION 3 INPUT:
*****************************************************
WARNING:  Enter data for only ONE radiation monitor
per release point, even if two monitors have onscale
readings.  Does not apply to Main Steam. Enter NET
monitor data.
*****************************************************
ENTER: [N.N]  VENT RADIATION READING FOR VS112-HR IN NET   (CPM)

ENTER: [N.N]  VENT RADIATION READING FOR VS112-LR IN NET   (CPM)

ENTER: [N.N]  VENT RADIATION READING FOR VS110-9  IN NET   (CPM)

ENTER: [N.N]  VENT RADIATION READING FOR VS110-7  IN NET   (CPM)

ENTER: [N.N]  VENT RADIATION READING FOR VS110-5  IN NET   (CPM)
27.5
DEFAULT FLOW IN  (CFM)     =   4.25E+04
FOR MONITOR VS110-5  RELEASE PT  2

ENTER: [N.N]     NEW VALUE
       [RETURN] NO CHANGE

ENTER: [RETURN] CONTINUE, [SO] START OVER, [EX] TO EXIT

 SITE: BEAVER VALLEY        UNIT: ONE                10/16/90 13:01
```

MIDAS - METEOROLOGICAL INPUTS

```
*****************************************************
SOME OR ALL MET DATA ARE BAD FOR
RELEASE POINT 2 GROUND RELEASE


PARAMETER              DIR      SPD       DT
SENSOR NAME         DI150P  SP 35P  DT1-P
UNITS                  DEG      MPH     DEG.F
DEFAULT VALUES          N/A      4.0      0.8
CURRENT VALUES          N       N.N      N.N

ENTER: [N,N.N,N.N] DIR,SPD,DT
240,.1,1
CURRENT VALUES         240.      0.1      1.0


******


ENTER: [N,N.N,N.N] DIR,SPD,DT
```

MIDAS - LOCA RELEASE RATE

LOCATION	AUX VENT	SLCRS	COOL TWR	MAIN STM
MONITORS	VS111-HR VS111-LR VS109-9 VS109-7 VS109-5	VS112-HR VS112-LR VS110-9 VS110-7 VS110-5	GW110-HR GW110-LR GW109-9 GW109-7 GW109-5	MS-C MS-B MS-A RFTEX
EXIT VEL- FLOW(CFM)	6.00E+04	4.25E+04	1.00E+03	3.43E+05
ACC. TYPE		1, 2, 3 4, 5, 6 8,10,		7, 9,
TOTAL RELEASE (UCI/SEC)	0.00E+00	2.76E+01	0.00E+00	0.00E+00
KR85M	0.00E+00	1.07E+00	0.00E+00	0.00E+00
KR85	0.00E+00	6.11E+00	0.00E+00	0.00E+00
KR87	0.00E+00	5.19E-01	0.00E+00	0.00E+00
KR88	0.00E+00	1.57E+00	0.00E+00	0.00E+00
KR89	0.00E+00	4.33E-03	0.00E+00	0.00E+00
XE131M	0.00E+00	5.89E-02	0.00E+00	0.00E+00
XE133M	0.00E+00	1.69E+00	0.00E+00	0.00E+00
XE133	0.00E+00	1.45E+01	0.00E+00	0.00E+00
XE135M	0.00E+00	2.14E-01	0.00E+00	0.00E+00
XE135	0.00E+00	1.72E+00	0.00E+00	0.00E+00
XE137	0.00E+00	8.31E-03	0.00E+00	0.00E+00
XE138	0.00E+00	1.22E-01	0.00E+00	0.00E+00
I131	0.00E+00	3.47E-03	0.00E+00	0.00E+00
I133	0.00E+00	5.81E-03	0.00E+00	0.00E+00
TOT NOBLE	0.00E+00	2.76E+01	0.00E+00	0.00E+00
TOT PART	0.00E+00	0.00E+00	0.00E+00	0.00E+00
TOT IODINE	0.00E+00	9.28E-03	0.00E+00	0.00E+00

MIDAS - EMERGENCY CL SIFICATION

METEOROLOGICAL DATA: TIME OF MET USED: 901016 1300

	AUX VENT RPT1	SLCRS RPT2	COOL TWR RPT3	MAIN STM RPT4
RELEASE TYPE		GND		
WIND SPD AT REF HT(MPH)		0.7		
WIND DIRECTION TOWARD:		ENE		
PASQUILL CATEGORY VERT		F		
PASQUILL CATEGORY HORIZ		F		

```
*****************************************************************
*                                                               *
*  PEAK OFFSITE W BOD DOSE RATE(MREM/HR)              5.8E-03   *
*  DOSE IS BETWEEN (MREM/HR)                 0.0E+00 & 5.0E-01   *
*  EMERGENCY ACTION LEVEL                     U.E. OR NO EMERG   *
*                                                               *
*                                                               *
*****************************************************************
```

MIDAS - WHOLE BODY PLUME MAP

SITE: BEAVER VALLEY UNIT: ONE 10/15/90 13:14

MANUAL ENTRY OF MET
MANUAL ENTRY OF RELEASE DATA AND ACCIDENT TYPE MCA

SCALE: 1.00 MILES

TIME AFTER ACCIDENT 0.0 HOURS
GAMMA DOSE (ADJ. FACTOR) 1.00
DATE OF MET 9010161311
RELEASE PT 2
SPEED(MPH) 0
DIR FROM 240
VERT STAB F(D)
HORIZ STAB F(D)
RELEASE TYPE GND
EXFL CFM/1000 40
MIXED MODE 0.00
PLUME HGT(FT) 0
PEAK (REM/HR) 5.79E-06
DST TO PK 6.1E+02(M) 0.4(MI)
TERRAIN AT PEAK(FT) 5.17E+01
DECAYED RELEASE(CI/SEC) 2.76E-05

CONTOUR LEGEND

1.0E-05
1.0E-06
1.0E-07
1.0E-08
1.0E-09
1.0E-10

ISOTOPIC REL.
CI/SEC

XE133	1.45E-05
KR85	6.11E-06
XE135	1.72E-06
XE133M	1.69E-06
KR88	1.57E-06
KR85M	1.07E-06
KR87	5.19E-07
XE135M	2.14E-07
I131	3.47E-09
I133	5.81E-09

*** EAL IS: U.E. OR NO EMERG.

MIDAS - DOSE SUMMARY

DOSE RESULTS OFFSITE BY RELEASE PT(REM/HR)	AUX VENT RPT1	SLCRS RPT2	COOL TWR RPT3	MAIN STM RPT4	TOTALS
PEAK W BOD FOR EACH RP	0.0E+00	5.8E-06	0.0E+00	0.0E+00	
DIST TO PEAK(FT)	0.0E+00	2.0E+03	0.0E+00	0.0E+00	
W BOD AT TOTAL PK LOC	0.0E+00	5.8E-06	0.0E+00	0.0E+00	5.8E-06
DIST TO TOT PK WBOD(FT)	0.0E+00	2.0E+03	0.0E+00	0.0E+00	2.0E+03
W BOD SITE BOUNDARY	0.0E+00	5.8E-06	0.0E+00	0.0E+00	5.8E-06
W BOD AT 2 MILES	0.0E+00	7.3E-07	0.0E+00	0.0E+00	7.3E-07
W BOD AT 5 MILES	0.0E+00	1.4E-07	0.0E+00	0.0E+00	1.4E-07
W BOD AT 10 MILES	0.0E+00	5.0E-08	0.0E+00	0.0E+00	5.0E-08
THYRD FOR EACH RP	0.0E+00	2.0E-05	0.0E+00	0.0E+00	
DIST TO PEAK(FT)	0.0E+00	2.0E+03	0.0E+00	0.0E+00	
THYRD AT TOTAL PK LOC	0.0E+00	2.0E-05	0.0E+00	0.0E+00	2.0E-05
DIST TO TOT PK THYR(FT)	0.0E+00	2.0E+03	0.0E+00	0.0E+00	2.0E+03
THYRD SITE BOUNDARY	0.0E+00	2.0E-05	0.0E+00	0.0E+00	2.0E-05
THYRD AT 2 MILES	0.0E+00	3.9E-06	0.0E+00	0.0E+00	3.9E-06
THYRD AT 5 MILES	0.0E+00	1.2E-06	0.0E+00	0.0E+00	1.2E-06
THYRD AT 10 MILES	0.0E+00	5.5E-07	0.0E+00	0.0E+00	5.5E-07

Field Monitoring

Data

Package

Section VII

(Part C.7)

Field Monitoring Team Data (FMT)

No FMT data is necessary due to the low activity of the RCS (no fuel damage). If FMT's are dispatched, all reading will be as read.

Injured Person Medical

Data

Package

Section VII

(Part C.8)

Section VII

Injured Person
Medical Response Data

Section VII

NOTE: It is not the intention of Duquesne Light to critique the hospital staff on the use of proper medical procedures for the patient described. Controllers are trained and familiar with hospital procedures concerning the handling of contaminated and irradiated persons and will concentrate their actions in this area. Medical information is provided to enhance the realism of the drill.

Also note that all messages by phone or radio will be annotated before and after with "This is a Drill".

Contaminated/Injured Person

Event:

Construction workers are removing scaffolding from QS-TK-1 (the Refueling Water Storage Tank-RWST) after repairs to insulation. At approximately 0940 hrs. one individual loses his balance and falls to the concrete. The fall results in a simple closed fracture of both bones of the lower left leg, an abrasion of the left elbow and a 1" wound on the right side of the forehead. The piece of pipe he was holding falls and breaks RWST level transmitter LT-QS-100A and contaminated water from the tank begins spraying out onto the ground. The individual is able to get out of the way of the worst of the spray but does get some of the water on his arm thereby contaminating the arm. He also touches the wound on his head and spreads contamination to the area of the forehead injury. The victim complains of great pain in the broken leg.

Vital Signs for Emergency Squad:

Approx. Time:	0954
Respirations:	20
Pulse:	110
Skin:	normal
Blood pressure:	160/90
Pupils:	normal
Contamination:	see body map

Expected Actions: Treat for shock, determine that the victim is contaminated, call the Control Room and request offsite assistance.

CONTROLLER NOTE: If the emergency squad fails to treat for shock within a reasonable period of time the victim will begin to exhibit signs of shock to include: skin growing cool and clammy, blood pressure falling,increasing weakness and the inability to speak clearly.

Vital Signs for the EMT's and Hospital:

The victim's vital signs will be "as read" for the remainder of the drill. He will continue to complain of the pain in the leg unless medication is administered.

HOSPITAL CONTROLLER NOTE: Repeated scrubbing or washing of the abrasion on the arm will not remove all contamination. 200 cpm above background will remain.

Contaminated/Injured Person

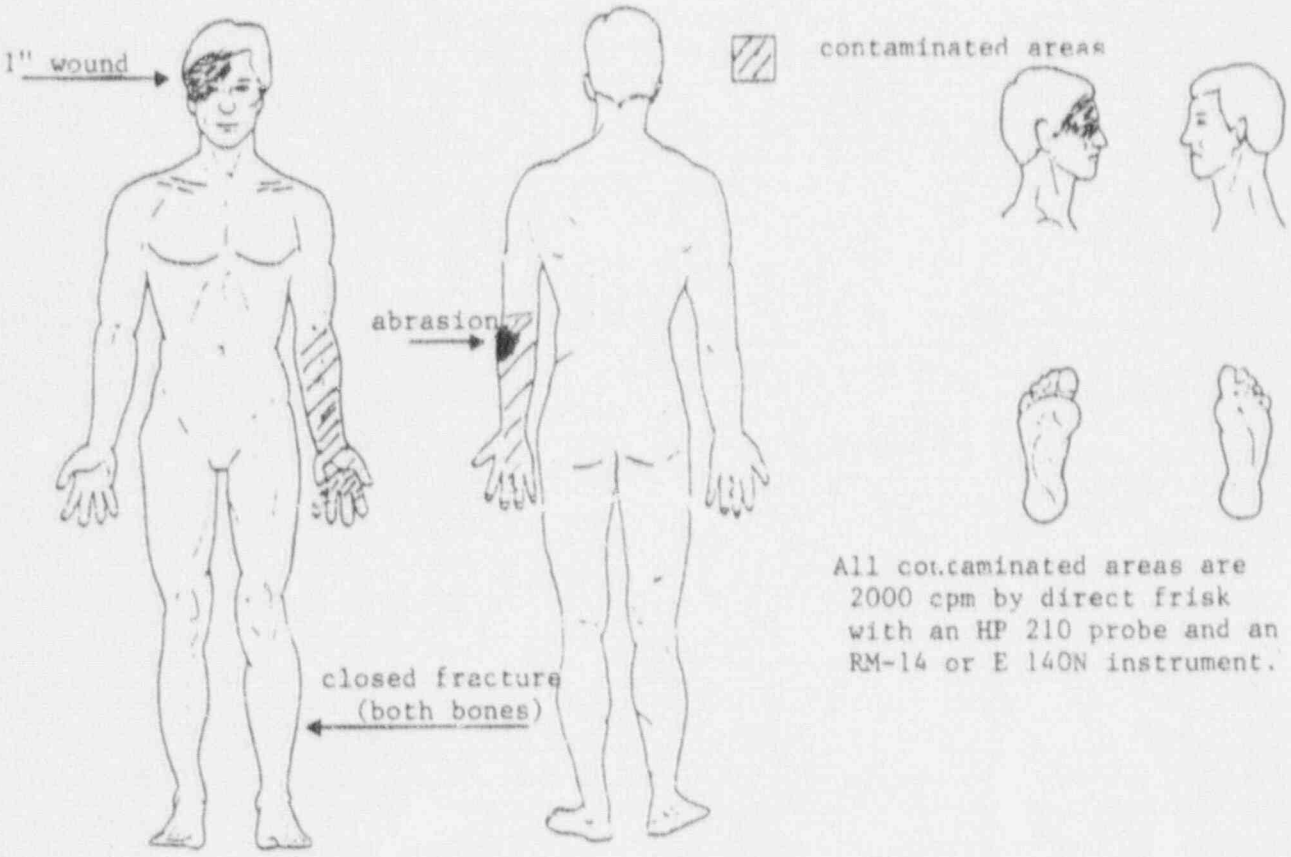

All contaminated areas are 2000 cpm by direct frisk with an HP 210 probe and an RM-14 or E 140N instrument.

Contaminated/Injured Person

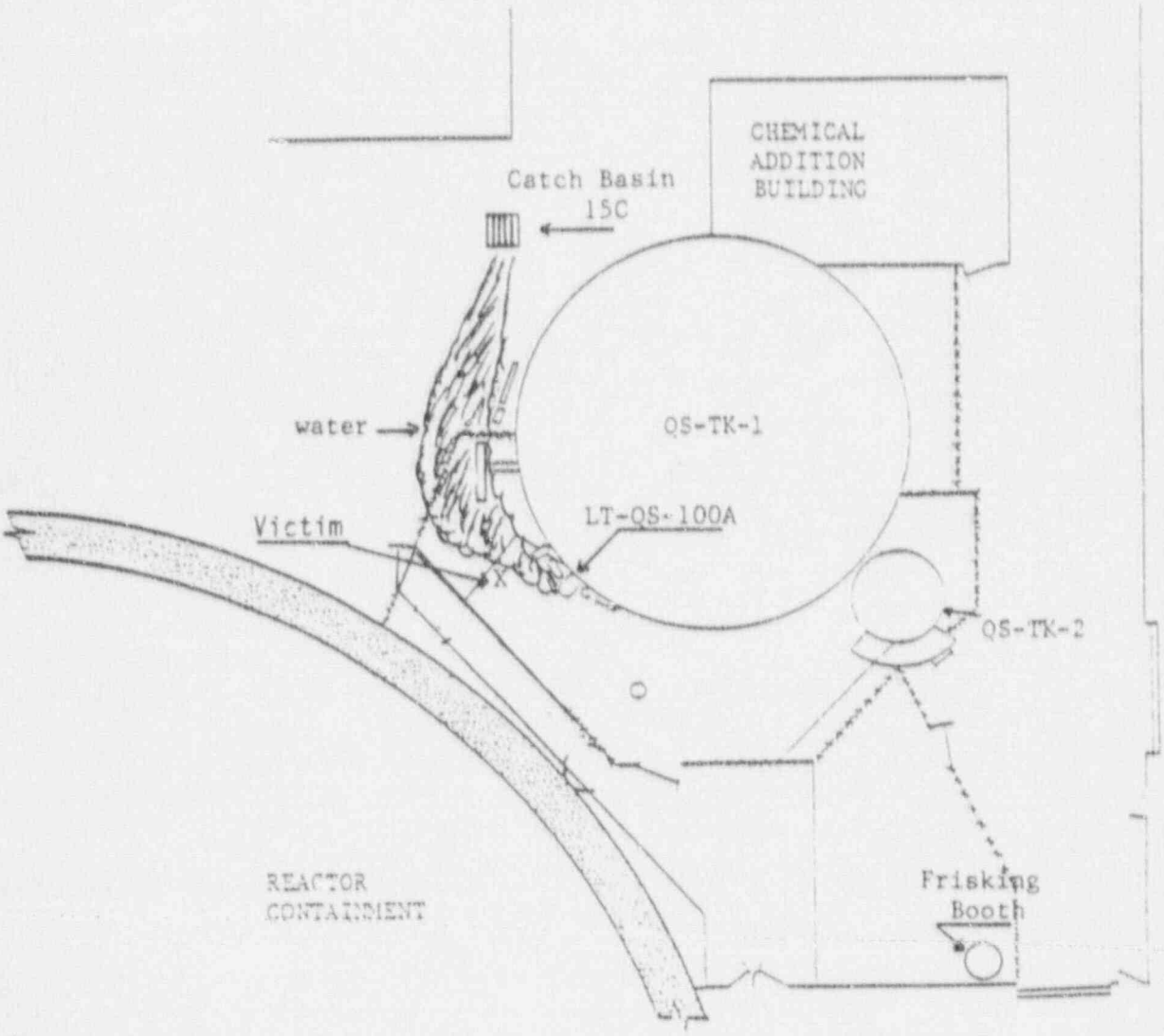

Miscellaneous

Section VII

(Part C.11)

Duquesne Light Company
Beaver Valley Power Station
P.O. Box 4
Shippingport, PA 15077

CONTACTS

Hal Szklinski
412-393-5772

Glenn McKee
412-393-5778

TRAVEL INFORMATION

Major Airports

Pittsburgh, PA

Motels

Willows
Industry, PA
412-643-4500

Quality Inn Airport
Coraopolis, PA
412-264-7900

Royce Airport
Coraopolis, PA
412-262-2400

Holiday Inn Airport
Coraopolis, PA
412-771-6500

Airport Hilton
Imperial, PA
412-262-3600

E. L. Motor Lodge
2340 Dresden Avenue
East Liverpool, OH
216-386-5858

PLANT: BEAVER VALLEY LOCATION: SHIPPINGPORT, PA

LICENSEE: DUQUESNE LIGHT CO.

DIRECTIONS FROM GREATER PITTSBURGH INTERNATIONAL AIRPORT:

North on Route 60. North 8 miles2 - Exit Aliquippa, left on Green Garden Road-Road changes names, cross Rt. 18 (on an angle) continue past Bruce Mansfield Coal Plant (3 Cooling Towers). 1 Mile past Coal Plant, turn in Beaver Valley Power Station Entrance, past bridge.

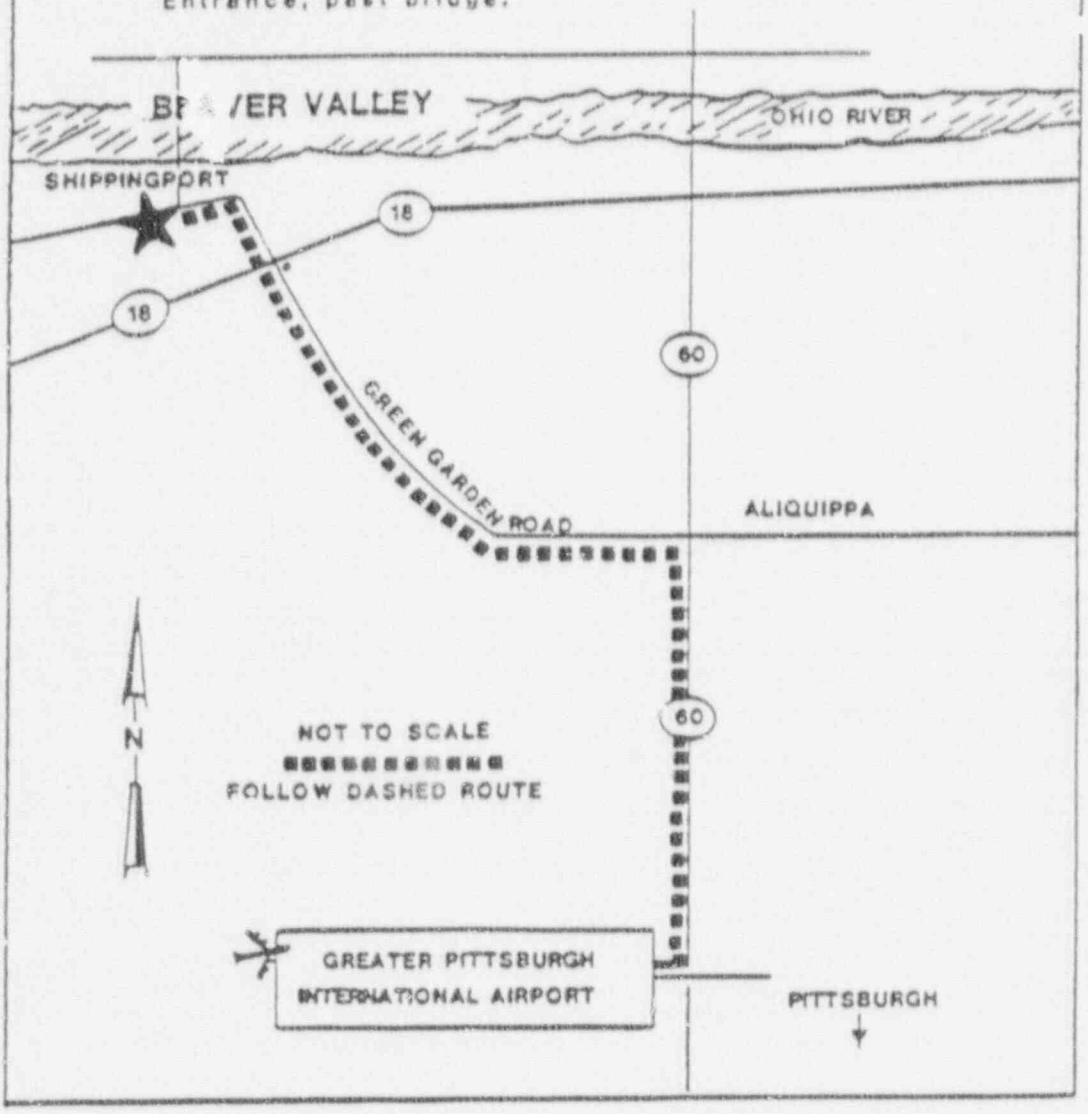

BVPS SITE MAP

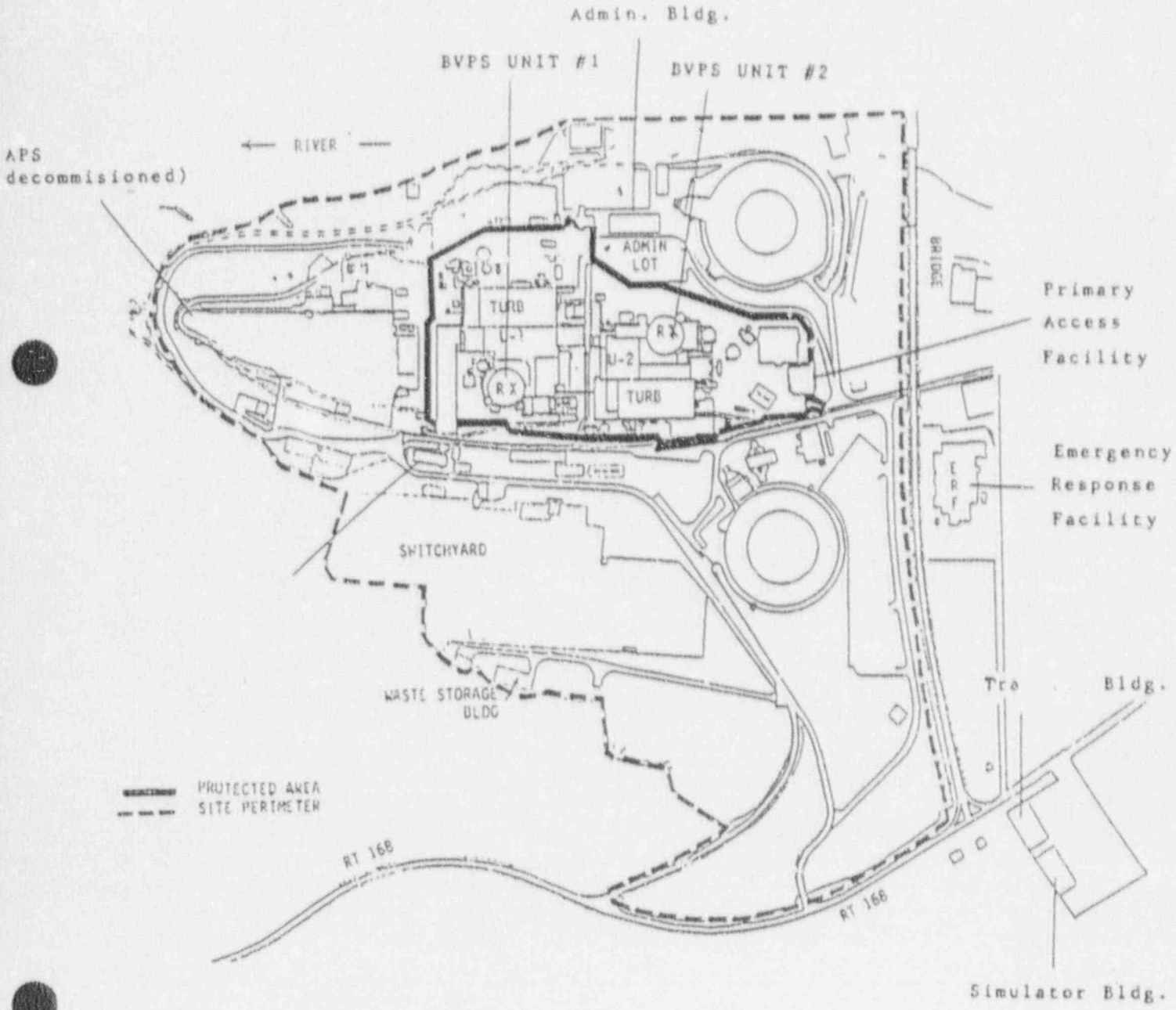

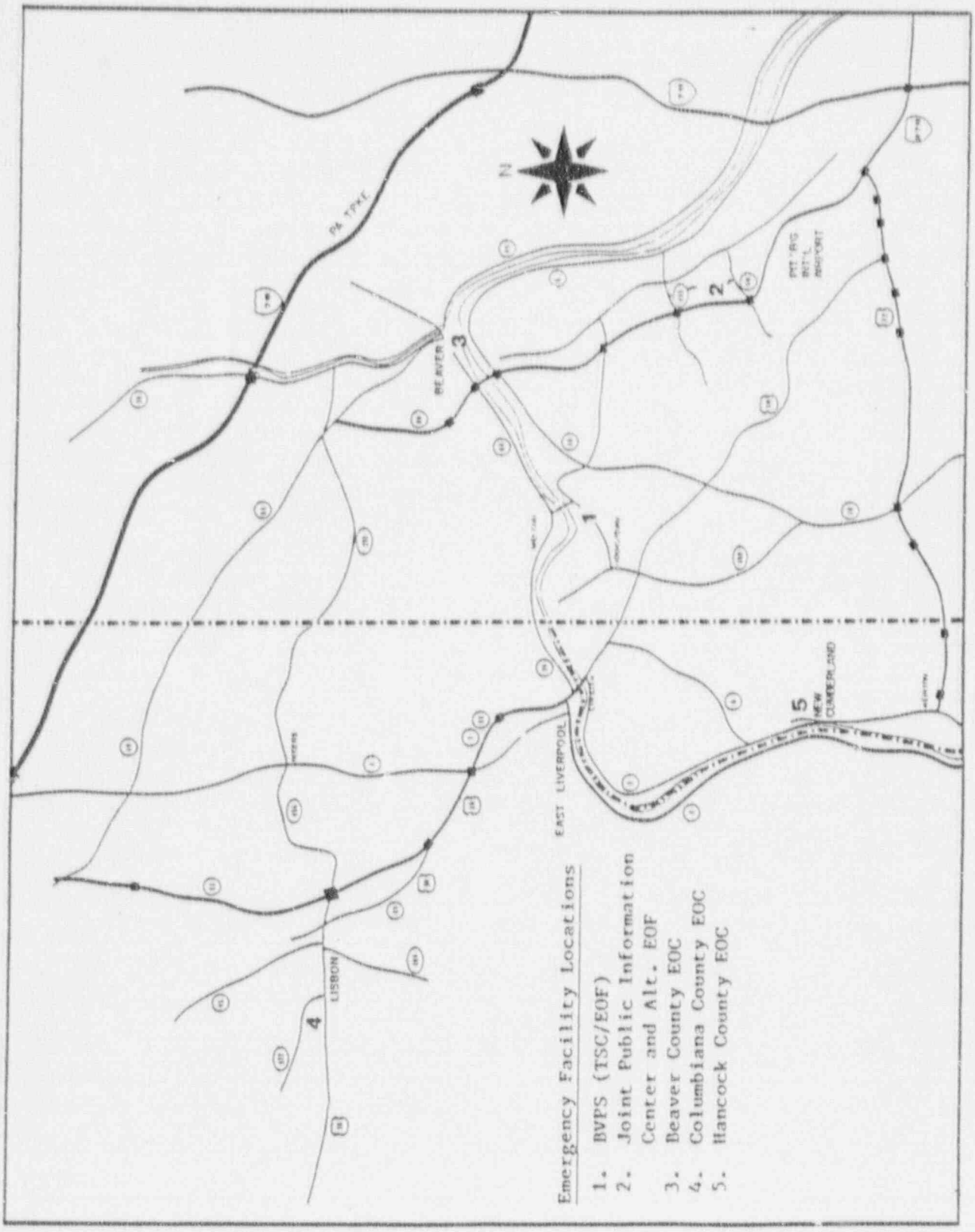
N
PA TPKE
BEAVER
3
2
1
EAST LIVERPOOL
5
NEW CUMBERLAND
4
LISBON
Emergency Facility Locations
1. BVPS (TSC/EOF)
2. Joint Public Information Center and Alt. EOF
3. Beaver County EOC
4. Columbiana County EOC
5. Hancock County EOC

EMERGENCY RESPONSE FACILITY (ERF)

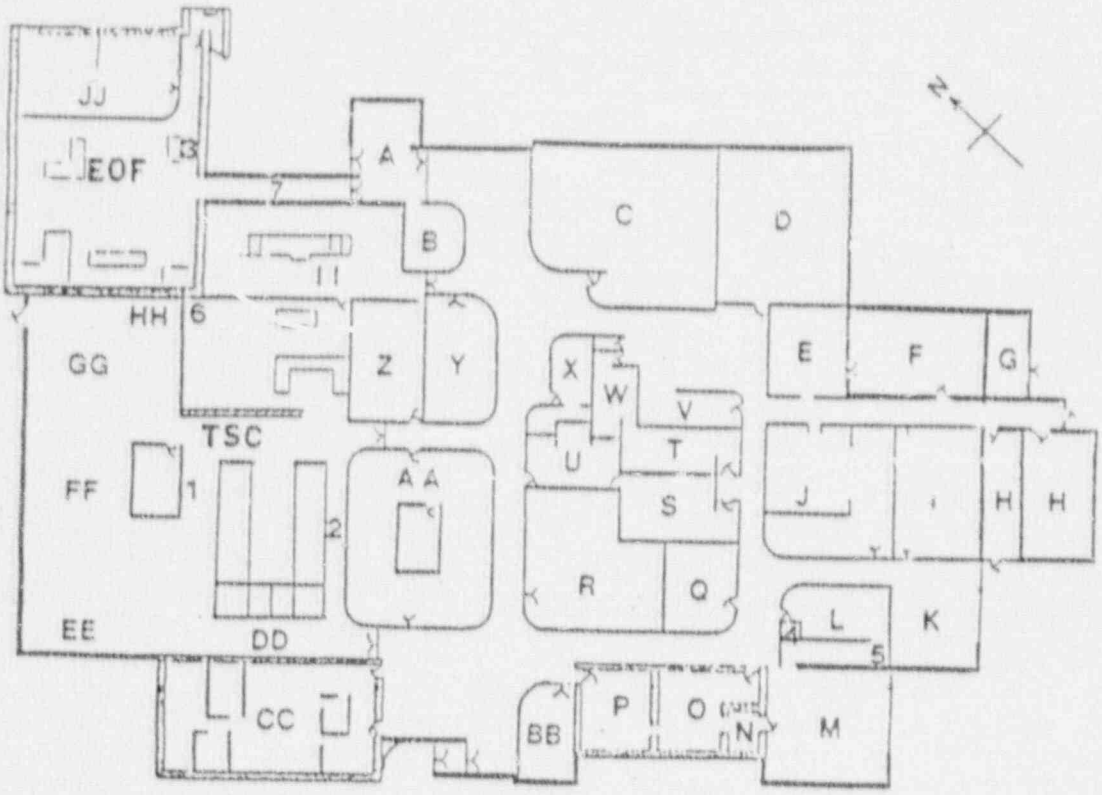

AREA DESIGNATIONS

A. Non-Emergency Entrance
B. Computer Group Office
C. Engineering
D. Office/Conference Room
E. Electrical Distribution Room
F. Equipment Court
G. Water Treatment Room
H. Electrical Control Room
H. Switchgear Room
I. UPS Battery Room
J. Mechanical Equipment Room
K. Service Dock
L. Decon Room/Showers
M. Garage/Emergency Entrance
N. Irradiation Facility
O. Chemistry Sample Prep Room
P. Chemistry Counting Room
Q. Xerox Room
R. Records Room
S. Men's Sleeping Area
T. Women's Sleeping Area
U. Men's Restroom
V. Kitchen and Lunch Room
W. Women's Restroom
X. Medical Room
Y. Communications Equipment Room
Z. Engineering Manager's Office
AA. Engineering Management Services/NRC Ar
BB. Radcon Files
CC. Dosimetry Area
DD. Communications Area
EE. Environmental Station/LLEA
FF. Rad Health Services/LLEA
GG. Radiological Engineering
HH. Halon Storage/LLEA
II. Comp. Maint./Conf. Room
JJ. Computer Room

EPP CABINETS

1. TSC Cabinets 1,2,3
2. TSC Cabinets 4-10
3. EOF Cabinets 1,2,3
4. Access Area/Fan Van Supplies
5. Personnel Decon Cabinet & Decon Kit #3
6. Break Glass Box
7. EOF Air Sample Equip. Cart

ERF EMERGENCY ACCESS AREA

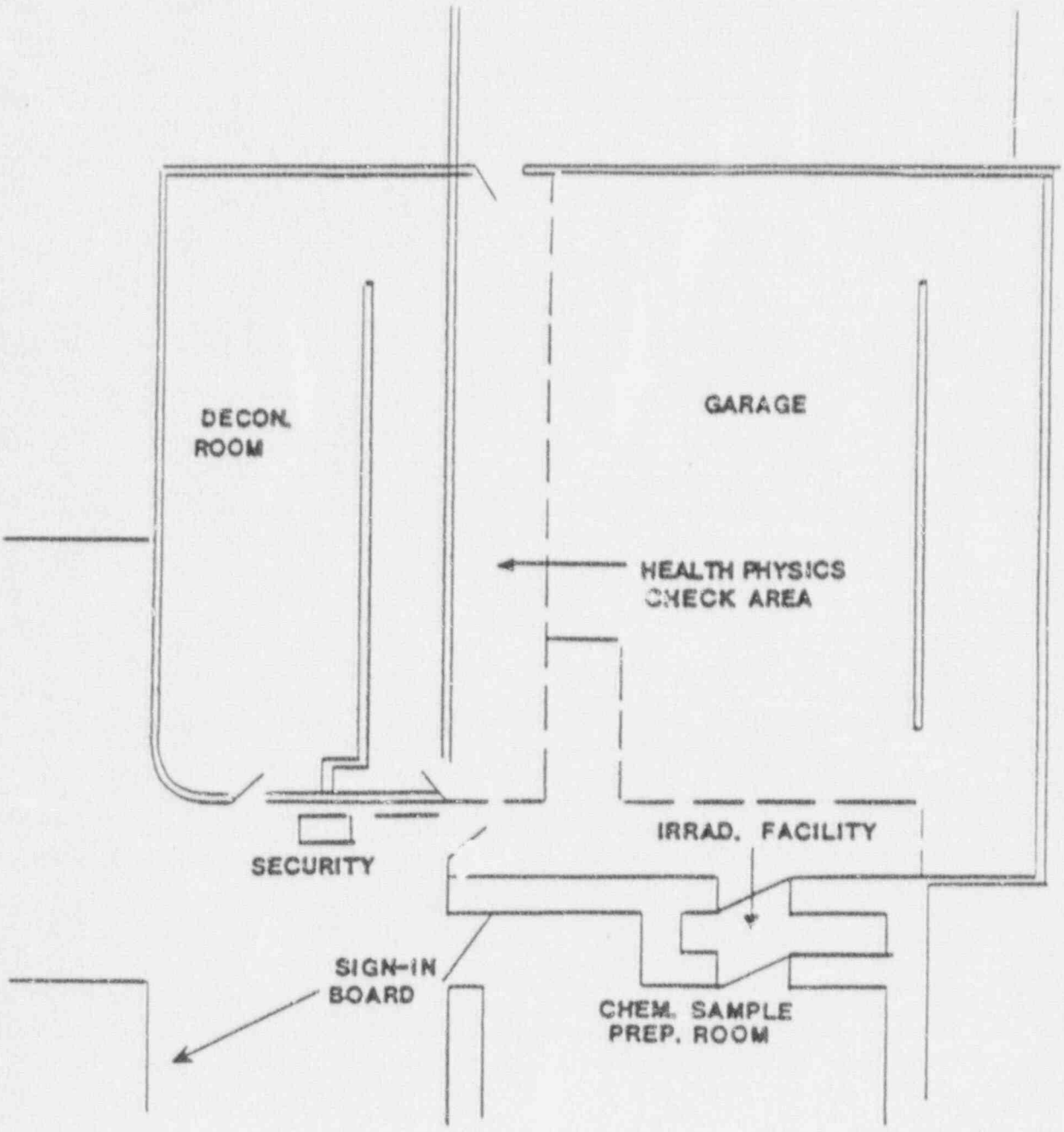

DIRECTIONS TO THE JOINT PUBLIC INFORMATION CENTER

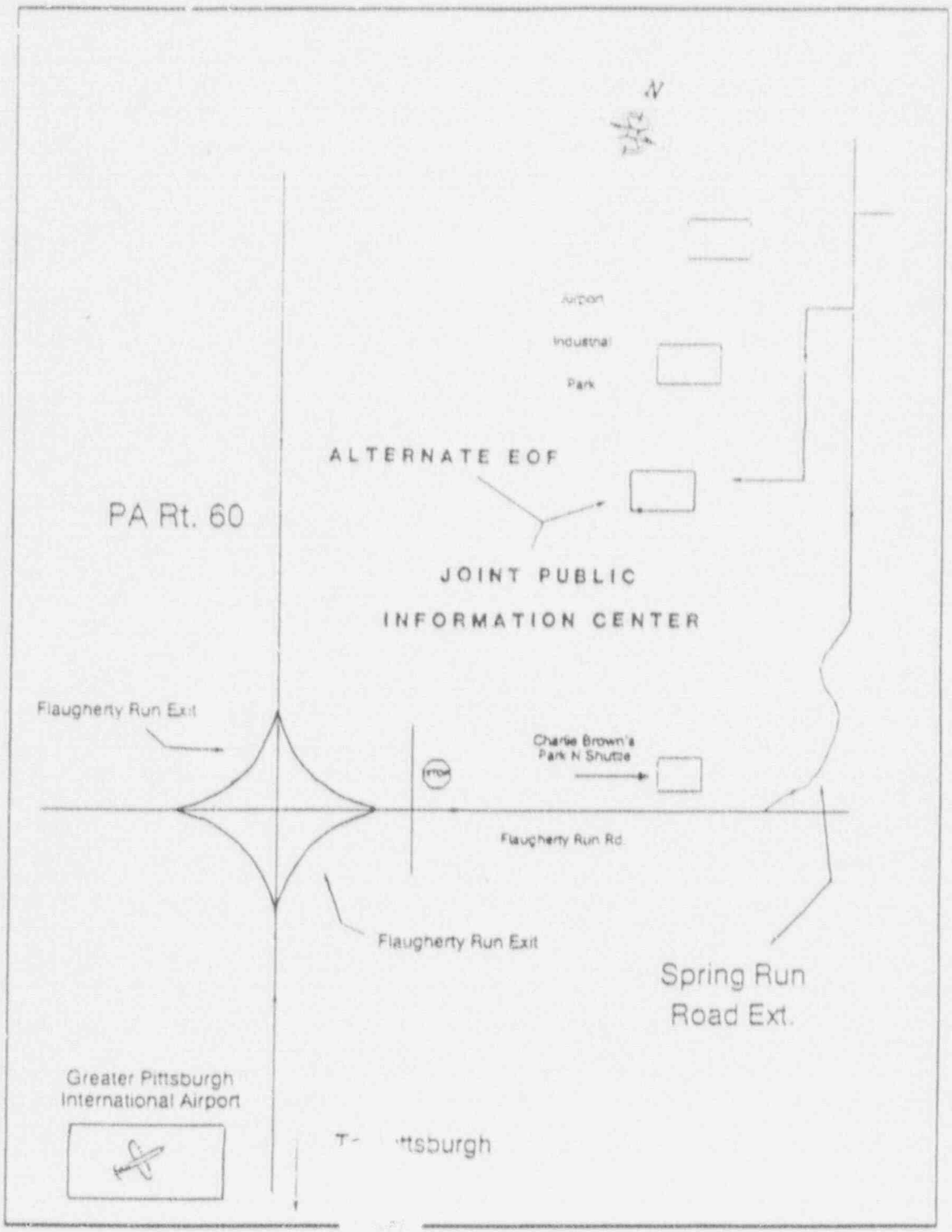

JOINT PUBLIC INFORMATION CENTER

AND ALTERNATE EOF

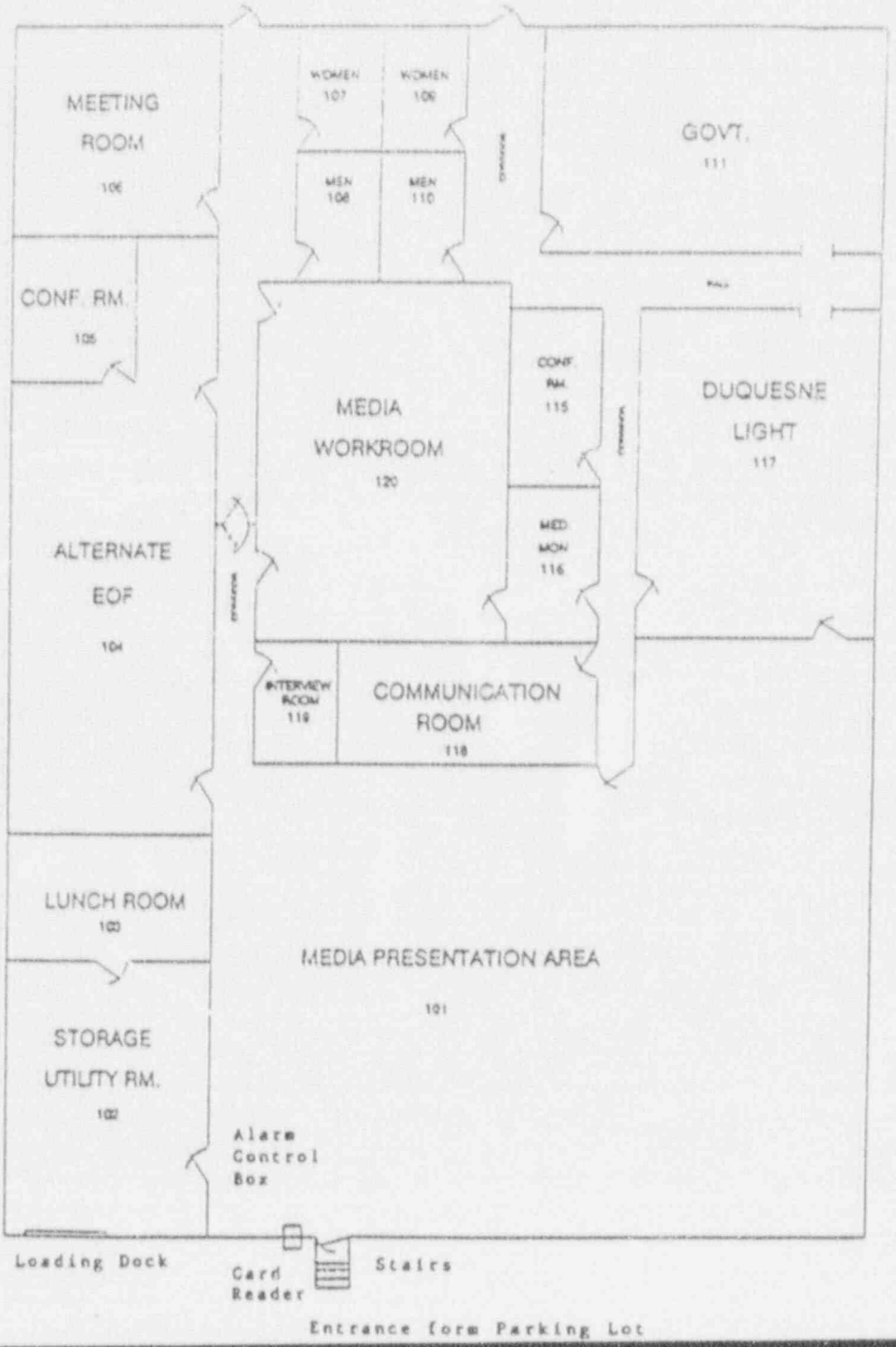

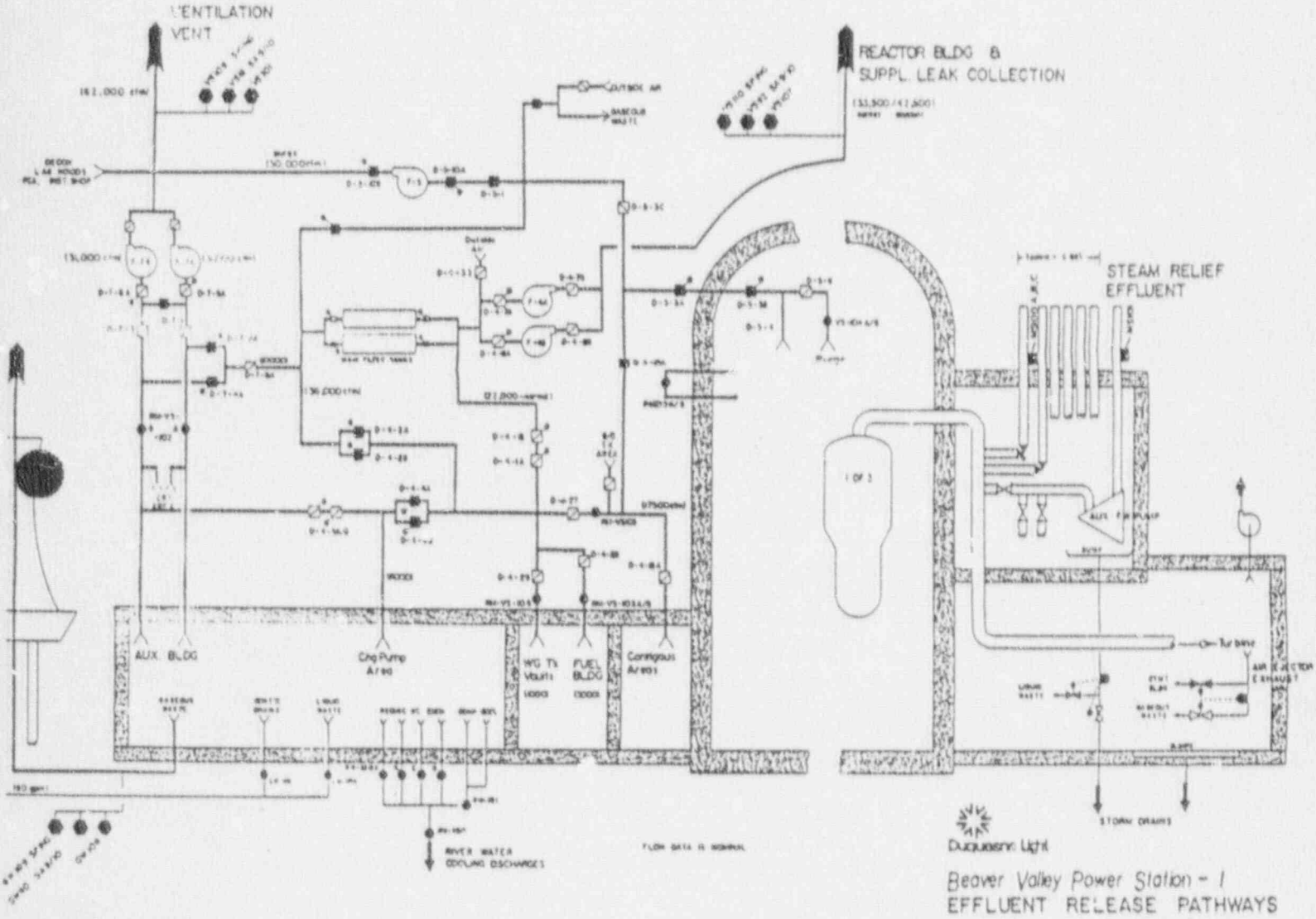

Beaver Valley Power Station - 1
EFFLUENT RELEASE PATHWAYS

EPP MAP-170

REACTOR POWER _____
SURVEY DATE _____ TIME _____
SURVEY BY _____
RWP#/RACP# _____
INST. TYPE _____ SR# _____
INST. TYPE _____ SR# _____
OTHER _____

BEAVER VALLEY POWER STATION
UNIT ONE 768'

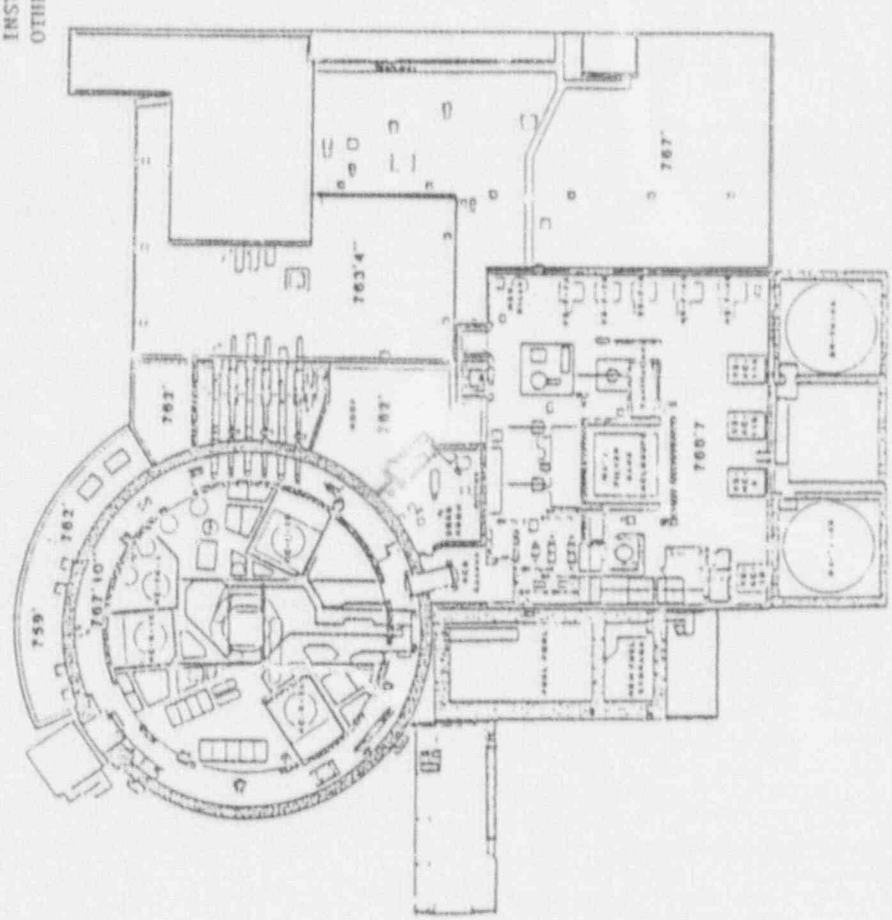

BEAVER VALLEY POWER STATION

ANNUAL EXERCISE

EPP MAP-169

REACTOR POWER _____

SURVEY DATE _____ TIME _____

SURVEY BY _____

RWP#/RACP# _____

INST.TYPE _____ SR# _____

INST.TYPE _____ SR# _____

OTHER _____

BEAVER VALLEY POWER STATION
UNIT ONE 752'

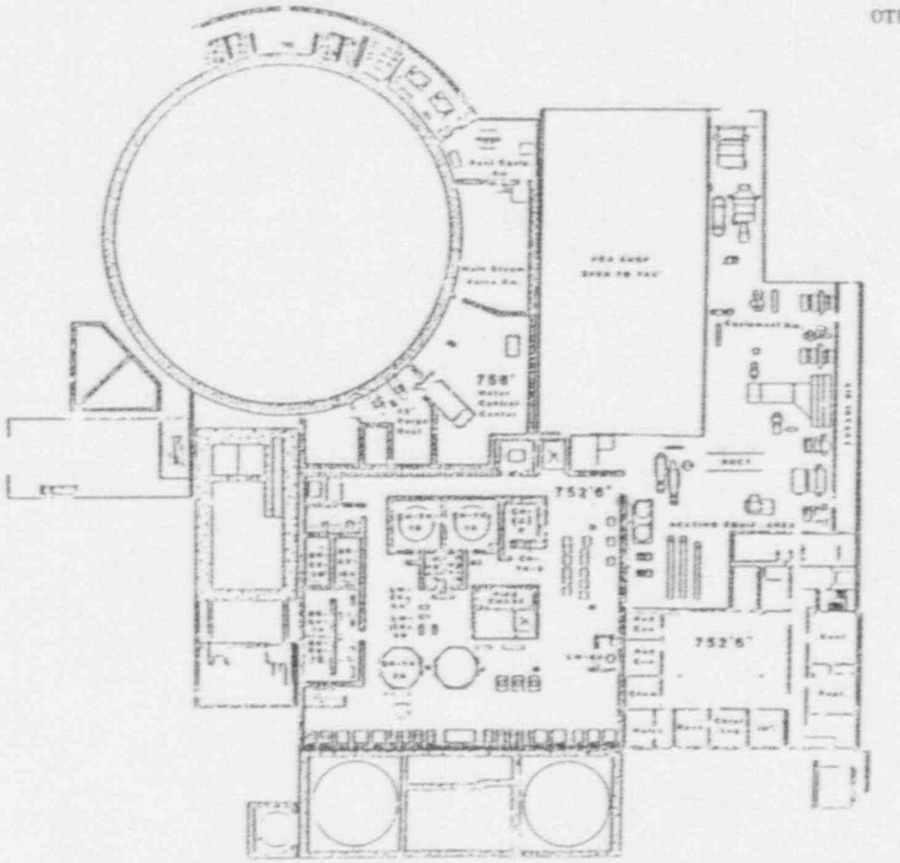

Duquesne Light Company

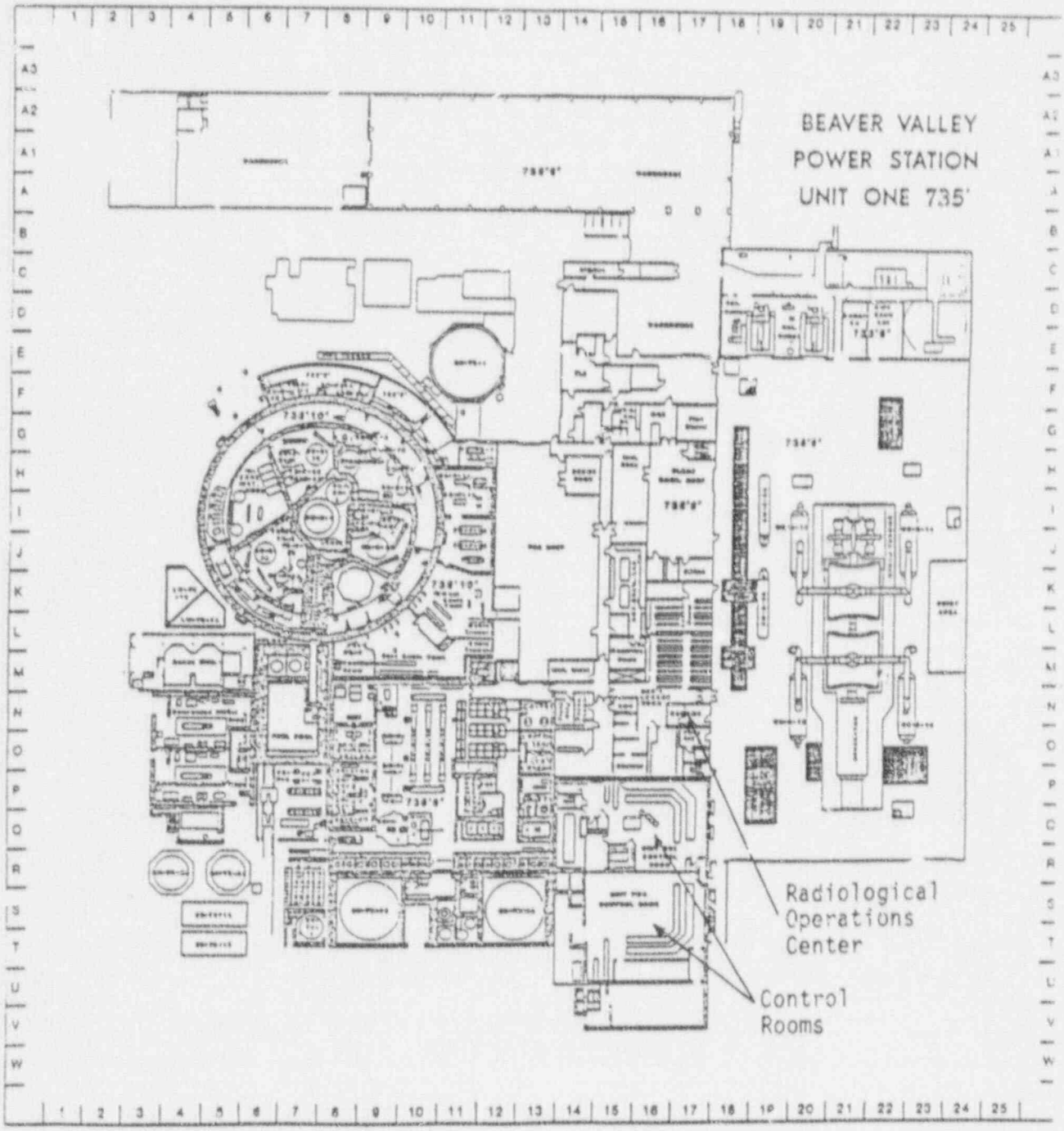
BEAVER VALLEY
POWER STATION
UNIT ONE 735'
Radiological
Operations
Center
Control
Rooms

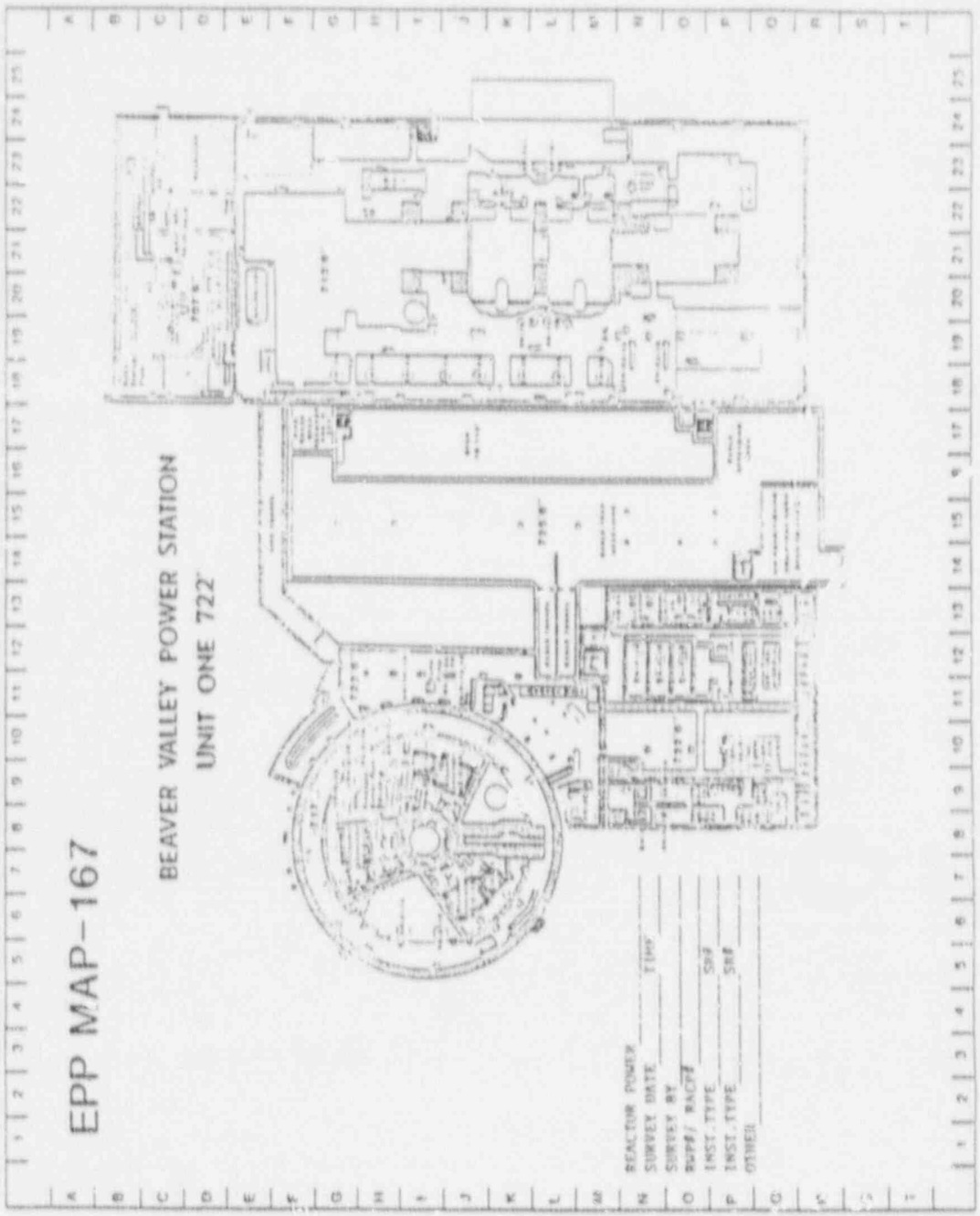
EPP MAP-167
BEAVER VALLEY POWER STATION
UNIT ONE 722'
REACTOR POWER
SURVEY DATE
TIME
SURVEY BY
RDMS/ RAD#
INST. TYPE
SN#
INST. TYPE
SN#
OTHER

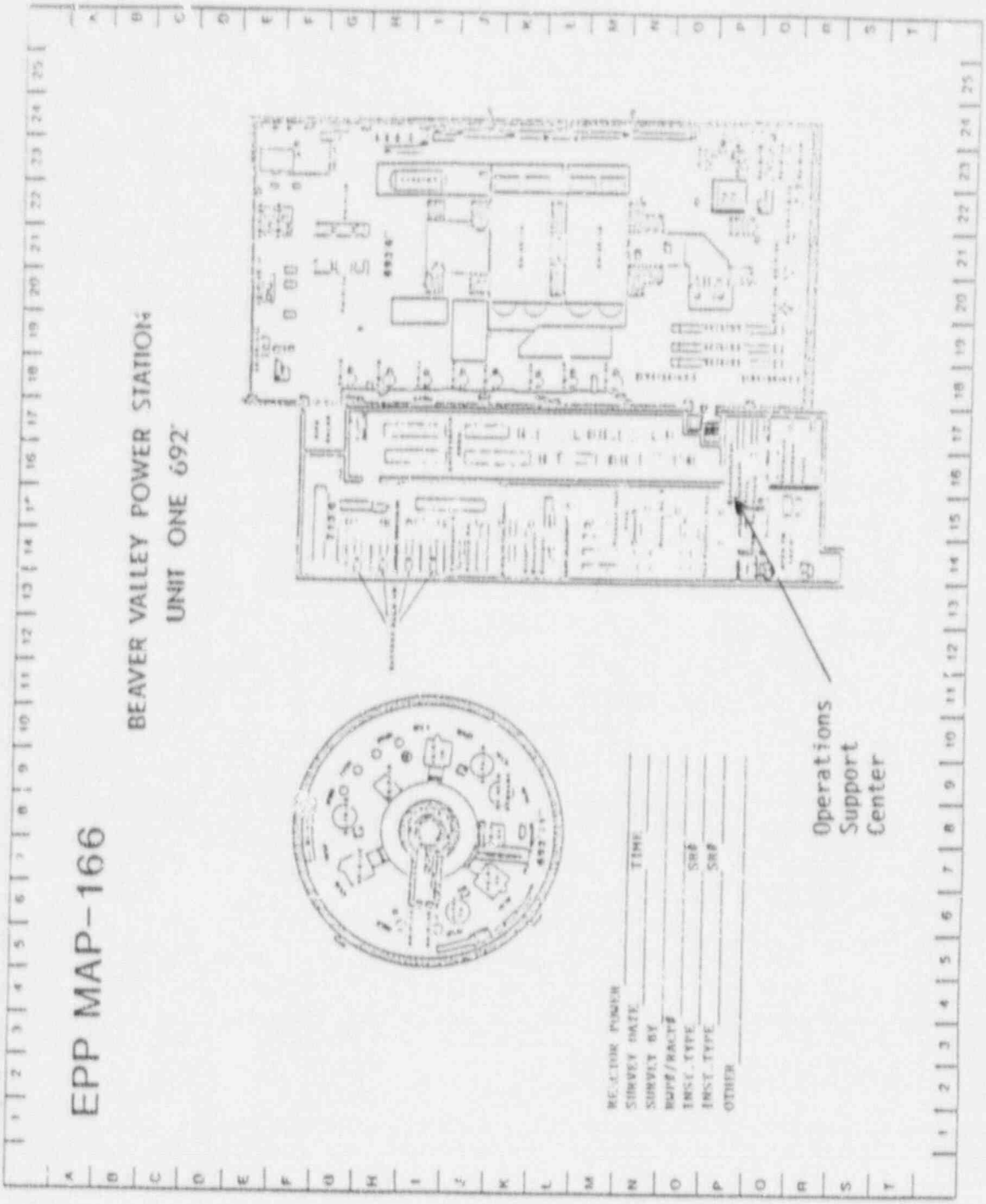
EPP MAP-166
BEAVER VALLEY POWER STATION
UNIT ONE 692'
Operations
Support
Center
RECEIVER PAGER
SURVEY DATE
TIME
SURVEY BY
BUPP/RACT#
INST. TYPE
SR#
INST. TYPE
SR#
OTHER

DAILY TRAINING ROSTER

DUQUESNE LIGHT COMPANY
BEAVER VALLEY POWER STATION
TRAINING SECTION

394	04	001	006	1		014

COURSE TITLE:

STARTING TIME	:
ENDING TIME	:

PLEASE PRINT

INSTRUCTOR:

LAST NAME	INITIAL 1ST	INITIAL 2ND	JOB TITLE	DLCo. EMP. NO.	ORG CO.	COMPANY IF OTHER THAN DLCo.	CO. CODE	SOCIAL SECURITY NUMBER	SIGNATURE

INSTRUCTOR'S COMMENTS:

INSTRUCTOR SIGNATURE:

Corporate Communication

Data

Package

Section VII

(Part C.10)

Duquesne Light Company
Nuclear Communications
1991 EPP Drill Questions

A significant aspect of emergency response is to provide the news media with accurate and timely information about the incident. Public perception and reaction is influenced by the information relayed to them. To ensure that the Emergency Response Organization is prepared to deal with the media during an incident at the Beaver Valley Power Station, the exercise provides certain elements that test Public Information activities. During the course of this exercise, the Joint Public Information Center (JPIC) will be activiated and exercised.

Once the Joint Public Information Center is activated, it is expected that the largest number of media inquiries will originate from news organizations outside the EPZ who will not send representatives to the JPIC. Based upon actual experience, a large barrage of questions by the general public, media and industry organizations begin to occur during the Alert declaration.

The scenario for the public information portion of the emergency exercise must be as realistic as possible. Questions must be realistic and should lag the on-site sequence of events by several minutes to allow for news dissemination by the utility. The following pages denote questions that controllers can use. Controllers need not use only the questions herein; some free play is encouraged. All questions shall be preceded with "This is a drill."

Callers will begin to make these telephone calls after the initial news release is issued. Calls will be spaced out every five to ten minutes. Questions will be asked following the Emergency Action Level indicated.

Nuclear Communications
1991 EPP Drill Questions

Members of the Public:

Unusual Event:

- My name is _____ . Why was an ambulance sent to the site? My husband works there and I fear he may be hurt. I can't get him on the phone. What should I do?

Alert:

- My child has been vomiting all morning. Vomiting is a sign of radiation sickness right? Has my child been irradiated by your plant? She was feeling well before your accident.

- I work in Pittsburgh but I live in Midland. With accident at the nuclear plant this morning, can I go home after work?

- I heard a radio announcement about some sort of accident at the nuke plant. Is that true? How come my emergency radio that I got from the County hasn't come on yet with information about this accident?

- This is Tom McMullen in Senator Heinz's office here in Washington, D.C. The senator has asked us to keep him updated on the situation there in western Pennsylvania. What's the status there now? Can someone periodically call the senator's office and keep him updated? How can the senator contact Mr. Von Schack if he needs to?

- I live in Monroeville. Should I be doing anything like evacuating or something with that accident at the nuclear plant?

Site Area Emergency:

- I was planning to go out today and do some fishing on the Ohio River. How long will it be before it's safe for me to go fishing? I heard that there's radiation coming out of the nuke plant.

- What kind of radiation are you releasing down there anyway? Can you guarantee that this radiation won't harm me?

- This is Craig Moses from the American Red Cross. Can we be of help?

- What are the local government officials doing in response to the accident there at your nuclear power plant?

Nuclear Communications
1991 EPP Drill Questions

Members of the Public:

- This is George Smith, principal of Beaver High School. Some of my staff are getting pretty nervous about being this close to the nuclear plant after that accident this morning. What's the situation now? Do you think it would be advisable to let school out and get the students back home?Who would recommend this to us down here if it becomes advisable? What's their phone number?

- My neighbor just told me I'm to leave my house because of your nuclear plant. Where am I supposed to go? I live in East Liverpool, Ohio.

- Would you please tell me what's going on at the nuclear plant? I heard that all the employees are leaving because there is going to be a meltdown. I've been trying to get through to my husband (he works at Unit 1) but he doesn't answer his telephone. His name is Gary. Can you help me get through to him? What should I do?

- I want to complain about your nuclear plant out there releasing all that radiation on us without us being able to do anything about it. What's the name of your company's president? What's his phone number?

- I live just up the road from Shippingport. How do I protect my cattle here at my farm from all the radiation that you are releasing?

- My kid goes to East Liverpool schools. I tried to get her to leave so we can get away from your radiation that you are releasing, but the principal wouldn't let me take her. Why don't you call him and tell him what's really going on so he will change his mind?

- Hello, my name is Susan Garrett and I live in Philadelphia. I have a sister who lives in Beaver Falls, Pa. Ever since I heard about this nuclear plant accident, I've been trying to get her on the phone but she doesn't answer. Do you know if she's alright? Well, can you try to get in touch with her and ask her to call me? I'm terribly concerned about her.

- I've been listening to the radio about the nuclear plant accident. My mother is 86 years old and can't hear well enough to listen to a radio or TV. I'm sure that she couldn't have heard anything about what's going on there. Can someone go to her home in Midland and tell her about these precautions that have been given about staying indoors until the radiation blows over? Why not?!

Nuclear Communications
1991 EPP Drill Questions

MEDIA

Unusual Event:

- This is _____ from the Beaver County Tribune. We have a report of an ambulance being called to the nuclear plant site. Has there been an accident? What were the injuries? Who can I call to get more information?

- This is _____ from the Pittsburgh Press. I would like to know the status of the man who was injured at your plant? He is contaminated, what does that mean?

- This is _____ from CCLT-TV of Steubenville, Ohio. I just received information about an emergency at Beaver Valley Power Station. What are the details? Any injuries? Who? Where can I send a reporter and photographer out at the site?

- This is _____ from the Monroeville Herald. I understand there was an injury at your plant. What was the injured man doing at the time of his injury? Was he wearing any protective gear?

Alert:

- This is _____ from the Pittsburgh Record. I've gotten a report that an emergency has been declared at the Shippingport Atomic Power Station. Is this report correct? How many people are involved? Is any radiation leakage involved?

- This is _____ from KDKB-TV in Pittsburgh. What's happening at the nuclear power plant? Is any radioactive material involved? Should we make a broadcast on the emergency system?

- This is _____ from WPTT-TV. Would you be available for an update on our live broadcast in 10 minutes to explain what happened at Shippingport today? [Caller: If answer is yes, take their phone number and call them back in 10 minutes]

- This is _____ from the Pittsburgh Post-newspaper. Is something unusual going on out at the atomic power plants? Can we send a camera team out to the scene? Can we fly over the area? Is there anything to see from the air? Where can we land our helicopter?

Nuclear Communications
1991 EPP Drill Questions

MEDIA:

- This is _____ from KDKB-TV again. I'd like an update on the emergency at the power plant. When is the accident going to be terminated? What do we tell our listeners?

- This is _____ from WTAZ-radio. I'd like a report on the accident at the nuclear power plant in Shippingport. Is this where I can get information on the incident? Who is this speaking? I'd like to get this on tape, is that O.K.? Please summarize what has happened and what actions are being taken by your company to control the situation.

- This is _____ from the International Wire Service. How large is the nuclear power plant that had the accident? When did it go into operation? What kind of nuclear power plant is it? Who built your plant? Are they assisting you in this emergency?

- What caused you to declare the Alert emergency at Beaver Valley this morning? How does this relate to the man who was injured?

Site Area Emergency:

- This is _____ from KQVT-radio. I understand that there has been a severe accident at Shippingport. Where can I go to get more information? Can you fax me directions?

- I am _____ from the Hookstown Crier. What are the radiation levels in Hookstown from this accident? Is that safe? What are unsafe levels? What are the normal levels of radiation released from the plant?

- This is _____ from WNBC in New York. I want to interview your CEO of your company to explain this incident for national coverage. When can we do the interview? That's too late for our news deadline. We must do it now. (Don't take no or later for an answer).

- This is _____ from the Associated Press. I need an update on the situation at the Beaver Valley Power Station. Has there been confirmation of any releases of radiotion into the environment? How much? What measures are being taken to control the release? Is this affecting any of the plant employees?

Nuclear Communications
1991 EPP Drill Questions

MEDIA:

- This is _____ from the LJGT-radio. A few of our listeners have just called and said that all the employees of all three Beaver Valley nuclear power plants are being evacuated, they thought due to a danger of a plant meltdown. It sounds pretty serious. Is it true? What is going on out there? Who going to run the plants that are not damaged? How are those workers protected? I doubt that you can make them stay if there is actually radiation being leaked?

- This is _____ from the WCBS-TV in Cleveland. We've gotten an AP wire story about the accident at Beaver Valley. How much radiation has been released and where is it heading? Is the plant shut down? How come you take better measures to prevent this radiation leakage?

- What's going on at your nuclear plant? What's the chance that the radiation will get into the Ohio River. This is _____ from WPOT-TV. Is evacuation of people living near the plant being considered? Why? (or Why not?) When will you know?

- This is _____ from WGHT-radio. Why wasn't the plant shut down earlier than now? What is the status of your other plant?

- This is _____ from WAVD-radio. We would like to interview one of your company management people about your accident. Could you please get them on the phone?

- This is the Columbus News. When will be your next press conference? Where is it being held?

- This is WCBS-TV in Cleveland. I'd like an update on the nuclear meltdown at the Beaver Valley Power Plant. Which company runs this plant? We understand that the Beaver Valley Power Plant is one of the main reason for why Ohio Edison rates here in Ohio has increased? Will this accident cause them to go higher? Can you guarantee that? What's your name?

- This is _____ from the Beaver Falls Times. Well, I see Duquesne Light has done it again. This will surely raise your rates again. How much of the environment have you crapped up again? Who is responsible for cleaning up all the land down-wind of your radiation leakage? What are you going to do about cleaning things up?

Nuclear Communications
1991 EPP Drill Questions

MEDIA:

- This is _____ from the Associated Press. We have some of our staff headed for your JPIC. They're not familiar with the Pittsburgh region. Can you give us directions to the JPIC and to the power plant site?

- My name is _____ and I'm from the Othello Outlook newspaper. I want to talk to someone who knows what type of radiation has been released. They say it's a radiation cloud, is that true? What does it look like? How can you tell it apart from regular clouds? How far can this cloud possibly travel? How can people that far away know what effect it will have on them?

- This is _____ from the Greensburg Chronicle. I'd like to get a picture of the Beaver Valley Power Plant. Is the area closed because of the accident? Can I get an interview of a utility person on site?

- This is _____ from KDKB-TV again. I'm getting ready for our news broadcast and I'd like an update on the accident at the nuclear plant. What's the situation now? Hurry up, I have only two more minutes.

- This is _____ from the Farmers Journal. I'm interested in getting more information about the radiation that has gotten out as a result of the nuclear power plant accident. How much radiation was leaked? How long will it stay on the ground? Will it get onto the crops in that area? If so, what should local farmers do to protect their livestock?

Financial:

Alert:

- This is the Wall Street Journal. Would you please send us your press releases?

Site Area Emergency:

- I'm from Fobes financial magazine. I need to one of your finance folks about the accident. Do you have someone there who can tell me if the company will continue to pay its dividend over the next three months?

Nuclear Communications
1991 EPP Drill Questions

FINANCIAL:

- This is _____ from the Wall Street Journal in New York. We have technical information about the accident at your plant. What I'd like to know is your assessment of the impact of this accident on your price of the DQE stock price? Do you think that this accident will affect your future dividends?

- This is _____ from E. F. Button. How much will this accident cost your company? What are any other financial implications of this event?

- This is _____ from the N.Y. Business Times. How do you feel that the accident will affect the institutional shareholders?

- This is _____ from the Pittsburgh Business News. What impact does your liability under the Price-Anderson Act have regarding your assets and this accident?

- This is _____ from the Boston Business Tips. How does Price-Anderson work for this accident? Who can explain this to me? How do I find out? Every time I call I never get a straight answer?

Industry:

Alert:

- This is _____ from INPO. Why haven't you issued any information on the Nuclear Network on this accident? When will you issue something to INPO?

- This is _____ from the Nuclear News. Why is the Alert not a danger to the safety of the public? I don't understand/

- This is the plant manager from the Perry Nuclear Power Plant. How can we help you? Who can I call to offer our assistance?

- This is the corporate communication department at Toledo Edison. Would you send us your news releases on the accident at your plant today?

- This is Centerior Energy. Please call us with any information you may have for this emergency. [Caller: Give them your phone number and ask for updates. Don't take no for an answer. Tell them the CEO insists that you get these updates and remind them that Centerior Energy owns part of that plant.]

Nuclear Communications
1991 EPP Drill Questions

Industry:

Site Area Emergency:

- This is _____, plant manager for the Bruce Mansfield power stations. Should we shut down our plants? Should we evacuate our employees? Who will notify me if we need to and how?

- This is the secretary for the CEO of the Ohio Edison Company. Our CEO would like to talk to your CEO. How can I arrange this discussion?

- This is the control room at the Limerick Nuclear Power Station. We heard a rumor of a radiation leak heading in this direction. You guys haven't reported anything on this. What's the situation?

- This is the plant manager of the Arco plant just down the road from the Shippingport. I heard a radio report of an accident at the power plant. What's the situation there? Should we shutdown or do anything?

Other:

- This is _____ from the Governor's Office out here at the Pittsburgh Airport. I just got off a plane and I need someone to come and take me to your JPIC. When will someone come pick me up?

- This is _____ from Substations. I have men working in the switchyard down at Beaver Valley. Should I recall these men? Who is in charge of letting me know what I should be doing in regards to the nuclear accident?

Controller/Observer

Conduct

Section VIII

(Part A)

Section VII

EXERCISE CONTROLLER/OBSERVER CONDUCT

A. Each controller/observer should be familiar with the following:

1. The basic objectives of the exercise.

2. The assumptions and precautions being taken.

3. The exercise scenario, including the initiating events and the expected course of action to be taken.

4. The various locations that will be involved and the specific items to be observed when at those locations.

5. The purpose and importance of the evaluation checklist, chronological record sheets, and controller/observer summary sheet.

B. A summary and description of the controller's/observer's assigned location, including an onsite controller organization, exercise evaluation checklist, and chronological record sheet is provided within this packet.

C. Controllers/observers are assigned to various locations and are to be at their initial locations as indicated in Section I "Overall Schedule of Events."

D. If controllers are to provide information via "Cue Information Sheets" (e.g., initiating events, instrument readings, monitoring results, etc.) to the exercise participants, the information must be provided exactly as and when prescribed.

E. Controllers/observers shall maintain an accurate chronological record of activities for the locations observed. The record should show the actual start and stop time, brief description of the event or occurrence with the result or action taken, and pertinent comments or suggestions.

EXERCISE CONTROLLER/OBSERVER CONDUCT (continued)

F. Controllers/observers should offer no information, advice or assistance to the exercise participants. Any such requests should be respectfully declined. Controllers shall only interpose themselves if the participants are taking an action that will cause the exercise to go far afield of the anticipated time schedule and/or outcome.

Examples or problems requiring such interpositions may include: an engineering calculation/projection that is so grossly inaccurate that an action level other than the one postulated for the scenario would be instituted, or an activity is taking much longer than predicted that the exercise scenario is in danger of not progressing as postulated, etc.

Notes have been placed in the body of the scenario that direct the controller to be aware of these types of situations.

A lead exercise controller has been designated for the On-shift and, On-site Exercise Organizations. Those controllers responsible for "Cue Information Sheets" or "Cue Signs" should coordinate their action times closely with the Lead Controllers. Provisions will be available for necessary communications with these designated individuals should scenario variations warrant.

G. The controller/observer must remain cognizant of all the events and circumstances at their assigned locations. These should include but not be limited to: Participants' actions and reactions, communications methods and record keeping, chain of command, equipment performance and the overall ability to interface with other emergency facilities.

I. Significant items, both major deficiencies and strong performance points, should be highlighted upon occurrence and condensed for the Controller/Observer Summary Sheets with emphasis on the items C 1-8 in the Exercise Evaluation Criteria. It is very important for controllers/observers to offer recommended solutions to deficiencies.

Exercise Evaluation

Criteria

Section VIII

(Part B)

Section VIII

EXERCISED EVALUATION CRITERIA

To ensure validity of the evaluation, all exercise controllers/observers must utilize the same grading criteria. The following grading standards should be utilized:

A. Recording Times of Actions

1. For calculating elapsed times, evaluators will be given the actual time the exercise is initiated. This will be T = 0 on all reports. All elapsed time calculations will be based on this time regardless of when the separate evaluated activities are initiated.

2. An emergency center will be deemed to be in service when its personnel accountability check is completed and reported or when the center has sufficient manpower present to carry out its mission. (NOTE: A formal announcement should be made.)

3. Controllers/observers shall use the Chronological Events Summary during the course of the exercise to take notes on the time and events and shall be the primary evaluation record. It is intended to be used to compliment the evaluation forms upon completion of the exercise. The form calls for the actual and elapsed times, the initial discoveries, the resultant activity, and evaluator comments.

B. Evaluation Standards

The system below should be used by the controller/observer to evaluate assigned areas pertaining to the emergency response. A dual purpose will be served by this rating system. First, the capability of each facility or response area will be evaluated and second, the system will provide a vehicle for guiding and directing improvement. The rating scale is as follows:

1. "5" = Excellent - Personnel and equipment always functioned without error the first time, every time. There were no problems encountered and all personnel and equipment functioned at a level much greater than could reasonably be anticipated.

2. "4" = Good - Personnel and equipment generally performed better than expected. Any errors or problems were minor and easily correctable.

3. "3" = Satisfactory - Personnel and equipment performed according to expectations, with few minor exceptions. Any errors noted were not severe and could be corrected without undue labor or expense.

4. "2" = Poor - Personnel and equipment generally performed below expectations and there were several significant deficiencies noted. The area's ability to carry out its functions was diminished.

5. "1" = Failure - Personnel and equipment consistently failed to perform as required and there were serious deficiencies noted which severely impaired the ability of the area to carry out its functions.

6. "N" - Not Observed - Through no fault of the exercise.

Categories for Evaluation

A number of areas have been designated for monitor evaluation. These areas will be further defined in the various packets. Each controller/observer will be required to rate pertinent actions in the following areas:

A. Activation and Response

B. Communications/Dissemination of Information

C. Procedures

D. Direction and Control

E. Material and Equipment

F. Protective Measures

G. Access Control

H. Recommendations

EXERCISE EVALUATION CRITERIA
FOR
PLANT CONTROL ROOM

Location:

Beaver Valley Power Station
Service Building

Functions:

1. Perform immediate actions for the safe and proper operation of the plant.

2. Assess information available from valid indications and initially classify the situation.

3. Provide initial notifications and maintain information flow to emergency support centers, when they are established.

4. Perform offsite dose projection and provide directions for offsite monitoring until the TSC/EOF is activated.

5. Make recommendations to offsite agencies regarding protective and other actions.

6. Perform supplementary actions to regain control of the plant.

Personnel and Duties:

1. Nuclear Shift Supervisor - NSS - As senior licensed operator on shift, performs all functions in accordance with approved procedures. During an emergency, the NSS assumes the role of the Emergency Director until properly relieved by the designated Emergency Director.

2. Nuclear Shift Operating Foreman - NSOF - Performs the duties of the Operations Coordinator during the initial stages of an emergency. Performs the duties of Emergency Squad Chief.

3. Nuclear Shift Supervisor Administrative Assistant - During the initial stages of an emergency serves as the Communications and Records Coordinator.

4. Radcon Technician - Initial dose projections will be calculated during the early stages of an accident.

5. Other Personnel

   a. Nuclear Control Operators (2)

EXERCISE EVALUATION CRITERIA
FOR
PLANT CONTROL ROOM (continued)

b. Shift Technical Advisor

c. Startup Operators or Nuclear Operators (2)

CONTROL ROOM EVALUATION

Activation and Response Rating: Ex. Good Sat. Poor Fail

1. Was activation/initiating efficient and organized?

2. Were personnel familiar with their responsibilities and did they respond in a timely manner?

3. Was the person in charge clearly identifiable?

4. Was the transfer of responsibilities accomplished efficiently and effectively?

5. Were all persons made aware when transfers were completed?

6. Were personnel able to quickly diagnose problems and develop suggestions for alternative solutions.

Communications/Dissemination of Information Rating: Ex. Good Sat. Poor Fail

1. Were all required and specified communication circuits operable?

2. Were personnel familiar with communications available and the intended use of each?

3. Were communications adequate?

4. Were there sufficient personnel to conduct communications tasks?

5. Was incoming information effectively and efficiently distributed to appropriate personnel?

6. Were periodic update announcements made via Page Party or face-to-face?

7. Did communicators keep accurate logs?

8. Did persons in charge spend an inordinate amount of time on communications, such that their attention was diverted from the incident?

9. Were offsite personnel kept informed of activities/plant status?

10. Were logs used effectively by personnel to review past events to trend data?

11. Were appropriate communications techniques (no abbreviations, phonetic alphabet, sign-on, sign-off, etc.) followed?

Procedures Rating: Ex. Good Sat. Poor Fail

1. Were personnel able to perform the relevant procedures?

2. Were procedures followed?

3. Were the procedures adequate?

Direction and Control Rating: Ex. Good Sat. Poor Fail

1. Was the information flow from the plant to senior management, timely, complete and accurate?

2. Did the Emergency Director become too deeply involved in a specific activity to the exclusion of other activities?

3. Could the response be categorized as a team effort or a group of individual efforts?

4. Was there an effective mechanism for resolving differences of opinions regarding technical issues or actions to be taken?

5. Was there excessive noise and loitering in response facilities?

E. Material and Equipment Rating: Ex. Good Sat. Poor Fail

1. Was all of the required materials and equipment available?

2. Was the equipment functional?

3. Did personnel check to ensure that all equipment was available and functional early in the activation process?

4. If equipment was inoperative or failed in use, were appropriate actions taken to resolve deficiency (e.g., spares or backups, etc.)?

5. Were there any situations where the lack of equipment or materials, or inoperative equipment, or lack of ability to operate the equipment, prevent personnel from performing assigned task? (If so, please detail)

6. Were there any situations in which additional equipment or materials, or different types of equipment could have made the activity more effective (Explain)?

7. Could the area support the personnel assigned to it?

8. Were there resource materials readily available to assess the emergency situation and to plan corrective actions (maps, reference books, copies of emergency plans and procedures)?

F. Protective Measures Rating: Ex. Good Sat. Poor Fail

1. Were appropriate protective measures implemented for plant personnel?

2. Were appropriate contamination controls observed?

3. Were all in-plant activities conducted with regard to personnel safety, consistent with the need to complete activity?

G. Access Control Rating: Ex. Good Sat. Poor Fail

1. Was an appropriate security posture established against unauthorized personnel?

2. Were incoming support personnel (fire-fighters, ambulances, others) provided appropriate access in a timely manner?

3. Was there an identification system developed and used that effectively identified authorized personnel and their duties?

H. Summary

1. Describe any problems noted by the area evaluated, a brief description of the problem, its outcome or effect, and any recommended corrective courses of action to mitigate or correct the problem.

2. Completely fill out the summary evaluation form, sign it, promptly return it as directed.

3. Critiques of the exercise will be held for all participants, evaluators, and NRC personnel (if applicable) that want to attend. Locations and times will be provided.

EXERCISE EVALUATION CRITERIA
FOR
EMERGENCY SQUAD

Location:

Beaver Valley Power Station

On-site locations

Functions:

To provide first aid to plant personnel, search and rescue, and onsite fire fighting (group also called Fire Brigade in this function).

Personnel and Duties:

All assigned personnel are trained in fire fighting and first aid.

Specific duties: Operators - To assess the operational impact of deenergizing circuits, stopping pumps, etc.

RadCon: To assess radiological conditions.

Chemistry: To assess chemical hazzards.

EMERGENCY SQUAD

Activation and Response Rating: Ex. Good Sat. Poor Fail

1. Was the activation/initiating efficient and organized?

2. Were personnel familiar with their responsibilities respond in a timely manner?

3. Was the person in charge clearly identifiable?

4. Was the squads response time to the assembly point timely?

Communications/Dissemination of Information Rating: Ex. Good Sat. Poor Fail

1. Were personnel familiar with communications available (radio, PAX, etc.)?

2. Were communications adequate?

3. Were communications to the Control Room for updates timely?

4. Were appropriate communications techniques (no abbreviations, phonetic alphabetic, sign-on, sign-off, etc.) followed?

5. Were communications prefaced with "This is a drill"?

6. Was the Emergency Squad briefed upon arrival at the assembly point?

Procedures Rating: Ex. Good Sat. Poor Fail

1. Were personnel generally familiar with the relevant procedures?

2. Were procedures followed?

3. Were personnel so overwhelmed with procedural requirements that they were distracted from the appropriate response?

4. Were the procedures appropriate?

5. Was the overall level of competency and state of training adequate? (NOTE: Any shortcomings or exceptional performance observed should be detailed in the Event Summary Sheets.)

D. Direction and Control Rating: Ex. Good Sat. Poor Fail

1. Was the information flow from the squad to the Control Room, timely, complete and accurate?

2. Could the response be categorized as a team effort or a group of individual efforts?

E. Material and Equipment Rating: Ex. Good Sat. Poor Fail

1. Was all of the required material and equipment available?

2. Was the equipment functional?

3. Did personnel check to ensure that all equipment was available and functional early in the activation process?

4. If equipment was inoperable or failed in use, were appropriate actions taken to resolve the deficiency (spares or back-up equipment)?

6. Were there any situations in which additional equipment or materials, or different types of equipment could have made the activity more effective? If so, please detail.

7. Were there resource materials readily available to access the emergency situation and to plan corrective actions - maps, reference books, copies of the emergency plans and procedures?

F. Protective Measures Rating: Ex. Good Sat. Poor Fail

1. Were appropriate protective measures implemented for squad personnel?

2. Did personnel properly wear protective clothing, dosimetry, respirators, if necessary?

3. Were appropriate contamination controls observed?

4. Were squad personnel kept apprised of area radiological conditions, if necessary?

5. Were activities conducted with regard to personnel safety, consistent with the need to complete the activity?

G. Summary

1. Describe any problems noted by the area being evaluated, a description of the problem, its outcome or effect, and any recommended corrective courses of action to mitigate or correct the deficiency.

2. Completely fill out the evaluation form, sign it, and promptly return it as directed.

3. Critiques of the exercise will be held for all participants, evaluators and NRC personnel (if applicable) that want to attend. Locations and times will be provided.

EXERCISE EVALUATION CRITERIA FOR ENVIRONMENTAL ASSESSMENT AND DOSE PROJECTIONS AREA

Location:

Beaver Valley Power Station
Emergency Response Facility (ERF)

Functions:

1. Assess environmental conditions.
2. Coordinate radiological monitoring activities.
3. Recommend implementation of offsite emergency actions.

Personnel and Duties:

1. Environmental Assessment and Dose Projections Coordinator - Responsible for performing dose calculations and providing the Emergency Director with technical advice concerning radiological assessment and recommendations for offsite protective actions.
2. Other personnel:
   a. Field team communicator
   b. Assistant EA and DP Coordinator
   c. Status board keepers and communicators

ENVIRONMENTAL ASSESSMENT AND DOSE PROJECTION AREA

A. Activations and Response Rating: Ex. Good Sat. Poor Fail

1. Was activation efficient and organized?

2. Were personnel familiar with their responsibilities and respond in a timely manner?

3. Was the person in charge clearly identifiable?

4. Was the transfer of responsibilities from the CR accomplished efficiently and effectively?

5. Did EA and DP personnel adequately direct the Field Monitoring Teams (FMTs) so as to locate and define the plume?

6. Did EA and DP adequately instruct FMTs as to the disposition of samples that were taken?

7. Were recommendations to senior management timely?

B. Communications/Dissemination of Information Rating: Ex. Good Sat. Poor Fail

1. Were all required and specified communication circuits operable?

2. Were communications adequate?

3. Was incoming information effectively and efficiently distributed to appropriate personnel?

4. Were accurate logs kept, and were the status boards kept updated?

5. Were offsite teams kept informed of activities/plant status?

6. Were appropriate communication techniques (no abbreviations, phonetic alphabet, etc.) followed?

7. Was there a two-way exchange of information such that the personnel observed understood the changing situation and were able to perform their tasks in the context of the changing situation and to effectively contribute to overall assessment and mitigation.

C. Procedures Rating: Ex. Good Sat. Poor Fail

1. Were personnel generally familiar with the relevant procedures?

2. Were procedures followed?

3. Were personnel overwhelmed with procedural requirements?

4. Were the procedures appropriate?

5. Was the overall level of competency and state of training adequate. (NOTE: Any shortcomings or exceptional performance should be detailed in the Event Summary Sheet.)

D. Direction and Control Rating: Ex. Good Sat. Poor Fail

1. Was adequate and timely guidance provided by the senior management?

2. Could the response be categorized as a team effort or a group of individual efforts?

3. Was there excessive noise and loitering in the response facility?

E. Material and Equipment Rating: Ex. Good Sat. Poor Fail

1. Was all of the required material and equipment available?

2. Was the equipment functional?

3. Did personnel check to ensure that all equipment was available and functional early in the activation process?

4. If equipment was inoperable or failed in use, were appropriate actions taken to resolve the deficiency.

5. Were there any situations where the lack of equipment and materials, or inoperative equipment, or lack of ability to operate the equipment, prevent personnel from performing assigned tasks? If so, please detail.

6. Were there any situations in which additional equipment or materials, or different types of equipment could have made the activity more effective? If so, please detail.

7. Could the area support the personnel assigned to it?

8. Were there resource materials readily available to assess the emergency situation and to plan corrective actions - maps, reference books, copies of emergency plans and procedures?

F. Protective Measures Rating: Ex. Good Sat. Poor Fail

1. Were field personnel properly directed to wear protective clothing, dosimetry, respirators when appropriate?

2. Were Field Monitoring Teams periodically reminded to check their dosimeters?

3. Were appropriate contamination controls observed?

4. Was the normal radiological controls program appropriately modified to contend with the emergency radiological conditions?

5. Were field teams directed to take KI when appropriate?

G. Summary

1. Describe any problems noted by the area evaluated, a brief description of the problem, its outcome or effect, and any recommended corrective courses of action to mitigate or correct the problem.

2. Completely fill out the summary evaluation form, sign it, and promptly return it as directed.

3. Critiques of the exercise will be held for all participants, evaluators, and NRC personnel (if applicable) that want to attend. Locations and times will be provided.

EXERCISE EVALUATION CRITERIA
FOR
OPERATIONAL SUPPORT CENTER (OSC)

Location:

Beaver Valley Power Station
Near shutdown panel below Control Room (Unit 1)

Function:

1. Provide a location where plant logistic support can be coordinated during an emergency.

2. Restrict Control Room access to those support personnel specifically requested by the Shift Supervisor.

Personnel and Duties:

1. Operational Support Center Supervisor - Responsible for the activation and operation of the OSC.

   a. Plant Maintenance Personnel - Responsible for plant repairs

2. Other personnel:

   a. Radcon Operations Center - if unstable conditions exist in the service building.

OPERATIONAL SUPPORT CENTER EVALUATION

A. Activation and Response Rating: Ex. Good Sat. Poor Fail

1. Was the activation/initiating efficient and organized?
2. Were personnel familiar with their responsibilities and respond in a timely manner?
3. Was the person in charge clearly identifiable?
4. Was there adequate numbers of personnel from all necessary crafts (electricians, mechanics, etc.)

B. Communications/Dissemination of Information Rating: Ex. Good Sat. Poor Fail

1. Were all required and specified communications circuits operable?
2. Were personnel familiar with communications available and the intended use of each?
3. Were communications adequate?
4. Were there sufficient personnel to conduct communications tasks?
5. Was incoming information effectively and efficiently distributed to appropriate personnel?
6. Were periodic updates made by the Supervisor?
7. Were accurate logs kept?
8. Were the status boards kept updated?
9. Did the OSC Coordinator track entry teams - recording such information as who was on the team, what the job assignment was, time dispatched, etc.?
10. Were the correct dedicated lines used and did non-emergency communications interfere with emergency transmission?

11. Were logs used effectively by personnel to review past events and to trend data?

12. Were appropriate communications techniques (no abbreviations, phonetic alphabetic, sign-on, sign-off, etc.) followed?

C. Procedures Rating: Ex. Good Sat. Poor Fail

1. Were personnel generally familiar with the relevant procedures?

2. Were procedures followed?

3. Were personnel overwhelmed with procedural requirements?

4. Were the procedures appropriate?

5. Were emergency procedures developed as necessary and was there adequate discussion as to the consequences of their implementation?

6. Was the overall level of competency and state of training adequate? (NOTE: Any shortcomings or exceptional performance observed should be detailed in the Event Summary Sheets.)

D. Direction and Control Rating: Ex. Good Sat. Poor Fail

1. Was the information flow from the plant to the facilities, timely, complete and accurate?

2. Could the response be categorized as a team effort or a group of individual efforts?

3. Was there an effective mechanism for resolving differences of opinion regarding technical issues and action to be taken?

4. Was there excessive noise and loitering in the response facility?

E. Material and Equipment Rating: Ex. Good Sat. Poor Fail

1. Was all of the required material and equipment available?

2. Was the equipment functional?

3. Did personnel check to ensure that all equipment was available and functional early in the activation process?

4. If equipment was inoperable or failed in use, were appropriate actions taken to resolve the deficiency (spares or back-up equipment)?

5. Were there any situations in which the lack of equipment and materials, or inoperative equipment, or a lack of ability to operate the equipment, prevented personnel from pre-assigned tasks? If so, please detail.

6. Were there any situations in which additional equipment or materials, or different types of equipment could have made the activity more effective? If so, please detail.

7. Could the area support the personnel assigned to it?

8. Were there resource materials readily available to access the emergency situation and to plan corrective actions - maps, reference books, copies of the emergency plans and procedures?

F. Protective Measures Rating: Ex. Good Sat. Poor Fail

1. Were appropriate protective measures implemented for OSC personnel?

2. Did personnel properly wear protective clothing, dosimetry, respirators?

3. Were appropriate contamination controls observed?

4. Were OSC personnel kept apprised of in-plant radiological conditions?

5. Were all in-plant activities conducted with regard to personnel safety, consistent with the need to complete the activity?

6. Did the OSC Coordinator track entry team members exposure or request this information from the ROC?

G. Access Control Rating: Ex. Good Sat. Poor Fail

1. Was there appropriate measures established against unnecessary personnel entering in the area?

2. Was there an identifiable system developed and used that effectively identified authorized personnel and their duties?

H. Summary

1. Describe any problems noted by the area being evaluated, a description of the problem, its outcome or effect, and any recommended corrective courses of action to mitigate or correct the deficiency.

2. Completely fill out the summary evaluation form, sign it, and promptly return it as directed.

3. Critiques of the exercise will be held for all participants, evaluators, and NRC personnel (if applicable) that want to attend. Locations and times will be provided.

EXERCISE EVALUATION CRITERIA
FOR
IN PLANT RADCON

Location:

Beaver Valley Power Station Unit 1 or Unit 2
Various locations in plant or onsite

Function:

1. Provide overall radiological protection for plant personnel.

Personnel and Duties:

1. Entry Radiation Control Foreman (RCF) - Establishes a control point and provides the final review to ensure that entry teams are properly briefed and equipped.

2. Radiation Work Permit (RWP) RCF - Oversees the writing and issuance of routine and emergency RWPs.

3. Radiation Control Technicians (RCTs) - Accompany and provide radiological guidance for entry teams, enforce and control exposure limits, gather radiological survey data, count samples, etc.

IN PLANT RADCON

A. Activation and Response Rating: Ex. Good Sat. Poor Fail

1. Were sufficient Radiation Control Technicians (RCTs) available to support all phases of the emergency radiological response?

2. Was there prompt activation of the plant entry control and emergency radiological work permit function?

3. Did RadCon foreman in charge of entry and Radiological Work Permits (RWPs) show adequate record keeping (logs and for status boards as appropriate)?

4. Did RCTs show proper survey techniques and handling of samples (smears, liquids, air samples, etc.)

5. Were survey results (counting of smears, etc.) obtained promptly and forwarded to the ROC?

6. Was sample counting conducted with due concern to background levels?

7. Was adequate dose tracking demonstrated with exposure information sent to appropriate locations (ROC, OSC, etc.)

B. Communications/Dissemination of Information Rating: Ex. Good Sat. Poor Fail

1. Were RCTs in the plant/field adequately updated on changing plant conditions?

2. Were communication (radio, PAX, Page Party) formal, clear, concise and without abbreviations?

3. Did entry and RWP foreman and RCTs pass important information back to the Radiological Operations Center (ROC)?

C. Procedures Rating: Ex. Good Sat. Poor Fail

1. Were personnel generally familiar with procedures?

2. Were procedures followed?

3. Were procedures appropriate?

4. Were procedures modified if necessary and was there adequate discussion of the consequences of such modifications?

D. Direction and Control Rating: Ex. Good Sat. Poor Fail

1. Did entry and RWP foreman clearly communicate requirements and precautions to RCTs and entry teams?

2. Did RCTs give adequate radiological guidance to the personnel to whom they were providing coverage?

3. Was there adequate debriefing of entry teams in order to gather information regarding in-plant conditions?

E. Material and Equipment Rating: Ex. Good Sat. Poor Fail

1. Was all required material and equipment available?

2. Were instruments functional and with current calibrations?

3. Were field instruments properly response checked prior to use?

4. Were field instruments selected with proper attention as to range for expected dose rates, environmental conditions, etc?

F. Protective Measures Rating: Ex. Good Sat. Poor Fail

1. Did personnel properly use respirators, Anti-Cs, dosimetry, etc.?

2. Did RCTs demonstrate adequate exposure and contamination control?

3. Were high range dosimeters used, as necessary, and properly positioned?

G. Access Control Rating: Ex. Good Sat. Poor Fail

1. Was entry into effected area properly controlled?

2. Were support personnel (firemen, ambulance crews, etc.) coming onsite quickly assigned dosimetry and provided appropriate escort?

H. Summary

1. Describe any problems noted by the area being evaluated, a brief description of the problem, its outcome or effect, and any recommended corrective courses of action to mitigate or correct the problem.

2. Completely fill out the summary evaluation form, sign it, and promptly return it as directed.

3. Critiques of the exercise will be held for all participants, evaluators, and NRC personnel (if applicable) that want to attend. Locations and times will be provided.

EXERCISE EVALUATION CRITERIA
FOR
RADIOLOGICAL OPERATIONS CENTER (ROC)

Location:

Beaver Valley Power Station
Radcon Foreman's Office - Turbine Building (735') Unit 1

Function:

1. Central location for coordinating the activities of Radcon technicians within the plant.

Personnel and Duties:

1. ROC Coordinator - Receives direction from the Radcon Coordinator located in the TSC. Is the liaison between the Rad Techs and the TSC?

2. Radcon Technicians - Activated as needed. Rad Techs provide support for inplant radiation monitoring as well as for emergency squad surveys inplant and accompanying offsite support vehicles and personnel.

RADCON OPERATORS CENTER

A. Activation and Response Rating: Ex. Good Sat. Poor Fail

1. Was activation/initiating efficient and organized?

2. Were personnel familiar with their responsibilities and did they respond in a timely manner?

B. Communications/Dissemination of Information Rating: Ex. Good Sat. Poor Fail

1. Were all required and specified communication circuits operable?

2. Were personnel familiar with communications available and the intended use of each?

3. Were communications adequate?

4. Were there sufficient personnel to conduct communication tasks?

5. Were periodic updates made? Were briefings made to facility personnel?

6. Were logs/status boards used effectively by personnel to review past events and to trend data?

7. Were appropriate communications techniques followed? (i.e., no abbreviations)

C. Procedures Rating: Ex. Good Sat. Poor Fail

1. Were personnel generally familiar with the relevant procedures?

2. Were procedures followed?

3. Were the procedures and the tech specs in agreement?

4. Were the procedures appropriate?

5. What was your overall assessment of the level of competency and state of training of the personnel observed? (NOTE: If a shortcoming or exceptional performance was observed, provide specific details in the Chronological Event Summary Sheet)

D. Direction and Control Rating: Ex. Good Sat. Poor Fail

1. Was the information flow from the plant to senior management, timely, complete and accurate?

2. Could the response be categorized as a team effort as opposed to a group of individual efforts?

3. Was there excessive noise and loitering in the facilities?

4. Was the person in charge clearly identifiable?

E. Material and Equipment Rating: Ex. Good Sat. Poor Fail

1. Was all of the required materials and equipment available?

2. Was the equipment functional?

3. Did personnel check to ensure that all equipment was available and functional early in the activation process?

4. If equipment was inoperable, were appropriate actions taken to resolve the deficiency?

5. Could the area support the personnel assigned to it?

6. Was there resources readily available to assess the emergency situation and to plan corrective actions?

F. Protective Measures Rating: Ex. Good Sat. Poor Fail

1. Did ROC personnel properly evaluate the need for protective clothing, dosimetry, respirators?

2. Were appropriate contamination controls implemented?

3. Were areas properly assessed before personnel were sent to enter the area?

4. Were all in-plant activities conducted with regard to personnel safety, consistent with the need to complete the activity? Did entry teams receive adequate briefings?

5. Was the normal radiological controls program appropriately modified to contend with the emergency radiological conditions?

6. Was there adequate dose tracking both pre and post entry?

7. Was there adequate attention paid to habitability surveys of various emergency centers?

G. Access Control Rating: Ex. Good Sat. Poor Fail

1. Were incoming personnel (fire-fighters, ambulances, etc.) provided appropriate escort?

H. Summary

1. Describe any problems noted by the area being evaluated, a brief description of the problem, its outcome or effect, and any recommended corrective courses of action to mitigate or correct the problem.

2. Completely fill out the summary evaluation form, sign it, and promptly return it as directed.

3. Critiques of the exercise will be held for all participants, evaluators, and NRC personnel (if applicable) that want to attend. Locations and times will be provided.

ROC 4

EXERCISE EVALUATION CRITERIA FOR FIELD MONITORING TEAMS

Location:

Offsite areas within the 10 mile Emergency Planning Zone (EPZ).

Function:

Offsite radiological surveying to confirm dose projections regarding any radiological release.

Personnel and Duties:

Radiation Control Technicians (RCT): Operate survey meters, air samplers, gather liquid samples, etc and do field evaluations on the samples. Relay these results to appropriate plant management. Keep records of time, locations, sample count results, etc.

FIELD MONITORING TEAMS EVALUATION

A. Activation and Response Rating: Ex. Good Sat. Poor Fail

1. Was activation efficient and organized?

2. Were personnel familiar with their responsibilities and respond in a timely manner?

3. Did one team member assume the role as the team leader?

4. Did the team receive an adequate briefing prior to departure?

B. Communications/Dissemination of Information Rating: Ex. Good Sat. Poor Fail

1. Was the mobile radio operable?

2. Were communications adequate?

3. Were accurate logs kept and sample data properly recorded?

4. Were teams kept informed of activities/plant status?

5. Were appropriate communication techniques followed? (No abbreviations, phonetic alphabet, "This is a drill", etc.)

6. Was there a two-way exchange of information such that the personnel observed understood the changing situation and were able to perform tasks in the context of the changing situation?

C. Procedures Rating: Ex. Good Sat. Poor Fail

1. Were personnel generally familiar with the relevant procedures?

2. Were procedures followed?

3. Were the procedures appropriate?

4. Was the overall level of competency and state of training adequate? (NOTE: Any shortcomings or exceptional performance should be detailed in the Controller/Observer Summary Sheets.

D. Direction and Control Rating: Ex. Good Sat. Poor Fail

1. Was adequate and timely guidance provided by management?

2. Were the teams reminded to periodically check their pocket dosimeter readings?

E. Material and Equipment Rating: Ex. Good Sat. Poor Fail

1. Was a vehicle readily available for the teams use?

2. Did the vehicle meet the teams needs?

3. Was all of the other required material and equipment available?

4. Was the equipment functional?

5. Did the personnel check to ensure that all equipment was available and functional early in the activation process? (NOTE: This includes establishing radio contact.)

6. If equipment was inoperable or failed in use, were appropriate actions taken to resolve the deficiency? (e.g., back-ups or spares)

F. Protective Measures Rating: Ex. Good Sat. Poor Fail

1. Did personnel properly wear protective clothing, dosimetry, respirators?

2. Were appropriate contamination controls observed?

3. Was the normal radiological controls program appropriately modified to contend with the emergency radiological conditions?

G. Summary

1. Describe any problems noted with the field monitoring teams, a description of the problem, its outcome or effect, and any recommended corrective courses of action to mitigate or correct the deficiency.

2. Completely fill out the summary evaluation form, sign it, and promptly return it as directed.

FMT 3

3. Critiques of the exercise will be held for all participants, evaluators, and NRC personnel (if applicable) that want to attend. Locations and times will be provided.

FMT 4

EXERCISE EVALUATION CRITERIA
FOR
HOSPITALS

Location:

Aliquippa Hospital
or
Beaver County Medical Center

Function:

1. To render emergency medical care to a contaminated/injured individual while minimizing the radiological consequence to the patient, facility and care providers.

Personnel and Duties

1. Emergency Room Staff - provide necessary medical care and decontamination.

2. Radcon Technician, Radcon Foreman - provide advice to medical staff regarding levels of contamination, maintaining exposures ALARA, aid in preventing the spread of contamination, overseeing the handling of radioactive waste.

NOTE: It is not the intent of this package to evaluate the medical practice of the hospital but only their management of the radiological situation.

HOSPITAL EVALUATION

A. Communications Rating: Ex. Good Sat. Poor Fail

1. Was the call from the utility received in a timely manner so as to allow adequate area preparation?

2. Did the hospital make a return call to verify the source?

3. Did the utility communicator give adequate information especially regarding the nature of the injuries, the approximate levels of contamination, estimated arrival time, etc.?

4. Was there an adequate exchange of information between the emergency room personnel and the RadTech?

B. Activation and Response Rating: Ex. Good Sat. Poor Fail

1. Was the controlled area established in time to receive the victim?

2. Was the controlled area properly established so as to minimize the spread of contamination or prevent the contamination of permanently installed equipment/material?

3. Did the personnel show adequate knowledge of, and demonstrate good techniques to prevent the spread of contamination to clean areas of the victim?

4. Did the personnel show adequate knowledge of how to remove the patient from the controlled area at the end of the treatment?

5. Were personnel able to remove protective clothing in such a way so as to minimize the chance of contaminating themselves or of spreading contamination?

C. Equipment Rating: Ex. Good Sat. Poor Fail

1. Were all the necessary materials (relating to handling contaminated personnel) available and in sufficient quantity?

2. Did the personnel have and use dosimetry?

D. Health Physics Support Rating: Ex. Good Sat. Poor Fail

1. Did the Rad Tech demonstrate adequate knowledge of his/her function in advising the hospital on contamination levels, etc?

2. Did the Rad Tech insure that good ALARA and contamination control practice were followed (i.e., checking dosimeters periodically, surveying items prior to release, bagging waste, etc.)?

3. Did a Rad Con Supervisor accompany the victim?

4. Did the supervisor keep plant management advised as to the condition of the victim?

E. Summary

1. Describe any problems by the area being evaluated, a brief description of the problem, its outcome or effect and any recommended corrective courses of action to mitigate or correct the problem.

2. Completely fill out the summary evaluation form, sign it and promptly return it as directed.

3. Critiques of the exercise will be held for all participants, evaluators and NRC personnel (if applicable) that want to attend. Locations and times will be announced.

EXERCISE EVALUATION CRITERIA FOR SECURITY

Location:

Beaver Valley Power Station
Security Building/Various

Functions:

1. Maintain an appropriate plant security posture and institute appropriately contingency measures as necessary.

2. For unit and site evacuations; receive accountability reports from personnel assembly areas; determine the identity of unaccounted personnel, advise the Emergency Director of the status of personnel accountability, and maintain accountability of personnel remaining behind during an emergency.

3. Expeditously provide for station access for emergency response personnel who do not have current security badging at the Beaver Valley Power Station.

Personnel and Duties:

1. Security Coordinator

2. Security Liaison

3. Security Supervisors

4. Security Officers

A. Activation and Response Rating: Ex. Good Sat. Poor Fail

1. Was activation/initiation efficient and organized?

2. Were personnel familiar with their responsibilities and respond in a timely manner?

3. Was the person in charge clearly identifiable?

4. Was the transfer of responsibilities accomplished efficiently and effectively?

5. Were all personnel made aware when transfers had occurred?

B. Communications/Dissemination of Information Rating: Ex. Good Sat. Poor Fail

1. Were all required and specified communication circuits operable?

2. Were personnel familiar with communications available and the intended use of each?

3. Were communications adequate?

4. Were there sufficient personnel to conduct communication tasks?

5. Was incoming information effectively and efficiently distributed to appropriate personnel?

6. Were periodic update announcements made to facility personnel?

7. Did communicators keep accurate logs?

8. Were the status boards kept updated?

9. Did persons in charge spend an inordinate amount of time on communications, such that their attention was diverted from the incident?

10. Were logs used effectively by personnel to review past events to trend data?

11. Were appropriate communications techniques (no abbreviations, phonetic alphabet, sign-on, sign-off, etc.) followed?

12. Were Security personnel adequately informed about plant conditions?

C. Procedures Rating: Ex. Good Sat. Poor Fail

1. Were personnel generally familiar with the relevant procedures?

2. Were procedures followed?

3. Were the procedures appropriate?

4. What was your overall assessment of the level of competency and state of training of the personnel observed? (NOTE: If a shortcoming or exceptional performance was observed, provide specific details in the Chronological Event - Summary Sheet)

D. Direction and Control Rating: Ex. Good Sat. Poor Fail

1. Was the information flow from the plant to senior management, timely, complete and accurate?

2. Could the response be categorized as a team effort or a group of individual efforts?

3. Was there excessive noise and loitering in the security facilities?

E. Material and Equipment Rating: Ex. Good Sat. Poor Fail

1. Was all of the required material and equipment available?

2. Was the equipment functional?

3. Did personnel check to ensure that all equipment was available and functional early in the activation process?

4. If equipment was inoperative or failed in use, were appropriate actions taken to resolve the deficiency (e.g., spares or backups, etc.)?

5. Were there any situations where the lack of equipment and materials, or inoperative equipment, or lack of ability to operate the equipment, prevent personnel from performing assigned tasks?

6. Could the area support the personnel assigned to it?

F. Protective Measures Rating; Ex. Good Sat. Poor Fail

1. Were appropriate protective measures implemented for security personnel?

2. Were all in-plant activities conducted with regard to personnel safety, consistent with the need to complete the activity?

G. Access Control Rating; Ex. Good Sat. Poor Fail

1. Was an appropriate security posture established against unauthorized personnel?

2. Were incoming support personnel (fire fighters, ambulances, others) provided appropriate access in a timely manner?

3. Was there an identification systems developed and used that effectively identified authorized personnel and their duties?

H. Summary

1. Describe any problems noted by the area being evaluated, a brief description of the problem, its outcome or effect, and any recommended corrective courses of action to mitigate or correct the problem.

2. Completely fill out the summary evaluation form, sign it, and promptly return it as directed.

3. Critiques of the exercise will be held for all participants, evaluators, and NRC personnel (if applicable) that want to attend. Locations and times will be provided

EXERCISE EVALUATION CRITERIA
FOR
CHEMISTRY

Location:

Beaver Valley Power Station

Chemistry Areas

Function:

1. Responsible for conducting all in-plant sampling as requested by the Emergency Director.

2. Also responsible for chemical analysis done on and offsite, including environmental samples.

Personnel and Duties:

1. Chemistry Coordinator (in TSC)

2. Chemists, Chem Analysts (in-plant)

CHEMISTRY

A. Activation and Response Rating: Ex. Good Sat. Poor Fail

1. Was activation/initiation efficient and organized?

2. Were personnel familiar with their responsibilities and did they respond in a timely manner?

3. Was the person in charge clearly identifiable?

B. Communications/Dissemination of Information Rating: Ex. Good Sat. Poor Fail

1. Were all required and specified communication circuits operable?

2. Were personnel familiar with communications available and the intended use of each?

3. Were communications adequate?

4. Were there sufficient personnel to conduct communication tasks?

5. Was incoming information effectively and efficiently distributed to appropriate personnel?

6. Did communicators keep accurate logs?

7. Were logs used effectively by personnel to review past events to trend data?

8. Were appropriate communications techniques (no abbreviations, phonetic alphabet, sign-on, sign-off, etc.) followed?

C. Procedures Rating: Ex. Good Sat. Poor Fail

1. Were personnel generally familiar with the relevant procedures?

2. Were procedures followed?

3. Were the procedures appropriate?

4. What was your overall assessment of the level of competency and state of training (NOTE: If shortcomings or exceptional performance was observed, provide specific details in the Chronological Event Summary Sheet.)

D. Direction and Control Rating: Ex. Good Sat. Poor Fail

1. Could the response be categorized as a team effort or a group of individual efforts?

2. Was there an effective mechanism for resolving differences of opinions regarding technical issues or actions to be taken?

3. Was there excessive noise and loitering in the response facility?

E. Material and Equipment Rating: Ex. Good Sat. Poor Fail

1. Was all of the required material and equipment available?

2. Was the equipment functional?

3. Did personnel check to ensure that all equipment was available and functional early in the activation process?

4. Were there any situations in which additional equipment or materials or different types of equipment could have made the activity more effective? (If so, please detail.)

5. Could the area support the personnel assigned to it?

F. Protective Measures Rating: Ex. Good Sat. Poor Fail

1. Were appropriate protective measures implemented for plant personnel?

2. Was appropriate contamination controls observed?

3. Were all in-plant activities conducted with regard to personnel safety, consistent with the need to complete the activity?

4. Was the normal radiological controls program appropriately modified to contend with the emergency radiological conditions?

G. Summary

1. Describe any problems noted by the area being evaluated, a brief description of the problem, its outcome or effect, and any recommended corrective courses of action to mitigate or correct the problem.

2. Completely fill out the summary evaluation form, sign it, promptly return it as directed.

3. Critiques of the exercise will be held for all participants, evaluators, and NRC personnel (if applicable) that want to attend. Locations and times will be provided.

EXERCISE EVALUATION CRITERIA
FOR
TECHNICAL SUPPORT CENTER (TSC)

Location:

Beaver Valley Power Station
Emergency Response Facility (ERF)

Function:

1. Provide plant management and technical support to the plant operations personnel during emergency conditions.

2. Relieve the reactor operators of peripheral duties and communications not directly related to reactor system manipulations.

3. Prevent congestion in the Control Room.

4. Perform EOF functions for the Alert Emergency Class and for the Site Area and General Emergency Class until the EOF is functional.

Personnel and Duties:

1. Emergency Director - Responsible for the command and control of all accident mitigation actions on site.

2. Radiological Controls Coordinator - Responsible for onsite radiological controls and personnel monitoring.

3. Environmental Assessment and Dose Projection Coordinator - Responsible for dose projections and offsite monitoring along with radiological assessment, sample coordination and the interface with DER/BRP. (Operates out of the EOF area)

4. Operations Coordinator - Acts as management representative in the Control Room. All directives pertaining to operation of the plant, from management will go to the NSS via the Operations Coordinator.

5. Communications and Records Coordinator - Coordinates all communications and maintain records.

6. Other personnel:

   a. Chemistry Coordinator

   b. Security Coordinator (CAS)

EXERCISE EVALUATION CRITERIA
FOR
TECHNICAL SUPPORT CENTER (TSC) (continued)

c. Security Liaison

d. Operations Support Center Coordinator

e. Technical Support Coordinator

f. Maintenance Coordinator

g. Assistant to Emergency Director

h. TSC Communications, Records, Engineering Assistants

i. Computer Coordinator

TECHNICAL SUPPORT CENTER EVALUATION

A. Activation and Response Rating: Ex. Good Sat. Poor Fail

1. Was activation/initiating efficient and organized?

2. Were personnel familiar with their responsibilities and respond in a timely manner?

3. Was the person in charge clearly identifiable?

4. Were the transfers of responsibilities accomplished efficiently and effectively?

5. Were all participants made aware the transfers had occurred? (NOTE: A formal announcement should be made.)

B. Communications/Dissemination of Information Rating: Ex. Good Sat. Poor Fail

1. Were all required and specified communication circuits operable?

2. Were all personnel familiar with communications available and the intended use of each?

3. Were communications adequate?

4. Were there sufficient personnel to conduct communication tasks?

5. Was incoming information effectively and efficiently distributed to appropriate personnel?

6. Were periodic update announcements made via Intercom or face-to-face?

7. Did communicators keep accurate logs?

8. Were the status boards kept updated?

9. Did persons in charge spend an inordinate amount of time on communications, such that their attention was diverted from the incident?

10. Were there periodic reports from the various response facilities to the TSC?

11. Were private and dedicated lines used as effectively as possible?

12. Were logs used effectively by personnel to review past events and to trend data?

13. Was information provided to the Emergency News Center in a timely manner?

14. Were appropriate communication techniques (no abbreviations, phonetic alphabet, sign-on sign-off, etc.) followed?

15. Was there a two-way exchange of information such that the personnel observed understood the changing situation and were able to perform their tasks in the context of the changing situation and to effectively contribute to overall assessment and mitigation?

C. Procedures Rating: Ex. Good Sat. Poor Fail

1. Were personnel generally familiar with the relevant procedures?

2. Were procedures followed?

3. Were procedures and tech specs compatible?

4. Were personnel so overwhelmed with procedural requirements that they were distracted from the appropriate response?

5. Were the procedures appropriate?

6. Was the overall level of competency and training satisfactory? (NOTE: Shortcomings or exceptional performance should be detailed in the Chronological Events Summary.)

D. Direction and Control Rating: Ex. Good Sat. Poor Fail

1. Was the information flow from the plant to senior management, timely, complete and adequate?

2. Did the individual emergency supervisors keep the Emergency Director apprised of significant events within their sphere of concern?

3. Did the Emergency Director effectively delegate responsibilities to the individual coordinators?

4. Did the Emergency Director become too deeply involved in a specific activity to the exclusion of other activities?

5. Could the response be categorized as a team effort or a group of individual efforts?

6. Were interfaces with outside technical groups effective?

7. Was there an effective mechanism for resolving differences of opinion regarding technical issues and actions to be taken?

8. Was there excessive noise and loitering in the response facility?

E. Material and Equipment Rating: Ex. Good Sat. Poor Fail

1. Was all of the required material and equipment available?

2. Was the equipment functional?

3. Did the personnel check to ensure that all equipment was available and functional early in the activation process?

4. If equipment was inoperative or failed in use, were appropriate actions taken to resolve deficiency (spare and back-ups, etc.)

5. Were there any situations in which the lack of equipment and materials, or inoperative equipment, or a lack of ability to operate the equipment prevented personnel from performing assigned tasks? (If so, please detail)

6. Were there any situations in which additional equipment or materials, or different types of equipment could have made the activity more effective?

7. Could the area support the personnel assigned to it?

8. Were there resource materials readily available to assess the emergency situation and to plan corrective action - maps, reference books, copies of emergency plans and procedures?

F. Protective Measures Rating: Ex. Good Sat. Poor Fail

1. Were appropriate protective measures implemented for plant personnel?

2. Were appropriate contamination controls observed?

3. Were TSC personnel kept apprised of in-plant radiological conditions?

4. Were all in-plant activities conducted with regard to personnel safety, consistent with the need to complete the activity?

5. Was the normal radiological controls program appropriately modified to contend with the emergency radiological conditions?

G. Access Control Rating: Ex. Good Sat. Poor Fail

1. Was an appropriate security posture established against unauthorized personnel?

2. Was there an identification system developed and used that effectively identified authorized personnel and their duties?

H. Summary

1. Describe any problems noted by area being evaluated, a description of the problem, its outcome or effect, and any recommended corrective courses of action to mitigate or correct the deficiency.

2. Completely fill out the summary evaluation form, sign it, and promptly return it as directed.

3. Critiques of the exercise will be held for all participants, evaluators, and NRC personnel (if applicable) that want to attend. Location and times will be provided.

EXERCISE EVALUATION CRITERIA FOR EMERGENCY OPERATIONS FACILITY (EOF)

Location:

Beaver Valley Power Station

Emergency Response Facility (ERF)

Functions:

1. Management of overall licensee emergency response.
2. Coordination of radiological and environmental assessment.
3. Determination of recommended public protective actions.
4. Coordination of emergency response activities with Federal, State, and local agencies.

Personnel and Duties:

1. Emergency/Recovery Manager - Responsible for the overall activation and operation of the EOF and for recommending offsite protective actions.
2. Offsite Agency Liaison - Responsible for acting as a liaison with the Nuclear Regulatory Commission concerning Operating License commitments and serving as a liaison between the utility and the representatives of the state and local governments in the EOF.
3. Engineering Manager - Responsible for directing the engineering efforts related to the emergency response and for short-term modifications to plant systems to mitigate the accident.
4. Support Services Manager - Acts as a liaison with outside groups in providing transportation, food, manpower, equipment, supplies and other logistical support for emergency personnel.

5. Other personnel:

a. Assistant to Emergency/Recovery Manager

b. Environmental Assessment and Dose Projection Coordinator

c. Technical Spokesperson

d. Corporate Communications Coordinator

e. Assistants in Communications Records and Engineering

EOF 2

EMERGENCY OPERATIONS FACILITY EVALUATION

A. Activation and Response Rating: Ex. Good Sat. Poor Fail

1. Was the activation efficient and organized?

2. Were personnel familiar with their responsibilities and respond in a timely manner?

3. Was the person in charge clearly identifiable?

4. Were the transfers of responsibilities from the TSC accomplished efficiently and effectively?

5. Were all personnel made aware when transfers had occurred?

B. Communications/Dissemination of Information Rating: Ex. Good Sat. Poor Fail

1. Were all required and specified communication circuits operable?

2. Were personnel familiar with communications available and the intended use of each?

3. Were communications adequate?

4. Were there sufficient personnel to conduct communication tasks?

5. Was incoming information effectively and efficiently distributed to appropriate personnel?

6. Were periodic updates provided by the facility director?

7. Did personnel keep accurate logs?

8. Were the status boards kept updated?

9. Did persons in charge spend an inordinate amount of time on communications, such that their attention was diverted from the incident?

EOF 3

10. Were there periodic reports from the various response facilities to the EOF?

11. Were offsite personnel kept informed of activities/plant status?

12. Were the private lines and communications systems used as intended? Did non-emergency communications interfere with emergency transmissions?

13. Were logs and status boards used effectively by personnel to review past events and to trend data?

14. Was information provided to the Emergency News Center in a timely manner?

15. Were appropriate communications techniques (no abbreviations, phonetic alphabet, sign-on, sign-off, etc.) followed?

C. Procedures Rating: Ex. Good Sat. Poor Fail

1. Were personnel generally familiar with the relevant procedures?

2. Were procedures followed?

3. Were personnel so overwhelmed with procedural requirements that they were distracted from the appropriate response?

5. Was the overall level of competency and state of training adequate? (NOTE: Shortcomings and exceptional performance observed should be noted in detail in the Event Summary Sheet.)

D. Direction and Control Rating: Ex. Good Sat. Poor Fail

1. Was the information flow from the plant to senior management, timely, complete and accurate?

2. Was adequate and timely guidance provided by the senior management?

3. Did the emergency supervisors keep the Emergency/Recovery Manager apprised of significant events within their sphere of concern?

4. Did the Emergency/Recovery Manager effectively delegate responsibilities to the individual coordinators?

5. Did the Emergency/Recovery Manager become too deeply involved in a specific activity to the exclusion of other activities?

6. Could the response be categorized as a team effort or a group of individual efforts?

7. Were interfaces with outside groups effective?

8. Was there an effective mechanism for resolving differences of opinion regarding technical issues and actions to be taken?

9. Was there excessive noise and loitering in the EOF?

E. Material and Equipment Rating: Ex. Good Sat. Poor Fail

1. Was all of the required material and equipment available?

2. Was the equipment functional?

3. Did personnel check to ensure that all equipment was available and functional early in the activation process?

4. If the equipment was inoperative or failed in use, were appropriate actions taken to resolve the deficiency (e.g., spare or backup, equipment etc.)?

5. Were there any situations in which additional equipment or materials, or different types of equipment could have made the activity more effective? If so, please detail.

6. Were there any situations in which the lack of equipment of materials, or inoperative equipment, or lack of ability to operate the equipment, prevented personnel from performing assigned tasks?

7. Could the area support the personnel assigned to it?

8. Were there resource materials readily available to assess the emergency situation and to plan corrective actions - maps, reference books, copies of emergency plans and procedures?

F. Access Control Rating: Ex. Good Sat. Poor Fail

1. Was an appropriate security posture established against unauthorized personnel?

2. Was there an identification system developed and used that effectively identified authorized personnel and their duties?

G. Summary

1. Describe any problems noted by the area being evaluated. A brief description of the problem, its outcome or effect, and any recommended corrective courses of action to mitigate to correct the problem.

2. Completely fill out the summary evaluation form, sign it, and promptly return it as directed.

3. Critiques of the exercise will be held for all participants, evaluators, and NRC personnel (if applicable) that want to attend. Locations and times will be provided.

CONTROLLER EVALUATION FORM

JOINT PUBLIC INFORMATION CENTER

DATE: _____

OVERALL EVALUATION:

EVALUATOR: _____ (print)

_____ (sign)

Good _____
Sat. _____
Unsat. _____

* *

I. ACTIVATION AND RESPONSE:
(Circle One)

Category Evaluation
Good Sat. Unsat.

A. Time Manager arrived: _____

B. Time communications manned: _____

C. Time JPIC fully functional: _____

D. Was the JPIC activated at the appropriate time? YES NO

_____

_____

II. COMMUNICATIONS:
(Circle One)

Category Evaluation
Good Sat. Unsat.

A. Was communications equipment tested and operable as appropriate? YES NO

B. Were correct communications procedures and techniques utilized?

1. Audible and understandable? YES NO
2. Concise? YES NO
3. Formal? YES NO
4. Accurate? YES NO
5. Timely? YES NO
6. Identities ascertained and logged? YES NO
7. Abbreviations and acronyms minimized? YES NO
8. Messages preceded by "This is a drill"? YES NO
9. Information updates frequent enough? YES NO

II. PROCEDURES
(Circle One)

Category Evaluation
Good Sat. Unsat.

A. Did the Manager maintain overall control of information released to the media (public) through the JPIC? YES NO

B. Was the dissemination of information to the media:

1. Swift? YES NO
2. Orderly? YES NO
3. Accurate? YES NO
4. Technically interpreted? YES NO
5. Significant? YES NO
6. Candid? YES NO

C. Was rumor control in the JPIC adequate? YES NO N/A

D. Did the Manager ensure:

1. Smooth operation of the JPIC-EOF communications link? YES NO
2. That media services were properly handled? YES NO

E. Were news releases prepared:

1. Accurately? YES NO
2. Timely? YES NO

F. Were news releases:

1. Approved prior to release? YES NO
2. Distributed properly? YES NO

G. Was the media briefing schedule:

1. Timely? YES NO
2. Adequate? YES NO
3. Publicized? YES NO
4. Adhered to? YES NO

H. Were responses to public inquiry adequately handled? YES NO N/A

I. Was rumor control properly addressed? YES NO N/A

J. Was security enforced properly at JPIC?

1. Personnel registered? YES NO
2. Personnel controlled? YES NO
3. Number of personnel controlled? YES NO

K. Was recordkeeping of data/event logs performed?

1. Timely? YES NO
2. Accurately? YES NO

L. Was documentation properly controlled? YES NO

M. Were status boards maintained current? YES NO N/A

N. Were news releases coordinated between JPIC, the State, and the County? YES NO N/A

IV. EQUIPMENT AND MATERIALS (Circle One)

		Category Evaluation Good	Sat.	Unsat.
A.	Were supplies adequately stocked?	YES	NO	
B.	Was emergency equipment inventoried:			
	1. Before use?	YES	NO	
	2. After use?	YES	NO	
C.	Was equipment tested to be operational, as applicable?	YES	NO	
D.	Were staff members familiar with the equipment which they were responsible for operating?	YES	NO	
E.	Was damaged/missing equipment repaired/ replaced, as appropriate?	YES	NO	

H. INTERFACE:
(Circle One)

Category Evaluation
Good Sat. Unsat.

A. Was the information flow between the staff adequate? YES NO

B. Was the information flow between emergency response facilities adequate? YES NO

I. ADDITIONAL COMMENTS:

EXERCISE EVALUATE CRITERIA
FOR
OFFSITE COMMUNICATION

Location:

Control Room, ERF

Functions:

1. Provide initial and follow-up modifications to offsite agencies.

Personnel and Duties:

1. Communications and Records Coordinator: Provide overall direction and control for notifications to offsite agencies, ensure proper approval and completeness of notification forms prior to release, act as a communicator as necessary. (Other duties described under TSC and Control Room evaluation)

2. Communicators: Make initial and follow-up notification phone calls to offsite agencies. Receive calls from offsite agencies and supply information regarding follow-up notification forms.

OFFSITE COMMUNICATIONS

A. Activation and Response Rating: Ex. Good Sat. Poor Fail

1. Were ERF offsite communications personnel available in a timely manner so as to not delay the activation of ERF functions?

2. Were personnel familiar with their duties?

3. Was the person in charge clearly identifiable?

B. Communication/Dissemination of Information Rating: Ex. Good Sat. Poor Fail

1. Were personnel familiar with the equipment?

2. Were the initial notifications completed within specified time limits?

3. Were follow-up notifications made on a periodic basis and for changing conditions not requiring an initial notification?

4. Were appropriate communications techniques used (no use of accronyms, abbreviations, etc.)? Was "This is a drill" used before and after each communication?

5. Were forms properly filled out and approved before being given to communicators?

6. Was the transfer of the offsite communication responsibility from the Control Room to the ERF completed in an efficient manner without loss of information?

C. Procedures Rating: Ex. Good Sat. Poor Fail

1. Were personel generally familiar with relevant procedures?

2. Were procedures followed?

3. Were procedures appropriate?

4. Was the overall level of competency and state of training adequate? (NOTE: Any shortcomings or exceptional performance observed should be detailed in the Event Summary Sheets)

D. Direction and Control Rating: Ex. Good Sat. Poor Fail

1. Were communicators given adequate guidance by the Communications and Records Coordinator?

E. Material and Equipment Rating: Ex. Good Sat. Poor Fail

1. Were the proper forms available and in adequate quantity?

2. Did equipment function properly?

3. Were autodialers preprogramed and were the phone numbers correct?

Exercise Chronological

Record

Sheets

Section VIII

(Part C)

Section VIII

EXERCISE CHRONOLOGICAL RECORD SHEET

Evaluator:_____ Location:_____ Date:_____

Time	Event

DRILL/EXERCISE CRITIQUE SUMMARY

NAME (Print) _____ DATE _____ AREA/FUNCTION OBSERVED _____

(Signature) _____ Overall Rating (Circle) Ex. Good Sat. Poor Fail

STRENGTHS:

WEAKNESSES:

- Activation
- Procedures
- Equipment
- Performance (communications, interaction, etc.)
- Misc.

RECOMMENDATIONS:

* NOTE: (Use back side and additional sheets if necessary.)

Critique Agenda

Section IX

(Part A)

Section IX

CRITIQUE AGENDA

In order to ensure that planning programs are upgraded or problem items addressed, the Nuclear Regulatory Commission and Federal Emergency Management Agency require that a critique be held following each emergency drill or exercise. The critique is a review session normally held in a meeting style for both the exercise participants and controllers. The critique provides a forum for the comments and views of the individuals involved to be openly aired in the form of constructive criticism and suggestions for improvement.

The following is a guideline agenda for the station's critique of the exercise.

Subject: 1991 Beaver Valley Power Station Annual Emergency Exercise Critique.

Objective: To allow for discussion and comment on the general outcome of the exercise and to identify action items for necessary improvements.

Topics:

- Introduction -To be given by critique chairperson.
- Overview of Outcome - Should not exceed 15 minutes for any one (1) area, be it Operations, TSC, EOF, onsite RadCon, etc. (including the utility or NRC at a joint critique).
- Specific problems (Facilities and equipment, communications, personnel response, etc.) - Should not exceed one-half hour for any one (1) area.
- Scenario problems - (too short, too long, not enough information) Should be brief and to the point.
- Summary - To be provided by chairperson.

NOTE: At all critiques, ensure that the notes and materials used by the exercise controllers/observers are collected by a requisite representative of either the utility, Federal, State or local agencies. These should be used not only for documentation purposes, but also to assist in the preparation of formal written critiques and scenarios following the open meetings.

References

Section IX

(Part B)

Section VIII

References

*Beaver Valley Power Station, Emergency Preparedness Plan and Implementing Procedures.

*Beaver Valley Power Station Operating Manuals

53A Emergency Operating Procedures
53C Abnormal Operating

Normal Operating Procedures
Chapter 11 "Safety Injection"
Chapter 55 "Surveillance Tests"
Chapter 56 "Personal Injury"
Annunciator response procedures (various chapters)

*Radiation Control Manual Chapters 1-5

*Beaver Valley Power Station Security Manual

*Beaver County Emergency Response Plan

*Columbiana County Emergency Response Plan

*Hancock County Emergency Response Plan

*West Virginia Radiological Emergency Plan for the Beaver Valley Power Station.

*Commonwealth of Pennsylvania Disaster Operations Plan Annex E

*The Ohio Plan for Response to Radiation Emergencies at Licensed Nuclear Facilities.

Acknowledgements

Section IX

Section VIII

Acknowledgements

The 1991 Annual Exercise Scenario was prepared by the following Duquesne Light Scenario Development Committee members:

Duquesne Light	Department
M. W. Adams	Training
D. Carothers	Maintenance
N. DiPietro	Security
M. P. Duranko	RadCon
W. Etzel	Engineering
R. Fedin	ISEG
R. J. Freund	RadCon
G. Guzak	Maintenacne
M. Hamel	Computer Group
D. M. Hosmer	Training
C. P. Hynes	Operations
R. C. Jenkins	Training
J. Kalinyak	Chemistry
D. E. Kozak	Operations
G. A. McKee	E.P.P.
R. L. Moser	E.P.P.
D. Murcko	Maintenance
H. I. Szklinski	E.P.P.

NUS Simulator Personnel

T. Bean	Simulator Instructor

Duquesne Light Company Beaver Valley Power Station
P.O. Box 4
Shippingport, PA 15077-0004

JOHN D. SIEBER
Vice President, Nuclear Group

(412) 393-6255

December 4, 1990
ND1VPN:6448

United States Nuclear Regulatory Commission
Attention: W. Lazarus, Chief
Emergency Preparedness Section, Region 1
475 Allendale Road
King of Prussia, Pennsylvania 19406

Reference: Beaver Valley Power Station, Unit No. 1 & 2
Docket No. 50-334, License No. DPR-66
Docket No. 50-412, License No. NPF-73
Emergency Preparedness Plan

Dear Sir:

In support of the schedule for review of Beaver Valley Power Station's 1991 Annual Emergency Preparedness Exercise, Duquesne Light Company is providing the attached Beaver Valley Power Station Unit No. 1 Annual Exercise scenario package. The exercise, to be conducted on February 27, 1991 will be an onsite only Exercise. However, at a minimum, participation in the area of communications will occur with the States of Pennsylvania, Ohio, West Virginia and their associated Counties (Beaver, Columbiana, and Hancock).

We request that any comments on the scenario be provided to the Duquesne Light Company no later than January 31, 1991 to allow adequate time to incorporate any needed scenario changes.

Contacts for the exercise and its preparation should be directed to Mr. H. I. Szklinski (412) 393-5772. Your cooperation on this matter is greatly appreciated and will help to ensure that the scenario will be one that thoroughly addresses all objectives in a realistic manner.

Very truly yours,

J. D. Sieber
Vice President,
Nuclear Group

JDS/HIS:plg

Attachment

9012170072
280

IE35

130029

cc: Mr. Jim Beall, Resident Inspector
U.S. Nuclear Regulatory Commission
Beaver Valley Power Station
Shippingport, PA 15077

U.S. Nuclear Regulatory Commission (w/o Attachment)
Document Control Desk
Washington, D.C. 20555