LA CROSSE BOILING WATER REACTOR
FINAL STATUS SURVEY RELEASE RECORD

REACTOR BUILDING BASEMENT
SURVEY UNIT B1-010-001

PREPARED BY / DATE:	Mitchell Uz	8/15/19
	M. Uz, Survey Design Specialist	
REVIEWED BY / DATE:		8/15/19
	R. Yetter, Director, Radiological Site Closure	
REVIEWED BY / DATE:	P Hollenbeck	8/28/19
	P. Hollenbeck, Radiological Engineer	
APPROVED BY / DATE:	Scott Zoller	8/28/19
	S. Zoller, FSS Manager	

TABLE OF CONTENTS

LIST OF TABLES

LIST OF FIGURES

LIST OF ACRONYMS AND ABBREVIATIONS

ALARA	As Low As Reasonably Achievable
BFM	Basement Fill Model
DQO	Data Quality Objective
DCGL	Derived Concentration Guideline Level
$DCGL_B$	Basement Derived Concentration Guideline Level
EMC	Elevated Measurement Comparison
FOV	Field-of-View
FSS	Final Status Survey
IC	Insignificant Contributors
ISOCS	In-Situ Object Counting System
LACBWR	La Crosse Boiling Water Reactor
LBGR	Lower Bound of the Gray Region
LTP	License Termination Plan
MARSSIM	Multi-Agency Radiation Survey and Site Investigation Manual
MDC	Minimum Detectable Concentration
$OpDCGL_B$	Basement Operational Derived Concentration Guideline Level
QAPP	Quality Assurance Project Plan
QC	Quality Control
RA	Radiological Assessment
ROC	Radionuclides of Concern
SOF	Sum-of-Fraction
UBGR	Upper Bound of the Gray Region
WGTV	Waste Gas Tank Vault
WTB	Waste Treatment Building

1. EXECUTIVE SUMMARY

This Final Status Survey (FSS) Release Record for survey unit B1-010-001, Reactor Building Basement, has been generated in accordance with LaCrosse*Solutions* procedure LC-FS-PR-009, *Final Status Survey Data Reporting* (Reference 1) and satisfies the requirements of Section 5.11 of the *La Crosse Boiling Water Reactor License Termination Plan* (LACBWR LTP) (Reference 2).

An FSS sample plan for this survey unit was developed in accordance with LaCrosse*Solutions* procedure LC-FS-PR-002, *Final Status Survey Package Development* (Reference 3), the LACBWR LTP, and with guidance from NUREG-1575, Revision 1, *Multi-Agency Radiation Survey and Site Investigation Manual* (MARSSIM) (Reference 4).

This survey unit has a MARSSIM classification of 1. A survey plan was designed based upon use of the Sign Test as the nonparametric statistical test for compliance. Both the Type I (α) and Type II (β) decision error rates were set at 0.05. As a systematic measurement population, forty-five (45) measurements using the Canberra In-Situ Object Counting System (ISOCS) were acquired from the survey unit.

The analytical results for all systematic measurements taken in survey unit B1-010-001 indicate that the maximum Sum-of-Fraction (SOF), considering the concentration of all applicable Radionuclides of Concern (ROC), either by direct measurement or by inference, is equal to 0.0232, when applying the respective Operational Derived Concentration Guideline Levels ($OpDCGL_B$). Therefore, the null hypothesis is rejected, and survey unit B1-010-001 is acceptable for unrestricted release.

The mean SOF for systematic measurements when applying the respective Base Case DCGLs ($DCGL_B$) is 0.0004. The maximum SOF for the judgmental measurements, when compared to the $DCGL_B$ is 0.0753. The total SOF, when factoring in the area-weighted SOF of the elevated judgmental measurements is 0.0006, which equates to a dose of 0.015 mrem/yr.

2. SURVEY UNIT DESCRIPTION

B1-010-001 is an impacted Class 1 basement survey unit. This survey unit housed the nuclear reactor and primary reactor systems. All internal systems, concrete, and the steel liner were removed during demolition. At end-state, the survey unit consisted of the concrete floor and concrete walls up to 3 feet below grade (636 foot elevation). The total surface area of the survey unit is 512 m^2.

3. CLASSIFICATION BASIS

Based on the *Historical Site Assessment* (Reference 5), the Reactor Building Basement was identified as a Class 1 area.

The initial site characterization surveys performed by Energy*Solutions* were conducted between October 9, 2014, and August 6, 2015. Because of limited accessibility, the Reactor Building Basement interior structural surfaces characterization was deferred.

A Radiological Assessment (RA) (considered a form of continuing characterization) was performed in the survey unit between March 15, 2019, and March 21, 2019. The RA survey was performed to ensure that any individual ISOCS measurement would not exceed the $OpDCGL_B$ during FSS. The RA consisted of a beta-gamma and gamma only scan over 100% of all accessible surfaces and the collection of 30 loose surface contamination samples. Six (6) concrete core samples were obtained at evenly distributed locations, and an additional five (5) cores were obtained at areas of elevated activity identified during the scan survey.

Eleven (11) concrete core samples were collected from the floor and walls in the survey unit. The cores were 3” in diameter and 6” deep. Table 3-1 below summarizes the results from the concrete core analyses using the on-site gamma spectroscopy system. Only the top half-inch of the puck from each core was analyzed with the exception of B1-010-001-CJFC-009-CV 0.5-1” and B1-010-001-CJFC-011-CV 0.5-1”.

Table 3-1 – Reactor Building Basement Continuing Characterization Concrete Core Analysis Summary - On-site

Sample ID	Puck Surface	Cs-137 Activity (pCi/g)
B1-010-001-CJFC-C01-CV 0-0.5"	Top	4.21E-02
B1-010-001-CJFC-C01-CV 0-0.5"	Bottom	0.00E+00
B1-010-001-CJFC-C02-CV 0-0.5"	Top	1.86E-01
B1-010-001-CJFC-C02-CV 0-0.5"	Bottom	9.93E-02
B1-010-001-CJFC-C03-CV 0-0.5"	Top	5.02E-02
B1-010-001-CJFC-C03-CV 0-0.5"	Bottom	3.50E-01
B1-010-001-CJFC-C04-CV 0-0.5"	Top	1.71E-01
B1-010-001-CJFC-C04-CV 0-0.5"	Bottom	5.27E-01
B1-010-001-CJFC-C05-CV 0-0.5"	Top	1.72E-01
B1-010-001-CJFC-C05-CV 0-0.5"	Bottom	3.32E-01

Sample ID	Puck Surface	Cs-137 Activity (pCi/g)
B1-010-001-CJFC-C06-CV 0-0.5"	Top	3.40E-01
B1-010-001-CJFC-C06-CV 0-0.5"	Bottom	3.15E-01
B1-010-001-CJFC-C07-CV 0-0.5"	Top	2.80E-01
B1-010-001-CJFC-C07-CV 0-0.5"	Bottom	0.00E+00
B1-010-001-CJFC-C08-CV 0-0.5"	Top	2.79E-01
B1-010-001-CJFC-C08-CV 0-0.5"	Bottom	4.86E-01
B1-010-001-CJFC-C09-CV 0-0.5"	Top	**4.77E+01**
B1-010-001-CJFC-C09-CV 0-0.5"	Bottom	**2.03E+01**
B1-010-001-CJFC-C09-CV 0.5-1”	Top	3.50E-01
B1-010-001-CJFC-C09-CV 0.5-1”	Bottom	6.98E-03
B1-010-001-CJFC-C10-CV 0-0.5"	Top	4.40E-01
B1-010-001-CJFC-C10-CV 0-0.5"	Bottom	3.39E-01
B1-010-001-CJFC-C11-CV 0-0.5"	Top	**9.47E+00**
B1-010-001-CJFC-C11-CV 0-0.5”	Bottom	**4.02E+00**
B1-010-001-CJFC-C11-CV 0.5-1”	Top	3.37E-01
B1-010-001-CJFC-C11-CV 0.5-1”	Bottom	1.02E-01

Note: Bold values indicate activity above MDC

Cs-137 was detected in concentrations above MDC in two (2) of the eleven (11) pucks analyzed. No other ROC were identified in the continuing characterization concrete cores.

The top half-inch pucks from concrete core samples B1-010-001-CJFC-C04-CV, B1-010-001-CJFC-C09-CV, and B1-010-001-CJFC-C11-CV were sent off-site to Gel Laboratories for gamma spectroscopy and HTD analysis of the full suite of ROC. Table 3-2 summarizes the results of the off-site analyses.

Table 3-2 – Reactor Building Basement Continuing Characterization Concrete Core Analysis Summary - Off-site

Radionuclide	B1-010-001-CSFC-C04-CV (pCi/g)	B1-010-001-CSFC-C09-CV (pCi/g)	B1-010-001-CSFC-C11-CV (pCi/g)
Am-241	2.37E-03	3.12E-04	-1.67E-03
Am-243	-7.80E-03	-5.57E-03	9.25E-03
Cm-243/244	-6.02E-03	-3.69E-03	-1.38E-02
Np-237	0.00E+00	-5.17E-04	3.27E-03
Pu-238	1.25E-02	4.76E-03	-2.14E-02
Pu-239/240	1.21E-02	-1.10E-02	-3.73E-03
Pu-241	1.71E+00	2.52E-01	9.58E-01
Ni-59	1.88E-01	6.84E-01	6.84E-01
Cs-137	3.56E-02	**4.82E+01**	**1.10E+01**
Co-60	4.03E-02	6.72E-02	3.21E-03
Eu-152	1.68E-01	-2.96E-01	4.55E-02
Eu-154	-6.38E-03	-9.13E-02	7.01E-03
Eu-155	1.68E-01	1.95E-01	1.73E-01
Nb-94	-7.60E-02	6.47E-02	4.12E-02
Sr-90	8.01E-03	-2.56E-02	2.30E-01
H-3	-3.65E+00	-2.41E+00	-1.22E+00
C-14	-1.10E+00	-2.96E-01	-3.03E+00
Tc-99	6.91E-01	-1.48E-02	-1.65E-02
Fe-55	-4.52E-01	1.66E+00	3.42E+00
Ni-63	-1.45E+00	-2.94E-01	-1.31E-02

Note: Bold values indicate activity above MDC

Cs-137 was positively identified in two (2) of the three (3) core samples. No other ROC were identified in the core samples sent off-site.

Section 5.1 of the LTP states that the actual Insignificant Contributor (IC) dose will be calculated for each individual sample result using the DCGLs from TSD RS-TD-313196-004, *LACBWR Soil DCGL, Basement Concrete DCGL, and Buried Pipe DCGL*, Table 35 (Reference 6) for basement structures. If the IC dose calculated is less than the IC dose assigned for DCGL adjustment, then no further action will be taken. If the actual IC dose calculated from the sample result is greater than the IC dose assigned for DCGL adjustment, then a minimum of five (5) additional investigation samples will be taken around the original sample location. Each investigation sample will be analyzed by the on-site gamma spectroscopy system and sent for HTD analysis (full suite of radionuclides from LTP Table 5-1). As with the original sample, the actual IC dose will be calculated for each investigation sample. In this case, the actual calculated maximum IC dose from an individual sample observed in the survey unit will be used to readjust the DCGLs in that survey unit. If the maximum IC dose exceeds 10%, then the additional radionuclides that were the cause of the IC dose exceeding 10% will be added as additional ROC for that survey unit. The survey unit-specific DCGLs used for compliance, the ROC for that survey unit, and the survey data serving as the basis for the IC dose adjustment will be documented in the release record for the survey unit.

An assessment of the results of continuing characterization confirmed that the IC dose is unchanged (dose fraction less than 10%).

Based upon review of the historical information, the results of the characterization survey data, and completion of a final Survey Unit Classification Worksheet, the correct final classification of survey unit B1-010-001 was determined to be Class 1.

4. DATA QUALITY OBJECTIVES

FSS planning and design relies on a properly executed Data Quality Objective (DQO) process to ensure, through compliance with explicitly defined inputs and boundaries, that the primary objective of the survey is satisfied. The DQO process is described in the LACBWR LTP in accordance with MARSSIM. The appropriate design for a given survey was developed using the DQO process as outlined in Appendix D of MARSSIM.

The DQO process incorporated hypothesis testing and probabilistic sampling distributions to control decision errors during data analysis. Hypothesis testing is a process based on the scientific method that compares a baseline condition to an alternate condition. The baseline condition is technically known as the null hypothesis. Hypothesis testing rests on the premise that the null hypothesis is true and that sufficient evidence must be provided for rejection. In designing the survey plan, the underlying assumption, or null hypothesis was

that residual activity in the survey unit exceeded the release criteria. Rejection of the null hypothesis would indicate that residual activity within the survey unit does not exceed the release criteria. Therefore, the survey unit would satisfy the primary objective of the FSS sample plan.

The primary objective of the FSS sample plan is to demonstrate that the level of residual radioactivity in survey unit B1-010-001 did not exceed the release criteria specified in the LTP and that the potential dose from residual radioactivity is As Low As Reasonably Achievable (ALARA).

LaCrosse*Solutions* TSD RS-TD-313196-001, *Radionuclides of Concern during LACBWR Decommissioning* (Reference 7) established the basis for an initial suite of potential ROC for decommissioning. LTP Chapter 2 provides detailed characterization data that describes current contamination levels in the basements and soils from the characterization campaign conducted from September 2014 through August 2015. The initial survey data for basements was based on core samples obtained from the walls and floors of the Reactor Building, Waste Treatment Building (WTB), and the balance of the basement structures (primarily the Piping Tunnels) at biased locations with elevated contact dose rates, contamination levels, and/or evidence of leaks/spills. During subsequent characterizations, additional cores were obtained from the Reactor Building and the Waste Gas Tank Vault (WGTV). TSD RS-TD-313196-001 evaluates the results of the concrete core analysis data from the Reactor Building, WTB, Piping Tunnels and WGTV and refines the initial suite of potential ROC by evaluating the dose significance of each radionuclide.

Insignificant dose contributors were determined consistent with the guidance contained in Section 3.3 of NUREG-1757, Volume 2, Revision 1, *Consolidated Decommissioning Guidance – Characterization, Survey, and Determination of Radiological Criteria, Final Report* (Reference 8). In all soil and concrete scenarios, Cs-137, Co-60, Sr-90, Eu-152 and Eu-154 contribute nearly 100% of the total dose. The remaining radionuclides were designated as insignificant dose contributors and are eliminated from further detailed evaluation. Therefore, the final ROCs for LACBWR soil, basement concrete and buried piping are Cs-137, Co-60, Sr-90, Eu-152 and Eu-154.

LTP Chapter 6, Section 6.14.1 discusses the process used to derive the ROC for the decommissioning of LACBWR, including the elimination of insignificant dose contributors (IC) from the initial suite. Table 4-1 presents the ROC for the decommissioning of basements at LACBWR and the normalized mixture fractions for the Reactor Building Basement based on the radionuclide mixture.

Table 4-1 – Reactor Building Basement Dose Significant Radionuclides and Mixture

Radionuclide	Fraction of Total Activity (normalized)(1)
Co-60	0.074
Sr-90	0.123
Cs-137	0.796
Eu-152	0.003
Eu-154	0.004

(1) Based on maximum percent of total activity from Table 22 of RS-TD-313196-001, normalized to one for the dose significant radionuclides.

LTP, Section 5.2 states that each radionuclide-specific Base Case DCGL is equivalent to the level of residual radioactivity (above background levels) that could, when considered independently, result in a Total Effective Dose Equivalent of 25 mrem/yr to an Average Member of the Critical Group. To ensure that the summation of dose from each source term is 25 mrem/yr or less after all FSS is completed, the Base Case DCGLs are reduced based on an expected, or *a priori*, fraction of the 25 mrem/yr dose limit from each source term. The reduced DCGLs, or "Operational" DCGLs can be related to the Base Case DCGLs as an expected fraction of dose based on an *a priori* assessment of what the expected dose should be based on the results of site characterization, process knowledge and the extent of planned remediation. The Operational DCGL is then used as the DCGL for the FSS design of the survey unit (calculation of surrogate DCGLs, investigations levels, etc.). Details of the Operational DCGLs derived for each dose component and the basis for the applied *a priori* dose fractions are provided in LC-FS-TSD-002, *Operational Derived Concentration Guideline Levels for Final Status Survey* (Reference 9).

The dose contribution from each ROC is accounted for using the SOF to ensure that the total dose from all ROC does not exceed the dose criterion. A Base Case DCGL that is established for the average residual radioactivity in a survey unit is equivalent to a $DCGL_W$.

At LACBWR, compliance is demonstrated through the summation of dose from five (5) distinct source terms for the end-state (basements, soils, buried pipe, above ground structures, and groundwater). When applied to backfilled basements below the 636 foot elevation, the DCGLs are expressed in units of activity per unit of area (pCi/m^2).

The Basement Fill Model (BFM) applies to the steel-reinforced concrete walls and floors of the backfilled Reactor Building and WGTV below the 636 foot elevation. BFM DCGLs ($DCGL_B$) apply to basement concrete and are calculated in LTP Chapter 6, Section 6.13. The insignificant dose contributor percentages for the most limiting basement scenario was

used to adjust the $DCGL_B$ to account for the dose from the eliminated insignificant contributor radionuclides. The $DCGL_B$ values for the Reactor Building Basement from LTP Chapter 5, Section 5.2.1 are reproduced below in Table 4-2.

Table 4-2 – Reactor Building Basement Base Case DCGLs

Radionuclide	Reactor Building Basement $DCGL_B$ (pCi/m^2)
Co-60	5.16E+06
Sr-90	1.45E+07
Cs-137	2.17E+07
Eu-152	1.19E+07
Eu-154	1.10E+07

The Operational DCGLs are then used as the DCGL for the FSS design of the survey unit (calculation of surrogate DCGLs, investigation levels, etc.). The BFM $OpDCGL_B$ for the unrestricted release of the Reactor Building Basement survey unit from LTP Chapter 5, Section 5.2.2 are provided in Table 4-3.

Table 4-3 – Reactor Building Basement Operational DCGLs

Radionuclide	Reactor Building Basement $OpDCGL_B$ (pCi/m^2)
Co-60	3.61E+05
Sr-90	1.02E+06
Cs-137	1.52E+06
Eu-152	8.33E+05
Eu-154	7.71E+05

Instrument DQOs included a verification of the ability of the survey instrument to detect the radiation(s) of interest relative to the Operational DCGL. The Canberra ISOCS was selected as the primary instrument used to perform FSS of basement surfaces. Response checks were required prior to issuance and after use. Control and accountability of ISOCS units was required to assure data quality.

As part of the DQOs applied to laboratory processes, analysis results were reported as actual calculated results. The actual recorded value was used as the recorded FSS result for

measurement and/or sample values that are less than MDC. Negative values were recorded as "zero." Results were not reported as "less than MDC" (< MDC). Sample report summaries included unique sample identification, analytical method, radionuclide, result, uncertainty, laboratory data qualifiers, units, and the observed MDC.

In accordance with the LTP, for laboratory analysis, MDCs less than 10% of the Operational DCGL were preferable while MDCs up to 50% of the Operational DCGL were acceptable. The minimum acceptable MDC for measurements obtained using field instruments was 50% of the applicable Operational DCGL.

5. SURVEY DESIGN

The level of effort associated with planning a survey is based on the complexity of the survey unit and nature of the hazards. Guidance for preparing FSS plans is provided in procedure LC-FS-PR-002, *Final Status Survey Package Development*.

The DQO process determined that Co-60, Sr-90, Cs-137, Eu-152, and Eu-154 would be the ROC in survey unit B1-010-001. During FSS, concentrations for the HTD ROC Sr-90 are inferred using a surrogate approach. Cs-137 is the principle surrogate radionuclide for Sr-90. Both Sr-90 and Cs-137 was positively detected in all thirty (30) concrete core samples assessed in the Reactor Building, Piping Tunnels, and WTB. For the Reactor Building Basement, Sr-90 was not detected in any of the eleven (11) core samples assessed during continuing characterization. The 95% Upper Confidence Limit (UCL) of the Cs-137 fractions was chosen to represent the overall nuclide mix for soils/buried pipe, the Reactor Building, and the Reactor Building Basement. The surrogate ratio for the Reactor Building Basement is given in Table 5-1.

Table 5-1 – Reactor Building Basement Surrogate Ratio

Radionuclides	Ratio
Sr-90/Cs-137	0.5

The equation for calculating a surrogate DCGL is as follows:

Equation 1

$$Surrogate_{DCGL} = \frac{1}{\left[\left(\frac{1}{DCGL_{Sur}}\right) + \left(\frac{R_2}{DCGL_2}\right) + \left(\frac{R_3}{DCGL_3}\right) + \cdots \left(\frac{R_n}{DCGL_n}\right)\right]}$$

Where: $DCGL_{Sur}$ = Surrogate radionuclide DCGL

$DCGL_{2,3...n}$ = DCGL for radionuclides to be represented by the surrogate

R_n = Ratio of concentration (or nuclide mixture fraction) of radionuclide "n" to surrogate radionuclide

Using the Operational DCGLs presented in Table 4-3 and the ratio from Table 5-1, the following surrogate calculation was performed:

Equation 2

$$Surrogate_{DCGL\ (Cs-137)} = \frac{1}{\left[\left(\frac{1}{1.52E+06_{(Cs-137)}}\right)+\left(\frac{0.5}{1.02E+06_{(Sr-90)}}\right)\right]} = 8.71E+05\ pCi/m^2$$

The surrogate Operational DCGL that was used for Cs-137 in this survey unit for direct comparison of measurement results to demonstrate compliance was 8.71E+05 pCi/m^2.

The action levels for survey unit B1-010-001 are based on the Operational DCGL and are presented in Table 5-2.

Table 5-2 – Action Levels for Survey Unit B1-010-001

ROC	$OpDCGL_B$ (pCi/m^2)
Co-60	3.61E+05
Cs-137	8.71E+05(1)
Eu-152	8.33E+05
Eu-154	7.71E+05

(1) Based on the surrogate adjusted DCGL of Cs-137 while inferring Sr-90.

The Sign Test was selected as the non-parametric statistical test. The use of the Sign Test did not require the selection or use of a background reference area, which simplified survey design and implementation.

The Elevated Measurement Comparison (EMC) does not apply to this survey unit. At LACBWR, EMC only applies to Class 1 open land areas.

Sample size determination for FSS basement structures is addressed in LTP Chapter 5, Section 5.5.2.2. To ensure that the number of ISOCS measurements, based on the necessary areal coverage in a basement surface FSS unit, was sufficient to satisfy a statistically based sample design, a calculation was performed to determine sample size. If the sample size based on the statistical design required more ISOCS measurements than the number of

ISOCS measurements required by the areal coverage, then the number of ISOCS measurements was adjusted to meet the larger sample size.

The number of measurements for FSS was determined in accordance with procedure LC-FS-PR-002. The relative shift (Δ/σ) for the survey unit data set is defined as shift (Δ), which is the Upper Boundary of the Gray Region (UBGR), or the DCGL (SOF of 1), minus the Lower Bound of the Gray Region (LBGR) (SOF of 0.5), divided by sigma (σ), which is the standard deviation of the data set used for survey design. The optimal value for Δ/σ should range between one (1) and three (3). The largest value the Δ/σ can have is three (3). If the Δ/σ exceeds three (3), then the value of three (3) will be used for Δ/σ. In the absence of prior survey data, the survey design used the MARSSIM recommended standard deviation value of 0.3. The Δ/σ for survey unit B1-010-001 was calculated as follows:

Equation 3

$$\Delta/\sigma = 0.5/0.3 = 1.67$$

Both the Type I error, or α value, and the Type II error, or β value, were set at 0.05. The sample size for use with the Sign Test from Table 5.5 of MARSSIM that equates to the Type I and Type II error of 0.05 and a relative shift of 1.67 is an N value of seventeen (17).

The required areal scan coverage for a Class 1 basement survey unit is 100%. The LTP requires that sufficient measurements be taken in a Class 1 FSS unit to ensure that 100% of the surface area was surveyed. The number of ISOCS measurements required in each FSS unit can be calculated as the quotient of the ISOCS Field-of-View (FOV) divided into the surface area required for areal coverage. Table 5-3 presents the minimum number of ISOCS measurements that were required for survey unit B1-010-001 based on a measurement FOV of 28 m^2.

Table 5-3 – Number of ISOCS Measurements based on Areal Coverage

Survey Unit	Classification	Area (m^2)	Minimum Areal Coverage (% of Area)	# of ISOCS Measurements (based on 28 m^2 FOV)
Reactor Building Basement	Class 1	512	100%	18

The ISOCS FOV was overlapped to ensure that there were no un-surveyed corners and gaps. The adjusted minimum number of ISOCS measurements in the Reactor Building Basement to account for overlap is provided in Table 5-4.

Table 5-4 – Adjusted Minimum Number of ISOCS Measurements

Survey Unit	Classification	Required Areal Coverage (m^2)	Adjusted # of ISOCS Measurements (based on 16 m^2 FOV)	Adjusted Areal Coverage (m^2)	Adjusted Areal Coverage (% of Area)
Reactor Building Basement	Class 1	512	43	512	100%

The areal scan coverage requirements for FSS of structures as specified in the LTP are commensurate with the probability that a small area of elevated activity could exist within an FSS unit in a concentration exceeding the Base Case DCGL and the likelihood that such an area would not be detected by the FSS ISOCS measurements. It is highly unlikely that the ISOCS, with a nominal FOV of approximately 28 m^2 would not detect and account for elevated areas. The primary basis used to determine reasonable areal coverage for the ISOCS measurements is the potential for the Operational DCGL to be exceeded. The criterion for selecting reasonable and risk-informed areal coverage is based on a graded approach similar to the guidance for scan surveys during FSS provided in MARSSIM, where the coverage is based on the expected fraction of the DCGL (in this case the Operational DCGL). All ISOCS measurement locations collected for survey unit B1-010-001 are provided on the map in Attachment 1 of this document.

The coordinates for all of the ISOCS measurement locations were conspicuously marked to designate where to position the survey rig to the center-point of the instrument FOV. The ISOCS detector was then positioned either vertically or horizontally and adjacent to the surface at the center-point of each designated floor or wall measurement location. Each survey measurement location would then be reproducible utilizing permanent markings on the survey unit floor and walls and annotated on the survey map and Attachment 14 of the sample plan, "FSS Samples/Measurements Identification and Coordinates."

The implementation of quality control measures as referenced by LTP Chapter 5, Section 5.9 and LaCrosse*Solutions* LC-QA-PN-001, *Final Status Survey Quality Assurance Project Plan* (QAPP) (Reference 10) includes the collection of a replicate measurement at 5% of the measurements taken in a survey unit with the locations selected at random. Three (3) ISOCS measurements were selected randomly for the replicate measurements for this survey unit.

In accordance with Section 5.1 of the LTP, concrete core samples are required to be collected at 10% of the ISOCS measurement locations during FSS for HTD analysis. The

eleven (11) continuing characterization concrete cores were used to satisfy the requirement in the LTP, as they were representative of the survey unit's end state condition. See Section 3 of this report for the data concerning the concrete cores.

As a Class 1 survey unit, Table 5-4 specifies that a minimum of 512 m^2, or 100% of the accessible surface area, in this structural basement survey unit will be subjected to scan coverage. The minimum number of ISOCS measurements required to fully cover the 512 m^2 surface area is forty-three (43). Two (2) systematic measurements were added during survey design to fully ensure coverage of gaps. The surface area covered by a single ISOCS measurement is large, and the FOV of the measurement becomes a substitute for scanning that is typically performed by moving a hand-held detector over the surface in question. The majority of systematic ISOCS measurements that were taken during the FSS of the Reactor Building Basement were obtained at a stand-off distance of 3 meters, which resulted in a FOV for each measurement of 28 m^2. Seven (7) systematic measurements were taken at a stand-off distance of 2 meters, which resulted in a FOV of 12.56 m^2. The six (6) judgmental ISOCS measurements were collected at a stand-off distance of 0.5 meters, which correlates to a ISOCS FOV of 0.79 m^2.

To achieve 100% areal coverage for the 512 m^2 of floor and wall surfaces that constitute this survey unit, along with the minimum of 5% replicate measurements, 54 ISOCS measurements were taken (45 systematic, 6 judgmental, 3 replicate).

All of the ISOCS measurements were collected using the circular plane geometry, although varied geometries were necessary due to the structural anomalies encountered within the survey unit (use of different stand-off distances). ISOCS geometries specifically employed within this survey unit are provided in Attachment 2 of this report. Maps of the surface area scanned by the ISOCS FOV are provided in Attachment 1.

For this Class 1 basement structure survey unit, the "Investigation Levels" for ISOCS measurement results are those levels specified in LTP Chapter 5, Table 5-16, and are reproduced below in Table 5-5.

Table 5-5 - Investigation Levels

Classification	Scan Investigation Levels	Direct Investigation Levels
Class 1	>Operational DCGL or >MDC_{scan} if MDC_{scan} is greater than Operational DCGL	>Operational DCGL

Table 5-6 provides a synopsis of the survey design for survey unit B1-010-001.

Table 5-6 - Synopsis of Survey Design

Feature	Design Criteria	Basis
Survey Unit Surface Area	512 m^2	LTP Ch. 5, Table 5-13 and Table 5-14
Number of Systematic Measurements (N)	17	• UBGR = SOF of 1 • LBGR = SOF of 0.5 • Type I error = 0.05 • Type II error = 0.05 • $\Delta/\sigma = 1.67$ • MARSSIM Table 5.5
Adjusted Number of Systematic Measurements	43 45 (actual number obtained)	Based on 100% scan coverage accounting for overlap
DCGLs	Co-60: 3.61E+05 Sr-90: 1.02E+06 Cs-137: 1.52E+06 Eu-152: 8.33E+05 Eu-154: 7.71E+05	Operational DCGLs for Reactor Building Basement, (LTP Chapter 5, Table 5-4)
Investigation Level	>Operational DCGL	(LTP Chapter 5, Table 5-16)
Scan Areal Coverage	512 m^2 or 100% areal coverage	(LTP Chapter 5, Table 5-15)
Number of Judgmental Measurements	6	Minimum of 1 ISOCS Measurement per Sample Plan
QC	3 measurements selected randomly for replicate measurement analysis	(LTP Chapter 5, Section 5.9)
HTD	10% of ISOCS Measurements, Minimum of 2	(LTP Chapter 5, Section 5.1)

6. SURVEY IMPLEMENTATION

For survey unit B1-010-001, compliance with the unrestricted release criteria was demonstrated through the use of ISOCS for direct measurements.

A walkdown and turnover survey was satisfactorily performed in the Reactor Building Basement in accordance with the Isolation and Control requirements of procedure LC-FS-PR-010, *Isolation and Control for Final Status Survey* (Reference 11). The Reactor Building Basement was deemed acceptable for turnover and FSS commenced on March 27, 2019 under the FSS sample plan, which included DQOs, survey design, detailed FSS instructions, job safety analysis, and related procedures for reference. A "Field Log" was used to document field activities and other information pertaining to the performance of the FSS.

FSS field activities were projected to take four (4) working days to complete. Daily briefings were conducted to discuss the expectations for job performance and to review safety aspects of the job. The survey required field activities were performed during normal working hours and concluded on March 29, 2019.

Prior to implementing the sample plan for the FSS of the Reactor Building Basement structure, the physical condition of the concrete surfaces to be surveyed were assessed to ensure that the geometry was not significantly changed from that assumed in LC-FS-TSD-001, *Use of ISOCS for FSS of End State Sub Structures at LACBWR* (Reference 12). ISOCS measurements were acquired using the circular plane geometry, which assumed a circular plane source with a contaminant depth of 0.5 inches. With the 90-degree collimation shield installed and a source to detector distance of 3 meters, this orientation corresponded to a nominal FOV of 28 m^2. A guide attached to the detector assembly, in the form of a plumb-bob or wooden stud, was used to establish a consistent source to detector distance and center the detector over the selected measurement location.

The ISOCS measurement locations specified in FSS sample plan for survey unit B1-010-001 were marked based on the grid coordinates provided in the maps. See Attachment 2 of this report for the ISOCS Geometry Composer Reports.

A total of forty-five (45) systematic ISOCS measurements were collected in the survey unit. Six (6) judgmental measurements were collected, and three (3) replicate measurements were also acquired in the Reactor Building Basement survey locations #5, #16 and #18. The ISOCS detector face was oriented perpendicular to the surface of interest represented by the grid coordinate. See Picture 1 below for an example of an ISOCS measurement being conducted.

Figure 6-1 - ISOCS Measurement

7. SURVEY RESULTS

The SOF or "unity rule" is applied to the data used for the survey planning, and data evaluation and statistical tests for basement surfaces, since multiple radionuclide-specific measurements will be performed or the concentrations inferred based on known relationships. The SOF or "unity rule" is the mathematical test used to evaluate compliance with radiological criteria for license termination when more than one radionuclide has been determined to be potentially present.

The equation for the unity rule is:

Equation 4

$$\frac{C_1}{DCGL_1} + \frac{C_2}{DCGL_2} + \ldots\ldots \frac{C_n}{DCGL_n} \leq 1$$

Where: C_n = concentration of radionuclide *n*

$DCGL_n$ = DCGL of radionuclide *n*.

The application of the unity rule serves to normalize the data to allow for an accurate comparison of the various data measurements to the release criteria. When the unity rule is applied, the $DCGL_W$ (used for the nonparametric statistical test) becomes 1. The $DCGL_B$ are directly analogous to the $DCGL_W$ as defined in MARSSIM. The use and application of the unity rule was performed in accordance with Section 4.3.3 of MARSSIM.

As described in LTP Chapter 5, Section 5.10.3.2, the Sign Test was used to evaluate the measured residual radioactivity against the dose criterion. The SOF for each measurement was used as the sum value for the Sign Test. The Sign Test then demonstrated that the mean activity for each ROC was less than the $OpDCGL_B$ at a Type 1 decision error of 0.05.

For building surfaces, areas of elevated activity were defined as any area identified by measurement/sample (systematic or judgmental) that exceeded the $OpDCGL_B$ but was less than the $DCGL_B$. Any area that exceeded the $DCGL_B$ would have required remediation. The SOF (based on the $OpDCGL_B$) for a systematic or judgmental measurement/sample(s) can exceed 1 without remediation as long as the survey unit passes the Sign Test, and the mean SOF (based on the $OpDCGL_B$) for the survey unit does not exceed one. Once the survey data set passes the Sign Test (using Operational DCGLs), then the mean radionuclide activity (pCi/m^2) for each ROC from systematic measurements along with any identified elevated areas from systematic and judgmental measurement/samples can be used with the Base Case DCGLs to perform a mean SOF_B calculation. The dose from residual radioactivity assigned to the FSS unit is the mean SOF_B multiplied by 25 mrem/yr.

Direct measurement locations were denoted on the concrete walls and floor of the Reactor Building Basement using the dimensions on the survey map as guidance. See Figure 16-1 on Attachment 1 for a depiction of all measurement locations.

The systematic measurement population consisted of 45 direct measurements that were acquired using the ISOCS. In total, 54 ISOCS measurements were collected, including the systematic, judgmental, and QC measurements. A breakdown of the total ISOCS measurements and SOF for systematic measurements compared to the $OpDCGL_B$ is provided in Table 7-1. A summary of the results of the 45 ISOCS measurements taken for non-parametric statistical testing when compared to the $DCGL_B$ is provided in Table 7-2.

The complete ISOCS measurement and gamma spectroscopy reports are presented in Attachment 6.

Table 7-1 – Summary of Systematic, Judgmental, and QC Measurements

Total Number of Systematic Measurements	45
Number of Quality Control Measurements	3
Number of Judgmental/Investigational Measurements	6
Total Number of Measurements	54
Mean Systematic Gamma Measurement SOF (1)	0.0061
Max Individual Systematic Gamma Measurement SOF (1)	0.0232
Number of Systematic Gamma Measurements with SOF $\geq$ 1 (1)	0

(1) Based on the $OpDCGL_B$

Table 7-2 – Summary of ISOCS Systematic Measurement Statistical Quantities

ROC	Mean (pCi/m^2)	Median (pCi/m^2)	Max (pCi/m^2)	Min (pCi/m^2)	Std. Dev. (pCi/m^2)	BcDCGL (pCi/m^2)	Avg SOF per ROC	Avg Dose per ROC
Co-60	3.90E+02	2.88E+02	1.22E+03	0.000E+00	3.59E+02	5.16E+06	7.57E-05	1.89E-03
Sr-90	4.39E+02	2.18E+02	3.51E+03	0.000E+00	6.62E+02	1.45E+07	3.03E-05	7.57E-04
Cs-137	8.78E+02	4.37E+02	7.03E+03	0.000E+00	1.32E+03	2.17E+07	4.05E-05	1.01E-03
Eu-152	1.34E+03	8.82E+02	6.08E+03	0.000E+00	1.47E+03	1.19E+07	1.13E-04	2.81E-03
Eu-154	1.82E+03	1.51E+03	9.17E+03	0.000E+00	1.59E+03	1.10E+07	1.65E-04	4.13E-03

The total mean SOF for the Reactor Building Basement, based on the mean concentration for each ROC as measured by the systematic measurement population when compared against the $DCGL_B$, is 0.0004. This SOF equates to a dose of 0.0106 mrem/yr.

Six (6) judgmental ISOCS measurement were collected within the survey unit. The judgmental ISOCS measurement results are presented in Table 7-3.

Table 7-3 – Summary of ISOCS Judgmental Measurements

Measurement ID	Cs-137 (pCi/m²)	Co-60 (pCi/m²)	Eu-152 (pCi/m²)	Eu-154 (pCi/m²)	Sr-90 (pCi/m²)
B1-010-001-FJFC-D44-GM	**8.58E+05**	2.58E+03	0.00E+00	4.77E+04	4.29E+05
B1-010-001-FJFC-D45-GM	**8.04E+05**	1.88E+04	5.58E+04	2.48E+04	4.02E+05
B1-010-001-FJFC-D46-GM	**2.07E+05**	1.65E+04	7.00E+04	5.37E+04	1.04E+05
B1-010-001-FJFC-D47-GM	**1.64E+05**	2.68E+03	0.00E+00	6.83E+04	8.18E+04
B1-010-001-FJFC-D48-GM	**4.38E+04**	1.21E+04	0.00E+00	2.48E+04	2.19E+04
B1-010-001-FJFC-D49-GM	**1.02E+05**	1.01E+04	0.00E+00	9.37E+04	5.12E+04

Note: Bold values indicate activity greater than MDC.

Two (2) judgmental measurements, B1-010-001-FJFC-D44-GM and B1-010-001-FJFC-D45-GM, exceeded the $OpDCGL_B$, at a maximum SOF of 1.0737. The mean SOF of judgmental measurements when compared to the $OpDCGL_B$ is 0.5388 and the mean SOF when compared to the $DCGL_B$ is 0.03779. Because judgmental measurements are outside of the systematic measurement population, an area-weighted SOF for the two (2) elevated measurements is calculated and added to the average systematic measurement SOF, which is then used to calculate the overall dose assigned to the basement survey unit. The equation for calculating the area-weighted SOF (Equation 5-5 in the LTP) is provided below.

Equation 5

$$SOF_B = \sum_{i=1}^{n} \frac{Mean\ Conc_{B_{ROC_i}}}{Base\ Case\ DCGL_{B_{ROC_i}}} + \frac{\left(Elev\ Conc_{B_{ROC_i}} - Mean\ Conc_{B_{ROC_i}}\right)}{\left[Base\ Case\ DCGL_{B_{ROC_i}} \times \left(\frac{SA_{SU}}{SA_{Elev}}\right)\right]}$$

where:

SOF_B	=	SOF for structural surface survey unit within a Basement using Base Case DCGLs
$Mean\ Conc_B\ ROC_i$	=	Mean concentration for the systematic measurements taken during the FSS of structural surface in survey unit for each ROC_i
$Base\ Case\ DCGL_B\ ROC_i$	=	Base Case DCGL for structural surfaces ($DCGL_B$) for each ROC_i
$Elev\ Conc_B\ ROC_i$	=	Concentration for ROC_i in any identified elevated area (systematic or judgmental)
SA_{Elev}	=	surface area of the elevated area
SA_{SU}	=	adjusted surface area of FSS unit for DCGL calculation

The total SOF for the Reactor Building Basement was calculated as follows:

Equation 6

$$SOF_B = 0.0004 + 0.0002 = 0.0006$$

The total SOF assigned to the Reactor Building Basement survey unit is 0.0006, which equates to a dose of 0.015 mrem/yr.

The implementation of required QC measures included the collection of three (3) additional ISOCS measurements at locations throughout the Reactor Building Basement for "replicate measurement" analysis. The replicate ISOCS measurement results are provided in Table 7-4. The concentration for Sr-90 is inferred based on the ratio given in Table 5-1.

Table 7-4 – Summary of Replicate ISOCS Measurements for QC

Measurement ID	Cs-137 (pCi/m^2)	Co-60 (pCi/m^2)	Eu-152 (pCi/m^2)	Eu-154 (pCi/m^2)	Sr-90 (pCi/m^2)
B1-010-001-QSFC-D05-GM	5.31E+02	5.76E+02	0.00E+00	1.52E+03	2.66E+02
B1-010-001-QSFC-D16-GM	**5.09E+02**	9.36E+02	0.00E+00	2.66E+03	2.55E+02
B1-010-001-QSFC-D18-GM	3.15E+02	4.23E+02	2.13E+02	2.21E+03	1.58E+02

Note: Bold values indicate activity greater than MDC.

The complete ISOCS gamma spectroscopy reports are presented in Attachment 6.

8. QUALITY CONTROL

Three (3) replicate measurements were taken during the FSS of this basement structure. The measurement results were evaluated using USNRC acceptance criteria specified in Inspection Procedure No. 84750, *Radioactive Waste Treatment, and Effluent and Environmental Monitoring* (Reference 13). In the case of all three (3) pairs of standard and comparison measurements, there was acceptable QC agreement. Refer to Attachment 4 for data and quality control analysis results.

9. INVESTIGATIONS AND RESULTS

No investigations were performed during the performance or analyses of the survey.

10. REMEDIATION AND RESULTS

No radiological remedial action as described by MARSSIM Section 5.4 was performed in this survey unit as a result of the FSS. Chapter 4 of the LTP determined that remediation

beyond that required to meet the release criteria is unnecessary and that the remaining residual radioactivity in the structure was ALARA.

11. CHANGES FROM THE FINAL STATUS SURVEY PLAN

There were no addendums to the FSS plan.

12. DATA QUALITY ASSESSMENT

The DQO sample design and data were reviewed in accordance with LC-FS-PR-008, *Final Status Survey Data Assessment* (Reference 14) for completeness and consistency. Documentation was complete and legible. Surveys and the collection of measurements were consistent with the DQOs and were sufficient to ensure that the survey unit was properly designated as Class 1. The survey design had adequate power as indicated by the Retrospective Power Curve (see Attachment 5).

The analytical results indicated that all systematic measurements were less than a SOF of one (1) when compared to the $OpDCGL_B$. Two (2) judgmental measurements were identified with a SOF greater than one (1) when compared to the $OpDCGL_B$, but less than a SOF of one (1) when compared to the $DCGL_B$.

The Sign Test (Attachment 3) was performed on the data and compared to the original assumptions of the DQOs. The evaluation of the Sign Test results clearly demonstrates that the survey unit passes the unrestricted release criteria, thus, the null hypothesis is rejected.

The preliminary data review consisted of calculating basic statistical quantities (e.g., mean, median, standard deviation). All data was considered valid including negative values, zeros, values reported below the MDC, and values with uncertainties that exceeded two standard deviations. The mean and median values for each ROC were well below the respective Operational DCGLs. Also, the retrospective power curve shows that a sufficient number of measurements were collected to achieve the desired power. Therefore, the survey unit meets the unrestricted release criteria with adequate power as required by the DQOs.

All graphical presentations are provided in Attachment 5.

13. ANOMALIES

No anomalies were observed during the performance or analyses of the survey.

14. CONCLUSION

Survey unit B1-010-001 has met the DQOs of the FSS plan. The ALARA criteria as specified in Chapter 4 of the LTP were achieved. The EMC is not applicable to structural surfaces and remediation was not required.

All identified ROC were used for statistical testing to determine the adequacy of the survey unit for FSS. Evaluation of the data shows that none of the systematic ROC concentration values exceeds the $OpDCGL_B$. Additionally, the two (2) elevated judgmental locations were evaluated and the dose was included in the total dose for the survey unit.

The total SOF assigned to the Reactor Building Basement survey unit is 0.0006, which equates to a dose of 0.015 mrem/yr.

The measurement data passed the Sign Test. The null hypothesis was rejected. The Retrospective Power Curve showed that adequate power was achieved. The survey unit is properly classified as Class 1. Therefore, in accordance with the LTP Section 5.10, the survey unit meets the release criteria. Survey unit B1-010-001 is acceptable for unrestricted release.

15. REFERENCES

1. LC-FS-PR-009, Final Status Survey Data Reporting
2. *La Crosse Boiling Water Reactor License Termination Plan (LTP)*
3. LC-FS-PR-002, *Final Status Survey Package Development*
4. NUREG-1575, Revision 1, *Multi-Agency Radiation Survey and Site Investigation Manual* (MARSSIM)
5. *La Crosse Boiling Water Reactor Historical Site Assessment* (HSA)
6. RS-TD-313196-004, *LACBWR Soil DCGL, Basement Concrete DCGL, and Buried Pipe DCGL*
7. RS-TD-313196-001, *Radionuclides of Concern during LACBWR Decommissioning*
8. NUREG-1757, Volume 2, Revision 1, *Consolidated Decommissioning Guidance – Characterization, Survey, and Determination of Radiological Criteria, Final Report*
9. LC-FS-TSD-002, *Operational Derived Concentration Guideline Levels for Final Status Survey*
10. LC-QA-PN-001, *Final Status Survey Quality Assurance Project Plan* (QAPP)
11. LC-FS-PR-010, *Isolation and Control for Final Status Survey*
12. LC-FS-TSD-001, *Use of ISOCS for FSS of End State Sub Structures at LACBWR*
13. USNRC Inspection Procedure No. 84750, *Radioactive Waste Treatment, and Effluent and Environmental Monitoring*
14. LC-FS-PR-008, *Final Status Survey Data Assessment*

16. ATTACHMENTS

Attachment 1 – Figures and Maps

Attachment 2 – ISOCS Geometries

Attachment 3 – Sign Test

Attachment 4 – Quality Control Assessment

Attachment 5 – Graphical Presentations

Attachment 6 – Measurement Analytical Reports

ATTACHMENT 1
FIGURES AND MAPS

Figure 16-1 - Reactor Building Basement ISOCS Measurement Locations (1)

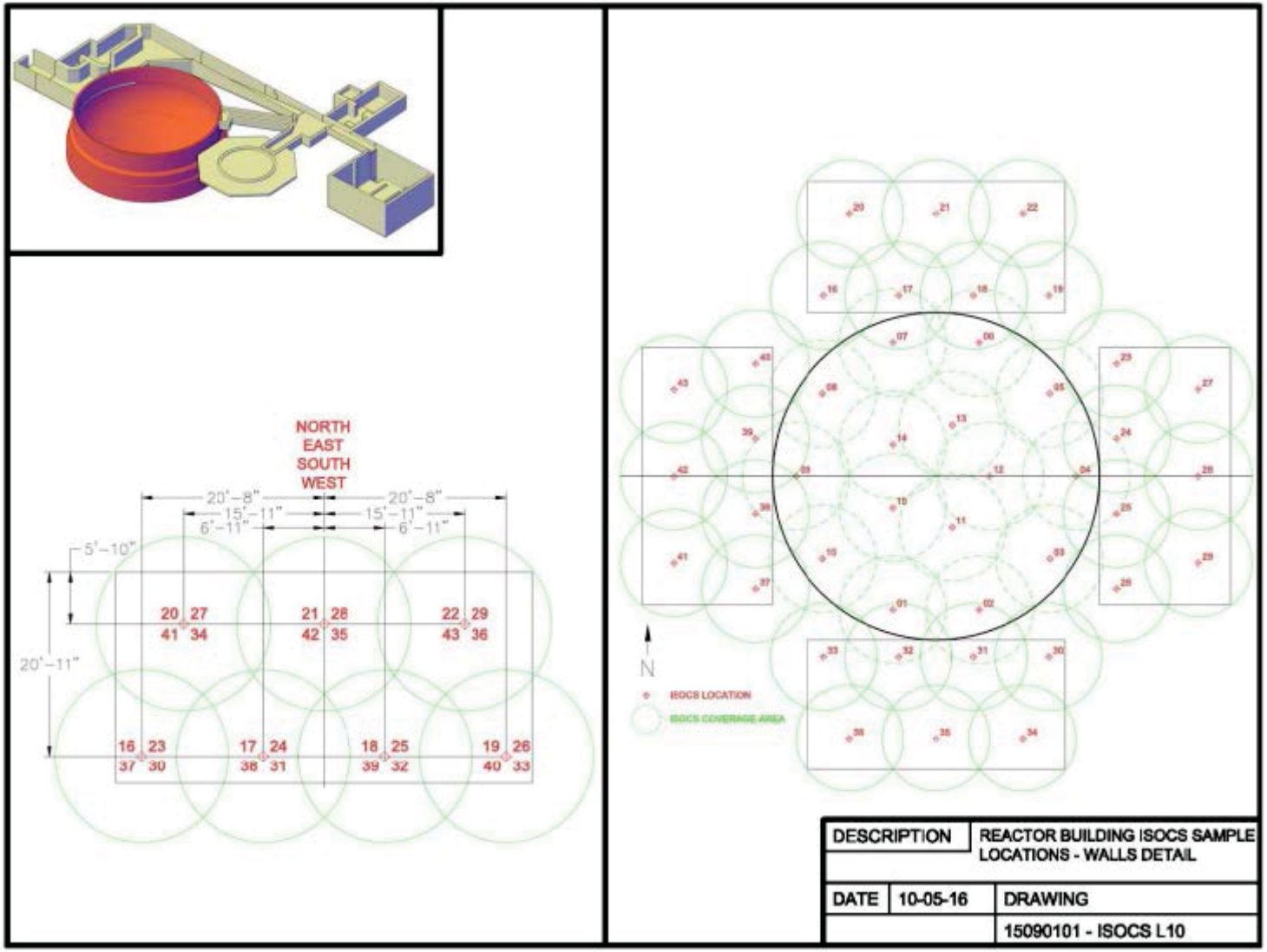

Figure 16-2 - Reactor Building Basement ISOCS Measurement Locations (2)

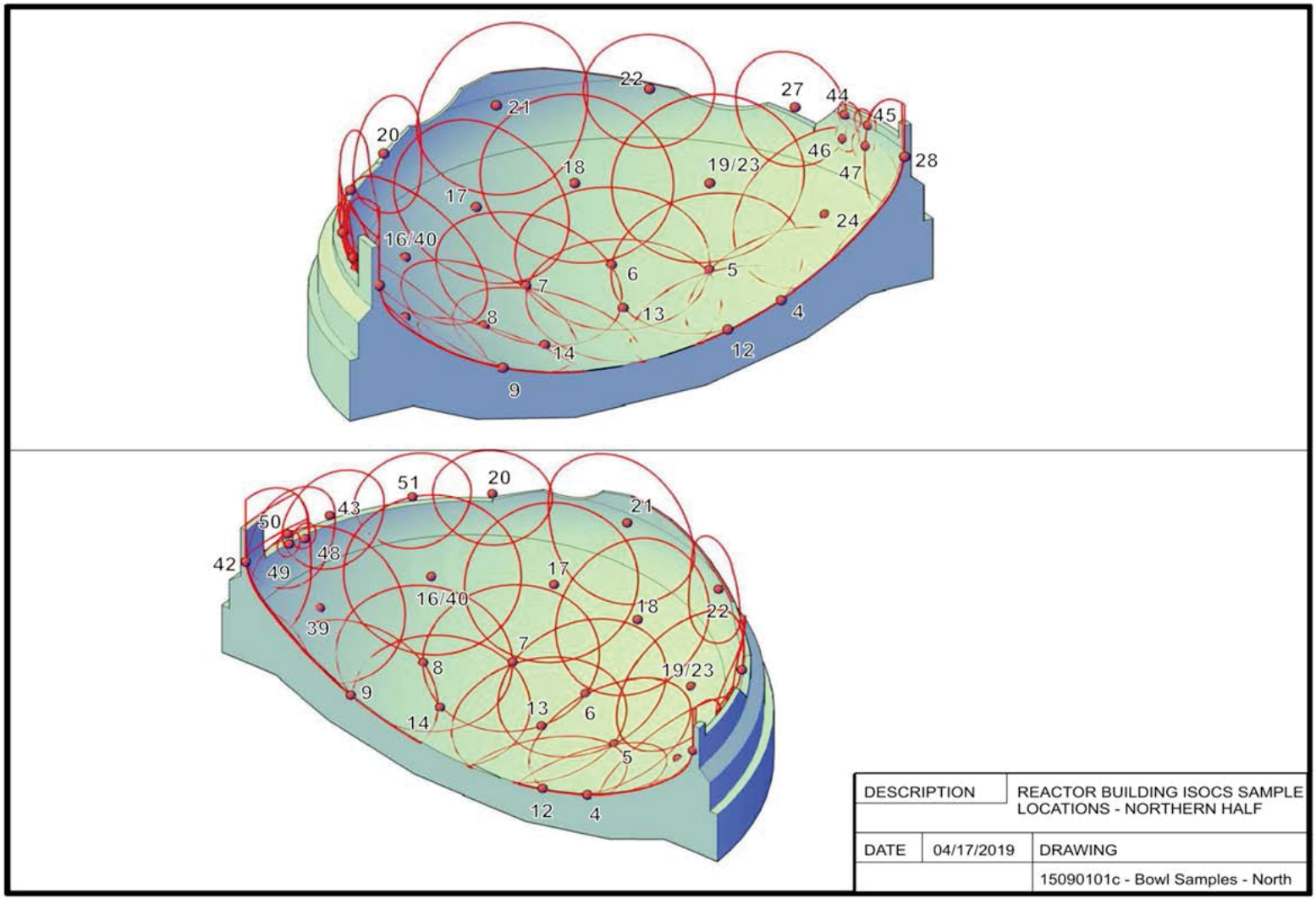

Figure 16-3 - Reactor Building Basement ISOCS Measurement Locations (3)

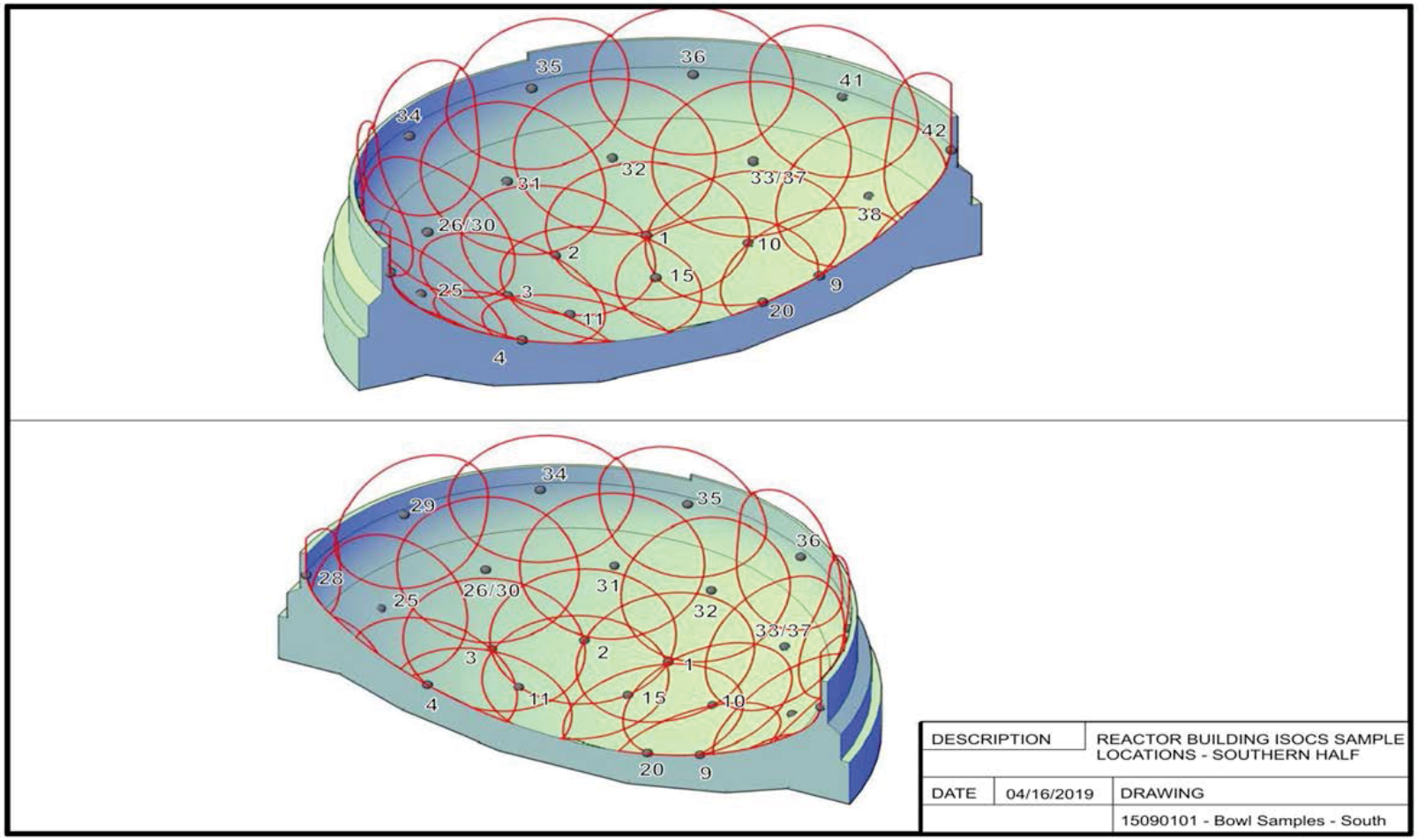

ATTACHMENT 2
ISOCS GEOMETRIES

Geometry Composer Report

Date: Tuesday, March 26, 2019 - 13:13:12
Description: Rx Bowl Concrete 0.5M
Comment: shielding with 90 deg collimator
File Name: C:\GENIE2K\isocs\data\GEOMETRY\In-Situ\CIRCULAR_PLANE\RxBowl Con 0.5M.geo
Software: ISOCS
Template: CIRCULAR_PLANE, Version: (default)
Detector: 3844f
Collimator: 50mm-90d new (newISOCS 50mm side 90deg collimation [large hole collimator])
Environment: Temperature = 22 °C, Pressure = 760 mm Hg, Relative Humidity = 30%
Integration: Convergence = 1.00%, MDRPN = 2^4 (16), CRPN = 2^4 (16)

Dimensions (cm)

No.	Description	d.1	d.2	d.3	d.4	d.5	d.6	Material	Density	Rel. Conc.
1	Side Walls	0	100					none		
2	Layer 1	1.27						concrete	2.3	1.00
3	Layer 2	0						<none>		
4	Layer 3	0						<none>		
5	Layer 4	0						<none>		
6	Layer 5	0						<none>		
7	Layer 6	0						<none>		
8	Layer 7	0						<none>		
9	Layer 8	0						<none>		
10	Layer 9	0						<none>		
11	Layer 10	0						<none>		
12	Absorber1									
13	Absorber2									
14	Source-Detector	50	0	0	0	0				

List of energies for efficiency curve generation

59.5	88.0	122.1	200.0	400.0	661.7	900.0	1000.0
1173.2	1332.5	1836.0					

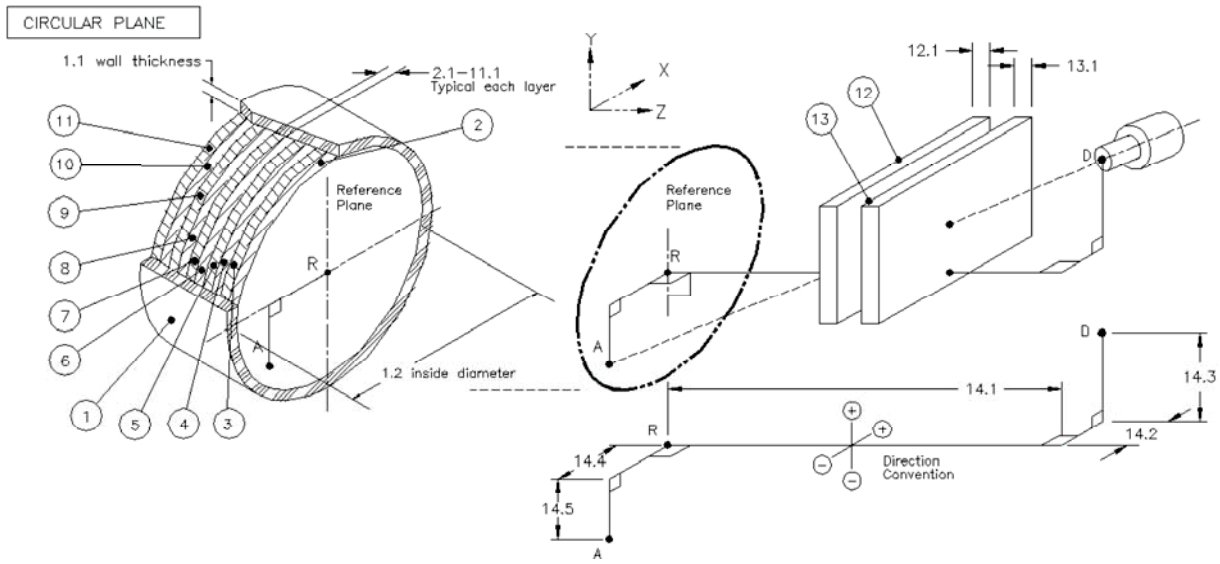

Geometry Composer Report

Date: Tuesday, March 26, 2019 - 13:13:12
Description: Rx Bowl Concrete 0.5M
Comment: shielding with 90 deg collimator
File Name: C:\GENIE2K\isocs\data\GEOMETRY\In-Situ\CIRCULAR_PLANE\RxBowl Con 0.5M.geo
Software: ISOCS
Template: CIRCULAR_PLANE, Version: (default)

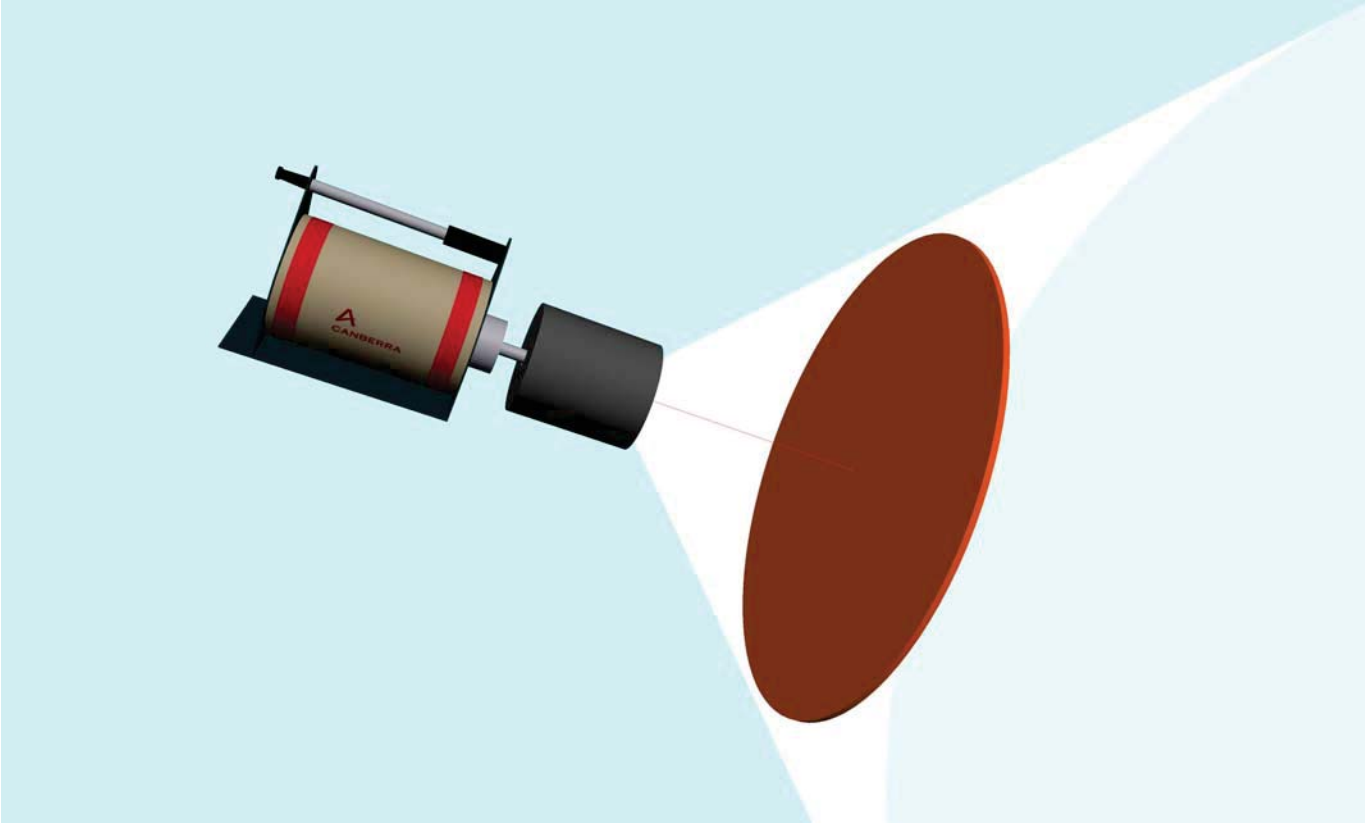

Geometry Composer Report

Date: Tuesday, March 26, 2019 - 13:14:36
Description: Rx Bowl Concrete 2M
Comment: shielding with 90 deg collimator
File Name: C:\GENIE2K\isocs\data\GEOMETRY\In-Situ\CIRCULAR_PLANE\RxBowl Con 2M.geo
Software: ISOCS
Template: CIRCULAR_PLANE, Version: (default)
Detector: 3844f
Collimator: 50mm-90d new (newISOCS 50mm side 90deg collimation [large hole collimator])
Environment: Temperature = 22 °C, Pressure = 760 mm Hg, Relative Humidity = 30%
Integration: Convergence = 1.00%, MDRPN = 2^4 (16), CRPN = 2^4 (16)

Dimensions (cm)

No.	Description	d.1	d.2	d.3	d.4	d.5	d.6	Material	Density	Rel. Conc.
1	Side Walls	0	400					none		
2	Layer 1	1.27						concrete	2.3	1.00
3	Layer 2	0						<none>		
4	Layer 3	0						<none>		
5	Layer 4	0						<none>		
6	Layer 5	0						<none>		
7	Layer 6	0						<none>		
8	Layer 7	0						<none>		
9	Layer 8	0						<none>		
10	Layer 9	0						<none>		
11	Layer 10	0						<none>		
12	Absorber1									
13	Absorber2									
14	Source-Detector	200	0	0	0	0				

List of energies for efficiency curve generation

59.5	88.0	122.1	200.0	400.0	661.7	900.0	1000.0
1173.2	1332.5	1836.0					

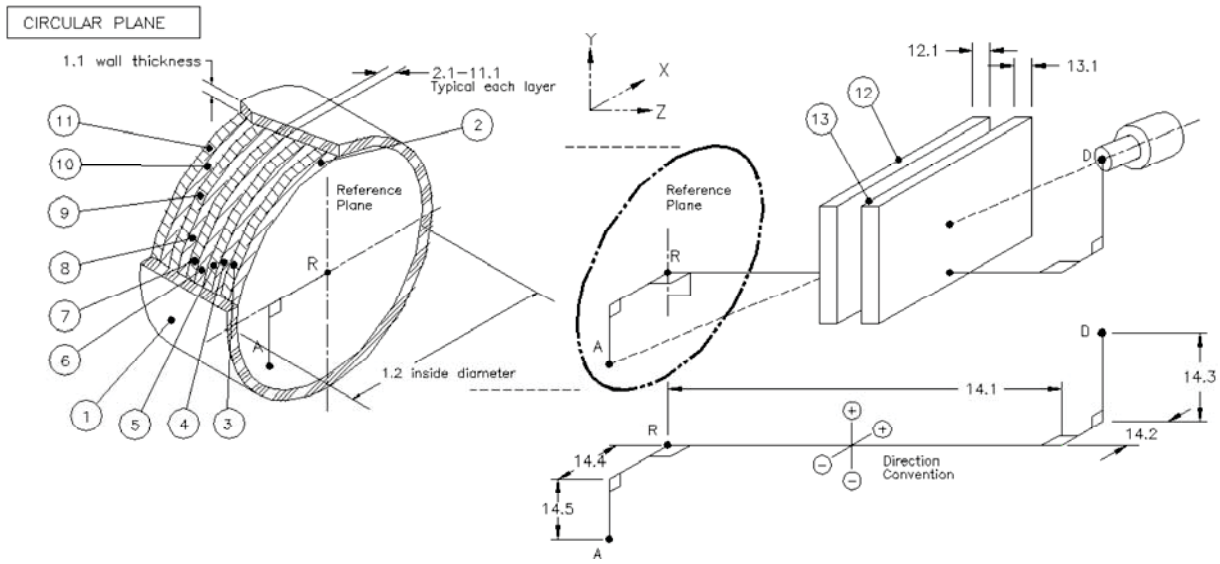

Geometry Composer Report

Date: Tuesday, March 26, 2019 - 13:14:36
Description: Rx Bowl Concrete 2M
Comment: shielding with 90 deg collimator
File Name: C:\GENIE2K\isocs\data\GEOMETRY\In-Situ\CIRCULAR_PLANE\RxBowl Con 2M.geo
Software: ISOCS
Template: CIRCULAR_PLANE, Version: (default)

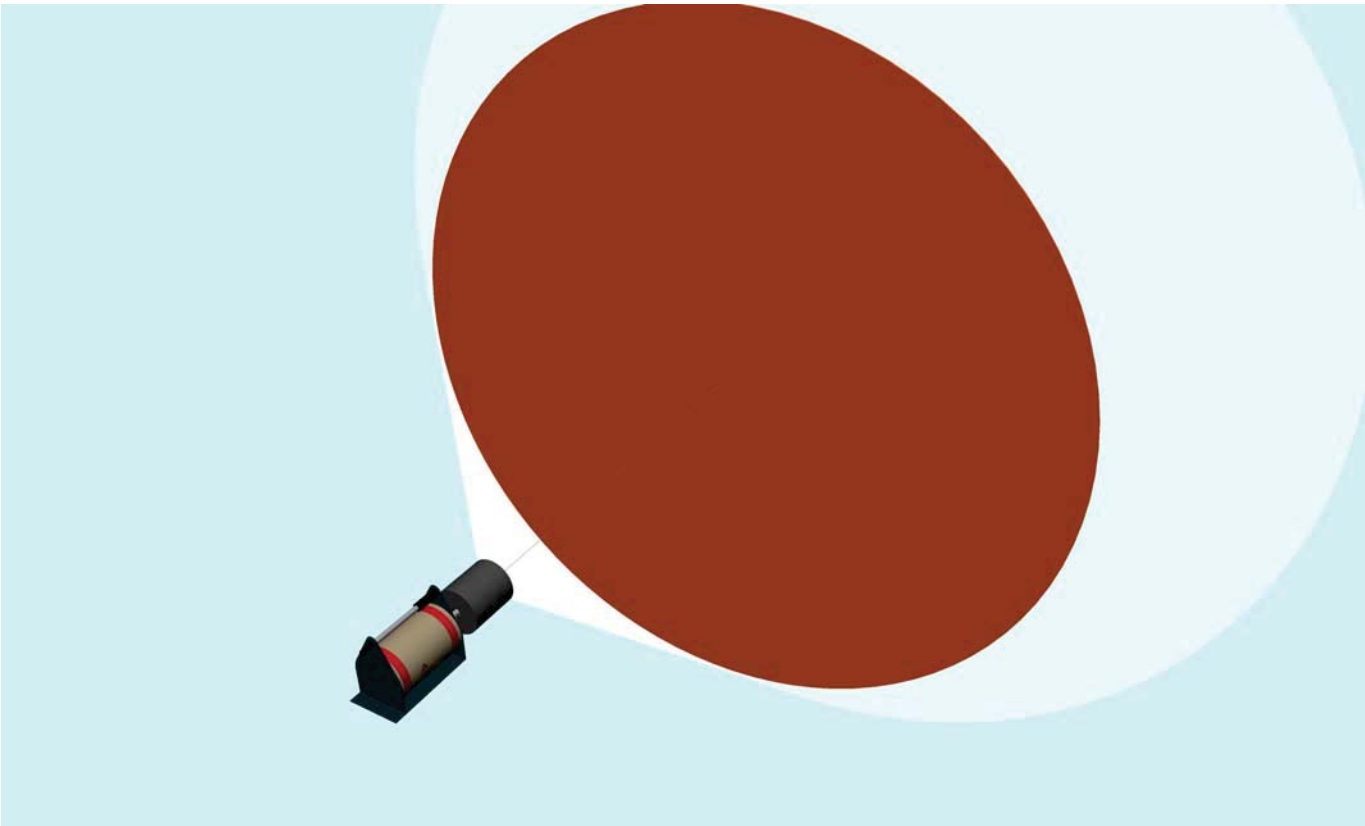

Geometry Composer Report

Date: Tuesday, March 26, 2019 - 13:15:10
Description: Rx Bowl Concrete 3M
Comment: shielding with 90 deg collimator
File Name: C:\GENIE2K\isocs\data\GEOMETRY\In-Situ\CIRCULAR_PLANE\RxBowl Con 3M.geo
Software: ISOCS
Template: CIRCULAR_PLANE, Version: (default)
Detector: 3844f
Collimator: 50mm-90d new (newISOCS 50mm side 90deg collimation [large hole collimator])
Environment: Temperature = 22 °C, Pressure = 760 mm Hg, Relative Humidity = 30%
Integration: Convergence = 1.00%, MDRPN = 2^4 (16), CRPN = 2^4 (16)

Dimensions (cm)

No.	Description	d.1	d.2	d.3	d.4	d.5	d.6	Material	Density	Rel. Conc.
1	Side Walls	0	600					none		
2	Layer 1	1.27						concrete	2.3	1.00
3	Layer 2	0						<none>		
4	Layer 3	0						<none>		
5	Layer 4	0						<none>		
6	Layer 5	0						<none>		
7	Layer 6	0						<none>		
8	Layer 7	0						<none>		
9	Layer 8	0						<none>		
10	Layer 9	0						<none>		
11	Layer 10	0						<none>		
12	Absorber1									
13	Absorber2									
14	Source-Detector	300	0	0	0	0				

List of energies for efficiency curve generation

59.5	88.0	122.1	200.0	400.0	661.7	900.0	1000.0
1173.2	1332.5	1836.0					

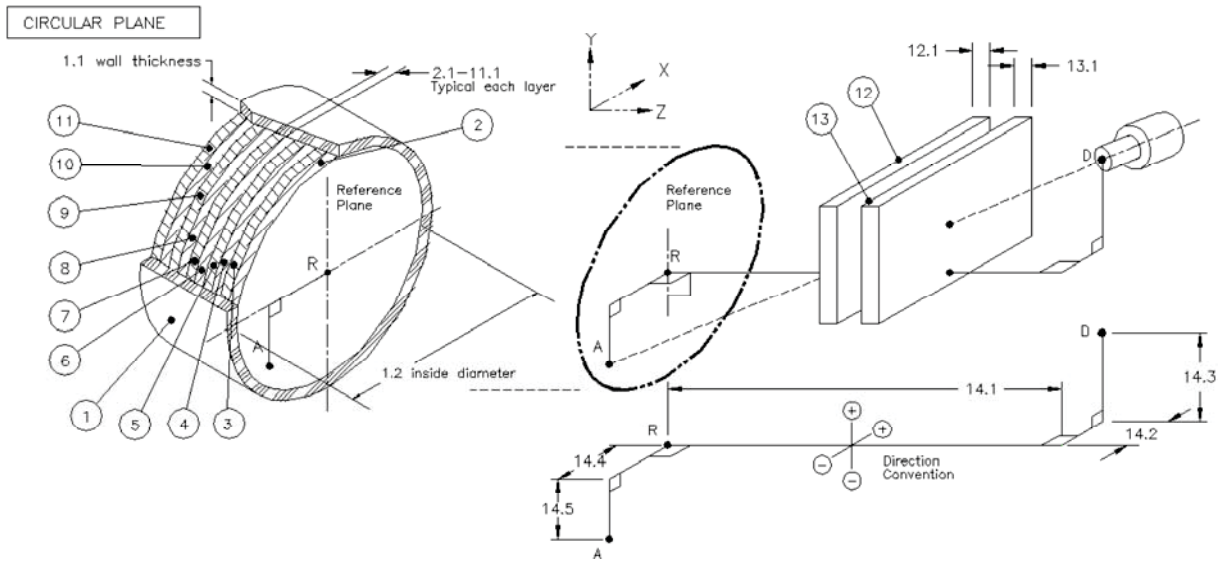

Geometry Composer Report

Date: Tuesday, March 26, 2019 - 13:15:10
Description: Rx Bowl Concrete 3M
Comment: shielding with 90 deg collimator
File Name: C:\GENIE2K\isocs\data\GEOMETRY\In-Situ\CIRCULAR_PLANE\RxBowl Con 3M.geo
Software: ISOCS
Template: CIRCULAR_PLANE, Version: (default)

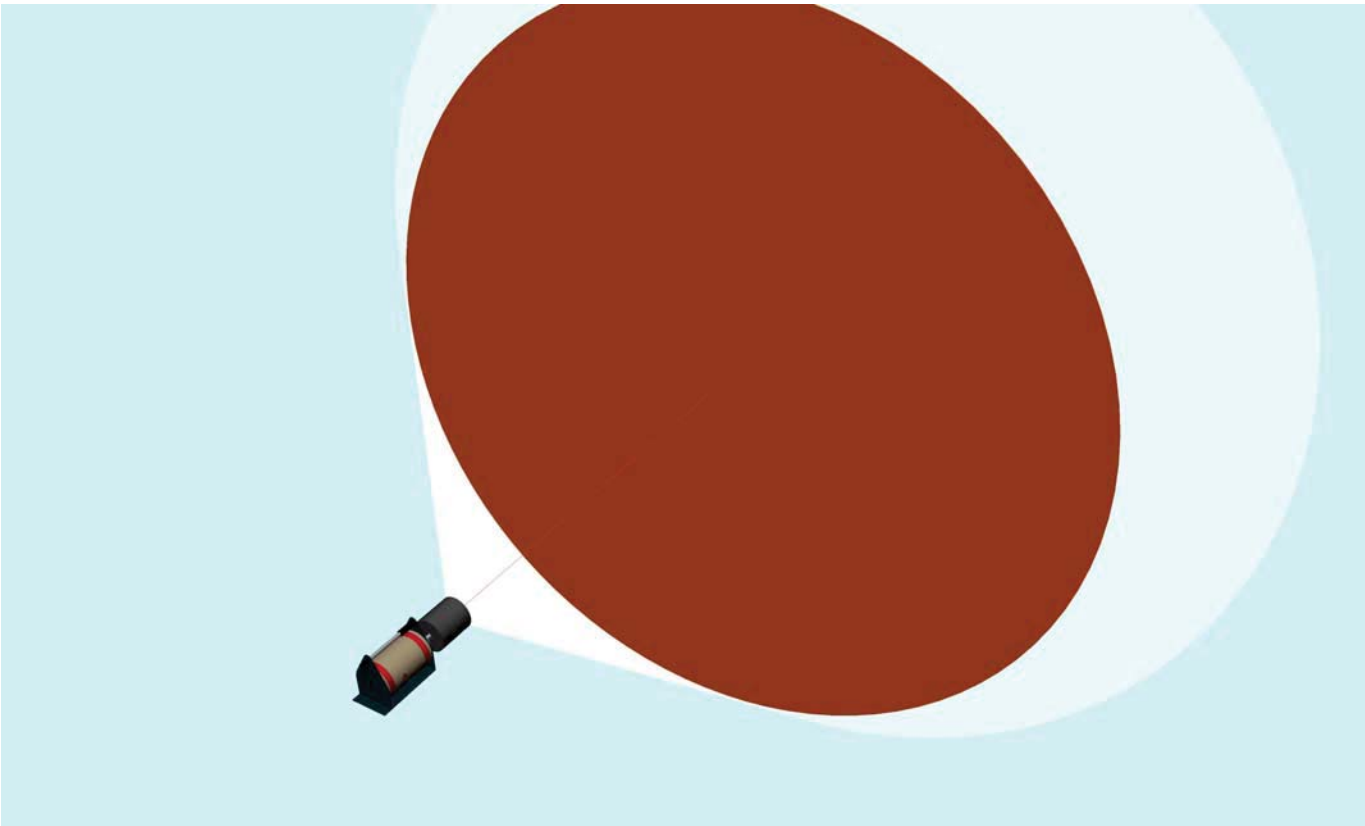

ATTACHMENT 3
SIGN TEST

Table 16-1 – B1-010-001 Sign Test

#	SOF (Ws)	1-Ws	Sign
1	0.00781	0.99	+1
2	0.00614	0.99	+1
3	0.00454	1.00	+1
4	0.00409	1.00	+1
5	0.00614	0.99	+1
6	0.00249	1.00	+1
7	0.00175	1.00	+1
8	0.00195	1.00	+1
9	0.00416	1.00	+1
10	0.00479	1.00	+1
11	0.00804	0.99	+1
12	0.00522	0.99	+1
13	0.00448	0.99	+1
14	0.00496	1.00	+1
15	0.00411	1.00	+1
16	0.00472	1.00	+1
17	0.00347	1.00	+1
18	0.00934	1.00	+1
19	0.00362	0.99	+1
20	0.01588	1.00	+1
21	0.00206	0.98	+1
22	0.00759	1.00	+1
23	0.00683	0.99	+1
24	0.00419	0.99	+1
25	0.00855	1.00	+1
26	0.01002	0.99	+1
27	0.02319	0.99	+1
28	0.01990	0.98	+1
29	0.00095	0.98	+1
30	0.00228	1.00	+1
31	0.00483	1.00	+1
32	0.00176	1.00	+1
33	0.00054	1.00	+1
34	0.00474	1.00	+1
35	0.00187	1.00	+1
36	0.00567	1.00	+1
37	0.00313	0.99	+1
38	0.00287	1.00	+1
39	0.00910	1.00	+1
40	0.00516	0.99	+1
41	0.00589	0.99	+1
42	0.00716	0.99	+1
43	0.00693	0.99	+1
50	0.01143	0.99	+1
51	0.00803	0.99	+1
Number of positive differences (S+)			45
Critical Value			28
Survey Unit		Meets	the Acceptance Criteria

ATTACHMENT 4
QUALITY CONTROL ASSESSMENT

Table 16-2 – Reactor Building Basement QC Assessment

STANDARD							COMPARISON				
Measurement ID	Radionuclide	Activity Value	Standard Error	Resolution	Agreement Range (Low to High)		Measurement ID	Activity Value	Standard Error	Comparison Ratio	Acceptable (Y/N)
B1-010-001-FSFC-D05-GM	K-40*	8.83E+04	1.37E+04	6	0.5	2	B1-010-001-QSFC-D05-GM	7.83E+04	1.29E+04	0.89	Y
B1-010-001-FSFC-D16-GM	K-40*	8.71E+04	1.33E+04	7	0.5	2	B1-010-001-QSFC-D16-GM	8.64E+04	1.35E+04	0.99	Y
B1-010-001-FSFC-D18-GM	K-40*	8.12E+04	1.37E+04	6	0.5	2	B1-010-001-QSFC-D18-GM	8.21E+04	1.31E+04	1.01	Y

Comments/Corrective Actions: K-40 was substituted for the assessment of locations #5 and #18 because Cs-137 was not identified in either the standard or comparison measurement. K-40 was substitued for the assessment of location #16 because of low Cs-137 activity identified in the replicate measurement and no ROC identified in the standard measurement.

Table is provided to show acceptance criteria used to assess replicate ISOCS measurements.

Resolution	Acceptable Ratio
<4	0.4-2.5
4-7	0.5-2.0
8-15	0.6-1.66
16-50	0.75-1.33
51-200	0.80-1.25
>200	0.85-1.18

ATTACHMENT 5
GRAPHICAL PRESENTATIONS

Figure 16-4 - Quantile Plot for Cs-137 Concentration

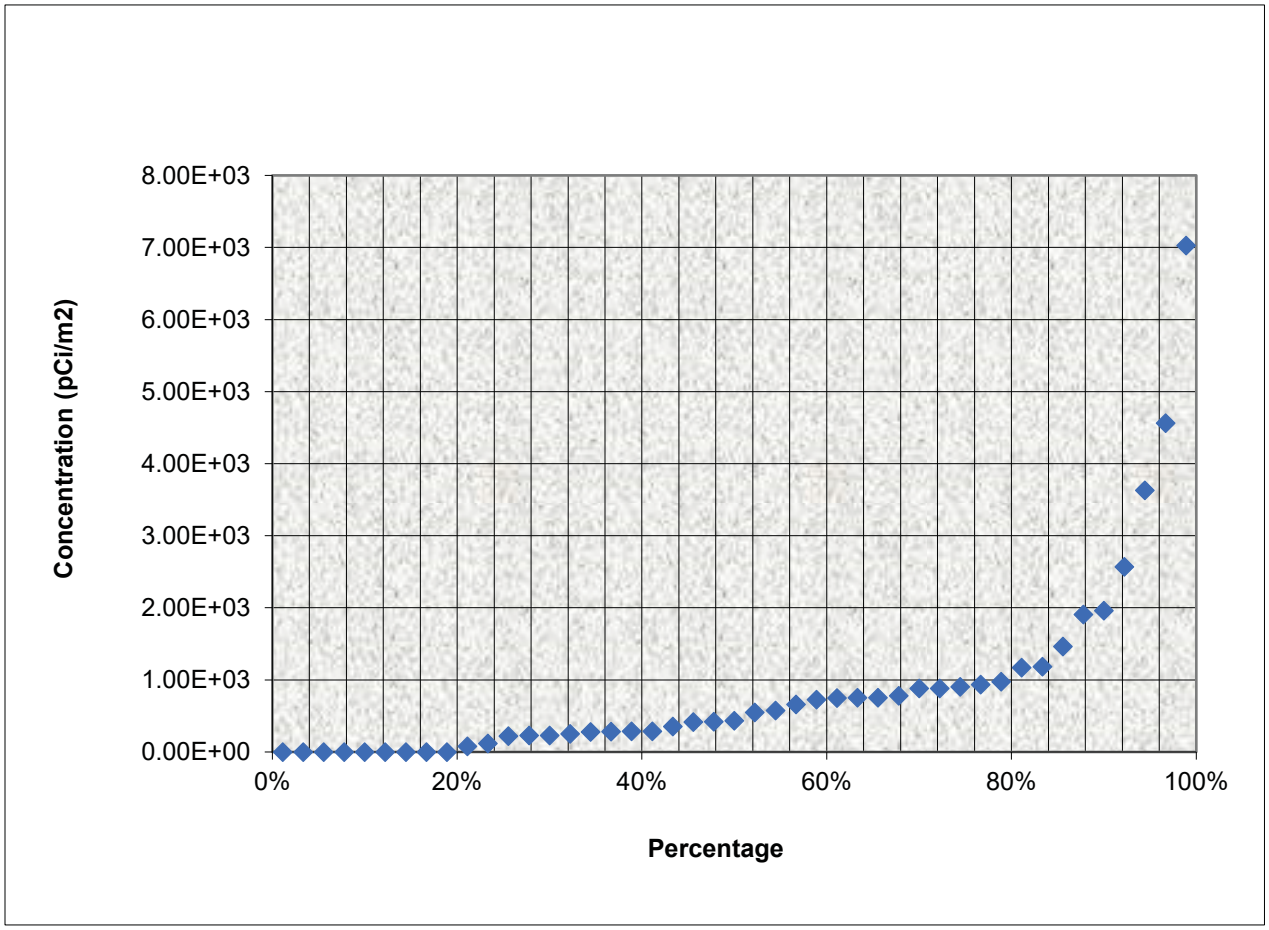

Figure 16-5 - Histogram for Cs-137 Concentration

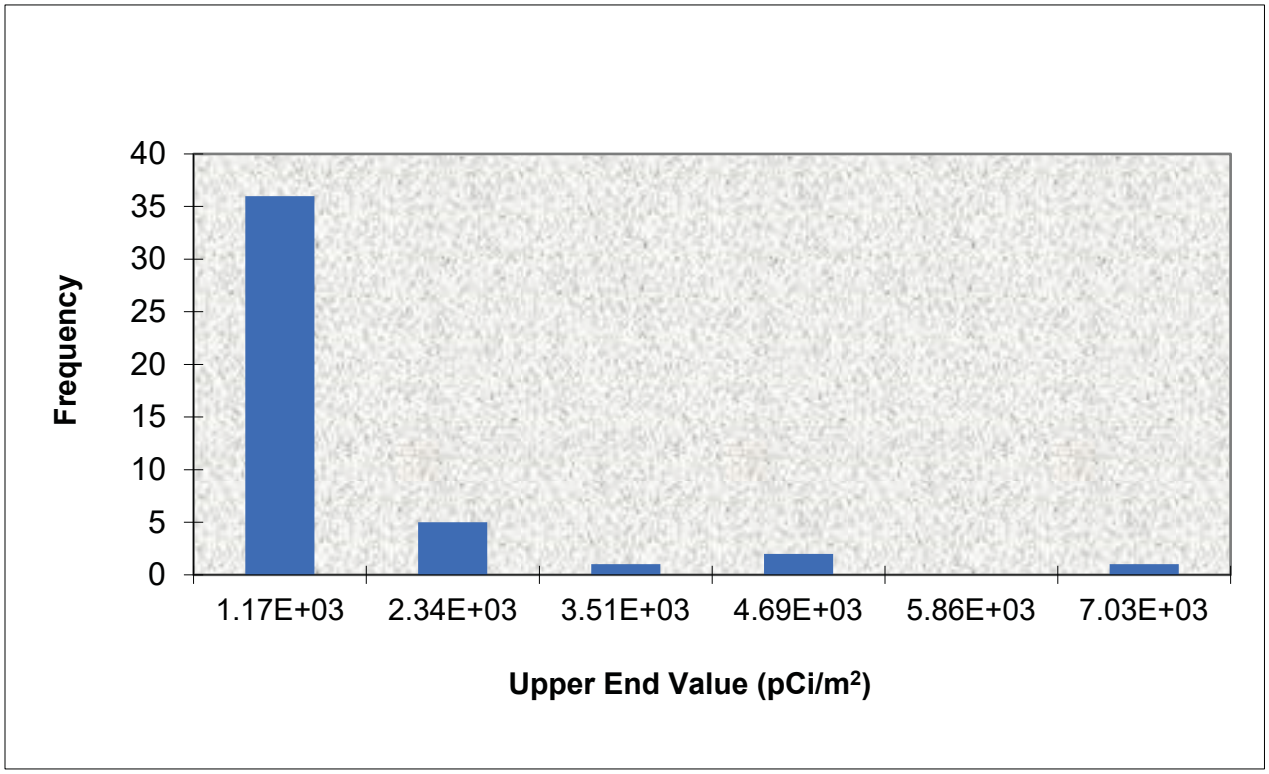

Figure 16-6 - Retrospective Power Curve for B1-010-001

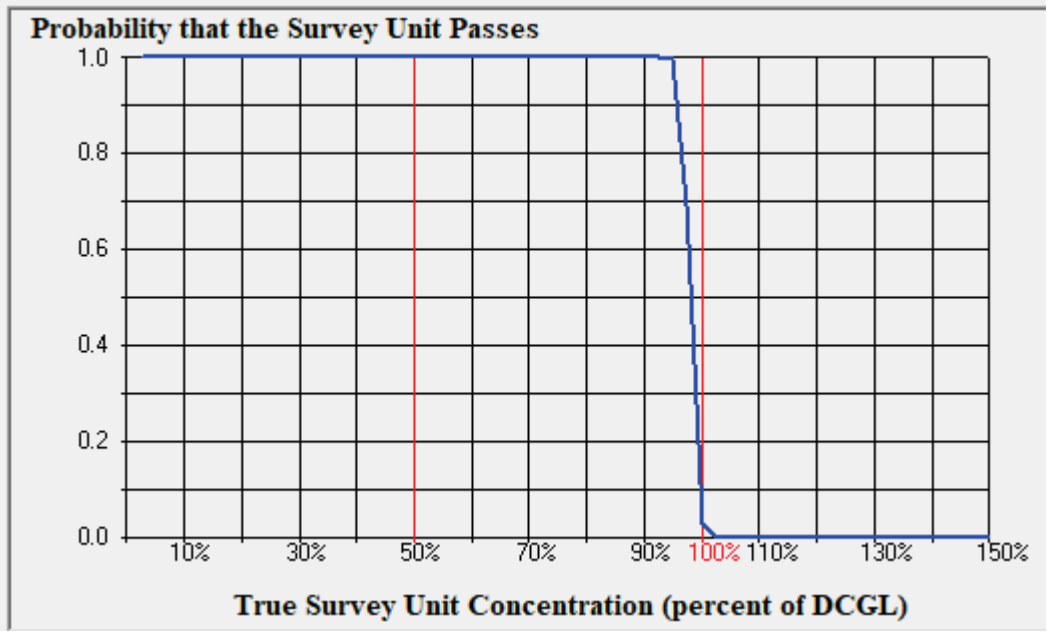

ATTACHMENT 6
MEASUREMENT ANALYTICAL REPORTS

```
************************************************************************
*****        G A M M A   S P E C T R U M   A N A L Y S I S        *****
************************************************************************


Filename: C:\LACBWR\B1-010-001-FJFC-D44-GM.CNF

Report Generated On             : 3/29/2019   9:59:57 AM

Sample Title                    : B1-010-001-FJFC-D44-GM
Sample Description              : Rx Bowl concrete 0.5 M
Sample Identification           : D44
Sample Type                     : Gamma Direct
Sample Geometry                 :

Peak Locate Threshold           :  3.00
Peak Locate Range (in channels) :    85 -  8000
Peak Area Range (in channels)   :    85 -  8000
Identification Energy Tolerance :    3.000 keV

Sample Size                     :  7.900E-001 M^2

Sample Taken On                 : 3/29/2019   7:28:00 AM
Acquisition Started             : 3/29/2019   7:29:04 AM

Live Time                       :      600.0 seconds
Real Time                       :      600.3 seconds

Dead Time                       :   0.05 %


              Energy Calibration Used Done On       : 10/24/2017
              Efficiency Calibration Used Done On   : 3/26/2019
              Efficiency ID                         : RxBOWL_CON_0.5M
```

****
***** P E A K A N A L Y S I S R E P O R T *****
****

Detector Name: 3844
Sample Title: B1-010-001-FJFC-D44-GM
Peak Analysis Performed on: 3/29/2019 9:59:57 AM
Peak Analysis From Channel: 85
Peak Analysis To Channel: 8000

Peak No.	ROI start	ROI end	Peak centroid	Energy (keV)	FWHM (keV)	Net Peak Area	Net Area Uncert.	Continuum Counts
1	947-	962	955.05	238.83	0.58	5.90E+001	41.00	1.20E+002
2	1525-	1536	1530.60	382.81	0.61	1.91E+001	20.20	3.29E+001
3	2327-	2339	2332.32	583.33	0.81	4.51E+001	16.55	8.90E+000
4	2431-	2442	2436.82	609.46	1.35	3.10E+001	15.64	1.20E+001
5	2635-	2658	2646.78	661.96	1.65	8.45E+002	64.41	4.80E+001
6	3639-	3652	3645.44	911.64	0.59	1.54E+001	14.42	1.26E+001
7	3868-	3881	3874.49	968.89	0.46	1.25E+001	12.87	1.05E+001
8	5834-	5858	5846.32	1461.59	1.66	2.53E+002	34.03	9.03E+000

M = First peak in a multiplet region
m = Other peak in a multiplet region
F = Fitted singlet

Errors quoted at 2.000 sigma

****
***** N U C L I D E I D E N T I F I C A T I O N R E P O R T *****
****

Sample Title: B1-010-001-FJFC-D44-GM
Nuclide Library Used: C:\GENIE2K\CAMFILES\LACBWR.NLB

..... IDENTIFIED NUCLIDES .....

Nuclide Name	Id Confidence	Energy (keV)	Yield (%)	Activity (pCi/M^2)	Activity Uncertainty
K-40	0.989	1460.81*	10.67	3.25663E+006	5.14122E+005
CS-137	0.998	661.65*	85.12	8.58067E+005	1.22072E+005
PB-212	1.000	74.81	9.60		
		77.11	17.50		
		87.20	6.30		
		89.80	1.75		
		115.19	0.60		
		238.63*	44.60	6.37116E+004	4.54297E+004
		300.09	3.41		
BI-214	1.000	609.31*	46.30	5.50964E+004	2.86783E+004
		768.36	5.04		
		806.17	1.23		
		934.06	3.21		
		1120.29	15.10		
		1155.19	1.69		
		1238.11	5.94		
		1280.96	1.47		
		1377.67	4.11		
		1385.31	0.78		
		1401.50	1.39		
		1407.98	2.48		
		1509.19	2.19		
		1661.28	1.15		
		1729.60	3.05		
		1764.49	15.80		
		1847.44	2.12		
		2118.54	1.21		
AC-228	1.000	89.95	2.10		
		93.35	3.50		
		129.08	2.80		
		209.28	4.40		
		270.23	3.60		
		327.64	3.20		
		338.32	11.40		
		409.51	2.13		
		463.00	4.40		
		794.70	4.60		
		911.60*	27.70	5.77509E+004	5.44968E+004
		964.60	5.20		
		969.11*	16.60	8.07937E+004	8.35033E+004
		1587.90	3.71		

Nuclide Name	Id Confidence	Energy (keV)	Yield (%)	Activity (pCi/M^2)	Activity Uncertainty

* = Energy line found in the spectrum.
@ = Energy line not used for Weighted Mean Activity
Energy Tolerance : 3.000 keV
Nuclide confidence index threshold = 0.30
Errors quoted at 2.000 sigma

****
***** I N T E R F E R E N C E C O R R E C T E D R E P O R T *****
****

Nuclide Name	Nuclide Id Confidence	Wt mean Activity (pCi/M^2)	Wt mean Activity Uncertainty
K-40	0.989	3.256629E+006	5.141220E+005
CS-137	0.998	8.580667E+005	1.220722E+005
PB-212	1.000	6.371158E+004	4.542965E+004
BI-214	1.000	5.509645E+004	2.867825E+004
AC-228	1.000	6.463381E+004	4.563755E+004

? = Nuclide is part of an undetermined solution
X = Nuclide rejected by the interference analysis
@ = Nuclide contains energy lines not used in Weighted Mean Activity

Errors quoted at 2.000 sigma

********** U N I D E N T I F I E D P E A K S **********

Peak Locate Performed on: 3/29/2019 9:59:57 AM
Peak Locate From Channel: 85
Peak Locate To Channel: 8000

Peak No.	Energy (keV)	Peak Size in Counts per Second	Peak CPS % Uncertainty	Peak Type	Tol. Nuclide
2	382.81	3.1859E-002	105.67		
3	583.33	7.5170E-002	36.70		

M = First peak in a multiplet region
m = Other peak in a multiplet region
F = Fitted singlet

Errors quoted at 2.000 sigma

****
***** N U C L I D E M D A R E P O R T *****
****

Detector Name: 3844
Sample Geometry:
Sample Title: B1-010-001-FJFC-D44-GM
Nuclide Library Used: C:\GENIE2K\CAMFILES\LACBWR.NLB

	Nuclide Name	Energy (keV)	Yield (%)	Line MDA (pCi/M^2)	Nuclide MDA (pCi/M^2)	Activity (pCi/M^2)	Dec. Level (pCi/M^2)
+	K-40	1460.81*	10.67	2.910E+005	2.91E+005	3.257E+006	1.281E+005
	CO-60	1173.22	100.00	3.824E+004	2.96E+004	2.581E+003	1.751E+004
		1332.49	100.00	2.958E+004		-6.722E+003	1.305E+004
	CS-134	475.35	1.46	3.010E+006	3.72E+004	-1.034E+006	1.439E+006
		563.23	8.38	4.343E+005		2.952E+004	2.045E+005
		569.32	15.43	2.283E+005		2.305E+004	1.072E+005
		604.70	97.60	3.719E+004		3.700E+004	1.746E+004
		795.84	85.40	4.044E+004		1.171E+004	1.870E+004
		801.93	8.73	3.973E+005		1.758E+005	1.837E+005
		1038.57	1.00	3.279E+006		-2.405E+005	1.489E+006
		1167.94	1.80	2.095E+006		1.517E+006	9.583E+005
		1365.15	3.04	8.662E+005		2.791E+005	3.748E+005
+	CS-137	661.65*	85.12	4.905E+004	4.91E+004	8.581E+005	2.315E+004
	EU-152	121.78	28.40	1.577E+005	1.51E+005	-1.415E+004	7.688E+004
		344.27	26.50	1.506E+005		-4.877E+004	7.227E+004
		1407.95	20.70	1.617E+005		-4.496E+003	7.211E+004
	EU-154	123.07	40.40	1.106E+005	9.79E+004	-1.686E+004	5.388E+004
		722.30	20.00	1.719E+005		-5.340E+004	7.982E+004
		1274.51	34.40	9.786E+004		4.773E+004	4.400E+004
+	BI-214	609.31*	46.30	3.692E+004	3.69E+004	5.510E+004	1.606E+004
		768.36	5.04	6.954E+005		-1.172E+005	3.224E+005
		806.17	1.23	2.829E+006		2.192E+005	1.308E+006
		934.06	3.21	1.145E+006		8.558E+005	5.283E+005
		1120.29	15.10	2.762E+005		2.229E+005	1.277E+005
		1155.19	1.69	2.056E+006		1.381E+006	9.333E+005
		1238.11	5.94	7.641E+005		8.974E+004	3.540E+005
		1280.96	1.47	2.445E+006		5.968E+005	1.107E+006
		1377.67	4.11	6.833E+005		-4.648E+005	2.983E+005
		1385.31	0.78	3.898E+006		6.359E+005	1.720E+006
		1401.50	1.39	2.205E+006		-1.666E+005	9.728E+005
		1407.98	2.48	1.350E+006		-3.753E+004	6.019E+005
		1509.19	2.19	1.250E+006		-1.764E+005	5.381E+005
		1661.28	1.15	2.074E+006		-6.945E+004	8.602E+005
		1729.60	3.05	7.152E+005		3.043E+005	2.890E+005
		1764.49	15.80	2.386E+005		2.085E+005	1.058E+005
		1847.44	2.12	1.531E+006		-1.631E+005	6.624E+005
>		2118.54	1.21	0.000E+000		0.000E+000	0.000E+000
	PB-214	74.81	6.33	1.426E+006	1.18E+005	9.142E+005	6.956E+005
		77.11	10.70	7.876E+005		4.521E+005	3.842E+005
		87.20	3.70	1.593E+006		-9.106E+005	7.768E+005
		89.80	1.03	5.636E+006		9.328E+005	2.750E+006
		241.98	7.49	6.050E+005		7.335E+005	2.937E+005

Nuclide Name	Energy (keV)	Yield (%)	Line MDA (pCi/M^2)	Nuclide MDA (pCi/M^2)	Activity (pCi/M^2)	Dec. Level (pCi/M^2)
PB-214	295.21	19.20	2.101E+005	1.18E+005	6.068E+004	1.012E+005
	351.92	37.20	1.180E+005		8.906E+004	5.684E+004
	785.91	1.10	2.723E+006		-7.869E+005	1.244E+006

+ = Nuclide identified during the nuclide identification
* = Energy line found in the spectrum
> = Calculated MDA is zero due to zero counts in the region, or
the region is outside the spectrum, or MDA has not been calculated
@ = Half-life too short to be able to perform the decay correction

```
************************************************************************
*****        G A M M A   S P E C T R U M   A N A L Y S I S        *****
************************************************************************


Filename: C:\LACBWR\B1-010-001-FJFC-D45-GM.CNF

Report Generated On             : 3/29/2019  10:03:01 AM

Sample Title                    : B1-010-001-FJFC-D45-GM
Sample Description              : Rx Bowl concrete 0.5 M
Sample Identification           : D45
Sample Type                     : Gamma Direct
Sample Geometry                 :

Peak Locate Threshold           :  3.00
Peak Locate Range (in channels) :    85 -  8000
Peak Area Range (in channels)   :    85 -  8000
Identification Energy Tolerance :    3.000 keV

Sample Size                     :  7.900E-001 M^2

Sample Taken On                 : 3/29/2019   8:06:00 AM
Acquisition Started             : 3/29/2019   8:06:18 AM

Live Time                       :      600.0 seconds
Real Time                       :      600.3 seconds

Dead Time                       :   0.04 %


              Energy Calibration Used Done On       : 10/24/2017
              Efficiency Calibration Used Done On   : 3/26/2019
              Efficiency ID                         : RxBOWL_CON_0.5M
```

****
***** P E A K A N A L Y S I S R E P O R T *****
****

Detector Name: 3844
Sample Title: B1-010-001-FJFC-D45-GM
Peak Analysis Performed on: 3/29/2019 10:03:00 AM
Peak Analysis From Channel: 85
Peak Analysis To Channel: 8000

Peak No.	ROI start	ROI end	Peak centroid	Energy (keV)	FWHM (keV)	Net Peak Area	Net Area Uncert.	Continuum Counts
1	948-	962	954.71	238.75	0.49	5.67E+001	38.46	1.08E+002
2	1174-	1186	1179.67	295.03	0.43	3.35E+001	24.76	4.45E+001
3	2430-	2443	2436.75	609.44	0.37	3.33E+001	19.62	2.27E+001
4	2635-	2657	2646.42	661.87	1.44	7.91E+002	61.24	3.75E+001
5	5833-	5857	5845.50	1461.38	2.24	2.21E+002	32.20	9.35E+000

M = First peak in a multiplet region
m = Other peak in a multiplet region
F = Fitted singlet

Errors quoted at 2.000 sigma

****
***** N U C L I D E I D E N T I F I C A T I O N R E P O R T *****
****

Sample Title: B1-010-001-FJFC-D45-GM
Nuclide Library Used: C:\GENIE2K\CAMFILES\LACBWR.NLB

..... IDENTIFIED NUCLIDES .....

Nuclide Name	Id Confidence	Energy (keV)	Yield (%)	Activity (pCi/M^2)	Activity Uncertainty
K-40	0.994	1460.81*	10.67	2.84021E+006	4.76279E+005
CS-137	0.999	661.65*	85.12	8.03636E+005	1.14827E+005
PB-212	1.000	74.81	9.60		
		77.11	17.50		
		87.20	6.30		
		89.80	1.75		
		115.19	0.60		
		238.63*	44.60	6.11633E+004	4.26640E+004
		300.09	3.41		
BI-214	1.000	609.31*	46.30	5.91420E+004	3.56895E+004
		768.36	5.04		
		806.17	1.23		
		934.06	3.21		
		1120.29	15.10		
		1155.19	1.69		
		1238.11	5.94		
		1280.96	1.47		
		1377.67	4.11		
		1385.31	0.78		
		1401.50	1.39		
		1407.98	2.48		
		1509.19	2.19		
		1661.28	1.15		
		1729.60	3.05		
		1764.49	15.80		
		1847.44	2.12		
		2118.54	1.21		
PB-214	1.000	74.81	6.33		
		77.11	10.70		
		87.20	3.70		
		89.80	1.03		
		241.98	7.49		
		295.21*	19.20	9.43086E+004	7.14224E+004
		351.92	37.20		
		785.91	1.10		

* = Energy line found in the spectrum.
@ = Energy line not used for Weighted Mean Activity
Energy Tolerance : 3.000 keV
Nuclide confidence index threshold = 0.30
Errors quoted at 2.000 sigma

****
***** I N T E R F E R E N C E C O R R E C T E D R E P O R T *****
****

Nuclide Name	Nuclide Id Confidence	Wt mean Activity (pCi/M^2)	Wt mean Activity Uncertainty
K-40	0.994	2.840212E+006	4.762794E+005
CS-137	0.999	8.036357E+005	1.148271E+005
PB-212	1.000	6.116332E+004	4.266403E+004
BI-214	1.000	5.914200E+004	3.568947E+004
PB-214	1.000	9.430862E+004	7.142243E+004

? = Nuclide is part of an undetermined solution
X = Nuclide rejected by the interference analysis
@ = Nuclide contains energy lines not used in Weighted Mean Activity

Errors quoted at 2.000 sigma

********** U N I D E N T I F I E D P E A K S **********

Peak Locate Performed on: 3/29/2019 10:03:00 AM
Peak Locate From Channel: 85
Peak Locate To Channel: 8000

Peak No.	Energy (keV)	Peak Size in Counts per Second	Peak CPS % Uncertainty	Peak Type	Tol. Nuclide

All peaks were identified.

****
***** N U C L I D E M D A R E P O R T *****
****

Detector Name: 3844
Sample Geometry:
Sample Title: B1-010-001-FJFC-D45-GM
Nuclide Library Used: C:\GENIE2K\CAMFILES\LACBWR.NLB

	Nuclide Name	Energy (keV)	Yield (%)	Line MDA (pCi/M^2)	Nuclide MDA (pCi/M^2)	Activity (pCi/M^2)	Dec. Level (pCi/M^2)
+	K-40	1460.81*	10.67	2.978E+005	2.98E+005	2.840E+006	1.315E+005
	CO-60	1173.22	100.00	3.405E+004	2.89E+004	1.875E+004	1.542E+004
		1332.49	100.00	2.889E+004		-1.594E+004	1.270E+004
	CS-134	475.35	1.46	2.740E+006	3.89E+004	-3.052E+005	1.304E+006
		563.23	8.38	4.249E+005		7.027E+004	1.998E+005
		569.32	15.43	2.296E+005		5.933E+004	1.079E+005
		604.70	97.60	4.322E+004		-2.797E+003	2.048E+004
		795.84	85.40	3.894E+004		-5.986E+002	1.795E+004
		801.93	8.73	3.471E+005		-1.035E+005	1.586E+005
		1038.57	1.00	2.944E+006		-1.789E+006	1.321E+006
		1167.94	1.80	1.968E+006		1.099E+006	8.948E+005
		1365.15	3.04	1.056E+006		9.473E+005	4.699E+005
+	CS-137	661.65*	85.12	4.312E+004	4.31E+004	8.036E+005	2.019E+004
	EU-152	121.78	28.40	1.528E+005	1.13E+005	-4.096E+004	7.442E+004
		344.27	26.50	1.509E+005		5.579E+004	7.245E+004
		1407.95	20.70	1.126E+005		-6.883E+004	4.755E+004
	EU-154	123.07	40.40	1.077E+005	1.04E+005	-3.863E+004	5.248E+004
		722.30	20.00	1.719E+005		3.271E+004	7.982E+004
		1274.51	34.40	1.042E+005		2.478E+004	4.715E+004
+	BI-214	609.31*	46.30	5.122E+004	5.12E+004	5.914E+004	2.321E+004
		768.36	5.04	6.529E+005		1.331E+005	3.012E+005
		806.17	1.23	2.349E+006		-1.653E+006	1.068E+006
		934.06	3.21	1.077E+006		-7.961E+005	4.942E+005
		1120.29	15.10	2.354E+005		4.228E+004	1.073E+005
		1155.19	1.69	2.218E+006		4.320E+005	1.015E+006
		1238.11	5.94	7.096E+005		9.527E+005	3.268E+005
		1280.96	1.47	2.445E+006		1.346E+006	1.107E+006
		1377.67	4.11	8.020E+005		-6.530E+005	3.576E+005
		1385.31	0.78	4.324E+006		2.899E+006	1.933E+006
		1401.50	1.39	2.353E+006		2.111E+006	1.047E+006
		1407.98	2.48	9.397E+005		-5.745E+005	3.969E+005
		1509.19	2.19	1.118E+006		1.877E+005	4.720E+005
		1661.28	1.15	2.179E+006		1.380E+005	9.124E+005
		1729.60	3.05	3.732E+005		5.071E+004	1.180E+005
		1764.49	15.80	1.801E+005		1.092E+005	7.660E+004
		1847.44	2.12	1.207E+006		6.088E+005	5.007E+005
>		2118.54	1.21	0.000E+000		0.000E+000	0.000E+000
+	PB-214	74.81	6.33	1.366E+006	1.08E+005	9.721E+005	6.653E+005
		77.11	10.70	7.566E+005		2.407E+005	3.687E+005
		87.20	3.70	1.661E+006		1.180E+006	8.108E+005
		89.80	1.03	5.685E+006		1.850E+006	2.775E+006
		241.98	7.49	5.797E+005		6.894E+005	2.811E+005

	Nuclide Name	Energy (keV)	Yield (%)	Line MDA (pCi/M^2)	Nuclide MDA (pCi/M^2)	Activity (pCi/M^2)	Dec. Level (pCi/M^2)
+	PB-214	295.21*	19.20	1.092E+005	1.08E+005	9.431E+004	5.077E+004
		351.92	37.20	1.080E+005		-1.127E+004	5.184E+004
		785.91	1.10	3.173E+006		-8.723E+005	1.469E+006

+ = Nuclide identified during the nuclide identification
* = Energy line found in the spectrum
> = Calculated MDA is zero due to zero counts in the region, or the region is outside the spectrum, or MDA has not been calculated
@ = Half-life too short to be able to perform the decay correction

```
************************************************************************
*****        G A M M A   S P E C T R U M   A N A L Y S I S        *****
************************************************************************


Filename: C:\LACBWR\B1-010-001-FJFC-D46-GM.CNF

Report Generated On             : 3/29/2019  10:06:01 AM

Sample Title                    : B1-010-001-FJFC-D46-GM
Sample Description              : Rx Bowl concrete 0.5 M
Sample Identification           : D46
Sample Type                     : Gamma Direct
Sample Geometry                 :

Peak Locate Threshold           :  3.00
Peak Locate Range (in channels) :    85 -  8000
Peak Area Range (in channels)   :    85 -  8000
Identification Energy Tolerance :    3.000 keV

Sample Size                     :  7.900E-001 M^2

Sample Taken On                 : 3/29/2019   7:41:00 AM
Acquisition Started             : 3/29/2019   7:41:26 AM

Live Time                       :      600.0 seconds
Real Time                       :      600.2 seconds

Dead Time                       :   0.04 %


              Energy Calibration Used Done On       : 10/24/2017
              Efficiency Calibration Used Done On   : 3/26/2019
              Efficiency ID                         : RxBOWL_CON_0.5M
```

****
***** P E A K A N A L Y S I S R E P O R T *****
****

Detector Name: 3844
Sample Title: B1-010-001-FJFC-D46-GM
Peak Analysis Performed on: 3/29/2019 10:06:01 AM
Peak Analysis From Channel: 85
Peak Analysis To Channel: 8000

Peak No.	ROI start	ROI end	Peak centroid	Energy (keV)	FWHM (keV)	Net Peak Area	Net Area Uncert.	Continuum Counts
1	948-	961	954.45	238.68	0.78	5.57E+001	36.21	9.73E+001
2	1175-	1186	1180.08	295.13	0.43	1.87E+001	22.43	4.23E+001
3	2431-	2446	2437.31	609.58	1.48	3.42E+001	18.42	1.68E+001
4	2638-	2656	2646.89	661.99	0.85	2.04E+002	31.23	1.18E+001
5	3638-	3652	3645.20	911.58	1.65	3.23E+001	14.89	7.72E+000
6	5835-	5858	5846.70	1461.68	2.37	2.40E+002	32.41	5.74E+000

M = First peak in a multiplet region
m = Other peak in a multiplet region
F = Fitted singlet

Errors quoted at 2.000 sigma

****
***** N U C L I D E I D E N T I F I C A T I O N R E P O R T *****
****

Sample Title: B1-010-001-FJFC-D46-GM
Nuclide Library Used: C:\GENIE2K\CAMFILES\LACBWR.NLB

..... IDENTIFIED NUCLIDES .....

Nuclide Name	Id Confidence	Energy (keV)	Yield (%)	Activity (pCi/M^2)	Activity Uncertainty
K-40	0.986	1460.81*	10.67	3.09315E+006	4.89292E+005
CS-137	0.998	661.65*	85.12	2.07401E+005	4.03258E+004
PB-212	1.000	74.81	9.60		
		77.11	17.50		
		87.20	6.30		
		89.80	1.75		
		115.19	0.60		
		238.63*	44.60	6.00999E+004	4.02546E+004
		300.09	3.41		
BI-214	0.999	609.31*	46.30	6.07493E+004	3.36464E+004
		768.36	5.04		
		806.17	1.23		
		934.06	3.21		
		1120.29	15.10		
		1155.19	1.69		
		1238.11	5.94		
		1280.96	1.47		
		1377.67	4.11		
		1385.31	0.78		
		1401.50	1.39		
		1407.98	2.48		
		1509.19	2.19		
		1661.28	1.15		
		1729.60	3.05		
		1764.49	15.80		
		1847.44	2.12		
		2118.54	1.21		
PB-214	1.000	74.81	6.33		
		77.11	10.70		
		87.20	3.70		
		89.80	1.03		
		241.98	7.49		
		295.21*	19.20	5.26974E+004	6.38181E+004
		351.92	37.20		
		785.91	1.10		
AC-228	1.000	89.95	2.10		
		93.35	3.50		
		129.08	2.80		
		209.28	4.40		
		270.23	3.60		
		327.64	3.20		

Nuclide Name	Id Confidence	Energy (keV)	Yield (%)	Activity (pCi/M^2)	Activity Uncertainty
AC-228	1.000	338.32	11.40		
		409.51	2.13		
		463.00	4.40		
		794.70	4.60		
		911.60*	27.70	1.21015E+005	5.75362E+004
		964.60	5.20		
		969.11	16.60		
		1587.90	3.71		

* = Energy line found in the spectrum.
@ = Energy line not used for Weighted Mean Activity
Energy Tolerance : 3.000 keV
Nuclide confidence index threshold = 0.30
Errors quoted at 2.000 sigma

****
***** I N T E R F E R E N C E C O R R E C T E D R E P O R T *****
****

Nuclide Name	Nuclide Id Confidence	Wt mean Activity (pCi/M^2)	Wt mean Activity Uncertainty
K-40	0.986	3.093151E+006	4.892917E+005
CS-137	0.998	2.074005E+005	4.032576E+004
PB-212	1.000	6.009990E+004	4.025458E+004
BI-214	0.999	6.074929E+004	3.364636E+004
PB-214	1.000	5.269739E+004	6.381806E+004
AC-228	1.000	1.210149E+005	5.753622E+004

? = Nuclide is part of an undetermined solution
X = Nuclide rejected by the interference analysis
@ = Nuclide contains energy lines not used in Weighted Mean Activity

Errors quoted at 2.000 sigma

********** U N I D E N T I F I E D P E A K S **********

Peak Locate Performed on: 3/29/2019 10:06:01 AM
Peak Locate From Channel: 85
Peak Locate To Channel: 8000

Peak No.	Energy (keV)	Peak Size in Counts per Second	Peak CPS % Uncertainty	Peak Type	Tol. Nuclide

All peaks were identified.

****
***** N U C L I D E M D A R E P O R T *****
****

Detector Name: 3844
Sample Geometry:
Sample Title: B1-010-001-FJFC-D46-GM
Nuclide Library Used: C:\GENIE2K\CAMFILES\LACBWR.NLB

	Nuclide Name	Energy (keV)	Yield (%)	Line MDA (pCi/M^2)	Nuclide MDA (pCi/M^2)	Activity (pCi/M^2)	Dec. Level (pCi/M^2)
+	K-40	1460.81*	10.67	2.351E+005	2.35E+005	3.093E+006	1.001E+005
	CO-60	1173.22	100.00	3.355E+004	3.09E+004	-4.124E+004	1.517E+004
		1332.49	100.00	3.092E+004		1.653E+004	1.372E+004
	CS-134	475.35	1.46	2.557E+006	3.89E+004	1.536E+006	1.213E+006
		563.23	8.38	4.249E+005		1.897E+005	1.998E+005
		569.32	15.43	2.146E+005		-9.575E+004	1.004E+005
		604.70	97.60	4.092E+004		-2.868E+004	1.933E+004
		795.84	85.40	3.894E+004		1.132E+004	1.795E+004
		801.93	8.73	4.044E+005		-1.741E+005	1.873E+005
		1038.57	1.00	3.323E+006		3.125E+006	1.511E+006
		1167.94	1.80	2.045E+006		4.287E+005	9.334E+005
		1365.15	3.04	1.035E+006		9.043E+005	4.591E+005
+	CS-137	661.65*	85.12	2.375E+004	2.38E+004	2.074E+005	1.050E+004
	EU-152	121.78	28.40	1.449E+005	1.38E+005	7.002E+004	7.049E+004
		344.27	26.50	1.410E+005		7.993E+004	6.748E+004
		1407.95	20.70	1.378E+005		-3.959E+004	6.014E+004
	EU-154	123.07	40.40	1.011E+005	1.01E+005	-5.248E+004	4.915E+004
		722.30	20.00	1.774E+005		-4.101E+004	8.257E+004
		1274.51	34.40	1.026E+005		5.369E+004	4.638E+004
+	BI-214	609.31*	46.30	4.642E+004	4.64E+004	6.075E+004	2.080E+004
		768.36	5.04	6.653E+005		-7.675E+005	3.074E+005
		806.17	1.23	2.777E+006		-2.177E+006	1.282E+006
		934.06	3.21	1.145E+006		-6.658E+003	5.283E+005
		1120.29	15.10	2.978E+005		1.667E+005	1.385E+005
		1155.19	1.69	2.084E+006		-1.886E+006	9.473E+005
		1238.11	5.94	6.879E+005		4.223E+005	3.159E+005
		1280.96	1.47	2.372E+006		1.175E+006	1.071E+006
		1377.67	4.11	6.448E+005		-2.215E+005	2.790E+005
		1385.31	0.78	3.615E+006		1.410E+006	1.578E+006
		1401.50	1.39	2.045E+006		7.195E+004	8.927E+005
		1407.98	2.48	1.150E+006		-3.304E+005	5.020E+005
		1509.19	2.19	1.208E+006		-2.406E+005	5.170E+005
		1661.28	1.15	1.844E+006		3.922E+005	7.450E+005
		1729.60	3.05	8.834E+005		5.071E+005	3.731E+005
		1764.49	15.80	2.282E+005		1.172E+005	1.007E+005
		1847.44	2.12	1.207E+006		-6.658E+005	5.007E+005
>		2118.54	1.21	0.000E+000		0.000E+000	0.000E+000
+	PB-214	74.81	6.33	1.351E+006	1.04E+005	1.208E+006	6.577E+005
		77.11	10.70	7.418E+005		7.107E+005	3.613E+005
		87.20	3.70	1.563E+006		2.373E+005	7.619E+005
		89.80	1.03	5.484E+006		4.342E+006	2.674E+006
		241.98	7.49	5.616E+005		4.453E+005	2.721E+005

	Nuclide Name	Energy (keV)	Yield (%)	Line MDA (pCi/M^2)	Nuclide MDA (pCi/M^2)	Activity (pCi/M^2)	Dec. Level (pCi/M^2)
+	PB-214	295.21*	19.20	1.037E+005	1.04E+005	5.270E+004	4.801E+004
		351.92	37.20	1.050E+005		5.314E+004	5.034E+004
		785.91	1.10	3.001E+006		-5.453E+005	1.383E+006

+ = Nuclide identified during the nuclide identification
* = Energy line found in the spectrum
> = Calculated MDA is zero due to zero counts in the region, or
the region is outside the spectrum, or MDA has not been calculated
@ = Half-life too short to be able to perform the decay correction

```
************************************************************************
*****        G A M M A   S P E C T R U M   A N A L Y S I S        *****
************************************************************************


Filename: C:\LACBWR\B1-010-001-FJFC-D47-GM.CNF

Report Generated On             : 3/29/2019  10:08:32 AM

Sample Title                    : B1-010-001-FJFC-D47-GM
Sample Description              : Rx Bowl concrete 0.5 M
Sample Identification           : D47
Sample Type                     : Gamma Direct
Sample Geometry                 :

Peak Locate Threshold           :  3.00
Peak Locate Range (in channels) :    85 -  8000
Peak Area Range (in channels)   :    85 -  8000
Identification Energy Tolerance :    3.000 keV

Sample Size                     :  7.900E-001 M^2

Sample Taken On                 : 3/29/2019   7:53:00 AM
Acquisition Started             : 3/29/2019   7:53:55 AM

Live Time                       :      600.0 seconds
Real Time                       :      600.3 seconds

Dead Time                       :   0.04 %


              Energy Calibration Used Done On       : 10/24/2017
              Efficiency Calibration Used Done On   : 3/26/2019
              Efficiency ID                         : RxBOWL_CON_0.5M
```

****
***** P E A K A N A L Y S I S R E P O R T *****
****

Detector Name: 3844
Sample Title: B1-010-001-FJFC-D47-GM
Peak Analysis Performed on: 3/29/2019 10:08:32 AM
Peak Analysis From Channel: 85
Peak Analysis To Channel: 8000

Peak No.	ROI start	ROI end	Peak centroid	Energy (keV)	FWHM (keV)	Net Peak Area	Net Area Uncert.	Continuum Counts
1	296-	305	300.80	75.13	0.69	3.55E+001	35.71	1.25E+002
2	948-	962	955.07	238.84	0.68	4.66E+001	34.76	8.84E+001
3	1399-	1415	1407.51	352.02	0.77	6.23E+001	24.93	2.97E+001
4	2326-	2340	2332.97	583.49	1.00	4.07E+001	17.16	1.13E+001
5	2431-	2444	2436.92	609.48	0.80	2.94E+001	17.97	1.86E+001
6	2638-	2655	2646.79	661.97	1.39	1.61E+002	31.17	2.49E+001
7	3869-	3883	3876.00	969.27	0.35	2.63E+001	14.24	7.68E+000
8	5833-	5858	5845.99	1461.51	2.07	2.67E+002	34.25	6.34E+000

M = First peak in a multiplet region
m = Other peak in a multiplet region
F = Fitted singlet

Errors quoted at 2.000 sigma

****
***** N U C L I D E I D E N T I F I C A T I O N R E P O R T *****
****

Sample Title: B1-010-001-FJFC-D47-GM
Nuclide Library Used: C:\GENIE2K\CAMFILES\LACBWR.NLB

..... IDENTIFIED NUCLIDES .....

Nuclide Name	Id Confidence	Energy (keV)	Yield (%)	Activity (pCi/M^2)	Activity Uncertainty
K-40	0.991	1460.81*	10.67	3.43271E+006	5.24218E+005
CS-137	0.998	661.65*	85.12	1.63552E+005	3.72523E+004
PB-212	0.999	74.81*	9.60	3.01073E+005	3.08416E+005
		77.11	17.50		
		87.20	6.30		
		89.80	1.75		
		115.19	0.60		
		238.63*	44.60	5.03538E+004	3.83897E+004
		300.09	3.41		
BI-214	1.000	609.31*	46.30	5.22374E+004	3.26373E+004
		768.36	5.04		
		806.17	1.23		
		934.06	3.21		
		1120.29	15.10		
		1155.19	1.69		
		1238.11	5.94		
		1280.96	1.47		
		1377.67	4.11		
		1385.31	0.78		
		1401.50	1.39		
		1407.98	2.48		
		1509.19	2.19		
		1661.28	1.15		
		1729.60	3.05		
		1764.49	15.80		
		1847.44	2.12		
		2118.54	1.21		
PB-214	0.627	74.81*	6.33	4.56603E+005	4.67740E+005
		77.11	10.70		
		87.20	3.70		
		89.80	1.03		
		241.98	7.49		
		295.21	19.20		
		351.92*	37.20	9.98871E+004	4.30729E+004
		785.91	1.10		
AC-228	0.593	89.95	2.10		
		93.35	3.50		
		129.08	2.80		
		209.28	4.40		
		270.23	3.60		
		327.64	3.20		

Nuclide Name	Id Confidence	Energy (keV)	Yield (%)	Activity (pCi/M^2)	Activity Uncertainty
AC-228	0.593	338.32	11.40		
		409.51	2.13		
		463.00	4.40		
		794.70	4.60		
		911.60	27.70		
		964.60	5.20		
		969.11*	16.60	1.70177E+005	9.33865E+004
		1587.90	3.71		

* = Energy line found in the spectrum.
@ = Energy line not used for Weighted Mean Activity
Energy Tolerance : 3.000 keV
Nuclide confidence index threshold = 0.30
Errors quoted at 2.000 sigma

****
***** I N T E R F E R E N C E C O R R E C T E D R E P O R T *****
****

Nuclide Name	Nuclide Id Confidence	Wt mean Activity (pCi/M^2)	Wt mean Activity Uncertainty
K-40	0.991	3.432712E+006	5.242179E+005
CS-137	0.998	1.635516E+005	3.725234E+004
PB-212	0.999	5.315089E+004	3.809820E+004
BI-214	1.000	5.223742E+004	3.263728E+004
PB-214	0.627	1.022088E+005	4.289422E+004
AC-228	0.593	1.701774E+005	9.338652E+004

? = Nuclide is part of an undetermined solution
X = Nuclide rejected by the interference analysis
@ = Nuclide contains energy lines not used in Weighted Mean Activity

Errors quoted at 2.000 sigma

********** U N I D E N T I F I E D P E A K S **********

Peak Locate Performed on: 3/29/2019 10:08:32 AM
Peak Locate From Channel: 85
Peak Locate To Channel: 8000

Peak No.	Energy (keV)	Peak Size in Counts per Second	Peak CPS % Uncertainty	Peak Type	Tol. Nuclide
4	583.49	6.7837E-002	42.15		

M = First peak in a multiplet region
m = Other peak in a multiplet region
F = Fitted singlet

Errors quoted at 2.000 sigma

****
***** N U C L I D E M D A R E P O R T *****
****

Detector Name: 3844
Sample Geometry:
Sample Title: B1-010-001-FJFC-D47-GM
Nuclide Library Used: C:\GENIE2K\CAMFILES\LACBWR.NLB

	Nuclide Name	Energy (keV)	Yield (%)	Line MDA (pCi/M^2)	Nuclide MDA (pCi/M^2)	Activity (pCi/M^2)	Dec. Level (pCi/M^2)
+	K-40	1460.81*	10.67	2.532E+005	2.53E+005	3.433E+006	1.092E+005
	CO-60	1173.22	100.00	3.995E+004	3.34E+004	-1.122E+004	1.837E+004
		1332.49	100.00	3.342E+004		2.677E+003	1.497E+004
	CS-134	475.35	1.46	2.313E+006	3.85E+004	-1.313E+006	1.091E+006
		563.23	8.38	4.128E+005		2.826E+004	1.937E+005
		569.32	15.43	2.146E+005		3.713E+004	1.004E+005
		604.70	97.60	3.848E+004		-1.926E+004	1.810E+004
		795.84	85.40	3.856E+004		-2.446E+003	1.776E+004
		801.93	8.73	3.863E+005		-6.473E+004	1.782E+005
		1038.57	1.00	3.367E+006		-2.542E+006	1.533E+006
		1167.94	1.80	2.214E+006		-2.211E+005	1.018E+006
		1365.15	3.04	9.898E+005		4.113E+005	4.367E+005
+	CS-137	661.65*	85.12	3.297E+004	3.30E+004	1.636E+005	1.511E+004
	EU-152	121.78	28.40	1.533E+005	1.31E+005	-9.235E+004	7.466E+004
		344.27	26.50	1.307E+005		-3.661E+004	6.232E+004
		1407.95	20.70	1.486E+005		-3.197E+004	6.554E+004
	EU-154	123.07	40.40	1.082E+005	9.95E+004	-1.844E+004	5.270E+004
		722.30	20.00	1.747E+005		1.818E+004	8.120E+004
		1274.51	34.40	9.947E+004		6.829E+004	4.481E+004
+	BI-214	609.31*	46.30	4.672E+004	4.67E+004	5.224E+004	2.096E+004
		768.36	5.04	6.273E+005		-5.499E+005	2.884E+005
		806.17	1.23	2.724E+006		3.685E+005	1.255E+006
		934.06	3.21	1.041E+006		-1.057E+006	4.762E+005
		1120.29	15.10	2.884E+005		-3.843E+004	1.338E+005
		1155.19	1.69	1.969E+006		-1.100E+006	8.899E+005
		1238.11	5.94	7.374E+005		2.329E+005	3.407E+005
		1280.96	1.47	1.870E+006		-1.154E+006	8.196E+005
		1377.67	4.11	5.814E+005		-3.461E+005	2.473E+005
		1385.31	0.78	3.615E+006		1.468E+006	1.578E+006
		1401.50	1.39	1.988E+006		-7.723E+005	8.644E+005
		1407.98	2.48	1.240E+006		-2.669E+005	5.470E+005
		1509.19	2.19	1.208E+006		2.352E+005	5.170E+005
		1661.28	1.15	1.714E+006		6.537E+005	6.801E+005
		1729.60	3.05	7.152E+005		-6.128E+004	2.890E+005
		1764.49	15.80	2.282E+005		2.234E+004	1.007E+005
		1847.44	2.12	1.143E+006		-1.006E+005	4.684E+005
>		2118.54	1.21	0.000E+000		0.000E+000	0.000E+000
+	PB-214	74.81*	6.33	7.461E+005	5.53E+004	4.566E+005	3.557E+005
		77.11	10.70	7.610E+005		4.821E+005	3.709E+005
		87.20	3.70	1.611E+006		1.150E+006	7.856E+005
		89.80	1.03	5.611E+006		2.360E+006	2.737E+006
		241.98	7.49	5.515E+005		2.910E+005	2.670E+005

	Nuclide Name	Energy (keV)	Yield (%)	Line MDA (pCi/M^2)	Nuclide MDA (pCi/M^2)	Activity (pCi/M^2)	Dec. Level (pCi/M^2)
+	PB-214	295.21	19.20	1.923E+005	5.53E+004	1.275E+004	9.232E+004
		351.92*	37.20	5.528E+004		9.989E+004	2.547E+004
		785.91	1.10	3.173E+006		1.628E+006	1.469E+006

+ = Nuclide identified during the nuclide identification
* = Energy line found in the spectrum
> = Calculated MDA is zero due to zero counts in the region, or
the region is outside the spectrum, or MDA has not been calculated
@ = Half-life too short to be able to perform the decay correction

```
***********************************************************************
*****        G A M M A   S P E C T R U M   A N A L Y S I S        *****
***********************************************************************


Filename: C:\LACBWR\B1-010-001-FJFC-D48-GM.CNF

Report Generated On              : 3/29/2019  10:12:57 AM

Sample Title                     : B1-010-001-FJFC-D48-GM
Sample Description               : Rx Bowl concrete 0.5 M
Sample Identification            : D48
Sample Type                      : Gamma Direct
Sample Geometry                  :

Peak Locate Threshold            :  3.00
Peak Locate Range (in channels)  :    85 -  8000
Peak Area Range (in channels)    :    85 -  8000
Identification Energy Tolerance  :    3.000 keV

Sample Size                      :  7.900E-001 M^2

Sample Taken On                  : 3/29/2019   8:19:00 AM
Acquisition Started              : 3/29/2019   8:20:46 AM

Live Time                        :      600.0 seconds
Real Time                        :      600.2 seconds

Dead Time                        :   0.04 %


              Energy Calibration Used Done On       : 10/24/2017
              Efficiency Calibration Used Done On   : 3/26/2019
              Efficiency ID                         : RxBOWL_CON_0.5M
```

****
***** P E A K A N A L Y S I S R E P O R T *****
****

Detector Name: 3844
Sample Title: B1-010-001-FJFC-D48-GM
Peak Analysis Performed on: 3/29/2019 10:12:57 AM
Peak Analysis From Channel: 85
Peak Analysis To Channel: 8000

Peak No.	ROI start	ROI end	Peak centroid	Energy (keV)	FWHM (keV)	Net Peak Area	Net Area Uncert.	Continuum Counts
1	295-	306	300.24	74.99	0.64	5.21E+001	39.32	1.33E+002
2	946-	961	954.32	238.65	0.71	5.10E+001	33.78	7.80E+001
3	2326-	2338	2332.78	583.44	1.12	2.70E+001	17.32	1.80E+001
4	2433-	2444	2438.19	609.80	0.53	3.90E+001	17.54	1.50E+001
5	2640-	2654	2646.42	661.87	1.11	4.32E+001	20.39	2.08E+001
6	3639-	3652	3645.07	911.54	0.41	2.14E+001	17.07	1.86E+001
7	5834-	5859	5846.12	1461.54	2.17	2.66E+002	33.36	3.02E+000

M = First peak in a multiplet region
m = Other peak in a multiplet region
F = Fitted singlet

Errors quoted at 2.000 sigma

****
***** N U C L I D E I D E N T I F I C A T I O N R E P O R T *****
****

Sample Title: B1-010-001-FJFC-D48-GM
Nuclide Library Used: C:\GENIE2K\CAMFILES\LACBWR.NLB

..... IDENTIFIED NUCLIDES .....

Nuclide Name	Id Confidence	Energy (keV)	Yield (%)	Activity (pCi/M^2)	Activity Uncertainty
K-40	0.991	1460.81*	10.67	3.42392E+006	5.14214E+005
CS-137	0.999	661.65*	85.12	4.38400E+004	2.13622E+004
PB-212	0.711	74.81*	9.60	4.43820E+005	3.46341E+005
		77.11	17.50		
		87.20	6.30		
		89.80	1.75		
		115.19	0.60		
		238.63*	44.60	5.50681E+004	3.75100E+004
		300.09	3.41		
BI-214	0.998	609.31*	46.30	6.93381E+004	3.24219E+004
		768.36	5.04		
		806.17	1.23		
		934.06	3.21		
		1120.29	15.10		
		1155.19	1.69		
		1238.11	5.94		
		1280.96	1.47		
		1377.67	4.11		
		1385.31	0.78		
		1401.50	1.39		
		1407.98	2.48		
		1509.19	2.19		
		1661.28	1.15		
		1729.60	3.05		
		1764.49	15.80		
		1847.44	2.12		
		2118.54	1.21		
AC-228	1.000	89.95	2.10		
		93.35	3.50		
		129.08	2.80		
		209.28	4.40		
		270.23	3.60		
		327.64	3.20		
		338.32	11.40		
		409.51	2.13		
		463.00	4.40		
		794.70	4.60		
		911.60*	27.70	8.04016E+004	6.46697E+004
		964.60	5.20		
		969.11	16.60		
		1587.90	3.71		

Nuclide Name	Id Confidence	Energy (keV)	Yield (%)	Activity (pCi/M^2)	Activity Uncertainty

* = Energy line found in the spectrum.
@ = Energy line not used for Weighted Mean Activity
Energy Tolerance : 3.000 keV
Nuclide confidence index threshold = 0.30
Errors quoted at 2.000 sigma

****
***** I N T E R F E R E N C E C O R R E C T E D R E P O R T *****
****

Nuclide Name	Nuclide Id Confidence	Wt mean Activity (pCi/M^2)	Wt mean Activity Uncertainty
K-40	0.991	3.423920E+006	5.142145E+005
CS-137	0.999	4.384004E+004	2.136225E+004
PB-212	0.711	5.957522E+004	3.729191E+004
BI-214	0.998	6.933811E+004	3.242188E+004
AC-228	1.000	8.040162E+004	6.466971E+004

? = Nuclide is part of an undetermined solution
X = Nuclide rejected by the interference analysis
@ = Nuclide contains energy lines not used in Weighted Mean Activity

Errors quoted at 2.000 sigma

********** U N I D E N T I F I E D P E A K S **********

Peak Locate Performed on: 3/29/2019 10:12:57 AM
Peak Locate From Channel: 85
Peak Locate To Channel: 8000

Peak No.	Energy (keV)	Peak Size in Counts per Second	Peak CPS % Uncertainty	Peak Type	Tol. Nuclide
3	583.44	4.4926E-002	64.25		

M = First peak in a multiplet region
m = Other peak in a multiplet region
F = Fitted singlet

Errors quoted at 2.000 sigma

****
***** N U C L I D E M D A R E P O R T *****
****

Detector Name: 3844
Sample Geometry:
Sample Title: B1-010-001-FJFC-D48-GM
Nuclide Library Used: C:\GENIE2K\CAMFILES\LACBWR.NLB

	Nuclide Name	Energy (keV)	Yield (%)	Line MDA (pCi/M^2)	Nuclide MDA (pCi/M^2)	Activity (pCi/M^2)	Dec. Level (pCi/M^2)
+	K-40	1460.81*	10.67	1.829E+005	1.83E+005	3.424E+006	7.402E+004
	CO-60	1173.22	100.00	3.355E+004	3.28E+004	8.946E+003	1.517E+004
		1332.49	100.00	3.281E+004		1.214E+004	1.467E+004
	CS-134	475.35	1.46	2.180E+006	4.32E+004	1.576E+006	1.024E+006
		563.23	8.38	3.875E+005		1.644E+005	1.811E+005
		569.32	15.43	2.118E+005		1.839E+005	9.896E+004
		604.70	97.60	4.322E+004		-1.116E+004	2.048E+004
		795.84	85.40	4.460E+004		-1.080E+004	2.078E+004
		801.93	8.73	3.937E+005		-5.528E+004	1.819E+005
		1038.57	1.00	3.367E+006		-6.484E+005	1.533E+006
		1167.94	1.80	2.191E+006		1.989E+006	1.006E+006
		1365.15	3.04	1.035E+006		2.476E+005	4.591E+005
+	CS-137	661.65*	85.12	2.879E+004	2.88E+004	4.384E+004	1.302E+004
	EU-152	121.78	28.40	1.484E+005	1.26E+005	-2.899E+004	7.220E+004
		344.27	26.50	1.263E+005		-4.377E+004	6.013E+004
		1407.95	20.70	1.340E+005		-6.668E+004	5.823E+004
	EU-154	123.07	40.40	1.044E+005	1.03E+005	2.481E+004	5.081E+004
		722.30	20.00	1.801E+005		9.884E+004	8.391E+004
		1274.51	34.40	1.026E+005		5.369E+004	4.638E+004
+	BI-214	609.31*	46.30	4.083E+004	4.08E+004	6.934E+004	1.801E+004
		768.36	5.04	6.835E+005		4.935E+005	3.165E+005
		806.17	1.23	2.750E+006		-1.025E+004	1.269E+006
		934.06	3.21	1.112E+006		5.317E+005	5.115E+005
		1120.29	15.10	2.932E+005		-2.306E+004	1.362E+005
		1155.19	1.69	2.295E+006		-2.619E+005	1.053E+006
		1238.11	5.94	6.655E+005		1.967E+005	3.047E+005
		1280.96	1.47	2.219E+006		-1.773E+006	9.939E+005
		1377.67	4.11	8.020E+005		4.878E+005	3.576E+005
		1385.31	0.78	3.806E+006		-9.797E+005	1.674E+006
		1401.50	1.39	2.100E+006		-1.295E+006	9.202E+005
		1407.98	2.48	1.118E+006		-5.565E+005	4.861E+005
		1509.19	2.19	9.633E+005		-2.062E+004	3.949E+005
		1661.28	1.15	1.570E+006		5.229E+005	6.083E+005
		1729.60	3.05	7.152E+005		-9.805E+005	2.890E+005
		1764.49	15.80	2.229E+005		8.274E+004	9.799E+004
		1847.44	2.12	9.976E+005		3.805E+005	3.959E+005
>		2118.54	1.21	0.000E+000		0.000E+000	0.000E+000
	PB-214	74.81	6.33	1.315E+006	9.76E+004	1.166E+006	6.401E+005
		77.11	10.70	7.220E+005		4.333E+004	3.514E+005
		87.20	3.70	1.519E+006		2.212E+005	7.397E+005
		89.80	1.03	5.259E+006		6.666E+005	2.562E+006
		241.98	7.49	5.298E+005		7.692E+005	2.561E+005

Nuclide Name	Energy (keV)	Yield (%)	Line MDA (pCi/M^2)	Nuclide MDA (pCi/M^2)	Activity (pCi/M^2)	Dec. Level (pCi/M^2)
PB-214	295.21	19.20	1.802E+005	9.76E+004	1.241E+005	8.629E+004
	351.92	37.20	9.756E+004		9.891E+004	4.661E+004
	785.91	1.10	3.200E+006		2.963E+006	1.483E+006

+ = Nuclide identified during the nuclide identification
* = Energy line found in the spectrum
> = Calculated MDA is zero due to zero counts in the region, or
the region is outside the spectrum, or MDA has not been calculated
@ = Half-life too short to be able to perform the decay correction

```
************************************************************************
*****        G A M M A   S P E C T R U M   A N A L Y S I S        *****
************************************************************************


Filename: C:\LACBWR\B1-010-001-FJFC-D49-GM.CNF

Report Generated On             : 3/29/2019  10:15:47 AM

Sample Title                    : B1-010-001-FJFC-D49-GM
Sample Description              : Rx Bowl concrete 0.5 M
Sample Identification           : D49
Sample Type                     : Gamma Direct
Sample Geometry                 :

Peak Locate Threshold           :  3.00
Peak Locate Range (in channels) :    85 -  8000
Peak Area Range (in channels)   :    85 -  8000
Identification Energy Tolerance :    3.000 keV

Sample Size                     :  7.900E-001 M^2

Sample Taken On                 : 3/29/2019   8:33:00 AM
Acquisition Started             : 3/29/2019   8:34:56 AM

Live Time                       :      600.0 seconds
Real Time                       :      600.2 seconds

Dead Time                       :   0.04 %


              Energy Calibration Used Done On       : 10/24/2017
              Efficiency Calibration Used Done On   : 3/26/2019
              Efficiency ID                         : RxBOWL_CON_0.5M
```

****
***** P E A K A N A L Y S I S R E P O R T *****
****

Detector Name: 3844
Sample Title: B1-010-001-FJFC-D49-GM
Peak Analysis Performed on: 3/29/2019 10:15:47 AM
Peak Analysis From Channel: 85
Peak Analysis To Channel: 8000

Peak No.	ROI start	ROI end	Peak centroid	Energy (keV)	FWHM (keV)	Net Peak Area	Net Area Uncert.	Continuum Counts
1	948-	963	954.47	238.69	1.35	5.00E+001	38.24	1.02E+002
2	2432-	2444	2437.93	609.74	0.63	2.65E+001	19.39	2.55E+001
3	2639-	2654	2646.62	661.92	1.05	1.01E+002	25.63	2.12E+001
4	5834-	5857	5846.85	1461.72	1.78	2.64E+002	33.25	3.06E+000

M = First peak in a multiplet region
m = Other peak in a multiplet region
F = Fitted singlet

Errors quoted at 2.000 sigma

****
***** N U C L I D E I D E N T I F I C A T I O N R E P O R T *****
****

Sample Title: B1-010-001-FJFC-D49-GM
Nuclide Library Used: C:\GENIE2K\CAMFILES\LACBWR.NLB

..... IDENTIFIED NUCLIDES .....

Nuclide Name	Id Confidence	Energy (keV)	Yield (%)	Activity (pCi/M^2)	Activity Uncertainty
K-40	0.985	1460.81*	10.67	3.39800E+006	5.11914E+005
CS-137	0.999	661.65*	85.12	1.02334E+005	2.87817E+004
PB-212	1.000	74.81	9.60		
		77.11	17.50		
		87.20	6.30		
		89.80	1.75		
		115.19	0.60		
		238.63*	44.60	5.39604E+004	4.21739E+004
		300.09	3.41		
BI-214	0.999	609.31*	46.30	4.70430E+004	3.49993E+004
		768.36	5.04		
		806.17	1.23		
		934.06	3.21		
		1120.29	15.10		
		1155.19	1.69		
		1238.11	5.94		
		1280.96	1.47		
		1377.67	4.11		
		1385.31	0.78		
		1401.50	1.39		
		1407.98	2.48		
		1509.19	2.19		
		1661.28	1.15		
		1729.60	3.05		
		1764.49	15.80		
		1847.44	2.12		
		2118.54	1.21		

* = Energy line found in the spectrum.
@ = Energy line not used for Weighted Mean Activity
Energy Tolerance : 3.000 keV
Nuclide confidence index threshold = 0.30
Errors quoted at 2.000 sigma

****
***** I N T E R F E R E N C E C O R R E C T E D R E P O R T *****
****

Nuclide Name	Nuclide Id Confidence	Wt mean Activity (pCi/M^2)	Wt mean Activity Uncertainty
K-40	0.985	3.398002E+006	5.119138E+005
CS-137	0.999	1.023335E+005	2.878174E+004
PB-212	1.000	5.396043E+004	4.217389E+004
BI-214	0.999	4.704304E+004	3.499931E+004

? = Nuclide is part of an undetermined solution
X = Nuclide rejected by the interference analysis
@ = Nuclide contains energy lines not used in Weighted Mean Activity

Errors quoted at 2.000 sigma

********** U N I D E N T I F I E D P E A K S **********

Peak Locate Performed on: 3/29/2019 10:15:47 AM
Peak Locate From Channel: 85
Peak Locate To Channel: 8000

Peak No.	Energy (keV)	Peak Size in Counts per Second	Peak CPS % Uncertainty	Peak Type	Tol. Nuclide

All peaks were identified.

****
***** N U C L I D E M D A R E P O R T *****
****

Detector Name: 3844
Sample Geometry:
Sample Title: B1-010-001-FJFC-D49-GM
Nuclide Library Used: C:\GENIE2K\CAMFILES\LACBWR.NLB

	Nuclide Name	Energy (keV)	Yield (%)	Line MDA (pCi/M^2)	Nuclide MDA (pCi/M^2)	Activity (pCi/M^2)	Dec. Level (pCi/M^2)
+	K-40	1460.81*	10.67	1.844E+005	1.84E+005	3.398E+006	7.477E+004
	CO-60	1173.22	100.00	3.780E+004	3.09E+004	1.012E+004	1.729E+004
		1332.49	100.00	3.092E+004		6.955E+003	1.372E+004
	CS-134	475.35	1.46	2.515E+006	4.17E+004	4.360E+005	1.192E+006
		563.23	8.38	4.177E+005		-7.877E+004	1.962E+005
		569.32	15.43	2.386E+005		6.401E+004	1.124E+005
		604.70	97.60	4.171E+004		-1.635E+004	1.972E+004
		795.84	85.40	4.493E+004		1.728E+004	2.094E+004
		801.93	8.73	4.149E+005		2.828E+005	1.925E+005
		1038.57	1.00	3.739E+006		3.314E+006	1.719E+006
		1167.94	1.80	2.020E+006		8.515E+005	9.207E+005
		1365.15	3.04	9.898E+005		1.615E+005	4.367E+005
+	CS-137	661.65*	85.12	2.936E+004	2.94E+004	1.023E+005	1.330E+004
	EU-152	121.78	28.40	1.414E+005	1.29E+005	-5.703E+003	6.873E+004
		344.27	26.50	1.289E+005		-1.273E+005	6.145E+004
		1407.95	20.70	1.340E+005		-1.218E+005	5.823E+004
	EU-154	123.07	40.40	9.991E+004	9.99E+004	-4.538E+004	4.856E+004
		722.30	20.00	1.677E+005		-1.488E+005	7.769E+004
		1274.51	34.40	1.183E+005		9.374E+004	5.422E+004
+	BI-214	609.31*	46.30	5.289E+004	5.29E+004	4.704E+004	2.404E+004
		768.36	5.04	6.207E+005		-2.752E+005	2.851E+005
		806.17	1.23	2.697E+006		-1.114E+006	1.242E+006
		934.06	3.21	9.514E+005		1.183E+005	4.314E+005
		1120.29	15.10	2.634E+005		-6.651E+004	1.213E+005
		1155.19	1.69	2.111E+006		-1.871E+006	9.611E+005
		1238.11	5.94	6.805E+005		5.276E+005	3.122E+005
		1280.96	1.47	2.682E+006		-5.015E+005	1.225E+006
		1377.67	4.11	7.369E+005		-3.311E+005	3.251E+005
		1385.31	0.78	4.074E+006		7.106E+005	1.808E+006
		1401.50	1.39	2.045E+006		-8.994E+004	8.927E+005
		1407.98	2.48	1.118E+006		-1.017E+006	4.861E+005
		1509.19	2.19	1.118E+006		5.293E+004	4.720E+005
		1661.28	1.15	2.074E+006		1.046E+006	8.602E+005
		1729.60	3.05	6.091E+005		2.029E+005	2.360E+005
		1764.49	15.80	2.058E+005		6.685E+004	8.946E+004
		1847.44	2.12	9.976E+005		3.805E+005	3.959E+005
>		2118.54	1.21	0.000E+000		0.000E+000	0.000E+000
	PB-214	74.81	6.33	1.337E+006	9.73E+004	1.202E+005	6.507E+005
		77.11	10.70	7.395E+005		5.118E+004	3.602E+005
		87.20	3.70	1.574E+006		6.275E+005	7.671E+005
		89.80	1.03	5.464E+006		6.927E+006	2.664E+006
		241.98	7.49	5.600E+005		5.407E+005	2.712E+005

Nuclide Name	Energy (keV)	Yield (%)	Line MDA (pCi/M^2)	Nuclide MDA (pCi/M^2)	Activity (pCi/M^2)	Dec. Level (pCi/M^2)
PB-214	295.21	19.20	1.812E+005	9.73E+004	1.836E+004	8.679E+004
	351.92	37.20	9.726E+004		5.067E+004	4.646E+004
	785.91	1.10	3.173E+006		-1.970E+006	1.469E+006

+ = Nuclide identified during the nuclide identification
* = Energy line found in the spectrum
> = Calculated MDA is zero due to zero counts in the region, or
the region is outside the spectrum, or MDA has not been calculated
@ = Half-life too short to be able to perform the decay correction

```
************************************************************************
*****        G A M M A   S P E C T R U M   A N A L Y S I S        *****
************************************************************************


Filename: C:\LACBWR\B1-010-001-FSFC-D01-GM.CNF

Report Generated On             : 3/27/2019   8:25:05 PM

Sample Title                    : B1-010-001-FSFC-D01-GM
Sample Description              : Rx Bowl 3M Concrete
Sample Identification           : D01
Sample Type                     : Gamma Direct
Sample Geometry                 :

Peak Locate Threshold           :  3.00
Peak Locate Range (in channels) :    85 -  8000
Peak Area Range (in channels)   :    85 -  8000
Identification Energy Tolerance :    3.000 keV

Sample Size                     :  2.827E+001 M^2

Sample Taken On                 : 3/27/2019   3:51:00 PM
Acquisition Started             : 3/27/2019   3:51:48 PM

Live Time                       :      600.0 seconds
Real Time                       :      600.2 seconds

Dead Time                       :   0.04 %


              Energy Calibration Used Done On       : 10/24/2017
              Efficiency Calibration Used Done On   : 3/26/2019
              Efficiency ID                         : RxBOWL_CON_3M
```

****
***** P E A K A N A L Y S I S R E P O R T *****
****

Detector Name: 3844
Sample Title: B1-010-001-FSFC-D01-GM
Peak Analysis Performed on: 3/27/2019 8:25:04 PM
Peak Analysis From Channel: 85
Peak Analysis To Channel: 8000

Peak No.	ROI start	ROI end	Peak centroid	Energy (keV)	FWHM (keV)	Net Peak Area	Net Area Uncert.	Continuum Counts
1	948-	961	953.90	238.54	0.95	5.93E+001	32.56	7.47E+001
2	1402-	1414	1407.87	352.11	1.15	2.37E+001	21.16	3.33E+001
3	2327-	2338	2332.97	583.49	1.15	2.26E+001	16.81	1.84E+001
4	2430-	2442	2436.84	609.47	0.64	3.90E+001	17.11	1.30E+001
5	3639-	3652	3645.09	911.55	0.58	2.48E+001	15.96	1.32E+001
6	5833-	5856	5845.30	1461.33	1.85	2.31E+002	31.94	6.00E+000

M = First peak in a multiplet region
m = Other peak in a multiplet region
F = Fitted singlet

Errors quoted at 2.000 sigma

****
***** N U C L I D E I D E N T I F I C A T I O N R E P O R T *****
****

Sample Title: B1-010-001-FSFC-D01-GM
Nuclide Library Used: C:\GENIE2K\CAMFILES\LACBWR.NLB

..... IDENTIFIED NUCLIDES .....

Nuclide Name	Id Confidence	Energy (keV)	Yield (%)	Activity (pCi/M^2)	Activity Uncertainty
K-40	0.995	1460.81*	10.67	8.32198E+004	1.34037E+004
PB-212	1.000	74.81	9.60		
		77.11	17.50		
		87.20	6.30		
		89.80	1.75		
		115.19	0.60		
		238.63*	44.60	1.84511E+003	1.05501E+003
		300.09	3.41		
BI-214	1.000	609.31*	46.30	1.96342E+003	8.97170E+002
		768.36	5.04		
		806.17	1.23		
		934.06	3.21		
		1120.29	15.10		
		1155.19	1.69		
		1238.11	5.94		
		1280.96	1.47		
		1377.67	4.11		
		1385.31	0.78		
		1401.50	1.39		
		1407.98	2.48		
		1509.19	2.19		
		1661.28	1.15		
		1729.60	3.05		
		1764.49	15.80		
		1847.44	2.12		
		2118.54	1.21		
PB-214	1.000	74.81	6.33		
		77.11	10.70		
		87.20	3.70		
		89.80	1.03		
		241.98	7.49		
		295.21	19.20		
		351.92*	37.20	1.09224E+003	9.88826E+002
		785.91	1.10		
AC-228	1.000	89.95	2.10		
		93.35	3.50		
		129.08	2.80		
		209.28	4.40		
		270.23	3.60		
		327.64	3.20		
		338.32	11.40		

Nuclide Name	Id Confidence	Energy (keV)	Yield (%)	Activity (pCi/M^2)	Activity Uncertainty
AC-228	1.000	409.51	2.13		
		463.00	4.40		
		794.70	4.60		
		911.60*	27.70	2.62904E+003	1.71953E+003
		964.60	5.20		
		969.11	16.60		
		1587.90	3.71		

* = Energy line found in the spectrum.
@ = Energy line not used for Weighted Mean Activity
Energy Tolerance : 3.000 keV
Nuclide confidence index threshold = 0.30
Errors quoted at 2.000 sigma

****
***** I N T E R F E R E N C E C O R R E C T E D R E P O R T *****
****

Nuclide Name	Nuclide Id Confidence	Wt mean Activity (pCi/M^2)	Wt mean Activity Uncertainty
K-40	0.995	8.321976E+004	1.340373E+004
PB-212	1.000	1.845110E+003	1.055009E+003
BI-214	1.000	1.963417E+003	8.971696E+002
PB-214	1.000	1.092242E+003	9.888258E+002
AC-228	1.000	2.629041E+003	1.719529E+003

? = Nuclide is part of an undetermined solution
X = Nuclide rejected by the interference analysis
@ = Nuclide contains energy lines not used in Weighted Mean Activity

Errors quoted at 2.000 sigma

********** U N I D E N T I F I E D P E A K S **********

Peak Locate Performed on: 3/27/2019 8:25:04 PM
Peak Locate From Channel: 85
Peak Locate To Channel: 8000

Peak No.	Energy (keV)	Peak Size in Counts per Second	Peak CPS % Uncertainty	Peak Type	Tol. Nuclide
3	583.49	3.7602E-002	74.50		

M = First peak in a multiplet region
m = Other peak in a multiplet region
F = Fitted singlet

Errors quoted at 2.000 sigma

****
***** N U C L I D E M D A R E P O R T *****
****

Detector Name: 3844
Sample Geometry:
Sample Title: B1-010-001-FSFC-D01-GM
Nuclide Library Used: C:\GENIE2K\CAMFILES\LACBWR.NLB

	Nuclide Name	Energy (keV)	Yield (%)	Line MDA (pCi/M^2)	Nuclide MDA (pCi/M^2)	Activity (pCi/M^2)	Dec. Level (pCi/M^2)
+	K-40	1460.81*	10.67	6.784E+003	6.78E+003	8.322E+004	2.904E+003
	CO-60	1173.22	100.00	1.175E+003	8.46E+002	5.886E+002	5.421E+002
		1332.49	100.00	8.463E+002		-1.008E+002	3.744E+002
	CS-134	475.35	1.46	6.212E+004	1.15E+003	-1.788E+004	2.919E+004
		563.23	8.38	1.092E+004		1.122E+003	5.101E+003
		569.32	15.43	6.009E+003		5.133E+002	2.808E+003
		604.70	97.60	1.209E+003		1.163E+003	5.721E+002
		795.84	85.40	1.154E+003		-3.105E+002	5.338E+002
		801.93	8.73	1.123E+004		-5.680E+003	5.194E+003
		1038.57	1.00	8.890E+004		-1.648E+004	4.018E+004
		1167.94	1.80	6.126E+004		9.454E+003	2.811E+004
		1365.15	3.04	2.347E+004		-1.040E+004	1.010E+004
	CS-137	661.65	85.12	1.095E+003	1.09E+003	-1.769E+001	5.084E+002
	EU-152	121.78	28.40	3.847E+003	3.70E+003	-2.337E+003	1.866E+003
		344.27	26.50	3.698E+003		6.507E+002	1.763E+003
		1407.95	20.70	3.958E+003		-1.181E+003	1.735E+003
	EU-154	123.07	40.40	2.759E+003	2.76E+003	-9.739E+002	1.339E+003
		722.30	20.00	4.658E+003		4.164E+003	2.155E+003
		1274.51	34.40	2.880E+003		-2.399E+003	1.302E+003
+	BI-214	609.31*	46.30	1.104E+003	1.10E+003	1.963E+003	4.841E+002
		768.36	5.04	1.864E+004		1.238E+004	8.604E+003
		806.17	1.23	8.070E+004		9.802E+003	3.734E+004
		934.06	3.21	2.980E+004		-1.014E+004	1.365E+004
		1120.29	15.10	7.065E+003		-2.740E+003	3.238E+003
		1155.19	1.69	6.964E+004		5.244E+004	3.215E+004
		1238.11	5.94	1.956E+004		4.973E+003	8.992E+003
		1280.96	1.47	6.445E+004		1.871E+004	2.898E+004
		1377.67	4.11	2.155E+004		5.156E+003	9.560E+003
		1385.31	0.78	1.275E+005		-5.069E+004	5.734E+004
		1401.50	1.39	6.845E+004		-1.118E+004	3.059E+004
		1407.98	2.48	3.304E+004		-9.855E+003	1.448E+004
		1509.19	2.19	2.697E+004		1.257E+004	1.105E+004
		1661.28	1.15	6.895E+004		4.395E+004	2.952E+004
		1729.60	3.05	1.530E+004		-1.883E+004	5.727E+003
		1764.49	15.80	4.638E+003		-1.701E+002	1.942E+003
		1847.44	2.12	3.386E+004		1.707E+004	1.404E+004
>		2118.54	1.21	0.000E+000		0.000E+000	0.000E+000
+	PB-214	74.81	6.33	3.811E+004	1.55E+003	4.061E+004	1.854E+004
		77.11	10.70	2.125E+004		1.807E+004	1.035E+004
		87.20	3.70	4.282E+004		-1.426E+004	2.083E+004
		89.80	1.03	1.492E+005		7.265E+004	7.260E+004
		241.98	7.49	1.509E+004		7.951E+003	7.293E+003

	Nuclide Name	Energy (keV)	Yield (%)	Line MDA (pCi/M^2)	Nuclide MDA (pCi/M^2)	Activity (pCi/M^2)	Dec. Level (pCi/M^2)
+	PB-214	295.21	19.20	4.839E+003	1.55E+003	-1.038E+003	2.310E+003
		351.92*	37.20	1.546E+003		1.092E+003	7.105E+002
		785.91	1.10	8.233E+004		-9.476E+004	3.785E+004

+ = Nuclide identified during the nuclide identification
* = Energy line found in the spectrum
> = Calculated MDA is zero due to zero counts in the region, or
the region is outside the spectrum, or MDA has not been calculated
@ = Half-life too short to be able to perform the decay correction

```
************************************************************************
*****        G A M M A   S P E C T R U M   A N A L Y S I S        *****
************************************************************************


Filename: C:\LACBWR\B1-010-001-FSFC-D02-GM.CNF

Report Generated On             : 3/27/2019   8:27:43 PM

Sample Title                    : B1-010-001-FSFC-D02-GM
Sample Description              : Rx Bowl 3M Concrete
Sample Identification           : D02
Sample Type                     : Gamma Direct
Sample Geometry                 :

Peak Locate Threshold           :  3.00
Peak Locate Range (in channels) :    85 -  8000
Peak Area Range (in channels)   :    85 -  8000
Identification Energy Tolerance :    3.000 keV

Sample Size                     :  2.827E+001 M^2

Sample Taken On                 : 3/27/2019   4:04:00 PM
Acquisition Started             : 3/27/2019   4:04:41 PM

Live Time                       :      600.0 seconds
Real Time                       :      600.2 seconds

Dead Time                       :   0.03 %


              Energy Calibration Used Done On       : 10/24/2017
              Efficiency Calibration Used Done On   : 3/26/2019
              Efficiency ID                         : RxBOWL_CON_3M
```

****
***** P E A K A N A L Y S I S R E P O R T *****
****

Detector Name: 3844
Sample Title: B1-010-001-FSFC-D02-GM
Peak Analysis Performed on: 3/27/2019 8:27:42 PM
Peak Analysis From Channel: 85
Peak Analysis To Channel: 8000

Peak No.	ROI start	ROI end	Peak centroid	Energy (keV)	FWHM (keV)	Net Peak Area	Net Area Uncert.	Continuum Counts
1	946-	961	954.14	238.61	0.50	5.28E+001	31.78	6.62E+001
2	2241-	2252	2246.67	561.91	0.68	1.19E+001	9.07	3.10E+000
3	2324-	2340	2331.76	583.19	0.32	3.46E+001	19.20	1.84E+001
4	2432-	2443	2437.42	609.61	0.64	2.26E+001	16.33	1.74E+001
5	3637-	3650	3643.80	911.23	0.98	2.88E+001	15.79	1.22E+001
6	5832-	5856	5843.91	1460.99	1.68	2.33E+002	32.89	9.22E+000

M = First peak in a multiplet region
m = Other peak in a multiplet region
F = Fitted singlet

Errors quoted at 2.000 sigma

****
***** N U C L I D E I D E N T I F I C A T I O N R E P O R T *****
****

Sample Title: B1-010-001-FSFC-D02-GM
Nuclide Library Used: C:\GENIE2K\CAMFILES\LACBWR.NLB

..... IDENTIFIED NUCLIDES .....

Nuclide Name	Id Confidence	Energy (keV)	Yield (%)	Activity (pCi/M^2)	Activity Uncertainty
K-40	0.999	1460.81*	10.67	8.38465E+004	1.37237E+004
PB-212	1.000	74.81	9.60		
		77.11	17.50		
		87.20	6.30		
		89.80	1.75		
		115.19	0.60		
		238.63*	44.60	1.64427E+003	1.02309E+003
		300.09	3.41		
BI-214	0.999	609.31*	46.30	1.14045E+003	8.34906E+002
		768.36	5.04		
		806.17	1.23		
		934.06	3.21		
		1120.29	15.10		
		1155.19	1.69		
		1238.11	5.94		
		1280.96	1.47		
		1377.67	4.11		
		1385.31	0.78		
		1401.50	1.39		
		1407.98	2.48		
		1509.19	2.19		
		1661.28	1.15		
		1729.60	3.05		
		1764.49	15.80		
		1847.44	2.12		
		2118.54	1.21		
AC-228	0.999	89.95	2.10		
		93.35	3.50		
		129.08	2.80		
		209.28	4.40		
		270.23	3.60		
		327.64	3.20		
		338.32	11.40		
		409.51	2.13		
		463.00	4.40		
		794.70	4.60		
		911.60*	27.70	3.05559E+003	1.71101E+003
		964.60	5.20		
		969.11	16.60		
		1587.90	3.71		

* = Energy line found in the spectrum.
@ = Energy line not used for Weighted Mean Activity
Energy Tolerance : 3.000 keV
Nuclide confidence index threshold = 0.30
Errors quoted at 2.000 sigma

****
***** I N T E R F E R E N C E C O R R E C T E D R E P O R T *****
****

Nuclide Name	Nuclide Id Confidence	Wt mean Activity (pCi/M^2)	Wt mean Activity Uncertainty
K-40	0.999	8.384646E+004	1.372369E+004
PB-212	1.000	1.644273E+003	1.023093E+003
BI-214	0.999	1.140447E+003	8.349064E+002
AC-228	0.999	3.055591E+003	1.711008E+003

? = Nuclide is part of an undetermined solution
X = Nuclide rejected by the interference analysis
@ = Nuclide contains energy lines not used in Weighted Mean Activity

Errors quoted at 2.000 sigma

********** U N I D E N T I F I E D P E A K S **********

Peak Locate Performed on: 3/27/2019 8:27:42 PM
Peak Locate From Channel: 85
Peak Locate To Channel: 8000

Peak No.	Energy (keV)	Peak Size in Counts per Second	Peak CPS % Uncertainty	Peak Type	Tol. Nuclide
2	561.91	1.9833E-002	76.19	Tol.	CS-134
3	583.19	5.7649E-002	55.51		

M = First peak in a multiplet region
m = Other peak in a multiplet region
F = Fitted singlet

Errors quoted at 2.000 sigma

****
***** N U C L I D E M D A R E P O R T *****
****

Detector Name: 3844
Sample Geometry:
Sample Title: B1-010-001-FSFC-D02-GM
Nuclide Library Used: C:\GENIE2K\CAMFILES\LACBWR.NLB

	Nuclide Name	Energy (keV)	Yield (%)	Line MDA (pCi/M^2)	Nuclide MDA (pCi/M^2)	Activity (pCi/M^2)	Dec. Level (pCi/M^2)
+	K-40	1460.81*	10.67	8.249E+003	8.25E+003	8.385E+004	3.637E+003
	CO-60	1173.22	100.00	1.293E+003	7.46E+002	1.219E+003	6.011E+002
		1332.49	100.00	7.459E+002		-5.758E+001	3.243E+002
	CS-134	475.35	1.46	6.757E+004	9.49E+002	2.923E+003	3.191E+004
		563.23	8.38	9.811E+003		-1.556E+003	4.546E+003
		569.32	15.43	5.586E+003		4.155E+003	2.596E+003
		604.70	97.60	1.176E+003		1.092E+002	5.559E+002
		795.84	85.40	9.494E+002		-1.261E+003	4.316E+002
		801.93	8.73	1.005E+004		1.054E+004	4.600E+003
		1038.57	1.00	9.899E+004		5.550E+004	4.523E+004
		1167.94	1.80	6.995E+004		2.132E+004	3.245E+004
		1365.15	3.04	2.568E+004		-1.972E+004	1.121E+004
	CS-137	661.65	85.12	9.931E+002	9.93E+002	-5.392E+002	4.577E+002
	EU-152	121.78	28.40	4.185E+003	3.60E+003	9.314E+002	2.035E+003
		344.27	26.50	3.596E+003		-1.774E+003	1.712E+003
		1407.95	20.70	4.157E+003		8.661E+002	1.834E+003
	EU-154	123.07	40.40	2.914E+003	2.61E+003	1.266E+003	1.417E+003
		722.30	20.00	4.313E+003		-6.652E+003	1.983E+003
		1274.51	34.40	2.606E+003		9.856E+002	1.165E+003
+	BI-214	609.31*	46.30	1.235E+003	1.23E+003	1.140E+003	5.493E+002
		768.36	5.04	1.999E+004		1.896E+004	9.280E+003
		806.17	1.23	6.816E+004		-2.802E+004	3.107E+004
		934.06	3.21	2.804E+004		-7.188E+003	1.277E+004
		1120.29	15.10	8.291E+003		1.062E+003	3.851E+003
		1155.19	1.69	6.764E+004		3.806E+004	3.115E+004
		1238.11	5.94	2.131E+004		3.188E+003	9.869E+003
		1280.96	1.47	5.637E+004		-2.805E+004	2.494E+004
		1377.67	4.11	2.061E+004		-1.115E+004	9.093E+003
		1385.31	0.78	9.832E+004		-7.124E+004	4.274E+004
		1401.50	1.39	5.722E+004		2.013E+003	2.498E+004
		1407.98	2.48	3.470E+004		7.229E+003	1.531E+004
		1509.19	2.19	2.697E+004		-3.656E+003	1.105E+004
		1661.28	1.15	4.400E+004		1.465E+004	1.704E+004
		1729.60	3.05	1.863E+004		-4.548E+003	7.394E+003
		1764.49	15.80	6.398E+003		5.288E+003	2.822E+003
		1847.44	2.12	2.797E+004		-1.654E+004	1.110E+004
>		2118.54	1.21	0.000E+000		0.000E+000	0.000E+000
	PB-214	74.81	6.33	3.618E+004	2.69E+003	-3.583E+003	1.757E+004
		77.11	10.70	2.009E+004		7.272E+003	9.763E+003
		87.20	3.70	4.362E+004		2.523E+004	2.123E+004
		89.80	1.03	1.513E+005		1.313E+005	7.365E+004
		241.98	7.49	1.448E+004		1.501E+004	6.989E+003

Nuclide Name	Energy (keV)	Yield (%)	Line MDA (pCi/M^2)	Nuclide MDA (pCi/M^2)	Activity (pCi/M^2)	Dec. Level (pCi/M^2)
PB-214	295.21	19.20	5.363E+003	2.69E+003	2.250E+003	2.572E+003
	351.92	37.20	2.692E+003		2.556E+003	1.284E+003
	785.91	1.10	8.569E+004		1.213E+003	3.953E+004

+ = Nuclide identified during the nuclide identification
* = Energy line found in the spectrum
> = Calculated MDA is zero due to zero counts in the region, or
the region is outside the spectrum, or MDA has not been calculated
@ = Half-life too short to be able to perform the decay correction

```
************************************************************************
*****        G A M M A   S P E C T R U M   A N A L Y S I S        *****
************************************************************************


Filename: C:\LACBWR\B1-010-001-FSFC-D03-GM.CNF

Report Generated On             : 3/27/2019   8:29:08 PM

Sample Title                    : B1-010-001-FSFC-D03-GM
Sample Description              : Rx Bowl 3M Concrete
Sample Identification           : D03
Sample Type                     : Gamma Direct
Sample Geometry                 :

Peak Locate Threshold           :  3.00
Peak Locate Range (in channels) :    85 -  8000
Peak Area Range (in channels)   :    85 -  8000
Identification Energy Tolerance :    3.000 keV

Sample Size                     :  2.827E+001 M^2

Sample Taken On                 : 3/27/2019   1:56:00 PM
Acquisition Started             : 3/27/2019   1:56:59 PM

Live Time                       :      600.0 seconds
Real Time                       :      600.2 seconds

Dead Time                       :   0.04 %


              Energy Calibration Used Done On       : 10/24/2017
              Efficiency Calibration Used Done On   : 3/26/2019
              Efficiency ID                         : RxBOWL_CON_3M
```

****
***** P E A K A N A L Y S I S R E P O R T *****
****

Detector Name: 3844
Sample Title: B1-010-001-FSFC-D03-GM
Peak Analysis Performed on: 3/27/2019 8:29:08 PM
Peak Analysis From Channel: 85
Peak Analysis To Channel: 8000

Peak No.	ROI start	ROI end	Peak centroid	Energy (keV)	FWHM (keV)	Net Peak Area	Net Area Uncert.	Continuum Counts
1	947-	962	954.22	238.63	0.58	2.91E+001	36.81	1.03E+002
2	1402-	1415	1407.80	352.10	0.37	4.24E+001	22.10	2.86E+001
3	2327-	2338	2332.79	583.45	0.39	1.73E+001	12.59	7.70E+000
4	3869-	3882	3875.10	969.04	0.69	1.95E+001	12.25	6.54E+000
5	5831-	5854	5843.54	1460.90	2.19	2.45E+002	32.80	6.00E+000

M = First peak in a multiplet region
m = Other peak in a multiplet region
F = Fitted singlet

Errors quoted at 2.000 sigma

****
***** N U C L I D E I D E N T I F I C A T I O N R E P O R T *****
****

Sample Title: B1-010-001-FSFC-D03-GM
Nuclide Library Used: C:\GENIE2K\CAMFILES\LACBWR.NLB

..... IDENTIFIED NUCLIDES .....

Nuclide Name	Id Confidence	Energy (keV)	Yield (%)	Activity (pCi/M^2)	Activity Uncertainty
K-40	1.000	1460.81*	10.67	8.82445E+004	1.38831E+004
PB-212	1.000	74.81	9.60		
		77.11	17.50		
		87.20	6.30		
		89.80	1.75		
		115.19	0.60		
		238.63*	44.60	9.04822E+002	1.15458E+003
		300.09	3.41		
PB-214	1.000	74.81	6.33		
		77.11	10.70		
		87.20	3.70		
		89.80	1.03		
		241.98	7.49		
		295.21	19.20		
		351.92*	37.20	1.94922E+003	1.06366E+003
		785.91	1.10		
AC-228	1.000	89.95	2.10		
		93.35	3.50		
		129.08	2.80		
		209.28	4.40		
		270.23	3.60		
		327.64	3.20		
		338.32	11.40		
		409.51	2.13		
		463.00	4.40		
		794.70	4.60		
		911.60	27.70		
		964.60	5.20		
		969.11*	16.60	3.56193E+003	2.26641E+003
		1587.90	3.71		

* = Energy line found in the spectrum.
@ = Energy line not used for Weighted Mean Activity
Energy Tolerance : 3.000 keV
Nuclide confidence index threshold = 0.30
Errors quoted at 2.000 sigma

****
***** I N T E R F E R E N C E C O R R E C T E D R E P O R T *****
****

Nuclide Name	Nuclide Id Confidence	Wt mean Activity (pCi/M^2)	Wt mean Activity Uncertainty
K-40	1.000	8.824450E+004	1.388314E+004
PB-212	1.000	9.048221E+002	1.154582E+003
PB-214	1.000	1.949217E+003	1.063659E+003
AC-228	1.000	3.561925E+003	2.266410E+003

? = Nuclide is part of an undetermined solution
X = Nuclide rejected by the interference analysis
@ = Nuclide contains energy lines not used in Weighted Mean Activity

Errors quoted at 2.000 sigma

********** U N I D E N T I F I E D P E A K S **********

Peak Locate Performed on: 3/27/2019 8:29:08 PM
Peak Locate From Channel: 85
Peak Locate To Channel: 8000

Peak No.	Energy (keV)	Peak Size in Counts per Second	Peak CPS % Uncertainty	Peak Type	Tol. Nuclide
3	583.45	2.8833E-002	72.76		

M = First peak in a multiplet region
m = Other peak in a multiplet region
F = Fitted singlet

Errors quoted at 2.000 sigma

****
***** N U C L I D E M D A R E P O R T *****
****

Detector Name: 3844
Sample Geometry:
Sample Title: B1-010-001-FSFC-D03-GM
Nuclide Library Used: C:\GENIE2K\CAMFILES\LACBWR.NLB

	Nuclide Name	Energy (keV)	Yield (%)	Line MDA (pCi/M^2)	Nuclide MDA (pCi/M^2)	Activity (pCi/M^2)	Dec. Level (pCi/M^2)
+	K-40	1460.81*	10.67	6.781E+003	6.78E+003	8.824E+004	2.903E+003
	CO-60	1173.22	100.00	1.017E+003	8.65E+002	-5.651E+002	4.629E+002
		1332.49	100.00	8.647E+002		2.069E+002	3.837E+002
	CS-134	475.35	1.46	6.318E+004	1.13E+003	4.663E+004	2.972E+004
		563.23	8.38	9.978E+003		8.110E+003	4.629E+003
		569.32	15.43	5.028E+003		-5.573E+002	2.317E+003
		604.70	97.60	1.203E+003		1.342E+003	5.695E+002
		795.84	85.40	1.133E+003		1.395E+003	5.234E+002
		801.93	8.73	1.154E+004		-8.540E+002	5.345E+003
		1038.57	1.00	1.143E+005		4.764E+004	5.291E+004
		1167.94	1.80	5.411E+004		3.123E+004	2.453E+004
		1365.15	3.04	2.637E+004		2.090E+003	1.155E+004
	CS-137	661.65	85.12	1.022E+003	1.02E+003	6.595E+002	4.721E+002
	EU-152	121.78	28.40	4.027E+003	3.60E+003	4.033E+002	1.956E+003
		344.27	26.50	3.596E+003		-7.235E+002	1.712E+003
		1407.95	20.70	4.345E+003		-6.415E+002	1.928E+003
	EU-154	123.07	40.40	2.862E+003	2.51E+003	2.098E+003	1.391E+003
		722.30	20.00	5.167E+003		3.582E+003	2.410E+003
		1274.51	34.40	2.506E+003		-1.159E+003	1.115E+003
	BI-214	609.31	46.30	2.525E+003	2.52E+003	1.900E+003	1.194E+003
		768.36	5.04	1.638E+004		9.050E+003	7.476E+003
		806.17	1.23	7.702E+004		1.264E+004	3.550E+004
		934.06	3.21	2.876E+004		2.929E+004	1.313E+004
		1120.29	15.10	7.448E+003		5.435E+001	3.430E+003
		1155.19	1.69	5.480E+004		-1.630E+004	2.473E+004
		1238.11	5.94	2.055E+004		6.656E+003	9.489E+003
		1280.96	1.47	6.551E+004		1.070E+003	2.951E+004
		1377.67	4.11	2.200E+004		6.542E+003	9.785E+003
		1385.31	0.78	1.065E+005		-1.316E+005	4.682E+004
		1401.50	1.39	6.311E+004		-1.446E+004	2.793E+004
		1407.98	2.48	3.627E+004		-5.355E+003	1.609E+004
		1509.19	2.19	2.993E+004		-3.393E+003	1.253E+004
		1661.28	1.15	5.166E+004		-6.593E+004	2.087E+004
		1729.60	3.05	1.707E+004		5.685E+003	6.613E+003
		1764.49	15.80	6.398E+003		5.288E+003	2.822E+003
		1847.44	2.12	3.556E+004		1.920E+004	1.489E+004
>		2118.54	1.21	0.000E+000		0.000E+000	0.000E+000
+	PB-214	74.81	6.33	3.729E+004	1.48E+003	2.556E+004	1.813E+004
		77.11	10.70	2.014E+004		6.279E+003	9.787E+003
		87.20	3.70	4.404E+004		1.698E+004	2.144E+004
		89.80	1.03	1.558E+005		3.870E+003	7.593E+004
		241.98	7.49	1.438E+004		8.728E+003	6.935E+003

	Nuclide Name	Energy (keV)	Yield (%)	Line MDA (pCi/M^2)	Nuclide MDA (pCi/M^2)	Activity (pCi/M^2)	Dec. Level (pCi/M^2)
+	PB-214	295.21	19.20	5.180E+003	1.48E+003	2.090E+003	2.480E+003
		351.92*	37.20	1.476E+003		1.949E+003	6.760E+002
		785.91	1.10	7.510E+004		-4.966E+004	3.423E+004

+ = Nuclide identified during the nuclide identification
* = Energy line found in the spectrum
> = Calculated MDA is zero due to zero counts in the region, or
the region is outside the spectrum, or MDA has not been calculated
@ = Half-life too short to be able to perform the decay correction

```
************************************************************************
*****        G A M M A   S P E C T R U M   A N A L Y S I S        *****
************************************************************************


Filename: C:\LACBWR\B1-010-001-FSFC-D04-GM.CNF

Report Generated On             : 3/27/2019   8:30:18 PM

Sample Title                    : B1-010-001-FSFC-D04-GM
Sample Description              : Rx Bowl 3M Concrete
Sample Identification           : D04
Sample Type                     : Gamma Direct
Sample Geometry                 :

Peak Locate Threshold           :  3.00
Peak Locate Range (in channels) :    85 -  8000
Peak Area Range (in channels)   :    85 -  8000
Identification Energy Tolerance :    3.000 keV

Sample Size                     :  2.827E+001 M^2

Sample Taken On                 : 3/27/2019   2:10:00 PM
Acquisition Started             : 3/27/2019   2:11:16 PM

Live Time                       :      600.0 seconds
Real Time                       :      600.2 seconds

Dead Time                       :   0.04 %


              Energy Calibration Used Done On       : 10/24/2017
              Efficiency Calibration Used Done On   : 3/26/2019
              Efficiency ID                         : RxBOWL_CON_3M
```

****
***** P E A K A N A L Y S I S R E P O R T *****
****

Detector Name: 3844
Sample Title: B1-010-001-FSFC-D04-GM
Peak Analysis Performed on: 3/27/2019 8:30:18 PM
Peak Analysis From Channel: 85
Peak Analysis To Channel: 8000

Peak No.	ROI start	ROI end	Peak centroid	Energy (keV)	FWHM (keV)	Net Peak Area	Net Area Uncert.	Continuum Counts
1	947-	961	954.26	238.64	0.73	3.84E+001	31.88	7.36E+001
2	1401-	1414	1407.11	351.92	0.40	3.07E+001	20.67	2.73E+001
3	2324-	2336	2330.83	582.96	0.69	3.00E+001	19.82	2.60E+001
4	2433-	2444	2438.65	609.92	0.70	3.77E+001	13.92	4.33E+000
5	2639-	2650	2644.74	661.45	0.47	1.24E+001	15.91	1.86E+001
6	5831-	5855	5843.29	1460.83	1.46	2.38E+002	33.29	9.48E+000

M = First peak in a multiplet region
m = Other peak in a multiplet region
F = Fitted singlet

Errors quoted at 2.000 sigma

****
***** N U C L I D E I D E N T I F I C A T I O N R E P O R T *****
****

Sample Title: B1-010-001-FSFC-D04-GM
Nuclide Library Used: C:\GENIE2K\CAMFILES\LACBWR.NLB

..... IDENTIFIED NUCLIDES .....

Nuclide Name	Id Confidence	Energy (keV)	Yield (%)	Activity (pCi/M^2)	Activity Uncertainty
K-40	1.000	1460.81*	10.67	8.55485E+004	1.39173E+004
CS-137	0.999	661.65*	85.12	3.56348E+002	4.58498E+002
PB-212	1.000	74.81	9.60		
		77.11	17.50		
		87.20	6.30		
		89.80	1.75		
		115.19	0.60		
		238.63*	44.60	1.19401E+003	1.01036E+003
		300.09	3.41		
BI-214	0.997	609.31*	46.30	1.89710E+003	7.41675E+002
		768.36	5.04		
		806.17	1.23		
		934.06	3.21		
		1120.29	15.10		
		1155.19	1.69		
		1238.11	5.94		
		1280.96	1.47		
		1377.67	4.11		
		1385.31	0.78		
		1401.50	1.39		
		1407.98	2.48		
		1509.19	2.19		
		1661.28	1.15		
		1729.60	3.05		
		1764.49	15.80		
		1847.44	2.12		
		2118.54	1.21		
PB-214	1.000	74.81	6.33		
		77.11	10.70		
		87.20	3.70		
		89.80	1.03		
		241.98	7.49		
		295.21	19.20		
		351.92*	37.20	1.41071E+003	9.77008E+002
		785.91	1.10		

* = Energy line found in the spectrum.
@ = Energy line not used for Weighted Mean Activity
Energy Tolerance : 3.000 keV
Nuclide confidence index threshold = 0.30
Errors quoted at 2.000 sigma

****
***** I N T E R F E R E N C E C O R R E C T E D R E P O R T *****
****

Nuclide Name	Nuclide Id Confidence	Wt mean Activity (pCi/M^2)	Wt mean Activity Uncertainty
K-40	1.000	8.554853E+004	1.391730E+004
CS-137	0.999	3.563483E+002	4.584976E+002
PB-212	1.000	1.194014E+003	1.010357E+003
BI-214	0.997	1.897095E+003	7.416747E+002
PB-214	1.000	1.410711E+003	9.770084E+002

? = Nuclide is part of an undetermined solution
X = Nuclide rejected by the interference analysis
@ = Nuclide contains energy lines not used in Weighted Mean Activity

Errors quoted at 2.000 sigma

********** U N I D E N T I F I E D P E A K S **********

Peak Locate Performed on: 3/27/2019 8:30:18 PM
Peak Locate From Channel: 85
Peak Locate To Channel: 8000

Peak No.	Energy (keV)	Peak Size in Counts per Second	Peak CPS % Uncertainty	Peak Type	Tol. Nuclide
3	582.96	5.0000E-002	66.08		

M = First peak in a multiplet region
m = Other peak in a multiplet region
F = Fitted singlet

Errors quoted at 2.000 sigma

****
***** N U C L I D E M D A R E P O R T *****
****

Detector Name: 3844
Sample Geometry:
Sample Title: B1-010-001-FSFC-D04-GM
Nuclide Library Used: C:\GENIE2K\CAMFILES\LACBWR.NLB

	Nuclide Name	Energy (keV)	Yield (%)	Line MDA (pCi/M^2)	Nuclide MDA (pCi/M^2)	Activity (pCi/M^2)	Dec. Level (pCi/M^2)
+	K-40	1460.81*	10.67	8.421E+003	8.42E+003	8.555E+004	3.723E+003
	CO-60	1173.22	100.00	1.068E+003	9.99E+002	-9.824E+002	4.887E+002
		1332.49	100.00	9.991E+002		2.730E+001	4.509E+002
	CS-134	475.35	1.46	6.558E+004	1.11E+003	1.230E+004	3.092E+004
		563.23	8.38	1.158E+004		5.376E+003	5.428E+003
		569.32	15.43	6.552E+003		2.730E+003	3.080E+003
		604.70	97.60	1.125E+003		-6.921E+002	5.305E+002
		795.84	85.40	1.112E+003		-2.227E+002	5.129E+002
		801.93	8.73	1.038E+004		-5.033E+003	4.769E+003
		1038.57	1.00	9.023E+004		-1.478E+005	4.085E+004
		1167.94	1.80	5.851E+004		-1.715E+004	2.673E+004
		1365.15	3.04	2.098E+004		-1.771E+004	8.861E+003
+	CS-137	661.65*	85.12	7.509E+002	7.51E+002	3.563E+002	3.366E+002
	EU-152	121.78	28.40	3.868E+003	3.77E+003	-2.247E+003	1.876E+003
		344.27	26.50	3.772E+003		1.133E+003	1.800E+003
		1407.95	20.70	4.157E+003		5.877E+002	1.834E+003
	EU-154	123.07	40.40	2.705E+003	2.70E+003	-2.103E+003	1.312E+003
		722.30	20.00	5.313E+003		4.430E+003	2.483E+003
		1274.51	34.40	3.049E+003		1.728E+003	1.386E+003
+	BI-214	609.31*	46.30	6.794E+002	6.79E+002	1.897E+003	2.716E+002
		768.36	5.04	1.983E+004		-1.132E+002	9.198E+003
		806.17	1.23	7.925E+004		6.308E+004	3.661E+004
		934.06	3.21	3.480E+004		1.229E+004	1.615E+004
		1120.29	15.10	7.952E+003		-1.046E+002	3.682E+003
		1155.19	1.69	5.394E+004		9.659E+003	2.430E+004
		1238.11	5.94	1.894E+004		-2.368E+004	8.680E+003
		1280.96	1.47	6.860E+004		-1.972E+004	3.105E+004
		1377.67	4.11	1.804E+004		1.255E+004	7.806E+003
		1385.31	0.78	8.930E+004		2.510E+004	3.823E+004
		1401.50	1.39	5.876E+004		-2.795E+004	2.575E+004
		1407.98	2.48	3.470E+004		4.906E+003	1.531E+004
		1509.19	2.19	3.129E+004		5.253E+003	1.321E+004
		1661.28	1.15	6.895E+004		-1.160E+004	2.952E+004
		1729.60	3.05	2.134E+004		9.950E+003	8.749E+003
		1764.49	15.80	6.398E+003		2.963E+003	2.822E+003
		1847.44	2.12	3.386E+004		-5.201E+003	1.404E+004
>		2118.54	1.21	0.000E+000		0.000E+000	0.000E+000
+	PB-214	74.81	6.33	3.837E+004	1.44E+003	3.122E+004	1.867E+004
		77.11	10.70	2.082E+004		-8.133E+002	1.013E+004
		87.20	3.70	4.362E+004		1.458E+004	2.123E+004
		89.80	1.03	1.506E+005		7.113E+004	7.333E+004
		241.98	7.49	1.413E+004		8.121E+003	6.812E+003

	Nuclide Name	Energy (keV)	Yield (%)	Line MDA (pCi/M^2)	Nuclide MDA (pCi/M^2)	Activity (pCi/M^2)	Dec. Level (pCi/M^2)
+	PB-214	295.21	19.20	4.885E+003	1.44E+003	1.899E+003	2.333E+003
		351.92*	37.20	1.445E+003		1.411E+003	6.601E+002
		785.91	1.10	9.279E+004		2.222E+004	4.308E+004

+ = Nuclide identified during the nuclide identification
* = Energy line found in the spectrum
> = Calculated MDA is zero due to zero counts in the region, or the region is outside the spectrum, or MDA has not been calculated
@ = Half-life too short to be able to perform the decay correction

```
************************************************************************
*****        G A M M A   S P E C T R U M   A N A L Y S I S        *****
************************************************************************


Filename: C:\LACBWR\B1-010-001-FSFC-D05-GM.CNF

Report Generated On             : 3/27/2019   8:34:05 PM

Sample Title                    : B1-010-001-FSFC-D05-GM
Sample Description              : Rx Bowl 3M Concrete
Sample Identification           : D05
Sample Type                     : Gamma Direct
Sample Geometry                 :

Peak Locate Threshold           :  3.00
Peak Locate Range (in channels) :    85 -  8000
Peak Area Range (in channels)   :    85 -  8000
Identification Energy Tolerance :    3.000 keV

Sample Size                     :  2.827E+001 M^2

Sample Taken On                 : 3/27/2019   2:24:00 PM
Acquisition Started             : 3/27/2019   2:24:27 PM

Live Time                       :      600.0 seconds
Real Time                       :      600.2 seconds

Dead Time                       :   0.04 %


              Energy Calibration Used Done On       : 10/24/2017
              Efficiency Calibration Used Done On   : 3/26/2019
              Efficiency ID                         : RxBOWL_CON_3M
```

****
***** P E A K A N A L Y S I S R E P O R T *****
****

Detector Name: 3844
Sample Title: B1-010-001-FSFC-D05-GM
Peak Analysis Performed on: 3/27/2019 8:34:04 PM
Peak Analysis From Channel: 85
Peak Analysis To Channel: 8000

Peak No.	ROI start	ROI end	Peak centroid	Energy (keV)	FWHM (keV)	Net Peak Area	Net Area Uncert.	Continuum Counts
1	948-	960	954.12	238.60	0.41	3.18E+001	31.18	7.82E+001
2	1401-	1412	1406.49	351.77	0.73	3.03E+001	22.38	3.77E+001
3	2038-	2050	2043.69	511.14	1.30	3.42E+001	21.00	2.88E+001
4	2325-	2338	2331.28	583.07	0.49	3.11E+001	18.52	1.89E+001
5	2430-	2442	2436.78	609.45	0.35	2.61E+001	17.16	1.79E+001
6	5832-	5856	5843.82	1460.96	1.69	2.45E+002	32.05	2.96E+000

M = First peak in a multiplet region
m = Other peak in a multiplet region
F = Fitted singlet

Errors quoted at 2.000 sigma

****
***** N U C L I D E I D E N T I F I C A T I O N R E P O R T *****
****

Sample Title: B1-010-001-FSFC-D05-GM
Nuclide Library Used: C:\GENIE2K\CAMFILES\LACBWR.NLB

..... IDENTIFIED NUCLIDES .....

Nuclide Name	Id Confidence	Energy (keV)	Yield (%)	Activity (pCi/M^2)	Activity Uncertainty
K-40	1.000	1460.81*	10.67	8.82601E+004	1.36548E+004
PB-212	1.000	74.81	9.60		
		77.11	17.50		
		87.20	6.30		
		89.80	1.75		
		115.19	0.60		
		238.63*	44.60	9.88705E+002	9.82869E+002
		300.09	3.41		
BI-214	1.000	609.31*	46.30	1.31608E+003	8.80127E+002
		768.36	5.04		
		806.17	1.23		
		934.06	3.21		
		1120.29	15.10		
		1155.19	1.69		
		1238.11	5.94		
		1280.96	1.47		
		1377.67	4.11		
		1385.31	0.78		
		1401.50	1.39		
		1407.98	2.48		
		1509.19	2.19		
		1661.28	1.15		
		1729.60	3.05		
		1764.49	15.80		
		1847.44	2.12		
		2118.54	1.21		
PB-214	1.000	74.81	6.33		
		77.11	10.70		
		87.20	3.70		
		89.80	1.03		
		241.98	7.49		
		295.21	19.20		
		351.92*	37.20	1.39433E+003	1.05307E+003
		785.91	1.10		

* = Energy line found in the spectrum.
@ = Energy line not used for Weighted Mean Activity
Energy Tolerance : 3.000 keV
Nuclide confidence index threshold = 0.30
Errors quoted at 2.000 sigma

****
***** I N T E R F E R E N C E C O R R E C T E D R E P O R T *****
****

Nuclide Name	Nuclide Id Confidence	Wt mean Activity (pCi/M^2)	Wt mean Activity Uncertainty
K-40	1.000	8.826012E+004	1.365481E+004
PB-212	1.000	9.887050E+002	9.828690E+002
BI-214	1.000	1.316075E+003	8.801266E+002
PB-214	1.000	1.394333E+003	1.053071E+003

? = Nuclide is part of an undetermined solution
X = Nuclide rejected by the interference analysis
@ = Nuclide contains energy lines not used in Weighted Mean Activity

Errors quoted at 2.000 sigma

********** U N I D E N T I F I E D P E A K S **********

Peak Locate Performed on: 3/27/2019 8:34:04 PM
Peak Locate From Channel: 85
Peak Locate To Channel: 8000

Peak No.	Energy (keV)	Peak Size in Counts per Second	Peak CPS % Uncertainty	Peak Type	Tol. Nuclide
3	511.14	5.6997E-002	61.40		
4	583.07	5.1833E-002	59.55		

M = First peak in a multiplet region
m = Other peak in a multiplet region
F = Fitted singlet

Errors quoted at 2.000 sigma

****
***** N U C L I D E M D A R E P O R T *****
****

Detector Name: 3844
Sample Geometry:
Sample Title: B1-010-001-FSFC-D05-GM
Nuclide Library Used: C:\GENIE2K\CAMFILES\LACBWR.NLB

	Nuclide Name	Energy (keV)	Yield (%)	Line MDA (pCi/M^2)	Nuclide MDA (pCi/M^2)	Activity (pCi/M^2)	Dec. Level (pCi/M^2)
+	K-40	1460.81*	10.67	5.046E+003	5.05E+003	8.826E+004	2.035E+003
	CO-60	1173.22	100.00	1.152E+003	7.46E+002	1.034E+003	5.307E+002
		1332.49	100.00	7.459E+002		-5.578E+002	3.243E+002
	CS-134	475.35	1.46	6.177E+004	1.06E+003	-1.146E+004	2.901E+004
		563.23	8.38	1.054E+004		-1.653E+004	4.910E+003
		569.32	15.43	5.927E+003		-1.423E+003	2.767E+003
		604.70	97.60	1.060E+003		2.338E+002	4.978E+002
		795.84	85.40	1.164E+003		-1.037E+002	5.389E+002
		801.93	8.73	1.134E+004		-4.599E+002	5.245E+003
		1038.57	1.00	9.779E+004		2.344E+002	4.463E+004
		1167.94	1.80	5.851E+004		3.088E+004	2.673E+004
		1365.15	3.04	2.568E+004		9.034E+002	1.121E+004
	CS-137	661.65	85.12	1.012E+003	1.01E+003	2.220E+002	4.673E+002
	EU-152	121.78	28.40	4.261E+003	3.15E+003	1.552E+003	2.073E+003
		344.27	26.50	3.505E+003		1.952E+002	1.666E+003
		1407.95	20.70	3.150E+003		1.808E+003	1.330E+003
	EU-154	123.07	40.40	2.965E+003	2.84E+003	8.934E+002	1.442E+003
		722.30	20.00	5.016E+003		-2.762E+003	2.334E+003
		1274.51	34.40	2.837E+003		-1.533E+002	1.280E+003
+	BI-214	609.31*	46.30	1.277E+003	1.28E+003	1.316E+003	5.706E+002
		768.36	5.04	1.898E+004		1.572E+003	8.778E+003
		806.17	1.23	8.070E+004		-6.677E+003	3.734E+004
		934.06	3.21	2.692E+004		2.298E+004	1.221E+004
		1120.29	15.10	7.882E+003		8.758E+002	3.647E+003
		1155.19	1.69	5.565E+004		2.678E+004	2.515E+004
		1238.11	5.94	1.915E+004		6.840E+003	8.785E+003
		1280.96	1.47	6.114E+004		1.698E+003	2.732E+004
		1377.67	4.11	2.061E+004		-1.031E+004	9.093E+003
		1385.31	0.78	1.065E+005		-2.655E+004	4.682E+004
		1401.50	1.39	5.563E+004		-8.947E+001	2.418E+004
		1407.98	2.48	2.629E+004		1.509E+004	1.110E+004
		1509.19	2.19	3.613E+004		-2.906E+004	1.563E+004
		1661.28	1.15	3.943E+004		1.099E+004	1.476E+004
		1729.60	3.05	2.255E+004		1.137E+004	9.353E+003
		1764.49	15.80	6.687E+003		1.183E+003	2.967E+003
		1847.44	2.12	3.204E+004		-2.081E+004	1.313E+004
>		2118.54	1.21	0.000E+000		0.000E+000	0.000E+000
+	PB-214	74.81	6.33	3.672E+004	1.60E+003	8.716E+003	1.784E+004
		77.11	10.70	2.059E+004		2.072E+003	1.001E+004
		87.20	3.70	4.385E+004		1.715E+004	2.135E+004
		89.80	1.03	1.500E+005		-2.557E+004	7.300E+004
		241.98	7.49	1.440E+004		6.679E+003	6.949E+003

	Nuclide Name	Energy (keV)	Yield (%)	Line MDA (pCi/M^2)	Nuclide MDA (pCi/M^2)	Activity (pCi/M^2)	Dec. Level (pCi/M^2)
+	PB-214	295.21	19.20	4.915E+003	1.60E+003	-1.809E+003	2.348E+003
		351.92*	37.20	1.598E+003		1.394E+003	7.369E+002
		785.91	1.10	8.813E+004		6.877E+003	4.075E+004

+ = Nuclide identified during the nuclide identification
* = Energy line found in the spectrum
> = Calculated MDA is zero due to zero counts in the region, or the region is outside the spectrum, or MDA has not been calculated
@ = Half-life too short to be able to perform the decay correction

```
************************************************************************
*****        G A M M A   S P E C T R U M   A N A L Y S I S        *****
************************************************************************


Filename: C:\LACBWR\B1-010-001-FSFC-D06-GM.CNF

Report Generated On             : 3/27/2019   8:35:33 PM

Sample Title                    : B1-010-001-FSFC-D06-GM
Sample Description              : Rx Bowl 3M Concrete
Sample Identification           : D06
Sample Type                     : Gamma Direct
Sample Geometry                 :

Peak Locate Threshold           :  3.00
Peak Locate Range (in channels) :    85 -  8000
Peak Area Range (in channels)   :    85 -  8000
Identification Energy Tolerance :    3.000 keV

Sample Size                     :  2.827E+001 M^2

Sample Taken On                 : 3/27/2019   2:48:00 PM
Acquisition Started             : 3/27/2019   2:49:06 PM

Live Time                       :      600.0 seconds
Real Time                       :      600.2 seconds

Dead Time                       :   0.03 %


              Energy Calibration Used Done On       : 10/24/2017
              Efficiency Calibration Used Done On   : 3/26/2019
              Efficiency ID                         : RxBOWL_CON_3M
```

****
***** P E A K A N A L Y S I S R E P O R T *****
****

Detector Name: 3844
Sample Title: B1-010-001-FSFC-D06-GM
Peak Analysis Performed on: 3/27/2019 8:35:33 PM
Peak Analysis From Channel: 85
Peak Analysis To Channel: 8000

Peak No.	ROI start	ROI end	Peak centroid	Energy (keV)	FWHM (keV)	Net Peak Area	Net Area Uncert.	Continuum Counts
1	367-	378	371.93	92.93	1.09	3.53E+001	35.84	1.14E+002
2	946-	961	955.12	238.85	1.03	5.48E+001	35.47	8.62E+001
3	1402-	1413	1407.47	352.01	0.38	3.17E+001	19.37	2.43E+001
4	1730-	1741	1735.75	434.13	0.78	1.42E+001	10.79	5.82E+000
5	2326-	2338	2331.95	583.23	0.59	2.08E+001	16.90	1.93E+001
6	5833-	5856	5844.08	1461.03	2.10	2.10E+002	31.05	8.22E+000

M = First peak in a multiplet region
m = Other peak in a multiplet region
F = Fitted singlet

Errors quoted at 2.000 sigma

****
***** N U C L I D E I D E N T I F I C A T I O N R E P O R T *****
****

Sample Title: B1-010-001-FSFC-D06-GM
Nuclide Library Used: C:\GENIE2K\CAMFILES\LACBWR.NLB

..... IDENTIFIED NUCLIDES .....

Nuclide Name	Id Confidence	Energy (keV)	Yield (%)	Activity (pCi/M^2)	Activity Uncertainty
K-40	0.999	1460.81*	10.67	7.55654E+004	1.28076E+004
PB-212	1.000	74.81	9.60		
		77.11	17.50		
		87.20	6.30		
		89.80	1.75		
		115.19	0.60		
		238.63*	44.60	1.70753E+003	1.13741E+003
		300.09	3.41		
PB-214	1.000	74.81	6.33		
		77.11	10.70		
		87.20	3.70		
		89.80	1.03		
		241.98	7.49		
		295.21	19.20		
		351.92*	37.20	1.45801E+003	9.21153E+002
		785.91	1.10		
PA-234	0.994	94.67*	15.50	3.37392E+003	3.48891E+003
		98.44	25.10		
		111.00	8.55		
		131.28	20.00		
		152.70	7.20		
		226.87	6.50		
		569.26	10.40		
		733.00	8.50		
		883.24	12.00		
		946.00	20.00		
		949.00	7.80		

* = Energy line found in the spectrum.
@ = Energy line not used for Weighted Mean Activity
Energy Tolerance : 3.000 keV
Nuclide confidence index threshold = 0.30
Errors quoted at 2.000 sigma

****
***** I N T E R F E R E N C E C O R R E C T E D R E P O R T *****
****

Nuclide Name	Nuclide Id Confidence	Wt mean Activity (pCi/M^2)	Wt mean Activity Uncertainty
K-40	0.999	7.556540E+004	1.280759E+004
PB-212	1.000	1.707528E+003	1.137406E+003
PB-214	1.000	1.458007E+003	9.211533E+002
PA-234	0.994	3.373922E+003	3.488915E+003

? = Nuclide is part of an undetermined solution
X = Nuclide rejected by the interference analysis
@ = Nuclide contains energy lines not used in Weighted Mean Activity

Errors quoted at 2.000 sigma

********** U N I D E N T I F I E D P E A K S **********

Peak Locate Performed on: 3/27/2019 8:35:33 PM
Peak Locate From Channel: 85
Peak Locate To Channel: 8000

Peak No.	Energy (keV)	Peak Size in Counts per Second	Peak CPS % Uncertainty	Peak Type	Tol. Nuclide
4	434.13	2.3625E-002	76.10		
5	583.23	3.4583E-002	81.45		

M = First peak in a multiplet region
m = Other peak in a multiplet region
F = Fitted singlet

Errors quoted at 2.000 sigma

****
***** N U C L I D E M D A R E P O R T *****
****

Detector Name: 3844
Sample Geometry:
Sample Title: B1-010-001-FSFC-D06-GM
Nuclide Library Used: C:\GENIE2K\CAMFILES\LACBWR.NLB

	Nuclide Name	Energy (keV)	Yield (%)	Line MDA (pCi/M^2)	Nuclide MDA (pCi/M^2)	Activity (pCi/M^2)	Dec. Level (pCi/M^2)
+	K-40	1460.81*	10.67	7.593E+003	7.59E+003	7.557E+004	3.309E+003
	CO-60	1173.22	100.00	1.043E+003	8.08E+002	4.832E+002	4.760E+002
		1332.49	100.00	8.078E+002		6.478E+002	3.552E+002
	CS-134	475.35	1.46	6.212E+004	1.16E+003	-3.792E+004	2.919E+004
		563.23	8.38	1.129E+004		-6.146E+003	5.285E+003
		569.32	15.43	6.209E+003		-1.530E+003	2.908E+003
		604.70	97.60	1.187E+003		1.504E+003	5.613E+002
		795.84	85.40	1.164E+003		-3.084E+002	5.389E+002
		801.93	8.73	1.071E+004		-5.276E+003	4.933E+003
		1038.57	1.00	8.335E+004		-6.034E+004	3.741E+004
		1167.94	1.80	5.636E+004		-2.004E+004	2.566E+004
		1365.15	3.04	2.496E+004		9.475E+003	1.085E+004
	CS-137	661.65	85.12	1.068E+003	1.07E+003	4.367E+002	4.951E+002
	EU-152	121.78	28.40	4.131E+003	3.57E+003	1.597E+002	2.008E+003
		344.27	26.50	3.570E+003		2.058E+003	1.699E+003
		1407.95	20.70	3.958E+003		2.260E+002	1.735E+003
	EU-154	123.07	40.40	2.876E+003	2.65E+003	-4.856E+002	1.398E+003
		722.30	20.00	5.313E+003		-5.684E+003	2.483E+003
		1274.51	34.40	2.654E+003		-3.229E+003	1.189E+003
	BI-214	609.31	46.30	2.283E+003	2.28E+003	1.573E+003	1.073E+003
		768.36	5.04	1.810E+004		-3.388E+003	8.336E+003
		806.17	1.23	7.152E+004		1.920E+004	3.275E+004
		934.06	3.21	3.048E+004		3.896E+004	1.398E+004
		1120.29	15.10	8.291E+003		6.300E+003	3.851E+003
		1155.19	1.69	5.890E+004		6.909E+003	2.678E+004
		1238.11	5.94	2.187E+004		9.432E+003	1.014E+004
		1280.96	1.47	6.337E+004		5.648E+003	2.844E+004
		1377.67	4.11	2.287E+004		-1.183E+004	1.022E+004
		1385.31	0.78	1.038E+005		-1.466E+005	4.550E+004
		1401.50	1.39	5.876E+004		2.822E+004	2.575E+004
		1407.98	2.48	3.304E+004		1.887E+003	1.448E+004
		1509.19	2.19	2.850E+004		3.143E+003	1.182E+004
		1661.28	1.15	5.500E+004		2.564E+004	2.254E+004
		1729.60	3.05	2.255E+004		-7.551E+002	9.353E+003
		1764.49	15.80	5.768E+003		4.175E+003	2.508E+003
		1847.44	2.12	3.870E+004		-1.145E+004	1.646E+004
>		2118.54	1.21	0.000E+000		0.000E+000	0.000E+000
+	PB-214	74.81	6.33	3.879E+004	1.32E+003	6.038E+004	1.888E+004
		77.11	10.70	2.070E+004		-8.324E+002	1.007E+004
		87.20	3.70	4.205E+004		8.748E+003	2.045E+004
		89.80	1.03	1.490E+005		2.494E+004	7.252E+004
		241.98	7.49	1.475E+004		1.486E+004	7.123E+003

	Nuclide Name	Energy (keV)	Yield (%)	Line MDA (pCi/M^2)	Nuclide MDA (pCi/M^2)	Activity (pCi/M^2)	Dec. Level (pCi/M^2)
+	PB-214	295.21	19.20	5.093E+003	1.32E+003	3.541E+003	2.437E+003
		351.92*	37.20	1.317E+003		1.458E+003	5.964E+002
		785.91	1.10	9.429E+004		-6.578E+003	4.382E+004

+ = Nuclide identified during the nuclide identification
* = Energy line found in the spectrum
> = Calculated MDA is zero due to zero counts in the region, or
the region is outside the spectrum, or MDA has not been calculated
@ = Half-life too short to be able to perform the decay correction

```
************************************************************************
*****        G A M M A   S P E C T R U M   A N A L Y S I S        *****
************************************************************************


Filename: C:\LACBWR\B1-010-001-FSFC-D07-GM.CNF

Report Generated On             : 3/27/2019   8:38:30 PM

Sample Title                    : B1-010-001-FSFC-D07-GM
Sample Description              : Rx Bowl 3M Concrete
Sample Identification           : D07
Sample Type                     : Gamma Direct
Sample Geometry                 :

Peak Locate Threshold           :  3.00
Peak Locate Range (in channels) :    85 -  8000
Peak Area Range (in channels)   :    85 -  8000
Identification Energy Tolerance :    3.000 keV

Sample Size                     :  2.827E+001 M^2

Sample Taken On                 : 3/27/2019   3:00:00 PM
Acquisition Started             : 3/27/2019   3:01:05 PM

Live Time                       :      600.0 seconds
Real Time                       :      600.2 seconds

Dead Time                       :   0.04 %


              Energy Calibration Used Done On       : 10/24/2017
              Efficiency Calibration Used Done On   : 3/26/2019
              Efficiency ID                         : RxBOWL_CON_3M
```

****
***** P E A K A N A L Y S I S R E P O R T *****
****

Detector Name: 3844
Sample Title: B1-010-001-FSFC-D07-GM
Peak Analysis Performed on: 3/27/2019 8:38:30 PM
Peak Analysis From Channel: 85
Peak Analysis To Channel: 8000

Peak No.	ROI start	ROI end	Peak centroid	Energy (keV)	FWHM (keV)	Net Peak Area	Net Area Uncert.	Continuum Counts
1	949	960	954.18	238.61	0.79	5.41E+001	27.90	5.49E+001
2	1108	1120	1113.16	278.39	0.51	2.95E+001	18.61	2.15E+001
3	2034	2052	2040.92	510.45	0.63	5.69E+001	26.22	3.41E+001
4	2325	2339	2331.77	583.19	0.34	3.52E+001	18.27	1.68E+001
5	2430	2443	2436.51	609.38	0.83	3.69E+001	16.75	1.21E+001
6	3637	3650	3643.26	911.09	0.57	3.74E+001	15.62	8.60E+000
7	5832	5855	5844.24	1461.07	1.68	2.33E+002	34.15	1.46E+001

M = First peak in a multiplet region
m = Other peak in a multiplet region
F = Fitted singlet

Errors quoted at 2.000 sigma

****
***** N U C L I D E I D E N T I F I C A T I O N R E P O R T *****
****

Sample Title: B1-010-001-FSFC-D07-GM
Nuclide Library Used: C:\GENIE2K\CAMFILES\LACBWR.NLB

..... IDENTIFIED NUCLIDES .....

Nuclide Name	Id Confidence	Energy (keV)	Yield (%)	Activity (pCi/M^2)	Activity Uncertainty
K-40	0.999	1460.81*	10.67	8.40820E+004	1.41266E+004
PB-212	1.000	74.81	9.60		
		77.11	17.50		
		87.20	6.30		
		89.80	1.75		
		115.19	0.60		
		238.63*	44.60	1.68304E+003	9.08872E+002
		300.09	3.41		
BI-214	1.000	609.31*	46.30	1.85745E+003	8.76162E+002
		768.36	5.04		
		806.17	1.23		
		934.06	3.21		
		1120.29	15.10		
		1155.19	1.69		
		1238.11	5.94		
		1280.96	1.47		
		1377.67	4.11		
		1385.31	0.78		
		1401.50	1.39		
		1407.98	2.48		
		1509.19	2.19		
		1661.28	1.15		
		1729.60	3.05		
		1764.49	15.80		
		1847.44	2.12		
		2118.54	1.21		
AC-228	0.999	89.95	2.10		
		93.35	3.50		
		129.08	2.80		
		209.28	4.40		
		270.23	3.60		
		327.64	3.20		
		338.32	11.40		
		409.51	2.13		
		463.00	4.40		
		794.70	4.60		
		911.60*	27.70	3.96558E+003	1.71820E+003
		964.60	5.20		
		969.11	16.60		
		1587.90	3.71		

* = Energy line found in the spectrum.
@ = Energy line not used for Weighted Mean Activity
Energy Tolerance : 3.000 keV
Nuclide confidence index threshold = 0.30
Errors quoted at 2.000 sigma

****
***** I N T E R F E R E N C E C O R R E C T E D R E P O R T *****
****

Nuclide Name	Nuclide Id Confidence	Wt mean Activity (pCi/M^2)	Wt mean Activity Uncertainty
K-40	0.999	8.408196E+004	1.412660E+004
PB-212	1.000	1.683045E+003	9.088725E+002
BI-214	1.000	1.857446E+003	8.761620E+002
AC-228	0.999	3.965578E+003	1.718204E+003

? = Nuclide is part of an undetermined solution
X = Nuclide rejected by the interference analysis
@ = Nuclide contains energy lines not used in Weighted Mean Activity

Errors quoted at 2.000 sigma

********** U N I D E N T I F I E D P E A K S **********

Peak Locate Performed on: 3/27/2019 8:38:30 PM
Peak Locate From Channel: 85
Peak Locate To Channel: 8000

Peak No.	Energy (keV)	Peak Size in Counts per Second	Peak CPS % Uncertainty	Peak Type	Tol. Nuclide
2	278.39	4.9126E-002	63.15		
3	510.45	9.4821E-002	46.10		
4	583.19	5.8694E-002	51.88		

M = First peak in a multiplet region
m = Other peak in a multiplet region
F = Fitted singlet

Errors quoted at 2.000 sigma

****
***** N U C L I D E M D A R E P O R T *****
****

Detector Name: 3844
Sample Geometry:
Sample Title: B1-010-001-FSFC-D07-GM
Nuclide Library Used: C:\GENIE2K\CAMFILES\LACBWR.NLB

	Nuclide Name	Energy (keV)	Yield (%)	Line MDA (pCi/M^2)	Nuclide MDA (pCi/M^2)	Activity (pCi/M^2)	Dec. Level (pCi/M^2)
+	K-40	1460.81*	10.67	1.001E+004	1.00E+004	8.408E+004	4.517E+003
	CO-60	1173.22	100.00	1.152E+003	8.27E+002	-4.991E+002	5.307E+002
		1332.49	100.00	8.273E+002		-4.139E+002	3.650E+002
	CS-134	475.35	1.46	5.410E+004	1.13E+003	-3.810E+003	2.517E+004
		563.23	8.38	1.129E+004		5.118E+003	5.285E+003
		569.32	15.43	6.913E+003		6.173E+003	3.260E+003
		604.70	97.60	1.125E+003		-5.464E+002	5.305E+002
		795.84	85.40	1.184E+003		-2.183E+002	5.490E+002
		801.93	8.73	1.202E+004		1.541E+003	5.587E+003
		1038.57	1.00	9.154E+004		7.998E+004	4.150E+004
		1167.94	1.80	5.781E+004		-1.631E+004	2.638E+004
		1365.15	3.04	2.098E+004		-4.198E+004	8.861E+003
	CS-137	661.65	85.12	1.068E+003	1.07E+003	-7.019E+002	4.951E+002
	EU-152	121.78	28.40	3.920E+003	3.45E+003	-3.538E+003	1.902E+003
		344.27	26.50	3.452E+003		1.804E+002	1.639E+003
		1407.95	20.70	4.436E+003		3.978E+003	1.973E+003
	EU-154	123.07	40.40	2.810E+003	2.81E+003	1.180E+003	1.364E+003
		722.30	20.00	5.593E+003		3.627E+003	2.623E+003
		1274.51	34.40	2.837E+003		-5.902E+001	1.280E+003
+	BI-214	609.31*	46.30	1.091E+003	1.09E+003	1.857E+003	4.776E+002
		768.36	5.04	2.079E+004		3.698E+003	9.678E+003
		806.17	1.23	7.626E+004		-1.935E+002	3.512E+004
		934.06	3.21	2.946E+004		-1.231E+004	1.348E+004
		1120.29	15.10	7.740E+003		2.943E+003	3.576E+003
		1155.19	1.69	6.415E+004		-1.212E+004	2.941E+004
		1238.11	5.94	1.807E+004		-5.449E+003	8.246E+003
		1280.96	1.47	5.999E+004		-1.798E+004	2.675E+004
		1377.67	4.11	2.244E+004		4.835E+003	1.000E+004
		1385.31	0.78	1.090E+005		-1.548E+004	4.810E+004
		1401.50	1.39	5.563E+004		2.657E+004	2.418E+004
		1407.98	2.48	3.702E+004		3.321E+004	1.647E+004
		1509.19	2.19	3.258E+004		6.123E+003	1.386E+004
		1661.28	1.15	5.166E+004		2.198E+004	2.087E+004
		1729.60	3.05	2.005E+004		-4.205E+003	8.100E+003
		1764.49	15.80	6.544E+003		5.566E+003	2.896E+003
		1847.44	2.12	3.386E+004		-8.869E+003	1.404E+004
>		2118.54	1.21	0.000E+000		0.000E+000	0.000E+000
	PB-214	74.81	6.33	3.772E+004	2.59E+003	3.704E+004	1.834E+004
		77.11	10.70	2.030E+004		-6.488E+003	9.870E+003
		87.20	3.70	4.367E+004		1.065E+004	2.125E+004
		89.80	1.03	1.490E+005		-2.542E+004	7.252E+004
		241.98	7.49	1.454E+004		1.842E+004	7.016E+003

Nuclide Name	Energy (keV)	Yield (%)	Line MDA (pCi/M^2)	Nuclide MDA (pCi/M^2)	Activity (pCi/M^2)	Dec. Level (pCi/M^2)
PB-214	295.21	19.20	4.792E+003	2.59E+003	-1.324E+003	2.286E+003
	351.92	37.20	2.592E+003		3.942E+001	1.234E+003
	785.91	1.10	8.651E+004		-1.644E+004	3.994E+004

+ = Nuclide identified during the nuclide identification
* = Energy line found in the spectrum
> = Calculated MDA is zero due to zero counts in the region, or
the region is outside the spectrum, or MDA has not been calculated
@ = Half-life too short to be able to perform the decay correction

```
************************************************************************
*****        G A M M A   S P E C T R U M   A N A L Y S I S        *****
************************************************************************


Filename: C:\LACBWR\B1-010-001-FSFC-D08-GM.CNF

Report Generated On             : 3/27/2019   8:40:19 PM

Sample Title                    : B1-010-001-FSFC-D08-GM
Sample Description              : Rx Bowl 3M Concrete
Sample Identification           : D08
Sample Type                     : Gamma Direct
Sample Geometry                 :

Peak Locate Threshold           :  3.00
Peak Locate Range (in channels) :    85 -  8000
Peak Area Range (in channels)   :    85 -  8000
Identification Energy Tolerance :    3.000 keV

Sample Size                     :  2.827E+001 M^2

Sample Taken On                 : 3/27/2019   3:12:00 PM
Acquisition Started             : 3/27/2019   3:13:36 PM

Live Time                       :      600.0 seconds
Real Time                       :      600.2 seconds

Dead Time                       :   0.03 %


              Energy Calibration Used Done On       : 10/24/2017
              Efficiency Calibration Used Done On   : 3/26/2019
              Efficiency ID                         : RxBOWL_CON_3M
```

****
***** P E A K A N A L Y S I S R E P O R T *****
****

Detector Name: 3844
Sample Title: B1-010-001-FSFC-D08-GM
Peak Analysis Performed on: 3/27/2019 8:40:19 PM
Peak Analysis From Channel: 85
Peak Analysis To Channel: 8000

Peak No.	ROI start	ROI end	Peak centroid	Energy (keV)	FWHM (keV)	Net Peak Area	Net Area Uncert.	Continuum Counts
1	947-	964	953.76	238.51	0.68	6.32E+001	35.46	7.68E+001
2	1402-	1415	1408.72	352.33	0.81	3.97E+001	21.82	2.83E+001
3	2327-	2338	2332.56	583.39	1.47	2.28E+001	19.45	2.72E+001
4	2431-	2443	2436.48	609.38	0.42	3.09E+001	19.66	2.41E+001
5	3637-	3650	3643.59	911.17	0.73	2.28E+001	17.39	1.92E+001
6	5833-	5855	5844.50	1461.13	1.30	2.10E+002	30.50	5.75E+000

M = First peak in a multiplet region
m = Other peak in a multiplet region
F = Fitted singlet

Errors quoted at 2.000 sigma

****
***** N U C L I D E I D E N T I F I C A T I O N R E P O R T *****
****

Sample Title: B1-010-001-FSFC-D08-GM
Nuclide Library Used: C:\GENIE2K\CAMFILES\LACBWR.NLB

..... IDENTIFIED NUCLIDES .....

Nuclide Name	Id Confidence	Energy (keV)	Yield (%)	Activity (pCi/M^2)	Activity Uncertainty
K-40	0.998	1460.81*	10.67	7.57370E+004	1.26436E+004
PB-212	1.000	74.81	9.60		
		77.11	17.50		
		87.20	6.30		
		89.80	1.75		
		115.19	0.60		
		238.63*	44.60	1.96598E+003	1.14715E+003
		300.09	3.41		
BI-214	1.000	609.31*	46.30	1.55413E+003	1.00934E+003
		768.36	5.04		
		806.17	1.23		
		934.06	3.21		
		1120.29	15.10		
		1155.19	1.69		
		1238.11	5.94		
		1280.96	1.47		
		1377.67	4.11		
		1385.31	0.78		
		1401.50	1.39		
		1407.98	2.48		
		1509.19	2.19		
		1661.28	1.15		
		1729.60	3.05		
		1764.49	15.80		
		1847.44	2.12		
		2118.54	1.21		
PB-214	0.999	74.81	6.33		
		77.11	10.70		
		87.20	3.70		
		89.80	1.03		
		241.98	7.49		
		295.21	19.20		
		351.92*	37.20	1.82731E+003	1.04579E+003
		785.91	1.10		
AC-228	0.999	89.95	2.10		
		93.35	3.50		
		129.08	2.80		
		209.28	4.40		
		270.23	3.60		
		327.64	3.20		
		338.32	11.40		

Nuclide Name	Id Confidence	Energy (keV)	Yield (%)	Activity (pCi/M^2)	Activity Uncertainty
AC-228	0.999	409.51	2.13		
		463.00	4.40		
		794.70	4.60		
		911.60*	27.70	2.41977E+003	1.86471E+003
		964.60	5.20		
		969.11	16.60		
		1587.90	3.71		

* = Energy line found in the spectrum.
@ = Energy line not used for Weighted Mean Activity
Energy Tolerance : 3.000 keV
Nuclide confidence index threshold = 0.30
Errors quoted at 2.000 sigma

****
***** I N T E R F E R E N C E C O R R E C T E D R E P O R T *****
****

Nuclide Name	Nuclide Id Confidence	Wt mean Activity (pCi/M^2)	Wt mean Activity Uncertainty
K-40	0.998	7.573698E+004	1.264356E+004
PB-212	1.000	1.965977E+003	1.147153E+003
BI-214	1.000	1.554125E+003	1.009343E+003
PB-214	0.999	1.827312E+003	1.045788E+003
AC-228	0.999	2.419773E+003	1.864711E+003

? = Nuclide is part of an undetermined solution
X = Nuclide rejected by the interference analysis
@ = Nuclide contains energy lines not used in Weighted Mean Activity

Errors quoted at 2.000 sigma

********** U N I D E N T I F I E D P E A K S **********

Peak Locate Performed on: 3/27/2019 8:40:19 PM
Peak Locate From Channel: 85
Peak Locate To Channel: 8000

Peak No.	Energy (keV)	Peak Size in Counts per Second	Peak CPS % Uncertainty	Peak Type	Tol. Nuclide
3	583.39	3.8000E-002	85.31		

M = First peak in a multiplet region
m = Other peak in a multiplet region
F = Fitted singlet

Errors quoted at 2.000 sigma

****
***** N U C L I D E M D A R E P O R T *****
****

Detector Name: 3844
Sample Geometry:
Sample Title: B1-010-001-FSFC-D08-GM
Nuclide Library Used: C:\GENIE2K\CAMFILES\LACBWR.NLB

	Nuclide Name	Energy (keV)	Yield (%)	Line MDA (pCi/M^2)	Nuclide MDA (pCi/M^2)	Activity (pCi/M^2)	Dec. Level (pCi/M^2)
+	K-40	1460.81*	10.67	6.573E+003	6.57E+003	7.574E+004	2.799E+003
	CO-60	1173.22	100.00	1.175E+003	9.51E+002	-1.843E+002	5.421E+002
		1332.49	100.00	9.512E+002		-6.776E+002	4.269E+002
	CS-134	475.35	1.46	5.958E+004	1.10E+003	-3.321E+003	2.791E+004
		563.23	8.38	1.158E+004		2.037E+003	5.428E+003
		569.32	15.43	6.440E+003		3.428E+003	3.023E+003
		604.70	97.60	1.182E+003		-1.096E+003	5.586E+002
		795.84	85.40	1.101E+003		6.205E+002	5.075E+002
		801.93	8.73	1.016E+004		3.153E+003	4.657E+003
		1038.57	1.00	8.618E+004		-4.246E+004	3.882E+004
		1167.94	1.80	6.058E+004		6.548E+003	2.777E+004
		1365.15	3.04	2.832E+004		5.721E+003	1.253E+004
	CS-137	661.65	85.12	1.129E+003	1.13E+003	-3.257E+002	5.257E+002
	EU-152	121.78	28.40	4.057E+003	3.65E+003	8.439E+002	1.971E+003
		344.27	26.50	3.647E+003		1.678E+003	1.737E+003
		1407.95	20.70	3.958E+003		2.260E+002	1.735E+003
	EU-154	123.07	40.40	2.838E+003	2.84E+003	7.195E+002	1.378E+003
		722.30	20.00	4.740E+003		5.946E+003	2.196E+003
		1274.51	34.40	2.966E+003		2.396E+003	1.345E+003
+	BI-214	609.31*	46.30	1.479E+003	1.48E+003	1.554E+003	6.714E+002
		768.36	5.04	2.200E+004		8.340E+003	1.028E+004
		806.17	1.23	6.902E+004		-1.185E+004	3.150E+004
		934.06	3.21	3.178E+004		1.593E+004	1.463E+004
		1120.29	15.10	7.811E+003		6.187E+003	3.612E+003
		1155.19	1.69	6.270E+004		1.708E+003	2.868E+004
		1238.11	5.94	1.956E+004		7.866E+003	8.992E+003
		1280.96	1.47	7.248E+004		4.735E+004	3.300E+004
		1377.67	4.11	2.287E+004		-5.829E+003	1.022E+004
		1385.31	0.78	1.187E+005		1.091E+005	5.293E+004
		1401.50	1.39	5.563E+004		4.026E+004	2.418E+004
		1407.98	2.48	3.304E+004		1.887E+003	1.448E+004
		1509.19	2.19	3.499E+004		-3.661E+003	1.507E+004
		1661.28	1.15	3.401E+004		7.326E+003	1.205E+004
		1729.60	3.05	2.255E+004		1.137E+004	9.353E+003
		1764.49	15.80	7.097E+003		4.201E+003	3.172E+003
		1847.44	2.12	4.017E+004		2.561E+004	1.720E+004
>		2118.54	1.21	0.000E+000		0.000E+000	0.000E+000
+	PB-214	74.81	6.33	3.772E+004	1.47E+003	5.659E+004	1.834E+004
		77.11	10.70	2.077E+004		2.223E+004	1.010E+004
		87.20	3.70	4.431E+004		1.686E+003	2.158E+004
		89.80	1.03	1.530E+005		-3.363E+004	7.452E+004
		241.98	7.49	1.446E+004		1.941E+004	6.976E+003

	Nuclide Name	Energy (keV)	Yield (%)	Line MDA (pCi/M^2)	Nuclide MDA (pCi/M^2)	Activity (pCi/M^2)	Dec. Level (pCi/M^2)
+	PB-214	295.21	19.20	5.020E+003	1.47E+003	1.541E+003	2.400E+003
		351.92*	37.20	1.473E+003		1.827E+003	6.742E+002
		785.91	1.10	7.790E+004		-2.585E+004	3.563E+004

+ = Nuclide identified during the nuclide identification
* = Energy line found in the spectrum
> = Calculated MDA is zero due to zero counts in the region, or
the region is outside the spectrum, or MDA has not been calculated
@ = Half-life too short to be able to perform the decay correction

```
************************************************************************
*****        G A M M A   S P E C T R U M   A N A L Y S I S        *****
************************************************************************


Filename: C:\LACBWR\B1-010-001-FSFC-D09-GM.CNF

Report Generated On             : 3/27/2019   8:42:37 PM

Sample Title                    : B1-010-001-FSFC-D09-GM
Sample Description              : Rx Bowl 3M Concrete
Sample Identification           : D09
Sample Type                     : Gamma Direct
Sample Geometry                 :

Peak Locate Threshold           :  3.00
Peak Locate Range (in channels) :    85 -  8000
Peak Area Range (in channels)   :    85 -  8000
Identification Energy Tolerance :    3.000 keV

Sample Size                     :  2.827E+001 M^2

Sample Taken On                 : 3/27/2019   3:24:00 PM
Acquisition Started             : 3/27/2019   3:26:28 PM

Live Time                       :      600.0 seconds
Real Time                       :      600.2 seconds

Dead Time                       :   0.03 %


              Energy Calibration Used Done On       : 10/24/2017
              Efficiency Calibration Used Done On   : 3/26/2019
              Efficiency ID                         : RxBOWL_CON_3M
```

****
***** P E A K A N A L Y S I S R E P O R T *****
****

Detector Name: 3844
Sample Title: B1-010-001-FSFC-D09-GM
Peak Analysis Performed on: 3/27/2019 8:42:37 PM
Peak Analysis From Channel: 85
Peak Analysis To Channel: 8000

Peak No.	ROI start	ROI end	Peak centroid	Energy (keV)	FWHM (keV)	Net Peak Area	Net Area Uncert.	Continuum Counts
1	1402-	1413	1407.61	352.05	0.82	2.80E+001	19.55	2.70E+001
2	2037-	2049	2043.60	511.12	0.90	2.40E+001	22.55	3.90E+001
3	2326-	2337	2331.49	583.12	0.39	1.76E+001	16.27	1.94E+001
4	2431-	2442	2436.10	609.28	0.53	2.25E+001	18.09	2.35E+001
5	5834-	5856	5844.61	1461.16	1.18	2.24E+002	31.61	6.26E+000

M = First peak in a multiplet region
m = Other peak in a multiplet region
F = Fitted singlet

Errors quoted at 2.000 sigma

****
***** N U C L I D E I D E N T I F I C A T I O N R E P O R T *****
****

Sample Title: B1-010-001-FSFC-D09-GM
Nuclide Library Used: C:\GENIE2K\CAMFILES\LACBWR.NLB

..... IDENTIFIED NUCLIDES .....

Nuclide Name	Id Confidence	Energy (keV)	Yield (%)	Activity (pCi/M^2)	Activity Uncertainty
K-40	0.998	1460.81*	10.67	8.05979E+004	1.31902E+004
BI-214	1.000	609.31*	46.30	1.13364E+003	9.22163E+002
		768.36	5.04		
		806.17	1.23		
		934.06	3.21		
		1120.29	15.10		
		1155.19	1.69		
		1238.11	5.94		
		1280.96	1.47		
		1377.67	4.11		
		1385.31	0.78		
		1401.50	1.39		
		1407.98	2.48		
		1509.19	2.19		
		1661.28	1.15		
		1729.60	3.05		
		1764.49	15.80		
		1847.44	2.12		
		2118.54	1.21		
PB-214	1.000	74.81	6.33		
		77.11	10.70		
		87.20	3.70		
		89.80	1.03		
		241.98	7.49		
		295.21	19.20		
		351.92*	37.20	1.28805E+003	9.22427E+002
		785.91	1.10		

* = Energy line found in the spectrum.
@ = Energy line not used for Weighted Mean Activity
Energy Tolerance : 3.000 keV
Nuclide confidence index threshold = 0.30
Errors quoted at 2.000 sigma

****
***** I N T E R F E R E N C E C O R R E C T E D R E P O R T *****
****

Nuclide Name	Nuclide Id Confidence	Wt mean Activity (pCi/M^2)	Wt mean Activity Uncertainty
K-40	0.998	8.059794E+004	1.319019E+004
BI-214	1.000	1.133636E+003	9.221627E+002
PB-214	1.000	1.288046E+003	9.224265E+002

? = Nuclide is part of an undetermined solution
X = Nuclide rejected by the interference analysis
@ = Nuclide contains energy lines not used in Weighted Mean Activity

Errors quoted at 2.000 sigma

********** U N I D E N T I F I E D P E A K S **********

Peak Locate Performed on: 3/27/2019 8:42:37 PM
Peak Locate From Channel: 85
Peak Locate To Channel: 8000

Peak No.	Energy (keV)	Peak Size in Counts per Second	Peak CPS % Uncertainty	Peak Type	Tol. Nuclide
2	511.12	3.9987E-002	94.01		
3	583.12	2.9291E-002	92.58		

M = First peak in a multiplet region
m = Other peak in a multiplet region
F = Fitted singlet

Errors quoted at 2.000 sigma

****
***** N U C L I D E M D A R E P O R T *****
****

Detector Name: 3844
Sample Geometry:
Sample Title: B1-010-001-FSFC-D09-GM
Nuclide Library Used: C:\GENIE2K\CAMFILES\LACBWR.NLB

	Nuclide Name	Energy (keV)	Yield (%)	Line MDA (pCi/M^2)	Nuclide MDA (pCi/M^2)	Activity (pCi/M^2)	Dec. Level (pCi/M^2)
+	K-40	1460.81*	10.67	7.021E+003	7.02E+003	8.060E+004	3.023E+003
	CO-60	1173.22	100.00	1.081E+003	9.35E+002	1.066E+002	4.949E+002
		1332.49	100.00	9.346E+002		-1.979E+002	4.186E+002
	CS-134	475.35	1.46	6.032E+004	1.07E+003	-3.103E+004	2.828E+004
		563.23	8.38	1.046E+004		2.425E+003	4.871E+003
		569.32	15.43	5.802E+003		2.041E+003	2.704E+003
		604.70	97.60	1.209E+003		6.538E+002	5.721E+002
		795.84	85.40	1.068E+003		8.316E+001	4.910E+002
		801.93	8.73	1.060E+004		-5.523E+002	4.879E+003
		1038.57	1.00	1.164E+005		5.344E+004	5.391E+004
		1167.94	1.80	5.334E+004		-1.380E+004	2.415E+004
		1365.15	3.04	2.704E+004		-6.625E+003	1.189E+004
	CS-137	661.65	85.12	1.112E+003	1.11E+003	7.554E+002	5.171E+002
	EU-152	121.78	28.40	3.956E+003	3.48E+003	-6.780E+002	1.920E+003
		344.27	26.50	3.478E+003		-2.214E+003	1.653E+003
		1407.95	20.70	4.157E+003		1.142E+002	1.834E+003
	EU-154	123.07	40.40	2.799E+003	2.80E+003	2.203E+003	1.359E+003
		722.30	20.00	4.268E+003		-4.202E+003	1.960E+003
		1274.51	34.40	2.837E+003		2.963E+003	1.280E+003
+	BI-214	609.31*	46.30	1.412E+003	1.41E+003	1.134E+003	6.377E+002
		768.36	5.04	2.110E+004		1.202E+004	9.833E+003
		806.17	1.23	6.816E+004		-1.199E+004	3.107E+004
		934.06	3.21	2.730E+004		-2.902E+003	1.240E+004
		1120.29	15.10	7.596E+003		7.443E+003	3.504E+003
		1155.19	1.69	6.627E+004		-4.711E+002	3.046E+004
		1238.11	5.94	1.894E+004		1.121E+004	8.680E+003
		1280.96	1.47	5.881E+004		2.398E+004	2.616E+004
		1377.67	4.11	2.061E+004		-4.260E+003	9.093E+003
		1385.31	0.78	9.832E+004		-1.278E+005	4.274E+004
		1401.50	1.39	5.876E+004		-3.624E+004	2.575E+004
		1407.98	2.48	3.470E+004		9.533E+002	1.531E+004
		1509.19	2.19	3.258E+004		-2.208E+004	1.386E+004
		1661.28	1.15	5.500E+004		2.564E+004	2.254E+004
		1729.60	3.05	2.134E+004		9.950E+003	8.749E+003
		1764.49	15.80	5.422E+003		1.194E+003	2.334E+003
		1847.44	2.12	2.297E+004		6.402E+003	8.598E+003
>		2118.54	1.21	0.000E+000		0.000E+000	0.000E+000
+	PB-214	74.81	6.33	3.879E+004	1.37E+003	-1.217E+004	1.888E+004
		77.11	10.70	2.181E+004		2.265E+004	1.062E+004
		87.20	3.70	4.196E+004		-3.801E+004	2.040E+004
		89.80	1.03	1.477E+005		-4.014E+004	7.187E+004
		241.98	7.49	1.435E+004		-4.015E+003	6.921E+003

	Nuclide Name	Energy (keV)	Yield (%)	Line MDA (pCi/M^2)	Nuclide MDA (pCi/M^2)	Activity (pCi/M^2)	Dec. Level (pCi/M^2)
+	PB-214	295.21	19.20	5.049E+003	1.37E+003	5.674E+003	2.415E+003
		351.92*	37.20	1.368E+003		1.288E+003	6.217E+002
		785.91	1.10	7.510E+004		-2.863E+004	3.423E+004

+ = Nuclide identified during the nuclide identification
* = Energy line found in the spectrum
> = Calculated MDA is zero due to zero counts in the region, or the region is outside the spectrum, or MDA has not been calculated
@ = Half-life too short to be able to perform the decay correction

```
************************************************************************
*****        G A M M A   S P E C T R U M   A N A L Y S I S        *****
************************************************************************


Filename: C:\LACBWR\B1-010-001-FSFC-D10-GM.CNF

Report Generated On             : 3/27/2019   8:44:50 PM

Sample Title                    : B1-010-001-FSFC-D10-GM
Sample Description              : Rx Bowl 3M Concrete
Sample Identification           : D10
Sample Type                     : Gamma Direct
Sample Geometry                 :

Peak Locate Threshold           :  3.00
Peak Locate Range (in channels) :    85 -  8000
Peak Area Range (in channels)   :    85 -  8000
Identification Energy Tolerance :    3.000 keV

Sample Size                     :  2.827E+001 M^2

Sample Taken On                 : 3/27/2019   3:38:00 PM
Acquisition Started             : 3/27/2019   3:39:27 PM

Live Time                       :      600.0 seconds
Real Time                       :      600.2 seconds

Dead Time                       :   0.03 %


              Energy Calibration Used Done On       : 10/24/2017
              Efficiency Calibration Used Done On   : 3/26/2019
              Efficiency ID                         : RxBOWL_CON_3M
```

****
***** P E A K A N A L Y S I S R E P O R T *****
****

Detector Name: 3844
Sample Title: B1-010-001-FSFC-D10-GM
Peak Analysis Performed on: 3/27/2019 8:44:50 PM
Peak Analysis From Channel: 85
Peak Analysis To Channel: 8000

Peak No.	ROI start	ROI end	Peak centroid	Energy (keV)	FWHM (keV)	Net Peak Area	Net Area Uncert.	Continuum Counts
1	294-	304	299.78	74.88	0.42	3.75E+001	35.23	1.14E+002
2	1228-	1239	1233.23	308.43	0.26	1.35E+001	16.71	2.25E+001
3	1403-	1414	1408.20	352.20	0.92	2.82E+001	20.28	2.98E+001
4	2325-	2338	2331.55	583.14	1.69	3.50E+001	17.25	1.30E+001
5	2429-	2443	2436.08	609.27	0.75	4.80E+001	19.12	1.50E+001
6	3639-	3652	3645.34	911.61	0.85	2.12E+001	13.38	7.76E+000
7	5833-	5857	5844.75	1461.20	1.49	2.50E+002	34.97	1.42E+001

M = First peak in a multiplet region
m = Other peak in a multiplet region
F = Fitted singlet

Errors quoted at 2.000 sigma

****
***** N U C L I D E I D E N T I F I C A T I O N R E P O R T *****
****

Sample Title: B1-010-001-FSFC-D10-GM
Nuclide Library Used: C:\GENIE2K\CAMFILES\LACBWR.NLB

..... IDENTIFIED NUCLIDES .....

Nuclide Name	Id Confidence	Energy (keV)	Yield (%)	Activity (pCi/M^2)	Activity Uncertainty
K-40	0.997	1460.81*	10.67	8.99765E+004	1.46260E+004
BI-214	1.000	609.31*	46.30	2.41608E+003	1.01102E+003
		768.36	5.04		
		806.17	1.23		
		934.06	3.21		
		1120.29	15.10		
		1155.19	1.69		
		1238.11	5.94		
		1280.96	1.47		
		1377.67	4.11		
		1385.31	0.78		
		1401.50	1.39		
		1407.98	2.48		
		1509.19	2.19		
		1661.28	1.15		
		1729.60	3.05		
		1764.49	15.80		
		1847.44	2.12		
		2118.54	1.21		
PB-214	0.625	74.81*	6.33	1.43004E+004	1.37424E+004
		77.11	10.70		
		87.20	3.70		
		89.80	1.03		
		241.98	7.49		
		295.21	19.20		
		351.92*	37.20	1.29785E+003	9.55855E+002
		785.91	1.10		
AC-228	1.000	89.95	2.10		
		93.35	3.50		
		129.08	2.80		
		209.28	4.40		
		270.23	3.60		
		327.64	3.20		
		338.32	11.40		
		409.51	2.13		
		463.00	4.40		
		794.70	4.60		
		911.60*	27.70	2.25283E+003	1.44228E+003
		964.60	5.20		
		969.11	16.60		
		1587.90	3.71		

Nuclide Name	Id Confidence	Energy (keV)	Yield (%)	Activity (pCi/M^2)	Activity Uncertainty

* = Energy line found in the spectrum.
@ = Energy line not used for Weighted Mean Activity
Energy Tolerance : 3.000 keV
Nuclide confidence index threshold = 0.30
Errors quoted at 2.000 sigma

****
***** I N T E R F E R E N C E C O R R E C T E D R E P O R T *****
****

Nuclide Name	Nuclide Id Confidence	Wt mean Activity (pCi/M^2)	Wt mean Activity Uncertainty
K-40	0.997	8.997647E+004	1.462597E+004
BI-214	1.000	2.416080E+003	1.011022E+003
PB-214	0.625	1.360457E+003	9.535513E+002
AC-228	1.000	2.252832E+003	1.442279E+003

? = Nuclide is part of an undetermined solution
X = Nuclide rejected by the interference analysis
@ = Nuclide contains energy lines not used in Weighted Mean Activity

Errors quoted at 2.000 sigma

********** U N I D E N T I F I E D P E A K S **********

Peak Locate Performed on: 3/27/2019 8:44:50 PM
Peak Locate From Channel: 85
Peak Locate To Channel: 8000

Peak No.	Energy (keV)	Peak Size in Counts per Second	Peak CPS % Uncertainty	Peak Type	Tol. Nuclide
2	308.43	2.2512E-002	123.71		
4	583.14	5.8325E-002	49.29		

M = First peak in a multiplet region
m = Other peak in a multiplet region
F = Fitted singlet

Errors quoted at 2.000 sigma

****
***** N U C L I D E M D A R E P O R T *****
****

Detector Name: 3844
Sample Geometry:
Sample Title: B1-010-001-FSFC-D10-GM
Nuclide Library Used: C:\GENIE2K\CAMFILES\LACBWR.NLB

	Nuclide Name	Energy (keV)	Yield (%)	Line MDA (pCi/M^2)	Nuclide MDA (pCi/M^2)	Activity (pCi/M^2)	Dec. Level (pCi/M^2)
+	K-40	1460.81*	10.67	9.835E+003	9.84E+003	8.998E+004	4.430E+003
	CO-60	1173.22	100.00	1.105E+003	8.46E+002	1.113E+002	5.071E+002
		1332.49	100.00	8.463E+002		1.431E+002	3.744E+002
	CS-134	475.35	1.46	5.883E+004	1.08E+003	-1.502E+004	2.754E+004
		563.23	8.38	1.014E+004		-8.718E+003	4.711E+003
		569.32	15.43	5.497E+003		1.876E+003	2.552E+003
		604.70	97.60	1.219E+003		-1.152E+003	5.775E+002
		795.84	85.40	1.079E+003		-3.500E+001	4.966E+002
		801.93	8.73	9.574E+003		-7.134E+003	4.364E+003
		1038.57	1.00	9.534E+004		-5.722E+003	4.340E+004
		1167.94	1.80	6.126E+004		4.987E+004	2.811E+004
		1365.15	3.04	3.014E+004		1.822E+004	1.344E+004
	CS-137	661.65	85.12	1.077E+003	1.08E+003	4.215E+002	4.996E+002
	EU-152	121.78	28.40	3.951E+003	3.50E+003	2.617E+003	1.918E+003
		344.27	26.50	3.505E+003		-1.455E+003	1.666E+003
		1407.95	20.70	4.059E+003		-1.007E+003	1.785E+003
	EU-154	123.07	40.40	2.759E+003	2.76E+003	5.932E+002	1.339E+003
		722.30	20.00	4.781E+003		1.792E+003	2.217E+003
		1274.51	34.40	2.966E+003		1.076E+003	1.345E+003
+	BI-214	609.31*	46.30	1.227E+003	1.23E+003	2.416E+003	5.456E+002
		768.36	5.04	1.864E+004		-8.006E+002	8.604E+003
		806.17	1.23	6.641E+004		-2.321E+004	3.019E+004
		934.06	3.21	3.241E+004		4.870E+003	1.495E+004
		1120.29	15.10	7.882E+003		4.502E+003	3.647E+003
		1155.19	1.69	6.557E+004		4.889E+003	3.012E+004
		1238.11	5.94	2.016E+004		1.899E+004	9.293E+003
		1280.96	1.47	6.226E+004		4.963E+003	2.789E+004
		1377.67	4.11	2.155E+004		5.156E+003	9.560E+003
		1385.31	0.78	1.140E+005		5.676E+004	5.057E+004
		1401.50	1.39	5.876E+004		-3.193E+004	2.575E+004
		1407.98	2.48	3.388E+004		-8.406E+003	1.490E+004
		1509.19	2.19	3.129E+004		-1.033E+004	1.321E+004
		1661.28	1.15	5.500E+004		-3.388E+004	2.254E+004
		1729.60	3.05	2.859E+004		-3.198E+003	1.237E+004
		1764.49	15.80	7.097E+003		6.680E+003	3.172E+003
		1847.44	2.12	3.556E+004		2.075E+003	1.489E+004
>		2118.54	1.21	0.000E+000		0.000E+000	0.000E+000
+	PB-214	74.81*	6.33	2.177E+004	1.43E+003	1.430E+004	1.037E+004
		77.11	10.70	2.150E+004		2.043E+004	1.047E+004
		87.20	3.70	4.181E+004		-3.015E+004	2.033E+004
		89.80	1.03	1.439E+005		-7.482E+004	6.996E+004
		241.98	7.49	1.470E+004		8.014E+003	7.096E+003

	Nuclide Name	Energy (keV)	Yield (%)	Line MDA (pCi/M^2)	Nuclide MDA (pCi/M^2)	Activity (pCi/M^2)	Dec. Level (pCi/M^2)
+	PB-214	295.21	19.20	4.990E+003	1.43E+003	-8.589E+002	2.385E+003
		351.92*	37.20	1.432E+003		1.298E+003	6.537E+002
		785.91	1.10	8.651E+004		2.615E+003	3.994E+004

+ = Nuclide identified during the nuclide identification
* = Energy line found in the spectrum
> = Calculated MDA is zero due to zero counts in the region, or
the region is outside the spectrum, or MDA has not been calculated
@ = Half-life too short to be able to perform the decay correction

```
************************************************************************
*****        G A M M A   S P E C T R U M   A N A L Y S I S        *****
************************************************************************


Filename: C:\LACBWR\B1-010-001-FSFC-D11-GM.CNF

Report Generated On             : 3/27/2019   8:46:25 PM

Sample Title                    : B1-010-001-FSFC-D11-GM
Sample Description              : Rx Bowl 3M Concrete
Sample Identification           : D11
Sample Type                     : Gamma Direct
Sample Geometry                 :

Peak Locate Threshold           :  3.00
Peak Locate Range (in channels) :    85 -  8000
Peak Area Range (in channels)   :    85 -  8000
Identification Energy Tolerance :    3.000 keV

Sample Size                     :  2.827E+001 M^2

Sample Taken On                 : 3/27/2019  10:53:00 AM
Acquisition Started             : 3/27/2019  10:53:21 AM

Live Time                       :      600.0 seconds
Real Time                       :      600.2 seconds

Dead Time                       :   0.03 %


              Energy Calibration Used Done On       : 10/24/2017
              Efficiency Calibration Used Done On   : 3/26/2019
              Efficiency ID                         : RxBOWL_CON_3M
```

****
***** P E A K A N A L Y S I S R E P O R T *****
****

Detector Name: 3844
Sample Title: B1-010-001-FSFC-D11-GM
Peak Analysis Performed on: 3/27/2019 8:46:25 PM
Peak Analysis From Channel: 85
Peak Analysis To Channel: 8000

Peak No.	ROI start	ROI end	Peak centroid	Energy (keV)	FWHM (keV)	Net Peak Area	Net Area Uncert.	Continuum Counts
1	948-	963	955.67	238.99	0.41	7.35E+001	33.29	6.65E+001
2	1404-	1415	1409.58	352.54	0.41	2.97E+001	20.80	3.13E+001
3	2327-	2343	2335.28	584.07	0.99	3.90E+001	20.45	2.10E+001
4	2435-	2447	2440.89	610.48	0.52	3.34E+001	16.06	1.16E+001
5	5840-	5865	5853.02	1463.26	1.19	2.62E+002	33.15	3.11E+000

M = First peak in a multiplet region
m = Other peak in a multiplet region
F = Fitted singlet

Errors quoted at 2.000 sigma

****
***** N U C L I D E I D E N T I F I C A T I O N R E P O R T *****
****

Sample Title: B1-010-001-FSFC-D11-GM
Nuclide Library Used: C:\GENIE2K\CAMFILES\LACBWR.NLB

..... IDENTIFIED NUCLIDES .....

Nuclide Name	Id Confidence	Energy (keV)	Yield (%)	Activity (pCi/M^2)	Activity Uncertainty
K-40	0.899	1460.81*	10.67	9.44382E+004	1.42740E+004
PB-212	0.999	74.81	9.60		
		77.11	17.50		
		87.20	6.30		
		89.80	1.75		
		115.19	0.60		
		238.63*	44.60	2.28791E+003	1.09929E+003
		300.09	3.41		
BI-214	0.990	609.31*	46.30	1.68420E+003	8.37649E+002
		768.36	5.04		
		806.17	1.23		
		934.06	3.21		
		1120.29	15.10		
		1155.19	1.69		
		1238.11	5.94		
		1280.96	1.47		
		1377.67	4.11		
		1385.31	0.78		
		1401.50	1.39		
		1407.98	2.48		
		1509.19	2.19		
		1661.28	1.15		
		1729.60	3.05		
		1764.49	15.80		
		1847.44	2.12		
		2118.54	1.21		
PB-214	0.610	74.81	6.33		
		77.11	10.70		
		87.20	3.70		
		89.80	1.03		
		241.98*	7.49	1.36236E+004	6.54586E+003
		295.21	19.20		
		351.92*	37.20	1.36769E+003	9.82184E+002
		785.91	1.10		

* = Energy line found in the spectrum.
@ = Energy line not used for Weighted Mean Activity
Energy Tolerance : 3.000 keV
Nuclide confidence index threshold = 0.30
Errors quoted at 2.000 sigma

****
***** I N T E R F E R E N C E C O R R E C T E D R E P O R T *****
****

Nuclide Name	Nuclide Id Confidence	Wt mean Activity (pCi/M^2)	Wt mean Activity Uncertainty
K-40	0.899	9.443817E+004	1.427399E+004
PB-212	0.999	2.058228E+003	1.111599E+003
BI-214	0.990	1.684204E+003	8.376486E+002
PB-214	0.610	1.367695E+003	9.821836E+002

? = Nuclide is part of an undetermined solution
X = Nuclide rejected by the interference analysis
@ = Nuclide contains energy lines not used in Weighted Mean Activity

Errors quoted at 2.000 sigma

********** U N I D E N T I F I E D P E A K S **********

Peak Locate Performed on: 3/27/2019 8:46:25 PM
Peak Locate From Channel: 85
Peak Locate To Channel: 8000

Peak No.	Energy (keV)	Peak Size in Counts per Second	Peak CPS % Uncertainty	Peak Type	Tol. Nuclide
3	584.07	6.5028E-002	52.42		

M = First peak in a multiplet region
m = Other peak in a multiplet region
F = Fitted singlet

Errors quoted at 2.000 sigma

****
***** N U C L I D E M D A R E P O R T *****
****

Detector Name: 3844
Sample Geometry:
Sample Title: B1-010-001-FSFC-D11-GM
Nuclide Library Used: C:\GENIE2K\CAMFILES\LACBWR.NLB

	Nuclide Name	Energy (keV)	Yield (%)	Line MDA (pCi/M^2)	Nuclide MDA (pCi/M^2)	Activity (pCi/M^2)	Dec. Level (pCi/M^2)
+	K-40	1460.81*	10.67	5.221E+003	5.22E+003	9.444E+004	2.123E+003
	CO-60	1173.22	100.00	1.164E+003	7.67E+002	8.270E+002	5.365E+002
		1332.49	100.00	7.672E+002		-9.863E+002	3.349E+002
	CS-134	475.35	1.46	5.572E+004	1.03E+003	1.631E+003	2.599E+004
		563.23	8.38	1.100E+004		1.396E+003	5.139E+003
		569.32	15.43	6.287E+003		5.493E+003	2.947E+003
		604.70	97.60	1.108E+003		-9.969E+002	5.218E+002
		795.84	85.40	1.034E+003		-1.081E+003	4.740E+002
		801.93	8.73	1.134E+004		1.554E+003	5.245E+003
		1038.57	1.00	1.048E+005		1.760E+003	4.811E+004
		1167.94	1.80	5.851E+004		-6.679E+004	2.673E+004
		1365.15	3.04	2.185E+004		1.643E+003	9.294E+003
	CS-137	661.65	85.12	1.129E+003	1.13E+003	-7.576E+002	5.257E+002
	EU-152	121.78	28.40	3.930E+003	3.38E+003	-1.293E+003	1.908E+003
		344.27	26.50	3.384E+003		-2.593E+003	1.606E+003
		1407.95	20.70	4.059E+003		1.831E+003	1.785E+003
	EU-154	123.07	40.40	2.749E+003	2.70E+003	-5.296E+002	1.334E+003
		722.30	20.00	5.349E+003		2.737E+003	2.501E+003
		1274.51	34.40	2.701E+003		-4.598E+002	1.212E+003
+	BI-214	609.31*	46.30	1.061E+003	1.06E+003	1.684E+003	4.622E+002
		768.36	5.04	2.110E+004		1.568E+004	9.833E+003
		806.17	1.23	7.314E+004		3.227E+004	3.356E+004
		934.06	3.21	3.146E+004		-1.074E+004	1.447E+004
		1120.29	15.10	7.882E+003		6.293E+003	3.647E+003
		1155.19	1.69	6.270E+004		-1.564E+004	2.868E+004
		1238.11	5.94	2.016E+004		2.320E+004	9.293E+003
		1280.96	1.47	5.637E+004		-2.517E+004	2.494E+004
		1377.67	4.11	2.200E+004		1.239E+004	9.785E+003
		1385.31	0.78	1.011E+005		-1.927E+004	4.414E+004
		1401.50	1.39	5.229E+004		-2.824E+004	2.251E+004
		1407.98	2.48	3.388E+004		1.528E+004	1.490E+004
		1509.19	2.19	3.258E+004		1.225E+002	1.386E+004
		1661.28	1.15	6.104E+004		6.105E+003	2.556E+004
		1729.60	3.05	2.134E+004		9.950E+003	8.749E+003
		1764.49	15.80	6.687E+003		5.845E+003	2.967E+003
		1847.44	2.12	3.556E+004		1.920E+004	1.489E+004
>		2118.54	1.21	0.000E+000		0.000E+000	0.000E+000
+	PB-214	74.81	6.33	3.605E+004	1.47E+003	1.271E+004	1.751E+004
		77.11	10.70	1.977E+004		-4.661E+003	9.606E+003
		87.20	3.70	4.385E+004		1.394E+004	2.135E+004
		89.80	1.03	1.503E+005		1.781E+004	7.316E+004
		241.98*	7.49	9.205E+003		1.362E+004	4.352E+003

	Nuclide Name	Energy (keV)	Yield (%)	Line MDA (pCi/M^2)	Nuclide MDA (pCi/M^2)	Activity (pCi/M^2)	Dec. Level (pCi/M^2)
+	PB-214	295.21	19.20	5.223E+003	1.47E+003	1.341E+003	2.502E+003
		351.92*	37.20	1.466E+003		1.368E+003	6.707E+002
		785.91	1.10	7.970E+004		-1.576E+004	3.653E+004

+ = Nuclide identified during the nuclide identification
* = Energy line found in the spectrum
> = Calculated MDA is zero due to zero counts in the region, or
the region is outside the spectrum, or MDA has not been calculated
@ = Half-life too short to be able to perform the decay correction

```
************************************************************************
*****        G A M M A   S P E C T R U M   A N A L Y S I S        *****
************************************************************************


Filename: C:\LACBWR\B1-010-001-FSFC-D12-GM.CNF

Report Generated On             : 3/27/2019   8:47:58 PM

Sample Title                    : B1-010-001-FSFC-D12-GM
Sample Description              : Rx Bowl 3M Concrete
Sample Identification           : D12
Sample Type                     : Gamma Direct
Sample Geometry                 :

Peak Locate Threshold           :  3.00
Peak Locate Range (in channels) :    85 -  8000
Peak Area Range (in channels)   :    85 -  8000
Identification Energy Tolerance :    3.000 keV

Sample Size                     :  2.827E+001 M^2

Sample Taken On                 : 3/27/2019  11:07:00 AM
Acquisition Started             : 3/27/2019  11:07:30 AM

Live Time                       :      600.0 seconds
Real Time                       :      600.2 seconds

Dead Time                       :   0.04 %


              Energy Calibration Used Done On       : 10/24/2017
              Efficiency Calibration Used Done On   : 3/26/2019
              Efficiency ID                         : RxBOWL_CON_3M
```

****
***** P E A K A N A L Y S I S R E P O R T *****
****

Detector Name: 3844
Sample Title: B1-010-001-FSFC-D12-GM
Peak Analysis Performed on: 3/27/2019 8:47:58 PM
Peak Analysis From Channel: 85
Peak Analysis To Channel: 8000

Peak No.	ROI start	ROI end	Peak centroid	Energy (keV)	FWHM (keV)	Net Peak Area	Net Area Uncert.	Continuum Counts
1	296-	306	300.16	74.97	0.71	2.84E+001	34.22	1.10E+002
2	1402-	1413	1407.78	352.09	0.34	2.32E+001	21.25	3.58E+001
3	2430-	2445	2437.14	609.54	0.79	4.84E+001	18.21	1.16E+001
4	3639-	3652	3645.16	911.57	0.70	1.37E+001	16.77	2.03E+001
5	5832-	5858	5845.10	1461.28	2.00	2.65E+002	33.47	3.46E+000

M = First peak in a multiplet region
m = Other peak in a multiplet region
F = Fitted singlet

Errors quoted at 2.000 sigma

****
***** N U C L I D E I D E N T I F I C A T I O N R E P O R T *****
****

Sample Title: B1-010-001-FSFC-D12-GM
Nuclide Library Used: C:\GENIE2K\CAMFILES\LACBWR.NLB

..... IDENTIFIED NUCLIDES .....

Nuclide Name	Id Confidence	Energy (keV)	Yield (%)	Activity (pCi/M^2)	Activity Uncertainty
K-40	0.996	1460.81*	10.67	9.52989E+004	1.44002E+004
BI-214	1.000	609.31*	46.30	2.43850E+003	9.68542E+002
		768.36	5.04		
		806.17	1.23		
		934.06	3.21		
		1120.29	15.10		
		1155.19	1.69		
		1238.11	5.94		
		1280.96	1.47		
		1377.67	4.11		
		1385.31	0.78		
		1401.50	1.39		
		1407.98	2.48		
		1509.19	2.19		
		1661.28	1.15		
		1729.60	3.05		
		1764.49	15.80		
		1847.44	2.12		
		2118.54	1.21		
PB-214	0.626	74.81*	6.33	1.07960E+004	1.31881E+004
		77.11	10.70		
		87.20	3.70		
		89.80	1.03		
		241.98	7.49		
		295.21	19.20		
		351.92*	37.20	1.06590E+003	9.92235E+002
		785.91	1.10		
AC-228	1.000	89.95	2.10		
		93.35	3.50		
		129.08	2.80		
		209.28	4.40		
		270.23	3.60		
		327.64	3.20		
		338.32	11.40		
		409.51	2.13		
		463.00	4.40		
		794.70	4.60		
		911.60*	27.70	1.44891E+003	1.78652E+003
		964.60	5.20		
		969.11	16.60		
		1587.90	3.71		

Nuclide Name	Id Confidence	Energy (keV)	Yield (%)	Activity (pCi/M^2)	Activity Uncertainty

* = Energy line found in the spectrum.
@ = Energy line not used for Weighted Mean Activity
Energy Tolerance : 3.000 keV
Nuclide confidence index threshold = 0.30
Errors quoted at 2.000 sigma

****
***** I N T E R F E R E N C E C O R R E C T E D R E P O R T *****
****

Nuclide Name	Nuclide Id Confidence	Wt mean Activity (pCi/M^2)	Wt mean Activity Uncertainty
K-40	0.996	9.529887E+004	1.440018E+004
BI-214	1.000	2.438496E+003	9.685424E+002
PB-214	0.626	1.120671E+003	9.894385E+002
AC-228	1.000	1.448909E+003	1.786520E+003

? = Nuclide is part of an undetermined solution
X = Nuclide rejected by the interference analysis
@ = Nuclide contains energy lines not used in Weighted Mean Activity

Errors quoted at 2.000 sigma

********** U N I D E N T I F I E D P E A K S **********

Peak Locate Performed on: 3/27/2019 8:47:58 PM
Peak Locate From Channel: 85
Peak Locate To Channel: 8000

Peak No.	Energy (keV)	Peak Size in Counts per Second	Peak CPS % Uncertainty	Peak Type	Tol. Nuclide

All peaks were identified.

****
***** N U C L I D E M D A R E P O R T *****
****

Detector Name: 3844
Sample Geometry:
Sample Title: B1-010-001-FSFC-D12-GM
Nuclide Library Used: C:\GENIE2K\CAMFILES\LACBWR.NLB

	Nuclide Name	Energy (keV)	Yield (%)	Line MDA (pCi/M^2)	Nuclide MDA (pCi/M^2)	Activity (pCi/M^2)	Dec. Level (pCi/M^2)
+	K-40	1460.81*	10.67	5.643E+003	5.64E+003	9.530E+004	2.334E+003
	CO-60	1173.22	100.00	9.624E+002	9.00E+002	-4.891E+002	4.357E+002
		1332.49	100.00	9.005E+002		5.289E+002	4.015E+002
	CS-134	475.35	1.46	5.845E+004	1.20E+003	-1.841E+004	2.735E+004
		563.23	8.38	1.179E+004		4.522E+003	5.533E+003
		569.32	15.43	5.802E+003		-3.669E+003	2.704E+003
		604.70	97.60	1.203E+003		-4.577E+002	5.695E+002
		795.84	85.40	1.223E+003		5.295E+002	5.686E+002
		801.93	8.73	1.173E+004		-9.834E+003	5.443E+003
		1038.57	1.00	9.657E+004		2.365E+004	4.402E+004
		1167.94	1.80	5.851E+004		5.740E+003	2.673E+004
		1365.15	3.04	3.128E+004		2.461E+004	1.401E+004
	CS-137	661.65	85.12	1.249E+003	1.25E+003	8.819E+002	5.858E+002
	EU-152	121.78	28.40	3.997E+003	3.52E+003	-9.131E+002	1.941E+003
		344.27	26.50	3.557E+003		-2.021E+003	1.692E+003
		1407.95	20.70	3.523E+003		1.231E+003	1.517E+003
	EU-154	123.07	40.40	2.785E+003	2.35E+003	-2.590E+001	1.352E+003
		722.30	20.00	5.277E+003		9.754E+002	2.465E+003
		1274.51	34.40	2.349E+003		-2.037E+003	1.036E+003
+	BI-214	609.31*	46.30	1.109E+003	1.11E+003	2.438E+003	4.863E+002
		768.36	5.04	2.063E+004		6.624E+003	9.600E+003
		806.17	1.23	8.282E+004		1.558E+004	3.840E+004
		934.06	3.21	3.114E+004		6.345E+003	1.431E+004
		1120.29	15.10	7.740E+003		2.868E+003	3.576E+003
		1155.19	1.69	6.121E+004		1.339E+004	2.794E+004
		1238.11	5.94	2.075E+004		1.623E+004	9.585E+003
		1280.96	1.47	6.114E+004		6.518E+003	2.732E+004
		1377.67	4.11	1.804E+004		8.967E+002	7.806E+003
		1385.31	0.78	1.065E+005		-1.127E+005	4.682E+004
		1401.50	1.39	6.311E+004		-6.234E+004	2.793E+004
		1407.98	2.48	2.941E+004		1.028E+004	1.266E+004
		1509.19	2.19	2.533E+004		-3.600E+004	1.023E+004
		1661.28	1.15	5.500E+004		-3.388E+004	2.254E+004
		1729.60	3.05	1.707E+004		5.685E+003	6.613E+003
		1764.49	15.80	6.963E+003		6.401E+003	3.105E+003
		1847.44	2.12	3.204E+004		1.494E+004	1.313E+004
>		2118.54	1.21	0.000E+000		0.000E+000	0.000E+000
+	PB-214	74.81*	6.33	2.137E+004	1.56E+003	1.080E+004	1.017E+004
		77.11	10.70	2.042E+004		2.574E+004	9.929E+003
		87.20	3.70	4.381E+004		2.390E+004	2.132E+004
		89.80	1.03	1.571E+005		8.274E+004	7.654E+004
		241.98	7.49	1.470E+004		9.073E+003	7.096E+003

	Nuclide Name	Energy (keV)	Yield (%)	Line MDA (pCi/M^2)	Nuclide MDA (pCi/M^2)	Activity (pCi/M^2)	Dec. Level (pCi/M^2)
+	PB-214	295.21	19.20	4.930E+003	1.56E+003	4.131E+002	2.355E+003
		351.92*	37.20	1.558E+003		1.066E+003	7.167E+002
		785.91	1.10	8.487E+004		-3.627E+004	3.911E+004

+ = Nuclide identified during the nuclide identification
* = Energy line found in the spectrum
> = Calculated MDA is zero due to zero counts in the region, or
the region is outside the spectrum, or MDA has not been calculated
@ = Half-life too short to be able to perform the decay correction

```
************************************************************************
*****        G A M M A   S P E C T R U M   A N A L Y S I S        *****
************************************************************************


Filename: C:\LACBWR\B1-010-001-FSFC-D13-GM.CNF

Report Generated On             : 3/27/2019   8:50:07 PM

Sample Title                    : B1-010-001-FSFC-D13-GM
Sample Description              : Rx Bowl 3M Concrete
Sample Identification           : D13
Sample Type                     : Gamma Direct
Sample Geometry                 :

Peak Locate Threshold           :  3.00
Peak Locate Range (in channels) :    85 -  8000
Peak Area Range (in channels)   :    85 -  8000
Identification Energy Tolerance :    3.000 keV

Sample Size                     :  2.827E+001 M^2

Sample Taken On                 : 3/27/2019  11:22:00 AM
Acquisition Started             : 3/27/2019  11:22:50 AM

Live Time                       :      600.0 seconds
Real Time                       :      600.2 seconds

Dead Time                       :   0.04 %


              Energy Calibration Used Done On       : 10/24/2017
              Efficiency Calibration Used Done On   : 3/26/2019
              Efficiency ID                         : RxBOWL_CON_3M
```

****
***** P E A K A N A L Y S I S R E P O R T *****
****

Detector Name: 3844
Sample Title: B1-010-001-FSFC-D13-GM
Peak Analysis Performed on: 3/27/2019 8:50:06 PM
Peak Analysis From Channel: 85
Peak Analysis To Channel: 8000

Peak No.	ROI start	ROI end	Peak centroid	Energy (keV)	FWHM (keV)	Net Peak Area	Net Area Uncert.	Continuum Counts
1	946-	960	953.88	238.54	1.59	4.10E+001	30.96	6.90E+001
2	1401-	1413	1406.86	351.86	0.72	3.14E+001	21.77	3.26E+001
3	2325-	2339	2332.88	583.47	0.56	4.16E+001	16.58	9.40E+000
4	5833-	5857	5845.25	1461.32	2.08	2.46E+002	31.37	0.00E+000

M = First peak in a multiplet region
m = Other peak in a multiplet region
F = Fitted singlet

Errors quoted at 2.000 sigma

****
***** N U C L I D E I D E N T I F I C A T I O N R E P O R T *****
****

Sample Title: B1-010-001-FSFC-D13-GM
Nuclide Library Used: C:\GENIE2K\CAMFILES\LACBWR.NLB

..... IDENTIFIED NUCLIDES .....

Nuclide Name	Id Confidence	Energy (keV)	Yield (%)	Activity (pCi/M^2)	Activity Uncertainty
K-40	0.995	1460.81*	10.67	8.86232E+004	1.34653E+004
PB-212	1.000	74.81	9.60		
		77.11	17.50		
		87.20	6.30		
		89.80	1.75		
		115.19	0.60		
		238.63*	44.60	1.27485E+003	9.84512E+002
		300.09	3.41		
PB-214	1.000	74.81	6.33		
		77.11	10.70		
		87.20	3.70		
		89.80	1.03		
		241.98	7.49		
		295.21	19.20		
		351.92*	37.20	1.44307E+003	1.02743E+003
		785.91	1.10		

* = Energy line found in the spectrum.
@ = Energy line not used for Weighted Mean Activity
Energy Tolerance : 3.000 keV
Nuclide confidence index threshold = 0.30
Errors quoted at 2.000 sigma

****
***** I N T E R F E R E N C E C O R R E C T E D R E P O R T *****
****

Nuclide Name	Nuclide Id Confidence	Wt mean Activity (pCi/M^2)	Wt mean Activity Uncertainty
K-40	0.995	8.862317E+004	1.346526E+004
PB-212	1.000	1.274851E+003	9.845124E+002
PB-214	1.000	1.443067E+003	1.027428E+003

? = Nuclide is part of an undetermined solution
X = Nuclide rejected by the interference analysis
@ = Nuclide contains energy lines not used in Weighted Mean Activity

Errors quoted at 2.000 sigma

********** U N I D E N T I F I E D P E A K S **********

Peak Locate Performed on: 3/27/2019 8:50:06 PM
Peak Locate From Channel: 85
Peak Locate To Channel: 8000

Peak No.	Energy (keV)	Peak Size in Counts per Second	Peak CPS % Uncertainty	Peak Type	Tol. Nuclide
3	583.47	6.9338E-002	39.86		

M = First peak in a multiplet region
m = Other peak in a multiplet region
F = Fitted singlet

Errors quoted at 2.000 sigma

****
***** N U C L I D E M D A R E P O R T *****
****

Detector Name: 3844
Sample Geometry:
Sample Title: B1-010-001-FSFC-D13-GM
Nuclide Library Used: C:\GENIE2K\CAMFILES\LACBWR.NLB

	Nuclide Name	Energy (keV)	Yield (%)	Line MDA (pCi/M^2)	Nuclide MDA (pCi/M^2)	Activity (pCi/M^2)	Dec. Level (pCi/M^2)
+	K-40	1460.81*	10.67	9.749E+002	9.75E+002	8.862E+004	0.000E+000
	CO-60	1173.22	100.00	1.017E+003	9.18E+002	-9.228E+002	4.629E+002
		1332.49	100.00	9.177E+002		2.879E+002	4.102E+002
	CS-134	475.35	1.46	6.388E+004	1.07E+003	4.993E+003	3.006E+004
		563.23	8.38	1.143E+004		-2.174E+003	5.357E+003
		569.32	15.43	6.050E+003		6.435E+002	2.828E+003
		604.70	97.60	1.198E+003		9.592E+002	5.668E+002
		795.84	85.40	1.068E+003		-1.625E+003	4.910E+002
		801.93	8.73	1.113E+004		-8.255E+003	5.143E+003
		1038.57	1.00	9.657E+004		-2.129E+004	4.402E+004
		1167.94	1.80	5.636E+004		-3.184E+004	2.566E+004
		1365.15	3.04	2.267E+004		-6.273E+003	9.707E+003
	CS-137	661.65	85.12	1.103E+003	1.10E+003	5.524E+002	5.128E+002
	EU-152	121.78	28.40	3.858E+003	3.52E+003	-7.548E+002	1.871E+003
		344.27	26.50	3.916E+003		-3.242E+003	1.872E+003
		1407.95	20.70	3.523E+003		-2.267E+003	1.517E+003
	EU-154	123.07	40.40	2.741E+003	2.74E+003	2.351E+003	1.330E+003
		722.30	20.00	4.700E+003		1.612E+003	2.176E+003
		1274.51	34.40	2.792E+003		-1.038E+003	1.258E+003
	BI-214	609.31	46.30	2.478E+003	2.48E+003	3.064E+003	1.171E+003
		768.36	5.04	1.916E+004		2.021E+004	8.863E+003
		806.17	1.23	8.352E+004		3.337E+004	3.875E+004
		934.06	3.21	2.911E+004		8.812E+003	1.330E+004
		1120.29	15.10	7.740E+003		7.554E+003	3.576E+003
		1155.19	1.69	7.029E+004		2.303E+004	3.247E+004
		1238.11	5.94	2.075E+004		8.056E+003	9.585E+003
		1280.96	1.47	6.445E+004		8.214E+003	2.898E+004
		1377.67	4.11	2.200E+004		6.522E+002	9.785E+003
		1385.31	0.78	1.317E+005		6.523E+004	5.943E+004
		1401.50	1.39	4.868E+004		-2.904E+004	2.071E+004
		1407.98	2.48	2.941E+004		-1.893E+004	1.266E+004
		1509.19	2.19	3.129E+004		1.796E+004	1.321E+004
		1661.28	1.15	7.368E+004		5.128E+004	3.188E+004
		1729.60	3.05	2.476E+004		3.411E+003	1.046E+004
		1764.49	15.80	6.687E+003		-1.087E+003	2.967E+003
		1847.44	2.12	2.297E+004		6.402E+003	8.598E+003
>		2118.54	1.21	0.000E+000		0.000E+000	0.000E+000
+	PB-214	74.81	6.33	3.832E+004	1.54E+003	3.164E+004	1.864E+004
		77.11	10.70	2.103E+004		1.721E+004	1.023E+004
		87.20	3.70	4.329E+004		-1.850E+004	2.107E+004
		89.80	1.03	1.498E+005		8.726E+002	7.292E+004
		241.98	7.49	1.462E+004		1.689E+004	7.056E+003

	Nuclide Name	Energy (keV)	Yield (%)	Line MDA (pCi/M^2)	Nuclide MDA (pCi/M^2)	Activity (pCi/M^2)	Dec. Level (pCi/M^2)
+	PB-214	295.21	19.20	5.079E+003	1.54E+003	-2.595E+003	2.430E+003
		351.92*	37.20	1.537E+003		1.443E+003	7.060E+002
		785.91	1.10	7.605E+004		-2.530E+004	3.470E+004

+ = Nuclide identified during the nuclide identification
* = Energy line found in the spectrum
> = Calculated MDA is zero due to zero counts in the region, or
the region is outside the spectrum, or MDA has not been calculated
@ = Half-life too short to be able to perform the decay correction

```
***********************************************************************
*****        G A M M A   S P E C T R U M   A N A L Y S I S        *****
***********************************************************************


Filename: C:\LACBWR\B1-010-001-FSFC-D14-GM.CNF

Report Generated On              : 3/27/2019   8:58:13 PM

Sample Title                     : B1-010-001-FSFC-D14-GM
Sample Description               : Rx Bowl 3M Concrete
Sample Identification            : D14
Sample Type                      : Gamma Direct
Sample Geometry                  :

Peak Locate Threshold            :  3.00
Peak Locate Range (in channels)  :    85 -  8000
Peak Area Range (in channels)    :    85 -  8000
Identification Energy Tolerance  :    3.000 keV

Sample Size                      :  2.827E+001 M^2

Sample Taken On                  : 3/27/2019  11:37:00 AM
Acquisition Started              : 3/27/2019  11:37:22 AM

Live Time                        :      600.0 seconds
Real Time                        :      600.2 seconds

Dead Time                        :   0.04 %


              Energy Calibration Used Done On       : 10/24/2017
              Efficiency Calibration Used Done On   : 3/26/2019
              Efficiency ID                         : RxBOWL_CON_3M
```

****
***** P E A K A N A L Y S I S R E P O R T *****
****

Detector Name: 3844
Sample Title: B1-010-001-FSFC-D14-GM
Peak Analysis Performed on: 3/27/2019 8:58:13 PM
Peak Analysis From Channel: 85
Peak Analysis To Channel: 8000

Peak No.	ROI start	ROI end	Peak centroid	Energy (keV)	FWHM (keV)	Net Peak Area	Net Area Uncert.	Continuum Counts
1	950-	961	955.06	238.84	1.08	2.82E+001	29.26	7.28E+001
2	2280-	2291	2285.98	571.74	1.36	1.58E+001	10.45	4.24E+000
3	2328-	2340	2333.09	583.52	0.59	3.50E+001	18.45	1.90E+001
4	2432-	2443	2437.42	609.61	0.80	3.39E+001	18.09	1.91E+001
5	3870-	3883	3876.15	969.30	0.82	1.35E+001	13.80	1.05E+001
6	5833-	5856	5845.02	1461.27	2.37	2.22E+002	29.80	0.00E+000

M = First peak in a multiplet region
m = Other peak in a multiplet region
F = Fitted singlet

Errors quoted at 2.000 sigma

****
***** N U C L I D E I D E N T I F I C A T I O N R E P O R T *****
****

Sample Title: B1-010-001-FSFC-D14-GM
Nuclide Library Used: C:\GENIE2K\CAMFILES\LACBWR.NLB

..... IDENTIFIED NUCLIDES .....

Nuclide Name	Id Confidence	Energy (keV)	Yield (%)	Activity (pCi/M^2)	Activity Uncertainty
K-40	0.996	1460.81*	10.67	7.99747E+004	1.26054E+004
PB-212	1.000	74.81	9.60		
		77.11	17.50		
		87.20	6.30		
		89.80	1.75		
		115.19	0.60		
		238.63*	44.60	8.77193E+002	9.21583E+002
		300.09	3.41		
BI-214	0.999	609.31*	46.30	1.70670E+003	9.36650E+002
		768.36	5.04		
		806.17	1.23		
		934.06	3.21		
		1120.29	15.10		
		1155.19	1.69		
		1238.11	5.94		
		1280.96	1.47		
		1377.67	4.11		
		1385.31	0.78		
		1401.50	1.39		
		1407.98	2.48		
		1509.19	2.19		
		1661.28	1.15		
		1729.60	3.05		
		1764.49	15.80		
		1847.44	2.12		
		2118.54	1.21		
AC-228	1.000	89.95	2.10		
		93.35	3.50		
		129.08	2.80		
		209.28	4.40		
		270.23	3.60		
		327.64	3.20		
		338.32	11.40		
		409.51	2.13		
		463.00	4.40		
		794.70	4.60		
		911.60	27.70		
		964.60	5.20		
		969.11*	16.60	2.47119E+003	2.53677E+003
		1587.90	3.71		
PA-234	0.992	94.67	15.50		

Nuclide Name	Id Confidence	Energy (keV)	Yield (%)	Activity (pCi/M^2)	Activity Uncertainty
PA-234	0.992	98.44	25.10		
		111.00	8.55		
		131.28	20.00		
		152.70	7.20		
		226.87	6.50		
		569.26*	10.40	3.40635E+003	2.30370E+003
		733.00	8.50		
		883.24	12.00		
		946.00	20.00		
		949.00	7.80		

* = Energy line found in the spectrum.
@ = Energy line not used for Weighted Mean Activity
Energy Tolerance : 3.000 keV
Nuclide confidence index threshold = 0.30
Errors quoted at 2.000 sigma

****
***** I N T E R F E R E N C E C O R R E C T E D R E P O R T *****
****

Nuclide Name	Nuclide Id Confidence	Wt mean Activity (pCi/M^2)	Wt mean Activity Uncertainty
K-40	0.996	7.997474E+004	1.260538E+004
PB-212	1.000	8.771935E+002	9.215829E+002
BI-214	0.999	1.706704E+003	9.366502E+002
AC-228	1.000	2.471188E+003	2.536772E+003
PA-234	0.992	3.406354E+003	2.303695E+003

? = Nuclide is part of an undetermined solution
X = Nuclide rejected by the interference analysis
@ = Nuclide contains energy lines not used in Weighted Mean Activity

Errors quoted at 2.000 sigma

********** U N I D E N T I F I E D P E A K S **********

Peak Locate Performed on: 3/27/2019 8:58:13 PM
Peak Locate From Channel: 85
Peak Locate To Channel: 8000

Peak No.	Energy (keV)	Peak Size in Counts per Second	Peak CPS % Uncertainty	Peak Type	Tol. Nuclide
3	583.52	5.8364E-002	52.69		

M = First peak in a multiplet region
m = Other peak in a multiplet region
F = Fitted singlet

Errors quoted at 2.000 sigma

****
***** N U C L I D E M D A R E P O R T *****
****

Detector Name: 3844
Sample Geometry:
Sample Title: B1-010-001-FSFC-D14-GM
Nuclide Library Used: C:\GENIE2K\CAMFILES\LACBWR.NLB

	Nuclide Name	Energy (keV)	Yield (%)	Line MDA (pCi/M^2)	Nuclide MDA (pCi/M^2)	Activity (pCi/M^2)	Dec. Level (pCi/M^2)
+	K-40	1460.81*	10.67	9.748E+002	9.75E+002	7.997E+004	0.000E+000
	CO-60	1173.22	100.00	1.209E+003	9.51E+002	5.031E+002	5.588E+002
		1332.49	100.00	9.512E+002		4.741E+002	4.269E+002
	CS-134	475.35	1.46	6.212E+004	1.09E+003	-1.070E+004	2.919E+004
		563.23	8.38	1.100E+004		-4.779E+002	5.139E+003
		569.32	15.43	5.844E+003		-2.662E+003	2.725E+003
		604.70	97.60	1.251E+003		-2.502E+002	5.931E+002
		795.84	85.40	1.090E+003		1.920E+002	5.021E+002
		801.93	8.73	1.050E+004		-7.738E+003	4.824E+003
		1038.57	1.00	9.899E+004		-6.017E+004	4.523E+004
		1167.94	1.80	6.699E+004		7.919E+004	3.097E+004
		1365.15	3.04	3.071E+004		1.871E+004	1.373E+004
	CS-137	661.65	85.12	1.121E+003	1.12E+003	9.782E+002	5.214E+002
	EU-152	121.78	28.40	4.007E+003	3.65E+003	4.701E+002	1.946E+003
		344.27	26.50	3.647E+003		-2.352E+003	1.737E+003
		1407.95	20.70	3.958E+003		-4.103E+003	1.735E+003
	EU-154	123.07	40.40	2.803E+003	2.80E+003	1.447E+003	1.361E+003
		722.30	20.00	4.268E+003		1.713E+003	1.960E+003
		1274.51	34.40	3.008E+003		-5.666E+002	1.366E+003
+	BI-214	609.31*	46.30	1.283E+003	1.28E+003	1.707E+003	5.733E+002
		768.36	5.04	1.983E+004		3.842E+003	9.198E+003
		806.17	1.23	7.702E+004		1.280E+004	3.550E+004
		934.06	3.21	3.014E+004		1.217E+004	1.382E+004
		1120.29	15.10	7.373E+003		1.441E+003	3.393E+003
		1155.19	1.69	6.627E+004		4.128E+004	3.046E+004
		1238.11	5.94	1.976E+004		1.375E+004	9.094E+003
		1280.96	1.47	7.057E+004		-1.355E+004	3.204E+004
		1377.67	4.11	2.061E+004		1.704E+004	9.093E+003
		1385.31	0.78	1.090E+005		-5.936E+004	4.810E+004
		1401.50	1.39	6.025E+004		-1.379E+004	2.649E+004
		1407.98	2.48	3.304E+004		-3.425E+004	1.448E+004
		1509.19	2.19	3.499E+004		2.335E+004	1.507E+004
		1661.28	1.15	6.380E+004		3.663E+004	2.695E+004
		1729.60	3.05	2.369E+004		-1.579E+002	9.920E+003
		1764.49	15.80	5.048E+003		3.061E+003	2.147E+003
		1847.44	2.12	2.797E+004		-2.507E+004	1.110E+004
>		2118.54	1.21	0.000E+000		0.000E+000	0.000E+000
	PB-214	74.81	6.33	3.729E+004	2.70E+003	6.247E+004	1.813E+004
		77.11	10.70	2.002E+004		2.393E+003	9.727E+003
		87.20	3.70	4.394E+004		2.446E+004	2.139E+004
		89.80	1.03	1.524E+005		-2.504E+002	7.420E+004
		241.98	7.49	1.486E+004		2.334E+004	7.176E+003

Nuclide Name	Energy (keV)	Yield (%)	Line MDA (pCi/M^2)	Nuclide MDA (pCi/M^2)	Activity (pCi/M^2)	Dec. Level (pCi/M^2)
PB-214	295.21	19.20	5.005E+003	2.70E+003	-3.188E+002	2.393E+003
	351.92	37.20	2.701E+003		2.114E+003	1.288E+003
	785.91	1.10	9.279E+004		3.410E+003	4.308E+004

+ = Nuclide identified during the nuclide identification
* = Energy line found in the spectrum
> = Calculated MDA is zero due to zero counts in the region, or
the region is outside the spectrum, or MDA has not been calculated
@ = Half-life too short to be able to perform the decay correction

```
************************************************************************
*****        G A M M A   S P E C T R U M   A N A L Y S I S        *****
************************************************************************


Filename: C:\LACBWR\B1-010-001-FSFC-D15-GM.CNF

Report Generated On             : 3/27/2019   8:59:18 PM

Sample Title                    : B1-010-001-FSFC-D15-GM
Sample Description              : Rx Bowl 3M Concrete
Sample Identification           : D15
Sample Type                     : Gamma Direct
Sample Geometry                 :

Peak Locate Threshold           :  3.00
Peak Locate Range (in channels) :    85 -  8000
Peak Area Range (in channels)   :    85 -  8000
Identification Energy Tolerance :    3.000 keV

Sample Size                     :  2.827E+001 M^2

Sample Taken On                 : 3/27/2019  11:50:00 AM
Acquisition Started             : 3/27/2019  11:50:19 AM

Live Time                       :      600.0 seconds
Real Time                       :      600.2 seconds

Dead Time                       :   0.04 %


              Energy Calibration Used Done On       : 10/24/2017
              Efficiency Calibration Used Done On   : 3/26/2019
              Efficiency ID                         : RxBOWL_CON_3M
```

****
***** P E A K A N A L Y S I S R E P O R T *****
****

Detector Name: 3844
Sample Title: B1-010-001-FSFC-D15-GM
Peak Analysis Performed on: 3/27/2019 8:59:17 PM
Peak Analysis From Channel: 85
Peak Analysis To Channel: 8000

Peak No.	ROI start	ROI end	Peak centroid	Energy (keV)	FWHM (keV)	Net Peak Area	Net Area Uncert.	Continuum Counts
1	948-	962	954.77	238.76	0.50	4.82E+001	32.00	7.18E+001
2	1402-	1414	1407.70	352.07	1.05	3.01E+001	23.47	3.99E+001
3	2327-	2339	2332.63	583.41	0.83	3.15E+001	18.25	1.95E+001
4	2431-	2444	2437.32	609.59	0.37	2.84E+001	20.45	2.76E+001
5	4475-	4488	4481.88	1120.69	0.78	2.33E+001	10.59	1.70E+000
6	5833-	5857	5845.51	1461.39	1.59	2.30E+002	32.67	9.07E+000

M = First peak in a multiplet region
m = Other peak in a multiplet region
F = Fitted singlet

Errors quoted at 2.000 sigma

****
***** N U C L I D E I D E N T I F I C A T I O N R E P O R T *****
****

Sample Title: B1-010-001-FSFC-D15-GM
Nuclide Library Used: C:\GENIE2K\CAMFILES\LACBWR.NLB

..... IDENTIFIED NUCLIDES .....

Nuclide Name	Id Confidence	Energy (keV)	Yield (%)	Activity (pCi/M^2)	Activity Uncertainty
K-40	0.994	1460.81*	10.67	8.28356E+004	1.36153E+004
PB-212	1.000	74.81	9.60		
		77.11	17.50		
		87.20	6.30		
		89.80	1.75		
		115.19	0.60		
		238.63*	44.60	1.49919E+003	1.02434E+003
		300.09	3.41		
BI-214	0.999	609.31*	46.30	1.42957E+003	1.04576E+003
		768.36	5.04		
		806.17	1.23		
		934.06	3.21		
		1120.29*	15.10	5.06608E+003	2.33738E+003
		1155.19	1.69		
		1238.11	5.94		
		1280.96	1.47		
		1377.67	4.11		
		1385.31	0.78		
		1401.50	1.39		
		1407.98	2.48		
		1509.19	2.19		
		1661.28	1.15		
		1729.60	3.05		
		1764.49	15.80		
		1847.44	2.12		
		2118.54	1.21		
PB-214	1.000	74.81	6.33		
		77.11	10.70		
		87.20	3.70		
		89.80	1.03		
		241.98	7.49		
		295.21	19.20		
		351.92*	37.20	1.38388E+003	1.10221E+003
		785.91	1.10		

* = Energy line found in the spectrum.
@ = Energy line not used for Weighted Mean Activity
Energy Tolerance : 3.000 keV
Nuclide confidence index threshold = 0.30
Errors quoted at 2.000 sigma

****
***** I N T E R F E R E N C E C O R R E C T E D R E P O R T *****
****

Nuclide Name	Nuclide Id Confidence	Wt mean Activity (pCi/M^2)	Wt mean Activity Uncertainty
K-40	0.994	8.283561E+004	1.361532E+004
PB-212	1.000	1.499188E+003	1.024341E+003
BI-214	0.999	2.036093E+003	9.545754E+002
PB-214	1.000	1.383875E+003	1.102214E+003

? = Nuclide is part of an undetermined solution
X = Nuclide rejected by the interference analysis
@ = Nuclide contains energy lines not used in Weighted Mean Activity

Errors quoted at 2.000 sigma

********** U N I D E N T I F I E D P E A K S **********

Peak Locate Performed on: 3/27/2019 8:59:17 PM
Peak Locate From Channel: 85
Peak Locate To Channel: 8000

Peak No.	Energy (keV)	Peak Size in Counts per Second	Peak CPS % Uncertainty	Peak Type	Tol. Nuclide
3	583.41	5.2500E-002	57.93		

M = First peak in a multiplet region
m = Other peak in a multiplet region
F = Fitted singlet

Errors quoted at 2.000 sigma

****
***** N U C L I D E M D A R E P O R T *****
****

Detector Name: 3844
Sample Geometry:
Sample Title: B1-010-001-FSFC-D15-GM
Nuclide Library Used: C:\GENIE2K\CAMFILES\LACBWR.NLB

	Nuclide Name	Energy (keV)	Yield (%)	Line MDA (pCi/M^2)	Nuclide MDA (pCi/M^2)	Activity (pCi/M^2)	Dec. Level (pCi/M^2)
+	K-40	1460.81*	10.67	8.178E+003	8.18E+003	8.284E+004	3.601E+003
	CO-60	1173.22	100.00	1.030E+003	8.83E+002	1.313E+002	4.695E+002
		1332.49	100.00	8.828E+002		-4.548E+002	3.927E+002
	CS-134	475.35	1.46	6.068E+004	1.09E+003	-3.291E+004	2.847E+004
		563.23	8.38	1.030E+004		-5.784E+002	4.792E+003
		569.32	15.43	5.968E+003		1.305E+003	2.788E+003
		604.70	97.60	1.171E+003		-7.619E+002	5.531E+002
		795.84	85.40	1.090E+003		7.263E+002	5.021E+002
		801.93	8.73	9.694E+003		4.499E+002	4.424E+003
		1038.57	1.00	9.657E+004		-3.226E+004	4.402E+004
		1167.94	1.80	5.781E+004		9.926E+003	2.638E+004
		1365.15	3.04	2.832E+004		2.409E+004	1.253E+004
	CS-137	661.65	85.12	1.137E+003	1.14E+003	4.185E+002	5.299E+002
	EU-152	121.78	28.40	4.199E+003	3.54E+003	1.585E+002	2.042E+003
		344.27	26.50	3.544E+003		-3.067E+001	1.686E+003
		1407.95	20.70	4.345E+003		9.257E+002	1.928E+003
	EU-154	123.07	40.40	2.935E+003	2.93E+003	-4.053E+002	1.427E+003
		722.30	20.00	5.016E+003		2.375E+003	2.334E+003
		1274.51	34.40	3.008E+003		-1.200E+003	1.366E+003
+	BI-214	609.31*	46.30	1.582E+003	1.58E+003	1.430E+003	7.228E+002
		768.36	5.04	1.916E+004		1.829E+003	8.863E+003
		806.17	1.23	6.902E+004		3.841E+004	3.150E+004
		934.06	3.21	2.980E+004		5.467E+003	1.365E+004
		1120.29*	15.10	2.143E+003		5.066E+003	7.773E+002
		1155.19	1.69	5.811E+004		-1.346E+005	2.638E+004
		1238.11	5.94	2.055E+004		1.653E+003	9.489E+003
		1280.96	1.47	6.445E+004		1.334E+004	2.898E+004
		1377.67	4.11	2.109E+004		1.122E+004	9.330E+003
		1385.31	0.78	1.090E+005		-1.036E+005	4.810E+004
		1401.50	1.39	5.722E+004		-9.604E+004	2.498E+004
		1407.98	2.48	3.627E+004		7.727E+003	1.609E+004
		1509.19	2.19	3.829E+004		2.874E+004	1.671E+004
		1661.28	1.15	5.166E+004		2.198E+004	2.087E+004
		1729.60	3.05	2.578E+004		1.564E+004	1.097E+004
		1764.49	15.80	7.097E+003		6.680E+003	3.172E+003
		1847.44	2.12	3.386E+004		-1.867E+003	1.404E+004
>		2118.54	1.21	0.000E+000		0.000E+000	0.000E+000
+	PB-214	74.81	6.33	3.720E+004	1.69E+003	4.196E+004	1.808E+004
		77.11	10.70	2.026E+004		6.396E+003	9.846E+003
		87.20	3.70	4.191E+004		-5.330E+003	2.038E+004
		89.80	1.03	1.442E+005		-6.886E+004	7.013E+004
		241.98	7.49	1.451E+004		7.106E+003	7.003E+003

	Nuclide Name	Energy (keV)	Yield (%)	Line MDA (pCi/M^2)	Nuclide MDA (pCi/M^2)	Activity (pCi/M^2)	Dec. Level (pCi/M^2)
+	PB-214	295.21	19.20	5.166E+003	1.69E+003	2.024E+003	2.473E+003
		351.92*	37.20	1.695E+003		1.384E+003	7.851E+002
		785.91	1.10	9.503E+004		-3.939E+004	4.419E+004

+ = Nuclide identified during the nuclide identification
* = Energy line found in the spectrum
> = Calculated MDA is zero due to zero counts in the region, or
the region is outside the spectrum, or MDA has not been calculated
@ = Half-life too short to be able to perform the decay correction

```
***********************************************************************
*****        G A M M A   S P E C T R U M   A N A L Y S I S        *****
***********************************************************************


Filename: 3844

Report Generated On              : 3/28/2019  10:16:42 AM

Sample Title                     : B1-010-001-FSFC-D16-GM
Sample Description               : Rx Bowl 3M Concrete
Sample Identification            : D16
Sample Type                      : Gamma Direct
Sample Geometry                  :

Peak Locate Threshold            :  3.00
Peak Locate Range (in channels)  :    85 -  8000
Peak Area Range (in channels)    :    85 -  8000
Identification Energy Tolerance  :    3.000 keV

Sample Size                      :  2.827E+001 M^2

Sample Taken On                  : 3/28/2019  10:06:00 AM
Acquisition Started              : 3/28/2019  10:06:41 AM

Live Time                        :      600.0 seconds
Real Time                        :      600.2 seconds

Dead Time                        :   0.03 %


              Energy Calibration Used Done On       : 10/24/2017
              Efficiency Calibration Used Done On   : 3/26/2019
              Efficiency ID                         : RxBOWL_CON_3M
```

****
***** P E A K A N A L Y S I S R E P O R T *****
****

Detector Name: 3844
Sample Title: B1-010-001-FSFC-D16-GM
Peak Analysis Performed on: 3/28/2019 10:16:42 AM
Peak Analysis From Channel: 85
Peak Analysis To Channel: 8000

Peak No.	ROI start	ROI end	Peak centroid	Energy (keV)	FWHM (keV)	Net Peak Area	Net Area Uncert.	Continuum Counts
1	947	959	952.73	238.25	0.45	3.62E+001	29.85	7.08E+001
2	2322	2334	2328.08	582.27	0.79	3.28E+001	15.77	1.12E+001
3	2427	2440	2434.09	608.78	1.18	2.21E+001	17.85	1.99E+001
4	4469	4482	4475.88	1119.19	0.73	1.87E+001	11.55	5.26E+000
5	5826	5849	5837.03	1459.27	1.31	2.42E+002	31.11	0.00E+000
6	7044	7059	7051.58	1762.59	0.56	1.54E+001	10.34	3.63E+000

M = First peak in a multiplet region
m = Other peak in a multiplet region
F = Fitted singlet

Errors quoted at 2.000 sigma

****
***** N U C L I D E I D E N T I F I C A T I O N R E P O R T *****
****

Sample Title: B1-010-001-FSFC-D16-GM
Nuclide Library Used: C:\GENIE2K\CAMFILES\LACBWR.NLB

..... IDENTIFIED NUCLIDES .....

Nuclide Name	Id Confidence	Energy (keV)	Yield (%)	Activity (pCi/M^2)	Activity Uncertainty
K-40	0.959	1460.81*	10.67	8.70947E+004	1.33098E+004
PB-212	0.999	74.81	9.60		
		77.11	17.50		
		87.20	6.30		
		89.80	1.75		
		115.19	0.60		
		238.63*	44.60	1.12393E+003	9.45253E+002
		300.09	3.41		
BI-214	0.986	609.31*	46.30	1.10955E+003	9.09295E+002
		768.36	5.04		
		806.17	1.23		
		934.06	3.21		
		1120.29*	15.10	4.07163E+003	2.53124E+003
		1155.19	1.69		
		1238.11	5.94		
		1280.96	1.47		
		1377.67	4.11		
		1385.31	0.78		
		1401.50	1.39		
		1407.98	2.48		
		1509.19	2.19		
		1661.28	1.15		
		1729.60	3.05		
		1764.49*	15.80	4.27399E+003	2.89501E+003
		1847.44	2.12		
		2118.54	1.21		

* = Energy line found in the spectrum.
@ = Energy line not used for Weighted Mean Activity
Energy Tolerance : 3.000 keV
Nuclide confidence index threshold = 0.30
Errors quoted at 2.000 sigma

****
***** I N T E R F E R E N C E C O R R E C T E D R E P O R T *****
****

Nuclide Name	Nuclide Id Confidence	Wt mean Activity (pCi/M^2)	Wt mean Activity Uncertainty
K-40	0.959	8.709466E+004	1.330983E+004
PB-212	0.999	1.123931E+003	9.452532E+002
BI-214	0.986	1.675182E+003	8.206520E+002

? = Nuclide is part of an undetermined solution
X = Nuclide rejected by the interference analysis
@ = Nuclide contains energy lines not used in Weighted Mean Activity

Errors quoted at 2.000 sigma

********** U N I D E N T I F I E D P E A K S **********

Peak Locate Performed on: 3/28/2019 10:16:42 AM
Peak Locate From Channel: 85
Peak Locate To Channel: 8000

Peak No.	Energy (keV)	Peak Size in Counts per Second	Peak CPS % Uncertainty	Peak Type	Tol. Nuclide
2	582.27	5.4688E-002	48.07		

M = First peak in a multiplet region
m = Other peak in a multiplet region
F = Fitted singlet

Errors quoted at 2.000 sigma

****
***** N U C L I D E M D A R E P O R T *****
****

Detector Name: 3844
Sample Geometry:
Sample Title: B1-010-001-FSFC-D16-GM
Nuclide Library Used: C:\GENIE2K\CAMFILES\LACBWR.NLB

	Nuclide Name	Energy (keV)	Yield (%)	Line MDA (pCi/M^2)	Nuclide MDA (pCi/M^2)	Activity (pCi/M^2)	Dec. Level (pCi/M^2)
+	K-40	1460.81*	10.67	9.739E+002	9.74E+002	8.709E+004	0.000E+000
	CO-60	1173.22	100.00	1.017E+003	9.99E+002	-3.580E+002	4.629E+002
		1332.49	100.00	9.991E+002		4.654E+000	4.509E+002
	CS-134	475.35	1.46	6.524E+004	1.09E+003	4.217E+003	3.075E+004
		563.23	8.38	1.022E+004		-4.998E+003	4.752E+003
		569.32	15.43	5.886E+003		1.160E+003	2.746E+003
		604.70	97.60	1.165E+003		1.375E+003	5.503E+002
		795.84	85.40	1.090E+003		-1.920E+001	5.021E+002
		801.93	8.73	9.694E+003		-1.329E+003	4.424E+003
		1038.57	1.00	8.890E+004		4.967E+004	4.018E+004
		1167.94	1.80	5.709E+004		-1.227E+004	2.602E+004
		1365.15	3.04	2.423E+004		1.686E+004	1.048E+004
	CS-137	661.65	85.12	1.137E+003	1.14E+003	2.873E+002	5.299E+002
	EU-152	121.78	28.40	3.894E+003	3.34E+003	-2.676E+003	1.889E+003
		344.27	26.50	3.342E+003		-2.337E+003	1.585E+003
		1407.95	20.70	3.958E+003		-2.151E+003	1.735E+003
	EU-154	123.07	40.40	2.745E+003	2.46E+003	-9.175E+001	1.332E+003
		722.30	20.00	5.490E+003		3.376E+003	2.571E+003
		1274.51	34.40	2.455E+003		-1.529E+003	1.089E+003
+	BI-214	609.31*	46.30	1.393E+003	1.39E+003	1.110E+003	6.282E+002
		768.36	5.04	1.864E+004		1.432E+004	8.604E+003
		806.17	1.23	6.986E+004		-2.565E+004	3.192E+004
		934.06	3.21	2.767E+004		-2.041E+004	1.258E+004
		1120.29*	15.10	3.322E+003		4.072E+003	1.367E+003
		1155.19	1.69	6.557E+004		-5.211E+003	3.012E+004
		1238.11	5.94	1.915E+004		1.094E+004	8.785E+003
		1280.96	1.47	6.226E+004		2.445E+004	2.789E+004
		1377.67	4.11	2.200E+004		1.973E+004	9.785E+003
		1385.31	0.78	9.832E+004		-7.353E+004	4.274E+004
		1401.50	1.39	5.399E+004		-4.429E+004	2.336E+004
		1407.98	2.48	3.304E+004		-1.796E+004	1.448E+004
		1509.19	2.19	2.993E+004		-1.212E+004	1.253E+004
		1661.28	1.15	5.811E+004		2.930E+004	2.410E+004
		1729.60	3.05	2.134E+004		9.950E+003	8.749E+003
		1764.49*	15.80	3.834E+003		4.274E+003	1.541E+003
		1847.44	2.12	3.556E+004		1.920E+004	1.489E+004
>		2118.54	1.21	0.000E+000		0.000E+000	0.000E+000
	PB-214	74.81	6.33	3.712E+004	2.50E+003	2.815E+004	1.804E+004
		77.11	10.70	2.042E+004		5.935E+003	9.929E+003
		87.20	3.70	4.357E+004		2.754E+004	2.121E+004
		89.80	1.03	1.469E+005		-6.720E+004	7.146E+004
		241.98	7.49	1.416E+004		8.590E+003	6.825E+003

Nuclide Name	Energy (keV)	Yield (%)	Line MDA (pCi/M^2)	Nuclide MDA (pCi/M^2)	Activity (pCi/M^2)	Dec. Level (pCi/M^2)
PB-214	295.21	19.20	4.869E+003	2.50E+003	2.212E+003	2.325E+003
	351.92	37.20	2.498E+003		1.485E+003	1.187E+003
	785.91	1.10	8.487E+004		-8.734E+004	3.911E+004

+ = Nuclide identified during the nuclide identification
* = Energy line found in the spectrum
> = Calculated MDA is zero due to zero counts in the region, or
the region is outside the spectrum, or MDA has not been calculated
@ = Half-life too short to be able to perform the decay correction

```
************************************************************************
*****        G A M M A   S P E C T R U M   A N A L Y S I S        *****
************************************************************************


Filename: 3844

Report Generated On              : 3/28/2019  10:57:26 AM

Sample Title                     : B1-010-001-FSFC-D17-GM
Sample Description               : Rx Bowl 3M Concrete
Sample Identification            : D17
Sample Type                      : Gamma Direct
Sample Geometry                  :

Peak Locate Threshold            :  3.00
Peak Locate Range (in channels)  :    85 -  8000
Peak Area Range (in channels)    :    85 -  8000
Identification Energy Tolerance  :    3.000 keV

Sample Size                      :  2.827E+001 M^2

Sample Taken On                  : 3/28/2019  10:47:00 AM
Acquisition Started              : 3/28/2019  10:47:25 AM

Live Time                        :      600.0 seconds
Real Time                        :      600.2 seconds

Dead Time                        :   0.03 %


              Energy Calibration Used Done On       : 10/24/2017
              Efficiency Calibration Used Done On   : 3/26/2019
              Efficiency ID                         : RxBOWL_CON_3M
```

****
***** P E A K A N A L Y S I S R E P O R T *****
****

Detector Name: 3844
Sample Title: B1-010-001-FSFC-D17-GM
Peak Analysis Performed on: 3/28/2019 10:57:26 AM
Peak Analysis From Channel: 85
Peak Analysis To Channel: 8000

Peak No.	ROI start	ROI end	Peak centroid	Energy (keV)	FWHM (keV)	Net Peak Area	Net Area Uncert.	Continuum Counts
1	945-	960	953.83	238.53	0.74	5.09E+001	37.20	9.81E+001
2	1102-	1113	1107.58	276.99	0.43	1.56E+001	20.17	3.44E+001
3	1400-	1412	1405.92	351.63	0.92	3.39E+001	21.59	3.11E+001
4	2322-	2334	2328.25	582.31	0.40	3.11E+001	17.07	1.59E+001
5	2428-	2440	2433.61	608.66	0.55	3.12E+001	17.96	1.78E+001
6	5825-	5848	5837.71	1459.44	1.60	2.24E+002	30.76	3.09E+000

M = First peak in a multiplet region
m = Other peak in a multiplet region
F = Fitted singlet

Errors quoted at 2.000 sigma

****
***** N U C L I D E I D E N T I F I C A T I O N R E P O R T *****
****

Sample Title: B1-010-001-FSFC-D17-GM
Nuclide Library Used: C:\GENIE2K\CAMFILES\LACBWR.NLB

..... IDENTIFIED NUCLIDES .....

Nuclide Name	Id Confidence	Energy (keV)	Yield (%)	Activity (pCi/M^2)	Activity Uncertainty
K-40	0.967	1460.81*	10.67	8.05907E+004	1.29200E+004
PB-212	1.000	74.81	9.60		
		77.11	17.50		
		87.20	6.30		
		89.80	1.75		
		115.19	0.60		
		238.63*	44.60	1.58215E+003	1.18460E+003
		300.09	3.41		
BI-214	0.997	609.31*	46.30	1.57129E+003	9.25678E+002
		768.36	5.04		
		806.17	1.23		
		934.06	3.21		
		1120.29	15.10		
		1155.19	1.69		
		1238.11	5.94		
		1280.96	1.47		
		1377.67	4.11		
		1385.31	0.78		
		1401.50	1.39		
		1407.98	2.48		
		1509.19	2.19		
		1661.28	1.15		
		1729.60	3.05		
		1764.49	15.80		
		1847.44	2.12		
		2118.54	1.21		
PB-214	0.999	74.81	6.33		
		77.11	10.70		
		87.20	3.70		
		89.80	1.03		
		241.98	7.49		
		295.21	19.20		
		351.92*	37.20	1.55721E+003	1.02343E+003
		785.91	1.10		

* = Energy line found in the spectrum.
@ = Energy line not used for Weighted Mean Activity
Energy Tolerance : 3.000 keV
Nuclide confidence index threshold = 0.30
Errors quoted at 2.000 sigma

****
***** I N T E R F E R E N C E C O R R E C T E D R E P O R T *****
****

Nuclide Name	Nuclide Id Confidence	Wt mean Activity (pCi/M^2)	Wt mean Activity Uncertainty
K-40	0.967	8.059070E+004	1.291997E+004
PB-212	1.000	1.582155E+003	1.184598E+003
BI-214	0.997	1.571289E+003	9.256777E+002
PB-214	0.999	1.557208E+003	1.023432E+003

? = Nuclide is part of an undetermined solution
X = Nuclide rejected by the interference analysis
@ = Nuclide contains energy lines not used in Weighted Mean Activity

Errors quoted at 2.000 sigma

********** U N I D E N T I F I E D P E A K S **********

Peak Locate Performed on: 3/28/2019 10:57:26 AM
Peak Locate From Channel: 85
Peak Locate To Channel: 8000

Peak No.	Energy (keV)	Peak Size in Counts per Second	Peak CPS % Uncertainty	Peak Type	Tol. Nuclide
2	276.99	2.5942E-002	129.59		
4	582.31	5.1879E-002	54.84		

M = First peak in a multiplet region
m = Other peak in a multiplet region
F = Fitted singlet

Errors quoted at 2.000 sigma

****
***** N U C L I D E M D A R E P O R T *****
****

Detector Name: 3844
Sample Geometry:
Sample Title: B1-010-001-FSFC-D17-GM
Nuclide Library Used: C:\GENIE2K\CAMFILES\LACBWR.NLB

	Nuclide Name	Energy (keV)	Yield (%)	Line MDA (pCi/M^2)	Nuclide MDA (pCi/M^2)	Activity (pCi/M^2)	Dec. Level (pCi/M^2)
+	K-40	1460.81*	10.67	5.191E+003	5.19E+003	8.059E+004	2.108E+003
	CO-60	1173.22	100.00	9.901E+002	9.51E+002	-4.289E+002	4.495E+002
		1332.49	100.00	9.512E+002		3.640E+002	4.269E+002
	CS-134	475.35	1.46	6.177E+004	1.03E+003	-1.855E+004	2.901E+004
		563.23	8.38	9.811E+003		-6.133E+003	4.546E+003
		569.32	15.43	5.452E+003		-2.030E+003	2.530E+003
		604.70	97.60	1.125E+003		6.863E+002	5.305E+002
		795.84	85.40	1.034E+003		-1.069E+002	4.740E+002
		801.93	8.73	9.813E+003		5.050E+003	4.484E+003
		1038.57	1.00	8.190E+004		1.602E+004	3.668E+004
		1167.94	1.80	5.255E+004		1.157E+004	2.375E+004
		1365.15	3.04	2.832E+004		-3.598E+003	1.253E+004
	CS-137	661.65	85.12	1.129E+003	1.13E+003	2.317E+002	5.257E+002
	EU-152	121.78	28.40	4.052E+003	3.28E+003	-1.237E+002	1.968E+003
		344.27	26.50	3.370E+003		-3.771E+003	1.599E+003
		1407.95	20.70	3.280E+003		8.466E+002	1.395E+003
	EU-154	123.07	40.40	2.838E+003	2.46E+003	9.119E+002	1.378E+003
		722.30	20.00	4.740E+003		-2.744E+003	2.196E+003
		1274.51	34.40	2.455E+003		-1.767E+003	1.089E+003
+	BI-214	609.31*	46.30	1.300E+003	1.30E+003	1.571E+003	5.817E+002
		768.36	5.04	1.864E+004		-5.690E+003	8.604E+003
		806.17	1.23	7.152E+004		1.725E+003	3.275E+004
		934.06	3.21	2.876E+004		4.362E+003	1.313E+004
		1120.29	15.10	6.985E+003		1.932E+003	3.198E+003
		1155.19	1.69	5.648E+004		-6.148E+004	2.557E+004
		1238.11	5.94	1.739E+004		-2.198E+003	7.904E+003
		1280.96	1.47	5.637E+004		-4.337E+004	2.494E+004
		1377.67	4.11	2.528E+004		1.323E+004	1.143E+004
		1385.31	0.78	1.140E+005		3.727E+003	5.057E+004
		1401.50	1.39	5.399E+004		-3.374E+004	2.336E+004
		1407.98	2.48	2.738E+004		7.067E+003	1.165E+004
		1509.19	2.19	2.993E+004		-1.796E+003	1.253E+004
		1661.28	1.15	5.166E+004		2.198E+004	2.087E+004
		1729.60	3.05	1.707E+004		-3.376E+003	6.613E+003
		1764.49	15.80	6.092E+003		4.731E+003	2.670E+003
		1847.44	2.12	3.386E+004		-3.334E+002	1.404E+004
>		2118.54	1.21	0.000E+000		0.000E+000	0.000E+000
+	PB-214	74.81	6.33	3.746E+004	1.50E+003	-1.057E+004	1.821E+004
		77.11	10.70	2.082E+004		1.649E+004	1.013E+004
		87.20	3.70	4.329E+004		1.151E+003	2.107E+004
		89.80	1.03	1.490E+005		-6.481E+004	7.252E+004
		241.98	7.49	1.509E+004		-1.341E+003	7.293E+003

	Nuclide Name	Energy (keV)	Yield (%)	Line MDA (pCi/M^2)	Nuclide MDA (pCi/M^2)	Activity (pCi/M^2)	Dec. Level (pCi/M^2)
+	PB-214	295.21	19.20	5.122E+003	1.50E+003	3.658E+003	2.452E+003
		351.92*	37.20	1.500E+003		1.557E+003	6.877E+002
		785.91	1.10	8.813E+004		-5.749E+004	4.075E+004

+ = Nuclide identified during the nuclide identification
* = Energy line found in the spectrum
> = Calculated MDA is zero due to zero counts in the region, or
the region is outside the spectrum, or MDA has not been calculated
@ = Half-life too short to be able to perform the decay correction

```
***********************************************************************
*****        G A M M A   S P E C T R U M   A N A L Y S I S        *****
***********************************************************************


Filename: 3844

Report Generated On              : 3/28/2019  11:10:52 AM

Sample Title                     : B1-010-001-FSFC-D18-GM
Sample Description               : Rx Bowl 3M Concrete
Sample Identification            : D18
Sample Type                      : Gamma Direct
Sample Geometry                  :

Peak Locate Threshold            :  3.00
Peak Locate Range (in channels)  :    85 -  8000
Peak Area Range (in channels)    :    85 -  8000
Identification Energy Tolerance  :    3.000 keV

Sample Size                      :  2.827E+001 M^2

Sample Taken On                  : 3/28/2019  11:00:00 AM
Acquisition Started              : 3/28/2019  11:00:50 AM

Live Time                        :      600.0 seconds
Real Time                        :      600.2 seconds

Dead Time                        :   0.03 %


              Energy Calibration Used Done On       : 10/24/2017
              Efficiency Calibration Used Done On   : 3/26/2019
              Efficiency ID                         : RxBOWL_CON_3M
```

****
***** P E A K A N A L Y S I S R E P O R T *****
****

Detector Name: 3844
Sample Title: B1-010-001-FSFC-D18-GM
Peak Analysis Performed on: 3/28/2019 11:10:51 AM
Peak Analysis From Channel: 85
Peak Analysis To Channel: 8000

Peak No.	ROI start	ROI end	Peak centroid	Energy (keV)	FWHM (keV)	Net Peak Area	Net Area Uncert.	Continuum Counts
1	948-	964	953.84	238.53	0.72	5.26E+001	33.84	7.44E+001
2	2324-	2336	2330.05	582.76	0.96	2.74E+001	18.95	2.36E+001
3	2428-	2441	2434.75	608.94	0.45	3.25E+001	15.67	1.05E+001
4	5826-	5851	5838.03	1459.52	1.87	2.26E+002	33.30	1.24E+001

M = First peak in a multiplet region
m = Other peak in a multiplet region
F = Fitted singlet

Errors quoted at 2.000 sigma

****
***** N U C L I D E I D E N T I F I C A T I O N R E P O R T *****
****

Sample Title: B1-010-001-FSFC-D18-GM
Nuclide Library Used: C:\GENIE2K\CAMFILES\LACBWR.NLB

..... IDENTIFIED NUCLIDES .....

Nuclide Name	Id Confidence	Energy (keV)	Yield (%)	Activity (pCi/M^2)	Activity Uncertainty
K-40	0.971	1460.81*	10.67	8.11844E+004	1.37344E+004
PB-212	1.000	74.81	9.60		
		77.11	17.50		
		87.20	6.30		
		89.80	1.75		
		115.19	0.60		
		238.63*	44.60	1.63541E+003	1.08484E+003
		300.09	3.41		
BI-214	0.999	609.31*	46.30	1.63538E+003	8.15788E+002
		768.36	5.04		
		806.17	1.23		
		934.06	3.21		
		1120.29	15.10		
		1155.19	1.69		
		1238.11	5.94		
		1280.96	1.47		
		1377.67	4.11		
		1385.31	0.78		
		1401.50	1.39		
		1407.98	2.48		
		1509.19	2.19		
		1661.28	1.15		
		1729.60	3.05		
		1764.49	15.80		
		1847.44	2.12		
		2118.54	1.21		

* = Energy line found in the spectrum.
@ = Energy line not used for Weighted Mean Activity
Energy Tolerance : 3.000 keV
Nuclide confidence index threshold = 0.30
Errors quoted at 2.000 sigma

****
***** I N T E R F E R E N C E C O R R E C T E D R E P O R T *****
****

Nuclide Name	Nuclide Id Confidence	Wt mean Activity (pCi/M^2)	Wt mean Activity Uncertainty
K-40	0.971	8.118440E+004	1.373445E+004
PB-212	1.000	1.635411E+003	1.084842E+003
BI-214	0.999	1.635380E+003	8.157883E+002

? = Nuclide is part of an undetermined solution
X = Nuclide rejected by the interference analysis
@ = Nuclide contains energy lines not used in Weighted Mean Activity

Errors quoted at 2.000 sigma

********** U N I D E N T I F I E D P E A K S **********

Peak Locate Performed on: 3/28/2019 11:10:51 AM
Peak Locate From Channel: 85
Peak Locate To Channel: 8000

Peak No.	Energy (keV)	Peak Size in Counts per Second	Peak CPS % Uncertainty	Peak Type	Tol. Nuclide
2	582.76	4.5711E-002	69.10		

M = First peak in a multiplet region
m = Other peak in a multiplet region
F = Fitted singlet

Errors quoted at 2.000 sigma

****
***** N U C L I D E M D A R E P O R T *****
****

Detector Name: 3844
Sample Geometry:
Sample Title: B1-010-001-FSFC-D18-GM
Nuclide Library Used: C:\GENIE2K\CAMFILES\LACBWR.NLB

	Nuclide Name	Energy (keV)	Yield (%)	Line MDA (pCi/M^2)	Nuclide MDA (pCi/M^2)	Activity (pCi/M^2)	Dec. Level (pCi/M^2)
+	K-40	1460.81*	10.67	9.484E+003	9.48E+003	8.118E+004	4.255E+003
	CO-60	1173.22	100.00	1.187E+003	6.53E+002	4.146E+002	5.478E+002
		1332.49	100.00	6.528E+002		1.194E+002	2.777E+002
	CS-134	475.35	1.46	5.368E+004	1.11E+003	-4.891E+004	2.497E+004
		563.23	8.38	1.038E+004		2.659E+003	4.832E+003
		569.32	15.43	5.497E+003		-9.808E+002	2.552E+003
		604.70	97.60	1.108E+003		6.530E+002	5.218E+002
		795.84	85.40	1.133E+003		-3.989E+002	5.234E+002
		801.93	8.73	1.071E+004		1.485E+003	4.933E+003
		1038.57	1.00	1.091E+005		-7.626E+004	5.030E+004
		1167.94	1.80	5.781E+004		-1.292E+004	2.638E+004
		1365.15	3.04	2.185E+004		3.723E+003	9.294E+003
	CS-137	661.65	85.12	1.095E+003	1.09E+003	9.354E+002	5.084E+002
	EU-152	121.78	28.40	3.992E+003	3.36E+003	-1.194E+003	1.938E+003
		344.27	26.50	3.356E+003		-5.175E+003	1.592E+003
		1407.95	20.70	4.059E+003		1.778E+003	1.785E+003
	EU-154	123.07	40.40	2.799E+003	2.75E+003	-8.609E+002	1.359E+003
		722.30	20.00	5.167E+003		3.842E+003	2.410E+003
		1274.51	34.40	2.747E+003		-9.499E+002	1.235E+003
+	BI-214	609.31*	46.30	1.026E+003	1.03E+003	1.635E+003	4.448E+002
		768.36	5.04	1.678E+004		-1.189E+003	7.676E+003
		806.17	1.23	7.549E+004		2.076E+004	3.473E+004
		934.06	3.21	3.014E+004		5.260E+003	1.382E+004
		1120.29	15.10	7.297E+003		-4.125E+002	3.355E+003
		1155.19	1.69	6.415E+004		-2.607E+004	2.941E+004
		1238.11	5.94	2.016E+004		9.546E+002	9.293E+003
		1280.96	1.47	7.057E+004		-4.866E+004	3.204E+004
		1377.67	4.11	2.109E+004		-1.894E+003	9.330E+003
		1385.31	0.78	1.187E+005		7.461E+004	5.293E+004
		1401.50	1.39	5.722E+004		-2.059E+004	2.498E+004
		1407.98	2.48	3.388E+004		1.484E+004	1.490E+004
		1509.19	2.19	2.850E+004		-1.201E+004	1.182E+004
		1661.28	1.15	5.811E+004		-1.351E+004	2.410E+004
		1729.60	3.05	2.005E+004		8.528E+003	8.100E+003
		1764.49	15.80	5.933E+003		4.453E+003	2.590E+003
		1847.44	2.12	3.556E+004		7.291E+003	1.489E+004
>		2118.54	1.21	0.000E+000		0.000E+000	0.000E+000
	PB-214	74.81	6.33	3.790E+004	2.60E+003	2.910E+004	1.843E+004
		77.11	10.70	2.080E+004		8.879E+003	1.012E+004
		87.20	3.70	4.253E+004		8.470E+003	2.069E+004
		89.80	1.03	1.495E+005		1.344E+004	7.276E+004
		241.98	7.49	1.407E+004		9.189E+002	6.784E+003

Nuclide Name	Energy (keV)	Yield (%)	Line MDA (pCi/M^2)	Nuclide MDA (pCi/M^2)	Activity (pCi/M^2)	Dec. Level (pCi/M^2)
PB-214	295.21	19.20	5.251E+003	2.60E+003	2.047E+003	2.516E+003
	351.92	37.20	2.602E+003		1.196E+003	1.239E+003
	785.91	1.10	8.651E+004		-1.413E+004	3.994E+004

+ = Nuclide identified during the nuclide identification
* = Energy line found in the spectrum
> = Calculated MDA is zero due to zero counts in the region, or
the region is outside the spectrum, or MDA has not been calculated
@ = Half-life too short to be able to perform the decay correction

```
***********************************************************************
*****        G A M M A   S P E C T R U M   A N A L Y S I S        *****
***********************************************************************


Filename: 3844

Report Generated On              : 3/28/2019  11:37:22 AM

Sample Title                     : B1-010-001-FSFC-D19-GM
Sample Description               : Rx Bowl 3M Concrete
Sample Identification            : D19
Sample Type                      : Gamma Direct
Sample Geometry                  :

Peak Locate Threshold            :  3.00
Peak Locate Range (in channels)  :    85 -  8000
Peak Area Range (in channels)    :    85 -  8000
Identification Energy Tolerance  :    3.000 keV

Sample Size                      :  2.827E+001 M^2

Sample Taken On                  : 3/28/2019  11:25:00 AM
Acquisition Started              : 3/28/2019  11:27:21 AM

Live Time                        :      600.0 seconds
Real Time                        :      600.2 seconds

Dead Time                        :   0.03 %


              Energy Calibration Used Done On       : 10/24/2017
              Efficiency Calibration Used Done On   : 3/26/2019
              Efficiency ID                         : RxBOWL_CON_3M
```

****
***** P E A K A N A L Y S I S R E P O R T *****
****

Detector Name: 3844
Sample Title: B1-010-001-FSFC-D19-GM
Peak Analysis Performed on: 3/28/2019 11:37:21 AM
Peak Analysis From Channel: 85
Peak Analysis To Channel: 8000

Peak No.	ROI start	ROI end	Peak centroid	Energy (keV)	FWHM (keV)	Net Peak Area	Net Area Uncert.	Continuum Counts
1	947-	958	952.94	238.30	0.40	4.55E+001	28.25	6.05E+001
2	1174-	1185	1179.52	294.99	0.33	1.82E+001	22.21	4.18E+001
3	2324-	2336	2330.41	582.85	0.59	3.35E+001	16.00	1.15E+001
4	2428-	2439	2433.80	608.71	0.44	3.10E+001	17.44	1.80E+001
5	3633-	3646	3639.80	910.23	0.50	2.83E+001	16.90	1.57E+001
6	3865-	3878	3871.06	968.03	0.46	1.11E+001	11.99	8.86E+000
7	5826-	5850	5838.35	1459.60	1.36	2.52E+002	32.56	3.17E+000

M = First peak in a multiplet region
m = Other peak in a multiplet region
F = Fitted singlet

Errors quoted at 2.000 sigma

****
***** N U C L I D E I D E N T I F I C A T I O N R E P O R T *****
****

Sample Title: B1-010-001-FSFC-D19-GM
Nuclide Library Used: C:\GENIE2K\CAMFILES\LACBWR.NLB

..... IDENTIFIED NUCLIDES .....

Nuclide Name	Id Confidence	Energy (keV)	Yield (%)	Activity (pCi/M^2)	Activity Uncertainty
K-40	0.974	1460.81*	10.67	9.06462E+004	1.39096E+004
PB-212	0.999	74.81	9.60		
		77.11	17.50		
		87.20	6.30		
		89.80	1.75		
		115.19	0.60		
		238.63*	44.60	1.41326E+003	9.07086E+002
		300.09	3.41		
BI-214	0.997	609.31*	46.30	1.55955E+003	8.99702E+002
		768.36	5.04		
		806.17	1.23		
		934.06	3.21		
		1120.29	15.10		
		1155.19	1.69		
		1238.11	5.94		
		1280.96	1.47		
		1377.67	4.11		
		1385.31	0.78		
		1401.50	1.39		
		1407.98	2.48		
		1509.19	2.19		
		1661.28	1.15		
		1729.60	3.05		
		1764.49	15.80		
		1847.44	2.12		
		2118.54	1.21		
PB-214	1.000	74.81	6.33		
		77.11	10.70		
		87.20	3.70		
		89.80	1.03		
		241.98	7.49		
		295.21*	19.20	1.47200E+003	1.81471E+003
		351.92	37.20		
		785.91	1.10		
AC-228	0.987	89.95	2.10		
		93.35	3.50		
		129.08	2.80		
		209.28	4.40		
		270.23	3.60		
		327.64	3.20		
		338.32	11.40		

Nuclide Name	Id Confidence	Energy (keV)	Yield (%)	Activity (pCi/M^2)	Activity Uncertainty
AC-228	0.987	409.51	2.13		
		463.00	4.40		
		794.70	4.60		
		911.60*	27.70	3.00208E+003	1.82469E+003
		964.60	5.20		
		969.11*	16.60	2.03726E+003	2.20213E+003
		1587.90	3.71		

* = Energy line found in the spectrum.
@ = Energy line not used for Weighted Mean Activity
Energy Tolerance : 3.000 keV
Nuclide confidence index threshold = 0.30
Errors quoted at 2.000 sigma

****
***** I N T E R F E R E N C E C O R R E C T E D R E P O R T *****
****

Nuclide Name	Nuclide Id Confidence	Wt mean Activity (pCi/M^2)	Wt mean Activity Uncertainty
K-40	0.974	9.064618E+004	1.390958E+004
PB-212	0.999	1.413259E+003	9.070864E+002
BI-214	0.997	1.559553E+003	8.997018E+002
PB-214	1.000	1.472004E+003	1.814713E+003
AC-228	0.987	2.609317E+003	1.405030E+003

? = Nuclide is part of an undetermined solution
X = Nuclide rejected by the interference analysis
@ = Nuclide contains energy lines not used in Weighted Mean Activity

Errors quoted at 2.000 sigma

********** U N I D E N T I F I E D P E A K S **********

Peak Locate Performed on: 3/28/2019 11:37:21 AM
Peak Locate From Channel: 85
Peak Locate To Channel: 8000

Peak No.	Energy (keV)	Peak Size in Counts per Second	Peak CPS % Uncertainty	Peak Type	Tol. Nuclide
3	582.85	5.5861E-002	47.74		

M = First peak in a multiplet region
m = Other peak in a multiplet region
F = Fitted singlet

Errors quoted at 2.000 sigma

****
***** N U C L I D E M D A R E P O R T *****
****

Detector Name: 3844
Sample Geometry:
Sample Title: B1-010-001-FSFC-D19-GM
Nuclide Library Used: C:\GENIE2K\CAMFILES\LACBWR.NLB

	Nuclide Name	Energy (keV)	Yield (%)	Line MDA (pCi/M^2)	Nuclide MDA (pCi/M^2)	Activity (pCi/M^2)	Dec. Level (pCi/M^2)
+	K-40	1460.81*	10.67	5.290E+003	5.29E+003	9.065E+004	2.158E+003
	CO-60	1173.22	100.00	1.209E+003	8.65E+002	1.766E+002	5.588E+002
		1332.49	100.00	8.647E+002		-7.584E+001	3.837E+002
	CS-134	475.35	1.46	6.212E+004	1.16E+003	-2.847E+003	2.919E+004
		563.23	8.38	1.054E+004		-8.603E+003	4.910E+003
		569.32	15.43	5.886E+003		3.051E+003	2.746E+003
		604.70	97.60	1.225E+003		7.745E+002	5.801E+002
		795.84	85.40	1.164E+003		-3.012E+002	5.389E+002
		801.93	8.73	1.123E+004		-1.614E+003	5.194E+003
		1038.57	1.00	9.657E+004		9.551E+004	4.402E+004
		1167.94	1.80	6.878E+004		4.350E+004	3.187E+004
		1365.15	3.04	2.637E+004		-1.585E+004	1.155E+004
	CS-137	661.65	85.12	1.162E+003	1.16E+003	7.533E+002	5.424E+002
	EU-152	121.78	28.40	4.072E+003	3.52E+003	1.017E+003	1.978E+003
		344.27	26.50	3.518E+003		-3.097E+003	1.673E+003
		1407.95	20.70	3.748E+003		-1.356E+002	1.629E+003
	EU-154	123.07	40.40	2.817E+003	2.79E+003	8.083E+002	1.368E+003
		722.30	20.00	4.781E+003		4.528E+003	2.217E+003
		1274.51	34.40	2.792E+003		-1.173E+003	1.258E+003
+	BI-214	609.31*	46.30	1.247E+003	1.25E+003	1.560E+003	5.552E+002
		768.36	5.04	2.155E+004		2.549E+003	1.006E+004
		806.17	1.23	7.626E+004		-4.831E+004	3.512E+004
		934.06	3.21	3.014E+004		-3.495E+004	1.382E+004
		1120.29	15.10	7.952E+003		1.001E+004	3.682E+003
		1155.19	1.69	6.121E+004		1.311E+004	2.794E+004
		1238.11	5.94	1.996E+004		1.387E+004	9.194E+003
		1280.96	1.47	6.226E+004		-1.045E+004	2.789E+004
		1377.67	4.11	2.881E+004		1.499E+004	1.319E+004
		1385.31	0.78	1.296E+005		-3.003E+004	5.840E+004
		1401.50	1.39	6.170E+004		3.217E+004	2.722E+004
		1407.98	2.48	3.128E+004		-1.132E+003	1.360E+004
		1509.19	2.19	3.932E+004		1.878E+004	1.723E+004
		1661.28	1.15	5.811E+004		3.663E+003	2.410E+004
		1729.60	3.05	2.255E+004		1.137E+004	9.353E+003
		1764.49	15.80	6.398E+003		2.563E+003	2.822E+003
		1847.44	2.12	2.297E+004		6.402E+003	8.598E+003
>		2118.54	1.21	0.000E+000		0.000E+000	0.000E+000
+	PB-214	74.81	6.33	3.772E+004	2.62E+003	5.490E+004	1.834E+004
		77.11	10.70	2.061E+004		2.749E+003	1.002E+004
		87.20	3.70	4.320E+004		-5.153E+003	2.102E+004
		89.80	1.03	1.490E+005		-8.096E+004	7.252E+004
		241.98	7.49	1.451E+004		1.229E+004	7.003E+003

	Nuclide Name	Energy (keV)	Yield (%)	Line MDA (pCi/M^2)	Nuclide MDA (pCi/M^2)	Activity (pCi/M^2)	Dec. Level (pCi/M^2)
+	PB-214	295.21*	19.20	2.952E+003	2.62E+003	1.472E+003	1.367E+003
		351.92	37.20	2.620E+003		2.406E+002	1.248E+003
		785.91	1.10	8.318E+004		-4.280E+004	3.827E+004

+ = Nuclide identified during the nuclide identification
* = Energy line found in the spectrum
> = Calculated MDA is zero due to zero counts in the region, or
the region is outside the spectrum, or MDA has not been calculated
@ = Half-life too short to be able to perform the decay correction

```
************************************************************************
*****        G A M M A   S P E C T R U M   A N A L Y S I S        *****
************************************************************************


Filename: C:\LACBWR\B1-010-001-FSFC-D20-GM.CNF

Report Generated On             : 3/29/2019  10:37:42 AM

Sample Title                    : B1-010-001-FSFC-D20-GM
Sample Description              : Rx Bowl 2M Concrete
Sample Identification           : D20
Sample Type                     : Gamma Direct
Sample Geometry                 :

Peak Locate Threshold           :  3.00
Peak Locate Range (in channels) :    85 -  8000
Peak Area Range (in channels)   :    85 -  8000
Identification Energy Tolerance :    3.000 keV

Sample Size                     :  1.256E+001 M^2

Sample Taken On                 : 3/28/2019   3:28:00 PM
Acquisition Started             : 3/28/2019   3:43:14 PM

Live Time                       :      600.0 seconds
Real Time                       :      600.2 seconds

Dead Time                       :   0.03 %


              Energy Calibration Used Done On       : 10/24/2017
              Efficiency Calibration Used Done On   : 3/26/2019
              Efficiency ID                         : RxBOWL_CON_2M
```

****
***** P E A K A N A L Y S I S R E P O R T *****
****

Detector Name: 3844
Sample Title: B1-010-001-FSFC-D20-GM
Peak Analysis Performed on: 3/29/2019 10:37:41 AM
Peak Analysis From Channel: 85
Peak Analysis To Channel: 8000

Peak No.	ROI start	ROI end	Peak centroid	Energy (keV)	FWHM (keV)	Net Peak Area	Net Area Uncert.	Continuum Counts
1	948-	959	953.38	238.41	0.93	4.18E+001	25.53	4.82E+001
2	2429-	2441	2434.93	608.99	0.30	2.58E+001	16.57	1.63E+001
3	2638-	2653	2645.51	661.64	1.06	5.66E+001	19.08	1.14E+001
4	5828-	5851	5840.51	1460.14	1.27	1.84E+002	28.85	6.00E+000

M = First peak in a multiplet region
m = Other peak in a multiplet region
F = Fitted singlet

Errors quoted at 2.000 sigma

****
***** N U C L I D E I D E N T I F I C A T I O N R E P O R T *****
****

Sample Title: B1-010-001-FSFC-D20-GM
Nuclide Library Used: C:\GENIE2K\CAMFILES\LACBWR.NLB

..... IDENTIFIED NUCLIDES .....

Nuclide Name	Id Confidence	Energy (keV)	Yield (%)	Activity (pCi/M^2)	Activity Uncertainty
K-40	0.992	1460.81*	10.67	1.48191E+005	2.62614E+004
CS-137	1.000	661.65*	85.12	3.63185E+003	1.29981E+003
PB-212	1.000	74.81	9.60		
		77.11	17.50		
		87.20	6.30		
		89.80	1.75		
		115.19	0.60		
		238.63*	44.60	2.88500E+003	1.82086E+003
		300.09	3.41		
BI-214	0.999	609.31*	46.30	2.89634E+003	1.90015E+003
		768.36	5.04		
		806.17	1.23		
		934.06	3.21		
		1120.29	15.10		
		1155.19	1.69		
		1238.11	5.94		
		1280.96	1.47		
		1377.67	4.11		
		1385.31	0.78		
		1401.50	1.39		
		1407.98	2.48		
		1509.19	2.19		
		1661.28	1.15		
		1729.60	3.05		
		1764.49	15.80		
		1847.44	2.12		
		2118.54	1.21		

* = Energy line found in the spectrum.
@ = Energy line not used for Weighted Mean Activity
Energy Tolerance : 3.000 keV
Nuclide confidence index threshold = 0.30
Errors quoted at 2.000 sigma

****
***** I N T E R F E R E N C E C O R R E C T E D R E P O R T *****
****

Nuclide Name	Nuclide Id Confidence	Wt mean Activity (pCi/M^2)	Wt mean Activity Uncertainty
K-40	0.992	1.481906E+005	2.626136E+004
CS-137	1.000	3.631851E+003	1.299811E+003
PB-212	1.000	2.885003E+003	1.820860E+003
BI-214	0.999	2.896339E+003	1.900146E+003

? = Nuclide is part of an undetermined solution
X = Nuclide rejected by the interference analysis
@ = Nuclide contains energy lines not used in Weighted Mean Activity

Errors quoted at 2.000 sigma

********** U N I D E N T I F I E D P E A K S **********

Peak Locate Performed on: 3/29/2019 10:37:41 AM
Peak Locate From Channel: 85
Peak Locate To Channel: 8000

Peak No.	Energy (keV)	Peak Size in Counts per Second	Peak CPS % Uncertainty	Peak Type	Tol. Nuclide

All peaks were identified.

****
***** N U C L I D E M D A R E P O R T *****
****

Detector Name: 3844
Sample Geometry:
Sample Title: B1-010-001-FSFC-D20-GM
Nuclide Library Used: C:\GENIE2K\CAMFILES\LACBWR.NLB

	Nuclide Name	Energy (keV)	Yield (%)	Line MDA (pCi/M^2)	Nuclide MDA (pCi/M^2)	Activity (pCi/M^2)	Dec. Level (pCi/M^2)
+	K-40	1460.81*	10.67	1.517E+004	1.52E+004	1.482E+005	6.496E+003
	CO-60	1173.22	100.00	2.182E+003	1.71E+003	1.128E+002	9.894E+002
		1332.49	100.00	1.715E+003		6.034E+001	7.486E+002
	CS-134	475.35	1.46	1.216E+005	2.10E+003	7.647E+004	5.664E+004
		563.23	8.38	2.076E+004		-2.503E+004	9.575E+003
		569.32	15.43	1.228E+004		1.338E+002	5.702E+003
		604.70	97.60	2.410E+003		1.024E+003	1.133E+003
		795.84	85.40	2.095E+003		-5.689E+002	9.512E+002
		801.93	8.73	1.972E+004		-1.731E+004	8.911E+003
		1038.57	1.00	2.186E+005		-4.054E+004	9.978E+004
		1167.94	1.80	1.192E+005		3.626E+004	5.397E+004
		1365.15	3.04	5.417E+004		-2.217E+004	2.344E+004
+	CS-137	661.65*	85.12	1.412E+003	1.41E+003	3.632E+003	6.192E+002
	EU-152	121.78	28.40	8.522E+003	6.42E+003	5.592E+003	4.134E+003
		344.27	26.50	7.025E+003		-1.102E+004	3.321E+003
		1407.95	20.70	6.416E+003		3.235E+003	2.661E+003
	EU-154	123.07	40.40	5.951E+003	5.95E+003	3.612E+003	2.886E+003
		722.30	20.00	8.910E+003		-7.009E+003	4.066E+003
		1274.51	34.40	6.341E+003		-2.441E+002	2.861E+003
+	BI-214	609.31*	46.30	2.728E+003	2.73E+003	2.896E+003	1.212E+003
		768.36	5.04	4.169E+004		-2.334E+004	1.925E+004
		806.17	1.23	1.465E+005		-1.095E+005	6.654E+004
		934.06	3.21	5.936E+004		1.563E+004	2.687E+004
		1120.29	15.10	1.579E+004		1.650E+003	7.239E+003
		1155.19	1.69	1.317E+005		-4.607E+004	5.986E+004
		1238.11	5.94	4.185E+004		2.210E+004	1.916E+004
		1280.96	1.47	1.367E+005		8.379E+004	6.108E+004
		1377.67	4.11	4.033E+004		-1.898E+004	1.745E+004
		1385.31	0.78	1.997E+005		4.420E+004	8.548E+004
		1401.50	1.39	1.169E+005		-1.351E+004	5.035E+004
		1407.98	2.48	5.355E+004		2.700E+004	2.221E+004
		1509.19	2.19	6.697E+004		-4.465E+003	2.805E+004
		1661.28	1.15	1.075E+005		4.101E+004	4.266E+004
		1729.60	3.05	5.051E+004		2.189E+003	2.095E+004
		1764.49	15.80	1.292E+004		9.352E+003	5.617E+003
		1847.44	2.12	5.147E+004		1.434E+004	1.927E+004
>		2118.54	1.21	0.000E+000		0.000E+000	0.000E+000
	PB-214	74.81	6.33	7.843E+004	5.58E+003	1.165E+004	3.808E+004
		77.11	10.70	4.380E+004		4.333E+004	2.128E+004
		87.20	3.70	9.168E+004		-2.544E+004	4.456E+004
		89.80	1.03	3.291E+005		4.825E+005	1.601E+005
		241.98	7.49	2.905E+004		3.387E+004	1.396E+004

Nuclide Name	Energy (keV)	Yield (%)	Line MDA (pCi/M^2)	Nuclide MDA (pCi/M^2)	Activity (pCi/M^2)	Dec. Level (pCi/M^2)
PB-214	295.21	19.20	1.023E+004	5.58E+003	-1.971E+003	4.870E+003
	351.92	37.20	5.583E+003		7.244E+003	2.653E+003
	785.91	1.10	1.570E+005		-9.295E+004	7.106E+004

+ = Nuclide identified during the nuclide identification
* = Energy line found in the spectrum
> = Calculated MDA is zero due to zero counts in the region, or
the region is outside the spectrum, or MDA has not been calculated
@ = Half-life too short to be able to perform the decay correction

```
************************************************************************
*****        G A M M A   S P E C T R U M   A N A L Y S I S        *****
************************************************************************


Filename: 3844

Report Generated On              : 3/28/2019   4:10:57 PM

Sample Title                     : B1-010-001-FSFC-D21-GM
Sample Description               : Rx Bowl 3M Concrete
Sample Identification            : D21
Sample Type                      : Gamma Direct
Sample Geometry                  :

Peak Locate Threshold            :  3.00
Peak Locate Range (in channels)  :    85 -  8000
Peak Area Range (in channels)    :    85 -  8000
Identification Energy Tolerance  :    3.000 keV

Sample Size                      :  2.827E+001 M^2

Sample Taken On                  : 3/28/2019   4:00:00 PM
Acquisition Started              : 3/28/2019   4:00:56 PM

Live Time                        :      600.0 seconds
Real Time                        :      600.2 seconds

Dead Time                        :   0.03 %


              Energy Calibration Used Done On       : 10/24/2017
              Efficiency Calibration Used Done On   : 3/26/2019
              Efficiency ID                         : RxBOWL_CON_3M
```

****
***** P E A K A N A L Y S I S R E P O R T *****
****

Detector Name: 3844
Sample Title: B1-010-001-FSFC-D21-GM
Peak Analysis Performed on: 3/28/2019 4:10:57 PM
Peak Analysis From Channel: 85
Peak Analysis To Channel: 8000

Peak No.	ROI start	ROI end	Peak centroid	Energy (keV)	FWHM (keV)	Net Peak Area	Net Area Uncert.	Continuum Counts
1	946-	960	953.62	238.47	1.02	5.51E+001	32.33	6.99E+001
2	1401-	1413	1407.21	351.95	0.77	2.65E+001	18.58	2.25E+001
3	2429-	2442	2435.68	609.18	0.78	3.47E+001	14.17	5.31E+000
4	5829-	5854	5840.15	1460.05	1.69	2.09E+002	28.91	0.00E+000

M = First peak in a multiplet region
m = Other peak in a multiplet region
F = Fitted singlet

Errors quoted at 2.000 sigma

****
***** N U C L I D E I D E N T I F I C A T I O N R E P O R T *****
****

Sample Title: B1-010-001-FSFC-D21-GM
Nuclide Library Used: C:\GENIE2K\CAMFILES\LACBWR.NLB

..... IDENTIFIED NUCLIDES .....

Nuclide Name	Id Confidence	Energy (keV)	Yield (%)	Activity (pCi/M^2)	Activity Uncertainty
K-40	0.990	1460.81*	10.67	7.52468E+004	1.21247E+004
PB-212	1.000	74.81	9.60		
		77.11	17.50		
		87.20	6.30		
		89.80	1.75		
		115.19	0.60		
		238.63*	44.60	1.71276E+003	1.04234E+003
		300.09	3.41		
BI-214	1.000	609.31*	46.30	1.74615E+003	7.47341E+002
		768.36	5.04		
		806.17	1.23		
		934.06	3.21		
		1120.29	15.10		
		1155.19	1.69		
		1238.11	5.94		
		1280.96	1.47		
		1377.67	4.11		
		1385.31	0.78		
		1401.50	1.39		
		1407.98	2.48		
		1509.19	2.19		
		1661.28	1.15		
		1729.60	3.05		
		1764.49	15.80		
		1847.44	2.12		
		2118.54	1.21		
PB-214	1.000	74.81	6.33		
		77.11	10.70		
		87.20	3.70		
		89.80	1.03		
		241.98	7.49		
		295.21	19.20		
		351.92*	37.20	1.21909E+003	8.76371E+002
		785.91	1.10		

* = Energy line found in the spectrum.
@ = Energy line not used for Weighted Mean Activity
Energy Tolerance : 3.000 keV
Nuclide confidence index threshold = 0.30
Errors quoted at 2.000 sigma

****
***** I N T E R F E R E N C E C O R R E C T E D R E P O R T *****
****

Nuclide Name	Nuclide Id Confidence	Wt mean Activity (pCi/M^2)	Wt mean Activity Uncertainty
K-40	0.990	7.524677E+004	1.212475E+004
PB-212	1.000	1.712757E+003	1.042342E+003
BI-214	1.000	1.746148E+003	7.473414E+002
PB-214	1.000	1.219090E+003	8.763708E+002

? = Nuclide is part of an undetermined solution
X = Nuclide rejected by the interference analysis
@ = Nuclide contains energy lines not used in Weighted Mean Activity

Errors quoted at 2.000 sigma

********** U N I D E N T I F I E D P E A K S **********

Peak Locate Performed on: 3/28/2019 4:10:57 PM
Peak Locate From Channel: 85
Peak Locate To Channel: 8000

Peak No.	Energy (keV)	Peak Size in Counts per Second	Peak CPS % Uncertainty	Peak Type	Tol. Nuclide

All peaks were identified.

****
***** N U C L I D E M D A R E P O R T *****
****

Detector Name: 3844
Sample Geometry:
Sample Title: B1-010-001-FSFC-D21-GM
Nuclide Library Used: C:\GENIE2K\CAMFILES\LACBWR.NLB

	Nuclide Name	Energy (keV)	Yield (%)	Line MDA (pCi/M^2)	Nuclide MDA (pCi/M^2)	Activity (pCi/M^2)	Dec. Level (pCi/M^2)
+	K-40	1460.81*	10.67	9.743E+002	9.74E+002	7.525E+004	0.000E+000
	CO-60	1173.22	100.00	9.482E+002	8.08E+002	-7.938E+002	4.286E+002
		1332.49	100.00	8.078E+002		9.897E+001	3.552E+002
	CS-134	475.35	1.46	5.451E+004	9.24E+002	1.182E+004	2.538E+004
		563.23	8.38	9.727E+003		5.318E+002	4.504E+003
		569.32	15.43	5.315E+003		3.006E+003	2.461E+003
		604.70	97.60	9.424E+002		5.528E+002	4.390E+002
		795.84	85.40	9.236E+002		2.217E+002	4.187E+002
		801.93	8.73	8.679E+003		-3.579E+003	3.917E+003
		1038.57	1.00	8.618E+004		4.100E+004	3.882E+004
		1167.94	1.80	5.094E+004		-3.236E+004	2.295E+004
		1365.15	3.04	2.496E+004		8.692E+003	1.085E+004
	CS-137	661.65	85.12	1.171E+003	1.17E+003	5.760E+002	5.465E+002
	EU-152	121.78	28.40	3.745E+003	3.20E+003	9.333E+002	1.815E+003
		344.27	26.50	3.200E+003		-3.146E+003	1.514E+003
		1407.95	20.70	3.523E+003		2.351E+003	1.517E+003
	EU-154	123.07	40.40	2.564E+003	2.46E+003	-1.900E+003	1.242E+003
		722.30	20.00	4.575E+003		-1.452E+002	2.113E+003
		1274.51	34.40	2.455E+003		-1.551E+003	1.089E+003
+	BI-214	609.31*	46.30	7.880E+002	7.88E+002	1.746E+003	3.259E+002
		768.36	5.04	1.678E+004		6.076E+003	7.676E+003
		806.17	1.23	5.676E+004		-4.785E+004	2.537E+004
		934.06	3.21	2.804E+004		5.135E+003	1.277E+004
		1120.29	15.10	7.882E+003		4.916E+003	3.647E+003
		1155.19	1.69	5.890E+004		-7.374E+003	2.678E+004
		1238.11	5.94	1.643E+004		-4.074E+003	7.425E+003
		1280.96	1.47	6.759E+004		4.979E+004	3.055E+004
		1377.67	4.11	1.804E+004		4.788E+003	7.806E+003
		1385.31	0.78	1.011E+005		3.558E+003	4.414E+004
		1401.50	1.39	4.473E+004		-1.678E+004	1.873E+004
		1407.98	2.48	2.941E+004		1.962E+004	1.266E+004
		1509.19	2.19	2.697E+004		-1.572E+004	1.105E+004
		1661.28	1.15	5.500E+004		1.308E+002	2.254E+004
		1729.60	3.05	1.707E+004		-2.665E+003	6.613E+003
		1764.49	15.80	4.848E+003		2.783E+003	2.047E+003
		1847.44	2.12	3.204E+004		1.494E+004	1.313E+004
>		2118.54	1.21	0.000E+000		0.000E+000	0.000E+000
+	PB-214	74.81	6.33	3.645E+004	1.29E+003	3.974E+004	1.771E+004
		77.11	10.70	1.965E+004		3.385E+003	9.544E+003
		87.20	3.70	4.007E+004		2.072E+004	1.946E+004
		89.80	1.03	1.398E+005		-1.659E+004	6.791E+004
		241.98	7.49	1.454E+004		2.037E+004	7.016E+003

	Nuclide Name	Energy (keV)	Yield (%)	Line MDA (pCi/M^2)	Nuclide MDA (pCi/M^2)	Activity (pCi/M^2)	Dec. Level (pCi/M^2)
+	PB-214	295.21	19.20	4.585E+003	1.29E+003	2.940E+003	2.183E+003
		351.92*	37.20	1.294E+003		1.219E+003	5.849E+002
		785.91	1.10	8.146E+004		5.599E+004	3.741E+004

+ = Nuclide identified during the nuclide identification
* = Energy line found in the spectrum
> = Calculated MDA is zero due to zero counts in the region, or the region is outside the spectrum, or MDA has not been calculated
@ = Half-life too short to be able to perform the decay correction

```
************************************************************************
*****        G A M M A   S P E C T R U M   A N A L Y S I S        *****
************************************************************************


Filename: C:\LACBWR\B1-010-001-FSFC-D22-GM.CNF

Report Generated On             : 3/29/2019  10:40:20 AM

Sample Title                    : B1-010-001-FSFC-D22-GM
Sample Description              : Rx Bowl 2M Concrete
Sample Identification           : D22
Sample Type                     : Gamma Direct
Sample Geometry                 :

Peak Locate Threshold           :  3.00
Peak Locate Range (in channels) :    85 -  8000
Peak Area Range (in channels)   :    85 -  8000
Identification Energy Tolerance :    3.000 keV

Sample Size                     :  1.256E+001 M^2

Sample Taken On                 : 3/28/2019   3:28:00 PM
Acquisition Started             : 3/28/2019   3:29:55 PM

Live Time                       :      600.0 seconds
Real Time                       :      600.2 seconds

Dead Time                       :   0.03 %


              Energy Calibration Used Done On       : 10/24/2017
              Efficiency Calibration Used Done On   : 3/26/2019
              Efficiency ID                         : RxBOWL_CON_2M
```

****
***** P E A K A N A L Y S I S R E P O R T *****
****

Detector Name: 3844
Sample Title: B1-010-001-FSFC-D22-GM
Peak Analysis Performed on: 3/29/2019 10:40:19 AM
Peak Analysis From Channel: 85
Peak Analysis To Channel: 8000

Peak No.	ROI start	ROI end	Peak centroid	Energy (keV)	FWHM (keV)	Net Peak Area	Net Area Uncert.	Continuum Counts
1	948-	962	954.41	238.67	0.92	3.90E+001	28.72	5.80E+001
2	1402-	1413	1407.42	352.00	0.34	1.73E+001	17.35	2.27E+001
3	2325-	2337	2330.62	582.90	0.87	2.55E+001	14.61	1.05E+001
4	3635-	3648	3641.50	910.65	0.29	1.58E+001	13.21	9.23E+000
5	5829-	5852	5840.80	1460.21	1.75	1.94E+002	30.29	8.89E+000

M = First peak in a multiplet region
m = Other peak in a multiplet region
F = Fitted singlet

Errors quoted at 2.000 sigma

****
***** N U C L I D E I D E N T I F I C A T I O N R E P O R T *****
****

Sample Title: B1-010-001-FSFC-D22-GM
Nuclide Library Used: C:\GENIE2K\CAMFILES\LACBWR.NLB

..... IDENTIFIED NUCLIDES .....

Nuclide Name	Id Confidence	Energy (keV)	Yield (%)	Activity (pCi/M^2)	Activity Uncertainty
K-40	0.994	1460.81*	10.67	1.56341E+005	2.76059E+004
PB-212	1.000	74.81	9.60		
		77.11	17.50		
		87.20	6.30		
		89.80	1.75		
		115.19	0.60		
		238.63*	44.60	2.69423E+003	2.02883E+003
		300.09	3.41		
PB-214	1.000	74.81	6.33		
		77.11	10.70		
		87.20	3.70		
		89.80	1.03		
		241.98	7.49		
		295.21	19.20		
		351.92*	37.20	1.76726E+003	1.79894E+003
		785.91	1.10		
AC-228	0.995	89.95	2.10		
		93.35	3.50		
		129.08	2.80		
		209.28	4.40		
		270.23	3.60		
		327.64	3.20		
		338.32	11.40		
		409.51	2.13		
		463.00	4.40		
		794.70	4.60		
		911.60*	27.70	3.73954E+003	3.16152E+003
		964.60	5.20		
		969.11	16.60		
		1587.90	3.71		

* = Energy line found in the spectrum.
@ = Energy line not used for Weighted Mean Activity
Energy Tolerance : 3.000 keV
Nuclide confidence index threshold = 0.30
Errors quoted at 2.000 sigma

****
***** I N T E R F E R E N C E C O R R E C T E D R E P O R T *****
****

Nuclide Name	Nuclide Id Confidence	Wt mean Activity (pCi/M^2)	Wt mean Activity Uncertainty
K-40	0.994	1.563413E+005	2.760595E+004
PB-212	1.000	2.694230E+003	2.028829E+003
PB-214	1.000	1.767257E+003	1.798938E+003
AC-228	0.995	3.739537E+003	3.161521E+003

? = Nuclide is part of an undetermined solution
X = Nuclide rejected by the interference analysis
@ = Nuclide contains energy lines not used in Weighted Mean Activity

Errors quoted at 2.000 sigma

********** U N I D E N T I F I E D P E A K S **********

Peak Locate Performed on: 3/29/2019 10:40:19 AM
Peak Locate From Channel: 85
Peak Locate To Channel: 8000

Peak No.	Energy (keV)	Peak Size in Counts per Second	Peak CPS % Uncertainty	Peak Type	Tol. Nuclide
3	582.90	4.2431E-002	57.38		

M = First peak in a multiplet region
m = Other peak in a multiplet region
F = Fitted singlet

Errors quoted at 2.000 sigma

****
***** N U C L I D E M D A R E P O R T *****
****

Detector Name: 3844
Sample Geometry:
Sample Title: B1-010-001-FSFC-D22-GM
Nuclide Library Used: C:\GENIE2K\CAMFILES\LACBWR.NLB

	Nuclide Name	Energy (keV)	Yield (%)	Line MDA (pCi/M^2)	Nuclide MDA (pCi/M^2)	Activity (pCi/M^2)	Dec. Level (pCi/M^2)
+	K-40	1460.81*	10.67	1.792E+004	1.79E+004	1.563E+005	7.871E+003
	CO-60	1173.22	100.00	2.331E+003	1.76E+003	-6.350E+001	1.064E+003
		1332.49	100.00	1.761E+003		-5.833E+002	7.717E+002
	CS-134	475.35	1.46	1.121E+005	2.29E+003	-8.583E+004	5.187E+004
		563.23	8.38	2.355E+004		1.172E+004	1.097E+004
		569.32	15.43	1.218E+004		3.315E+003	5.652E+003
		604.70	97.60	2.369E+003		3.528E+002	1.113E+003
		795.84	85.40	2.287E+003		-8.897E+001	1.047E+003
		801.93	8.73	1.972E+004		-1.866E+004	8.911E+003
		1038.57	1.00	2.017E+005		1.763E+004	9.133E+004
		1167.94	1.80	1.209E+005		-6.348E+004	5.484E+004
		1365.15	3.04	2.899E+004		-3.299E+004	1.085E+004
	CS-137	661.65	85.12	2.742E+003	2.74E+003	2.569E+003	1.284E+003
	EU-152	121.78	28.40	8.299E+003	7.44E+003	8.032E+002	4.022E+003
		344.27	26.50	7.440E+003		3.283E+002	3.528E+003
		1407.95	20.70	7.612E+003		1.761E+003	3.259E+003
	EU-154	123.07	40.40	5.666E+003	5.67E+003	-5.387E+003	2.744E+003
		722.30	20.00	1.122E+004		5.675E+003	5.221E+003
		1274.51	34.40	6.241E+003		2.835E+003	2.812E+003
	BI-214	609.31	46.30	4.957E+003	4.96E+003	3.605E+003	2.326E+003
		768.36	5.04	4.008E+004		4.432E+003	1.844E+004
		806.17	1.23	1.465E+005		9.584E+004	6.654E+004
		934.06	3.21	6.272E+004		2.454E+004	2.855E+004
		1120.29	15.10	1.631E+004		6.030E+003	7.499E+003
		1155.19	1.69	1.434E+005		1.809E+005	6.573E+004
		1238.11	5.94	4.088E+004		9.768E+003	1.868E+004
		1280.96	1.47	1.441E+005		2.560E+004	6.478E+004
		1377.67	4.11	4.274E+004		-1.397E+004	1.866E+004
		1385.31	0.78	2.322E+005		-5.475E+004	1.017E+005
		1401.50	1.39	1.046E+005		-6.933E+004	4.416E+004
		1407.98	2.48	6.354E+004		1.470E+004	2.720E+004
		1509.19	2.19	6.376E+004		2.888E+003	2.644E+004
		1661.28	1.15	1.075E+005		4.101E+004	4.266E+004
		1729.60	3.05	5.993E+004		3.820E+004	2.566E+004
		1764.49	15.80	1.215E+004		3.309E+003	5.229E+003
		1847.44	2.12	4.440E+004		9.563E+003	1.573E+004
>		2118.54	1.21	0.000E+000		0.000E+000	0.000E+000
+	PB-214	74.81	6.33	7.853E+004	2.84E+003	8.643E+003	3.813E+004
		77.11	10.70	4.427E+004		3.841E+004	2.152E+004
		87.20	3.70	9.485E+004		2.694E+004	4.615E+004
		89.80	1.03	3.262E+005		1.190E+005	1.587E+005
		241.98	7.49	2.957E+004		3.826E+004	1.423E+004

	Nuclide Name	Energy (keV)	Yield (%)	Line MDA (pCi/M^2)	Nuclide MDA (pCi/M^2)	Activity (pCi/M^2)	Dec. Level (pCi/M^2)
+	PB-214	295.21	19.20	1.044E+004	2.84E+003	9.433E+003	4.977E+003
		351.92*	37.20	2.843E+003		1.767E+003	1.283E+003
		785.91	1.10	1.935E+005		-1.912E+005	8.934E+004

+ = Nuclide identified during the nuclide identification
* = Energy line found in the spectrum
> = Calculated MDA is zero due to zero counts in the region, or
the region is outside the spectrum, or MDA has not been calculated
@ = Half-life too short to be able to perform the decay correction

```
***********************************************************************
*****        G A M M A   S P E C T R U M   A N A L Y S I S        *****
***********************************************************************


Filename: 3844

Report Generated On              : 3/28/2019  11:49:34 AM

Sample Title                     : B1-010-001-FSFC-D23-GM
Sample Description               : Rx Bowl 3M Concrete
Sample Identification            : D23
Sample Type                      : Gamma Direct
Sample Geometry                  :

Peak Locate Threshold            :  3.00
Peak Locate Range (in channels)  :    85 -  8000
Peak Area Range (in channels)    :    85 -  8000
Identification Energy Tolerance  :    3.000 keV

Sample Size                      :  2.827E+001 M^2

Sample Taken On                  : 3/28/2019  11:39:00 AM
Acquisition Started              : 3/28/2019  11:39:32 AM

Live Time                        :      600.0 seconds
Real Time                        :      600.2 seconds

Dead Time                        :   0.03 %


              Energy Calibration Used Done On       : 10/24/2017
              Efficiency Calibration Used Done On   : 3/26/2019
              Efficiency ID                         : RxBOWL_CON_3M
```

****
***** P E A K A N A L Y S I S R E P O R T *****
****

Detector Name: 3844
Sample Title: B1-010-001-FSFC-D23-GM
Peak Analysis Performed on: 3/28/2019 11:49:33 AM
Peak Analysis From Channel: 85
Peak Analysis To Channel: 8000

Peak No.	ROI start	ROI end	Peak centroid	Energy (keV)	FWHM (keV)	Net Peak Area	Net Area Uncert.	Continuum Counts
1	949-	960	954.31	238.65	0.89	2.63E+001	27.52	6.47E+001
2	1400-	1414	1406.90	351.87	0.31	3.60E+001	26.24	4.70E+001
3	5828-	5851	5839.17	1459.80	1.97	2.25E+002	31.44	5.64E+000

M = First peak in a multiplet region
m = Other peak in a multiplet region
F = Fitted singlet

Errors quoted at 2.000 sigma

****
***** N U C L I D E I D E N T I F I C A T I O N R E P O R T *****
****

Sample Title: B1-010-001-FSFC-D23-GM
Nuclide Library Used: C:\GENIE2K\CAMFILES\LACBWR.NLB

..... IDENTIFIED NUCLIDES .....

Nuclide Name	Id Confidence	Energy (keV)	Yield (%)	Activity (pCi/M^2)	Activity Uncertainty
K-40	0.982	1460.81*	10.67	8.11277E+004	1.31530E+004
PB-212	1.000	74.81	9.60		
		77.11	17.50		
		87.20	6.30		
		89.80	1.75		
		115.19	0.60		
		238.63*	44.60	8.19556E+002	8.66462E+002
		300.09	3.41		
PB-214	1.000	74.81	6.33		
		77.11	10.70		
		87.20	3.70		
		89.80	1.03		
		241.98	7.49		
		295.21	19.20		
		351.92*	37.20	1.65436E+003	1.23531E+003
		785.91	1.10		

* = Energy line found in the spectrum.
@ = Energy line not used for Weighted Mean Activity
Energy Tolerance : 3.000 keV
Nuclide confidence index threshold = 0.30
Errors quoted at 2.000 sigma

****
***** I N T E R F E R E N C E C O R R E C T E D R E P O R T *****
****

Nuclide Name	Nuclide Id Confidence	Wt mean Activity (pCi/M^2)	Wt mean Activity Uncertainty
K-40	0.982	8.112769E+004	1.315304E+004
PB-212	1.000	8.195564E+002	8.664624E+002
PB-214	1.000	1.654361E+003	1.235309E+003

? = Nuclide is part of an undetermined solution
X = Nuclide rejected by the interference analysis
@ = Nuclide contains energy lines not used in Weighted Mean Activity

Errors quoted at 2.000 sigma

********** U N I D E N T I F I E D P E A K S **********

Peak Locate Performed on: 3/28/2019 11:49:33 AM
Peak Locate From Channel: 85
Peak Locate To Channel: 8000

Peak No.	Energy (keV)	Peak Size in Counts per Second	Peak CPS % Uncertainty	Peak Type	Tol. Nuclide

All peaks were identified.

****
***** N U C L I D E M D A R E P O R T *****
****

Detector Name: 3844
Sample Geometry:
Sample Title: B1-010-001-FSFC-D23-GM
Nuclide Library Used: C:\GENIE2K\CAMFILES\LACBWR.NLB

	Nuclide Name	Energy (keV)	Yield (%)	Line MDA (pCi/M^2)	Nuclide MDA (pCi/M^2)	Activity (pCi/M^2)	Dec. Level (pCi/M^2)
+	K-40	1460.81*	10.67	6.494E+003	6.49E+003	8.113E+004	2.760E+003
	CO-60	1173.22	100.00	1.017E+003	9.00E+002	-1.197E+002	4.629E+002
		1332.49	100.00	9.005E+002		8.278E+002	4.015E+002
	CS-134	475.35	1.46	6.558E+004	1.07E+003	4.560E+004	3.092E+004
		563.23	8.38	1.085E+004		3.372E+003	5.064E+003
		569.32	15.43	5.673E+003		5.218E+003	2.640E+003
		604.70	97.60	1.066E+003		1.005E+003	5.009E+002
		795.84	85.40	1.252E+003		1.097E+003	5.829E+002
		801.93	8.73	1.134E+004		-2.081E+004	5.245E+003
		1038.57	1.00	8.755E+004		-3.877E+004	3.951E+004
		1167.94	1.80	5.990E+004		4.614E+004	2.743E+004
		1365.15	3.04	2.423E+004		-1.396E+004	1.048E+004
	CS-137	661.65	85.12	1.171E+003	1.17E+003	1.172E+003	5.465E+002
	EU-152	121.78	28.40	4.007E+003	3.57E+003	2.659E+003	1.946E+003
		344.27	26.50	3.570E+003		-1.925E+003	1.699E+003
		1407.95	20.70	4.059E+003		-9.921E+002	1.785E+003
	EU-154	123.07	40.40	2.734E+003	2.73E+003	-2.634E+003	1.327E+003
		722.30	20.00	4.446E+003		-5.464E+003	2.049E+003
		1274.51	34.40	2.880E+003		-1.006E+003	1.302E+003
	BI-214	609.31	46.30	2.270E+003	2.27E+003	5.563E+002	1.067E+003
		768.36	5.04	1.864E+004		-3.170E+003	8.604E+003
		806.17	1.23	7.925E+004		6.688E+004	3.661E+004
		934.06	3.21	3.303E+004		6.725E+003	1.526E+004
		1120.29	15.10	7.065E+003		3.433E+002	3.238E+003
		1155.19	1.69	6.415E+004		2.073E+004	2.941E+004
		1238.11	5.94	1.976E+004		-9.323E+003	9.094E+003
		1280.96	1.47	7.342E+004		-6.127E+003	3.347E+004
		1377.67	4.11	2.287E+004		1.501E+004	1.022E+004
		1385.31	0.78	1.115E+005		9.488E+004	4.935E+004
		1401.50	1.39	5.876E+004		1.105E+004	2.575E+004
		1407.98	2.48	3.388E+004		-8.281E+003	1.490E+004
		1509.19	2.19	2.355E+004		8.980E+003	9.343E+003
		1661.28	1.15	6.104E+004		-3.358E+003	2.556E+004
		1729.60	3.05	2.005E+004		8.528E+003	8.100E+003
		1764.49	15.80	7.228E+003		4.372E+003	3.237E+003
		1847.44	2.12	3.204E+004		1.494E+004	1.313E+004
>		2118.54	1.21	0.000E+000		0.000E+000	0.000E+000
+	PB-214	74.81	6.33	3.772E+004	1.89E+003	3.315E+004	1.834E+004
		77.11	10.70	2.033E+004		8.092E+003	9.882E+003
		87.20	3.70	4.472E+004		2.502E+004	2.178E+004
		89.80	1.03	1.551E+005		1.204E+005	7.554E+004
		241.98	7.49	1.373E+004		3.161E+003	6.615E+003

	Nuclide Name	Energy (keV)	Yield (%)	Line MDA (pCi/M^2)	Nuclide MDA (pCi/M^2)	Activity (pCi/M^2)	Dec. Level (pCi/M^2)
+	PB-214	295.21	19.20	5.122E+003	1.89E+003	-1.551E+003	2.452E+003
		351.92*	37.20	1.890E+003		1.654E+003	8.826E+002
		785.91	1.10	8.569E+004		4.946E+004	3.953E+004

+ = Nuclide identified during the nuclide identification
* = Energy line found in the spectrum
> = Calculated MDA is zero due to zero counts in the region, or the region is outside the spectrum, or MDA has not been calculated
@ = Half-life too short to be able to perform the decay correction

```
***********************************************************************
*****        G A M M A   S P E C T R U M   A N A L Y S I S        *****
***********************************************************************


Filename: 3844

Report Generated On              : 3/28/2019  12:02:52 PM

Sample Title                     : B1-010-001-FSFC-D24-GM
Sample Description               : Rx Bowl 3M Concrete
Sample Identification            : D24
Sample Type                      : Gamma Direct
Sample Geometry                  :

Peak Locate Threshold            :  3.00
Peak Locate Range (in channels)  :    85 -  8000
Peak Area Range (in channels)    :    85 -  8000
Identification Energy Tolerance  :    3.000 keV

Sample Size                      :  2.827E+001 M^2

Sample Taken On                  : 3/28/2019  11:51:00 AM
Acquisition Started              : 3/28/2019  11:52:52 AM

Live Time                        :      600.0 seconds
Real Time                        :      600.2 seconds

Dead Time                        :   0.04 %


              Energy Calibration Used Done On       : 10/24/2017
              Efficiency Calibration Used Done On   : 3/26/2019
              Efficiency ID                         : RxBOWL_CON_3M
```

****
***** P E A K A N A L Y S I S R E P O R T *****
****

Detector Name: 3844
Sample Title: B1-010-001-FSFC-D24-GM
Peak Analysis Performed on: 3/28/2019 12:02:52 PM
Peak Analysis From Channel: 85
Peak Analysis To Channel: 8000

Peak No.	ROI start	ROI end	Peak centroid	Energy (keV)	FWHM (keV)	Net Peak Area	Net Area Uncert.	Continuum Counts
1	294-	306	299.51	74.81	0.85	5.34E+001	38.99	1.24E+002
2	948-	962	954.13	238.60	1.02	5.76E+001	32.86	7.34E+001
3	2428-	2439	2433.33	608.59	0.47	2.20E+001	17.27	2.00E+001
4	3634-	3647	3640.53	910.41	0.80	1.99E+001	16.41	1.61E+001
5	5828-	5850	5839.78	1459.96	1.59	2.18E+002	31.00	5.68E+000

M = First peak in a multiplet region
m = Other peak in a multiplet region
F = Fitted singlet

Errors quoted at 2.000 sigma

****
***** N U C L I D E I D E N T I F I C A T I O N R E P O R T *****
****

Sample Title: B1-010-001-FSFC-D24-GM
Nuclide Library Used: C:\GENIE2K\CAMFILES\LACBWR.NLB

..... IDENTIFIED NUCLIDES .....

Nuclide Name	Id Confidence	Energy (keV)	Yield (%)	Activity (pCi/M^2)	Activity Uncertainty
K-40	0.987	1460.81*	10.67	7.85984E+004	1.29130E+004
PB-212	0.713	74.81*	9.60	1.34566E+004	1.01952E+004
		77.11	17.50		
		87.20	6.30		
		89.80	1.75		
		115.19	0.60		
		238.63*	44.60	1.79207E+003	1.06172E+003
		300.09	3.41		
BI-214	0.996	609.31*	46.30	1.10785E+003	8.80160E+002
		768.36	5.04		
		806.17	1.23		
		934.06	3.21		
		1120.29	15.10		
		1155.19	1.69		
		1238.11	5.94		
		1280.96	1.47		
		1377.67	4.11		
		1385.31	0.78		
		1401.50	1.39		
		1407.98	2.48		
		1509.19	2.19		
		1661.28	1.15		
		1729.60	3.05		
		1764.49	15.80		
		1847.44	2.12		
		2118.54	1.21		
AC-228	0.993	89.95	2.10		
		93.35	3.50		
		129.08	2.80		
		209.28	4.40		
		270.23	3.60		
		327.64	3.20		
		338.32	11.40		
		409.51	2.13		
		463.00	4.40		
		794.70	4.60		
		911.60*	27.70	2.11301E+003	1.75586E+003
		964.60	5.20		
		969.11	16.60		
		1587.90	3.71		

* = Energy line found in the spectrum.
@ = Energy line not used for Weighted Mean Activity
Energy Tolerance : 3.000 keV
Nuclide confidence index threshold = 0.30
Errors quoted at 2.000 sigma

****
***** I N T E R F E R E N C E C O R R E C T E D R E P O R T *****
****

Nuclide Name	Nuclide Id Confidence	Wt mean Activity (pCi/M^2)	Wt mean Activity Uncertainty
K-40	0.987	7.859841E+004	1.291303E+004
PB-212	0.713	1.917216E+003	1.056010E+003
BI-214	0.996	1.107855E+003	8.801605E+002
AC-228	0.993	2.113009E+003	1.755856E+003

? = Nuclide is part of an undetermined solution
X = Nuclide rejected by the interference analysis
@ = Nuclide contains energy lines not used in Weighted Mean Activity

Errors quoted at 2.000 sigma

********** U N I D E N T I F I E D P E A K S **********

Peak Locate Performed on: 3/28/2019 12:02:52 PM
Peak Locate From Channel: 85
Peak Locate To Channel: 8000

Peak No.	Energy (keV)	Peak Size in Counts per Second	Peak CPS % Uncertainty	Peak Type	Tol. Nuclide

All peaks were identified.

****
***** N U C L I D E M D A R E P O R T *****
****

Detector Name: 3844
Sample Geometry:
Sample Title: B1-010-001-FSFC-D24-GM
Nuclide Library Used: C:\GENIE2K\CAMFILES\LACBWR.NLB

	Nuclide Name	Energy (keV)	Yield (%)	Line MDA (pCi/M^2)	Nuclide MDA (pCi/M^2)	Activity (pCi/M^2)	Dec. Level (pCi/M^2)
+	K-40	1460.81*	10.67	6.527E+003	6.53E+003	7.860E+004	2.777E+003
	CO-60	1173.22	100.00	1.105E+003	7.46E+002	4.445E+002	5.071E+002
		1332.49	100.00	7.459E+002		-4.985E+002	3.243E+002
	CS-134	475.35	1.46	6.691E+004	1.10E+003	-6.131E+004	3.158E+004
		563.23	8.38	1.077E+004		-3.263E+002	5.026E+003
		569.32	15.43	5.968E+003		-4.134E+003	2.788E+003
		604.70	97.60	1.225E+003		1.040E+003	5.801E+002
		795.84	85.40	1.101E+003		8.173E+002	5.075E+002
		801.93	8.73	1.016E+004		2.009E+003	4.657E+003
		1038.57	1.00	9.657E+004		2.194E+004	4.402E+004
		1167.94	1.80	6.258E+004		-5.364E+004	2.877E+004
		1365.15	3.04	2.568E+004		7.829E+003	1.121E+004
	CS-137	661.65	85.12	1.171E+003	1.17E+003	2.288E+002	5.465E+002
	EU-152	121.78	28.40	4.052E+003	3.69E+003	8.815E+002	1.968E+003
		344.27	26.50	3.685E+003		-2.658E+003	1.756E+003
		1407.95	20.70	3.748E+003		1.061E+003	1.629E+003
	EU-154	123.07	40.40	2.817E+003	2.82E+003	-3.530E+003	1.368E+003
		722.30	20.00	5.627E+003		6.918E+002	2.640E+003
		1274.51	34.40	3.049E+003		1.260E+003	1.386E+003
+	BI-214	609.31*	46.30	1.336E+003	1.34E+003	1.108E+003	5.997E+002
		768.36	5.04	1.999E+004		9.014E+002	9.280E+003
		806.17	1.23	7.393E+004		-1.132E+004	3.395E+004
		934.06	3.21	2.946E+004		-2.991E+004	1.348E+004
		1120.29	15.10	7.811E+003		3.197E+001	3.612E+003
		1155.19	1.69	6.627E+004		4.127E+004	3.046E+004
		1238.11	5.94	1.915E+004		1.807E+003	8.785E+003
		1280.96	1.47	6.226E+004		-3.054E+004	2.789E+004
		1377.67	4.11	2.244E+004		5.946E+003	1.000E+004
		1385.31	0.78	1.115E+005		-1.469E+005	4.935E+004
		1401.50	1.39	6.025E+004		-3.355E+004	2.649E+004
		1407.98	2.48	3.128E+004		8.855E+003	1.360E+004
		1509.19	2.19	2.697E+004		-1.668E+004	1.105E+004
		1661.28	1.15	5.166E+004		2.198E+004	2.087E+004
		1729.60	3.05	2.369E+004		1.145E+003	9.920E+003
		1764.49	15.80	5.598E+003		1.600E+003	2.423E+003
		1847.44	2.12	3.556E+004		1.897E+003	1.489E+004
>		2118.54	1.21	0.000E+000		0.000E+000	0.000E+000
	PB-214	74.81	6.33	3.858E+004	2.76E+003	6.146E+004	1.877E+004
		77.11	10.70	2.042E+004		5.627E+003	9.929E+003
		87.20	3.70	4.584E+004		3.571E+004	2.234E+004
		89.80	1.03	1.592E+005		6.631E+004	7.761E+004
		241.98	7.49	1.451E+004		-5.202E+003	7.003E+003

Nuclide Name	Energy (keV)	Yield (%)	Line MDA (pCi/M^2)	Nuclide MDA (pCi/M^2)	Activity (pCi/M^2)	Dec. Level (pCi/M^2)
PB-214	295.21	19.20	5.377E+003	2.76E+003	6.586E+003	2.579E+003
	351.92	37.20	2.763E+003		2.704E+003	1.319E+003
	785.91	1.10	9.354E+004		2.444E+004	4.345E+004

+ = Nuclide identified during the nuclide identification
* = Energy line found in the spectrum
> = Calculated MDA is zero due to zero counts in the region, or
the region is outside the spectrum, or MDA has not been calculated
@ = Half-life too short to be able to perform the decay correction

```
***********************************************************************
*****        G A M M A   S P E C T R U M   A N A L Y S I S        *****
***********************************************************************


Filename: 3844

Report Generated On              : 3/28/2019  12:17:06 PM

Sample Title                     : B1-010-001-FSFC-D25-GM
Sample Description               : Rx Bowl 3M Concrete
Sample Identification            : D25
Sample Type                      : Gamma Direct
Sample Geometry                  :

Peak Locate Threshold            :  3.00
Peak Locate Range (in channels)  :    85 -  8000
Peak Area Range (in channels)    :    85 -  8000
Identification Energy Tolerance  :    3.000 keV

Sample Size                      :  2.827E+001 M^2

Sample Taken On                  : 3/28/2019  12:05:00 AM
Acquisition Started              : 3/28/2019  12:07:04 PM

Live Time                        :      600.0 seconds
Real Time                        :      600.2 seconds

Dead Time                        :   0.04 %


              Energy Calibration Used Done On       : 10/24/2017
              Efficiency Calibration Used Done On   : 3/26/2019
              Efficiency ID                         : RxBOWL_CON_3M
```

****
***** P E A K A N A L Y S I S R E P O R T *****
****

Detector Name: 3844
Sample Title: B1-010-001-FSFC-D25-GM
Peak Analysis Performed on: 3/28/2019 12:17:05 PM
Peak Analysis From Channel: 85
Peak Analysis To Channel: 8000

Peak No.	ROI start	ROI end	Peak centroid	Energy (keV)	FWHM (keV)	Net Peak Area	Net Area Uncert.	Continuum Counts
1	947-	960	953.46	238.43	0.45	4.78E+001	32.12	7.62E+001
2	2428-	2443	2435.25	609.07	0.73	2.80E+001	18.77	2.00E+001
3	3633-	3647	3640.28	910.34	0.38	3.30E+001	17.46	1.50E+001
4	5828-	5850	5839.23	1459.82	1.03	2.66E+002	32.62	0.00E+000

M = First peak in a multiplet region
m = Other peak in a multiplet region
F = Fitted singlet

Errors quoted at 2.000 sigma

****
***** N U C L I D E I D E N T I F I C A T I O N R E P O R T *****
****

Sample Title: B1-010-001-FSFC-D25-GM
Nuclide Library Used: C:\GENIE2K\CAMFILES\LACBWR.NLB

..... IDENTIFIED NUCLIDES .....

Nuclide Name	Id Confidence	Energy (keV)	Yield (%)	Activity (pCi/M^2)	Activity Uncertainty
K-40	0.983	1460.81*	10.67	9.57578E+004	1.41588E+004
PB-212	1.000	74.81	9.60		
		77.11	17.50		
		87.20	6.30		
		89.80	1.75		
		115.19	0.60		
		238.63*	44.60	1.48775E+003	1.02683E+003
		300.09	3.41		
BI-214	1.000	609.31*	46.30	1.40911E+003	9.61511E+002
		768.36	5.04		
		806.17	1.23		
		934.06	3.21		
		1120.29	15.10		
		1155.19	1.69		
		1238.11	5.94		
		1280.96	1.47		
		1377.67	4.11		
		1385.31	0.78		
		1401.50	1.39		
		1407.98	2.48		
		1509.19	2.19		
		1661.28	1.15		
		1729.60	3.05		
		1764.49	15.80		
		1847.44	2.12		
		2118.54	1.21		
AC-228	0.992	89.95	2.10		
		93.35	3.50		
		129.08	2.80		
		209.28	4.40		
		270.23	3.60		
		327.64	3.20		
		338.32	11.40		
		409.51	2.13		
		463.00	4.40		
		794.70	4.60		
		911.60*	27.70	3.49726E+003	1.89375E+003
		964.60	5.20		
		969.11	16.60		
		1587.90	3.71		

* = Energy line found in the spectrum.
@ = Energy line not used for Weighted Mean Activity
Energy Tolerance : 3.000 keV
Nuclide confidence index threshold = 0.30
Errors quoted at 2.000 sigma

****
***** I N T E R F E R E N C E C O R R E C T E D R E P O R T *****
****

Nuclide Name	Nuclide Id Confidence	Wt mean Activity (pCi/M^2)	Wt mean Activity Uncertainty
K-40	0.983	9.575782E+004	1.415880E+004
PB-212	1.000	1.487755E+003	1.026833E+003
BI-214	1.000	1.409106E+003	9.615115E+002
AC-228	0.992	3.497263E+003	1.893754E+003

? = Nuclide is part of an undetermined solution
X = Nuclide rejected by the interference analysis
@ = Nuclide contains energy lines not used in Weighted Mean Activity

Errors quoted at 2.000 sigma

********** U N I D E N T I F I E D P E A K S **********

Peak Locate Performed on: 3/28/2019 12:17:05 PM
Peak Locate From Channel: 85
Peak Locate To Channel: 8000

Peak No.	Energy (keV)	Peak Size in Counts per Second	Peak CPS % Uncertainty	Peak Type	Tol. Nuclide

All peaks were identified.

****
***** N U C L I D E M D A R E P O R T *****
****

Detector Name: 3844
Sample Geometry:
Sample Title: B1-010-001-FSFC-D25-GM
Nuclide Library Used: C:\GENIE2K\CAMFILES\LACBWR.NLB

	Nuclide Name	Energy (keV)	Yield (%)	Line MDA (pCi/M^2)	Nuclide MDA (pCi/M^2)	Activity (pCi/M^2)	Dec. Level (pCi/M^2)
+	K-40	1460.81*	10.67	9.741E+002	9.74E+002	9.576E+004	0.000E+000
	CO-60	1173.22	100.00	1.030E+003	8.83E+002	4.602E+002	4.696E+002
		1332.49	100.00	8.830E+002		2.847E+002	3.928E+002
	CS-134	475.35	1.46	6.459E+004	1.11E+003	-1.047E+004	3.042E+004
		563.23	8.38	1.062E+004		-1.929E+003	4.951E+003
		569.32	15.43	6.133E+003		-3.421E+003	2.870E+003
		604.70	97.60	1.108E+003		-1.271E+002	5.220E+002
		795.84	85.40	1.123E+003		4.093E+001	5.184E+002
		801.93	8.73	1.061E+004		-5.201E+003	4.881E+003
		1038.57	1.00	9.662E+004		4.520E+004	4.404E+004
		1167.94	1.80	5.924E+004		-2.697E+004	2.710E+004
		1365.15	3.04	2.424E+004		7.618E+003	1.049E+004
	CS-137	661.65	85.12	1.179E+003	1.18E+003	7.795E+002	5.506E+002
	EU-152	121.78	28.40	4.022E+003	3.34E+003	2.641E+003	1.953E+003
		344.27	26.50	3.343E+003		-4.599E+003	1.585E+003
		1407.95	20.70	4.436E+003		1.180E+003	1.973E+003
	EU-154	123.07	40.40	2.817E+003	2.82E+003	-1.093E+001	1.368E+003
		722.30	20.00	4.700E+003		2.472E+003	2.176E+003
		1274.51	34.40	2.837E+003		-2.278E+003	1.280E+003
+	BI-214	609.31*	46.30	1.419E+003	1.42E+003	1.409E+003	6.415E+002
		768.36	5.04	1.916E+004		1.041E+003	8.863E+003
		806.17	1.23	7.472E+004		2.173E+004	3.435E+004
		934.06	3.21	3.241E+004		1.783E+004	1.495E+004
		1120.29	15.10	7.221E+003		4.483E+003	3.316E+003
		1155.19	1.69	5.811E+004		2.044E+004	2.638E+004
		1238.11	5.94	2.131E+004		8.603E+003	9.869E+003
		1280.96	1.47	5.761E+004		7.535E+003	2.556E+004
		1377.67	4.11	1.859E+004		-2.242E+002	8.080E+003
		1385.31	0.78	1.038E+005		0.000E+000	4.550E+004
		1401.50	1.39	6.449E+004		1.425E+004	2.862E+004
		1407.98	2.48	3.702E+004		9.845E+003	1.647E+004
		1509.19	2.19	3.129E+004		1.796E+004	1.321E+004
		1661.28	1.15	5.811E+004		2.930E+004	2.410E+004
		1729.60	3.05	1.530E+004		4.264E+003	5.727E+003
		1764.49	15.80	6.544E+003		3.611E+003	2.896E+003
		1847.44	2.12	2.297E+004		6.402E+003	8.598E+003
>		2118.54	1.21	0.000E+000		0.000E+000	0.000E+000
	PB-214	74.81	6.33	3.716E+004	2.61E+003	2.242E+004	1.806E+004
		77.11	10.70	2.077E+004		1.644E+004	1.010E+004
		87.20	3.70	4.263E+004		-2.617E+004	2.074E+004
		89.80	1.03	1.519E+005		7.177E+004	7.396E+004
		241.98	7.49	1.462E+004		1.955E+004	7.056E+003

Nuclide Name	Energy (keV)	Yield (%)	Line MDA (pCi/M^2)	Nuclide MDA (pCi/M^2)	Activity (pCi/M^2)	Dec. Level (pCi/M^2)
PB-214	295.21	19.20	4.930E+003	2.61E+003	-5.908E+002	2.355E+003
	351.92	37.20	2.611E+003		8.049E+002	1.243E+003
	785.91	1.10	8.233E+004		-7.799E+004	3.785E+004

+ = Nuclide identified during the nuclide identification
* = Energy line found in the spectrum
> = Calculated MDA is zero due to zero counts in the region, or
the region is outside the spectrum, or MDA has not been calculated
@ = Half-life too short to be able to perform the decay correction

```
************************************************************************
*****        G A M M A   S P E C T R U M   A N A L Y S I S        *****
************************************************************************


Filename: 3844

Report Generated On              : 3/28/2019   8:21:21 AM

Sample Title                     : B1-010-001-FSFC-D26-GM
Sample Description               : Rx Bowl 3M Concrete
Sample Identification            : D26
Sample Type                      : Gamma Direct
Sample Geometry                  :

Peak Locate Threshold            :  3.00
Peak Locate Range (in channels)  :    85 -  8000
Peak Area Range (in channels)    :    85 -  8000
Identification Energy Tolerance  :    3.000 keV

Sample Size                      :  2.827E+001 M^2

Sample Taken On                  : 3/28/2019   7:54:00 AM
Acquisition Started              : 3/28/2019   8:11:21 AM

Live Time                        :      600.0 seconds
Real Time                        :      600.2 seconds

Dead Time                        :   0.03 %


              Energy Calibration Used Done On       : 10/24/2017
              Efficiency Calibration Used Done On   : 3/26/2019
              Efficiency ID                         : RxBOWL_CON_3M
```

****
***** P E A K A N A L Y S I S R E P O R T *****
****

Detector Name: 3844
Sample Title: B1-010-001-FSFC-D26-GM
Peak Analysis Performed on: 3/28/2019 8:21:21 AM
Peak Analysis From Channel: 85
Peak Analysis To Channel: 8000

Peak No.	ROI start	ROI end	Peak centroid	Energy (keV)	FWHM (keV)	Net Peak Area	Net Area Uncert.	Continuum Counts
1	947-	961	954.01	238.57	0.80	5.27E+001	32.90	7.53E+001
2	1400-	1414	1406.03	351.65	0.41	5.08E+001	22.57	2.63E+001
3	3636-	3649	3642.43	910.88	0.35	2.99E+001	15.90	1.21E+001
4	5827-	5852	5840.35	1460.10	1.96	2.60E+002	33.90	6.49E+000

M = First peak in a multiplet region
m = Other peak in a multiplet region
F = Fitted singlet

Errors quoted at 2.000 sigma

****
***** N U C L I D E I D E N T I F I C A T I O N R E P O R T *****
****

Sample Title: B1-010-001-FSFC-D26-GM
Nuclide Library Used: C:\GENIE2K\CAMFILES\LACBWR.NLB

..... IDENTIFIED NUCLIDES .....

Nuclide Name	Id Confidence	Energy (keV)	Yield (%)	Activity (pCi/M^2)	Activity Uncertainty
K-40	0.991	1460.81*	10.67	9.34334E+004	1.44404E+004
PB-212	1.000	74.81	9.60		
		77.11	17.50		
		87.20	6.30		
		89.80	1.75		
		115.19	0.60		
		238.63*	44.60	1.64017E+003	1.05670E+003
		300.09	3.41		
PB-214	0.999	74.81	6.33		
		77.11	10.70		
		87.20	3.70		
		89.80	1.03		
		241.98	7.49		
		295.21	19.20		
		351.92*	37.20	2.33317E+003	1.10273E+003
		785.91	1.10		
AC-228	0.997	89.95	2.10		
		93.35	3.50		
		129.08	2.80		
		209.28	4.40		
		270.23	3.60		
		327.64	3.20		
		338.32	11.40		
		409.51	2.13		
		463.00	4.40		
		794.70	4.60		
		911.60*	27.70	3.16711E+003	1.72495E+003
		964.60	5.20		
		969.11	16.60		
		1587.90	3.71		

* = Energy line found in the spectrum.
@ = Energy line not used for Weighted Mean Activity
Energy Tolerance : 3.000 keV
Nuclide confidence index threshold = 0.30
Errors quoted at 2.000 sigma

****
***** I N T E R F E R E N C E C O R R E C T E D R E P O R T *****
****

Nuclide Name	Nuclide Id Confidence	Wt mean Activity (pCi/M^2)	Wt mean Activity Uncertainty
K-40	0.991	9.343339E+004	1.444039E+004
PB-212	1.000	1.640174E+003	1.056703E+003
PB-214	0.999	2.333166E+003	1.102726E+003
AC-228	0.997	3.167115E+003	1.724951E+003

? = Nuclide is part of an undetermined solution
X = Nuclide rejected by the interference analysis
@ = Nuclide contains energy lines not used in Weighted Mean Activity

Errors quoted at 2.000 sigma

********** U N I D E N T I F I E D P E A K S **********

Peak Locate Performed on: 3/28/2019 8:21:21 AM
Peak Locate From Channel: 85
Peak Locate To Channel: 8000

Peak No.	Energy (keV)	Peak Size in Counts per Second	Peak CPS % Uncertainty	Peak Type	Tol. Nuclide

All peaks were identified.

****
***** N U C L I D E M D A R E P O R T *****
****

Detector Name: 3844
Sample Geometry:
Sample Title: B1-010-001-FSFC-D26-GM
Nuclide Library Used: C:\GENIE2K\CAMFILES\LACBWR.NLB

	Nuclide Name	Energy (keV)	Yield (%)	Line MDA (pCi/M^2)	Nuclide MDA (pCi/M^2)	Activity (pCi/M^2)	Dec. Level (pCi/M^2)
+	K-40	1460.81*	10.67	7.213E+003	7.21E+003	9.343E+004	3.119E+003
	CO-60	1173.22	100.00	1.004E+003	9.51E+002	-1.454E+002	4.563E+002
		1332.49	100.00	9.512E+002		6.423E+002	4.269E+002
	CS-134	475.35	1.46	5.958E+004	1.14E+003	-1.755E+003	2.791E+004
		563.23	8.38	1.179E+004		7.712E+003	5.533E+003
		569.32	15.43	5.886E+003		3.295E+003	2.746E+003
		604.70	97.60	1.137E+003		1.727E+003	5.363E+002
		795.84	85.40	1.194E+003		1.115E+003	5.540E+002
		801.93	8.73	1.027E+004		-7.157E+003	4.714E+003
		1038.57	1.00	8.618E+004		-6.271E+004	3.882E+004
		1167.94	1.80	5.334E+004		1.598E+004	2.415E+004
		1365.15	3.04	2.098E+004		-2.252E+004	8.861E+003
	CS-137	661.65	85.12	1.031E+003	1.03E+003	1.175E+002	4.768E+002
	EU-152	121.78	28.40	4.117E+003	3.37E+003	4.706E+003	2.001E+003
		344.27	26.50	3.370E+003		-3.497E+003	1.599E+003
		1407.95	20.70	4.059E+003		-4.069E+003	1.785E+003
	EU-154	123.07	40.40	2.806E+003	2.75E+003	-1.316E+003	1.363E+003
		722.30	20.00	4.700E+003		3.060E+003	2.176E+003
		1274.51	34.40	2.747E+003		1.893E+003	1.235E+003
	BI-214	609.31	46.30	2.431E+003	2.43E+003	2.144E+003	1.147E+003
		768.36	5.04	2.185E+004		1.819E+004	1.021E+004
		806.17	1.23	7.393E+004		-1.311E+004	3.395E+004
		934.06	3.21	2.911E+004		2.185E+003	1.330E+004
		1120.29	15.10	8.552E+003		2.254E+003	3.982E+003
		1155.19	1.69	5.480E+004		2.714E+004	2.473E+004
		1238.11	5.94	1.996E+004		1.792E+004	9.194E+003
		1280.96	1.47	6.656E+004		5.130E+004	3.004E+004
		1377.67	4.11	2.061E+004		1.058E+004	9.093E+003
		1385.31	0.78	1.065E+005		2.122E+004	4.682E+004
		1401.50	1.39	6.716E+004		4.105E+004	2.995E+004
		1407.98	2.48	3.388E+004		-3.396E+004	1.490E+004
		1509.19	2.19	3.499E+004		2.335E+004	1.507E+004
		1661.28	1.15	4.802E+004		-9.890E+003	1.905E+004
		1729.60	3.05	2.255E+004		1.137E+004	9.353E+003
		1764.49	15.80	7.356E+003		7.236E+003	3.301E+003
		1847.44	2.12	3.717E+004		2.134E+004	1.570E+004
>		2118.54	1.21	0.000E+000		0.000E+000	0.000E+000
+	PB-214	74.81	6.33	3.949E+004	1.45E+003	3.959E+004	1.923E+004
		77.11	10.70	2.188E+004		2.483E+004	1.066E+004
		87.20	3.70	4.343E+004		-7.361E+003	2.114E+004
		89.80	1.03	1.494E+005		-2.071E+004	7.268E+004
		241.98	7.49	1.507E+004		1.045E+004	7.280E+003

	Nuclide Name	Energy (keV)	Yield (%)	Line MDA (pCi/M^2)	Nuclide MDA (pCi/M^2)	Activity (pCi/M^2)	Dec. Level (pCi/M^2)
+	PB-214	295.21	19.20	5.418E+003	1.45E+003	3.949E+003	2.599E+003
		351.92*	37.20	1.448E+003		2.333E+003	6.619E+002
		785.91	1.10	8.318E+004		-3.184E+004	3.827E+004

+ = Nuclide identified during the nuclide identification
* = Energy line found in the spectrum
> = Calculated MDA is zero due to zero counts in the region, or
the region is outside the spectrum, or MDA has not been calculated
@ = Half-life too short to be able to perform the decay correction

```
************************************************************************
*****        G A M M A   S P E C T R U M   A N A L Y S I S        *****
************************************************************************


Filename: C:\LACBWR\B1-010-001-FSFC-D27-GM.CNF

Report Generated On             : 3/29/2019  10:43:38 AM

Sample Title                    : B1-010-001-FSFC-D27-GM
Sample Description              : Rx Bowl 2M Concrete
Sample Identification           : D27
Sample Type                     : Gamma Direct
Sample Geometry                 :

Peak Locate Threshold           :  3.00
Peak Locate Range (in channels) :    85 -  8000
Peak Area Range (in channels)   :    85 -  8000
Identification Energy Tolerance :    3.000 keV

Sample Size                     :  1.256E+001 M^2

Sample Taken On                 : 3/28/2019   3:15:00 PM
Acquisition Started             : 3/28/2019   3:15:57 PM

Live Time                       :      600.0 seconds
Real Time                       :      600.2 seconds

Dead Time                       :   0.03 %


              Energy Calibration Used Done On       : 10/24/2017
              Efficiency Calibration Used Done On   : 3/26/2019
              Efficiency ID                         : RxBOWL_CON_2M
```

****
***** P E A K A N A L Y S I S R E P O R T *****
****

Detector Name: 3844
Sample Title: B1-010-001-FSFC-D27-GM
Peak Analysis Performed on: 3/29/2019 10:43:38 AM
Peak Analysis From Channel: 85
Peak Analysis To Channel: 8000

Peak No.	ROI start	ROI end	Peak centroid	Energy (keV)	FWHM (keV)	Net Peak Area	Net Area Uncert.	Continuum Counts
1	946-	960	954.04	238.58	1.01	5.30E+001	31.72	6.80E+001
2	2636-	2652	2644.51	661.39	1.01	7.12E+001	21.68	1.48E+001
3	3635-	3648	3641.05	910.54	0.61	3.40E+001	11.66	0.00E+000
4	5828-	5851	5839.09	1459.78	1.95	2.05E+002	29.38	2.77E+000

M = First peak in a multiplet region
m = Other peak in a multiplet region
F = Fitted singlet

Errors quoted at 2.000 sigma

****
***** N U C L I D E I D E N T I F I C A T I O N R E P O R T *****
****

Sample Title: B1-010-001-FSFC-D27-GM
Nuclide Library Used: C:\GENIE2K\CAMFILES\LACBWR.NLB

..... IDENTIFIED NUCLIDES .....

Nuclide Name	Id Confidence	Energy (keV)	Yield (%)	Activity (pCi/M^2)	Activity Uncertainty
K-40	0.981	1460.81*	10.67	1.65258E+005	2.73123E+004
CS-137	0.999	661.65*	85.12	4.56625E+003	1.49551E+003
PB-212	1.000	74.81	9.60		
		77.11	17.50		
		87.20	6.30		
		89.80	1.75		
		115.19	0.60		
		238.63*	44.60	3.66110E+003	2.26658E+003
		300.09	3.41		
AC-228	0.994	89.95	2.10		
		93.35	3.50		
		129.08	2.80		
		209.28	4.40		
		270.23	3.60		
		327.64	3.20		
		338.32	11.40		
		409.51	2.13		
		463.00	4.40		
		794.70	4.60		
		911.60*	27.70	8.06186E+003	2.91850E+003
		964.60	5.20		
		969.11	16.60		
		1587.90	3.71		

* = Energy line found in the spectrum.
@ = Energy line not used for Weighted Mean Activity
Energy Tolerance : 3.000 keV
Nuclide confidence index threshold = 0.30
Errors quoted at 2.000 sigma

****
***** I N T E R F E R E N C E C O R R E C T E D R E P O R T *****
****

Nuclide Name	Nuclide Id Confidence	Wt mean Activity (pCi/M^2)	Wt mean Activity Uncertainty
K-40	0.981	1.652578E+005	2.731226E+004
CS-137	0.999	4.566251E+003	1.495509E+003
PB-212	1.000	3.661098E+003	2.266575E+003
AC-228	0.994	8.061860E+003	2.918497E+003

? = Nuclide is part of an undetermined solution
X = Nuclide rejected by the interference analysis
@ = Nuclide contains energy lines not used in Weighted Mean Activity

Errors quoted at 2.000 sigma

********** U N I D E N T I F I E D P E A K S **********

Peak Locate Performed on: 3/29/2019 10:43:38 AM
Peak Locate From Channel: 85
Peak Locate To Channel: 8000

Peak No.	Energy (keV)	Peak Size in Counts per Second	Peak CPS % Uncertainty	Peak Type	Tol. Nuclide

All peaks were identified.

****
***** N U C L I D E M D A R E P O R T *****
****

Detector Name: 3844
Sample Geometry:
Sample Title: B1-010-001-FSFC-D27-GM
Nuclide Library Used: C:\GENIE2K\CAMFILES\LACBWR.NLB

	Nuclide Name	Energy (keV)	Yield (%)	Line MDA (pCi/M^2)	Nuclide MDA (pCi/M^2)	Activity (pCi/M^2)	Dec. Level (pCi/M^2)
+	K-40	1460.81*	10.67	1.077E+004	1.08E+004	1.653E+005	4.295E+003
	CO-60	1173.22	100.00	2.524E+003	1.76E+003	1.015E+003	1.160E+003
		1332.49	100.00	1.761E+003		-3.738E+002	7.717E+002
	CS-134	475.35	1.46	1.226E+005	2.27E+003	-2.319E+003	5.709E+004
		563.23	8.38	2.248E+004		7.460E+003	1.043E+004
		569.32	15.43	1.248E+004		2.597E+003	5.801E+003
		604.70	97.60	2.271E+003		7.795E+002	1.063E+003
		795.84	85.40	2.287E+003		-3.009E+003	1.047E+003
		801.93	8.73	2.348E+004		-1.903E+004	1.079E+004
		1038.57	1.00	1.957E+005		4.632E+004	8.833E+004
		1167.94	1.80	1.384E+005		6.054E+004	6.357E+004
		1365.15	3.04	4.273E+004		2.154E+004	1.772E+004
+	CS-137	661.65*	85.12	1.611E+003	1.61E+003	4.566E+003	7.187E+002
	EU-152	121.78	28.40	8.580E+003	7.59E+003	2.707E+003	4.163E+003
		344.27	26.50	7.593E+003		-1.087E+004	3.604E+003
		1407.95	20.70	8.381E+003		2.864E+003	3.644E+003
	EU-154	123.07	40.40	5.992E+003	5.37E+003	-3.202E+003	2.907E+003
		722.30	20.00	1.051E+004		9.168E+003	4.867E+003
		1274.51	34.40	5.370E+003		-2.398E+003	2.376E+003
	BI-214	609.31	46.30	5.326E+003	5.33E+003	5.101E+003	2.511E+003
		768.36	5.04	4.049E+004		-3.508E+004	1.865E+004
		806.17	1.23	1.706E+005		-5.239E+004	7.856E+004
		934.06	3.21	5.936E+004		5.187E+003	2.687E+004
		1120.29	15.10	1.579E+004		8.451E+003	7.239E+003
		1155.19	1.69	1.299E+005		4.158E+004	5.897E+004
		1238.11	5.94	4.185E+004		5.128E+003	1.916E+004
		1280.96	1.47	1.260E+005		2.546E+004	5.576E+004
		1377.67	4.11	4.033E+004		8.665E+003	1.745E+004
		1385.31	0.78	2.438E+005		2.015E+005	1.076E+005
		1401.50	1.39	1.207E+005		8.403E+004	5.225E+004
		1407.98	2.48	6.996E+004		2.391E+004	3.041E+004
		1509.19	2.19	7.000E+004		4.019E+004	2.956E+004
		1661.28	1.15	7.616E+004		-4.921E+004	2.698E+004
		1729.60	3.05	4.780E+004		2.274E+003	1.959E+004
		1764.49	15.80	1.215E+004		3.825E+003	5.229E+003
		1847.44	2.12	7.586E+004		3.825E+004	3.146E+004
>		2118.54	1.21	0.000E+000		0.000E+000	0.000E+000
	PB-214	74.81	6.33	7.943E+004	5.63E+003	8.808E+004	3.858E+004
		77.11	10.70	4.390E+004		2.825E+004	2.133E+004
		87.20	3.70	8.794E+004		-1.147E+005	4.270E+004
		89.80	1.03	3.133E+005		4.489E+003	1.523E+005
		241.98	7.49	3.085E+004		1.656E+004	1.486E+004

Nuclide Name	Energy (keV)	Yield (%)	Line MDA (pCi/M^2)	Nuclide MDA (pCi/M^2)	Activity (pCi/M^2)	Dec. Level (pCi/M^2)
PB-214	295.21	19.20	1.034E+004	5.63E+003	2.822E+003	4.924E+003
	351.92	37.20	5.625E+003		7.913E+003	2.674E+003
	785.91	1.10	1.701E+005		-1.736E+005	7.763E+004

+ = Nuclide identified during the nuclide identification
* = Energy line found in the spectrum
> = Calculated MDA is zero due to zero counts in the region, or
the region is outside the spectrum, or MDA has not been calculated
@ = Half-life too short to be able to perform the decay correction

```
************************************************************************
*****        G A M M A   S P E C T R U M   A N A L Y S I S        *****
************************************************************************


Filename: C:\LACBWR\B1-010-001-FSFC-D28-GM.CNF

Report Generated On             : 3/29/2019  10:46:21 AM

Sample Title                    : B1-010-001-FSFC-D28-GM
Sample Description              : Rx Bowl 2M Concrete
Sample Identification           : D28
Sample Type                     : Gamma Direct
Sample Geometry                 :

Peak Locate Threshold           :  3.00
Peak Locate Range (in channels) :    85 -  8000
Peak Area Range (in channels)   :    85 -  8000
Identification Energy Tolerance :    3.000 keV

Sample Size                     :  1.256E+001 M^2

Sample Taken On                 : 3/28/2019   3:02:00 PM
Acquisition Started             : 3/28/2019   3:02:25 PM

Live Time                       :      600.0 seconds
Real Time                       :      600.2 seconds

Dead Time                       :   0.03 %


              Energy Calibration Used Done On       : 10/24/2017
              Efficiency Calibration Used Done On   : 3/26/2019
              Efficiency ID                         : RxBOWL_CON_2M
```

****
***** P E A K A N A L Y S I S R E P O R T *****
****

Detector Name: 3844
Sample Title: B1-010-001-FSFC-D28-GM
Peak Analysis Performed on: 3/29/2019 10:46:21 AM
Peak Analysis From Channel: 85
Peak Analysis To Channel: 8000

Peak No.	ROI start	ROI end	Peak centroid	Energy (keV)	FWHM (keV)	Net Peak Area	Net Area Uncert.	Continuum Counts
1	945-	961	954.48	238.69	1.53	6.77E+001	33.81	6.83E+001
2	1402-	1415	1407.09	351.92	0.58	1.86E+001	20.84	3.24E+001
3	2036-	2048	2042.38	510.82	0.39	3.43E+001	18.85	2.07E+001
4	2427-	2439	2433.77	608.70	0.79	2.69E+001	16.64	1.61E+001
5	2634-	2653	2643.87	661.23	1.07	1.10E+002	27.43	2.24E+001
6	3345-	3358	3351.71	838.21	0.46	1.30E+001	11.49	7.03E+000
7	5828-	5852	5840.16	1460.05	2.10	2.31E+002	32.62	8.76E+000

M = First peak in a multiplet region
m = Other peak in a multiplet region
F = Fitted singlet

Errors quoted at 2.000 sigma

****
***** N U C L I D E I D E N T I F I C A T I O N R E P O R T *****
****

Sample Title: B1-010-001-FSFC-D28-GM
Nuclide Library Used: C:\GENIE2K\CAMFILES\LACBWR.NLB

..... IDENTIFIED NUCLIDES .....

Nuclide Name	Id Confidence	Energy (keV)	Yield (%)	Activity (pCi/M^2)	Activity Uncertainty
K-40	0.990	1460.81*	10.67	1.86227E+005	3.04451E+004
CS-137	0.997	661.65*	85.12	7.02899E+003	1.95187E+003
PB-212	1.000	74.81	9.60		
		77.11	17.50		
		87.20	6.30		
		89.80	1.75		
		115.19	0.60		
		238.63*	44.60	4.67158E+003	2.45079E+003
		300.09	3.41		
BI-214	0.997	609.31*	46.30	3.02434E+003	1.91115E+003
		768.36	5.04		
		806.17	1.23		
		934.06	3.21		
		1120.29	15.10		
		1155.19	1.69		
		1238.11	5.94		
		1280.96	1.47		
		1377.67	4.11		
		1385.31	0.78		
		1401.50	1.39		
		1407.98	2.48		
		1509.19	2.19		
		1661.28	1.15		
		1729.60	3.05		
		1764.49	15.80		
		1847.44	2.12		
		2118.54	1.21		
PB-214	1.000	74.81	6.33		
		77.11	10.70		
		87.20	3.70		
		89.80	1.03		
		241.98	7.49		
		295.21	19.20		
		351.92*	37.20	1.90192E+003	2.15533E+003
		785.91	1.10		

* = Energy line found in the spectrum.
@ = Energy line not used for Weighted Mean Activity
Energy Tolerance : 3.000 keV
Nuclide confidence index threshold = 0.30
Errors quoted at 2.000 sigma

****
***** I N T E R F E R E N C E C O R R E C T E D R E P O R T *****
****

Nuclide Name	Nuclide Id Confidence	Wt mean Activity (pCi/M^2)	Wt mean Activity Uncertainty
K-40	0.990	1.862271E+005	3.044507E+004
CS-137	0.997	7.028987E+003	1.951866E+003
PB-212	1.000	4.671576E+003	2.450787E+003
BI-214	0.997	3.024340E+003	1.911154E+003
PB-214	1.000	1.901919E+003	2.155330E+003

? = Nuclide is part of an undetermined solution
X = Nuclide rejected by the interference analysis
@ = Nuclide contains energy lines not used in Weighted Mean Activity

Errors quoted at 2.000 sigma

********** U N I D E N T I F I E D P E A K S **********

Peak Locate Performed on: 3/29/2019 10:46:21 AM
Peak Locate From Channel: 85
Peak Locate To Channel: 8000

Peak No.	Energy (keV)	Peak Size in Counts per Second	Peak CPS % Uncertainty	Peak Type	Tol. Nuclide
3	510.82	5.7129E-002	54.99		
6	838.21	2.1625E-002	88.59		

M = First peak in a multiplet region
m = Other peak in a multiplet region
F = Fitted singlet

Errors quoted at 2.000 sigma

****
***** N U C L I D E M D A R E P O R T *****
****

Detector Name: 3844
Sample Geometry:
Sample Title: B1-010-001-FSFC-D28-GM
Nuclide Library Used: C:\GENIE2K\CAMFILES\LACBWR.NLB

	Nuclide Name	Energy (keV)	Yield (%)	Line MDA (pCi/M^2)	Nuclide MDA (pCi/M^2)	Activity (pCi/M^2)	Dec. Level (pCi/M^2)
+	K-40	1460.81*	10.67	1.781E+004	1.78E+004	1.862E+005	7.816E+003
	CO-60	1173.22	100.00	2.151E+003	1.89E+003	-4.717E+002	9.738E+002
		1332.49	100.00	1.892E+003		1.121E+003	8.370E+002
	CS-134	475.35	1.46	1.338E+005	2.31E+003	-5.107E+004	6.271E+004
		563.23	8.38	2.284E+004		-1.786E+004	1.062E+004
		569.32	15.43	1.277E+004		5.471E+003	5.947E+003
		604.70	97.60	2.515E+003		2.073E+003	1.186E+003
		795.84	85.40	2.313E+003		-5.160E+002	1.060E+003
		801.93	8.73	2.195E+004		-7.454E+002	1.003E+004
		1038.57	1.00	2.266E+005		8.109E+004	1.037E+005
		1167.94	1.80	1.276E+005		5.269E+004	5.816E+004
		1365.15	3.04	6.045E+004		-1.863E+004	2.658E+004
+	CS-137	661.65*	85.12	2.044E+003	2.04E+003	7.029E+003	9.350E+002
	EU-152	121.78	28.40	8.907E+003	7.50E+003	3.978E+003	4.326E+003
		344.27	26.50	7.501E+003		-3.260E+003	3.559E+003
		1407.95	20.70	8.620E+003		-3.911E+003	3.763E+003
	EU-154	123.07	40.40	6.246E+003	6.24E+003	3.045E+003	3.034E+003
		722.30	20.00	1.014E+004		1.034E+004	4.680E+003
		1274.51	34.40	6.241E+003		-5.995E+002	2.812E+003
+	BI-214	609.31*	46.30	2.712E+003	2.71E+003	3.024E+003	1.204E+003
		768.36	5.04	4.129E+004		1.665E+004	1.905E+004
		806.17	1.23	1.465E+005		4.639E+004	6.654E+004
		934.06	3.21	6.272E+004		2.879E+004	2.855E+004
		1120.29	15.10	1.597E+004		1.300E+004	7.326E+003
		1155.19	1.69	1.418E+005		3.552E+004	6.492E+004
		1238.11	5.94	4.372E+004		-3.094E+004	2.010E+004
		1280.96	1.47	1.577E+005		5.578E+004	7.162E+004
		1377.67	4.11	4.389E+004		-1.038E+004	1.923E+004
		1385.31	0.78	2.381E+005		1.214E+005	1.047E+005
		1401.50	1.39	1.244E+005		9.003E+004	5.408E+004
		1407.98	2.48	7.195E+004		-3.265E+004	3.141E+004
		1509.19	2.19	6.376E+004		3.014E+003	2.644E+004
		1661.28	1.15	7.616E+004		-2.870E+004	2.698E+004
		1729.60	3.05	4.174E+004		-5.730E+003	1.656E+004
		1764.49	15.80	1.399E+004		1.122E+004	6.153E+003
		1847.44	2.12	7.180E+004		3.347E+004	2.943E+004
>		2118.54	1.21	0.000E+000		0.000E+000	0.000E+000
+	PB-214	74.81	6.33	8.052E+004	3.47E+003	9.259E+003	3.912E+004
		77.11	10.70	4.390E+004		5.266E+003	2.133E+004
		87.20	3.70	9.650E+004		7.934E+004	4.698E+004
		89.80	1.03	3.354E+005		-5.045E+004	1.633E+005
		241.98	7.49	3.249E+004		-5.635E+003	1.569E+004

	Nuclide Name	Energy (keV)	Yield (%)	Line MDA (pCi/M^2)	Nuclide MDA (pCi/M^2)	Activity (pCi/M^2)	Dec. Level (pCi/M^2)
+	PB-214	295.21	19.20	1.106E+004	3.47E+003	-1.976E+003	5.286E+003
		351.92*	37.20	3.473E+003		1.902E+003	1.598E+003
		785.91	1.10	1.803E+005		-7.132E+004	8.271E+004

+ = Nuclide identified during the nuclide identification
* = Energy line found in the spectrum
> = Calculated MDA is zero due to zero counts in the region, or the region is outside the spectrum, or MDA has not been calculated
@ = Half-life too short to be able to perform the decay correction

```
************************************************************************
*****        G A M M A   S P E C T R U M   A N A L Y S I S        *****
************************************************************************


Filename: C:\LACBWR\B1-010-001-FSFC-D29-GM.CNF

Report Generated On             : 3/27/2019   9:00:26 PM

Sample Title                    : B1-010-001-FSFC-D29-GM
Sample Description              : Rx Bowl 3M Concrete
Sample Identification           : D29
Sample Type                     : Gamma Direct
Sample Geometry                 :

Peak Locate Threshold           :  3.00
Peak Locate Range (in channels) :    85 -  8000
Peak Area Range (in channels)   :    85 -  8000
Identification Energy Tolerance :    3.000 keV

Sample Size                     :  2.827E+001 M^2

Sample Taken On                 : 3/27/2019   8:24:00 AM
Acquisition Started             : 3/27/2019   8:24:53 AM

Live Time                       :      600.0 seconds
Real Time                       :      600.2 seconds

Dead Time                       :   0.03 %


              Energy Calibration Used Done On       : 10/24/2017
              Efficiency Calibration Used Done On   : 3/26/2019
              Efficiency ID                         : RxBOWL_CON_3M
```

****
***** P E A K A N A L Y S I S R E P O R T *****
****

Detector Name: 3844
Sample Title: B1-010-001-FSFC-D29-GM
Peak Analysis Performed on: 3/27/2019 9:00:26 PM
Peak Analysis From Channel: 85
Peak Analysis To Channel: 8000

Peak No.	ROI start	ROI end	Peak centroid	Energy (keV)	FWHM (keV)	Net Peak Area	Net Area Uncert.	Continuum Counts
1	946-	960	954.64	238.73	0.92	7.99E+001	28.14	4.11E+001
2	1345-	1358	1351.47	338.00	1.14	2.42E+001	19.55	2.48E+001
3	2323-	2336	2330.37	582.84	1.04	2.49E+001	18.25	2.11E+001
4	2426-	2439	2432.82	608.46	0.32	3.43E+001	17.66	1.57E+001
5	3634-	3647	3640.51	910.40	0.76	1.44E+001	12.23	7.57E+000
6	5825-	5847	5836.64	1459.17	1.23	2.12E+002	33.40	1.73E+001

M = First peak in a multiplet region
m = Other peak in a multiplet region
F = Fitted singlet

Errors quoted at 2.000 sigma

****
***** N U C L I D E I D E N T I F I C A T I O N R E P O R T *****
****

Sample Title: B1-010-001-FSFC-D29-GM
Nuclide Library Used: C:\GENIE2K\CAMFILES\LACBWR.NLB

..... IDENTIFIED NUCLIDES .....

Nuclide Name	Id Confidence	Energy (keV)	Yield (%)	Activity (pCi/M^2)	Activity Uncertainty
K-40	0.953	1460.81*	10.67	7.61936E+004	1.35690E+004
PB-212	1.000	74.81	9.60		
		77.11	17.50		
		87.20	6.30		
		89.80	1.75		
		115.19	0.60		
		238.63*	44.60	2.48737E+003	9.62059E+002
		300.09	3.41		
BI-214	0.995	609.31*	46.30	1.72568E+003	9.15519E+002
		768.36	5.04		
		806.17	1.23		
		934.06	3.21		
		1120.29	15.10		
		1155.19	1.69		
		1238.11	5.94		
		1280.96	1.47		
		1377.67	4.11		
		1385.31	0.78		
		1401.50	1.39		
		1407.98	2.48		
		1509.19	2.19		
		1661.28	1.15		
		1729.60	3.05		
		1764.49	15.80		
		1847.44	2.12		
		2118.54	1.21		
AC-228	0.992	89.95	2.10		
		93.35	3.50		
		129.08	2.80		
		209.28	4.40		
		270.23	3.60		
		327.64	3.20		
		338.32*	11.40	3.55745E+003	2.92712E+003
		409.51	2.13		
		463.00	4.40		
		794.70	4.60		
		911.60*	27.70	1.52951E+003	1.30843E+003
		964.60	5.20		
		969.11	16.60		
		1587.90	3.71		

* = Energy line found in the spectrum.
@ = Energy line not used for Weighted Mean Activity
Energy Tolerance : 3.000 keV
Nuclide confidence index threshold = 0.30
Errors quoted at 2.000 sigma

****
***** I N T E R F E R E N C E C O R R E C T E D R E P O R T *****
****

Nuclide Name	Nuclide Id Confidence	Wt mean Activity (pCi/M^2)	Wt mean Activity Uncertainty
K-40	0.953	7.619356E+004	1.356903E+004
PB-212	1.000	2.487372E+003	9.620595E+002
BI-214	0.995	1.725677E+003	9.155186E+002
AC-228	0.992	1.867229E+003	1.194521E+003

? = Nuclide is part of an undetermined solution
X = Nuclide rejected by the interference analysis
@ = Nuclide contains energy lines not used in Weighted Mean Activity

Errors quoted at 2.000 sigma

********** U N I D E N T I F I E D P E A K S **********

Peak Locate Performed on: 3/27/2019 9:00:26 PM
Peak Locate From Channel: 85
Peak Locate To Channel: 8000

Peak No.	Energy (keV)	Peak Size in Counts per Second	Peak CPS % Uncertainty	Peak Type	Tol. Nuclide
3	582.84	4.1558E-002	73.20		

M = First peak in a multiplet region
m = Other peak in a multiplet region
F = Fitted singlet

Errors quoted at 2.000 sigma

****
***** N U C L I D E M D A R E P O R T *****
****

Detector Name: 3844
Sample Geometry:
Sample Title: B1-010-001-FSFC-D29-GM
Nuclide Library Used: C:\GENIE2K\CAMFILES\LACBWR.NLB

	Nuclide Name	Energy (keV)	Yield (%)	Line MDA (pCi/M^2)	Nuclide MDA (pCi/M^2)	Activity (pCi/M^2)	Dec. Level (pCi/M^2)
+	K-40	1460.81*	10.67	1.068E+004	1.07E+004	7.619E+004	4.853E+003
	CO-60	1173.22	100.00	1.017E+003	7.67E+002	-3.616E+002	4.629E+002
		1332.49	100.00	7.672E+002		-9.059E+002	3.349E+002
	CS-134	475.35	1.46	5.807E+004	8.97E+002	1.924E+004	2.716E+004
		563.23	8.38	1.022E+004		-1.165E+003	4.752E+003
		569.32	15.43	5.407E+003		2.545E+003	2.507E+003
		604.70	97.60	1.114E+003		1.316E+003	5.247E+002
		795.84	85.40	8.970E+002		3.071E+002	4.054E+002
		801.93	8.73	7.972E+003		-1.027E+004	3.563E+003
		1038.57	1.00	9.534E+004		-2.406E+004	4.340E+004
		1167.94	1.80	5.487E+004		-8.982E+003	2.491E+004
		1365.15	3.04	2.704E+004		-5.119E+003	1.189E+004
	CS-137	661.65	85.12	9.221E+002	9.22E+002	-2.798E+001	4.222E+002
	EU-152	121.78	28.40	3.831E+003	3.17E+003	7.891E+002	1.858E+003
		344.27	26.50	3.171E+003		-2.601E+003	1.499E+003
		1407.95	20.70	4.252E+003		-5.990E+002	1.881E+003
	EU-154	123.07	40.40	2.679E+003	2.68E+003	-9.689E+002	1.299E+003
		722.30	20.00	4.532E+003		-3.078E+003	2.092E+003
		1274.51	34.40	2.880E+003		-3.406E+001	1.302E+003
+	BI-214	609.31*	46.30	1.230E+003	1.23E+003	1.726E+003	5.469E+002
		768.36	5.04	1.846E+004		1.483E+004	8.516E+003
		806.17	1.23	6.551E+004		4.684E+004	2.974E+004
		934.06	3.21	2.181E+004		-1.762E+003	9.650E+003
		1120.29	15.10	6.823E+003		1.321E+003	3.117E+003
		1155.19	1.69	5.968E+004		-5.274E+003	2.717E+004
		1238.11	5.94	1.807E+004		9.150E+003	8.246E+003
		1280.96	1.47	5.761E+004		-1.379E+004	2.556E+004
		1377.67	4.11	2.244E+004		1.392E+004	1.000E+004
		1385.31	0.78	9.832E+004		-5.028E+004	4.274E+004
		1401.50	1.39	5.722E+004		2.810E+004	2.498E+004
		1407.98	2.48	3.549E+004		-5.000E+003	1.570E+004
		1509.19	2.19	3.129E+004		-1.033E+004	1.321E+004
		1661.28	1.15	5.500E+004		2.564E+004	2.254E+004
		1729.60	3.05	1.863E+004		7.107E+003	7.394E+003
		1764.49	15.80	5.239E+003		-1.322E+003	2.243E+003
		1847.44	2.12	3.386E+004		1.707E+004	1.404E+004
>		2118.54	1.21	0.000E+000		0.000E+000	0.000E+000
	PB-214	74.81	6.33	3.605E+004	2.60E+003	3.993E+004	1.751E+004
		77.11	10.70	1.940E+004		1.394E+004	9.421E+003
		87.20	3.70	4.263E+004		5.442E+004	2.074E+004
		89.80	1.03	1.477E+005		6.933E+004	7.187E+004
		241.98	7.49	1.385E+004		9.702E+003	6.672E+003

Nuclide Name	Energy (keV)	Yield (%)	Line MDA (pCi/M^2)	Nuclide MDA (pCi/M^2)	Activity (pCi/M^2)	Dec. Level (pCi/M^2)
PB-214	295.21	19.20	4.823E+003	2.60E+003	2.460E+003	2.302E+003
	351.92	37.20	2.602E+003		3.461E+003	1.239E+003
	785.91	1.10	7.881E+004		3.786E+004	3.608E+004

+ = Nuclide identified during the nuclide identification
* = Energy line found in the spectrum
> = Calculated MDA is zero due to zero counts in the region, or
the region is outside the spectrum, or MDA has not been calculated
@ = Half-life too short to be able to perform the decay correction

```
***********************************************************************
*****        G A M M A   S P E C T R U M   A N A L Y S I S        *****
***********************************************************************


Filename: 3844

Report Generated On              : 3/28/2019   8:33:23 AM

Sample Title                     : B1-010-001-FSFC-D30-GM
Sample Description               : Rx Bowl 3M Concrete
Sample Identification            : D30
Sample Type                      : Gamma Direct
Sample Geometry                  :

Peak Locate Threshold            :  3.00
Peak Locate Range (in channels)  :    85 -  8000
Peak Area Range (in channels)    :    85 -  8000
Identification Energy Tolerance  :    3.000 keV

Sample Size                      :  2.827E+001 M^2

Sample Taken On                  : 3/28/2019   8:23:00 AM
Acquisition Started              : 3/28/2019   8:23:22 AM

Live Time                        :      600.0 seconds
Real Time                        :      600.2 seconds

Dead Time                        :   0.04 %


              Energy Calibration Used Done On       : 10/24/2017
              Efficiency Calibration Used Done On   : 3/26/2019
              Efficiency ID                         : RxBOWL_CON_3M
```

****
***** P E A K A N A L Y S I S R E P O R T *****
****

Detector Name: 3844
Sample Title: B1-010-001-FSFC-D30-GM
Peak Analysis Performed on: 3/28/2019 8:33:23 AM
Peak Analysis From Channel: 85
Peak Analysis To Channel: 8000

Peak No.	ROI start	ROI end	Peak centroid	Energy (keV)	FWHM (keV)	Net Peak Area	Net Area Uncert.	Continuum Counts
1	946-	960	953.61	238.47	1.13	5.53E+001	33.02	7.47E+001
2	1399-	1413	1406.01	351.65	0.63	4.73E+001	23.04	2.97E+001
3	2326-	2337	2331.50	583.12	0.76	2.63E+001	12.75	5.72E+000
4	2429-	2443	2436.34	609.34	0.55	3.63E+001	19.06	1.88E+001
5	5830-	5852	5841.42	1460.36	1.39	2.25E+002	32.07	8.48E+000

M = First peak in a multiplet region
m = Other peak in a multiplet region
F = Fitted singlet

Errors quoted at 2.000 sigma

****
***** N U C L I D E I D E N T I F I C A T I O N R E P O R T *****
****

Sample Title: B1-010-001-FSFC-D30-GM
Nuclide Library Used: C:\GENIE2K\CAMFILES\LACBWR.NLB

..... IDENTIFIED NUCLIDES .....

Nuclide Name	Id Confidence	Energy (keV)	Yield (%)	Activity (pCi/M^2)	Activity Uncertainty
K-40	0.996	1460.81*	10.67	8.08452E+004	1.33398E+004
PB-212	1.000	74.81	9.60		
		77.11	17.50		
		87.20	6.30		
		89.80	1.75		
		115.19	0.60		
		238.63*	44.60	1.71973E+003	1.06325E+003
		300.09	3.41		
BI-214	1.000	609.31*	46.30	1.82475E+003	9.87560E+002
		768.36	5.04		
		806.17	1.23		
		934.06	3.21		
		1120.29	15.10		
		1155.19	1.69		
		1238.11	5.94		
		1280.96	1.47		
		1377.67	4.11		
		1385.31	0.78		
		1401.50	1.39		
		1407.98	2.48		
		1509.19	2.19		
		1661.28	1.15		
		1729.60	3.05		
		1764.49	15.80		
		1847.44	2.12		
		2118.54	1.21		
PB-214	0.999	74.81	6.33		
		77.11	10.70		
		87.20	3.70		
		89.80	1.03		
		241.98	7.49		
		295.21	19.20		
		351.92*	37.20	2.17613E+003	1.11490E+003
		785.91	1.10		

* = Energy line found in the spectrum.
@ = Energy line not used for Weighted Mean Activity
Energy Tolerance : 3.000 keV
Nuclide confidence index threshold = 0.30
Errors quoted at 2.000 sigma

****
***** I N T E R F E R E N C E C O R R E C T E D R E P O R T *****
****

Nuclide Name	Nuclide Id Confidence	Wt mean Activity (pCi/M^2)	Wt mean Activity Uncertainty
K-40	0.996	8.084517E+004	1.333982E+004
PB-212	1.000	1.719732E+003	1.063248E+003
BI-214	1.000	1.824754E+003	9.875603E+002
PB-214	0.999	2.176126E+003	1.114895E+003

? = Nuclide is part of an undetermined solution
X = Nuclide rejected by the interference analysis
@ = Nuclide contains energy lines not used in Weighted Mean Activity

Errors quoted at 2.000 sigma

********** U N I D E N T I F I E D P E A K S **********

Peak Locate Performed on: 3/28/2019 8:33:23 AM
Peak Locate From Channel: 85
Peak Locate To Channel: 8000

Peak No.	Energy (keV)	Peak Size in Counts per Second	Peak CPS % Uncertainty	Peak Type	Tol. Nuclide
3	583.12	4.3802E-002	48.50		

M = First peak in a multiplet region
m = Other peak in a multiplet region
F = Fitted singlet

Errors quoted at 2.000 sigma

****
***** N U C L I D E M D A R E P O R T *****
****

Detector Name: 3844
Sample Geometry:
Sample Title: B1-010-001-FSFC-D30-GM
Nuclide Library Used: C:\GENIE2K\CAMFILES\LACBWR.NLB

	Nuclide Name	Energy (keV)	Yield (%)	Line MDA (pCi/M^2)	Nuclide MDA (pCi/M^2)	Activity (pCi/M^2)	Dec. Level (pCi/M^2)
+	K-40	1460.81*	10.67	7.736E+003	7.74E+003	8.085E+004	3.381E+003
	CO-60	1173.22	100.00	1.117E+003	8.83E+002	-6.168E+002	5.131E+002
		1332.49	100.00	8.828E+002		-9.815E+000	3.927E+002
	CS-134	475.35	1.46	6.524E+004	1.08E+003	-3.559E+004	3.075E+004
		563.23	8.38	1.100E+004		-2.257E+003	5.139E+003
		569.32	15.43	5.886E+003		3.062E+003	2.746E+003
		604.70	97.60	1.176E+003		-1.165E+003	5.559E+002
		795.84	85.40	1.079E+003		-9.811E+001	4.966E+002
		801.93	8.73	1.103E+004		2.456E+003	5.091E+003
		1038.57	1.00	9.657E+004		-1.112E+005	4.402E+004
		1167.94	1.80	6.126E+004		-7.697E+004	2.811E+004
		1365.15	3.04	2.704E+004		1.076E+004	1.189E+004
	CS-137	661.65	85.12	1.086E+003	1.09E+003	2.871E+002	5.040E+002
	EU-152	121.78	28.40	4.077E+003	3.15E+003	-2.254E+003	1.981E+003
		344.27	26.50	3.531E+003		-6.515E+003	1.679E+003
		1407.95	20.70	3.150E+003		-3.020E+003	1.330E+003
	EU-154	123.07	40.40	2.831E+003	2.83E+003	-1.462E+002	1.375E+003
		722.30	20.00	4.861E+003		2.175E+003	2.257E+003
		1274.51	34.40	2.880E+003		1.507E+003	1.302E+003
+	BI-214	609.31*	46.30	1.360E+003	1.36E+003	1.825E+003	6.118E+002
		768.36	5.04	1.949E+004		1.173E+004	9.032E+003
		806.17	1.23	7.851E+004		-4.036E+004	3.625E+004
		934.06	3.21	2.840E+004		-1.130E+004	1.295E+004
		1120.29	15.10	7.952E+003		6.287E+003	3.682E+003
		1155.19	1.69	5.811E+004		-1.153E+004	2.638E+004
		1238.11	5.94	2.055E+004		1.055E+004	9.489E+003
		1280.96	1.47	6.337E+004		-4.643E+004	2.844E+004
		1377.67	4.11	1.804E+004		1.255E+004	7.806E+003
		1385.31	0.78	9.832E+004		-3.953E+004	4.274E+004
		1401.50	1.39	5.399E+004		-2.986E+004	2.336E+004
		1407.98	2.48	2.629E+004		-2.521E+004	1.110E+004
		1509.19	2.19	3.381E+004		-3.667E+003	1.447E+004
		1661.28	1.15	5.811E+004		2.930E+004	2.410E+004
		1729.60	3.05	1.863E+004		-5.330E+003	7.394E+003
		1764.49	15.80	6.398E+003		3.190E+003	2.822E+003
		1847.44	2.12	2.563E+004		8.536E+003	9.928E+003
>		2118.54	1.21	0.000E+000		0.000E+000	0.000E+000
+	PB-214	74.81	6.33	3.941E+004	1.52E+003	4.484E+004	1.919E+004
		77.11	10.70	2.190E+004		2.148E+004	1.067E+004
		87.20	3.70	4.531E+004		-4.897E+003	2.208E+004
		89.80	1.03	1.540E+005		-4.237E+004	7.499E+004
		241.98	7.49	1.527E+004		2.390E+004	7.383E+003

	Nuclide Name	Energy (keV)	Yield (%)	Line MDA (pCi/M^2)	Nuclide MDA (pCi/M^2)	Activity (pCi/M^2)	Dec. Level (pCi/M^2)
+	PB-214	295.21	19.20	4.975E+003	1.52E+003	-3.303E+003	2.378E+003
		351.92*	37.20	1.522E+003		2.176E+003	6.987E+002
		785.91	1.10	8.813E+004		-9.810E+003	4.075E+004

+ = Nuclide identified during the nuclide identification
* = Energy line found in the spectrum
> = Calculated MDA is zero due to zero counts in the region, or the region is outside the spectrum, or MDA has not been calculated
@ = Half-life too short to be able to perform the decay correction

```
************************************************************************
*****        G A M M A   S P E C T R U M   A N A L Y S I S        *****
************************************************************************


Filename: 3844

Report Generated On              : 3/28/2019   8:55:50 AM

Sample Title                     : B1-010-001-FSFC-D31-GM
Sample Description               : Rx Bowl 3M Concrete
Sample Identification            : D31
Sample Type                      : Gamma Direct
Sample Geometry                  :

Peak Locate Threshold            :  3.00
Peak Locate Range (in channels)  :    85 -  8000
Peak Area Range (in channels)    :    85 -  8000
Identification Energy Tolerance  :    3.000 keV

Sample Size                      :  2.827E+001 M^2

Sample Taken On                  : 3/28/2019   8:43:00 AM
Acquisition Started              : 3/28/2019   8:45:49 AM

Live Time                        :      600.0 seconds
Real Time                        :      600.2 seconds

Dead Time                        :   0.04 %


              Energy Calibration Used Done On       : 10/24/2017
              Efficiency Calibration Used Done On   : 3/26/2019
              Efficiency ID                         : RxBOWL_CON_3M
```

****
***** P E A K A N A L Y S I S R E P O R T *****
****

Detector Name: 3844
Sample Title: B1-010-001-FSFC-D31-GM
Peak Analysis Performed on: 3/28/2019 8:55:50 AM
Peak Analysis From Channel: 85
Peak Analysis To Channel: 8000

Peak No.	ROI start	ROI end	Peak centroid	Energy (keV)	FWHM (keV)	Net Peak Area	Net Area Uncert.	Continuum Counts
1	946-	959	953.42	238.42	0.93	4.05E+001	33.97	8.85E+001
2	2324-	2339	2330.78	582.94	0.63	3.80E+001	18.57	1.60E+001
3	2429-	2442	2436.35	609.34	1.47	3.48E+001	18.76	1.92E+001
4	3636-	3649	3642.85	910.99	0.95	2.32E+001	15.66	1.38E+001
5	5829-	5852	5841.66	1460.43	1.55	2.49E+002	33.05	6.00E+000

M = First peak in a multiplet region
m = Other peak in a multiplet region
F = Fitted singlet

Errors quoted at 2.000 sigma

****
***** N U C L I D E I D E N T I F I C A T I O N R E P O R T *****
****

Sample Title: B1-010-001-FSFC-D31-GM
Nuclide Library Used: C:\GENIE2K\CAMFILES\LACBWR.NLB

..... IDENTIFIED NUCLIDES .....

Nuclide Name	Id Confidence	Energy (keV)	Yield (%)	Activity (pCi/M^2)	Activity Uncertainty
K-40	0.997	1460.81*	10.67	8.96646E+004	1.40173E+004
PB-212	1.000	74.81	9.60		
		77.11	17.50		
		87.20	6.30		
		89.80	1.75		
		115.19	0.60		
		238.63*	44.60	1.25888E+003	1.07557E+003
		300.09	3.41		
BI-214	1.000	609.31*	46.30	1.75345E+003	9.70577E+002
		768.36	5.04		
		806.17	1.23		
		934.06	3.21		
		1120.29	15.10		
		1155.19	1.69		
		1238.11	5.94		
		1280.96	1.47		
		1377.67	4.11		
		1385.31	0.78		
		1401.50	1.39		
		1407.98	2.48		
		1509.19	2.19		
		1661.28	1.15		
		1729.60	3.05		
		1764.49	15.80		
		1847.44	2.12		
		2118.54	1.21		
AC-228	0.998	89.95	2.10		
		93.35	3.50		
		129.08	2.80		
		209.28	4.40		
		270.23	3.60		
		327.64	3.20		
		338.32	11.40		
		409.51	2.13		
		463.00	4.40		
		794.70	4.60		
		911.60*	27.70	2.45849E+003	1.68465E+003
		964.60	5.20		
		969.11	16.60		
		1587.90	3.71		

* = Energy line found in the spectrum.
@ = Energy line not used for Weighted Mean Activity
Energy Tolerance : 3.000 keV
Nuclide confidence index threshold = 0.30
Errors quoted at 2.000 sigma

****
***** I N T E R F E R E N C E C O R R E C T E D R E P O R T *****
****

Nuclide Name	Nuclide Id Confidence	Wt mean Activity (pCi/M^2)	Wt mean Activity Uncertainty
K-40	0.997	8.966464E+004	1.401732E+004
PB-212	1.000	1.258878E+003	1.075569E+003
BI-214	1.000	1.753446E+003	9.705772E+002
AC-228	0.998	2.458490E+003	1.684649E+003

? = Nuclide is part of an undetermined solution
X = Nuclide rejected by the interference analysis
@ = Nuclide contains energy lines not used in Weighted Mean Activity

Errors quoted at 2.000 sigma

********** U N I D E N T I F I E D P E A K S **********

Peak Locate Performed on: 3/28/2019 8:55:50 AM
Peak Locate From Channel: 85
Peak Locate To Channel: 8000

Peak No.	Energy (keV)	Peak Size in Counts per Second	Peak CPS % Uncertainty	Peak Type	Tol. Nuclide
2	582.94	6.3333E-002	48.87		

M = First peak in a multiplet region
m = Other peak in a multiplet region
F = Fitted singlet

Errors quoted at 2.000 sigma

****
***** N U C L I D E M D A R E P O R T *****
****

Detector Name: 3844
Sample Geometry:
Sample Title: B1-010-001-FSFC-D31-GM
Nuclide Library Used: C:\GENIE2K\CAMFILES\LACBWR.NLB

	Nuclide Name	Energy (keV)	Yield (%)	Line MDA (pCi/M^2)	Nuclide MDA (pCi/M^2)	Activity (pCi/M^2)	Dec. Level (pCi/M^2)
+	K-40	1460.81*	10.67	6.781E+003	6.78E+003	8.966E+004	2.903E+003
	CO-60	1173.22	100.00	9.624E+002	7.67E+002	-3.746E+002	4.357E+002
		1332.49	100.00	7.672E+002		2.699E+001	3.349E+002
	CS-134	475.35	1.46	5.883E+004	1.09E+003	-7.474E+004	2.754E+004
		563.23	8.38	1.030E+004		5.252E+003	4.792E+003
		569.32	15.43	6.009E+003		-1.242E+003	2.808E+003
		604.70	97.60	1.148E+003		2.929E+002	5.419E+002
		795.84	85.40	1.090E+003		6.433E+002	5.021E+002
		801.93	8.73	1.092E+004		-4.284E+003	5.039E+003
		1038.57	1.00	9.779E+004		2.664E+003	4.463E+004
		1167.94	1.80	5.921E+004		-2.542E+004	2.708E+004
		1365.15	3.04	2.098E+004		3.071E+003	8.861E+003
	CS-137	661.65	85.12	1.154E+003	1.15E+003	9.073E+002	5.383E+002
	EU-152	121.78	28.40	4.087E+003	3.44E+003	1.116E+003	1.986E+003
		344.27	26.50	3.438E+003		-5.375E+003	1.633E+003
		1407.95	20.70	3.855E+003		-3.956E+001	1.683E+003
	EU-154	123.07	40.40	2.887E+003	2.89E+003	1.832E+003	1.403E+003
		722.30	20.00	5.349E+003		4.197E+003	2.501E+003
		1274.51	34.40	3.129E+003		3.024E+003	1.426E+003
+	BI-214	609.31*	46.30	1.343E+003	1.34E+003	1.753E+003	6.036E+002
		768.36	5.04	1.881E+004		-6.065E+003	8.691E+003
		806.17	1.23	8.141E+004		8.580E+004	3.770E+004
		934.06	3.21	3.210E+004		2.340E+004	1.479E+004
		1120.29	15.10	7.952E+003		5.128E+003	3.682E+003
		1155.19	1.69	6.764E+004		-2.961E+004	3.115E+004
		1238.11	5.94	1.976E+004		7.964E+003	9.094E+003
		1280.96	1.47	5.999E+004		-7.216E+004	2.675E+004
		1377.67	4.11	2.370E+004		1.648E+004	1.064E+004
		1385.31	0.78	1.065E+005		-2.172E+005	4.682E+004
		1401.50	1.39	5.563E+004		-8.871E+004	2.418E+004
		1407.98	2.48	3.218E+004		-3.302E+002	1.405E+004
		1509.19	2.19	3.129E+004		1.796E+004	1.321E+004
		1661.28	1.15	4.802E+004		1.831E+004	1.905E+004
		1729.60	3.05	1.707E+004		-8.972E+003	6.613E+003
		1764.49	15.80	6.963E+003		3.794E+003	3.105E+003
		1847.44	2.12	3.556E+004		-1.624E+004	1.489E+004
>		2118.54	1.21	0.000E+000		0.000E+000	0.000E+000
	PB-214	74.81	6.33	3.858E+004	2.68E+003	2.515E+004	1.877E+004
		77.11	10.70	2.114E+004		1.917E+004	1.029E+004
		87.20	3.70	4.282E+004		2.374E+004	2.083E+004
		89.80	1.03	1.497E+005		5.541E+004	7.284E+004
		241.98	7.49	1.527E+004		2.033E+004	7.383E+003

Nuclide Name	Energy (keV)	Yield (%)	Line MDA (pCi/M^2)	Nuclide MDA (pCi/M^2)	Activity (pCi/M^2)	Dec. Level (pCi/M^2)
PB-214	295.21	19.20	5.251E+003	2.68E+003	2.953E+002	2.516E+003
	351.92	37.20	2.683E+003		2.166E+003	1.279E+003
	785.91	1.10	8.059E+004		3.556E+004	3.698E+004

+ = Nuclide identified during the nuclide identification
* = Energy line found in the spectrum
> = Calculated MDA is zero due to zero counts in the region, or
the region is outside the spectrum, or MDA has not been calculated
@ = Half-life too short to be able to perform the decay correction

```
***********************************************************************
*****        G A M M A   S P E C T R U M   A N A L Y S I S        *****
***********************************************************************


Filename: 3844

Report Generated On              : 3/28/2019   9:08:53 AM

Sample Title                     : B1-010-001-FSFC-D32-GM
Sample Description               : Rx Bowl 3M Concrete
Sample Identification            : D32
Sample Type                      : Gamma Direct
Sample Geometry                  :

Peak Locate Threshold            :  3.00
Peak Locate Range (in channels)  :    85 -  8000
Peak Area Range (in channels)    :    85 -  8000
Identification Energy Tolerance  :    3.000 keV

Sample Size                      :  2.827E+001 M^2

Sample Taken On                  : 3/28/2019   8:58:00 AM
Acquisition Started              : 3/28/2019   8:58:52 AM

Live Time                        :      600.0 seconds
Real Time                        :      600.2 seconds

Dead Time                        :   0.04 %


              Energy Calibration Used Done On       : 10/24/2017
              Efficiency Calibration Used Done On   : 3/26/2019
              Efficiency ID                         : RxBOWL_CON_3M
```

****
***** P E A K A N A L Y S I S R E P O R T *****
****

Detector Name: 3844
Sample Title: B1-010-001-FSFC-D32-GM
Peak Analysis Performed on: 3/28/2019 9:08:53 AM
Peak Analysis From Channel: 85
Peak Analysis To Channel: 8000

Peak No.	ROI start	ROI end	Peak centroid	Energy (keV)	FWHM (keV)	Net Peak Area	Net Area Uncert.	Continuum Counts
1	1401-	1413	1406.51	351.77	0.34	3.07E+001	20.09	2.63E+001
2	2324-	2336	2329.50	582.62	0.89	2.26E+001	15.37	1.34E+001
3	2428-	2442	2434.61	608.91	1.20	4.53E+001	17.22	9.66E+000
4	5827-	5851	5840.39	1460.11	1.65	2.42E+002	31.91	3.08E+000

M = First peak in a multiplet region
m = Other peak in a multiplet region
F = Fitted singlet

Errors quoted at 2.000 sigma

****
***** N U C L I D E I D E N T I F I C A T I O N R E P O R T *****
****

Sample Title: B1-010-001-FSFC-D32-GM
Nuclide Library Used: C:\GENIE2K\CAMFILES\LACBWR.NLB

..... IDENTIFIED NUCLIDES .....

Nuclide Name	Id Confidence	Energy (keV)	Yield (%)	Activity (pCi/M^2)	Activity Uncertainty
K-40	0.991	1460.81*	10.67	8.71025E+004	1.35555E+004
BI-214	0.999	609.31*	46.30	2.28145E+003	9.14461E+002
		768.36	5.04		
		806.17	1.23		
		934.06	3.21		
		1120.29	15.10		
		1155.19	1.69		
		1238.11	5.94		
		1280.96	1.47		
		1377.67	4.11		
		1385.31	0.78		
		1401.50	1.39		
		1407.98	2.48		
		1509.19	2.19		
		1661.28	1.15		
		1729.60	3.05		
		1764.49	15.80		
		1847.44	2.12		
		2118.54	1.21		
PB-214	1.000	74.81	6.33		
		77.11	10.70		
		87.20	3.70		
		89.80	1.03		
		241.98	7.49		
		295.21	19.20		
		351.92*	37.20	1.41154E+003	9.50770E+002
		785.91	1.10		

* = Energy line found in the spectrum.
@ = Energy line not used for Weighted Mean Activity
Energy Tolerance : 3.000 keV
Nuclide confidence index threshold = 0.30
Errors quoted at 2.000 sigma

****
***** I N T E R F E R E N C E C O R R E C T E D R E P O R T *****
****

Nuclide Name	Nuclide Id Confidence	Wt mean Activity (pCi/M^2)	Wt mean Activity Uncertainty
K-40	0.991	8.710249E+004	1.355552E+004
BI-214	0.999	2.281452E+003	9.144613E+002
PB-214	1.000	1.411535E+003	9.507704E+002

? = Nuclide is part of an undetermined solution
X = Nuclide rejected by the interference analysis
@ = Nuclide contains energy lines not used in Weighted Mean Activity

Errors quoted at 2.000 sigma

********** U N I D E N T I F I E D P E A K S **********

Peak Locate Performed on: 3/28/2019 9:08:53 AM
Peak Locate From Channel: 85
Peak Locate To Channel: 8000

Peak No.	Energy (keV)	Peak Size in Counts per Second	Peak CPS % Uncertainty	Peak Type	Tol. Nuclide
2	582.62	3.7708E-002	67.92		

M = First peak in a multiplet region
m = Other peak in a multiplet region
F = Fitted singlet

Errors quoted at 2.000 sigma

****
***** N U C L I D E M D A R E P O R T *****
****

Detector Name: 3844
Sample Geometry:
Sample Title: B1-010-001-FSFC-D32-GM
Nuclide Library Used: C:\GENIE2K\CAMFILES\LACBWR.NLB

	Nuclide Name	Energy (keV)	Yield (%)	Line MDA (pCi/M^2)	Nuclide MDA (pCi/M^2)	Activity (pCi/M^2)	Dec. Level (pCi/M^2)
+	K-40	1460.81*	10.67	5.177E+003	5.18E+003	8.710E+004	2.102E+003
	CO-60	1173.22	100.00	1.068E+003	9.99E+002	-6.598E+002	4.887E+002
		1332.49	100.00	9.991E+002		1.787E+002	4.509E+002
	CS-134	475.35	1.46	6.248E+004	9.99E+002	-3.849E+004	2.936E+004
		563.23	8.38	1.136E+004		9.963E+002	5.322E+003
		569.32	15.43	6.050E+003		9.082E+002	2.828E+003
		604.70	97.60	1.171E+003		9.244E+002	5.531E+002
		795.84	85.40	9.987E+002		-1.428E+002	4.563E+002
		801.93	8.73	9.574E+003		-5.923E+003	4.364E+003
		1038.57	1.00	9.409E+004		1.952E+004	4.278E+004
		1167.94	1.80	6.258E+004		1.575E+004	2.877E+004
		1365.15	3.04	1.911E+004		-1.716E+004	7.926E+003
	CS-137	661.65	85.12	1.103E+003	1.10E+003	7.485E+002	5.128E+002
	EU-152	121.78	28.40	4.097E+003	3.37E+003	-2.920E+003	1.991E+003
		344.27	26.50	3.370E+003		-5.418E+002	1.599E+003
		1407.95	20.70	4.252E+003		-5.909E+003	1.881E+003
	EU-154	123.07	40.40	2.873E+003	2.87E+003	3.136E+002	1.396E+003
		722.30	20.00	4.740E+003		-2.683E+003	2.196E+003
		1274.51	34.40	3.129E+003		2.099E+003	1.426E+003
+	BI-214	609.31*	46.30	1.025E+003	1.02E+003	2.281E+003	4.442E+002
		768.36	5.04	2.079E+004		1.099E+004	9.678E+003
		806.17	1.23	6.986E+004		-3.962E+004	3.192E+004
		934.06	3.21	3.048E+004		6.211E+003	1.398E+004
		1120.29	15.10	8.157E+003		7.062E+003	3.784E+003
		1155.19	1.69	6.898E+004		3.455E+004	3.182E+004
		1238.11	5.94	1.976E+004		2.117E+003	9.094E+003
		1280.96	1.47	7.434E+004		6.561E+004	3.393E+004
		1377.67	4.11	1.963E+004		8.506E+003	8.601E+003
		1385.31	0.78	1.065E+005		-2.036E+004	4.682E+004
		1401.50	1.39	6.584E+004		5.905E+004	2.929E+004
		1407.98	2.48	3.549E+004		-4.932E+004	1.570E+004
		1509.19	2.19	2.533E+004		-5.328E+004	1.023E+004
		1661.28	1.15	4.802E+004		-7.326E+003	1.905E+004
		1729.60	3.05	2.134E+004		-1.015E+003	8.749E+003
		1764.49	15.80	6.827E+003		6.123E+003	3.037E+003
		1847.44	2.12	3.386E+004		1.707E+004	1.404E+004
>		2118.54	1.21	0.000E+000		0.000E+000	0.000E+000
+	PB-214	74.81	6.33	3.904E+004	1.39E+003	1.173E+004	1.900E+004
		77.11	10.70	2.155E+004		1.417E+004	1.049E+004
		87.20	3.70	4.277E+004		-1.657E+004	2.081E+004
		89.80	1.03	1.513E+005		6.134E+004	7.365E+004
		241.98	7.49	1.486E+004		1.305E+004	7.176E+003

	Nuclide Name	Energy (keV)	Yield (%)	Line MDA (pCi/M^2)	Nuclide MDA (pCi/M^2)	Activity (pCi/M^2)	Dec. Level (pCi/M^2)
+	PB-214	295.21	19.20	5.064E+003	1.39E+003	-5.822E+002	2.422E+003
		351.92*	37.20	1.392E+003		1.412E+003	6.336E+002
		785.91	1.10	8.569E+004		6.663E+004	3.953E+004

+ = Nuclide identified during the nuclide identification
* = Energy line found in the spectrum
> = Calculated MDA is zero due to zero counts in the region, or
the region is outside the spectrum, or MDA has not been calculated
@ = Half-life too short to be able to perform the decay correction

```
***********************************************************************
*****        G A M M A   S P E C T R U M   A N A L Y S I S        *****
***********************************************************************


Filename: 3844

Report Generated On              : 3/28/2019   9:21:42 AM

Sample Title                     : B1-010-001-FSFC-D33-GM
Sample Description               : Rx Bowl 3M Concrete
Sample Identification            : D33
Sample Type                      : Gamma Direct
Sample Geometry                  :

Peak Locate Threshold            :  3.00
Peak Locate Range (in channels)  :    85 -  8000
Peak Area Range (in channels)    :    85 -  8000
Identification Energy Tolerance  :    3.000 keV

Sample Size                      :  2.827E+001 M^2

Sample Taken On                  : 3/28/2019   9:11:00 AM
Acquisition Started              : 3/28/2019   9:11:41 AM

Live Time                        :      600.0 seconds
Real Time                        :      600.2 seconds

Dead Time                        :   0.03 %


              Energy Calibration Used Done On       : 10/24/2017
              Efficiency Calibration Used Done On   : 3/26/2019
              Efficiency ID                         : RxBOWL_CON_3M
```

****
***** P E A K A N A L Y S I S R E P O R T *****
****

Detector Name: 3844
Sample Title: B1-010-001-FSFC-D33-GM
Peak Analysis Performed on: 3/28/2019 9:21:41 AM
Peak Analysis From Channel: 85
Peak Analysis To Channel: 8000

Peak No.	ROI start	ROI end	Peak centroid	Energy (keV)	FWHM (keV)	Net Peak Area	Net Area Uncert.	Continuum Counts
1	943-	960	953.28	238.39	0.95	7.63E+001	35.24	7.07E+001
2	3636-	3649	3642.44	910.89	0.65	2.90E+001	18.66	2.10E+001
3	5830-	5854	5841.30	1460.34	1.78	2.31E+002	32.46	8.46E+000

M = First peak in a multiplet region
m = Other peak in a multiplet region
F = Fitted singlet

Errors quoted at 2.000 sigma

****
***** N U C L I D E I D E N T I F I C A T I O N R E P O R T *****
****

Sample Title: B1-010-001-FSFC-D33-GM
Nuclide Library Used: C:\GENIE2K\CAMFILES\LACBWR.NLB

..... IDENTIFIED NUCLIDES .....

Nuclide Name	Id Confidence	Energy (keV)	Yield (%)	Activity (pCi/M^2)	Activity Uncertainty
K-40	0.996	1460.81*	10.67	8.30123E+004	1.35505E+004
PB-212	0.999	74.81	9.60		
		77.11	17.50		
		87.20	6.30		
		89.80	1.75		
		115.19	0.60		
		238.63*	44.60	2.37165E+003	1.15985E+003
		300.09	3.41		
AC-228	0.997	89.95	2.10		
		93.35	3.50		
		129.08	2.80		
		209.28	4.40		
		270.23	3.60		
		327.64	3.20		
		338.32	11.40		
		409.51	2.13		
		463.00	4.40		
		794.70	4.60		
		911.60*	27.70	3.07436E+003	2.01020E+003
		964.60	5.20		
		969.11	16.60		
		1587.90	3.71		

* = Energy line found in the spectrum.
@ = Energy line not used for Weighted Mean Activity
Energy Tolerance : 3.000 keV
Nuclide confidence index threshold = 0.30
Errors quoted at 2.000 sigma

****
***** I N T E R F E R E N C E C O R R E C T E D R E P O R T *****
****

Nuclide Name	Nuclide Id Confidence	Wt mean Activity (pCi/M^2)	Wt mean Activity Uncertainty
K-40	0.996	8.301231E+004	1.355052E+004
PB-212	0.999	2.371654E+003	1.159853E+003
AC-228	0.997	3.074358E+003	2.010197E+003

? = Nuclide is part of an undetermined solution
X = Nuclide rejected by the interference analysis
@ = Nuclide contains energy lines not used in Weighted Mean Activity

Errors quoted at 2.000 sigma

********** U N I D E N T I F I E D P E A K S **********

Peak Locate Performed on: 3/28/2019 9:21:41 AM
Peak Locate From Channel: 85
Peak Locate To Channel: 8000

Peak No.	Energy (keV)	Peak Size in Counts per Second	Peak CPS % Uncertainty	Peak Type	Tol. Nuclide

All peaks were identified.

****
***** N U C L I D E M D A R E P O R T *****
****

Detector Name: 3844
Sample Geometry:
Sample Title: B1-010-001-FSFC-D33-GM
Nuclide Library Used: C:\GENIE2K\CAMFILES\LACBWR.NLB

	Nuclide Name	Energy (keV)	Yield (%)	Line MDA (pCi/M^2)	Nuclide MDA (pCi/M^2)	Activity (pCi/M^2)	Dec. Level (pCi/M^2)
+	K-40	1460.81*	10.67	7.761E+003	7.76E+003	8.301E+004	3.393E+003
	CO-60	1173.22	100.00	1.141E+003	8.08E+002	-4.008E+002	5.249E+002
		1332.49	100.00	8.078E+002		-7.283E+002	3.552E+002
	CS-134	475.35	1.46	6.177E+004	9.37E+002	1.415E+004	2.901E+004
		563.23	8.38	1.054E+004		8.463E+003	4.910E+003
		569.32	15.43	5.452E+003		-1.527E+003	2.530E+003
		604.70	97.60	1.072E+003		-1.180E+002	5.039E+002
		795.84	85.40	9.366E+002		1.020E+002	4.252E+002
		801.93	8.73	1.016E+004		4.112E+003	4.657E+003
		1038.57	1.00	8.335E+004		-3.202E+004	3.741E+004
		1167.94	1.80	5.990E+004		-5.491E+004	2.743E+004
		1365.15	3.04	2.704E+004		9.887E+003	1.189E+004
	CS-137	661.65	85.12	1.077E+003	1.08E+003	2.784E+002	4.996E+002
	EU-152	121.78	28.40	3.956E+003	3.63E+003	-3.481E+003	1.920E+003
		344.27	26.50	3.635E+003		-1.569E+003	1.731E+003
		1407.95	20.70	4.345E+003		-8.439E+002	1.928E+003
	EU-154	123.07	40.40	2.795E+003	2.80E+003	1.718E+002	1.357E+003
		722.30	20.00	4.575E+003		4.657E+003	2.113E+003
		1274.51	34.40	2.923E+003		2.294E+003	1.323E+003
	BI-214	609.31	46.30	2.370E+003	2.37E+003	2.563E+003	1.117E+003
		768.36	5.04	2.200E+004		7.887E+003	1.028E+004
		806.17	1.23	7.393E+004		4.840E+003	3.395E+004
		934.06	3.21	2.980E+004		-9.061E+003	1.365E+004
		1120.29	15.10	7.297E+003		4.774E+003	3.355E+003
		1155.19	1.69	5.307E+004		-1.058E+004	2.386E+004
		1238.11	5.94	2.075E+004		6.512E+003	9.585E+003
		1280.96	1.47	6.656E+004		2.782E+004	3.004E+004
		1377.67	4.11	1.747E+004		6.415E+003	7.522E+003
		1385.31	0.78	1.011E+005		7.590E+004	4.414E+004
		1401.50	1.39	5.563E+004		3.221E+003	2.418E+004
		1407.98	2.48	3.627E+004		-7.044E+003	1.609E+004
		1509.19	2.19	2.697E+004		1.257E+004	1.105E+004
		1661.28	1.15	6.104E+004		8.343E+003	2.556E+004
		1729.60	3.05	2.005E+004		8.528E+003	8.100E+003
		1764.49	15.80	5.933E+003		-2.087E+002	2.590E+003
		1847.44	2.12	2.797E+004		1.067E+004	1.110E+004
>		2118.54	1.21	0.000E+000		0.000E+000	0.000E+000
	PB-214	74.81	6.33	3.751E+004	2.68E+003	3.154E+004	1.824E+004
		77.11	10.70	2.098E+004		2.051E+004	1.021E+004
		87.20	3.70	4.390E+004		1.479E+004	2.137E+004
		89.80	1.03	1.476E+005		-6.614E+004	7.178E+004
		241.98	7.49	1.496E+004		2.900E+002	7.228E+003

Nuclide Name	Energy (keV)	Yield (%)	Line MDA (pCi/M^2)	Nuclide MDA (pCi/M^2)	Activity (pCi/M^2)	Dec. Level (pCi/M^2)
PB-214	295.21	19.20	5.335E+003	2.68E+003	1.070E+003	2.558E+003
	351.92	37.20	2.683E+003		1.641E+003	1.279E+003
	785.91	1.10	8.651E+004		6.080E+004	3.994E+004

+ = Nuclide identified during the nuclide identification
* = Energy line found in the spectrum
> = Calculated MDA is zero due to zero counts in the region, or
the region is outside the spectrum, or MDA has not been calculated
@ = Half-life too short to be able to perform the decay correction

```
************************************************************************
*****        G A M M A   S P E C T R U M   A N A L Y S I S        *****
************************************************************************


Filename: C:\LACBWR\B1-010-001-FSFC-D34-GM.CNF

Report Generated On             : 3/27/2019   9:01:56 PM

Sample Title                    : B1-010-001-FSFC-D34-GM
Sample Description              : Rx Bowl 3M Concrete
Sample Identification           : D34
Sample Type                     : Gamma Direct
Sample Geometry                 :

Peak Locate Threshold           :  3.00
Peak Locate Range (in channels) :    85 -  8000
Peak Area Range (in channels)   :    85 -  8000
Identification Energy Tolerance :    3.000 keV

Sample Size                     :  2.827E+001 M^2

Sample Taken On                 : 3/27/2019   8:42:00 AM
Acquisition Started             : 3/27/2019   8:43:24 AM

Live Time                       :      600.0 seconds
Real Time                       :      600.2 seconds

Dead Time                       :   0.03 %


              Energy Calibration Used Done On       : 10/24/2017
              Efficiency Calibration Used Done On   : 3/26/2019
              Efficiency ID                         : RxBOWL_CON_3M
```

****
***** P E A K A N A L Y S I S R E P O R T *****
****

Detector Name: 3844
Sample Title: B1-010-001-FSFC-D34-GM
Peak Analysis Performed on: 3/27/2019 9:01:56 PM
Peak Analysis From Channel: 85
Peak Analysis To Channel: 8000

Peak No.	ROI start	ROI end	Peak centroid	Energy (keV)	FWHM (keV)	Net Peak Area	Net Area Uncert.	Continuum Counts
1	949-	961	955.01	238.82	0.41	2.33E+001	26.29	5.67E+001
2	2328-	2340	2333.04	583.51	0.73	2.13E+001	15.19	1.37E+001
3	2429-	2445	2436.70	609.43	0.53	5.29E+001	19.02	1.21E+001
4	5831-	5854	5843.88	1460.98	1.53	2.15E+002	29.33	0.00E+000

M = First peak in a multiplet region
m = Other peak in a multiplet region
F = Fitted singlet

Errors quoted at 2.000 sigma

****
***** N U C L I D E I D E N T I F I C A T I O N R E P O R T *****
****

Sample Title: B1-010-001-FSFC-D34-GM
Nuclide Library Used: C:\GENIE2K\CAMFILES\LACBWR.NLB

..... IDENTIFIED NUCLIDES .....

Nuclide Name	Id Confidence	Energy (keV)	Yield (%)	Activity (pCi/M^2)	Activity Uncertainty
K-40	0.999	1460.81*	10.67	7.74422E+004	1.23495E+004
PB-212	1.000	74.81	9.60		
		77.11	17.50		
		87.20	6.30		
		89.80	1.75		
		115.19	0.60		
		238.63*	44.60	7.24535E+002	8.26503E+002
		300.09	3.41		
BI-214	1.000	609.31*	46.30	2.66118E+003	1.01637E+003
		768.36	5.04		
		806.17	1.23		
		934.06	3.21		
		1120.29	15.10		
		1155.19	1.69		
		1238.11	5.94		
		1280.96	1.47		
		1377.67	4.11		
		1385.31	0.78		
		1401.50	1.39		
		1407.98	2.48		
		1509.19	2.19		
		1661.28	1.15		
		1729.60	3.05		
		1764.49	15.80		
		1847.44	2.12		
		2118.54	1.21		

* = Energy line found in the spectrum.
@ = Energy line not used for Weighted Mean Activity
Energy Tolerance : 3.000 keV
Nuclide confidence index threshold = 0.30
Errors quoted at 2.000 sigma

****
***** I N T E R F E R E N C E C O R R E C T E D R E P O R T *****
****

Nuclide Name	Nuclide Id Confidence	Wt mean Activity (pCi/M^2)	Wt mean Activity Uncertainty
K-40	0.999	7.744224E+004	1.234949E+004
PB-212	1.000	7.245353E+002	8.265030E+002
BI-214	1.000	2.661175E+003	1.016369E+003

? = Nuclide is part of an undetermined solution
X = Nuclide rejected by the interference analysis
@ = Nuclide contains energy lines not used in Weighted Mean Activity

Errors quoted at 2.000 sigma

********** U N I D E N T I F I E D P E A K S **********

Peak Locate Performed on: 3/27/2019 9:01:56 PM
Peak Locate From Channel: 85
Peak Locate To Channel: 8000

Peak No.	Energy (keV)	Peak Size in Counts per Second	Peak CPS % Uncertainty	Peak Type	Tol. Nuclide
2	583.51	3.5476E-002	71.38		

M = First peak in a multiplet region
m = Other peak in a multiplet region
F = Fitted singlet

Errors quoted at 2.000 sigma

****
***** N U C L I D E M D A R E P O R T *****
****

Detector Name: 3844
Sample Geometry:
Sample Title: B1-010-001-FSFC-D34-GM
Nuclide Library Used: C:\GENIE2K\CAMFILES\LACBWR.NLB

	Nuclide Name	Energy (keV)	Yield (%)	Line MDA (pCi/M^2)	Nuclide MDA (pCi/M^2)	Activity (pCi/M^2)	Dec. Level (pCi/M^2)
+	K-40	1460.81*	10.67	9.747E+002	9.75E+002	7.744E+004	0.000E+000
	CO-60	1173.22	100.00	1.030E+003	8.46E+002	9.818E+002	4.695E+002
		1332.49	100.00	8.463E+002		-5.353E+001	3.744E+002
	CS-134	475.35	1.46	6.318E+004	1.07E+003	-5.031E+004	2.972E+004
		563.23	8.38	1.022E+004		-1.701E+003	4.752E+003
		569.32	15.43	5.407E+003		-3.124E+003	2.507E+003
		604.70	97.60	1.165E+003		-1.085E+003	5.503E+002
		795.84	85.40	1.068E+003		5.250E+002	4.910E+002
		801.93	8.73	9.694E+003		3.361E+003	4.424E+003
		1038.57	1.00	9.657E+004		4.470E+004	4.402E+004
		1167.94	1.80	5.012E+004		2.190E+004	2.254E+004
		1365.15	3.04	2.955E+004		-1.048E+004	1.314E+004
	CS-137	661.65	85.12	1.068E+003	1.07E+003	2.510E+002	4.951E+002
	EU-152	121.78	28.40	3.762E+003	3.42E+003	1.822E+001	1.823E+003
		344.27	26.50	3.425E+003		-4.291E+003	1.626E+003
		1407.95	20.70	4.059E+003		1.499E+003	1.785E+003
	EU-154	123.07	40.40	2.649E+003	2.51E+003	1.315E+003	1.284E+003
		722.30	20.00	4.740E+003		2.500E+003	2.196E+003
		1274.51	34.40	2.506E+003		6.897E+002	1.115E+003
+	BI-214	609.31*	46.30	1.152E+003	1.15E+003	2.661E+003	5.078E+002
		768.36	5.04	1.898E+004		1.179E+004	8.778E+003
		806.17	1.23	6.816E+004		4.247E+004	3.107E+004
		934.06	3.21	2.730E+004		5.572E+003	1.240E+004
		1120.29	15.10	5.940E+003		-6.685E+003	2.676E+003
		1155.19	1.69	5.218E+004		-5.803E+004	2.342E+004
		1238.11	5.94	1.762E+004		7.421E+003	8.020E+003
		1280.96	1.47	5.999E+004		-7.099E+004	2.675E+004
		1377.67	4.11	1.804E+004		-1.121E+003	7.806E+003
		1385.31	0.78	1.164E+005		-5.121E+004	5.176E+004
		1401.50	1.39	5.722E+004		2.013E+003	2.498E+004
		1407.98	2.48	3.388E+004		1.252E+004	1.490E+004
		1509.19	2.19	3.258E+004		1.976E+004	1.386E+004
		1661.28	1.15	4.802E+004		-8.974E+003	1.905E+004
		1729.60	3.05	2.134E+004		9.950E+003	8.749E+003
		1764.49	15.80	5.048E+003		3.061E+003	2.147E+003
		1847.44	2.12	3.556E+004		-1.067E+003	1.489E+004
>		2118.54	1.21	0.000E+000		0.000E+000	0.000E+000
	PB-214	74.81	6.33	3.685E+004	2.67E+003	1.510E+004	1.791E+004
		77.11	10.70	2.028E+004		1.521E+004	9.858E+003
		87.20	3.70	4.093E+004		2.735E+003	1.989E+004
		89.80	1.03	1.436E+005		1.466E+004	6.979E+004
		241.98	7.49	1.327E+004		6.299E+003	6.383E+003

Nuclide Name	Energy (keV)	Yield (%)	Line MDA (pCi/M^2)	Nuclide MDA (pCi/M^2)	Activity (pCi/M^2)	Dec. Level (pCi/M^2)
PB-214	295.21	19.20	4.419E+003	2.67E+003	1.957E+003	2.100E+003
	351.92	37.20	2.665E+003		1.361E+003	1.271E+003
	785.91	1.10	8.813E+004		-3.084E+004	4.075E+004

+ = Nuclide identified during the nuclide identification
* = Energy line found in the spectrum
> = Calculated MDA is zero due to zero counts in the region, or
the region is outside the spectrum, or MDA has not been calculated
@ = Half-life too short to be able to perform the decay correction

```
************************************************************************
*****        G A M M A   S P E C T R U M   A N A L Y S I S        *****
************************************************************************


Filename: C:\LACBWR\B1-010-001-FSFC-D35-GM.CNF

Report Generated On             : 3/27/2019   9:03:02 PM

Sample Title                    : B1-010-001-FSFC-D35-GM
Sample Description              : Rx Bowl 3M Concrete
Sample Identification           : D35
Sample Type                     : Gamma Direct
Sample Geometry                 :

Peak Locate Threshold           :  3.00
Peak Locate Range (in channels) :    85 -  8000
Peak Area Range (in channels)   :    85 -  8000
Identification Energy Tolerance :    3.000 keV

Sample Size                     :  2.827E+001 M^2

Sample Taken On                 : 3/27/2019   9:04:00 AM
Acquisition Started             : 3/27/2019   9:05:12 AM

Live Time                       :      600.0 seconds
Real Time                       :      600.2 seconds

Dead Time                       :   0.03 %


              Energy Calibration Used Done On       : 10/24/2017
              Efficiency Calibration Used Done On   : 3/26/2019
              Efficiency ID                         : RxBOWL_CON_3M
```

****
***** P E A K A N A L Y S I S R E P O R T *****
****

Detector Name: 3844
Sample Title: B1-010-001-FSFC-D35-GM
Peak Analysis Performed on: 3/27/2019 9:03:02 PM
Peak Analysis From Channel: 85
Peak Analysis To Channel: 8000

Peak No.	ROI start	ROI end	Peak centroid	Energy (keV)	FWHM (keV)	Net Peak Area	Net Area Uncert.	Continuum Counts
1	947-	958	952.68	238.24	0.67	2.79E+001	27.41	6.21E+001
2	1400-	1413	1405.57	351.54	0.82	4.30E+001	24.71	3.90E+001
3	2426-	2440	2432.97	608.50	1.13	2.45E+001	18.94	2.25E+001
4	5824-	5847	5835.50	1458.89	0.89	1.69E+002	27.01	3.21E+000

M = First peak in a multiplet region
m = Other peak in a multiplet region
F = Fitted singlet

Errors quoted at 2.000 sigma

****
***** N U C L I D E I D E N T I F I C A T I O N R E P O R T *****
****

Sample Title: B1-010-001-FSFC-D35-GM
Nuclide Library Used: C:\GENIE2K\CAMFILES\LACBWR.NLB

..... IDENTIFIED NUCLIDES .....

Nuclide Name	Id Confidence	Energy (keV)	Yield (%)	Activity (pCi/M^2)	Activity Uncertainty
K-40	0.936	1460.81*	10.67	6.07351E+004	1.09375E+004
PB-212	0.999	74.81	9.60		
		77.11	17.50		
		87.20	6.30		
		89.80	1.75		
		115.19	0.60		
		238.63*	44.60	8.67969E+002	8.63469E+002
		300.09	3.41		
BI-214	0.995	609.31*	46.30	1.23231E+003	9.65838E+002
		768.36	5.04		
		806.17	1.23		
		934.06	3.21		
		1120.29	15.10		
		1155.19	1.69		
		1238.11	5.94		
		1280.96	1.47		
		1377.67	4.11		
		1385.31	0.78		
		1401.50	1.39		
		1407.98	2.48		
		1509.19	2.19		
		1661.28	1.15		
		1729.60	3.05		
		1764.49	15.80		
		1847.44	2.12		
		2118.54	1.21		
PB-214	0.999	74.81	6.33		
		77.11	10.70		
		87.20	3.70		
		89.80	1.03		
		241.98	7.49		
		295.21	19.20		
		351.92*	37.20	1.97681E+003	1.17909E+003
		785.91	1.10		

* = Energy line found in the spectrum.
@ = Energy line not used for Weighted Mean Activity
Energy Tolerance : 3.000 keV
Nuclide confidence index threshold = 0.30
Errors quoted at 2.000 sigma

****
***** I N T E R F E R E N C E C O R R E C T E D R E P O R T *****
****

Nuclide Name	Nuclide Id Confidence	Wt mean Activity (pCi/M^2)	Wt mean Activity Uncertainty
K-40	0.936	6.073511E+004	1.093748E+004
PB-212	0.999	8.679694E+002	8.634687E+002
BI-214	0.995	1.232310E+003	9.658382E+002
PB-214	0.999	1.976806E+003	1.179094E+003

? = Nuclide is part of an undetermined solution
X = Nuclide rejected by the interference analysis
@ = Nuclide contains energy lines not used in Weighted Mean Activity

Errors quoted at 2.000 sigma

********** U N I D E N T I F I E D P E A K S **********

Peak Locate Performed on: 3/27/2019 9:03:02 PM
Peak Locate From Channel: 85
Peak Locate To Channel: 8000

Peak No.	Energy (keV)	Peak Size in Counts per Second	Peak CPS % Uncertainty	Peak Type	Tol. Nuclide

All peaks were identified.

****
***** N U C L I D E M D A R E P O R T *****
****

Detector Name: 3844
Sample Geometry:
Sample Title: B1-010-001-FSFC-D35-GM
Nuclide Library Used: C:\GENIE2K\CAMFILES\LACBWR.NLB

	Nuclide Name	Energy (keV)	Yield (%)	Line MDA (pCi/M^2)	Nuclide MDA (pCi/M^2)	Activity (pCi/M^2)	Dec. Level (pCi/M^2)
+	K-40	1460.81*	10.67	5.337E+003	5.34E+003	6.074E+004	2.182E+003
	CO-60	1173.22	100.00	9.482E+002	7.24E+002	2.430E+002	4.286E+002
		1332.49	100.00	7.239E+002		-8.483E+001	3.133E+002
	CS-134	475.35	1.46	5.920E+004	9.49E+002	-2.113E+004	2.773E+004
		563.23	8.38	9.895E+003		-7.229E+003	4.588E+003
		569.32	15.43	5.126E+003		-3.996E+003	2.366E+003
		604.70	97.60	1.137E+003		7.201E+002	5.363E+002
		795.84	85.40	9.494E+002		-4.750E+002	4.316E+002
		801.93	8.73	1.038E+004		7.325E+003	4.769E+003
		1038.57	1.00	7.736E+004		-4.232E+004	3.441E+004
		1167.94	1.80	5.094E+004		-2.230E+003	2.295E+004
		1365.15	3.04	2.568E+004		1.927E+004	1.121E+004
	CS-137	661.65	85.12	1.012E+003	1.01E+003	7.907E+001	4.673E+002
	EU-152	121.78	28.40	3.951E+003	3.40E+003	-7.203E+002	1.918E+003
		344.27	26.50	3.397E+003		-4.052E+003	1.612E+003
		1407.95	20.70	4.436E+003		-1.849E+002	1.973E+003
	EU-154	123.07	40.40	2.730E+003	2.56E+003	8.503E+002	1.325E+003
		722.30	20.00	3.833E+003		-1.477E+003	1.743E+003
		1274.51	34.40	2.556E+003		-4.887E+001	1.140E+003
+	BI-214	609.31*	46.30	1.472E+003	1.47E+003	1.232E+003	6.682E+002
		768.36	5.04	1.736E+004		1.099E+004	7.966E+003
		806.17	1.23	7.777E+004		4.563E+004	3.587E+004
		934.06	3.21	2.876E+004		-4.976E+003	1.313E+004
		1120.29	15.10	7.297E+003		4.707E+003	3.355E+003
		1155.19	1.69	6.045E+004		1.086E+004	2.756E+004
		1238.11	5.94	1.691E+004		5.950E+003	7.668E+003
		1280.96	1.47	5.999E+004		4.154E+004	2.675E+004
		1377.67	4.11	1.963E+004		-2.275E+004	8.601E+003
		1385.31	0.78	9.242E+004		2.846E+004	3.979E+004
		1401.50	1.39	6.170E+004		5.100E+004	2.722E+004
		1407.98	2.48	3.702E+004		-1.544E+003	1.647E+004
		1509.19	2.19	2.993E+004		1.616E+004	1.253E+004
		1661.28	1.15	4.400E+004		-9.615E+003	1.704E+004
		1729.60	3.05	2.134E+004		-1.523E+003	8.749E+003
		1764.49	15.80	5.239E+003		9.103E+002	2.243E+003
		1847.44	2.12	3.204E+004		1.494E+004	1.313E+004
>		2118.54	1.21	0.000E+000		0.000E+000	0.000E+000
+	PB-214	74.81	6.33	3.794E+004	1.71E+003	3.323E+004	1.845E+004
		77.11	10.70	2.066E+004		1.376E+004	1.005E+004
		87.20	3.70	4.093E+004		4.087E+002	1.989E+004
		89.80	1.03	1.419E+005		-9.166E+004	6.894E+004
		241.98	7.49	1.368E+004		1.443E+004	6.586E+003

	Nuclide Name	Energy (keV)	Yield (%)	Line MDA (pCi/M^2)	Nuclide MDA (pCi/M^2)	Activity (pCi/M^2)	Dec. Level (pCi/M^2)
+	PB-214	295.21	19.20	4.602E+003	1.71E+003	6.107E+002	2.191E+003
		351.92*	37.20	1.708E+003		1.977E+003	7.918E+002
		785.91	1.10	7.119E+004		-2.705E+004	3.227E+004

+ = Nuclide identified during the nuclide identification
* = Energy line found in the spectrum
> = Calculated MDA is zero due to zero counts in the region, or
the region is outside the spectrum, or MDA has not been calculated
@ = Half-life too short to be able to perform the decay correction

```
************************************************************************
*****        G A M M A   S P E C T R U M   A N A L Y S I S        *****
************************************************************************


Filename: C:\LACBWR\B1-010-001-FSFC-D36-GM.CNF

Report Generated On             : 3/27/2019   9:04:08 PM

Sample Title                    : B1-010-001-FSFC-D36-GM
Sample Description              : Rx Bowl 3M Concrete
Sample Identification           : D36
Sample Type                     : Gamma Direct
Sample Geometry                 :

Peak Locate Threshold           :  3.00
Peak Locate Range (in channels) :    85 -  8000
Peak Area Range (in channels)   :    85 -  8000
Identification Energy Tolerance :    3.000 keV

Sample Size                     :  2.827E+001 M^2

Sample Taken On                 : 3/27/2019   9:23:00 AM
Acquisition Started             : 3/27/2019   9:23:00 AM

Live Time                       :      600.0 seconds
Real Time                       :      600.2 seconds

Dead Time                       :   0.03 %


              Energy Calibration Used Done On       : 10/24/2017
              Efficiency Calibration Used Done On   : 3/26/2019
              Efficiency ID                         : RxBOWL_CON_3M
```

****
***** P E A K A N A L Y S I S R E P O R T *****
****

Detector Name: 3844
Sample Title: B1-010-001-FSFC-D36-GM
Peak Analysis Performed on: 3/27/2019 9:04:08 PM
Peak Analysis From Channel: 85
Peak Analysis To Channel: 8000

Peak No.	ROI start	ROI end	Peak centroid	Energy (keV)	FWHM (keV)	Net Peak Area	Net Area Uncert.	Continuum Counts
1	945-	959	952.41	238.17	0.85	8.88E+001	32.02	5.82E+001
2	1400-	1413	1406.32	351.73	0.82	2.17E+001	20.77	3.13E+001
3	2323-	2336	2329.65	582.66	0.94	3.14E+001	17.24	1.56E+001
4	2427-	2439	2432.72	608.43	0.68	4.61E+001	16.35	7.94E+000
5	3632-	3645	3638.20	909.83	0.45	2.55E+001	15.59	1.25E+001
6	5826-	5847	5836.15	1459.05	0.87	2.01E+002	30.24	7.60E+000

M = First peak in a multiplet region
m = Other peak in a multiplet region
F = Fitted singlet

Errors quoted at 2.000 sigma

****
***** N U C L I D E I D E N T I F I C A T I O N R E P O R T *****
****

Sample Title: B1-010-001-FSFC-D36-GM
Nuclide Library Used: C:\GENIE2K\CAMFILES\LACBWR.NLB

..... IDENTIFIED NUCLIDES .....

Nuclide Name	Id Confidence	Energy (keV)	Yield (%)	Activity (pCi/M^2)	Activity Uncertainty
K-40	0.946	1460.81*	10.67	7.24762E+004	1.24213E+004
PB-212	0.998	74.81	9.60		
		77.11	17.50		
		87.20	6.30		
		89.80	1.75		
		115.19	0.60		
		238.63*	44.60	2.76063E+003	1.08899E+003
		300.09	3.41		
BI-214	0.994	609.31*	46.30	2.31685E+003	8.74311E+002
		768.36	5.04		
		806.17	1.23		
		934.06	3.21		
		1120.29	15.10		
		1155.19	1.69		
		1238.11	5.94		
		1280.96	1.47		
		1377.67	4.11		
		1385.31	0.78		
		1401.50	1.39		
		1407.98	2.48		
		1509.19	2.19		
		1661.28	1.15		
		1729.60	3.05		
		1764.49	15.80		
		1847.44	2.12		
		2118.54	1.21		
PB-214	1.000	74.81	6.33		
		77.11	10.70		
		87.20	3.70		
		89.80	1.03		
		241.98	7.49		
		295.21	19.20		
		351.92*	37.20	9.98956E+002	9.68318E+002
		785.91	1.10		
AC-228	0.984	89.95	2.10		
		93.35	3.50		
		129.08	2.80		
		209.28	4.40		
		270.23	3.60		
		327.64	3.20		
		338.32	11.40		

Nuclide Name	Id Confidence	Energy (keV)	Yield (%)	Activity (pCi/M^2)	Activity Uncertainty
AC-228	0.984	409.51	2.13		
		463.00	4.40		
		794.70	4.60		
		911.60*	27.70	2.70368E+003	1.68081E+003
		964.60	5.20		
		969.11	16.60		
		1587.90	3.71		

* = Energy line found in the spectrum.
@ = Energy line not used for Weighted Mean Activity
Energy Tolerance : 3.000 keV
Nuclide confidence index threshold = 0.30
Errors quoted at 2.000 sigma

****
***** I N T E R F E R E N C E C O R R E C T E D R E P O R T *****
****

Nuclide Name	Nuclide Id Confidence	Wt mean Activity (pCi/M^2)	Wt mean Activity Uncertainty
K-40	0.946	7.247621E+004	1.242127E+004
PB-212	0.998	2.760628E+003	1.088987E+003
BI-214	0.994	2.316849E+003	8.743107E+002
PB-214	1.000	9.989564E+002	9.683176E+002
AC-228	0.984	2.703676E+003	1.680806E+003

? = Nuclide is part of an undetermined solution
X = Nuclide rejected by the interference analysis
@ = Nuclide contains energy lines not used in Weighted Mean Activity

Errors quoted at 2.000 sigma

********** U N I D E N T I F I E D P E A K S **********

Peak Locate Performed on: 3/27/2019 9:04:08 PM
Peak Locate From Channel: 85
Peak Locate To Channel: 8000

Peak No.	Energy (keV)	Peak Size in Counts per Second	Peak CPS % Uncertainty	Peak Type	Tol. Nuclide
3	582.66	5.2349E-002	54.89		

M = First peak in a multiplet region
m = Other peak in a multiplet region
F = Fitted singlet

Errors quoted at 2.000 sigma

****
***** N U C L I D E M D A R E P O R T *****
****

Detector Name: 3844
Sample Geometry:
Sample Title: B1-010-001-FSFC-D36-GM
Nuclide Library Used: C:\GENIE2K\CAMFILES\LACBWR.NLB

	Nuclide Name	Energy (keV)	Yield (%)	Line MDA (pCi/M^2)	Nuclide MDA (pCi/M^2)	Activity (pCi/M^2)	Dec. Level (pCi/M^2)
+	K-40	1460.81*	10.67	7.154E+003	7.15E+003	7.248E+004	3.090E+003
	CO-60	1173.22	100.00	9.338E+002	7.01E+002	-1.584E+003	4.214E+002
		1332.49	100.00	7.011E+002		4.679E+002	3.019E+002
	CS-134	475.35	1.46	6.283E+004	1.10E+003	-7.348E+003	2.954E+004
		563.23	8.38	9.555E+003		4.420E+003	4.418E+003
		569.32	15.43	5.174E+003		-2.046E+003	2.390E+003
		604.70	97.60	1.096E+003		1.360E+003	5.159E+002
		795.84	85.40	1.194E+003		9.069E+002	5.539E+002
		801.93	8.73	1.134E+004		9.650E+003	5.245E+003
		1038.57	1.00	9.409E+004		-3.075E+004	4.278E+004
		1167.94	1.80	5.851E+004		-2.869E+004	2.673E+004
		1365.15	3.04	2.347E+004		-1.297E+004	1.010E+004
	CS-137	661.65	85.12	1.146E+003	1.15E+003	8.840E+002	5.341E+002
	EU-152	121.78	28.40	3.956E+003	3.33E+003	1.859E+003	1.920E+003
		344.27	26.50	3.328E+003		-2.059E+003	1.578E+003
		1407.95	20.70	4.345E+003		3.797E+003	1.928E+003
	EU-154	123.07	40.40	2.767E+003	2.77E+003	8.675E+002	1.343E+003
		722.30	20.00	4.489E+003		-3.138E+003	2.071E+003
		1274.51	34.40	3.008E+003		1.091E+003	1.366E+003
+	BI-214	609.31*	46.30	8.902E+002	8.90E+002	2.317E+003	3.771E+002
		768.36	5.04	1.846E+004		-1.096E+004	8.516E+003
		806.17	1.23	7.702E+004		2.343E+004	3.550E+004
		934.06	3.21	3.081E+004		6.471E+003	1.415E+004
		1120.29	15.10	6.905E+003		-1.703E+003	3.158E+003
		1155.19	1.69	6.045E+004		4.184E+004	2.756E+004
		1238.11	5.94	2.075E+004		7.193E+003	9.585E+003
		1280.96	1.47	6.226E+004		-4.191E+004	2.789E+004
		1377.67	4.11	1.626E+004		9.864E+003	6.919E+003
		1385.31	0.78	1.038E+005		8.065E+004	4.550E+004
		1401.50	1.39	5.722E+004		4.295E+004	2.498E+004
		1407.98	2.48	3.627E+004		3.170E+004	1.609E+004
		1509.19	2.19	2.533E+004		1.946E+003	1.023E+004
		1661.28	1.15	5.500E+004		2.564E+004	2.254E+004
		1729.60	3.05	2.578E+004		1.131E+003	1.097E+004
		1764.49	15.80	5.933E+003		4.453E+003	2.590E+003
		1847.44	2.12	3.386E+004		1.707E+004	1.404E+004
>		2118.54	1.21	0.000E+000		0.000E+000	0.000E+000
+	PB-214	74.81	6.33	3.849E+004	1.53E+003	4.617E+004	1.873E+004
		77.11	10.70	2.109E+004		1.124E+004	1.027E+004
		87.20	3.70	4.268E+004		1.342E+004	2.076E+004
		89.80	1.03	1.477E+005		8.410E+004	7.187E+004
		241.98	7.49	1.491E+004		-9.707E+003	7.202E+003

	Nuclide Name	Energy (keV)	Yield (%)	Line MDA (pCi/M^2)	Nuclide MDA (pCi/M^2)	Activity (pCi/M^2)	Dec. Level (pCi/M^2)
+	PB-214	295.21	19.20	4.745E+003	1.53E+003	2.035E+003	2.263E+003
		351.92*	37.20	1.528E+003		9.990E+002	7.020E+002
		785.91	1.10	8.318E+004		-4.195E+004	3.827E+004

+ = Nuclide identified during the nuclide identification
* = Energy line found in the spectrum
> = Calculated MDA is zero due to zero counts in the region, or
the region is outside the spectrum, or MDA has not been calculated
@ = Half-life too short to be able to perform the decay correction

```
***********************************************************************
*****        G A M M A   S P E C T R U M   A N A L Y S I S        *****
***********************************************************************


Filename: 3844

Report Generated On              : 3/28/2019   9:33:16 AM

Sample Title                     : B1-010-001-FSFC-D37-GM
Sample Description               : Rx Bowl 3M Concrete
Sample Identification            : D37
Sample Type                      : Gamma Direct
Sample Geometry                  :

Peak Locate Threshold            :  3.00
Peak Locate Range (in channels)  :    85 -  8000
Peak Area Range (in channels)    :    85 -  8000
Identification Energy Tolerance  :    3.000 keV

Sample Size                      :  2.827E+001 M^2

Sample Taken On                  : 3/28/2019   9:22:00 AM
Acquisition Started              : 3/28/2019   9:23:15 AM

Live Time                        :      600.0 seconds
Real Time                        :      600.2 seconds

Dead Time                        :   0.03 %


              Energy Calibration Used Done On       : 10/24/2017
              Efficiency Calibration Used Done On   : 3/26/2019
              Efficiency ID                         : RxBOWL_CON_3M
```

****
***** P E A K A N A L Y S I S R E P O R T *****
****

Detector Name: 3844
Sample Title: B1-010-001-FSFC-D37-GM
Peak Analysis Performed on: 3/28/2019 9:33:16 AM
Peak Analysis From Channel: 85
Peak Analysis To Channel: 8000

Peak No.	ROI start	ROI end	Peak centroid	Energy (keV)	FWHM (keV)	Net Peak Area	Net Area Uncert.	Continuum Counts
1	295-	304	299.86	74.90	0.41	2.95E+001	33.44	1.11E+002
2	949-	960	954.67	238.74	1.15	4.20E+001	28.76	6.50E+001
3	1401-	1413	1407.57	352.04	0.94	3.23E+001	19.19	2.28E+001
4	2324-	2338	2331.35	583.09	0.33	3.10E+001	17.22	1.50E+001
5	2429-	2443	2436.56	609.39	0.58	4.60E+001	16.96	8.97E+000
6	3636-	3650	3642.61	910.93	0.52	4.33E+001	14.71	3.75E+000
7	5829-	5853	5841.78	1460.46	1.62	2.44E+002	32.03	3.07E+000

M = First peak in a multiplet region
m = Other peak in a multiplet region
F = Fitted singlet

Errors quoted at 2.000 sigma

****
***** N U C L I D E I D E N T I F I C A T I O N R E P O R T *****
****

Sample Title: B1-010-001-FSFC-D37-GM
Nuclide Library Used: C:\GENIE2K\CAMFILES\LACBWR.NLB

..... IDENTIFIED NUCLIDES .....

Nuclide Name	Id Confidence	Energy (keV)	Yield (%)	Activity (pCi/M^2)	Activity Uncertainty
K-40	0.998	1460.81*	10.67	8.78399E+004	1.36270E+004
PB-212	1.000	74.81*	9.60	7.40938E+003	8.53574E+003
		77.11	17.50		
		87.20	6.30		
		89.80	1.75		
		115.19	0.60		
		238.63*	44.60	1.30747E+003	9.19139E+002
		300.09	3.41		
BI-214	1.000	609.31*	46.30	2.31704E+003	9.03774E+002
		768.36	5.04		
		806.17	1.23		
		934.06	3.21		
		1120.29	15.10		
		1155.19	1.69		
		1238.11	5.94		
		1280.96	1.47		
		1377.67	4.11		
		1385.31	0.78		
		1401.50	1.39		
		1407.98	2.48		
		1509.19	2.19		
		1661.28	1.15		
		1729.60	3.05		
		1764.49	15.80		
		1847.44	2.12		
		2118.54	1.21		
PB-214	0.626	74.81*	6.33	1.12370E+004	1.29452E+004
		77.11	10.70		
		87.20	3.70		
		89.80	1.03		
		241.98	7.49		
		295.21	19.20		
		351.92*	37.20	1.48353E+003	9.14292E+002
		785.91	1.10		
AC-228	0.998	89.95	2.10		
		93.35	3.50		
		129.08	2.80		
		209.28	4.40		
		270.23	3.60		
		327.64	3.20		
		338.32	11.40		

Nuclide Name	Id Confidence	Energy (keV)	Yield (%)	Activity (pCi/M^2)	Activity Uncertainty
AC-228	0.998	409.51	2.13		
		463.00	4.40		
		794.70	4.60		
		911.60*	27.70	4.58515E+003	1.64746E+003
		964.60	5.20		
		969.11	16.60		
		1587.90	3.71		

* = Energy line found in the spectrum.
@ = Energy line not used for Weighted Mean Activity
Energy Tolerance : 3.000 keV
Nuclide confidence index threshold = 0.30
Errors quoted at 2.000 sigma

****
***** I N T E R F E R E N C E C O R R E C T E D R E P O R T *****
****

Nuclide Name	Nuclide Id Confidence	Wt mean Activity (pCi/M^2)	Wt mean Activity Uncertainty
K-40	0.998	8.783988E+004	1.362699E+004
PB-212	1.000	1.365914E+003	9.138820E+002
BI-214	1.000	2.317044E+003	9.037736E+002
PB-214	0.626	1.521660E+003	9.120459E+002
AC-228	0.998	4.585147E+003	1.647459E+003

? = Nuclide is part of an undetermined solution
X = Nuclide rejected by the interference analysis
@ = Nuclide contains energy lines not used in Weighted Mean Activity

Errors quoted at 2.000 sigma

********** U N I D E N T I F I E D P E A K S **********

Peak Locate Performed on: 3/28/2019 9:33:16 AM
Peak Locate From Channel: 85
Peak Locate To Channel: 8000

Peak No.	Energy (keV)	Peak Size in Counts per Second	Peak CPS % Uncertainty	Peak Type	Tol. Nuclide
4	583.09	5.1667E-002	55.55		

M = First peak in a multiplet region
m = Other peak in a multiplet region
F = Fitted singlet

Errors quoted at 2.000 sigma

****
***** N U C L I D E M D A R E P O R T *****
****

Detector Name: 3844
Sample Geometry:
Sample Title: B1-010-001-FSFC-D37-GM
Nuclide Library Used: C:\GENIE2K\CAMFILES\LACBWR.NLB

	Nuclide Name	Energy (keV)	Yield (%)	Line MDA (pCi/M^2)	Nuclide MDA (pCi/M^2)	Activity (pCi/M^2)	Dec. Level (pCi/M^2)
+	K-40	1460.81*	10.67	5.171E+003	5.17E+003	8.784E+004	2.098E+003
	CO-60	1173.22	100.00	8.890E+002	8.65E+002	6.417E+002	3.990E+002
		1332.49	100.00	8.647E+002		4.824E+002	3.837E+002
	CS-134	475.35	1.46	5.572E+004	1.11E+003	2.848E+004	2.599E+004
		563.23	8.38	1.069E+004		-2.668E+003	4.987E+003
		569.32	15.43	5.221E+003		1.853E+003	2.414E+003
		604.70	97.60	1.143E+003		-2.935E+002	5.391E+002
		795.84	85.40	1.112E+003		8.721E+002	5.129E+002
		801.93	8.73	1.082E+004		-6.782E+003	4.986E+003
		1038.57	1.00	1.013E+005		2.357E+004	4.640E+004
		1167.94	1.80	4.384E+004		-2.493E+004	1.940E+004
		1365.15	3.04	2.423E+004		-2.607E+004	1.048E+004
	CS-137	661.65	85.12	1.146E+003	1.15E+003	-6.421E+002	5.341E+002
	EU-152	121.78	28.40	4.194E+003	3.45E+003	-2.248E+003	2.040E+003
		344.27	26.50	3.452E+003		-1.174E+003	1.639E+003
		1407.95	20.70	4.436E+003		1.130E+003	1.973E+003
	EU-154	123.07	40.40	2.914E+003	2.91E+003	-1.688E+003	1.417E+003
		722.30	20.00	5.055E+003		-3.543E+002	2.353E+003
		1274.51	34.40	3.049E+003		-2.074E+002	1.386E+003
+	BI-214	609.31*	46.30	9.787E+002	9.79E+002	2.317E+003	4.212E+002
		768.36	5.04	1.846E+004		-3.638E+003	8.516E+003
		806.17	1.23	7.998E+004		8.222E+004	3.698E+004
		934.06	3.21	3.422E+004		2.233E+004	1.586E+004
		1120.29	15.10	8.157E+003		5.221E+003	3.784E+003
		1155.19	1.69	6.415E+004		2.937E+004	2.941E+004
		1238.11	5.94	1.936E+004		-2.073E+003	8.889E+003
		1280.96	1.47	7.342E+004		1.142E+004	3.347E+004
		1377.67	4.11	2.155E+004		-1.516E+003	9.560E+003
		1385.31	0.78	1.065E+005		-1.212E+004	4.682E+004
		1401.50	1.39	5.399E+004		-1.122E+004	2.336E+004
		1407.98	2.48	3.702E+004		9.434E+003	1.647E+004
		1509.19	2.19	3.129E+004		6.511E+003	1.321E+004
		1661.28	1.15	6.643E+004		4.029E+004	2.826E+004
		1729.60	3.05	2.134E+004		9.950E+003	8.749E+003
		1764.49	15.80	4.179E+003		-9.045E+002	1.713E+003
		1847.44	2.12	3.556E+004		1.920E+004	1.489E+004
>		2118.54	1.21	0.000E+000		0.000E+000	0.000E+000
+	PB-214	74.81*	6.33	2.087E+004	1.30E+003	1.124E+004	9.918E+003
		77.11	10.70	2.075E+004		1.207E+004	1.009E+004
		87.20	3.70	4.517E+004		2.484E+002	2.201E+004
		89.80	1.03	1.557E+005		7.284E+004	7.585E+004
		241.98	7.49	1.421E+004		1.483E+004	6.853E+003

	Nuclide Name	Energy (keV)	Yield (%)	Line MDA (pCi/M^2)	Nuclide MDA (pCi/M^2)	Activity (pCi/M^2)	Dec. Level (pCi/M^2)
+	PB-214	295.21	19.20	5.166E+003	1.30E+003	3.552E+003	2.473E+003
		351.92*	37.20	1.295E+003		1.484E+003	5.854E+002
		785.91	1.10	8.233E+004		-1.200E+005	3.785E+004

+ = Nuclide identified during the nuclide identification
* = Energy line found in the spectrum
> = Calculated MDA is zero due to zero counts in the region, or the region is outside the spectrum, or MDA has not been calculated
@ = Half-life too short to be able to perform the decay correction

```
***********************************************************************
*****        G A M M A   S P E C T R U M   A N A L Y S I S        *****
***********************************************************************


Filename: 3844

Report Generated On              : 3/28/2019   9:48:55 AM

Sample Title                     : B1-010-001-FSFC-D38-GM
Sample Description               : Rx Bowl 3M Concrete
Sample Identification            : D38
Sample Type                      : Gamma Direct
Sample Geometry                  :

Peak Locate Threshold            :  3.00
Peak Locate Range (in channels)  :    85 -  8000
Peak Area Range (in channels)    :    85 -  8000
Identification Energy Tolerance  :    3.000 keV

Sample Size                      :  2.827E+001 M^2

Sample Taken On                  : 3/28/2019   9:36:00 AM
Acquisition Started              : 3/28/2019   9:38:54 AM

Live Time                        :      600.0 seconds
Real Time                        :      600.2 seconds

Dead Time                        :   0.04 %


              Energy Calibration Used Done On       : 10/24/2017
              Efficiency Calibration Used Done On   : 3/26/2019
              Efficiency ID                         : RxBOWL_CON_3M
```

****
***** P E A K A N A L Y S I S R E P O R T *****
****

Detector Name: 3844
Sample Title: B1-010-001-FSFC-D38-GM
Peak Analysis Performed on: 3/28/2019 9:48:54 AM
Peak Analysis From Channel: 85
Peak Analysis To Channel: 8000

Peak No.	ROI start	ROI end	Peak centroid	Energy (keV)	FWHM (keV)	Net Peak Area	Net Area Uncert.	Continuum Counts
1	947-	961	953.95	238.56	0.62	4.43E+001	32.94	7.88E+001
2	1400-	1414	1407.68	352.07	0.32	4.03E+001	22.55	2.97E+001
3	2325-	2338	2331.42	583.10	0.32	4.49E+001	16.86	9.07E+000
4	3638-	3651	3644.76	911.47	0.80	2.71E+001	15.43	1.09E+001
5	5830-	5855	5841.69	1460.43	1.88	2.60E+002	33.70	5.96E+000

M = First peak in a multiplet region
m = Other peak in a multiplet region
F = Fitted singlet

Errors quoted at 2.000 sigma

****
***** N U C L I D E I D E N T I F I C A T I O N R E P O R T *****
****

Sample Title: B1-010-001-FSFC-D38-GM
Nuclide Library Used: C:\GENIE2K\CAMFILES\LACBWR.NLB

..... IDENTIFIED NUCLIDES .....

Nuclide Name	Id Confidence	Energy (keV)	Yield (%)	Activity (pCi/M^2)	Activity Uncertainty
K-40	0.997	1460.81*	10.67	9.36396E+004	1.43923E+004
PB-212	1.000	74.81	9.60		
		77.11	17.50		
		87.20	6.30		
		89.80	1.75		
		115.19	0.60		
		238.63*	44.60	1.37664E+003	1.04813E+003
		300.09	3.41		
PB-214	1.000	74.81	6.33		
		77.11	10.70		
		87.20	3.70		
		89.80	1.03		
		241.98	7.49		
		295.21	19.20		
		351.92*	37.20	1.85391E+003	1.07889E+003
		785.91	1.10		
AC-228	1.000	89.95	2.10		
		93.35	3.50		
		129.08	2.80		
		209.28	4.40		
		270.23	3.60		
		327.64	3.20		
		338.32	11.40		
		409.51	2.13		
		463.00	4.40		
		794.70	4.60		
		911.60*	27.70	2.87171E+003	1.67009E+003
		964.60	5.20		
		969.11	16.60		
		1587.90	3.71		

* = Energy line found in the spectrum.
@ = Energy line not used for Weighted Mean Activity
Energy Tolerance : 3.000 keV
Nuclide confidence index threshold = 0.30
Errors quoted at 2.000 sigma

****
***** I N T E R F E R E N C E C O R R E C T E D R E P O R T *****
****

Nuclide Name	Nuclide Id Confidence	Wt mean Activity (pCi/M^2)	Wt mean Activity Uncertainty
K-40	0.997	9.363961E+004	1.439235E+004
PB-212	1.000	1.376644E+003	1.048130E+003
PB-214	1.000	1.853913E+003	1.078888E+003
AC-228	1.000	2.871706E+003	1.670089E+003

? = Nuclide is part of an undetermined solution
X = Nuclide rejected by the interference analysis
@ = Nuclide contains energy lines not used in Weighted Mean Activity

Errors quoted at 2.000 sigma

********** U N I D E N T I F I E D P E A K S **********

Peak Locate Performed on: 3/28/2019 9:48:54 AM
Peak Locate From Channel: 85
Peak Locate To Channel: 8000

Peak No.	Energy (keV)	Peak Size in Counts per Second	Peak CPS % Uncertainty	Peak Type	Tol. Nuclide
3	583.10	7.4884E-002	37.52		

M = First peak in a multiplet region
m = Other peak in a multiplet region
F = Fitted singlet

Errors quoted at 2.000 sigma

****
***** N U C L I D E M D A R E P O R T *****
****

Detector Name: 3844
Sample Geometry:
Sample Title: B1-010-001-FSFC-D38-GM
Nuclide Library Used: C:\GENIE2K\CAMFILES\LACBWR.NLB

	Nuclide Name	Energy (keV)	Yield (%)	Line MDA (pCi/M^2)	Nuclide MDA (pCi/M^2)	Activity (pCi/M^2)	Dec. Level (pCi/M^2)
+	K-40	1460.81*	10.67	6.771E+003	6.77E+003	9.364E+004	2.898E+003
	CO-60	1173.22	100.00	1.043E+003	8.46E+002	-3.357E+002	4.760E+002
		1332.49	100.00	8.463E+002		-1.228E+002	3.744E+002
	CS-134	475.35	1.46	5.768E+004	1.03E+003	-3.644E+004	2.697E+004
		563.23	8.38	9.380E+003		-2.034E+003	4.330E+003
		569.32	15.43	5.497E+003		-3.202E+003	2.552E+003
		604.70	97.60	1.125E+003		1.310E+003	5.305E+002
		795.84	85.40	1.034E+003		5.904E+002	4.740E+002
		801.93	8.73	1.005E+004		-4.690E+003	4.600E+003
		1038.57	1.00	9.409E+004		6.229E+004	4.278E+004
		1167.94	1.80	5.411E+004		2.796E+003	2.453E+004
		1365.15	3.04	2.185E+004		-1.013E+004	9.294E+003
	CS-137	661.65	85.12	1.068E+003	1.07E+003	-1.337E+002	4.951E+002
	EU-152	121.78	28.40	4.052E+003	3.33E+003	-1.119E+003	1.968E+003
		344.27	26.50	3.328E+003		-1.921E+003	1.578E+003
		1407.95	20.70	4.345E+003		-4.607E+002	1.928E+003
	EU-154	123.07	40.40	2.873E+003	2.87E+003	2.215E+003	1.396E+003
		722.30	20.00	4.446E+003		1.648E+003	2.049E+003
		1274.51	34.40	3.129E+003		1.362E+002	1.426E+003
	BI-214	609.31	46.30	2.455E+003	2.45E+003	3.280E+003	1.159E+003
		768.36	5.04	2.110E+004		-2.053E+004	9.833E+003
		806.17	1.23	7.393E+004		1.975E+004	3.395E+004
		934.06	3.21	2.946E+004		2.296E+004	1.348E+004
		1120.29	15.10	7.373E+003		-2.181E+003	3.393E+003
		1155.19	1.69	6.557E+004		4.227E+004	3.012E+004
		1238.11	5.94	1.872E+004		7.866E+002	8.573E+003
		1280.96	1.47	6.226E+004		-7.046E+004	2.789E+004
		1377.67	4.11	2.109E+004		1.062E+004	9.330E+003
		1385.31	0.78	1.065E+005		5.534E+004	4.682E+004
		1401.50	1.39	5.563E+004		4.921E+003	2.418E+004
		1407.98	2.48	3.627E+004		-3.845E+003	1.609E+004
		1509.19	2.19	2.697E+004		-1.116E+004	1.105E+004
		1661.28	1.15	6.104E+004		3.297E+004	2.556E+004
		1729.60	3.05	2.134E+004		-9.543E+003	8.749E+003
		1764.49	15.80	6.398E+003		3.208E+003	2.822E+003
		1847.44	2.12	3.009E+004		-3.201E+004	1.216E+004
>		2118.54	1.21	0.000E+000		0.000E+000	0.000E+000
+	PB-214	74.81	6.33	3.703E+004	1.53E+003	4.660E+004	1.800E+004
		77.11	10.70	2.028E+004		1.015E+004	9.858E+003
		87.20	3.70	4.249E+004		2.019E+003	2.067E+004
		89.80	1.03	1.452E+005		2.493E+004	7.063E+004
		241.98	7.49	1.432E+004		8.330E+003	6.908E+003

	Nuclide Name	Energy (keV)	Yield (%)	Line MDA (pCi/M^2)	Nuclide MDA (pCi/M^2)	Activity (pCi/M^2)	Dec. Level (pCi/M^2)
+	PB-214	295.21	19.20	5.418E+003	1.53E+003	8.042E+001	2.599E+003
		351.92*	37.20	1.535E+003		1.854E+003	7.051E+002
		785.91	1.10	7.970E+004		4.217E+003	3.653E+004

+ = Nuclide identified during the nuclide identification
* = Energy line found in the spectrum
> = Calculated MDA is zero due to zero counts in the region, or
the region is outside the spectrum, or MDA has not been calculated
@ = Half-life too short to be able to perform the decay correction

```
***********************************************************************
*****        G A M M A   S P E C T R U M   A N A L Y S I S        *****
***********************************************************************


Filename: 3844

Report Generated On              : 3/28/2019  10:44:33 AM

Sample Title                     : B1-010-001-FSFC-D39-GM
Sample Description               : Rx Bowl 3M Concrete
Sample Identification            : D39
Sample Type                      : Gamma Direct
Sample Geometry                  :

Peak Locate Threshold            :  3.00
Peak Locate Range (in channels)  :    85 -  8000
Peak Area Range (in channels)    :    85 -  8000
Identification Energy Tolerance  :    3.000 keV

Sample Size                      :  2.827E+001 M^2

Sample Taken On                  : 3/28/2019  10:33:00 AM
Acquisition Started              : 3/28/2019  10:34:32 AM

Live Time                        :      600.0 seconds
Real Time                        :      600.2 seconds

Dead Time                        :   0.03 %


              Energy Calibration Used Done On       : 10/24/2017
              Efficiency Calibration Used Done On   : 3/26/2019
              Efficiency ID                         : RxBOWL_CON_3M
```

****
***** P E A K A N A L Y S I S R E P O R T *****
****

Detector Name: 3844
Sample Title: B1-010-001-FSFC-D39-GM
Peak Analysis Performed on: 3/28/2019 10:44:33 AM
Peak Analysis From Channel: 85
Peak Analysis To Channel: 8000

Peak No.	ROI start	ROI end	Peak centroid	Energy (keV)	FWHM (keV)	Net Peak Area	Net Area Uncert.	Continuum Counts
1	946-	962	953.78	238.51	0.94	5.95E+001	32.51	6.55E+001
2	1400-	1411	1405.91	351.62	0.53	2.21E+001	20.44	3.29E+001
3	2427-	2440	2434.44	608.87	0.62	4.73E+001	19.06	1.57E+001
4	3634-	3647	3640.06	910.29	1.36	2.98E+001	14.49	8.18E+000
5	5826-	5849	5837.53	1459.39	1.95	2.24E+002	29.93	0.00E+000

M = First peak in a multiplet region
m = Other peak in a multiplet region
F = Fitted singlet

Errors quoted at 2.000 sigma

****
***** N U C L I D E I D E N T I F I C A T I O N R E P O R T *****
****

Sample Title: B1-010-001-FSFC-D39-GM
Nuclide Library Used: C:\GENIE2K\CAMFILES\LACBWR.NLB

..... IDENTIFIED NUCLIDES .....

Nuclide Name	Id Confidence	Energy (keV)	Yield (%)	Activity (pCi/M^2)	Activity Uncertainty
K-40	0.965	1460.81*	10.67	8.06214E+004	1.26661E+004
PB-212	1.000	74.81	9.60		
		77.11	17.50		
		87.20	6.30		
		89.80	1.75		
		115.19	0.60		
		238.63*	44.60	1.85128E+003	1.05386E+003
		300.09	3.41		
BI-214	0.999	609.31*	46.30	2.38041E+003	1.00644E+003
		768.36	5.04		
		806.17	1.23		
		934.06	3.21		
		1120.29	15.10		
		1155.19	1.69		
		1238.11	5.94		
		1280.96	1.47		
		1377.67	4.11		
		1385.31	0.78		
		1401.50	1.39		
		1407.98	2.48		
		1509.19	2.19		
		1661.28	1.15		
		1729.60	3.05		
		1764.49	15.80		
		1847.44	2.12		
		2118.54	1.21		
PB-214	0.999	74.81	6.33		
		77.11	10.70		
		87.20	3.70		
		89.80	1.03		
		241.98	7.49		
		295.21	19.20		
		351.92*	37.20	1.01681E+003	9.53546E+002
		785.91	1.10		
AC-228	0.991	89.95	2.10		
		93.35	3.50		
		129.08	2.80		
		209.28	4.40		
		270.23	3.60		
		327.64	3.20		
		338.32	11.40		

Nuclide Name	Id Confidence	Energy (keV)	Yield (%)	Activity (pCi/M^2)	Activity Uncertainty
AC-228	0.991	409.51	2.13		
		463.00	4.40		
		794.70	4.60		
		911.60*	27.70	3.16040E+003	1.57875E+003
		964.60	5.20		
		969.11	16.60		
		1587.90	3.71		

* = Energy line found in the spectrum.
@ = Energy line not used for Weighted Mean Activity
Energy Tolerance : 3.000 keV
Nuclide confidence index threshold = 0.30
Errors quoted at 2.000 sigma

****
***** I N T E R F E R E N C E C O R R E C T E D R E P O R T *****
****

Nuclide Name	Nuclide Id Confidence	Wt mean Activity (pCi/M^2)	Wt mean Activity Uncertainty
K-40	0.965	8.062144E+004	1.266611E+004
PB-212	1.000	1.851279E+003	1.053863E+003
BI-214	0.999	2.380414E+003	1.006444E+003
PB-214	0.999	1.016808E+003	9.535456E+002
AC-228	0.991	3.160405E+003	1.578755E+003

? = Nuclide is part of an undetermined solution
X = Nuclide rejected by the interference analysis
@ = Nuclide contains energy lines not used in Weighted Mean Activity

Errors quoted at 2.000 sigma

********** U N I D E N T I F I E D P E A K S **********

Peak Locate Performed on: 3/28/2019 10:44:33 AM
Peak Locate From Channel: 85
Peak Locate To Channel: 8000

Peak No.	Energy (keV)	Peak Size in Counts per Second	Peak CPS % Uncertainty	Peak Type	Tol. Nuclide

All peaks were identified.

****
***** N U C L I D E M D A R E P O R T *****
****

Detector Name: 3844
Sample Geometry:
Sample Title: B1-010-001-FSFC-D39-GM
Nuclide Library Used: C:\GENIE2K\CAMFILES\LACBWR.NLB

	Nuclide Name	Energy (keV)	Yield (%)	Line MDA (pCi/M^2)	Nuclide MDA (pCi/M^2)	Activity (pCi/M^2)	Dec. Level (pCi/M^2)
+	K-40	1460.81*	10.67	9.739E+002	9.74E+002	8.062E+004	0.000E+000
	CO-60	1173.22	100.00	1.129E+003	7.46E+002	1.707E+002	5.191E+002
		1332.49	100.00	7.459E+002		-8.997E+000	3.243E+002
	CS-134	475.35	1.46	5.768E+004	1.10E+003	-9.006E+003	2.697E+004
		563.23	8.38	1.022E+004		7.820E+002	4.752E+003
		569.32	15.43	5.630E+003		-1.246E+003	2.618E+003
		604.70	97.60	1.198E+003		6.902E+002	5.668E+002
		795.84	85.40	1.101E+003		-1.000E+002	5.075E+002
		801.93	8.73	1.038E+004		-1.161E+004	4.769E+003
		1038.57	1.00	9.283E+004		3.519E+004	4.215E+004
		1167.94	1.80	6.058E+004		-8.855E+003	2.777E+004
		1365.15	3.04	2.568E+004		8.582E+003	1.121E+004
	CS-137	661.65	85.12	1.226E+003	1.23E+003	1.185E+003	5.743E+002
	EU-152	121.78	28.40	3.982E+003	3.54E+003	-2.623E+002	1.933E+003
		344.27	26.50	3.544E+003		-2.904E+003	1.686E+003
		1407.95	20.70	4.524E+003		2.962E+003	2.018E+003
	EU-154	123.07	40.40	2.824E+003	2.79E+003	2.860E+003	1.371E+003
		722.30	20.00	4.978E+003		3.262E+003	2.315E+003
		1274.51	34.40	2.792E+003		4.717E+002	1.258E+003
+	BI-214	609.31*	46.30	1.228E+003	1.23E+003	2.380E+003	5.461E+002
		768.36	5.04	1.698E+004		-8.308E+003	7.774E+003
		806.17	1.23	7.233E+004		1.593E+004	3.315E+004
		934.06	3.21	3.333E+004		1.447E+004	1.541E+004
		1120.29	15.10	7.882E+003		-1.956E+003	3.647E+003
		1155.19	1.69	6.045E+004		1.017E+004	2.756E+004
		1238.11	5.94	1.762E+004		-1.777E+003	8.020E+003
		1280.96	1.47	6.551E+004		-5.994E+003	2.951E+004
		1377.67	4.11	2.013E+004		-4.284E+003	8.851E+003
		1385.31	0.78	1.090E+005		-7.640E+004	4.810E+004
		1401.50	1.39	6.449E+004		1.432E+004	2.862E+004
		1407.98	2.48	3.776E+004		2.472E+004	1.684E+004
		1509.19	2.19	3.613E+004		2.514E+004	1.563E+004
		1661.28	1.15	3.943E+004		1.099E+004	1.476E+004
		1729.60	3.05	2.676E+004		5.449E+003	1.145E+004
		1764.49	15.80	6.092E+003		2.034E+003	2.670E+003
		1847.44	2.12	2.563E+004		-1.040E+004	9.928E+003
>		2118.54	1.21	0.000E+000		0.000E+000	0.000E+000
+	PB-214	74.81	6.33	3.658E+004	1.50E+003	3.016E+004	1.777E+004
		77.11	10.70	1.982E+004		-6.735E+003	9.630E+003
		87.20	3.70	4.348E+004		4.664E+004	2.116E+004
		89.80	1.03	1.464E+005		-2.130E+004	7.121E+004
		241.98	7.49	1.418E+004		1.087E+004	6.839E+003

	Nuclide Name	Energy (keV)	Yield (%)	Line MDA (pCi/M^2)	Nuclide MDA (pCi/M^2)	Activity (pCi/M^2)	Dec. Level (pCi/M^2)
+	PB-214	295.21	19.20	5.194E+003	1.50E+003	-7.489E+002	2.488E+003
		351.92*	37.20	1.497E+003		1.017E+003	6.861E+002
		785.91	1.10	8.403E+004		-7.299E+004	3.870E+004

+ = Nuclide identified during the nuclide identification
* = Energy line found in the spectrum
> = Calculated MDA is zero due to zero counts in the region, or
the region is outside the spectrum, or MDA has not been calculated
@ = Half-life too short to be able to perform the decay correction

```
***********************************************************************
*****        G A M M A   S P E C T R U M   A N A L Y S I S        *****
***********************************************************************


Filename: 3844

Report Generated On              : 3/28/2019  10:04:21 AM

Sample Title                     : B1-010-001-FSFC-D40-GM
Sample Description               : Rx Bowl 3M Concrete
Sample Identification            : D40
Sample Type                      : Gamma Direct
Sample Geometry                  :

Peak Locate Threshold            :  3.00
Peak Locate Range (in channels)  :    85 -  8000
Peak Area Range (in channels)    :    85 -  8000
Identification Energy Tolerance  :    3.000 keV

Sample Size                      :  2.827E+001 M^2

Sample Taken On                  : 3/28/2019   9:52:00 AM
Acquisition Started              : 3/28/2019   9:54:20 AM

Live Time                        :      600.0 seconds
Real Time                        :      600.2 seconds

Dead Time                        :   0.03 %


              Energy Calibration Used Done On       : 10/24/2017
              Efficiency Calibration Used Done On   : 3/26/2019
              Efficiency ID                         : RxBOWL_CON_3M
```

****
***** P E A K A N A L Y S I S R E P O R T *****
****

Detector Name: 3844
Sample Title: B1-010-001-FSFC-D40-GM
Peak Analysis Performed on: 3/28/2019 10:04:21 AM
Peak Analysis From Channel: 85
Peak Analysis To Channel: 8000

Peak No.	ROI start	ROI end	Peak centroid	Energy (keV)	FWHM (keV)	Net Peak Area	Net Area Uncert.	Continuum Counts
1	948-	961	953.36	238.41	0.59	3.47E+001	31.20	7.53E+001
2	2325-	2337	2330.29	582.82	0.33	2.69E+001	18.30	2.11E+001
3	2430-	2442	2435.17	609.05	0.36	2.93E+001	17.18	1.67E+001
4	3634-	3647	3640.25	910.34	0.32	3.20E+001	14.32	7.00E+000
5	5825-	5850	5837.93	1459.49	1.94	2.43E+002	31.18	0.00E+000

M = First peak in a multiplet region
m = Other peak in a multiplet region
F = Fitted singlet

Errors quoted at 2.000 sigma

****
***** N U C L I D E I D E N T I F I C A T I O N R E P O R T *****
****

Sample Title: B1-010-001-FSFC-D40-GM
Nuclide Library Used: C:\GENIE2K\CAMFILES\LACBWR.NLB

..... IDENTIFIED NUCLIDES .....

Nuclide Name	Id Confidence	Energy (keV)	Yield (%)	Activity (pCi/M^2)	Activity Uncertainty
K-40	0.970	1460.81*	10.67	8.74641E+004	1.33468E+004
PB-212	1.000	74.81	9.60		
		77.11	17.50		
		87.20	6.30		
		89.80	1.75		
		115.19	0.60		
		238.63*	44.60	1.07946E+003	9.85474E+002
		300.09	3.41		
BI-214	1.000	609.31*	46.30	1.47281E+003	8.85054E+002
		768.36	5.04		
		806.17	1.23		
		934.06	3.21		
		1120.29	15.10		
		1155.19	1.69		
		1238.11	5.94		
		1280.96	1.47		
		1377.67	4.11		
		1385.31	0.78		
		1401.50	1.39		
		1407.98	2.48		
		1509.19	2.19		
		1661.28	1.15		
		1729.60	3.05		
		1764.49	15.80		
		1847.44	2.12		
		2118.54	1.21		
AC-228	0.992	89.95	2.10		
		93.35	3.50		
		129.08	2.80		
		209.28	4.40		
		270.23	3.60		
		327.64	3.20		
		338.32	11.40		
		409.51	2.13		
		463.00	4.40		
		794.70	4.60		
		911.60*	27.70	3.39127E+003	1.56809E+003
		964.60	5.20		
		969.11	16.60		
		1587.90	3.71		

* = Energy line found in the spectrum.
@ = Energy line not used for Weighted Mean Activity
Energy Tolerance : 3.000 keV
Nuclide confidence index threshold = 0.30
Errors quoted at 2.000 sigma

****
***** I N T E R F E R E N C E C O R R E C T E D R E P O R T *****
****

Nuclide Name	Nuclide Id Confidence	Wt mean Activity (pCi/M^2)	Wt mean Activity Uncertainty
K-40	0.970	8.746415E+004	1.334682E+004
PB-212	1.000	1.079464E+003	9.854740E+002
BI-214	1.000	1.472808E+003	8.850540E+002
AC-228	0.992	3.391272E+003	1.568094E+003

? = Nuclide is part of an undetermined solution
X = Nuclide rejected by the interference analysis
@ = Nuclide contains energy lines not used in Weighted Mean Activity

Errors quoted at 2.000 sigma

********** U N I D E N T I F I E D P E A K S **********

Peak Locate Performed on: 3/28/2019 10:04:21 AM
Peak Locate From Channel: 85
Peak Locate To Channel: 8000

Peak No.	Energy (keV)	Peak Size in Counts per Second	Peak CPS % Uncertainty	Peak Type	Tol. Nuclide
2	582.82	4.4792E-002	68.11		

M = First peak in a multiplet region
m = Other peak in a multiplet region
F = Fitted singlet

Errors quoted at 2.000 sigma

****
***** N U C L I D E M D A R E P O R T *****
****

Detector Name: 3844
Sample Geometry:
Sample Title: B1-010-001-FSFC-D40-GM
Nuclide Library Used: C:\GENIE2K\CAMFILES\LACBWR.NLB

	Nuclide Name	Energy (keV)	Yield (%)	Line MDA (pCi/M^2)	Nuclide MDA (pCi/M^2)	Activity (pCi/M^2)	Dec. Level (pCi/M^2)
+	K-40	1460.81*	10.67	9.740E+002	9.74E+002	8.746E+004	0.000E+000
	CO-60	1173.22	100.00	1.117E+003	8.08E+002	6.903E+002	5.131E+002
		1332.49	100.00	8.078E+002		7.498E+000	3.552E+002
	CS-134	475.35	1.46	6.212E+004	9.10E+002	-5.300E+004	2.919E+004
		563.23	8.38	1.006E+004		3.159E+003	4.670E+003
		569.32	15.43	5.315E+003		-6.765E+002	2.461E+003
		604.70	97.60	1.154E+003		8.529E+002	5.448E+002
		795.84	85.40	9.104E+002		1.239E+002	4.121E+002
		801.93	8.73	9.813E+003		-3.295E+003	4.484E+003
		1038.57	1.00	8.755E+004		-6.710E+004	3.951E+004
		1167.94	1.80	6.387E+004		2.890E+004	2.941E+004
		1365.15	3.04	2.568E+004		1.927E+004	1.121E+004
	CS-137	661.65	85.12	1.203E+003	1.20E+003	1.466E+003	5.625E+002
	EU-152	121.78	28.40	3.868E+003	3.01E+003	2.628E+002	1.876E+003
		344.27	26.50	3.609E+003		-3.666E+003	1.718E+003
		1407.95	20.70	3.013E+003		-4.069E+003	1.262E+003
	EU-154	123.07	40.40	2.705E+003	2.61E+003	-6.605E+002	1.312E+003
		722.30	20.00	4.781E+003		9.607E+002	2.217E+003
		1274.51	34.40	2.606E+003		-5.300E+002	1.165E+003
+	BI-214	609.31*	46.30	1.241E+003	1.24E+003	1.473E+003	5.525E+002
		768.36	5.04	1.792E+004		-4.403E+002	8.245E+003
		806.17	1.23	7.314E+004		2.101E+004	3.356E+004
		934.06	3.21	2.654E+004		8.909E+003	1.201E+004
		1120.29	15.10	7.522E+003		4.875E+003	3.467E+003
		1155.19	1.69	6.415E+004		3.537E+004	2.941E+004
		1238.11	5.94	1.936E+004		-3.049E+003	8.889E+003
		1280.96	1.47	5.881E+004		3.550E+004	2.616E+004
		1377.67	4.11	1.912E+004		8.113E+003	8.345E+003
		1385.31	0.78	1.011E+005		-2.350E+004	4.414E+004
		1401.50	1.39	6.025E+004		2.990E+004	2.649E+004
		1407.98	2.48	2.515E+004		-3.396E+004	1.053E+004
		1509.19	2.19	3.129E+004		-1.302E+004	1.321E+004
		1661.28	1.15	5.500E+004		6.541E+002	2.254E+004
		1729.60	3.05	2.578E+004		5.298E+003	1.097E+004
		1764.49	15.80	6.247E+003		5.010E+003	2.747E+003
		1847.44	2.12	3.870E+004		8.439E+003	1.646E+004
>		2118.54	1.21	0.000E+000		0.000E+000	0.000E+000
	PB-214	74.81	6.33	3.720E+004	2.75E+003	2.314E+004	1.808E+004
		77.11	10.70	2.096E+004		2.924E+004	1.020E+004
		87.20	3.70	4.362E+004		1.515E+004	2.123E+004
		89.80	1.03	1.508E+005		-4.281E+004	7.341E+004
		241.98	7.49	1.435E+004		1.121E+004	6.921E+003

Nuclide Name	Energy (keV)	Yield (%)	Line MDA (pCi/M^2)	Nuclide MDA (pCi/M^2)	Activity (pCi/M^2)	Dec. Level (pCi/M^2)
PB-214	295.21	19.20	5.194E+003	2.75E+003	3.501E+002	2.488E+003
	351.92	37.20	2.754E+003		2.074E+003	1.315E+003
	785.91	1.10	7.605E+004		-4.237E+004	3.470E+004

+ = Nuclide identified during the nuclide identification
* = Energy line found in the spectrum
> = Calculated MDA is zero due to zero counts in the region, or
the region is outside the spectrum, or MDA has not been calculated
@ = Half-life too short to be able to perform the decay correction

```
************************************************************************
*****        G A M M A   S P E C T R U M   A N A L Y S I S        *****
************************************************************************


Filename: C:\LACBWR\B1-010-001-FSFC-D41-GM.CNF

Report Generated On             : 3/27/2019   9:05:23 PM

Sample Title                    : B1-010-001-FSFC-D41-GM
Sample Description              : Rx Bowl 3M Concrete
Sample Identification           : D41
Sample Type                     : Gamma Direct
Sample Geometry                 :

Peak Locate Threshold           :  3.00
Peak Locate Range (in channels) :    85 -  8000
Peak Area Range (in channels)   :    85 -  8000
Identification Energy Tolerance :    3.000 keV

Sample Size                     :  2.827E+001 M^2

Sample Taken On                 : 3/27/2019   9:39:00 AM
Acquisition Started             : 3/27/2019   9:39:23 AM

Live Time                       :      600.0 seconds
Real Time                       :      600.2 seconds

Dead Time                       :   0.03 %


              Energy Calibration Used Done On       : 10/24/2017
              Efficiency Calibration Used Done On   : 3/26/2019
              Efficiency ID                         : RxBOWL_CON_3M
```

****
***** P E A K A N A L Y S I S R E P O R T *****
****

Detector Name: 3844
Sample Title: B1-010-001-FSFC-D41-GM
Peak Analysis Performed on: 3/27/2019 9:05:22 PM
Peak Analysis From Channel: 85
Peak Analysis To Channel: 8000

Peak No.	ROI start	ROI end	Peak centroid	Energy (keV)	FWHM (keV)	Net Peak Area	Net Area Uncert.	Continuum Counts
1	945-	959	952.80	238.27	0.99	3.17E+001	33.17	8.33E+001
2	1174-	1185	1179.08	294.88	1.15	1.95E+001	20.30	3.25E+001
3	1400-	1413	1405.84	351.60	0.82	3.35E+001	19.65	2.25E+001
4	2424-	2440	2431.93	608.24	0.39	4.72E+001	19.32	1.48E+001
5	3631-	3645	3637.17	909.57	0.93	3.57E+001	15.41	8.34E+000
6	5821-	5847	5834.02	1458.52	1.96	2.16E+002	30.29	3.20E+000

M = First peak in a multiplet region
m = Other peak in a multiplet region
F = Fitted singlet

Errors quoted at 2.000 sigma

****
***** N U C L I D E I D E N T I F I C A T I O N R E P O R T *****
****

Sample Title: B1-010-001-FSFC-D41-GM
Nuclide Library Used: C:\GENIE2K\CAMFILES\LACBWR.NLB

..... IDENTIFIED NUCLIDES .....

Nuclide Name	Id Confidence	Energy (keV)	Yield (%)	Activity (pCi/M^2)	Activity Uncertainty
K-40	0.911	1460.81*	10.67	7.76353E+004	1.26437E+004
PB-212	0.999	74.81	9.60		
		77.11	17.50		
		87.20	6.30		
		89.80	1.75		
		115.19	0.60		
		238.63*	44.60	9.85095E+002	1.04309E+003
		300.09	3.41		
BI-214	0.992	609.31*	46.30	2.37501E+003	1.01817E+003
		768.36	5.04		
		806.17	1.23		
		934.06	3.21		
		1120.29	15.10		
		1155.19	1.69		
		1238.11	5.94		
		1280.96	1.47		
		1377.67	4.11		
		1385.31	0.78		
		1401.50	1.39		
		1407.98	2.48		
		1509.19	2.19		
		1661.28	1.15		
		1729.60	3.05		
		1764.49	15.80		
		1847.44	2.12		
		2118.54	1.21		
PB-214	0.999	74.81	6.33		
		77.11	10.70		
		87.20	3.70		
		89.80	1.03		
		241.98	7.49		
		295.21*	19.20	1.57855E+003	1.66412E+003
		351.92*	37.20	1.54165E+003	9.36268E+002
		785.91	1.10		
AC-228	0.979	89.95	2.10		
		93.35	3.50		
		129.08	2.80		
		209.28	4.40		
		270.23	3.60		
		327.64	3.20		
		338.32	11.40		

Nuclide Name	Id Confidence	Energy (keV)	Yield (%)	Activity (pCi/M^2)	Activity Uncertainty
AC-228	0.979	409.51	2.13		
		463.00	4.40		
		794.70	4.60		
		911.60*	27.70	3.77789E+003	1.69080E+003
		964.60	5.20		
		969.11	16.60		
		1587.90	3.71		

* = Energy line found in the spectrum.
@ = Energy line not used for Weighted Mean Activity
Energy Tolerance : 3.000 keV
Nuclide confidence index threshold = 0.30
Errors quoted at 2.000 sigma

****
***** I N T E R F E R E N C E C O R R E C T E D R E P O R T *****
****

Nuclide Name	Nuclide Id Confidence	Wt mean Activity (pCi/M^2)	Wt mean Activity Uncertainty
K-40	0.911	7.763525E+004	1.264374E+004
PB-212	0.999	9.850953E+002	1.043094E+003
BI-214	0.992	2.375007E+003	1.018173E+003
PB-214	0.999	1.550522E+003	8.159862E+002
AC-228	0.979	3.777894E+003	1.690796E+003

? = Nuclide is part of an undetermined solution
X = Nuclide rejected by the interference analysis
@ = Nuclide contains energy lines not used in Weighted Mean Activity

Errors quoted at 2.000 sigma

********** U N I D E N T I F I E D P E A K S **********

Peak Locate Performed on: 3/27/2019 9:05:22 PM
Peak Locate From Channel: 85
Peak Locate To Channel: 8000

Peak No.	Energy (keV)	Peak Size in Counts per Second	Peak CPS % Uncertainty	Peak Type	Tol. Nuclide

All peaks were identified.

****
***** N U C L I D E M D A R E P O R T *****
****

Detector Name: 3844
Sample Geometry:
Sample Title: B1-010-001-FSFC-D41-GM
Nuclide Library Used: C:\GENIE2K\CAMFILES\LACBWR.NLB

	Nuclide Name	Energy (keV)	Yield (%)	Line MDA (pCi/M^2)	Nuclide MDA (pCi/M^2)	Activity (pCi/M^2)	Dec. Level (pCi/M^2)
+	K-40	1460.81*	10.67	5.328E+003	5.33E+003	7.764E+004	2.177E+003
	CO-60	1173.22	100.00	1.141E+003	8.83E+002	-1.437E+002	5.249E+002
		1332.49	100.00	8.828E+002		4.679E+002	3.927E+002
	CS-134	475.35	1.46	5.995E+004	1.12E+003	1.717E+004	2.810E+004
		563.23	8.38	9.811E+003		1.187E+003	4.546E+003
		569.32	15.43	4.928E+003		-4.577E+003	2.268E+003
		604.70	97.60	1.159E+003		1.191E+003	5.476E+002
		795.84	85.40	1.122E+003		4.788E+002	5.182E+002
		801.93	8.73	1.038E+004		3.893E+003	4.769E+003
		1038.57	1.00	8.890E+004		-3.784E+003	4.018E+004
		1167.94	1.80	5.990E+004		1.771E+004	2.743E+004
		1365.15	3.04	2.098E+004		-1.460E+004	8.861E+003
	CS-137	661.65	85.12	1.077E+003	1.08E+003	2.820E+002	4.996E+002
	EU-152	121.78	28.40	3.868E+003	3.27E+003	1.774E+002	1.876E+003
		344.27	26.50	3.272E+003		-6.733E+003	1.550E+003
		1407.95	20.70	3.748E+003		-2.984E+003	1.629E+003
	EU-154	123.07	40.40	2.664E+003	2.61E+003	-1.639E+003	1.291E+003
		722.30	20.00	4.358E+003		2.229E+003	2.005E+003
		1274.51	34.40	2.606E+003		1.654E+003	1.165E+003
+	BI-214	609.31*	46.30	1.259E+003	1.26E+003	2.375E+003	5.616E+002
		768.36	5.04	1.898E+004		-5.962E+003	8.778E+003
		806.17	1.23	6.274E+004		-5.564E+004	2.836E+004
		934.06	3.21	2.767E+004		-1.350E+004	1.258E+004
		1120.29	15.10	7.952E+003		3.070E+003	3.682E+003
		1155.19	1.69	6.343E+004		3.355E+004	2.905E+004
		1238.11	5.94	1.715E+004		1.457E+003	7.787E+003
		1280.96	1.47	5.881E+004		3.081E+004	2.616E+004
		1377.67	4.11	1.859E+004		5.889E+003	8.080E+003
		1385.31	0.78	9.832E+004		3.898E+004	4.274E+004
		1401.50	1.39	4.868E+004		-4.886E+004	2.071E+004
		1407.98	2.48	3.128E+004		-2.490E+004	1.360E+004
		1509.19	2.19	2.697E+004		8.339E+002	1.105E+004
		1661.28	1.15	5.166E+004		2.198E+004	2.087E+004
		1729.60	3.05	2.005E+004		8.528E+003	8.100E+003
		1764.49	15.80	5.598E+003		3.896E+003	2.423E+003
		1847.44	2.12	3.556E+004		1.920E+004	1.489E+004
>		2118.54	1.21	0.000E+000		0.000E+000	0.000E+000
+	PB-214	74.81	6.33	3.685E+004	1.32E+003	5.738E+004	1.791E+004
		77.11	10.70	2.054E+004		3.511E+004	9.988E+003
		87.20	3.70	4.220E+004		2.266E+003	2.052E+004
		89.80	1.03	1.456E+005		-3.333E+004	7.079E+004
		241.98	7.49	1.427E+004		2.476E+003	6.880E+003

	Nuclide Name	Energy (keV)	Yield (%)	Line MDA (pCi/M^2)	Nuclide MDA (pCi/M^2)	Activity (pCi/M^2)	Dec. Level (pCi/M^2)
+	PB-214	295.21*	19.20	2.656E+003	1.32E+003	1.579E+003	1.218E+003
		351.92*	37.20	1.325E+003		1.542E+003	6.001E+002
		785.91	1.10	8.318E+004		-4.320E+004	3.827E+004

+ = Nuclide identified during the nuclide identification
* = Energy line found in the spectrum
> = Calculated MDA is zero due to zero counts in the region, or the region is outside the spectrum, or MDA has not been calculated
@ = Half-life too short to be able to perform the decay correction

```
************************************************************************
*****        G A M M A   S P E C T R U M   A N A L Y S I S        *****
************************************************************************


Filename: C:\LACBWR\B1-010-001-FSFC-D42-GM.CNF

Report Generated On             : 3/27/2019   9:07:11 PM

Sample Title                    : B1-010-001-FSFC-D42-GM
Sample Description              : Rx Bowl 3M Concrete
Sample Identification           : D42
Sample Type                     : Gamma Direct
Sample Geometry                 :

Peak Locate Threshold           :  3.00
Peak Locate Range (in channels) :    85 -  8000
Peak Area Range (in channels)   :    85 -  8000
Identification Energy Tolerance :    3.000 keV

Sample Size                     :  2.827E+001 M^2

Sample Taken On                 : 3/27/2019   9:55:00 AM
Acquisition Started             : 3/27/2019   9:55:26 AM

Live Time                       :      600.0 seconds
Real Time                       :      600.2 seconds

Dead Time                       :   0.03 %


              Energy Calibration Used Done On       : 10/24/2017
              Efficiency Calibration Used Done On   : 3/26/2019
              Efficiency ID                         : RxBOWL_CON_3M
```

****
***** P E A K A N A L Y S I S R E P O R T *****
****

Detector Name: 3844
Sample Title: B1-010-001-FSFC-D42-GM
Peak Analysis Performed on: 3/27/2019 9:07:11 PM
Peak Analysis From Channel: 85
Peak Analysis To Channel: 8000

Peak No.	ROI start	ROI end	Peak centroid	Energy (keV)	FWHM (keV)	Net Peak Area	Net Area Uncert.	Continuum Counts
1	295-	305	299.44	74.79	0.90	4.17E+001	33.07	9.63E+001
2	947-	958	952.49	238.19	1.11	3.10E+001	25.41	5.20E+001
3	1399-	1411	1404.53	351.28	0.39	2.60E+001	20.85	3.10E+001
4	2425-	2438	2430.76	607.94	0.79	3.69E+001	17.44	1.41E+001
5	5822-	5845	5832.95	1458.25	1.55	1.97E+002	31.00	1.13E+001

M = First peak in a multiplet region
m = Other peak in a multiplet region
F = Fitted singlet

Errors quoted at 2.000 sigma

****
***** N U C L I D E I D E N T I F I C A T I O N R E P O R T *****
****

Sample Title: B1-010-001-FSFC-D42-GM
Nuclide Library Used: C:\GENIE2K\CAMFILES\LACBWR.NLB

..... IDENTIFIED NUCLIDES .....

Nuclide Name	Id Confidence	Energy (keV)	Yield (%)	Activity (pCi/M^2)	Activity Uncertainty
K-40	0.890	1460.81*	10.67	7.07733E+004	1.25923E+004
PB-212	0.998	74.81*	9.60	1.05151E+004	8.60772E+003
		77.11	17.50		
		87.20	6.30		
		89.80	1.75		
		115.19	0.60		
		238.63*	44.60	9.64011E+002	8.04929E+002
		300.09	3.41		
BI-214	0.987	609.31*	46.30	1.85712E+003	9.08664E+002
		768.36	5.04		
		806.17	1.23		
		934.06	3.21		
		1120.29	15.10		
		1155.19	1.69		
		1238.11	5.94		
		1280.96	1.47		
		1377.67	4.11		
		1385.31	0.78		
		1401.50	1.39		
		1407.98	2.48		
		1509.19	2.19		
		1661.28	1.15		
		1729.60	3.05		
		1764.49	15.80		
		1847.44	2.12		
		2118.54	1.21		
PB-214	0.469	74.81*	6.33	1.59470E+004	1.30544E+004
		77.11	10.70		
		87.20	3.70		
		89.80	1.03		
		241.98	7.49		
		295.21	19.20		
		351.92*	37.20	1.19644E+003	9.76846E+002
		785.91	1.10		

* = Energy line found in the spectrum.
@ = Energy line not used for Weighted Mean Activity
Energy Tolerance : 3.000 keV
Nuclide confidence index threshold = 0.30
Errors quoted at 2.000 sigma

****
***** I N T E R F E R E N C E C O R R E C T E D R E P O R T *****
****

Nuclide Name	Nuclide Id Confidence	Wt mean Activity (pCi/M^2)	Wt mean Activity Uncertainty
K-40	0.890	7.077327E+004	1.259228E+004
PB-212	0.998	1.039549E+003	8.014524E+002
BI-214	0.987	1.857118E+003	9.086643E+002
PB-214	0.469	1.269798E+003	9.741458E+002

? = Nuclide is part of an undetermined solution
X = Nuclide rejected by the interference analysis
@ = Nuclide contains energy lines not used in Weighted Mean Activity

Errors quoted at 2.000 sigma

********** U N I D E N T I F I E D P E A K S **********

Peak Locate Performed on: 3/27/2019 9:07:11 PM
Peak Locate From Channel: 85
Peak Locate To Channel: 8000

Peak No.	Energy (keV)	Peak Size in Counts per Second	Peak CPS % Uncertainty	Peak Type	Tol. Nuclide

All peaks were identified.

****
***** N U C L I D E M D A R E P O R T *****
****

Detector Name: 3844
Sample Geometry:
Sample Title: B1-010-001-FSFC-D42-GM
Nuclide Library Used: C:\GENIE2K\CAMFILES\LACBWR.NLB

	Nuclide Name	Energy (keV)	Yield (%)	Line MDA (pCi/M^2)	Nuclide MDA (pCi/M^2)	Activity (pCi/M^2)	Dec. Level (pCi/M^2)
+	K-40	1460.81*	10.67	8.784E+003	8.78E+003	7.077E+004	3.905E+003
	CO-60	1173.22	100.00	9.901E+002	8.83E+002	5.970E+002	4.495E+002
		1332.49	100.00	8.828E+002		2.577E+002	3.927E+002
	CS-134	475.35	1.46	5.532E+004	1.08E+003	1.818E+003	2.579E+004
		563.23	8.38	1.014E+004		-2.847E+003	4.711E+003
		569.32	15.43	5.315E+003		-4.733E+003	2.461E+003
		604.70	97.60	1.084E+003		-7.552E+000	5.099E+002
		795.84	85.40	1.154E+003		-3.243E+002	5.338E+002
		801.93	8.73	1.173E+004		1.118E+004	5.443E+003
		1038.57	1.00	9.534E+004		2.050E+004	4.340E+004
		1167.94	1.80	5.487E+004		4.957E+003	2.491E+004
		1365.15	3.04	2.267E+004		3.588E+003	9.707E+003
	CS-137	661.65	85.12	1.234E+003	1.23E+003	7.291E+002	5.782E+002
	EU-152	121.78	28.40	3.821E+003	3.36E+003	6.772E+002	1.853E+003
		344.27	26.50	3.356E+003		-5.399E+003	1.592E+003
		1407.95	20.70	3.855E+003		1.563E+003	1.683E+003
	EU-154	123.07	40.40	2.679E+003	2.68E+003	-1.242E+003	1.299E+003
		722.30	20.00	4.268E+003		2.970E+003	1.960E+003
		1274.51	34.40	2.880E+003		-8.413E+002	1.302E+003
+	BI-214	609.31*	46.30	1.171E+003	1.17E+003	1.857E+003	5.173E+002
		768.36	5.04	1.810E+004		9.774E+003	8.336E+003
		806.17	1.23	7.549E+004		4.178E+004	3.473E+004
		934.06	3.21	2.535E+004		-4.638E+002	1.142E+004
		1120.29	15.10	8.089E+003		3.777E+003	3.751E+003
		1155.19	1.69	5.968E+004		6.077E+003	2.717E+004
		1238.11	5.94	1.667E+004		9.718E+003	7.548E+003
		1280.96	1.47	6.656E+004		-3.596E+003	3.004E+004
		1377.67	4.11	1.912E+004		6.585E+003	8.345E+003
		1385.31	0.78	1.038E+005		1.953E+003	4.550E+004
		1401.50	1.39	5.563E+004		-4.160E+004	2.418E+004
		1407.98	2.48	3.218E+004		1.304E+004	1.405E+004
		1509.19	2.19	3.613E+004		-6.286E+003	1.563E+004
		1661.28	1.15	4.400E+004		1.465E+004	1.704E+004
		1729.60	3.05	2.005E+004		-1.267E+004	8.100E+003
		1764.49	15.80	7.727E+003		8.071E+003	3.487E+003
		1847.44	2.12	1.570E+004		-8.536E+003	4.964E+003
>		2118.54	1.21	0.000E+000		0.000E+000	0.000E+000
+	PB-214	74.81*	6.33	2.021E+004	1.50E+003	1.595E+004	9.586E+003
		77.11	10.70	1.994E+004		1.479E+004	9.691E+003
		87.20	3.70	4.152E+004		-1.258E+004	2.018E+004
		89.80	1.03	1.417E+005		8.371E+003	6.886E+004
		241.98	7.49	1.324E+004		8.454E+003	6.368E+003

	Nuclide Name	Energy (keV)	Yield (%)	Line MDA (pCi/M^2)	Nuclide MDA (pCi/M^2)	Activity (pCi/M^2)	Dec. Level (pCi/M^2)
+	PB-214	295.21	19.20	4.777E+003	1.50E+003	-1.385E+003	2.279E+003
		351.92*	37.20	1.498E+003		1.196E+003	6.870E+002
		785.91	1.10	7.881E+004		1.470E+004	3.608E+004

+ = Nuclide identified during the nuclide identification
* = Energy line found in the spectrum
> = Calculated MDA is zero due to zero counts in the region, or the region is outside the spectrum, or MDA has not been calculated
@ = Half-life too short to be able to perform the decay correction

```
************************************************************************
*****        G A M M A   S P E C T R U M   A N A L Y S I S        *****
************************************************************************


Filename: C:\LACBWR\B1-010-001-FSFC-D43-GM.CNF

Report Generated On             : 3/29/2019  10:49:21 AM

Sample Title                    : B1-010-001-FSFC-D43-GM
Sample Description              : Rx Bowl concrete 2M
Sample Identification           : D43
Sample Type                     : Gamma Direct
Sample Geometry                 :

Peak Locate Threshold           :  3.00
Peak Locate Range (in channels) :    85 -  8000
Peak Area Range (in channels)   :    85 -  8000
Identification Energy Tolerance :    3.000 keV

Sample Size                     :  1.256E+001 M^2

Sample Taken On                 : 3/29/2019   8:51:00 AM
Acquisition Started             : 3/29/2019   8:52:53 AM

Live Time                       :      600.0 seconds
Real Time                       :      600.2 seconds

Dead Time                       :   0.03 %


              Energy Calibration Used Done On       : 10/24/2017
              Efficiency Calibration Used Done On   : 3/26/2019
              Efficiency ID                         : RxBOWL_CON_2M
```

****
***** P E A K A N A L Y S I S R E P O R T *****
****

Detector Name: 3844
Sample Title: B1-010-001-FSFC-D43-GM
Peak Analysis Performed on: 3/29/2019 10:49:21 AM
Peak Analysis From Channel: 85
Peak Analysis To Channel: 8000

Peak No.	ROI start	ROI end	Peak centroid	Energy (keV)	FWHM (keV)	Net Peak Area	Net Area Uncert.	Continuum Counts
1	949-	961	954.17	238.61	0.76	2.98E+001	25.39	4.92E+001
2	1402-	1414	1407.87	352.11	1.08	1.86E+001	20.37	3.24E+001
3	2327-	2338	2332.88	583.47	1.15	1.34E+001	14.85	1.66E+001
4	2431-	2445	2437.03	609.51	1.17	3.99E+001	16.26	9.13E+000
5	2641-	2653	2646.74	661.95	0.38	2.98E+001	16.17	1.33E+001
6	5836-	5857	5847.15	1461.80	1.47	1.74E+002	30.58	1.61E+001

M = First peak in a multiplet region
m = Other peak in a multiplet region
F = Fitted singlet

Errors quoted at 2.000 sigma

****
***** N U C L I D E I D E N T I F I C A T I O N R E P O R T *****
****

Sample Title: B1-010-001-FSFC-D43-GM
Nuclide Library Used: C:\GENIE2K\CAMFILES\LACBWR.NLB

..... IDENTIFIED NUCLIDES .....

Nuclide Name	Id Confidence	Energy (keV)	Yield (%)	Activity (pCi/M^2)	Activity Uncertainty
K-40	0.983	1460.81*	10.67	1.40201E+005	2.72350E+004
CS-137	0.998	661.65*	85.12	1.90988E+003	1.06328E+003
PB-212	1.000	74.81	9.60		
		77.11	17.50		
		87.20	6.30		
		89.80	1.75		
		115.19	0.60		
		238.63*	44.60	2.05933E+003	1.78292E+003
		300.09	3.41		
BI-214	1.000	609.31*	46.30	4.48706E+003	1.91731E+003
		768.36	5.04		
		806.17	1.23		
		934.06	3.21		
		1120.29	15.10		
		1155.19	1.69		
		1238.11	5.94		
		1280.96	1.47		
		1377.67	4.11		
		1385.31	0.78		
		1401.50	1.39		
		1407.98	2.48		
		1509.19	2.19		
		1661.28	1.15		
		1729.60	3.05		
		1764.49	15.80		
		1847.44	2.12		
		2118.54	1.21		
PB-214	1.000	74.81	6.33		
		77.11	10.70		
		87.20	3.70		
		89.80	1.03		
		241.98	7.49		
		295.21	19.20		
		351.92*	37.20	1.90751E+003	2.10882E+003
		785.91	1.10		

* = Energy line found in the spectrum.
@ = Energy line not used for Weighted Mean Activity
Energy Tolerance : 3.000 keV
Nuclide confidence index threshold = 0.30
Errors quoted at 2.000 sigma

****
***** I N T E R F E R E N C E C O R R E C T E D R E P O R T *****
****

Nuclide Name	Nuclide Id Confidence	Wt mean Activity (pCi/M^2)	Wt mean Activity Uncertainty
K-40	0.983	1.402007E+005	2.723495E+004
CS-137	0.998	1.909876E+003	1.063284E+003
PB-212	1.000	2.059332E+003	1.782924E+003
BI-214	1.000	4.487058E+003	1.917314E+003
PB-214	1.000	1.907512E+003	2.108819E+003

? = Nuclide is part of an undetermined solution
X = Nuclide rejected by the interference analysis
@ = Nuclide contains energy lines not used in Weighted Mean Activity

Errors quoted at 2.000 sigma

********** U N I D E N T I F I E D P E A K S **********

Peak Locate Performed on: 3/29/2019 10:49:21 AM
Peak Locate From Channel: 85
Peak Locate To Channel: 8000

Peak No.	Energy (keV)	Peak Size in Counts per Second	Peak CPS % Uncertainty	Peak Type	Tol. Nuclide
3	583.47	2.2389E-002	110.51		

M = First peak in a multiplet region
m = Other peak in a multiplet region
F = Fitted singlet

Errors quoted at 2.000 sigma

****
***** N U C L I D E M D A R E P O R T *****
****

Detector Name: 3844
Sample Geometry:
Sample Title: B1-010-001-FSFC-D43-GM
Nuclide Library Used: C:\GENIE2K\CAMFILES\LACBWR.NLB

	Nuclide Name	Energy (keV)	Yield (%)	Line MDA (pCi/M^2)	Nuclide MDA (pCi/M^2)	Activity (pCi/M^2)	Dec. Level (pCi/M^2)
+	K-40	1460.81*	10.67	2.270E+004	2.27E+004	1.402E+005	1.026E+004
	CO-60	1173.22	100.00	2.497E+003	2.01E+003	9.398E+002	1.147E+003
		1332.49	100.00	2.013E+003		8.115E+002	8.976E+002
	CS-134	475.35	1.46	1.252E+005	2.12E+003	-1.374E+004	5.844E+004
		563.23	8.38	2.076E+004		-1.033E+004	9.575E+003
		569.32	15.43	1.134E+004		3.274E+003	5.233E+003
		604.70	97.60	2.502E+003		-1.475E+003	1.179E+003
		795.84	85.40	2.124E+003		-8.060E+001	9.655E+002
		801.93	8.73	2.420E+004		1.273E+004	1.115E+004
		1038.57	1.00	2.186E+005		5.993E+004	9.978E+004
		1167.94	1.80	1.323E+005		-1.208E+005	6.054E+004
		1365.15	3.04	5.417E+004		1.803E+004	2.344E+004
+	CS-137	661.65*	85.12	1.435E+003	1.43E+003	1.910E+003	6.304E+002
	EU-152	121.78	28.40	8.705E+003	7.77E+003	-2.332E+003	4.225E+003
		344.27	26.50	7.772E+003		8.493E+002	3.694E+003
		1407.95	20.70	8.381E+003		2.635E+003	3.644E+003
	EU-154	123.07	40.40	5.992E+003	5.25E+003	-4.437E+003	2.907E+003
		722.30	20.00	1.051E+004		7.389E+003	4.867E+003
		1274.51	34.40	5.250E+003		8.565E+002	2.316E+003
+	BI-214	609.31*	46.30	2.199E+003	2.20E+003	4.487E+003	9.473E+002
		768.36	5.04	3.883E+004		-2.315E+004	1.782E+004
		806.17	1.23	1.689E+005		1.519E+005	7.770E+004
		934.06	3.21	5.760E+004		6.017E+004	2.599E+004
		1120.29	15.10	1.410E+004		8.139E+003	6.395E+003
		1155.19	1.69	1.385E+005		1.358E+005	6.328E+004
		1238.11	5.94	4.638E+004		2.344E+004	2.143E+004
		1280.96	1.47	1.203E+005		-6.699E+004	5.289E+004
		1377.67	4.11	4.500E+004		5.514E+003	1.979E+004
		1385.31	0.78	2.198E+005		-2.652E+003	9.557E+004
		1401.50	1.39	1.089E+005		-1.226E+005	4.631E+004
		1407.98	2.48	6.996E+004		2.200E+004	3.041E+004
		1509.19	2.19	6.376E+004		3.265E+003	2.644E+004
		1661.28	1.15	9.851E+004		-4.665E+004	3.816E+004
		1729.60	3.05	3.824E+004		1.273E+004	1.481E+004
		1764.49	15.80	1.131E+004		6.858E+003	4.810E+003
		1847.44	2.12	9.001E+004		1.395E+004	3.853E+004
>		2118.54	1.21	0.000E+000		0.000E+000	0.000E+000
+	PB-214	74.81	6.33	7.823E+004	3.39E+003	4.849E+004	3.798E+004
		77.11	10.70	4.347E+004		3.446E+004	2.112E+004
		87.20	3.70	8.883E+004		-5.577E+004	4.314E+004
		89.80	1.03	3.156E+005		3.089E+005	1.534E+005
		241.98	7.49	2.768E+004		2.256E+004	1.328E+004

	Nuclide Name	Energy (keV)	Yield (%)	Line MDA (pCi/M^2)	Nuclide MDA (pCi/M^2)	Activity (pCi/M^2)	Dec. Level (pCi/M^2)
+	PB-214	295.21	19.20	1.048E+004	3.39E+003	4.322E+003	4.995E+003
		351.92*	37.20	3.386E+003		1.908E+003	1.555E+003
		785.91	1.10	1.742E+005		3.154E+004	7.970E+004

+ = Nuclide identified during the nuclide identification
* = Energy line found in the spectrum
> = Calculated MDA is zero due to zero counts in the region, or the region is outside the spectrum, or MDA has not been calculated
@ = Half-life too short to be able to perform the decay correction

```
************************************************************************
*****        G A M M A   S P E C T R U M   A N A L Y S I S        *****
************************************************************************


Filename: C:\LACBWR\B1-010-001-FSFC-D50-GM.CNF

Report Generated On             : 3/29/2019  10:52:10 AM

Sample Title                    : B1-010-001-FSFC-D50-GM
Sample Description              : Rx Bowl 2M Concrete
Sample Identification           : D50
Sample Type                     : Gamma Direct
Sample Geometry                 :

Peak Locate Threshold           :  3.00
Peak Locate Range (in channels) :    85 -  8000
Peak Area Range (in channels)   :    85 -  8000
Identification Energy Tolerance :    3.000 keV

Sample Size                     :  1.256E+001 M^2

Sample Taken On                 : 3/28/2019   2:50:00 AM
Acquisition Started             : 3/28/2019   2:49:47 PM

Live Time                       :      600.0 seconds
Real Time                       :      600.3 seconds

Dead Time                       :   0.05 %


              Energy Calibration Used Done On       : 10/24/2017
              Efficiency Calibration Used Done On   : 3/26/2019
              Efficiency ID                         : RxBOWL_CON_2M
```

****
***** P E A K A N A L Y S I S R E P O R T *****
****

Detector Name: 3844
Sample Title: B1-010-001-FSFC-D50-GM
Peak Analysis Performed on: 3/29/2019 10:52:09 AM
Peak Analysis From Channel: 85
Peak Analysis To Channel: 8000

Peak No.	ROI start	ROI end	Peak centroid	Energy (keV)	FWHM (keV)	Net Peak Area	Net Area Uncert.	Continuum Counts
1	296-	305	300.37	75.03	0.98	2.67E+001	32.27	1.02E+002
2	1400-	1412	1406.35	351.73	0.92	1.83E+001	22.39	4.07E+001
3	2032-	2046	2040.27	510.29	0.36	2.40E+001	20.99	2.80E+001
4	2326-	2338	2331.15	583.04	0.33	2.69E+001	17.93	2.01E+001
5	2429-	2440	2434.90	608.98	0.41	2.10E+001	17.21	2.10E+001
6	3866-	3879	3872.95	968.50	0.30	9.27E+000	12.63	1.07E+001
7	5828-	5852	5840.72	1460.19	1.72	2.15E+002	30.97	6.09E+000

M = First peak in a multiplet region
m = Other peak in a multiplet region
F = Fitted singlet

Errors quoted at 2.000 sigma

****
***** N U C L I D E I D E N T I F I C A T I O N R E P O R T *****
****

Sample Title: B1-010-001-FSFC-D50-GM
Nuclide Library Used: C:\GENIE2K\CAMFILES\LACBWR.NLB

..... IDENTIFIED NUCLIDES .....

Nuclide Name	Id Confidence	Energy (keV)	Yield (%)	Activity (pCi/M^2)	Activity Uncertainty
K-40	0.993	1460.81*	10.67	1.73091E+005	2.87493E+004
BI-214	0.999	609.31*	46.30	2.36205E+003	1.95960E+003
		768.36	5.04		
		806.17	1.23		
		934.06	3.21		
		1120.29	15.10		
		1155.19	1.69		
		1238.11	5.94		
		1280.96	1.47		
		1377.67	4.11		
		1385.31	0.78		
		1401.50	1.39		
		1407.98	2.48		
		1509.19	2.19		
		1661.28	1.15		
		1729.60	3.05		
		1764.49	15.80		
		1847.44	2.12		
		2118.54	1.21		
PB-214	0.626	74.81*	6.33	2.22868E+004	2.73161E+004
		77.11	10.70		
		87.20	3.70		
		89.80	1.03		
		241.98	7.49		
		295.21	19.20		
		351.92*	37.20	1.87519E+003	2.31171E+003
		785.91	1.10		
AC-228	0.999	89.95	2.10		
		93.35	3.50		
		129.08	2.80		
		209.28	4.40		
		270.23	3.60		
		327.64	3.20		
		338.32	11.40		
		409.51	2.13		
		463.00	4.40		
		794.70	4.60		
		911.60	27.70		
		964.60	5.20		
		969.11*	16.60	3.79520E+003	5.17849E+003
		1587.90	3.71		

Nuclide Name	Id Confidence	Energy (keV)	Yield (%)	Activity (pCi/M^2)	Activity Uncertainty

* = Energy line found in the spectrum.
@ = Energy line not used for Weighted Mean Activity
Energy Tolerance : 3.000 keV
Nuclide confidence index threshold = 0.30
Errors quoted at 2.000 sigma

****
***** I N T E R F E R E N C E C O R R E C T E D R E P O R T *****
****

Nuclide Name	Nuclide Id Confidence	Wt mean Activity (pCi/M^2)	Wt mean Activity Uncertainty
K-40	0.993	1.730911E+005	2.874934E+004
BI-214	0.999	2.362048E+003	1.959599E+003
PB-214	0.626	2.020336E+003	2.303475E+003
AC-228	0.999	3.795202E+003	5.178494E+003

? = Nuclide is part of an undetermined solution
X = Nuclide rejected by the interference analysis
@ = Nuclide contains energy lines not used in Weighted Mean Activity

Errors quoted at 2.000 sigma

********** U N I D E N T I F I E D P E A K S **********

Peak Locate Performed on: 3/29/2019 10:52:09 AM
Peak Locate From Channel: 85
Peak Locate To Channel: 8000

Peak No.	Energy (keV)	Peak Size in Counts per Second	Peak CPS % Uncertainty	Peak Type	Tol. Nuclide
3	510.29	4.0080E-002	87.30		
4	583.04	4.4867E-002	66.60		

M = First peak in a multiplet region
m = Other peak in a multiplet region
F = Fitted singlet

Errors quoted at 2.000 sigma

****
***** N U C L I D E M D A R E P O R T *****
****

Detector Name: 3844
Sample Geometry:
Sample Title: B1-010-001-FSFC-D50-GM
Nuclide Library Used: C:\GENIE2K\CAMFILES\LACBWR.NLB

	Nuclide Name	Energy (keV)	Yield (%)	Line MDA (pCi/M^2)	Nuclide MDA (pCi/M^2)	Activity (pCi/M^2)	Dec. Level (pCi/M^2)
+	K-40	1460.81*	10.67	1.538E+004	1.54E+004	1.731E+005	6.601E+003
	CO-60	1173.22	100.00	2.550E+003	2.13E+003	-1.345E+002	1.173E+003
		1332.49	100.00	2.127E+003		1.284E+002	9.545E+002
	CS-134	475.35	1.46	1.411E+005	2.24E+003	2.481E+004	6.635E+004
		563.23	8.38	2.556E+004		2.625E+004	1.197E+004
		569.32	15.43	1.229E+004		-4.148E+003	5.705E+003
		604.70	97.60	2.491E+003		2.245E+003	1.173E+003
		795.84	85.40	2.235E+003		-2.642E+002	1.021E+003
		801.93	8.73	2.059E+004		-4.208E+004	9.351E+003
		1038.57	1.00	2.292E+005		4.009E+004	1.051E+005
		1167.94	1.80	1.355E+005		-8.338E+004	6.210E+004
		1365.15	3.04	6.047E+004		-3.368E+004	2.659E+004
	CS-137	661.65	85.12	2.506E+003	2.51E+003	-3.567E+002	1.166E+003
	EU-152	121.78	28.40	9.201E+003	7.34E+003	6.078E+003	4.473E+003
		344.27	26.50	7.919E+003		-5.340E+003	3.767E+003
		1407.95	20.70	7.335E+003		1.682E+003	3.120E+003
	EU-154	123.07	40.40	6.461E+003	6.46E+003	2.911E+003	3.141E+003
		722.30	20.00	1.096E+004		6.760E+003	5.092E+003
		1274.51	34.40	6.535E+003		3.559E+003	2.959E+003
+	BI-214	609.31*	46.30	3.000E+003	3.00E+003	2.362E+003	1.348E+003
		768.36	5.04	4.285E+004		1.380E+004	1.983E+004
		806.17	1.23	1.600E+005		2.054E+004	7.326E+004
		934.06	3.21	6.667E+004		-7.132E+003	3.053E+004
		1120.29	15.10	1.262E+004		-1.728E+004	5.652E+003
		1155.19	1.69	1.512E+005		3.278E+004	6.962E+004
		1238.11	5.94	4.185E+004		2.304E+004	1.916E+004
		1280.96	1.47	1.464E+005		-1.322E+005	6.597E+004
		1377.67	4.11	5.113E+004		2.339E+004	2.285E+004
		1385.31	0.78	2.322E+005		6.271E+004	1.017E+005
		1401.50	1.39	1.130E+005		2.538E+004	4.837E+004
		1407.98	2.48	6.122E+004		1.404E+004	2.604E+004
		1509.19	2.19	6.034E+004		-2.440E+004	2.473E+004
		1661.28	1.15	9.851E+004		-1.281E+005	3.816E+004
		1729.60	3.05	4.780E+004		2.228E+004	1.959E+004
		1764.49	15.80	1.292E+004		-3.138E+003	5.617E+003
		1847.44	2.12	7.180E+004		3.347E+004	2.943E+004
>		2118.54	1.21	0.000E+000		0.000E+000	0.000E+000
+	PB-214	74.81*	6.33	4.426E+004	3.76E+003	2.229E+004	2.100E+004
		77.11	10.70	4.593E+004		-1.828E+004	2.234E+004
		87.20	3.70	9.640E+004		7.923E+004	4.692E+004
		89.80	1.03	3.330E+005		3.035E+005	1.621E+005
		241.98	7.49	3.290E+004		2.097E+004	1.589E+004

	Nuclide Name	Energy (keV)	Yield (%)	Line MDA (pCi/M^2)	Nuclide MDA (pCi/M^2)	Activity (pCi/M^2)	Dec. Level (pCi/M^2)
+	PB-214	295.21	19.20	1.109E+004	3.76E+003	9.792E+003	5.302E+003
		351.92*	37.20	3.761E+003		1.875E+003	1.742E+003
		785.91	1.10	1.842E+005		-1.512E+004	8.466E+004

+ = Nuclide identified during the nuclide identification
* = Energy line found in the spectrum
> = Calculated MDA is zero due to zero counts in the region, or the region is outside the spectrum, or MDA has not been calculated
@ = Half-life too short to be able to perform the decay correction

```
***********************************************************************
*****        G A M M A   S P E C T R U M   A N A L Y S I S        *****
***********************************************************************


Filename: C:\LACBWR\B1-010-001-FSFC-D51-GM.CNF

Report Generated On             : 3/29/2019  12:34:03 PM

Sample Title                    : B1-010-001-FSFC-D51-GM
Sample Description              : Rx Bowl concrete 2M
Sample Identification           : D51
Sample Type                     : Gamma Direct
Sample Geometry                 :

Peak Locate Threshold           :  3.00
Peak Locate Range (in channels) :    85 -  8000
Peak Area Range (in channels)   :    85 -  8000
Identification Energy Tolerance :    3.000 keV

Sample Size                     :  1.256E+001 M^2

Sample Taken On                 : 3/29/2019   9:05:00 AM
Acquisition Started             : 3/29/2019   9:05:38 AM

Live Time                       :      600.0 seconds
Real Time                       :      600.2 seconds

Dead Time                       :   0.03 %


              Energy Calibration Used Done On       : 10/24/2017
              Efficiency Calibration Used Done On   : 3/26/2019
              Efficiency ID                         : RxBOWL_CON_2M
```

****
***** P E A K A N A L Y S I S R E P O R T *****
****

Detector Name: 3844
Sample Title: B1-010-001-FSFC-D51-GM
Peak Analysis Performed on: 3/29/2019 12:34:03 PM
Peak Analysis From Channel: 85
Peak Analysis To Channel: 8000

Peak No.	ROI start	ROI end	Peak centroid	Energy (keV)	FWHM (keV)	Net Peak Area	Net Area Uncert.	Continuum Counts
1	296-	305	300.83	75.14	0.65	2.75E+001	29.27	8.25E+001
2	948-	962	955.09	238.84	0.59	2.58E+001	29.62	6.72E+001
3	1175-	1188	1180.89	295.33	1.45	2.93E+001	20.02	2.57E+001
4	1403-	1415	1408.84	352.36	1.28	3.01E+001	18.47	2.09E+001
5	2431-	2443	2436.03	609.26	0.59	2.31E+001	16.75	1.59E+001
6	2641-	2653	2646.45	661.88	0.39	3.06E+001	14.62	7.42E+000
7	5834-	5858	5847.13	1461.79	2.24	1.77E+002	26.61	0.00E+000

M = First peak in a multiplet region
m = Other peak in a multiplet region
F = Fitted singlet

Errors quoted at 2.000 sigma

****
***** N U C L I D E I D E N T I F I C A T I O N R E P O R T *****
****

Sample Title: B1-010-001-FSFC-D51-GM
Nuclide Library Used: C:\GENIE2K\CAMFILES\LACBWR.NLB

..... IDENTIFIED NUCLIDES .....

Nuclide Name	Id Confidence	Energy (keV)	Yield (%)	Activity (pCi/M^2)	Activity Uncertainty
K-40	0.983	1460.81*	10.67	1.42669E+005	2.44727E+004
CS-137	0.999	661.65*	85.12	1.96297E+003	9.67476E+002
PB-212	0.999	74.81*	9.60	1.50802E+004	1.63293E+004
		77.11	17.50		
		87.20	6.30		
		89.80	1.75		
		115.19	0.60		
		238.63*	44.60	1.78441E+003	2.06518E+003
		300.09	3.41		
BI-214	1.000	609.31*	46.30	2.59635E+003	1.91399E+003
		768.36	5.04		
		806.17	1.23		
		934.06	3.21		
		1120.29	15.10		
		1155.19	1.69		
		1238.11	5.94		
		1280.96	1.47		
		1377.67	4.11		
		1385.31	0.78		
		1401.50	1.39		
		1407.98	2.48		
		1509.19	2.19		
		1661.28	1.15		
		1729.60	3.05		
		1764.49	15.80		
		1847.44	2.12		
		2118.54	1.21		
PB-214	0.998	74.81*	6.33	2.28704E+004	2.47649E+004
		77.11	10.70		
		87.20	3.70		
		89.80	1.03		
		241.98	7.49		
		295.21*	19.20	5.27716E+003	3.70607E+003
		351.92*	37.20	3.08412E+003	1.95631E+003
		785.91	1.10		

* = Energy line found in the spectrum.
@ = Energy line not used for Weighted Mean Activity
Energy Tolerance : 3.000 keV
Nuclide confidence index threshold = 0.30
Errors quoted at 2.000 sigma

****
***** I N T E R F E R E N C E C O R R E C T E D R E P O R T *****
****

Nuclide Name	Nuclide Id Confidence	Wt mean Activity (pCi/M^2)	Wt mean Activity Uncertainty
K-40	0.983	1.426694E+005	2.447269E+004
CS-137	0.999	1.962968E+003	9.674756E+002
PB-212	0.999	1.955925E+003	2.048942E+003
BI-214	1.000	2.596353E+003	1.913991E+003
PB-214	0.998	3.641397E+003	1.725930E+003

? = Nuclide is part of an undetermined solution
X = Nuclide rejected by the interference analysis
@ = Nuclide contains energy lines not used in Weighted Mean Activity

Errors quoted at 2.000 sigma

********** U N I D E N T I F I E D P E A K S **********

Peak Locate Performed on: 3/29/2019 12:34:03 PM
Peak Locate From Channel: 85
Peak Locate To Channel: 8000

Peak No.	Energy (keV)	Peak Size in Counts per Second	Peak CPS % Uncertainty	Peak Type	Tol. Nuclide

All peaks were identified.

****
***** N U C L I D E M D A R E P O R T *****
****

Detector Name: 3844
Sample Geometry:
Sample Title: B1-010-001-FSFC-D51-GM
Nuclide Library Used: C:\GENIE2K\CAMFILES\LACBWR.NLB

	Nuclide Name	Energy (keV)	Yield (%)	Line MDA (pCi/M^2)	Nuclide MDA (pCi/M^2)	Activity (pCi/M^2)	Dec. Level (pCi/M^2)
+	K-40	1460.81*	10.67	2.181E+003	2.18E+003	1.427E+005	0.000E+000
	CO-60	1173.22	100.00	2.360E+003	2.05E+003	-1.124E+003	1.078E+003
		1332.49	100.00	2.051E+003		1.031E+002	9.169E+002
	CS-134	475.35	1.46	1.330E+005	2.15E+003	7.442E+004	6.229E+004
		563.23	8.38	2.096E+004		-1.515E+002	9.674E+003
		569.32	15.43	1.248E+004		-1.875E+003	5.801E+003
		604.70	97.60	2.153E+003		-3.963E+003	1.004E+003
		795.84	85.40	2.287E+003		-4.942E+002	1.047E+003
		801.93	8.73	2.087E+004		-1.703E+004	9.487E+003
		1038.57	1.00	2.213E+005		5.808E+004	1.011E+005
		1167.94	1.80	1.292E+005		-3.176E+004	5.896E+004
		1365.15	3.04	6.738E+004		-2.693E+004	3.005E+004
+	CS-137	661.65*	85.12	1.183E+003	1.18E+003	1.963E+003	5.046E+002
	EU-152	121.78	28.40	8.751E+003	7.09E+003	1.931E+003	4.248E+003
		344.27	26.50	7.091E+003		1.982E+003	3.353E+003
		1407.95	20.70	8.620E+003		-5.055E+002	3.763E+003
	EU-154	123.07	40.40	6.088E+003	6.09E+003	-6.308E+002	2.955E+003
		722.30	20.00	9.545E+003		2.448E+003	4.384E+003
		1274.51	34.40	6.140E+003		-2.314E+003	2.761E+003
+	BI-214	609.31*	46.30	2.845E+003	2.84E+003	2.596E+003	1.270E+003
		768.36	5.04	4.008E+004		2.068E+004	1.844E+004
		806.17	1.23	1.361E+005		-1.638E+005	6.129E+004
		934.06	3.21	6.353E+004		5.403E+003	2.896E+004
		1120.29	15.10	1.762E+004		1.786E+004	8.152E+003
		1155.19	1.69	1.385E+005		3.309E+004	6.328E+004
		1238.11	5.94	4.326E+004		2.546E+004	1.987E+004
		1280.96	1.47	1.392E+005		-1.112E+005	6.234E+004
		1377.67	4.11	5.017E+004		1.273E+004	2.237E+004
		1385.31	0.78	2.198E+005		-1.653E+005	9.557E+004
		1401.50	1.39	1.130E+005		-5.552E+004	4.837E+004
		1407.98	2.48	7.195E+004		-4.219E+003	3.141E+004
		1509.19	2.19	7.289E+004		4.420E+004	3.101E+004
		1661.28	1.15	1.367E+005		7.381E+004	5.724E+004
		1729.60	3.05	4.174E+004		1.592E+004	1.656E+004
		1764.49	15.80	1.466E+004		1.247E+004	6.486E+003
		1847.44	2.12	7.586E+004		-4.184E+004	3.146E+004
>		2118.54	1.21	0.000E+000		0.000E+000	0.000E+000
+	PB-214	74.81*	6.33	3.963E+004	2.78E+003	2.287E+004	1.869E+004
		77.11	10.70	4.272E+004		3.877E+004	2.074E+004
		87.20	3.70	9.038E+004		3.702E+004	4.391E+004
		89.80	1.03	3.061E+005		-2.162E+005	1.487E+005
		241.98	7.49	2.858E+004		1.952E+004	1.373E+004

	Nuclide Name	Energy (keV)	Yield (%)	Line MDA (pCi/M^2)	Nuclide MDA (pCi/M^2)	Activity (pCi/M^2)	Dec. Level (pCi/M^2)
+	PB-214	295.21*	19.20	5.482E+003	2.78E+003	5.277E+003	2.497E+003
		351.92*	37.20	2.783E+003		3.084E+003	1.253E+003
		785.91	1.10	1.861E+005		1.365E+005	8.561E+004

+ = Nuclide identified during the nuclide identification
* = Energy line found in the spectrum
> = Calculated MDA is zero due to zero counts in the region, or the region is outside the spectrum, or MDA has not been calculated
@ = Half-life too short to be able to perform the decay correction

```
************************************************************************
*****        G A M M A   S P E C T R U M   A N A L Y S I S        *****
************************************************************************


Filename: C:\LACBWR\B1-010-001-QSFC-D05-GM.CNF

Report Generated On             : 3/27/2019   9:09:02 PM

Sample Title                    : B1-010-001-QSFC-D05-GM
Sample Description              : Rx Bowl 3M Concrete
Sample Identification           : D05 QC
Sample Type                     : Gamma Direct
Sample Geometry                 :

Peak Locate Threshold           :  3.00
Peak Locate Range (in channels) :    85 -  8000
Peak Area Range (in channels)   :    85 -  8000
Identification Energy Tolerance :    3.000 keV

Sample Size                     :  2.827E+001 M^2

Sample Taken On                 : 3/27/2019   2:35:00 PM
Acquisition Started             : 3/27/2019   2:35:49 PM

Live Time                       :      600.0 seconds
Real Time                       :      600.2 seconds

Dead Time                       :   0.04 %


              Energy Calibration Used Done On       : 10/24/2017
              Efficiency Calibration Used Done On   : 3/26/2019
              Efficiency ID                         : RxBOWL_CON_3M
```

****
***** P E A K A N A L Y S I S R E P O R T *****
****

Detector Name: 3844
Sample Title: B1-010-001-QSFC-D05-GM
Peak Analysis Performed on: 3/27/2019 9:09:01 PM
Peak Analysis From Channel: 85
Peak Analysis To Channel: 8000

Peak No.	ROI start	ROI end	Peak centroid	Energy (keV)	FWHM (keV)	Net Peak Area	Net Area Uncert.	Continuum Counts
1	948-	962	953.54	238.45	1.05	7.30E+001	31.20	5.90E+001
2	1401-	1413	1407.35	351.98	1.36	3.38E+001	21.02	2.92E+001
3	2326-	2338	2332.62	583.40	0.71	2.87E+001	19.24	2.43E+001
4	2429-	2442	2435.08	609.02	0.93	3.98E+001	19.24	1.92E+001
5	3636-	3651	3644.24	911.33	1.53	3.40E+001	17.54	1.40E+001
6	5832-	5854	5843.78	1460.95	1.15	2.17E+002	30.95	5.75E+000

M = First peak in a multiplet region
m = Other peak in a multiplet region
F = Fitted singlet

Errors quoted at 2.000 sigma

****
***** N U C L I D E I D E N T I F I C A T I O N R E P O R T *****
****

Sample Title: B1-010-001-QSFC-D05-GM
Nuclide Library Used: C:\GENIE2K\CAMFILES\LACBWR.NLB

..... IDENTIFIED NUCLIDES .....

Nuclide Name	Id Confidence	Energy (keV)	Yield (%)	Activity (pCi/M^2)	Activity Uncertainty
K-40	1.000	1460.81*	10.67	7.82517E+004	1.28880E+004
PB-212	1.000	74.81	9.60		
		77.11	17.50		
		87.20	6.30		
		89.80	1.75		
		115.19	0.60		
		238.63*	44.60	2.27008E+003	1.03617E+003
		300.09	3.41		
BI-214	0.999	609.31*	46.30	2.00440E+003	1.00165E+003
		768.36	5.04		
		806.17	1.23		
		934.06	3.21		
		1120.29	15.10		
		1155.19	1.69		
		1238.11	5.94		
		1280.96	1.47		
		1377.67	4.11		
		1385.31	0.78		
		1401.50	1.39		
		1407.98	2.48		
		1509.19	2.19		
		1661.28	1.15		
		1729.60	3.05		
		1764.49	15.80		
		1847.44	2.12		
		2118.54	1.21		
PB-214	1.000	74.81	6.33		
		77.11	10.70		
		87.20	3.70		
		89.80	1.03		
		241.98	7.49		
		295.21	19.20		
		351.92*	37.20	1.55587E+003	9.98546E+002
		785.91	1.10		
AC-228	1.000	89.95	2.10		
		93.35	3.50		
		129.08	2.80		
		209.28	4.40		
		270.23	3.60		
		327.64	3.20		
		338.32	11.40		

Nuclide Name	Id Confidence	Energy (keV)	Yield (%)	Activity (pCi/M^2)	Activity Uncertainty
AC-228	1.000	409.51	2.13		
		463.00	4.40		
		794.70	4.60		
		911.60*	27.70	3.60374E+003	1.90591E+003
		964.60	5.20		
		969.11	16.60		
		1587.90	3.71		

* = Energy line found in the spectrum.
@ = Energy line not used for Weighted Mean Activity
Energy Tolerance : 3.000 keV
Nuclide confidence index threshold = 0.30
Errors quoted at 2.000 sigma

****
***** I N T E R F E R E N C E C O R R E C T E D R E P O R T *****
****

Nuclide Name	Nuclide Id Confidence	Wt mean Activity (pCi/M^2)	Wt mean Activity Uncertainty
K-40	1.000	7.825170E+004	1.288804E+004
PB-212	1.000	2.270080E+003	1.036165E+003
BI-214	0.999	2.004399E+003	1.001647E+003
PB-214	1.000	1.555866E+003	9.985456E+002
AC-228	1.000	3.603738E+003	1.905910E+003

? = Nuclide is part of an undetermined solution
X = Nuclide rejected by the interference analysis
@ = Nuclide contains energy lines not used in Weighted Mean Activity

Errors quoted at 2.000 sigma

********** U N I D E N T I F I E D P E A K S **********

Peak Locate Performed on: 3/27/2019 9:09:01 PM
Peak Locate From Channel: 85
Peak Locate To Channel: 8000

Peak No.	Energy (keV)	Peak Size in Counts per Second	Peak CPS % Uncertainty	Peak Type	Tol. Nuclide
3	583.40	4.7767E-002	67.14		

M = First peak in a multiplet region
m = Other peak in a multiplet region
F = Fitted singlet

Errors quoted at 2.000 sigma

****
***** N U C L I D E M D A R E P O R T *****
****

Detector Name: 3844
Sample Geometry:
Sample Title: B1-010-001-QSFC-D05-GM
Nuclide Library Used: C:\GENIE2K\CAMFILES\LACBWR.NLB

	Nuclide Name	Energy (keV)	Yield (%)	Line MDA (pCi/M^2)	Nuclide MDA (pCi/M^2)	Activity (pCi/M^2)	Dec. Level (pCi/M^2)
+	K-40	1460.81*	10.67	6.569E+003	6.57E+003	7.825E+004	2.797E+003
	CO-60	1173.22	100.00	1.175E+003	7.67E+002	-2.554E+002	5.421E+002
		1332.49	100.00	7.672E+002		5.758E+002	3.349E+002
	CS-134	475.35	1.46	6.422E+004	1.11E+003	-9.557E+003	3.024E+004
		563.23	8.38	1.062E+004		-3.370E+003	4.949E+003
		569.32	15.43	5.717E+003		-1.559E+002	2.662E+003
		604.70	97.60	1.225E+003		8.390E+002	5.801E+002
		795.84	85.40	1.112E+003		5.303E+000	5.129E+002
		801.93	8.73	1.123E+004		-1.251E+003	5.194E+003
		1038.57	1.00	1.036E+005		-1.845E+004	4.755E+004
		1167.94	1.80	6.514E+004		3.262E+004	3.005E+004
		1365.15	3.04	2.267E+004		-2.359E+003	9.707E+003
	CS-137	661.65	85.12	1.211E+003	1.21E+003	5.305E+002	5.665E+002
	EU-152	121.78	28.40	3.976E+003	3.33E+003	-3.315E+003	1.931E+003
		344.27	26.50	3.328E+003		-1.866E+003	1.578E+003
		1407.95	20.70	3.523E+003		-1.878E+003	1.517E+003
	EU-154	123.07	40.40	2.827E+003	2.83E+003	1.519E+003	1.373E+003
		722.30	20.00	4.861E+003		2.024E+003	2.257E+003
		1274.51	34.40	2.966E+003		-1.405E+003	1.345E+003
+	BI-214	609.31*	46.30	1.338E+003	1.34E+003	2.004E+003	6.010E+002
		768.36	5.04	2.031E+004		9.378E+003	9.441E+003
		806.17	1.23	8.141E+004		5.676E+004	3.770E+004
		934.06	3.21	3.081E+004		2.006E+004	1.415E+004
		1120.29	15.10	7.221E+003		5.945E+003	3.316E+003
		1155.19	1.69	6.121E+004		-3.859E+004	2.794E+004
		1238.11	5.94	2.240E+004		2.669E+003	1.041E+004
		1280.96	1.47	6.551E+004		-2.783E+003	2.951E+004
		1377.67	4.11	1.912E+004		7.818E+003	8.345E+003
		1385.31	0.78	1.011E+005		-1.022E+005	4.414E+004
		1401.50	1.39	5.563E+004		-3.937E+003	2.418E+004
		1407.98	2.48	2.941E+004		-1.567E+004	1.266E+004
		1509.19	2.19	3.258E+004		6.939E+002	1.386E+004
		1661.28	1.15	5.166E+004		3.052E+003	2.087E+004
		1729.60	3.05	2.005E+004		-2.428E+003	8.100E+003
		1764.49	15.80	5.768E+003		4.175E+003	2.508E+003
		1847.44	2.12	3.870E+004		2.347E+004	1.646E+004
>		2118.54	1.21	0.000E+000		0.000E+000	0.000E+000
+	PB-214	74.81	6.33	3.820E+004	1.45E+003	4.252E+004	1.858E+004
		77.11	10.70	2.075E+004		1.008E+004	1.009E+004
		87.20	3.70	4.325E+004		-4.759E+003	2.104E+004
		89.80	1.03	1.497E+005		-2.951E+004	7.284E+004
		241.98	7.49	1.470E+004		1.780E+004	7.096E+003

	Nuclide Name	Energy (keV)	Yield (%)	Line MDA (pCi/M^2)	Nuclide MDA (pCi/M^2)	Activity (pCi/M^2)	Dec. Level (pCi/M^2)
+	PB-214	295.21	19.20	5.293E+003	1.45E+003	2.322E+003	2.537E+003
		351.92*	37.20	1.450E+003		1.556E+003	6.625E+002
		785.91	1.10	8.403E+004		6.127E+004	3.870E+004

+ = Nuclide identified during the nuclide identification
* = Energy line found in the spectrum
> = Calculated MDA is zero due to zero counts in the region, or
the region is outside the spectrum, or MDA has not been calculated
@ = Half-life too short to be able to perform the decay correction

```
***********************************************************************
*****        G A M M A   S P E C T R U M   A N A L Y S I S        *****
***********************************************************************


Filename: 3844

Report Generated On              : 3/28/2019  10:29:15 AM

Sample Title                     : B1-010-001-QSFC-D16-GM
Sample Description               : Rx Bowl 3M Concrete
Sample Identification            : D16 QC
Sample Type                      : Gamma Direct
Sample Geometry                  :

Peak Locate Threshold            :  3.00
Peak Locate Range (in channels)  :    85 -  8000
Peak Area Range (in channels)    :    85 -  8000
Identification Energy Tolerance  :    3.000 keV

Sample Size                      :  2.827E+001 M^2

Sample Taken On                  : 3/28/2019  10:18:00 AM
Acquisition Started              : 3/28/2019  10:19:14 AM

Live Time                        :      600.0 seconds
Real Time                        :      600.2 seconds

Dead Time                        :   0.03 %


              Energy Calibration Used Done On       : 10/24/2017
              Efficiency Calibration Used Done On   : 3/26/2019
              Efficiency ID                         : RxBOWL_CON_3M
```

****
***** P E A K A N A L Y S I S R E P O R T *****
****

Detector Name: 3844
Sample Title: B1-010-001-QSFC-D16-GM
Peak Analysis Performed on: 3/28/2019 10:29:15 AM
Peak Analysis From Channel: 85
Peak Analysis To Channel: 8000

Peak No.	ROI start	ROI end	Peak centroid	Energy (keV)	FWHM (keV)	Net Peak Area	Net Area Uncert.	Continuum Counts
1	946-	962	953.50	238.45	0.85	7.85E+001	36.37	8.05E+001
2	1399-	1413	1406.11	351.67	0.86	5.03E+001	19.83	1.67E+001
3	2036-	2048	2042.22	510.78	0.50	2.19E+001	18.29	2.31E+001
4	2427-	2440	2433.85	608.72	1.38	4.77E+001	15.81	5.31E+000
5	2639-	2650	2644.11	661.29	0.80	1.77E+001	14.30	1.33E+001
6	3634-	3649	3640.98	910.52	0.39	3.92E+001	16.55	9.78E+000
7	5825-	5849	5837.80	1459.46	2.00	2.40E+002	31.78	3.08E+000

M = First peak in a multiplet region
m = Other peak in a multiplet region
F = Fitted singlet

Errors quoted at 2.000 sigma

****
***** N U C L I D E I D E N T I F I C A T I O N R E P O R T *****
****

Sample Title: B1-010-001-QSFC-D16-GM
Nuclide Library Used: C:\GENIE2K\CAMFILES\LACBWR.NLB

..... IDENTIFIED NUCLIDES .....

Nuclide Name	Id Confidence	Energy (keV)	Yield (%)	Activity (pCi/M^2)	Activity Uncertainty
K-40	0.968	1460.81*	10.67	8.63537E+004	1.34818E+004
CS-137	0.998	661.65*	85.12	5.08538E+002	4.14857E+002
PB-212	1.000	74.81	9.60		
		77.11	17.50		
		87.20	6.30		
		89.80	1.75		
		115.19	0.60		
		238.63*	44.60	2.44215E+003	1.19668E+003
		300.09	3.41		
BI-214	0.997	609.31*	46.30	2.39916E+003	8.52609E+002
		768.36	5.04		
		806.17	1.23		
		934.06	3.21		
		1120.29	15.10		
		1155.19	1.69		
		1238.11	5.94		
		1280.96	1.47		
		1377.67	4.11		
		1385.31	0.78		
		1401.50	1.39		
		1407.98	2.48		
		1509.19	2.19		
		1661.28	1.15		
		1729.60	3.05		
		1764.49	15.80		
		1847.44	2.12		
		2118.54	1.21		
PB-214	1.000	74.81	6.33		
		77.11	10.70		
		87.20	3.70		
		89.80	1.03		
		241.98	7.49		
		295.21	19.20		
		351.92*	37.20	2.31231E+003	9.84011E+002
		785.91	1.10		
AC-228	0.994	89.95	2.10		
		93.35	3.50		
		129.08	2.80		
		209.28	4.40		
		270.23	3.60		
		327.64	3.20		

Nuclide Name	Id Confidence	Energy (keV)	Yield (%)	Activity (pCi/M^2)	Activity Uncertainty
AC-228	0.994	338.32	11.40		
		409.51	2.13		
		463.00	4.40		
		794.70	4.60		
		911.60*	27.70	4.15736E+003	1.81886E+003
		964.60	5.20		
		969.11	16.60		
		1587.90	3.71		

* = Energy line found in the spectrum.
@ = Energy line not used for Weighted Mean Activity
Energy Tolerance : 3.000 keV
Nuclide confidence index threshold = 0.30
Errors quoted at 2.000 sigma

****
***** I N T E R F E R E N C E C O R R E C T E D R E P O R T *****
****

Nuclide Name	Nuclide Id Confidence	Wt mean Activity (pCi/M^2)	Wt mean Activity Uncertainty
K-40	0.968	8.635370E+004	1.348176E+004
CS-137	0.998	5.085379E+002	4.148573E+002
PB-212	1.000	2.442154E+003	1.196680E+003
BI-214	0.997	2.399160E+003	8.526093E+002
PB-214	1.000	2.312315E+003	9.840105E+002
AC-228	0.994	4.157360E+003	1.818857E+003

? = Nuclide is part of an undetermined solution
X = Nuclide rejected by the interference analysis
@ = Nuclide contains energy lines not used in Weighted Mean Activity

Errors quoted at 2.000 sigma

********** U N I D E N T I F I E D P E A K S **********

Peak Locate Performed on: 3/28/2019 10:29:15 AM
Peak Locate From Channel: 85
Peak Locate To Channel: 8000

Peak No.	Energy (keV)	Peak Size in Counts per Second	Peak CPS % Uncertainty	Peak Type	Tol. Nuclide
3	510.78	3.6574E-002	83.34		

M = First peak in a multiplet region
m = Other peak in a multiplet region
F = Fitted singlet

Errors quoted at 2.000 sigma

****
***** N U C L I D E M D A R E P O R T *****
****

Detector Name: 3844
Sample Geometry:
Sample Title: B1-010-001-QSFC-D16-GM
Nuclide Library Used: C:\GENIE2K\CAMFILES\LACBWR.NLB

	Nuclide Name	Energy (keV)	Yield (%)	Line MDA (pCi/M^2)	Nuclide MDA (pCi/M^2)	Activity (pCi/M^2)	Dec. Level (pCi/M^2)
+	K-40	1460.81*	10.67	5.180E+003	5.18E+003	8.635E+004	2.103E+003
	CO-60	1173.22	100.00	1.068E+003	9.51E+002	5.177E+002	4.887E+002
		1332.49	100.00	9.512E+002		9.357E+002	4.269E+002
	CS-134	475.35	1.46	5.652E+004	1.14E+003	2.009E+004	2.638E+004
		563.23	8.38	1.114E+004		8.224E+003	5.213E+003
		569.32	15.43	5.630E+003		-1.603E+003	2.618E+003
		604.70	97.60	1.137E+003		8.294E+002	5.363E+002
		795.84	85.40	1.174E+003		-7.137E+002	5.440E+002
		801.93	8.73	1.123E+004		-1.225E+004	5.194E+003
		1038.57	1.00	9.154E+004		1.035E+004	4.150E+004
		1167.94	1.80	6.192E+004		-3.238E+004	2.844E+004
		1365.15	3.04	2.568E+004		1.109E+004	1.121E+004
+	CS-137	661.65*	85.12	6.233E+002	6.23E+002	5.085E+002	2.728E+002
	EU-152	121.78	28.40	4.032E+003	3.14E+003	-3.481E+003	1.958E+003
		344.27	26.50	3.141E+003		-3.097E+003	1.484E+003
		1407.95	20.70	3.855E+003		-1.407E+003	1.683E+003
	EU-154	123.07	40.40	2.866E+003	2.87E+003	-3.153E+002	1.392E+003
		722.30	20.00	4.781E+003		0.000E+000	2.217E+003
		1274.51	34.40	3.049E+003		2.662E+003	1.386E+003
+	BI-214	609.31*	46.30	7.726E+002	7.73E+002	2.399E+003	3.182E+002
		768.36	5.04	1.810E+004		-1.901E+004	8.336E+003
		806.17	1.23	8.070E+004		2.536E+004	3.734E+004
		934.06	3.21	3.048E+004		-1.391E+004	1.398E+004
		1120.29	15.10	8.021E+003		5.109E+003	3.716E+003
		1155.19	1.69	6.270E+004		9.415E+003	2.868E+004
		1238.11	5.94	1.762E+004		-1.061E+004	8.020E+003
		1280.96	1.47	6.656E+004		3.297E+004	3.004E+004
		1377.67	4.11	2.061E+004		-3.799E+003	9.093E+003
		1385.31	0.78	9.242E+004		2.819E+004	3.979E+004
		1401.50	1.39	5.399E+004		-9.586E+002	2.336E+004
		1407.98	2.48	3.218E+004		-1.174E+004	1.405E+004
		1509.19	2.19	2.993E+004		-1.212E+004	1.253E+004
		1661.28	1.15	4.802E+004		1.831E+004	1.905E+004
		1729.60	3.05	1.863E+004		7.107E+003	7.394E+003
		1764.49	15.80	5.422E+003		1.638E+003	2.334E+003
		1847.44	2.12	4.423E+004		-2.450E+004	1.923E+004
>		2118.54	1.21	0.000E+000		0.000E+000	0.000E+000
+	PB-214	74.81	6.33	3.658E+004	1.17E+003	3.023E+004	1.777E+004
		77.11	10.70	2.011E+004		3.848E+003	9.775E+003
		87.20	3.70	4.348E+004		8.908E+003	2.116E+004
		89.80	1.03	1.516E+005		-5.670E+003	7.381E+004
		241.98	7.49	1.504E+004		1.816E+004	7.267E+003

	Nuclide Name	Energy (keV)	Yield (%)	Line MDA (pCi/M^2)	Nuclide MDA (pCi/M^2)	Activity (pCi/M^2)	Dec. Level (pCi/M^2)
+	PB-214	295.21	19.20	4.885E+003	1.17E+003	3.268E+003	2.333E+003
		351.92*	37.20	1.173E+003		2.312E+003	5.242E+002
		785.91	1.10	8.732E+004		2.146E+004	4.034E+004

+ = Nuclide identified during the nuclide identification
* = Energy line found in the spectrum
> = Calculated MDA is zero due to zero counts in the region, or
the region is outside the spectrum, or MDA has not been calculated
@ = Half-life too short to be able to perform the decay correction

```
***********************************************************************
*****        G A M M A   S P E C T R U M   A N A L Y S I S        *****
***********************************************************************


Filename: 3844

Report Generated On              : 3/28/2019  11:22:47 AM

Sample Title                     : B1-010-001-QSFC-D18-GM
Sample Description               : Rx Bowl 3M Concrete
Sample Identification            : D18 QC
Sample Type                      : Gamma Direct
Sample Geometry                  :

Peak Locate Threshold            :  3.00
Peak Locate Range (in channels)  :    85 -  8000
Peak Area Range (in channels)    :    85 -  8000
Identification Energy Tolerance  :    3.000 keV

Sample Size                      :  2.827E+001 M^2

Sample Taken On                  : 3/28/2019  11:12:00 AM
Acquisition Started              : 3/28/2019  11:12:47 AM

Live Time                        :      600.0 seconds
Real Time                        :      600.2 seconds

Dead Time                        :   0.04 %


              Energy Calibration Used Done On       : 10/24/2017
              Efficiency Calibration Used Done On   : 3/26/2019
              Efficiency ID                         : RxBOWL_CON_3M
```

****
***** P E A K A N A L Y S I S R E P O R T *****
****

Detector Name: 3844
Sample Title: B1-010-001-QSFC-D18-GM
Peak Analysis Performed on: 3/28/2019 11:22:47 AM
Peak Analysis From Channel: 85
Peak Analysis To Channel: 8000

	Peak No.	ROI start	ROI end	Peak centroid	Energy (keV)	FWHM (keV)	Net Peak Area	Net Area Uncert.	Continuum Counts
	1	946-	962	954.03	238.58	1.17	8.91E+001	36.40	7.69E+001
M	2	1174-	1207	1179.08	294.88	0.67	1.64E+001	11.88	2.75E+001
m	3	1174-	1207	1201.25	300.42	0.67	1.79E+001	10.87	1.50E+001
	4	1399-	1411	1405.77	351.59	0.84	3.25E+001	19.77	2.45E+001
	5	2323-	2336	2329.15	582.53	0.80	2.80E+001	18.64	2.10E+001
	6	2425-	2439	2433.23	608.56	1.53	5.06E+001	17.64	9.41E+000
	7	3635-	3648	3641.58	910.67	0.99	3.10E+001	14.19	7.00E+000
	8	3866-	3879	3872.52	968.40	0.34	1.89E+001	11.45	5.05E+000
	9	4468-	4481	4474.03	1118.73	0.67	1.90E+001	8.72	0.00E+000
	10	5826-	5849	5838.16	1459.55	1.48	2.28E+002	30.98	2.99E+000

M = First peak in a multiplet region
m = Other peak in a multiplet region
F = Fitted singlet

Errors quoted at 2.000 sigma

****
***** N U C L I D E I D E N T I F I C A T I O N R E P O R T *****
****

Sample Title: B1-010-001-QSFC-D18-GM
Nuclide Library Used: C:\GENIE2K\CAMFILES\LACBWR.NLB

..... IDENTIFIED NUCLIDES .....

Nuclide Name	Id Confidence	Energy (keV)	Yield (%)	Activity (pCi/M^2)	Activity Uncertainty
K-40	0.972	1460.81*	10.67	8.20698E+004	1.30518E+004
PB-212	1.000	74.81	9.60		
		77.11	17.50		
		87.20	6.30		
		89.80	1.75		
		115.19	0.60		
		238.63*	44.60	2.77141E+003	1.21627E+003
		300.09*	3.41	8.23659E+003	5.17734E+003
BI-214	0.990	609.31*	46.30	2.54462E+003	9.45328E+002
		768.36	5.04		
		806.17	1.23		
		934.06	3.21		
		1120.29*	15.10	4.12731E+003	1.92231E+003
		1155.19	1.69		
		1238.11	5.94		
		1280.96	1.47		
		1377.67	4.11		
		1385.31	0.78		
		1401.50	1.39		
		1407.98	2.48		
		1509.19	2.19		
		1661.28	1.15		
		1729.60	3.05		
		1764.49	15.80		
		1847.44	2.12		
		2118.54	1.21		
PB-214	0.999	74.81	6.33		
		77.11	10.70		
		87.20	3.70		
		89.80	1.03		
		241.98	7.49		
		295.21*	19.20	1.33119E+003	9.85785E+002
		351.92*	37.20	1.49219E+003	9.39593E+002
		785.91	1.10		
AC-228	0.994	89.95	2.10		
		93.35	3.50		
		129.08	2.80		
		209.28	4.40		
		270.23	3.60		
		327.64	3.20		
		338.32	11.40		

Nuclide Name	Id Confidence	Energy (keV)	Yield (%)	Activity (pCi/M^2)	Activity Uncertainty
AC-228	0.994	409.51	2.13		
		463.00	4.40		
		794.70	4.60		
		911.60*	27.70	3.28595E+003	1.55137E+003
		964.60	5.20		
		969.11*	16.60	3.46665E+003	2.11981E+003
		1587.90	3.71		

* = Energy line found in the spectrum.
@ = Energy line not used for Weighted Mean Activity
Energy Tolerance : 3.000 keV
Nuclide confidence index threshold = 0.30
Errors quoted at 2.000 sigma

****
***** I N T E R F E R E N C E C O R R E C T E D R E P O R T *****
****

Nuclide Name	Nuclide Id Confidence	Wt mean Activity (pCi/M^2)	Wt mean Activity Uncertainty
K-40	0.972	8.206984E+004	1.305183E+004
PB-212	1.000	3.057254E+003	1.184041E+003
BI-214	0.990	2.852834E+003	8.483022E+002
PB-214	0.999	1.415549E+003	6.801367E+002
AC-228	0.994	3.348978E+003	1.251922E+003

? = Nuclide is part of an undetermined solution
X = Nuclide rejected by the interference analysis
@ = Nuclide contains energy lines not used in Weighted Mean Activity

Errors quoted at 2.000 sigma

********** U N I D E N T I F I E D P E A K S **********

Peak Locate Performed on: 3/28/2019 11:22:47 AM
Peak Locate From Channel: 85
Peak Locate To Channel: 8000

Peak No.	Energy (keV)	Peak Size in Counts per Second	Peak CPS % Uncertainty	Peak Type	Tol. Nuclide
5	582.53	4.6667E-002	66.56		

M = First peak in a multiplet region
m = Other peak in a multiplet region
F = Fitted singlet

Errors quoted at 2.000 sigma

****
***** N U C L I D E M D A R E P O R T *****
****

Detector Name: 3844
Sample Geometry:
Sample Title: B1-010-001-QSFC-D18-GM
Nuclide Library Used: C:\GENIE2K\CAMFILES\LACBWR.NLB

	Nuclide Name	Energy (keV)	Yield (%)	Line MDA (pCi/M^2)	Nuclide MDA (pCi/M^2)	Activity (pCi/M^2)	Dec. Level (pCi/M^2)
+	K-40	1460.81*	10.67	5.076E+003	5.08E+003	8.207E+004	2.051E+003
	CO-60	1173.22	100.00	1.175E+003	9.67E+002	-1.199E+003	5.421E+002
		1332.49	100.00	9.675E+002		4.229E+002	4.351E+002
	CS-134	475.35	1.46	6.032E+004	1.12E+003	7.508E+003	2.828E+004
		563.23	8.38	9.641E+003		-7.604E+003	4.461E+003
		569.32	15.43	5.497E+003		-1.154E+002	2.552E+003
		604.70	97.60	1.182E+003		1.112E+003	5.586E+002
		795.84	85.40	1.122E+003		6.965E+001	5.182E+002
		801.93	8.73	9.452E+003		-2.673E+003	4.303E+003
		1038.57	1.00	8.190E+004		-1.026E+005	3.668E+004
		1167.94	1.80	6.576E+004		4.906E+004	3.036E+004
		1365.15	3.04	2.894E+004		-1.180E+004	1.284E+004
	CS-137	661.65	85.12	1.154E+003	1.15E+003	3.151E+002	5.383E+002
	EU-152	121.78	28.40	3.997E+003	3.07E+003	2.133E+002	1.941E+003
		344.27	26.50	3.066E+003		-5.048E+003	1.447E+003
		1407.95	20.70	3.958E+003		-4.553E+003	1.735E+003
	EU-154	123.07	40.40	2.803E+003	2.80E+003	-6.766E+002	1.361E+003
		722.30	20.00	4.617E+003		2.214E+003	2.134E+003
		1274.51	34.40	3.089E+003		-2.996E+003	1.406E+003
+	BI-214	609.31*	46.30	9.993E+002	5.88E+002	2.545E+003	4.316E+002
		768.36	5.04	2.047E+004		-1.323E+003	9.521E+003
		806.17	1.23	7.393E+004		3.450E+004	3.395E+004
		934.06	3.21	2.840E+004		-1.690E+004	1.295E+004
		1120.29*	15.10	5.878E+002		4.127E+003	0.000E+000
		1155.19	1.69	5.890E+004		-9.319E+003	2.678E+004
		1238.11	5.94	1.894E+004		6.118E+003	8.680E+003
		1280.96	1.47	7.704E+004		2.278E+004	3.528E+004
		1377.67	4.11	2.200E+004		-6.155E+003	9.785E+003
		1385.31	0.78	1.187E+005		6.812E+004	5.293E+004
		1401.50	1.39	5.876E+004		-1.370E+004	2.575E+004
		1407.98	2.48	3.304E+004		-3.800E+004	1.448E+004
		1509.19	2.19	2.697E+004		1.257E+004	1.105E+004
		1661.28	1.15	5.166E+004		-1.648E+004	2.087E+004
		1729.60	3.05	2.134E+004		-4.619E+003	8.749E+003
		1764.49	15.80	5.933E+003		1.874E+003	2.590E+003
		1847.44	2.12	3.204E+004		1.494E+004	1.313E+004
>		2118.54	1.21	0.000E+000		0.000E+000	0.000E+000
+	PB-214	74.81	6.33	3.798E+004	1.35E+003	3.788E+004	1.847E+004
		77.11	10.70	2.105E+004		2.457E+004	1.024E+004
		87.20	3.70	4.301E+004		-2.303E+004	2.093E+004
		89.80	1.03	1.527E+005		7.462E+003	7.436E+004
		241.98	7.49	1.507E+004		1.383E+004	7.280E+003

	Nuclide Name	Energy (keV)	Yield (%)	Line MDA (pCi/M^2)	Nuclide MDA (pCi/M^2)	Activity (pCi/M^2)	Dec. Level (pCi/M^2)
+	PB-214	295.21*	19.20	2.198E+003	1.35E+003	1.331E+003	9.892E+002
		351.92*	37.20	1.346E+003		1.492E+003	6.108E+002
		785.91	1.10	8.971E+004		3.453E+004	4.154E+004

+ = Nuclide identified during the nuclide identification
* = Energy line found in the spectrum
> = Calculated MDA is zero due to zero counts in the region, or the region is outside the spectrum, or MDA has not been calculated
@ = Half-life too short to be able to perform the decay correction