NSP

NORTHERN STATES POWER COMPANY

MINNEAPOLIS, MINNESOTA 55401

November 30, 1979

Director
Office of Nuclear Reactor Regulation
US Nuclear Regulatory Commission
Washington, DC 20555

PRAIRIE ISLAND NUCLEAR GENERATING PLANT
Docket Nos. 50-282 License Nos. DPR-42
50-306 DPR-60

Evaluation of Penetration Seals and Fire Detectors Required by the Fire Protection Safety Evaluation

Sections 3.2.2 and 3.2.8 of the Prairie Island Fire Protection Safety Evaluation Report issued by the NRC Staff on September 6, 1979 require the completion of special evaluation of electrical and mechanical penetration seals and fire detectors. The requested evaluations are provided as Attachments (1) and (2).

Please contact us if you require further information related to either of these items.

Yours very truly,

L. O. Mayer

L O Mayer, PE
Manager of Nuclear Support Services

cc J G Keppler
G Charnoff

Attachment

1539 097

F 7912120 244

3.2.2 Penetrations

(1) The licensee will demonstrate that the electrical and mechanical penetration seals installed in the plant have a rating equivalent to the fire severity present on either side of the seal. These seals will be qualified by test by an independent testing laboratory in accordance with ASTM E-119 under criteria acceptable to the staff (4.9).

(2) The licensee will reevaluate the penetration seals between the diesel generator rooms and the auxiliary building to verify that these seals have a minimum three hour fire rating. Existing seals with less than a three hour rating will be upgraded (5.17).

Evaluation

Section 3.2.2 as well as Sections 3.1.1 (2) through (4) of the Fire Protection Safety Evaluation Report require fire barrier electrical and mechanical penetration seals to be reviewed for adequacy and upgraded if necessary.

To satisfy the requirements of Sections 3.1.1 (2) through (4) and Section 3.2.2, the following action will be taken.

1. New seals or replacement seals will be designed with a 3-hour rating. This rating will be substantiated by test data.

2. Existing seals will be reviewed and upgraded as necessary. All seals will be upgraded to a rating at least equal to the maximum fire loading on either side of the barrier. This rating will be substantiated by test data.

3. Seals in the following areas will be upgraded to a 3-hour rating. This rating will be substantiated by test data:

   a. Area 66 barriers shared with Turbine Building

   b. Areas 69 and 70 barriers shared with Auxiliary Building

   c. Elevation 735 Auxiliary Building barriers shared with Turbine Building

   d. Hatch area (fire area 61) barriers shared with parts of the Auxiliary Building

   e. Barriers between the diesel generator rooms and the Auxiliary Building

   f. Barriers between the Turbine Building and adjacent safety-related areas not listed above

1539 098

To develop a test program to determine the fire resistance of the existing penetration seal designs and to design and test a method of upgrading existing seals to a 3-hour rating or a rating based on the existing fire loading, we have obtained the assistance of Nuclear Services Corporation (NSC). They are provided engineering services for testing and upgrading penetration seals at both nuclear generating plants operated by Northern States Power Company, Prairie Island and Monticello. The Fire Protection Safety Evaluation Report for the Monticello plant contained requirements for a program of penetration seal testing and upgrading similar to those specified for Prairie Island. In this discussion, we will describe the preliminary test and modification program formulated by Nuclear Services Corporation for both plants. A considerable savings in time and cost can be obtained by combining the testing required for both plants.

The electrical and mechanical penetrations at Monticello and Prairie Island were sealed with materials that have not passed the fire test and the hose stream test currently specified for such penetrations in ASTM E119-76 and IEEE 634-1978 (with NRC comments RS-809-5). Therefore, the existing penetrations must be tested and if necessary, either replaced or modified so that the resultant configurations will pass these tests in accordance with today's requirements. The physical access to some of the existing penetrations make it impracticable if not impossible to remove the presently installed fireproofing material. Therefore, several different materials will be tested in an add-on configuration in which another material is built up over the existing material. See the attached preliminary notes, sketches, and list of material.

The material used in the penetrations at Monticello was primarily polyurethane foam, an Insta-Foam product. The material used at Prairie Island was primarily Thermal Insulating Wool which is an Owens-Corning fiberglas product. A primary concern at Monticello is the steel sleeve cable penetrations from the cable spreading room to the reactor building and to the turbine building. The only practical modification in this area is an add-on material over the existing configuration. Several test penetrations of this configuration will be tested. With the test sleeves filled with cable supplied by the plant using a 50% fill and sealed with polyurethane foam, the sleeve will be wrapped with a metal lath which is fastened to the wall and overlaid with different materials, including Flamemastic 77, Pyrocrete 241, Silicate Gel, and Intrumastic 285.

Some of these same materials and also ICMS Product 60 will be tested as add-on modifications for the Control Room penetrations for both plants. The attached preliminary sketches were supplied to the test lab (Southwest Research) which laid out three test slabs. These slabs will allow testing of all of the configurations proposed by NSC and will also provide for spares to allow adding on additional designs. The attached sketches do not include the Silicate Gel upgrade which is being added. This is a new material developed by Southwest Research Institute and was very recently brought to the attention of NSC. There is some data, from a different application, that indicates that it may be adequate for our needs. The

1539 099

Intumastic 285 is being added on one of the extra penetrations as a possible solution. This material was designed to be used as a flame retardant on cable, but the manufacturer believes it to be an excellent candidate for protecting the sleeve penetrations in the cable spreading room at Monticello.

The specifications, ASTM & IEEE, state that a seal that has been qualified in a floor test is also qualified for use in a wall. Therefore, our plan is to use a floor slab and thereby qualify both wall and floor seals.

All penetration seals will be subjected to a 3-hour fire test and then the hose stream test. The temperatures are always monitored throughout the complete test. As complete a visual inspection as possible, with photographs, will be performed at 1-1/2 hours. Any test configuration that is good at 1-1/2 hours but fails at 3 hours, or fails the hose stream test, is a candidate for retest in a 1-1/2 hour test. For this purpose, the test lab has been requested to use an existing test slab and prepare selected penetration seals using the materials that require a lengthy cure time. This test slab will be held in readiness. Configurations passing a 1-1/2 hour test plus the hose stream test may be used to upgrade seals in areas of the plant where a rating of less than 1-1/2 hours is sufficient and 3-hour rated seals were not explicitly required by the NRC review.

IEEE 634-1978 states that penetration seals that are unsymetrical should be fire tested from each side. Therefore, the preliminary test plan incudes additional test penetrations comply with this requirement.

The attached sketches are for review and comment.

The penetration testing will be completed early next year. Following evaluation of the test results, specific seal upgrade procedures will be developed and field work at both plants will begin. A completion date of October, 1980 is required. Any work which cannot be completed by that date will be reported to the NRC Staff and a revised schedule will be submitted for review.

If there are any comments related to the preliminary test plan we have described, they should be submitted to Northern States Power Company no later than January 1, 1980 to permit us to complete this project on schedule.

1539 100

P1

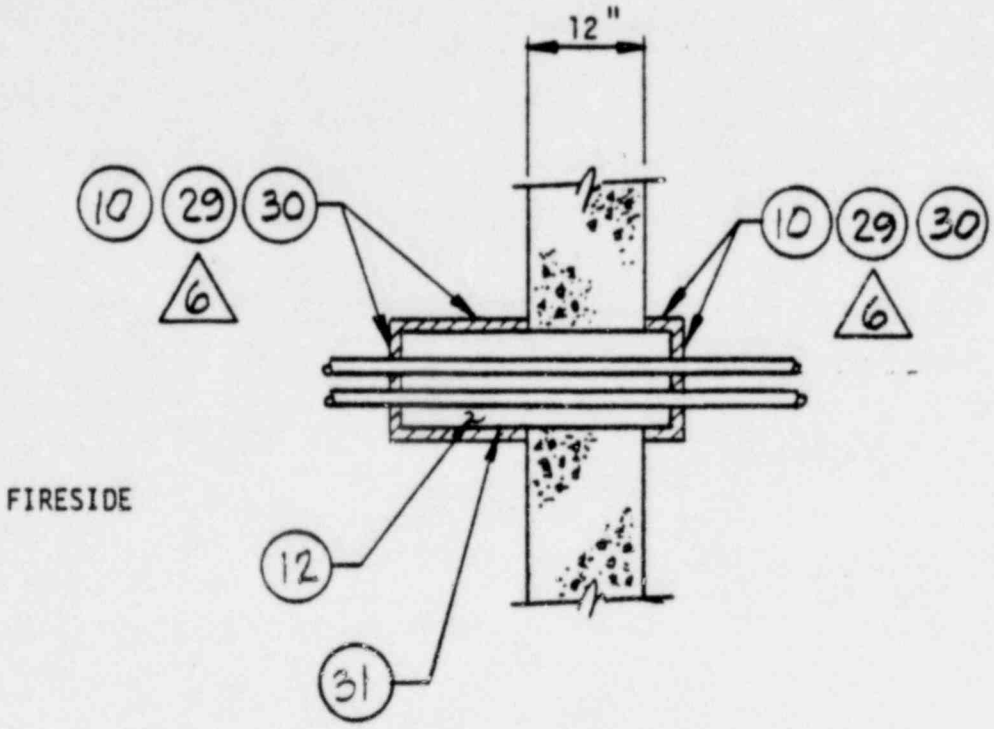

POOR ORIGINAL

1539 101

PRELIMINARY

REV	DATE	DESCRIPTION	DRAWN	DESIGN	CHECK	APPYD	QA
1	11-15-79	ISSUED FOR REVIEW & COMMENT	D.C.				

REVISIONS

TEST DATA
PASSED
FAILED

SCALE

Nuclear Services Corporation
CAMPBELL, CALIFORNIA
A DIVISION OF QUADREX CORPORATION

FOR

NORTHERN STATES POWER
PENETRATION SEAL TEST

CHARGE NO. NOR-0176/0179

DWG NO.	SHEET	REV
1000787	OF	1

P2

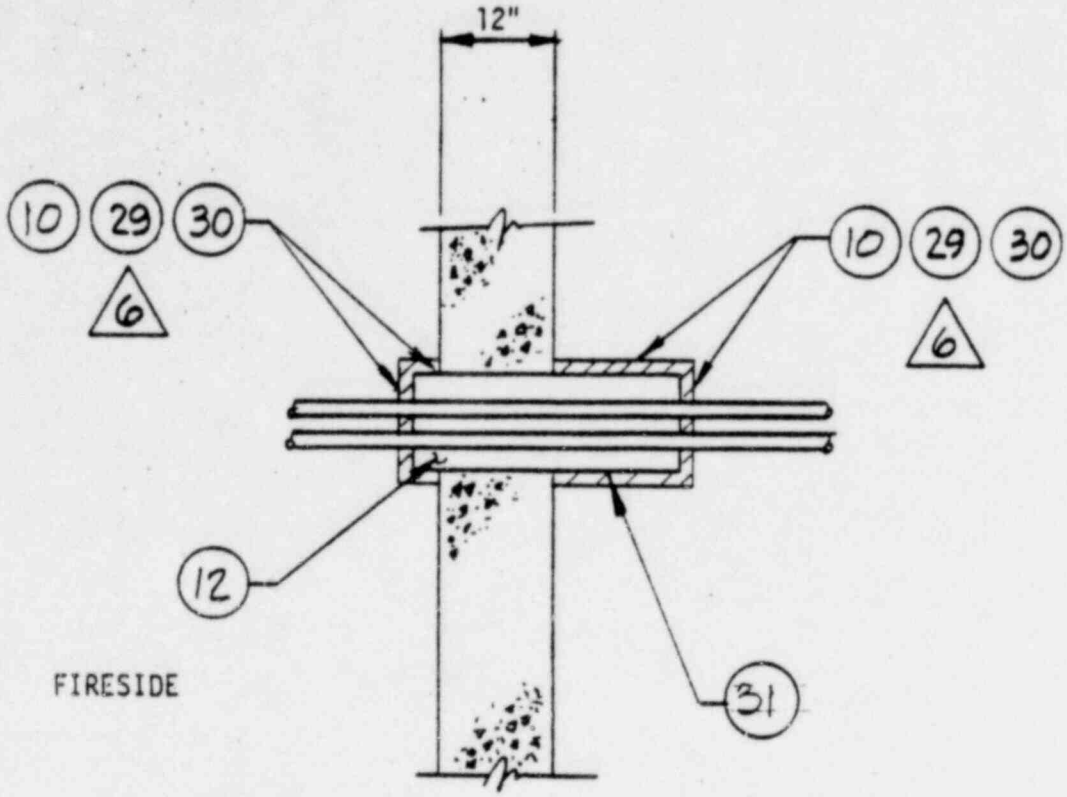

POOR ORIGINAL

1539 102

PRELIMINARY

REV	DATE	DESCRIPTION	DRAWN	DESIGN	CHECK	APPVD	QA
1	11-15-79	ISSUED FOR REVIEW & COMMENT	D.C.				

REVISIONS

TEST DATA
PASSED
FAILED

SCALE

Nuclear Services Corporation
CAMPBELL, CALIFORNIA
A DIVISION OF QUIKREX CORPORATION

FOR

NORTHERN STATES POWER
PENETRATION SEAL TEST

CHARGE NO. NOR-0176/0179

DWG NO.	SHEET	REV
1000787	OF	1

P3

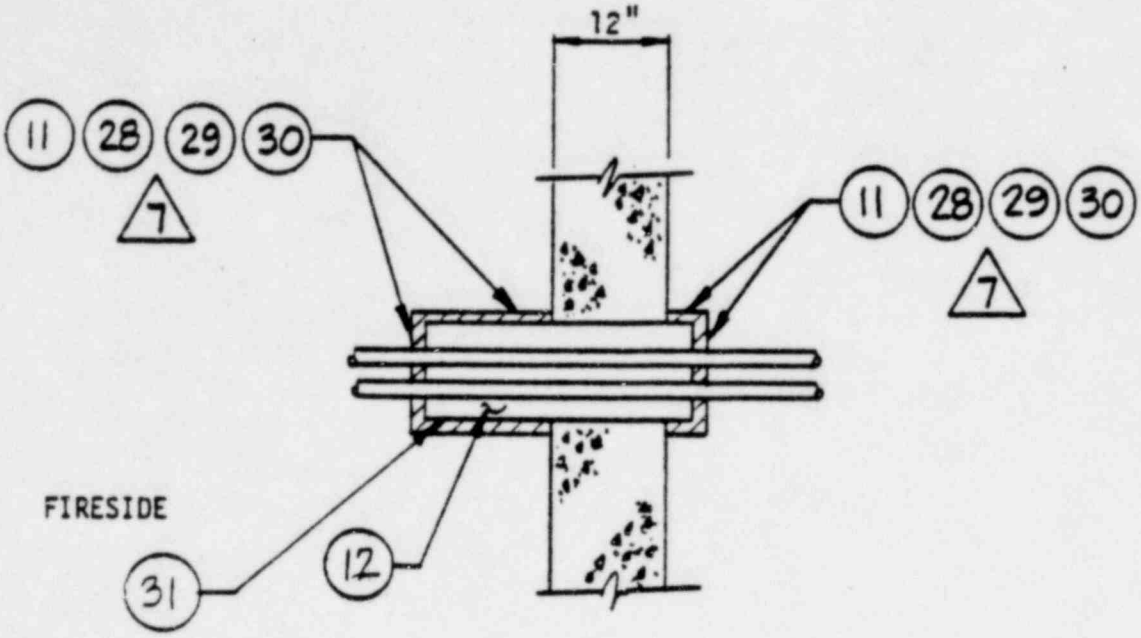

POOR ORIGINAL

1539 103

PRELIMINARY

REV	DATE	DESCRIPTION	DRAWN	DESIGN	CHECK	APPVD	QA
1	11-15-79	ISSUED FOR REVIEW & COMMENT	D.C.				

REVISIONS

TEST DATA
PASSED
FAILED

SCALE

Nuclear Services Corporation
CAMPBELL, CALIFORNIA
A DIVISION OF CONTROLDEX CORPORATION

FOR

NORTHERN STATES POWER
PENETRATION SEAL TEST

CHARGE NO. NOR-0176/0179

DWG NO.	SHEET	REV
1000787	OF	1

P4

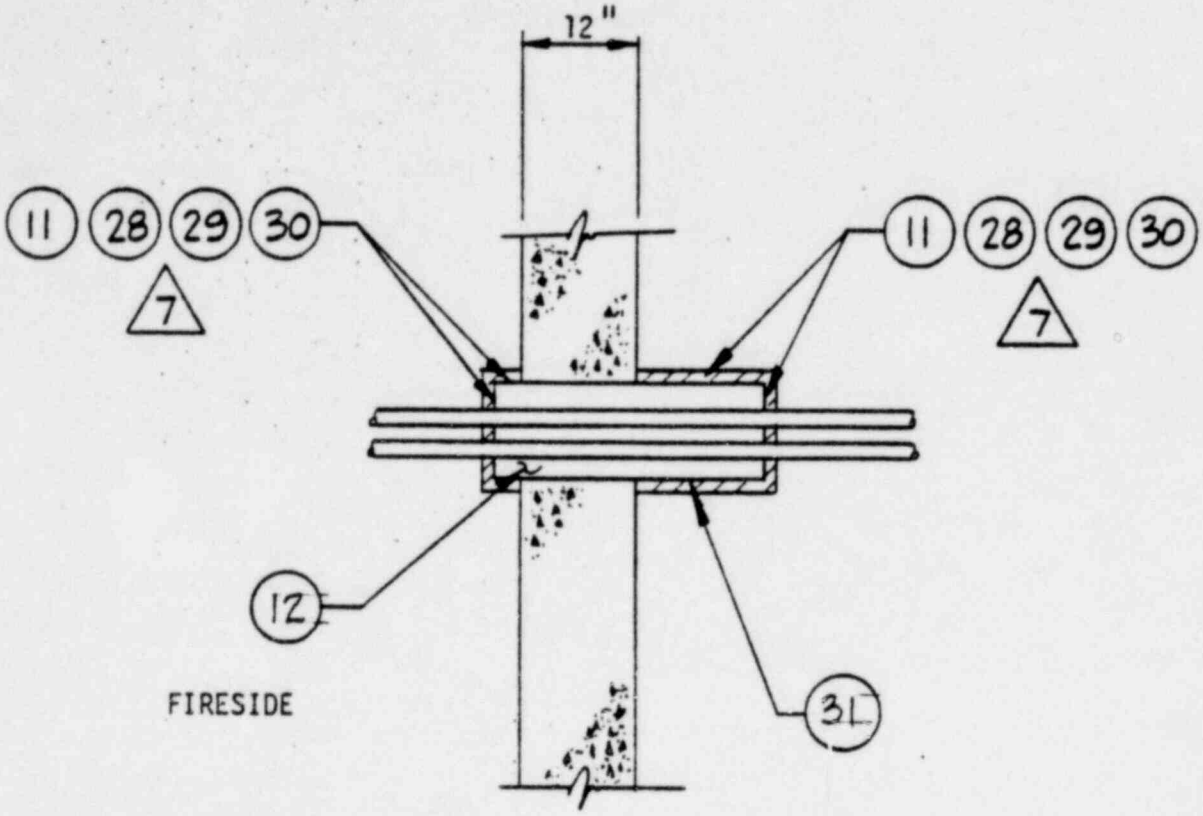

POOR ORIGINAL

PRELIMINARY

1539 104

REV	DATE	DESCRIPTION	DRAWN	DESIGN	CHECK	APPVD	QA
1	111579	ISSUED FOR REVIEW & COMMENTS	D.C.				

REVISIONS

TEST DATA
PASSED
FAILED

SCALE

Nuclear Services Corporation
CAMPBELL, CALIFORNIA
A DIVISION OF QUADREX CORPORATION

FOR

NORTHERN STATES POWER
PENETRATION SEAL TEST

CHARGE NO. NOR-0176/0179

DWG NO.	SHEET	REV
1000787	OF	1

P5

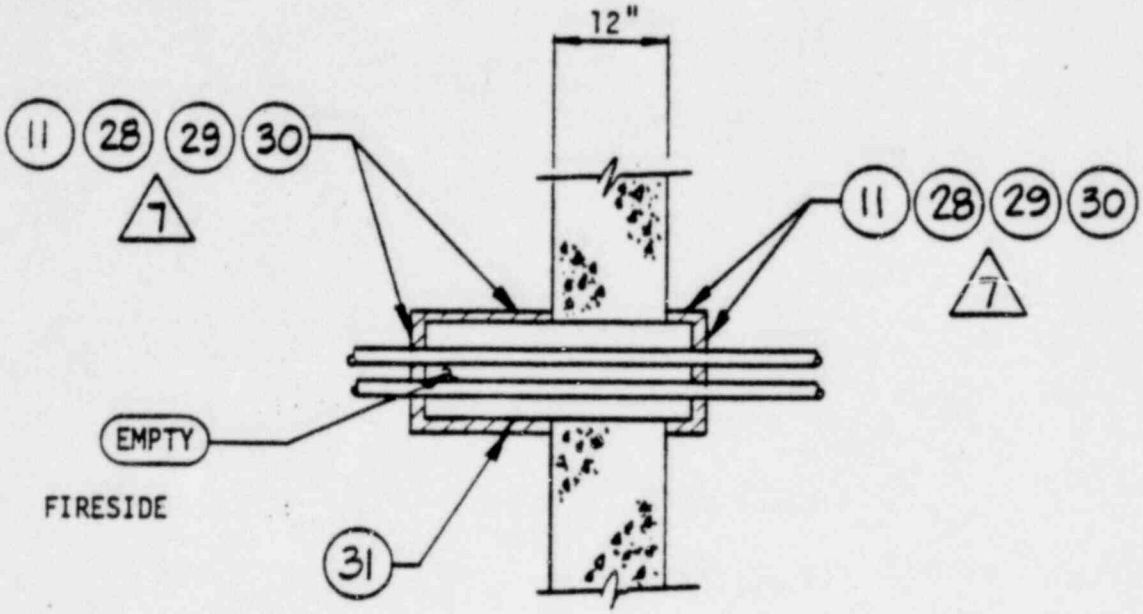

POOR ORIGINAL

1539 105

PRELIMINARY

REV	DATE	DESCRIPTION	DRAWN	DESIGN	CHECK	APPVD	QA
1	11-15-79	ISSUED FOR REVIEW & COMMENT	D.C.				

REVISIONS

TEST DATA
PASSED
FAILED

SCALE

Nuclear Services Corporation
CAMPBELL, CALIFORNIA
A DIVISION OF QUIRONEX CORPORATION

FOR

NORTHERN STATES POWER
PENETRATION SEAL TEST

CHARGE NO. NOR-0176/0179

DWG NO.	SHEET	REV
1000787	OF	1

P6

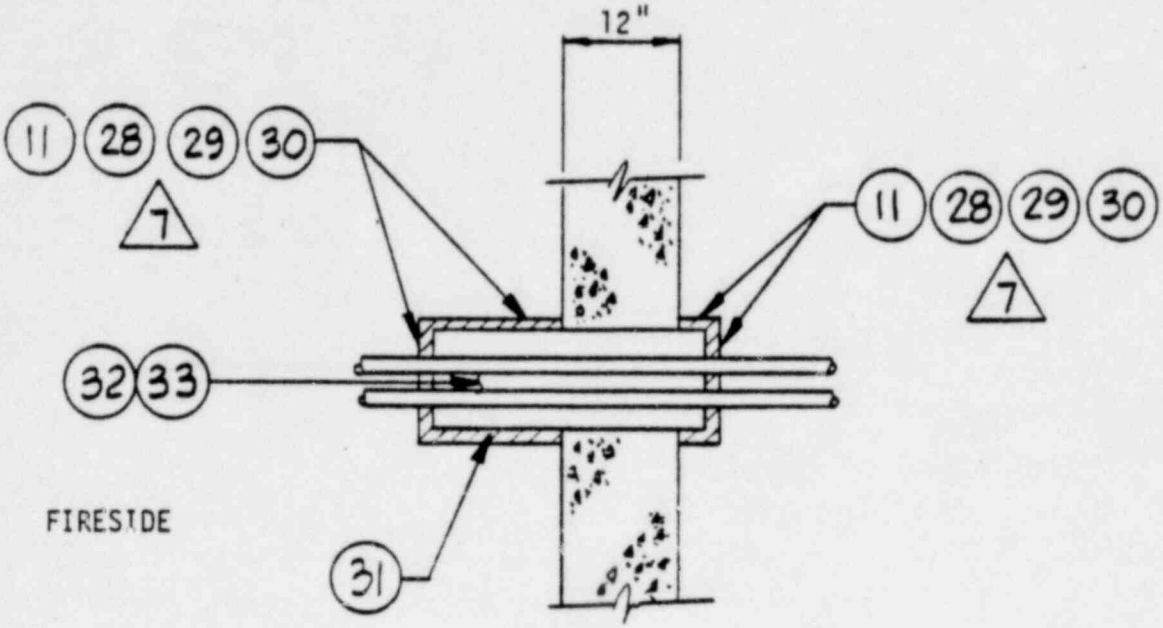

POOR ORIGINAL

PRELIMINARY

1539 106

REV	DATE	DESCRIPTION	DRAWN	DESIGN	CHECK	APPVD	QA
1	11-16-79	ISSUED FOR REVIEW & COMMENT	DC				

REVISIONS

TEST DATA
PASSED
FAILED

SCALE

Nuclear Services Corporation
CAMPBELL, CALIFORNIA
QUADREX CORPORATION

FOR

NORTHERN STATES POWER
PENETRATION SEAL TEST

CHARGE NO. NOR-0176/0179

DWG NO.	SHEET	REV
1000787	OF	1

P7

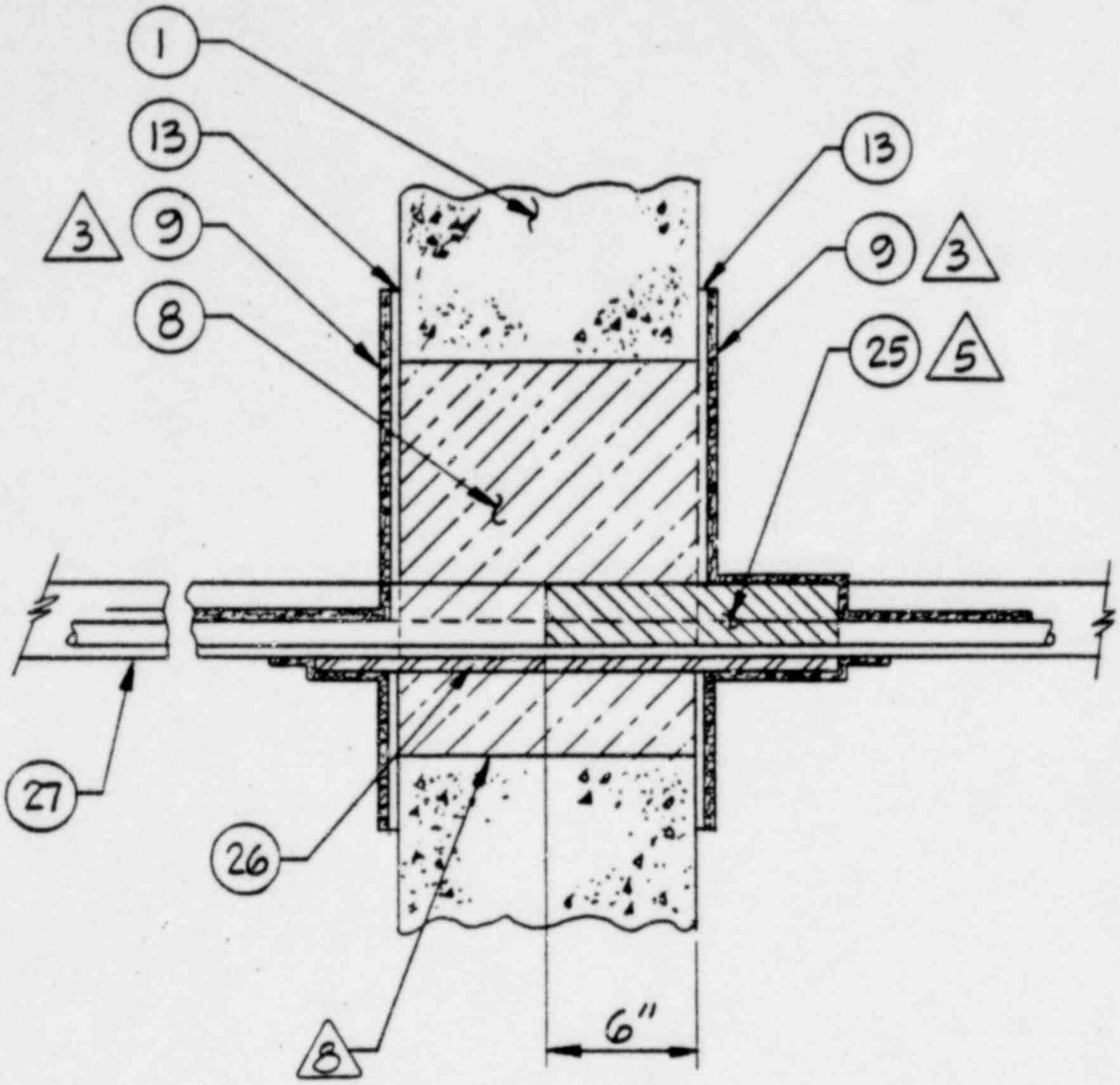

PRELIMINARY POOR ORIGINAL 1539 107

REV	DATE	DESCRIPTION	DRAWN	DESIGN	CHECK	APPVD	QA
1	11-15-79	ISSUED FOR REVIEW & COMMENT	DC				

REVISIONS

TEST DATA PASSED FAILED	Nuclear Services Corporation CAMPBELL, CALIFORNIA QUADREX CORPORATION FOR	CHARGE NO. NOR-0176/0179	
SCALE NONE	NORTHERN STATES POWER PENETRATION SEAL TEST	DWG NO. 1000787	SHEET OF 1 / REV 1

P8

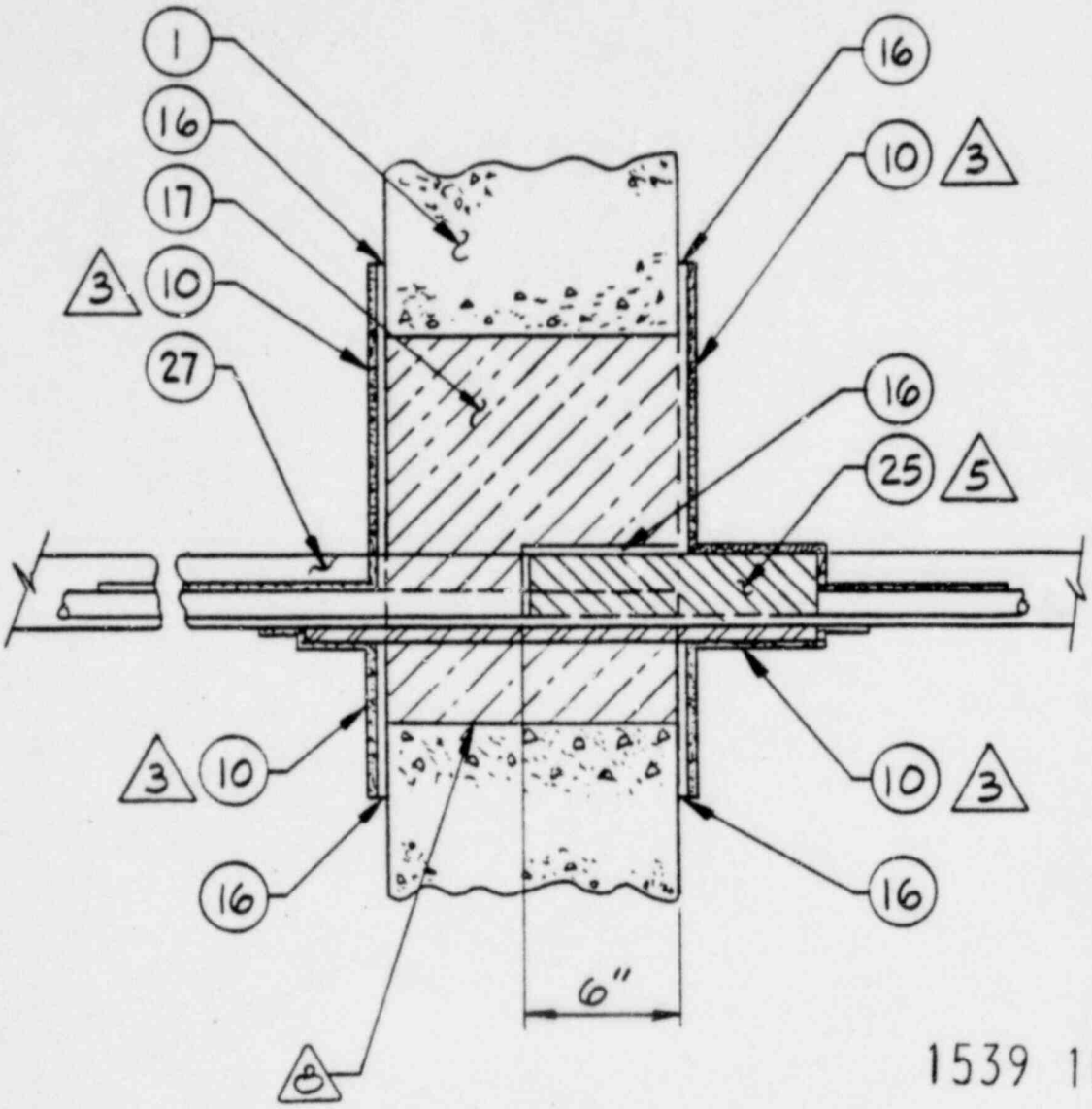

1539 108

PRELIMINARY POOR ORIGINAL

REV	DATE	DESCRIPTION	DRAWN	DESIGN	CHECK	APPVD	QA
1	11-15-79	ISSUED FOR REVIEW & COMMENT	D.C.				

REVISIONS

TEST DATA
PASSED
FAILED

SCALE NONE

Nuclear Services Corporation
CAMPBELL, CALIFORNIA
A DIVISION OF QUADREX CORPORATION

FOR

NORTHERN STATES POWER
PENETRATION SEAL TEST

CHARGE NO. NOR-0176/0179

DWG NO.	SHEET	REV
1000787	OF	1

P9

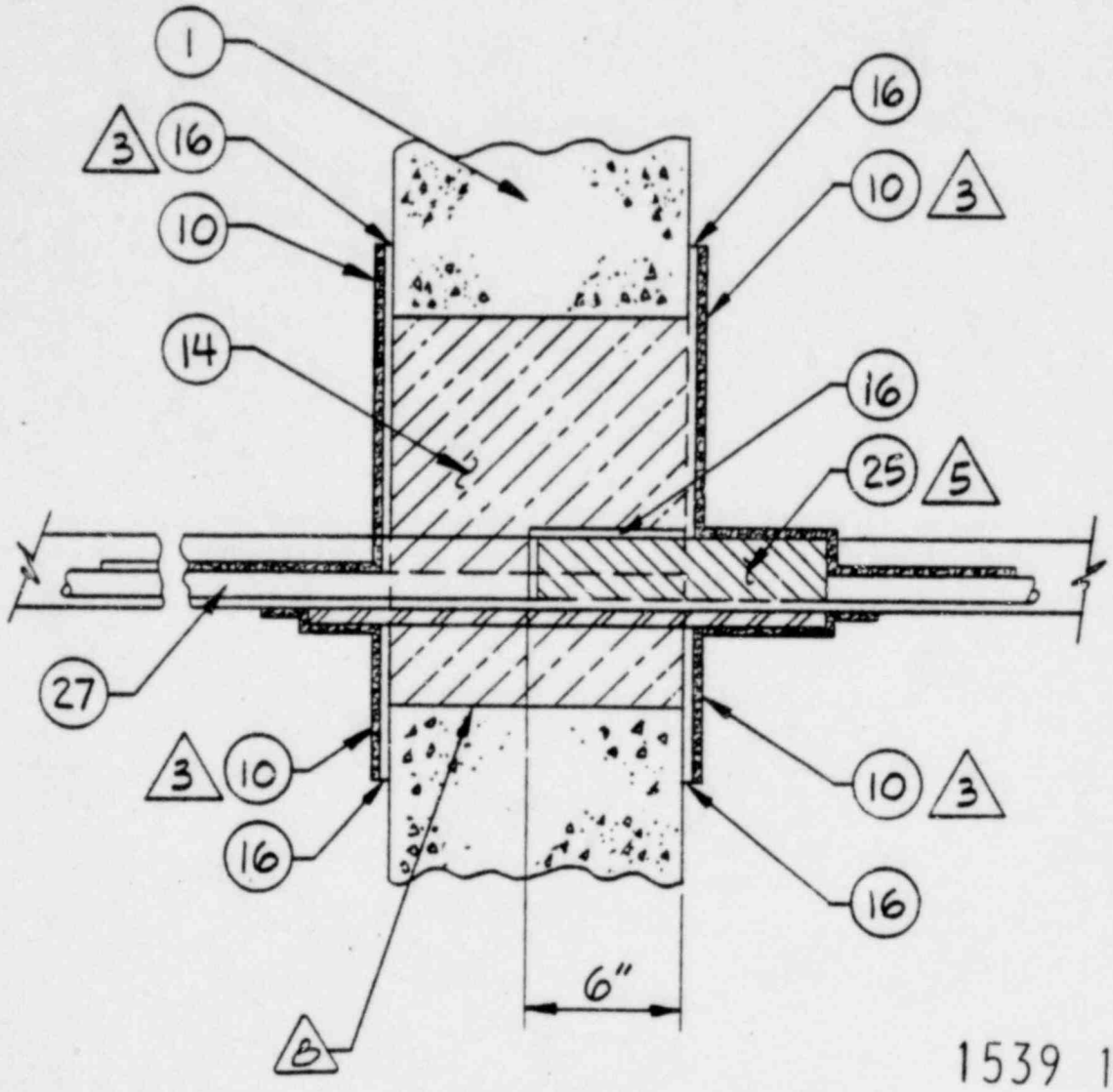

1539 109

PRELIMINARY POOR ORIGINAL

REV	DATE	DESCRIPTION	DRAWN	DESIGN	CHECK	APPVD	QA
1	11-15-79	ISSUED FOR REVIEW & COMMENT	DC				

REVISIONS

TEST DATA
PASSED
FAILED

SCALE NONE

Nuclear Services Corporation
CAMPBELL, CALIFORNIA
A DIVISION OF QUADREX CORPORATION

FOR

NORTHERN STATES POWER
PENETRATION SEAL TEST

CHARGE NO. NOR-0176/0179

DWG NO.	SHEET	REV
1000787	OF	1

P10

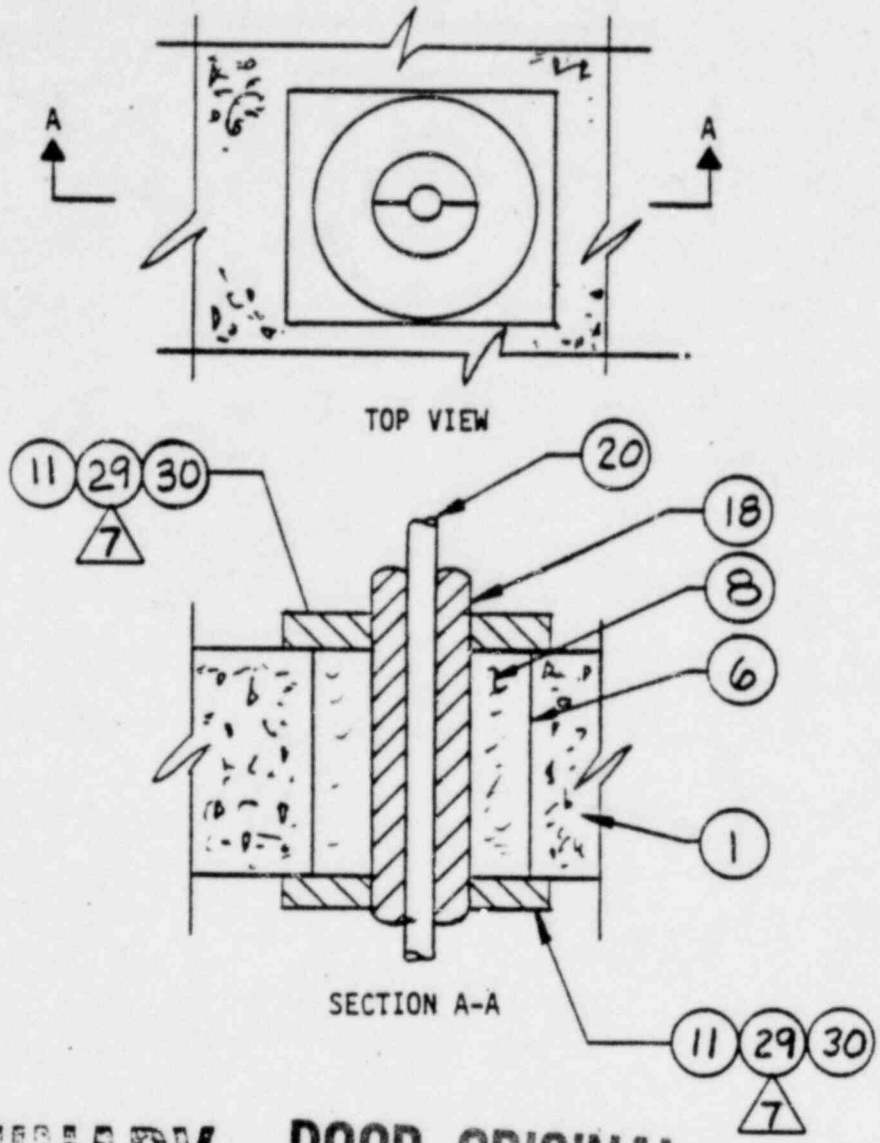

PRELIMINARY POOR ORIGINAL

1539 110

REV	DATE	DESCRIPTION	DRAWN	DESIGN	CHECK	APPVD	QA
1	11-15-79	ISSUED FOR REVIEW & COMMENT	D.C.				

REVISIONS

TEST DATA PASSED FAILED	Nuclear Services Corporation CAMPBELL, CALIFORNIA FOR	CHARGE NO. NOR-0176/0179	
SCALE NONE	NORTHERN STATES POWER PENETRATION SEAL TEST	DWG NO. 1000787	SHEET OF 1 / REV 1

PT1

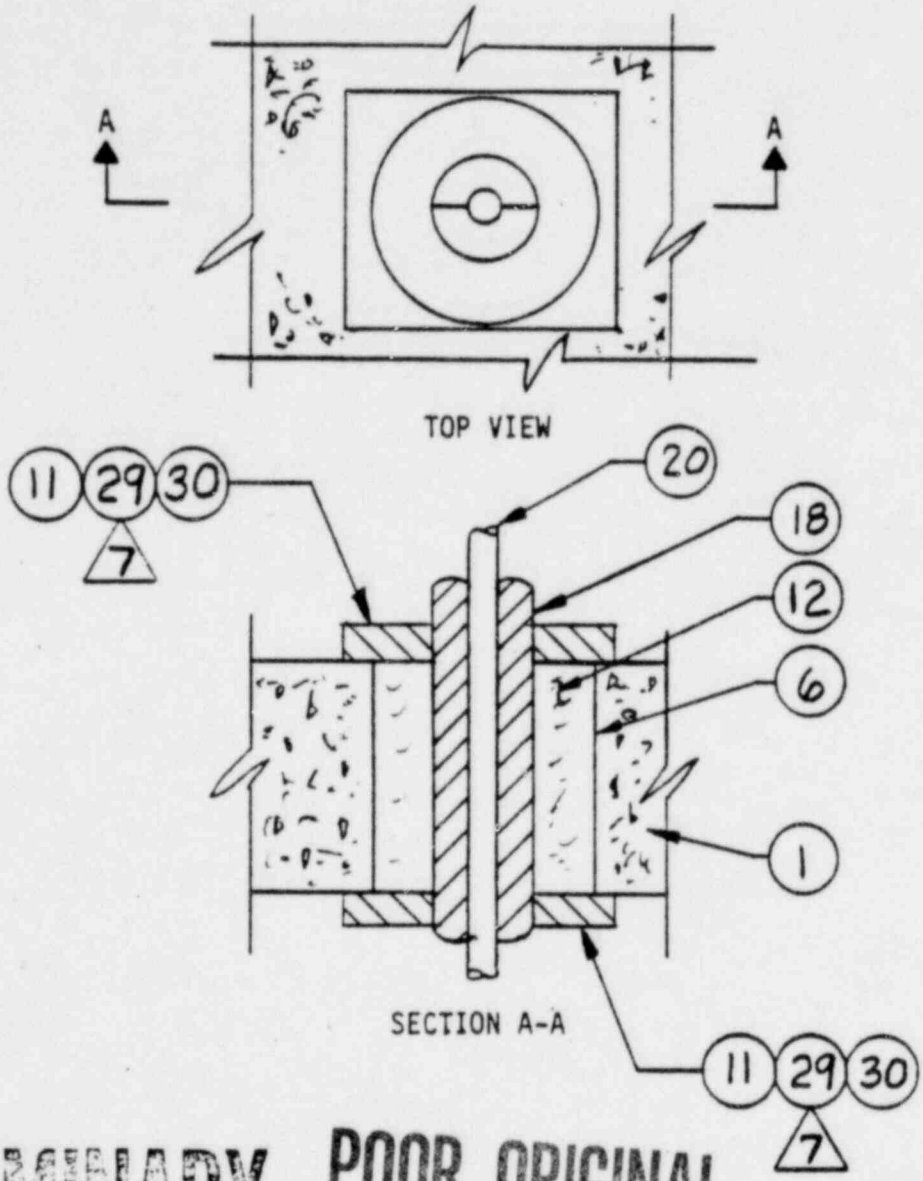

PRELIMINARY POOR ORIGINAL

1539 111

REV	DATE	DESCRIPTION	DRAWN	DESIGN	CHECK	APPVD	QA
1	11-15-79	ISSUED FOR REVIEW & COMMENT	D.C.				

REVISIONS

TEST DATA
PASSED
FAILED

SCALE NONE

Nuclear Services Corporation
CAMPBELL, CALIFORNIA
A DIVISION OF QUADREX CORPORATION

FOR

NORTHERN STATES POWER
PENETRATION SEAL TEST

CHARGE NO. NOR-0176/0179

DWG NO.	SHEET	REV
1000787	OF	1

P12

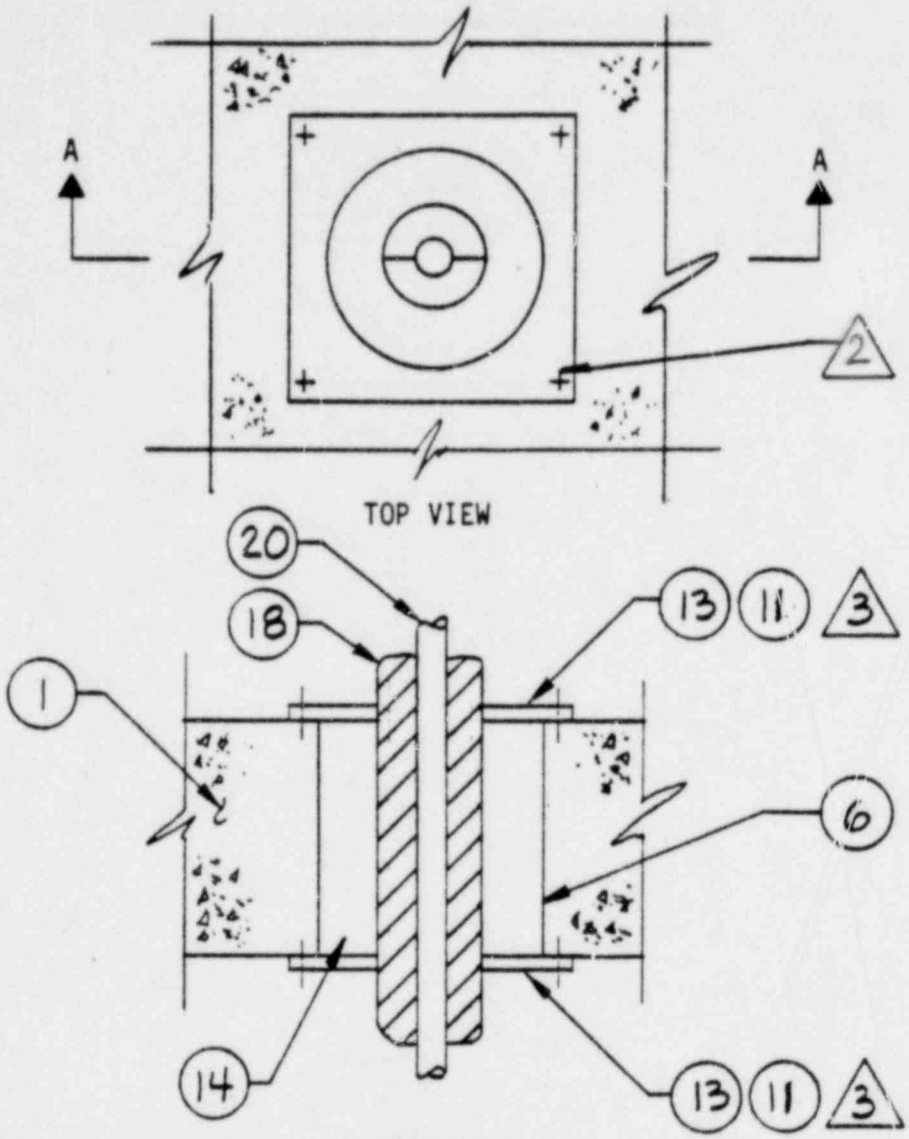

PRELIMINARY POOR ORIGINAL 1539 112

REV	DATE	DESCRIPTION	DRAWN	DESIGN	CHECK	APPVD	QA
1	11-15-79	ISSUED FOR REVIEW & COMMENT	D.C.				

REVISIONS

TEST DATA
PASSED
FAILED

SCALE NONE

Nuclear Services Corporation
CAMPBELL, CALIFORNIA
QUADREX CORPORATION

FOR

NORTHERN STATES POWER
PENETRATION SEAL TEST

CHARGE NO. NOR-0176/0179

DWG NO.	SHEET	REV
1000787	OF	1

P13

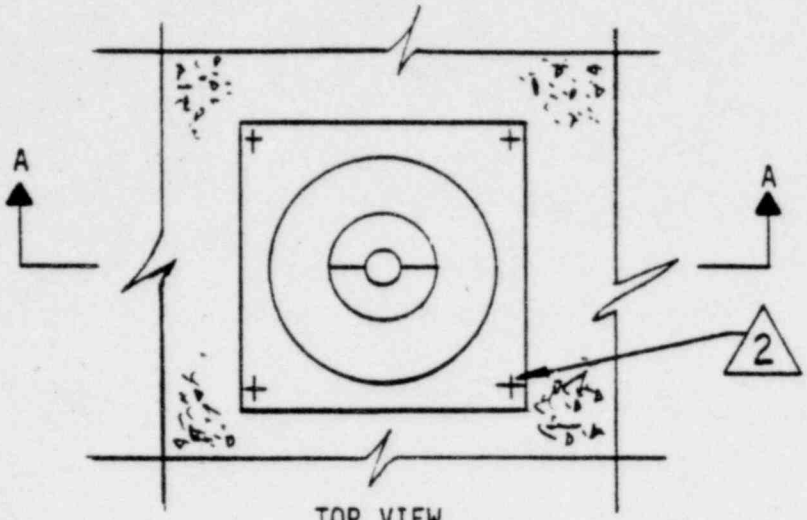

TOP VIEW

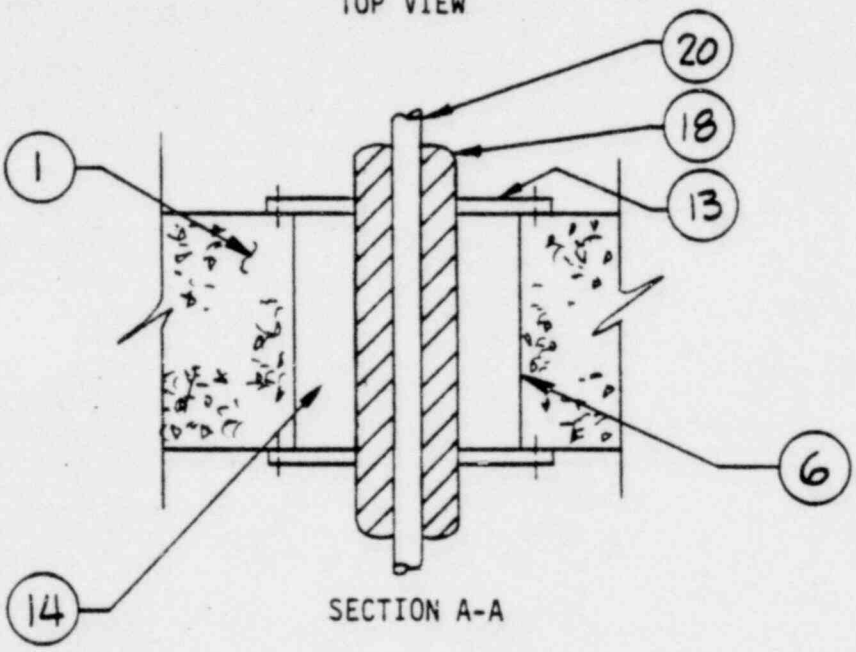

SECTION A-A

PRELIMINARY POOR ORIGINAL 1539 113

REV	DATE	DESCRIPTION	DRAWN	DESIGN	CHECK	APPVD	QA
1	11-15-79	ISSUED FOR REVIEW & COMMENT	D.C.				

REVISIONS

TEST DATA PASSED FAILED	Nuclear Services Corporation CAMPBELL, CALIFORNIA A DIVISION OF QUADREX CORPORATION FOR	CHARGE NO. NOR-0176/0179	
SCALE NONE	NORTHERN STATES POWER PENETRATION SEAL TEST	DWG NO. 1000787	SHEET OF 1 / REV 1

P14

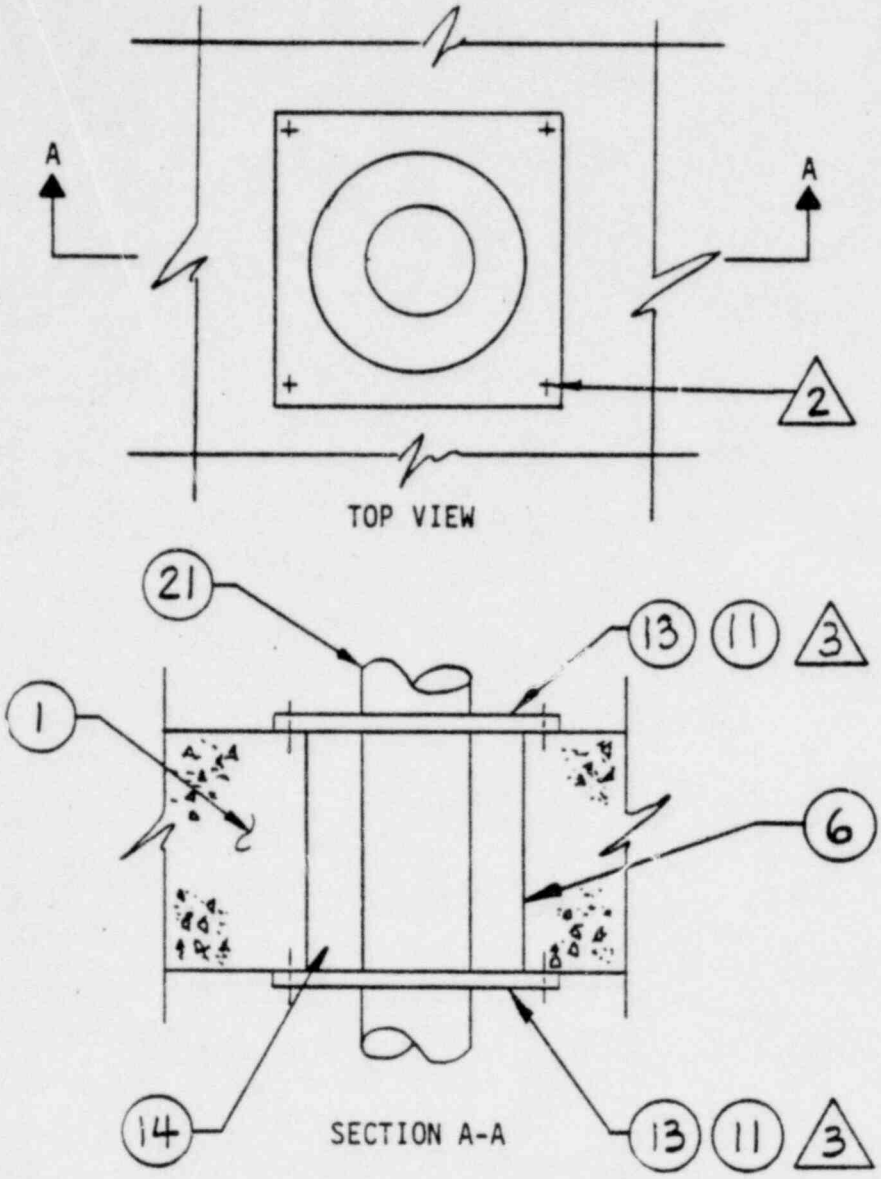

PRELIMINARY POOR ORIGINAL

1539 114

REV	DATE	DESCRIPTION	DRAWN	DESIGN	CHECK	APPVD	QA
1	11-15-79	ISSUED FOR REVIEW & COMMENT	D.C.				

REVISIONS

TEST DATA
PASSED
FAILED

SCALE NONE

Nuclear Services Corporation
CAMPBELL, CALIFORNIA
A DIVISION OF ORDREX CORPORATION

FOR

NORTHERN STATES POWER
PENETRATION SEAL TEST

CHARGE NO. NOR-0176/0179

DWG NO.	SHEET	REV
1000787	OF	1

P15

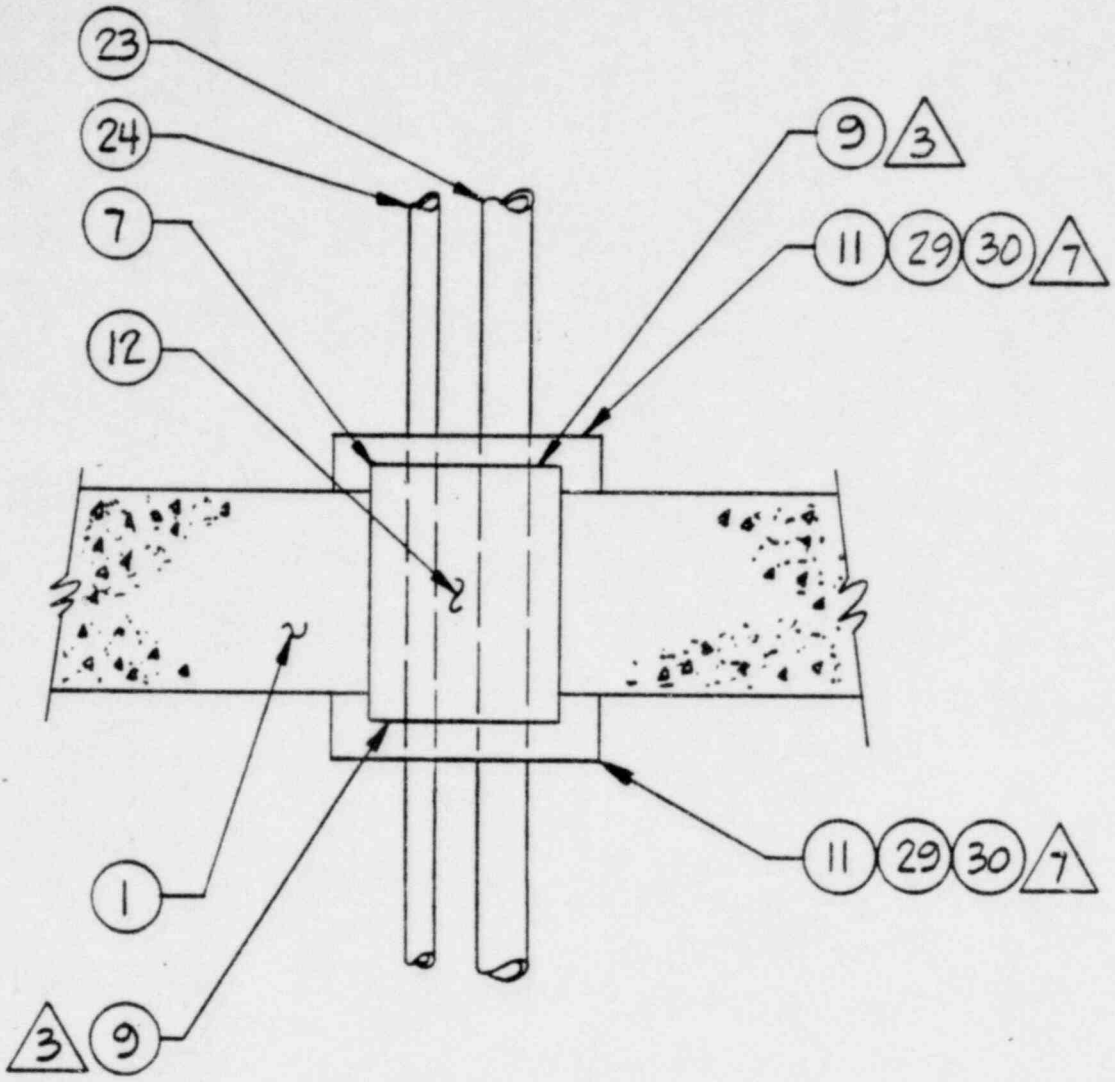

POOR ORIGINAL

PRELIMINARY

1539 115

REV	DATE	DESCRIPTION	DRAWN	DESIGN	CHECK	APPVD	QA
1	11-15-79	ISSUED FOR REVIEW & COMMENT	D.C.				

REVISIONS

TEST DATA
PASSED
FAILED

SCALE

Nuclear Services Corporation
CAMPBELL, CALIFORNIA
A DIVISION OF QUADREX CORPORATION

FOR

NORTHERN STATES POWER
PENETRATION SEAL TEST

CHARGE NO. NOR-0176/0179

DWG NO. 1000787

SHEET OF

REV 1

PT6

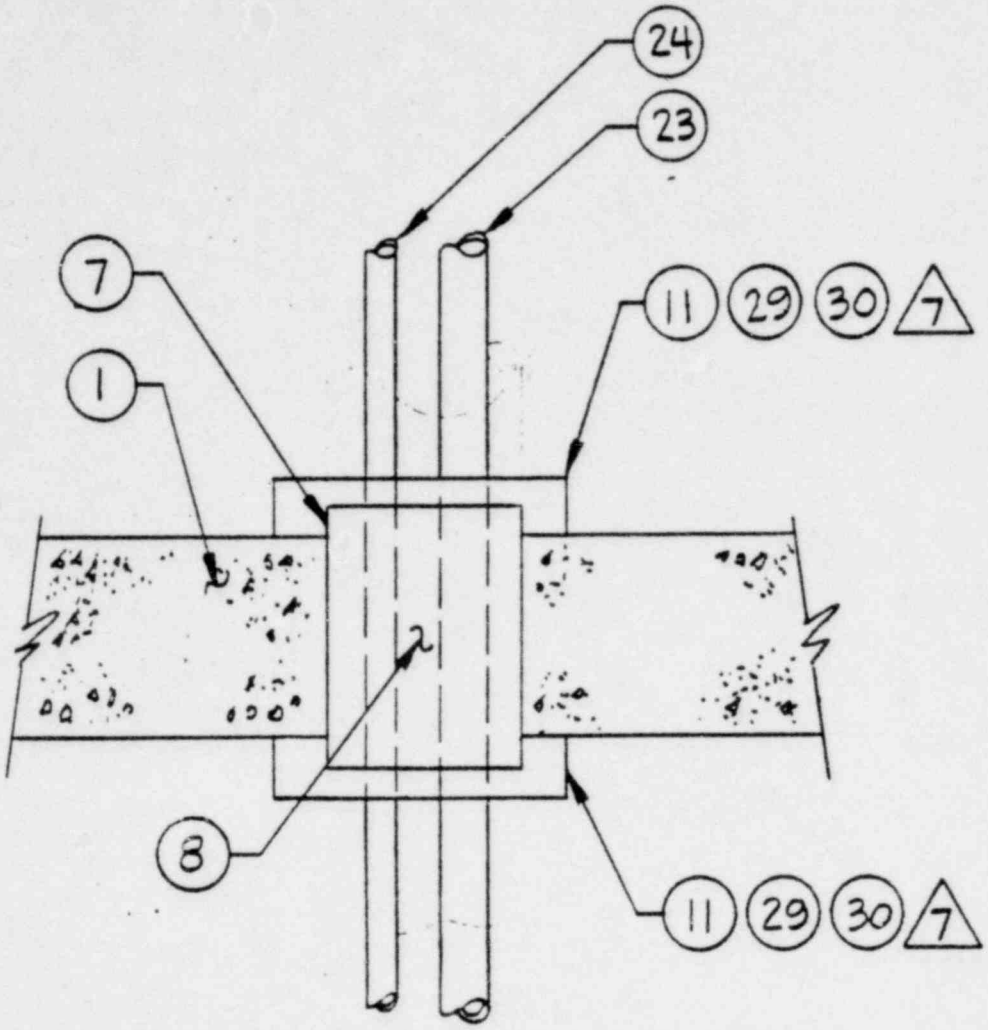

POOR ORIGINAL

PRELIMINARY

1539 116

REV	DATE	DESCRIPTION	DRAWN	DESIGN	CHECK	APPVD	QA
1	11-15-79	ISSUED FOR REVIEW & COMMENT	D.C.				

REVISIONS

TEST DATA
PASSED
FAILED

SCALE

Nuclear Services Corporation
CAMPBELL, CALIFORNIA
A DIVISION OF QUADREX CORPORATION

FOR

NORTHERN STATES POWER
PENETRATION SEAL TEST

CHARGE NO. NOR-0176/0179

DWG NO.	SHEET	REV
1000787	OF	1

P17

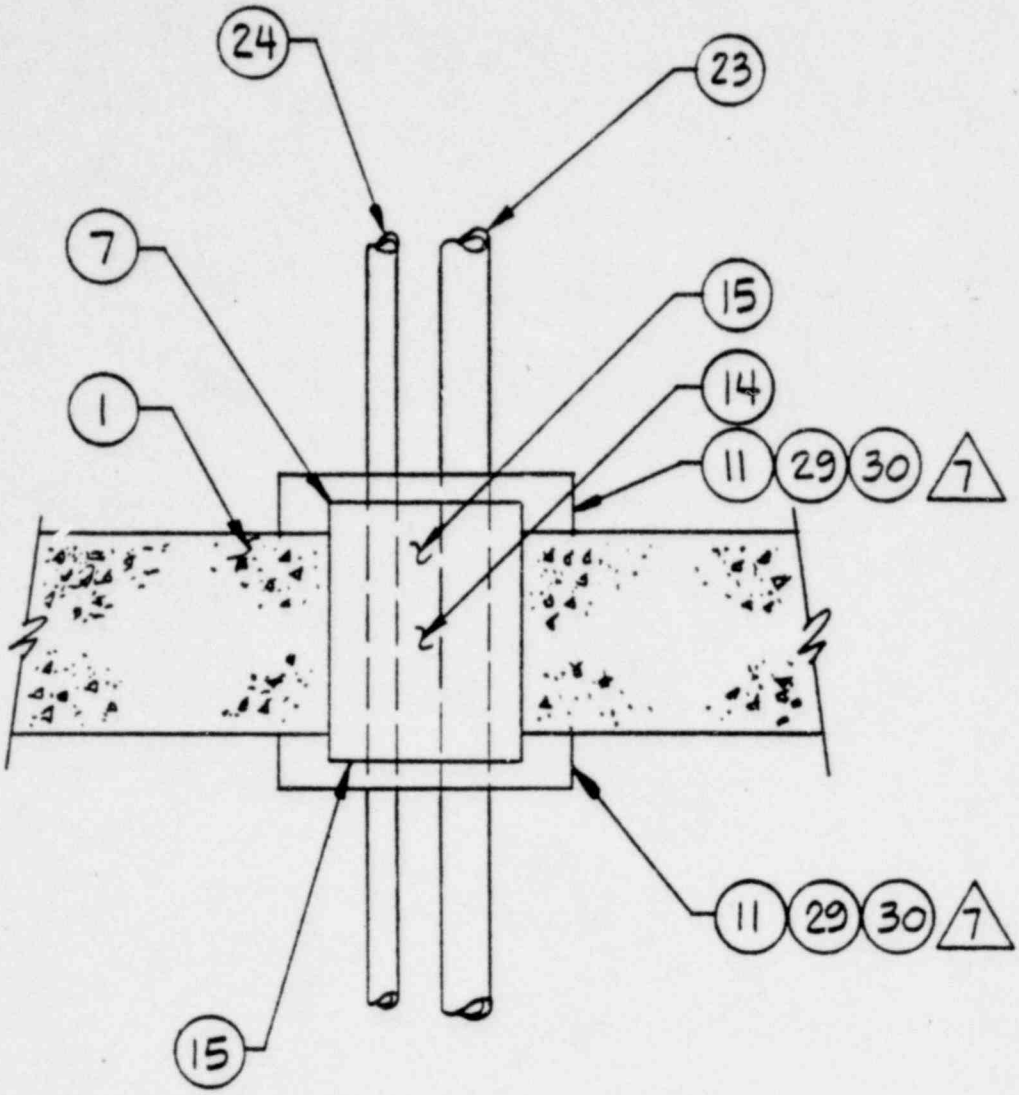

1539 117

POOR ORIGINAL

PRELIMINARY

REV	DATE	DESCRIPTION	DRAWN	DESIGN	CHECK	APPVD	QA
1	11-15-79	ISSUED FOR REVIEW & COMMENT	D.C.				

REVISIONS

TEST DATA
PASSED
FAILED

SCALE NONE

Nuclear Services Corporation
CAMPBELL, CALIFORNIA
QUADREX CORPORATION

FOR

NORTHERN STATES POWER
PENETRATION SEAL TEST

CHARGE NO. NOR-0176/0179

DWG NO.	SHEET	REV
1000787	OF	1

P18

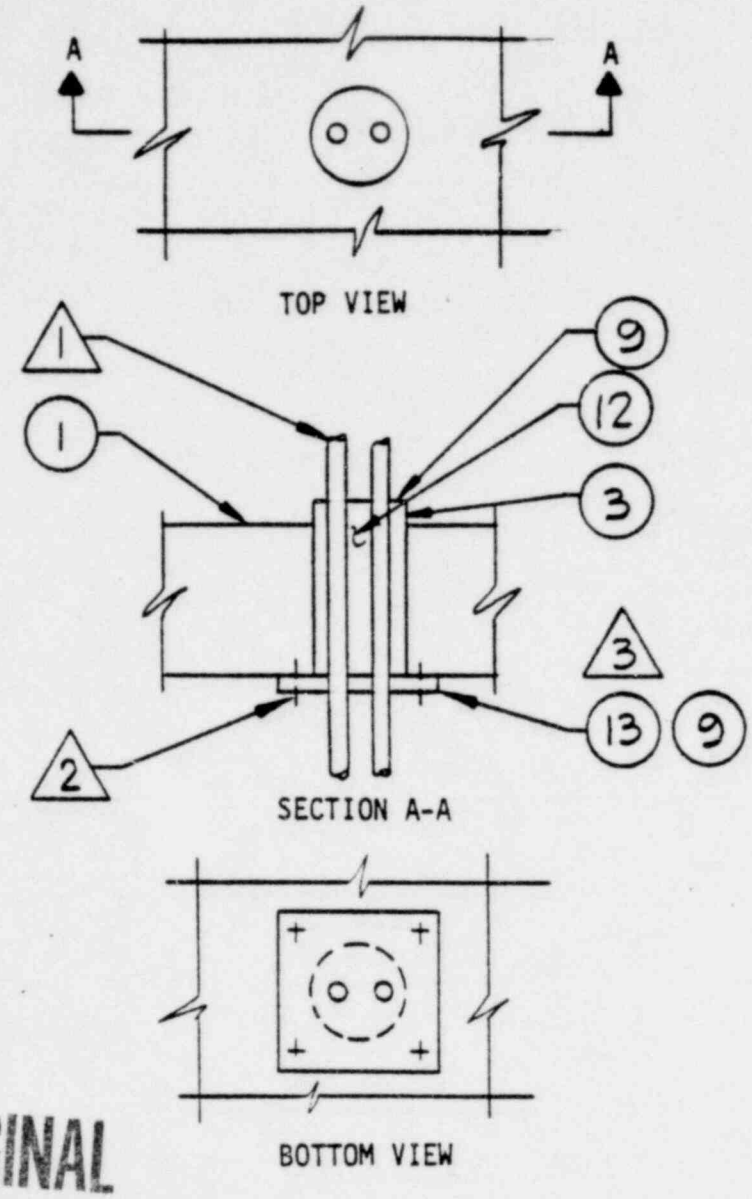

POOR ORIGINAL

PRELIMINARY

1539 118

REV	DATE	DESCRIPTION	DRAWN	DESIGN	CHECK	APPVD	QA
1	11-15-79	ISSUED FOR REVIEW & COMMENT	D.C.				

REVISIONS

TEST DATA
PASSED
FAILED

SCALE NONE

Nuclear Services Corporation
CAMPBELL, CALIFORNIA
A DIVISION OF QUANTREX CORPORATION

FOR

NORTHERN STATES POWER
PENETRATION SEAL TEST

CHARGE NO. NOR-0176/0179

DWG NO.	SHEET	REV
1000787	OF	1

P19

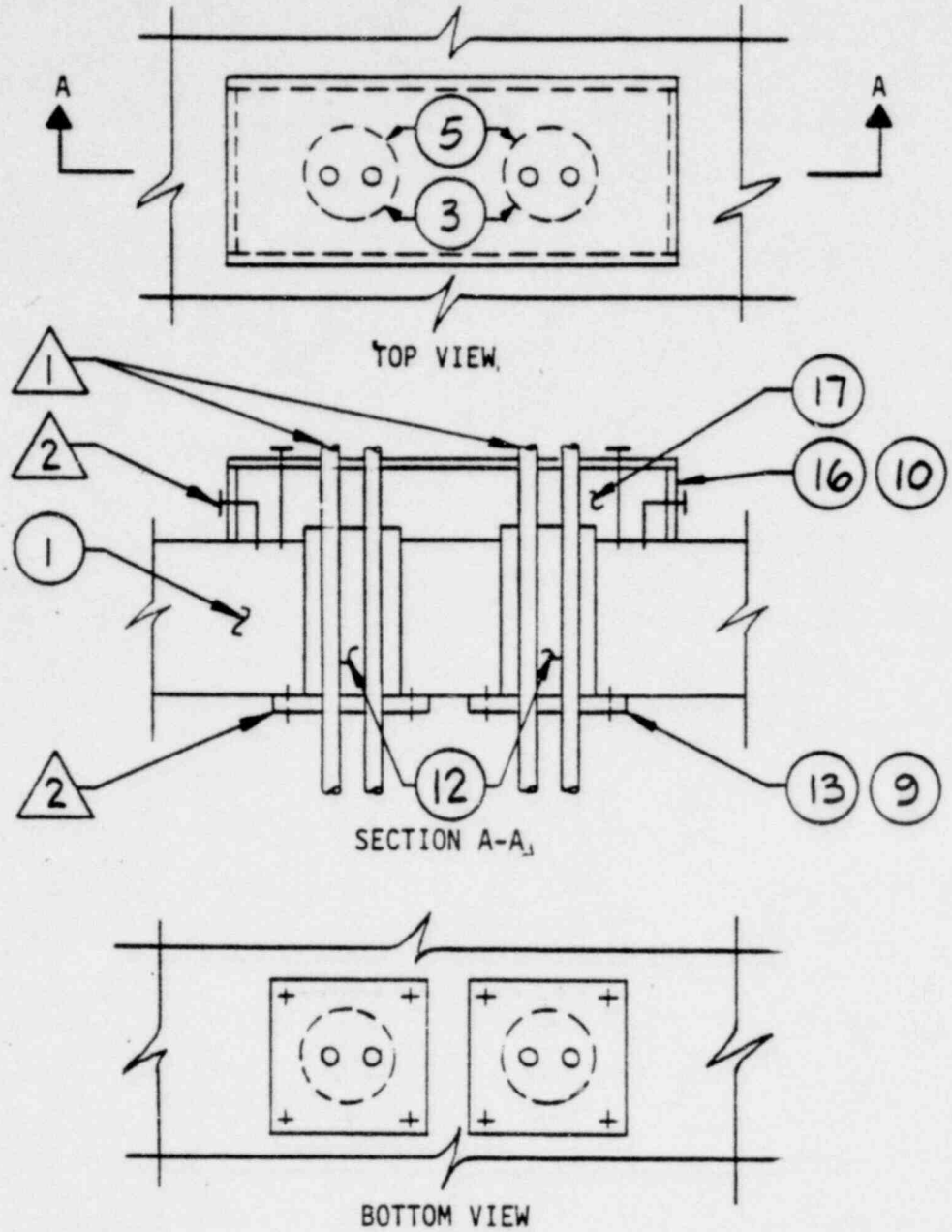

PRELIMINARY POOR ORIGINAL 1539 119

REV	DATE	DESCRIPTION	DRAWN	DESIGN	CHECK	APPVD	QA
1	11-15-79	ISSUED FOR REVIEW & COMMENT	D.C.				

REVISIONS

TEST DATA
PASSED
FAILED

SCALE NONE

Nuclear Services Corporation
CAMPBELL, CALIFORNIA
A DIVISION OF XEROREX CORPORATION

FOR

NORTHERN STATES POWER
PENETRATION SEAL TEST

CHARGE NO. NOR-0176/0179

DWG NO.	SHEET	REV
1000787	OF	1

P20

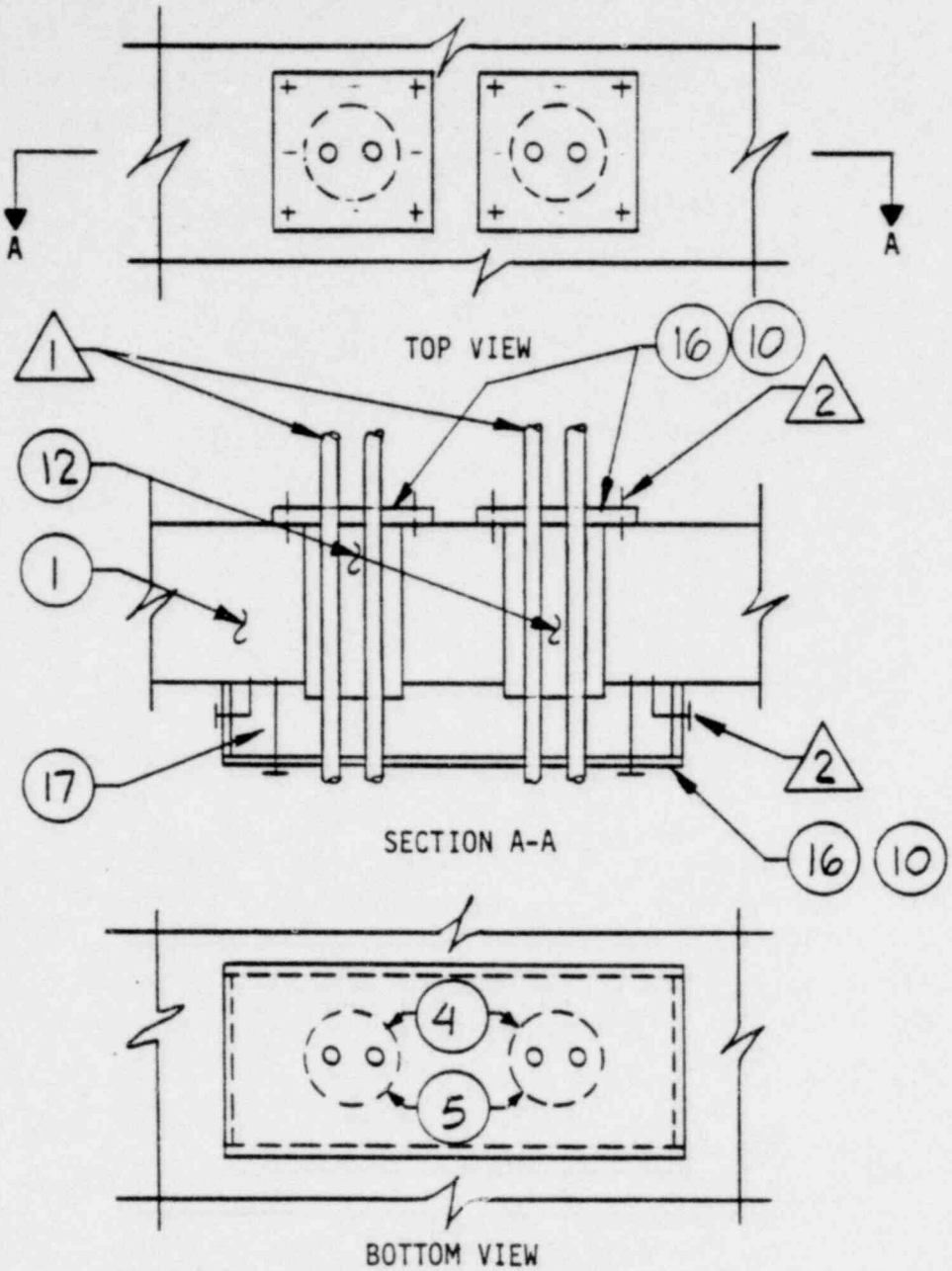

PRELIMINARY POOR ORIGINAL 1539 120

REV	DATE	DESCRIPTION	DRAWN	DESIGN	CHECK	APPVD	QA
1	11-5-79	ISSUED FOR REVIEW & COMMENT	D.C.				

REVISIONS

TEST DATA
PASSED
FAILED

SCALE NONE

Nuclear Services Corporation
CAMPBELL, CALIFORNIA
Quindex Corporation

FOR

NORTHERN STATES POWER
PENETRATION SEAL TEST

CHARGE NO. NOR-0176/0179

DWG NO.	SHEET	REV
1000787	OF	1

P21

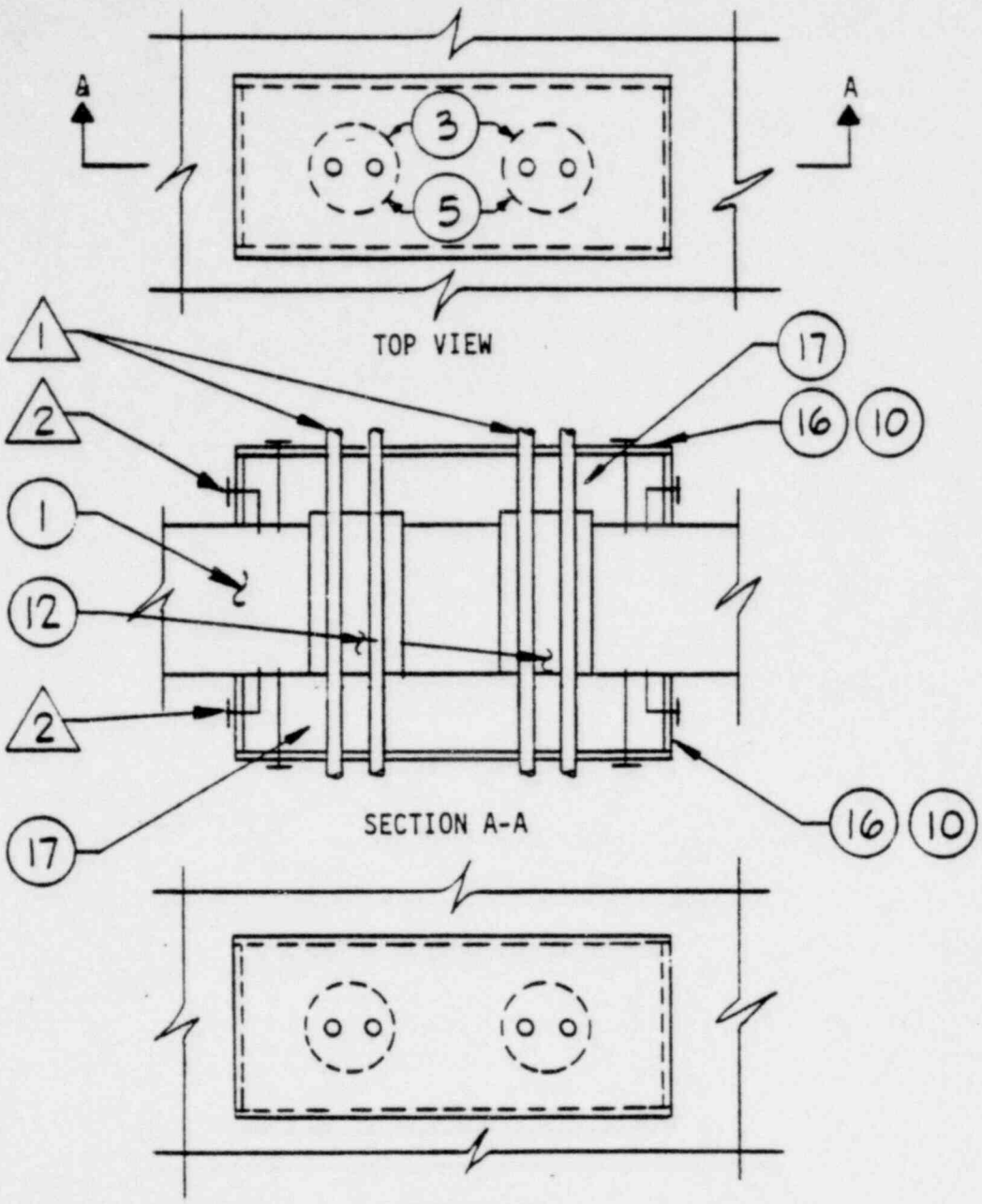

PRELIMINARY POOR ORIGINAL

1539 121

REV	DATE	DESCRIPTION	DRAWN	DESIGN	CHECK	APPVD	QA
1	11-5-79	ISSUED FOR REVIEW & COMMENT	D.C.				

REVISIONS

TEST DATA
PASSED
FAILED

SCALE NONE

Nuclear Services Corporation
CAMPBELL, CALIFORNIA
QUADREX CORPORATION

FOR

NORTHERN STATES POWER
PENETRATION SEAL TEST

CHARGE NO. NOR-0176/0179

DWG NO.	SHEET	REV
1000787	OF	1

P22

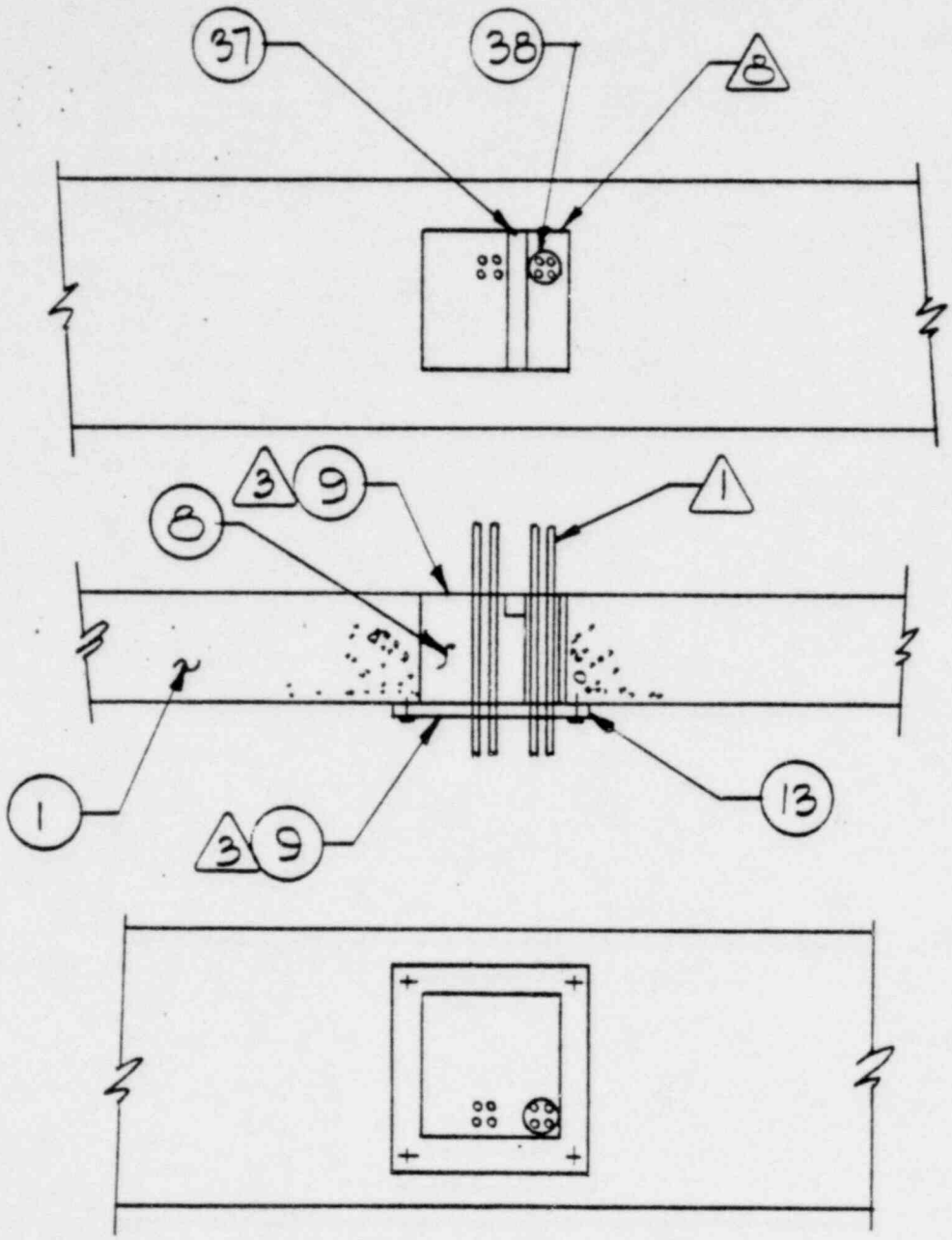

PRELIMINARY POOR ORIGINAL 1539 122

REV	DATE	DESCRIPTION	DRAWN	DESIGN	CHECK	APPVD	QA
1	11-15-79	ISSUED FOR REVIEW & COMMENT	D.C.				

REVISIONS

TEST DATA
PASSED
FAILED

SCALE NONE

Nuclear Services Corporation
CAMPBELL, CALIFORNIA
QUADREX CORPORATION

FOR

NORTHERN STATES POWER
PENETRATION SEAL TEST

CHARGE NO. NOR-0176/0179

DWG NO.	SHEET	REV
1000787	OF	1

P23

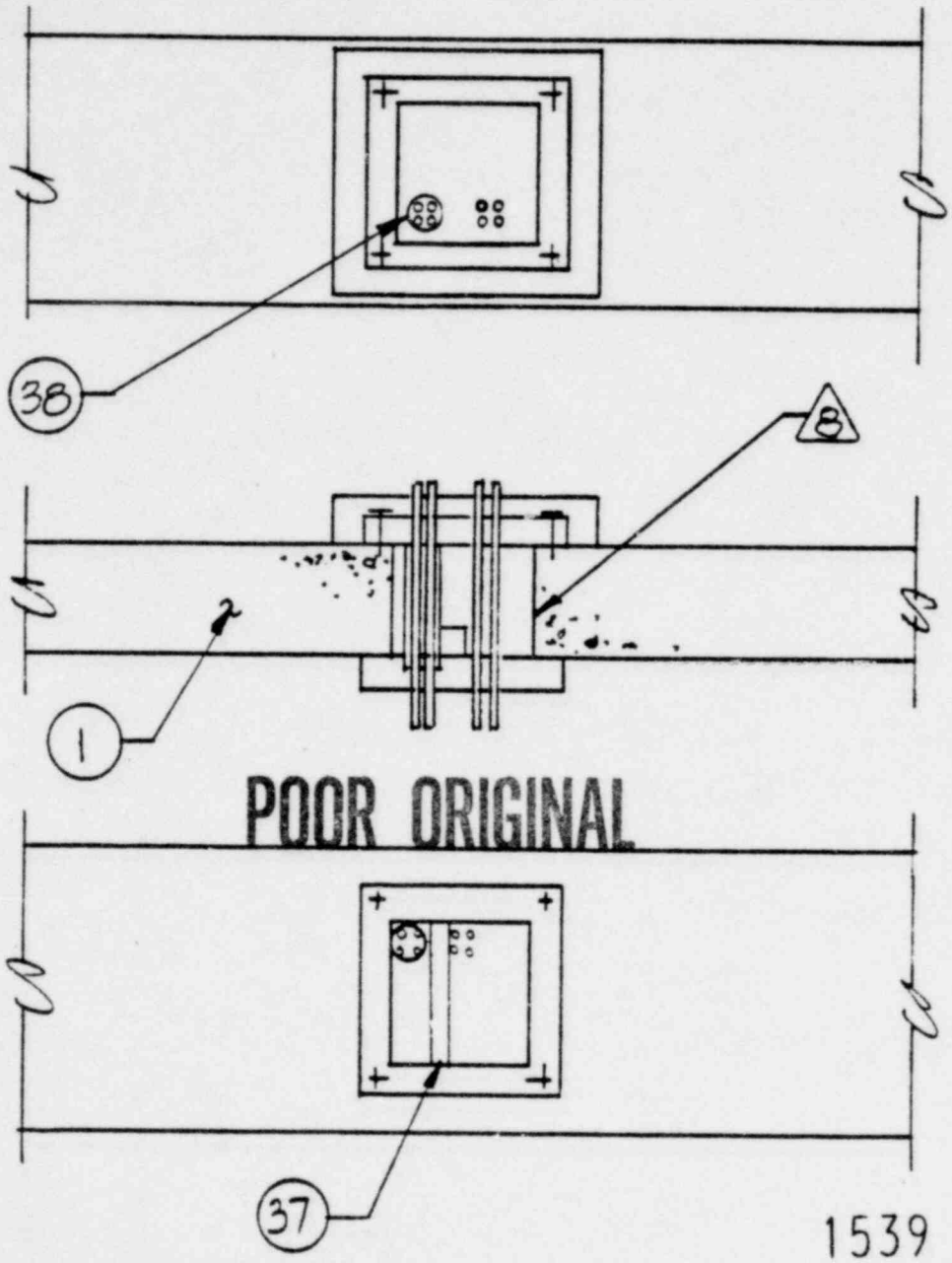

POOR ORIGINAL

PRELIMINARY

1539 123

REV	DATE	DESCRIPTION	DRAWN	DESIGN	CHECK	APPVD	QA
1	11-15-79	ISSUED FOR REVIEW & COMMENT	D.C.				

REVISIONS

TEST DATA
PASSED
FAILED

SCALE NONE

Nuclear Services Corporation
CAMPBELL, CALIFORNIA
A DIVISION OF QUADREX CORPORATION

FOR

NORTHERN STATES POWER
PENETRATION SEAL TEST

CHARGE NO. NOR-0176/0179

DWG NO.	SHEET	REV
1000787	OF	1

P24

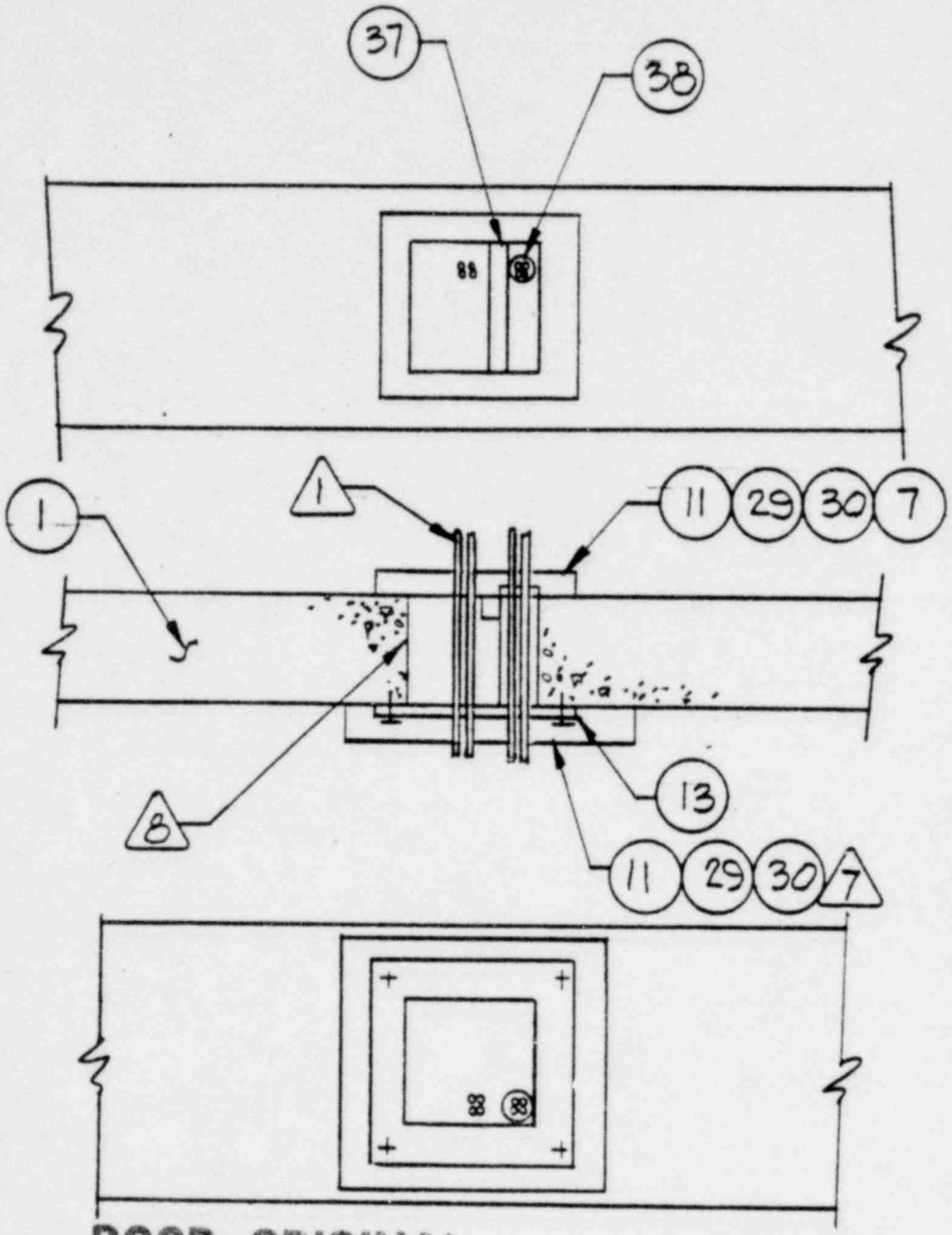

PRELIMINARY

POOR ORIGINAL

1539 124

REV	DATE	DESCRIPTION	DRAWN	DESIGN	CHECK	APPVD	QA
1	11-15-79	ISSUED FOR REVIEW & COMMENT	Q.C.				

REVISIONS

TEST DATA
PASSED
FAILED

SCALE NONE

Nuclear Services Corporation
CAMPBELL, CALIFORNIA
A DIVISION OF QUADREX CORPORATION

FOR

NORTHERN STATES POWER
PENETRATION SEAL TEST

CHARGE NO. NOR-0176/0179

DWG NO.	SHEET	REV
1000787	OF	1

P25

POOR ORIGINAL

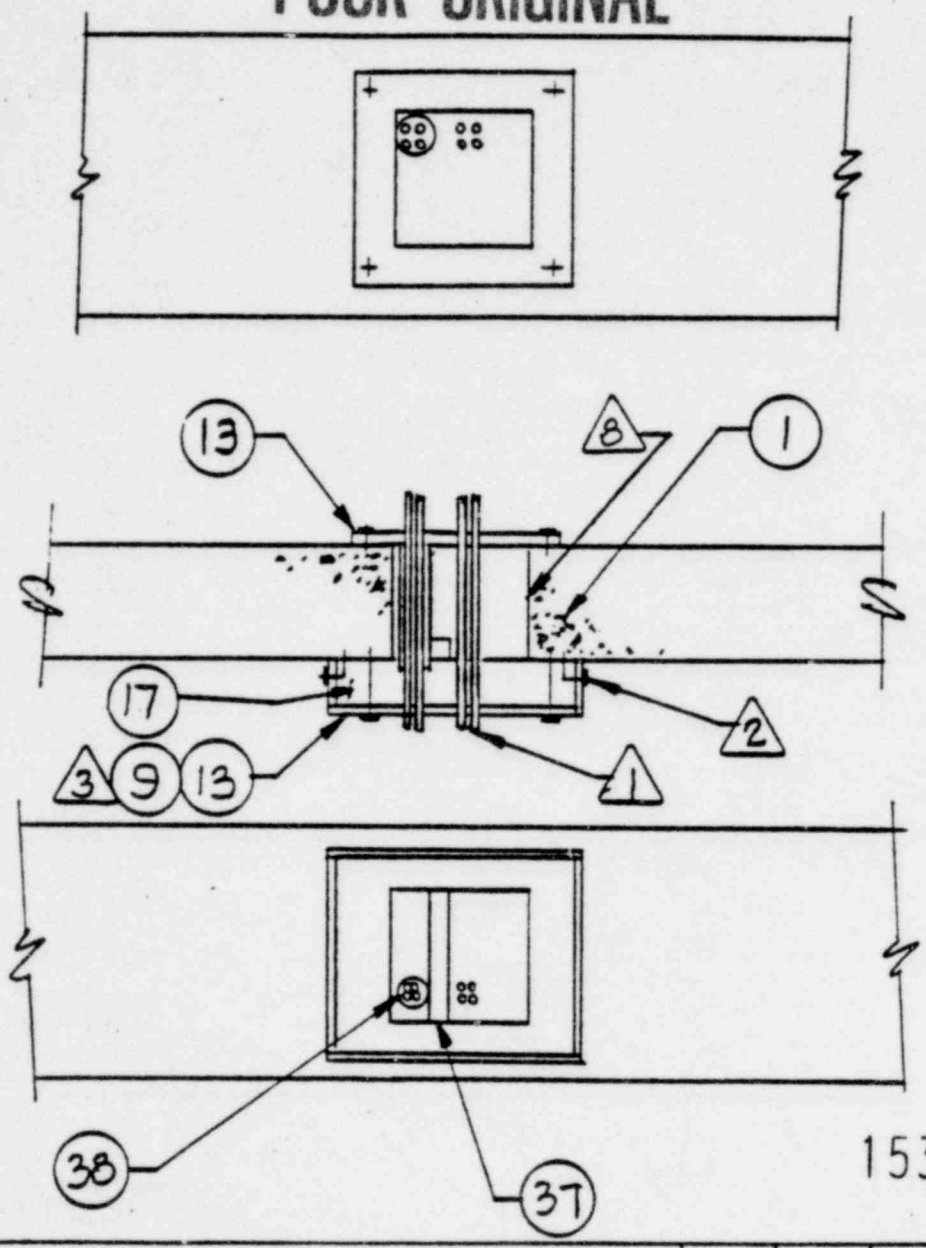

PRELIMINARY

1539 125

REV	DATE	DESCRIPTION	DRAWN	DESIGN	CHECK	APPVD	QA
1	11-15-79	ISSUED FOR REVIEW & COMMENT	D.C.				

REVISIONS

TEST DATA
PASSED
FAILED

SCALE NONE

Nuclear Services Corporation
CAMPBELL, CALIFORNIA
A DIVISION OF QUIRDEX CORPORATION

FOR

NORTHERN STATES POWER
PENETRATION SEAL TEST

CHARGE NO. NOR-0176/0179

DWG NO.	SHEET	REV
1000787	OF	1

P26

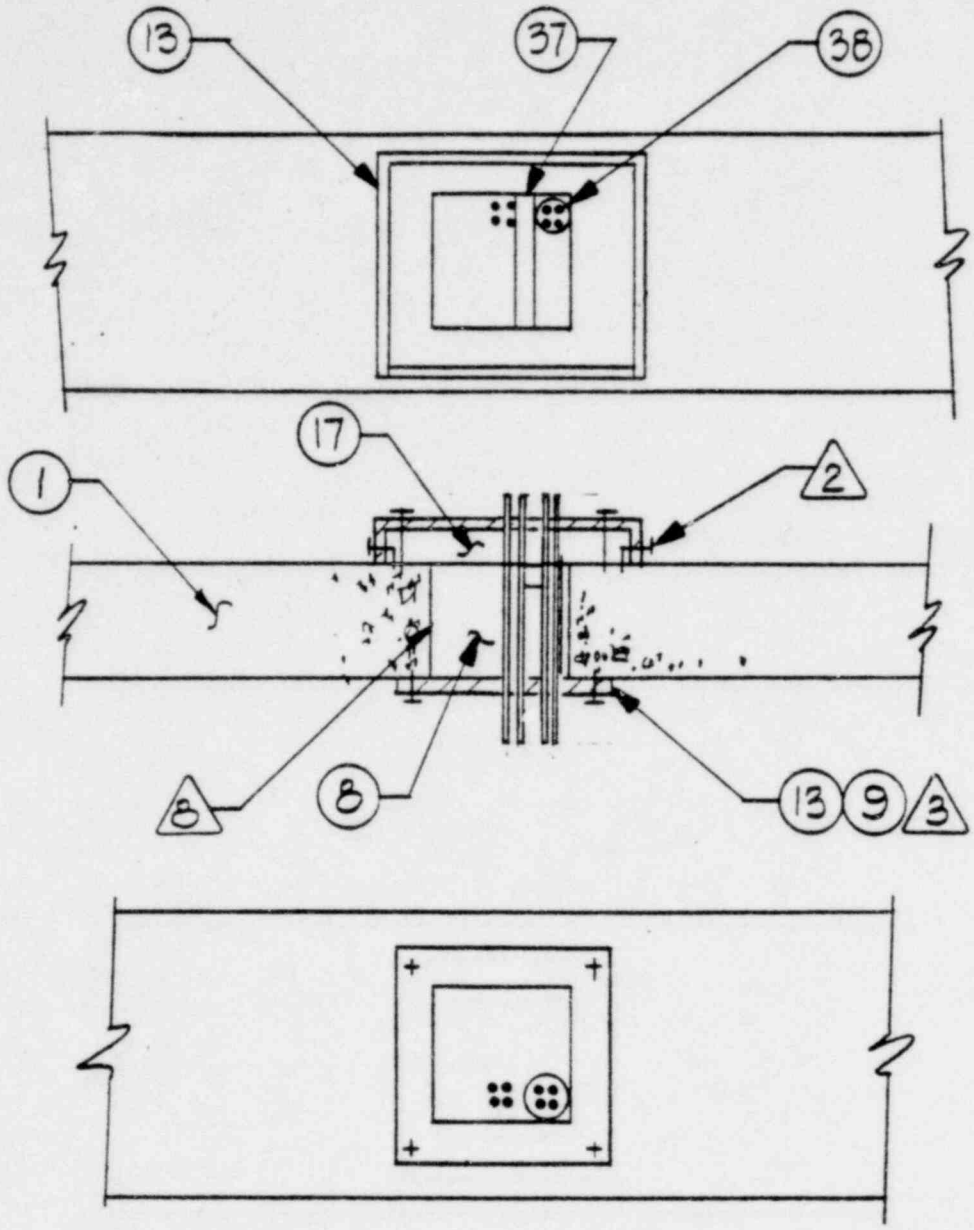

PRELIMINARY POOR ORIGINAL 1539 126

REV	DATE	DESCRIPTION	DRAWN	DESIGN	CHECK	APPVD	QA
1	11-1-79	ISSUED FOR REVIEW & COMMENT	D.C.				

REVISIONS

TEST DATA
PASSED
FAILED

SCALE NONE

Nuclear Services Corporation
CAMPBELL, CALIFORNIA
QUADREX CORPORATION

FOR

NORTHERN STATES POWER
PENETRATION SEAL TEST

CHARGE NO. NOR-0176/0179

DWG NO.	SHEET	REV
1000787	OF	1

P28

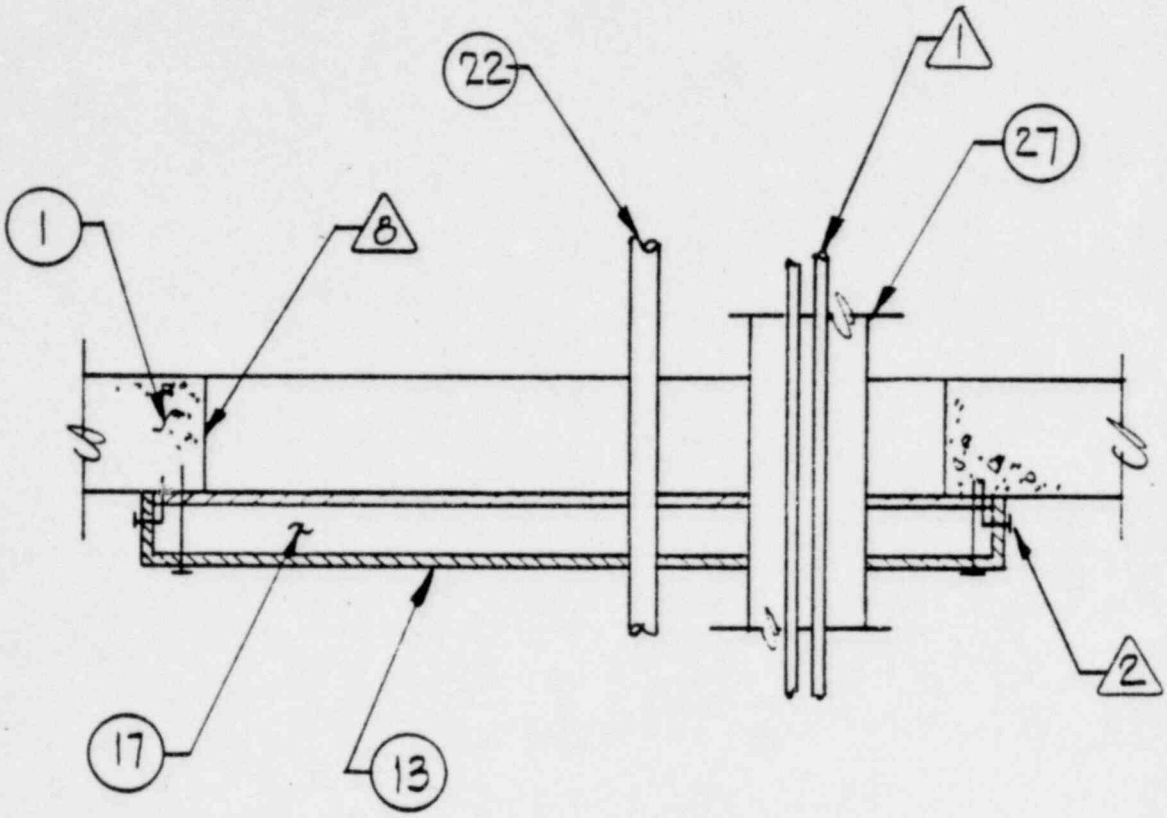

POOR ORIGINAL

1539 127

PRELIMINARY

REV	DATE	DESCRIPTION	DRAWN	DESIGN	CHECK	APPVD	QA
1	11-5-79	ISSUED FOR REVIEW & COMMENT	D.C.				

REVISIONS

TEST DATA
PASSED
FAILED

SCALE NONE

Nuclear Services Corporation
CAMPBELL, CALIFORNIA
QUADREX CORPORATION

FOR

NORTHERN STATES POWER
PENETRATION SEAL TEST

CHARGE NO. NOR-0176/0179

DWG NO.	SHEET	REV
	OF	1

P 29

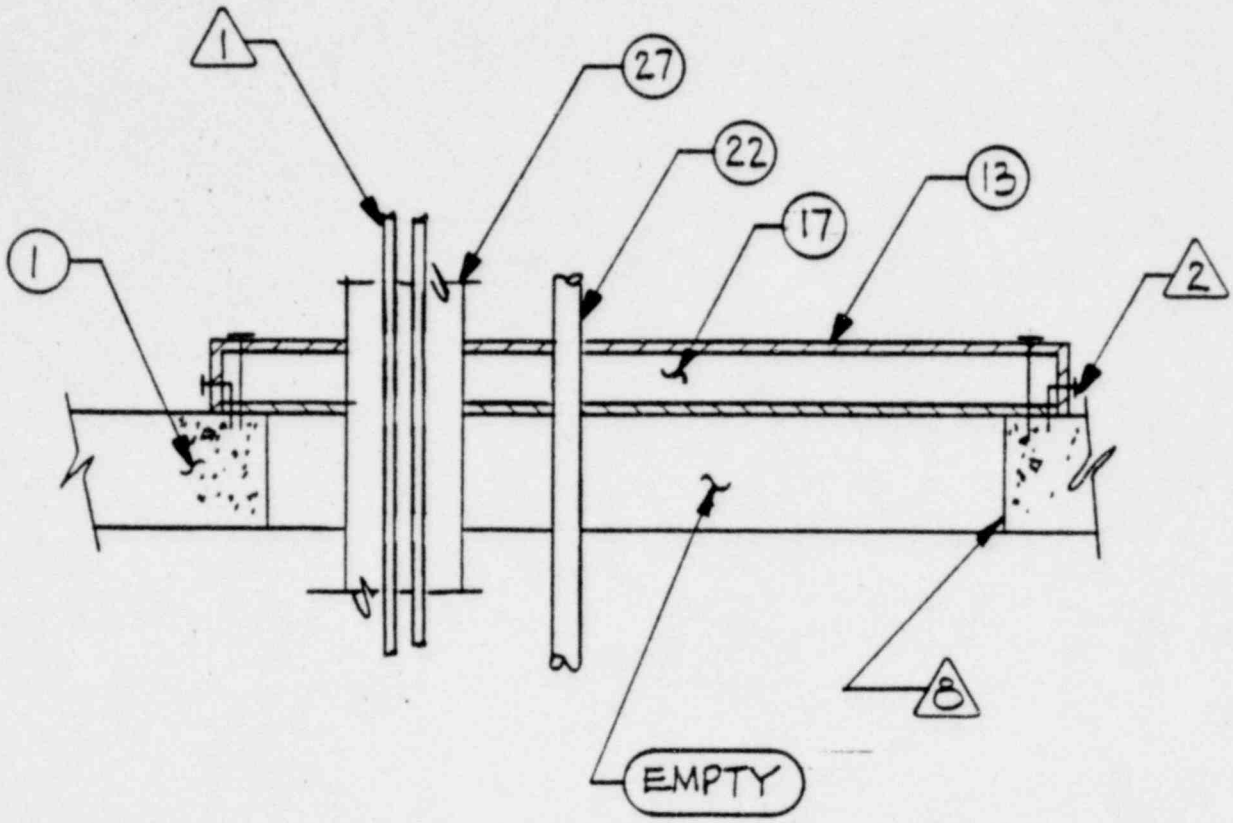

POOR ORIGINAL

1539 128

PRELIMINARY

REV	DATE	DESCRIPTION	DRAWN	DESIGN	CHECK	APPVD	QA
1	11-15-79	ISSUED FOR REVIEW & COMMENT	D.C.				

REVISIONS

TEST DATA PASSED FAILED	Nuclear Services Corporation CAMPBELL, CALIFORNIA A DIVISION OF QUADREX CORPORATION FOR	CHARGE NO. NOR-0176/0179	
SCALE NONE	NORTHERN STATES POWER PENETRATION SEAL TEST	DWG NO. 1000787	SHEET OF / REV 1

P30

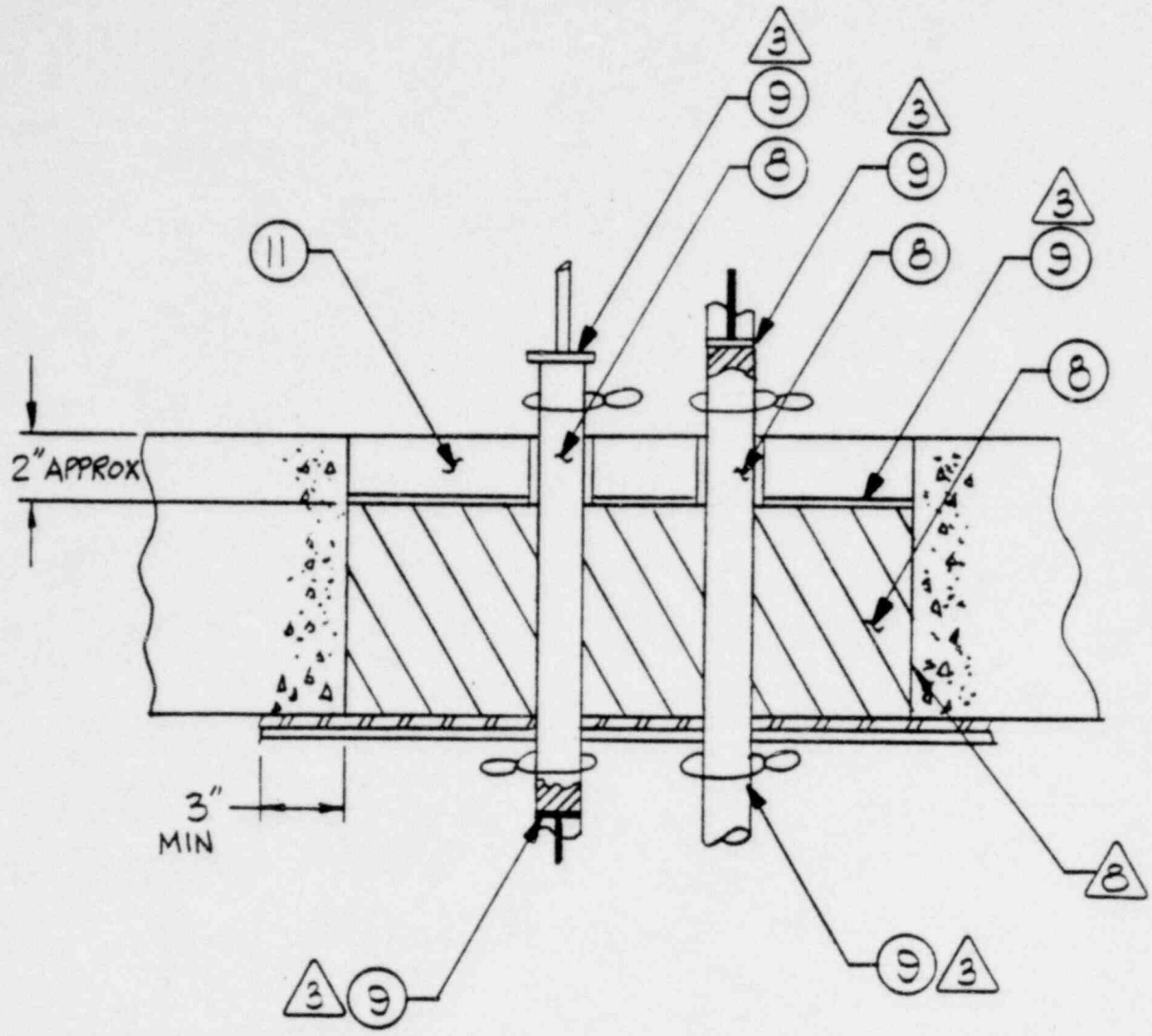

POOR ORIGINAL

1539 129

PRELIMINARY

REV	DATE	DESCRIPTION	DRAWN	DESIGN	CHECK	APPVD	QA
1	11-15-79	ISSUED FOR REVIEW & COMMENT	D.C.				

REVISIONS

TEST DATA
PASSED
FAILED

SCALE NONE

Nuclear Services Corporation
CAMPBELL, CALIFORNIA
QUADREX CORPORATION

FOR

NORTHERN STATES POWER
PENETRATION SEAL TEST

CHARGE NO. NOR-0176/0179

DWG NO.	SHEET	REV
1000787	OF	1

P31

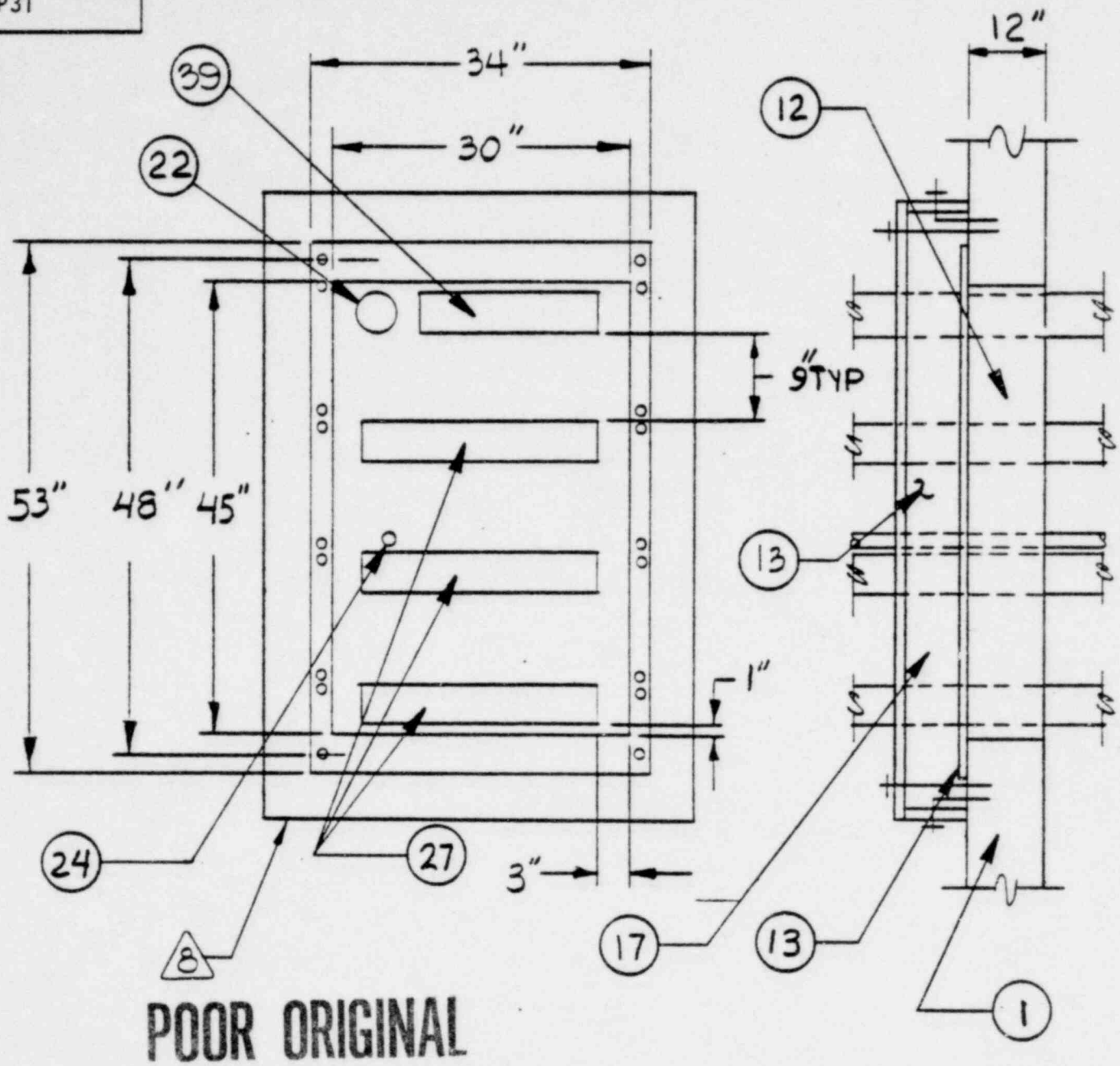

POOR ORIGINAL

PRELIMINARY

1539 130

REV	DATE	DESCRIPTION	DRAWN	DESIGN	CHECK	APPVD	QA
1	11-15-79	ISSUED FOR REVIEW & COMMENT	D.C.				

REVISIONS

TEST DATA
PASSED
FAILED

SCALE NONE

Nuclear Services Corporation
CAMPBELL, CALIFORNIA
QUADREX CORPORATION

FOR

NORTHERN STATES POWER
PENETRATION SEAL TEST

CHARGE NO. NOR-0176/0179

DWG NO.	SHEET	REV
1000787	OF	1

P32

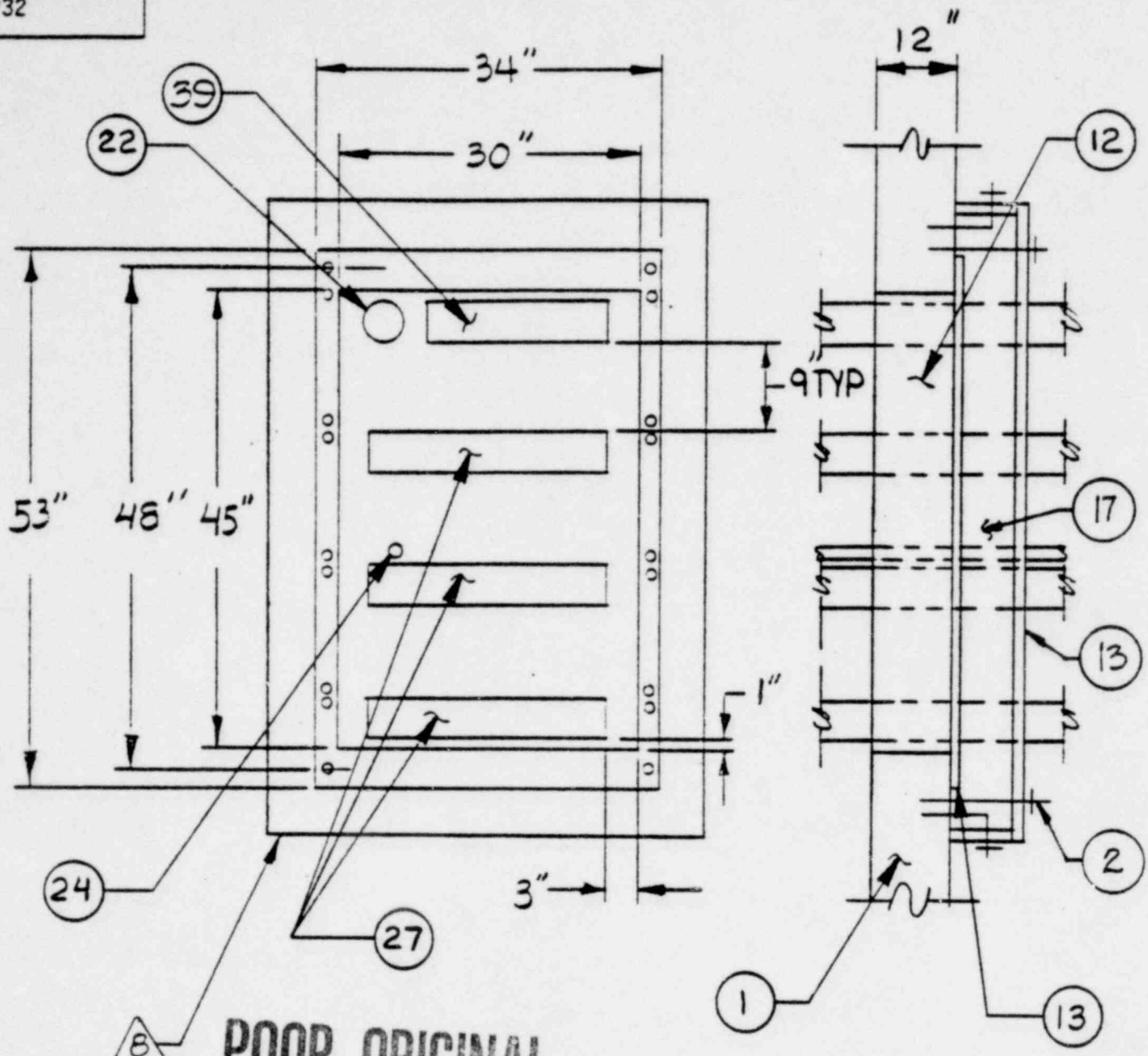

POOR ORIGINAL

PRELIMINARY

1539 131

REV	DATE	DESCRIPTION	DRAWN	DESIGN	CHECK	APPVD	DA
1	11-15-79	ISSUED FOR REVIEW & COMMENT	D.C.				

REVISIONS

TEST DATA
PASSED
FAILED

SCALE NONE

Nuclear Services Corporation
CAMPBELL, CALIFORNIA
QUADREX CORPORATION
FCR

NORTHERN STATES POWER
PENETRATION SEAL TEST

CHARGE NO. NOR-0176/0179

DWG NO.	SHEET	REV
1000787	OF	1

P33

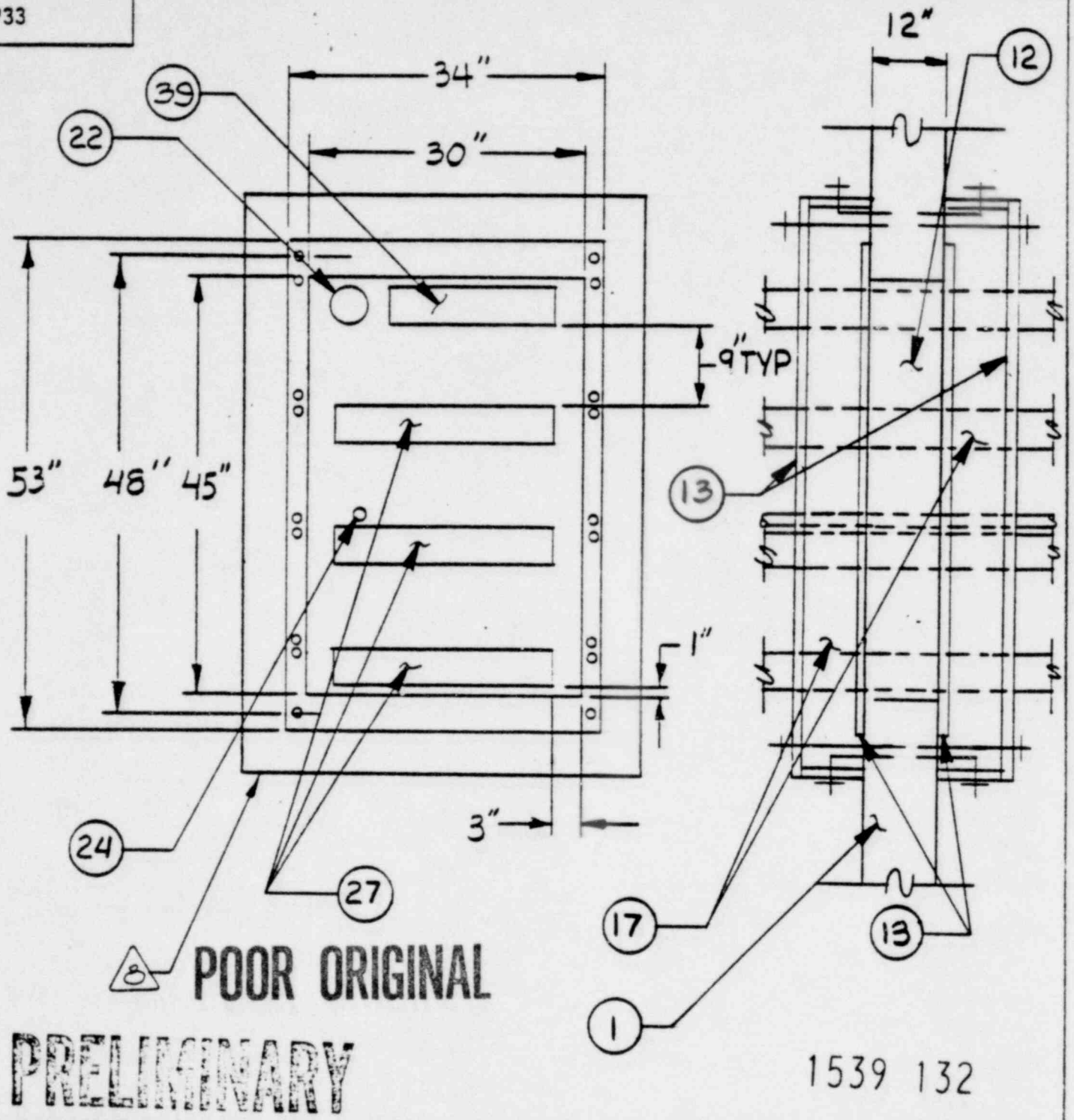

POOR ORIGINAL

PRELIMINARY

1539 132

REV	DATE	DESCRIPTION	DRAWN	DESIGN	CHECK	APPVD	QA
1	11-15-79	ISSUED FOR REVIEW & COMMENT	D.C.				

REVISIONS

TEST DATA
PASSED
FAILED

SCALE NONE

Nuclear Services Corporation
CAMPBELL, CALIFORNIA
A DIVISION OF QUADREX CORPORATION

FOR

NORTHERN STATES POWER
PENETRATION SEAL TEST

CHARGE NO. NOR-0176/0179

DWG NO.	SHEET	REV
1000787	OF	1

NOTES:

1. CABLES TO BE PER PENETRATION SCHEDULE FOR EACH PENETRATION. CABLES TO BE 24" MINIMUM LENGTH ABOVE THE PENETRATION AND TIED TO A SUPPORTING STRUCTURE. CABLES TO BE 12" MINIMUM LENGTH BELOW THE PENETRATION.

2. FASTEN THERMAL BOARD TO CONCRETE WITH 1/4" (REDHEAD) WEDGE ANCHOR WS-1416 OR EQUIV, AND 1/4" - 20 SCREWS OR STUDS, AS REQUIRED, AND 1" WASHERS.

3. COVER THE THERMAL BOARD BY APPLYING FLAMEMASTIC 71A OR 77, OR PYROCRETE 241 IN TWO COATS OF 1/8" EACH FOR A TOTAL THICKNESS OF 1/4". ALLOW THE FIRST COAT TO DRY FOR 24 HOURS, THEN APPLY THE SECOND COAT, IF THERE ARE ANY CRACKS AFTER THE SECOND COAT HAS DRIED, THEY CAN BE COVERED WITH A BRUSH APPLICATION.

4. COVER 6" OF THE CABLE WITH FLAMEMASTIC 71A, OR 77, OR PYROCRETE 241 WITH A 1/8" COAT. IF THERE ARE ANY CRACKS AFTER THIS COAT HAS DRIED THEY CAN BE COVERED WITH A BRUSH APPLICATION.

5. MAKE A DAM AT EACH END AND PRIME SURFACE WITH GE SS 4044 PRIMER AND APPLY GE RTV # 11 OR # 511 SILICONE OVER CABLES, MOVING CABLES TO ALLOW RTV TO FILL ALL VOIDS. FILL TO APPROXIMATELY 1" OVER TOP CABLE.

6. FASTEN METAL LATH TO THE WALL AND AROUND THE SLEEVE. APPLY FLAMEMASTIC 77 TO A DRY THICKNESS OF 2 INCHES INCLUDING AROUND THE CABLES AT THE END OF THE SLEEVE.

1539 133

7. FASTEN METAL LATH TO THE WALL AND AROUND THE SLEEVE. APPLY PYROPRIME 772 . APPLY PYROCRETE 241 TO A DRY THICKNESS OF 2 INCHES INCLUDING AROUND THE CABLES AT THE END OF THE SLEEVE.

PRELIMINARY

REV	DATE	DESCRIPTION	DRAWN	DESIGN	CHECK	APPVD	QA
1	11-15-79	ISSUED FOR REVIEW & COMMENT	D.C.				

REVISIONS

Nuclear Services Corporation
CAMPBELL, CALIFORNIA
QUADREX CORPORATION

FOR

NORTHERN STATES POWER
PENETRATION SEAL TEST

CHARGE NO. NOR-0176/0179

DWG NO.	SHEET	REV
1000787	1 OF	1

SCALE NONE

8. PENETRATIONS P7, P8, P9, P27 AND P34 ARE 14" X 42".
PENETRATIONS P22, P23, P24, P25, P26 AND P30 ARE 14" X 14".
PENETRATIONS P28 AND P29 ARE 36" X 48".
PENETRATIONS P31, P32 AND P33 ARE 30" X 45".

1539 134

PRELIMINARY

REV	DATE	DESCRIPTION	DRAWN	DESIGN	CHECK	APPVD	QA
1	11-15-79	ISSUED FOR REVIEW & COMMENT	D.C.				

REVISIONS

Nuclear Services Corporation
CAMPBELL, CALIFORNIA
A DIVISION OF QUADREX CORPORATION

CHARGE NO. NOR-0176/0179

FOR

NORTHERN STATES POWER
PENETRATION SEAL TEST

DWG NO.	SHEET	REV
1000787	OF	1

SCALE NONE

(1) SLAB, POURED CONCRETE, 12 INCHES THICK

(2) SLAB, POURED CONCRETE, 12 INCHES THICK WITH A PORTION 24 INCHES THICK

(3) SLEEVE, 6" DIAMETER, 13" LONG, FLUSH WITH BOTTOM OF SLAB.

(4) SLEEVE, 6" DIAMETER, 13" LONG, FLUSH WITH TOP OF SLAB.

(5) 2 SLEEVES, 6" DIAMETER ON 12" CENTERS

(6) SLEEVE, 10" DIAMETER, FLUSH WITH SLAB AT EACH END.

(7) SLEEVE, 8" DIAMETER, 18 1/2" LONG, EXTENDING 2" FROM ONE SIDE OF SLAB, AND 4 1/2" FROM THE OTHER SIDE.

(8) THERMAL INSULATING WOOL (TIW) TYPE I OWENS-CORNING FIBERGLASS CORPORATION FIBERGLASS TOWER, TOLEDO, OHIO 43659 (419)248-8000

(9) FLAMEMASTIC 71A
THE FLAMEMASTER CORPORATION
11120 SHERMAN WAY, SUN VALLEY, CA. 91352 (213)982-1650

(10) FLAMEMASTIC 77

(11) PYROCRETE 241
CARBOLINE COMPANY, FIREPROOFING PRODUCTS DIVISION
350 HANLEY INDUSTRIAL COURT, ST. LOUIS, MO. (314)644-1000
REPRESENTED BY:
BOB CORDTZ CO.
262 W. ANGELA AVE.
PLEASANTON, CA. 94566 (415) 846-3013

1539 135

PRELIMINARY

REV	DATE	DESCRIPTION	DRAWN	DESIGN	CHECK	APPVD	QA
1	11-15-79	ISSUED FOR REVIEW & COMMENTS	D.C.				

REVISIONS

Nuclear Services Corporation
CAMPBELL, CALIFORNIA
A DIVISION OF CORDREX CORPORATION

FOR

NORTHERN STATES POWER
PENETRATION SEAL TEST

CHARGE NO. NOR-0176/179

DWG NO.	SHEET	REV
1000787	OF	1

SCALE NONE

(12) INSTA-FOAM
INSTA-FOAM PRODUCTS, INC.
2050 NORTH BROADWAY, JOLIET, ILL. 60435 (815)726-6241

(13) 1/2" MARINITE XL BOARD
JOHNS-MANVILLE REFRACTORY PRODUCTS
DRAWER 17L, DENVER, COLO. 80217 (303)979-1000

(14) KAOWOOL, BULK FIBER
THE CARBORUNDUM COMPANY, INSULATION DIVISION
P. O. BOX 808, NIAGARA FALLS, N.Y. 14302 (716)278-6221

(15) KAOWOOL, DURABLANKET

(16) 1" CARBORUNDUM FIBERFRAX HOTBOARD

(17) ICMS PRODUCT 60, 5" DEEP, MINIMUM, FROM TOP AND SIDE OF SLEEVE
INSULATION CONSULTANTS & MANAGEMENT SERVICES, INC.
P. O. BOX 1, BARODA, MICHIGAN 49101 (616)422-2112

(18) ASBESTOS PIPE INSULATION 5" O.D., FOR 3" PIPE, 3' LONG EXTENDING
1' EACH SIDE OF SLAB.

(19) ALUMINUM SHEET OVER PIPE INSULATION PABCO SUREFIT METAL JACKETING SYSTEM
LOUISIANA-PACIFIC CORP., PALESTINE, TEXAS 75801

(20) PIPE 3", STEEL, 5' LONG, EXTENDING 2' EACH SIDE OF SLAB, CAPPED AT EACH END.

PRELIMINARY

1539 136

REV	DATE	DESCRIPTION	DRAWN	DESIGN	CHECK	APPVD	QA
1	11-5-79	ISSUED FOR REVIEW & COMMENT	D.C.				

REVISIONS

Nuclear Services Corporation
CAMPBELL, CALIFORNIA
A DIVISION OF QUADREX CORPORATION

FOR

NORTHERN STATES POWER
PENETRATION SEAL TEST

CHARGE NO. NOR-0176/0179

DWG NO.	SHEET	REV
1000787	OF	1

SCALE NONE

(21) PIPE 5", 316 STAINLESS STEEL, 4' LONG, EXTENDING 1' BELOW SLAB, CAPPED AT EACH END.

(22) CONDUIT 4", 4' LONG, EXTENDING 1' BELOW SLAB, CAPPED AT EACH END.

(23) CONDUIT 2", 4' LONG, EXTENDING 1' BELOW SLAB, CAPPED AT EACH END.

(24) CONDUIT 1", 4' LONG, EXTENDING 1' BELOW SLAB, CAPPED AT EACH END.

(25) PRIMER SS 4044 & RTV 511
GENERAL ELECTRIC COMPANY
1 RIVER ROAD, SCHENECTADY, N.Y. 12345 (518)385-2211

(26) SOLID SHEET METAL FULL WIDTH OF TRAY (16 GA MINIMUM)

(27) LADDER BACK TRAY, ALUMINUM, 24" WIDE, 4" HIGH

(28) PYROPRIME 772
CARBOLINE COMPANY

(29) 3.4 POUND PER SQUARE YARD METAL LATH

(30) SELF-STICK INSUL-ANCHORS
H.A. JONES CO. INC, DAYTON, OHIO
OR
SELF-STICK STICK-UPS
MIRACLE ADHESIVES CORP. BELLMORE, LONG ISLAND, NEW YORK
OR EQUIV. TO FASTEN TO THE
WALL, AND USE TIE WIRE TO FASTEN THE METAL
LATH AROUND THE SLEEVES.

PRELIMINARY

1539 137

REV	DATE	DESCRIPTION	DRAWN	DESIGN	CHECK	APPVD	QA
1	11-15-79	ISSUED FOR REVIEW & COMMENT	D.C.				

REVISIONS

Nuclear Services Corporation
CAMPBELL, CALIFORNIA
Quadrex Corporation

FOR

NORTHERN STATES POWER
PENETRATION SEAL TEST

CHARGE NO. NOR-0176/0179

DWG NO.	SHEET	REV
1000787	OF	1

SCALE NONE

(31) SLEEVE, 8" DIAMETER, 34" LONG, EXTENDING
2" FROM ONE SIDE OF THE SLAB AND 20" FROM THE OTHER SIDE.

(32) CHICO A

CROUSE-HINDS COMPANY
CONSTRUCTION MATERIALS PRODUCTS DIVISION
ROOM 625
155 BOVET ROAD
SAN MATEO, CALIF. 94402 (415) 574-3737

(33) CHICO X

CROUSE-HINDS COMPANY

(34) INTUMASTIC 285
CARBOLINE COMPANY

(35) SILICATE GEL
SOUTHWEST RESEARCH INSTITUTE
6220 CULEBRA ROAD
SAN ANTONIO, TEXAS 78284 (512) 684-5111

(36) SILICATE FOAM
SOUTHWEST RESEARCH INSTITUTE

1539 138

PRELIMINARY

REV	DATE	DESCRIPTION	DRAWN	DESIGN	CHECK	APPVD	QA
1	11-15-79	ISSUED FOR REVIEW & COMMENT	D.C.				

REVISIONS

TEST DATA
PASSED
FAILED

SCALE NONE

Nuclear Services Corporation
CAMPBELL, CALIFORNIA
QUADREX CORPORATION

FOR

NORTHERN STATES POWER
PENETRATION SEAL TEST

CHARGE NO. NOR-0176/0179

DWG NO.	SHEET	REV
1000787	OF	1

37. 2" CHANNEL

38 3" PIPE, 12" LONG

39 LADDER BACK TRAY, ALUMINUM 18" WIDE, 4" HIGH

PRELIMINARY

1539 139

REV	DATE	DESCRIPTION	DRAWN	DESIGN	CHECK	APPVD	QA
1	11-5-79	ISSUED FOR REVIEW & COMMENT	D.C.				

REVISIONS

Nuclear Services Corporation
CAMPBELL, CALIFORNIA
A DIVISION OF QUADREX CORPORATION

CHARGE NO. NOR-0176/0179

FOR

NORTHERN STATES POWER
PENETRATION SEAL TEST

DWG NO.	SHEET	REV
1000787	OF	1

SCALE NONE

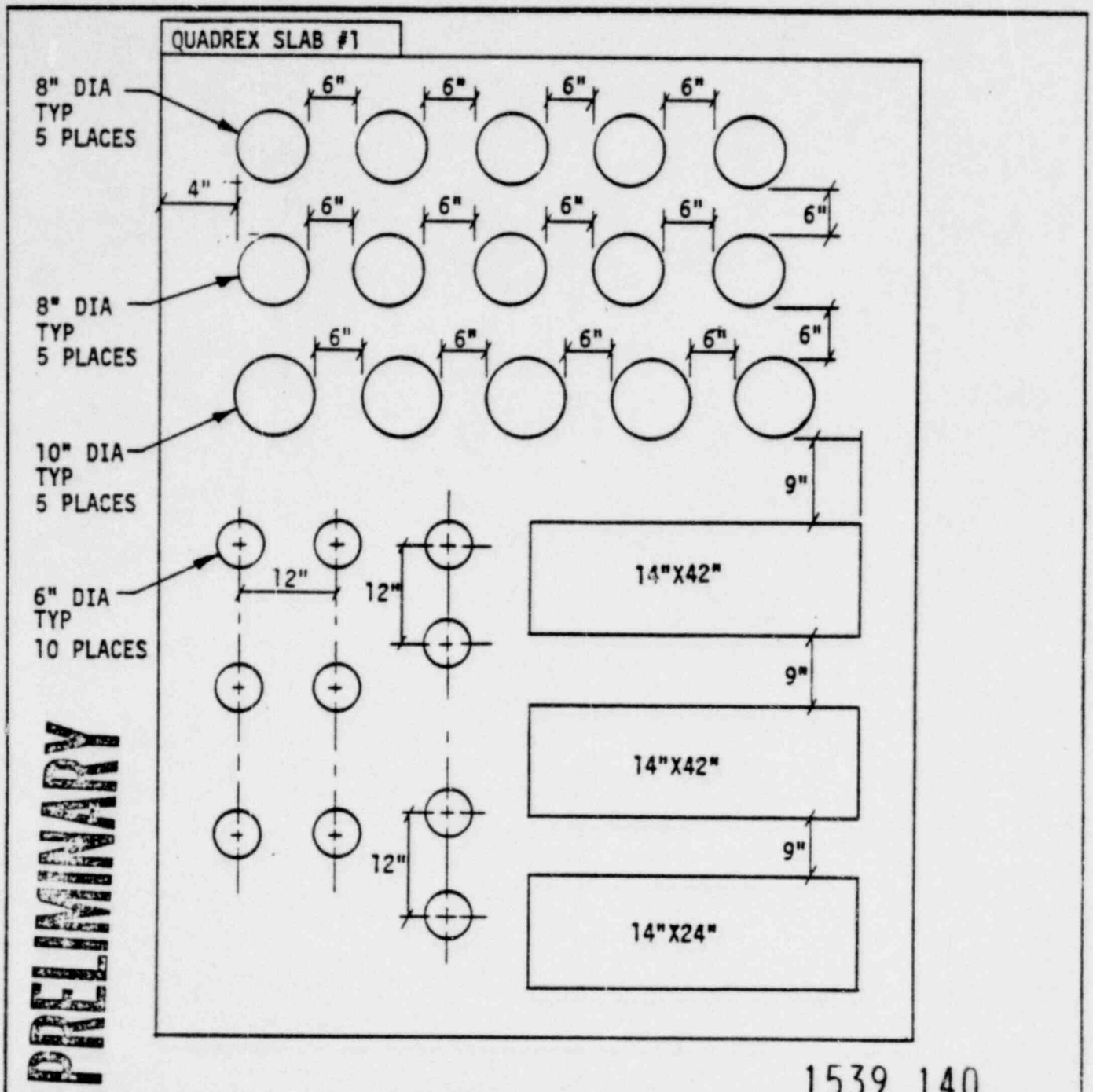

1539 140

REV	DATE	DESCRIPTION	DRAWN	DESIGN	CHECK	APPVD	QA
1	11-5-79	ISSUED FOR REVIEW & COMMENT	D.C.				

REVISIONS

TEST DATA
PASSED
FAILED

SCALE NONE

Nuclear Services Corporation
CAMPBELL, CALIFORNIA
QUADREX CORPORATION

FOR

NORTHERN STATES POWER
PENETRATION SEAL TEST

CHARGE NO. NOR-0176/0179

DWG NO.	SHEET	REV
1000787	OF	1

QUADREX SLAB #2

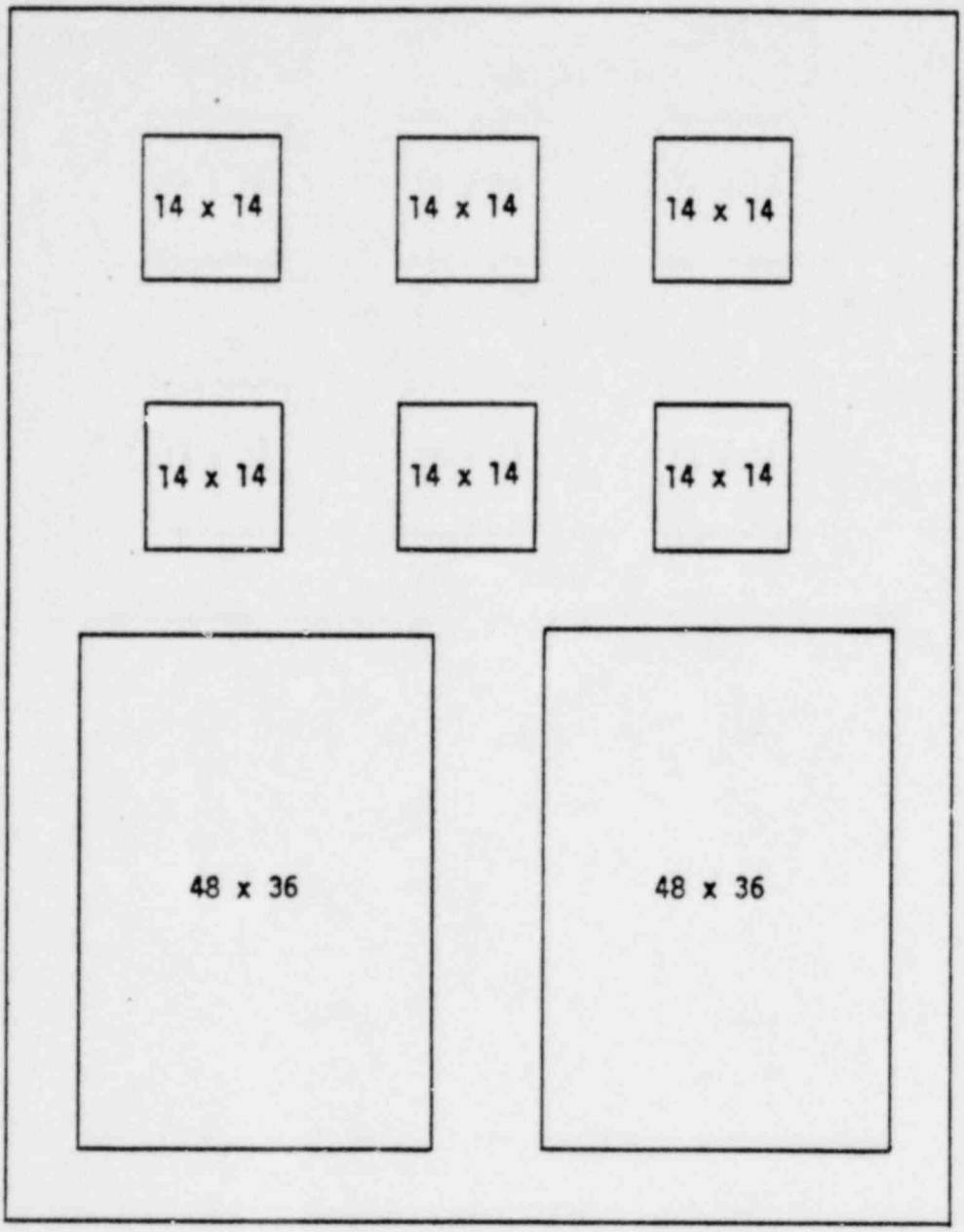

PRELIMINARY

1539 141

REV	DATE	DESCRIPTION	DRAWN	DESIGN	CHECK	APPVD	QA
1	11-15-79	ISSUED FOR REVIEW & COMMENTS	D.C.				

REVISIONS

TEST DATA
PASSED
FAILED

SCALE NONE

Nuclear Services Corporation
CAMPBELL, CALIFORNIA
QUADREX CORPORATION

FOR

NORTHERN STATES POWER
PENETRATION SEAL TEST

CHARGE NO. NOR-0176/0179

DWG NO.	SHEET	REV
1000787	OF	1

QUADREX SLAB#3

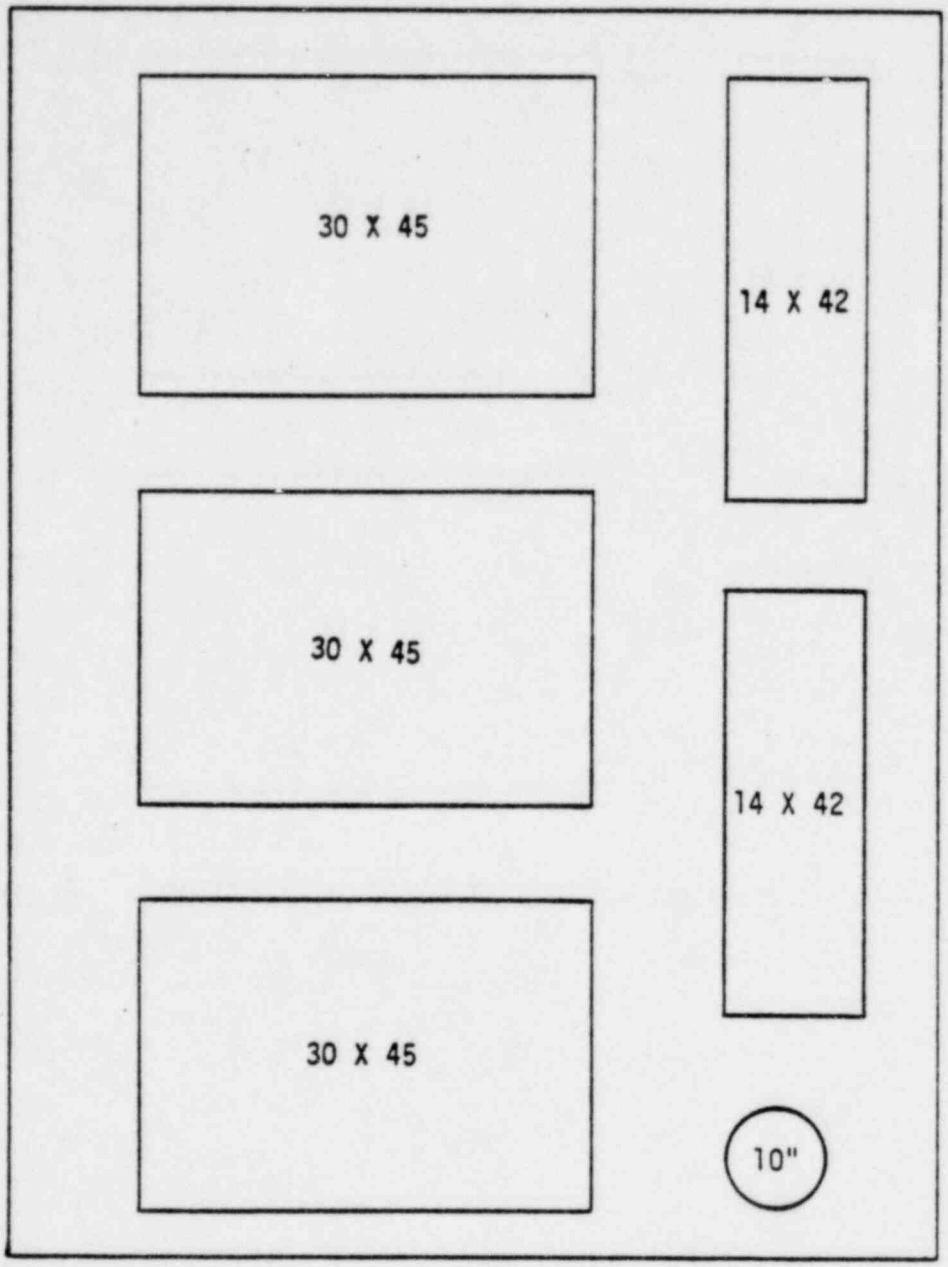

PRELIMINARY

1539 142

REV	DATE	DESCRIPTION	DRAWN	DESIGN	CHECK	APPVD	QA
1	11-15-79	ISSUED FOR REVIEW & COMMENT	D.C.				

REVISIONS

TEST DATA
PASSED
FAILED

SCALE NONE

Nuclear Services Corporation
CAMPBELL, CALIFORNIA
QUADREX CORPORATION

FOR

NORTHERN STATES POWER
PENETRATION SEAL TEST

CHARGE NO. NOR-0176/0179

DWG NO.	SHEET	REV
1000787	OF	1

3.2.8 Fire Detectors

The licensee will verify that the existing installed detectors will respond promptly to the various types of materials found in the plant when these materials are involved in the incipient stages of a fire (4.2).

Evaluation

Refer to the attached response testing reports provided to us by the detector vendor (Pyrotronics, Incorporated).

Response testing data for specific cable types not included in the attached reports has been requested and will be submitted at a later date. These cable types are:

Anaconda/Okonite	EPR
Kerite	HT/FR
Boston	CSPE
Westinghouse	FEP

This information should be available by early next year.

1539 143

Published by Pyrotronics Engineering Department

RESPONSE OF F5B IONIZATION DETECTOR TN-12A

TO

VARIOUS BURNING MATERIALS

This report deals with a large number of materials of which the buildings, stored goods or elements of individual objects to be protected may consist. For each material, the quantity in grams (gm) is given, which, when burned in a container of 1 cubic foot volume and homogenous distribution of the ensuing combustion gases, will alarm an F5B detector with standard sensitivity of 50 volts.

These values were experimentally determined in a miniature fire-chamber, having a volume of 2 cubic feet. Solid materials were burned without open flame by putting them on an asbestos plate, heated to approximately 650°C (1200°F). The average time for alarming the various solid materials was 10 seconds. Liquid materials were burned in a porcelain container by dipping a glowing wire into the liquid; evaporation was substantially reduced by this method. The average time for alarm was 20 seconds.

The tests described above provide reproducible results, but cannot be applied in practice without further consideration, because the conditions which are valid for laboratory tests are not usually present in a practical situation. For example, the combustion gases will not be uniformly distributed in the entire room, the distance from the source of the fire to the detector is considerably greater and in a fire outbreak it is likely that several materials are burned simultaneously (container, floor, etc.).

The list provides comparative values of the required quantity of burned material needed to alarm the detector. Generally, it can be stated that the quantities of material necessary for alarming the detector are not substantially different, with the exception of those materials, which, when burned, transform into other chemical compounds (alcohol, acetone). The average for solid materials is .0008 gm/ft.^{3}

POOR ORIGINAL

1539 144

S.R. 7-10-67

Pyrotronics A Division of Baker Protective Services Inc. 8 Ridgedale Avenue, Cedar Knolls, New Jersey 07927

Material Burned		Quantity Burned in gm/ft^3	Type of Combustion
Materials of Vegetable Origin:			
Grain	Barley	.0016	Carbonized
	Oats	.0012	Carbonized
	Corn	.0015	Carbonized
Rubber		.0006	Carbonized
Resins	Soldering resin	.0005	Carbonized
Wood	Conifers	.0006	Carb, embers
Wood	Hard Wood	.0011	Carb, embers
Cork		.0006	Carb, embers
Linen + Glue		.0004	Flame
Wick	Spindle string	.0027	Carb, embers
Paper	Glued writing paper	.0004	Carb, embers
	Filter paper	.0005	Carb, embers
Tobacco		.0015	Carb, embers
Materials of Animal or Mineral Origin:			
Asphalt		.0024	Carbonized
Felt		.0004	Carbonized
Putty		.0037	Carbonized
Cowhide		.0003	Carbonized
Horsehair		.0003	Carbonized
Sulphur		*.0001	Flame
Textiles:			
Cotton		.0003	Flame
Artificial Silk		.0019	Flame
Silk		.0006	Flame
Wool		.0003	Flame

* = greater than

Material Burned		Quantity Burned in gm/ft^3	Type of Combustion
Paints:			
Baking Varnish	Alkyd/Carbamid resin combination brown	*.0001	Carbonized
	black	.0006	Carbonized
Synthetic Resin Varnish	Alkyd Resin	.0020	Carbonized
Nitro Varnish	Cellulose/Synthetic Resin combination	.0014	Carbonized
Electrical Insulation Materials:			
Cellophane		.0003	Carbonized
Wire Insulation:			
Enamel Insulation of copper wires		.0004	Carbonized
Oil Varnished Wire with double artificial silk insulation (flame proof)		.0004	Carbonized
Polyvinylacetate		.0002	Carbonized
Polyvinylchloride	red	.0003	Carbonized
	blue	.0003	Carbonized
	green	.0004	Carbonized
Thermoplastic, single insulation (flame-proof)	yellow/red	.0002	Carbonized
Lacquered glass wool		.0014	Carbonized
Mica/Asphalt combination		.0006	Carbonized
Spaghetti Tube, oil impregnated, organic fabric		.0005	Carbonized
Artificial Resin Materials. Pressed Layers:			
Phenolic Resin with fabric		.0006	Carbonized
Phenolic Resin with paper		.0003 to .0009	Carbonized
Phenolic Resin with asbestos fabric		.0034	Carbonized
Oil glass silk		.0009	Carbonized
Oil silk		.0004	Carbonized

1539 146

Material Burned	Burned in gm/ft^3	of Combustion
Carbontet.achloride	*.0043	Slight Fl.
Trichlorethylene	.0635	Flame
<u>Oils and Greases</u>:		
Diesel Oil	*.0043	Flame
Hydraulic Oil	*.0043	Flame
Engine Oil	*.0043	Flame
Spindle Oil	*.0043	Flame
Vaseline Oil	*.0043	Flame
Ball Bearing Grease	.0005	Flame

PYRALARM DETECTORS F3/5A AND F5B

(SENSITIVITY TO POLYVINYLCHLORIDE COMBUSTION)

from

PYROTRONICS, INC.

SUBSIDIARY OF BAKER INDUSTRIES, INC.

2343 MORRIS AVENUE

UNION, N. J. 07083

SERIAL NO. 17741

FEBRUARY 23, 1967

FM

FACTORY MUTUAL ENGINEERING CORPORATION

1151 BOSTON-PROVIDENCE TURNPIKE, NORWOOD, MASS. 02062

1539 148

FACTORY MUTUAL ENGINEERING CORPORATION

1151 BOSTON-PROVIDENCE TURNPIKE, NORWOOD, MASS. 02062

17741 February 23, 1967

PYRALARM DETECTORS F3/5A AND F5B (SENSITIVITY TO POLYVINYLCHLORIDE COMBUSTION)

from

PYROTRONICS, INC.
SUBSIDIARY OF BAKER INDUSTRIES, INC.
2343 MORRIS AVENUE
UNION, N. J. 07083

I INTRODUCTION

The Pyralarm detectors respond to aerosol products of combustion. From many combustibles these airborne products are light, invisible and rise rapidly to the detector from thermal lift. Detector response is often very quick.

Other combustibles have products of combustion that are much larger and heavier, and are readily visible. If there is little thermal lift, these products rise slowly, drift horizontally and tend to stratify. Products of polyvinylchloride insulation combustion are examples. With these, Pyralarm response is not nearly as quick; and, in fact, some questioned whether the Pyralarm might be insensitive to these products.

The purpose of this re-examination was to determine if there is something so unusual about PVC combustion that the Pyralarm ignores it. The answer is negative. Pyralarm will respond to PVC combustion when the products reach the detector. This is also true of approved spot type smoke detection devices in general.

II TESTS

A General

1. These were run at the Pyrotronics plant in Union, N. J. Tests produced products of PVC combustion two ways: (1) by electrically overloading PVC insulated wire to produce smoke; (2) by placing pieces of the insulation on a hot surface until smoke resulted.

2. Four brands of wire were tested: Alpha, Belden, Birnback and Plastic Wire & Cable. In all, eight different types and sizes were tested. These ranged from No. 16 to No. 22 AWG, having 60-105°C temperature, 200-1000 volts and 17-35 ampere ratings.

1539 149

3. Both Pyralarm detectors F3/5A and F5B were tested.

B Results

1. There was a noticeable difference among the four brands tested; probably as a result of different plasticizer and pigment. However, in no case did the Pyralarm fail to operate when the products got there.

2. Sometimes, the response appeared slow - on the order of a couple minutes - and the test area was uncomfortably smokey at floor level. However, observation at detector level showed a practically clear atmosphere around the detector.

3. Other details are on file; but are unnecessary for the purpose of this report.

III CONCLUSION

Pyralarm detectors F3/5A and F5B are sensitive to products of "polyvinylchloride" insulation combustion.

EWC/bc

TESTS AND REPORT BY : E. W. Cray

1539 150