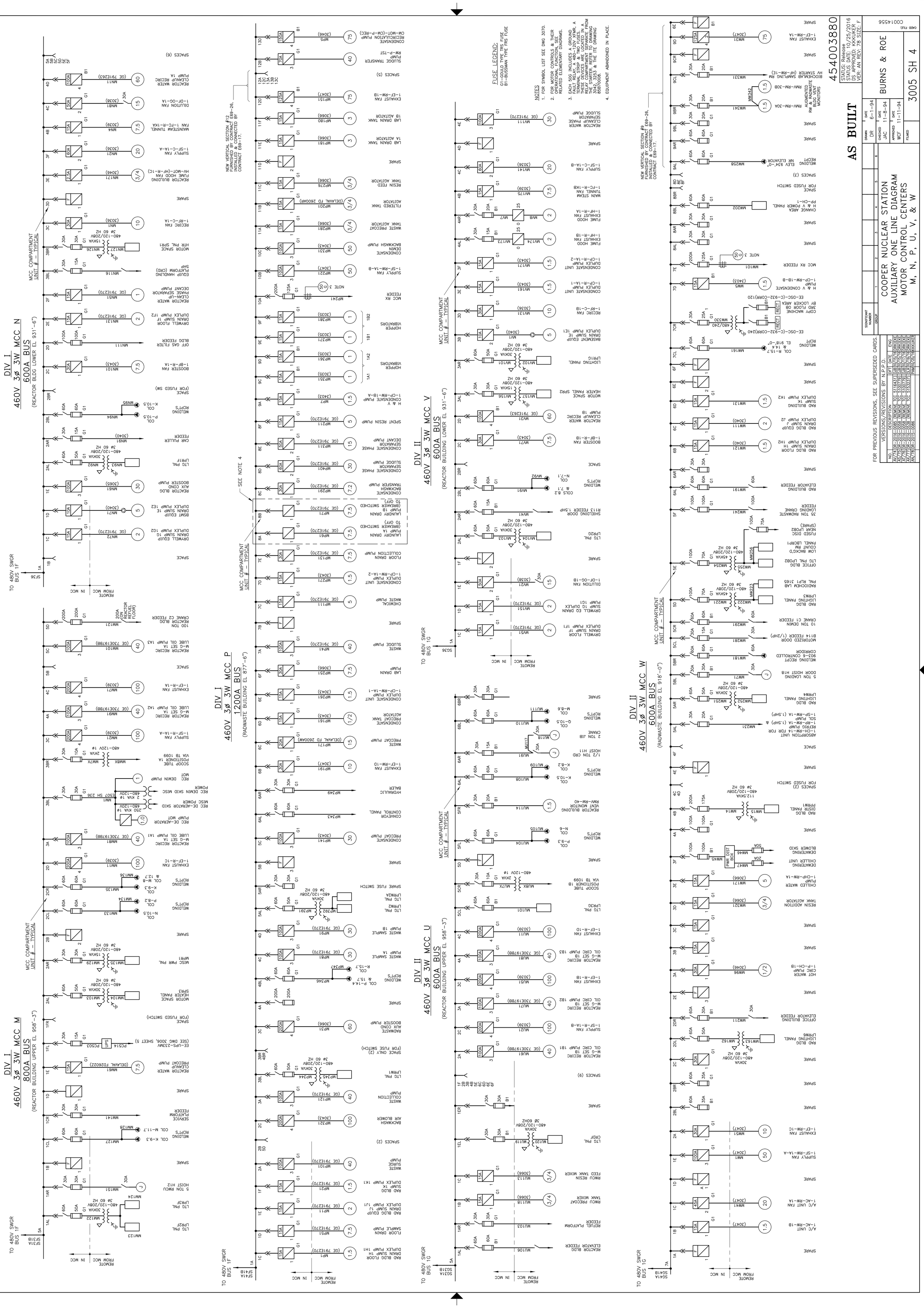

TO 480V SWGR BUS 1G
SG41A SG41B
REMOTE FROM MCC
IN MCC
SPARE
A/C UNIT 1-AC-RW-1B
A/C UNIT FAN 1-AC-RW-1A
MW41 (3047)
SUPPLY FAN 1-SF-RW-1A-A
MW1 (3047)
EXHAUST FAN 1-EF-RW-1C
MW51 (3047)
RAD BLDG LIGHTING PANEL LPRW6
MW163
MW162
30KVA 480-120/208V 3Ø 60 HZ
OFFICE BUILDING ELEVATOR FEEDER
MW211
HOT WATER CIRC PUMP 1-P-CH-1B
MW96 (3046)
RESIN ADDITION TANK AGITATOR
MW321 (3066)
CHILLED WATER PUMP 1-CHP-RW-1A
MW171 (3066)
DEWATERING CHILLER UNIT
MW47
DEWATERING BLOWER SKID
MW46
MW45
PWR DIST BOX
RAD BLDG DISTR PANEL PPRW1
MW15
MW14
112.5KVA 480-120/208V 3Ø 60 HZ
SPACES (2) FOR FUSED SWITCH
SPACE
ABSORPTION UNIT 1-CH-RW-14 FDR FOR REFRIG PUMP 1-RP-RW-1A (1.5HP) & SOL PUMP 1-SP-RW-1A (1.5HP)
MW231
RAD BLDG LIGHTING PANEL LPRW4
MW252
MW251
5 TON LOADING DOOR HOIST H18
MW71
WELDING RECPT 903-6 CONTROLLED CORRIDOR
MW181
MOTORIZED DOOR B114 FEEDER (1/2HP)
MW281
10 TON DEMIN CRANE C1 FEEDER
MW291
RAD BLDG LIGHTING PANEL LPRW3
MW222
MW221
MW223
45KVA 480-120/208V 3Ø 60 HZ
RADIOCHEM LAB PNL RLP1 3165
OFFICE BLDG LTG PNL LPOB2
MW255
MW254
MW256
LOW BACKG'D COUNT RM PANEL LBCRP1
FUSED DISC NEAR LPOB2 (SPARE)
35 TON RADWASTE LOADING CRANE FEEDER
MW241
RAD BUILDING ELEVATOR FEEDER
MW191
RAD BLDG FLOOR DRAIN SUMP 1H DUPLEX PUMP 1H2
MW121 (3040)
RAD BLDG EQUIP DRAIN SUMP J DUPLEX PUMP J2
MW111 (3040)
RAD BUILDING SUMP 1K DUPLEX PUMP 1K2
MW131 (3040)
WELDING RCPT
COL R-15.7 & 14.4 EL 918'-0"
MW161
EE-DSC-(C-932-CORR)240
480/240
MW330
RECT
COPY MACHINE 3RD FLOOR OB BY LOCKER AREA
EE-DSC-(C-932-CORR)120
H & V CONDENSATE PUMP 1-CP-RW-1B-B
MW5 (3403)
MCC RX FEEDER
MW101
NOTE 3
CHANGE AREA H & V POWER PANEL PP-CH-1
MW202
SPACE FOR FUSED SWITCH
SPACES (3)
WELDING RECPT
ELEV 934'-0" NR ELEVATOR
MW258
RW & RADWASTE AUGMENTED BLDG VENT MONITORS
RMV-RM-30A
RMV-RM-30B
MW341
MW342
BIOCHEMLAB SAMPLING RM HV STARTER (HF-RW-1E)
MW331
EXHAUST FAN 1-EF-RW-1A
MW31 (3047)
DIV II
460V 3Ø 3W MCC W
600A BUS
(RADWASTE BUILDING EL 918'-0")
MCC COMPARTMENT UNIT # - TYPICAL
NEW VERTICAL SECTION #10 FURNISHED BY CONTRACT E69-26. INSTALLED & CONNECTED BY CONTRACT E69-17.
TO 480V SWGR BUS 1G
SG31A SG31B
REACTOR BLDG ELEVATOR FEEDER
MU106
REFUEL PLATFORM FEEDER
MU103
RWCU PRECOAT TANK MIXER
MU118 (3066)
RWCU RESIN FEED TANK MIXER
MU113 (3066)
LTG PNL CRDF
MU120
MU119
30KVA 480-120/208V 3Ø 60HZ
SPACES (9)
REACTOR RECIRC M-G SET 1B OIL CIRC PUMP 1B1
MU61 (GE 730E197BB)
SUPPLY FAN 1-SF-R-1A-B
MU21 (3039)
REACTOR RECIRC M-G SET 1B OIL CIRC PUMP 1B2
MU71 (GE 730E197BB)
EXHAUST FAN 1-EF-R-1B
MU51 (3039)
REACTOR RECIRC M-G SET 1B OIL CIRC PUMP 1B3
MU81 (GE 730E197BB)
EXHAUST FAN 1-EF-R-1D
MU11 (3039)
LTG PNL LPR3G
MU101
SCOOP TUBE POSITIONER 1B VIA TB 1099
MU8X
MU7X
2KVA 480-120V 1Ø
WELDING RCPT'S
COL P-9.3
COL N-6
MU104
MU105
REACTOR BUILDING VENT MONITOR RMV-RM-40
MU114
COL K-10.5
COL K-8.2
MU108
MU109
1/2 TON CRD HOIST H11
MU91
MU117
2 TON JIB CRANE
MU118
COL Q-10.5
COL M-8.6
MU110
MU111
DIV II
460V 3Ø 3W MCC U
600A BUS
(REACTOR BUILDING UPPER EL 958'-3")
TO 480V SWGR BUS 1G
SG36
DRYWELL FLOOR DRAIN SUMP 1F DUPLEX PUMP 1F1
MV51 (GE 791E270)
DRYWELL EQ DRAIN SUMP 1G DUPLEX PUMP 1G1
MV151 (GE 791E270)
DILUTION FAN 1-DF-OG-1B
MV21 (3038)
LTG PNL LPR2G
MV104
MV103
SHIELDING DOOR R113 FEEDER 1.5HP
MV41
WELDING RCPT'S
COLS 8.2 & 7.1
COL N-7.1
MV91
MV92
BOOSTER FAN 1-BF-R-1B
MV71 (3043)
REACTOR WATER CLEANUP RECIRC PUMP 1B
MV31 (GE 791E263)
MOTOR SPACE HEATER PANEL SPR2
MV157
MV156
15KVA 480-120/208V 3Ø 60 HZ
LIGHTING PANEL LPR1G
MV102
MV101
BASEMENT EQUIP DRAIN SUMP 1E DUPLEX PUMP 1E1
MV1 (3040)
RECIRC FAN 1-RF-C-1B
MV131 (3036)
CONDENSATE UNIT DUPLEX PUMP 1-CP-R-1A-1
MV161 (3043)
CONDENSATE UNIT DUPLEX PUMP 1-CP-R-1A-2
MV171 (3043)
FUME HOOD EXHAUST FAN 1-HF-R-1B
MV174
MV173
FUME HOOD EXHAUST FAN 1-HF-R-1A
MV8
MV7
MAIN STEAM TUNNEL FAN 1-FC-R-1KB
MV175 (3039)
SUPPLY FAN 1-SF-C-1A-B
MV141 (3036)
REACTOR WATER CLEANUP PHASE SEPARATOR SLUDGE PUMP
MV111 (GE 791E270)
DIV II
460V 3Ø 3W MCC V
600A BUS
(REACTOR BUILDING LOWER EL 931'-6")
TO 480V SWGR BUS 1F
SF41A SF41B
RAD BLDG FLOOR DRAIN SUMP 1H DUPLEX PUMP 1H1
MP1 (GE 791E270)
FLOOR DRAIN SAMPLE PUMP
MP51 (GE 791E270)
RAD BLDG EQUIP DRAIN SUMP 1J DUPLEX PUMP 1J1
MP11 (GE 791E270)
RAD BLDG SUMP 1K DUPLEX PUMP 1K1
MP21 (GE 791E270)
WASTE SURGE PUMP
MP101 (GE 791E270)
SPACES (2)
BACKWASH AIR BLOWER
MP321 (3043)
WASTE COLLECTION PUMP
MP121 (GE 791E270)
LTG PNL LPRW1
MP345
MP344
SPACE ONLY (2) (FOR FUSE SWITCH)
RADWASTE AUX COND BOOSTER PUMP
MP31 (3066)
WELDING RCPT'S
COL P-14.4 & 15.7
COL R-15.7
MP346
MP347
WASTE SAMPLE PUMP 1A
MP81 (GE 791E270)
WASTE SAMPLE PUMP 1B
MP91 (GE 791E270)
LTG PNL LPRW2
LTG PNL LPRW2A
MP392
MP391
SPARE FUSE SWITCH
CONDENSATE PRECOAT PUMP
MP141 (3043)
CONVEYOR CONTROL PANEL
MP343
HYDRAULIC BALER
MP349
EXHAUST FAN 1-EF-RW-1D
MP191 (3047)
WASTE PRECOAT PUMP
MP171 (DELAVAL FD 2600AW)
CONDENSATE PRECOAT TANK AGITATOR
MP161 (3043)
CONDENSATE UNIT DUPLEX PUMP 1-CP-RW-1A-1
MP261 (3043)
LAB DRAIN PUMP
MP251 (3066)
WASTE SLUDGE PUMP
MP41 (GE 791E270)
CHEMICAL WASTE PUMP
MP111 (GE 791E270)
CONDENSATE UNIT DUPLEX PUMP 1-CP-RW-1A-2
MP271 (3043)
FLOOR DRAIN COLLECTION PUMP
MP131 (GE 791E270)
LAUNDRY DRAIN PUMP 1A (BREAKER SWITCHED TO OFF)
MP61 (GE 791E270)
LAUNDRY DRAIN PUMP 1B (BREAKER SWITCHED TO OFF)
MP71 (GE 791E270)
SEE NOTE 4
CONDENSATE BACKWASH TRANSFER PUMP
MP291 (GE 791E270)
CONDENSATE PHASE SEPARATOR SLUDGE PUMP
MP401 (GE 791E270)
CONDENSATE PHASE SEPARATOR DECANT PUMP
MP311 (GE 791E270)
SPENT RESIN PUMP
MP211 (GE 791E270)
H & V CONDENSATE PUMP 1-CP-RW-1B-A
MP7 (3403)
HOPPER VIBRATORS
MP351 (3035)
MP361 (3035)
MP371 (3035)
MP381 (3035)
MCC RX FEEDER
MP241
SUPPLY FAN 1-SF-RW-1A-B
MP221 (3047)
CONDENSATE DEMIN BACKWASH PUMP
MP331 (3043)
WASTE PRECOAT TANK AGITATOR
MP281 (3066)
FILTERED TANK AGITATOR
MP201 (DELAVAL FD 2600AR)
RESIN FEED TANK AGITATOR
MP276 (3066)
LAB DRAIN TANK 1A AGITATOR
MP181 (3066)
LAB DRAIN TANK 1B AGITATOR
MP180 (3066)
EXHAUST FAN 1-EF-RW-1B
MP151 (3047)
SPACES (5)
SLUDGE TRANSFER PUMP RW-P-TST
CONDENSATE RECIRCULATION PUMP CM-MOT-(CM-P-REC)
MP5 (3046)
DIV I
460V 3Ø 3W MCC P
1200A BUS
(RADWASTE BUILDING EL 877'-6")
NEW VERTICAL SECTION #12 FURNISHED BY CONTRACT E69-26. INSTALLED & CONNECTED BY CONTRACT E69-17.
TO 480V SWGR BUS 1F
SF31A SF31B
LTG PNL LPR2F
LTG PNL LPR3F
MM123
MM122
MM124
30KVA 480-120/208V 3Ø 60 HZ
5 TON RWCU HOIST H12
MM151
WELDING RCPT'S
COL K-9.3
COL M-11.7
MM127
MM128
SERVICE PLATFORM FEEDER
MM141
REACTOR WATER CLEANUP PRECOAT PUMP
MM61 (DELAVAL FD26022Z)
EE-UPS-233MV (SEE DWG 3006, SHEET 5)
PC514
UPS
PC503
SPACE (FOR FUSED SWITCH)
MOTOR SPACE HEATER PANEL SPR3
MM104
MM103
MISC PWR PNL MPR1
MM135
MM129
15KVA 480-120/208V 3Ø 60 HZ
COL N-10.5
COL P-8.2
MM133
MM134
COL K-9.3
COL M-8 & 12.7
MM135
MM136
EXHAUST FAN 1-EF-R-1C
MM11 (3039)
REACTOR RECIRC M-G SET 1A LUBE OIL PUMP 1A1
MM81 (GE 730E197BB)
REC DE-AERATOR PUMP MOT
REC DE-AERATOR SKID MISC POWER
REC DEMIN SKID MISC POWER
.250 KVA 1Ø 480-120V
2 KVA 1Ø 480-120V
MM1 E507 SH 236
REC DEMIN PUMP MOT
SCOOP TUBE POSITIONER 1A VIA TB 1099
MM8X
MM7X
2KVA 480-120V 1Ø
SUPPLY FAN 1-SF-R-1A-A
MM21 (3039)
REACTOR RECIRC M-G SET 1A LUBE OIL PUMP 1A2
MM91 (GE 730E197BB)
EXHAUST FAN 1-EF-R-1A
MM71 (3039)
REACTOR RECIRC M-G SET 1A LUBE OIL PUMP 1A3
MM101 (GE 730E197BB)
100 TON REACTOR BLDG CRANE C2 FEEDER
MM121
DIV I
460V 3Ø 3W MCC M
800A BUS
(REACTOR BUILDING UPPER EL 958'-3")
TO 480V SWGR BUS 1F
SF36
DRYWELL EQUIP DRAIN SUMP 1G DUPLEX PUMP 1G2
MN72 (GE 791E270)
BSMT EQUIP DRAIN SUMP 1E DUPLEX PUMP 1E2
MN71 (3040)
REACTOR BLDG AUX COND BOOSTER PUMP
MN61 (3065)
LTG PNL LPR1F
MN93
MN92
CAR PULLER FEEDER
MN91 (3040)
COL P-10.5
COL K-10.5
MN94
MN95
SPACE (FOR FUSED SW)
BOOSTER FAN 1-BF-R-1A
MN101 (3043)
OFF GAS FILTER BLDG FEEDER
MN111
DRYWELL FLOOR DRAIN SUMP 1F DUPLEX PUMP 1F2
MN131 (GE 791E270)
REACTOR WATER CLEAN-UP PHASE SEPARATOR DECANT PUMP
MN51 (GE 791E270)
EQUIP HANDLING PLATFORM (CRD) 5HP
MN116
MOTOR SPACE HTR PNL SPR1
MN127
MN126
RECIRC FAN 1-RF-C-1A
MN1 (3036)
REACTOR BUILDING FUME HOOD FAN HV-MOT-(HF-R-1C)
MN171 (3046)
SUPPLY FAN 1-SF-C-1A-A
MN21 (3036)
MAINSTEAM TUNNEL FAN 1-FC-R-1KA
MN4 (3039)
DILUTION FAN 1-DF-OG-1A
MN81 (3038)
REACTOR WATER CLEANUP RECIRC PUMP 1A
MN11 (GE 791E263)
SPACES (6)
DIV I
460V 3Ø 3W MCC N
600A BUS
(REACTOR BLDG LOWER EL 931'-6")

FUSE LEGEND:
G1-GOULD TYPE TRS FUSE
B1-BUSSMAN TYPE FRS FUSE

NOTES

1. FOR SYMBOL LIST SEE DWG 3070.
2. FOR MOTOR CONTROLS & THEIR OPERATIONAL FUNCTION, SEE RELATED ELEMENTARY DIAGRAMS.
3. EACH 50G INCLUDES A GROUND FAULT RELAY, A 480-120V XFMR, A TERMINAL STRIP & TWO FUSES. THESE DEVICES ARE LOCATED IN A RELAY COMPARTMENT SEPARATE FROM THE STARTER. REFER TO DRAWING 3042, 3253 & THE ITE DRAWING 85B70008.
4. EQUIPMENT ABANDONED IN PLACE.

FOR PREVIOUS REVISIONS, SEE SUPERSEDED CARDS.

VERSIONS/REVISIONS BY N.P.P.D.

NO.	DESCRIPTION	DFT	DATE	ENG
AV/74	DR-2016-0085 (REMOVE TCC 5116431)	DJB	10/15/16	DRKIEKE
AS/75	DR-2016-0058 (REMOVE TCC 5100779)	DJB	10/15/16	DRKIEKE
AT/76	DR-2016-0058 (REMOVE TCC 5100779)	DJB	10/17/16	DRKIEKE
AX/77	DR-2016-0538 (REMOVE TCC 5153237)	DLR	10/19/16	DRKIEKE
AN/78	DR-2015-0086	PAM	10/25/16	KKKUKER

SIGNIFICANT NUMBER						
GROUP	1	2	3	4	5	6

COOPER NUCLEAR STATION
AUXILIARY ONE LINE DIAGRAM
MOTOR CONTROL CENTERS
M, N, P, U, V, & W

AS BUILT

DRAWN DR	DATE 6-1-94	
CHECKED JAC	DATE 11-8-94	BURNS & ROE
APPROVED WCF	DATE 11-11-94	
FILMED		3005 SH 4

454003880

STATUS: Release
STATUS DATE: 10/25/2016
DS APPROVED: KKKUKER
VER: AN REV: 78 SIZE: F

CADD FILE:
C0014556

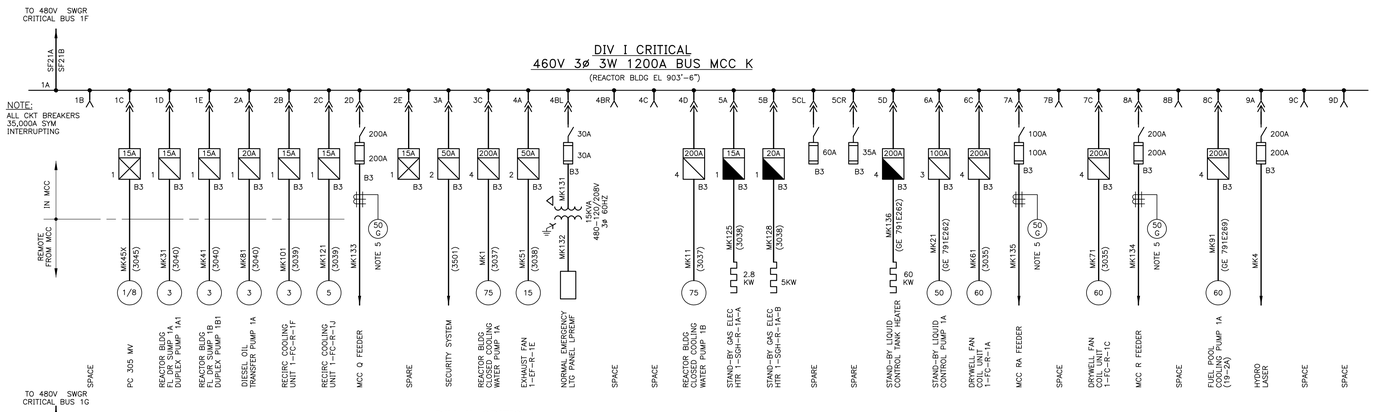

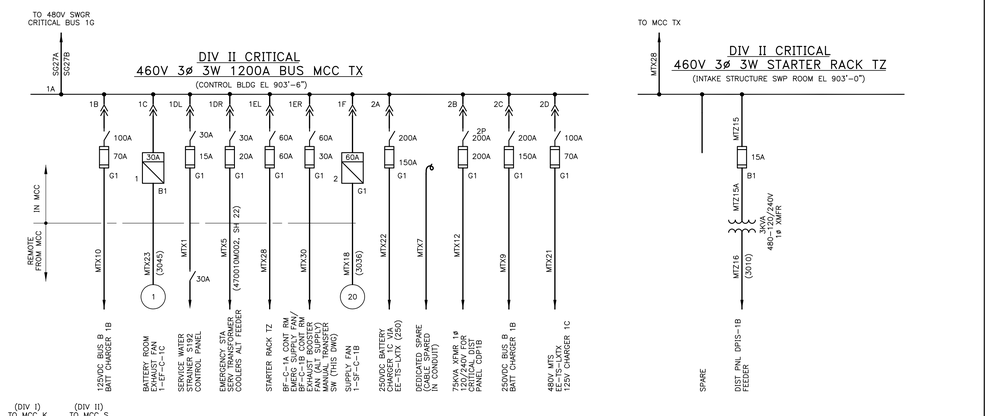

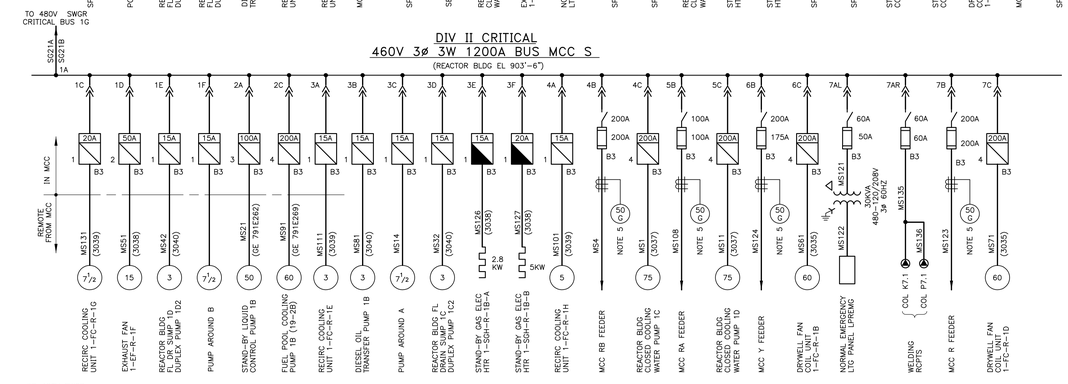

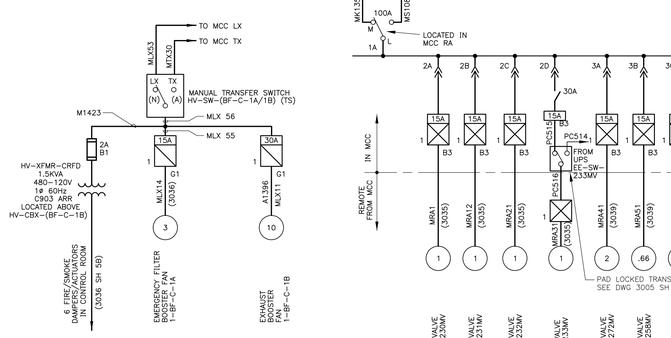

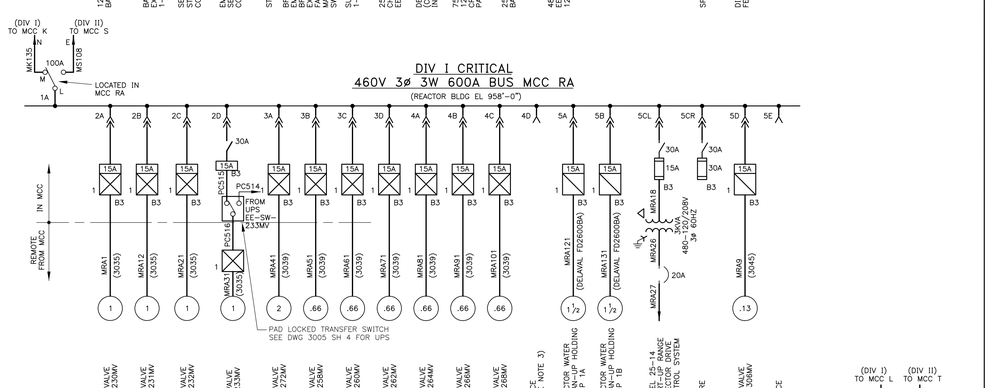

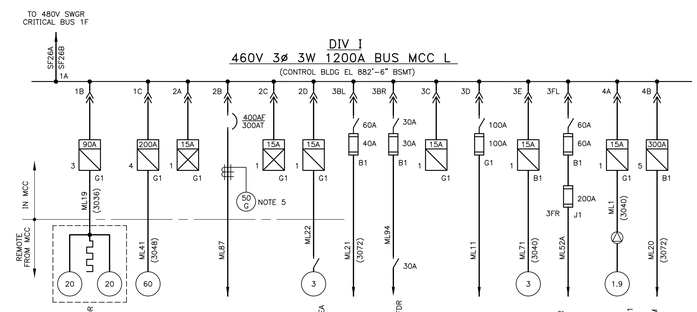

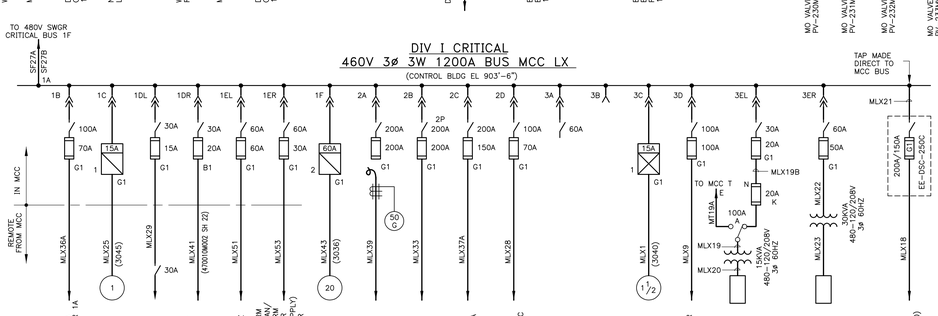

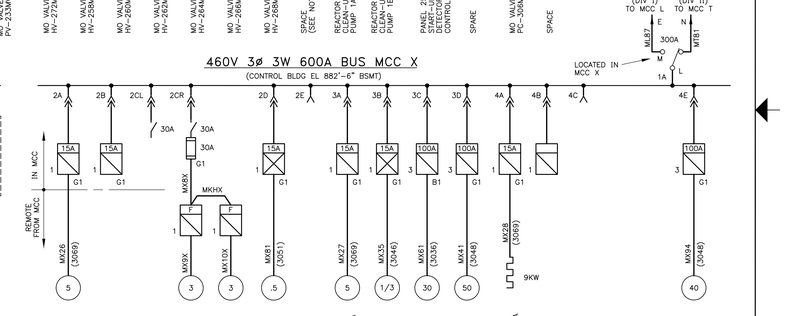

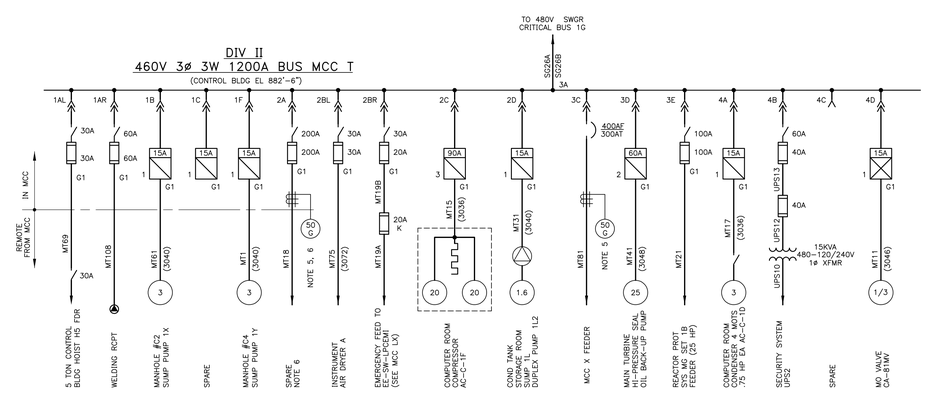

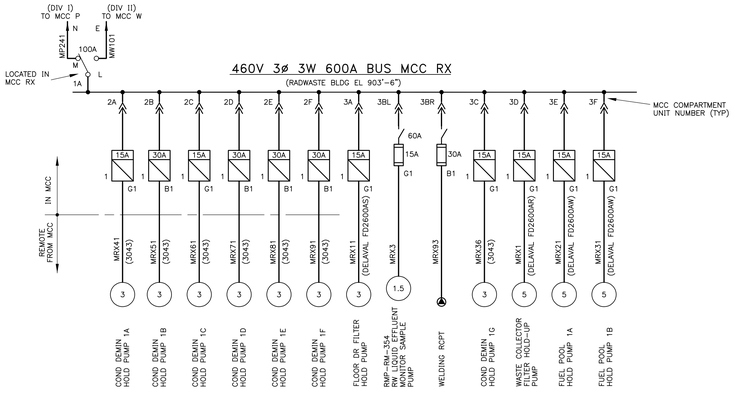

FUSE LEGEND

B1 – BUSSMANN TYPE FRS FUSE
B2 – BUSSMANN TYPE FRN FUSE
B3 – BUSSMANN TYPE LPS FUSE

G1 – GOULD TYPE TRS FUSE

J1 – BUSSMANN TYPE JKS FUSE

K – BUSSMANN TYPE KTK-R FUSE
K1 – BUSSMANN TYPE KTN FUSE
K2 – BUSSMANN TYPE KTS FUSE

NOTES:

1. FOR SYMBOL LIST SEE DWG 3070.
2. FOR MOTOR CONTROLS AND THEIR OPERATIONAL FUNCTION SEE RELATED ELEMENTARY DIAGRAMS.
3. CONTRACT E73-58 TO REMOVE SIZE FVR STATOR FROM MCC RA UNIT 4D AND INSTALL IN MCC Q UNIT 8D.
4. 250V CHARGER 1C WILL NOT OPERATE IN PARALLEL WITH 250V CHARGER 1A OR CHARGER 1B. CHARGER 1C WILL BE USED AS A SPARE WHEN CHARGER 1A OR CHARGER 1B IS TAKEN OUT OF SERVICE.
5. EACH 50G INCLUDES A GROUND FAULT RELAY, A 480-120V XFMR, A TERMINAL STRIP & TWO FUSES. THESE DEVICES ARE LOCATED IN A RELAY COMPARTMENT SEPARATE FROM THE STARTER. REFER TO DWG 3042, 3253 & ITE DWG 85B70008.
6. CONDUIT AND CABLE STILL IN PLACE. LOAD REMOVED BY CED 6031120. 50G RELAY SPARED IN PLACE.

AS BUILT
454003881

STATUS: Release
STATUS DATE: 04/03/2018
DS APPROVED: GLHADLE
VER: AL REV: 90 SIZE: F

FOR PREVIOUS REVISIONS, SEE SUPERSEDED CARDS.

VERSIONS/REVISIONS BY N.P.P.D.

NO.	DESCRIPTION	DFT	DATE	ENG
AK/88	DR-2016-0002	DLR	10/25/16	JDWILSO
AJ/89	DR-2016-0498	DJB	11/17/16	REJENSE
AL/90	DR-2018-0173	DLR	4/3/18	GLHADLE

SIGNIFICANT NUMBER | GROUP 1 2 3 4 5 6

COOPER NUCLEAR STATION
AUXILIARY ONE LINE DIAGRAM
STARTER RACKS LZ AND TZ
MCC'S K, L, LX, RA, RX, S, T, TX, X

DRAWN C.A.	DATE 8/9/94	BURNS & ROE
CHECKED JAC	DATE 10-6-94	
APPROVED WCF	DATE 10-6-94	
FILMED		3006 SH 5

CADD FILE: C0014557

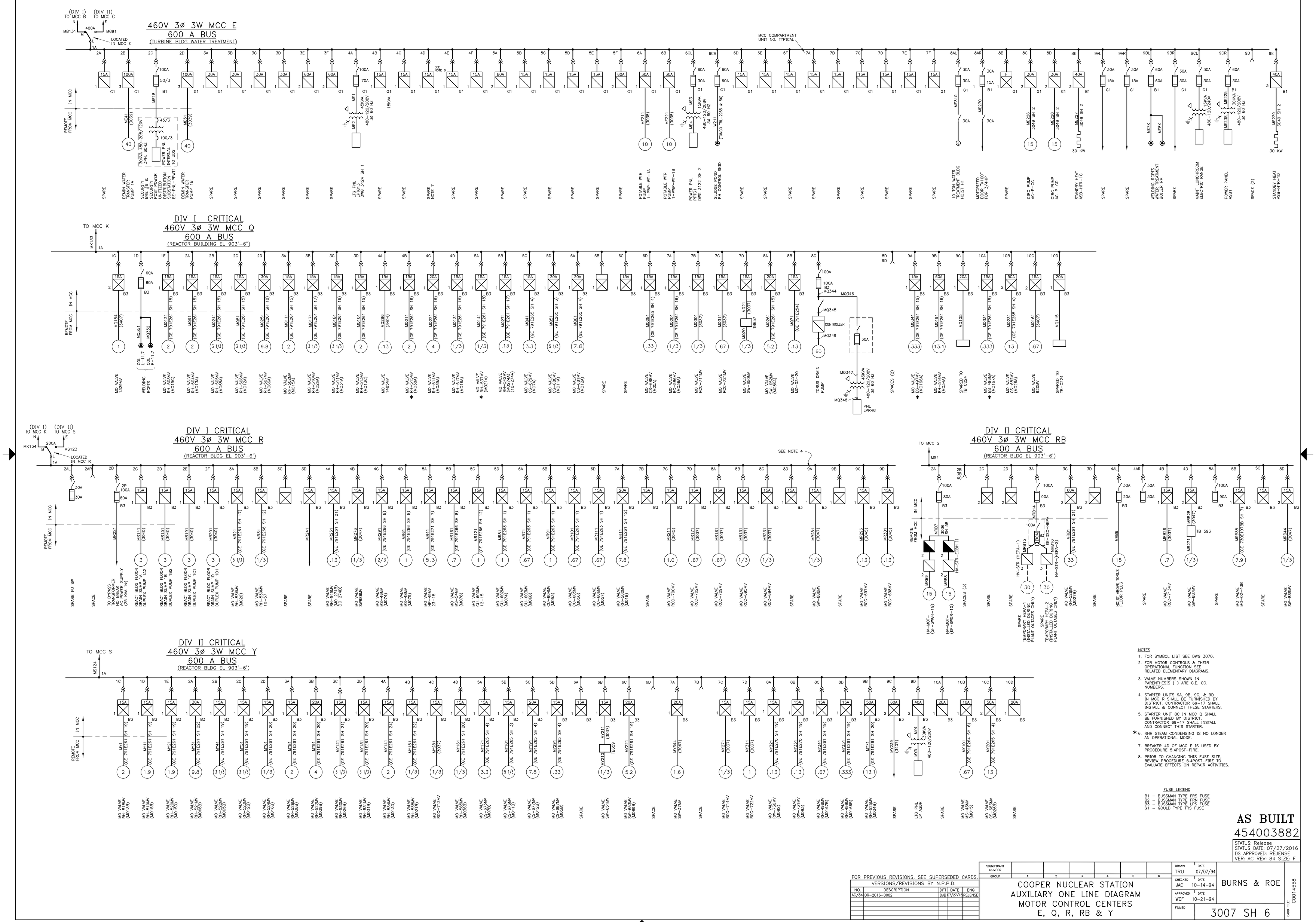

NOTES

1. FOR SYMBOL LIST SEE DWG 3070.
2. FOR MOTOR CONTROLS & THEIR OPERATIONAL FUNCTION SEE RELATED ELEMENTARY DIAGRAMS.
3. VALVE NUMBERS SHOWN IN PARENTHESIS ( ) ARE G.E. CO. NUMBERS.
4. STARTER UNITS 9A, 9B, 9C, & 9D IN MCC R SHALL BE FURNISHED BY DISTRICT. CONTRACTOR 69-17 SHALL INSTALL & CONNECT THESE STARTERS.
5. STARTER UNIT 8C IN MCC Q SHALL BE FURNISHED BY DISTRICT. CONTRACTOR 69-17 SHALL INSTALL AND CONNECT THIS STARTER.
6. * RHR STEAM CONDENSING IS NO LONGER AN OPERATIONAL MODE.
7. BREAKER 4D OF MCC E IS USED BY PROCEDURE 5.4POST-FIRE.
8. PRIOR TO CHANGING THIS FUSE SIZE, REVIEW PROCEDURE 5.4POST-FIRE TO EVALUATE EFFECTS ON REPAIR ACTIVITIES.

FUSE LEGEND

B1 – BUSSMAN TYPE FRS FUSE
B3 – BUSSMAN TYPE FRN FUSE
G1 – GOULD TYPE TRS FUSE

AS BUILT
454003882

STATUS: Release
STATUS DATE: 07/27/2016
DS APPROVED: REJENSE
VER: AC REV: 84 SIZE: F

FOR PREVIOUS REVISIONS, SEE SUPERSEDED CARDS.

VERSIONS/REVISIONS BY N.P.P.D.

NO.	DESCRIPTION	DFT	DATE	ENG
AC/84	DR-2016-0002	DJB	07/27/16	REJENSE

SIGNIFICANT NUMBER | GROUP 1 | 2 | 3 | 4 | 5 | 6

COOPER NUCLEAR STATION
AUXILIARY ONE LINE DIAGRAM
MOTOR CONTROL CENTERS
E, Q, R, RB & Y

DRAWN TRU	DATE 07/07/94	BURNS & ROE
CHECKED JAC	DATE 10-14-94	
APPROVED WCF	DATE 10-21-94	
FILMED		3007 SH 6

CADD FILE: C00145S8

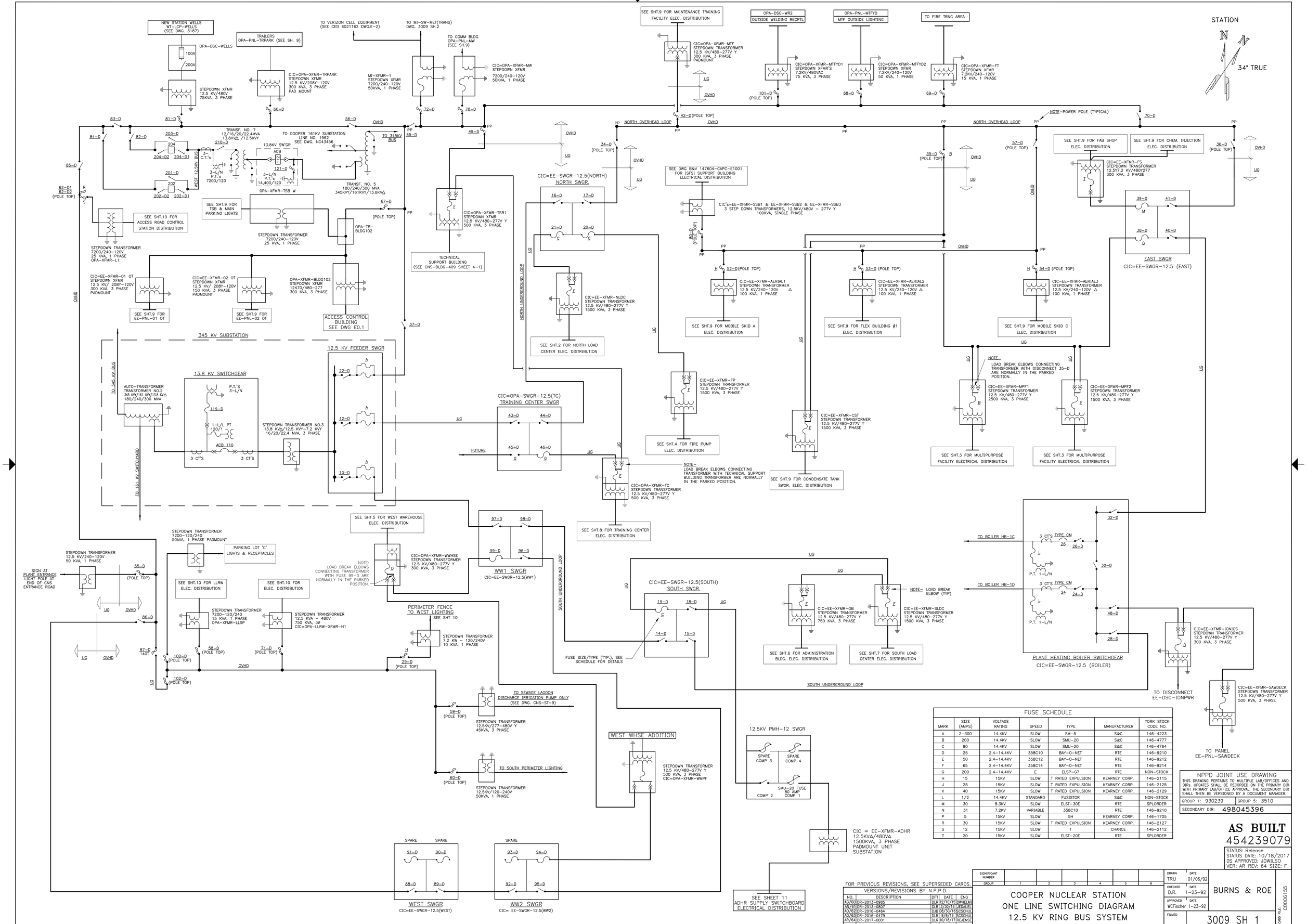

FUSE SCHEDULE

MARK	SIZE (AMPS)	VOLTAGE RATING	SPEED	TYPE	MANUFACTURER	YORK STOCK CODE NO.
A	2-300	14.4KV	SLOW	SM-5	S&C	146-4223
B	200	14.4KV	SLOW	SMU-20	S&C	146-4777
C	80	14.4KV	SLOW	SMU-20	S&C	146-4764
D	25	2.4-14.4KV	358C10	BAY-O-NET	RTE	146-9210
E	50	2.4-14.4KV	358C12	BAY-O-NET	RTE	146-9212
F	65	2.4-14.4KV	358C14	BAY-O-NET	RTE	146-9214
G	200	2.4-14.4KV	E	ELSP-G7	RTE	NON-STOCK
H	15	15KV	SLOW	T RATED EXPULSION	KEARNEY CORP.	146-2115
J	25	15KV	SLOW	T RATED EXPULSION	KEARNEY CORP.	146-2125
K	40	15KV	SLOW	T RATED EXPULSION	KEARNEY CORP.	146-2129
L	1/2	14.4KV	STANDARD	FUSISTOR	S&C	NON-STOCK
M	30	8.3KV	SLOW	ELST-30E	RTE	SPLORDER
N	31	7.2KV	VARIABLE	358C10	RTE	146-9210
P	5	15KV	SLOW	5H	KEARNEY CORP.	146-1705
R	30	15KV	SLOW	T RATED EXPULSION	KEARNEY CORP.	146-2127
S	12	15KV	SLOW	T	CHANCE	146-2112
T	20	15KV	SLOW	ELST-20E	RTE	SPLORDER

FOR PREVIOUS REVISIONS, SEE SUPERSEDED CARDS.

VERSIONS/REVISIONS BY N.P.P.D.

NO.	DESCRIPTION	DFT	DATE	ENG
AG/60	DR-2013-0985	DLR	12/10/15	DWHELMI
AN/61	DR-2013-0807	DLR	3/30/16	JEDAUEL
AQ/62	DR-2016-0464	DJB	08/30/16	SCSCHUL
AQ/63	DR-2016-0479	DLR	9/9/16	SCSCHUL
AR/64	DR-2017-0001	DLR	10/18/17	REJENSE

NPPD JOINT USE DRAWING

THIS DRAWING PERTAINS TO MULTIPLE LAB/OFFICES AND DIRs. UPDATES SHALL BE RECORDED ON THE PRIMARY DIR WITH PRIMARY LAB/OFFICE APPROVAL. THE SECONDARY DIR SHALL THEN BE VERSIONED BY A DOCUMENT MANAGER.

GROUP 1: 930239 | GROUP 5: 3510

SECONDARY DIR: 498045396

AS BUILT

454239079

STATUS: Release
STATUS DATE: 10/18/2017
DS APPROVED: JDWILSO
VER: AR REV: 64 SIZE: F

SIGNIFICANT NUMBER						
GROUP	1	2	3	4	5	6

COOPER NUCLEAR STATION
ONE LINE SWITCHING DIAGRAM
12.5 KV RING BUS SYSTEM

DRAWN TRU	DATE 01/06/92	BURNS & ROE
CHECKED D.R.	DATE 1-23-92	
APPROVED WCFischer	DATE 1-23-92	
FILMED		3009 SH 1

CADD FILE: C00061S5

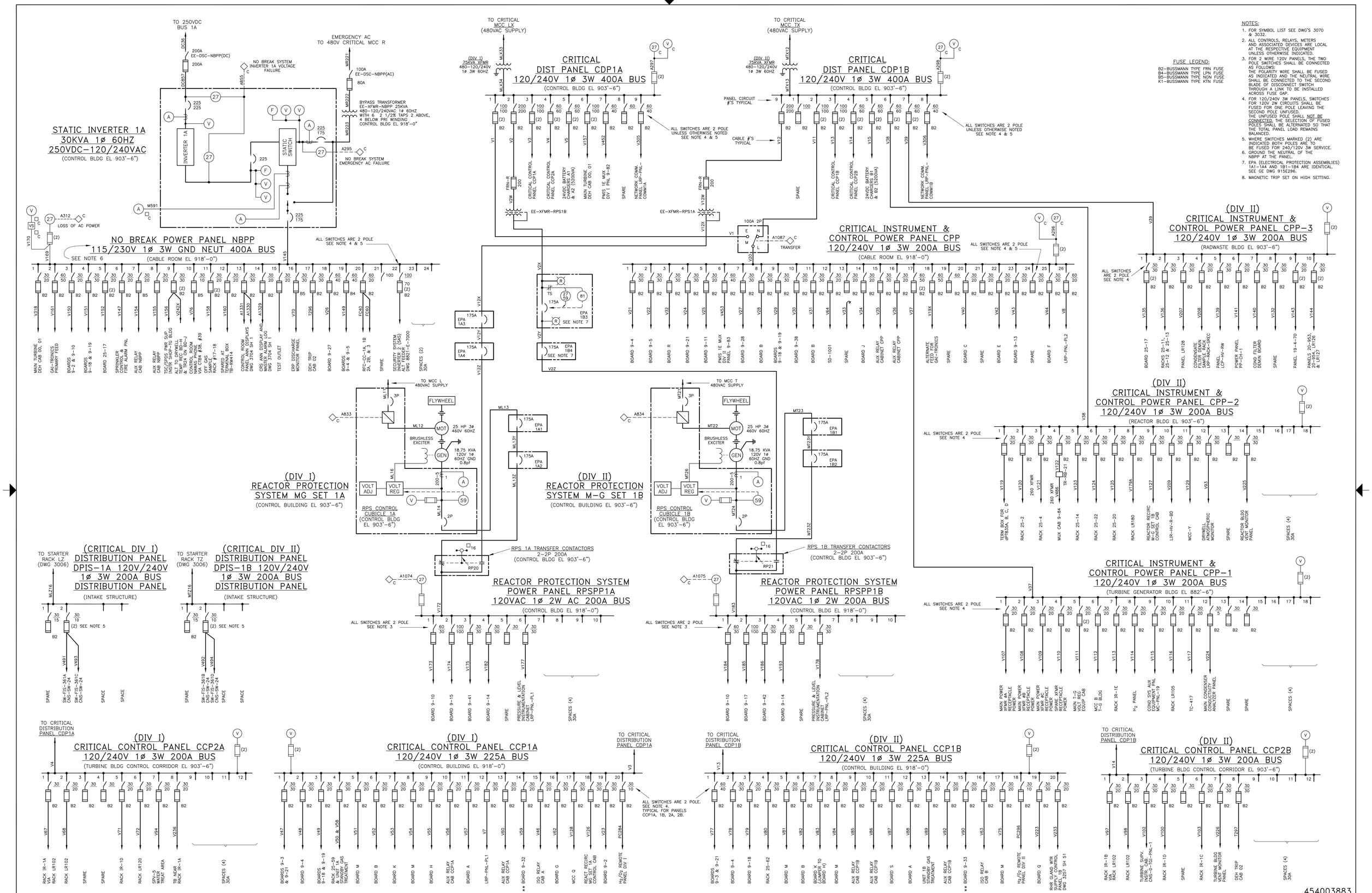

NOTES:

1. FOR SYMBOL LIST SEE DWG'S 3070 & 3032.
2. ALL CONTROLS, RELAYS, METERS AND ASSOCIATED DEVICES ARE LOCAL AT THE RESPECTIVE EQUIPMENT UNLESS OTHERWISE INDICATED.
3. FOR 2 WIRE 120V PANELS, THE TWO POLE SWITCHES SHALL BE CONNECTED AS FOLLOWS:
   THE POLARITY WIRE SHALL BE FUSED AS INDICATED AND THE NEUTRAL WIRE SHALL BE CONNECTED TO THE SECOND BLADE OF DISCONNECT SWITCH THROUGH A LINK TO BE INSTALLED ACROSS FUSE GAP.
4. FOR 120/240V 3W PANELS, SWITCHES FOR 120V 2W CIRCUITS SHALL BE FUSED FOR ONE POLE LEAVING THE SECOND POLE UNFUSED.
   THE UNFUSED POLE SHALL NOT BE CONNECTED. THE SELECTION OF FUSED POLES SHALL BE ALTERNATED SO THAT THE TOTAL PANEL LOAD REMAINS BALANCED.
5. WHERE SWITCHES MARKED (2) ARE INDICATED BOTH POLES ARE TO BE FUSED FOR 240/120V 3W SERVICE.
6. GROUND THE NEUTRAL OF THE NBPP AT THE PANEL.
7. EPA (ELECTRICAL PROTECTION ASSEMBLIES) 1A1–1A4 AND 1B1–1B4 ARE IDENTICAL. SEE GE DWG 915E296.
8. MAGNETIC TRIP SET ON HIGH SETTING.

FUSE LEGEND:

B2–BUSSMANN TYPE FRN FUSE
B4–BUSSMANN TYPE LPN FUSE
B5–BUSSMANN TYPE NON FUSE
K1–BUSSMANN TYPE KTN FUSE

454003883

STATUS: Release FIO
STATUS DATE: 11/17/2016
DS APPROVED: REJENSE
VER: AK REV: 85 SIZE: F

INFORMATION ONLY

FOR PREVIOUS REVISIONS, SEE SUPERSEDED CARDS.

VERSIONS/REVISIONS BY N.P.P.D.

NO.	DESCRIPTION	DFT	DATE	ENG
AJ/84	DR–2016–0058 (REMOVE TCC 5100779)	DLR	10/15/16	BSCSCHUL
AK/85	DR–2016–0498	DJB	11/17/16	REJENSE

SIGNIFICANT NUMBER / GROUP: 1 2 3 4 5 6

COOPER NUCLEAR STATION
VITAL ONE LINE DIAGRAM

DRAWN J.I. DATE 10–29–68
CHECKED J.C. DATE 10–29–68
APPROVED SEE SUPERSEDED CARDS DATE
FILMED

BURNS & ROE

3010 SH 1

CARD FILE CC015093

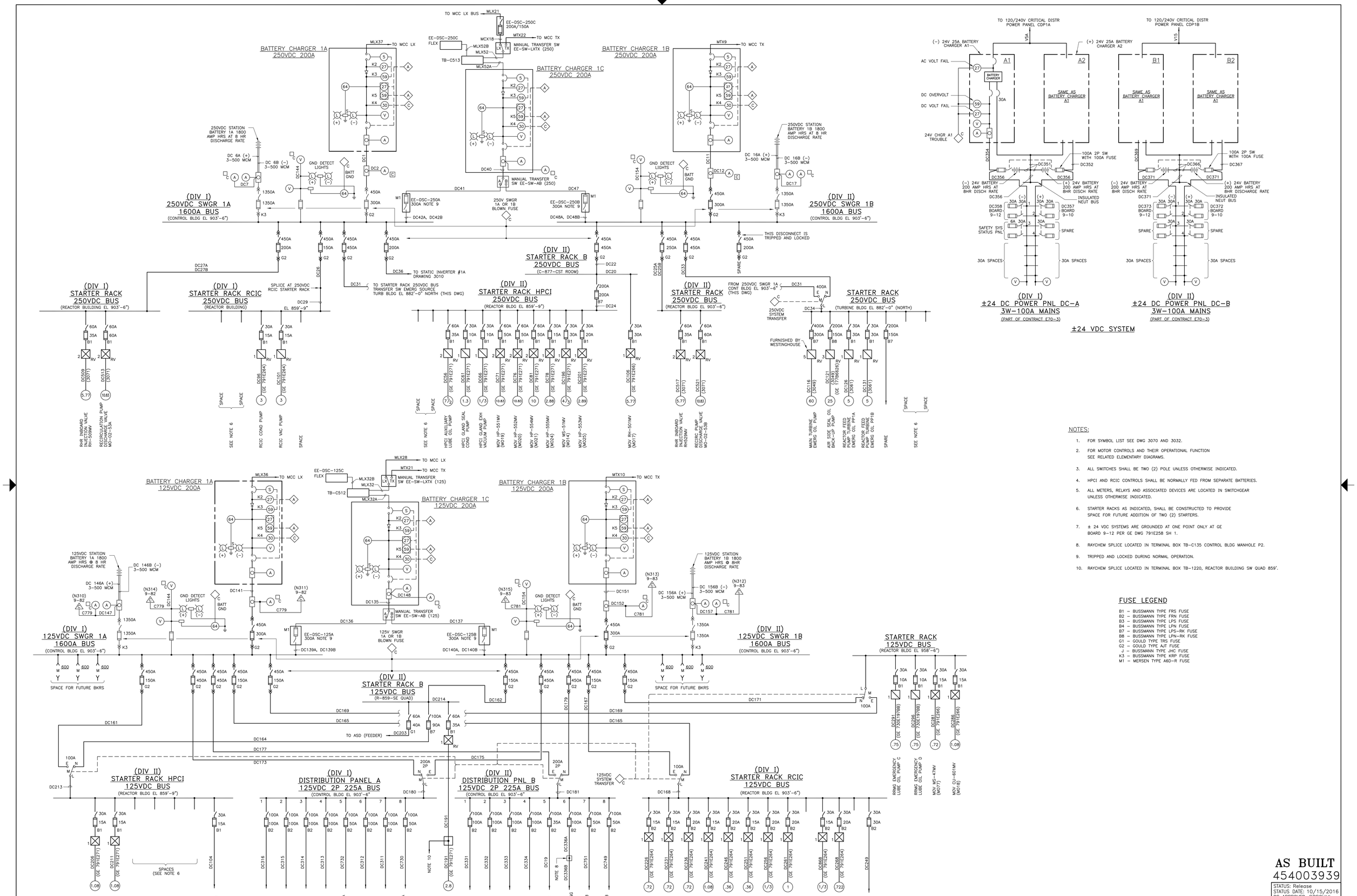

NOTES:

1. FOR SYMBOL LIST SEE DWG 3070 AND 3032.
2. FOR MOTOR CONTROLS AND THEIR OPERATIONAL FUNCTION SEE RELATED ELEMENTARY DIAGRAMS.
3. ALL SWITCHES SHALL BE TWO (2) POLE UNLESS OTHERWISE INDICATED.
4. HPCI AND RCIC CONTROLS SHALL BE NORMALLY FED FROM SEPARATE BATTERIES.
5. ALL METERS, RELAYS AND ASSOCIATED DEVICES ARE LOCATED IN SWITCHGEAR UNLESS OTHERWISE INDICATED.
6. STARTER RACKS AS INDICATED, SHALL BE CONSTRUCTED TO PROVIDE SPACE FOR FUTURE ADDITION OF TWO (2) STARTERS.
7. ± 24 VDC SYSTEMS ARE GROUNDED AT ONE POINT ONLY AT GE BOARD 9-12 PER GE DWG 791E258 SH 1.
8. RAYCHEM SPLICE LOCATED IN TERMINAL BOX TB-C135 CONTROL BLDG MANHOLE P2.
9. TRIPPED AND LOCKED DURING NORMAL OPERATION.
10. RAYCHEM SPLICE LOCATED IN TERMINAL BOX TB-1220, REACTOR BUILDING SW QUAD 859'.

FUSE LEGEND

B1 – BUSSMANN TYPE FRS FUSE
B2 – BUSSMANN TYPE FRN FUSE
B3 – BUSSMANN TYPE LPS FUSE
B4 – BUSSMANN TYPE LPN FUSE
B7 – BUSSMANN TYPE LPS-RK FUSE
B8 – BUSSMANN TYPE LPN-RK FUSE
G1 – GOULD TYPE TRS FUSE
G2 – GOULD TYPE AJT FUSE
J – BUSSMANN TYPE JHC FUSE
K3 – BUSSMANN TYPE KRP FUSE
M1 – MERSEN TYPE A6D-R FUSE

AS BUILT
454003939

STATUS: Release
STATUS DATE: 10/15/2016
DS APPROVED: SCSCHUL
VER: AH REV: 68 SIZE: F

FOR PREVIOUS REVISIONS, SEE SUPERSEDED CARDS.

VERSIONS/REVISIONS BY N.P.P.D.

NO.	DESCRIPTION	DFT	DATE	ENG
AD/64	DR-2014-0177 (DCN 08-0214)	DJB	02/19/14	SWGOCEK
AF/65	DR-2015-0298	DLR	3/11/16	SWGOCEK
AG/66	DR-2015-0298	DLR	3/15/16	SWGOCEK
AG/67	DR-2016-0058 (TCC 5100779)	DJB	10/03/16	GLHADLE
AH/68	DR-2016-0058 (REMOVE TCC 5100779)	DLR	10/15/16	SCSCHUL

SIGNIFICANT NUMBER | GROUP | 1 | 2 | 3 | 4 | 5 | 6

COOPER NUCLEAR STATION
DC ONE LINE DIAGRAM

DRAWN C.A. DATE 7/25/94
CHECKED DATE
APPROVED DATE
SEE SUPERSEDED CARDS
FILMED

BURNS & ROE

CARD FILE C00150G4

3058

ONE LINE & ELEMENTARY DIAGRAMS

GANG OPERATED HORN GAP SWITCH

HIGH VOLTAGE PRIMARY FUSE CUTOUT

60A — DISCONNECT SWITCH – SIZE AS INDICATED (3 POLE UNLESS OTHERWISE NOTED)

GROUNDING SWITCH

3 L.A. — LIGHTNING ARRESTER (NUMBER INDICATES QUANTITY)

CAPACITOR

DISCONNECT LINK

100A N A O E L — TRANSFER SWITCH – SIZE AS INDICATED
A – AUTOMATIC
M – MANUAL
N – NORMAL
E – EMERGENCY
L – LOAD

GROUNDING TRANSFORMER SIZE & RATING AS INDICATED

1 — GROUND DETECTION CURRENT TRANSFORMER – NUMBER INDICATES QUANTITY – RATIO AS NOTED

3 — CURRENT TRANSFORMER – NUMBER INDICATES QUANTITY RATIO AS NOTED

3 — BUSHING TYPE CURRENT TRANSFORMER NUMBER INDICATES QUANTITY RATIO AS NOTED

2 — BUSHING TYPE POTENTIAL DEVICE NUMBER INDICATES QUANTITY RATING AS NOTED

2 — POTENTIAL TRANSFORMER NUMBER INDICATES QUANTITY RATING AS NOTED

POWER TRANSFORMER SIZE & RATING AS NOTED (NUMBER OF WINDINGS AS SHOWN)

MEDIUM OR HIGH VOLTAGE DRAWOUT TYPE ELECTRICALLY OPERATED CIRCUIT BREAKER, INTERRUPTING CAPACITY, SIZE & VOLTAGE AS NOTED

AF AT U — AIR CIRCUIT BREAKER DRAWOUT TYPE ELECTRICALLY OPERATED, MAGNETIC OVERCURRENT TRIP – CURRENT RATING & INTERRUPTING CAPACITY AS NOTED
AIC = AMP INTERRUPTING CAPACITY
AF = AMP FRAME
AT = AMP TRIP
U = UNDERVOLTAGE ATTACHMENTS
M = MANUALLY OPERATED

AIR CIRCUIT BREAKER 3 POLE UNLESS OTHERWISE NOTED

GROUND CONNECTION

DRAWOUT DISCONNECT DEVICE

1 — MAGNETIC STARTER WITH THERMAL OVERLOADS, SINGLE SPEED, NON-REVERSING FULL VOLTAGE – NUMBER INDICATES NEMA SIZE (SYMBOL WITH "RV" INDICATES REDUCED VOLTAGE)

1 — MAGNETIC STARTER WITH THERMAL OVERLOADS, SINGLE SPEED, REVERSING FULL VOLTAGE – NUMBER INDICATES NEMA SIZE (SYMBOL WITH "RV" INDICATES REDUCED VOLTAGE)

2 2S — MAGNETIC STARTER WITH THERMAL OVERLOADS, 2S=MULTI SPEED NON-REVERSING, FULL VOLTAGE NUMBER INDICATES NEMA SIZE

F 2 — THIS SYMBOL ABOVE STARTER OR CONTACTOR INDICATES COMBINATION STARTER OR CONTACTOR
F – INDICATES FUSED DISC SWITCH & FUSE
B – INDICATES CIRCUIT BREAKER
S – INDICATES UNFUSED DISC SWITCH

1 — MAGNETIC CONTACTOR NUMBER INDICATES NEMA SIZE

NANUAL MOTOR STARTER, 1 POLE WITH THERMAL OVERLOAD

GENERATOR SIZE & RATING AS NOTED

15 — MOTOR – NUMBER INDICATES HORSEPOWER

10 HP MOT / 7½ KW GEN — MOTOR – GENERATOR SET

1750 — SYNCHRONOUS MOTOR – NUMBER INDICATES HORSEPOWER

EXC — EXCITER

BATTERY

HEATER

FUSE

SHUNT

RESISTOR

RTD — RESISTANCE TEMPERATURE DETECTOR

INTERLOCKS:
E – ELECTRICAL
K – KEY
M – MECHANICAL

NO — NORMALLY OPEN
NC — NORMALLY CLOSED

CONTROL SWITCH WITH INDICATING LIGHTS

START – STOP MAINTAINED CONTACT PUSH BUTTON

START – STOP MAINTAINED CONTACT PUSH BUTTON WITH INDICATING LIGHTS

START – STOP MOMENTARY CONTACT PUSH BUTTON

T — START – STOP MOMENTARY CONTACT PUSH BUTTON WITH INDICATING LIGHTS
T = TEST

INDICATING LIGHTS

SELECTOR SWITCH WITH INDICATING LIGHTS

STOP LOCK-OUT PUSH BUTTON

PERMISSIVE SWITCH WITH INDICATING LIGHTS

TS — CONTROL DEVICE: TYPE AS NOTED
TS – TEMP SW CONTACT
LVS – LEVEL SW CONTACT
PS – PRESS SW CONTACT
FS – FLOAT SW CONTACT
LS – LIMIT SW CONTACT
FR – FIRE RELAY CONTACT
T – THERMOSTAT
PE – PNEU-ELEC RELAY
EP – ELEC-PHEU SW
H – HUMIDISTAT

A — METERS & INSTRUMENTS
PREFIX "R" DENOTES RECORDING TYPE, NUMBER NEXT TO SYMBOL DENOTES QUANTITY IF MORE THAN ONE IS REQD

A AMMETER
V VOLTMETER
W WATTMETER
VAR VARMETER
WH WATTHOUR METER
F FREQUENCY METER
WHD DEMAND WATTHOUR METER
SY SYNCHROSCOPE
PF POWER FACTOR METER
THC THERMAL CONVERTER
TR TEMP RECORDER
TI TEMP INDICATOR
TACH TACHOMETER
TM TRANSMITTER

AS — SWITCHES
AS–AMMETER SW
VS–VOLTMETER SW
SYN SW–SYNCHRO SW
HS–HAND SW
SS–SEL SW
CS–CONTROL SW
TS–TEST SWITCH

TRD — TRANSDUCER

VA — VOLTAGE ADJUSTING RHEOSTAT

–TRANSFORMER CONNECTIONS–

3ø, 3W DELTA

3ø, OPEN DELTA

SINGLE PHASE

3ø, WYE OR STAR

86 — RELAYS & DEVICES
NUMBER NEXT TO SYMBOL DENOTES QUANTITY IF MORE THAN ONE IS REQUIRED

2 TIME DELAY CLOSING RELAY
21 DISTANCE
25 SYNCHRONIZING CHECK
27 UNDERVOLTAGE
30 ANNUN ALARM
32 DIRECTIONAL POWER RELAY
40 LOSS OF FIELD
46 NEGATIVE SEQUENCE
48 INCOMPLETE SEQUENCE
49 THERMAL OVERLOAD RELAY
50 INSTANT OVERCURRENT
50–1 INSTANT ELEMENT SHORT CIRC TRIP
50–2 INSTANT ELEMENT LOCKED ROTOR TRIP
50/51 OVERCURR–INSTANT & TIME DELAY
51 AC OVERCURRENT–TIME DELAY
55 POWER FACTOR
59 OVERVOLTAGE
60 VOLTAGE BALANCE
62 TIME DELAY OPENING RELAY
63 PRESSURE
64 GROUND PROTECTIVE
67 AC DIRECTIONAL OVERCURRENT
74 ALARM AUX RELAY
76 DC OVEREXCITATION
81 FREQUENCY
86 LOCKOUT
87 DIFFERENTIAL

CR CONTROL RELAY
AR AUXILIARY RELAY
LR LATCHING RELAY (LATCH OR UNLATCH COIL AS SHOWN)

TDR TIME DELAY RELAY
COIL: TDPU – TIME DELAY PICK UP
TDDO – TIME DELAY DROP OUT
CONTACT TDCAE – TIME DELAY CLOSE AFTER ENERGIZATION
TDOAE – TIME DELAY OPEN AFTER ENERGIZATION
TDCAD – TIME DELAY CLOSE AFTER DE–ENERGIZATION
TDOAD – TIME DELAY OPEN AFTER DE–ENERGIZATION

DEVICES

20 ELEC OPER VALVE
33 POSITION OR LIMIT SW
41 FIELD CIRCUIT BREAKER
42 MOTOR STARTER
52 AC CIRCUIT BREAKER
71 LEVEL SWITCH
72 DC CIRCUIT BREAKER
80 FLOW SWITCH

RELAY OR DEVICE "SUFFIX LETTERS"

F FIELD
G GROUND
N NEUTRAL
TELM TELEMETRERING
V VOLTAGE
X AUXILIARY
GN GENERATOR DIFFERENTIAL
GD GENERATOR DISTANCE
GF GENERATOR FIELD
GG GENERATOR GROUND
GNS GENERATOR NEG SEQUENCE
GT GENERATOR TRANSFORMER
GOE GENERATOR OVER EXCITATION
L 345KV LINE
TGP MAIN TRANSFORMER GAS
TN MAIN TRANSFORMER NEUTRAL
LGT LINE GEN TRANSF OVERALL
NGP NORM STA SERV TRANSF GAS
NT NORM STA SERV TRANSF
SGP START UP STA SERV TRANSF GAS
ST START UP STA SERV TRANSF
STL 161KV LINE
EGP EMERG TRANSF GAS
T TURBINE
IAS 4160V SWGR START–UP BKR 1A
IAN 4160V SWGR NORMAL BKR 1A
IBS 4160V SWGR START–UP BKR 1B
IBN 4160V SWGR NORMAL BKR 1B
ICS 4160V SWGR START–UP BKR 1C
ICN 4160V SWGR NORMAL BKR 1C
IDS 4160V SWGR START–UP BKR 1D
IDN 4160V SWGR NORMAL BKR 1D
IFS 4160V SWGR EMERG BKR 1F
IGS 4160V SWGR EMERG BKR 1G
DG1 DIESEL GEN NO 1
DG2 DIESEL GEN NO 2
IFE DIESEL GEN NO 1 BKR 1FE
IGE DIESEL GEN NO 2 BKR 1GE
NB 4160V SWGR NORMAL SUPPLY
SB 4160V SWGR START–UP SUPPLY

SOLENOID

WIRE TERMINAL POINT

WIRE CONNECTION POINT

R — INDICATING LIGHT WITH DROPPING RESISTOR
R–RED
G–GREEN
W–WHITE
B–BLUE
C–CLEAR
A–AMBER

R — INDICATING LIGHT

TEST JACK CONNECTION POINT

PUSH BUTTON–MOMENTARY CONTACT NORMALLY CLOSED

PUSH BUTTON–MOMENTARY CONTACT NORMALLY OPEN

PUSH BUTTON–MAINTAINED CONTACT

O L — MANUAL MOTOR STARTER – SINGLE POLE WITH THERMAL OVERLOAD

OL — OVERLOADS (THREE LINE DIAGRAM)

BLOCKING DIODE

OL — OVERLOADS

CONTACT – NORMALLY OPEN (NO)

CONTACT – NORMALLY CLOSED (NC)

BA — BELL ALARM CONTACT (OPEN OR CLOSED AS INDICATED)

52A — BREAKER CONTACT (OPEN WHEN BREAKER IS OPEN)

52B — BREAKER CONTACT (CLOSED WHEN BREAKER IS OPEN)

52 TCS — LOCAL BREAKER TEST CONTROL SWITCH (CONTACTS AS INDICATED IN CONTROL SWITCH DEVELOPMENT)

52H IN — BREAKER POSITION SWITCH (CLOSED WHEN BREAKER IS IN OPERATING POSITION)

52H OUT — BREAKER POSITION SWITCH (OPEN WHEN BREAKER IS IN OPERATING POSITION)

CS 2 — CONTROL SWITCH, CONTACTS AS INDICATED IN CONTROL SWITCH DEVELOPMENT

CS T C — CONTROL SWITCH TEST, LOCATED AT 4160V SWGR
C – INDICATES CLOSED POSITION
T – INDICATES TRIP POSITION

MULTIPLE CONDUCTOR – SHIELDED CABLE (TWO CONDUCTOR SHOWN)

MULTIPLE CONDUCTOR – SHIELDED CABLE – SHIELD GROUNDED (TWO CONDUCTOR SHOWN)

SIGNAL CONNECTOR (MULTI CONDUCTOR)

TWISTED SHIELDED PAIR CONDUCTORS

POWER, GROUNDING, & LIGHTING PLANS

LIGHTING PANEL (SEE LIGHTING PANEL SCHEDULES)

PANEL – MISCELLANEOUS AS NOTED ON PLAN DWGS

POWER PANEL

MOTOR HORIZONTALLY MOUNTED

MOTOR – VERTICALLY MOUNTED

CONTACTOR

MOTOR STARTER OR CONTROLLER

TRANSFER SWITCH–SIZE & TYPE AS NOTED

DISCONNECT OR SAFETY SWITCH SIZE AS NOTED

TRANSFORMER – DRAW TO SCALE SIZE & RATING AS NOTED

MOTOR OPERATED VALVE

AV — AIR OPERATED VALVE

LOCAL PUSHBUTTON STATION OR LOCAL CONTROL STATION, TYPE AS NOTED

OL SEL — SINGLE POLE MANUAL MOTOR STARTER WITH THERMAL OVERLOAD
SEL = SELECTOR SWITCH

J — JUNCTION BOX
TB – TERMINAL BOX
PB – PULL BOX

RIGID CONDUIT – RUN EXPOSED

RIGID CONDUIT – RUN CONCEALED

CONDUIT OR CABLE TURNING UP OR TOWARDS OBSERVER

CONDUIT OR CABLE TURNING DOWN OR AWAY FROM OBSERVER

DIRECT BURIAL CABLE

FLEXIBLE CONDUIT

CONDUIT "SEALING" FITTING

HORZ VERT — UNIT HEATER

TS — CONTROL DEVICES: TYPE AS NOTED
TS – TEMP SW
SV – SOLENOID VALVE
LVS – LEVEL SWITCH
PS – PRESSURE SWITCH
FS – FLOAT SWITCH
LS – LIMIT SWITCH
SS – SELECTOR SWITCH
CS – CONTROL SWITCH
PMS – PERMISSIVE SW
RTD – RESIST TEMP DETEC
T – THERMOSTAT
TE – TEMP ELEMENT
PE – PNEU–ELECT RELAY
SP – ELECT–PNEU SWITCH
T/C – THERMOCOUPLE
H – HUMIDISTAT
FT – FLOW TRANSFMITTER
PT – PRESSURE TRANS
LT – LEVEL TRANS
FI – FLOW INDICATOR
FLS – FLOW SWITCH
A – ALTERNATOR
SD – SMOKE DETECT
V – VALVE

CABLE TRAY OR CABLE LADDER (SIZE & ELEVATION AS NOTED ON PLAN DWGS)

IG — INSTRUMENT GROUND CABLE

G — GROUND CABLE – RUN EXPOSED

G — GROUND CABLE – RUN CONCEALED OR BELOW GRADE

GROUND ROD 5/8" DIA x 20'–0" LONG COPPER WELD

GROUND CONNECTION "THERMO PROCESS" WELD "CADWELD" OR APPROVED EQUAL

GROUND CONNECTION – PRESSURE TYPE SOLDERLESS CONNECTOR

ARC — INDICATES AUXILIARY RELAY CABINET

INDICATES LOCAL DEVICE

INDICATES LOCAL DEVICE ON LOCAL PANEL

B — INDICATES EQUIPMENT LOCATED AT BENCHBOARD LETTER OR NUMBER DESIGNATION AS SHOWN

40–27 — INDICATES EQUIPMENT LOCATED AT CABINET NUMBER DESIGNATION AS SHOWN

F — INDICATES EQUIPMENT LOCATED AT VERTICAL BOARD, LETTER OR NUMBER DESIGNATION AS SHOWN

40–11 — INDICATES EQUIPMENT LOCATED AT COMPUTER EQUIPMENT DESK, LETTER OR NUMBER DESIGNATION AS SHOWN

C — INDICATES ANNUNCIATION – LETTER DENOTES BOARD OR PANEL LOCATION

3 A 2–40 10'–0" — "A" INDICATES FIXTURE TYPE
"2–40" INDICATES NO. & WATTAGE OF LAMPS
"3" INDICATES NO. OF FIXTURES
10'–0" INDICATES MOUNTING HEIGHT

CEILING MTD A C–2 — WALL MTD A — INCANDESCENT OR MERCURTY LTG FIXTURE
"A" INDICATES FIXTURE TYPE
"C–2" INDICATES LTG PNL "C", CIRCUIT 2
(SMALL CIRCLE FOR INDIVIDUAL IDENTIFICATION)

EXIT LIGHTING FIXTURE

FLUORESCENT LIGHTING FIXTURE

BARE LAMP FLUORESCENT STRIP

STREET LIGHTING FIXTURE

FLOODLIGHT FIXTURE

EMERGENCY LIGHTING UNIT AC/DC

EMERGENCY LIGHTING REMOTE LAMP

GOOSENECK LIGHING STANCHION AND FIXTURE

REMOTE LAMP MOUTNED ABOVE EMERGENCY LIGHTING UNIT

a P 3 — SWITCH – SINGLE POLE
120V 20A TOGGLE
a – INDICATES ASSOCIATED CONTROLLED FIXTURES
3 – INDICATES 3 WAY SWITCH
P – INDICATES SWITCH WITH PILOT LIGHT

CKTS LP9,11,15 4#12 — HOME RUN TO PANELBOARD – ALL UNMARKED CONDUITS ARE 3/4" IN SIZE AND CONTAIN 2#12 UNLESS OTHERWISE NOTED

SWITCH & SINGLE CONVENIENCE RECEPTACLE COMBINATION

SWITCH & DUPLEX CONVENIENCE RECEPTACLE COMBINATION 20A, 125VAC, GE 5951–1 OR EQUAL

SINGLE RECEPTACLE, CONVENIENCE, 2P 3W 15A 125V HUBBELL TYPE 5261 OR APPVD EQUAL

DUPLEX RECEPTACLE, CONVENIENCE, 2P 3W 15A 125V HUBBELL TYPE 5262 OR APPVD EQUAL

CR — DUPLEX RECEPTACLE, CONVENIENCE, 2P 3W 15A 125V – "CR" INDICATES CORROSION RESISTANCE. HUBBELL TYPE 52CM62 WITH 52CM08 CAP OR APPVD EQUAL

R — DUPLEX RECEPTACLE, CONVENIENCE, 2P 3W 15A 125V HUBBELL TYPE 52621 OR APPVD EQUAL – "R" INDICATES REGULATED VOLTAGE

SINGLE RECEPTACLE 2P 3W GROUNDING 20A 250V NEMA 6–20R, HUBBELL TYPE 5461 WITH SUPER STAINLESS PLATE HUBBELL 93091 OR APPVD EQUAL

POWER RECEPTACLE 3W 4P 60A 600VAC CROUSE–HINDS TYPE "AREA" CAT NO. AREA6425 OR APPVD EQUAL

POWER RECEPTACLE 3W 4P 30A 600VAC CROUSE–HINDS TYPE "ARE" CAT NO. ARE3423 OR APPVD EQUAL

PLUG–IN STRIP – TYPE AS NOTED ON DWGS

CEILING MTD — WALL MTD

FN — FAN OUTLET

CK — CLOCK OUTLET

RL — REELITE

DC — DROP CORD

P — PORCELAIN LAMP HOLDER (PC INDICATES PULL CHAIN)

OUTLET BOX

SL — STROBE LIGHT

FIRE ALARM & COMMUNCATION PLANS

TS — TELEPHONE SWITCHBOARD

PUBLIC TELEPHONE CO. TELEPHONE WITH ACCESS TO PUBLIC EXCHANGE, DESK TYPE

PUBLIC TELEPHONE IN FULL BOOTH

D — INDUSTRIAL TYPE TELEPHONE
D = DESK SET
W = WALL SET
WP = WEATHERPROOF WALL SET

SOUND POWERED TELEPHONE SET

S.P. — JACK FOR SOUND POWERED TELEPHONE

T — OUTLET FOR PLUG–IN PORTABLE INDUSTRIAL TELEPHONE

LOUDSPEAKER, HORN TYPE, SINGLE UNIT

LOUDSPEAKER, SPECIAL TYPE

LOUDSPEAKER, OFFICE TYPE WITH VOLUME CONTROL

TWO–WAY INTERCOM SET

MICROPHONE (RADWASTE AREA)

TV R — CLOSED CIRCUIT TELEVISION RECEIVER

TV C — CLOSED CIRCUIT TELEVISION TRANSMITTER & CAMERA

ABBREVIATIONS

TRANSF TRANSFORMER
SWGR SWITCHGEAR
MCC MOTOR CONTROL CENTER
PDP POWER DISTRIBUTION PANEL
LDP LIGHT DISTRIBUTION PANEL
PP POWER PANEL
LP LIGHTING PANEL
GND GROUND
CND CONDUIT
PT POTENTIAL TRANSFORMER
CT CURRENT TRANSFORMER
POS(+) POSITIVE
NEG(–) NEGATIVE
RP RELAY PANEL

EP EXPLOSION PROOF
WP WEATHER PROOF
VT VAPOR TIGHT
DT DUST TIGHT
WT WATER TIGHT (SUBMERSIBLE)
EC EMPTY CONDUIT
DP DRIP PROOF

POLE LINE & UNDERGROUND DISTRIBUTION PLANS

35–5 — EXISTING POLE LENGTH & CLASS AS NOTED

35–5 — NEW POLE LENGTH & CLASS AS NOTED

35–5–6M — POLE WITH DOWN GUY & ANCHOR–LENGTH & CLASS & STRENGTH OF GUY IN POUNDS AS NOTED

35–5–6M — POLE WITH STREET LIGHTING FIXTURE LENGTH & CLASS AS NOTED

1 — SINGLE PHASE TRANSFORMER SIZE & RATING AS NOTED

3 — THREE PHASE TRANSFORMER SIZE & RATING AS NOTED

STREET LIGHTING REGULATOR RATING AS NOTED

SECTIONALIZING SWITCH–MOUNTED ON CROSSARM – NORMALLY OPEN

SECTIONALIZING SWITCH–MOUNTED ON CROSSARM – NORMALLY CLOSED

POLE TOP SWITCH

L.A. — LIGHTING ARRESTER IN EACH PHASE WIRE

3#2 — PRIMARY LINE – NO. & SIZE OF WIRE AS NOTED

#8 — SERIES STREET LTG CKT 1/C OF SIZE NOTED

3#2 — 3ø SECONDARY LINE – NO. & SIZE OF WIRE AS NOTED

1ø SECONDARY LINE – NO. & SIZE OF WIRE AS NOTED

CONDUCTOR DEAD END

MH# — MANHOLE

HH# — HANDHOLE

TOP OF DUCTBANK (ELEV AS NOTED)

INDICATES NUMBER & ARRGT OF DUCTS IN DUCTBANK

INDICATES ℄ OF DUCTBANK (LOCATE WITH DIMENSIONS OR CO–ORDINATE NUMBERS)

ARROW INDICATES DIRECTION OF DUCTBANK TOWARDS LOW POINT

NOTES

1. FOR ADDITIONAL SYMBOLS RELATED TO BENCHBOARD & CABINET DESIGNATIONS SEE DWG 3032.

AS BUILT
454003947
STATUS: Release
STATUS DATE: 01/15/2015
DS APPROVED: SCSCHUL
VER: AE REV: 13 SIZE: F

FOR PREVIOUS REVISIONS, SEE SUPERSEDED CARDS

VERSIONS/REVISIONS BY N.P.P.D.

NO.	DESCRIPTION	DFT	DATE	ENG
AB/11	DR–2013–0591	DJB	09/30/13	EMNELSO
AD/12	DR–2014–0413	DJB	09/23/14	BDSETOL
AE/13	DR–2015–0002	DLR	1/15/15	SCSCHUL

SIGNIFICANT NUMBER | GROUP 1 2 3 4 5 6

DRAWN RGA DATE 8/18/05
CHECKED DATE
APPROVED DATE
SEE SUPERSEDED CARDS
FILMED

COOPER NUCLEAR STATION
ELECTRICAL
SYMBOL LIST

BURNS & ROE

3070

CADD FILE: C00532207

REVISIONS

NO.

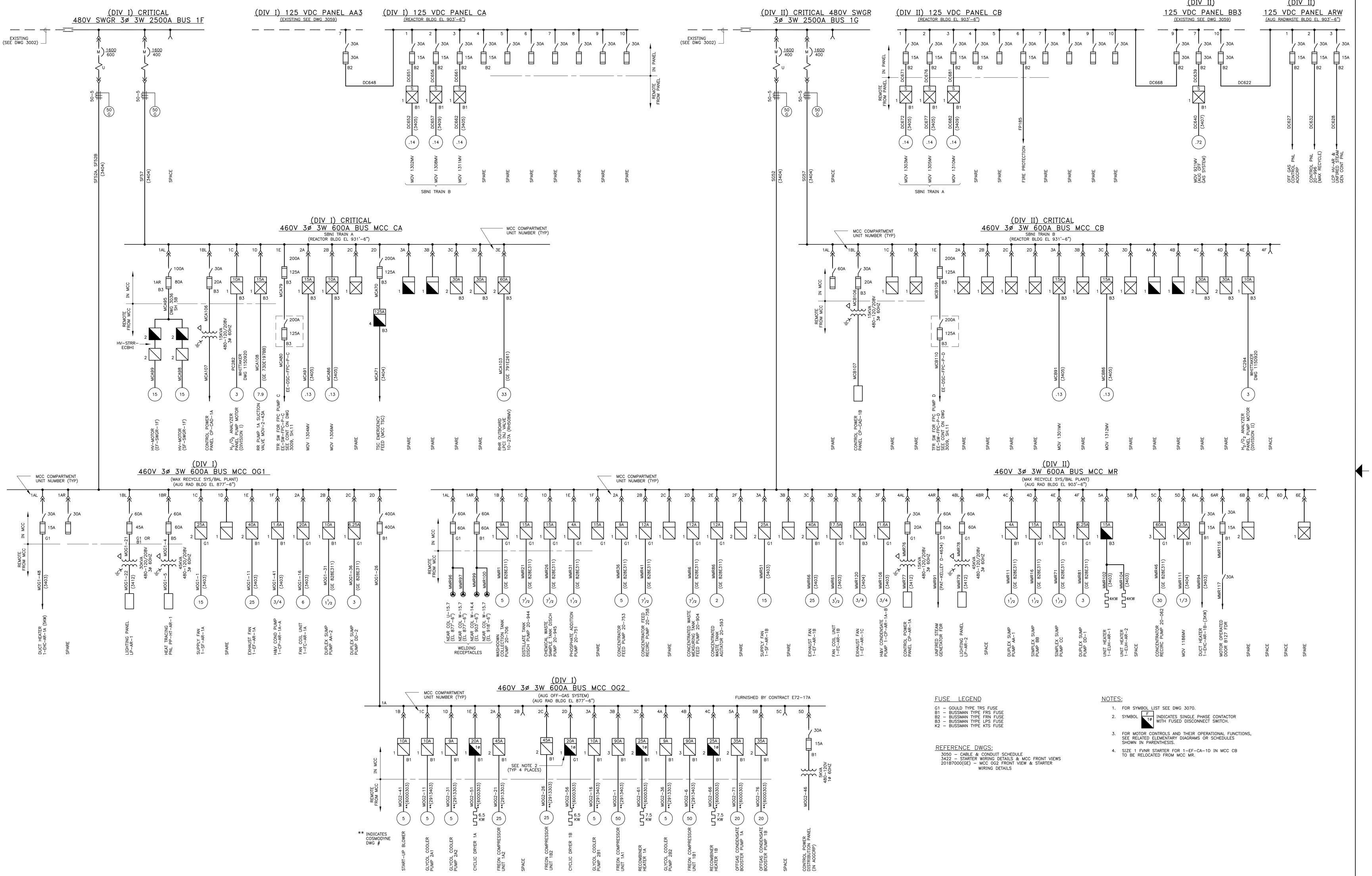

FUSE LEGEND

G1 – GOULD TYPE TRS FUSE
B1 – BUSSMAN TYPE FRS FUSE
B2 – BUSSMAN TYPE FRN FUSE
B3 – BUSSMAN TYPE LPS FUSE
K2 – BUSSMAN TYPE KTS FUSE

REFERENCE DWGS:

3050 – CABLE & CONDUIT SCHEDULE
3422 – STARTER WIRING DETAILS & MCC FRONT VIEWS
201B7000(GE) – MCC OG2 FRONT VIEW & STARTER WIRING DETAILS

NOTES:

1. FOR SYMBOL LIST SEE DWG 3070.
2. SYMBOL 1ø INDICATES SINGLE PHASE CONTACTOR WITH FUSED DISCONNECT SWITCH.
3. FOR MOTOR CONTROLS AND THEIR OPERATIONAL FUNCTIONS, SEE RELATED ELEMENTARY DIAGRAMS OR SCHEDULES SHOWN IN PARENTHESIS.
4. SIZE 1 FVNR STARTER FOR 1-EF-CA-1D IN MCC CB TO BE RELOCATED FROM MCC MR.

AS BUILT
454004387

FOR PREVIOUS REVISIONS, SEE SUPERSEDED CARDS.

REVISIONS BY N.P.P.D.

NO.	REVISIONS	DFT	CKD	APP	DATE
N30	WO 4574415 (DCN 07-1430)	KG	DLR	DJB	7/24/07
N31	TE 10641412, PE 4681651 (DCN 09-0114)	KZ	KZ	DLR	1/25/10
N32	CED 6028860 (DCN 10-0834)	DJB	DJB	EMN	03/13/11
N33	TE-10913533/PE-4919087 (DCN 12-0996)	PAM	PAM	DLR	10/31/12

SIGNIFICANT NUMBER / GROUP

COOPER NUCLEAR STATION
AUXILIARY ONE LINE DIAGRAM
MCC CA, CB, MR, OG1 & OG2

DRAWN C.A.	DATE 6/6/94	BURNS & ROE
CHECKED JAC	DATE 11-8-94	
APPROVED WCF	DATE 11-11-94	
FILMED	3401	REVISION N33

CD014559

REVISIONS
NO.

SECURITY-RELATED INFORMATION -

WITHHOLD UNDER 10 CFR 2.390

DRAWING 4003

OVERALL SITE AND VICINITY PLAN

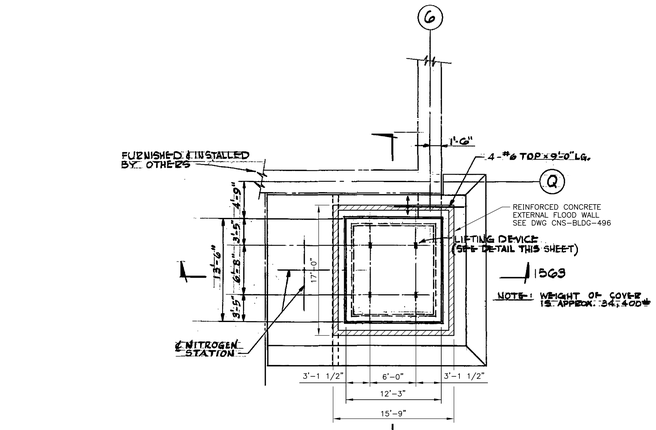

1564

PART PLAN - H.P.C.I. HATCH COVER
(FOR REMAINDER OF PLAN SEE 4216)
SCALE: 1/8" = 1'-0"

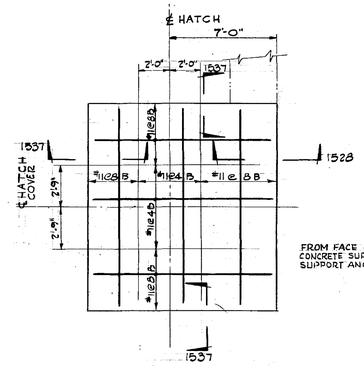

NOTE: TOP REINFORCEMENT = #9 @ 12" EACH WAY

REINF. PLAN H.P.C.I. HATCH COVER
SCALE: 1/4" = 1'-0"

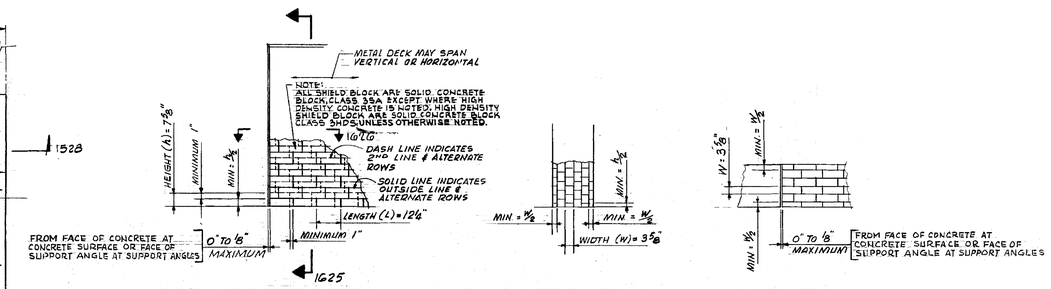

TYPICAL ELEVATION PATTERN — SECT - 1625 VERTICAL PATTERN — SECT - 1626 PLAN PATTERN

TYPICAL SHIELD WALLS - BLOCK PATTERN
NO SCALE

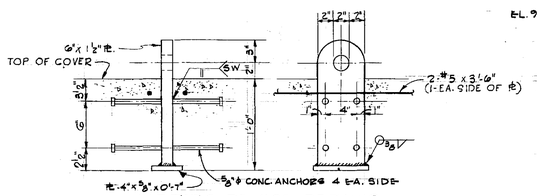

LIFTING DEVICE DETAILS
SCALE: 1 1/2" = 1'-0"

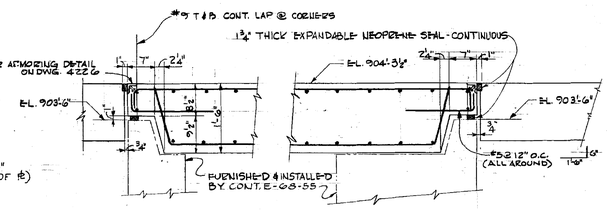

SECTION 1537-1537
SCALE: 3/4" = 1'-0"

SECTION 1528-1528
SCALE: 3/4" = 1'-0"

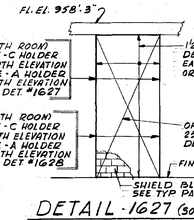

DETAIL - 1627 (SOUTH ROOM) (REF. DWG 4264)
DETAIL - 1628 (NORTH ROOM) (REF. DWG. 4264)
NO SCALE

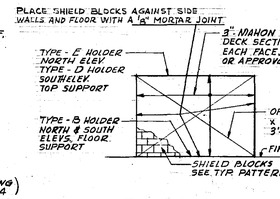

DETAIL - 1629 (REF. DWG 4264)

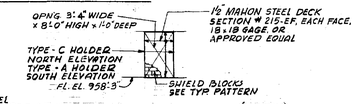

DETAIL - 1630 (REF. DWG 4263)

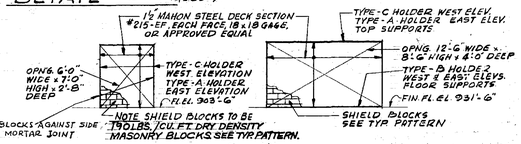

DETAIL - 1632 (REF. DWG 4263) DETAIL - 1633 (REF. DWG 4264)

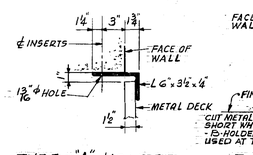

TYPE - "A" - HOLDER
SCALE - 1 1/2" = 1'-0"

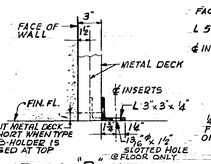

TYPE - "B" - HOLDER

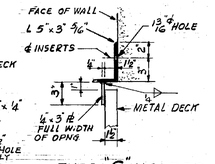

TYPE - "C" - HOLDER

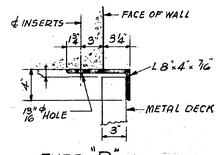

TYPE - "D" - HOLDER

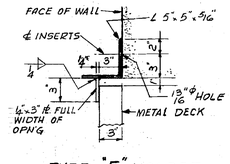

TYPE - "E" - HOLDER

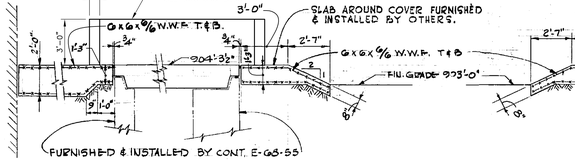

SECTION 1563 - 1563
SCALE: 1/4" = 1'-0"

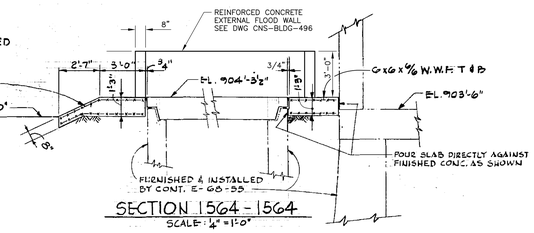

SECTION 1564 - 1564
SCALE: 1/4" = 1'-0"

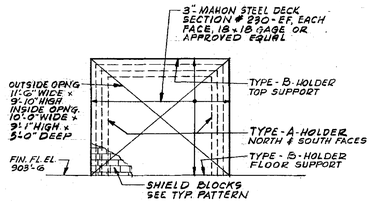

DETAIL - 1634 (REF. DWG. 4263)
NO SCALE
SEE DETAIL 595a, DWG. 4241 FOR ADDITIONAL DETAILS.

NOTES:

1. ALL SHIELDING BLOCKS SHALL BE LAYED UP WITHOUT MORTAR, EXCEPT AS NOTED.

FOR CONSTRUCTION
454004585

FOR PREVIOUS REVISIONS, SEE SUPERSEDED CARDS.

REVISIONS BY N.P.P.D.

NO.	REVISIONS	DFT	CKD	APP	DATE
N03	CED 6033644 (DCN 12-0125)	RAC	KPB	DJB	7-24-13

SIGNIFICANT NUMBER | GROUP 1 | 2 | 3 | 4 | 5 | 6

COOPER NUCLEAR STATION
REACTOR BUILDING
STRUCTURAL
SHIELDING BLOCKS (HPCI HATCH)

DRAWN | DATE
CHECKED | DATE
APPROVED | DATE
SEE SUPERSEDED CARDS
FILMED

BURNS & ROE

4215 | REVISION N03

CADD FILE: C01D3894

REVISIONS | NO.

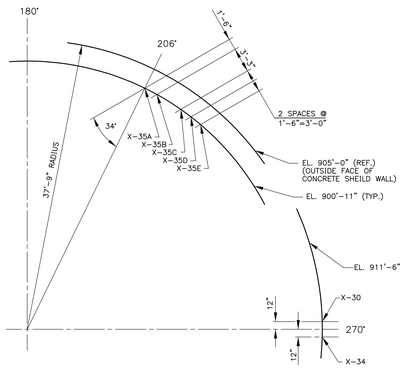

SECTION 1–1

SEE NOTE 4

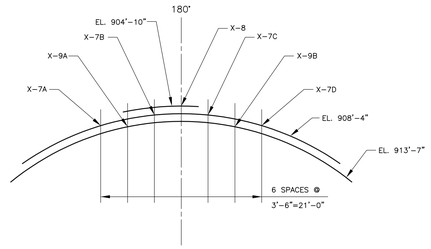

SECTION 4–4

SEE NOTE 4

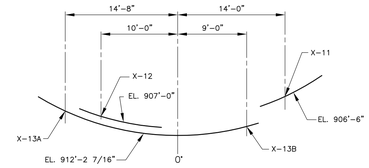

SECTION 5–5

SEE NOTE 4

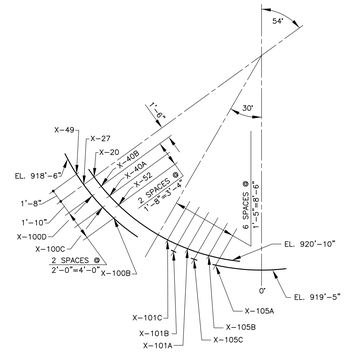

SECTION 6–6

SEE NOTE 4

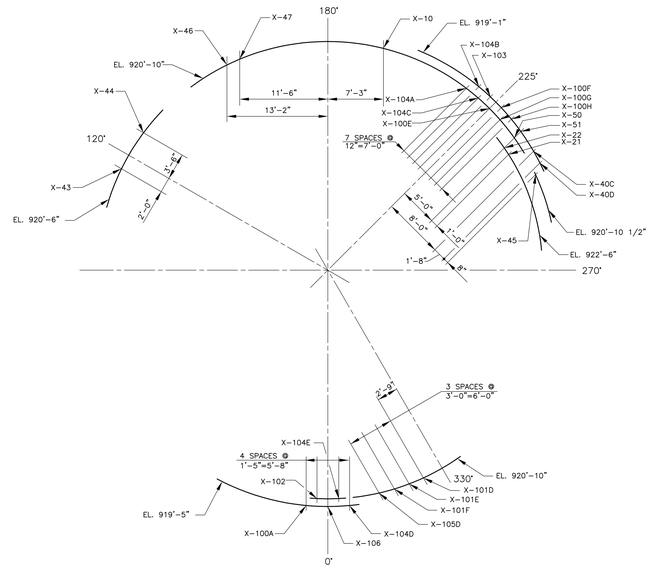

SECTION 7–7

SEE NOTE 4

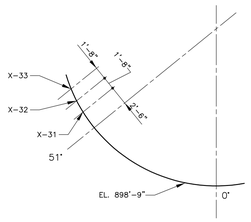

SECTION 2–2

SEE NOTE 4

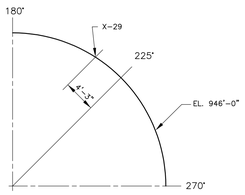

SECTION 3–3

SEE NOTE 4

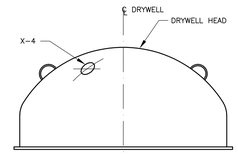

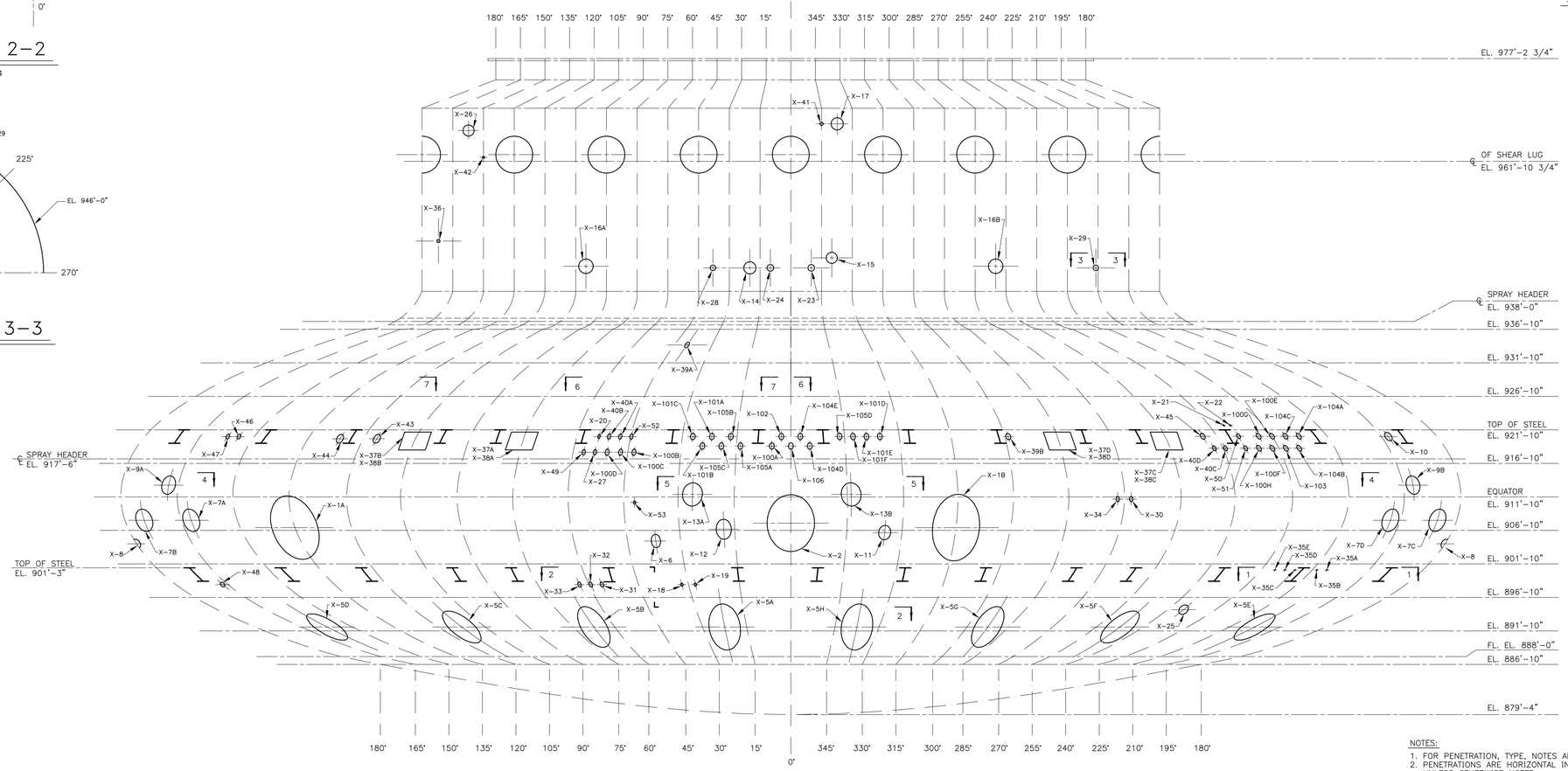

STRETCHOUT VIEW OF OUTSIDE OF DRYWELL

NOTES:

1. FOR PENETRATION, TYPE, NOTES AND REFERENCE DWGS. SEE DWG. #4262 (FOR REF. ONLY).
2. PENETRATIONS ARE HORIZONTAL IN ELEVATION AND RADIAL IN PLAN UNLESS OTHERWISE NOTED.
3. ELEVATIONS GIVEN IN SECTIONS ARE AT INSIDE FACE OF DRYWELL SHELL, UNLESS OTHERWISE NOTED.
4. FOR ORIENTATION TO BUILDING SEE DWG. #4260 SHEET 2.
5. FOR SECTION NOT SHOWN ON THIS DWG. SEE DWG #4262 (FOR REF. ONLY).
6. ALL PENETRATION ARE SHOWN IN THEIR APPROXIMATE LOCATIONS.

THIS DRAWING IS NOT TO SCALE

454004628
AS BUILT

CADD DRAWING
DO NOT REVISE MANUALLY

FOR PREVIOUS REVISIONS, SEE SUPERSEDED CARDS.

REVISIONS BY N.P.P.D.

NO.	REVISIONS	DFT	CKD	APP	DATE
N10	REDRAWN PER CR96-0160 (DCN 97-0094)	SPB	JEH	JRF	1-31-97

SIGNIFICANT NUMBER						
GROUP	1	2	3	4	5	6

CONTAINMENT VESSEL
PENETRATION LOCATION
SHEET 1

DRAWN DATE
CHECKED DATE
APPROVED DATE
SEE SUPERSEDED CARDS

BURNS & ROE

FILMED

4259

REVISION N10

CADD FILE: C0012748

REVISIONS NO.

CONTAINMENT PENETRATION	PENETRATION SIZE	LOCATION ELEVATION	LOCATION AZIMUTH	LINE SIZE	QTY.	LINE DESCRIPTION	REMARKS	TYPE "B" TESTABLE PENETR.	TYPE "C" TESTABLE ISOLATION VALVES (INBOARD, OUTBOARD)
X-1A	10'-0" I.D.	907'-3"	135'	–	1	EQUIPMENT HATCH	SEE SECTION 33 DWG. 4262 (REF. ONLY)	DOUBLE O-RING	
X-1B	10'-0" I.D.	907'-3"	315'	–	1	EQUIPMENT HATCH	SEE SECTION 33 DWG. 4262 (REF. ONLY)	DOUBLE O-RING	
X-2	8'-6" I.D.	907-'11"	0'	–	1	PERSONNEL ACCESS AIR LOCK	SEE SECTION 21 DWG. 4262 (REF. ONLY)	DOUBLE O-RING	
X-4	24" I.D.	DRYWELL HEAD	135'	5'-10" I.D.	1	DRYWELL HEAD ACCESS HATCH	10'-0" R FROM ℄ DRYWELL HEAD	DOUBLE O-RING	
X-5A	6'-11 1/2"	892'-5"	25'	5'-10" I.D.	1	VENT LINE DRYWELL TO TORUS	TYPE "A" TESTED		
X-5B	6'-11 1/2"	892'-5"	70'	5'-10" I.D.	1	VENT LINE DRYWELL TO TORUS	TYPE "A" TESTED		
X-5C	6'-11 1/2"	892'-5"	115'	5'-10" I.D.	1	VENT LINE DRYWELL TO TORUS	TYPE "A" TESTED		
X-5D	6'-11 1/2"	892'-5"	160'	5'-10" I.D.	1	VENT LINE DRYWELL TO TORUS	TYPE "A" TESTED		
X-5E	6'-11 1/2"	892'-5"	200'	5'-10" I.D.	1	VENT LINE DRYWELL TO TORUS	TYPE "A" TESTED		
X-5F	6'-11 1/2"	892'-5"	245'	5'-10" I.D.	1	VENT LINE DRYWELL TO TORUS	TYPE "A" TESTED		
X-5G	6'-11 1/2"	892'-5"	290'	5'-10" I.D.	1	VENT LINE DRYWELL TO TORUS	TYPE "A" TESTED		
X-5H	6'-11 1/2"	892'-5"	335'	5'-10" I.D.	1	VENT LINE DRYWELL TO TORUS	TYPE "A" TESTED		
X-6	24"	905'-3"	37'	–	1	CRD REMOVAL HATCH		DOUBLE O-RING	
X-7A	42"	908'-4"	160'	24"	1	MS TO TURBINE	SEE SECTION 4-4	BELLOWS	MS-A080A, MS-A086A
X-7B	42"	908'-4"	175'	24"	1	MS TO TURBINE	SEE SECTION 4-4	BELLOWS	MS-A080B, MS-A086B
X-7C	42"	908'-4"	185'	24"	1	MS TO TURBINE	SEE SECTION 4-4	BELLOWS	MS-A080C, MS-A086C
X-7D	42"	908'-4"	200'	24"	1	MS TO TURBINE	SEE SECTION 4-4	BELLOWS	MS-A080D, MS-A086D
X-8	18"	904'-10"	180'	3"	1	CONDENSATE DRAIN (MAIN STEAM)			MS-M074, MS-M077
X-9A	34"	913'-7"	170'	18"	1	FW WITH RWCU AND RCIC INJECTION LINES	SEE SECTION 4-4	BELLOWS	RF-16CV, RF-15CV FOR FW
									RF-16CV, RCIC-26CV FOR RCIC
									RF-16CV, RWCU-15CV FOR RWCU
X-9B	34"	913'-7"	190'	18"	1	FW WITH HPCI INJECTION LINES	SEE SECTION 4-4	BELLOWS	RF-14CV, RF-13CV FOR FW
									RF-14CV, HPCI-29CV FOR HPCI
X-10	18"	920'-10"	190'	3"	1	RCIC STEAM			RCIC-M015, RCIC-M016
X-11	26"	906'-6"	335'	10"	1	HPCI STEAM	SEE SECTION 5-5,		HPCI-M015, HPCI-M016
							PITCH DOWN 5' FROM FACE OF DRYWELL		
X-12	36"	907'-0"	20'	20"	1	SHUTDOWN SUPPLY TO RHR PUMPS	SEE SECTION 5-5 (SEE NOTE 7)		RHR-M017
X-13A	42"	912'-2 7/16"	25'	24"	1	RHR INJECTION	(SEE NOTE 7)		RHR-M025A
X-13B	42"	912'-2 7/16"	340'	24"	1	RHR INJECTION	(SEE NOTE 7)		RHR-M025B
X-14	22"	946'-0"	20'	6"	1	RWCU FROM RECIRC PUMPS			RWCU-M015, RWCU-M018
X-15	20"	947'-6"	340'	–	1	SPARE	TYPE "A" TESTED		
X-16A	26"	946'-3"	100'	10"	1	CS A PUMP DISCHARGE	(SEE NOTE 7)		CS-M012A
X-16B	26"	946'-3"	260'	10"	1	CS B PUMP DISCHARGE	(SEE NOTE 7)		CS-M012B
X-17	22"	967'-6"	337'	6"	1	SPARE	TYPE "A" TESTED		
X-18	6"	898'-9"	32'	3"	1	DRYWELL EQUIPMENT DRAIN PUMP DISCHARGE	(SEE NOTE 1)		RW-A094, RW-A095
X-19	4"	898'-9"	28'	3"	1	DRYWELL FLOOR DRAIN PUMP DISCHARGE	(SEE NOTE 1)		RW-A082, RW-A083
X-20	8"	920'-10"	55'	4"	1	DRYWELL DEMINERALIZED WATER SUPPLY	SEE SECTION 6-6		DW-219, DW-133
X-21	3"	922'-6"	235'	1"	1	SERVICE AIR	SEE SECTION 7-7 (SEE NOTE 1)		SA-647, SA-648
X-22	3"	922'-6"	232'	1"	1	INSTRUMENT AIR	SEE SECTION 7-7 (SEE NOTE 1)		IA-65CV, IA-78CV
X-23	12"	946'-0"	350'	8"	1	CLOSED COOLING WATER DRYWELL SUPPLY	(SEE NOTE 2)		REC-702MV
X-24	12"	946'-0"	10'	8"	1	CLOSED COOLING WATER DRYWELL RETURN	(SEE NOTE 2)		REC-709MV
X-25	20"	896'-0"	235'	20"	1	VENT TO DRYWELL	(SEE NOTE 1 & 5)	DOUBLE O-RING	PC-232MV, PC-238AV FOR PURGE & VENT
								FOR INBOARD FLANGE	PC-1306MV, PC-1305MV FOR SBNI
								ON PC-232	
X-26	20"	966'-6"	157'	20"	1	VENT FROM DRYWELL (PC PURGE AND VENT)	SEE DWG. GE 11703303 SHT. 5 (REF. ONLY)	DOUBLE O-RING	PC-231MV, PC-246AV FOR LARGE BORE SBGT
							(SEE NOTE 1, 4 & 6)	FOR INBOARD FLANGE	PC-306MV, PC-1310MV FOR SMALL BORE SBGT
								ON PC-232	
X-27	10"	918'-6"	55'	1"	6	X-27(A-D) 1" INSTRUMENT TO BCV	SEE SECTION 6-6		
						X27(E & F) SPARE	TYPE "A" TESTED		
X-28	10"	946'-0"	38'	1"	6	X-28(A-E) 1" INSTRUMENT TO BCV			
						X-28(F) FLANGE LEAK DETECTION			
X-29	10"	946'-0"	235'	1"	6	X-29(A-D) 1" INSTRUMENT TO BCV	SEE SECTION 3-3,		
						X-29(E) IA TO RR-741AV	SEE DWG. GE 11703303 SHT. 4 (REF. ONLY)		PC-33CV, PC-34CV (SEE NOTE 1)
						X-29(F) DRYWELL PRESSURE INDICATION	(SEE NOTE 4 & 6)		
X-30	10"	911'-6"	265'	1"	6	X-30(A-D) 1" INSTRUMENT TO BCV	SEE SECTION 1-1		
						X-30(E) IA TO NBI-737AV	(SEE NOTE 1)		NBI-559, NBI-560
						X-30(F) IA TO MS-739AV	(SEE NOTE 1)		NBI-561, NBI-562
X-31	10"	898'-9"	55'	1"	6	X-31(A-D) INSTRUMENT TO CV OR BCV	SEE SECTION 2-2		
X-32	10"	898'-9"	58'	1"	6	X-32(A-F) INSTRUMENT TO CV OR BCV	SEE SECTION 2-2		
X-33	10"	898'-9"	65'	1"	6	X-33(A-D) INSTRUMENT TO CV OR BCV	SEE SECTION 2-2		
						X-33(E) IA TO MS-738AV			NBI-563, NBI-564 (SEE NOTE 1)
						X-33(F) IA TO NBI-736AV			NBI-565, NBI-566 (SEE NOTE 1)
X-34	10"	911'-6"	260'	1"	6	X-34(A-D) INSTRUMENT TO CV OR BCV	SEE SECTION 1-1		
						X-34(E-F) SPARE	TYPE "A" TESTED		
X-35A	1 1/2"	900'-11"	206'	3/8"	1	TIP	SEE SECTION 1-1	DOUBLE O-RING	NMT-NVA-104A (SEE NOTE 2)
X-35B	1 1/2"	900'-11"	210'	3/8"	1	TIP	SEE SECTION 1-1	DOUBLE O-RING	NMT-NVA-104B (SEE NOTE 2)
X-35C	1 1/2"	900'-11"	214'	3/8"	1	TIP	SEE SECTION 1-1	DOUBLE O-RING	NMT-NVA-104C (SEE NOTE 2)
X-35D	1 1/2"	900'-11"	218'	3/8"	1	TIP	SEE SECTION 1-1	DOUBLE O-RING	NMT-NVA-104D (SEE NOTE 2)
X-35E	1 1/2"	900'-11"	222'	3/8"	1	TIP N_2 PURGE	SEE SECTION 1-1	DOUBLE O-RING	NM-CV4, NM-CV2 (SEE NOTE 1)

CONTAINMENT PENETRATION	PENETRATION SIZE	LOCATION ELEVATION	LOCATION AZIMUTH	LINE SIZE	QTY.	LINE DESCRIPTION	REMARKS	TYPE "B" TESTABLE PENETR.	TYPE "C" TESTABLE ISOLATION VALVES (INBOARD, OUTBOARD)
X-36	6"	950'-0"	175'	3"	1	H_2/O_2 MONITORING	SAMPLE LINES (SEE NOTE 4 & 6)	IF MODIFIED	
X-37A	3'-9"W x 2'-6"H	918'-10"	75'	1"	32	31 CRD WATER INSERT, 1 SPARE	SEE DETAIL 28 & 30, DWG. 4262 (REF. ONLY)		
X-37B	4'-7"W x 2'-6"H	918'-10"	105'	1"	38	37 CRD WATER INSERT, 1 SPARE	SEE DETAIL 28 & 30, DWG. 4262 (REF. ONLY)		
X-37C	4'-7"W x 2'-6"H	918'-10"	255'	1"	39	38 CRD WATER INSERT, CRD MINI PURGE	SEE DETAIL 28 & 30, DWG. 4262 (REF. ONLY)		CRD-14CV, CRD-13CV
X-37D	3'-9"W x 2'-6"H	918'-10"	285'	1"	32	31 CRD WATER INSERT, 1 SPARE	SEE DETAIL 28 & 30, DWG. 4262 (REF. ONLY)		
X-38A	3'-9"W x 2'-6"H	918'-10"	75'	1"	32	31 CRD WATER WITHDRAWAL, 1 SPARE	SEE DETAIL 28 & 30, DWG. 4262 (REF. ONLY)		
X-38B	4'-7"W x 2'-6"H	918'-10"	105'	1"	38	37 CRD WATER WITHDRAWAL, 1 SPARE	SEE DETAIL 28 & 30, DWG. 4262 (REF. ONLY)		
X-38C	4'-7"W x 2'-6"H	918'-10"	255'	1"	39	38 CRD WATER WITHDRAWAL, CRD MINI PURGE	SEE DETAIL 28 & 30, DWG. 4262 (REF. ONLY)		CRD-16CV, CRD-15CV
X-38D	3'-9"W x 2'-6"H	918'-10"	285'	1"	32	31 CRD WATER WITHDRAWAL, 1 SPARE	SEE DETAIL 28 & 30, DWG. 4262 (REF. ONLY)		
X-39A	12"	934'-6"	40'	12"	1	RHR DRYWELL SPRAY LOOP A	(SEE NOTE 1 & 7)		RHR-M031A
X-39B	12"	920'-10"	299'	12"	1	RHR DRYWELL SPRAY LOOP B	(SEE NOTE 1, 5 & 7)		RHR-M031B FOR RHR
									PC-1311MV, PC-1312MV FOR SBNI
X-40A	10"	920'-10"	49'	1"	7	X-40A(a-f) JET PUMP INSTR. TO BCV	SEE SECTION 6-6		
						X-40A COUPLING PC PRESSURE INSTR.	(SEE NOTE 4 & 6)		
X-40B	10"	920'-10"	53'	1"	7	X-40B(a-f) JET PUMP INSTR. TO BCV	SEE SECTION 6-6		
						X-40B COUPLING PC PRESSURE INSTR.	(SEE NOTE 4 & 6)		
X-40C	10"	919'-1"	239'	1"	7	X-40C(a-f) JET PUMP INSTR. TO BCV	SEE SECTION 7-7		
						X-40C COUPLING PC PRESSURE INSTR.	(SEE NOTE 4 & 6)		
X-40D	10"	919'-1"	244'	1"	7	X-40D(a-f) JET PUMP INSTR. TO BCV	SEE SECTION 7-7		
						X-40D COUPLING PC PRESSURE INSTR.	(SEE NOTE 4 & 6)		
X-41	6"	967'-6"	345'	1"	1	REACTOR WATER SAMPLE			RR-741AV, RR-740AV
X-42	4"	962'-6"	150'	1 1/2"	1	SLC INJECTION			SLC-13CV, SLC-12CV
X-43	18"	920'-6"	115'	4"	1	RR PUMP FLUSHING & ILRT TEST CONN.	SEE SECTION 7-7	DOUBLE O-RING	
X-44	18"	920'-6"	125'	4"	1	RR PUMP FLUSHING & ILRT TEST CONN.	SEE SECTION 7-7	DOUBLE O-RING	
X-45	12"	920'-10 1/2"	245'	2-1",1-1 1/2" 1-2 1/2"	6	X-45(A,B,E & F) SPARE	SEE SECTION 7-7, TYPE "A" TESTED		
						X-45(C) RAD MONITOR VENT	(SEE NOTE 1)		RMV-12AV, RMV-13AV
						X-45(D) SOV AIR EXHAUST TO DRYWELL	(SEE NOTE 1)		PC-35CV, PC-36CV
X-46	10"	920'-10"	155'	1"	6	X-46(A-F) SPARE	SEE SECTION 7-7, TYPE "A" TESTED		
X-47	10"	920'-10"	160'	1"	6	X-47(A,C-F) SPARE	SEE SECTION 7-7, TYPE "A" TESTED		
						X-47(B) INSTRUMENT LINE TO CV OR BCV	(SEE NOTE 6)		
X-48	10"	898'-9"	166'	10"	1	SPARE	TYPE "A" TESTED		
X-49	10"	918'-6"	55'	1"	6	X-49(A,B & E,F) SPARE	SEE SECTION 6-6, TYPE "A" TESTED		
						X-49(C & D) ELECTRICAL PEN.		ELEC. PENETR.	
X-50	10"	920'-10"	235'	1"	6	X-50(A,B) ELECTRICAL PEN.	SEE SECTION 7-7	ELEC. PENETR.	
						X-50(C,D) SPARE	TYPE "A" TESTED		
						X-50(E,F) INSTR. LINE TO CV OR BCV			
X-51	10"	919'-1"	235'	1"	6	X-51(A) INSTRUMENT LINE TO BCV	SEE SECTION 7-7		
						X-51(B) SOV TO DRYWELL AIR EXHAUST			
						X-51(C,D) SPARE	TYPE "A" TESTED		
						X-51(E) DRYWELL VENT MONITOR	(SEE NOTE 1)		RMV-10AV, RMV-11AV
						X-51(F) PAS CONT. ATM. SAMPLE	(SEE NOTE 1)		PC-247AV, PC-248AV
X-52	10"	920'-10"	45'	1"	6	X-52(A-D) 1" INSTR. LINE TO CV OR BCV	SEE SECTION 6-6		
						X-52(E,F) SPARE	TYPE "A" TESTED		
X-53	6"	911'-0"	42'	6"	1	SPARE	TYPE "A" TESTED		
X-100A	12"	919'-5"	5'	12"	1	LOW VOLTAGE INSTR. & CONTROL	SEE SECTION 7-7	ELEC. PENETR.	
X-100B	12"	918'-6"	40'	12"	1	SPARE	SEE SECTION 6-6, TYPE "A" TESTED		
X-100C	12"	918'-6"	49'	12"	1	SPARE	SEE SECTION 6-6, TYPE "A" TESTED		
X-100D	12"	918'-6"	53'	12"	1	SPARE	SEE SECTION 6-6, TYPE "A" TESTED		
X-100E	12"	920'-10"	225'	12"	1	THERMOCOUPLES	SEE SECTION 7-7	ELEC. PENETR.	
X-100F	12"	919'-1"	221'	12"	1	NEUTRON MONITORING	SEE SECTION 7-7	ELEC. PENETR.	
X-100G	12"	920'-10"	218'	12"	1	LOW VOLTAGE INSTR. & CONTROL	SEE SECTION 7-7	ELEC. PENETR.	
X-100H	12"	919'-10"	215'	12"	1	LOW VOLTAGE INSTR. & CONTROL	SEE SECTION 7-7	ELEC. PENETR.	
X-101A	12"	920'-10"	20'	12"	1	MEDIUM VOLTAGE POWER	SEE SECTION 6-6	ELEC. PENETR.	
X-101B	12"	919'-5"	24'	12"	1	NEUTRON MONITORING	SEE SECTION 6-6	ELEC. PENETR.	
X-101C	12"	920'-10"	28'	12"	1	MEDIUM VOLTAGE POWER	SEE SECTION 6-6	ELEC. PENETR.	
X-101D	12"	920'-10"	335'	12"	1	MEDIUM VOLTAGE POWER	SEE SECTION 7-7	ELEC. PENETR.	
X-101E	12"	920'-10"	337'	12"	1	LOW VOLTAGE INSTR. & CONTROL	SEE SECTION 7-7	ELEC. PENETR.	
X-101F	12"	920'-10"	340'	12"	1	MEDIUM VOLTAGE POWER	SEE SECTION 7-7	ELEC. PENETR.	
X-102	12"	920'-10"	3'	12"	1	LOW VOLTAGE INSTR. & CONTROL	SEE SECTION 7-7	ELEC. PENETR.	
X-103	12"	919'-1"	223'	12"	1	NEUTRON MONITORING	SEE SECTION 7-7	ELEC. PENETR.	
X-104A	12"	920'-10"	215'	12"	1	CONTROL ROD POSITION INDICATOR	SEE SECTION 7-7	ELEC. PENETR.	
X-104B	12"	919'-1"	218'	12"	1	CONTROL ROD POSITION INDICATOR	SEE SECTION 7-7	ELEC. PENETR.	
X-104C	12"	920'-10"	220'	12"	1	SPARE	SEE SECTION 7-7, TYPE "A" TESTED		
X-104D	12"	919'-5"	350'	12"	1	CONTROL ROD POSITION INDICATOR	SEE SECTION 7-7	ELEC. PENETR.	
X-104E	12"	920'-10"	355'	12"	1	CONTROL ROD POSITION INDICATOR	SEE SECTION 7-7	ELEC. PENETR.	
X-105A	12"	919'-5"	12'	12"	1	POWER	SEE SECTION 6-6	ELEC. PENETR.	
X-105B	12"	920'-10"	17'	12"	1	SPARE	SEE SECTION 6-6, TYPE "A" TESTED		
X-105C	12"	919'-5"	20'	12"	1	SPARE	SEE SECTION 6-6, TYPE "A" TESTED		
X-105D	12"	920'-10"	347'	12"	1	POWER	SEE SECTION 7-7	ELEC. PENETR.	
X-106	12"	919'-5"	0'	12"	1	NEUTRON MONITORING	SEE SECTION 7-7	ELEC. PENETR.	
SIP1	16"	961'-10 3/4"	0'	–	1	INSPECTION HATCH		DOUBLE O-RING	
SIP2	16"	961'-10 3/4"	45'	–	1	INSPECTION HATCH		DOUBLE O-RING	
SIP3	16"	961'-10 3/4"	90'	–	1	INSPECTION HATCH		DOUBLE O-RING	
SIP4	16"	961'-10 3/4"	135'	–	1	INSPECTION HATCH		DOUBLE O-RING	
SIP5	16"	961'-10 3/4"	180'	–	1	INSPECTION HATCH		DOUBLE O-RING	
SIP6	16"	961'-10 3/4"	225'	–	1	INSPECTION HATCH		DOUBLE O-RING	
SIP7	16"	961'-10 3/4"	270'	–	1	INSPECTION HATCH		DOUBLE O-RING	
SIP8	16"	961'-10 3/4"	315'	–	1	INSPECTION HATCH		DOUBLE O-RING	

NOTE:

1. BOTH ISOLATION VALVES ARE OUTBOARD OF DRYWELL CONTAINMENT.
2. ONLY ONE ISOLATION VALVE EXISTS.
3. ALL PENETRATION LOCATIONS SHOWN IN THE SCHEDULE ARE APPROXIMATE.
4. COMPONENTS ARE SUBJECT TO TESTING UNDER 10CFR50, APPENDIX J TYPE "B" REQUIREMENTS IF MAINTENANCE OR A MODIFICATION IS MADE.
5. IN-LINE MANUAL VALVES ARE NOT SUBJECT TO TYPE "C" TESTING.
6. INSTRUMENT PORTION IS AN EXTENSION OF CONTAINMENT.
7. CLOSED LOOP PROVIDES THE SECOND BARRIER.

AS BUILT
453243226

* THIS DRAWING GENERATED BY NPPD

REVISIONS BY N.P.P.D.

NO.	REVISIONS	DFT	CKD	APP	DATE
N00	CR96-0160 (DCN 97-0095)	SPB	JEH	JRF	1-31-97
N01	UCR BINDER 22A (DCN 00-0645)	DLR	TMB	KG	8/2/00
N02	PIR 2-21154 (DCN 99-0315)	KG	DLR	RGA	8/16/01
N03	EE 10-073 (DCN 11-0097)	KZ	KZ	DJB	2/9/12

SIGNIFICANT NUMBER						
GROUP	1	2	3	4	5	6

CONTAINMENT VESSEL
PENETRATION SCHEDULE
SHEET 1A

DRAWN SPB	DATE 3/22/96	*BURNS & ROE
CHECKED JEH	DATE 1/31/97	
APPROVED JRF	DATE 1/31/97	
FILMED	4259	REVISION N03

CADD FILE: C0020179

REVISIONS

NO.

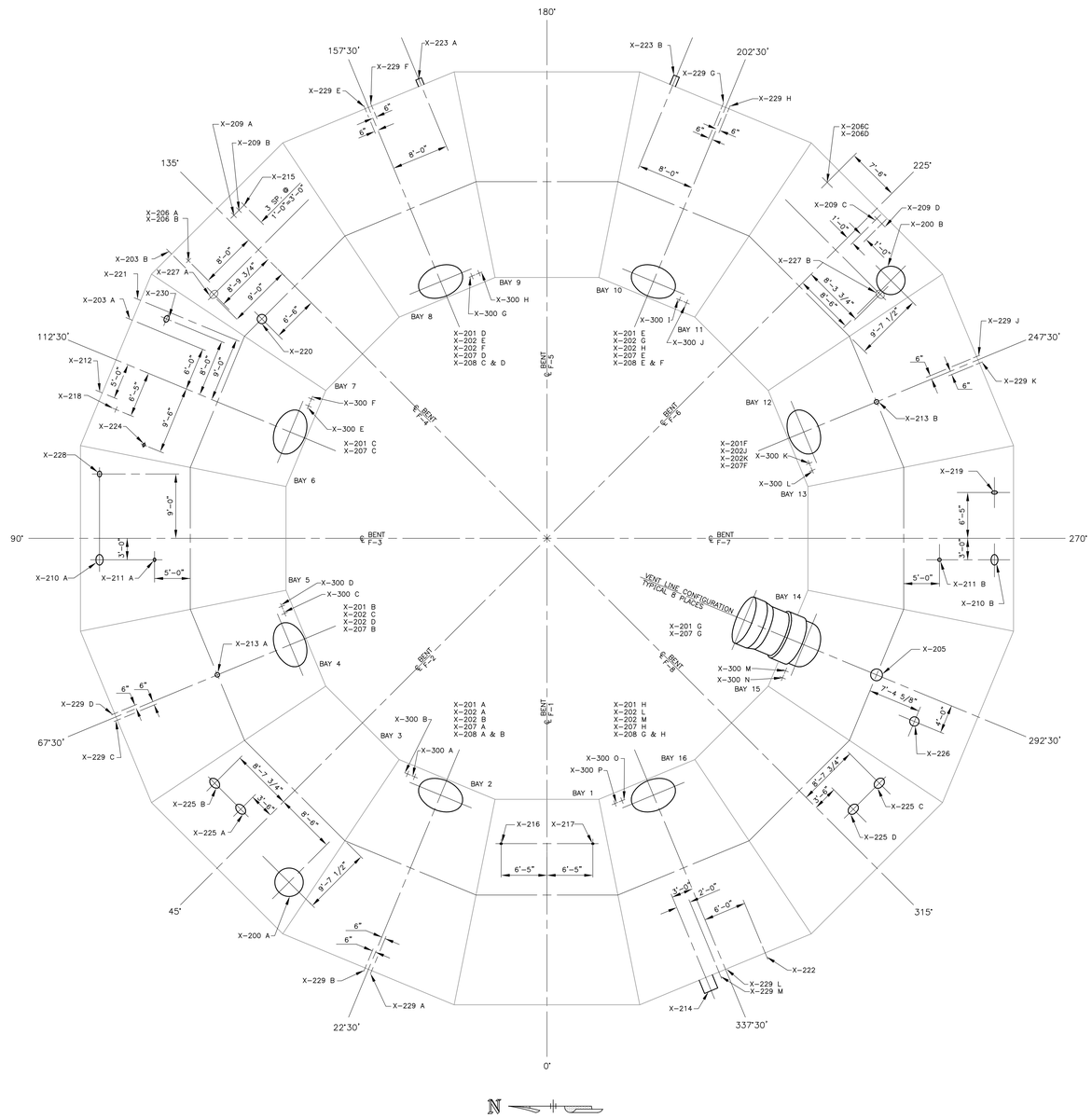

PLAN VIEW SUPPRESSION CHAMBER

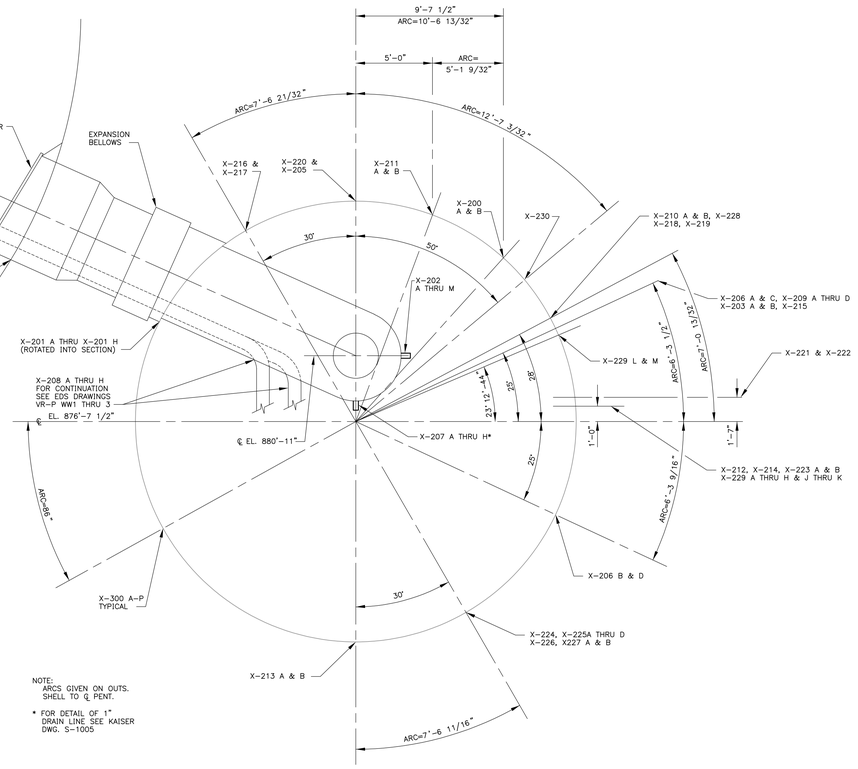

NOTE:
ARCS GIVEN ON OUTS. SHELL TO ℄ PENT.

* FOR DETAIL OF 1" DRAIN LINE SEE KAISER DWG. S-1005

COMPOSITION SECTION

ROTATE COUNTER CLOCKWISE

NOTES:

1. ALL PENETRATIONS ARE SHOWN IN THEIR APPROXIMATE LOCATIONS. LOCATIONS WERE TAKEN FROM BURNS AND ROE DRAWING 4260 SHT. 2 AND CHICAGO BRIDGE AND IRON COMPANY DRAWING # 5.

454243227
AS BUILT

CADD DRAWING
DO NOT REVISE MANUALLY

* THIS DRAWING GENERATED BY NPPD

REVISIONS BY N.P.P.D.				
NO.	REVISIONS	DFT	CKD	APP	DATE
N00	CR96-0160 (DCN 97-0097)	SPB	JEH	JRF	1-31-97

SIGNIFICANT NUMBER						
GROUP	1	2	3	4	5	6

CONTAINMENT SUPPRESSION CHAMBER
PENETRATION LOCATION
SHEET 2A

DRAWN SPB	DATE 3/22/96	BURNS & ROE*
CHECKED JEH	DATE 1/31/97	
APPROVED JRF	DATE 1/31/97	
FILMED	4260	REVISION N00

CADD FILE: C0012743

REVISIONS
NO.

CONTAINMENT PENETRATION	PENETRATION SIZE	LOCATION ELEVATION	LOCATION AZIMUTH	LINE SIZE	QTY.	LINE DESCRIPTION	REMARKS	TYPE "B" TESTABLE PENETR.	TYPE "C" TESTABLE ISOLATION VALVES (INBOARD, OUTBOARD)
X-200A	4'-0" I.D.	893'-0"	8'-6" FROM 45'	–	1	ACCESS HATCH		DOUBLE O-RING	
X-200B	4'-0" I.D.	893'-0"	8'-6" FROM 225'	–	1	ACCESS HATCH		DOUBLE O-RING	
X-201A	5'-11"	885'-10"	22'30'	5'-11"	1	VENT LINE	TYPE "A" TESTED		
X-201B	5'-11"	885'-10"	67'30'	5'-11"	1	VENT LINE	TYPE "A" TESTED		
X-201C	5'-11"	885'-10"	112'30'	5'-11"	1	VENT LINE	TYPE "A" TESTED		
X-201D	5'-11"	885'-10"	157'30'	5'-11"	1	VENT LINE	TYPE "A" TESTED		
X-201E	5'-11"	885'-10"	202'30'	5'-11"	1	VENT LINE	TYPE "A" TESTED		
X-201F	5'-11"	885'-10"	247'30'	5'-11"	1	VENT LINE	TYPE "A" TESTED		
X-201G	5'-11"	885'-10"	292'30'	5'-11"	1	VENT LINE	TYPE "A" TESTED		
X-201H	5'-11"	885'-10"	337'30'	5'-11"	1	VENT LINE	TYPE "A" TESTED		
X-202A	18"	880'-10 1/2"	22'30'	18"	1	VACUUM BREAKER	TYPE "A" TESTED		
X-202B	18"	880'-10 1/2"	22'30'	18"	1	VACUUM BREAKER	TYPE "A" TESTED		
X-202C	18"	880'-10 1/2"	67'30'	18"	1	VACUUM BREAKER	TYPE "A" TESTED		
X-202D	18"	880'-10 1/2"	67'30'	18"	1	VACUUM BREAKER	TYPE "A" TESTED		
X-202E	18"	880'-10 1/2"	157'30'	18"	1	VACUUM BREAKER	TYPE "A" TESTED		
X-202F	18"	880'-10 1/2"	157'30'	18"	1	VACUUM BREAKER	TYPE "A" TESTED		
X-202G	18"	880'-10 1/2"	202'30'	18"	1	VACUUM BREAKER	TYPE "A" TESTED		
X-202H	18"	880'-10 1/2"	202'30'	18"	1	VACUUM BREAKER	TYPE "A" TESTED		
X-202J	18"	880'-10 1/2"	247'30'	18"	1	VACUUM BREAKER	TYPE "A" TESTED		
X-202K	18"	880'-10 1/2"	247'30'	18"	1	VACUUM BREAKER	TYPE "A" TESTED		
X-202L	18"	880'-10 1/2"	337'30'	18"	1	VACUUM BREAKER	TYPE "A" TESTED		
X-202M	18"	880'-10 1/2"	337'30'	18"	1	VACUUM BREAKER	TYPE "A" TESTED		
X-203A	1"	882'-8"	6' FROM 112'30'	1"	1	HYDROGEN/OXYGEN ANALYZER	TYPE "A" TESTED (SEE NOTE 5)	IF MODIFIED	
X-203B	1"	882'-8"	9' FROM 135'	1"	1	HYDROGEN/OXYGEN ANALYZER	TYPE "A" TESTED (SEE NOTE 5)	IF MODIFIED	
X-205	20"	890'-10 1/2"	292'30'	20"	1	VACUUM RELIEF FROM BLDG. VENT PURGE INLET	FOR REF. LEG OF PC-3B-1 0-30' TORUS LEVEL	DOUBLE O-RING	PC-233MV, PC-237MV FOR PURGE & VENT
								FOR INBOARD	PC-243AV, PC-13CV FOR VACUUM RELIEF
								FLANGE ON	PC-244AV, PC-14CV FOR VACUUM RELIEF
								VALVES PC-233,	PC-1304MV, PC-1303MV DILUTION SUPPLY
								243 & 244	FOR LOOP A FROM SBNI
X-206A	1"	882'-8"	8' FROM 135'	1"	1	LIQUID LEVEL INDICATOR	TYPE "A" TESTED (SEE NOTE 5)		
X-206B	1"	870'-7"	8' FROM 135'	1"	1	LIQUID LEVEL INDICATOR	TYPE "A" TESTED (SEE NOTE 5)		
X-206C	1"	882'-8"	7'-6" FROM 225'	1"	1	LIQUID LEVEL INDICATOR	TYPE "A" TESTED (SEE NOTE 5)		
X-206D	1"	870'-7"	7'-6" FROM 225'	1"	1	LIQUID LEVEL INDICATOR	TYPE "A" TESTED (SEE NOTE 5)		
X-207A	1"	878'-0"	22'30'	1"	1	VENT LINE DRAIN	LOCATED AT LOW POINT OF EACH VENT LINE		
X-207B	1"	878'-0"	67'30'	1"	1	VENT LINE DRAIN	LOCATED AT LOW POINT OF EACH VENT LINE		
X-207C	1"	878'-0"	112'30'	1"	1	VENT LINE DRAIN	LOCATED AT LOW POINT OF EACH VENT LINE		
X-207D	1"	878'-0"	157'30'	1"	1	VENT LINE DRAIN	LOCATED AT LOW POINT OF EACH VENT LINE		
X-207E	1"	878'-0"	202'30'	1"	1	VENT LINE DRAIN	LOCATED AT LOW POINT OF EACH VENT LINE		
X-207F	1"	878'-0"	247'30'	1"	1	VENT LINE DRAIN	LOCATED AT LOW POINT OF EACH VENT LINE		
X-207G	1"	878'-0"	292'30'	1"	1	VENT LINE DRAIN	LOCATED AT LOW POINT OF EACH VENT LINE		
X-207H	1"	878'-0"	337'30'	1"	1	VENT LINE DRAIN	LOCATED AT LOW POINT OF EACH VENT LINE		
X-208A	10"	879'-11 1/2"	22'30'	10"	1	RELIEF VALVE DISCHARGE FROM MAIN STEAM HEADER			
X-208B	10"	879'-11 1/2"	22'30'	10"	1	RELIEF VALVE DISCHARGE FROM MAIN STEAM HEADER			
X-208C	10"	879'-11 1/2"	157'30'	10"	1	RELIEF VALVE DISCHARGE FROM MAIN STEAM HEADER			
X-208D	10"	879'-11 1/2"	157'30'	10"	1	RELIEF VALVE DISCHARGE FROM MAIN STEAM HEADER			
X-208E	10"	879'-11 1/2"	202'30'	10"	1	RELIEF VALVE DISCHARGE FROM MAIN STEAM HEADER			
X-208F	10"	879'-11 1/2"	202'30'	10"	1	RELIEF VALVE DISCHARGE FROM MAIN STEAM HEADER			
X-208G	10"	879'-11 1/2"	337'30'	10"	1	RELIEF VALVE DISCHARGE FROM MAIN STEAM HEADER			
X-208H	10"	879'-11 1/2"	337'30'	10"	1	RELIEF VALVE DISCHARGE FROM MAIN STEAM HEADER			
X-209A	1"	882'-8"	1' FROM 135'	1"	1	AIR TEMPERATURE		DOUBLE O-RING	
								& TEMP. ELEMENT	
X-209B	1"	882'-8"	2' FROM 135'	1"	1	SPARE	TYPE "A" TESTED		
X-209C	1"	882'-8"	1' FROM 225'	1"	1	AIR TEMPERATURE		DOUBLE O-RING	
								& TEMP. ELEMENT	
X-209D	1"	882'-8"	2' FROM 225'	1"	1	SPARE	TYPE "A" TESTED		
X-210A	18"	883'-4"	3' FROM 90'	18"	1	RHR LOOP A SYSTEM PUMP TEST LINE		DOUBLE O-RING	RCIC-MO27, RCIC-13CV FOR RCIC MIN.
								APPLICABLE ONLY	FLOW (SEE NOTE 2); RHR-MO21A FOR
								FOR RHR-FLG	RHR HX A DRAIN (SEE NOTE 2);
								-14RV AND 17RV	RHR-MO16A FOR RHR PUMP MIN. FLOW
								(SEE NOTE 2)	(SEE NOTE 2); RHR-MO57, RHR-MO67
									FOR DISCHARGE TO RADWASTE (SEE NOTE 3);
									RHR-RV-14RV FOR RHR LOOP A SUPPLY
									RV DISCHARGE (SEE NOTE 2); RHR-RV-17RV
									FOR RHR SHUTDOWN COOLING SUPPLY
									RV DISCHARGE (SEE NOTE 2)
X-210B	18"	883'-4"	3' FROM 270'	18"	1	RHR LOOP B SYSTEM PUMP TEST LINE		DOUBLE O-RING	RHR-MO-57, RHR-MO67 FOR DISCHARGE
								APPLICABLE ONLY	TO RADWASTE (SEE NOTE 3); HPCI-MO25,
								FOR RHR-FLG-15RV	HPCI-17CV FOR HPCI MIN. FLOW (SEE NOTE
								(SEE NOTE 2)	2); RHR-MO21B FOR RHR HX B DRAIN
									(SEE NOTE 2); RHR-MO16B FOR RHR
									PUMP MIN. FLOW (SEE NOTE 2);
									RHR-RV-15RV FOR RHR LOOP B SUPPLY
									RV DISCHARGE (SEE NOTE 2)
X-211A	6"	889'-11"	90'	6"	1	CONTAINMENT COOLING	(SEE NOTE 6)		RHR-MO38A
									FOR RHR LOOP A SUPPRESSION POOL SPRAY
X-211B	6"	889'-11"	270'	6"	1	CONTAINMENT COOLING	(SEE NOTE 6)		RHR-MO38B
									FOR RHR LOOP B SUPPRESSION POOL SPRAY
									PC-1302MV, PC-1301MV DILUTION SUPPLY
									FOR LOOP B FROM SBNI

CONTAINMENT PENETRATION	PENETRATION SIZE	LOCATION ELEVATION	LOCATION AZIMUTH	LINE SIZE	QTY.	LINE DESCRIPTION	REMARKS	TYPE "B" TESTABLE PENETR.	TYPE "C" TESTABLE ISOLATION VALVES (INBOARD, OUTBOARD)
X-212	12"	877'-7 1/2"	5' FROM 112'30'	12"	1	RCIC TURBINE EXHAUST			RCIC-37, RCIC-15CV
X-213A	8"	862'-4 1/2"	67'30'	8"	1	TORUS DRAIN	FLANGED (SEE NOTE 2)	DOUBLE O-RING	
X-213B	8"	862'-4 1/2"	247'30'	8"	1	TORUS DRAIN	FLANGED (SEE NOTE 2)	DOUBLE O-RING	
X-214	24"	877'-7 1/2"	340'	24"	1	HPCI TURBINE EXHAUST (SEE NOTE 5)		DOUBLE O-RING	HPCI-44, HPCI-15CV FOR HPCI TURBINE
								APPLICABLE ONLY	EXHAUST; RHR-MO167A, RHR-MO166A FOR
								FOR RHR-FLG	RHR HX A VENT; RHR-MO167B, RHR-
								-18, 19,	MO-166B FOR RHR HX B VENT; HPCI-AO70,
								20RV & 21RV	HPCI-AO71 FOR HPCI TURBINE EXHAUST
									DRIP LEG DRAIN; RHR-RV-20RV FOR RHR
									HX A SHELL SIDE RV DISCHARGE;
									RHR-RV-21RV FOR RHR HX B SHELL SIDE
									RV DISCHARGE
X-215	1"	882'-8"	135'	1"	1	ATMOSPHERIC PRESSURE INSTRUMENTATION	(SEE NOTE 5)		
X-216	4"	888'-11"	6'-5" FROM 0'	4"	1	SPARE	TYPE "A" TESTED		
X-217	4"	888'-11"	6'-5" FROM 0'	4"	1	SPARE	TYPE "A" TESTED		
X-218	2"	883'-4"	6'-5" FROM 112'30'	2"	1	SPARE	TYPE "A" TESTED		
X-219	10"	883'-4"	6'-5" FROM 270'	10"	1	SPARE	TYPE "A" TESTED		
X-220	16"	890'-10 1/2"	6'-6" FROM 135'	16"	1	VENT PURGE OUTLET	TOP REF. LEG OF PC-3B-2 0-30' TORUS LEVEL	DOUBLE O-RING	PC-230MV, PC-245AV FOR PURGE & VENT
							(SEE NOTE 5)	FOR INBOARD	EXHAUST; PC-305MV, PC-1308MV FOR
								FLANGE ON PC-230	BYPASS TO PC-230MV
X-221	2"	878'-2 1/2"	9' FROM 112'30'	2"	1	RCIC VACUUM PUMP DISCHARGE	(SEE NOTE 2)		RCIC-16CV, RCIC-12CV
X-222	2"	878'-2 1/2"	6' FROM 337'30'	2"	1	HPCI TURBINE DRAIN TO TORUS	(SEE NOTE 2)		HPCI-50, HPCI-16CV
X-223A	10"	877'-7 1/2"	8' FROM 157'30'	10"	1	CORE SPRAY PUMP A TEST LINE	(SEE NOTE 2)	DOUBLE O-RING	CS-MO26A FOR CS A TEST LINE; CS-MO5A
								APPLICABLE ONLY	FOR CS A MIN. FLOW; CS-RV-11RV FOR
								FOR CS-FLG-11RV	CS PUMP A RV DISCHARGE
X-223B	10"	877'-7 1/2"	8' FROM 202'30'	10"	1	CORE SPRAY PUMP B TEST LINE	(SEE NOTE 2)	DOUBLE O-RING	CS-MO26B FOR CS B TEST LINE; CS-MO5B
								APPLICABLE ONLY	FOR CS B MIN. FLOW; CS-RV-13RV FOR
								FOR CS-FLG-13RV	CS PUMP B RV DISCHARGE
X-224	6"	864'-2 1/2"	9'-6" FROM 112'30'	6"	1	RCIC PUMP SUCTION	(SEE NOTE 2)		RCIC-MO41
X-225A	20"	864'-2 1/2"	3'-6" FROM 45'	20"	1	RHR SYSTEM PUMP 1-A SUCTION	(SEE NOTE 2)	DOUBLE O-RING	RHR-MO13A; RHR-RV-10RV FOR RHR PUMP
								APPLICABLE ONLY	1-A RV DISCHARGE
								FOR RHR-FLG-10RV	
X-225B	20"	864'-2 1/2"	8'-7 3/4" FROM 45'	20"	1	RHR SYSTEM PUMP 1-C SUCTION	(SEE NOTE 2)	DOUBLE O-RING	RHR-MO13C; RHR-RV-12RV FOR RHR PUMP
								APPLICABLE ONLY	1-C RV DISCHARGE
								FOR RHR-FLG-12RV	
X-225C	20"	864'-2 1/2"	8'-7 3/4" FROM 315'	20"	1	RHR SYSTEM PUMP 1-B SUCTION	(SEE NOTE 2)	DOUBLE O-RING	RHR-MO13B; RHR-RV-11RV FOR RHR PUMP
								APPLICABLE ONLY	1-B RV DISCHARGE
								FOR RHR-FLG-11RV	
X-225D	20"	864'-2 1/2"	3'-6" FROM 315'	20"	1	RHR SYSTEM PUMP 1-D SUCTION	(SEE NOTE 2)	DOUBLE O-RING	RHR-MO13D; RHR-RV-13RV FOR RHR PUMP
								APPLICABLE ONLY	1-D RV DISCHARGE
								FOR RHR-FLG-13RV	
X-226	16"	864'-2 1/2"	4' FROM 292'30'	16"	1	HPCI PUMP SUCTION	(SEE NOTE 2)		HPCI-MO58
X-227A	16"	864'-2 1/2"	8'-9 3/4" FROM 135'	16"	1	CORE SPRAY PUMP SUCTION	(SEE NOTE 2)	DOUBLE O-RING	CS-MO7A; CS-RV-10RV FOR CS PUMP A
								APPLICABLE ONLY	SUPPLY RV DISCHARGE
								FOR CS-FLG-10RV	
X-227B	16"	864'-2 1/2"	8'-9 3/4" FROM 225'	16"	1	CORE SPRAY PUMP SUCTION	(SEE NOTE 2)	DOUBLE O-RING	CS-MO7B; CS-RV-12RV FOR CS PUMP B
								APPLICABLE ONLY	SUPPLY RV DISCHARGE
								FOR CS-FLG-12RV	
X-228	10"	883'-4"	9' FROM 90'	10"	1	SPARE	TYPE "A" TESTED		
X-229A	1"	877'-7 1/2"	6" FROM 22'30'	1"	1	VACUUM BREAKER ACTIVATING AIR			PC-569, PC-570 FOR PC-AO-NRV21
X-229B	1"	877'-7 1/2"	6" FROM 22'30'	1"	1	VACUUM BREAKER ACTIVATING AIR			PC-571, PC-572 FOR PC-AO-NRV20
X-229C	1"	877'-7 1/2"	6" FROM 67'30'	1"	1	VACUUM BREAKER ACTIVATING AIR			PC-573, PC-574 FOR PC-AO-NRV23
X-229D	1"	877'-7 1/2"	6" FROM 67'30'	1"	1	VACUUM BREAKER ACTIVATING AIR			PC-575, PC-576 FOR PC-AO-NRV22
X-229E	1"	877'-7 1/2"	6" FROM 157'30'	1"	1	VACUUM BREAKER ACTIVATING AIR			PC-577, PC-578 FOR PC-AO-NRV25
X-229F	1"	877'-7 1/2"	6" FROM 157'30'	1"	1	VACUUM BREAKER ACTIVATING AIR			PC-579, PC-580 FOR PC-AO-NRV24
X-229G	1"	877'-7 1/2"	6" FROM 202'30'	1"	1	VACUUM BREAKER ACTIVATING AIR			PC-581, PC-582 FOR PC-AO-NRV27
X-229H	1"	877'-7 1/2"	6" FROM 202'30'	1"	1	VACUUM BREAKER ACTIVATING AIR			PC-583, PC-584 FOR PC-AO-NRV26
X-229J	1"	877'-7 1/2"	6" FROM 247'30'	1"	1	VACUUM BREAKER ACTIVATING AIR			PC-585, PC-586 FOR PC-AO-NRV29
X-229K	1"	877'-7 1/2"	6" FROM 247'30'	1"	1	VACUUM BREAKER ACTIVATING AIR			PC-587, PC-588 FOR PC-AO-NRV28
X-229L	1"	877'-7 1/2"	337'30'	1"	1	VACUUM BREAKER ACTIVATING AIR			PC-589, PC-590 FOR PC-AO-NRV30 &
									PC-AO-NRV31
X-229M	1"	877'-7 1/2"	1' FROM 337'30'	1"	1	SPARE	TYPE "A" TESTED		
X-230	12"	885'-7 1/2"	8' FROM 112'30'	12"	1	LOW VOLTAGE POWER TO TORUS		ELEC. PENETR.	
X-300A	1 1/4"	869'-8 1/2"	4'-3" FROM 22'30'	1 1/4"	1	TORUS TEMP. MONITORING			
X-300B	1 1/4"	869'-8 1/2"	5'-3" FROM 22'30'	1 1/4"	1	TORUS TEMP. MONITORING			
X-300C	1 1/4"	869'-8 1/2"	4'-3" FROM 67'30'	1 1/4"	1	TORUS TEMP. MONITORING			
X-300D	1 1/4"	869'-8 1/2"	5'-3" FROM 67'30'	1 1/4"	1	TORUS TEMP. MONITORING			
X-300E	1 1/4"	869'-8 1/2"	4'-3" FROM 112'30'	1 1/4"	1	TORUS TEMP. MONITORING			
X-300F	1 1/4"	869'-8 1/2"	5'-3" FROM 112'30'	1 1/4"	1	TORUS TEMP. MONITORING			
X-300G	1 1/4"	869'-8 1/2"	4'-3" FROM 157'30'	1 1/4"	1	TORUS TEMP. MONITORING			
X-300H	1 1/4"	869'-8 1/2"	5'-3" FROM 157'30'	1 1/4"	1	TORUS TEMP. MONITORING			
X-300I	1 1/4"	869'-8 1/2"	4'-3" FROM 202'30'	1 1/4"	1	TORUS TEMP. MONITORING			
X-300J	1 1/4"	869'-8 1/2"	5'-3" FROM 202'30'	1 1/4"	1	TORUS TEMP. MONITORING			
X-300K	1 1/4"	869'-8 1/2"	4'-3" FROM 247'30'	1 1/4"	1	TORUS TEMP. MONITORING			
X-300L	1 1/4"	869'-8 1/2"	5'-3" FROM 247'30'	1 1/4"	1	TORUS TEMP. MONITORING			
X-300M	1 1/4"	869'-8 1/2"	4'-3" FROM 292'30'	1 1/4"	1	TORUS TEMP. MONITORING			
X-300N	1 1/4"	869'-8 1/2"	5'-3" FROM 292'30'	1 1/4"	1	TORUS TEMP. MONITORING			
X-300O	1 1/4"	869'-8 1/2"	4'-3" FROM 337'30'	1 1/4"	1	TORUS TEMP. MONITORING			
X-300P	1 1/4"	869'-8 1/2"	5'-3" FROM 337'30'	1 1/4"	1	TORUS TEMP. MONITORING			

GENERAL NOTES:

1. BOTH ISOLATION VALVES ARE OUTSIDE OF TORUS CONTAINMENT.
2. THESE VALVES AND/OR FLANGES ARE NOT SUBJECT TO TESTING UNDER 10CFR50, APPENDIX J TYPE "B" OR "C" REQUIREMENTS DUE TO WATER SEAL.
3. THESE VALVES MUST BE LEAK TESTED. HOWEVER, SINCE THEY ARE DOWNSTREAM OF THE OUTBOARD CONTAINMENT ISOLATION VALVE THE LEAKAGE FROM THESE VALVES NEED NOT BE ADDED TO 0.6 LA REQUIREMENT.
4. ALL PENETRATION LOCATIONS SHOWN IN THE SCHEDULE ARE APPROXIMATE.
5. INSTRUMENT PORTION IS AN EXTENSION OF CONTAINMENT.
6. CLOSED LOOP PROVIDES THE SECOND BARRIER.

* THIS DRAWING GENERATED BY NPPD

AS BUILT
453243228

REVISIONS BY N.P.D.

NO.	REVISIONS	DFT	CKD	APP	DATE
N00	CR96-0160 (DCN97-0098)	SPB	JEH	JRF	1-31-97
N01	UCR BINDER 22A (DCN 00-0644)	DLR	RGA	KG	8-2-00
N02	CED 6005621 (DCN 01-1504)	KG	DLR	RGA	12/18/01
N03	CED 6029200 (DCN 09-0527)	KG	KG	EMN	10/17/09
N04	CED 6029200 (DCN 09-1485)	KG	KPB	DLR	10/23/09
N05	EE 10-073 (DCN 11-0098)	KZ	KZ	DJB	2/9/12

SIGNIFICANT NUMBER						
GROUP	1	2	3	4	5	6

CONTAINMENT SUPRESSION CHAMBER
PENETRATION SCHEDULE
SHEET 2B

DRAWN SPB	DATE 3/22/96	* BURNS & ROE
CHECKED JEH	DATE 1/31/97	
APPROVED JRF	DATE 1/31/97	
FILMED	4260	REVISION N05

CADD FILE: C0020180

REVISIONS
NO.

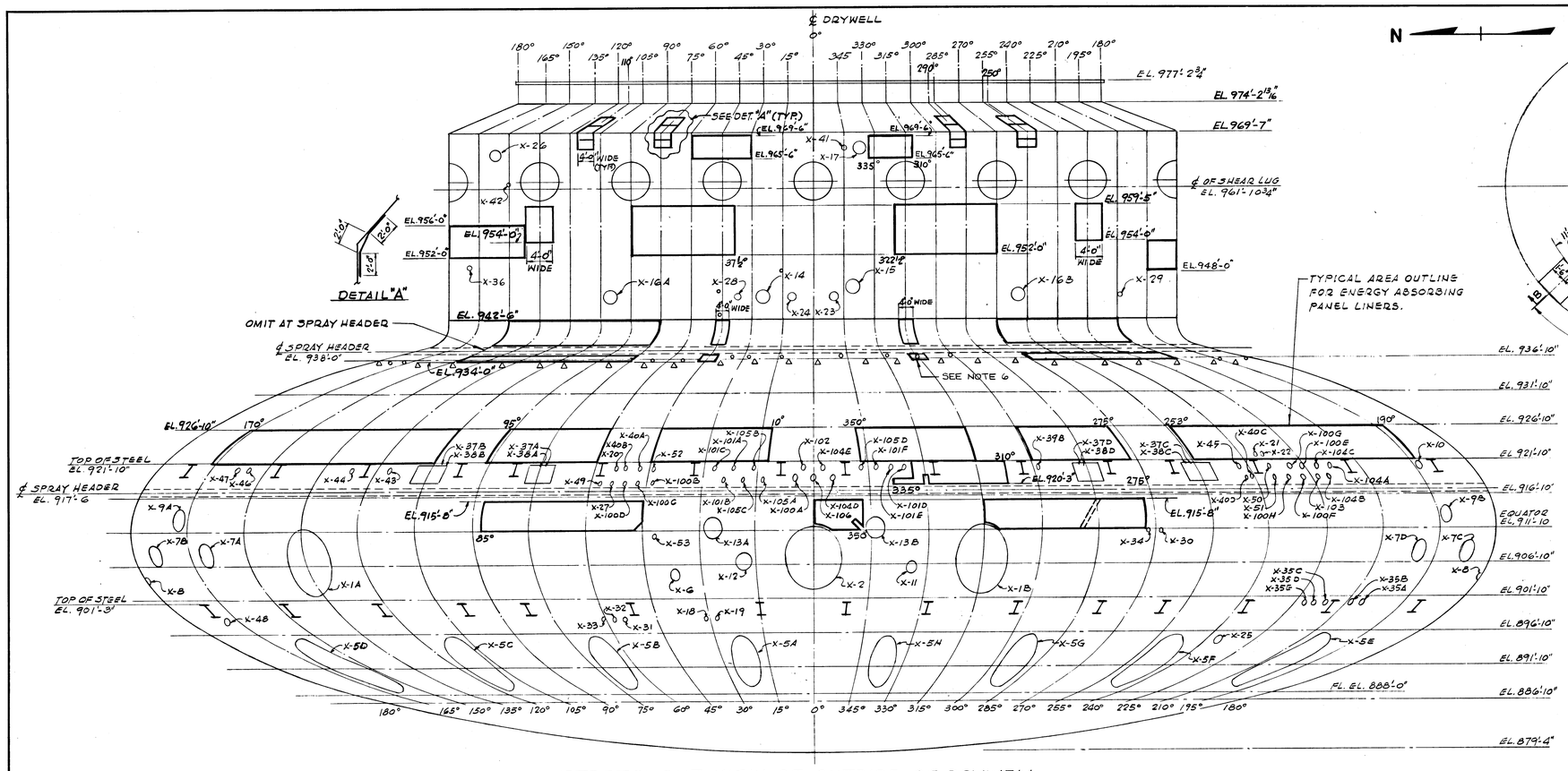

STRETCHOUT VIEW OF OUTSIDE OF DRYWELL

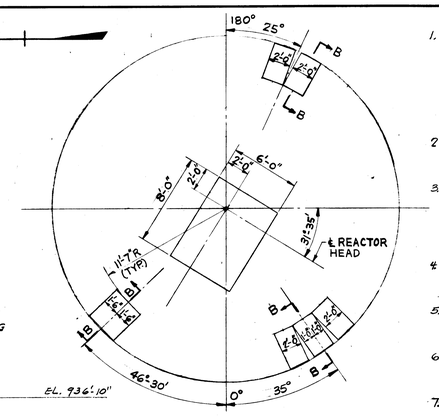

DRYWELL HEAD ADDITIONAL PANELS

NOTES:

1. LOCAL PANEL INTERFERENCES WITH PIPING, DUCTWORK, STRUCTURAL STEEL AND ELECTRICAL CONDUIT HAVE NOT BEEN NOTED ON DRAWING. CONTRACTOR SHALL FOLLOW REQUIREMENTS OUTLINED IN SPECIFICATION E72-37 PARAGRAPH 3.1 RELATIVE TO THIS MATTER.
2. PANELS REQUIRED TO BE CUT IN FIELD SHALL BE REPAIRED TO RE-ESTABLISH ITS STRUCTURAL INTEGRITY.
3. PANELS NOTCHED TO ALLOW FOR S/RV SUPPORTS AS SHOWN ON STRETCHOUT VIEW AT AZIMUTH 50°, ELEVATION 912'-0"; AZIMUTH 330°, ELEVATION 920'-3" AND AZIMUTH 350°, ELEV. 912'-0".
4. PANEL BRACING MODIFIED TO ALLOW FOR S/RV SUPPORTS AT AZIMUTH 85°, ELEV. 915'-8" AND AZIMUTH 50° ELEV. 912'-0".
5. PANEL CORRUGATION REMOVED AS SHOWN AT AZIMUTH 290° ELEVATION 912'-0", COVER PLATE REMAINS.
6. HOLE CUT IN ENERGY ABSORBING PANEL FOR RIGGING PAD. SEE CBI DRAWING NO. 10GA2-1.
7. ENERGY ABSORBER FRAMES HAVE BEEN TRIMMED FOR TWO (VR) PIPING SUPPORTS. SEE VR-H50 AND VR-H59 SUPPORT DRAWINGS FOR DETAILS.

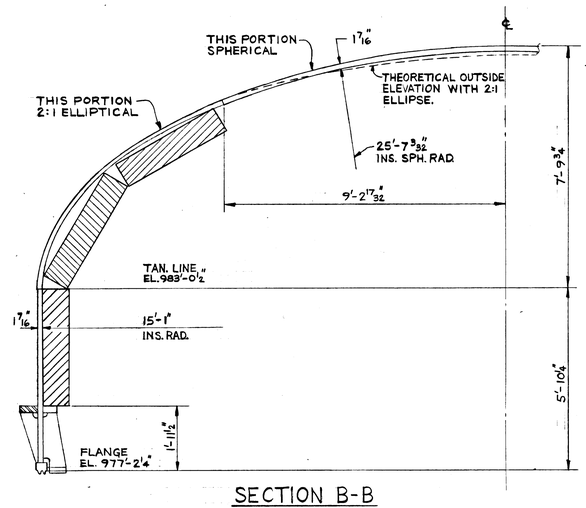

SECTION B-B

SPHERICAL DIAMETER = 65'-0"
CYLINDRICAL DIAMETER = 35'-7"
DIAMETER @ EL. 977'-2 3/4" = 30'-2"

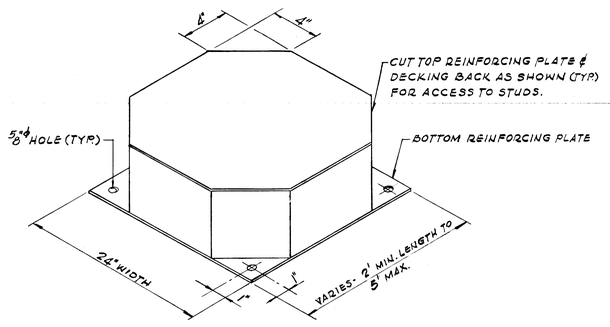

PROTECTION PANEL

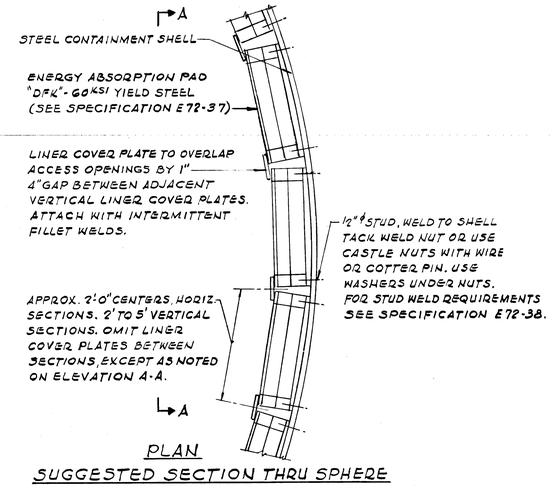

PLAN

SUGGESTED SECTION THRU SPHERE SEGMENT OF CONTAINMENT VESSEL

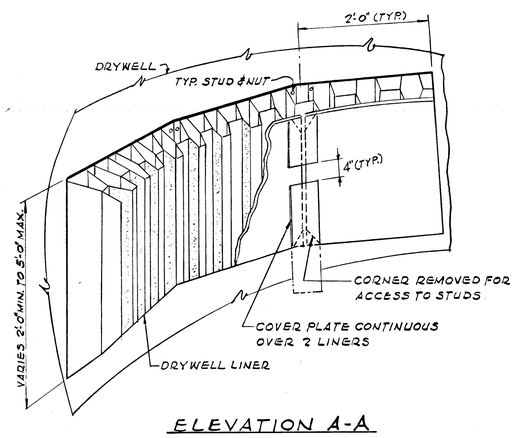

ELEVATION A-A

o SEE CBI ER 94, ER 95, ER 96 PAD ON INSIDE OF CONTAINMENT FOR RIGGING.

△ SEE CBI CONTRACT DWG. 3 PAD ON INSIDE OF CONTAINMENT FOR SCAFFOLD.

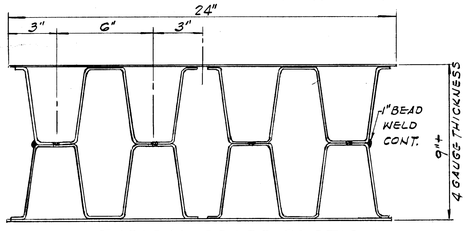

TYPICAL CROSS SECTION

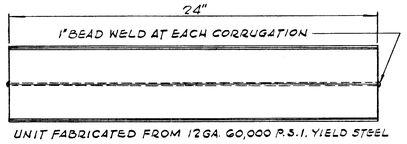

UNIT FABRICATED FROM 12GA. 60,000 P.S.I. YIELD STEEL

LONGITUDINAL SECTION
WELD LOCATIONS

NO4	DEPTD 2-13735 (DCN 98-0583)	DLR	KA	12-30-98		
NO3	DC 96-0441-1, R1 (DCN 96-0987)	PAM	JKF	9-25-96		
NO2	REV. PER CONTRACT 84-2 (DCN 86-114)	RK	PAM	3/13/91		
NO1	REV. PER DCN 85-928	TK	KA	4-26-89		
NO.	REVISIONS	BY	CHK	APP	DATE	

DCN REVISIONS BY N.P.P.D.

ENG. DES.	ELEC. ENG.	MECH. ENG.	CIVIL ENG.	
CLEARED BY	RE Sutherland	Klem	Wooley	
DATE	1/3/73	12/11/72	12/11/72	
REV. BY CH. DRAFTS	A.A. Williams	EBS	12/11/72	

REV. NO.	REVISION	BY	CHKD.	APP.	DATE
1	ADDED PLAN & SECTION FOR DRYWELL HEAD ADDITIONAL PANELS. ADDED ELEVATIONS ON STRETCHOUT VIEW.	A.S.	RCW	RK	2/15/73
2	ADDED ADD'L. PANELS ON STRETCHOUT VIEW OF DRYWELL	R.W.	RCW	RK	9/12/72

454004654

FOR CONSTRUCTION

BURNS AND ROE, INC.
ENGINEERS AND CONSTRUCTORS
ORADELL, N.J. HEMPSTEAD, N.Y. LOS ANGELES, CALIF.

ENERGY ABSORBING PANEL LINER LOCATIONS

CONSUMERS PUBLIC POWER DISTRICT
COOPER NUCLEAR STATION

DRAWN BY J.M.H. | SQUAD LDR. R.C. WOOD
CHECKED BY RCW | DATE 7-21-72 | SCALE NONE
APPROVED FOR CONSTRUCTION 1/3/73
FOR CHIEF CIVIL ENGINEER
W.O. 2520
DWG. 4286 REV. 4

ZONE	LTR	REVISIONS DESCRIPTION	DATE	APPROVED
		PRELIMINARY RELEASE SUBMITTAL DDT-30025-3	5-24-73	
A		REVISED & REDRAWN RESUBMITTAL #DDT-30025-10 (R.E.O. #6601)	7-27-73	
B		REVISED H_2 ANALYZER. ADDED LINE INDEX NUMBERS. ADDED AND CHANGED VALVE TAG NUMBERS. RESUBMITTAL #DDT-30025-17 (R.E.O. 14715)	9-12-73	
C		REQ 15026 GENERAL REVISION RESUBMITTAL #DDT-30025-34 (REQ 15038)	1-16-74	
D		REVISED AREAS CIRCLED RESUBMITTAL #DDT-30025-108 REQ #16756	1-11-74	
E		REVISED AREAS CIRCLED REQ. E.O. 17686	2/14/75	

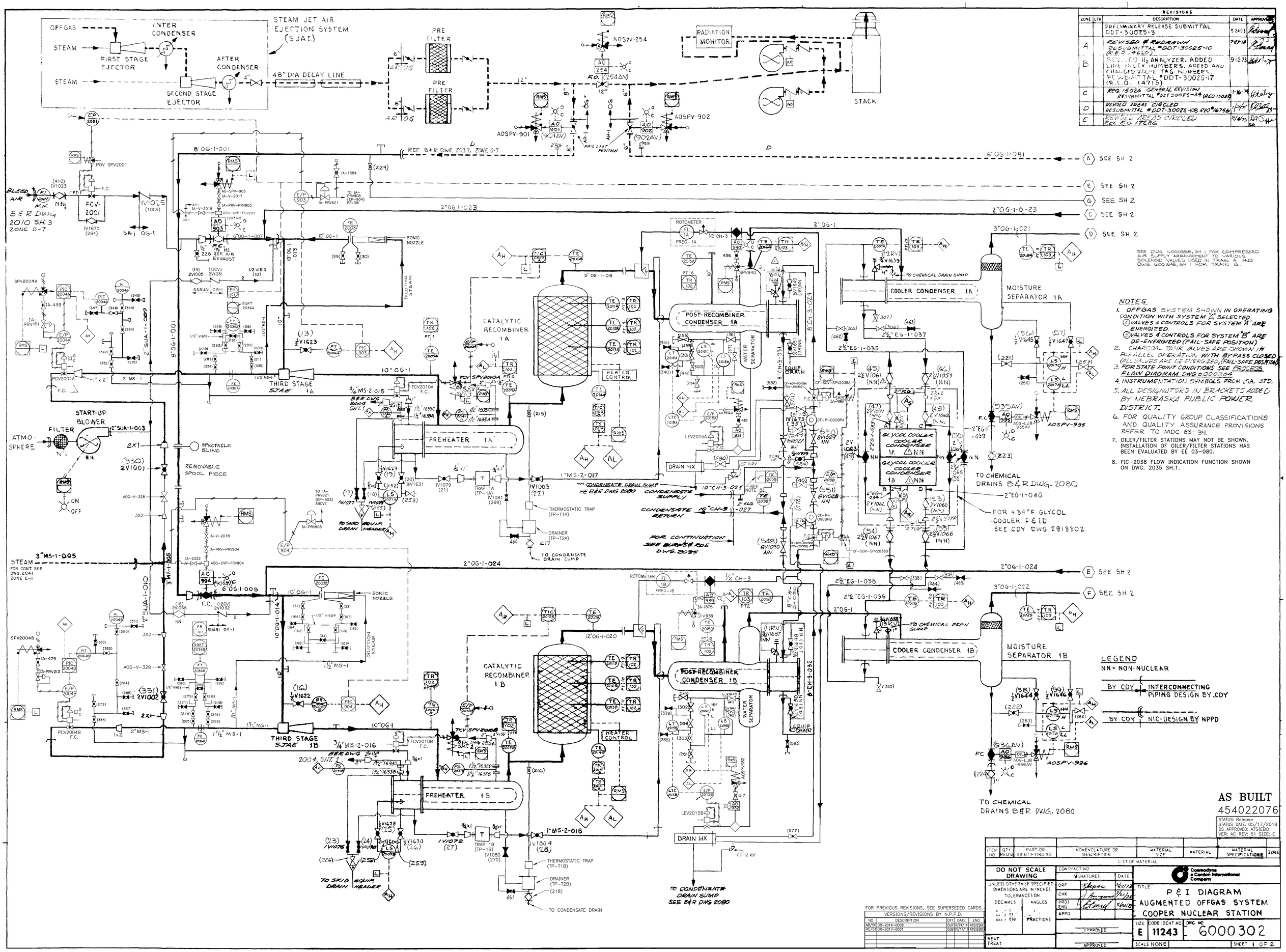

NOTES

1. OFFGAS SYSTEM SHOWN IN OPERATING CONDITION WITH SYSTEM "A" SELECTED
   (A) VALVES & CONTROLS FOR SYSTEM "A" ARE ENERGIZED.
   (B) VALVES & CONTROLS FOR SYSTEM "B" ARE DE-ENERGIZED (FAIL-SAFE POSITION)
2. CHARCOAL TANK VALVES ARE SHOWN IN PARALLEL OPERATION WITH BYPASS CLOSED (ALL VALVES ARE DE-ENERGIZED, (FAIL-SAFE POSITION)
3. FOR STATE POINT CONDITIONS SEE PROCESS FLOW DIAGRAM DWG 6000304
4. INSTRUMENTATION SYMBOLS FROM ISA. STD.
5. ALL DESIGNATORS IN BRACKETS ADDED BY NEBRASKA PUBLIC POWER DISTRICT.
6. FOR QUALITY GROUP CLASSIFICATIONS AND QUALITY ASSURANCE PROVISIONS REFER TO MDC 83-34.
7. OILER/FILTER STATIONS MAY NOT BE SHOWN. INSTALLATION OF OILER/FILTER STATIONS HAS BEEN EVALUATED BY EE 03-080.
8. FIC-2038 FLOW INDICATION FUNCTION SHOWN ON DWG. 2035 SH.1.

LEGEND

NN = NON-NUCLEAR

BY CDY — INTERCONNECTING PIPING DESIGN BY CDY

BY CDY — NIC-DESIGN BY NPPD

AS BUILT
454022076
STATUS: Release
STATUS DATE: 05/17/2018
DS APPROVED: ATSIEBO
VER: AC REV: 51 SIZE: E

FOR PREVIOUS REVISIONS, SEE SUPERSEDED CARDS.

VERSIONS/REVISIONS BY N.P.P.D.				
NO.	DESCRIPTION	DFT	DATE	ENG
AB/50	DR-2014-0008	GLB	6/24/14	ATSIEBO
AC/51	DR-2017-0001	GJB	5/17/18	ATSIEBO

ITEM NO	QTY REQ'D	PART OR IDENTIFYING NO	NOMENCLATURE OR DESCRIPTION	MATERIAL SIZE	MATERIAL	MATERIAL SPECIFICATIONS	ZONE
			LIST OF MATERIAL				

DO NOT SCALE DRAWING

UNLESS OTHERWISE SPECIFIED DIMENSIONS ARE IN INCHES
TOLERANCES ON
DECIMALS: . = ± .1, .x = ± .03, .xx = ± .010
ANGLES: ± 1°
FRACTIONS

HEAT TREAT

CONTRACT NO

SIGNATURES		DATE
DRF		5/21/73
CHK		7/21/73
PROJ ENG		5/24/73
APPD		

APPROVED

APPROVED

Cosmodyne a Cardon International Company

TITLE
P & I DIAGRAM
AUGMENTED OFFGAS SYSTEM
COOPER NUCLEAR STATION

SIZE E | CODE IDENT NO 11243 | DWG NO 6000302

SCALE NONE | SHEET 1 OF 2

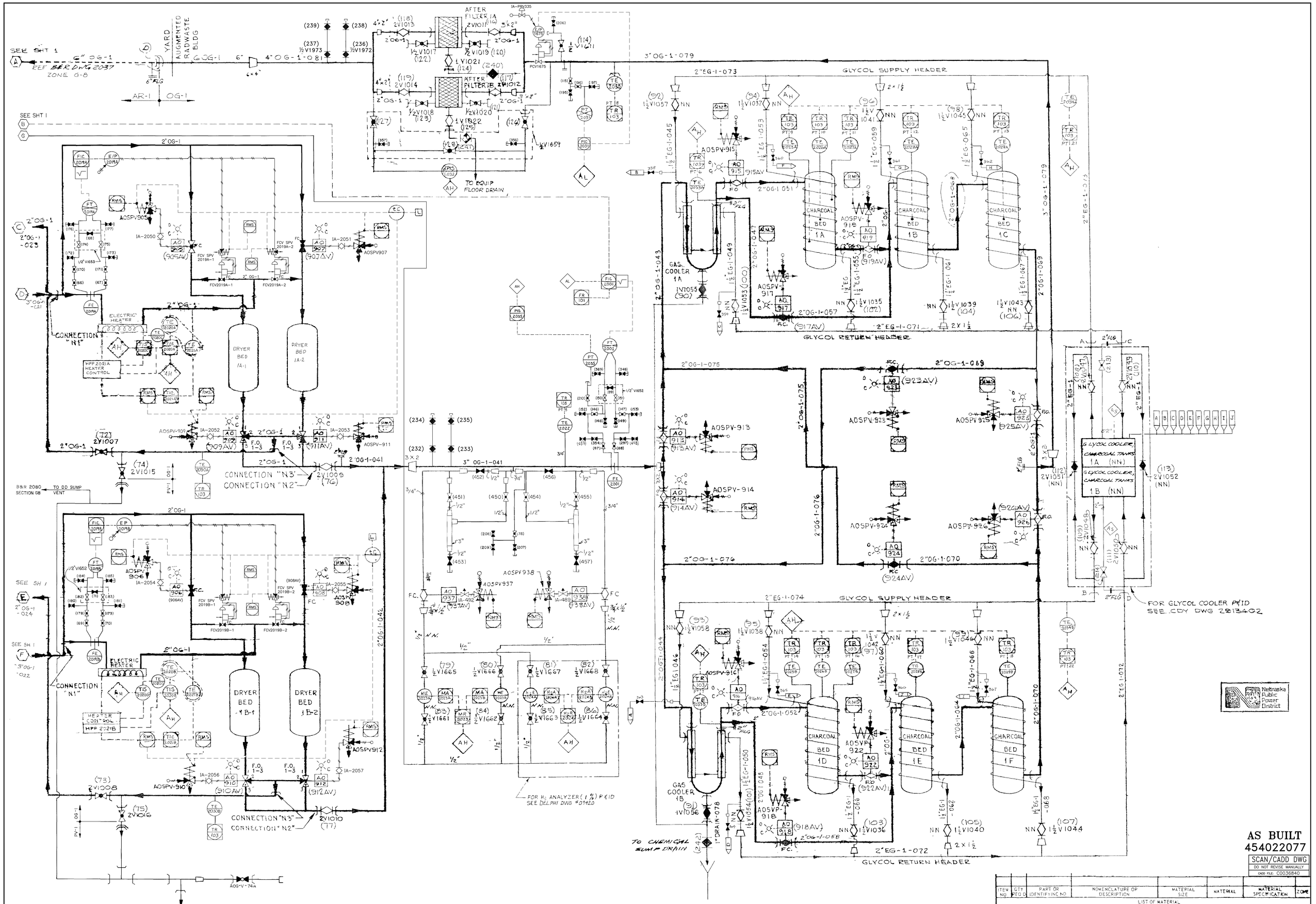

AS BUILT
454022077

SCAN/CADD DWG
DO NOT REVISE MANUALLY
CADD FILE: C0036840

ITEM NO	QTY REQ'D	PART OR IDENTIFYING NO	NOMENCLATURE OR DESCRIPTION	MATERIAL SIZE	MATERIAL	MATERIAL SPECIFICATION	ZONE

LIST OF MATERIAL

DO NOT SCALE DRAWING

UNLESS OTHERWISE SPECIFIED DIMENSIONS ARE IN INCHES
TOLERANCES ON
DECIMALS .X ± .1 .XX ± .03 .XXX ± .010
ANGLES ±
FRACTIONS

CONTRACT NO E72-17A

SIGNATURES		DATE
DRF	[illegible]	7/12/73
CHK	[illegible]	7/12/73
PROJ ENG	[illegible]	7/12/73
APPD		

Cheesebrough & Cordon Intermediate Company

TITLE
P & I DIAGRAM
AUGMENTED OFFGAS SYSTEM
COOPER NUCLEAR STATION

NEXT ASSY | USED ON
APPLICATION

HEAT TREAT | APPROVED | APPROVED

SIZE E | CODE IDENT NO 11243 | DWG NO 6000302 | REV. N24

SCALE NONE | 2 of 2

FOR PREVIOUS REVISIONS, SEE SUPERSEDED CARDS.

REVISIONS BY N.P.P.D.

NO.	REVISIONS	DFT	CKD	APP	DATE
N20	CR-CNS2004-06609 (DCN 04-2683)	DLR	DLR	RGA	10/28/04
N21	CED 8012480 (DCN 03-1412)	KG	RGA	DLR	9/7/05
N22	CR2006-09771 (DCN 07-0451)	DLR	DLR	DJB	4/25/07
N23	CED 6024785 (DCN 08-0329)	KPB	KPB	KG	10/13/08
N24	CR 2011-07948 (DCN 11-1000)	KZ	KZ	DLR	7/22/11

NOTICE

GENERAL ELECTRIC

719E415BB

TITLE P#10 NUCLEAR BOILER

FIRST MADE FOR COOPER

UNLESS OTHERWISE SPECIFIED USE THE FOLLOWING – APPLIED PRACTICES / SURFACES / TOLERANCES ON FRACTIONS DECIMALS ANGLES

FCF 238X100 BB, (-2)

REFERENCE DOCUMENTS:

1. RESIDUAL HEAT REMOVAL SYS P&ID ____ MPL #10
2. RCIC SYSTEM P&ID ____ MPL #13
3. REACTOR WATER CLEANUP SYS P&ID ____ MPL #12
4. CORE SPRAY SYSTEM P&ID ____ MPL #14
5. NUCLEAR BOILER VESSEL INSTR P&ID ____ MPL #2-3
6. STANDBY LIQUID CONTROL SYS P&ID ____ MPL #11
7. CONTROL ROD DRIVE HYD SYS P&ID ____ MPL #3
8. NEUTRON MONITORING SYS IED ____ MPL #7
9. FEEDWATER CONTROL SYS IED ____ MPL #6
10. PROCESS RADIATION MONITORING IED ____ MPL #17
11. HPCI SYS P&ID ____ MPL #23
12. REACTOR RECIRC PUMP P&ID ____ MPL #2-2
13. NUCLEAR BOILER FUNCTIONAL CONTROL DIAG
    A. MISC SYSTEMS ____ MPL #2-203
    B. RECIC FLOW CONTROL ____ MPL #2-184-5
14. SCHEMATIC CONTROL DIAGRAM ____ 175A9560
15. RESIDUAL HEAT REMOVAL SYS FCD ____ MPL #10-202
16. REACTOR PROTECTION SYS ____ MPL #5
17. PIPING & INSTRUMENT SYMBOLS ____ 104 R 900
18. DESIGN SPEC PRESS INTEGRITY OF PIPING & PRESS PARTS ____ MPL #1-115
19. DESIGN SPEC PROCESS INSTRUMENT PIPING & TUBING INSTALLATION ____ MPL #1-163
20. DESIGN SPEC NUCLEAR BOILER SYSTEM ____ MPL #2-201
21. PROCESS DIAGRAM NUCLEAR BOILER SYSTEM ____ MPL #2-202

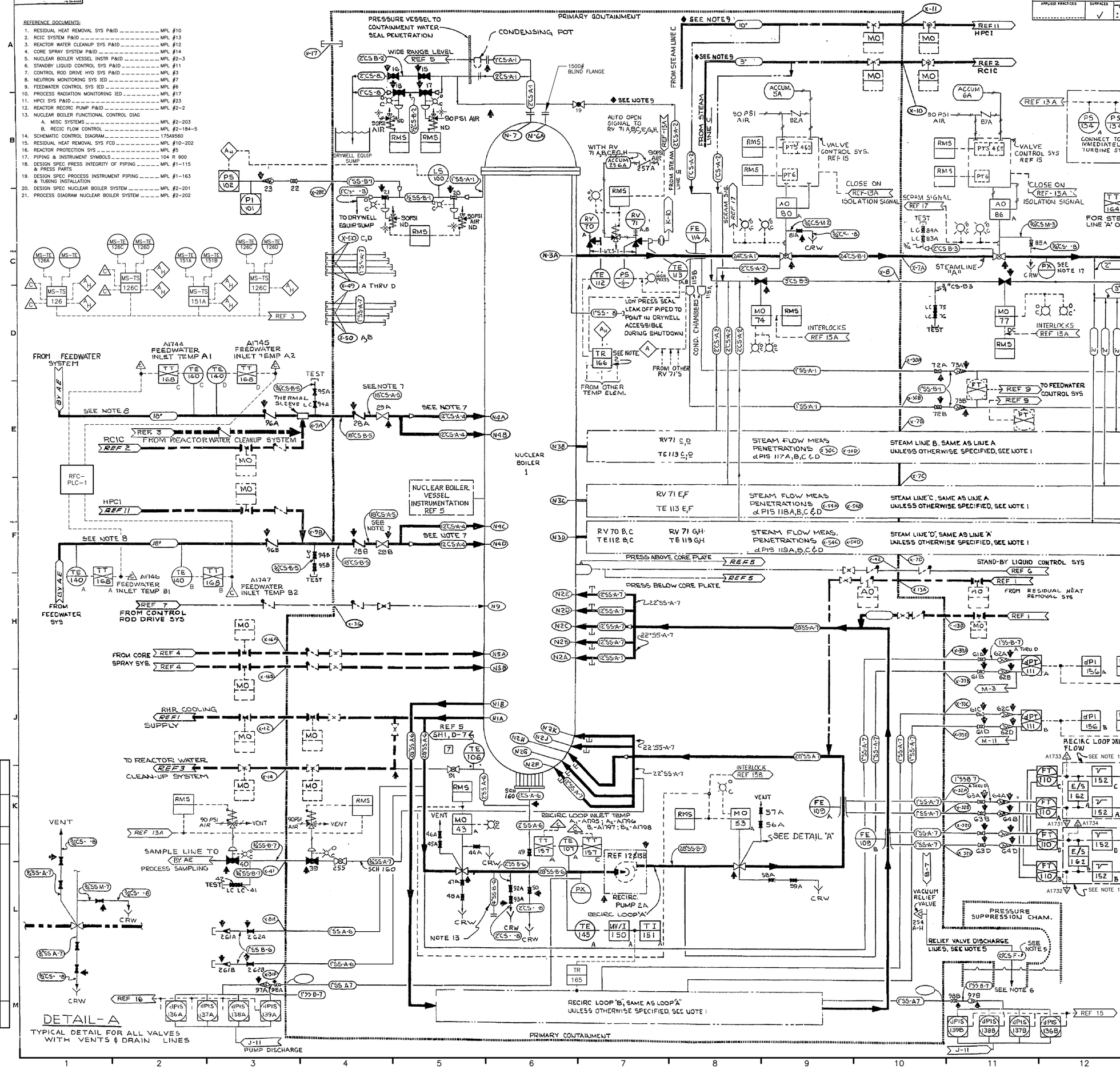

NOTES:

1. STEAM LINES & RECIRC LOOPS ENCLOSED IN BOXES SHALL HAVE PART NOS. CORRESPONDING TO ITS RESPECTIVE LINE OR LOOP NO. UNLESS OTHERWISE NOTED.
   XXXXB IS ON LINE "B"
   XXXXC IS ON LINE "C"
2. ALL RELIEF AND SAFETY VALVE THERMOCOUPLES SHALL BE CONNECTED TO TEMPERATURE RECORDER TR 166.
3. PIPE CLASSIFICATION
   EXAMPLE: 26" - CS - A - 1
   PIPE SIZE; MATERIAL; PIPE CLASS PER REF. 18; PRESS TEMP INDEX NO.
   CS - CARBON STEEL SS - STAINLESS STEEL

MATERIAL	PRESS TEMP INDEX NO.	DESIGN PRESS & TEMPERATURE	IN SERVICE TEMPERATURE
CS OR SS	1	1146 PSIG 565°F	408°F
CS	2	1146 PSIG 562°F	70°F
CS	3	1146 PSIG 562°F	40°F
CS	4	1475 PSIG 575°F	40°F
CS	5	DESIGN PRESS & TEMP BY AE	40°F
CS OR SS	6	1148 PSIG 563°F	70°F
SS	7	1274 PSIG 575°F	--
CS OR SS	8	150 PSIG 300°F	--

4. PIPE CLASSIFICATION NOT GIVEN FOR LINES IN AE DESIGN SCOPE.
5. A SEPARATE LINE IS TO BE RUN INTO THE SUPPRESSION CHAMBER THROUGH THE VENT PIPING FOR EACH INDIVIDUAL RELIEF VALVE. LINE IS TO BE ROUTED BY AE TO PASS RELIEF VALVE CAPACITY WITHOUT EXCEEDING BACK PRESSURE SPECIFIED ON PROCESS DIAGRAM (REF 20).
6. PROVIDE HOLD-DOWN AGAINST BLOWING REACTION.
7. VALVE 29 DESIGNED TO MOST SEVERE COND. BETWEEN UP-STREAM AND DOWN-STREAM CONDITIONS.
8. DESIGN PRESS. & TEMP TO BE ESTABLISHED BY AE BASED ON FEED PUMP SHUT OFF PRESSURE & SYSTEM ARRANGEMENT.
9. LINES INDICATED BY ◆ ARE SINGLE LINES & ARE CONNECTED ONLY WHERE ACTUALLY SHOWN.
10. ◀▶ INDICATES PIPE CLASSIFICATION CHANGE.
11. ALL EQUIPMENT & INSTRUMENTS ARE PREFIXED BY 2- WHICH IS PART 2 ON THE MASTER PARTS LIST.
12. INSTRUMENTS, PIPING AND VAL ING BEYOND FLOW LIMITING VALVES MUST COMPLY WITH REF. 19.
13. DECONTAMINATION CONNECTION TO BE READILY ACCESSIBLE FOR CONVENIENT & RAPID CONNECTION OF TEMPORARY PIPING.
14. PIPE SIZES SHOWN ON THIS DRAWING ARE APPROXIMATE EXCEPT AT POINTS OF CONNECTION WITH THE APED SUPPLIED EQUIPMENT OR PIPING. THE PIPING DESIGNER SHALL CHECK AND ADJUST PIPE SIZE IN ACCORDANCE WITH HIS PIPING LAYOUT FOR CONFORMANCE WITH THE SYSTEM DESIGN SPEC AND PROCESS DIAGRAM.
15. ALL MOTOR & SOLENOID VALVES SHALL BE AC UNLESS OTHERWISE NOTED.
16. FOR LOCATION & IDENTIFICATION OF INSTRUMENTS SEE INSTRUMENT DATA SHEET LISTED IN MPL FOR EACH INSTRUMENT.
17. PRESSURE TEST POINT TO BE LOCATED AS CLOSE AS POSSIBLE TO AO 2-86 & INSTALLED PER REF 19.
18. THIS BLOCK IS PART OF NEUTRON MONITORING SYSTEM FLOW UNIT. EACH UNIT IS GROUPED FOR ISOLATION WITHIN THE PANEL AS INDICATED.

FOR PREVIOUS REVISIONS, SEE SUPERSEDED CARDS.

VERSIONS/REVISIONS BY N.P.P.D.

NO.	DESCRIPTION	DFT	DATE	ENG
AB/14	DR-2015-0641	PAM	10/30/16	JDNEDDE

AS BUILT

452062868

STATUS: Release
STATUS DATE: 11/08/2016
DS APPROVED: JDNEDDE
VER: AB REV: 14 SIZE: C

719E415BB

CONT ON SHEET F SH # 1

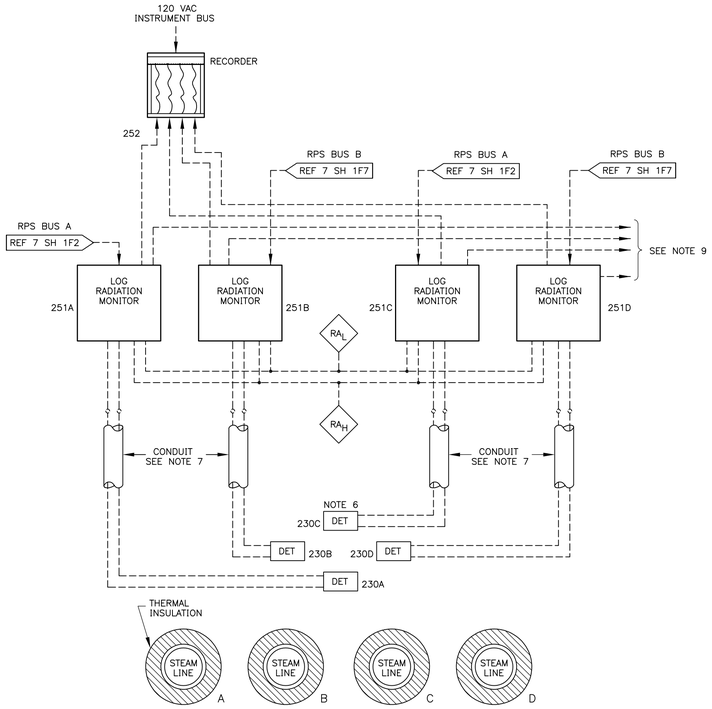

MAIN STEAM LINE RADIATION MONITORS

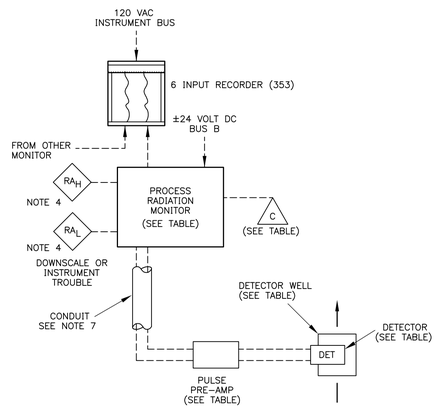

PART DESCRIPTION	REACTOR BUILDING CLOSED COOLING EFFLUENT MONITOR	LOCATION
DETECTOR WELL	302	PROCESS PIPE
DETECTOR	334	PROCESS PIPE
PULSE PRE-AMP	335	LOCAL AREA
PROCESS RAD MONITOR	352	MAIN CONTROL ROOM
RECORDER	353	MAIN CONTROL ROOM
PMIS POINT	N400	MUX CAB 9-80

REACTOR BUILDING CLOSED COOLING LIQUID PROCESS RADIATION MONITOR

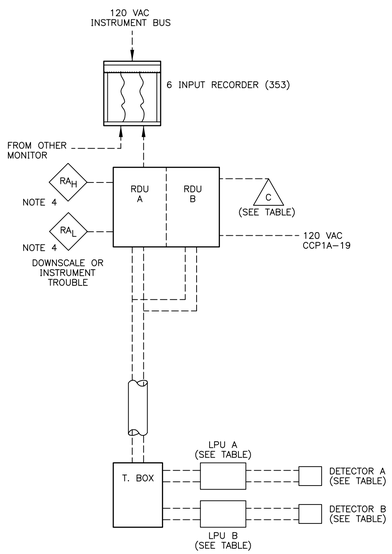

PART DESCRIPTION	SERVICE WATER EFFLUENT MONITOR	LOCATION
DETECTOR	332A, 332B	PROCESS PIPE
LPU	332A, 332B	LOCAL AREA
RDU	351A, 351B	MAIN CONTROL ROOM
RECORDER	353	MAIN CONTROL ROOM
PMIS POINT	N056, N057	MUX CAB 9-80

SERVICE WATER LIQUID PROCESS RADIATION MONITOR

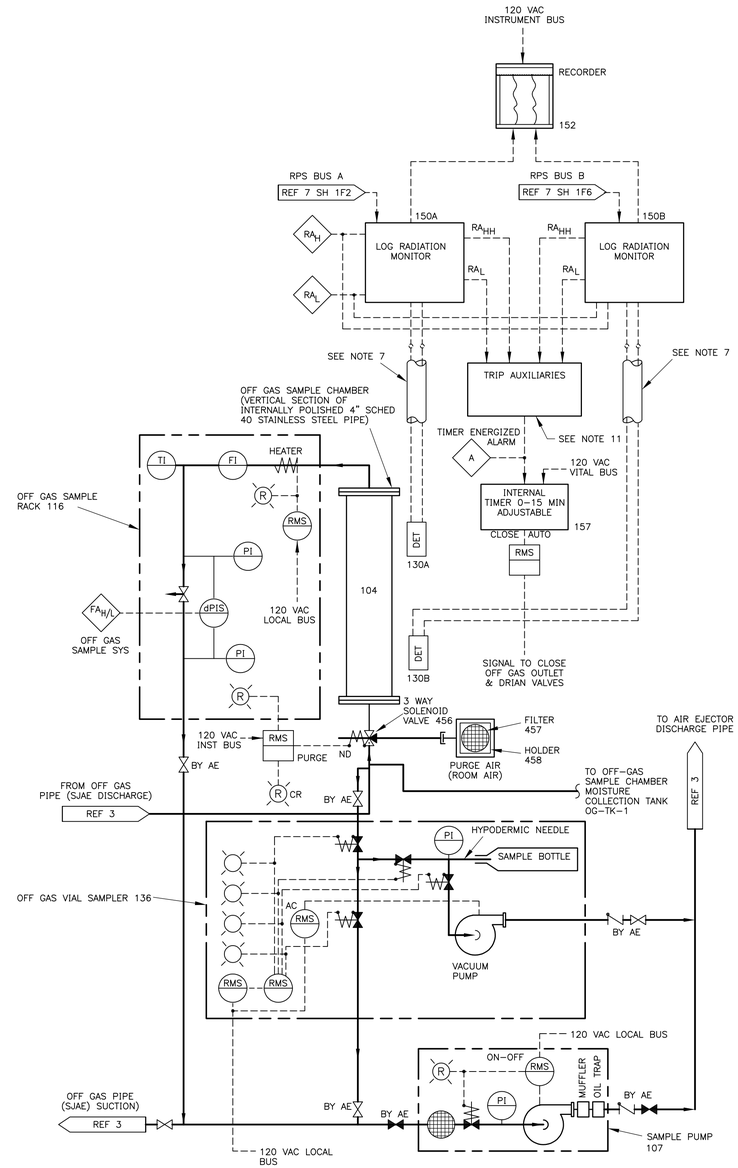

OFF GAS RADIATION MONITORS & SAMPLERS

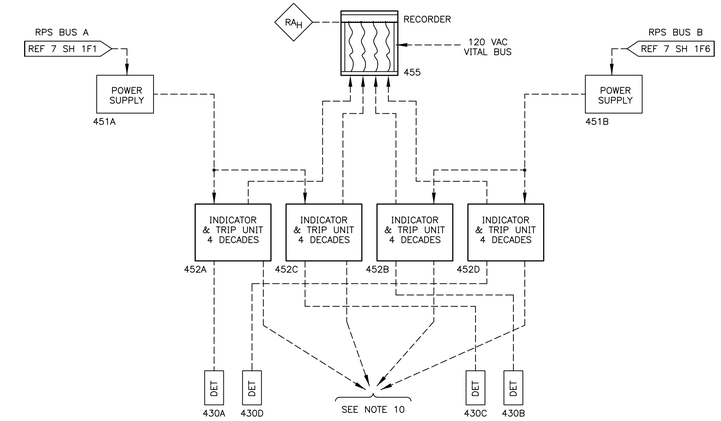

REACTOR BUILDING VENTILATION EXHAUST PLENUM RADIATION MONITOR

NOTES:

1. THE OFF GAS VENT PIPE GAS SAMPLE LINE BY AE SHALL BE 1" X 0.058" WALL THICKNESS SEAMLESS STAINLESS STEEL TUBING. THE TUBING MINIMUM BEND RADIUS SHALL BE 20". THE TUBING LENGTH SHALL BE JOINED WITH SWAGELOK TYPE 1610-6-316 UNIONS. THE TUBING SHALL SLOPE SO THAT CONDENSATE WILL RUN TO DRAIN TEE.
2. REMOVABLE SECTION SHALL BE PROVIDED NEAR THE ISOKINETIC PROBE FOR THE INSERTION OF A CHARCOAL FILTER HOLDER. THE FITTINGS ETC. SHALL PROVIDE SMOOTH TRANSITIONS WITHOUT DISCONTINUITIES OR REDUCING THE CROSS-SECTIONAL AREA OF THE FLOW STREAM.
3. UNION TEE SWAGELOK TYPE 1610-6-316.
4. ALARMS ARE ACTUATED BY RELAYS IN TRIP AUX UNIT PART 355.
5. ALL EQUIP AND INSTRUMENTS ARE PREFIXED BY 17 WHICH IS PART 17 ON THE MASTER PARTS LIST.
6. THE DETECTORS (230) SHALL BE LOCATED AS CLOSE AS PRACTICAL TO THE PRIMARY CONTAINMENT. THE DETECTORS SHALL BE ARRANGED SUCH THAT EACH DECTOR WILL VIEW ALL STEAM LINES WITH APPROXIMATELY THE SAME RESPONSE. THE DETECTOR OR DETECTOR ASSEMBLY MAY BE FASTENED TO A ROD OR A PIPE AND INSERTED INTO SEALED PIPE WELLS FROM OUTSIDE THE STEAM TUNNEL. CAREFULLY ROUTE CABLES TO MINIMIZE HEAT EXPOSURE. NO LEAD SHIELDING IS REQUIRED.
7. ALL CABLE SHALL COMPLY WITH GE ENGR SPEC REF A.
8. FOR LOCATION AND IDENTIFICATION OF INSTRUMENTS, SEE INSTRUMENT DATA SHEET LISTED IN MPL FOR EACH INSTRUMENT.
9. ONE HIGH RADIATION OR INOPERATIVE TRIP OUT OF TWO IN TRIP SYSTEM "A" AND ONE HIGH RADIATION OR INOPERATIVE TRIP OUT OF TWO IN THIS SYSTEM "B" SHALL TURN OFF MECHANICAL VACUUM PUMP AND CLOSE MECHANICAL LINE VALVE (REF 3). ANY ONE HIGH RADIATION SHALL ALARM (RA_{HH}).
10. IN EACH DIVISION, THE SIGNAL FROM ONE UPSCALE TRIP OR TWO DOWNSCALE TRIPS SHALL TRIP THAT DIVISION. TRIPPING OF BOTH DIVISIONS SHALL:
    A. SHUTDOWN REACTOR BUILDING VENTILATION SYSTEM AND VALVE OFF REACTOR BUILDING.
    B. INITIATE STANDBY GAS TREATMENT SYSTEM.
    C. CLOSE PRIMARY CONTAINMENT PURGE AND VENT VALVES.

    ANY ONE UPSCALE TRIP SHALL ALARM (RA_{HH}).

    ANY ONE DOWNSCALE TRIP SHALL ALARM (RA_L).

    UPSCALE TRIPS SHALL BE IN ACCORDANCE WITH THE REQUIREMENTS OF THE PRIMARY CONTAINMENT ISOLATION SYSTEM.
11. IF A HIGH-HIGH OR DOWNSCALE OR INOP TRIP OCCURS IN EACH OF THE TWO CHANNELS, THE OFFGAS TIMER WILL INITIATE AND A CONTROL ROOM ANNUNCIATOR WILL ACTIVATE. THE TIMER WILL IN TURN INITIATE AN OFFGAS ISOLATION. ANY ONE HIGH, DOWNSCALE OR INOP TRIP WILL GIVE AN ALARM IN THE CONTROL ROOM.

REFERENCE ENG SPECS:

A.	MPL	1-11	DESIGN SPECIFICATION FOR INSTRUMENT WIRE AND CABLE.
B.	MPL	17-1	DESIGN SPECIFICATION RADIATION MONITORING OF PROCESS FLUIDS AND GASES.
C.	MPL	1-112	DESIGN SPECIFICATION, SAMPLING OF PROCESS FLUIDS AND GASES.

REFERENCE DRAWINGS:

		MPL NO.
1.	PIPING AND INSRTUMENT SYMBOLS	104R900
2.	PLANT DC AND INST. AC/DC SYS ONE LINE DIAG.	1-63
3.	FLOW DIAGRAM OFF GAS SYSTEM HOLDUP	1-107-1
4.	P & ID RADWASTE SYSTEM	20-0
5.	FCD NUCLEAR BOILER MISC SYSTEM	2-203
6.	P & ID REACTOR BLDG. CLOSE COOLING WATER SYS.	BY AE
7.	REACTOR PROTECTION SYSTEM IED	5-0

LEGEND:

SJAE	STEAM JET AIR EJECTOR
DET	ALARM DETECTOR
FC	FAIL CLOSE
RA_H	RADIATION ALARM HIGH
RA_L	INSTRUMENT TROUBLE
RA_{HH}	RADIATION ALARM HIGH HIGH

INFORMATION ONLY

453011518

CADD DRAWING

DO NOT REVISE MANUALLY

FOR PREVIOUS REVISIONS, SEE SUPERSEDED CARDS.

REVISIONS BY N.P.P.D.

NO.	REVISIONS	DFT	CKD	APP	DATE
N08	CED 6005412 (DCN 01-0906)	RAC	RHG	KG	11-2-02
N09	CED 6008680 (DCN 02-0683)	RAC	RHG	KG	1-20-03
N10	CED 6010281 (DCN 03-0605)	RAC	RHG	KG	4-23-04
N11	CED 6010281 (DCN 03-0784)	RAC	RHG	KG	4-23-04
N12	CED 6005412 (DCN 03-1579)	jac	RHG	KG	4-23-04
N13	CED 6005412 (DCN 04-0643)	RAC	RHG	KG	10-20-04

REVISIONS

NO.

SIGNIFICANT NUMBER						
GROUP	1	2	3	4	5	6

COOPER NUCLEAR STATION
PROCESS RADIATION
MONITORING SYSTEM

DRAWN TRU	DATE 4/5-94	GENERAL ELECTRIC
CHECKED JAC	DATE 6-14-94	
APPROVED WCF	DATE 6-14-94	
FILMED	719E479BB SH 1	REVISION N13

CADD FILE: C0014050

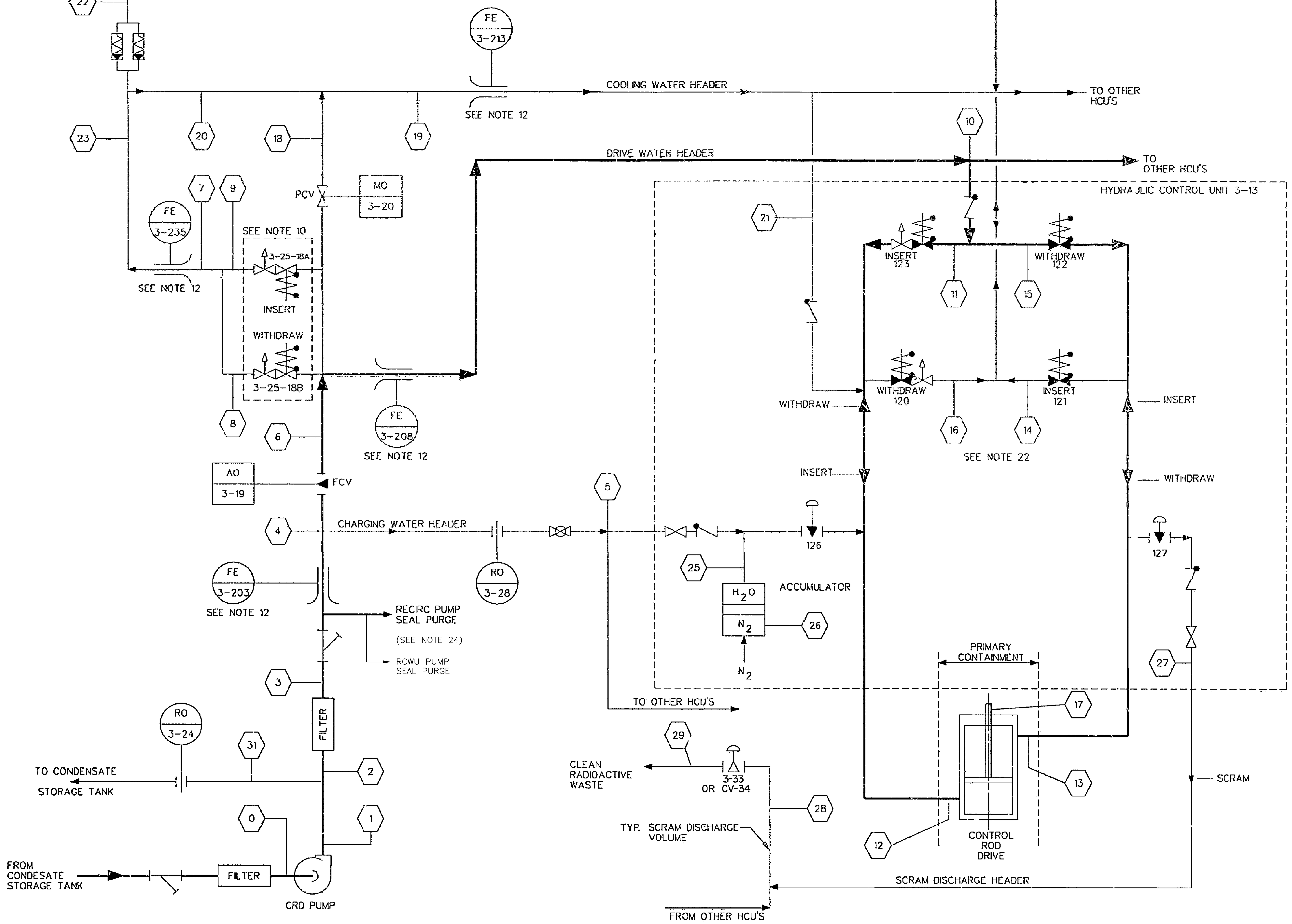

— PRESSURE EQUALIZING VALVE

REFERENCE DRAWINGS: | MPL ITEM NO.

1. P&ID CONTROL ROD DRIVE HYDRAULIC SYS — 3
2. FUNCTIONAL CONTROL DIAG — 3-7
3. DESIGN SPEC — 3-5

2. PR IS DEFINED AS THE REACTOR PRESSURE IN THE SHROUD INNER ANNULUS IMMEDIATELY ABOVE THE CORE PLATE.
3. MAX. OPERATING PR = 1055 PSIG
   MIN. OPERATING PR = 0 PSIG
   DESIGN PR = 1250 PSIG
4. RESPONSE TIME OF FCV 3-19 IS SUCH THAT SCRAM IS COMPLETED BEFORE FCV STARTS TO CLOSE.
5. PRESSURE DROP FROM (25) TO (12) SHALL NOT EXCEED 195 PSI AT A FLOW OF 50 GPM. PRESSURE DROP IN HCU SHALL NOT EXCEED 60 PSI AT 50 GPM.
6. FLOW CONDITIONS LISTED ARE BASED ON A ROD VELOCITY OF 100 IN. PER SEC. HOWEVER, THE ACTUAL MAX ROD VELOCITY IS APPROXIMATELY 85 IN. PER SEC.
7. FLOW IS INTO DRIVE FROM REACTOR PRESSURE VESSEL.
8. "—" IN TABLES I THRU VII INDICATES SAME AS LISTED UNDER CONDITION 1.
9. PRESSURE DROP FROM (13) TO (28) SHALL NOT EXCEED 290 PSI AT 32 GPM. PRESSURE DROP IN HCU SHALL NOT EXCEED 118 PSI AT 32 GPM.
10. VALVE 3-25-18A CLOSES ON DRIVE INSERT SIGNAL. VALVE 3-25-18B CLOSES ON DRIVE WITHDRAW SIGNAL, BUT DOES NOT STAY CLOSED DURING SETTLING.
11. APPROXIMATE PUMP DISCHARGE PRESSURE AT SPECIFIED FLOW.
12. MAXIMUM SYSTEM PRESSURE DROP ACROSS ELEMENTS:

FLOW ELEMENT	FLOW-GPM	PRESSURE DROP-PSI	OUTPUT SIGNAL AT FULL SCALE
3-203	59	0.4	200" H_2O AT 80 GPM
3-208	4	81	200" H_2O AT 8 GPM
3-235	6	3	200" H_2O AT 8 GPM
3-213	47	3.7	200" H_2O AT 60 GPM

13. CONDITIONS LISTED REPRESENT THOSE CONDITIONS WHICH EXIST AFTER 10% INSERTION OF FULL STROKE.
14. THE 546°F LISTED IN CONDITIONS IV AND V SHALL BE USED ONLY IN DETERMINING THE MINIMUM PIPE WALL THICKNESS AND NOT IN DETERMINING STRESSES DUE TO THERMAL EXPANSION. IN DETERMINING MINIMUM WALL THICKNESS IT MAY BE ASSUMED THAT THIS TEMPERATURE OCCURS LESS THAN 1% OF THE OPERATING LIFE OF THE SYSTEM.
15. THE DESIGN CONDITIONS ARE SHOWN FOR 137 CONTROL ROD DRIVERS, MPL NO. 02-1-10.
16. MINIMUM PUMP SUCTION PRESSURE LISTED UNDER CONDITION 1, LOCATION 0 IS 9.8 PSIA.
17. MAXIMUM FLOW VALUE OCCURS AT PR = 0 PSIG. MIN FLOW VALUE OCCURS AT PR = 1000 PSIG.
18. WITH THE EXCEPTION OF LOCATIONS (28) AND (29) SYSTEM CONDITIONS LISTED ON THIS DWG ARE FOR SINGLE DRIVE OPERATION ONLY.
19. PART NO'S. ARE DERIVED FROM REF 1.
20. DRIVE SETTLING SPEED (CONDITION VII) IS APPROX 2" PER SEC.
21. NORMAL DRIVE COOLING FLOW REQUIREMENTS ARE NOT LESS THAN 0.20 GPM PER DRIVE.
22. EXHAUST WATER FLOW FROM ONE MOVING DRIVE IS DISPERSED VIA HYDRAULIC CONTROL UNITS OF OTHER NON-MOVING DRIVES TO THE REACTOR PRESSURE VESSEL.
23. DURING SCRAM, FLOW WILL BE DIRECTED INTO THE SCRAM DISCHARGE VOLUME. FOLLOWING SCRAM, THIS FLOW WILL DECLINE AS VALVE FCV 3-19 CLOSES AND AS THE SCRAM DISCHARGE VOLUME PRESSURIZES TO EQUAL THE REACTOR PRESSURE. AFTER THE SCRAM DISCHARGE VOLUME AND THE REACTOR VESSEL PRESSURE HAVE EQUALIZED, FLOW WILL BE DIVERTED TO THE REACTOR VESSEL VIA THE CRD WITHDRAW LINES AT A FLOW RATE DEPENDENT ON THE REACTOR PRESSURE.
24. RECIRC. PUMP AND RWCU PUMP SEAL PURGES ~5.3 TO 7.7 GPM

CONDITION I

DRIVE LATCHED (VALVES 3-13: 120, 121, 122, 123, 126, 127 CLOSED ; 3-25-18A & 18B OPEN)

◯ LOCATION	0	1	2	3	4	5	6	7	8	9	10	11	12	13	14	15	16	17	18	19	20	21	22	23	24	25	26	27	28	29	30	31
FLOW, GPM	76.6	76.6	32.0/56.6	32.0/56.6	32.0/56.6	0	26.0/46.6	6.0	2.0	4.0	0	0	19/.34	0	0	0'	0	(21) .19/.34	20.0/40.6	26.0/46.6	6.0	.19/.34	0	6.0	X	0	0	0	0	0	X	20
PRESS PSIG	(16) 7	(11) 1614	1518	1512	1510	1510 MAX	PR+ 20	PR+ 15	PR+ 15	PR+ 15	PR+ 260	PR+ 260	PR+ 10/10	PR	PR+ 12	PR+ 60	PR+ 12	PR	PR+ 16/24	PR+ 16/24	PR+ 12	PR+ 12/15	PR+ 12	PR+ 12	X	1510	1510	0	0	0	X	1614
TEMP F°	40/140	50/150	50/150	50/150	50/150	50/150	50/150	50/150	50/150	50/150	50/150	50/150	50/150	60/150	50/150	50/150	50/150	60/200	50/150	50/150	50/150	50/150	50/150	50/150	X	50/150	50/150	50/200	50/200	50/200	X	50/150

CONDITION II

DRIVE INSERTING (VALVES 3-13: 121, 123: 3-25-18B OPEN: 3-13: 120, 122, 126, 127; 3-25-18A CLOSED)

◯ LOCATION	0	1	2	3	4	5	6	7	8	9	10	11	12	13	14	15	16	17	18	19	20	21	22	23	24	25	26	27	28	29	30	31	
FLOW, GPM	—	—	—	—	—	—	—	2.0	2.0	0	4.0	4.0	4.0	.72	.72	—	—	1.26	—	—	2.0	0	—	2.0	X	—	—	—	—	—	X	—	(8)
PRESS PSIG	—	—	—	—	—	—	—	—	—	—	PR+ 250	PR+ 245	PR+ 90	PR+ 15	PR+ 15	PR+ 245	PR+ 15	—	—	—	—	PR+ 14/22	PR+ 15	—	X	—	—	—	—	—	X	—	
TEMP F°	—	—	—	—	—	—	—	—	—	—	—	—	50/150	50/200	—	—	—	—	—	—	—	—	—	—	X	—	—	—	—	—	X	—	

CONDITION III

DRIVE WITHDRAWING (VALVES 3-13: 120, 122, 3-25-18A OPEN: 3-13-121, 123, 126, 127; 3-25-18B CLOSED

◯ LOCATION	0	1	2	3	4	5	6	7	8	9	10	11	12	13	14	15	16	17	18	19	20	21	22	23	24	25	26	27	28	29	30	31	
FLOW, GPM	—	—	—	—	—	—	—	4.0	0	—	2.0	0	1.63	2.0	0	2.0	1.63	2.16	—	—	4.0	0	—	4.0	X	—	—	—	—	—	X	—	(8)
PRESS PSIG	—	—	—	—	—	—	—	—	—	—	PR+ 250	PR+ 245	PR+ 110	PR+ 230	PR+ 16	PR+ 245	PR+ 16	—	—	—	—	PR+ 14/22	PR+ 15	—	X	—	—	—	—	—	X	—	
TEMP F°	—	—	—	—	—	—	—	—	—	—	—	—	50/200	—	—	—	—	—	—	—	—	—	—	—	X	—	—	—	—	—	X	—	

CONDITION IV

DRIVE SCRAMMING (VALVES 3-13: 126, 127: 3-25-18A & 18B OPEN: 3-13: 120, 121, 122, 123 & 3-33 CLOSED)

TOTAL STORAGE RATE (NOT FLOW) [location 28]

◯ LOCATION	0	1	2	3	4	5	6	7	8	9	10	11	12	13	14	15	16	17	18	19	20	21	22	23	24	25	26	27	28	29	30	31	
FLOW, GPM	—	—	—	—	—	—	—	—	—	—	—	—	(6) 90	29.6	—	—	—	(7) -3.6	—	—	—	0	—	—	X	90	—	29.6	~4055	0	X	—	(8) (4) (23)
PRESS PSIG	—	—	—	—	—	—	—	—	—	—	—	—	(5) 731 MAX	(9) 256 MAX	—	—	—	—	—	—	—	—	—	—	X	1362	1412	8	8	—	X	—	(13)
TEMP F°	—	—	—	—	—	—	—	—	—	—	—	—	—	(14) 50/546	—	—	—	50/546	—	—	—	—	—	—	X	—	—	50/280	50/280	50/212	X	—	

CONDITION V SCRAM COMPLETED

(SCRAM VALVES 3-13: 126, 127 OPEN-SCRAM DISCHARGE VOLUME PRESSURE <65 PSIG)

TOTAL STORAGE RATE (NOT FLOW) [location 28]

◯ LOCATION	0	1	2	3	4	5	6	7	8	9	10	11	12	13	14	15	16	17	18	19	20	21	22	23	24	25	26	27	28	29	30	31	
FLOW, GPM	199/135	199/135	181/116	181/116	171/110	166/107	5/3	0	0	0	0	—	1.29/0.86	-0.46/2.58	—	—	—	(7) 1.95/1.76	5/3	0	5/3	0	(23) 5/3	0	X	—	—	0.00/2.58	0.00/3.53	0	X	18/19	(17) (8)
PRESS PSIG	-4/3	1349/1521	459/1169	440/1142	418/1132	159/1027	PR	PR	PR	PR	PR	PR	127/1015	65 MAX	PR	PR	PR	—	PR	PR	PR	PR	PR	PR	X	124/1012	565 MIN	65 MAX	65 MAX	—	X	1349/1521	
TEMP F°	—	—	—	—	—	—	—	—	—	—	—	—	—	50/546	—	—	—	50/546	—	—	—	—	—	—	X	—	—	50/280	50/280		X	—	

CONDITION VI SCRAM COMPLETED

(SCRAM VALVES 3-13: 126, 127 OPEN-SCRAM DISCHARGE VOLUME PRESSURE AT PR)

◯ LOCATION	0	1	2	3	4	5	6	7	8	9	10	11	12	13	14	15	16	17	18	19	20	21	22	23	24	25	26	27	28	29	30	31	
FLOW, GPM	200/132	200/132	182/113	182/113	172/107	167/104	5/3	0	0	0	0	—	1.29/0.80	0/0	—	—	—	1.29/0.80	5/3	5/3	0	0	—	0	X	—	—	0/0	0/0	0	X	18/19	(17) (8)
PRESS PSIG	-4/3	1347/1528	489/1187	434/1166	411/1157	151/1058	PR	PR	PR	PR	PR	PR	118/1046	4.6/1002	PR	PR	PR	—	PR	PR	PR	PR	PR	PR	X	115/1043	565 MIN	65 MAX/1002	65 MAX/1002	—	X	1347/1528	
TEMP F°	—	—	—	—	—	—	—	—	—	—	—	—	—	—	—	—	—	50/200	—	—	—	—	—	—	X	—	—	50/280	50/280	50/212	X	—	

CONDITION VII

DRIVE SETTLING (VALVES 3-13: 121, 122, 123 CLOSED; 3-25-18A: 3-13-120 OPEN)

◯ LOCATION	0	1	2	3	4	5	6	7	8	9	10	11	12	13	14	15	16	17	18	19	20	21	22	23	24	25	26	27	28	29	30	31	
FLOW, GPM	—	—	—	—	—	—	—	—	—	—	—	—	1.5	—	—	—	1.5	(7) .6	—	—	—	0	0	—	X	—	—	—	—	—	X	—	(8) (20)
PRESS PSIG	—	—	—	—	—	—	—	—	—	—	—	—	PR+ 22	—	PR+ 12	—	PR+ 12	—	—	—	—	PR+ 20	PR+ 12	—	X	—	—	—	—	—	X	—	
TEMP F°	—	—	—	—	—	—	—	—	—	—	—	—	—	—	—	—	—	—	—	—	—	—	—	—	X	—	—	—	—	—	X	—	

VIII SPECIAL CONDITIONS

1.) STALLED LEAKAGE FLOW "INSERT" ~ 1 GPM AT (12)
2.) STALLED LEAKAGE FLOW "WITHDRAW" ~ 2 GPM AT (13)

FOR PREVIOUS REVISIONS, SEE SUPERSEDED CARDS.

VERSIONS/REVISIONS BY N.P.P.D.				
NO.	DESCRIPTION	DFT	DATE	ENG
AC/03	DR-2013-0880 FROM VERSION AB)	RLR	5/5/15	BSSWOBO

AS BUILT
454005831

STATUS: Release
STATUS DATE: 06/03/2015
DS APPROVED: BSSWOBO
VER: AC REV: 03 SIZE: F

COOPER NUCLEAR STATION

FCF: 239X348BB(3-6)

EQUIPMENT CLASS. CODE

SAFETY RELATED — THIS ITEM IS OR CONTAINS A SAFETY RELATED ITEM ☐ YES ☐ NO
IEEE CLASS 1E — NUCLEAR SAFETY RELATED ☐ YES ☐ NO

SIGNATURES	DAY	MO	YR
DRAWN LH BIBBY	1	10	69
CHECKED LH BIBBY	1	10	69
DFTG GA BAYLIS	9	10	69
ENGRG [signature]	20	3	87

GENERAL ELECTRIC

NEBO DEPT — LOC SAN JOSE

PROCESS DIAGRAM
CONTROL ROD DRIVE
HYDRAULIC SYSTEM

APPLIED PRACTICES — ALL SURF.
UNLESS OTHERWISE SPECIFIED TOLERANCES ON :
2 PLACE DECIMALS ± — FRACTIONS ±
3 PLACE DECIMALS ± — ANGLES ±

FMF COOPER
ISSUE DATE 10-9-69
DWG NO. 719E580BB
COMPL STAT C — SH NO. 1 — CONT ON F

735 — DIST TO

719E580BB — SH NO. 1

S-190-CA — EIS — CA-A6170R3

GENERAL ELECTRIC

729E174BB

TITLE 1ED

RECIRC. FLOW CONTROL SYS

FIRST MADE FOR COOPER

PCF: 299X347BB 2-184

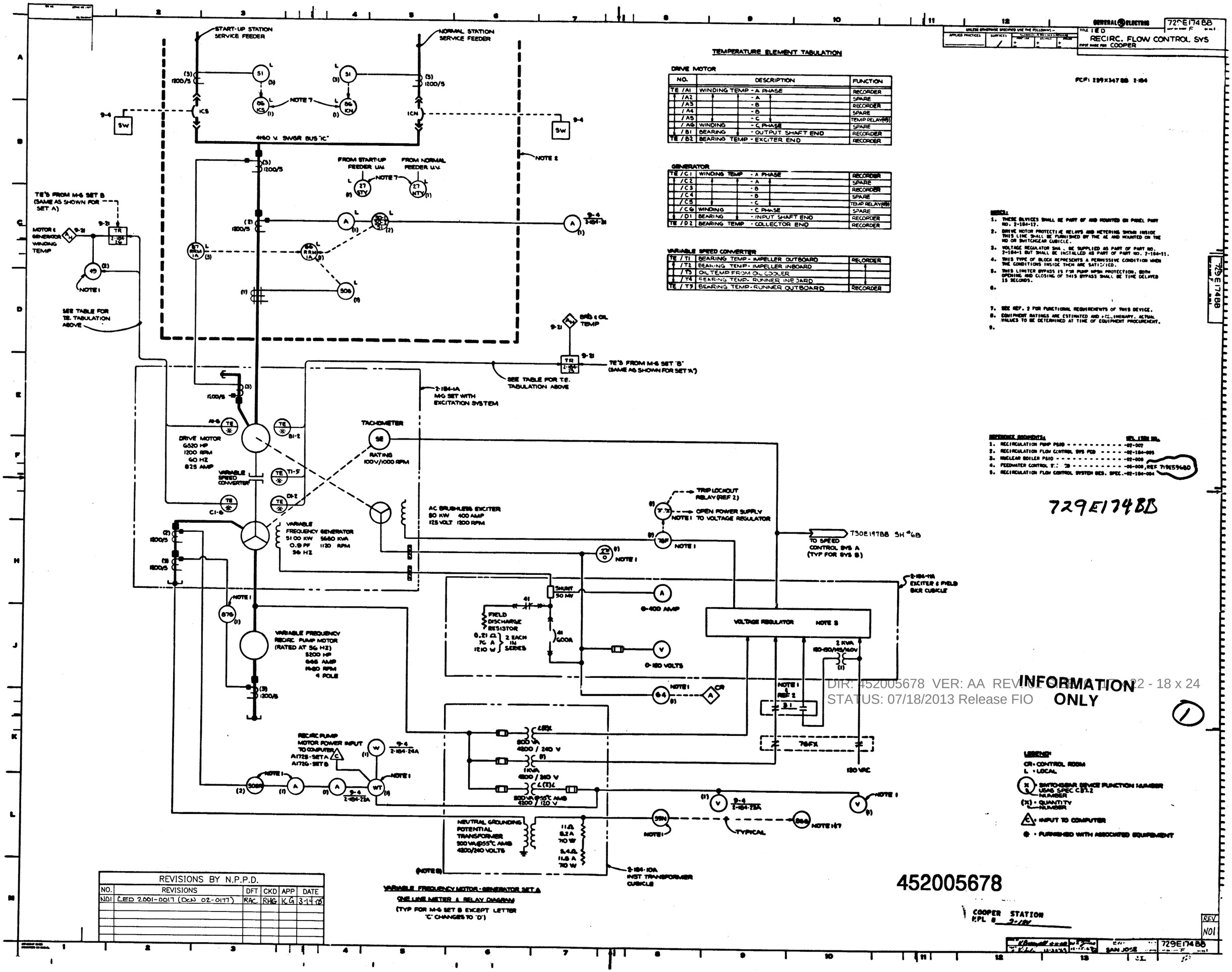

TEMPERATURE ELEMENT TABULATION

DRIVE MOTOR

NO.	DESCRIPTION	FUNCTION
TE /A1	WINDING TEMP - A PHASE	RECORDER
/A2	- A	SPARE
/A3	- B	RECORDER
/A4	- B	SPARE
/A5	- C	TEMP RELAY(49)
/A6	WINDING - C PHASE	SPARE
/B1	BEARING - OUTPUT SHAFT END	RECORDER
TE /B2	BEARING TEMP - EXCITER END	RECORDER

GENERATOR

TE /C1	WINDING TEMP	- A PHASE	RECORDER
/C2		- A	SPARE
/C3		- B	RECORDER
/C4		- B	SPARE
/C5		- C	TEMP RELAY(49)
/C6	WINDING	- C PHASE	SPARE
/D1	BEARING	- INPUT SHAFT END	RECORDER
TE /D2	BEARING TEMP	- COLLECTOR END	RECORDER

VARIABLE SPEED CONVERTER

TE / T1	BEARING TEMP - IMPELLER OUTBOARD	RECORDER
/T2	BEARING TEMP - IMPELLER INBOARD	
/T3	OIL TEMP FROM OIL COOLER	
/T4	BEARING TEMP - RUNNER INBOARD	
TE / T5	BEARING TEMP - RUNNER OUTBOARD	RECORDER

NOTES:

1. THESE DEVICES SHALL BE PART OF AND MOUNTED ON PANEL PART NO. 2-184-17.
2. DRIVE MOTOR PROTECTIVE RELAYS AND METERING SHOWN INSIDE THIS LINE SHALL BE FURNISHED BY THE AE AND MOUNTED ON THE MD OR SWITCHGEAR CUBICLE.
3. VOLTAGE REGULATOR SHALL BE SUPPLIED AS PART OF PART NO. 2-184-1 BUT SHALL BE INSTALLED AS PART OF PART NO. 2-184-11.
4. THIS TYPE OF BLOCK REPRESENTS A PERMISSIVE CONDITION WHEN THE CONDITIONS INSIDE THEM ARE SATISFIED.
5. THIS LIMITER BYPASS IS FOR PUMP NPSH PROTECTION. BOTH OPENING AND CLOSING OF THIS BYPASS SHALL BE TIME DELAYED 15 SECONDS.
6.
7. SEE REF. 2 FOR FUNCTIONAL REQUIREMENTS OF THIS DEVICE.
8. EQUIPMENT RATINGS ARE ESTIMATED AND PRELIMINARY. ACTUAL VALUES TO BE DETERMINED AT TIME OF EQUIPMENT PROCUREMENT.
9.

REFERENCE DRAWINGS:

1. RECIRCULATION PUMP P&ID		-02-002
2. RECIRCULATION FLOW CONTROL SYS FCD		-02-184-005
3. NUCLEAR BOILER P&ID		-02-000
4. FEEDWATER CONTROL S.: 2D		-06-000, REF 719E59680
5. RECIRCULATION FLOW CONTROL SYSTEM DES. SPEC.		-02-184-004

729E174BB

LEGEND:

CR = CONTROL ROOM
L = LOCAL
(X) = SWITCHGEAR DEVICE FUNCTION NUMBER (IEAE SPEC C37.2 NUMBER)
(X) = QUANTITY NUMBER
C = INPUT TO COMPUTER
* = FURNISHED WITH ASSOCIATED EQUIPMENT

REVISIONS BY N.P.P.D.

NO.	REVISIONS	DFT	CKD	APP	DATE
N01	CED 2001-0017 (DCN 02-0177)	RAC	RHG	KG	3-14-05

452005678

COOPER STATION
P.P.L. # 2-184

REV N01

729E174BB

SAN JOSE

DIR: 452005678 VER: AA REV: N01 FORMAT: 22 - 18 x 24
STATUS: 07/18/2013 Release FIO
INFORMATION ONLY

NOTES (CONTINUED)

14. THE DATA PRESENTED FOR MODE C2 CORRESPONDS TO THE PEAK SUPPRESSION POOL TEMPERATURE FOR A SMALL STEAM LINE BREAK ACCIDENT (REF. NEDC 94-034D). RHR FLOWRATES FOR MODE C2 REPRESENT ANALYTICAL MINIMUM VALUES WHICH ACCOUNT FOR NOZZLE PLUGGING (REF. NEDC 00-049), ACTUAL FLOW RATES MAY BE GREATER. THE RHR HEAT EXCHANGER OUTLET TEMPERATURES WERE CALCULATED IN NEDC 93-184.

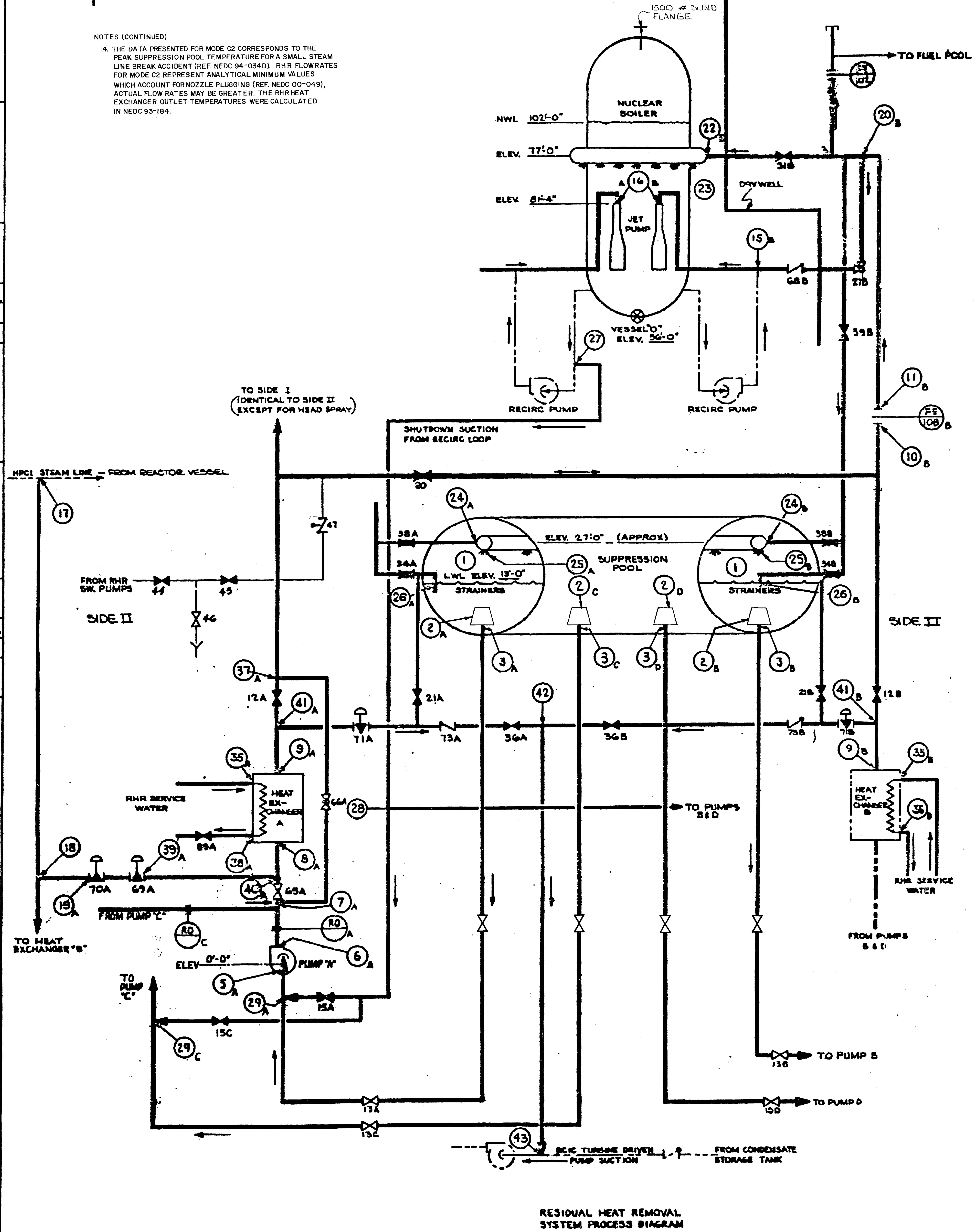

RESIDUAL HEAT REMOVAL SYSTEM PROCESS DIAGRAM

MODE A (SEE NOTES 12 & 13) — Rx PRESS = 20 PSID ABOVE DRYWELL PRESSURE

POSITION ○	1	2	3	5	6	7A	37A			10A	11A	20A	15A	16A	34								
FLOW GPM	←								7700					→	—								
PRESS PSIA	14.7														36.7								
TEMP °F	—	130	←											→130	—								
MAX PRESS DROP PSI				ΔTDH 175						ΔP 0.8			ΔP [illegible]										

MODE B (SEE NOTES 12 & 13) — Rx PRESS = 20 PSID ABOVE DRYWELL PRESS

POSITION ○	1	2 A/C	3 A/C	5 A/C	6 A/C	7A	37A	10A	11A	20A	15A	16A	34									
FLOW GPM	—	7500 ←		→7500	15000 ←							→15000	—									
PRESS PSIA	14.7												36.7									
TEMP °F	—	130 ←										→130	—									
MAX PRESS DROP PSI				ΔTDH=190																		

MODE C1 — TYP EITHER SIDE

POSITION ○	1	2 3/10	3 3/10		5 3/10	6 3/10	7B	8B	9B		10B	11B		20B	21B	22B	23	24B	25B	1		35B	36B
FLOW GPM	—	5750	5750		5750	5750	11500	11500	11500		11500	←		→11500	10900	—	600	600	—		8000	8000	
PRESS PSIA	25.5															25			25.5				
TEMP °F	—	187	←				→187	173.7		173.7	←			→173.7	—	173.7	173.7	—		90	109.1	
MAX PRESS DROP PSI					ΔTDH=237										ΔP=50		ΔP=50				ΔP=10		

DUTY PER HEAT EXCHANGER 76.3 x 10^6 BTU/HR — TOTAL HEAT EXCHANGER DUTY 76.3 x 10^6 BTU/HR (SEE NOTE 6)

MODE C2 (SEE NOTE 14) — TYP EITHER SIDE

POSITION ○	1	2B	3B		5B	6B	7B	8B	9B		10B	11B		20B	21B	22B	23	24B	25B	1		35B	36B	
FLOW GPM	—	6500 ←													→6500	6100	—	400	400	—		4000	4000	
PRESS PSIA	27.1																26.6			27.1				
TEMP °F	—	211.4 ←						→211.4	187	←						→187	—	187	187	—		95	132.4	
MAX PRESS DROP PSI					ΔTDH=175																			

DUTY PER HEAT EXCHANGER 77.5 x 10^6 BTU/HR — HEAT EXCHANGER DUTY 77.5 x 10^6 BTU/HR

MODE D1 (2Hx) / **MODE D2 (1Hx)**

POSITION ○	34	17	18	19 A18	39 A18	40 A18	41 A18	26 A18	1	42	43	35 A18	36 A18	34	17	18	19A	39A	40A	41A	42	43	35A	36A
FLOW LBS/HR	—	13.8 x10^3	13.8 x10^3	6.9 x10^3	←		→	6.9 x10^3	—	13.8 x10^3	13.8 x10^3	4x10^6	4x10^6	—	5.9 x10^3	←						6.9 x10^3	4x10^6	4x10^6
PRESS PSIA	1014.7				214.7				14.7		64.7			1014.7				214.7				64.7		
TEMP °F	546	←		546	390	390	140	140	—	140	140	85	103.6	546	←	→	546	390	390	140	140	140	85	111.8
MAX PRESS DROP PSI		ΔP=800			ΔP=200	ΔP=125									ΔP=800			ΔP=125						

DUTY PER HEAT EXCHANGER 74.5 x10^6 BTU/HR (2Hx OPERATING) — DUTY PER HEAT EXCHANGER 107x10^6 BTU/HR (1Hx OPERATING)

MODE E — Rx PRESS = 50 PSIA

POSITION ○	34	27	28	29 A13	5 A13	6 A18	8 A18	9 A18	10B	11A	20A			15B	16B	34						34	35 A13	36 A13
FLOW GPM	—	15400	15400	7700	←		→7700	15400	15400	15400			15400	15400	—						—	8000	8000
PRESS PSIA	50														50						50		
TEMP °F	—	281	←				→281	241.2	←					→241.2	—						—	75	113.8
MAX PRESS DROP PSI					ΔTDH 175																		

DUTY PER HEAT EXCHANGER 155 x 10^6 BTU/HR — TOTAL HEAT EXCHANGER DUTY 310 x 10^6 BTU/HR

MODE F — Rx PRESS = 0 PSIG — Rx TEMP = 125° F <20 HR AFTER SCRAM

POSITION ○	34	27	28	29 A13	5 A18	6 A18	8 A18	9 A13			10B	11B	20B			15B	16B	34				35 A13	36 A13
FLOW GPM	—	15400	15400	7700	←			→7700			15400 ←						→15400	—				8000	8000
PRESS PSIA	14.7																	14.7					
TEMP °F	—	125	←					→125	115.7	←							→115.7	—				75	83.9
MAX PRESS DROP PSI					ΔTDH=125																		

DUTY PER HEAT EXCHANGER 35.7x10^6 BTU/HR — TOTAL HEAT EXCHANGER DUTY 71.4 x 10^6 STU/HR

MODE G. (SEE NOTE 12) — Rx PRESS = 0 PSID

POSITION ○	1	2A	3A		5A	6A	7A	37A	10A	11A	20A			15A	16A	34							
FLOW GPM	—	←					8400								→	—							
PRESS PSIA	14.7															14.7							
TEMP °F	—	130	←												→130	—							
MAX PRESS DROP PSI					ΔTDH=130																		

MODE H — TYP EITHER SIDE

POSITION ○	1	2A	3A		5A	6A	7A	37A	10A	11A	20A	21A	26A	1									
FLOW GPM	—	←						7700					→	—									
PRESS PSIA	14.7													14.7									
TEMP °F	—	90	←										→90	—									
MAX PRESS DROP PSI					ΔTDH=125																		

MODE I — TYP EITHER SIDE

POSITION ○	34	27	28	29A	5A	6A	8A	9A	10A	11A	20A			15A	16A	34							
FLOW GPM	—	←						7700							→	—							
PRESS PSIA	14.7															14.7							
TEMP °F	—	125	←												→125	—							
MAX PRESS DROP PSI					ΔTDH=125																		

FCF: 238X100BB, 10-201

PRIMARY MODES

A. ACCIDENT W/RECIRC LINE BREAK IN SIDE II WITH ONE PUMP OPERATION (20 PSID).

B. ACCIDENT W/RECIRC LINE BREAK IN SIDE II WITH TWO PUMP OPERATION (20 PSID).

C.1 POST ACCIDENT CON'T. SPRAY W/HEAT REJECTION WITH TWO PUMP OPERATION (NORMAL SUPP POOL TEMP).

C.2 POST ACCIDENT CON'T SPRAY W/HEAT REJECTION WITH ONE PUMP OPERATION (PEAK SUPP POOL TEMP).

D.1 REACTOR ISOLATION - STM. COND - 2Hx REACTOR ISOLATION - STM. COND - 1Hx POOL COOLING (1Hx) NOT SHOWN.

E. NORMAL SHUTDOWN AFTER BLOWDOWN TO MAIN CONDENSER. (35 PSIG). SEE NOTE 9

F. CONTINUATION OF NORMAL SHUTDOWN FROM PLANT MODE E. (0 PSIG)

G. ACCIDENT W/RECIRC LINE BREAK IN SIDE II WITH SAME PUMP OPERATION. (0 PSID) MAX. RUNOUT CONDITIONS.

H. R.H.R. SYSTEM TEST DURING PLANT OPERATION.

I. FUNCTIONAL TEST FOLLOWING SHUTDOWN.

NOTES:

1. A/E IS TO FILL IN VALUES (BASED ON HIS ANALYSIS) FOR ALL EMPTY DATA BLANKS AND SUBMIT TO SMRSD FOR REVIEW. IF SIDE I AND SIDE II ARE NOT SYMETRICALLY ARRANGED, VALUES FOR BOTH SHALL BE SUBMITTED.

2. ALL ELEVATIONS ARE WITH RESPECT TO RHR PUMP ELEVATION WHICH IS ASSUMED TO BE 0'-0".

3. REFERENCE NEDC 97-041 AND 97-044 FOR NPSH MARGIN.

4. ALLOWANCE FOR SYSTEM PIPE FRICTION, VALVE & FITTING LOSSES ETC. ARE REFLECTED BY THE PRESSURES REPORTED IN THIS TABULATION. THIS ALLOWANCE IS BASED ON PRELIMINARY LAYOUTS & THE DATA & METHODS PRESENTED IN CRANE TECHNICAL PAPER 410 ASSUMING CLEAN PIPE EXCEPT FOR CARBON STEEL PIPE. FOR RUNS OF CARBON STEEL PIPE (NOT CARBON STEEL VALVES & FITTINGS) A MARGIN OF 20% ABOVE THE CLEAN FRICTION LOSS IS INCLUDED. PIPE FRICTION, VALVE & FITTING LOSSES ETC. MAY BE DISTRIBUTED THROUGHOUT SYSTEM AS REQUIRED BY FINAL SYSTEM LAYOUT CONSIDERATIONS AS LONG AS THE TOTAL DOES NOT EXCEED THAT INDICATED ON THIS DIAGRAM.

5. ELEVATIONS ARE NOT INCLUDED IN G.E. EQUIPMENT ΔP VALUES GIVEN. ELEVATIONS SHALL BE INCLUDED WHEN DETERMINING FINAL VALUES FOR THE EMPTY DATA BLANKS. PUMP HEAD & OVERALL ΔP ARE BASED ON ELEVATIONS SHOWN. PUMP HEAD WILL NOT CHANGE, THEREFORE, ANY ELEVATION CHANGES MUST BE REFLECTED IN THE OVERALL PRESSURE DROP.

6. THE ΔP LISTED IS THE PRESSURE DROP ACROSS THE NOZZLES ONLY.

7. DASHED LINES INDICATE FLOW DOES NOT PASS THROUGH THESE POINTS FOR ΔP SHOWN.

8. LINE SIZE 12 TO 31 TO BE BASED ON FLOW TO FUEL POOL SHOWN ON FUEL POOL PROCESS DIAGRAM.

9. SHUTDOWN OPERATION MAY BE INITIATED AT A MAXIMUM REACTOR VESSEL PRESSURE OF 75 PSIG.

10. SERVICE WATER CROSS TIE SHALL BE SIZED TO FLOW 4000 GPM, REF NEDC 97-086.

12. FLOWS SHOWN FOR MODE A AND B ARE THE MINIMUM ALLOWABLE (TRUE) FLOW. FOR MODE G IS THE MAXIMUM ALLOWABLE MEASURED FLOW.

13. DESIGN FLOWS WITH THE MINIMUM FLOW VALVE OPEN AND Rx PRESSURE AT 0 PSID ABOVE DRYWELL PRESSURE ARE 6,871 GPM FOR MODE A, AND 11,290 GPM FOR MODE B. SEE DC 94-332.

REFERENCE DRAWINGS & SPECIFICATIONS:

1. MPL 1C - - - - RESIDUAL HEAT REMOVAL SYS P&ID

2. MPL 10-200 - - DESIGN SPEC. RHR SYSTEM

NOTE: RHR STEAM CONDENSING MODE IS NO LONGER AN OPERATIONAL MODE.

LIMITING LINE LOSSES

MODE A	6-16
MODE B	NONE
MODE C1	21-23 & 24-25-1
MODE C2	1-5 (NPSH AVAILABLE)
MODE D	17 -40 (41-POOL) & 41-43
MODE E	12-31 (SEE NOTE 8) 31-34
MODE F	27-29 (NPSH AVAILABLE)
MODE G	STRAINER DESIGN 1-5 (NPSH AVAILABLE)
MODE H	21-26
MODE I	NONE

AS BUILT 454004886 — SCAN/CADD DWG — DO NOT REVISE MANUALLY — CADD FILE: C0103609

TRANSFER NOTE: NPPD TRANSFERRED ISSUERS REVISION NO.3 TO A MORE LEGIBLE COPY OF THE DRAWING.
TRANSFERRED BY SPB
DATE 2-17-89
CHECKED [illegible] 2-20-89
APPROVED MAH 2/24/89

FOR PREVIOUS REVISIONS, SEE SUPERSEDED CARDS.

REVISIONS BY N.P.P.D.

NO.	REVISIONS	DFT	CKD	APP	DATE
N12	EE 12-003 (DCN 12-0997)	RAC	KPB	DJB	1-23-13

GENERAL ELECTRIC — PROCESS DIAGRAM — RESIDUAL HEAT REMOVAL SYS (RHR) — COOPER

729E211BB — REV. N12 — NH26757 — SAN JOSE, CALIF.

CHKD W.B. JONES

A.M. BROCCHINI MAIL CODE - 723 JOB N

RELEASED FOR FABRICATION
SUBJECT TO ... REQUIREMENTS
RESPONSIBILITY ... DETAILS ... SECTION ... REQUIREMENTS.
BUTL ... INC.
NOV ... 1980
EXAMINED BY J.J.B.

GENERAL ELECTRIC 729E222BB

TITLE: REACTOR PROTECTION SYSTEM
PREPARED FOR COOPER

FCF 238X100BB (5)
PL ISSUED

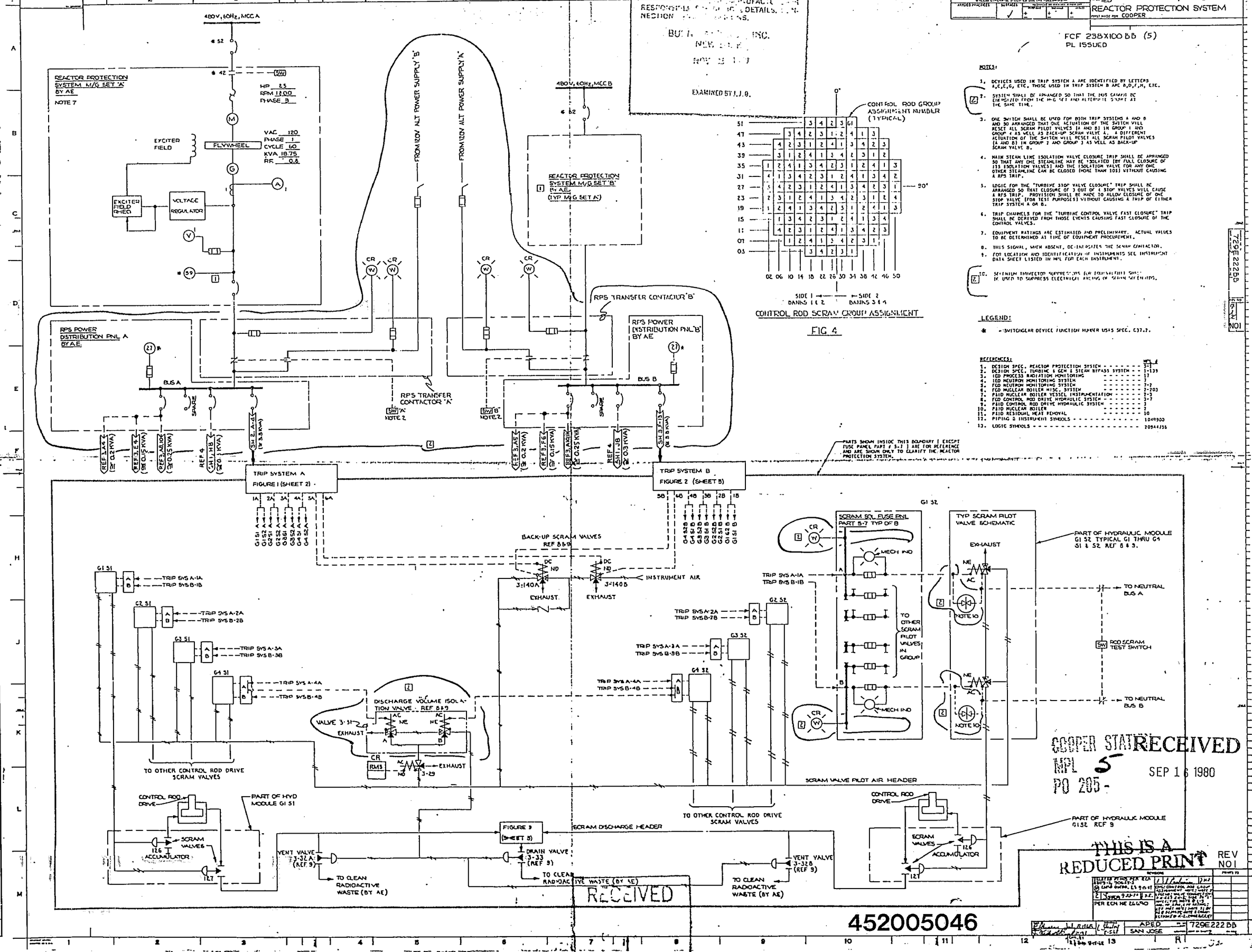

CONTROL ROD GROUP ASSIGNMENT NUMBER (TYPICAL)

SIDE 1 BANKS 1 & 2 — SIDE 2 BANKS 3 & 4

CONTROL ROD SCRAM GROUP ASSIGNMENT

FIG 4

NOTES:

1. DEVICES USED IN TRIP SYSTEM A ARE IDENTIFIED BY LETTERS A, C, E, G, ETC. THOSE USED IN TRIP SYSTEM B ARE B, D, F, H, ETC.
2. SYSTEM SHALL BE ARRANGED SO THAT THE IRM CANNOT BE ENERGIZED FROM THE M-G SET AND ALTERNATE SYSTEM AT THE SAME TIME.
3. ONE SWITCH SHALL BE USED FOR BOTH TRIP SYSTEMS A AND B AND SO ARRANGED THAT ONE ACTUATION OF THE SWITCH WILL RESET ALL SCRAM PILOT VALVES (A AND B) IN GROUP 1 AND GROUP 4 AS WELL AS BACK-UP SCRAM VALVE A. A DIFFERENT ACTUATION OF THE SWITCH WILL RESET ALL SCRAM PILOT VALVES (A AND B) IN GROUP 2 AND GROUP 3 AS WELL AS BACK-UP SCRAM VALVE B.
4. MAIN STEAM LINE ISOLATION VALVE CLOSURE TRIP SHALL BE ARRANGED SO THAT ANY ONE STEAMLINE MAY BE ISOLATED (BY FULL CLOSURE OF ITS ISOLATION VALVES) AND THE ISOLATION VALVE FOR ANY ONE OTHER STEAMLINE CAN BE CLOSED (MORE THAN 10%) WITHOUT CAUSING A RPS TRIP.
5. LOGIC FOR THE "TURBINE STOP VALVE CLOSURE" TRIP SHALL BE ARRANGED SO THAT CLOSURE OF 3 OUT OF 4 STOP VALVES WILL CAUSE A RPS TRIP. PROVISION SHALL BE MADE TO ALLOW CLOSURE OF ONE STOP VALVE (FOR TEST PURPOSES) WITHOUT CAUSING A TRIP OF EITHER TRIP SYSTEM A OR B.
6. TRIP CHANNELS FOR THE "TURBINE CONTROL VALVE FAST CLOSURE" TRIP SHALL BE DERIVED FROM THOSE EVENTS CAUSING FAST CLOSURE OF THE CONTROL VALVES.
7. EQUIPMENT RATINGS ARE ESTIMATED AND PRELIMINARY. ACTUAL VALUES TO BE DETERMINED AT TIME OF EQUIPMENT PROCUREMENT.
8. THIS SIGNAL, WHEN ABSENT, DE-ENERGIZES THE SCRAM CONTACTOR.
9. FOR LOCATION AND IDENTIFICATION OF INSTRUMENTS SEE INSTRUMENT DATA SHEET LISTED IN MPL FOR EACH INSTRUMENT.
10. SELENIUM IMPREGNATED SUPPRESSORS (OR EQUIVALENT) SHALL BE USED TO SUPPRESS ELECTRICAL ARCING OF SCRAM SOLENOIDS.

LEGEND:

* = SWITCHGEAR DEVICE FUNCTION NUMBER USAS SPEC. C37.2.

REFERENCES:

		MPL #
1.	DESIGN SPEC. REACTOR PROTECTION SYSTEM	5-1
2.	DESIGN SPEC. TURBINE & GEN & STEAM BYPASS SYSTEM	1-139
3.	IED PROCESS RADIATION MONITORING	17
4.	IED NEUTRON MONITORING SYSTEM	7
5.	FCD NEUTRON MONITORING SYSTEM	7-7
6.	FCD NUCLEAR BOILER MISC. SYSTEM	2-203
7.	PSID NUCLEAR BOILER VESSEL INSTRUMENTATION	7-3
8.	FCD CONTROL ROD DRIVE HYDRAULIC SYSTEM	3-7
9.	PSID CONTROL ROD DRIVE HYDRAULIC SYSTEM	1
10.	PSID NUCLEAR BOILER	7
11.	PSID RESIDUAL HEAT REMOVAL	10
12.	PIPING & INSTRUMENT SYMBOLS	1049900
13.	LOGIC SYMBOLS	209A4756

REVISIONS BY N.P.P.D.

NO.	REVISIONS	DFT	CKD	APP	DATE
NO1	REVISED PER DCN C86-0135	DL R	DJF	G&G	5-29-86

COOPER STATION
MPL 5
PO 205-
RECEIVED
SEP 16 1980

THIS IS A REDUCED PRINT

RECEIVED

452005046

APED SAN JOSE 729E222BB

REV NO1

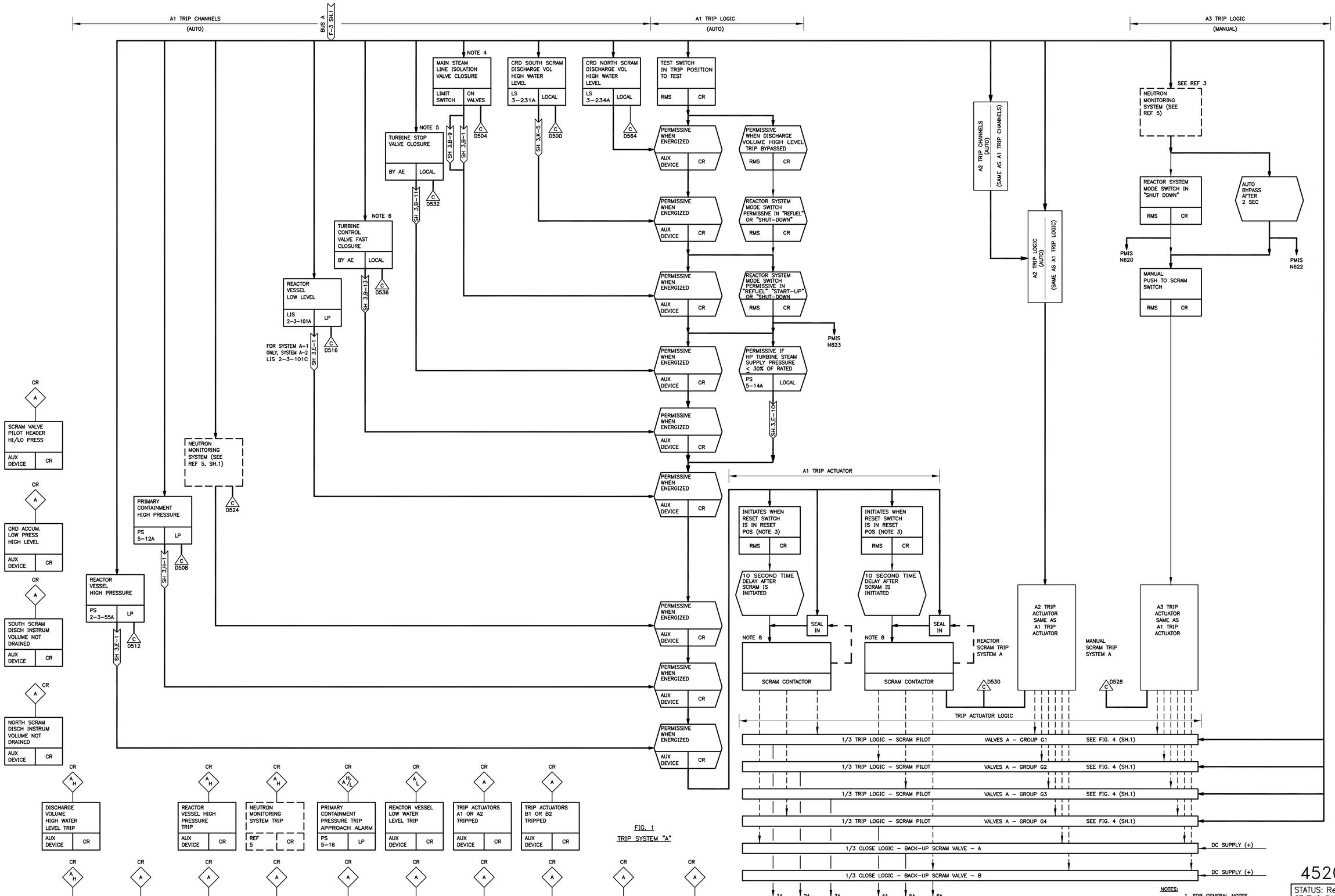

FIG. 1
TRIP SYSTEM "A"

NOTES:
1. FOR GENERAL NOTES AND REFERENCES SEE SHEET 1.

* THIS DRAWING GENERATED BY NPPD

452005047

STATUS: Release FIO
STATUS DATE: 05/03/2017
DS APPROVED: RSCULLI
VER: AB REV: 04 SIZE: C

INFORMATION ONLY

FOR PREVIOUS REVISIONS, SEE SUPERSEDED CARDS.
VERSIONS/REVISIONS BY N.P.P.D.

NO.	DESCRIPTION	DFT	DATE	ENG
AB/04	DR-2015-0268	DJB	10/19/16	TCMULLI

SIGNIFICANT NUMBER						
GROUP	1	2	3	4	5	6

COOPER NUCLEAR STATION
REACTOR PROTECTION SYSTEM
FUNCTIONAL CONTROL DIAGRAM

DRAWN TRU	DATE 8/24/93	GENERAL ELECTRIC*
CHECKED	DATE	
APPROVED SJT	DATE 11-9-93	
FILMED		729E222BB SH 2

CADD FILE: C0011088

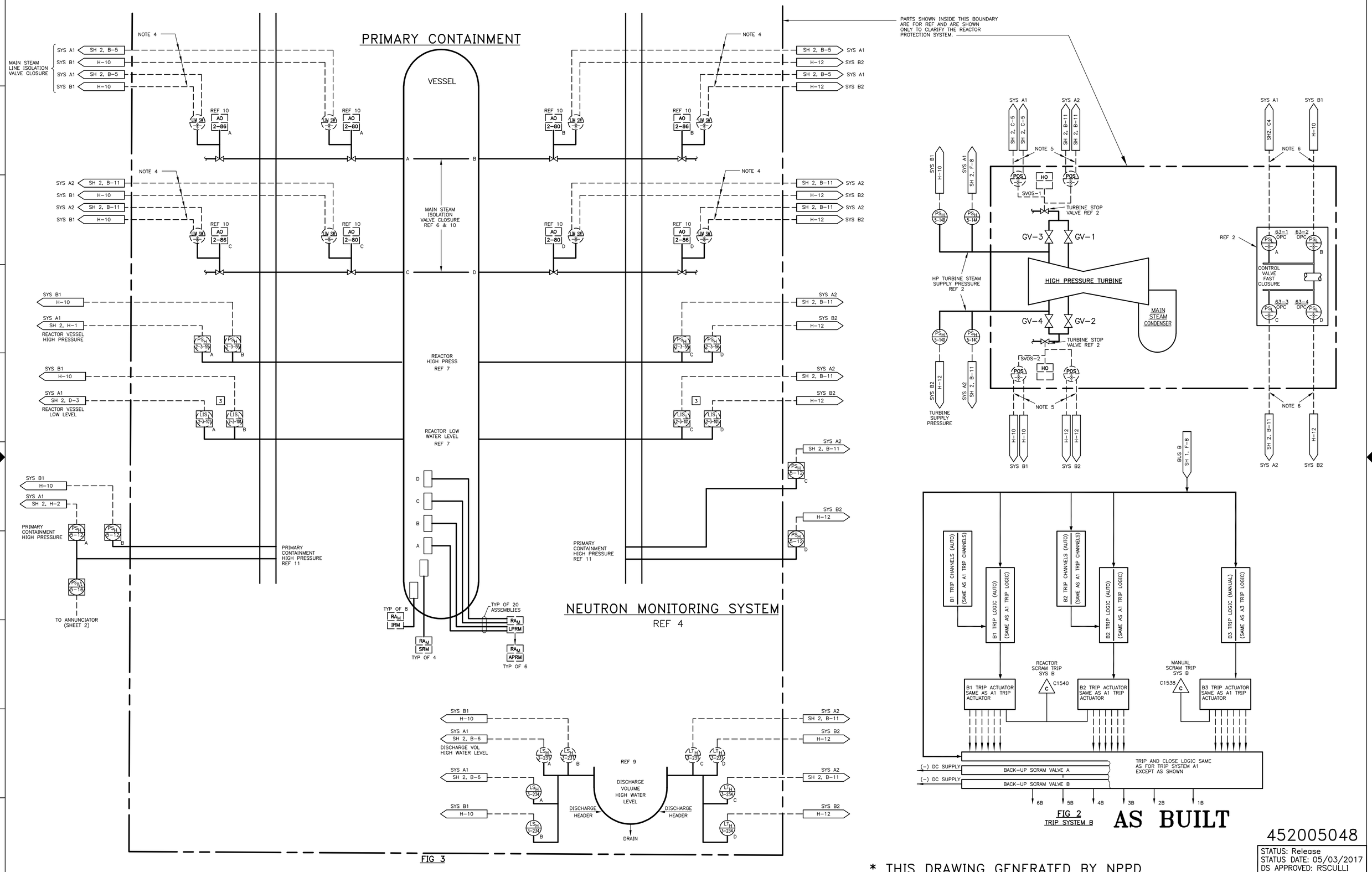

452005048

STATUS: Release
STATUS DATE: 05/03/2017
DS APPROVED: RSCULLI
VER: AB REV: 04 SIZE: C

* THIS DRAWING GENERATED BY NPPD

FOR PREVIOUS REVISIONS, SEE SUPERSEDED CARDS.

VERSIONS/REVISIONS BY N.P.P.D.

NO.	DESCRIPTION	DFT	DATE	ENG
AB/04	DR-2015-0268	DJB	01/23/17	RSCULLI

SIGNIFICANT NUMBER						
GROUP	1	2	3	4	5	6

COOPER NUCLEAR STATION
REACTOR PROTECTION SYSTEM
SHEET 3

DRAWN TRU	DATE 8/24/94	GENERAL ELECTRIC*
CHECKED JAC	DATE 8-25-94	
APPROVED WCF	DATE 9-3-94	
FILMED		729E222BB

CADD FILE: C0014085

GENERAL ELECTRIC 729E223BB

TITLE NEUTRON MONITORING SYSTEM — COOPER

OVERALL REVISION 4

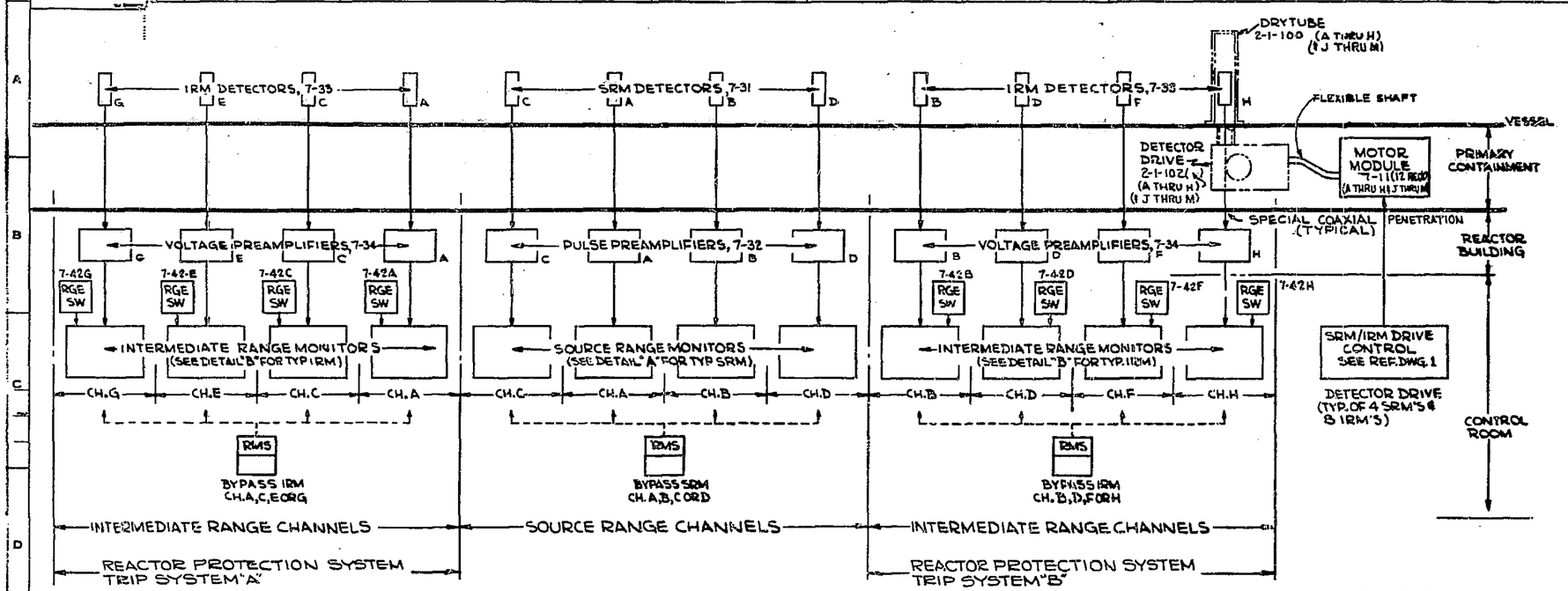

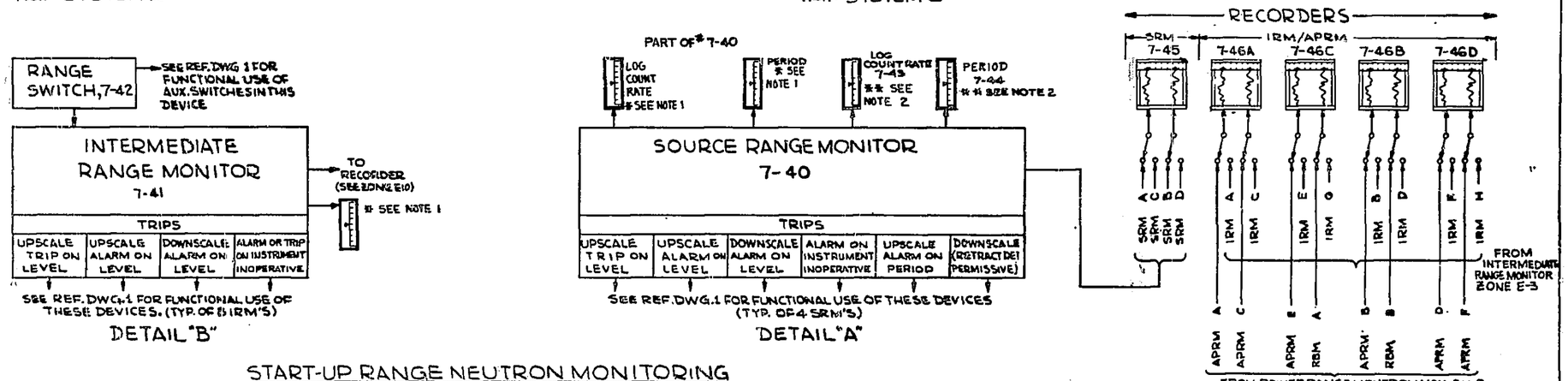

START-UP RANGE NEUTRON MONITORING

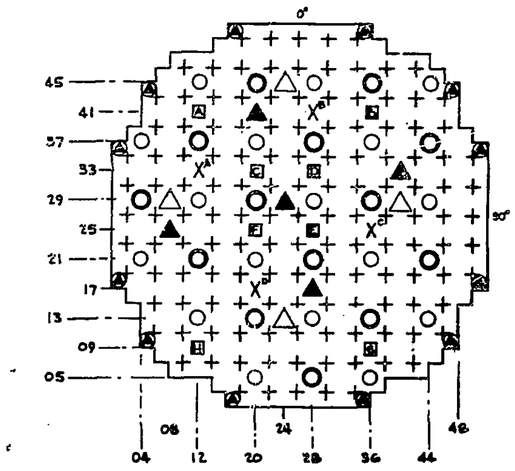

FIG 4

DETECTOR & CONTROL ELEMENT ARRANGEMENT

LEGEND FOR FIGURE 1, 2, 4

- + - CONTROL ROD
- X - SRM DETECTOR
- □ - IRM DETECTOR
- ▲ - SRM SOURCE
- △ - SRM SPARE SOURCE POSITION
- ○ LPRM DET. IN PWR RGE DET ASM. USED IN RPS TRIP SYS "A" SEE TABLE 1A
- ◎ LPRM DET. IN PWR RGE DET ASM. USED IN RPS TRIP SYS "B" SEE TABLE 1B
- ⊛ PERIPHERAL FUEL SUPPORT PLUG

NOTES

1. PARTS MARKED * ARE LOCATED ADJACENT TO OR ON THE SIGNAL CONDITIONING EQUIPMENT PERFORMING THE FUNCTION INDICATED.
2. PARTS MARKED ** ARE LOCATED ON THE MAIN CONTROL PANEL.
3. POSITION INFORMATION IS INPUT EVERY 1 INCH. FLUX LEVEL INFORMATION IS INPUT EVERY 3 INCHES ON WITHDRAWAL.
5. FOR LOCATION AND IDENTIFICATION OF INSTRUMENTS SEE INSTRUMENT DATA SHEET LISTED IN MPL FOR EACH INSTRUMENT
6. FLOW UNIT INCLUDES FLOW SUMMER, POWER SUPPLY, SQUARE ROOT FUNCTIONS AS SHOWN ON REF DWG 2.

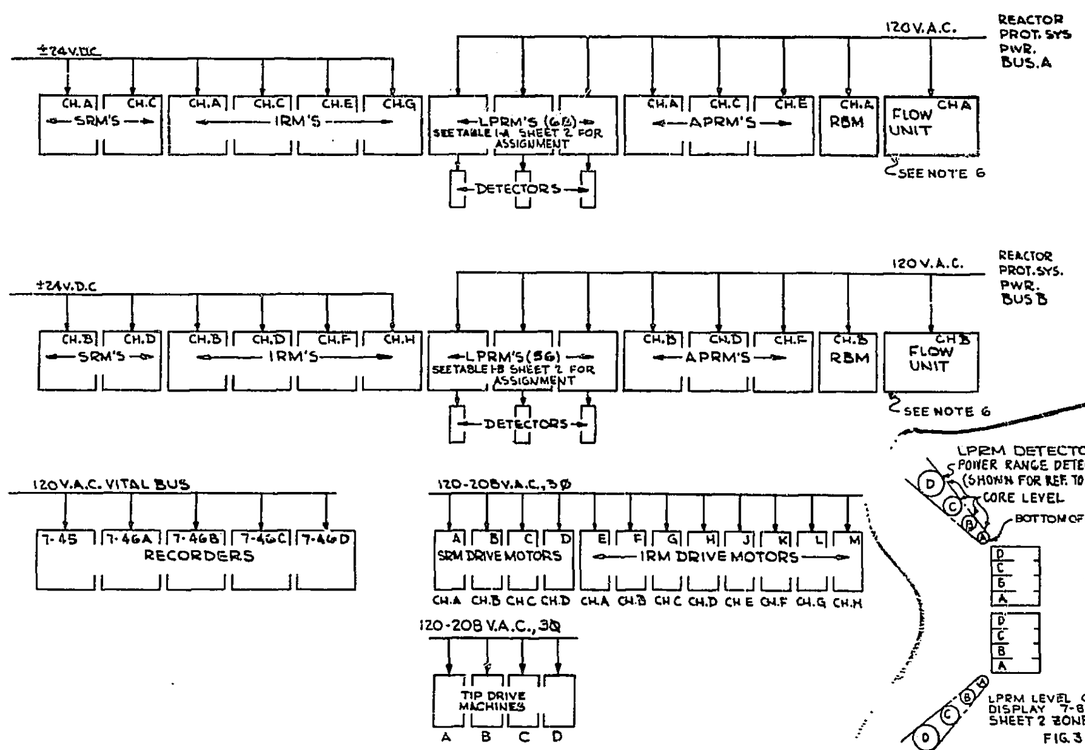

POWER DISTRIBUTION

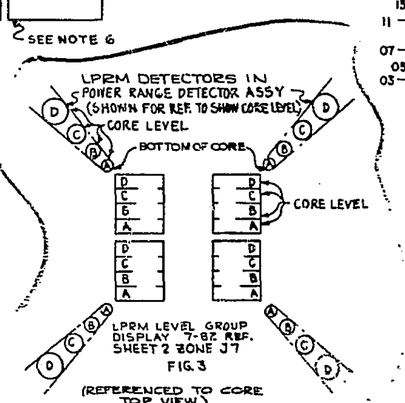

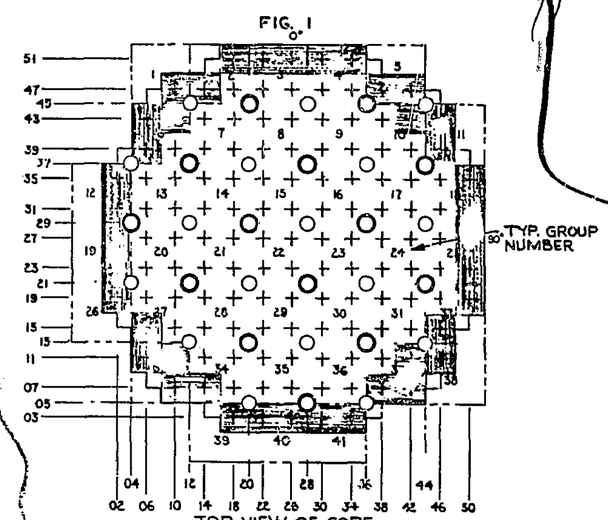

TOP VIEW OF CORE

WHEN A ROD IS SELECTED IN ANY GROUP THE LPRM DETECTOR ASSEMBLIES ASSIGNED TO THAT GROUP (SEE FIG. 1) ARE ROUTED VIA THE LPRM TO THE RBM'S SUCH THAT THE "A & C" LEVEL DETECTOR SIGNALS GO TO RBM "A" & THE "B & D" LEVEL DETECTOR SIGNALS GO TO RBM "B". WHEN A PERIPHERAL ROD (SHADED IN FIG 1) IS SELECTED THE RBM'S ARE AUTO BY PASSED.

THE LPRM SIGNALS ARE ROUTED TO THE LPRM LEVEL GROUP DISPLAY AS SHOWN IN FIG. 3. WHEN A DETECTOR ASSEMBLY IS NOT PRESENT IN A GROUP, THE CORRESPONDING READOUTS IN THE LPRM LEVEL GROUP DISPLAY WILL BE ZERO.

REFERENCE DWGS

1. MPL 7-2 — FUNCTIONAL CONTROL DIAGRAM, NEUTRON MONITORING SYSTEM
2. MPL-2 — P&ID NUCLEAR BOILER
3. MPL 3-7 — FCD CONTROL ROD DRIVE HYDRAULIC SYSTEM
4. 921D280 — INSTRUMENT SYMBOLS
5. 197R567 — PIPING & INSTRUMENT SYMBOLS
6. MPL 2-1 — REACTOR VESSEL
7. 730E100 — ARRGT DWG. - NEUTRON MONITORING SYS.

REFERENCE ENGINEERING SPECIFICATIONS

A. MPL7-1 — DESIGN SPECIFICATION NEUTRON MONITORING SYSTEM.

COOPER STATION MPL # 7

452005383

REVISIONS	PRINTS TO
3 SPARE MOUNT. POS FROM COORD 24-25 IN FIG 4 PER ECA 91102	
4 REVISED NOTE 5 PER M DET DATA ZONE F13, FIG 3, FLOW UNIT WAS CONVERTER & FIG 5 DELETED NOTES. RPS TRIP SYS FROM SOURCE RGE CHAN.	
2 NE 28687	
CHGD OVERALL REV 4 FIG 3. REVD FIG 2.	

A P E D — SAN JOSE — 729E223BB — 2 — 1

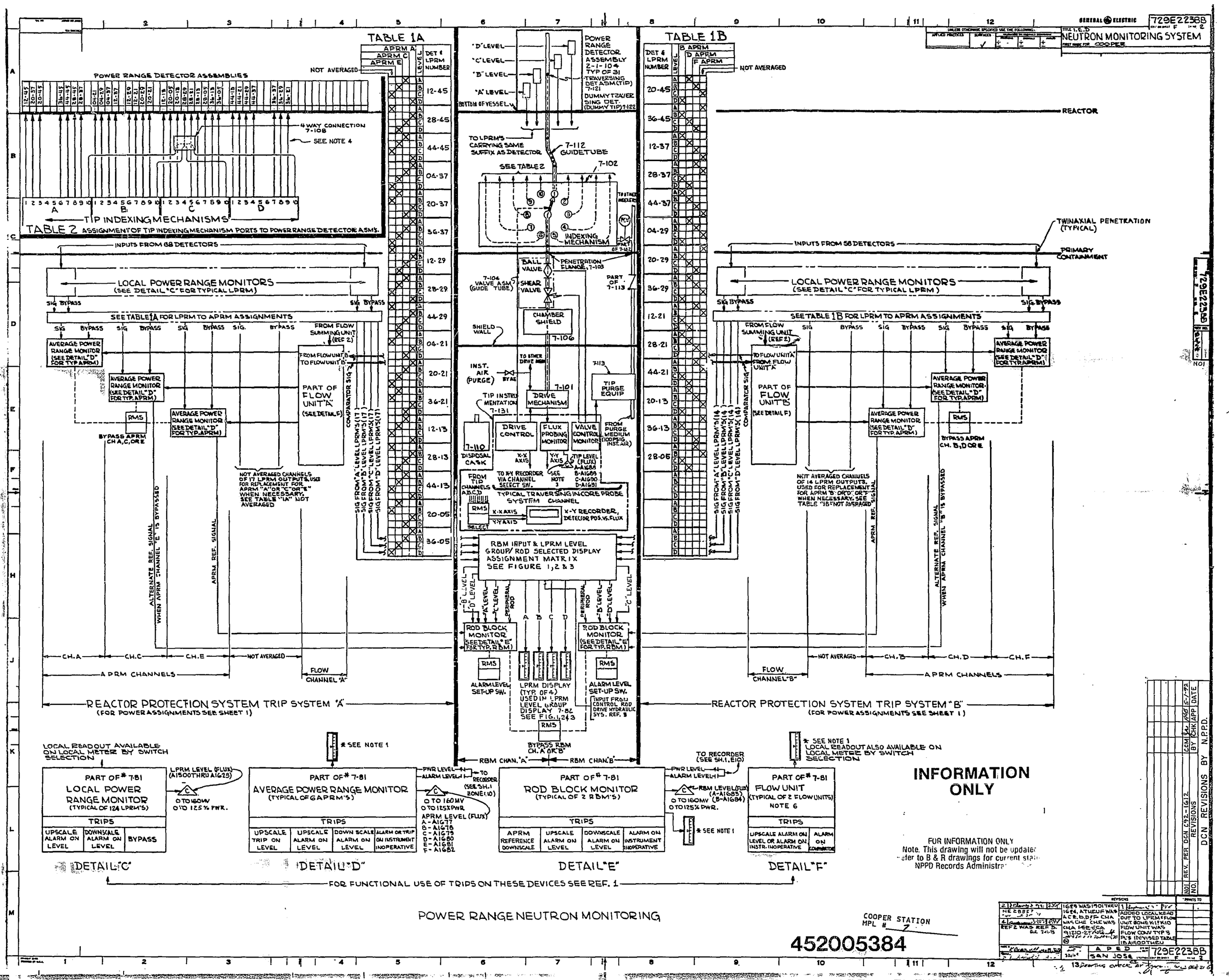
GENERAL ELECTRIC
729E223BB
TITLE 1.E.D
NEUTRON MONITORING SYSTEM
FIRST MADE FOR COOPER
TABLE 1A
APRM A
APRM C
APRM E
NOT AVERAGED
DET & LPRM NUMBER
LEVEL
POWER RANGE DETECTOR ASSEMBLIES
4 WAY CONNECTION 7-108
SEE NOTE 4
TIP INDEXING MECHANISMS
TABLE 2 ASSIGNMENT OF TIP INDEXING MECHANISM PORTS TO POWER RANGE DETECTOR ASMS.
INPUTS FROM 68 DETECTORS
LOCAL POWER RANGE MONITORS
(SEE DETAIL "C" FOR TYPICAL LPRM)
SIG BYPASS
SEE TABLE 1A FOR LPRM TO APRM ASSIGNMENTS
AVERAGE POWER RANGE MONITOR (SEE DETAIL "D" FOR TYP. APRM)
RMS
BYPASS APRM CH A,C,OR E
FROM FLOW SUMMING UNIT (REF 2)
FROM FLOW UNIT "B"
TO FLOW UNIT "B"
PART OF FLOW UNIT "A" (SEE DETAIL F)
COMPARATOR SIG
NOT AVERAGED CHANNELS OF 17 LPRM OUTPUTS USED FOR REPLACEMENT FOR APRM "A" OR "C" OR "E" WHEN NECESSARY. SEE TABLE "1A" NOT AVERAGED
SIG FROM "A" LEVEL LPRM'S (17)
SIG FROM "B" LEVEL LPRM'S (17)
SIG FROM "C" LEVEL LPRM'S (17)
SIG FROM "D" LEVEL LPRM'S (17)
ALTERNATE REF. SIGNAL WHEN APRM CHANNEL "E" IS BYPASSED
APRM REF. SIGNAL
CH. A
CH. C
CH. E
NOT AVERAGED
APRM CHANNELS
FLOW CHANNEL "A"
REACTOR PROTECTION SYSTEM TRIP SYSTEM "A"
(FOR POWER ASSIGNMENTS SEE SHEET 1)
"D" LEVEL
"C" LEVEL
"B" LEVEL
"A" LEVEL
BOTTOM OF VESSEL
POWER RANGE DETECTOR ASSEMBLY Z-1-104 TYP OF 31
TRAVERSING DET ASM (TIP) 7-121
DUMMY TRAVERSING DET. (DUMMY TIP) 7-122
TO LPRM'S CARRYING SAME SUFFIX AS DETECTOR
7-112 GUIDE TUBE
SEE TABLE 2
7-102
INDEXING MECHANISM
PART OF 7-102
BALL VALVE
PENETRATION FLANGE 7-103
7-104 VALVE ASM (GUIDE TUBE)
SHEAR VALVE
PART OF 7-113
CHAMBER SHIELD
7-106
SHIELD WALL
INST. AIR (PURGE)
BYAE
TO OTHER DRIVE MECH
7-101
DRIVE MECHANISM
7-113
TIP PURGE EQUIP
TIP INSTRUMENTATION 7-131
7-110 DISPOSAL CASK
DRIVE CONTROL
FLUX PROBING MONITOR
VALVE CONTROL MONITOR
FROM PURGE MEDIUM (100 PSIG INST. AIR)
X-X AXIS
Y-Y AXIS
TIP LEVEL (FLUX) A-A1683 B-A1684 C-A1690 D-A1691
FROM TIP CHANNELS A,B,C,D
TO X-Y RECORDER VIA CHANNEL SELECT SW.
SEE NOTE 3
TYPICAL TRAVERSING IN CORE PROBE SYSTEM CHANNEL
RMS
X-X AXIS
Y-Y AXIS
SELECT
X-Y RECORDER, DETECTOR POS. VS. FLUX
RBM INPUT & LPRM LEVEL GROUP/ ROD SELECTED DISPLAY ASSIGNMENT MATRIX SEE FIGURE 1,2 & 3
"B" LEVEL
"D" LEVEL
"A" LEVEL
"C" LEVEL
PERIPHERAL ROD
A B C D
ROD BLOCK MONITOR (SEE DETAIL "E" FOR TYP. RBM)
ALARM LEVEL SET-UP SW.
LPRM DISPLAY (TYP OF 4) USED IN LPRM LEVEL GROUP DISPLAY 7-82 SEE FIG. 1,2 & 3
INPUT FROM CONTROL ROD DRIVE HYDRAULIC SYS. REF. 3
BYPASS RBM CH. A OR B
RBM CHAN. "A"
RBM CHAN. "B"
TABLE 1B
B APRM
D APRM
F APRM
NOT AVERAGED
REACTOR
TWINAXIAL PENETRATION (TYPICAL)
PRIMARY CONTAINMENT
INPUTS FROM 58 DETECTORS
LOCAL POWER RANGE MONITORS
(SEE DETAIL "C" FOR TYPICAL LPRM)
SEE TABLE 1B FOR LPRM TO APRM ASSIGNMENTS
TO FLOW UNIT "A"
FROM FLOW UNIT "A"
PART OF FLOW UNIT "B" (SEE DETAIL F)
NOT AVERAGED CHANNELS OF 14 LPRM OUTPUTS USED FOR REPLACEMENT FOR APRM "B" OR "D" OR "F" WHEN NECESSARY. SEE TABLE "1B" NOT AVERAGED
SIG FROM "A" LEVEL LPRM'S (14)
SIG FROM "B" LEVEL LPRM'S (14)
SIG FROM "C" LEVEL LPRM'S (14)
SIG FROM "D" LEVEL LPRM'S (14)
APRM REF. SIGNAL
ALTERNATE REF. SIGNAL WHEN APRM CHANNEL "B" IS BYPASSED
CH. B
CH. D
CH. F
FLOW CHANNEL "B"
REACTOR PROTECTION SYSTEM TRIP SYSTEM "B"
(FOR POWER ASSIGNMENTS SEE SHEET 1)
LOCAL READOUT AVAILABLE ON LOCAL METER BY SWITCH SELECTION
* SEE NOTE 1
PART OF # 7-81
LOCAL POWER RANGE MONITOR (TYPICAL OF 124 LPRM'S)
TRIPS
UPSCALE ALARM ON LEVEL
DOWNSCALE ALARM ON LEVEL
BYPASS
LPRM LEVEL (FLUX) (A1500 THRU A1625)
0 TO 160MV
0 TO 125% PWR.
DETAIL "C"
AVERAGE POWER RANGE MONITOR (TYPICAL OF 6 APRM'S)
UPSCALE TRIP ON LEVEL
UPSCALE ALARM ON LEVEL
DOWN SCALE ALARM ON LEVEL
ALARM OR TRIP ON INSTRUMENT INOPERATIVE
PWR LEVEL
ALARM LEVEL
TO RECORDER (SEE SH. 1 ZONE E10)
APRM LEVEL (FLUX)
A - A1677
B - A1678
C - A1679
D - A1680
E - A1681
F - A1682
DETAIL "D"
ROD BLOCK MONITOR (TYPICAL OF 2 RBM'S)
APRM REFERENCE DOWNSCALE
UPSCALE ALARM ON LEVEL
DOWNSCALE ALARM ON LEVEL
ALARM ON INSTRUMENT INOPERATIVE
RBM LEVEL (FLUX) (A-A1683) (B-A1684)
DETAIL "E"
TO RECORDER (SEE SH. 1, E10)
FLOW UNIT (TYPICAL OF 2 FLOW UNITS) NOTE 6
UPSCALE ALARM ON LEVEL OR ALARM ON INSTR. INOPERATIVE
ALARM ON COMPARATOR
DETAIL "F"
FOR FUNCTIONAL USE OF TRIPS ON THESE DEVICES SEE REF. 1
INFORMATION ONLY
FOR INFORMATION ONLY
Note. This drawing will not be updated
refer to B & R drawings for current status
NPPD Records Administrator
NO. REV. PER DCN C92-1612 CCM 5-1-92
NO. REVISIONS BY CHK APP DATE
DCN REVISIONS BY N.P.P.D.
POWER RANGE NEUTRON MONITORING
COOPER STATION
MPL # 7
452005384
SAN JOSE
A P E D
729E223BB

REVISIONS BY N.P.P.D.					
NO.	REVISIONS	DFT	CKD	APP	DATE
N04	REV & REDRAWN PER APA DCN C93-1811	DR	JAC	WCF	10-26-93
N05	REV PER DCN C95-0003	RRT	JAC	DCH	2/8/95
N06	CORE SPRAY SYS GE ELEM DIAG DWG				
	REVIEW (DCN 96-1422)	RAC	JAC	RAR	9-15-97

FOR PREVIOUS REVISIONS, SEE SUPERSEDED CARDS.

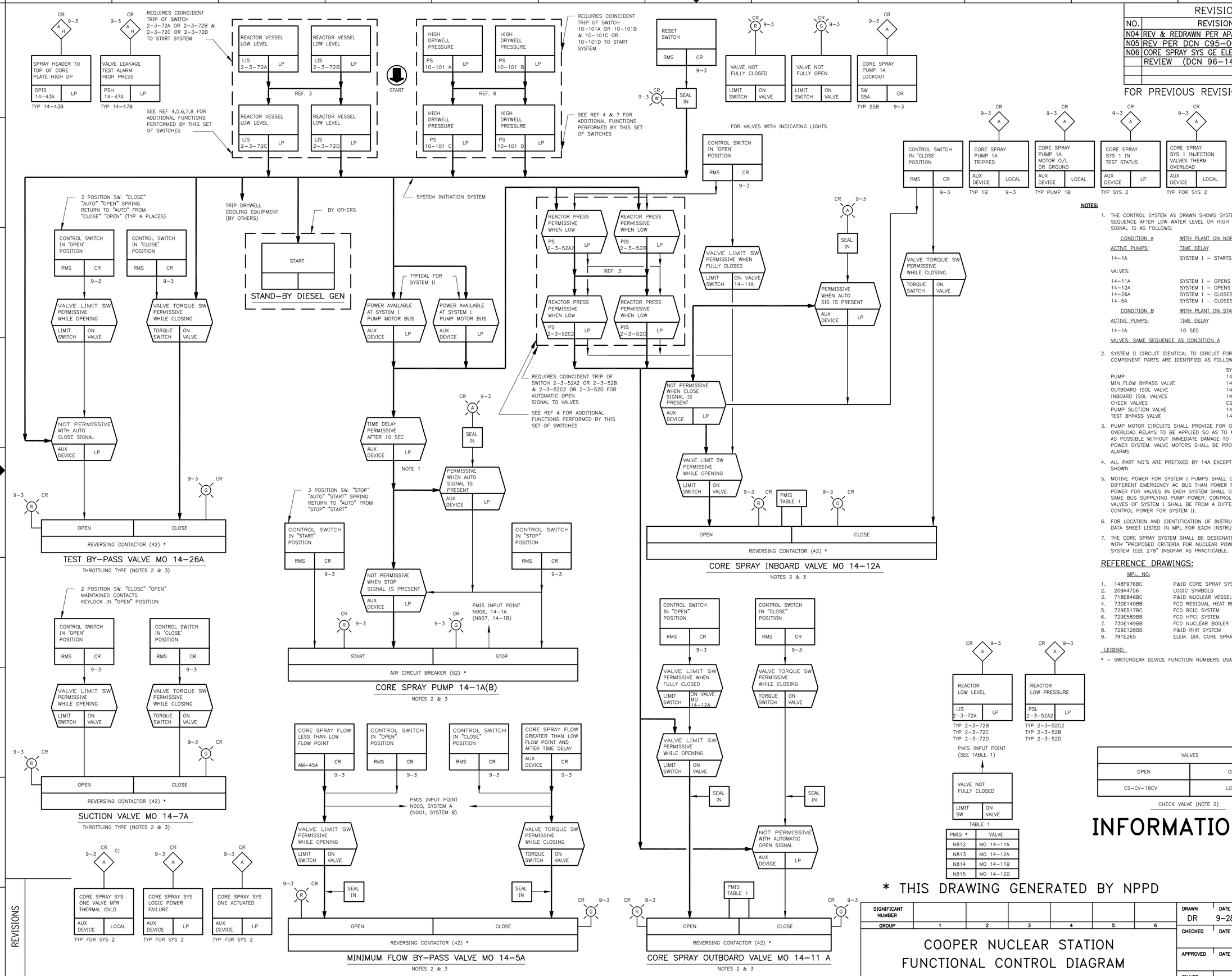

PMIS *	VALVE
N812	MO 14-11A
N813	MO 14-12A
N814	MO 14-11B
N815	MO 14-12B

NOTES:

1. THE CONTROL SYSTEM AS DRAWN SHOWS SYSTEM W OPERATING SEQUENCE AFTER LOW WATER LEVEL OR HIGH DRYCELL PRESSURE SIGNAL IS AS FOLLOWS:

CONDITION A	WITH PLANT ON NORMAL AUXILIARY POWER
ACTIVE PUMPS:	TIME DELAY
14-1A	SYSTEM I - STARTS - AFTER 10 SEC DELAY
VALVES:	
14-11A	SYSTEM I - OPENS AFTER REAC. LOW PRESS. PERM. IF CLOSED
14-12A	SYSTEM I - OPENS AFTER REAC. LOW PRESS. PERM. IF CLOSED
14-26A	SYSTEM I - CLOSES IF OPEN - NO DELAY
14-5A	SYSTEM I - CLOSES AFTER FLOW ESTABLISHED
CONDITION B	WITH PLANT ON STANDBY DIESEL POWER
ACTIVE PUMPS:	TIME DELAY
14-1A	10 SEC

VALVES: SAME SEQUENCE AS CONDITION A

2. SYSTEM II CIRCUIT IDENTICAL TO CIRCUIT FOR SYSTEM I EXCEPT COMPONENT PARTS ARE IDENTIFIED AS FOLLOWS:

	SYSTEM I	SYSTEM II
PUMP	14 - 1A	14 - 1B
MIN FLOW BYPASS VALVE	14 - 5A	14 - 5B
OUTBOARD ISOL VALVE	14 - 11A	14 - 11B
INBOARD ISOL VALVES	14 - 12A	14 - 12B
CHECK VALVES	CS-CV-18CV	CS-CV-19CV
PUMP SUCTION VALVE	14 - 7A	14 - 7B
TEST BYPASS VALVE	14 - 26A	14 - 26B

3. PUMP MOTOR CIRCUITS SHALL PROVIDE FOR OVERLOAD PROTECTION OVERLOAD RELAYS TO BE APPLIED SO AS TO MAINTAIN POWER AS LONG AS POSSIBLE WITHOUT IMMEDIATE DAMAGE TO MOTOR OR HARM TO ENERGIZED POWER SYSTEM. VALVE MOTORS SHALL BE PROTECTED BY OVERLOAD ALARMS.
4. ALL PART NO'S ARE PREFIXED BY 14A EXCEPT WHERE OTHERWISE SHOWN.
5. MOTIVE POWER FOR SYSTEM I PUMPS SHALL ORIGINATE FROM A DIFFERENT EMERGENCY AC BUS THAN POWER FOR SYSTEM II PUMPS. POWER FOR VALVES IN EACH SYSTEM SHALL ORIGINATE FROM THE SAME BUS SUPPLYING PUMP POWER. CONTROL POWER FOR PUMPS AND VALVES OF SYSTEM I SHALL BE FROM A DIFFERENT SOURCE THAN CONTROL POWER FOR SYSTEM II.
6. FOR LOCATION AND IDENTIFICATION OF INSTRUMENTS SEE INSTRUMENT DATA SHEET LISTED IN MPL FOR EACH INSTRUMENT.
7. THE CORE SPRAY SYSTEM SHALL BE DESIGNATED IN ACCORDANCE WITH "PROPOSED CRITERIA FOR NUCLEAR POWER PLANT PROTECTION SYSTEM IEEE 279" INSOFAR AS PRACTICABLE.

REFERENCE DRAWINGS:

	MPL. NO.	
1.	148F976BC	P&ID CORE SPRAY SYSTEM
2.	209A4756	LOGIC SYMBOLS
3.	718E846BC	P&ID NUCLEAR VESSEL INSTR.
4.	730E140BB	FCD RESIDUAL HEAT REMOVAL SYSTEM
5.	729E517BC	FCD RCIC SYSTEM
6.	729E589BB	FCD HPCI SYSTEM
7.	730E149BB	FCD NUCLEAR BOILER MISC. SYSTEM
8.	729E128BB	P&ID RHR SYSTEM
9.	791E265	ELEM. DIA. CORE SPRAY SYSTEM

LEGEND:

* - SWITCHGEAR DEVICE FUNCTION NUMBERS USAS SPEC C37.2.

INFORMATION ONLY

452005211

CADD DRAWING

DO NOT REVISE MANUALLY

* THIS DRAWING GENERATED BY NPPD

SIGNIFICANT NUMBER						
GROUP	1	2	3	4	5	6

COOPER NUCLEAR STATION
FUNCTIONAL CONTROL DIAGRAM
CORE SPRAY SYSTEM

DRAWN	DATE
DR	9-28-93
CHECKED	DATE
APPROVED	DATE
FILMED	

GENERAL ELECTRIC*

729E402BB SH.1

REVISION N06

CADD FILE: C0011073

REVISIONS

NO.

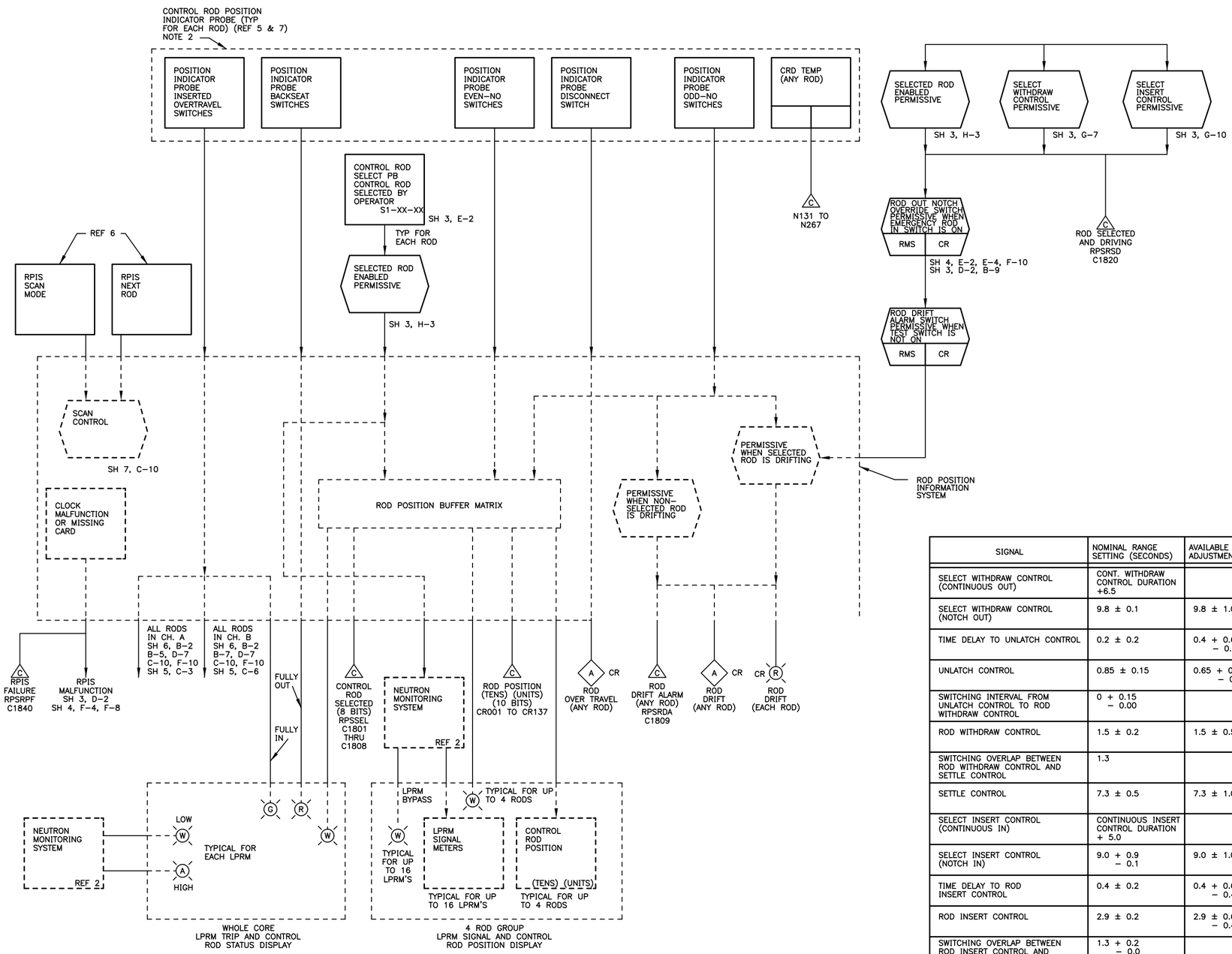

NOTES:

1. THE ROD CIRCUIT SHALL BE DESIGNED TO INSURE THAT:
   A. ONLY ONE ROD ROD MAY BE SELECTED AT A TIME.
   B. WHEN MOVEMENT IS INITIATED THE SELECTED ROD SHALL BE SEALED IN TO INHIBIT SELECTION OF ANOTHER ROD DURING THE MOVEMENT CYCLE (EXCEPT FOR THE LOSS OF CONTROL CIRCUIT POWER).
2. EACH CONTROL ROD, AS IT TRAVELS UP (INSERTED) OR DOWN (WITHDRAWN) PASSES BY A NUMBER OF SWITCHES. THE TOP TWO POSITION SWITCHES ARE CALLED "OVERTRAVEL" AND THE BOTTOM TWO POSITION SWITCHES ARE CALLED "WITHDRAWN", BACKSEAT AND DISCONNECT. SWITCHES IN BETWEEN ARE DIVIDED INTO ODD (DRIFT) AND EVEN (LATCH) POSITIONS. AS THE ROD TRAVELS OVER ANY SWITCH AN INDICATING SIGNAL IS ACTUATED.
3. FOR LOCATION AND IDENTIFICATION OF INSTRUMENTS SEE INSTRUMENT DATA SHEET LISTED IN MPL FOR EACH INSTRUMENT.
4. (C) DESIGNATIONS LISTED ARE PER RPIS/RWM DATABASE.

REFERENCE DOCUMENTS

MPL NO.	
1. 104R907BB	P&ID CONTROL ROD DRIVE HYD SYSTEM
2. 729E223BB	NEUTRON MONITORING SYSTEM IED
3. 6	FEEDWATER CONTROL SYSTEM IED
4. 6–1	DESIGN SPEC FEEDWATER CONT SYSTEM
5. 3–5	DESIGN SPEC CONTROL ROD DRIVE HYD SYSTEM
6. 9–40–1	PROCESS COMPUTER SYSTEM INPUT REQUIREMENTS
7. 104B2505	CONNECTION DIAGRAM POSITION INDICATOR PROBE
8. 209A4756	LOGIC SYMBOLS
9.	
10. 730E805BA	NEUTRON MONITORING SYSTEM FCD
11. 729E222BB	REACTOR PROTECTION SYSTEM FCD

SIGNAL	NOMINAL RANGE SETTING (SECONDS)	AVAILABLE RANGE ADJUSTMENT (SECONDS)
SELECT WITHDRAW CONTROL (CONTINUOUS OUT)	CONT. WITHDRAW CONTROL DURATION +6.5	
SELECT WITHDRAW CONTROL (NOTCH OUT)	9.8 ± 0.1	9.8 ± 1.0
TIME DELAY TO UNLATCH CONTROL	0.2 ± 0.2	0.4 + 0.6 − 0.4
UNLATCH CONTROL	0.85 ± 0.15	0.65 + 0.35 − 0.15
SWITCHING INTERVAL FROM UNLATCH CONTROL TO ROD WITHDRAW CONTROL	0 + 0.15 − 0.00	
ROD WITHDRAW CONTROL	1.5 ± 0.2	1.5 ± 0.5
SWITCHING OVERLAP BETWEEN ROD WITHDRAW CONTROL AND SETTLE CONTROL	1.3	
SETTLE CONTROL	7.3 ± 0.5	7.3 ± 1.0
SELECT INSERT CONTROL (CONTINUOUS IN)	CONTINUOUS INSERT CONTROL DURATION + 5.0	
SELECT INSERT CONTROL (NOTCH IN)	9.0 + 0.9 − 0.1	9.0 ± 1.0
TIME DELAY TO ROD INSERT CONTROL	0.4 ± 0.2	0.4 + 0.6 − 0.4
ROD INSERT CONTROL	2.9 ± 0.2	2.9 ± 0.6 − 0.4
SWITCHING OVERLAP BETWEEN ROD INSERT CONTROL AND SETTLE CONTROL	1.3 + 0.2 − 0.0	
SETTLE CONTROL	5.8 ± 0.5	5.8 ± 1.5

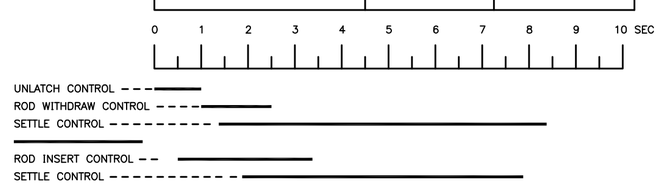

TABLE I FUNCTIONS OF CONTROL ROD TIMING

INFORMATION ONLY

452005832

* THIS DRAWING GENERATED BY NPPD

** FOR PREVIOUS REVISIONS, SEE SUPERSEDED CARDS.

NO.	REVISIONS	DFT	CKD	APP	DATE
** NO2	REV & REDRAWN PER APA DCN C93–1814	DR	JAC	WCF	10–26–93

DCN REVISIONS BY N.P.P.D.

REVISIONS

SIGNIFICANT NUMBER						
GROUP	1	2	3	4	5	6

COOPER NUCLEAR STATION
FUNCTIONAL CONTROL DIAGRAM
CONTROL ROD DRIVE HYDRAULIC SYSTEM

DRAWN DR DATE 10–12–93
CHECKED DATE
APPROVED DATE
FILMED

GENERAL ELECTRIC*

729E471BB SH. 1 REVISION NO2

CADD FILE: C0011080

NO.	REVISIONS	DFT	CKD	APP	DATE
** NO3	REVISED AND REDRAWN PER APA DCN C93-1815	DR	JAC	AGB	11-23-93

DCN REVISIONS BY N.P.P.D.

** FOR PREVIOUS REVISIONS, SEE SUPERSEDED CARDS.

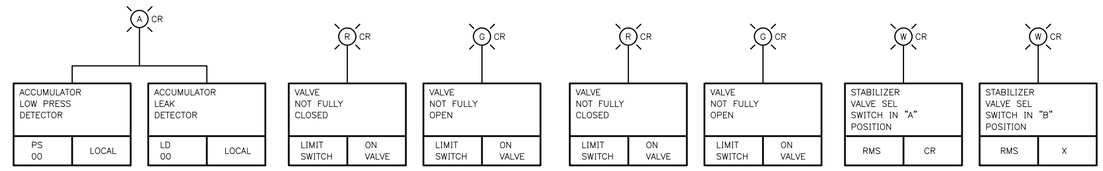

ACCUMULATOR TROUBLE INDICATIONS
(TYPICAL FOR EACH ACCUMULATOR)

TYP FLOW CONT VALVES
AO 3-19A AND 3-19B

TYP FOR CRD HYD SYS VALVES

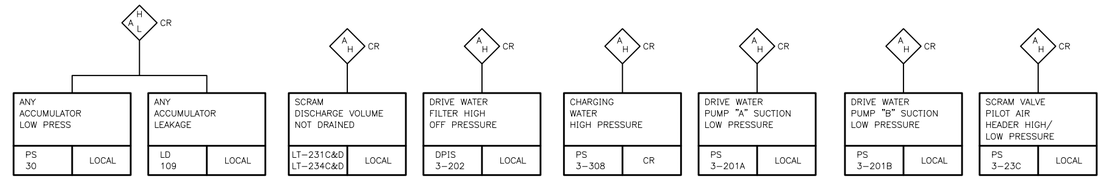

ACCUMULATOR TROUBLE INDICATIONS

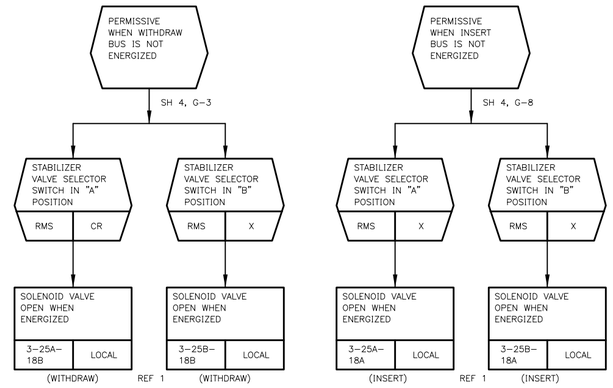

STABILIZER VALVES

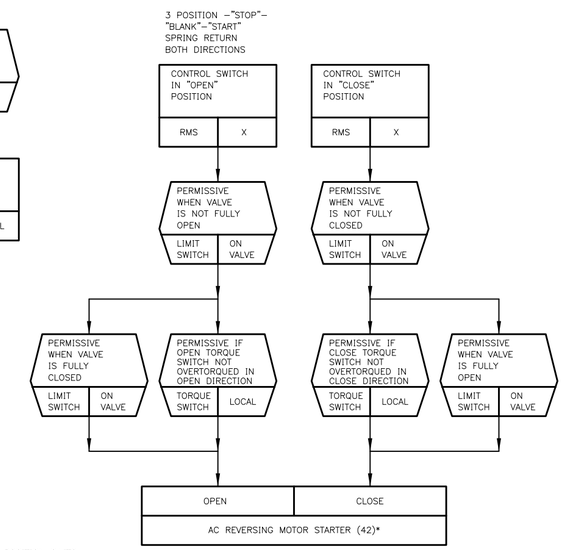

CRD HYD SYS VALVE MO 3-20

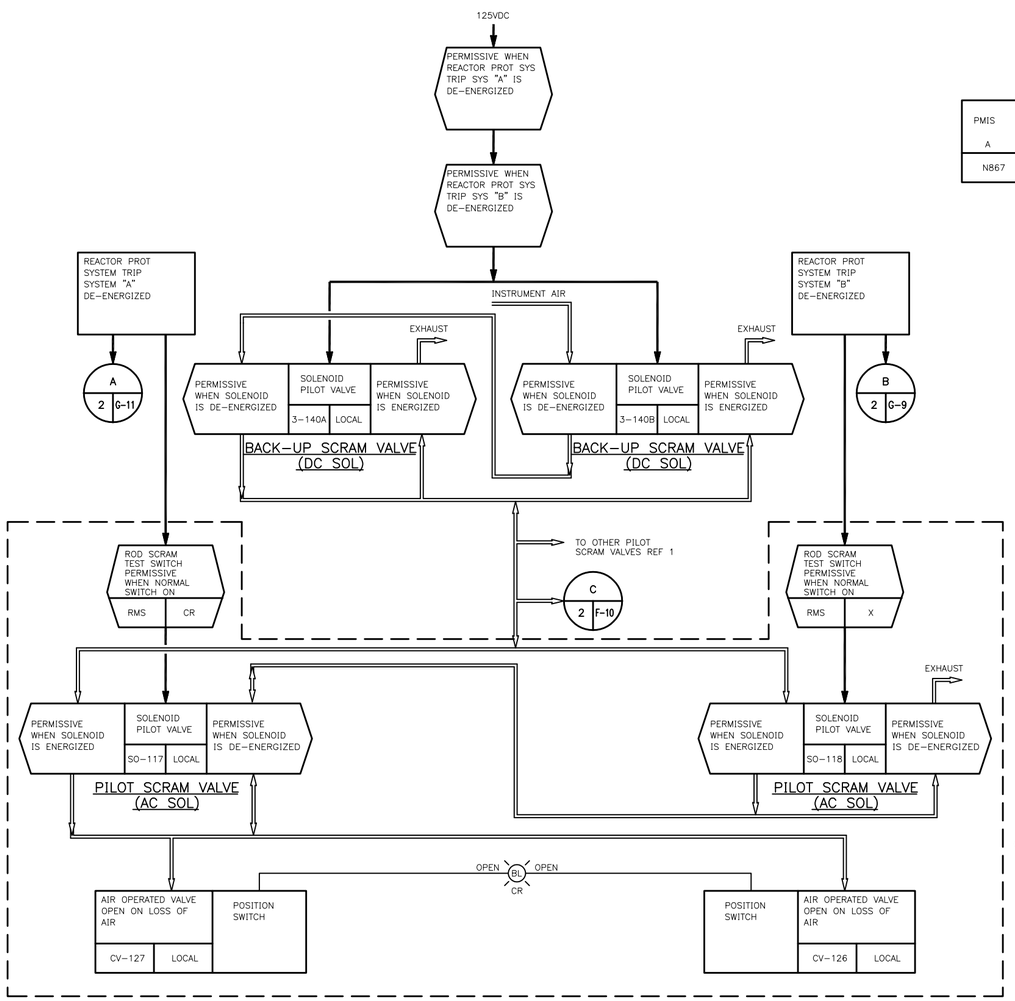

CONTROL ROD DRIVE SCRAM FUNCTION
(SHOWN FOR SCRAM CONDITION)

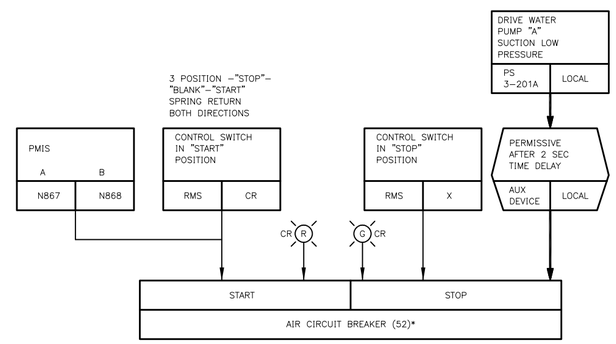

TYPICAL FOR DRIVE WATER PUMPS 3-16A & B

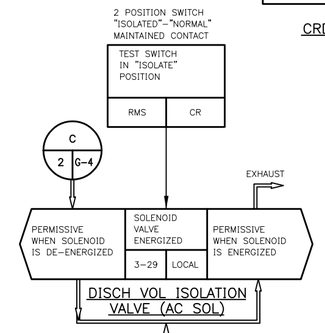

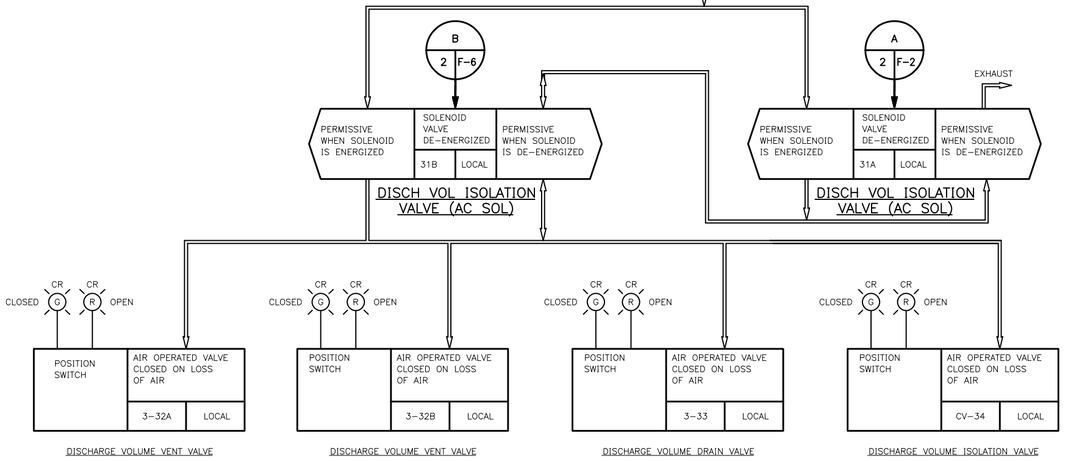

DISCHARGE VOLUME VENT & DRAIN VALVES
(SHOWN FOR ISOLATE CONDITION)

NOTES:
1. FOR GENERAL NOTES AND REFERENCE DOCUMENTS SEE SHEET 1.

AS BUILT

452005833

CADD DRAWING
DO NOT REVISE MANUALLY

* THIS DRAWING GENERATED BY NPPD

SIGNIFICANT NUMBER						
GROUP	1	2	3	4	5	6

COOPER NUCLEAR STATION
FUNCTIONAL CONTROL DIAGRAM
CONTROL ROD DRIVE HYDRAULIC SYSTEM

DRAWN DR	DATE 10-29-93	GENERAL ELECTRIC*
CHECKED JAC	DATE 11-3-93	
APPROVED AGB	DATE 11-23-93	
FILMED	729E471BB SH. 2	REVISION NO3

CADD FILE: C0011081

REVISIONS
NO.

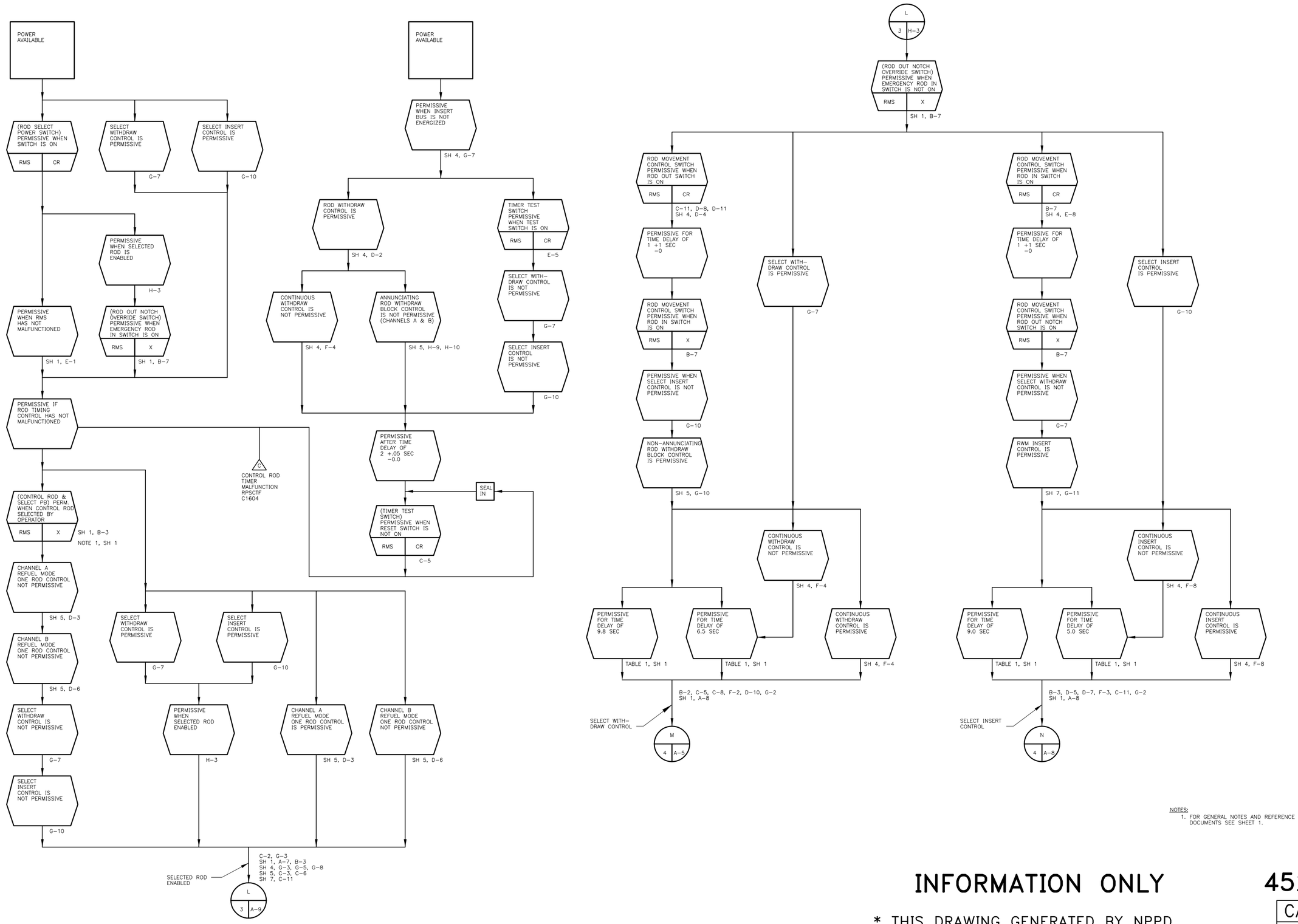

NOTES:
1. FOR GENERAL NOTES AND REFERENCE DOCUMENTS SEE SHEET 1.

INFORMATION ONLY

452005834

* THIS DRAWING GENERATED BY NPPD

CADD DRAWING
DO NOT REVISE MANUALLY

** FOR PREVIOUS REVISIONS, SEE SUPERSEDED CARDS.

NO.	REVISIONS	DFT	CKD	APP	DATE
** NO2	REVISED AND REDRAWN PER APA DCN C93-1816	DR	JAC	AGB	11-23-93

DCN REVISIONS BY N.P.P.D.

SIGNIFICANT NUMBER						
GROUP	1	2	3	4	5	6

COOPER NUCLEAR STATION
FUNCTIONAL CONTROL DIAGRAM
CONTROL ROD DRIVE HYDRAULIC SYSTEM

DRAWN DR	DATE 10-29-93	GENERAL ELECTRIC*
CHECKED JAC	DATE 11-9-93	
APPROVED AGB	DATE 11-23-93	
FILMED	729E471BB SH. 3	REVISION NO2

CADD FILE: C0011082

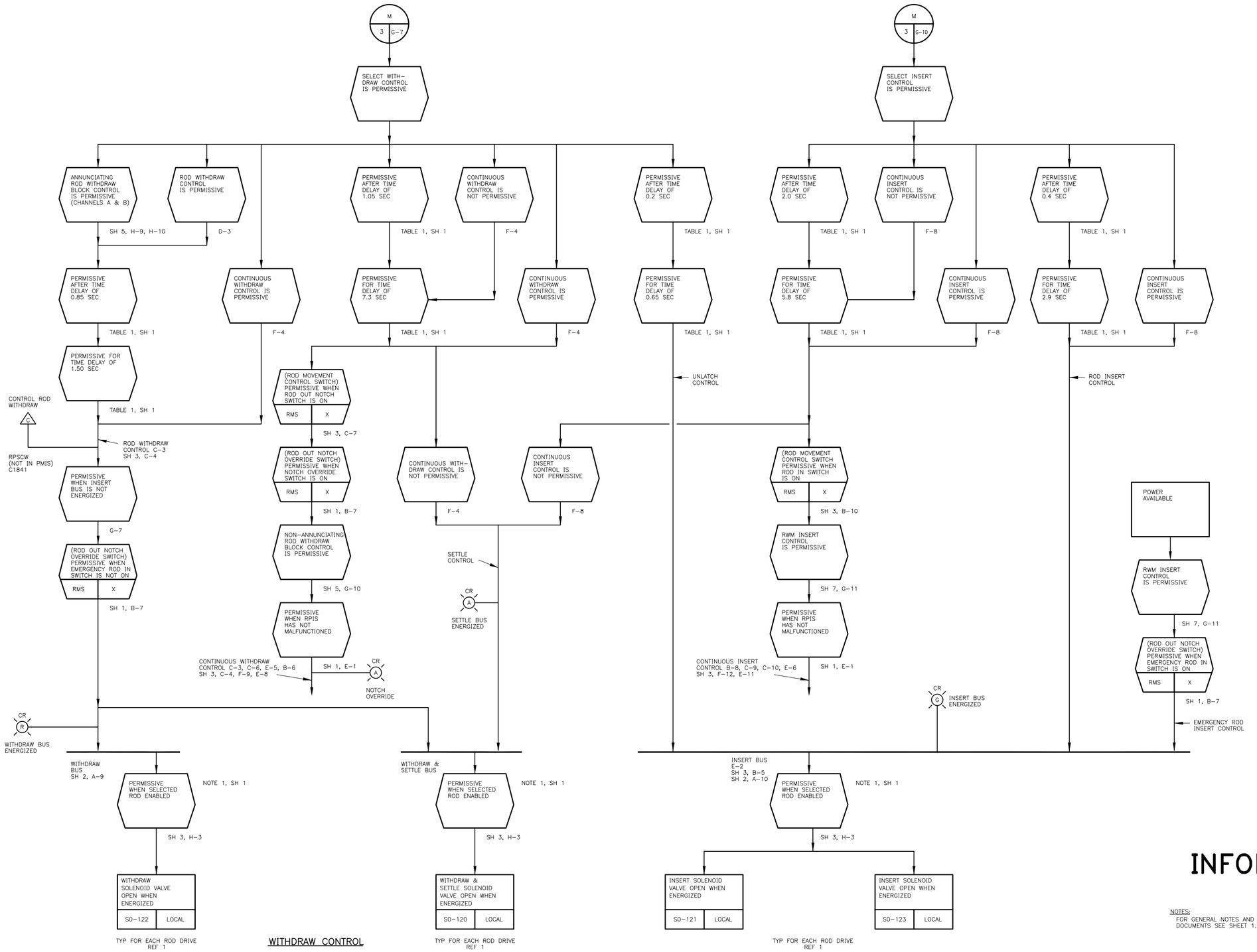

INFORMATION ONLY

NOTES:
FOR GENERAL NOTES AND REFERENCE DOCUMENTS SEE SHEET 1.

452005835

CADD DRAWING
DO NOT REVISE MANUALLY

* THIS DRAWING GENERATED BY NPPD

** FOR PREVIOUS REVISIONS, SEE SUPERSEDED CARDS.

NO.	REVISIONS	DFT	CKD	APP	DATE
** NO1	REVISED AND REDRAWN PER APA DCN C93-1817	DR	JAC	AGB	11-23-93

DCN REVISIONS BY N.P.P.D.

SIGNIFICANT NUMBER						
GROUP	1	2	3	4	5	6

COOPER NUCLEAR STATION
FUNCTIONAL CONTROL DIAGRAM
CONTROL ROD DRIVE HYDRAULIC SYSTEM

DRAWN DR	DATE 11-5-93	GENERAL ELECTRIC*
CHECKED JAC	DATE 11-10-93	
APPROVED AGB	DATE 11-23-93	
FILMED	729E471BB SH. 4	REVISION NO1

CADD FILE: C0011083

REVISIONS
NO.

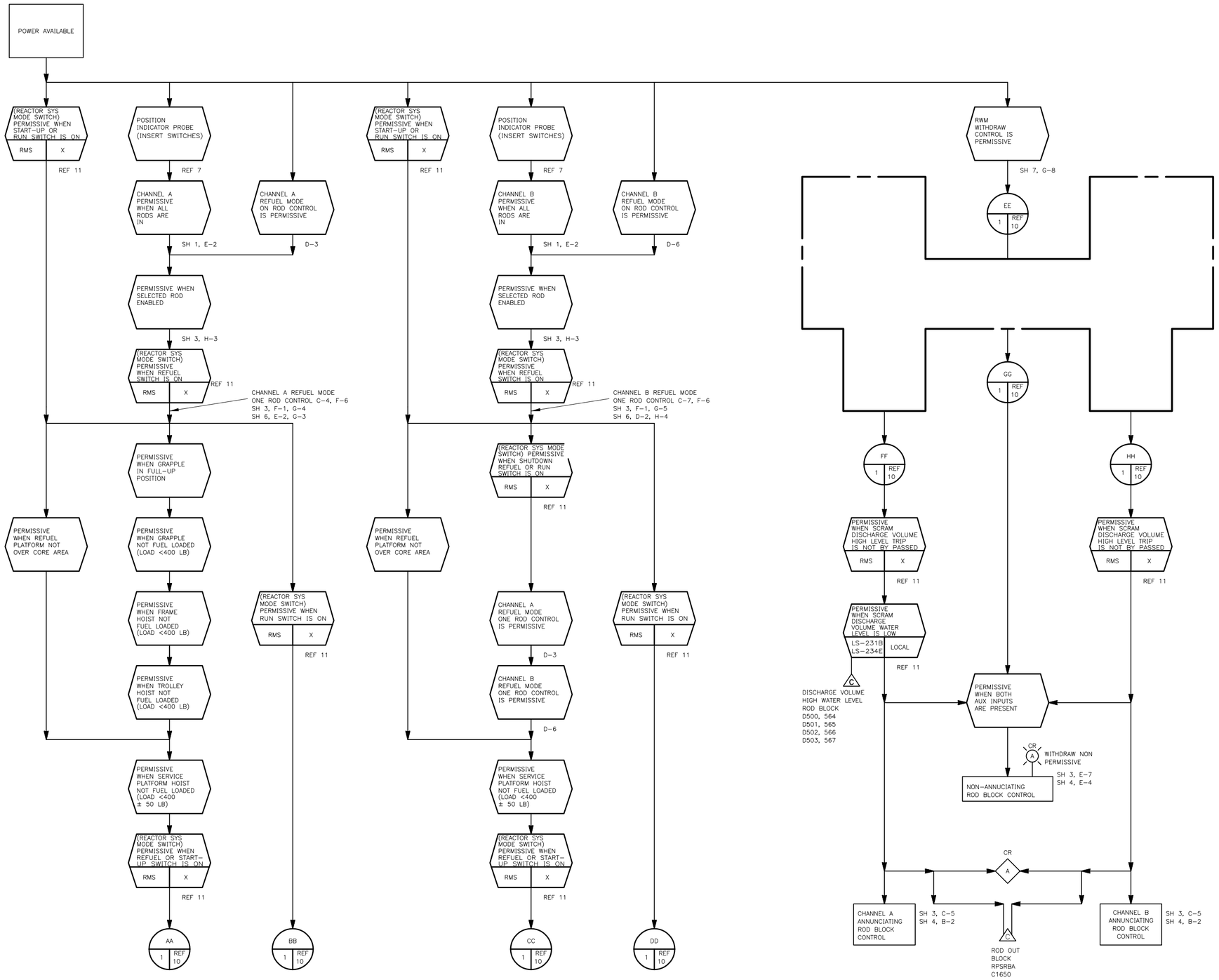

INFORMATION ONLY

NOTES:

1. FOR GENERAL NOTES AND REFERENCE DOCUMENTS SEE SHEET 1.

* THIS DRAWING GENERATED BY NPPD

452005836

** FOR PREVIOUS REVISIONS, SEE SUPERSEDED CARDS.

NO.	REVISIONS	DFT	CKD	APP	DATE
**NO2	REV & REDRAWN PER APA DCN C93-1577	DR	JAC	SJT	11-16-93

DCN REVISIONS BY N.P.P.D.

SIGNIFICANT NUMBER						
GROUP	1	2	3	4	5	6

COOPER NUCLEAR STATION
FUNCTIONAL CONTROL DIAGRAM
CONTROL ROD DRIVE HYDRAULIC SYSTEM

DRAWN DR	DATE 10-18-93	GENERAL ELECTRIC*
CHECKED	DATE	
APPROVED SJT	DATE 11-16-93	
FILMED	729E471BB SH. 5	REVISION NO2

CADD FILE: C0011084

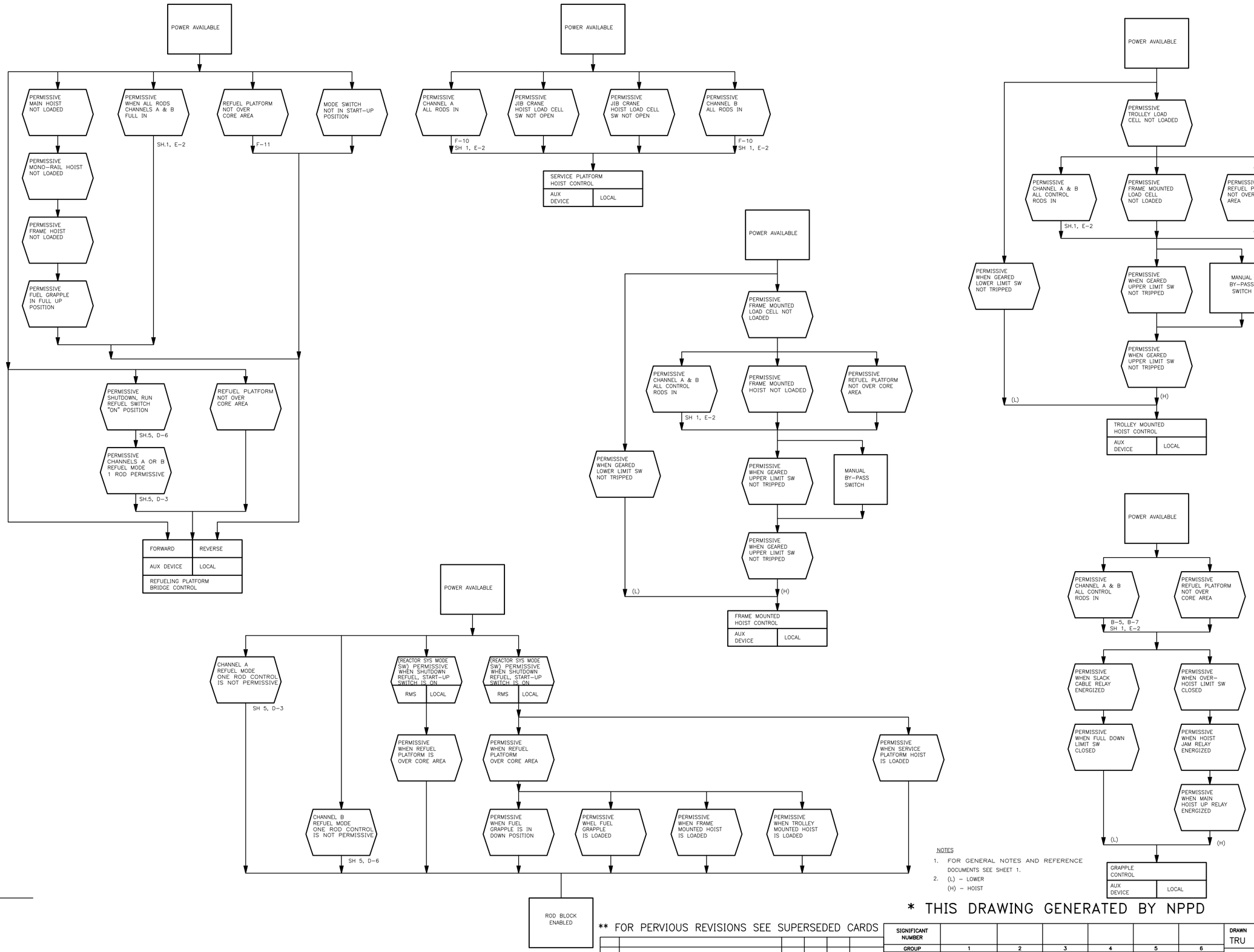

NOTES

1. FOR GENERAL NOTES AND REFERENCE DOCUMENTS SEE SHEET 1.
2. (L) – LOWER
   (H) – HOIST

INFORMATION ONLY

452005837

CADD DRAWING

DO NOT REVISE MANUALLY

* THIS DRAWING GENERATED BY NPPD

** FOR PERVIOUS REVISIONS SEE SUPERSEDED CARDS

NO.	REVISIONS	DFT	CKD	APP	DATE
**NO1	REVISED AND REDRAWN PER APA DCN C93-1578	TRU	JAC	SJT	11-16-93

DCN REVISIONS BY N.P.P.D.

REVISIONS

NO.

SIGNIFICANT NUMBER						
GROUP	1	2	3	4	5	6

COOPER NUCLEAR STATION
FUNCTIONAL CONTROL DIAGRAM
CONTROL ROD DRIVE HYDRAULIC SYSTEM

DRAWN TRU	DATE 10-14-93	GENERAL ELECTRIC*
CHECKED	DATE	
APPROVED SJT	DATE 11-16-93	
FILMED	729E471BB SH. 6	REVISION NO1

CADD FILE: C0011085

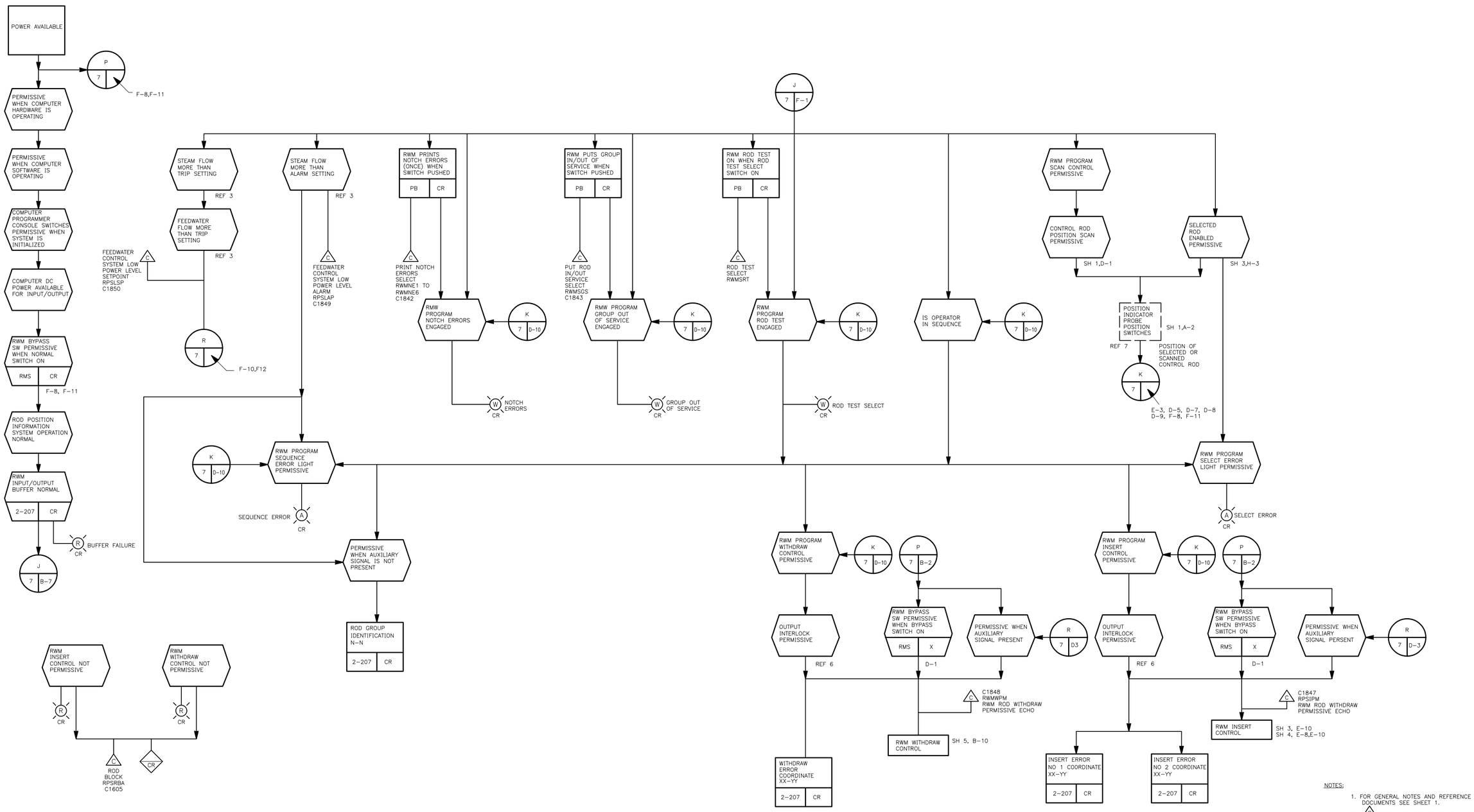

NOTES:

1. FOR GENERAL NOTES AND REFERENCE DOCUMENTS SEE SHEET 1.
2. C COMPUTER POINTS ARE PER RPIS/RWM DATABASE.

INFORMATION ONLY

452005838

* THIS DRAWING GENERATED BY NPPD

CADD DRAWING
DO NOT REVISE MANUALLY

** FOR PREVIOUS REVISIONS SEE SUPERSEDED CARDS

NO.	REVISIONS	DFT	CKD	APP	DATE
** NO3	REVISED AND REDRAWN PER APA DCN C93-1818	TRU	JAC	AGB	11-23-93

DCN REVISIONS BY N.P.P.D.

REVISIONS NO.

SIGNIFICANT NUMBER						
GROUP	1	2	3	4	5	6

COOPER NUCLEAR STATION
CONTROL ROD DRIVE HYDRAULIC SYSTEM
FUNCTIONAL CONTROL DIAGRAM

DRAWN TRU	DATE 11/8/93	
CHECKED JAC	DATE 11-10-93	
APPROVED AGB	DATE 11-23-93	
FILMED	729E471BB SH.7	REVISION NO3

GENERAL ELECTRIC*

CADD FILE: C0011086

NO.	REVISIONS	DFT	CKD	APP	DATE
N04	REV DCN 96-0118	RAC	JAC	KG	4-19-99
N03	REV PER DCN 97-0815	RRT	JAC	ACG	8-12-97
N02	REV & REDRAWN PER APA DCN C93-1784	DR	JAC	BAM	12/01/93

DCN REVISIONS BY N.P.P.D.

FOR PREVIOUS REVISIONS, SEE SUPERSEDED CARDS.

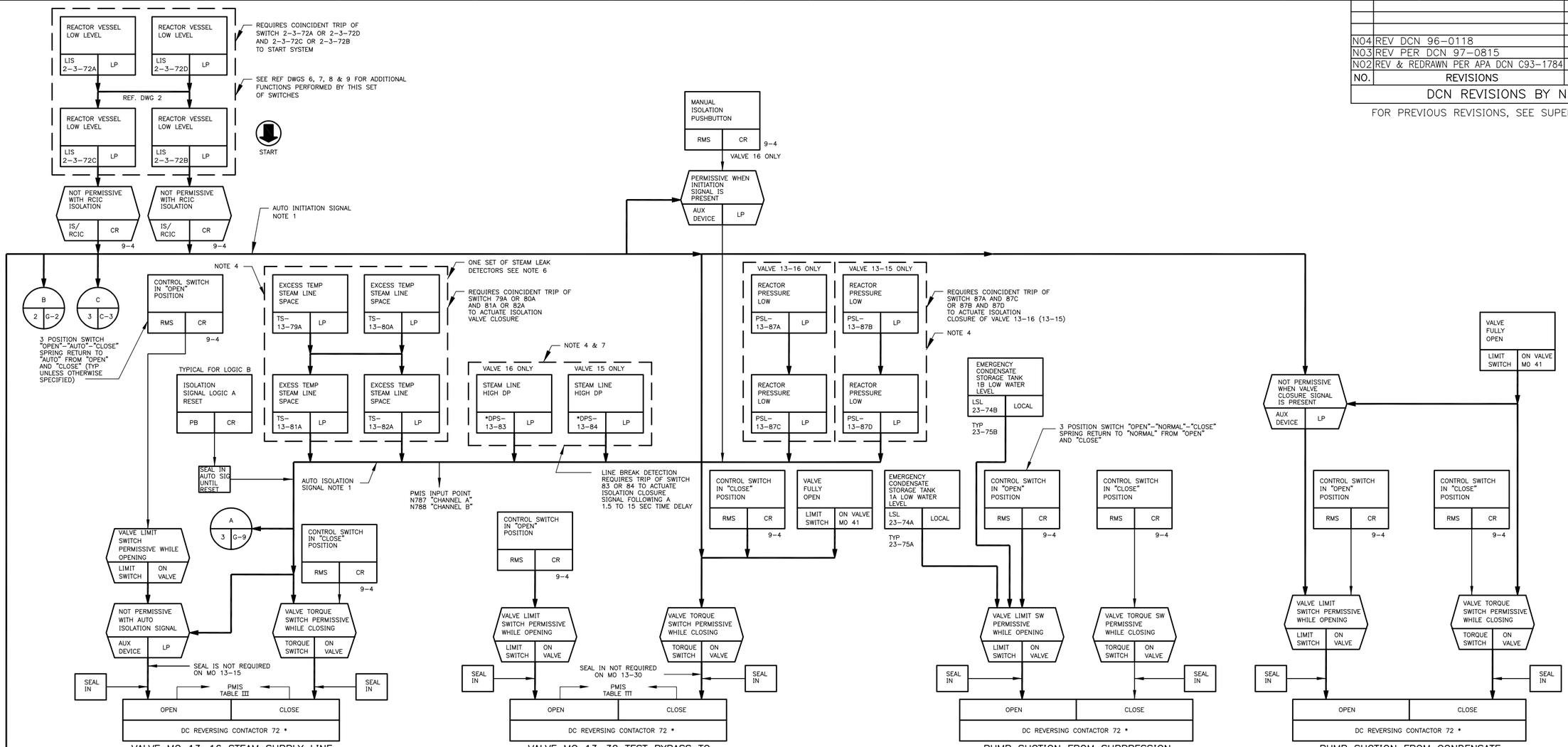

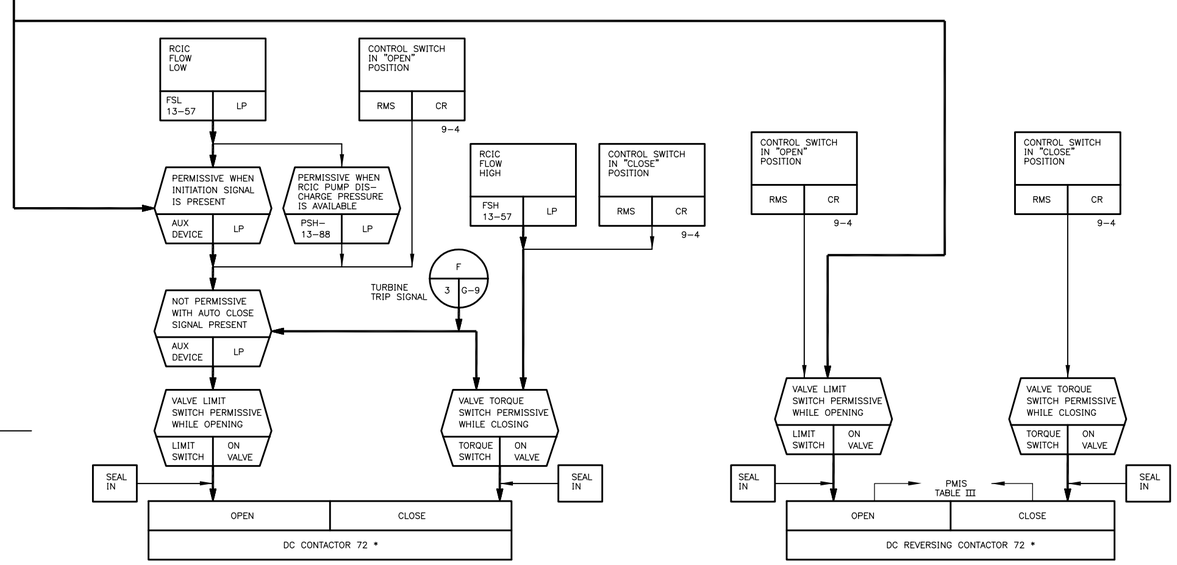

NOTES:

1. THE RCIC SYS IS ARRANGED FOR TEST OF PUMP AT FULL FLOW AND ALL VALVES FOR OPEN AND CLOSE CAPABILITY AT ANY TIME EXCEPT WHEN INITIATION SIGNAL OR AUTO ISOLATION SIGNAL IS ACTIVATED. IN EVENT THE INITIATION SIGNAL OCCURS WHILE TEST IS UNDER WAY THE SYS AUTOMATICALLY RETURNS TO START-UP MODE.
2. ALL POWER FOR OPERATION OF DC VALVE MOTORS SHALL ORIGINATE FROM A PLANT DC BUS. POWER FOR AC OPERATED VALVES SHALL ORIGINATE FROM ANY EMERGENCY AC BUS.
3. ALL PART NUMBERS ARE PREFIXED BY 13 EXCEPT WHERE OTHERWISE SHOWN.
4. ISOLATION SIGNAL SWITCHES SHALL BE OF THE TYPE THAT CLOSE CONTACTS FOR THE SPECIFIED ISOLATION EVENT WHERE AUX RELAYS ARE USED IN THE ISOLATION CHANNELS. THEY SHALL BE POWERED FROM THE STATION BATTERIES.
5. AUXILIARY RELAYS AND DEVICES NOT SHOWN ON FUNCTIONAL CONTROL DIAGRAMS EXCEPT WHERE REQUIRED TO CLARIFY FUNCTION.
6. SET A OF EXCESS TEMP STEAM LEAK DETECTORS ARE SHOWN. SETS B, C, & D SHALL BE CONNECTED IN THE SAME WAY WITH EACH SET A OR C (B OR D) GIVING AN INDEPENDENT ISOLATION CLOSURE SIGNAL TO VALVE NO. MO-15 & MO-16.
7. OPERATION OF HIGH STEAM FLOW SWITCHES DPIS-83 & 84 ARE DELAYED BY TDR-K12 & K32 FOR 1.5 TO 15 SEC.

REFERENCE DRAWINGS:

		DWG. MPL. NO.
1.	P&ID RCIC	718E961BC
2.	NUCLEAR BOILER VESSEL INSTRUMENT P&ID	718E846BC
3.	LOGIC SYMBOLS	209A473B
4.	FUNCTIONAL CONT DIAG NUCLEAR BOILER MISC SYSTEM	730E149BB
5.	FUNCTIONAL CONT DIAG RHR SYSTEM	730E140BB
6.	FUNCTIONAL CONT DIAG CORE SPRAY SYSTEM	729E402BB
7.	FUNCTIONAL CONT DIAG HPCI SYSTEM	729E589BB
8.	P&ID REACTOR WATER CLEANUP SYSTEM	718E833BA
9.	ELE. DIAGRAM RCIC SYSTEM	791E264

NOTE: RHR STEAM CONDENSING IS NO LONGER AN OPERATIONAL MODE.

LEGEND:

* —SWITCHGEAR DEVICE FUNCTION NO USAS SPEC C37.2
✳ —FURNISHED WITH TURBINE. SEE REF DWG 4.

A — SIGNAL
B — SHEET NO.
C — COORDINATES

INFORMATION ONLY

** THIS DRAWING GENERATED BY NPPD

452005358

CADD DRAWING
DO NOT REVISE MANUALLY

SIGNIFICANT NUMBER						
GROUP	1	2	3	4	5	6

COOPER NUCLEAR STATION
FUNCTIONAL CONTROL DIAGRAM
REACTOR CORE ISOLATION COOLING SYSTEM

DRAWN DR	DATE 10-25-93	GENERAL ELECTRIC✳✳
CHECKED JAC	DATE 10-29-93	
APPROVED BAM	DATE 12/01/93	
FILMED	729E517BC SH. 1	REVISION N04

CADD FILE: C0011077

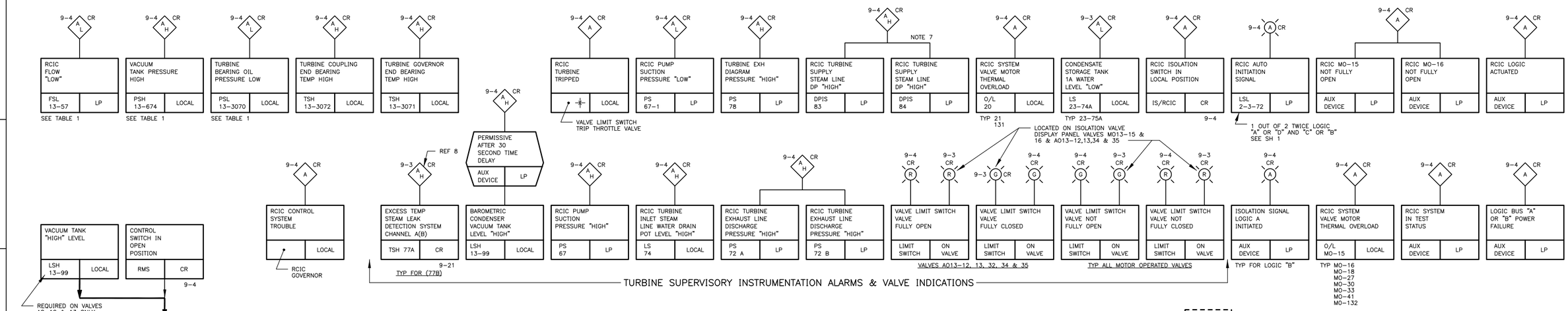

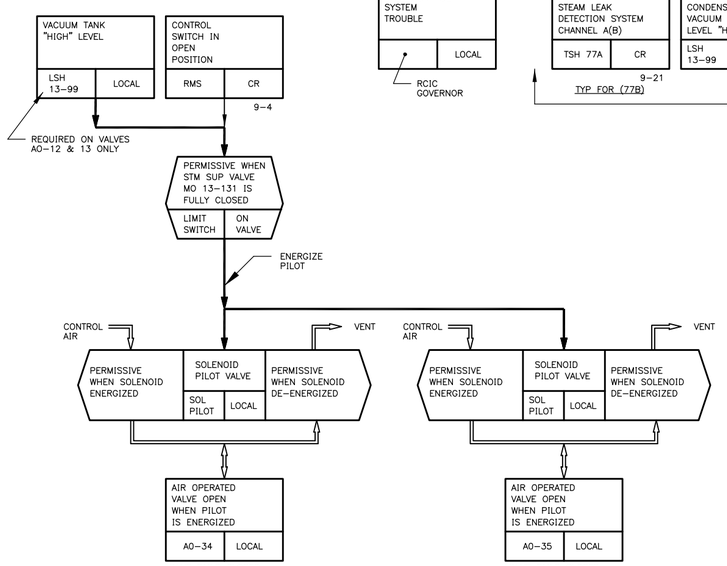

STEAM LINE DRAIN ISOLATION VALVES AO13-34 & 35
(TYP FOR CONDENSATE PUMP DISCHARGE ISOLATION VALVES AO13-12 & 13, EXCEPT AS NOTED)

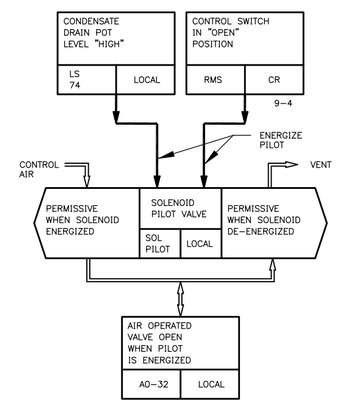

CONDENSATE DRAIN POT DRAIN VALVE AO-32

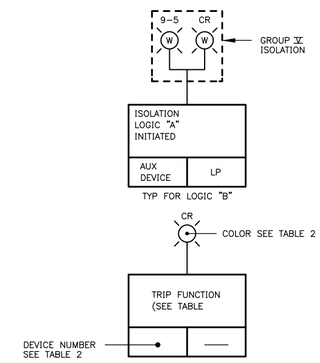

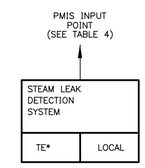

TABLE 2
TURBINE INDICATION LIGHTS

ACTUATING DEVICE	TRIP FUNCTION	COLOR	PNL LOCATION
REF 9	GOVERNOR VALVE OPEN	RED	9-4 CR
REF 9	GOVERNOR VALVE CLOSED	GREEN	9-4 CR
REF 9	TRIP THROTTLE VALVE OPEN	RED	9-4 CR
REF 9	TRIP THROTTLE VALVE CLOSED	GREEN	9-4 CR

TURBINE SUPERVISORY INDICATING LIGHTS

TABLE 4

PMIS POINT	TE *
N370	77A
N371	77B
N372	77C
N373	77D

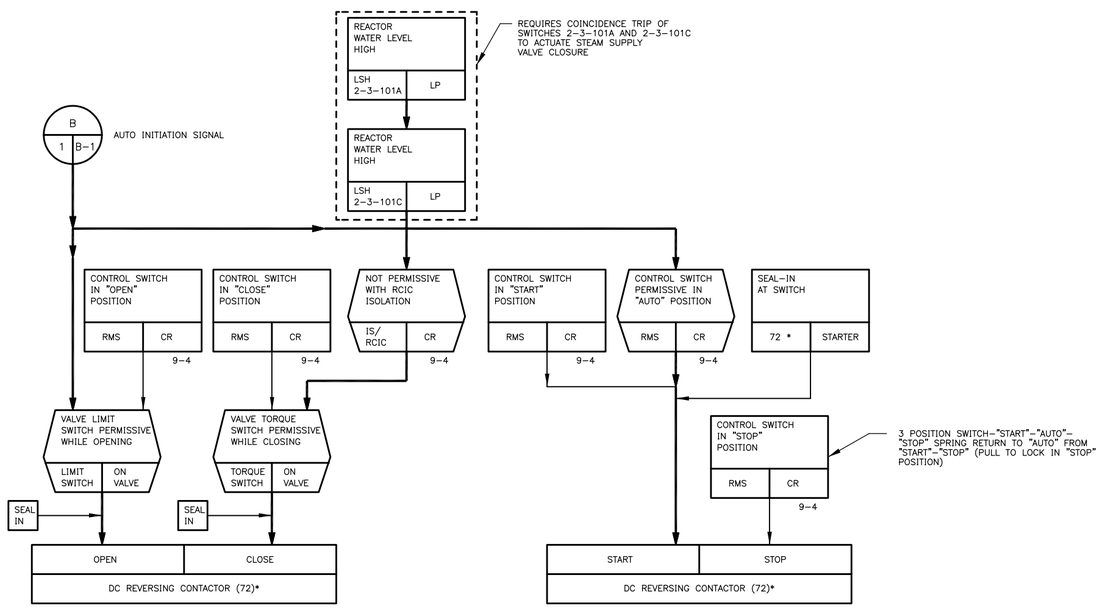

STEAM SUPPLY VALVE TO TURBINE MO 13-131
NOTES 2 & 5

START BAROMETRIC CONDENSER VACUUM PUMP ✳
NOTES 2 & 5

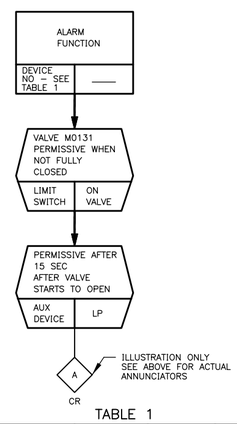

TABLE 1

ALARM FUNCTION	INITIALIZING DEVICE	SERVICE LOCATION	TYPE OF ALARM
TURBINE (BRG) OIL PRESS LOW	PSL 3070 ✳	LOCAL	LOW
VACUUM TANK PRESSURE HIGH	PSH 674 ✳	LOCAL	HIGH
RCIC FLOW LOW	FS H/L 57	LP	LOW

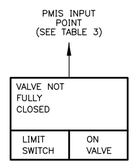

TABLE 3

PMIS POINT	VALVE *
N504	M013-15
N505	M013-16
N818	M013-20
N819	M013-21
N820	M013-30
N821	M013-33

NOTES:
1. FOR GENERAL NOTES AND REFERENCE DRAWINGS SEE SHEET 1.

NOTE: RHR STEAM CONDENSING IS NO LONGER AN OPERATIONAL MODE.

AS BUILT
452005359

STATUS: Release
STATUS DATE: 12/05/2018
DS APPROVED: DCWHEAT
VER: AB REV: 06 SIZE: C

FOR PREVIOUS REVISIONS, SEE SUPERSEDED CARDS.

VERSIONS/REVISIONS BY N.P.P.D.

NO.	DESCRIPTION	DFT	DATE	ENG
AB/06	DR-2014-0692	LS	10/19/18	DCWHEAT

SIGNIFICANT NUMBER						
GROUP	1	2	3	4	5	6

COOPER NUCLEAR STATION
FUNCTIONAL CONTROL DIAGRAM
REACTOR CORE ISOLATION COOLING SYS

DRAWN DR DATE 10-27-93
CHECKED JAC DATE 10-29-93
APPROVED SEE SUPERSEDED CARDS DATE
FILMED

GENERAL ELECTRIC

729E517BC SH. 2

CADD FILE: C0011078

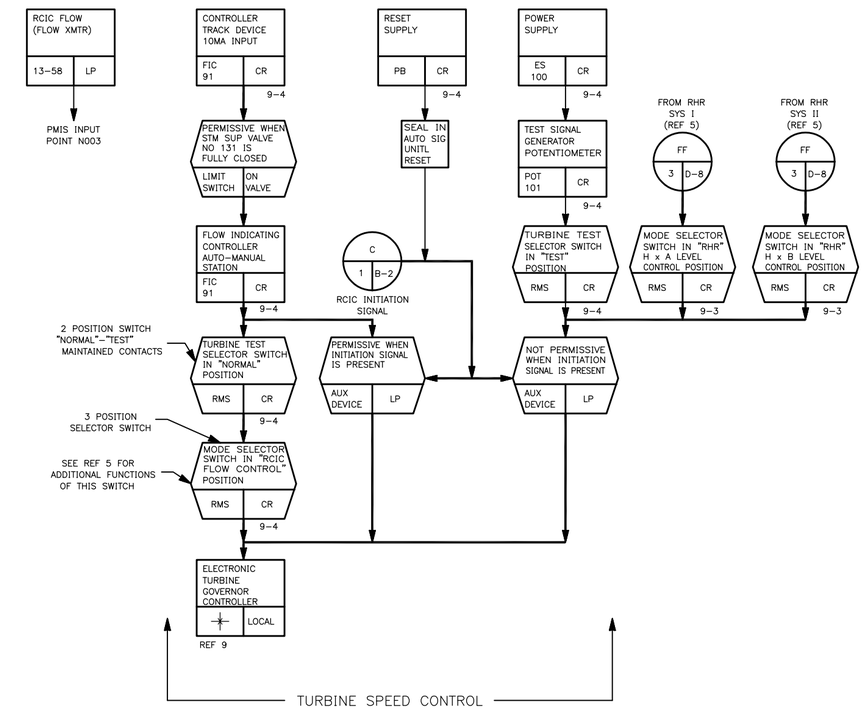

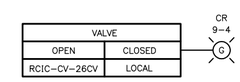

INJECTION CHECK VALVE RCIC-CV-26CV

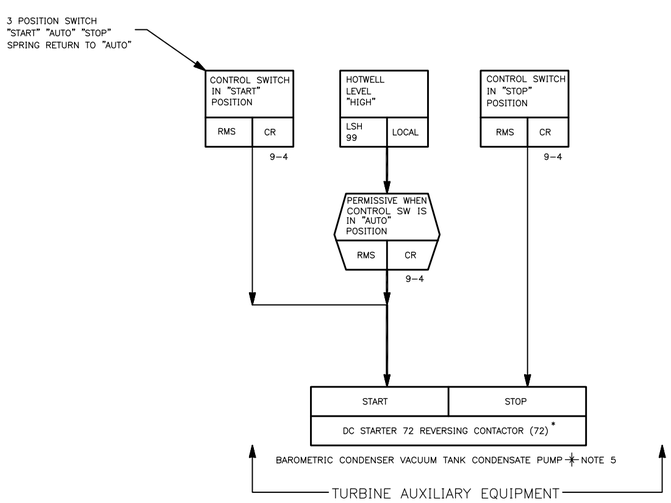

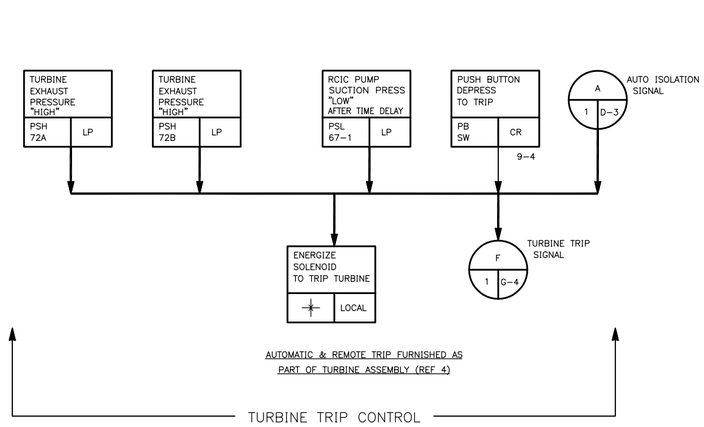

NOTES:

1. FOR GENERAL NOTES AND REFERENCE DRAWINGS SEE SHEET 1.

NOTE: RHR STEAM CONDENSING IS NO LONGER AN OPERATIONAL MODE.

INFORMATION ONLY
452005360

FOR PREVIOUS REVISIONS SEE SUPERSEDED CARDS

REVISIONS BY N.P.P.D.

NO.	REVISIONS	DFT	CKD	APP	DATE
N03	REVISED AND REDRAWN PER APA DCN C93-1812	TRU	JAC	AGB	11-23-93
N04	REVISED PER DCN 97-0813	RRT	JAC	KG	9/20/97
N05	REV DCN 96-1423	CRW	JAC	KG	9/20/97
N06	CED 6029441 (DCN 09-1944)	DLR	SMH	KZ	11-3-10

REVISIONS NO.

SIGNIFICANT NUMBER						
GROUP	1	2	3	4	5	6

COOPER NUCLEAR STATION
REACTOR CORE ISOLATION COOLING SYS
FUNCTIONAL CONTROL DIAGRAM

DRAWN TRU	DATE 10/01/93	GENERAL
CHECKED JAC	DATE 11-23-93	
APPROVED AGB	DATE 11-23-93	
FILMED	729E517BC SH 3	REVISION N06

CADD FILE: C0011079

NO.	REVISIONS	DFT	CKD	APP	DATE
N06	REV DCN 96-0112	RAC	JAC	KG	4-19-99
N05	REV PER DCN 97-0819	RAC	JAC	ACG	8/20/97
N04	REV PER DCN 96-1532	CRW	JAC	JRF	10/9/96
N03	REV & REDRAWN PER APA DCN C93-1781	DR	JAC	BAM	12/01/03

DCN REVISIONS BY N.P.P.D.

FOR PREVIOUS REVISIONS, SEE SUPERSEDED CARDS.

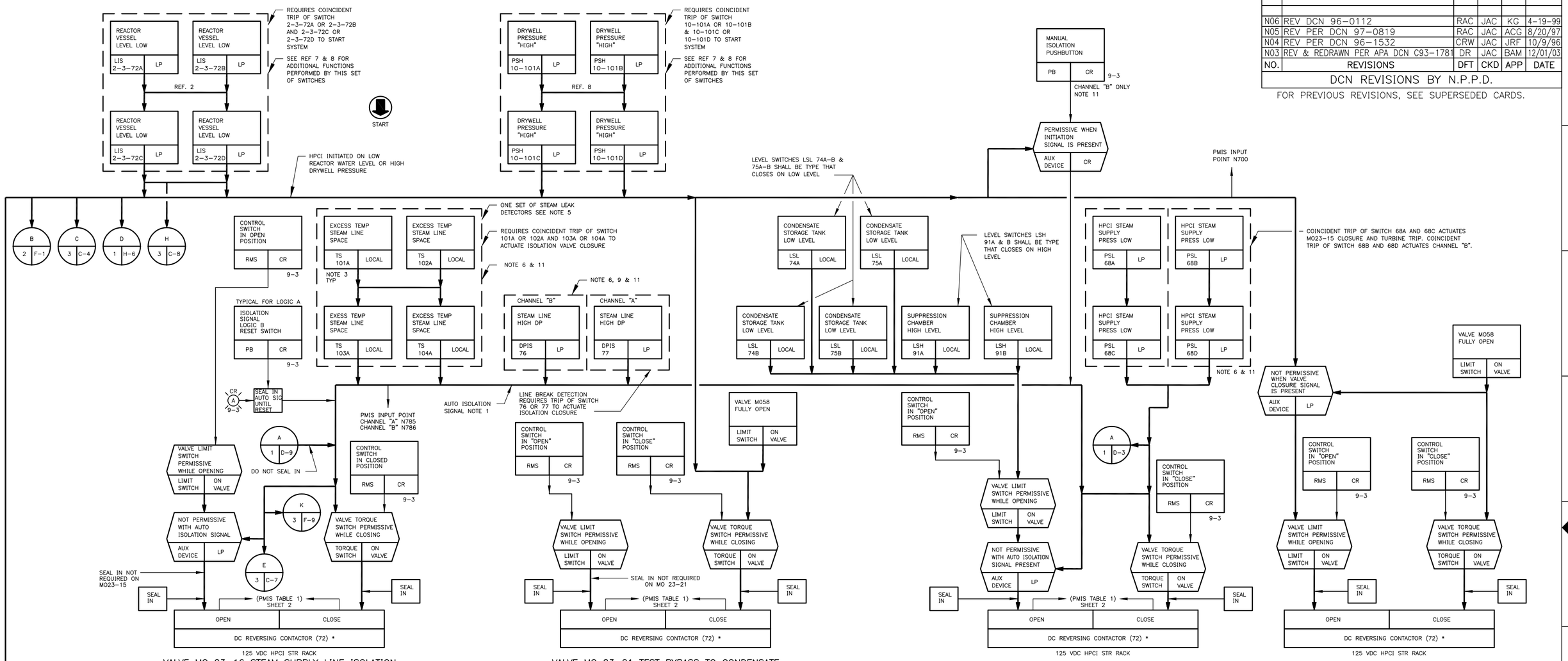

VALVE MO 23-16 STEAM SUPPLY LINE ISOLATION VALVE (DC OPERATED) FOR MO 23-15 IDENTICAL EXCEPT AC REVERSING CONTACTOR (42)*

NOTES 2 & 4

VALVE MO 23-21 TEST BYPASS TO CONDENSATE STORAGE TANK (EXCEPT AS NOTED) (TYPICAL FOR VALVE MO 23-24 REDUNDANT SHUT-OFF TO CNDS STORAGE TANK)

NOTES 2 & 4

PUMP SUCTION FROM SUPPRESSION CHAMBER VALVE MO 23-58

NOTES 2 & 4

PUMP SUCTION FROM CONDENSATE STORAGE TANK VALVE MO 23-17

NOTES 2 & 4

MINIMUM FLOW BYPASS TO SUPPRESSION CHAMBER VALVE MO 23-25

NOTES 2 & 4

PUMP DISCHARGE VALVE MO 23-19 (TYPICAL FOR PUMP DISCHARGE VALVE MO 23-20)

NOTES 2 & 4

NOTES:

1. THE HPCI SYS IS ARRANGED FOR TEST OF PUMP AT FULL FLOW AND ALL VALVES FOR OPEN AND CLOSE CAPACITY AT ANY TIME EXCEPT WHEN INITIATION SIGNAL OR AUTO ISOLATION SIGNAL IS ACTIVATED. IN EVENT THE INITIATION SIGNAL OCCURS WHILE TEST IS UNDERWAY THE SYS AUTOMATICALLY RETURNS TO START-UP MODE.
2. ALL POWER FOR OPERATION OF DC VALVE MOTORS SHALL ORIGINATE FROM A PLANT DC BUS. POWER FOR AC OPERATED VALVES SHALL ORIGINATE FROM ANY EMERGENCY AC BUS.
3. ALL PART NO'S PREFIXED BY 23 UNLESS OTHERWISE SHOWN.
4. AUXILIARY RELAYS & DEVICES NOT SHOWN ON FUNCTIONAL CONTROL DIAGRAMS EXCEPT WHERE REQUIRED TO CLARIFY FUNCTION.
5. FIVE IDENTICAL SETS OF STEAM LEAK DETECTORS COMPRISE CHANNEL A, WITH ONLY ONE SET BEING SHOWN FOR CLARITY. CHANNELS B, C, & D SHALL BE CONNECTED THE SAME WAY WITH EACH CHANNEL GIVING AN INDEPENDENT ISOLATION CLOSURE SIGNAL TO CHANNELS "A" AND "B". THREE STEAM LEAK DETECTOR SETS PER CHANNEL SERVE HPCI EQUIPMENT AND ITS STEAM PIPING, WITH THE REMAINING MONITORING THE STEAM PIPING SERVING RHR.
6. ISOLATION SIGNAL SWITCHES SHALL BE OF THE TYPE THAT CLOSE CONTACTS FOR SPECIFIED ISOLATION EVENT. WHERE AUX RELAYS ARE USED IN THE ISOLATION CHANNELS, THEY SHALL BE POWERED FROM THE STATION BATTERIES.
7. FOR LOCATION AND IDENTIFICATION OF INSTRUMENTS, SEE INSTRUMENT DATA SHEET LISTED IN MPL FOR EACH INSTRUMENT.
8. THE HPCI SYSTEM SHALL BE DESIGNATED IN ACCORDANCE WITH PROPOSED CRITERIA FOR NUCLEAR POWER PLANT PROTECTION SYSTEM IEEE 279 INSOFAR AS PRACTICABLE.
9. OPERATION OF HIGH STEAM FLOW SWITCHES DPIS-76 & 77 ARE DELAYED 3 SECONDS BY TDR-K33 & K45.
10. RHR STEAM CONDENSING IS NO LONGER AN OPERATIONAL MODE.
11. ACTUATION OF CHANNEL "A" CLOSES M023-15, A023-70, A023-71, AND PRODUCES TURBINE TRIP. ACTUATION OF CHANNEL "B" CLOSES M023-16, M023-58, A023-70, A023-71 AND PRODUCES TURBINE TRIP.

REFERENCE DRAWINGS:

1. 729E261BC P&ID HIGH PRESSURE COOLANT INJECTION SYSTEM
2. 719E415BB P&ID NUCLEAR BOILER VESSEL INSTRUMENTATION
3. 209A4756 LOGIC SYMBOLS
4. 730E149BB FCD NUCLEAR BOILER MISC. SYSTEM
5. 730E140BB FCD RHR SYSTEM
6. 729E402BB FCD CORE SPRAY SYSTEM
7. 729E517BC FCD RCIC SYSTEM
8. 729E128BB P&ID RHR SYSTEM
9. 718E833BA P&ID REACTOR WATER CLEAN-UP SYSTEM
10. 791E271 HPCI ELEMENTARY DIAGRAM

LEGEND:

* -SWITCHGEAR DEVICE FUNCTION NO ASA SPEC C37.2

✝ -FURNISHED WITH TURBINE SEE REF DWG 10

A - SIGNAL
B - SH NO
C - COORDINATES

INFORMATION ONLY

452005102

** THIS DRAWING GENERATED BY NPPD

CADD DRAWING

DO NOT REVISE MANUALLY

SIGNIFICANT NUMBER						
GROUP	1	2	3	4	5	6

COOPER NUCLEAR STATION
FUNCTIONAL CONTROL DIAGRAM
HIGH PRESSURE COOLANT INJECTION SYS

DRAWN DR	DATE 10-19-93	
CHECKED JAC	DATE 10-29-93	
APPROVED BAM	DATE 12/01/93	
FILMED	729E589BB SH. 1	REVISION N06

GENERAL ELECTRIC

CADD FILE: C0011074

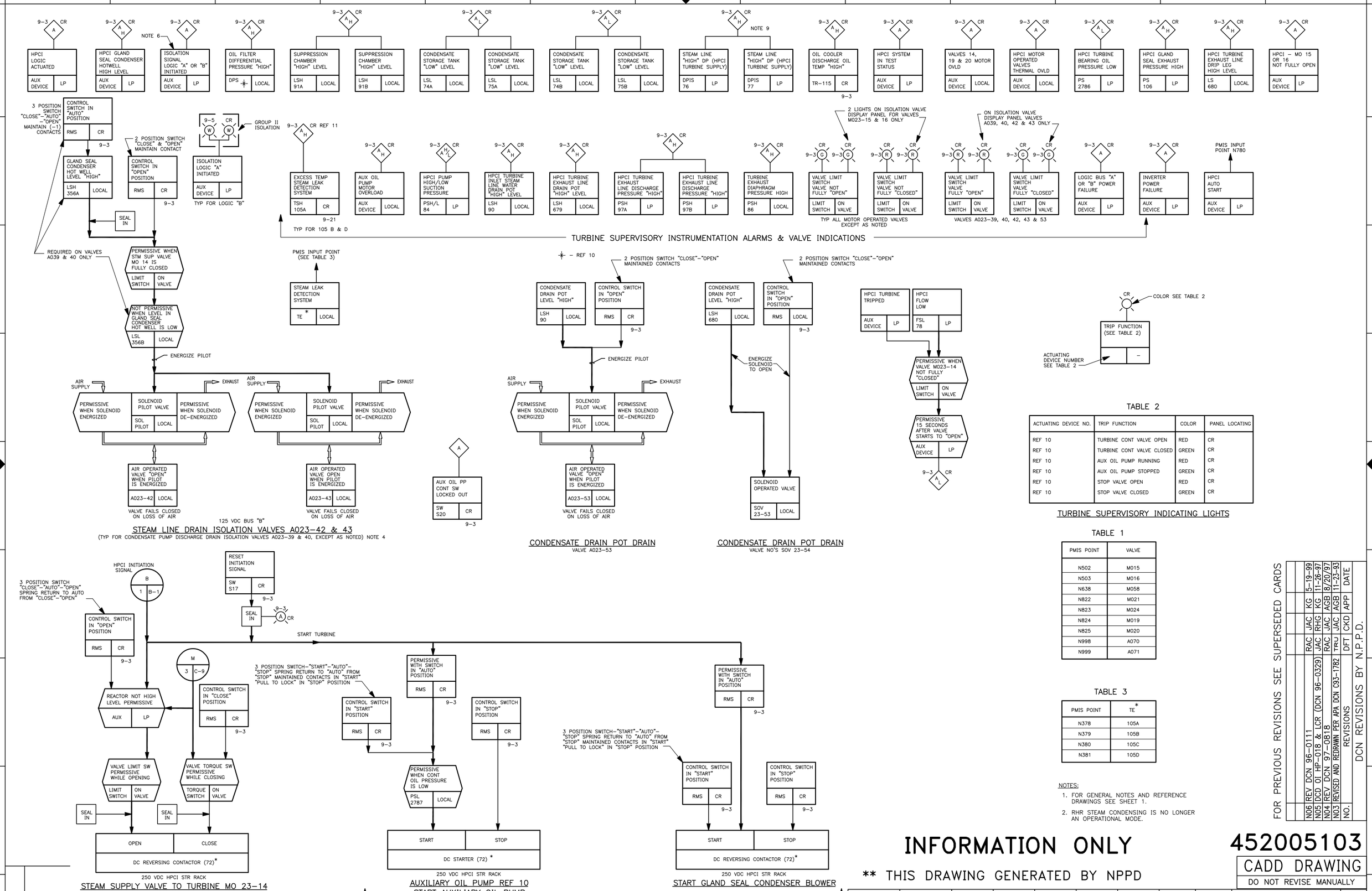

TABLE 2

ACTUATING DEVICE NO.	TRIP FUNCTION	COLOR	PANEL LOCATING
REF 10	TURBINE CONT VALVE OPEN	RED	CR
REF 10	TURBINE CONT VALVE CLOSED	GREEN	CR
REF 10	AUX OIL PUMP RUNNING	RED	CR
REF 10	AUX OIL PUMP STOPPED	GREEN	CR
REF 10	STOP VALVE OPEN	RED	CR
REF 10	STOP VALVE CLOSED	GREEN	CR

TURBINE SUPERVISORY INDICATING LIGHTS

TABLE 1

PMIS POINT	VALVE
N502	M015
N503	M016
N638	M058
N822	M021
N823	M024
N824	M019
N825	M020
N998	A070
N999	A071

TABLE 3

PMIS POINT	TE*
N378	105A
N379	105B
N380	105C
N381	105D

NOTES:

1. FOR GENERAL NOTES AND REFERENCE DRAWINGS SEE SHEET 1.
2. RHR STEAM CONDENSING IS NO LONGER AN OPERATIONAL MODE.

FOR PREVIOUS REVISIONS SEE SUPERSEDED CARDS

NO.	REVISIONS							DATE
N06	REV DCN 96-0111	RAC	JAC	KG	KG			5-19-99
N05	DCD 01 HP-018 & LCR (DCN 96-0329)	JAC	RHG	KG				11-26-97
N04	REV DCN 97-0818	RAC	JAC	AGB				8/20/97
N03	REVISED AND REDRAWN PER APA DCN C93-1782	TRU	JAC	AGB				11-23-93

DCN REVISIONS BY N.P.P.D.

INFORMATION ONLY

** THIS DRAWING GENERATED BY NPPD

452005103

CADD DRAWING

DO NOT REVISE MANUALLY

SIGNIFICANT NUMBER						
GROUP	1	2	3	4	5	6

COOPER NUCLEAR STATION
HIGH PRESSURE COOLANT INJECTION SYS
FUNCTIONAL CONTROL DIAGRAM

DRAWN TRU	DATE 10-29-93	GENERAL ELECTRIC**
CHECKED JAC	DATE 11-9-93	
APPROVED AGB	DATE 11-23-93	
FILMED	729E589BB SH2	REVISION N06

CADD FILE: C0011075

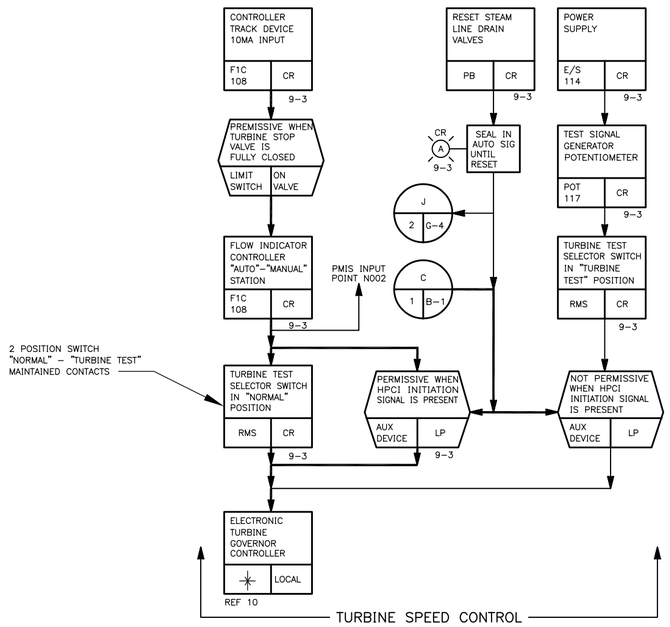

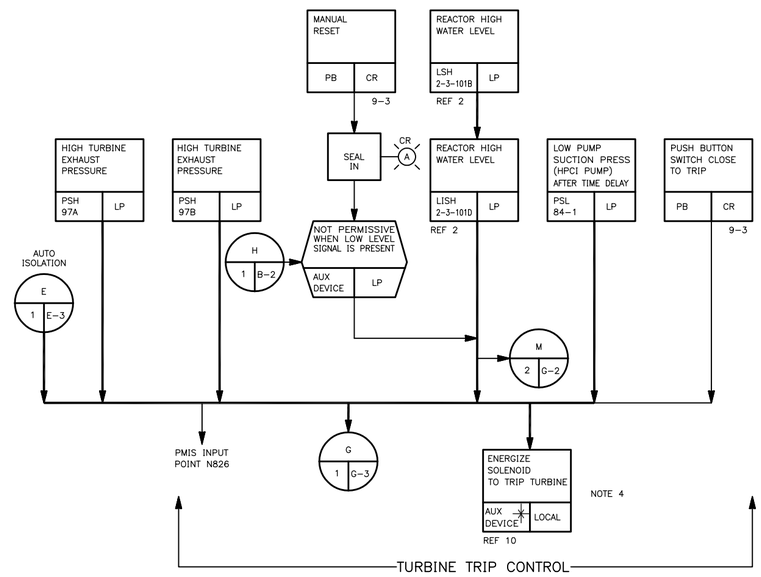

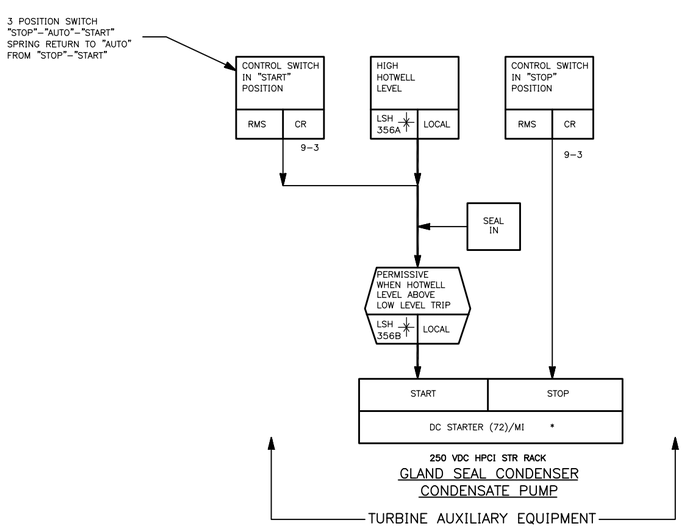

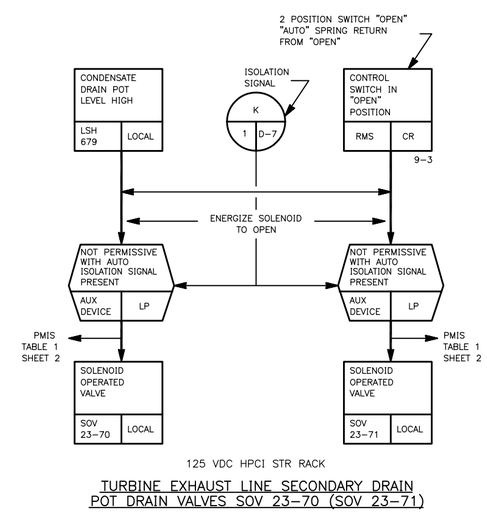

NOTES:

1. FOR GENERAL NOTES AND REFERENCE DRAWINGS SEE. SHEET 1.
2. RHR STEAM CONDENSING IS NO LONGER AN OPERATIONAL MODE.

INFORMATION ONLY
452005104

FOR PREVIOUS REVISIONS, SEE SUPERSEDED CARDS.

REVISIONS BY N.P.P.D.

NO.	REVISIONS	DFT	CKD	APP	DATE
N04	HPCI SYS GE ELEM DIAG DWG REVIEW	RAC	JAC	RAR	9-15-97
	(DCN 96-1438)				
N05	DCD 01 HP-018 (DCN 96-0330)	JAC	RHG	KG	12-1-97
N06	CED 6029441 (DCN 09-1940)	DLR	SMH	KZ	11-3-10

REVISIONS
NO.

SIGNIFICANT NUMBER						
GROUP	1	2	3	4	5	6

COOPER NUCLEAR STATION
HIGH PRESSURE COOLANT INJECTION SYS
FUNCTIONAL CONTROL DIAGRAM

DRAWN TRU	DATE 9/24/93	GENERAL ELECTRIC
CHECKED JAC	DATE 10-28-93	
APPROVED	DATE	
FILMED	729E589BB SH 3	REVISION N06

CADD FILE: C0011076

GENERAL ELECTRIC

729E719BC

UNLESS OTHERWISE SPECIFIED USE THE FOLLOWING: APPLIED PRACTICES | SURFACES ✓ | TOLERANCES ON MACHINED DIMENSIONS: FRACTIONS ± | DECIMALS ± | ANGLES ±

TITLE PROCESS DIAGRAM
REACTOR CORE ISOLATION COOLANT SYS.
FIRST MADE FOR COOPER STATION

FCF: 238X100BB 13-111

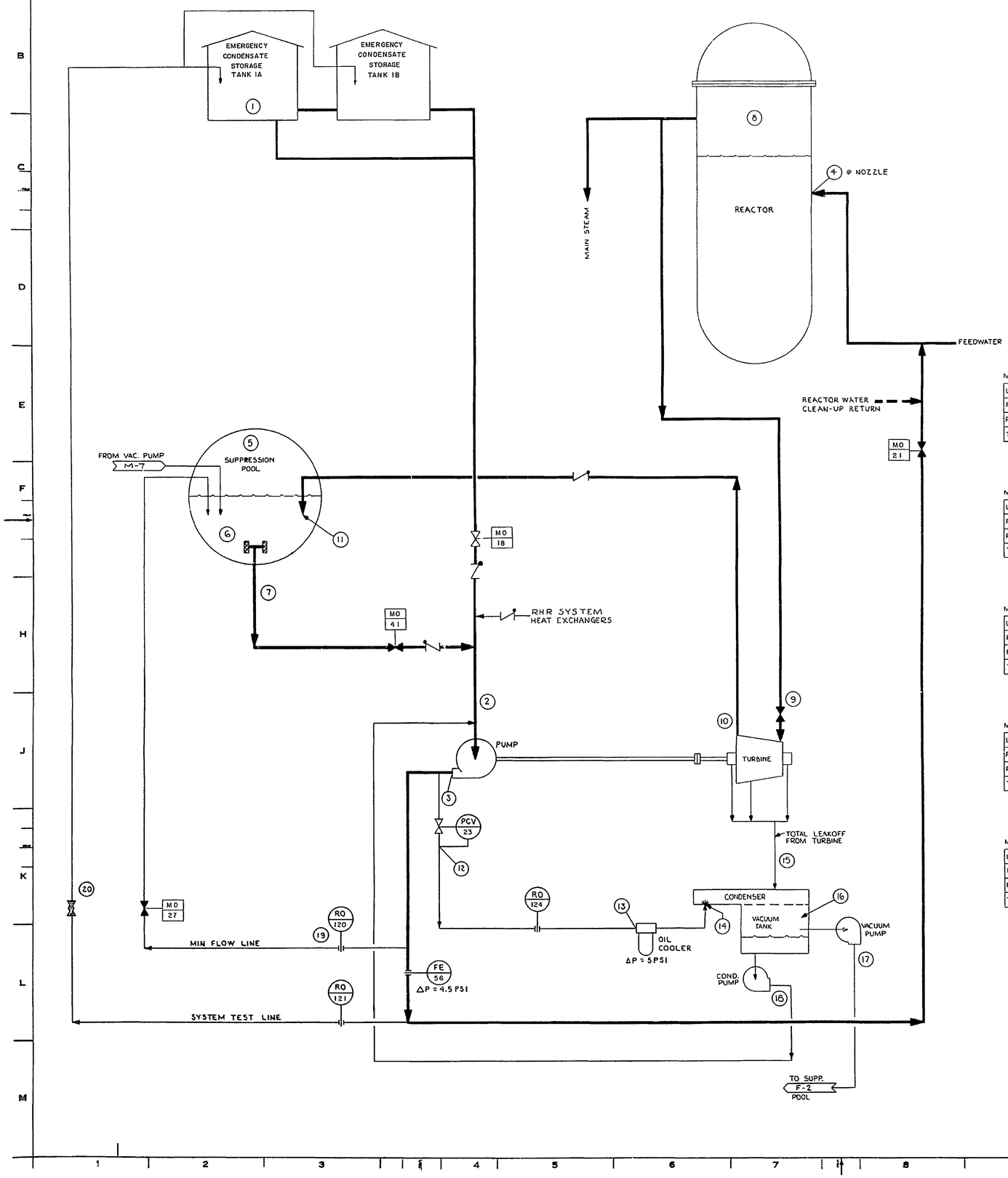

NOTES:

1. ATMOSPHERIC PRESSURE OF 14.7 PSIA WAS USED IN CALCULATIONS.
2. WATER FLOWS ARE SHOWN IN GPM, STEAM FLOWS IN 1000 LB/HR.
3. THE MAXIMUM POOL WATER TEMPERATURE FOR CONTINUOUS SYSTEM OPERATION WILL NOT EXCEED 140°F. HOWEVER, DUE TO POTENTIAL SHORT TERM OPERATION AT HIGHER TEMPERATURES, PIPING EXPANSION SHALL BE BASED ON 170°F.
4. THE UNRECOVERED FLOW NOZZLE PRESSURE DROP OF 4.5 PSI IS A FIXED LOSS BETWEEN LOCATIONS (3) AND (4)
5. THE LUBE OIL COOLER PRESSURE DROP OF 5.0 PSI IS A FIXED LOSS BETWEEN LOCATIONS (13) AND (14)
6. THE CONTROLLING MODES FOR LINE SIZING AND ARRANGEMENT ARE
   - SUCTION FROM COND STORAGE . . . . . MODE A
   - SUCTION FROM SUPPRESSION POOL . . . . MODE C
   - PUMP DISCHARGE . . . . . MODE C
   - STEAM SUPPLY . . . . . MODE A & B
   - TURBINE EXHAUST . . . . . MODE A, C & D
   - TEST LINE . . . . . MODE E
   - COOLING SYSTEM . . . . . MODE A
7. OTHER MODES OF OPERATION EXIST WHICH DO NOT EFFECT LINE SIZE OR OPERATING CONDITIONS. AMONG THESE ARE THE FOLLOWING:
   - A. SUCTION FROM EMERGENCY CONDENSATE STORAGE SUPPRESSION POOL AT LOW PRESSURE, REACTOR AT LOW PRESSURE.
   - B. SUCTION FROM SUPPRESSION POOL, SUPPRESSION POOL AT HIGH PRESSURE REACTOR AT HIGH OR LOW PRESSURE.
   - C. ANY INTERMEDIATE REACTOR PRESSURE OR SUPPRESSION POOL PRESSURE.
   - D. SUCTION FROM RHR HEAT EXCHANGER, REACTOR AT HIGH OR LOW PRESSURE.
8. PUMP MINIMUM FLOW REQUIREMENTS MAY OCCUR DURING ANY OPERATING MODE. FLOW REQUIREMENT IS 50 GPM MINIMUM.
9. MAXIMUM PROCESS TEMPERATURES ARE SHOWN.
10. THIS DRAWING REFLECTS THE AS-BUILT CONFIGURATION PER BURNS & ROE RCIC P&ID, DRAWING NO. 2043, REV 14.

NOTE:
RHR STEAM CONDENSING IS NO LONGER AN OPERATIONAL MODE.

MODE A — SUCTION FROM CONDENSATE STORAGE, REACTOR AT HIGH PRESSURE, SUPPRESSION POOL AT HIGH PRESS.

LOCATION	1	2	3	4	5	6	7	8	9	10	11	12	13	14	15	16	17	18	19	20
FLOW – SEE NOTE 2	—	400	416	400	—	—	0	—	16.4	16.25	16.25	16	16	16	0.23	—	0.01	16*	—	0
PRESSURE – PSIA	14.7	*	*	1140	18	—	—	1135	*	*	19.8	75	*	45	*	98	*	*	*	—
TEMPERATURE °F	100	100	100	100	140	—	—	560	SAT	SAT	228	100	100	100	298	120	120	120	100	—

MODE B — SUCTION FROM CONDENSATE STORAGE, REACTOR AT LOW PRESSURE, SUPPRESSION POOL AT HIGH PRESS.

LOCATION	1	2	3	4	5	6	7	8	9	10	11	12	13	14	15	16	17	18	19	20
FLOW – SEE NOTE 2	—	400	416	400	—	—	0	—	6	5.85	5.85	16	16	16	0.23	—	0.01	16*	—	0
PRESSURE – PSIA	14.7	*	*	170	18	—	—	165	*	*	19.8	75	*	45	*	98	*	*	*	—
TEMPERATURE °F	100	100	100	100	140	—	—	366	SAT	SAT	228	100	100	100	298	120	120	120	100	—

MODE C — SUCTION FROM SUPPRESSION POOL, REACTOR AT HIGH PRESSURE, SUPPRESSION POOL AT LOW PRESS.

LOCATION	1	2	3	4	5	6	7	8	9	10	11	12	13	14	15	16	17	18	19	20
FLOW – SEE NOTE 2	—	400	416	400	—	—	400	—	15.5	15.35	15.35	16	16	16	0.23	—	0.01	16*	—	0
PRESSURE – PSIA	—	*	*	1140	14.7	17.7	17.3	1135	*	*	16.6	75	*	45	*	98	*	*	*	—
TEMPERATURE °F	—	140	140	140	140	140	140	560	SAT	SAT	218	140	140	140	298	160	160	160	140	—

MODE D — SUCTION FROM SUPPRESSION POOL, REACTOR AT LOW PRESSURE, SUPPRESSION POOL AT LOW PRESS.

LOCATION	1	2	3	4	5	6	7	8	9	10	11	12	13	14	15	16	17	18	19	20
FLOW – SEE NOTE 2	—	400	416	400	—	—	400	—	5.5	5.35	5.35	16	16	16	0.23	—	0.01	16*	—	0
PRESSURE – PSIA	—	*	*	170	14.7	17.7	17.3	165	*	*	16.5	75	*	45	*	98	*	*	*	—
TEMPERATURE °F	—	140	140	140	140	140	140	366	SAT	SAT	218	140	140	140	298	160	160	160	140	—

MODE E — TEST MODE: SUCTION FROM CONDENSATE STORAGE, REACTOR AT HIGH PRESSURE, SUPPRESSION POOL AT LOW PRESS.

LOCATION	1	2	3	4	5	6	7	8	9	10	11	12	13	14	15	16	17	18	19	20
FLOW – SEE NOTE 2	—	400	416	0	—	—	0	—	13.7	13.55	13.55	16	16	16	0.23	—	0.01	16*	—	400
PRESSURE – PSIA	14.7	*	*	—	14.7	—	—	1000	*	*	16.6	75	*	45	*	98	*	*	*	*
TEMPERATURE °F	100	100	100	—	100	—	—	543	SAT	SAT	218	100	100	100	298	120	120	120	100	100

* THE PRESSURE AT THIS LOCATION DEPENDS ON PIPING ARRANGEMENT AND MAY BE VARIED WITHIN THE FOLLOWING LIMITS.

LOCATION

- (2) MINIMUM NPSH AT PUMP SUCTION = 20 FEET
- (3) MAXIMUM PRESSURE RISE ACROSS PUMP
  2800 FEET FOR MODES A & C
  525 FEET FOR MODES B & D
- (9) MAXIMUM PRESSURE DROP BETWEEN LOCATION (8) AND (9) = 15 PSI
- (10) MAXIMUM PRESSURE ALLOWED = 64.7 PSIA
- (13) MAXIMUM PRESSURE ALLOWED = 75 PSIA
- (15) SUFFICIENT VACUUM TO PREVENT TURBINE SHAFT-OUT-LEAKAGE, TO BE SPECIFIED ON TURBINE VENDOR DRAWINGS.
- (17) MAXIMUM PRESSURE AVAILABLE = 25 PSIA
- (18) MAXIMUM PRESSURE AVAILABLE = 50 PSIA
- (19) SUFFICIENT PRESSURE TO RETURN TO SUPPRESSION POOL
- (20) SUFFICIENT PRESSURE TO RETURN TO COND. STORAGE.

THIS DWG SUPERCEDES DWG 729E719BA REV 0. FOR COOPER CHGS ARE DENOTED BY ENCIRCLEMENT PER ECA 90715-2 (DF)
7-28-69 G.W. Hultman

INFORMATION ONLY

FOR PREVIOUS REVISIONS, SEE SUPERSEDED CARDS.

VERSIONS/REVISIONS BY N.P.D.

NO.	DESCRIPTION	DFT	DATE	ENG
AB/03	DR-2014-0712	RLR	3/10/15	RSCULLI

454004895

STATUS: Release F10
STATUS DATE: 06/05/2015
DS APPROVED: RAREXRO
VER: AB REV: 03 SIZE: F

NEBO SAN JOSE, CALIFORNIA

729E719BC

>00170597

DPK

GENERAL ELECTRIC

729E720BB

UNLESS OTHERWISE SPECIFIED USE THE FOLLOWING:-				
APPLIED PRACTICES	SURFACES	TOLERANCES ON MACHINED DIMENSIONS FRACTIONS	DECIMALS	ANGLES
	✓	±	±	±

TITLE PROCESS DIAGRAM
HIGH PRESSURE COOLANT INJECTION SYS.
FIRST MADE FOR COOPER

FCF 238X100B (23-121)

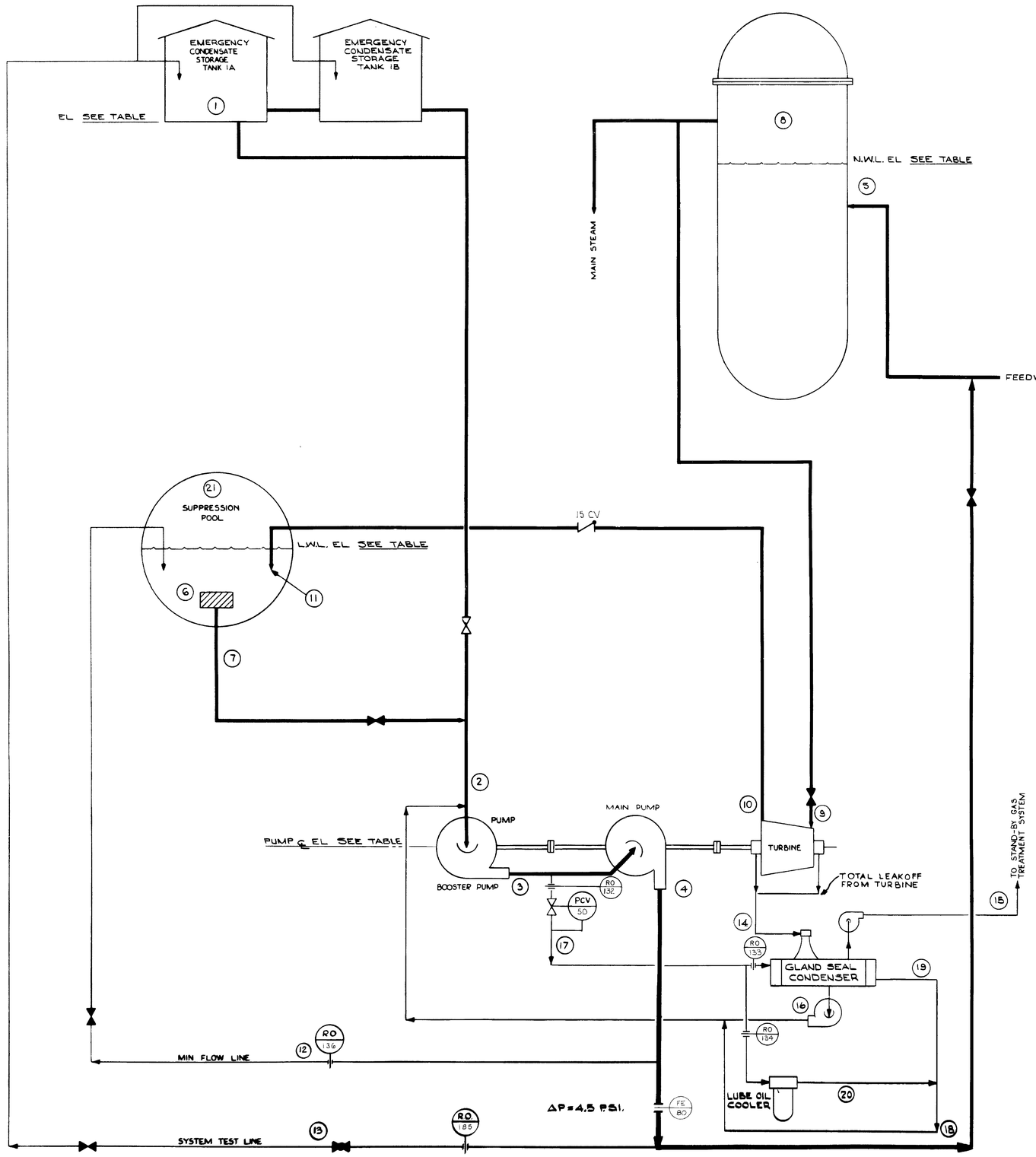

NOTES:

1. ATMOSPHERIC PRESSURE OF 14.7 PSIA WAS USED IN CALCULATIONS.
2. WATER FLOWS ARE SHOWN IN GPM, STEAM FLOWS IN 1000 LB/HR.
3. THE MAXIMUM POOL WATER TEMPERATURE FOR CONTINUOUS SYSTEM OPERATION WILL NOT EXCEED 140°F. HOWEVER, DUE TO POTENTIAL SHORT TERM OPERATION AT HIGHER TEMPERATURES, PIPING EXPANSION SHALL BE BASED ON 170°F. SHORT TERM OPERATION AT ELEVATED TEMPERATURES HAS BEEN EVALUATED IN CALCULATIONS NEDC 01-029A, B, C AND NEDC 97-044B, C.
4. THE FOLLOWING ADDITIONAL ACCIDENT OPERATING MODES ARE POSSIBLE:
   SUCTION FROM CONDENSATE STORAGE, SUPPRESSION POOL AT LOW PRESSURE, REACTOR AT HIGH OR LOW PRESSURE.
   SUCTION FROM SUPPRESSION POOL, SUPPRESSION POOL AT HIGH PRESSURE, REACTOR AT HIGH OR LOW PRESSURE.
   THESE POTENTIAL OPERATING MODES DO NOT CONTROL PIPE OR VALVE SIZING OR SPECIFICATION, AND NO DATA IS SHOWN.
5. THE CONTROLLING MODES FOR LINE SIZING AND ARRANGEMENT ARE:
   SUCTION FROM COND. STORAGE — — — — — MODE A
   SUCTION FROM SUPPRESSION POOL — — — — MODE C
   PUMP DISCHARGE — — — — — — — — — — MODE C
   STEAM SUPPLY — — — — — — — — — — — MODE B
   TURBINE EXHAUST — — — — — — — — — — MODE A, C & D
   TEST LINE — — — — — — — — — — — — — MODE E
   COOLING SYSTEM — — — — — — — — — — MODE A
6. THE PRESSURE AT LOCATION (3) IS ESTIMATED FROM PRELIMINARY PUMP DATA.
7. PUMP MINIMUM FLOW REQUIREMENT MAY OCCUR DURING ANY OPERATING MODE. FLOW REQUIREMENT IS 450 GPM MINIMUM.
8. THE PRESSURE DROPS ACROSS THE GLAND SEAL CONDENSER AND LUBE OIL COOLER WILL BE 3 PSI EACH.
9. THIS DRAWING REFLECTS THE AS-BUILT CONFIGURATION PER BURNS & ROE HPCI P & ID, DRAWING #2044, REV 16.

TABLE OF ELEVATION (FEET)

GRADE	903
VESSEL N.W.L.	963
POOL L.W.L.	875
PUMP C.L.	862

MODE A ACCIDENT MODE, SUCTION FROM CONDENSATE STORAGE, REACTOR AT HIGH PRESSURE, SUPPRESSION POOL AT HIGH PRESSURE.

LOCATION	1	2	3	4	5	6	7	8	9	10	11	12	13	14	15	16	17	18	19	20	21
FLOW - SEE NOTE 2	—	4250	4320	4250	4250	—	0	—	159.0	158.5	158.5	—	0	0.5	0.05	1	70	70	50	20	—
PRESSURE - PSIA	14.7	*	280	*	1140	—	—	1135	*	*	51.9	*	—	14.5	14.9	*	75	*	*	*	50
TEMPERATURE °F	100	100	100	100	100	—	—	560	SAT.	SAT.	283	100	—	240	200	200	100	130	130	130	140

MODE B ACCIDENT MODE, SUCTION FROM CONDENSATE STORAGE, REACTOR AT LOW PRESSURE, SUPPRESSION POOL AT HIGH PRESSURE.

LOCATION	1	2	3	4	5	6	7	8	9	10	11	12	13	14	15	16	17	18	19	20	21
FLOW - SEE NOTE 2	—	4250	4320	4250	4250	—	0	—	109.5	109.0	109.0	—	0	0.5	0.05	1	70	70	50	20	—
PRESSURE - PSIA	14.7	*	8.5	*	170	—	—	165	*	*	51.8	*	—	14.5	14.9	*	75	*	*	*	50
TEMPERATURE °F	100	100	100	100	100	—	—	366	SAT.	SAT.	283	100	—	240	200	200	100	130	130	130	140

MODE C ACCIDENT MODE, SUCTION FROM SUPPRESSION POOL, REACTOR AT HIGH PRESSURE, SUPPRESSION POOL AT LOW PRESSURE.

LOCATION	1	2	3	4	5	6	7	8	9	10	11	12	13	14	15	16	17	18	19	20	21
FLOW - SEE NOTE 2	—	4250	4320	4250	4250	—	4250	—	149.0	148.5	148.5	—	0	0.5	0.05	1	70	70	50	20	—
PRESSURE - PSIA	—	*	280	*	1140	17.7	16.5	1135	*	*	16.7	*	—	14.5	14.9	*	75	*	*	*	14.7
TEMPERATURE °F	—	140	140	140	140	140	140	560	SAT.	SAT.	218	140	—	240	200	200	140	170	170	170	140

MODE D ACCIDENT MODE, SUCTION FROM SUPPRESSION POOL, REACTOR AT LOW PRESSURE, SUPPRESSION POOL AT LOW PRESSURE.

LOCATION	1	2	3	4	5	6	7	8	9	10	11	12	13	14	15	16	17	18	19	20	21
FLOW - SEE NOTE 2	—	4250	4320	4250	4250	—	4250	—	71.0	70.5	70.5	—	0	0.5	0.05	1	70	70	50	20	—
PRESSURE - PSIA	—	*	8.5	*	170	17.7	16.5	165	*	*	16.6	*	—	14.5	14.9	*	75	*	*	*	14.7
TEMPERATURE °F	—	140	140	140	140	140	140	366	SAT.	SAT.	218	140	—	240	200	200	140	170	170	170	140

MODE E TEST MODE, SUCTION FROM CONDENSATE STORAGE, REACTOR AT HIGH PRESSURE, SUPPRESSION POOL AT LOW PRESSURE.

LOCATION	1	2	3	4	5	6	7	8	9	10	11	12	13	14	15	16	17	18	19	20	21
FLOW - SEE NOTE 2	—	4250	4320	4250	—	—	0	—	138.0	137.5	137.5	—	4250	0.5	0.05	1	70	70	50	20	—
PRESSURE - PSIA	14.7	*	255	*	—	—	—	1000	*	*	25.9	*	*	14.5	14.9	*	75	*	*	*	14.7
TEMPERATURE °F	100	100	100	100	—	—	—	545	SAT.	SAT.	218	100	100	240	200	200	100	130	130	130	140

* THE PRESSURE AT THIS LOCATION DEPENDS UPON PIPING ARRANGEMENTS, AND MAY BE VARIED WITHIN THE FOLLOWING LIMITS.

LOCATION

(2)	MINIMUM NPSH AT PUMP SUCTION = 21 FEET
(2) TO (4)	MAXIMUM PRESSURE RISE = 2800 FEET @ HIGH PRESS MODE = 525 FEET @ LOW PRESS MODE
(9)	MAXIMUM PRESSURE DROP BETWEEN LOCATIONS (8) AND (9) = 15 PSI.
(10)	MAXIMUM PRESSURE = 65 PSIA
(12)	SUFFICIENT PRESSURE TO RETURN TO SUPPRESSION POOL
(13)	SUFFICIENT PRESSURE TO RETURN TO COND. STORAGE
(16)	MAXIMUM PRESSURE AVAILABLE = 65 PSIA
(18)(19)(20)	SUFFICIENT PRESSURE TO RETURN TO PUMP SUCTION DURING OPERATION

FOR PREVIOUS REVISIONS, SEE SUPERSEDED CARDS.

REVISIONS BY N.P.P.D.

NO.	REVISIONS	DFT	CKD	APP	DATE
N04	EE 02-033 (DCN 02-0719)	RAC	RHG	KG	11-2-02

INFORMATION ONLY
454005023
SCAN/CADD DWG
DO NOT REVISE MANUALLY
CADD FILE: C0046335

GENERAL ELECTRIC

REV N04

NEBO
SAN JOSE, CALIFORNIA

729E720BB

GENERAL ELECTRIC 729E727BB

FUNCTIONAL CONTROL DIAG. RECIRCULATION FLOW CONTROL SYS

FIRST MADE FOR RECIRCULATION SYSTEM

235 X347 BB 2-184-5

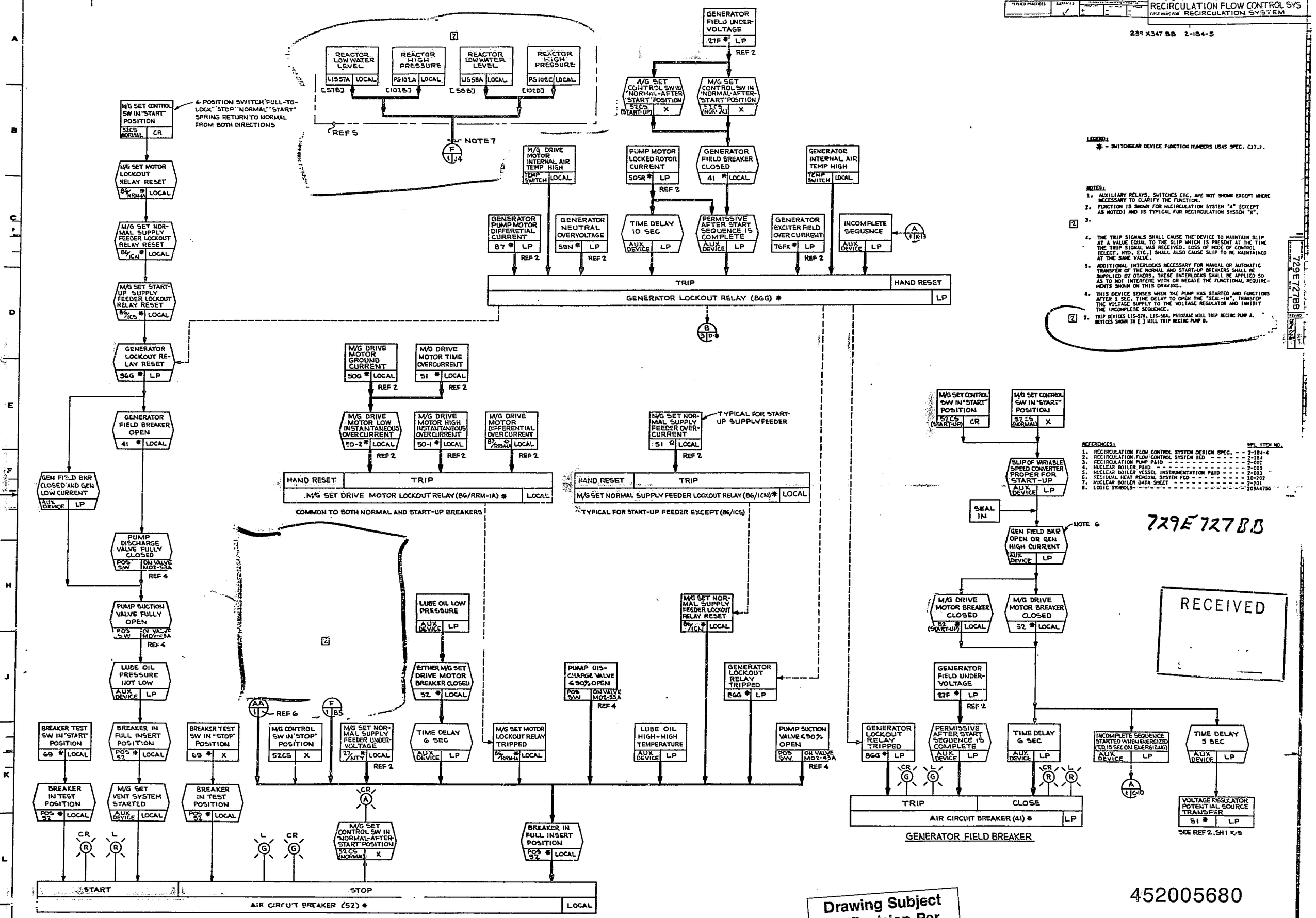

LEGEND:

* = SWITCHGEAR DEVICE FUNCTION NUMBERS USAS SPEC. C37.7.

NOTES:

1. AUXILIARY RELAYS, SWITCHES ETC. ARE NOT SHOWN EXCEPT WHERE NECESSARY TO CLARIFY THE FUNCTION.
2. FUNCTION IS SHOWN FOR RECIRCULATION SYSTEM "A" (EXCEPT AS NOTED) AND IS TYPICAL FOR RECIRCULATION SYSTEM "B".
3. [2]
4. THE TRIP SIGNALS SHALL CAUSE THE DEVICE TO MAINTAIN SLIP AT A VALUE EQUAL TO THE SLIP WHICH IS PRESENT AT THE TIME THE TRIP SIGNAL WAS RECEIVED. LOSS OF MODE OF CONTROL (ELECT. HYD. ETC.) SHALL ALSO CAUSE SLIP TO BE MAINTAINED AT THE SAME VALUE.
5. ADDITIONAL INTERLOCKS NECESSARY FOR MANUAL OR AUTOMATIC TRANSFER OF THE NORMAL AND START-UP BREAKERS SHALL BE SUPPLIED BY OTHERS. THESE INTERLOCKS SHALL BE APPLIED SO AS TO NOT INTERFERE WITH OR NEGATE THE FUNCTIONAL REQUIREMENTS SHOWN ON THIS DRAWING.
6. THIS DEVICE SENSES WHEN THE PUMP HAS STARTED AND FUNCTIONS AFTER 1 SEC. TIME DELAY TO OPEN THE "SEAL-IN", TRANSFER THE VOLTAGE SUPPLY TO THE VOLTAGE REGULATOR AND INHIBIT THE INCOMPLETE SEQUENCE.
7. [2] TRIP DEVICES LIS-57A, LIS-58A, PS102AC WILL TRIP RECIRC PUMP A. DEVICES SHOWN IN [ ] WILL TRIP RECIRC PUMP B.

REFERENCES:

		MPL ITEM NO.
1.	RECIRCULATION FLOW CONTROL SYSTEM DESIGN SPEC.	2-184-4
2.	RECIRCULATION FLOW CONTROL SYSTEM FED	2-184
3.	RECIRCULATION PUMP P&ID	2-002
4.	NUCLEAR BOILER P&ID	2-000
5.	NUCLEAR BOILER VESSEL INSTRUMENTATION P&ID	2-003
6.	RESIDUAL HEAT REMOVAL SYSTEM FED	30-202
7.	NUCLEAR BOILER DATA SHEET	2-201
8.	LOGIC SYMBOLS	209A4756

729E727BB

RECEIVED

452005680

Drawing Subject To Revision Per MDC 84-150+150A

T80-1281

COOPER STATION MPL 2-184-5

NO.	REVISIONS	BY	CHK	APP	DATE
1	REV. PER DCN 85-1786.	MAB		DRH	12-24-85

DCN REVISIONS BY N.P.P.D.

PER ECN NE25561

PER ECN 28936

APED 729E727BB

SAN JOSE CAL.

GENERAL ELECTRIC 729E727BB

TITLE FUNCTIONAL CONTROL DIAG
RECIRCULATION FLOW CONTROL SYS.
FIRST MADE FOR RECIRCULATION SYSTEM

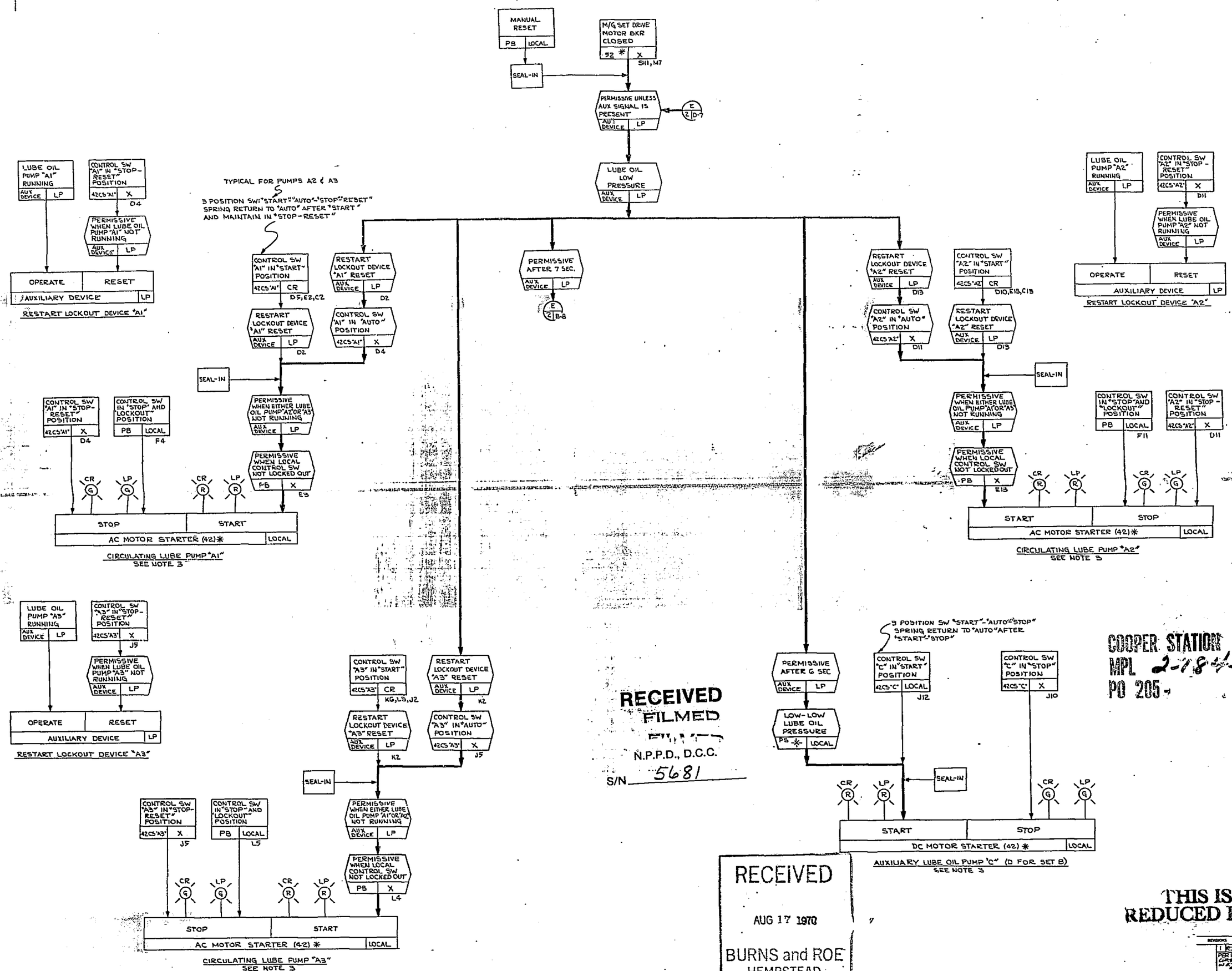

RECEIVED
FILMED
N.P.P.D., D.C.C.
S/N 5681

COOPER STATION
MPL 2-784-5
PO 205-

RECEIVED
AUG 17 1970
BURNS and ROE
HEMPSTEAD

THIS IS A REDUCED PRINT

729E727BB

APED
SAN JOSE CAL

TITLE: FUNCTIONAL CONTROL DIAGRAM
RECIRC FLOW CONTROL SYSTEM
FIRST MADE FOR: RECRICULATION SYSTEM

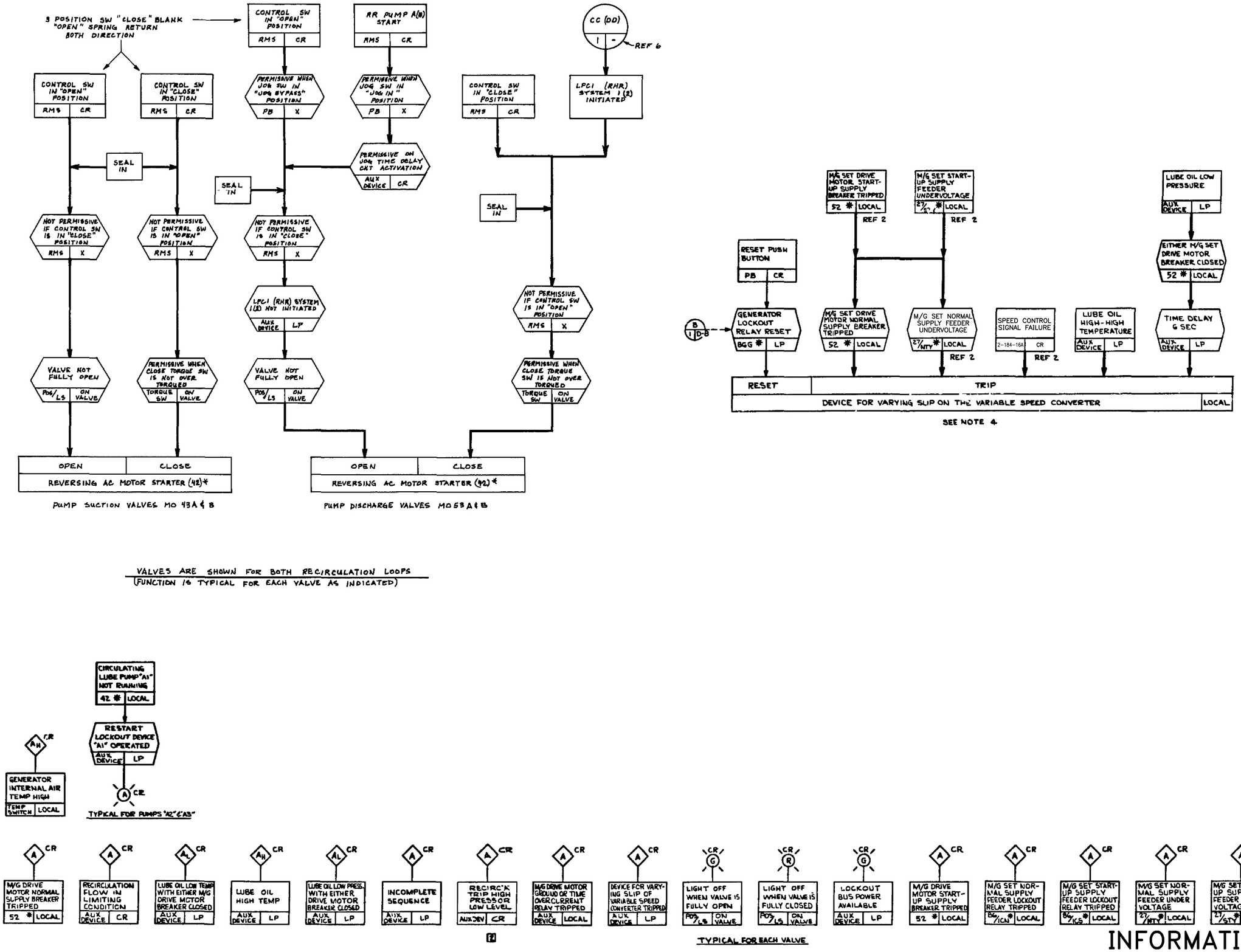

VALVES ARE SHOWN FOR BOTH RECIRCULATION LOOPS
(FUNCTION IS TYPICAL FOR EACH VALVE AS INDICATED)

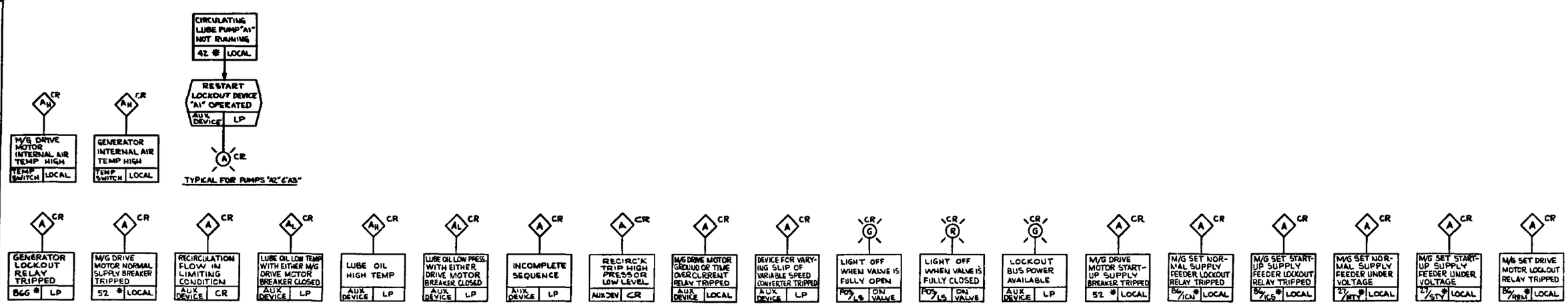

INFORMATION ONLY

FOR PREVIOUS REVISIONS, SEE SUPERSEDED CARDS.

452005682

REVISIONS BY N.P.P.D.					
NO.	REVISIONS	DFT	CKD	APP	DATE
N02	CED 2001-0017 (DCN 02-0176)	RAC	RHG	KG	4-27-05

SCAN/CADD DWG
DO NOT REVISE MANUALLY
CADD FILE: C0052840

729E727BB
CONT ON SHEET F SHEET 3
REV N02

GENERAL ELECTRIC 729E989

UNLESS OTHERWISE SPECIFIED USE THE FOLLOWING:
APPLIED PRACTICES | SURFACES √ | FRACTIONS ± 1/32 | DECIMALS ±.005 | ANGLES ± 30'

TITLE: POWER RANGE MONITORING UNIT
FIRST MADE FOR NEUTRON MONITORING SYSTEM
PURCHASED PART

PT. NO.	NAME	VENDOR	VENDOR IDENT. NO.	MPL NO.
1	P.R.M. INSTALL. HARDWARE	1110	237X657G1	718, 2-1-103, B11-D194
2	POWER RANGE DETECTOR	↓	129B3620G3	719
3	POWER RANGE DETECTOR		129B3620G4	
4	POWER RANGE DETECTOR		129B3620G5	
5	POWER RANGE DETECTOR		129B3620G9	2-1-104
6	POWER RANGE DETECTOR		129B3620G8	
7				
8	POWER RANGE DETECTOR		129B3620G7	2-1-104, B11-D193
9	POWER RANGE DETECTOR	↓	129B3620G10	719
10	POWER RANGE DETECTOR	NID	129B3620G11	719

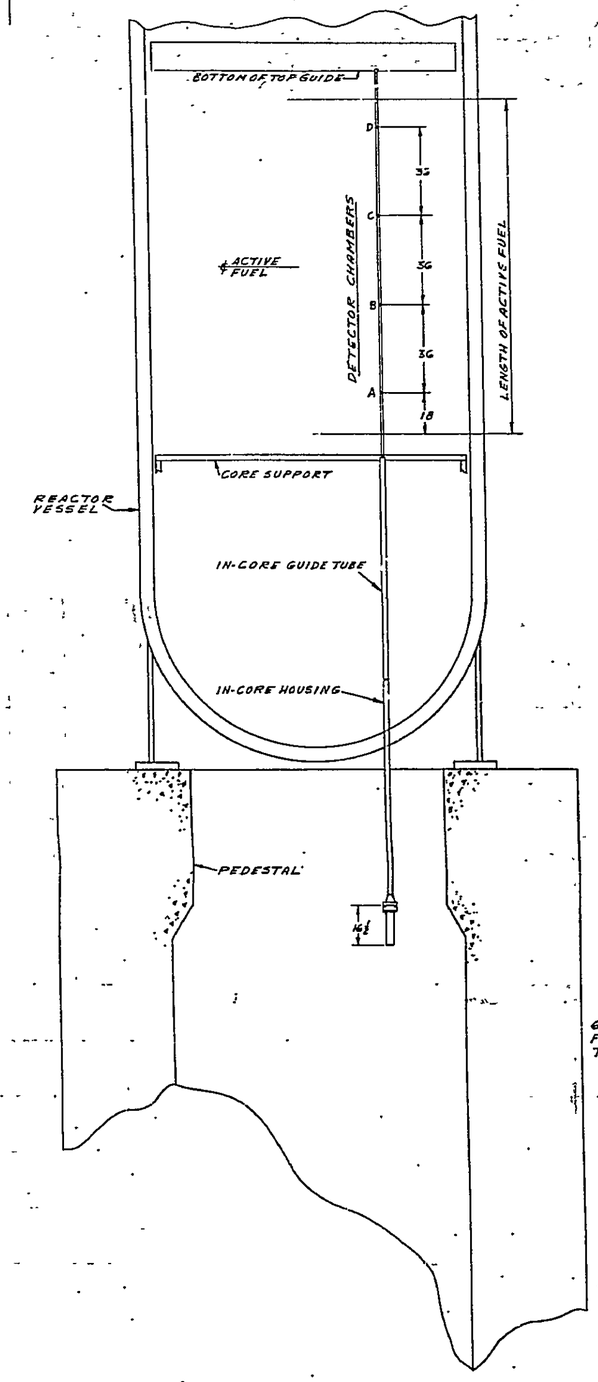

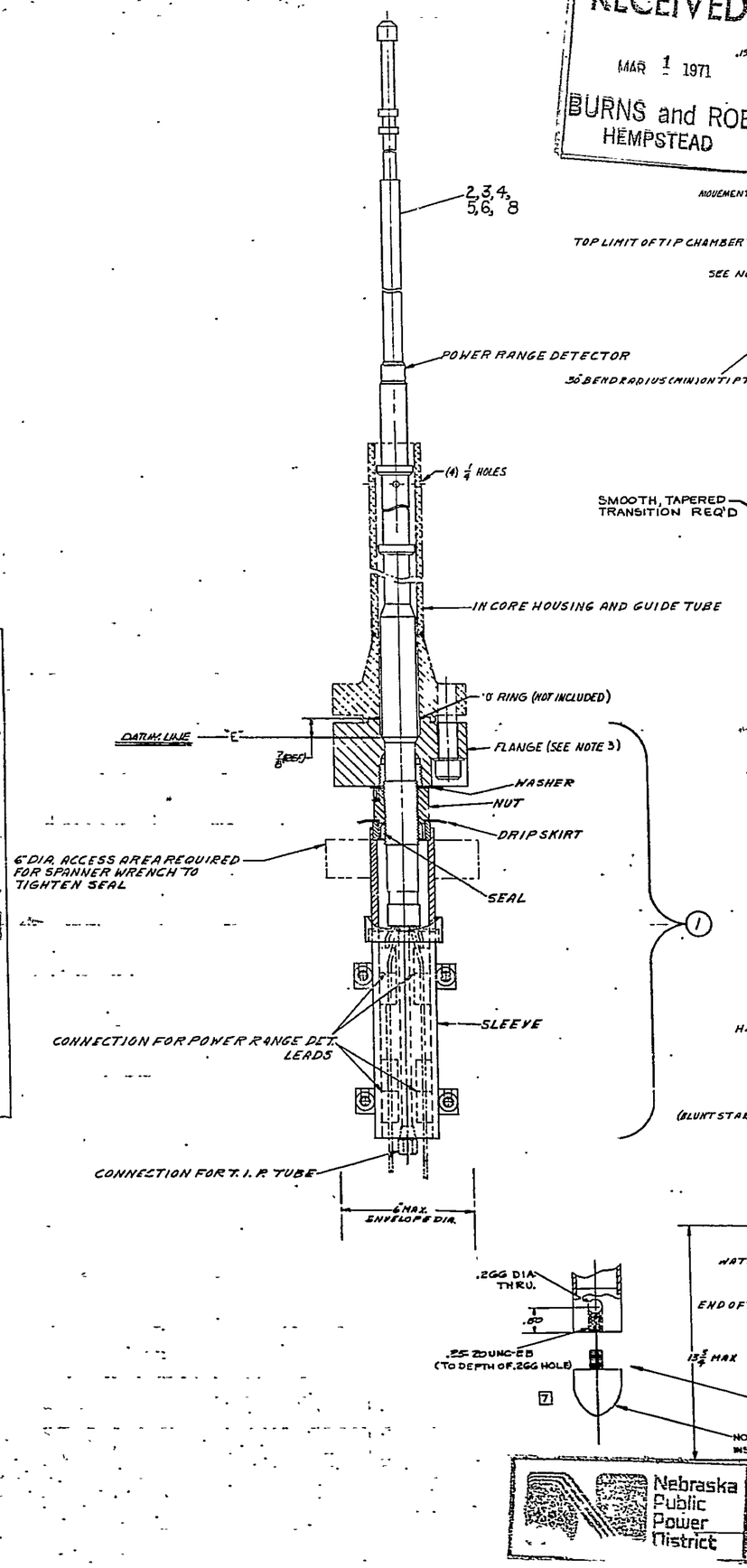

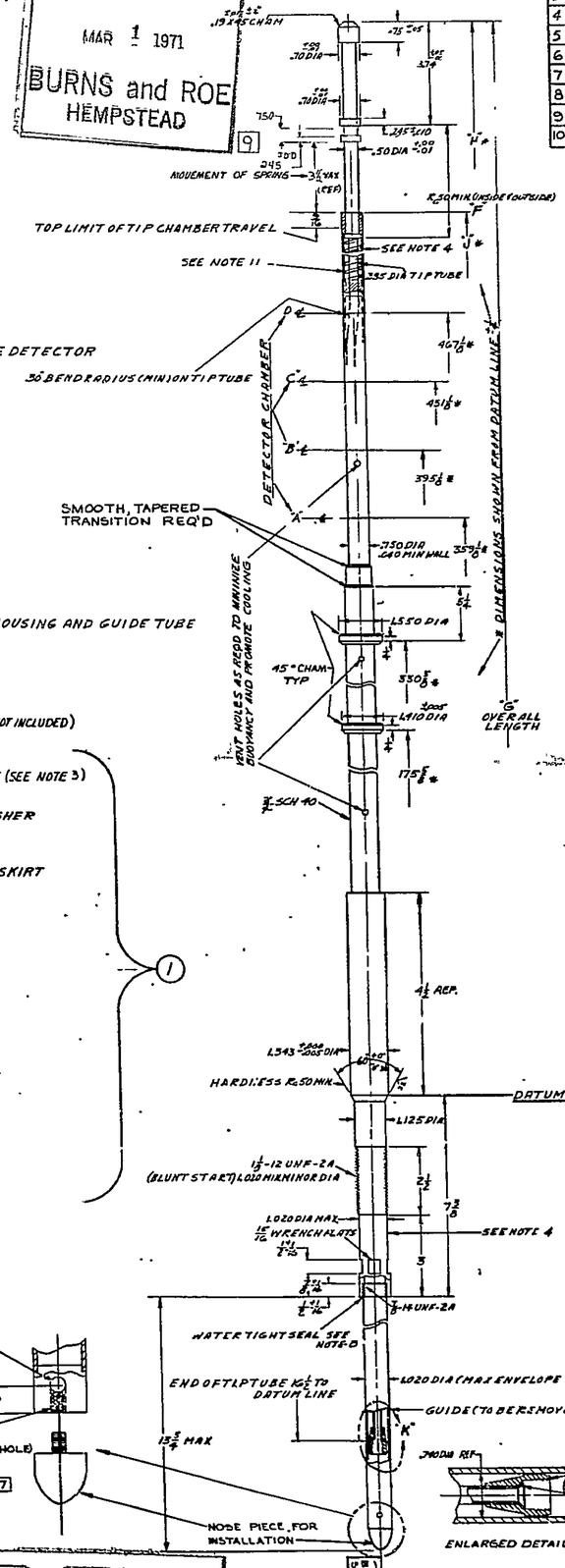

RECEIVED
MAR 1 1971
BURNS and ROE
HEMPSTEAD
9

POWER RANGE DETECTORS

PROJECT	PART NO.	SPEC NO.
DRESDEN 2&3	729E989P2	21A1491
MILLSTONE	P4	21A1477
NULLENOR	P2	21A1488
TSURUGA	P2	21A1489
QUAD CITIES 1&2	P29	21A1442
MONTICELLO	P4	21A1445
FUKUSHIMA 1	P3	21A1444
TVA 1,2,3	P2	21A1410
VERMONT YANKEE	P6	21A1491
ARK	P5	21A1492
PENN BOTTOM 2&3	P8	21A1493
PILGRIM	P10	21A1445
FITZPATRICK	P8	21A1494
LILCO	P8	21A1545
COOPER	P8	21A1495
BELL	P8	21A1
FUKUSHIMA 2	P8	21A1496
HATCH 1&2	P8	21A1518
SHAUSHAN 1&2	P8	21A1519
O-ARAGO	P8	21A1520
E-FCHOI-2	729E989P8	21A1521
CHINSHAN 1&2	729E989P8	21A1661

* For Deleted Projects See Dwg 761E983

NOTES.

1. MATERIAL (EXCEPT SPRING) SHALL BE TP 304, F304 OR TP 316 STAINLESS STEEL. SPRING SHALL BE INCONEL X-750. MATERIAL FOR PARTS REQUIRING DESIGN PER ASME CODE SECTION III, SHALL BE SPECIFIED PER THE FOLLOWING G.E. SPECIFICATIONS
   - B50YP21A2 PIPE, SEAMLESS TP 316, ASME SA312
   - B50YP22A7 PIPE, SEAMLESS TP 304, ASME SA312
   - B50YP33A2 TUBING, WELDED TP 304, ASME SA249
   - B50YP33B2 TUBING, SEAMLESS TP 304, ASME SA213
   - B50YP8JA2 ASME SA249
   - B50YP8JB7 ASME SA213
   - B50YP57C,D / B50YP58C,D FORGED AND ROLLED PARTS F304 ASME SA182 / FORGED AND ROLLED PTS F316 ASME SA182
2. UNIT SHALL BE DESIGNED, FABRICATED, TESTED AND STAMPED AS A PRIMARY VESSEL PER SECTION III, CLASS 1 OF ASME BOILER AND PRESSURE VESSEL CODE, (STAMP ON CODE PLATE) AND PER SPECIFICATION AS SHOWN IN TABLE ABOVE.
3. FLANGE OF PT-1 SHALL BE DESIGNED TO MATE WITH G.E. DWG. # 117C1684 AND SHALL BE FABRICATED AND EXAMINED IN ACCORDANCE WITH USAS B16.5 AND ASME BOILER AND PRESSURE VESSEL CODE, SECT. III.
4. MARK WITH VIBRA-TOOL OR LOW STRESS DIE STAMP ON AREA INDICATED APPLICABLE PT. NO. OR OTHER PRODUCT IDENTIFICATION.
5. ALL PARTS SHALL BE VAPOR DEGREASED PRIOR TO ASSEMBLY PER G.E. #P50YP11C OR CLEANED BY OTHER SUITABLE APPROVED METHODS WITH NON-HALOGENATED COMPOUNDS.
6. CLEAN WITH ACETONE AFTER ASSEMBLY AND WRAP TIGHTLY IN CLEAN CLEAR POLYETHYLENE TO PREVENT CONTAMINATION DURING STORAGE AND SHIPMENT. CAUTION: DO NOT USE ANY ADHESIVE TAPES ON BARE METAL.
7. MAY BE STRAIGHTENED ON HORIZONTAL FLAT SURFACE TO MEET THIS REQUIREMENT.
8. DETACHABLE JOINT TO BE WATER-TIGHT UNDER 110 FT. OF WATER.
9. THERE SHALL BE NO LEAKAGE BETWEEN THE POWER RANGE DETECTOR AND THE FLANGE OF PT-1 AFTER ASSEMBLY IN THE REACTOR AT MAX. REACTOR PRESSURE.
10. THE ENVIRONMENT BELOW THE FLANGE SHALL BE:
    - A. NORMAL OPERATION: 135°F AVERAGE - 50% R.H. / 185°F MAX - 90% R.H. UP TO 30 MINUTES
    - B. ABNORMAL OPERATION: [illegible] °F FOR 10 MINUTES / 330°F FOR 6 HRS. } 100% R.H. 100% R.H.
11. SPRING TO BE DESIGNED FOR A MINIMUM 100 SPRING UNLOADINGS FROM 20 TO 10 LBS AT 375°F.
    - 5 LBS. PRE-LOAD
    - 5 LBS./IN GRADIENT
    - 21 LBS. MAX. LOAD

9

PTN	'G'	'H'	'J'
2	509 13/16	486 11/16	480 13/16
3	513 13/16	492 11/16	494 13/16
4	512 13/16	491 11/16	493 13/16
5	518 13/16	497 7/16	489 11/16
6	517 13/16	496 7/16	488 11/16
7			
8	514 13/16	493 7/16	485 11/16
9	509 13/16	488 11/16	480 13/16
10	512 13/16	491 11/16	483 13/16

RECEIVED
FILMED
N.P.P.D., D.C.C.
S/N 5599

COOPER STATION
MPL.# 2-1-104

NO.	REVISIONS	BY	CHK	APP	DATE
N01	Incorp GE Rev. 8 E9	DM	DLT	WHH	2-9-77

ALL FUTURE REVISIONS BY N.P.P.D.

Nebraska Public Power District

REVISIONS: 6 NE 25899 NE 25076, NE 28576 NE 33083 NE 37525 NE 22636 NE 22635 — 3 CHG'D PER ECA 90340-3 — 2 CHG'D QUANTITY ON PTS 5,6 & DELETED PER ECA 7355-64 & ECA 7356 — 1 ADDED PTS 5&7 & WEATHER HEAD FLARE NUT WASHERS & MODIFIED FLARE NUT CHG'D PER ECA 7211-2 32-2-2 [illegible]

A.P.E.D. SAN JOSE 729E989

R DPL

GENERAL ELECTRIC — 730E100

NEUTRON MONITORING SYS. ARRGT.
FIRST BASIC FOR GENERAL PLANT DOCUMENT

FCF: 238X100BA (FITZPATRICK) 7-5
238X100BB (COOPER) 1-5

TUBE ROUTING SCHEDULE

05		C9	C7	C2		
13	D1	C8	C6	C3	C1	
21	D2	D9	C5	B9	B7	B1
29	D3	D8	4-WAY CONN.	B8	B6	B2
37	D4	D7	A9	A8	B4	B3
45	A7	A6	A5	A3	A1	
	44	36	28	20	12	04

NOTE: THE TUBE ROUTING SCHEDULE INDICATES THE TUBE LINE THAT COMES FROM EACH INDEXING MECHANISM. THE INDEXING MECH ARE DESIGNATED LETTERS (A,B,C,+D) AS SHOWN IN THE PLAN VIEWS. FOR TUBE ROUTING NUMBERING SEE VIEW G-G, SHEET 2. ROUTE ALL Nº 10 TUBES FROM INDEXING MECH. TO THE 4-WAY CONN. AS SHOWN IN THE 4-WAY CONNECTION DIAGRAM ON SHEET 2.

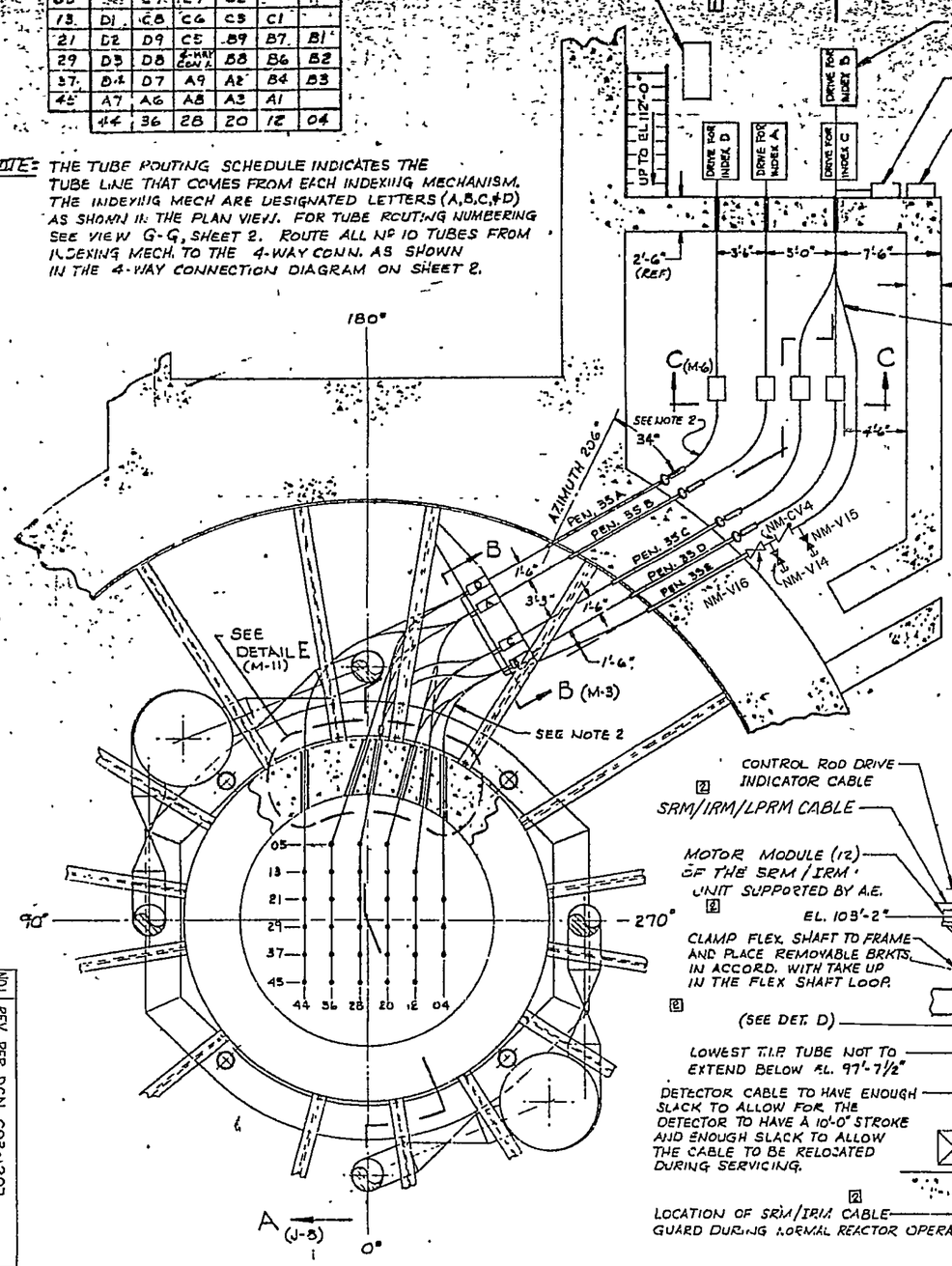

PLAN VIEW AT EL. 101'-6"

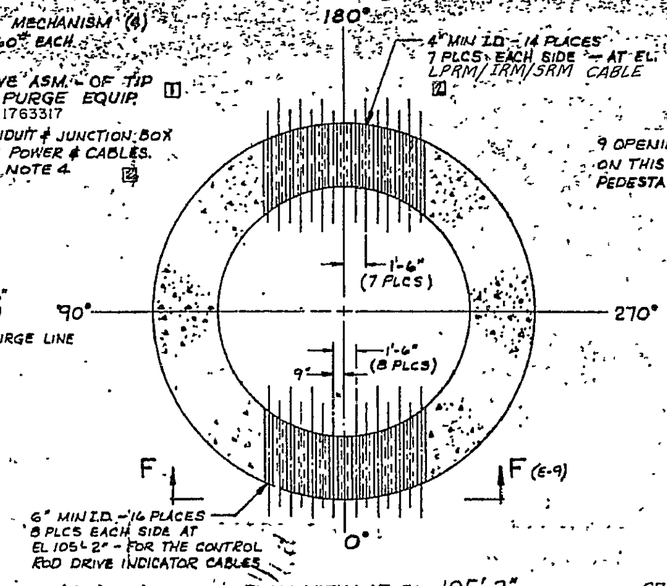

PLAN VIEW AT EL. 105'-2"

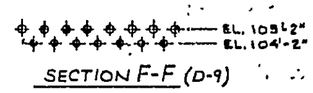

SECTION F-F (D-9)

SEE SHEET Nº 2 FOR NOTES AND REFERENCE DWG LIST

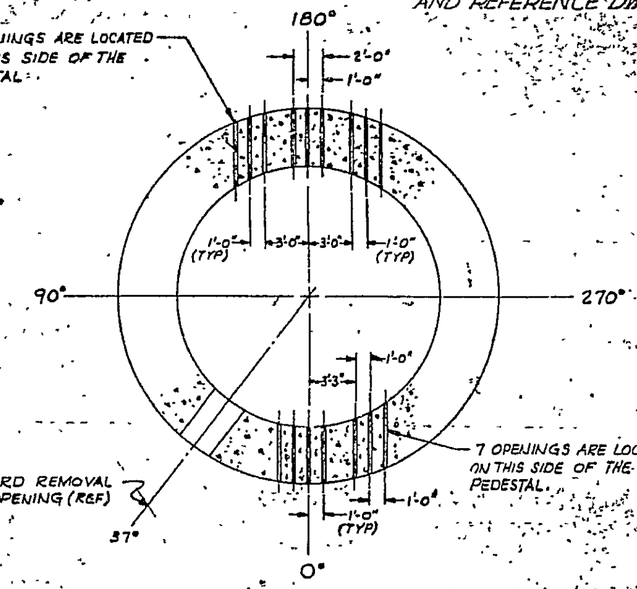

PLAN VIEW AT EL. 96'-6"

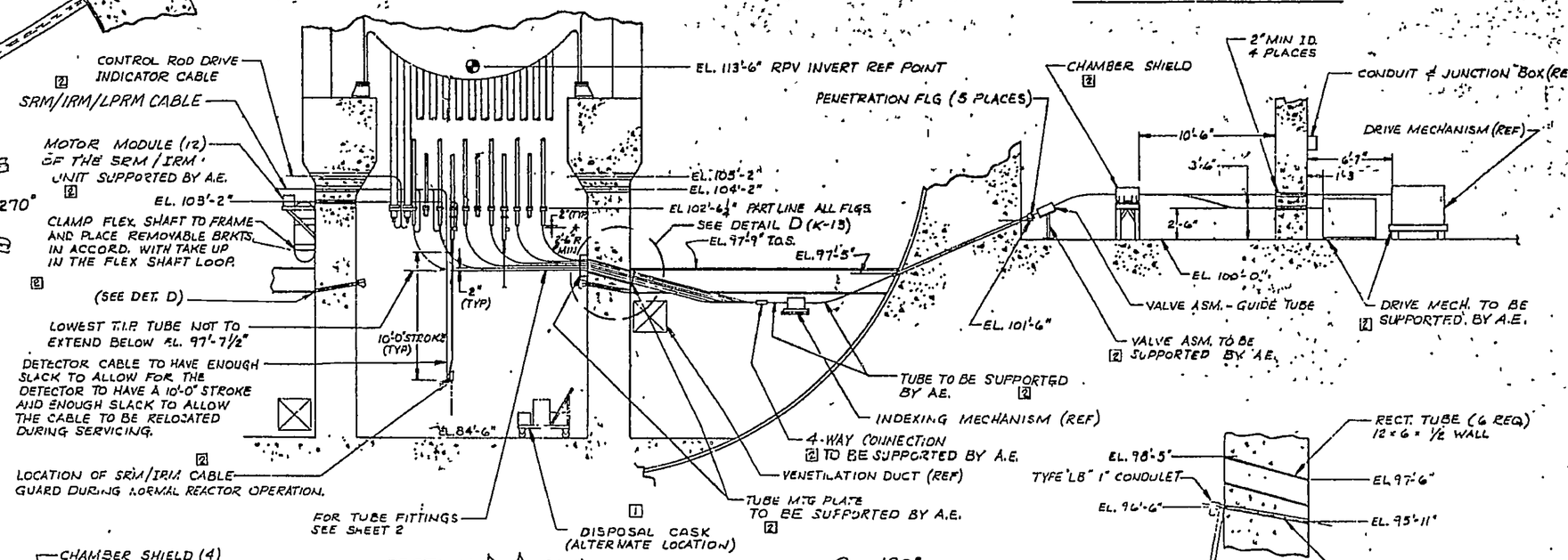

SECTION A-A (J-3)

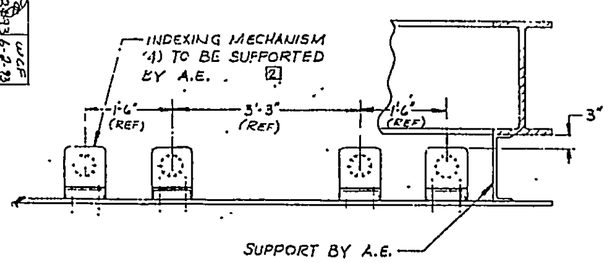

SECTION B-B (E-4)

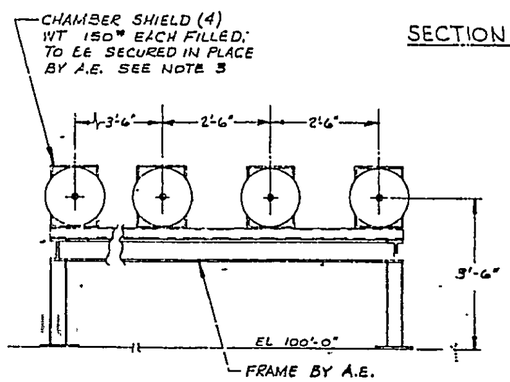

SECTION C-C (C-6)

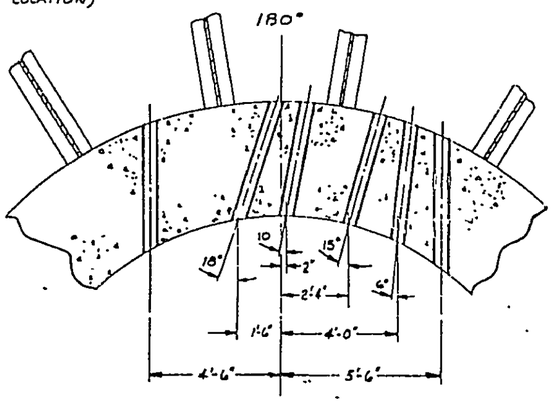

DETAIL E (E-3)

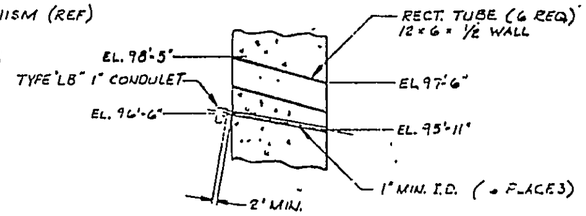

DETAIL D (H-9)

FOR CONSTRUCTION

452005355

NO.	REVISIONS	DFT	CKD	APP	DATE
NO2	REV. PER DCN C94-1122	DLR	DJF	MHM	9-27-94

NO	REVISIONS	DFT	CKD	APP
NO1	REV. PER DCN C93-1207	R.R.T. 5-21-93	5-28-93	6-2-93

DCN REVISIONS BY N.P.P.D.

APED — SAN JOSE — 730E100

GENERAL ELECTRIC

NEUTRON MONITORING SYS. ARRGT.

GENERAL PLANT DOCUMENT

730E100

FCF: 238X100BA (FITZPATRICK) 1-5
238X100BE (COOPER) 1-5

REVISIONS, BY N.P.P.D.					
NO.	REVISIONS	DFT	CKD	APP	DATE
N01	REV. PER DCN C94-1121	LAB	DJF	MHM	9-27-94

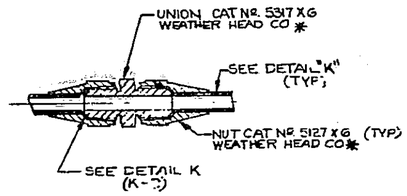

TYPE 2

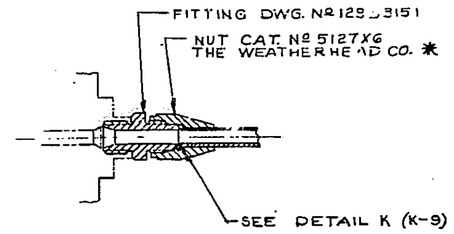

TYPE 1

NOTES:

1. TUBE UNIONS MAY BE LOCATED AS REQUIRED BETWEEN CONCRETE CYLINDER O.D. AND DRYWELL PENETRATION.
2. THE NUMBER OF T.I.P. GUIDE TUBE BENDS SHALL BE HELD TO A MINIMUM.
   A. THE TOTAL DEGREES OF BEND SHALL NOT EXCEED 450°. THE MINIMUM BEND RADIUS SHALL BE 2'-6" INSIDE PEDESTAL. 5'-0 RADIUS OUTSIDE PEDESTAL.
   B. BENDS MUST BE SMOOTH AND MADE BY BENDING OVER FORM OF PROPER RADIUS. THE BENDS MUST BE UNIFORM, NOT A SERIES OF SMALLER BENDS, FREE FROM INTERNAL DEFORMATIONS.
   C. TUBE FLARES TO BE FORMED WITH PROPER FLARING TOOLS AND CAREFULLY ASSEMBLED INTO FITTINGS FOR GOOD ALIGNMENT.
   D. CORRECT FIT OF ALL ATTACHMENTS TO BE CHECKED BY INSERTING DUMMY TRANSVERSING DETECTOR AND ASSURING SMOOTH MOVEMENT.
   E. MAXIMUM "L" LENGTH OF T.I.P. RUN FROM IN-CORE HOUSING FLANGE TO DRIVE MECHANISM TO BE 140'-0". ACTUAL LENGTH TO BE SPECIFIED BY A.E.
   F. THE T.I.P. GUIDE TUBES SHALL BE HELD AT 5'-0" MAXIMUM INTERVALS BY A SUPPORT (FURNISHED BY A.E.).
3. CHAMBER SHIELDS TO BE FILLED WITH 1/8" MAXIMUM DIAMETER FREE FLOWING CORRODING LEAD SHOT APPROXIMATELY 4800# TOTAL.
4. SIGNAL CABLE CONDUIT AND POWER CABLE CONDUIT SHALL BE SEPARATED BY A MINIMUM OF 12".
5. THE FOLLOWING EQUIPMENT WILL BE SUPPLIED AS PART OF THE NEUTRON MONITORING EQUIPMENT: TIP DRIVE ASSY., DUMMY TIP DRIVE MECHANISM, INDEXING MECHANISM, PENETRATION FLANGE, 4-WAY CONNECTION, CHAMBER SHIELD, VALVE ASM (GUIDE TUBE), SRM/IRM UNIT, POWER RANGE NEUTRON MONITOR INST., DISPOSAL CASK, T.I.P. GUIDE TUBES, ALL TUBE FITTING CONNECTIONS AS SHOWN AND TIP PURGE EQUIP.
6. ALL TUBING AND FITTINGS ARE TO BE SHIPPED TO FIELD FOR CUTTING, FLARING, BENDING, ETC. AND INSTALLATION.
7. ALL TUBE BENDS, FROM PENETRATION FLANGE TO VALVE ASM., TO BE TESTED AND BE CAPABLE TIGHT AT 100 PSIG INTERNAL AIR PRESSURE.
8. SUPPORT FLEXIBLE SHAFT AT 4'-0" MAX. INTERVALS TO PREVENT CASING ROTATION. CARE MUST BE TAKEN TO PREVENT JAMMING THE INNERSHAFT. THE MIN. BEND RADIUS SHALL BE 9".
9. OR ENGINEERING APPROVED EQUIVALENT.
10. ALL GAS AND AIR LINES SUPPLIED BY A.E. FOR 100 PSI SERVICE; REFERENCE ALSO DC94-212M

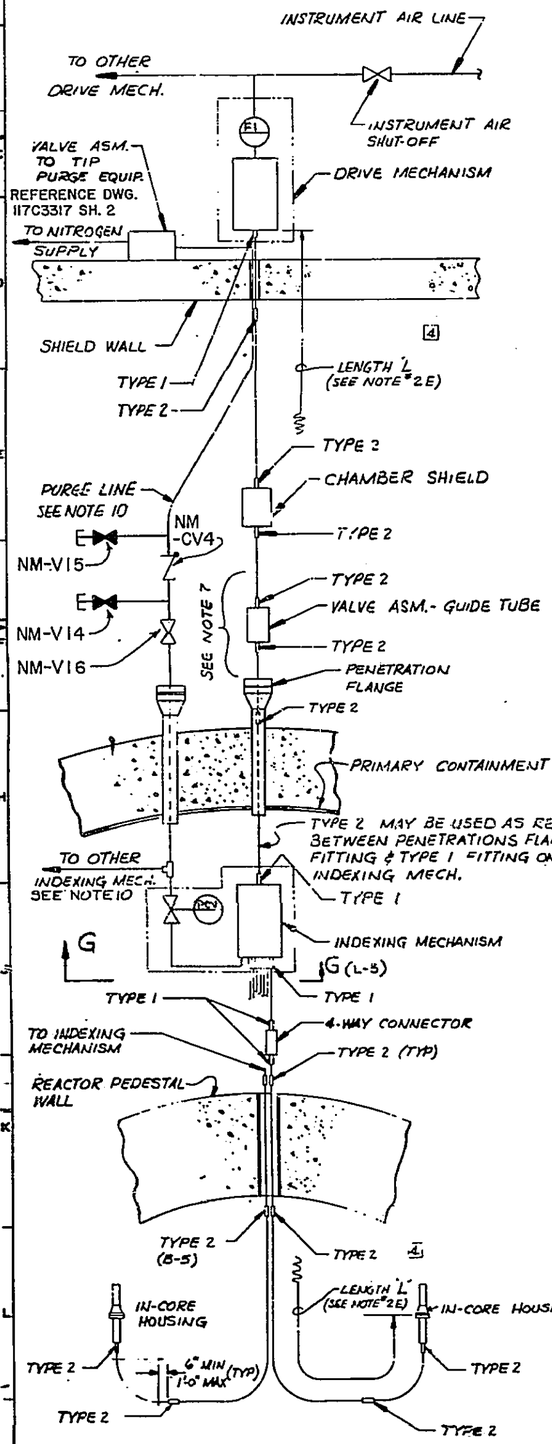

TYPICAL T.I.P. SYSTEM

SHOWING EQUIPMENT & FITTINGS REQUIRED FOR EACH TIP TUBE RUN.

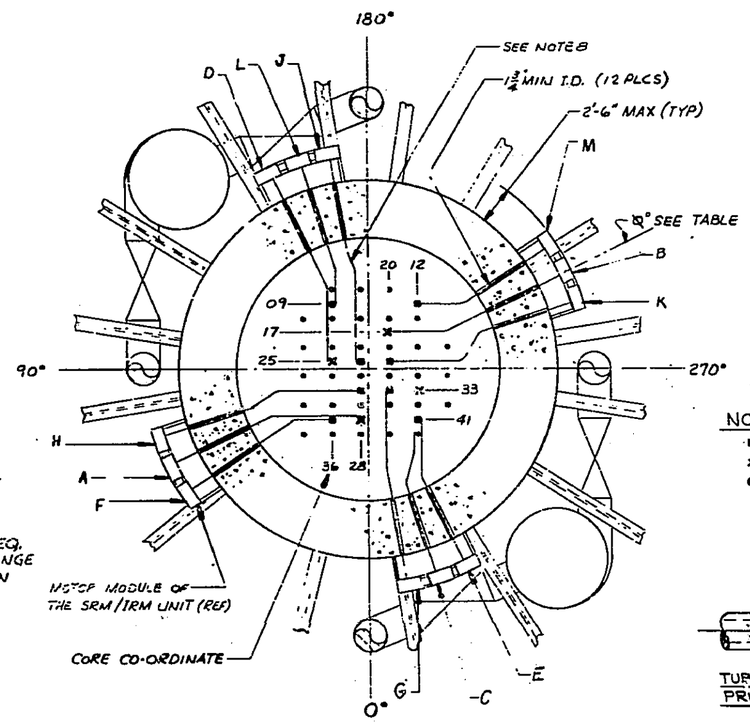

PLAN VIEW AT EL. 103'-2"

MOTOR MODULE Nº	AZIMUTH θ°	CORE CO-ORDINATE	MIN. LENGTH OF FLEX. SHAFT
IRM F	56°	36-41	18'-0"
SRM A	64°	28-41	21'-0"
IRM H	72°	28-33	22'-0"
SRM D	154°	36-25	21'-0"
IRM L	162°	36-09	18'-0"
IRM J	170°	28-25	22'-0"
IRM M	236°	12-09	18'-0"
SRM B	244°	20-17	22'-0"
IRM K	252°	20-25	21'-0"
IRM E	334°	12-41	18'-0"
SRM C	342°	12-33	21'-0"
IRM G	350°	20-33	21'-0"

NOTE:

- ■ INTERMEDIATE RANGE MONITORING SYSTEM (IRM)
- × SOURCE RANGE MONITORING SYSTEM (SRM)
- ● TRAVERSING IN-CORE PROBE SYSTEM (TIP)

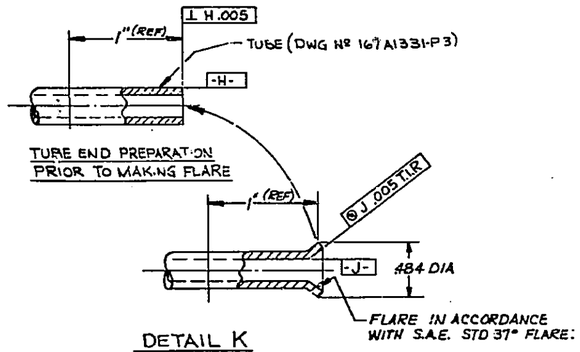

DETAIL K

SUGGESTED TOOL: FLARING TOOL CAT. Nº 400F IMPERIAL EASTMAN CORP.

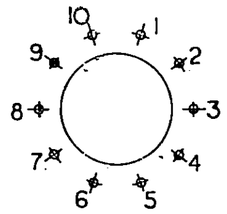

VIEW G-G (J-2)

TYPICAL TUBE NUMBERING SYSTEM FOR ALL INDEXING MECHANISMS

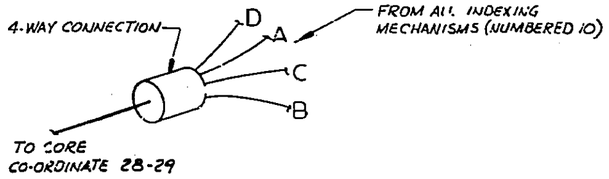

4-WAY CONNECTION DIAGRAM

Information Only

Correct status on microfilm

REFERENCE DRAWINGS:

		MPL ITEM NO.
1.	DRIVE MECHANISM	7-101
2.	CHAMBER SHIELD	7-106
3.	TIP PURGE EQUIP.	7-113
4.	PENETRATION FLANGE	7-103
5.	INDEXING MECHANISM	7-107
6.	4-WAY CONNECTION	7-108
7.	VALVE ASM (GUIDE TUBE)	7-104
8.	SRM/IRM UNIT	2-1-102
9.	REACTOR ASM (CORE CONFIGURATION)	2-1
10.	TIP	7-121
11.	DUMMY TIP	7-122
12.	GUIDE TUBES	7-112
13.	POWER RANGE NEUTRON MONITOR INST.	7-81
14.	DISPOSAL CASK	7-110

452007202

RECEIVED
APR 18 1975
BURNS and ROE
HEMPSTEAD

4	C.G.		
NE-2515			
3			
APED			730E100
SAN JOSE			

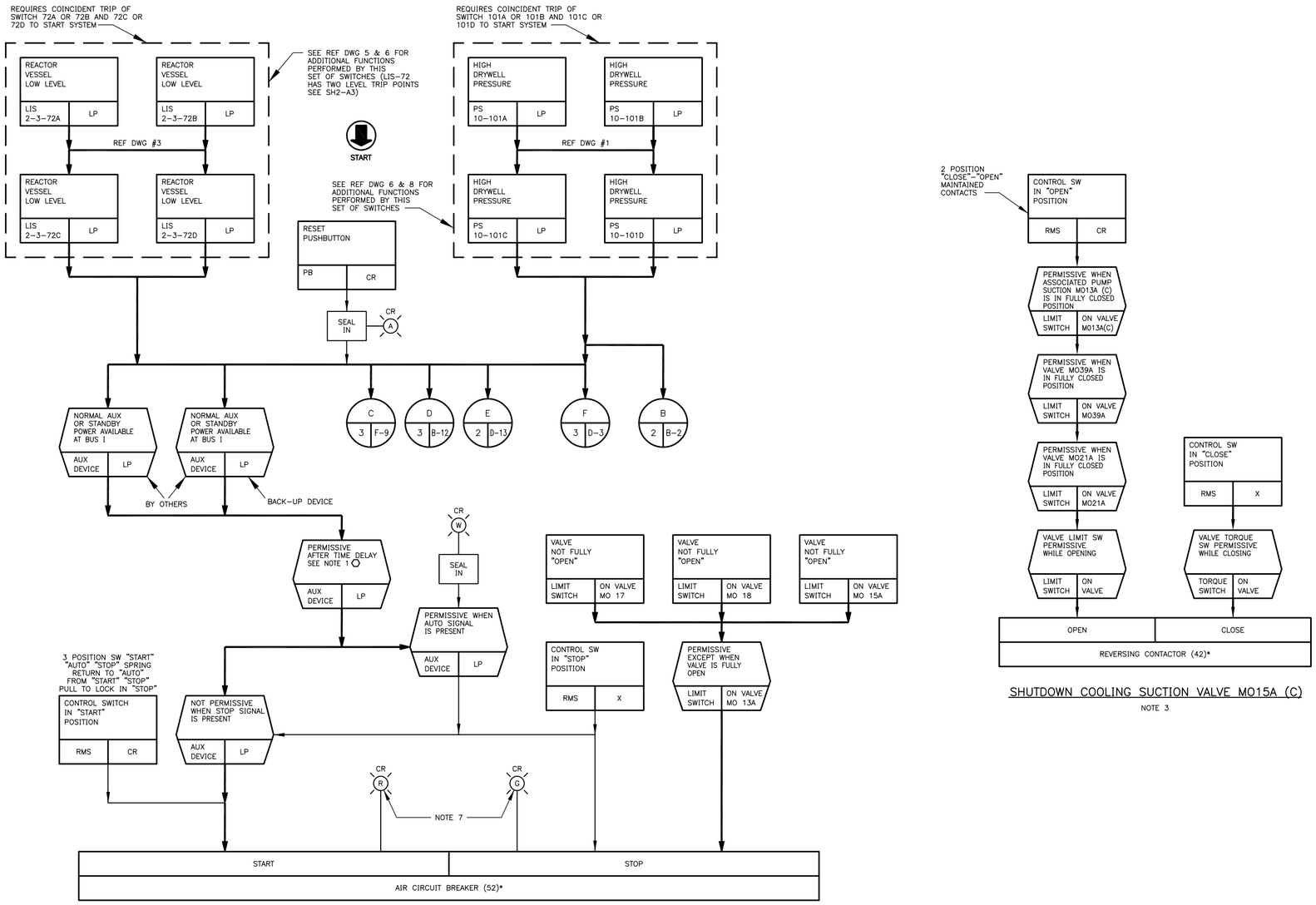

RHR PUMP 1A (1B) 4160V BUS 1F DIV I
RHR PUMP 1C (1D) 4160V BUS 1G DIV II
SEE NOTE 3

SHUTDOWN COOLING SUCTION VALVE MO15A (C)
NOTE 3

NOTES:

1. THE CONTROL SYSTEM AS DRAWN SHOWS SYSTEM 1. THE OPERATING SEQUENCE, AFTER LOW WATER LEVEL SIGNAL OR HIGH DRYWELL PRESSURE IS AS FOLLOWS:

CONDITION A:	PLANT ON NORMAL AUXILIARY POWER:
PUMP – 3A	STARTS ≤ 0.5 SECS DELAY
PUMP – 3C	STARTS 5 SECS DELAY
PUMP – 3B	STARTS 5 SECS DELAY
PUMP – 3D	STARTS ≤ 0.5 SECS DELAY

VALVES:
27A (NORMALLY OPEN) OPENS AFTER REACTOR LOW PRESSURE PERMISSIVE
25A OPENS AFTER REACTOR LOW PRESSURE PERMISSIVE

CONT COOLING 26A) 31A) 39A) 34A) 38A) CLOSE, IF OPEN, (NORMALLY MAINTAINED CLOSED)

HEAT EXCH VALVE 89A – CLOSES (IF OPEN)
SERVICE PUMPS 1A, 1C, 1B, 1D STOP IF RUNNING

CONDITION B: PUMP	PLANT ON STANDBY DIESEL POWER: ⬡ SET TIME DELAY DEVICE INITIALLY
PUMP – 3A	≤ 0.5 SEC
PUMP – 3C	5 SEC
PUMP – 3B	5 SEC
PUMP – 3D	≤ 0.5 SEC

VALVES: SEQUENCE SAME AS CONDITION A
SERVICE PUMPS – SAME AS CONDITION A

2. MANUAL CONTROL SYS FOR THROTTLING TYPE MO VALVES SHALL BE DESIGNED TO ALLOW VALVES TO BE STOPPED AT ANY DESIRED POSITION.
3. SYS I CKTS & EQUIP ARE SHOWN. SYS II CKTS & EQUIP ARE IDENTICAL EXCEPT CORRESPONDING EQUIP. NO. SUFFIXES ARE AS FOLLOWS:
SYS I – A,C
SYS II – B,D
4. PUMP MOTORS SHALL BE PROTECTED WITH OVERLOAD TRIPS. OVERLOAD RELAYS TO BE APPLIED SO AS TO MAINTAIN POWER ON MOTOR "A" AS LONG AS POSSIBLE WITHOUT IMMEDIATE DAMAGE TO MOTORS OR HARM TO EMERGENCY POWER SYSTEM. VALVE MOTORS SHALL BE PROTECTED BY OVERLOAD ALARMS.
5. AUXILIARY RELAYS & DEVICES ARE NOT SHOWN ON THE FUNCTIONAL CONTROL DIAGRAM EXCEPT WHERE NEEDED TO CLARIFY THE FUNCTIONAL REQUIREMENTS.
6. LPCI PUMPS A & B ARE POWERED FROM DIV I AND LPCI PUMPS C & D ARE POWERED FROM DIV II. LPCI LOOP A CONTAINS PUMPS A & C AND LPCI LOOP B CONTAINS PUMPS B & D.
7. STATUS LIGHTS SHALL BE AS FOLLOWS:
VALVES: GREEN ON FOR CLOSED POSITION
RED ON FOR OPEN POSITION
BOTH ON FOR INTERMEDIATE POSITION
PUMPS: RED ON FOR PUMP RUNNING
GREEN ON FOR PUMP STOP
8. ALL AUX TIMING DEVICES SHALL BE ADJUSTABLE FROM 0 TO FULL SCALE. FULL SCALE SHALL BE AT LEAST 1 1/2 TIMES GREATER THAN SPECIFIED TIME SETTINGS.
9. ALL EQUIPMENT & INSTRUMENTS ARE PREFIXED BY 10, UNLESS OTHERWISE NOTED, WHICH IS PART 10 ON THE MASTER PARTS LIST.
10. THE FOUR PRESSURE SWITCHES ARE ARRANGED FOR ONE OUT OF TWO TWICE LOGIC.
11. FOR LOCATION AND IDENTIFICATION OF INSTRUMENTS SEE MPL ITEM NUMBER 9-61.
12.
13. THE RHR SYSTEM SHALL BE DESIGNED IN ACCORDANCE WITH "PROPOSED CRITERIA FOR NUCLEAR POWER PLANT PROTECTION SYSTEM IEEE 279" INSOFAR AS PRACTICABLE.

LEGEND:

* – SWITCH GEAR DEVICE FUNCTION NUMBER USAS SPEC C37.2.

REFERENCE DOCUMENTS:	MPL NUMBERS:
1. P&ID RESIDUAL HEAT REMOVAL SYSTEM	10
2. LOGIC SYMBOLS	209A4756
3. NUCLEAR BOILER VESSEL INST P&ID	2-3
4. NUCLEAR BOILER P&ID	2
5. NUCLEAR BOILER MISC SYS FCD	2-203
6. CORE SPRAY FCD	14-102
7. RECIRC FLOW CONTROL SYS FCD	2-184-5
8. HPCI SYSTEM FCD	23-122
9. RCIC SYSTEM FCD	13-112

NOTE: RHR STEAM CONDENSING IS NO LONGER AN OPERATIONAL MODE.

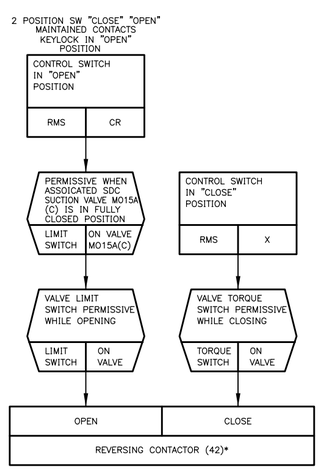

RHR PUMP SUCTION VALVE MO 13A (C)
NOTE 3

SYSTEM I
NOTE 3

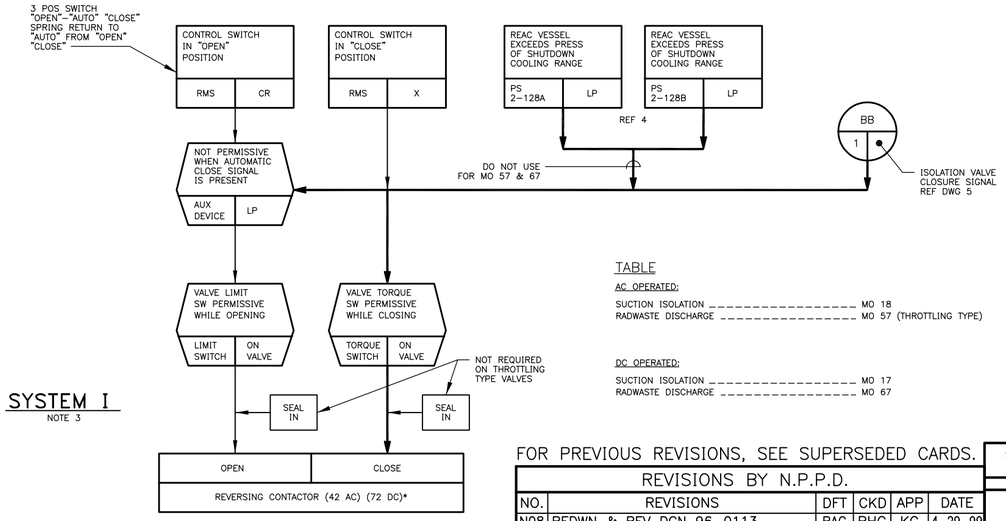

SHUTDOWN COOLING VALVES
(FOR VALVE NUMBER SEE TABLE)

TABLE

AC OPERATED:
SUCTION ISOLATION ---------- MO 18
RADWASTE DISCHARGE ---------- MO 57 (THROTTLING TYPE)

DC OPERATED:
SUCTION ISOLATION ---------- MO 17
RADWASTE DISCHARGE ---------- MO 67

MPL# 10-202

INFORMATION ONLY
452005380

CADD DRAWING
DO NOT REVISE MANUALLY

FOR PREVIOUS REVISIONS, SEE SUPERSEDED CARDS.

REVISIONS BY N.P.P.D.

NO.	REVISIONS	DFT	CKD	APP	DATE
N08	REDWN & REV DCN 96-0113	RAC	RHG	KG	4-29-99
N09	RCR 2001-0506 (DCN 01-0844)	RAC	RHG	KG	1-6-03
N10	NOTIF 10223144 (DCN 03-1159)	RAC	RHG	KG	12-30-04

SIGNIFICANT NUMBER | GROUP 1 2 3 4 5 6

COOPER NUCLEAR STATION
FCD
RESIDUAL HEAT REMOVAL SYSTEM

DRAWN RAC DATE 3/11/99
CHECKED DATE
APPROVED SEE SUPERSEDED CARDS DATE
FILMED

GENERAL ELECTRIC

730E140BB SH 1 REVISION N10

CADD FILE: C0026633

REVISIONS NO.

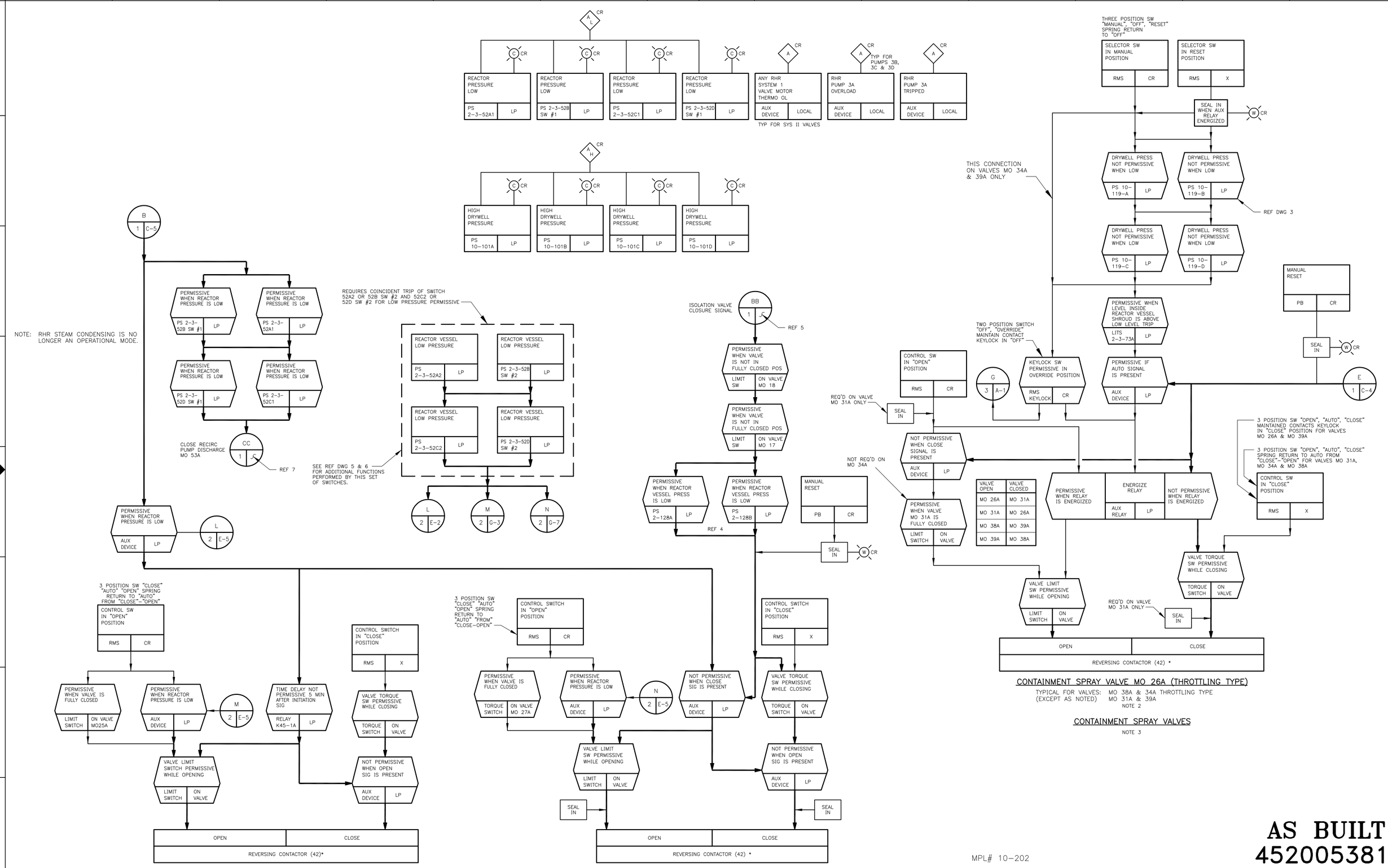

MPL# 10-202

AS BUILT 452005381

CADD DRAWING
DO NOT REVISE MANUALLY

** THIS DRAWING GENERATED BY NPPD

NOTES:
FOR NOTES SEE SHEET 1.

SYSTEM I
NOTE 3

FOR PREVIOUS REVISIONS, SEE SUPERSEDED CARDS.

REVISIONS BY N.P.P.D.

NO.	REVISIONS	DFT	CKD	APP	DATE
N04	REDWN & REV DCN 96-0114	RAC	JAC	KG	4-20-99
N05	RCR 2001-0506 (DCN 01-0847)	JRN	RHG	KG	2-27-02

SIGNIFICANT NUMBER
GROUP 1 2 3 4 5 6

COOPER NUCLEAR STATION
FCD
RESIDUAL HEAT REMOVAL SYSTEM

DRAWN RAC DATE 3/15/99
CHECKED DATE
APPROVED SEE SUPERSEDED CARDS DATE
FILMED

GENERAL ELECTRIC

730E140BB SH2
REVISION N05
CADD FILE: C0026634

REVISIONS
NO.

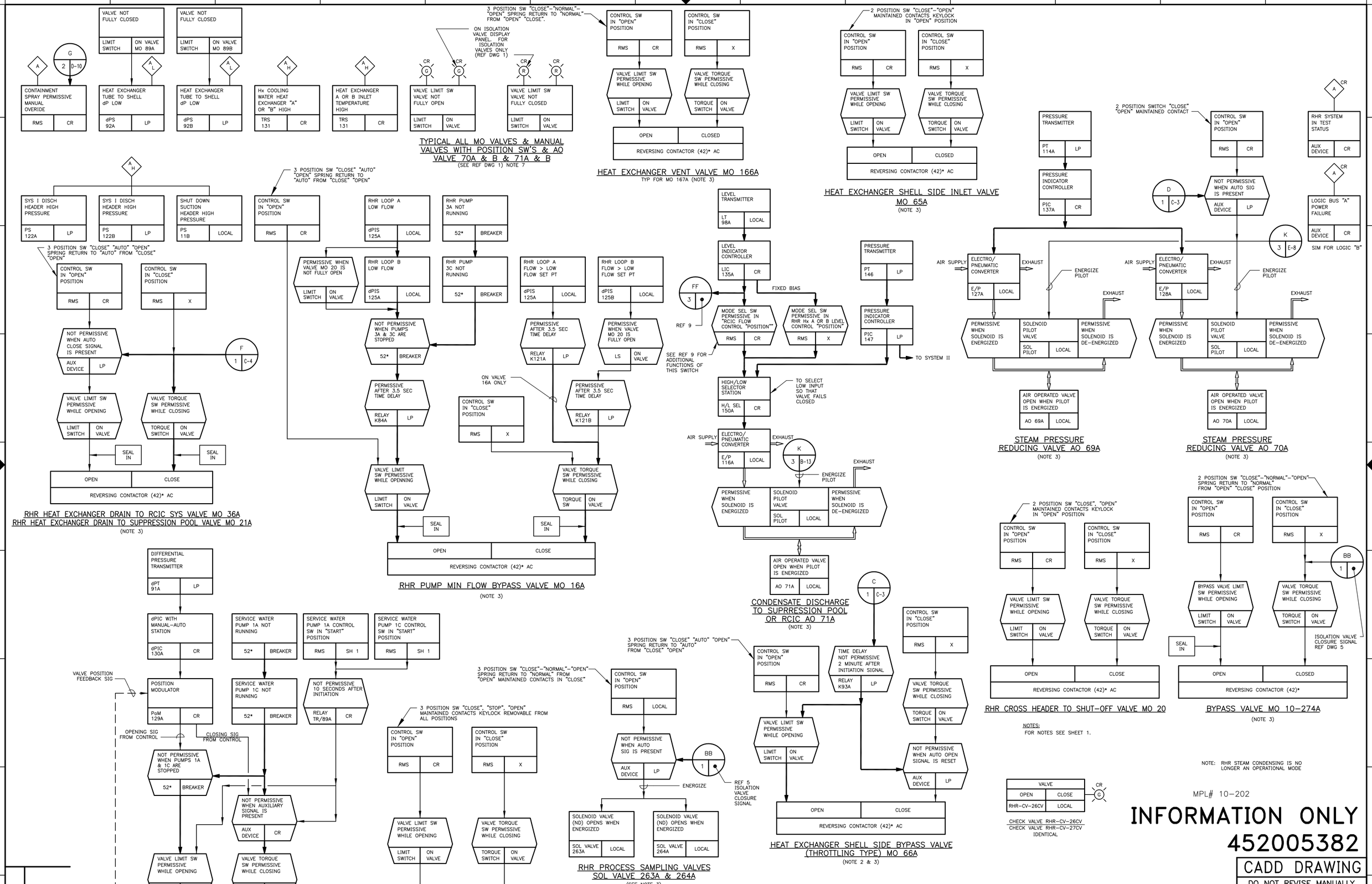

FOR PREVIOUS REVISIONS, SEE SUPERSEDED CARDS.

REVISIONS BY N.P.P.D.

NO.	REVISIONS	DFT	CKD	APP	DATE
N06	REDWN & REV DCN 96-0116	RAC	JAC	KG	5-19-99
N07	CED 1998-0268 (DCN 98-2060)	JRN	RHG	KG	4-26-00
N08	DCN 01-0624	JRN	RHG	KG	11-22-01
N09	RCR 2001-0506 (DCN 01-0849)	RAC	RHG	KG	3-6-02
N10	CED 6012122 (DCN 03-0672)	RAC	RHG	KG	3-2-04

REVISIONS

NO.

SIGNIFICANT NUMBER						
GROUP	1	2	3	4	5	6

COOPER NUCLEAR STATION
FCD
RESIDUAL HEAT REMOVAL SYSTEM

DRAWN RAC	DATE 4/7/99	GENERAL ELECTRIC
CHECKED	DATE	
APPROVED SEE SUPERSEDED CARDS	DATE	
FILMED	730E140BB SH3	REVISION N10

CADD FILE: C0026704

GENERAL ELECTRIC 730E148BB CONT ON SHEET F SH NO 1

UNLESS OTHERWISE SPECIFIED USE THE FOLLOWING: APPLIED PRACTICES | SURFACES ✓ | TOLERANCES ON MACHINED DIMENSIONS: FRACTIONS ± DECIMALS ± ANGLES ±

TITLE PROCESS DIAGRAM REACTOR WATER CLEAN-UP SYSTEM

FIRST MADE FOR COOPER

FCF: 238X100BB (12-203)

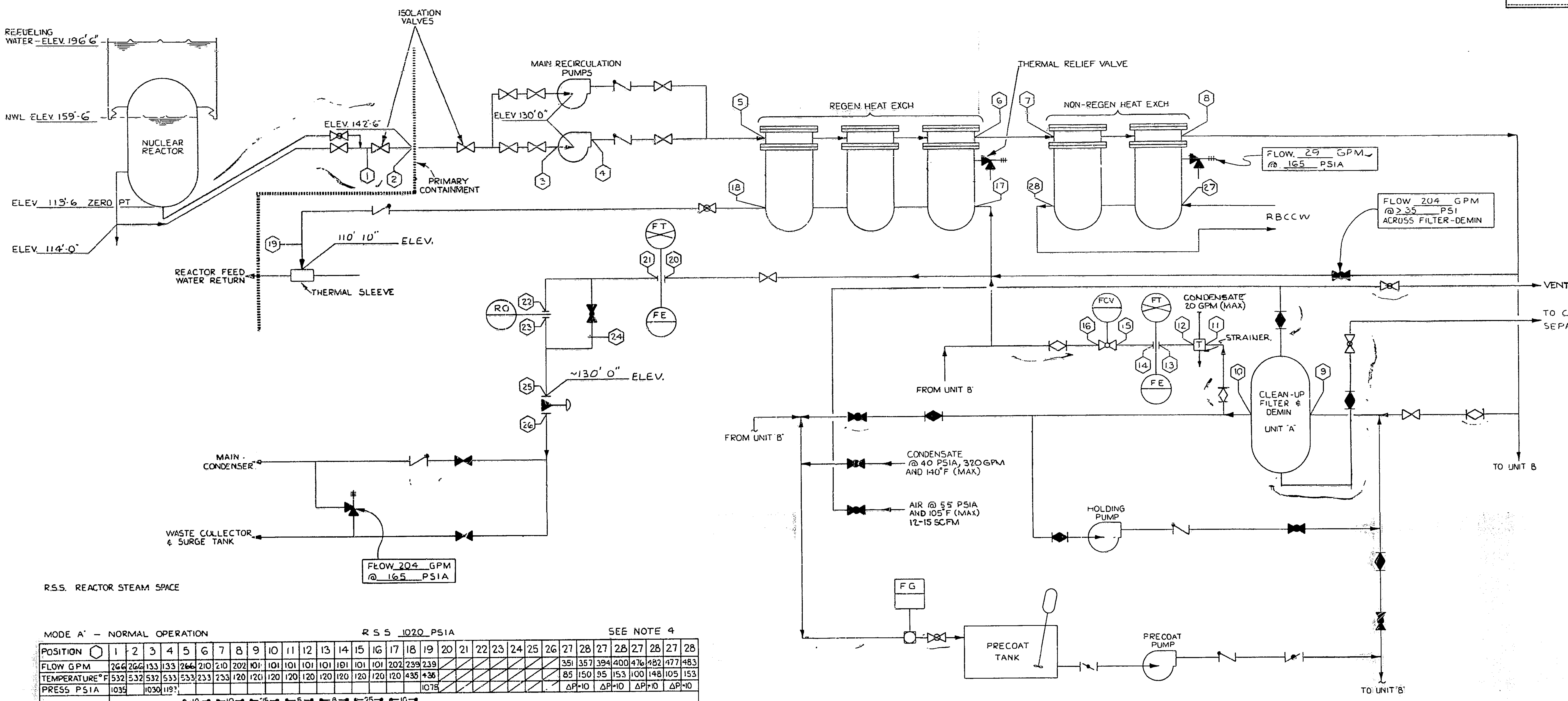

R.S.S. REACTOR STEAM SPACE

NOTES:

1. ✱ THIS IS THE MAXIMUM RBCCW OUTLET TEMPERATURE
   ✱✱ THIS IS THE MAXIMUM FLOW RATE POSSIBLE FOR THIS MODE WITH THESE HEAT EXCHANGERS
   ✱✱✱ TEMP. 7 MINUS TEMP. 9 IS THE MAXIMUM TEMP. DIFFERENCE ACROSS THE NRHx. THIS OPERATING MODE SHOULD BE LIMITED DURING THE LIFE OF THE PLANT TO THE NUMBER OF CYCLES PERMITTED BY PARA. N-415.1 OF SECTION III OF THE ASME CODE (100 MAXIMUM).
2. REQUIRED PUMP NPSH 10 FT.
3. ELEVATIONS GIVEN ARE ONLY RELATIVE.
4. POSITIONS 27 & 28 INDICATE CLEANUP SYSTEM CONDITIONS WITH VARIOUS RBCCW INLET TEMPERATURES. FOR A GIVEN PLANT'S RBCCW INLET TEMP. TO THE NRHX SEE REFERENCE 4.
5. FOR BACKWASH & PRECOAT FREQUENCY SEE RADWASTE SYS. PROCESS DIAG. MPL #20-702. FLOWS ARE APPROXIMATE. VENDOR REQUIREMENTS WILL SUPERSEDE THESE RATES.

MODE 'A' — NORMAL OPERATION — R S S 1020 PSIA — SEE NOTE 4

POSITION ⬡	1	2	3	4	5	6	7	8	9	10	11	12	13	14	15	16	17	18	19	20	21	22	23	24	25	26	27	28	27	28	27	28	27	28
FLOW GPM	266	266	133	133	266	210	210	202	101	101	101	101	101	101	101	101	202	239	239								351	357	394	400	476	482	477	483
TEMPERATURE °F	532	532	532	533	533	233	233	120	120	120	120	120	120	120	120	120	120	435	436								85	150	95	153	100	148	105	153
PRESS PSIA	1035		1030	1193															1075								ΔP	-10	ΔP	-10	ΔP	-10	ΔP	-10
MAXIMUM PRESSURE DROP PSI	←10→ ←10→ ←25→ ←5→ ←8→ ←25→ ←10→; ←164→ TDH; ←1.4→ ←28.6→ ALLOWABLE PIPE FRICTION DROP																																	

MODE 'A' DESIGN BASIS FOR HEAT EXCHANGERS

OPERATING PROCEDURE:
1. MAIN CLEAN-UP PUMPS IN OPERATION
2. RHx UNDER FULL LOAD
3. NRHx UNDER FULL LOAD
4. FILTER-DEMINERALIZERS IN OPERATION
5. FCV IN OPERATION
6. NO BY PASS FLOW

MODE B — START-UP OPERATION — R S S 200 PSIA — SEE NOTE 4

POSITION ⬡	1	2	3	4	5	6	7	8	9	10	11	12	13	14	15	16	17	18	19	20	21	22	23	24	25	26	27	28	27	28	27	28	27	28
FLOW GPM	230	230	115	115	230	213	213	204	102	102	102	102	102	102	102	102	111	123	123	93	93	←93 TOTAL→			93	93	310	317	327	334	370	377	360	367
TEMPERATURE °F	381	381	381	381	381	257	257	130	130	130	130	130	130	130	130	130	130	364	364	130	130	130	130	130	130	130	85	167	95	173	100	169	105	176
PRESS PSIA	217		209	398															~269							~40	ΔP	-10	ΔP	-10	ΔP	-10	ΔP	-10
MAXIMUM PRESSURE DROP PSI	←10→ ←10→ ←25→ ←5→ ←8→ ←~40→ ←10→ ←8→ ←~10→ ←~213→; ←189→ TDH; ←1.4→ FRICTION DROP CONTROLLED ΔP BY MODE 'A' → ALLOWABLE PIPE FRICTION DROP																																	

MODE 'B' OPERATIONAL INFORMATION

OPERATING PROCEDURE:
1. MAIN CLEAN-UP PUMPS IN OPERATION
2. RHx UNDER PARTIAL LOAD
3. NRHx UNDER MAX START UP LOAD
4. FILTER-DEMINERALIZER IN OPERATION
5. FCV IN OPERATION
6. CRD & SWELL WATER IS DISCHARGED TO RADWASTE OR CONDENSER

MODE 'C' — BLOWDOWN OPERATION — R.S.S. 1003 PSIA — SEE NOTE 1 & 4

POSITION ⬡	1	2	3	4	5	6	7	8	9	10	11	12	13	14	15	16	17	18	19	20	21	22	23	24	25	26	27	28
FLOW GPM	94**	94	47	47	94	94	94	70	35	35	35	35	35	35	35	35				70	70	70	70		70	70	351	361
TEMPERATURE °F	545	545	545	545	545	545	545***	100	100	100	100	100	100	100	100	100				100	100	100	100		100	100	85	180*
PRESS PSIA																											ΔP	-10
FLOW GPM	95**	95	48	48	95	95	95	71	36	36	36	36	36	36	36	36				71	71	71	71		71	71	394	403
TEMPERATURE °F	545	545	545	545	545	545	545***	105	105	105	105	105	105	105	105	105				105	105	105	105		105	105	95	180*
PRESS PSIA																											ΔP	-10
FLOW GPM	110**	110	55	55	110	110	110	82	41	41	41	41	41	41	41	41				82	82	82	82		82	82	476	487
TEMPERATURE °F	545	545	545	545	545	545	545***	110	110	110	110	110	110	110	110	110				110	110	110	110		110	110	100	180*
PRESS PSIA	1018		1013	1182																						~40	ΔP	-10
FLOW GPM	103**	103	52	52	103	103	103	77	39	39	39	39	39	39	39	39				77	77	77	77		77	77	477	487
TEMPERATURE °F	545	545	545	545	545	545	545***	111	111	111	111	111	111	111	111	111				111	111	111	111		111	111	105	180*
PRESS PSIA																											ΔP	-10
MAXIMUM PRESSURE DROP PSI	←7→ ←6→ ←25→ ←5→ ←8→ ←30→ ←8→ ←800→ ←~223→; ←163→ TDH; ←1.6→ FRICTION DROP CONTROLLED / ALLOWABLE PIPE ΔP BY MODE 'A' / FRICTION DROP																											

MODE "C" OPERATIONAL LIMITATIONS

OPERATING PROCEDURE:
1. MAIN PUMPS IN OPERATION
2. RHx UNDER NO LOAD
3. NRHx UNDER FULL LOAD
4. FILTER-DEMINERALIZER IN OPERATION
5. FCV IN OPERATION
6. ENTIRE FLOW IS DISCHARGED TO RADWASTE OR CONDENSER

MODE 'D' — REFUELING OPERATION (MAX BYPASS) — R.S.S. 15 PSIA

POSITION ⬡	1	2	3	4	5	6	7	8	9	10	11	12	13	14	15	16	17	18	19	20	21	22	23	24	25	26	27	28
FLOW GPM	204	204	102	102	204	204	204	204	102	102	102	102	102	102	102	102				204	204	←204 TOTAL→			204	204		
TEMPERATURE °F	125	125	125	125	125	125	125	125	125	125	125	125	125	125	125	125				125	125	125	125	125	125	125		
PRESS PSIA	50		43	267																						~40		
MAXIMUM PRESSURE DROP PSI	←10→ ←10→ ←25→ ←5→ ←8→ ←~40→ ←8→ ←~91→; ←224→ TDH; ←1.6→ FRICTION DROP CONTROLLED / ALLOWABLE PIPE ΔP BY MODE 'A' / FRICTION DROP																											

MODE 'D' DUMPING REFUELING WATER AND SIZING OF BYPASS LINE FCV

OPERATING PROCEDURES:
1. MAIN PUMPS IN OPERATION
2. NO RHx LOAD
3. NO NRHx LOAD
4. FILTER-DEMINERALIZER IN OPERATION
5. FCV IN OPERATION
6. ENTIRE FLOW IS DISCHARGED TO RADWASTE OR CONDENSER

MODE 'E' — REFUELING OPERATION — R S S 15 PSIA

POSITION ⬡	1	2	3	4	5	6	7	8	9	10	11	12	13	14	15	16	17	18	19	20	21	22	23	24	25	26	27	28
FLOW GPM	204	204	102	102	204	204	204	204	102	102	102	102	102	102	102	102	204	204	204									
TEMPERATURE °F	125	125	125	125	125	125	125	125	125	125	125	125	125	125	125	125	125	125	125									
PRESS PSIA	50		43	267															~138									
MAXIMUM PRESSURE DROP PSI	←10→ ←10→ ←25→ ←5→ ←8→ ←~40→ ←10→; ←224→ TDH; ←1.6→ FRICTION DROP CONTROLLED ΔP BY MODE 'A' → ALLOWABLE PIPE FRICTION DROP																											

MODE 'E' CONTINUOUS CLEANING OF REACTOR WATER DURING REFUELING

OPERATING PROCEDURES:
1. MAIN PUMPS IN OPERATION
2. NO RHx LOAD
3. NO NRHx LOAD
4. FILTER-DEMINERALIZER IN OPERATION
5. FCV IN OPERATION
6. NO BYPASS FLOW

MODE 'F' — HOT STANDBY OPERATION — R.S.S. 1003 PSIA — SEE NOTE 4

POSITION ⬡	1	2	3	4	5	6	7	8	9	10	11	12	13	14	15	16	17	18	19	20	21	22	23	24	25	26	27	28	27	28	27	28	27	28
FLOW GPM	270	270	135	135	270	212	212	204	102	102	102	102	102	102	102	102	204	242	242								287	293	307	313	348	354	343	350
TEMPERATURE °F	545	545	545	545	545	245	245	130	130	130	130	130	130	130	130	130	130	446	448								85	166	95	171	100	167	105	173
PRESS PSIA	1018		1013	1178															~1063								ΔP	-10	ΔP	-10	ΔP	-10	ΔP	-10
MAXIMUM PRESSURE DROP PSI	←10→ ←10→ ←25→ ←5→ ←8→ ←25→ ←10→; ←164→ TDH; ←1.6→ FRICTION DROP CONTROLLED ΔP BY MODE 'A' → ALLOWABLE PIPE FRICTION DROP																																	

MODE 'F' DESIGN BASIS FOR MAIN CLEANUP PUMP MAXIMUM CAPACITY AND MINIMUM NPSH, SEE NOTE 2

OPERATING PROCEDURES:
1. MAIN PUMPS IN OPERATION
2. RHx UNDER FULL LOAD
3. NRHx UNDER PARTIAL LOAD
4. FILTER-DEMINERALIZER IN OPERATION
5. FCV IN OPERATION
6. NO BYPASS FLOW

REFERENCE DRAWINGS:
1. REACTOR WATER CLEANUP P&ID - - - - - - - - - MPL #12
2. ARRANGEMENT DRAWING PRIMARY & SECONDARY CONTAINMENT - - MPL #1-1
3. FILTER & DEMINERALIZER SYSTEM - - - - - - - MPL #12-4
4. DESIGN SPECIFICATION - - - - - - - - - - MPL #12-201
5. PIPING & INSTRUMENT SYMBOLS - - - - - - - - 104R900

"THIS DRAWING SUPERSEDES DRAWING 730E148BA, REV 2, FOR COOPER. DIFFERENCES ARE DENOTED BY ENCIRCLEMENT." PER ECA 90825-02

INFORMATION ONLY

454005663

REVISIONS: 1 W. IWAKI 4-3-87 GAB; NH 26758 CHK BY W.S. TORRES, J. OESTERLE

NEBO — SAN JOSE, CALIFORNIA — 730E148BB — CONT ON SHEET F — SH NO 1

REV "0" CHK'D BY G.H.T. 11/17/69 — 11-18-69 — 13 S-190-MM

>00170027

PCF: 2.86X100 BB (2-203)

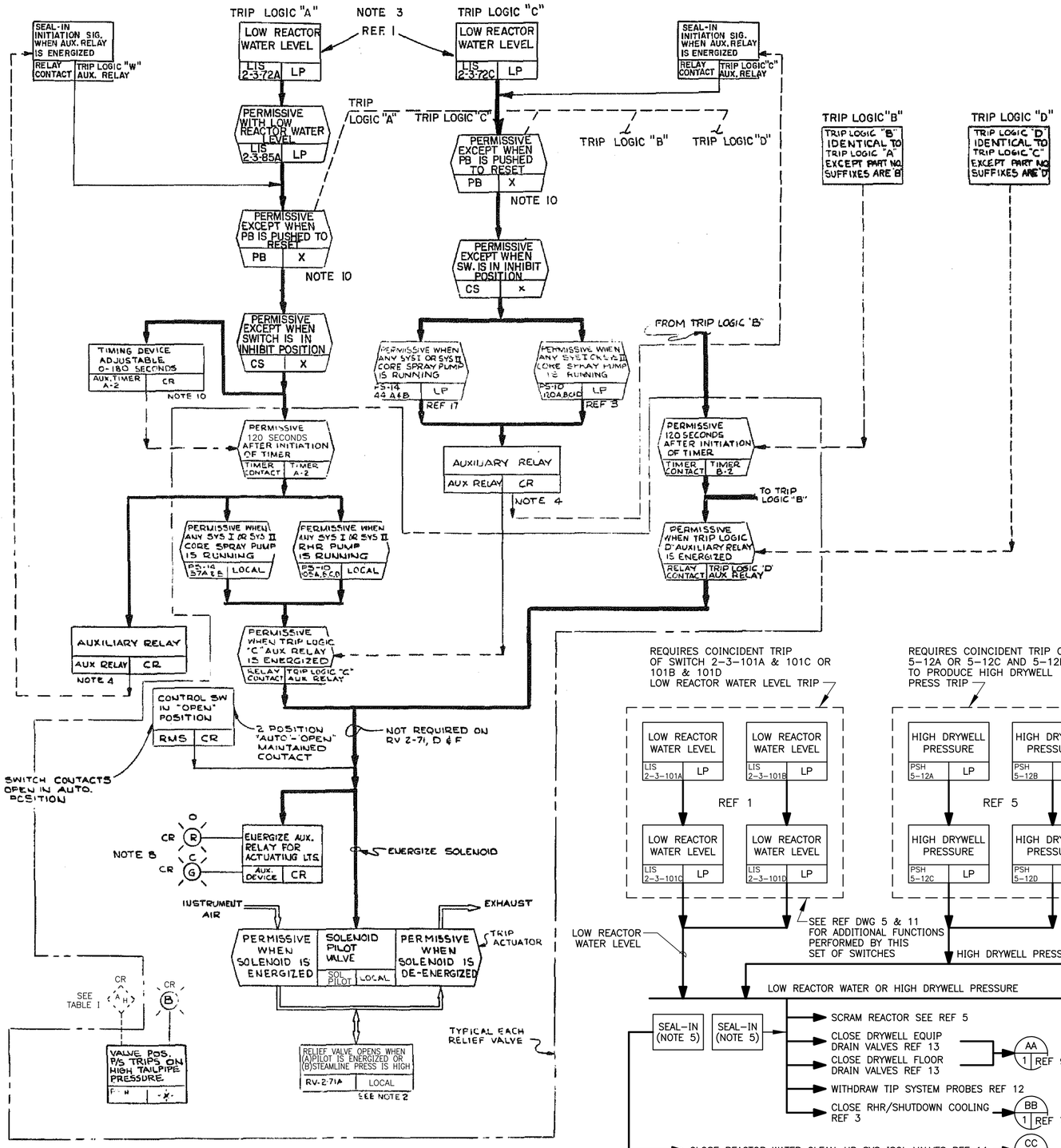

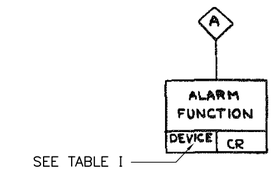

TABLE I

ALARM FUNCTION	INITIATING DEVICE(S)
BLOWDOWN SYSTEM TIMER INITIATED	TIMING DEVICE (A_2) AND (B_2) TO ONE COMMON ANNUNCIATOR
RELIEF VALVE POSITION	PSH ON TAILPIPE (8 TOTAL) TO ONE COMMON ANN.
BLOWDOWN CIRCUIT POWER FAILURE	AUX. POWER FAILURE RELAY FOR EACH LOGIC CHANNEL TO ONE COMMON ANNUNCIATOR
BLOWDOWN SYS AUX. RELAY ENERGIZED	AUX. RELAY (C) & TO ONE COMMON ANNUNCIATOR

BLOWDOWN SYSTEM SPECIAL ALARMS (NOTE 8)

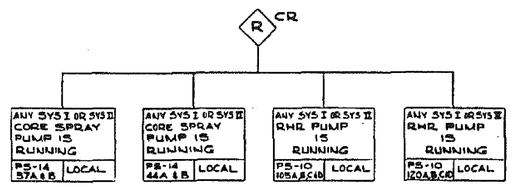

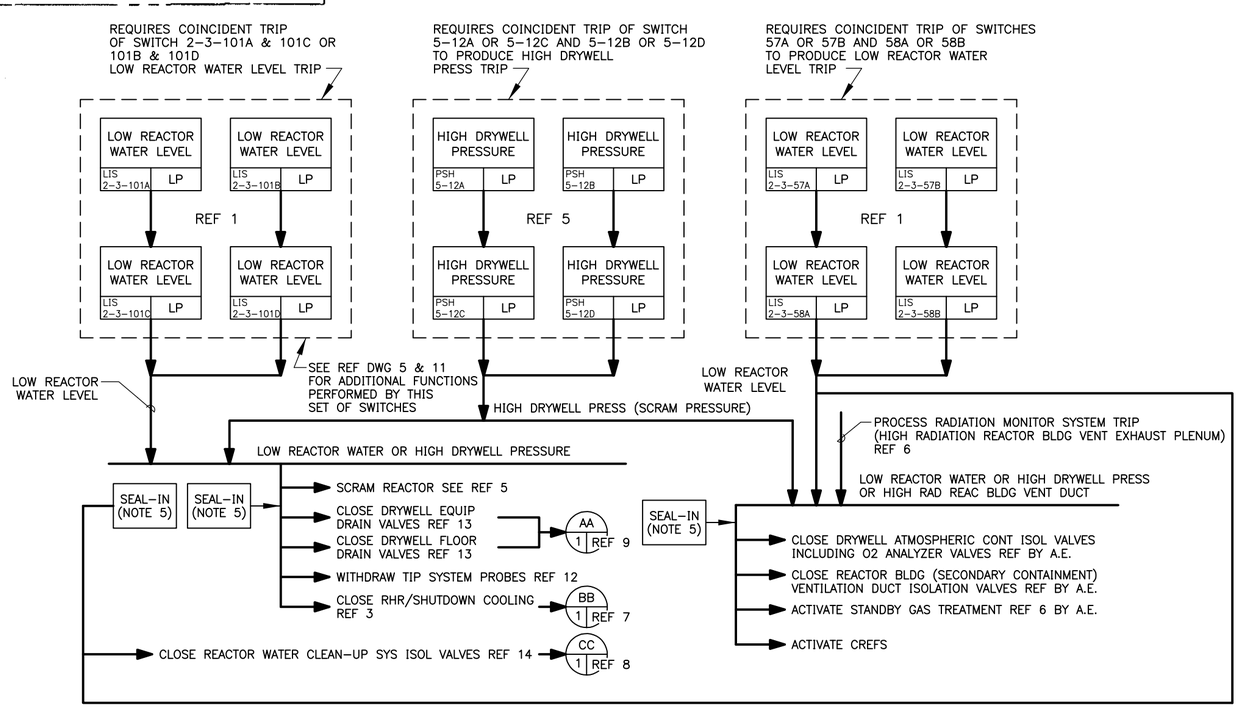

NOTES:

1. REMOVED
2. RELIEF VALVE MAY BE MANUALLY OPENED AT ANY TIME BY CONTROL SWITCH OR AUTOMATICALLY BY REACTOR HIGH PRESS VALVES CLOSE WHEN SWITCH IS IN AUTO POSITION EXCEPT WHEN AUTOMATIC BLOW DOWN OR REACTOR HIGH PRESSURE SIGNALS ARE PRESENT.
3. AUTOMATIC BLOWDOWN TRIP LOGIC CIRCUITS A&C SHALL BE POWERED FROM STATION BATTERIES "A" TRIP LOGIC. CIRCUITS B&D SHALL BE POWERED FROM STATION BATTERIES "B" WITH AUTOMATIC TRANSFER TO BATTERY "A" ON LOSS OF POWER.
4. AUXILIARY RELAYS AND DEVICES ARE NOT SHOWN ON FCD EXCEPT WHERE REQUIRED TO CLARIFY FUNCTION.
5. ISOLATION VALVE CLOSURE SIGNALS SHALL BE SEALED IN UNTIL MANUALLY RESET FROM THE CONTROL ROOM PANEL.
6. REMOVED
7. WHEN TEST SOLENDID PILOT IS ENERGIZED, THE MAIN STEAM ISOLATION VALVE OPERATOR IS SLOWLY EXHAUSTED (60 SEC CLOSURE TIME) WHILE VALVE IS CLOSED BY ACTION OF THE VALVE SPRING WITHOUT AID OF THE AIR PRESSURE.
8. THE ALARMS AND VALVE INDICATING LIGHTS SHOWN ON THE FCD ARE SYSTEM REQUIREMENTS IN ADDITION TO THOSE SHOWN ON THE SYSTEM P&ID'S ADDITIONAL INFORMATION ON ALARMS, VALVE POSITION INDICATING LIGHTS, AND PROCESS INSTRUMENTATION NOT SHOWN ON THIS FCD MAY BE OBTAINED FROM REF 1, 2, 3, 4, 5, 6, 13 AND 14.
9. MAIN STEAM LINE ISOLATION VALVE TRIP LOGIC CIRCUITS A, B, C, & D SHALL BE POWERED FROM REACTOR PROTECTION SYS M-G SETS. TRIP ACTUATOR CIRCUIT I SHALL BE POWERED FROM ANY RELIABLE AC SOURCE. TRIP ACTUATOR CIRCUIT II SHALL BE POWERED FROM STATION BATTERIES.
10. TIMING DEVICES SHALL BE OF THE TYPE THAT AUTO. MECHANICALLY RESET TO ZERO, UPON LOSS OF POWER TO THE TIMING DEVICE OR UPON LOSS OF THE INITIATION SIGNAL, OR UPON PUSHING THE PB TO RESET.
11. FOR LOCATION AND IDENTIFICATION OF INSTRUMENTS SEE INSTRUMENT DATA SHEET LISTED IN MPL FOR EACH INSTRUMENT.
12. THE NUCLEAR BOILER SYSTEM SHALL BE DESIGNED IN ACCORDANCE WITH "PROPOSED CRITERIA FOR NUCLEAR POWER PLANT PROTECTION SYSTEM IEEE 279" IN SO FAR AS PRACTICABLE.
13. FOR TRIP SETTINGS SEE REF 18.
14. THE DEVICES IN THIS LOGIC ARE ESSENTIAL AND MUST MEET THE REQUIREMENTS OF IEEE 279.

REF DOCUMENTS

		MPL #
1.	P&ID NUCLEAR BOILER VESSEL INSTRUMENTATION	2 - 3
2.	P&ID NUCLEAR BOILER	2
3.	P&ID RHR SYSTEM	10
4.	FCD HPCI SYSTEM	23
5.	IED REACTOR PROTECTION SYSTEM	5
6.	IED PROCESS RADIATION MONITOR	17
7.	FUNCTIONAL CONTROL DIAGRAM RHR SYSTEM	10 - 202
8.	FCD REACTOR WATER CLEAN-UP SYSTEM	12 - 202
9.	FCD RADWASTE SYSTEM	20 - 703
10.	DESIGN SPEC FOR CONTAINMENT ISOLATION SYSTEM	1 - 157
11.	FCD RECIRC FLOW CONTROL SYSTEM	2 - 184 - 5
12.	FCD NEUTRON MONITOR SYSTEM	7 - 2
13.	P&ID RADWASTE SYSTEM	20
14.	P&ID REACTOR WATER CLEANUP SYSTEM	12
15.	SCHEMATIC CONTROL DIAGRAM	175A9560
16.	LOGIC SYMBOLS	209A4756
17.	P&ID CORE SPRAY SYSTEM	14
18.	TURB GEN STEAM BYPASS SYS	1 - 139

LEGEND

✳ = SWITCH GEAR DEVICE FUNCTION NO'S USAS SPEC C-37.2

-✳- = FURNISHED AS PART OF VALVE OR DEVICE ASSEMBLY.

730E149BB

INFORMATION ONLY

FOR PREVIOUS REVISIONS, SEE SUPERSEDED CARDS.

452005040

REVISIONS BY N.P.P.D.

NO.	REVISIONS	DFT	CKD	APP	DATE
N05	CED 6014280 (DCN 04-1263)	RAC	RHG	KG	8-18-05

SCAN/CADD DWG
DO NOT REVISE MANUALLY
CADD FILE: C0054654

GENERAL ELECTRIC

730E149BB

TITLE FUNC. CONT DIAG

NUCLEAR BOILER (MISC. SYSTEM)

FIRST MADE FOR COOPER.

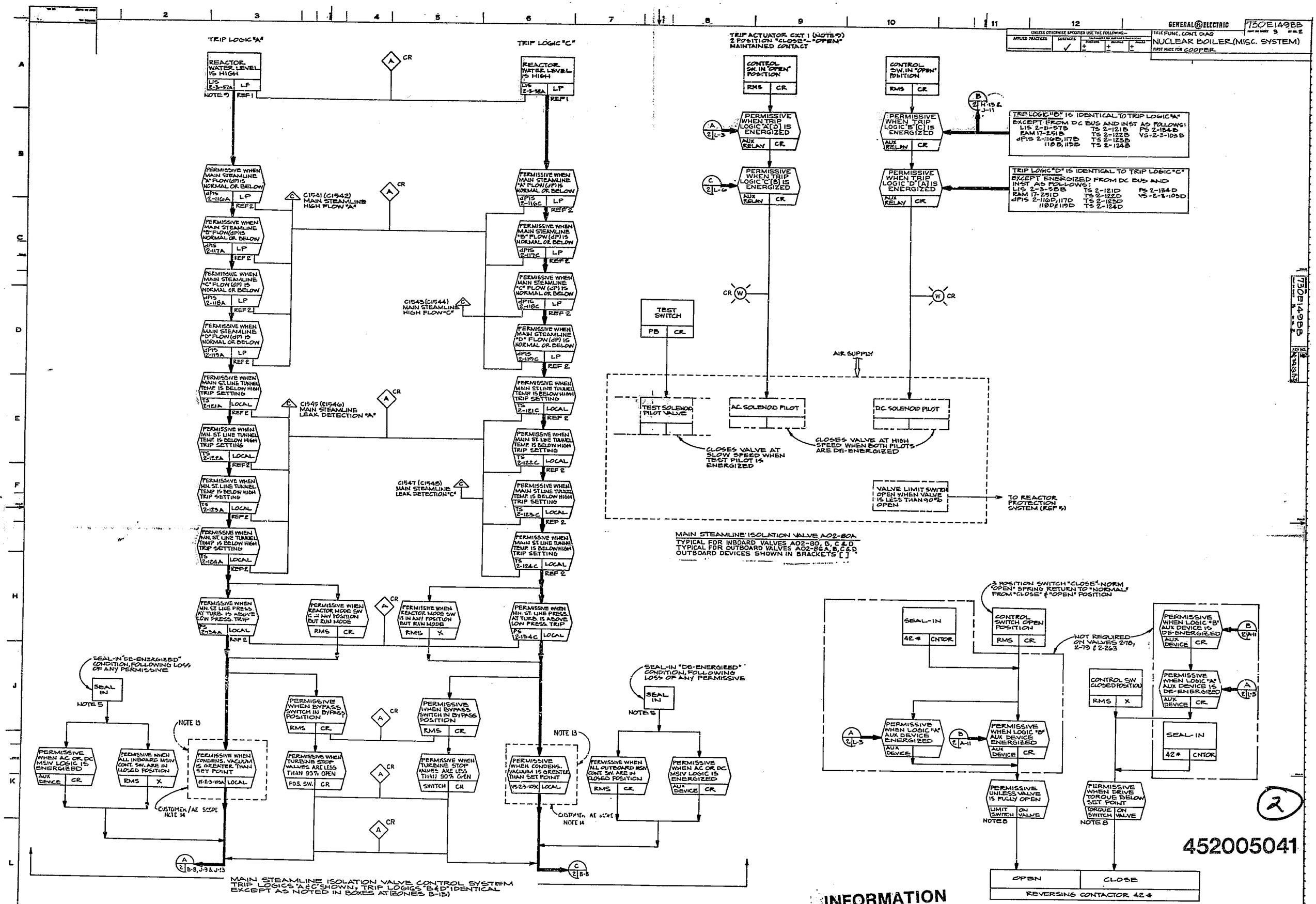

2

452005041

INFORMATION ONLY

COOPER STATION
MPL # 2-209

NO.	REVISIONS	BY	CHK	APP	DATE
N02	REV. PER DCN C94-0194	RRT			2-8-94
N01	REV. PER DCN 91-378.	PAM			3-1-91

DCN REVISIONS BY N.P.P.D.

REVISIONS			PRINTS TO
ADDED M02-263 PER ECA-30319-1	REV MAIN STEAM LINE ISOL VALVE CONTROL SYS LOGIC ECA-20809-10.	D. ECA 20809-7. E. DIM # TO. ALSO ADDED SH3 PER ECA 20809-9	REDRAWN WITH GEN. CHG'S IN ENCIRCLED AREAS A. ECA 20315-2. B. ECA 20809-10. C. ECA 20211-1.
PER ECA 30627-1			

BWRS

SAN JOSE

730E149BB

REACTOR RECIRCULATION PUMP A/B SPEED CONTROLLER CONFIGURATION
FUNCTION BLOCKS TYPICAL FOR CONTROLLERS RRFC–SIC–16A/B

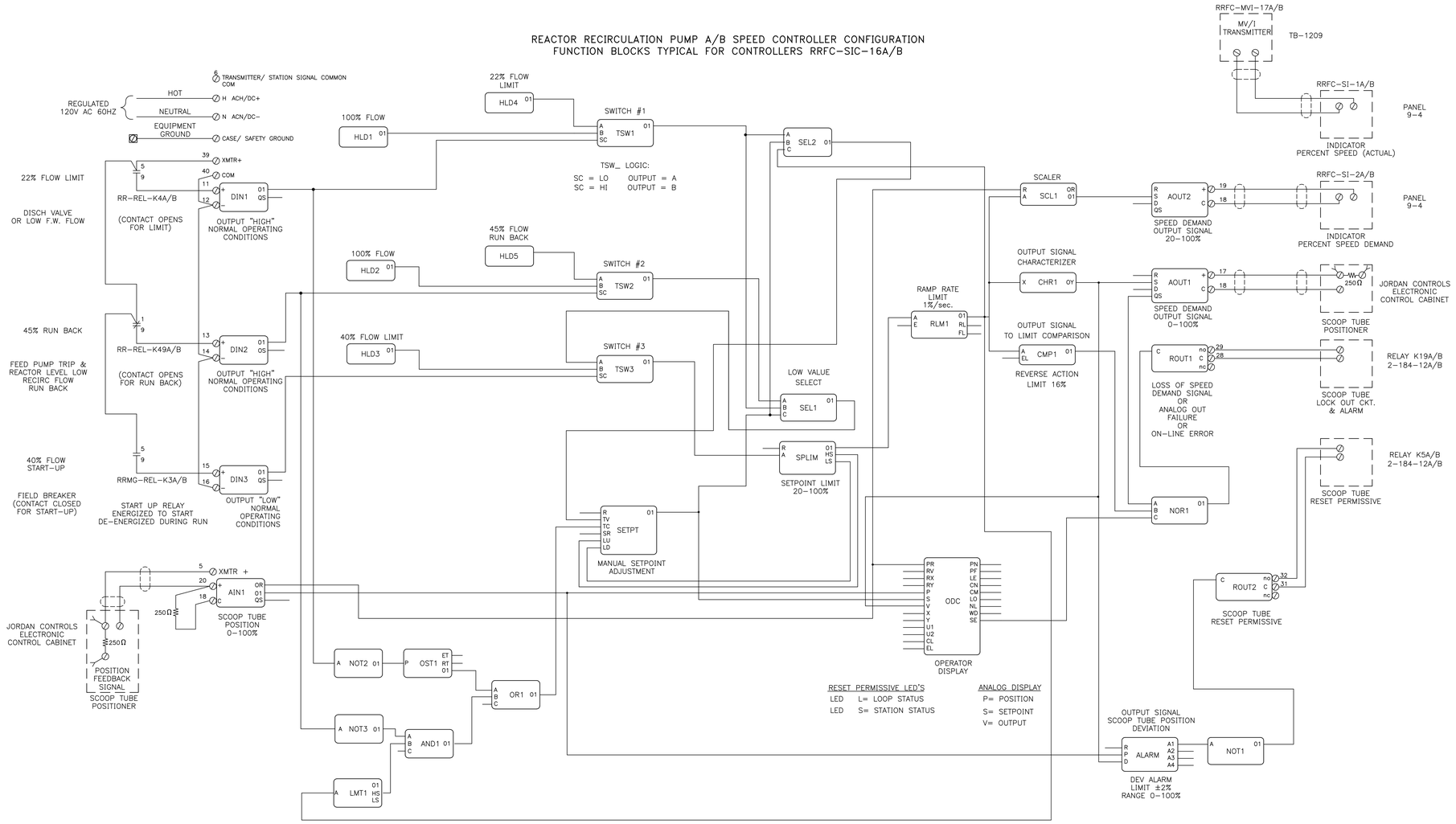

QUALITY STATUS:

BLOCK TYPE	QS TRANSITION	CONDITION
AOUT_	LO → HI	HI Z OR OPEN CKT

MPU CONTROLLER BOARD JUMPERS

JUMPER (SHUNT) ID	DESCRIPTION	JUMPER INSTALLED	
W2	ETHERNET//LIL/ MOD BUS	YES	
W4	LONWORKS I/O BUS	YES	
W8	REAL TIME CLOCK BATTERY	YES	CONTROLLER BOARD VERSION DEPENDENT (NOTE 2)

NOTE:
1. RRFC PUMP SPEED CONTROLLER REQUIREMENTS AND CONFIGURATION DESCRIPTION, CED 2001–0017 ATTACHMENT: F
2. SHUNT INSTALLED ON N/C OF W8 DURING STORAGE, INSTALLED ON CLK WHEN CONTROLLER INSTALLED IN THE FIELD.

AS BUILT
454244494
CADD DRAWING
DO NOT REVISE MANUALLY

FOR PREVIOUS REVISIONS, SEE SUPERSEDED CARDS.

REVISIONS BY N.P.P.D.

NO.	REVISIONS	DFT	CKD	APP	DATE
NO5	CR–CNS–2007–00411(DCN 07–0045)	DLR	DLR	DJB	1/17/07
NO6	CED 6010820 (DCN 05–1765)	DJB	PAM	DLR	04/29/08
NO7	CED 6010820 (DCN 08–0517)	KG	KG	TJO	5/5/08

SIGNIFICANT NUMBER | GROUP | 1 | 2 | 3 | 4 | 5 | 6

COOPER NUCLEAR STATION
REACTOR RECIRCULATION
CONTROLLER CONFIGURATION

DRAWN DLR	DATE 8/21/01	GENERAL ELECTRIC
CHECKED JDN	DATE 3/19/02	
APPROVED KMD	DATE 3/19/02	
FILMED		730E197BB SH 6B

REVISION NO7

CADD FILE C0042095

REVISIONS
NO.

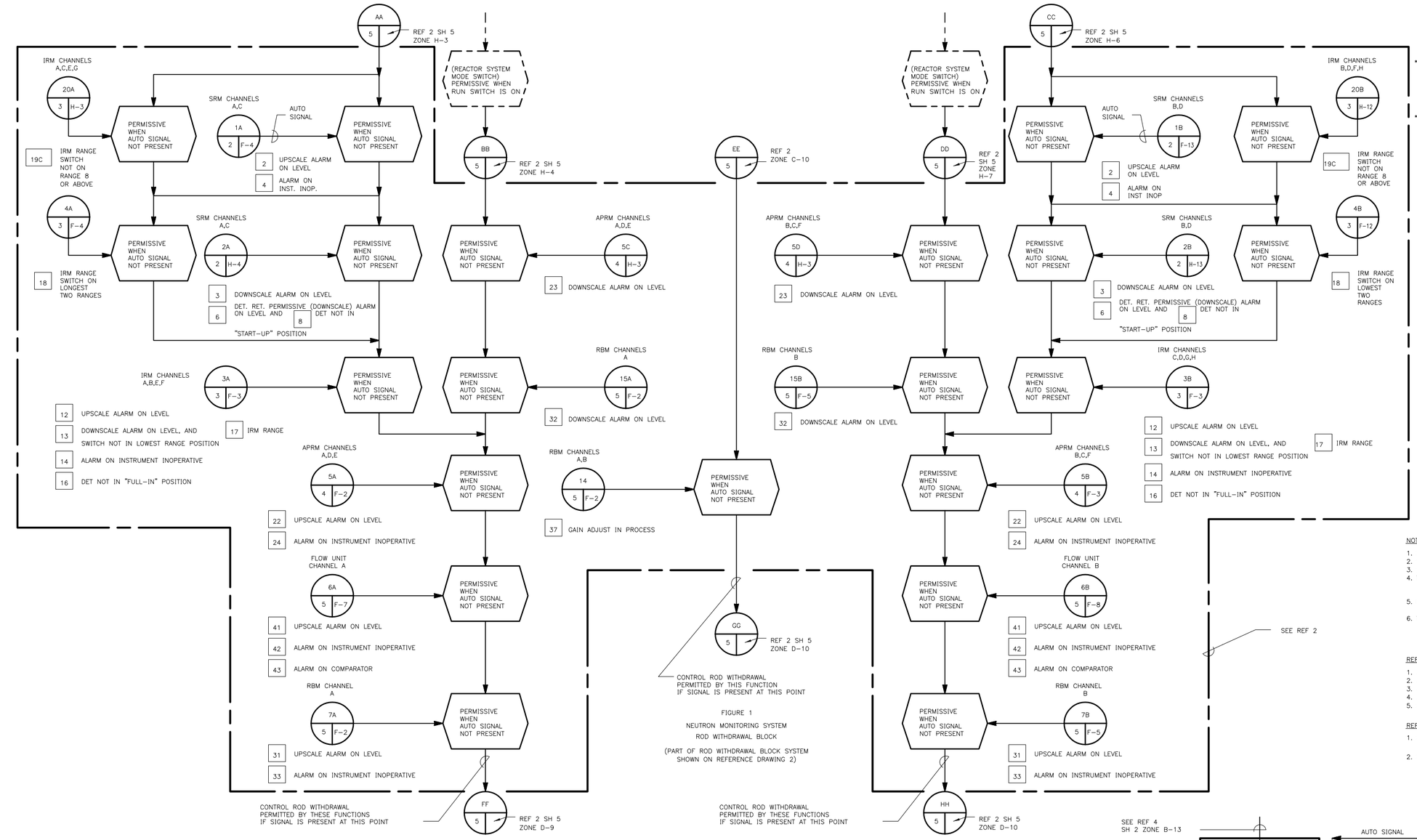

NO.	REVISIONS	DFT	CKD	APP	DATE
** N01	REV & REDRAWN PER APA DCN C93-1575	DR	JAC	SJT	11-9-93

DCN REVISIONS BY N.P.P.D.

** FOR PREVIOUS REVISIONS, SEE SUPERSEDED CARDS.

NOTES:

1. INPUTS TO COMPUTER ARE ISOLATED CONTACTS.
2. SEE SHEET 7.
3. SEE SHEET 7.
4. THE ENTIRE NEUTRON MONITORING SYSTEM IS A FULLY AUTOMATIC SYSTEM EXCEPT FOR REMOTE MANUAL OPERATED SWITCHES.
5. FOR LOCATION AND IDENTIFICATION OF INSTRUMENTS SEE MPL ITEM NUMBER 9-61.
6. THESE FUNCTIONS ARE ALSO IN THE NEUTRON MONITORING SYSTEM, NON-COINCIDENT TRIP, (INITIAL LOADING ONLY) FIG 3, SH 1, ZONE (G,H-10,11).

REFERENCE DOCUMENTS:

		MPL ITEM NO
1. 729E223 BB	– NEUTRON MONITORING SYSTEM IED.	7-0
2. 729E471 BB	– CONTROL ROD DRIVE HYD. SYSTEM FCD.	3-7
3. 730E149 BB	– NUCLEAR BOILER SYSTEM FCD.	2-203
4. 729E222 BB	– REACTOR PROTECTION SYSTEM FCD.	5-0
5. 209A4756	– LOGIC SYMBOLS	

REFERENCE SPECIFICATIONS:

1. 22A1796RAL DESIGN SPEC FOR PROCESS COMPUTER SYSTEM INPUT-OUTPUT DATA REQUIREMENTS
2. 22A2811 DESIGN SPEC –NEUTRON MONITORING SYSTEM

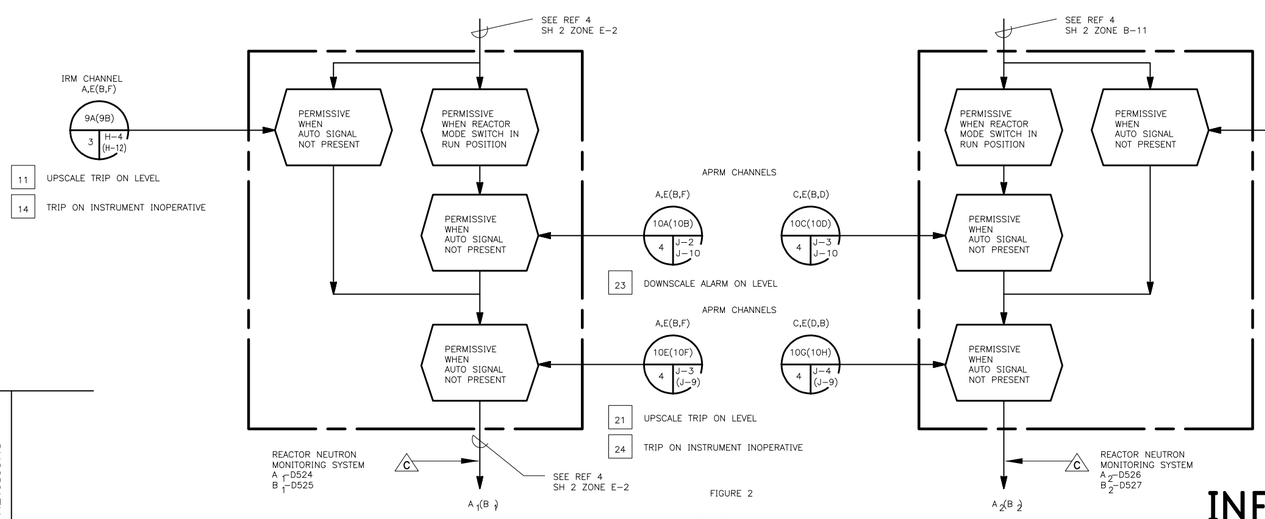

FIGURE 2

NEUTRON MONITORING SYSTEM TRIP
REACTOR PROTECTION SYSTEM TRIP SYSTEM A
(TYPICAL FOR TRIP SYSTEM B)

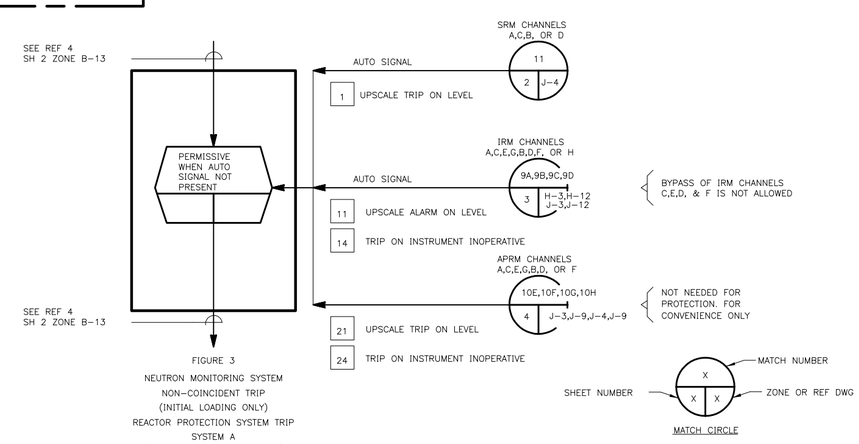

FIGURE 3

NEUTRON MONITORING SYSTEM
NON-COINCIDENT TRIP
(INITIAL LOADING ONLY)
REACTOR PROTECTION SYSTEM TRIP
SYSTEM A
(TYPICAL FOR TRIP SYSTEM B)

* THIS DRAWING GENERATED BY NPPD

452005327

INFORMATION ONLY

SIGNIFICANT NUMBER						
GROUP	1	2	3	4	5	6

COOPER NUCLEAR STATION
FUNCTIONAL CONTROL DIAGRAM
NEUTRON MONITORING SYSTEM

DRAWN	DATE	GENERAL ELECTRIC*
DR	9-28-93	
CHECKED	DATE	
APPROVED	DATE	
SJT	11-9-93	
FILMED		730E805BA SH. 1
REVISION	NO1	
CADD FILE:	C0011069	

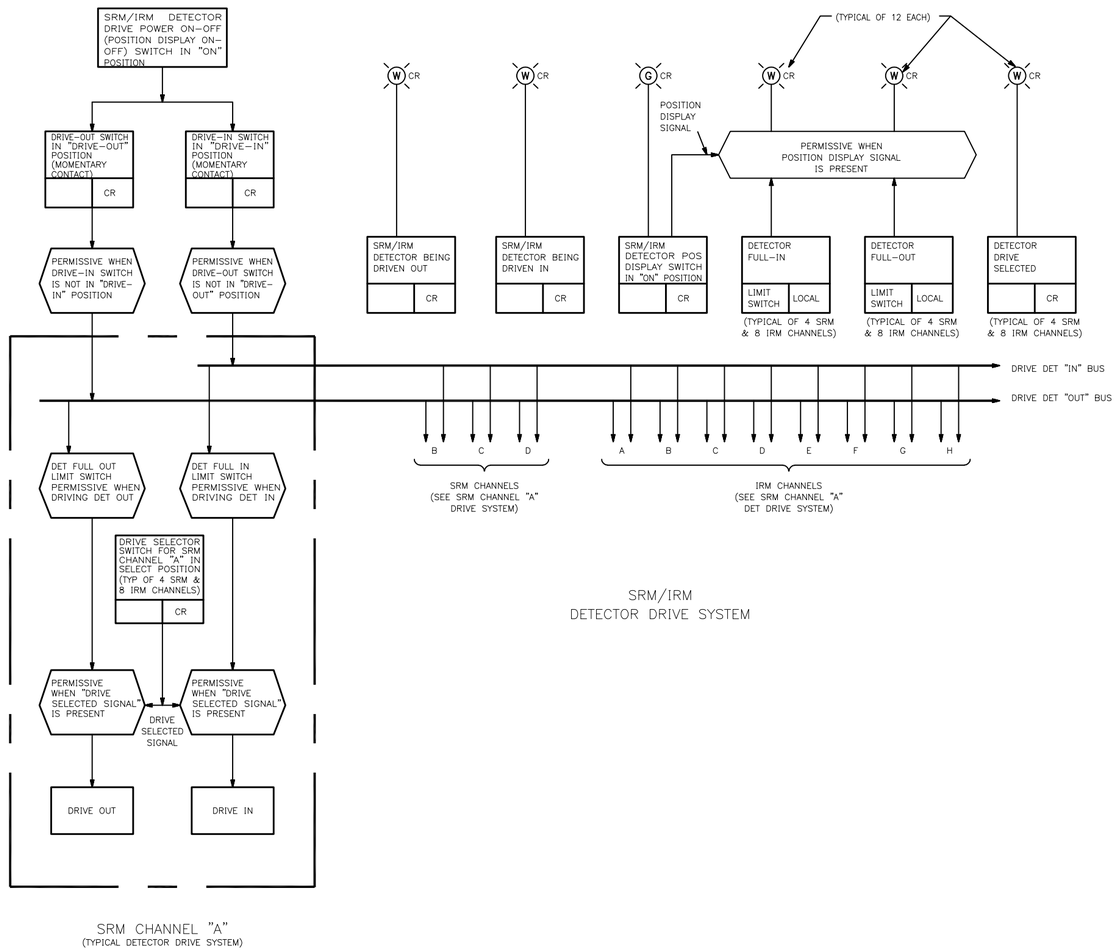

INFORMATION ONLY

452005332

CADD DRAWING

DO NOT REVISE MANUALLY

* THIS DRAWING GENERATED BY NPPD

** FOR PREVIOUS REVISIONS SEE SUPERSEDED CARDS

NO.	REVISIONS	DFT	CKD	APP	DATE
** NO1	REVISED AND REDRAWN PER APA DCN C93-1783	TRU	JAC	BAM	12/01/93

DCN REVISIONS BY N.P.P.D.

SIGNIFICANT NUMBER

GROUP 1 2 3 4 5 6

COOPER NUCLEAR STATION
NEUTRON MONITORING SYSTEM
FUNCTIONAL CONTROL DIAGRAM

DRAWN TRU	DATE 10/05/93	GENERAL ELECTRIC*
CHECKED JAC	DATE 10-29-93	
APPROVED BAM	DATE 12/01/93	
FILMED	730E805BA SH.6	REVISION NO1

CADD FILE: C0011070

REVISIONS

NO.

CADD FILE:

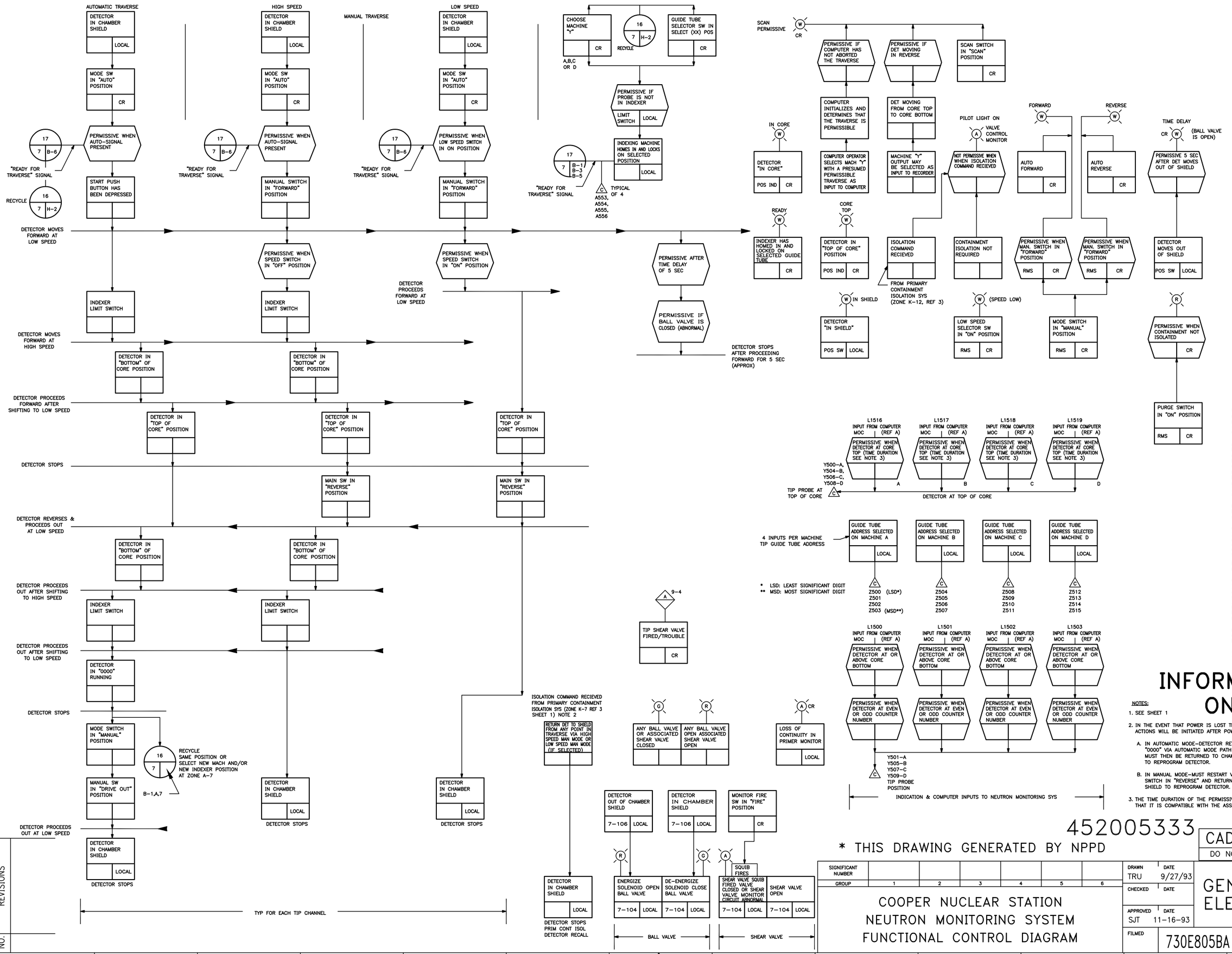

FOR PERVIOUS REVISIONS SEE SUPERSEDED CARDS

NO.	REVISIONS	DFT	CKD	APP	DATE
** NO1	REVISED AND REDRAWN PER APA DCN C93-1576	TRU	JAC	SJT	11-16-93

DCN REVISIONS BY N.P.D.

INFORMATION ONLY

NOTES:

1. SEE SHEET 1
2. IN THE EVENT THAT POWER IS LOST THE FOLLOWING ACTIONS WILL BE INITIATED AFTER POWER IS RESTORED.
   A. IN AUTOMATIC MODE-DETECTOR RETURNS TO "0000" VIA AUTOMATIC MODE PATH DETECTOR MUST THEN BE RETURNED TO CHAMBER SHIELD TO REPROGRAM DETECTOR.
   B. IN MANUAL MODE-MUST RESTART VIA MANUAL SWITCH IN "REVERSE" AND RETURN TO CHAMBER SHIELD TO REPROGRAM DETECTOR.
3. THE TIME DURATION OF THE PERMISSIVE SHALL BE SUCH THAT IT IS COMPATIBLE WITH THE ASSOCIATED COMPUTER.

452005333

* THIS DRAWING GENERATED BY NPPD

CADD DRAWING
DO NOT REVISE MANUALLY

SIGNIFICANT NUMBER						
GROUP	1	2	3	4	5	6

COOPER NUCLEAR STATION
NEUTRON MONITORING SYSTEM
FUNCTIONAL CONTROL DIAGRAM

DRAWN TRU	DATE 9/27/93	GENERAL ELECTRIC*
CHECKED	DATE	
APPROVED SJT	DATE 11-16-93	
FILMED	730E805BA SH.7	REVISION NO1

CADD FILE: C0011071

	ITEM	ALT	DESCRIPTION	REF. IDENTIFICATION	QTY.	EP NUMBER
	1		DETECTOR DRIVE	112C2345G001	1	B11/B13-D192
	2		SHUTTLE TUBE ***	RS-E5-0800-20X	1	PART OF B11/B13-D192
5		2A	SHUTTLE TUBE	RS-E5-0810-401	X	PART OF B11/B13-D192
	3		DRY TUBE ***	RS-E5-1200-206	1	B11/B13-D191
5		3A	DRY TUBE	RS-E5-1500-201	X	B11/B13-D191
	4		FLANGE	107C5053G002	1	
	5		ADAPTER	172C2528G001	1	
	6		THREAD SEAL	159A2501P001	1	PART OF B11/B13-D192
	7		HEX NUT	SEE NOTE 4	1	
	8		FLAT WASHER	167A1629P001	1	
	9		FLAT WASHER	SEE PLANT MPL	–	B11/B13-D052
	10		BOLT	SEE PLANT MPL	–	B11/B13-D056
	11		SOC HEAD SCREW	117C1007P23016	8	PART OF B11/B13-D192
	12		FLAT WASHER	175A8011P012	8	
	13		FLEX SHAFT	112C2346P002 OR MC-0601-064B	1	PART OF B11/B13-D192
	14		MOTOR MODULE	13589892	1	C51-S001
	15		DETECTOR	112C3144	1	C51-N001 OR C51-N002
	16		CABLE	SUPPLIED BY AE	–	–
		17A	EQI PLUG	RS-E3-0026	X	PART OF B11/B13-D192
		17A	EQI RECEPTACLE	RS-E3-0021	X	PART OF B11/B13-D192
	18		ACCESS PARTS	237X614G001	1	PART OF C51-S001
	19					
	20					
	21		O RING	SEE PLANT MPL	–	B11/B13-D050
	22		O RING	209A4117P003	1	PART OF B11/B13-D192
	23		SEALANT	213A6931P001	1	
7	24			DELETED		

** USED FOR JOINING ITEM 15 TO ITEM 16.
*** FOR ITEM WITH – X– IN PART No. REPLACE –X– WITH MODEL No. APPLING TO SITE SPECIFIC APPLICATION.

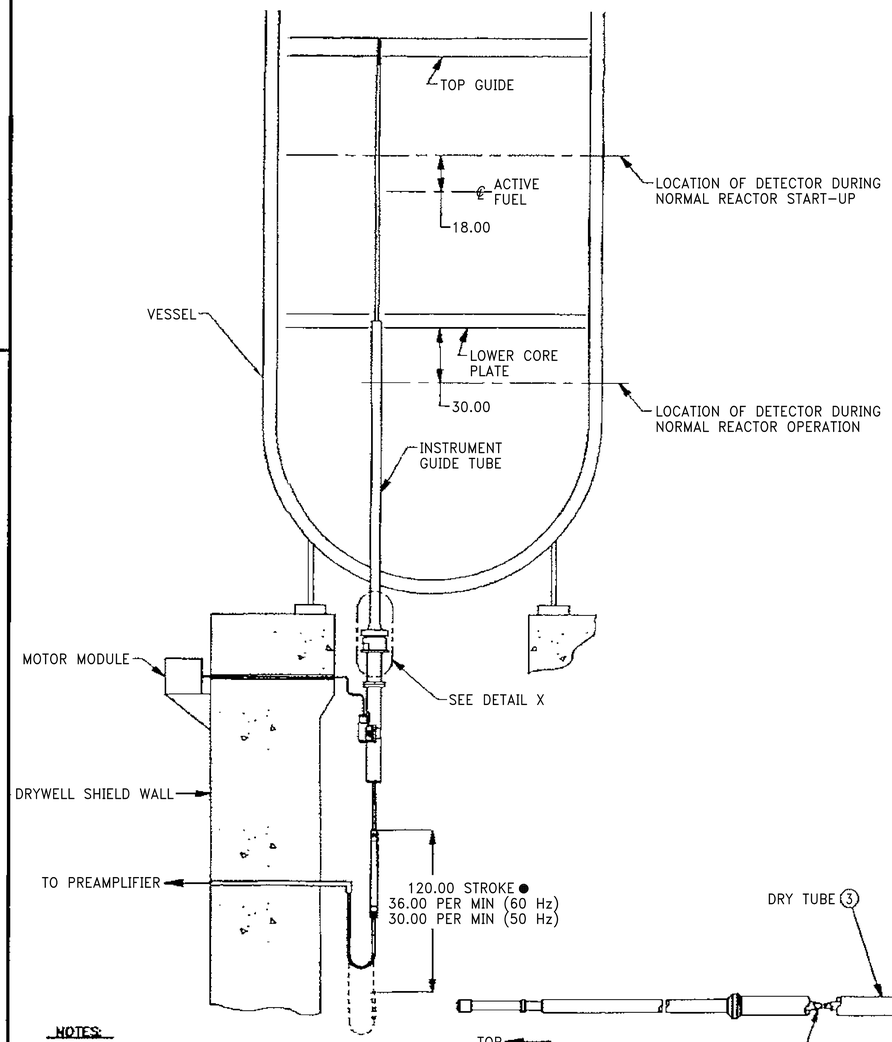

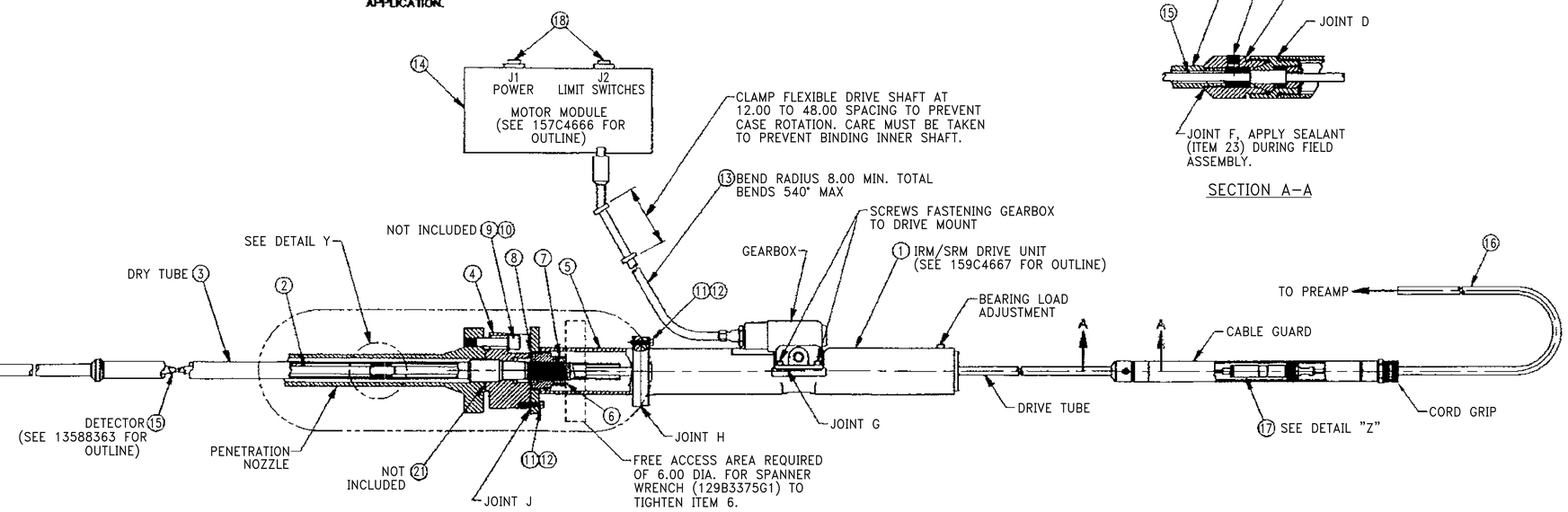

DETAIL X
ROTATED 90°

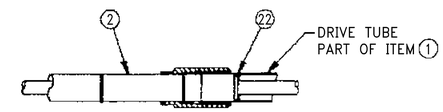

DETAIL Y

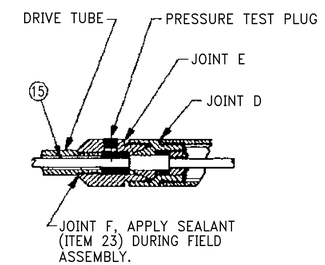

SECTION A–A

NOTES:

1– DISASSEMBLY POINTS:
- JOINT D – TO DISCONNECT ITEM 16
- JOINT E – TO REPLACE ITEM 15
- JOINT F – TO ALLOW DRIVE TUBE TO PASS THROUGH ITEM 1
- JOINT G – TO DISENGAGE GEAR BOX FROM ITEM 1
- JOINT H – TO REMOVE ITEM 1 OR DRIVE TUBE. (NOSE PIECE MUST BE REASSEMBLED TO ITEM 3 FOR PROTECTION IF ITEM 1 IS REMOVED. SEE B860424)
- JOINT J – TO REMOVE ADAPTER. (SEE NOTE ON "H" ABOVE).

2– TO DISCONNECT ELECTRICAL CABLE (ITEM 16) FROM DETECTOR DRIVE (ITEM 1):
- 2.1– LOOSEN CORD GRIP AT LOWER END OF CABLE GUARD.
- 2.2– UNSCREW CABLE GUARD AT JOINT D.
- 2.3– SEPARATE THE TWO ELECTRICAL CONNECTORS, KEEPING THE CABLE GUARD WITH THE ELECTRICAL CABLE.

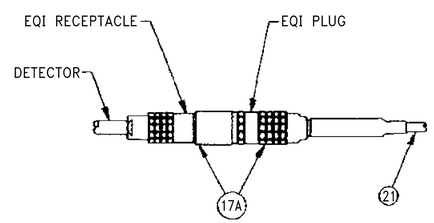

DETAIL Z
ALTERNATE CONSTRUCTION

USE 10482918P002 OR 193B1550P002. IF 193B1550P002 IS USED LUBRICANT MUST BE APPLIED BEFORE INSTALLATION.

THESE COMPONENTS MUST BE CONFIGURED TOGETHER FOR PROPER ASSEMBLY USE.

COOPER NUCLEAR STATION

453007347

SCAN/CADD DWG
DO NOT REVISE MANUALLY
CADD FILE: C0047197

INFORMATION ONLY

ITEM NO.	QTY REQ'D	PART OR IDENT NO	NOMENCLATURE OR DESCRIPTION
LIST OF MATERIAL OR PARTS			

FOR PREVIOUS REVISIONS, SEE SUPERSEDED CARDS.

REVISIONS BY N.P.P.D.

NO.	REVISIONS	DFT	CKD	APP	DATE
N02	VENDOR MANUAL REVIEW (DCN 02-0023)	RRT	DJF	KG	2-13-03
N03	TE-10645114 (DCN 09-0253)	RC	DJF	KZ	11-4-10

UNLESS OTHERWISE SPECIFIED DIMENSIONS ARE IN INCHES AND DIMENSIONAL UNITS ARE AS FOLLOWS:
SURFACE FINISH .33 MICRON
FRACTIONAL .XX
ANGULAR .XXX
MATERIAL

DWN M.TAYLOR 6-13-69
CHKD M.TAYLOR 6-13-69
APPROVED R.C.RYAN 6-13-69
APPROVED N/A
APPROVED N/A

Rosser-Stokes
Eastern Park, Twinsburg Ohio 44087

INCORE STARTUP CHAMBER RETRACT MECHANISM (FIELD INSTALLATION)

SIZE D | DWG NO 730E923 | REV N03
SCALE D.N.S | M0410010 | SHEET 1

GENERAL ELECTRIC

731E611

PRIMARY STEAM PIPING
NUCLEAR BOILER
PURCHASED PART

FCF 23BX100BB (COOPER) 2-190

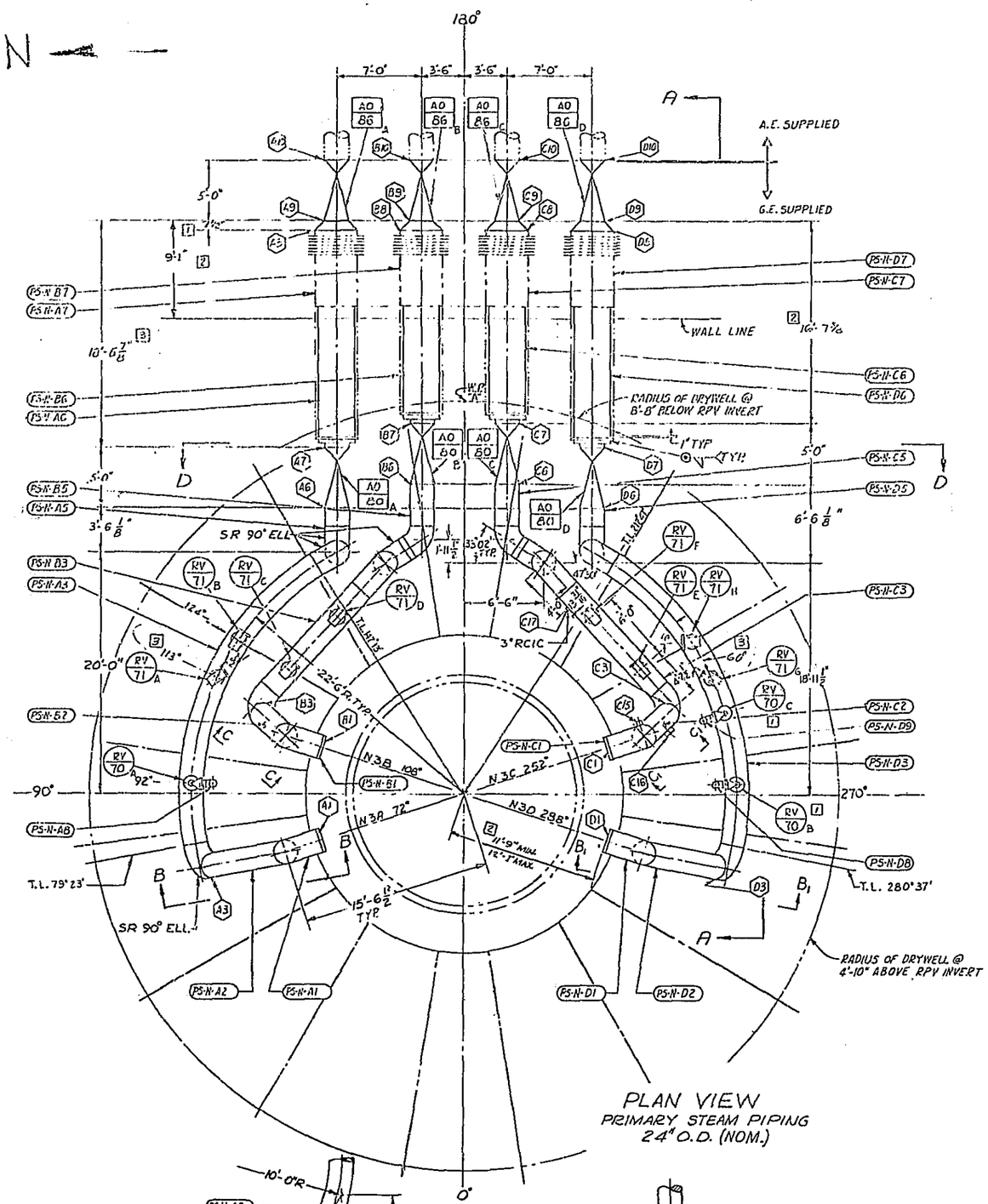

PLAN VIEW
PRIMARY STEAM PIPING
24" O.D. (NOM.)

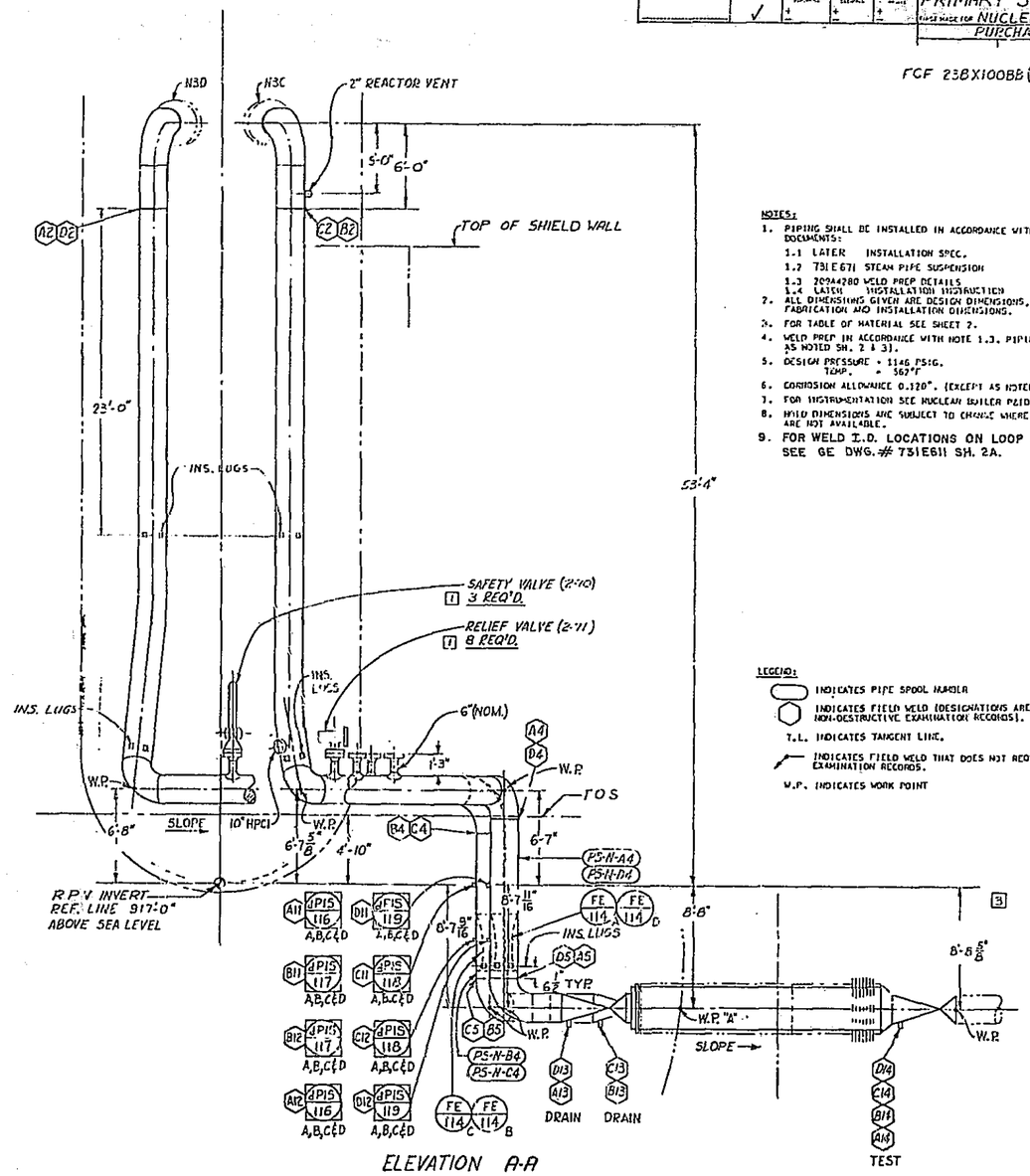

ELEVATION A-A

NOTES:

1. PIPING SHALL BE INSTALLED IN ACCORDANCE WITH THE FOLLOWING DOCUMENTS:
   1.1 LATER INSTALLATION SPEC.
   1.2 731E671 STEAM PIPE SUSPENSION
   1.3 20944280 WELD PREP DETAILS
   1.4 LATER INSTALLATION INSTRUCTION
2. ALL DIMENSIONS GIVEN ARE DESIGN DIMENSIONS, WHICH CONTROL FABRICATION AND INSTALLATION DIMENSIONS.
3. FOR TABLE OF MATERIAL SEE SHEET 2.
4. WELD PREP IN ACCORDANCE WITH NOTE 1.3. PIPING IS CLASS A (EXCEPT AS NOTED SH. 2 & 3).
5. DESIGN PRESSURE = 1146 PSIG.
   TEMP. = 562°F
6. CORROSION ALLOWANCE 0.120". (EXCEPT AS NOTED)
7. FOR INSTRUMENTATION SEE NUCLEAR BOILER P&ID NPL 2-000.
8. WELD DIMENSIONS ARE SUBJECT TO CHANGE WHERE FINAL EQUIPMENT DIMENSIONS ARE NOT AVAILABLE.
9. FOR WELD I.D. LOCATIONS ON LOOP A THRU D, SEE GE DWG.# 731E611 SH. 2A.

LEGEND:

- INDICATES PIPE SPOOL NUMBER
- INDICATES FIELD WELD (DESIGNATIONS ARE TO BE USED FOR NON-DESTRUCTIVE EXAMINATION RECORDS).
- T.L. INDICATES TANGENT LINE.
- INDICATES FIELD WELD THAT DOES NOT REQUIRE NON-DESTRUCTIVE EXAMINATION RECORDS.
- W.P. INDICATES WORK POINT

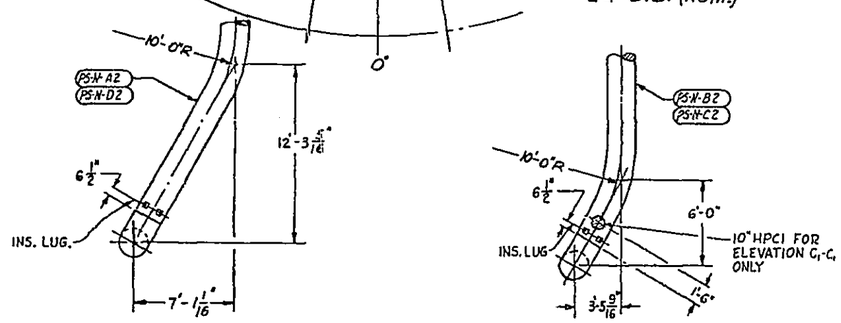

ELEVATION B-B
ELEVATION B-B, OPP. HAND

ELEVATION CC
ELEVATION C-C, OPP. HAND

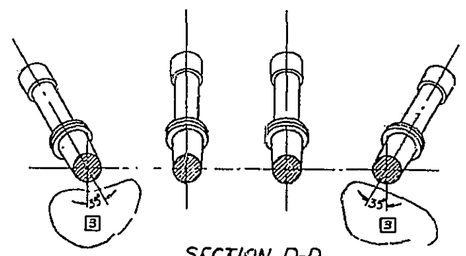

SECTION D-D
VALVE ORIENTATION
INTERIOR ONLY

COOPER STATION
NPL 2-190

THIS IS A REDUCED PRINT

Nebraska Public Power District

452005404

NO.	REVISIONS	BY	CHK	APP	DATE
NO4	REV. PER DCN 89-4017	RK		JH	11-10-89
NO3	REV. PER DCN 86-331.	MB		MAH	7/25/86
NO2	REV. PER DCN 79-338	SGH	DEV		12/8/79
	FOR INFO. ONLY				
NO1	DCN 77-351 AS BLT DWG	RH	DLT		5/11/77

ALL FUTURE REVISIONS BY NPPD

REVISIONS

	ANC CORRECTED CER JT DIMS FROM 5" TO 7½" & 7½" TO 7½"
	CHANGED NUMBER OF SAFETY VALVES FROM 2 TO 3, AND REMOVED SCH. SCHED. CHGD NO OF RELIEF VALVES FROM 9 TO 8
	DELETED HOLD & 7½"

PRINTS TO

APPD
SAN JOSE

731E611

REV'D CHECKED BY KAM 11-8-68

1 OF 8

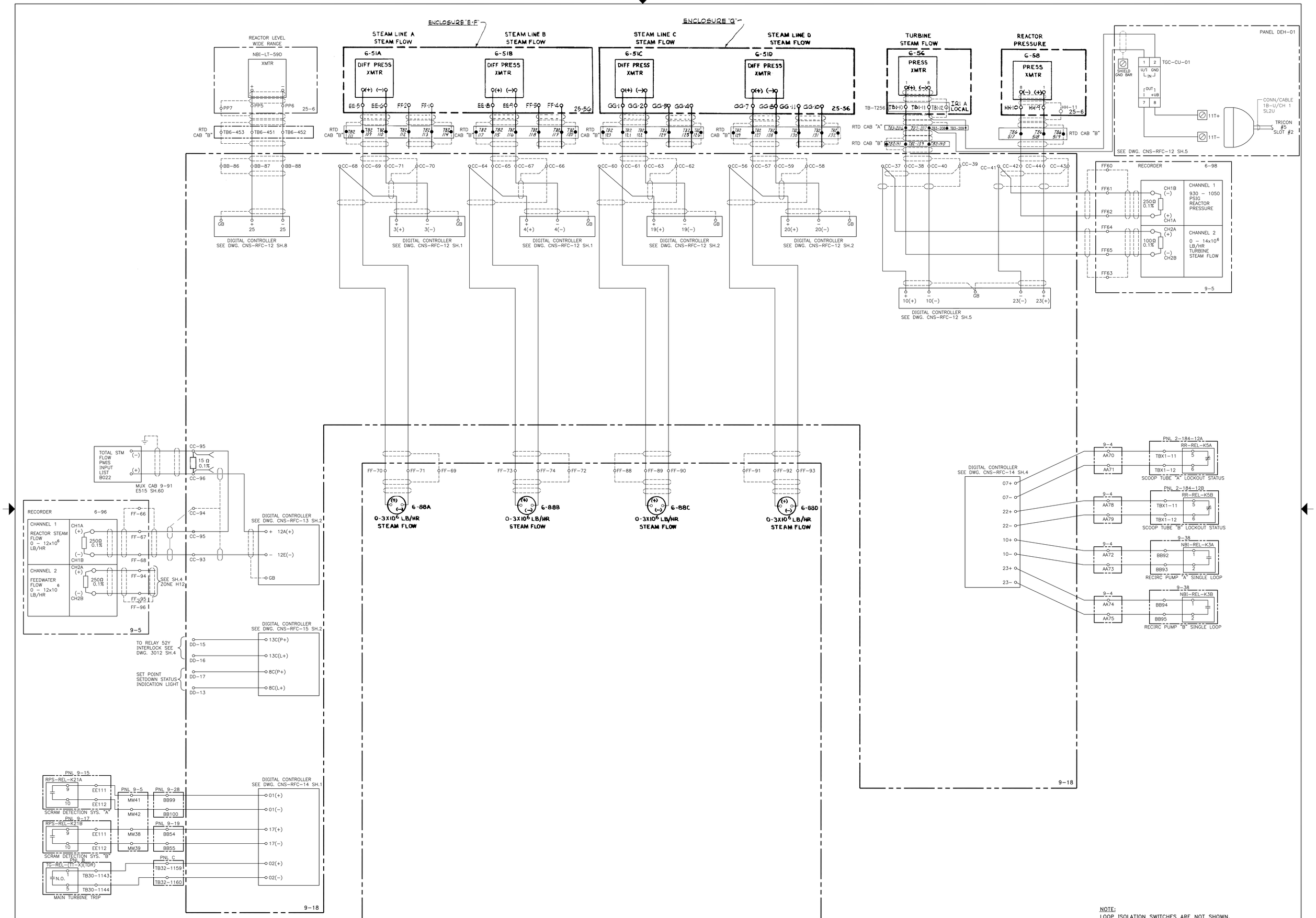

NOTE:
LOOP ISOLATION SWITCHES ARE NOT SHOWN.

AS BUILT
454006805

SCAN/CADD DWG
DO NOT REVISE MANUALLY

FOR PREVIOUS REVISIONS, SEE SUPERSEDED CARDS.

REVISIONS BY N.P.P.D.

NO.	REVISIONS	DFT	CKD	APP	DATE
N11	CED6007522 (DCN 01-0733)	DLR	KG	RGA	3/18/03
N12	CED 6010281 (DCN 03-0081)	KG	KG	WTF	12/22/03
N13	PROC. 7.3.46, #0.0446267(DCN 05-1151)	DLR	DLR	KG	10/13/05
N14	CED 6010820 (DCN 04-0614)	DLR	DJB	PAM	4/28/08
N15	CED 6016559 (DCN 09-1455)	KG	KPB	DJB	10/16/08
N16	CED 6016559 (DCN 11-2138)	DJB	DJB	KZ	10/24/11

SIGNIFICANT NUMBER | GROUP | 1 | 2 | 3 | 4 | 5 | 6

ELEMENTARY DIAGRAM
FEEDWATER CONTROL SYSTEM

COOPER NUCLEAR STATION

DRAWN DLR DATE 3/18/03
CHECKED DATE
APPROVED DATE
SEE SUPERSEDED CARDS
FILMED

GENERAL ELECTRIC

791E257 SH 3 REVISION N16

CARD FILE C0036405

REVISIONS NO.

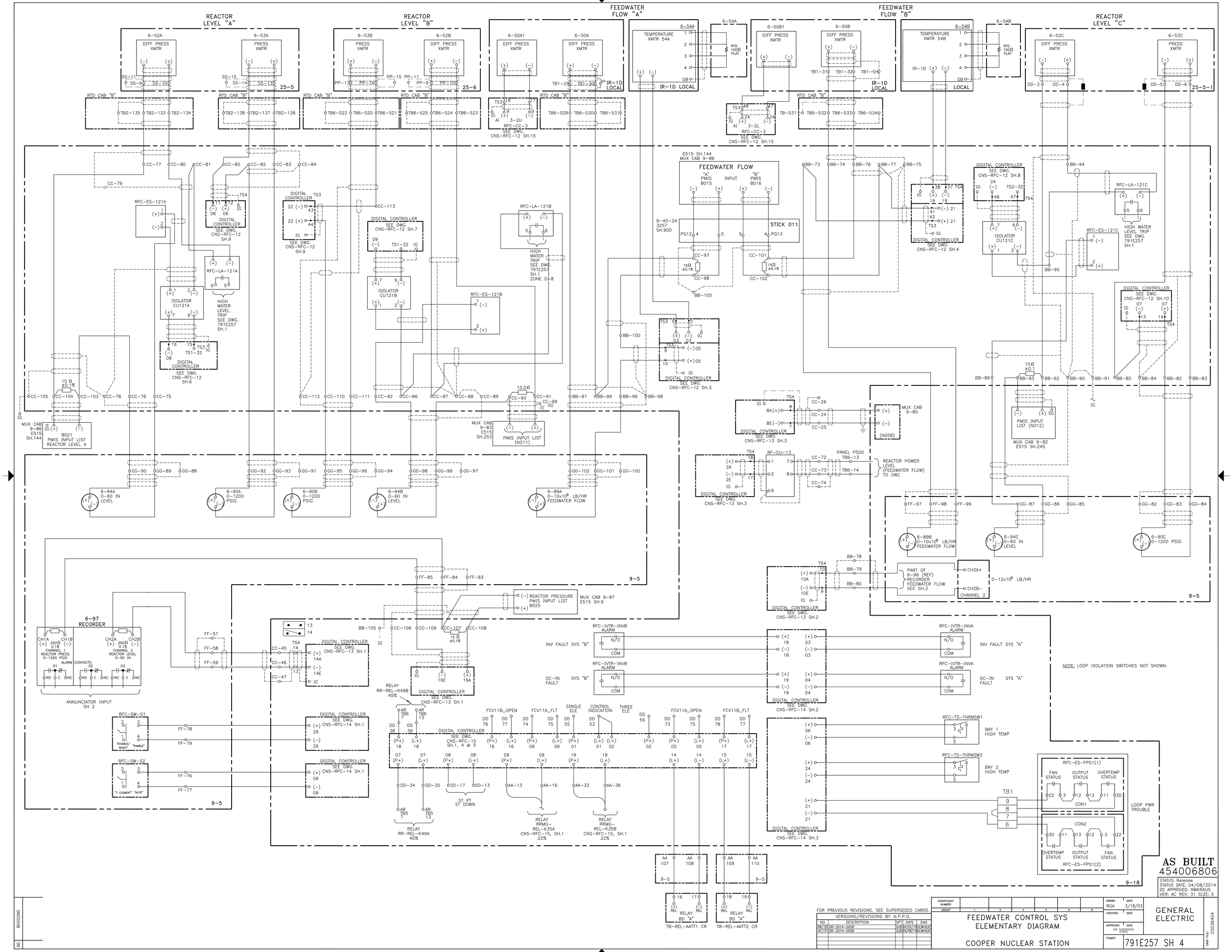

AS BUILT
454006806

STATUS: Release
STATUS DATE: 04/08/2014
DS APPROVED: RWKRAUS
VER: AC REV: 31 SIZE: E

FOR PREVIOUS REVISIONS, SEE SUPERSEDED CARDS.

VERSIONS/REVISIONS BY N.P.P.D.

NO.	DESCRIPTION	DFT	DATE	ENG
AB/30	DR-2014-0008	DJB	04/03/14	DCWHEAT
AC/31	DR-2014-0008	DJB	04/08/14	DCWHEAT

SIGNIFICANT NUMBER | GROUP 1 2 3 4 5 6

FEEDWATER CONTROL SYS
ELEMENTARY DIAGRAM

COOPER NUCLEAR STATION

DRAWN RGA DATE 3/18/03
CHECKED DATE
APPROVED DATE
SEE SUPERSEDED CARDS
FILMED

GENERAL ELECTRIC

791E257 SH 4

CAD FILE C00386404

REVISIONS NO.

REVISIONS						
ZONE	J	DESCRIPTION	DWN	CHK	DATE	APPROVED
G-6	1	CRA NO 213	L.Z.		2-3-77	RAM

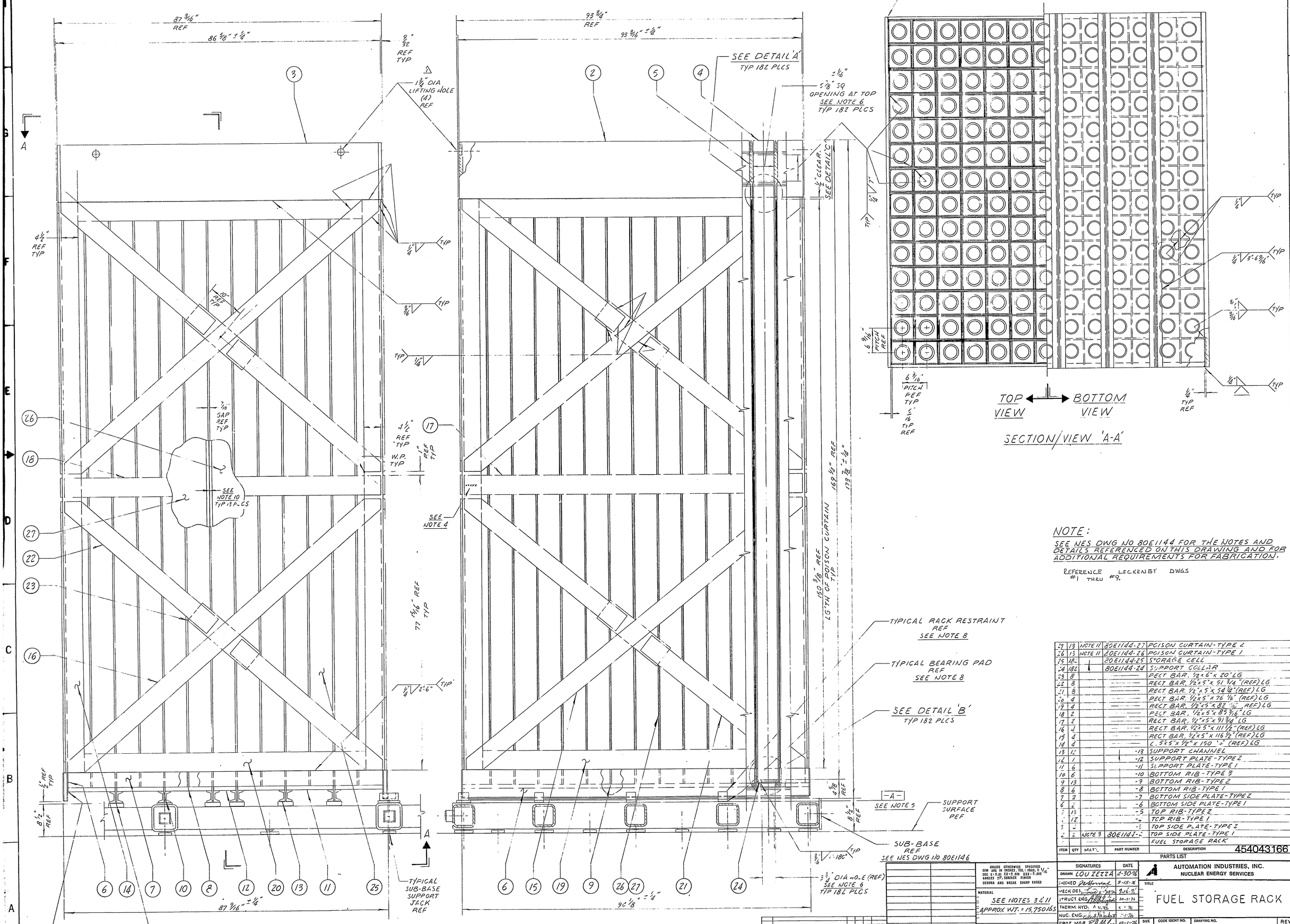

NOTE:
SEE NES DWG NO 80E1144 FOR THE NOTES AND DETAILS REFERENCED ON THIS DRAWING AND FOR ADDITIONAL REQUIREMENTS FOR FABRICATION.

REFERENCE #1 THRU #9. LECKENBY DWGS

ITEM	QTY	MATL	PART NUMBER	DESCRIPTION
27	13	NOTE 11	80E1144-27	POISON CURTAIN-TYPE 2
26	13	NOTE 11	80E1144-26	POISON CURTAIN-TYPE 1
25	182		80E1144-25	STORAGE CELL
24	182		80E1144-24	SUPPORT COLLAR
23	8			RECT BAR, 1/2 x 6" x 20" LG
22	8			RECT BAR, 1/2" x 5" x 51 3/4" (REF) LG
21	8			RECT BAR, 1/2" x 5" x 54 1/4" (REF) LG
20	4			RECT BAR, 1/2" x 5" x 76 1/16" (REF) LG
19	4			RECT BAR, 1/2" x 5" x 82 1/16" (REF) LG
18	2			RECT BAR, 1/2" x 5" x 85 3/16" LG
17	2			RECT BAR, 1/2" x 5" x 91 3/16" LG
16	4			RECT BAR, 1/2" x 5" x 111 1/2" (REF) LG
15	4			RECT BAR, 1/2" x 5" x 116 1/2" (REF) LG
14	4			∠ 5" x 5" x 1/2" x 150 1/4" (REF) LG
13	12		-13	SUPPORT CHANNEL
12	1		-12	SUPPORT PLATE-TYPE 2
11	6		-11	SUPPORT PLATE-TYPE 1
10	6		-10	BOTTOM RIB-TYPE 3
9	13		-9	BOTTOM RIB-TYPE 2
8	6		-8	BOTTOM RIB-TYPE 1
7	2		-7	BOTTOM SIDE PLATE-TYPE 2
6	2		-6	BOTTOM SIDE PLATE-TYPE 1
5	13		-5	TOP RIB-TYPE 2
4	12		-4	TOP RIB-TYPE 1
3	2		-3	TOP SIDE PLATE-TYPE 2
2	2	NOTE 3	80E1143-2	TOP SIDE PLATE-TYPE 1
1				FUEL STORAGE RACK

PARTS LIST

454043166

80E1143

SIGNATURES		DATE
DRAWN	LOU ZEZZA	4-30-76
CHECKED	[illegible]	9-15-76
MECH. DES.	[illegible]	9-16-76
STRUCT. ENG.	[illegible]	10-1-76
THERM. HYD.	[illegible]	10-1-76
NUC. ENG.	[illegible]	10-1-76
PROJ. MGR.	[illegible]	10-1-76
V.P. ENG.	[illegible]	10-5-76
Q.A. MGR.	[illegible]	10-5-76
N.P.P.D.	[illegible]	10-7-76

AUTOMATION INDUSTRIES, INC.
NUCLEAR ENERGY SERVICES

TITLE: FUEL STORAGE RACK

SIZE	CODE IDENT NO.	DRAWING NO.	REV
E	78446	80E1143	UD1

SCALE AUTO | PROJ: 5110-200 | SHEET

UNLESS OTHERWISE SPECIFIED DIM ARE IN INCHES, TOL: FRAC. ± 1/16 DEC X ± .03 XX ± .010 XXX ± .005 ANGLES ±1°, SURFACE FINISH DEBURR AND BREAK SHARP EDGES

MATERIAL: SEE NOTES 3 & 11
APPROX WT. = 15,750 LBS

FINISH: SEE NOTE 2

NEXT ASSY | USED ON
APPLICATION

NO.	REVISIONS	BY	CHK	APP	DATE
UD1	REV PER DCN 80-125	GGI	AN	JGA	7-22-80

ALL FUTURE REVISIONS BY N.P.P.D.

1 FUEL STORAGE RACK

THIS DRAWING CONTAINS CONFIDENTIAL INFORMATION AND IS SUPPLIED BY AUTOMATION INDUSTRIES INC., THE OWNER OF SUCH INFORMATION. IN ACCEPTING THE DRAWING THE USER AGREES THAT IT IS FOR THE USER'S SOLE USE. THAT IT WILL NOT BE REPRODUCED OR DISTRIBUTED TO OTHERS AND THAT THE DRAWING OR THE INFORMATION CONTAINED THEREIN WILL NOT BE USED IN ANY MANNER DETRIMENTAL TO AUTOMATION INDUSTRIES INC.,

REVISIONS						
ZONE	NO	DESCRIPTION	DWN	CKD	DATE	APPROVED
ALL	1	CRA NO. 218	JDH		2-4-77	RAM
ALL	2	CRA NO. 226	JDH		3-10-77	RAM
ALL	3	CRA NO. 300	JDH		9-8-77	RAM
B7	4	CRA NO. 493	JDH		7-26-77	RAM

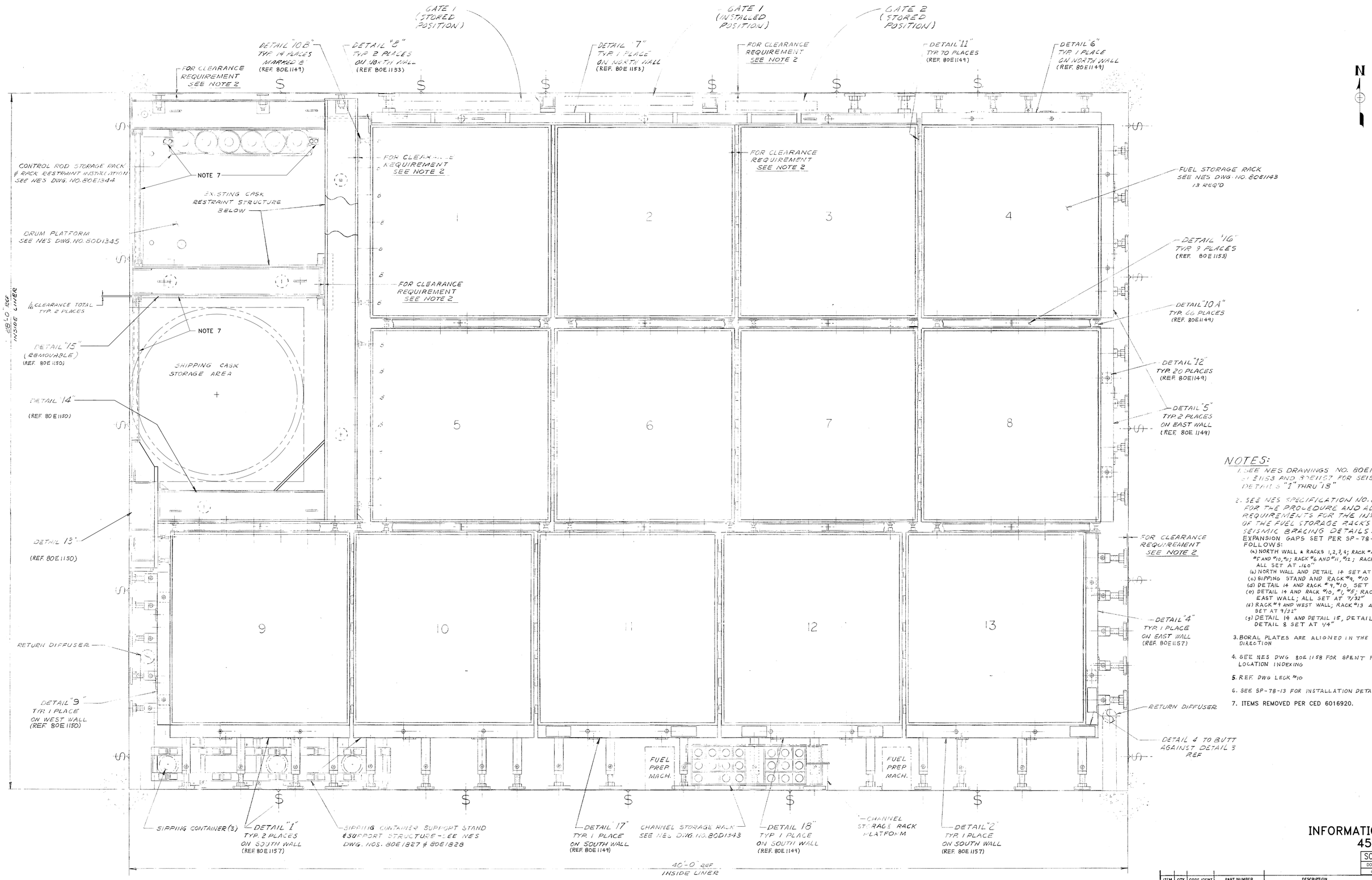

NOTES:

1. SEE NES DRAWINGS NO. 80E1149, 80E1150, 80E1153 AND 80E1157 FOR SEISMIC BRACING DETAILS "1" THRU "18"
2. SEE NES SPECIFICATION NO. 80A1279 FOR THE PROCEDURE AND ADDITIONAL REQUIREMENTS FOR THE INSTALLATION OF THE FUEL STORAGE RACKS AND SEISMIC BRACING DETAILS. THERMAL EXPANSION GAPS SET PER SP-78-13 ARE AS FOLLOWS:
   - (a) NORTH WALL & RACKS 1,2,3,4; RACK #4 AND #8; RACK #5 AND #10, #11; RACK #6 AND #11, #12; RACK #7 AND #13, #14; ALL SET AT .160"
   - (b) NORTH WALL AND DETAIL 14 SET AT .080"
   - (c) SIPPING STAND AND RACK #9, #10 SET AT 1/16"
   - (d) DETAIL 14 AND RACK #4, #10, SET AT .180"
   - (e) DETAIL 14 AND RACK #10, #1, #5; RACK #8 AND EAST WALL; ALL SET AT 7/32"
   - (f) RACK #9 AND WEST WALL; RACK #13 AND EAST WALL; SET AT 9/32"
   - (g) DETAIL 14 AND DETAIL 15, DETAIL 7 AND DETAIL 8 SET AT 1/4"
3. BORAL PLATES ARE ALIGNED IN THE EAST-WEST DIRECTION
4. SEE NES DWG 80E1158 FOR SPENT FUEL CELL LOCATION INDEXING
5. REF. DWG LEGK #10
6. SEE SP-78-13 FOR INSTALLATION DETAIL
7. ITEMS REMOVED PER CED 6016920.

INFORMATION ONLY
454043171

SCAN/CADD DWG
DO NOT REVISE MANUALLY
CADD FILE: C0070954

ITEM	QTY	CODE IDENT	PART NUMBER	DESCRIPTION

PARTS LIST

FOR PREVIOUS REVISIONS, SEE SUPERSEDED CARDS.

REVISIONS BY N.P.P.D.					
NO.	REVISIONS	DFT	CKD	APP	DATE
N03	CED 6016920 (DCN 06-0568)	DLR	DJB	KG	11-5-08

UNLESS OTHERWISE SPECIFIED DIM ARE IN INCHES. TOL (SAME AS DEC X: ±.03 XX: ±.02 XXX: ±.005 ANGLES ±1° SURFACE FINISH 125 DEBURR AND BREAK SHARP EDGES

MATERIAL

FINISH

NEXT ASSY | USED ON

APPLICATION

SIGNATURES		DATE
DRAWN	JOE HORNAK	6-11-76
CHECKED	W. HATCH, JR.	10-1-76
MECH. DES.		10-1-76
STRUCT. ENG.		10-1-76
THERM. HYD.	A. UZIEL	10-1-76
NUC. ENG.		10-1-76
PROJ. MGR.		10-1-76
V.P. ENG.		10-5-76
Q.A. MGR.		10-5-76
N.P.P.D.		10-7-76

AUTOMATION INDUSTRIES, INC.
NUCLEAR ENERGY SERVICES

TITLE: FUEL STORAGE RACK(13) AND SEISMIC BRACING INSTALLATION IN POOL

SIZE	CODE IDENT NO.	DRAWING NO.	REV
E	78446	80E1148	N03

SCALE: 3/8"=1'-0" | PROJ: 5110-200 | SHEET

80E1148

GENERAL ELECTRIC

UNLESS OTHERWISE SPECIFIED USE THE FOLLOWING:— APPLIED PRACTICES | SURFACES 250 | TOLERANCES ON MACHINED DIMENSIONS: FRACTIONS ± 1/16, DECIMALS ±, ANGLES ± | SH NO 2.3 | 919D690BC | CONT ON SHEET 4 | SH NO 3

TITLE: REACTOR VESSEL

FIRST MADE FOR: REACTOR ASM.

PURCHASED PART

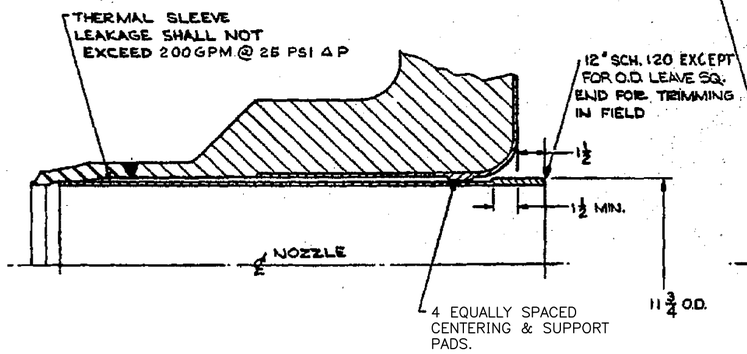

FEEDWATER NOZZLE

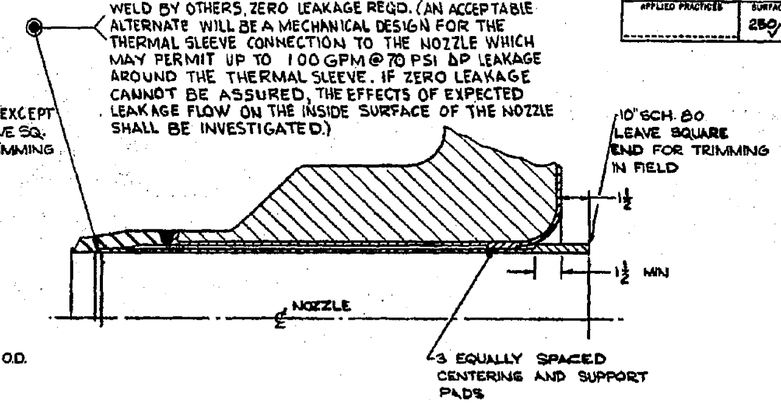

CORE SPRAY NOZZLE

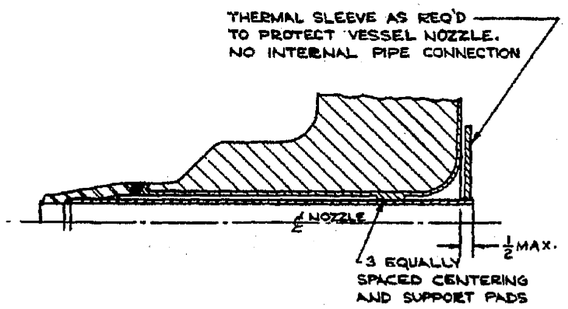

CONTROL ROD DRIVE HYDRAULIC SYSTEM RETURN NOZZLE

CRD RETURN LINE WAS CAPPED BY MDC 77–100

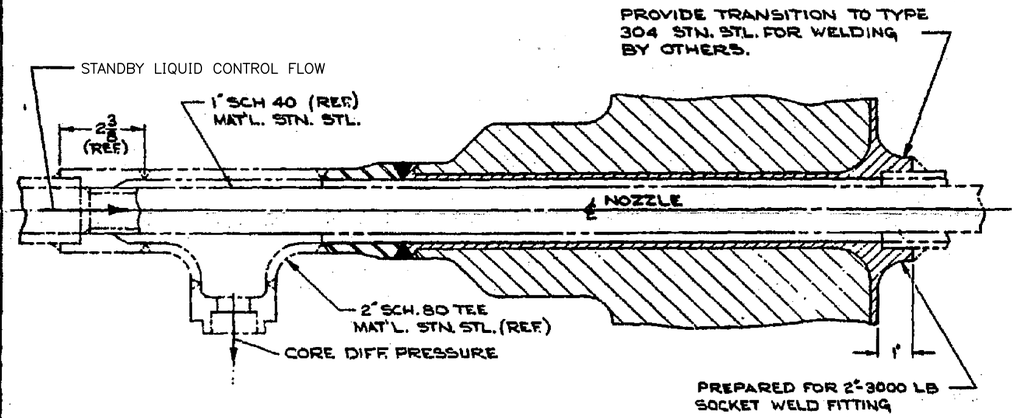

CORE DIFFERENTIAL PRESSURE & STANDBY LIQUID CONTROL NOZZLE

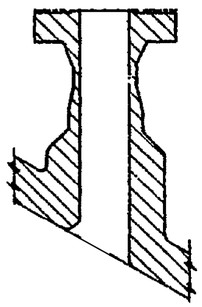

INSTR. NOZZLE ON HEAD

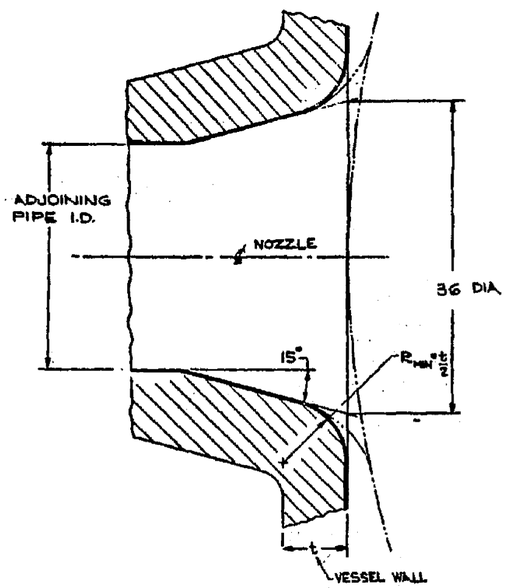

RECIRCULATION OUTLET NOZZLE

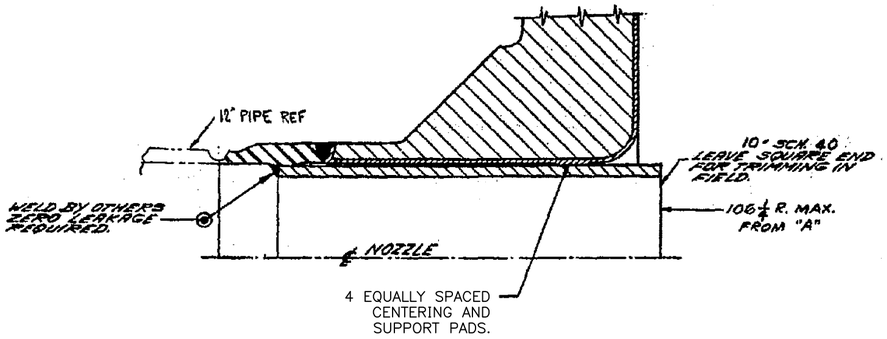

RECIRCULATION INLET NOZZLE

NOTES:

1. THIS DRAWING PROVIDES FUNCTIONAL REQUIREMENTS & IS NOT INDICATIVE OF DETAIL DESIGN OF NOZZLES OR THERMAL SLEEVES. THE SUPPLIER SHALL PROVIDE DETAIL DESIGN TO CARRY IMPOSED LOADS & ACCOMMODATE THERMAL TRANSIENTS.
2. NOZZEL SAFE–ENDS AND THERMAL SLEEVES WERE REPLACED IN 1985 PER CONTRACT 84–2. FOR DETAILS SEE COMBUSTION ENGINEERING DRAWINGS 232–241, 232–242 & 232–243, CBI DWGS 13, 16, 18 & 24, AND NPPD DWG CNS–NBI–1.

FOR PREVIOUS REVISIONS, SEE SUPERSEDED CARDS.

REVISIONS BY N.P.P.D.

NO.	REVISIONS	DFT	CKD	APP	DATE
N01	EE 07–01 & DCN 91–2041	RAC	DJF	KG	6–3–09
	(DCN 08–1656)				

COOPER NUCLEAR STATION

INFORMATION ONLY

452247204

SCAN/CADD DWG

REV	DO NOT REVISE MANUALLY
N01	CADD FILE: C0085516

W.S. KINKE FEB. 19, 1963 | T.R. FEB. 26, 68 | APED SAN JOSE | 919D690BC | SH. NO. 3 | CONT ON SHEET 4 | CKD. WSK

GENERAL ELECTRIC

UNLESS OTHERWISE SPECIFIED USE THE FOLLOWING:— APPLIED PRACTICES — SURFACES 250√ — TOLERANCES ON MACHINED DIMENSIONS: FRACTIONS ± 1/32, DECIMALS ±, ANGLES ±

SIZE E/2 — 919D690BC — SH NO 5

TITLE: REACTOR VESSEL

FIRST MADE FOR ~~REACTOR~~ ASM.

PURCHASED PART

THERMOCOUPLE PADS

MONITORED TEMPERATURE	END PAD AZIMUTH LOCATION (CLAMP PAD TOWARD VESSEL AZIMUTH 330°)	ELEVATION LOCATION ON VESSEL
VESSEL FLANGE	0°, 135°, 270°	JUST ABOVE SEAL SKIRT ATTACHMENT
VESSEL WALL (ADJACENT TO FLANGE)	0°, 135°, 270°	5" BELOW FLANGE TO SHELL WELD
FEEDWATER NOZZLES 4B & 4D	SEE FIGURE 1	
VESSEL WALL	0°, 135°, 270°	36" BELOW FEEDWATER NOZZLE
VESSEL WALL (ABOVE BOTTOM HEAD)	0°, 135°, 270°	5' ABOVE TANGENT LINE
BOTTOM HEAD (ADJACENT TO SUPPORT SKIRT)	0°, 135°, 270°	5" ABOVE SKIRT
TOP OF SUPPORT SKIRT	0°, 135°, 270°	3" BELOW HEAD JUNCTION
BOTTOM OF SUPPORT SKIRT	0°, 135°, 270°	3" ABOVE SKIRT FLANGE
BOTTOM HEAD	SEE VIEW AT "H"	
TOP HEAD (ADJACENT TO FLANGE)	~135° & 270° (MAGNETIC BASE T/C'S)	5" ABOVE FLANGE TO HEAD WELD
TOP HEAD FLANGE	~135° & 270° (MAGNETIC BASE T/C'S)	MID FLANGE BETWEEN STUDS
HEAD STUDS	~135° & 270° (PROBE T/C)	MID-LENGTH-IN CENTER HOLE

REF. - NO PADS OR OTHER SPECIAL FEATURES REQ'D.

THERMOCOUPLE END PADS TO BE LOCATED ±1/4 OF NORMAL POSITION.

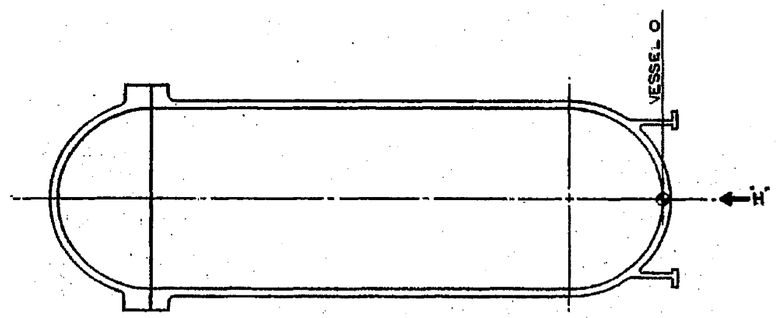

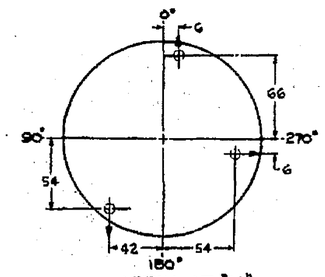

VIEW AT "H" [1]

NOTE: ARROWS INDICATE DIRECTION OF CLAMP PAD FROM END PAD LOCATION.

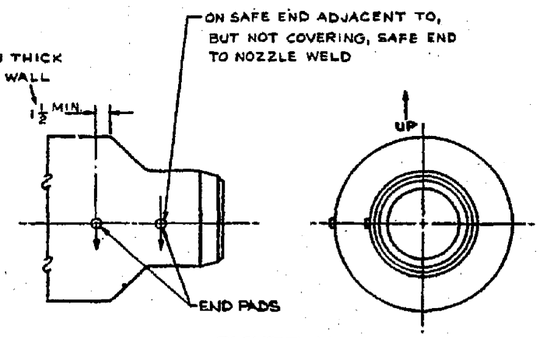

FIGURE 1

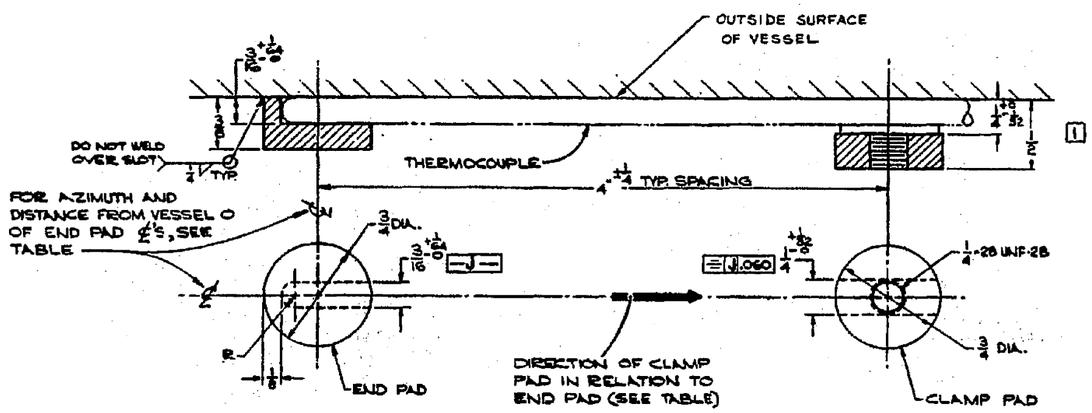

THERMOCOUPLE PADS

COOPER NUCLEAR STATION

INFORMATION ONLY
452247205

FOR PREVIOUS REVISIONS, SEE SUPERSEDED CARDS.

REVISIONS BY N.P.P.D.

NO.	REVISIONS	DFT	CKD	APP	DATE
N01	EE 07-01 (DCN 08-1660)	RAC	DJF	KG	6-3-09

SCAN/CADD DWG

REV	DO NOT REVISE MANUALLY
N01	CADD FILE: C0085517

W.S. WIRKE FEB 19, 1968 — APPROVED T. ROBINSON FEB 28, 68 — APED SAN JOSE — 919D690BC SH. NO. 5

CHKD. WJK

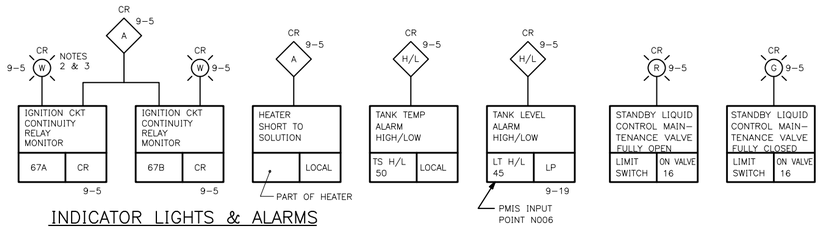

INDICATOR LIGHTS & ALARMS

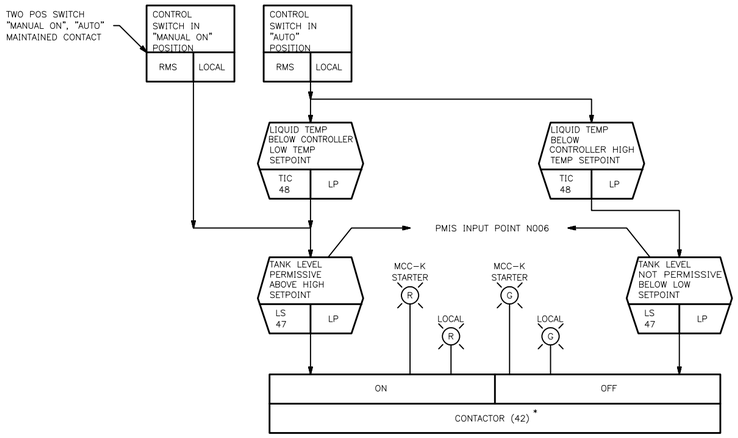

STANDBY LIQUID CONTROL TANK HEATER

MCC-K

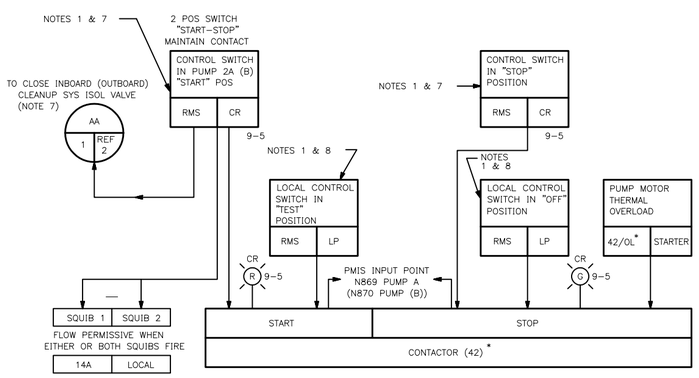

EXPLOSIVE VALVE 14A

TYPICAL FOR VALVE 14B

LIQUID CONTROL PUMP A MCC-K

TYPICAL FOR PUMP B (NOTE 7) (MCC-S)

NOTES:

1. EACH RMS CONTROL SWITCH IS KEYLOCKED IN "STOP" POSITION. SWITCH BYPASSES CONTINUITY MONITOR IN "START" POSITIONS TO FIRE VALVE SQUIBS.
2. CONTINUITY INDICATING LIGHT IS ON WHEN IGNITION CIRCUIT HAS CONTINUITY THROUGH ITS RESPECTIVE SQUIB CIRCUIT, ANNUNCIATOR ALARMS AND LIGHT GOES OUT UPON LOSS OF CONTINUITY IN EITHER IGNITION CIRCUIT.
3. CONTINUITY MONITOR CIRCUIT SHALL BE CURRENT LIMITED AND DESIGNED TO PREVENT ACCIDENTAL IGNITION OF EXPLOSIVE VALVES.
4. AUXILIARY RELAYS AND DEVICES NOT DRAWN ON FUNCTIONAL DIAGRAM.
5. ALL EQUIPMENT AND INSTRUMENTS ARE PREFIXED BY 11 UNLESS OTHERWISE SHOWN.
6. FOR LOCATION AND IDENTIFICATION OF INSTRUMENTS, SEE INSTRUMENT DATA SHEET LISTED IN MPL FOR EACH INSTRUMENT.
7. STARTING PUMP A(B) FROM FROM THE CONTROL ROOM FIRES SQUIB VALVE 14A(14B) AND CLOSES THE INBOARD (OUTBOARD) CLEAN-UP SYSTEM ISOLATION VALVE.
8. STARTING PUMP A(B) FROM LOCAL PANEL CONTROL SWITCH WHEN TESTING DOES NOT FIRE SQUIB VALVE OR CLOSE RWCU ISOLATION VALVE.

REFERENCE DRAWINGS:

1.	718E834BC	P&ID STANDBY LIQUID CONTROL SYSTEM
2.	729E916BB	FCD REACTOR WATER CLEANUP (12-202)
3.	209A4756	LOGIC SYMBOLS

LEGEND:

* -SWITCHGEAR DEVICE

AS BUILT
452007003

CADD DRAWING
DO NOT REVISE MANUALLY

* THIS DRAWING GENERATED BY NPPD

** FOR PREVIOUS REVISIONS SEE SUPERSEDED CARDS

REVISIONS

NO.	REVISIONS	DFT	CKD	APP	DATE
** NO3	DEPTD 2-21359 (DCN 98-0144)	CRW	JAC	KG	3-29-98
** NO2	REVISED AND REDRAWN PER APA DCN C93-1819	TRU	JAC	AGB	11-23-93

DCN REVISIONS BY N.P.P.D.

SIGNIFICANT NUMBER / GROUP 1 2 3 4 5 6

COOPER NUCLEAR STATION
STANDBY LIQUID CONTROL SYSTEM
FUNCTIONAL CONTROL DIAGRAM

DRAWN TRU	DATE 10/07/93	GENERAL ELECTRIC*
CHECKED JAC	DATE 11-1-93	
APPROVED AGB	DATE 11-23-93	
FILMED	920D225BB SH.1	REVISION NO3

CADD FILE: C0011072

TABLE 1

RANGE	SENSOR & CONVERTER	AUXILIARY UNIT	INDICATOR & TRIP UNIT	ALARM MODULE
.01–100 MR/HR	RE–2, 11, 12, 14, 16, 17, 20, 21, 22, 23, 28, 29, 30	RM–AU2, 11, 12, 14, 16, 17, 20, 21, 22, 23, 28, 29, 30	RA–2, 11, 12, 14, 16, 17, 20, 21, 22, 23, 28, 29, 30	AM–2, 11, 12, 14, 16, 17, 20, 21, 22, 23, 28, 29, 30
.1–1000 MR/HR	RE–4, 5, 6, 15, 25, 26, 27	RM–AU4, 5, 6, 15, 25, 26, 27	RA–4, 5, 6, 15, 25, 26, 27	AM–4, 5, 6, 15, 25, 26, 27
$1–10^4$ MR/HR	RE–18	RM–AU18	RA–18	AM–18
$100–10^6$ MR/HR	RE–1	RM–AU1	RA–1	AM–1

TABLE 2

RANGE	SENSOR & CONVERTER	INDICATOR & TRIP UNIT
.01–100 MR/HR	RE–3, 7, 8, 9, 10, 13, 19, 24	RA–3, 7, 8, 9, 10, 13, 19, 24

TABLE 3

POWER SUPPLY	CHANNELS POWERED
ES–53A	1–10
ES–53B	11–20
ES–53C	21–30

TABLE 4

PMIS INPUT POINT	SENSOR & CONVERTER
N091	RE–1
N092	RE–2
N093	RE–3
N094	RE–4
N095	RE–5
N096	RE–6
N097	RE–7
N098	RE–8
N099	RE–9
N100	RE–10
N101	RE–11
N102	RE–12
N103	RE–13
N104	RE–14
N105	RE–15
N106	RE–16
N107	RE–17
N108	RE–18
N109	RE–19
N110	RE–20
N111	RE–21
N112	RE–22
N113	RE–23
N114	RE–24
N115	RE–25
N116	RE–26
N117	RE–27
N118	RE–28
N119	RE–29
N120	RE–30

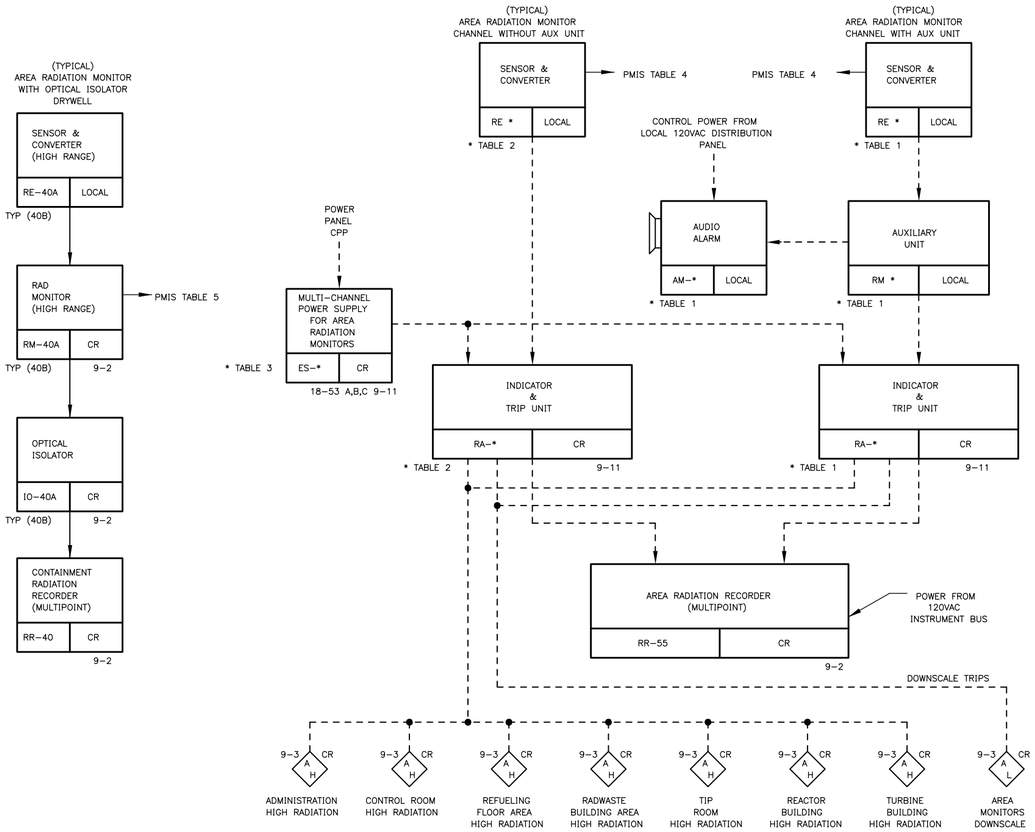

TABLE 5

PMIS INPUT POINT	RADIATION MONITOR
N063	RM–40A
N064	RM–40B

TABLE 3

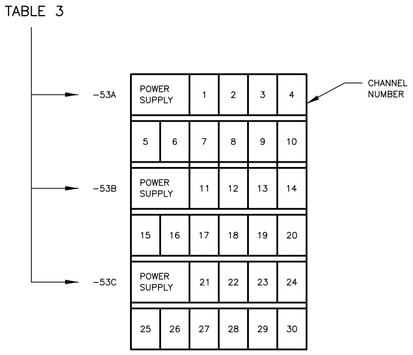

INDICATION & TRIP UNITS FOR EACH CHANNEL WILL BE ARRANGED PER CHART ABOVE

NOTES:

1. SENSOR & CONVERTER TO BE MOUNTED AT 7 FT ELEVATION FROM FLOOR. AUXILIARY UNIT TO BE MOUNTED AT 5 FT ELEVATION FROM FLOOR.
2. FOR SENSOR & CONVERTER LOCATIONS REFER TO INSTRUMENT DATA SHEETS.
3. FOR LOCATION AND IDENTIFICATION OF INSTRUMENTS SEE INSTRUMENT DATA SHEET LISTED IN MPL FOR EACH INSTRUMENT.
4. ALL COMPONENT NUMBERS PREFIXED BY 18 EXCEPT WHERE OTHERWISE SHOWN.

REFERENCE DOCUMENTS

1. 791E268 AREA RADIATION MONITORING ELE.
2. 791E267 PROCESS RADIATION MON SYS.
3. CNS–EE–78 MPF LLRW PLAN AND DETAILS.

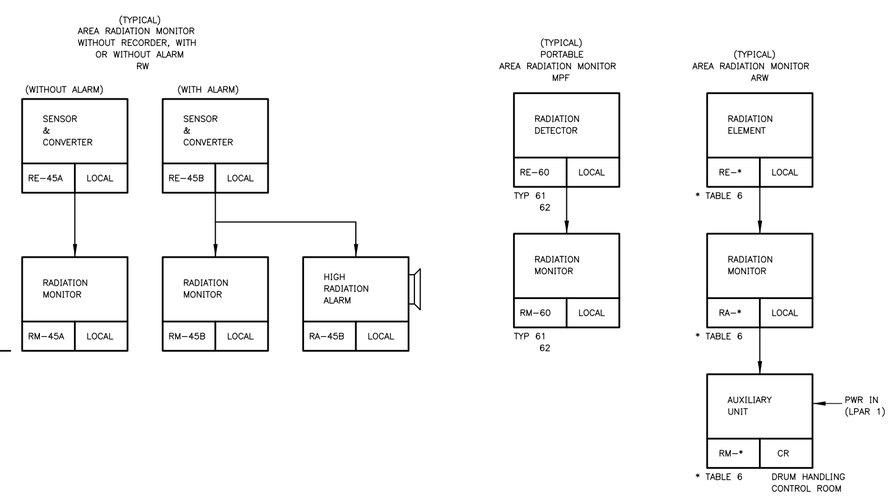

TABLE 6

RANGE	DETECTOR	AUXILIARY UNIT	RADIATION MONITOR
1–104	RE–31, 32, 33, 34, 35	RM–AU31, 32, 33, 34, 35	RA–31, 32, 33, 34, 35

INFORMATION ONLY
452005509

FOR PREVIOUS REVISIONS, SEE SUPERSEDED CARDS.

REVISIONS BY N.P.P.D.

NO.	REVISIONS	DFT	CKD	APP	DATE
NO1	REV & REDRAWN PER APA DCN C93–1813	DR	JAC	WCF	10–26–93
NO2	CED 6014761 (DCN 05–1374)	DLR	JDN	KZ	2–1–11

REVISIONS
NO.

SIGNIFICANT NUMBER
GROUP 1 2 3 4 5 6

COOPER NUCLEAR STATION
FUNCTIONAL CONTROL DIAGRAM
AREA RADIATION MONITORING SYSTEM

DRAWN DR DATE 10–11–93
CHECKED JAC DATE 10–29–93
APPROVED WCF DATE 10–29–93
FILMED

GENERAL ELECTRIC

921D796 SH 1
REVISION NO2
CADD FILE: C0011087

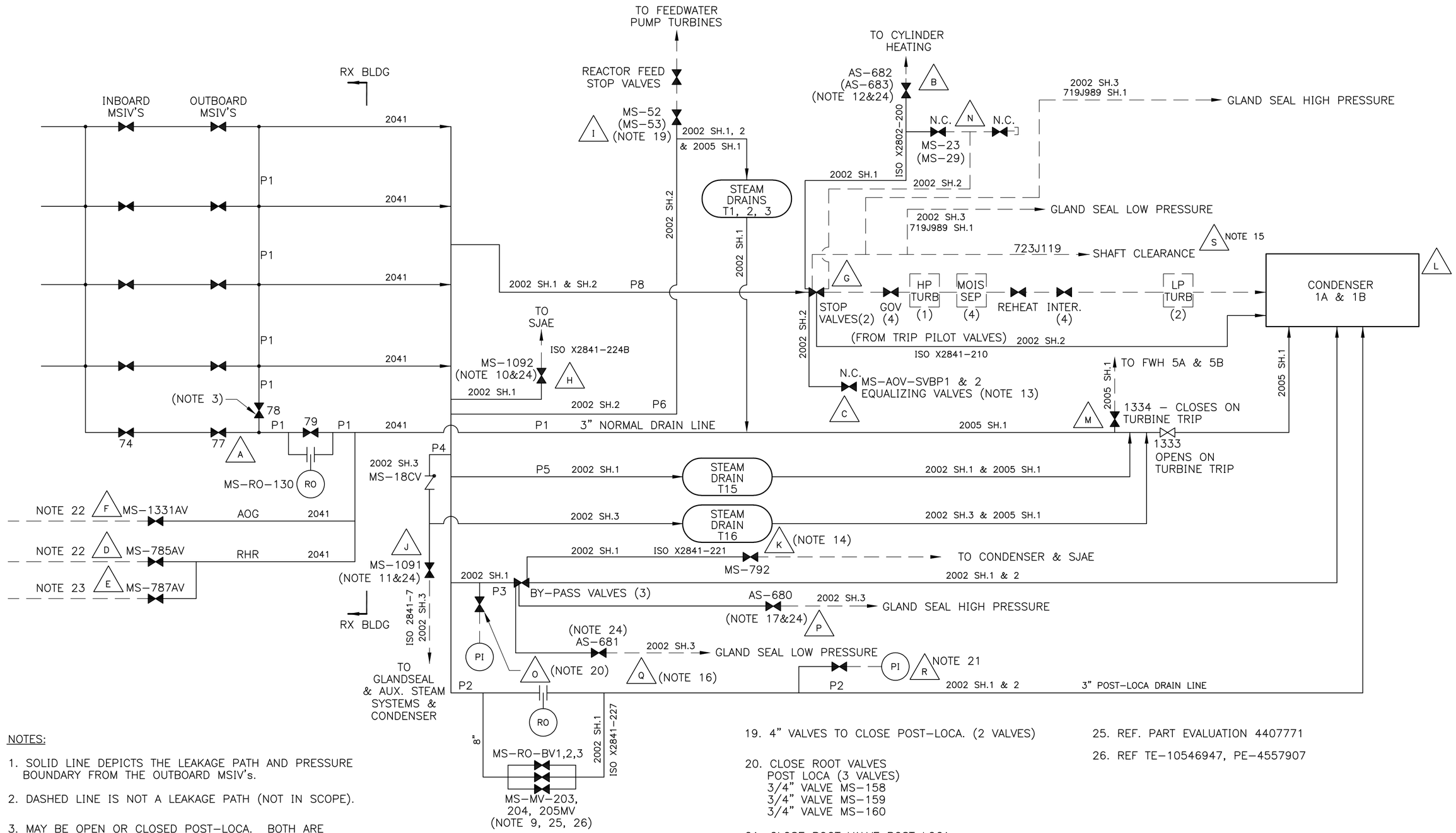

NOTES:

1. SOLID LINE DEPICTS THE LEAKAGE PATH AND PRESSURE BOUNDARY FROM THE OUTBOARD MSIV's.
2. DASHED LINE IS NOT A LEAKAGE PATH (NOT IN SCOPE).
3. MAY BE OPEN OR CLOSED POST-LOCA. BOTH ARE ACCEPTABLE.
4. POST-LOCA VALVE MANIPULATIONS ARE PER PROCEDURE 5.2 FUEL
5. NOT ALL LINES SHOWN (e.g. INSTRUMENT AND SENSING LINES). VALVE ON THESE LINES NORMALLY CLOSED SEE NEDC 00-029 TABLE 1).
6. FLOW DRAWING NUMBERS SHOWN ON LINE e.g.: 2041
7. POTENTIAL LEAKAGE PATHS SHOWN WITH A "P" DESIGNATION, EXAMPLE: P1.
8. BOUNDARY CONDITIONS SHOWN WITH A LETTER IN A TRIANGLE EXAMPLE: A.
9. 2" NORMALLY CLOSED, OPEN POST-LOCA. (3 VALVES)
10. ADDED 2" VALVE TO CLOSE POST-LOCA. (1 VALVE)
11. ADDED 5" VALVE TO CLOSE POST-LOCA. (1 VALVE)
12. ADDED 1 1/2" VALVES TO CLOSE POST-LOCA. (2 VALVES)
13. 4" EQUALIZING VALVES NORMALLY CLOSED.
14. 2" VALVE TO CLOSE POST-LOCA. (1 VALVE)
15. INSTALL AND MANIPULATE SHAFT ADJUSTMENT SYSTEM POST-LOCA.
16. ADDED 1 1/4" VALVE TO CLOSE POST-LOCA. (1 VALVE)
17. ADDED 4" VALVE TO CLOSE POST-LOCA. (1 VALVE)
18. VALVES SHOWN IN POST LOCA POSITION.
19. 4" VALVES TO CLOSE POST-LOCA. (2 VALVES)
20. CLOSE ROOT VALVES POST LOCA (3 VALVES)
    3/4" VALVE MS-158
    3/4" VALVE MS-159
    3/4" VALVE MS-160
21. CLOSE ROOT VALVE POST LOCA 3/4" VALVE MS-180 (1 VALVE)
22. 1" VALVE TO CLOSE POST-LOCA (2 VALVES)
23. 1" VALVE MS-787AV IS NORMALLY CLOSED (1 VALVE)
24. CED 6007261 INSTALLED THE FOLLOWING VALVES
    AS-680 AS-682 MS-1091
    AS-681 AS-683 MS-1092
25. REF. PART EVALUATION 4407771
26. REF TE-10546947, PE-4557907

CALC NEDC 00-029

AS BUILT 452244766

REVISIONS BY N.P.P.D.

NO.	REVISIONS	DFT	CKD	APP	DATE
N01	CED 6007261 (DCN 03-0983)	RGA	DLR	KG	7/15/03
N02	NEDC 00-029 (DCN 03-0765)	PAM	DJF	KG	3-1-04
N03	PE 4407771 (DCN 04-2903)	KPB	DJF	KG	7-29-05
N04	EE 07-004 (DCN 07-0197)	PAM	PAM	KG	4-17-07
N05	TE 10546947, PE 4557907 (DCN 07-1606)	RAC	DLR	KZ	10-4-10

REVISIONS

NO.

SIGNIFICANT NUMBER						
GROUP	1	2	3	4	5	6

LEAKAGE PATHS FROM OUTBOARD MSIV's COOPER NUCLEAR STATION

	DATE
DRAWN RA/KJD	10/16/02
CHECKED PKA FOR RLY	10-28-02
APPROVED TPM FOR TDS	3-6-03

Nebraska Public Power District

FILMED

CNS-MS-43

REVISION N05

CADD FILE: C0043212

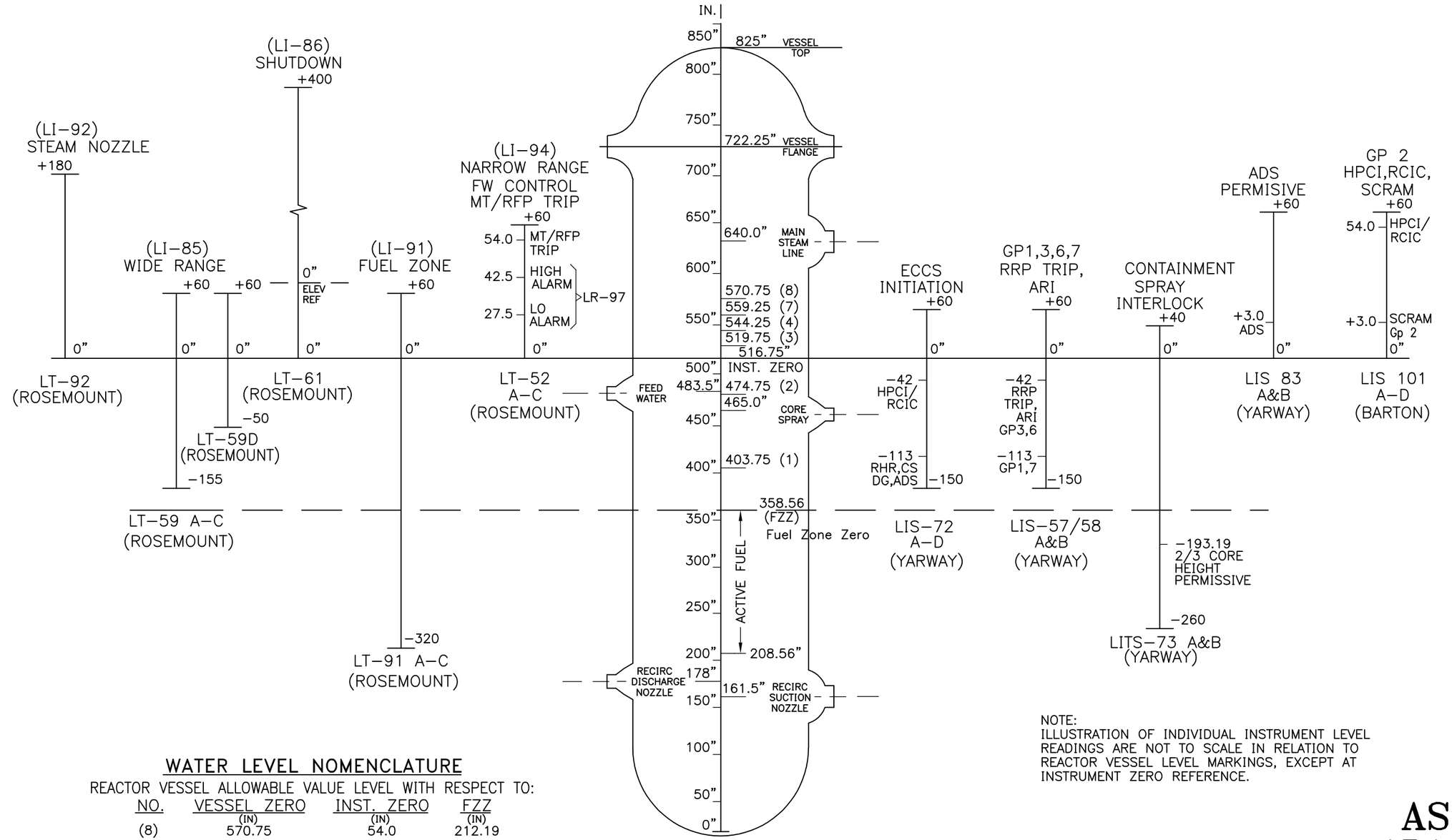

NOTE:
ILLUSTRATION OF INDIVIDUAL INSTRUMENT LEVEL READINGS ARE NOT TO SCALE IN RELATION TO REACTOR VESSEL LEVEL MARKINGS, EXCEPT AT INSTRUMENT ZERO REFERENCE.

WATER LEVEL NOMENCLATURE

REACTOR VESSEL ALLOWABLE VALUE LEVEL WITH RESPECT TO:

NO.	VESSEL ZERO (IN)	INST. ZERO (IN)	FZZ (IN)
(8)	570.75	54.0	212.19
(7)	559.25	42.5	200.69
(4)	544.25	27.5	185.69
(3)	519.75	3.0	161.19
(2)	474.75	-42.0	116.19
(1)	403.75	-113.0	45.19

ELEVATION 917'-0"
VESSEL BOTTOM

AS BUILT
451243784

CADD DRAWING
DO NOT REVISE MANUALLY

FOR PREVIOUS REVISIONS, SEE SUPERSEDED CARDS.

REVISIONS BY N.P.P.D.

NO.	REVISIONS	DFT	CKD	APP	DATE
N03	N/A (DCN 05-1259)	RAC	JAC	KG	1-10-06
N04	CR 2006-06944 (DCN 06-1570)	KG	DJB	DLR	2-7-07
N05	CED 6010820 (DCN 04-0608)	RAC	DLR	KG	5-19-08
N06	CED 6024445 (DCN 08-0030)	MTK	DLR	KG	8-11-08

NO.	REVISIONS
N00	RDC 2-17-99 PS 2-17-99

SIGNIFICANT NUMBER						
GROUP	1	2	3	4	5	6

COOPER NUCLEAR STATION
REACTOR WATER LEVEL
INDICATION CORRELATION

DRAWN PAM	DATE 9/24/98	
CHECKED AJH	DATE 2-9-99	Nebraska Public Power District
APPROVED PS	DATE 2-9-99	
FILMED	CNS-NBI-10	REVISION N06

CADD FILE: C0026002

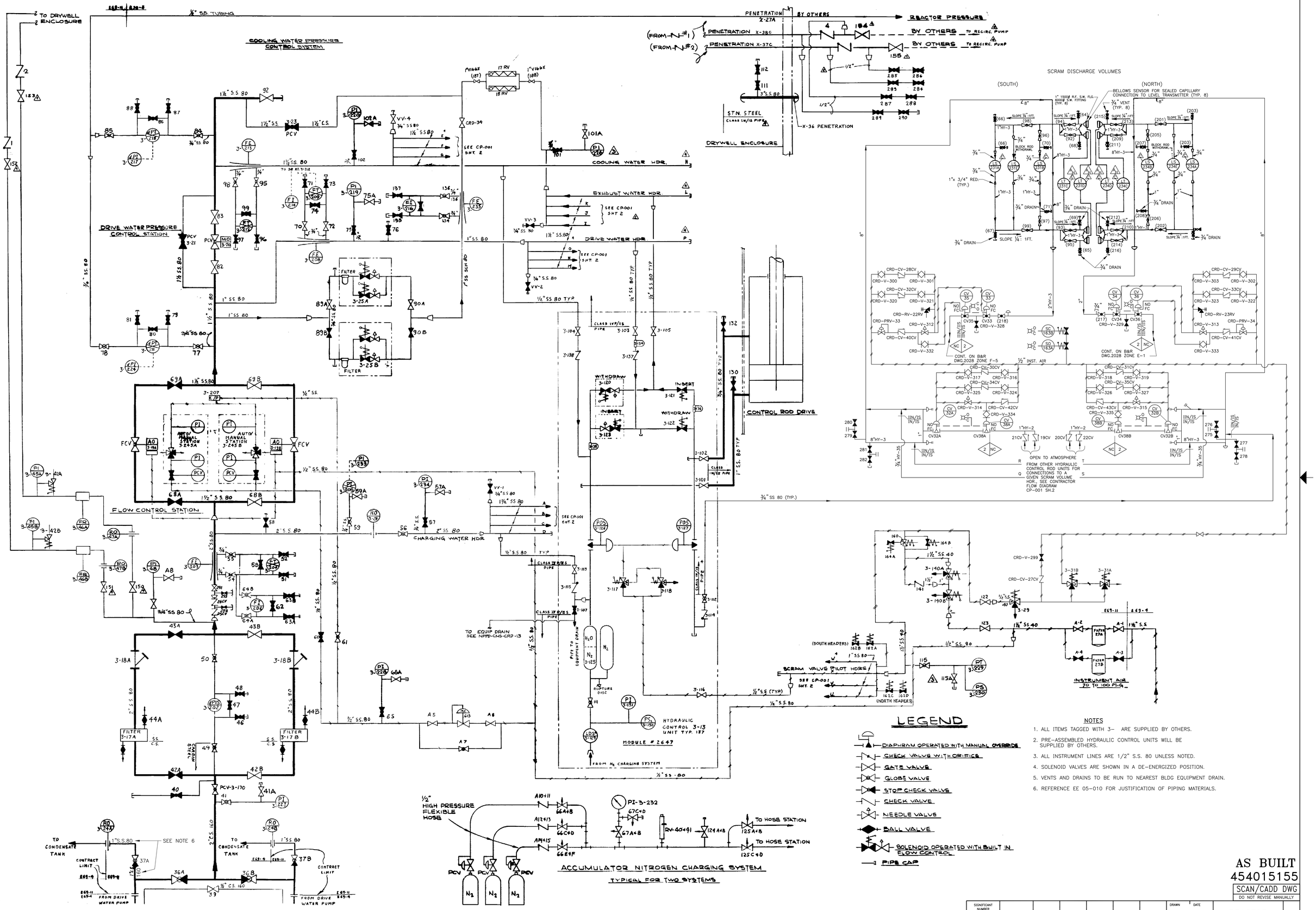

NOTES

1. ALL ITEMS TAGGED WITH 3– ARE SUPPLIED BY OTHERS.
2. PRE-ASSEMBLED HYDRAULIC CONTROL UNITS WILL BE SUPPLIED BY OTHERS.
3. ALL INSTRUMENT LINES ARE 1/2" S.S. 80 UNLESS NOTED.
4. SOLENOID VALVES ARE SHOWN IN A DE-ENERGIZED POSITION.
5. VENTS AND DRAINS TO BE RUN TO NEAREST BLDG EQUIPMENT DRAIN.
6. REFERENCE EE 05-010 FOR JUSTIFICATION OF PIPING MATERIALS.

AS BUILT
454015155
SCAN/CADD DWG
DO NOT REVISE MANUALLY

FOR PREVIOUS REVISIONS, SEE SUPERSEDED CARDS.

REVISIONS BY N.P.P.D.

NO.	REVISIONS	DFT	CKD	APP	DATE
N12	CAQ 98-0015, DC 96-121 (DCN 98-0905)	DLR	DJF	KG	10-19-98
N13	EEOS-010 (DCN 05-0409)	RGA	KG	DJF	3/20/05

SIGNIFICANT NUMBER | GROUP 1 2 3 4 5 6

COOPER NUCLEAR STATION
CRD HS DIAGRAM

DRAWN | DATE
CHECKED | DATE
APPROVED | DATE
SEE SUPERSEDED CARDS
FILMED

REACTOR CONTROLS, INC.

CP-001 | REVISION N13

CADD FILE: C0024863

REVISIONS | NO.

NOTE:

2424 MWth BASED ON LICENSED CORE THERMAL POWER; ACCOUNTING FOR SYSTEM THERMAL LOSSES, HEAT REJECTION TO THE REACTOR WATER CLEANUP, AND HEAT ADDITION OF REACTOR RECIRCULATION PUMPS.

This document contains information that is proprietary to Siemens Power Corporation and may not be reproduced or disclosed to any third party or other entity, in whole or in part, without the express prior written permission of Siemens Power Corporation.

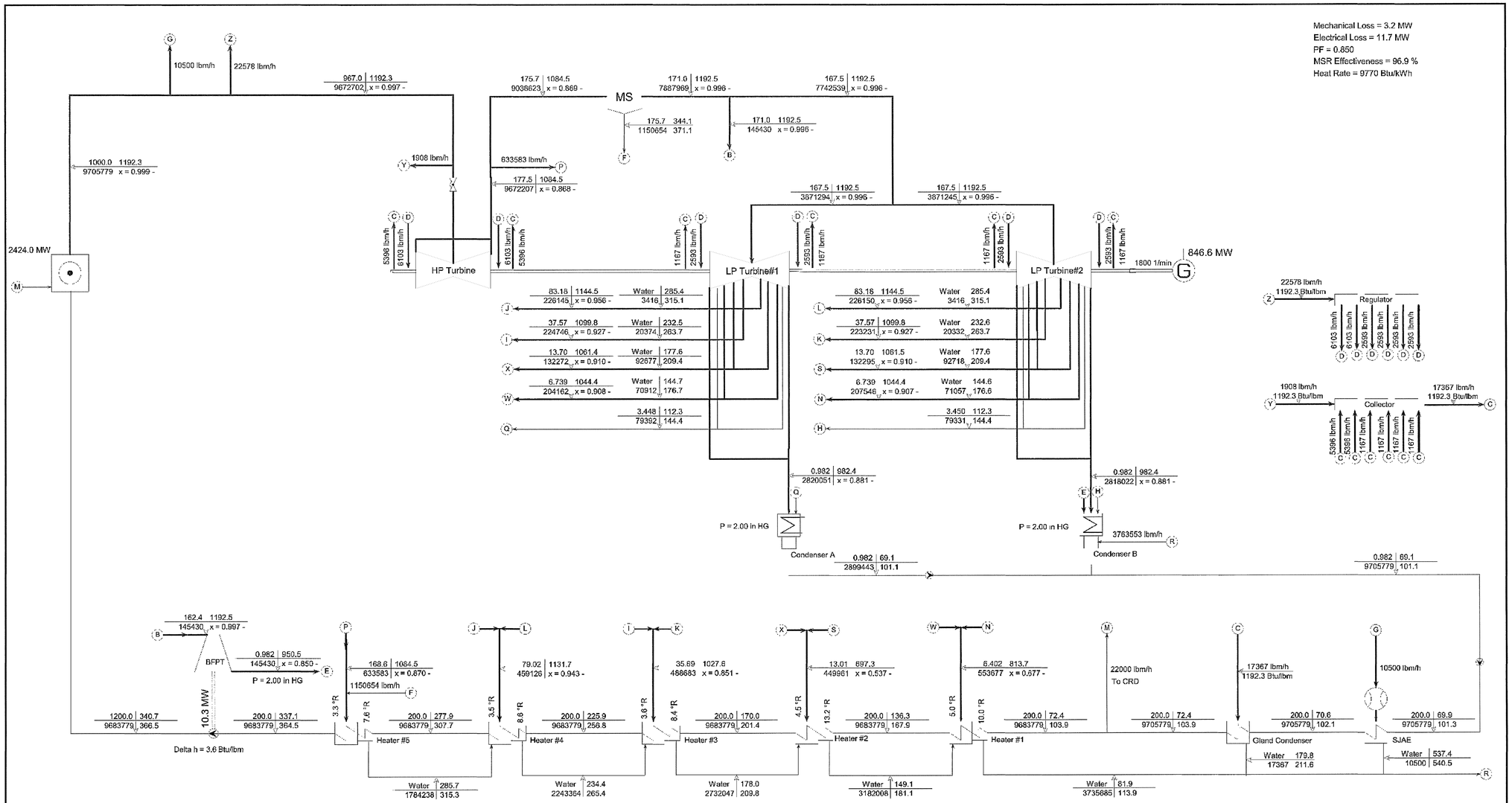

Heat Rate = (9683779 * (1192.3 - 340.7) + 22000 * (1192.3 - 72.4)) / (846.6 * 1000) = 9770 Btu/kWh

JOB IDENTIFICATION : Cooper_1_BB96FA_Upgrade_BB81-13.9m2_09.23.13_1.gek; Lp.002; GrinshME 2013-Nov-18 18:32:44 UTC; v 2.21.2

No.	VERSIONS/REVISIONS BY N.P.P.D. DESCRIPTION	DPTI	DATE	ENG
AB/2018	BK-2015-0268	DBB	07/11/15	RSCULL

INFORMATION ONLY

STATUS: Release FIO
SYSTEM: NUCLEAR
IS APPROVED: RSCULL 07/11/2017
VER: AB REV: 01 SIZE: F

4600084780

Siemens AG
Energy

Form. A | Z-Sy. | Spra.

Drawing Number: DPPPG-6002043800 B-008247-980500 B

Index: 5

Sheet: Not to scale

Handling: Restricted

The reproduction, transmission or use of this document or its contents is not permitted without express written authority. Offenders will be liable for damages. All rights, including rights created by patent grant or registration of a utility model or design, are reserved.

BY A.C. DATE
CHKD. BY DATE

SUBJECT NEBRASKA PUBLIC POWER DISTRICT
COOPER NUCLEAR STATION
AREA TEMP. MONITORING SYSTEM FOR NUCLEAR BOILER SYSTEMS LEAK DETECTIONS

SHEET NO. OF
JOB NO. 2520-02

REV. NO. 7

IL-E-70-3 SHT. NO. 107 B
DWG. NO. ID-105 SH. 3 A

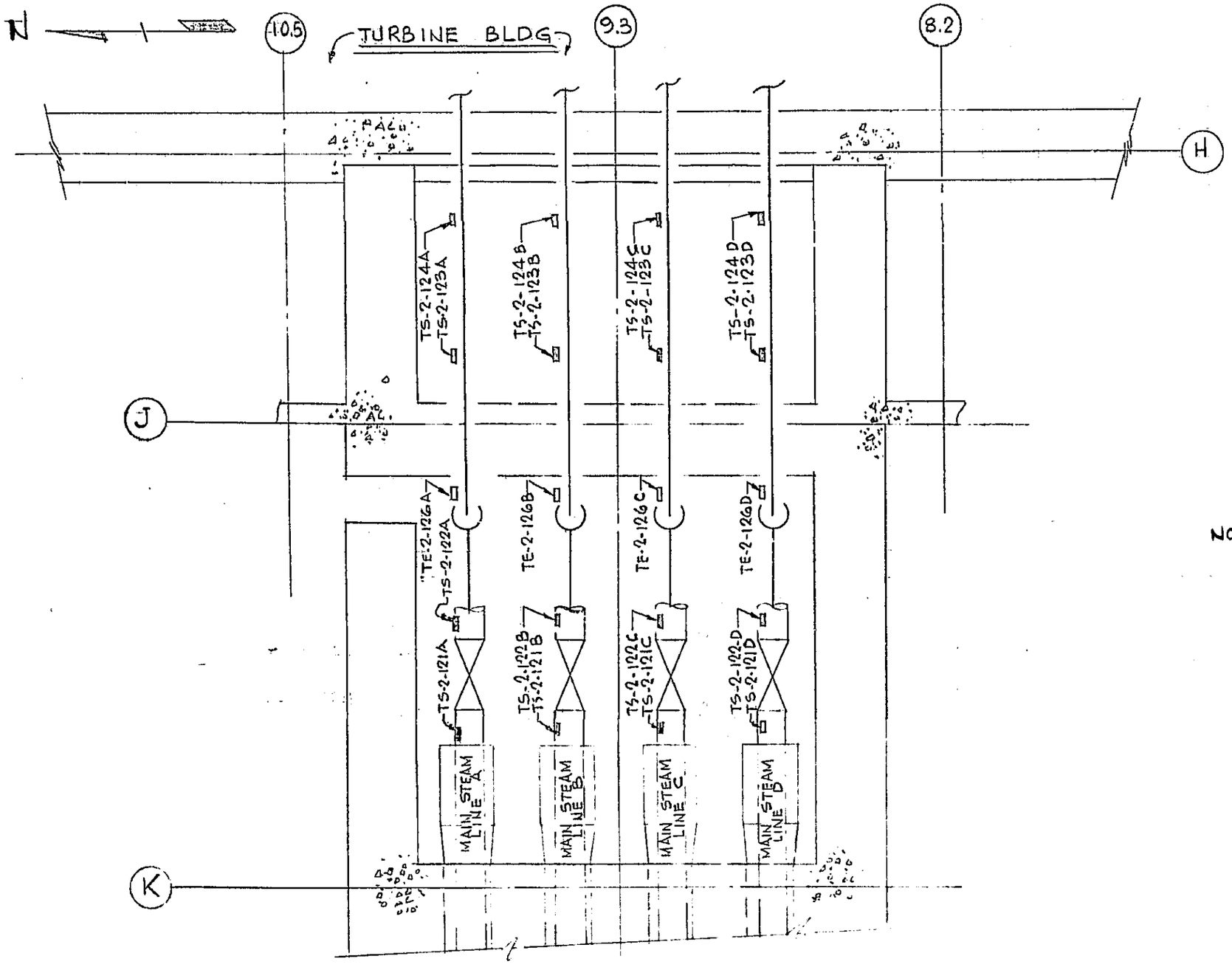

PLAN
REACTOR BLDG. PIPE TUNNEL AREA

MAIN STEAM SYSTEM LEAK DETECTION

NOTE:
FIELD TO LOCATE TEMP. ELEMENTS AND SWITCHES ABOVE PIPING APPROX. AS SHOWN AND TO CLEAR ALL OBSTRUCTIONS.
FOR MOUNTING DETAILS OF TE-2-126 SEE G.E. DWG. 145C3018
FOR MOUNTING DETAILS OF TS-2-121 THRU -124 SEE DWG. NO. ID-105 SH. 2

T30-0877
RECEIVED
FILMED
N.P.P.D., D.C.C
S/N 1800

BY KML DATE
CHKD. BY DATE

SUBJECT NEBRASKA PUBLIC POWER DISTRICT
COOPER NUCLEAR STATION
SHEET NO. OF
JOB NO. 2520-02

REV. NO. N04

IL-E-70-3 SHT. NO. 107C

DWG. NO. I.D.-105 SHEET-4

INSTALLATION DETAILS-TEMPERATURE DETECTORS FOR NUCLEAR BOILER SYSTEMS LEAK DETECTION

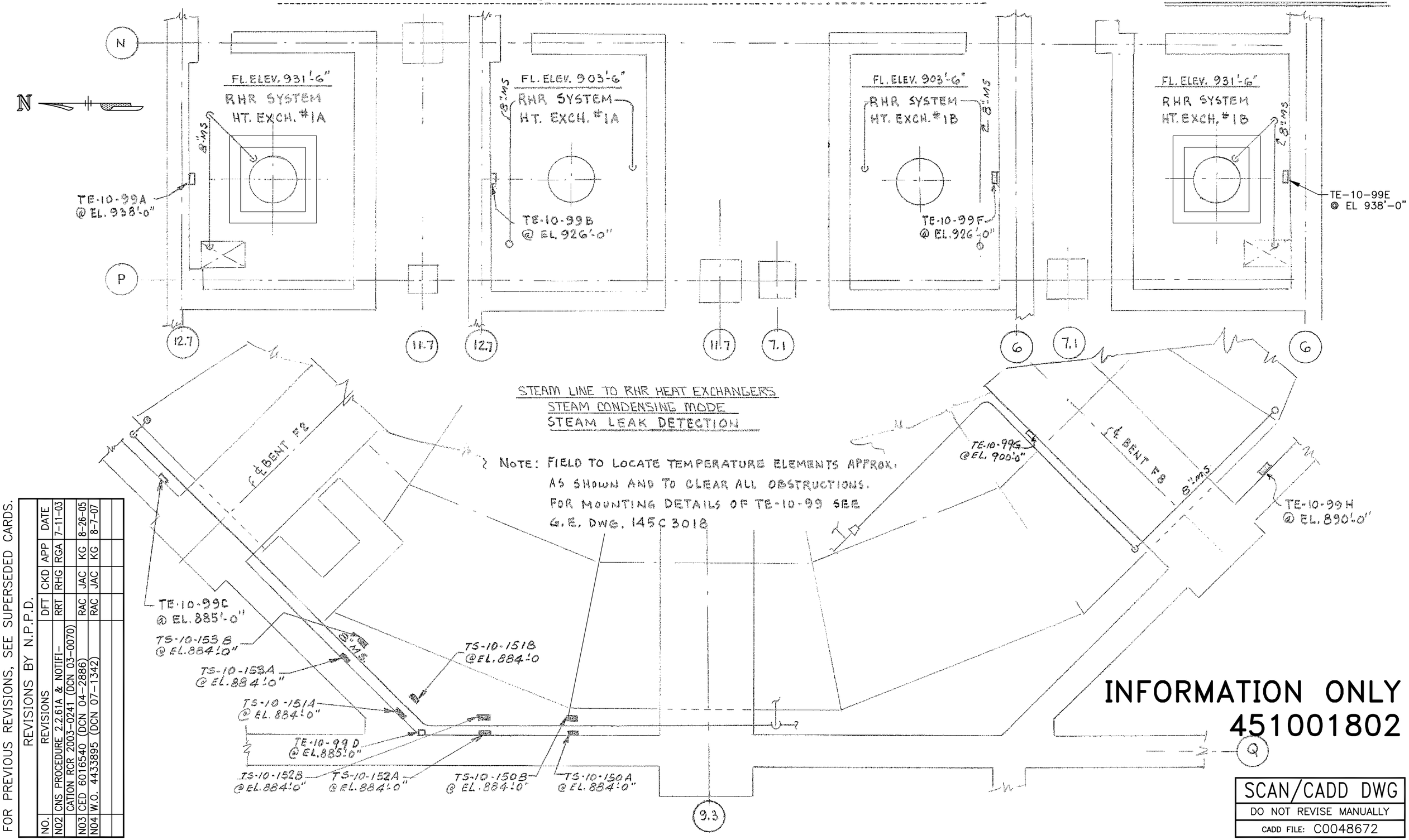

INFORMATION ONLY
451001802

SCAN/CADD DWG
DO NOT REVISE MANUALLY
CADD FILE: C0048672

FOR PREVIOUS REVISIONS, SEE SUPERSEDED CARDS.

REVISIONS BY N.P.D.

NO.	REVISIONS	DFT	CKD	APP	DATE
N02	CNS PROCEDURE 2.2.61A & NOTIFI-CATION RCR 2003-0241 (DCN 03-0070)	RRT	RHG	RGA	7-11-03
N03	CED 6016540 (DCN 04-2886)	RAC	JAC	KG	8-26-05
N04	W.O. 4433895 (DCN 07-1342)	RAC	JAC	KG	8-7-07

BY K.M.L. DATE
CHKD. BY DATE

SUBJECT NEBRASKA PUBLIC POWER DISTRICT SHEET NO. OF
COOPER NUCLEAR STATION JOB NO. 2520-02
INSTALLATION DETAILS - TEMPERATURE DETECTORS FOR NUCLEAR BOILER SYSTEMS LEAK DETECTION

REV. No. 7

I.L-E-70-3 SHT. NO. 107 E
DWG. NO. I.D.-105 SHEET-6

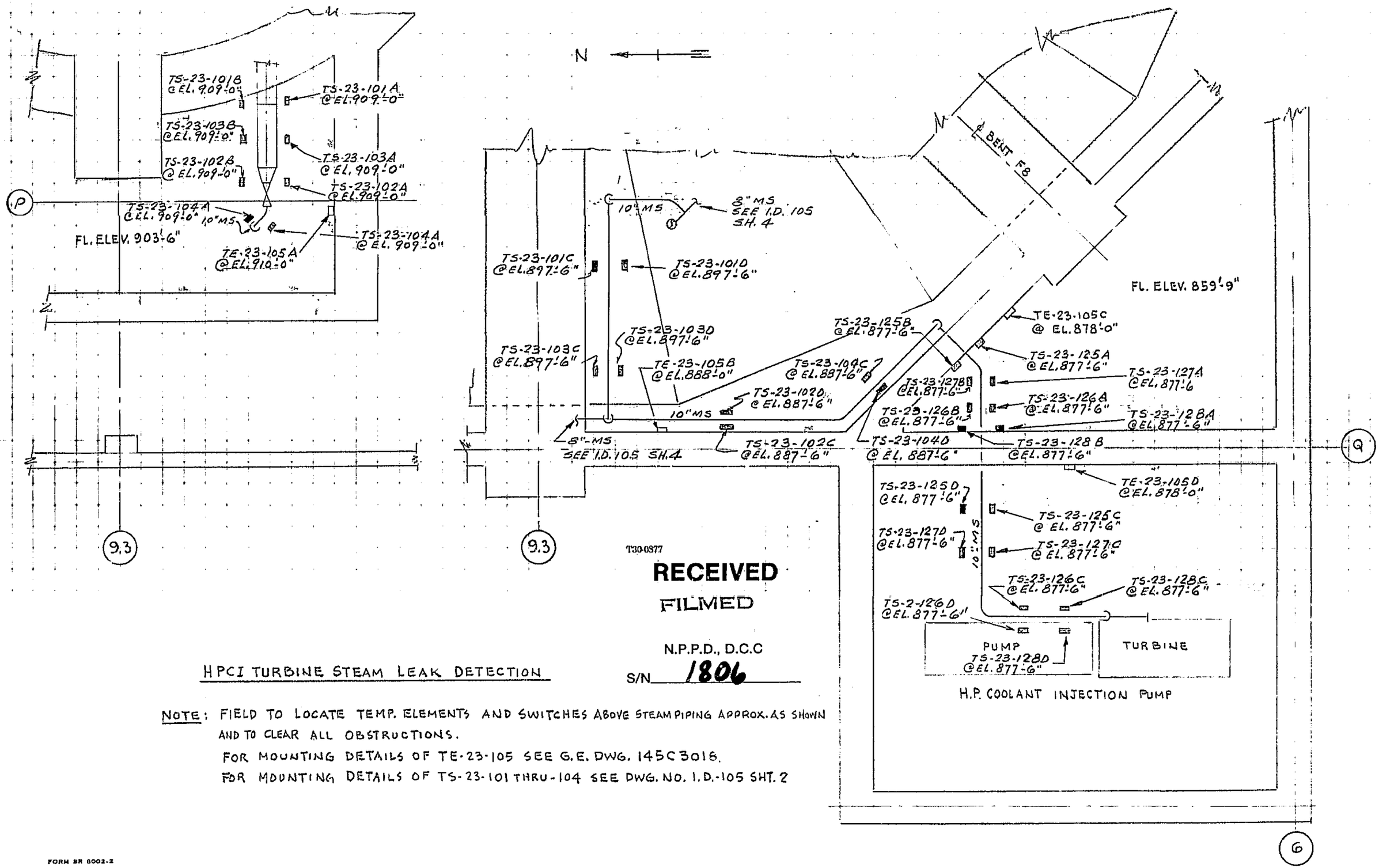

T30-0977

RECEIVED
FILMED

N.P.P.D., D.C.C
S/N 1806

HPCI TURBINE STEAM LEAK DETECTION

NOTE: FIELD TO LOCATE TEMP. ELEMENTS AND SWITCHES ABOVE STEAM PIPING APPROX. AS SHOWN AND TO CLEAR ALL OBSTRUCTIONS.
FOR MOUNTING DETAILS OF TE-23-105 SEE G.E. DWG. 145C3018.
FOR MOUNTING DETAILS OF TS-23-101 THRU-104 SEE DWG. NO. I.D.-105 SHT. 2

FORM SR 6002-2

BY K M L DATE
CHKD. BY DATE

SUBJECT NEBRASKA PUBLIC POWER DISTRICT
COOPER NUCLEAR STATION
INSTALLATION DETAILS - TEMPERATURE DETECTORS FOR NUCLEAR BOILER SYSTEMS LEAK DETECTION

SHEET NO. OF
JOB NO. 2520-02

REV. NO. 7

IL-E-70-3 SHT. NO. 107 F
DWG. NO. I.D.-105 SHEET-7

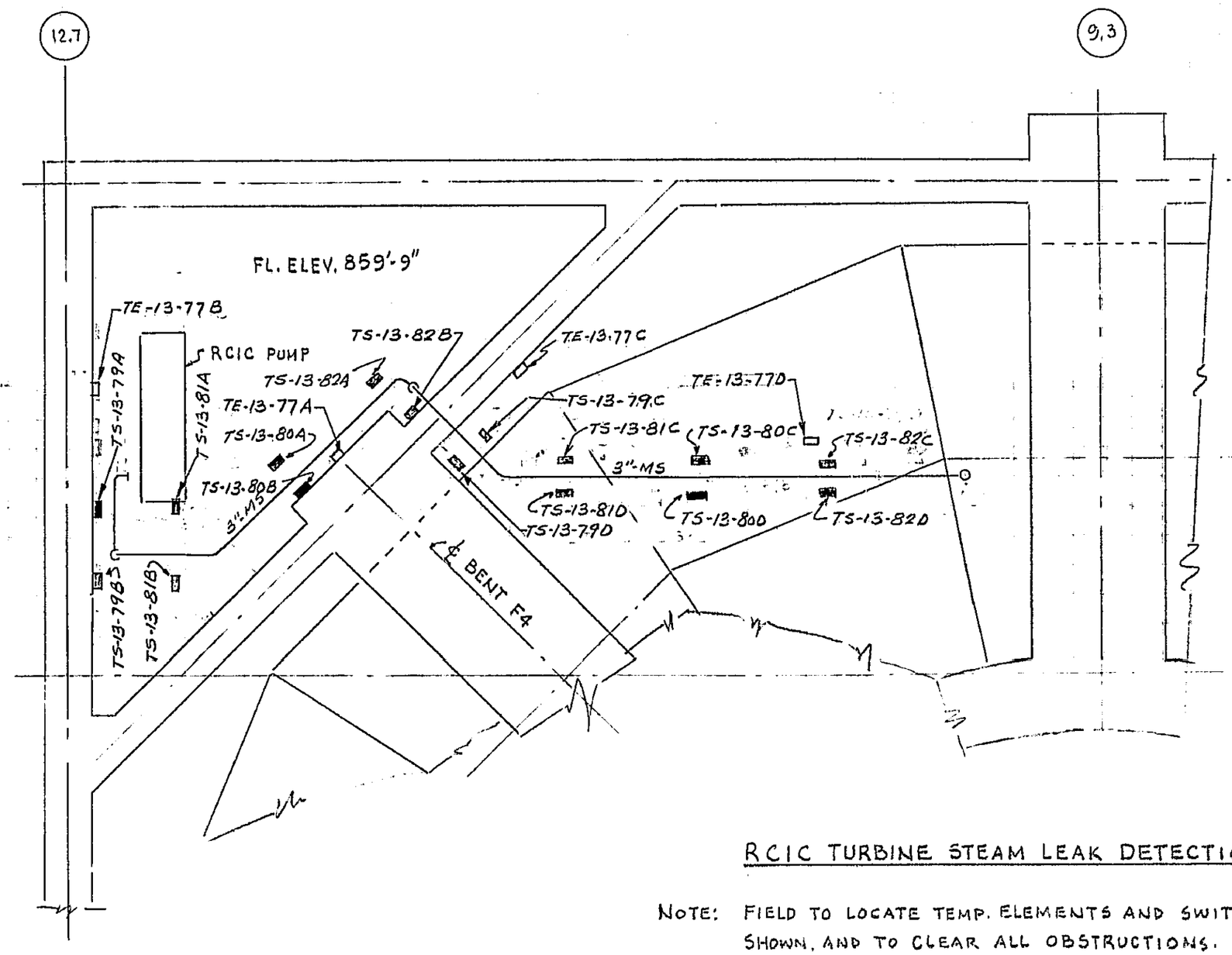

T30-0877
RECEIVED
FILMED
N.P.P.D.; D.C.C
S/N 1807

RCIC TURBINE STEAM LEAK DETECTION

NOTE: FIELD TO LOCATE TEMP. ELEMENTS AND SWITCHES ABOVE STEAM PIPING APPROX. AS SHOWN, AND TO CLEAR ALL OBSTRUCTIONS.
FOR MOUNTING DETAILS OF TE-13-77 SEE G.E. DWG. 145C3018
FOR MOUNTING DETAILS OF TS-13-79 THRU 82 SEE DWG. NO. I.D.-105 SHT. 2

FORM 3R 0002-2

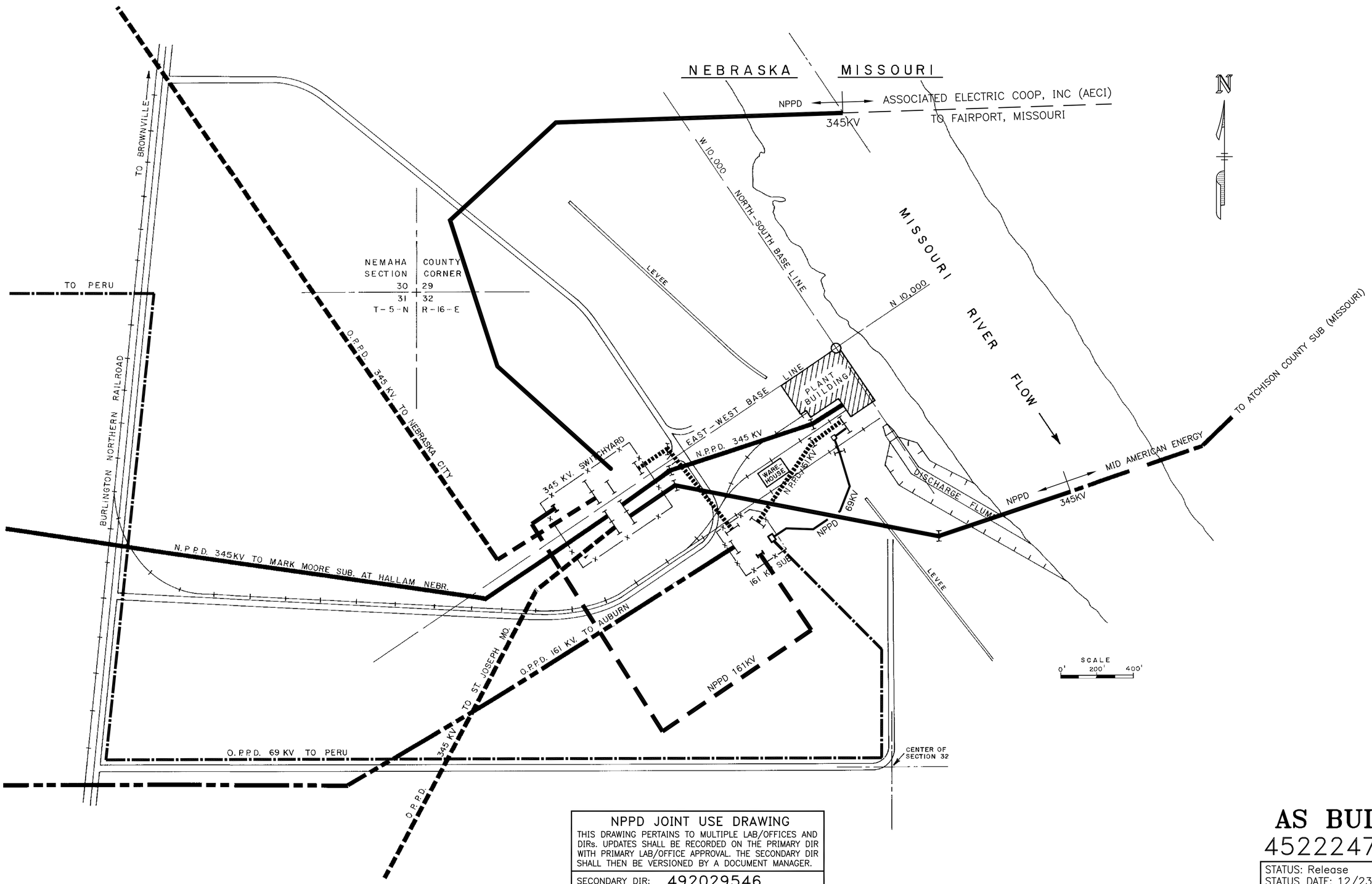

NPPD JOINT USE DRAWING

THIS DRAWING PERTAINS TO MULTIPLE LAB/OFFICES AND DIRs. UPDATES SHALL BE RECORDED ON THE PRIMARY DIR WITH PRIMARY LAB/OFFICE APPROVAL. THE SECONDARY DIR SHALL THEN BE VERSIONED BY A DOCUMENT MANAGER.

SECONDARY DIR: 492029546

AS BUILT

452224749

STATUS: Release
STATUS DATE: 12/23/2014
DS APPROVED: JDWILSO
VER: AB REV: 02 SIZE: C

FOR PREVIOUS REVISIONS, SEE SUPERSEDED CARDS.

VERSIONS/REVISIONS BY N.P.P.D.

NO.	DESCRIPTION	DFT	DATE	ENG
AB/02	DR-2014-0008	DLR	9/23/14	DJBUTLE

SIGNIFICANT NUMBER	035170 035040	035010 035000				7610	
GROUP	1	2	3	4	5	6	

COOPER NUCLEAR STATION TRANSMISSION LINE ROUTES

DRAWN	DATE
RAC	5/10/00
CHECKED	DATE
APPROVED SEE SUPERSEDED CARDS	DATE
FILMED	

Nebraska Public Power District

NC29546

CADD FILE: E0029807

NO. VERSIONS/REVISIONS

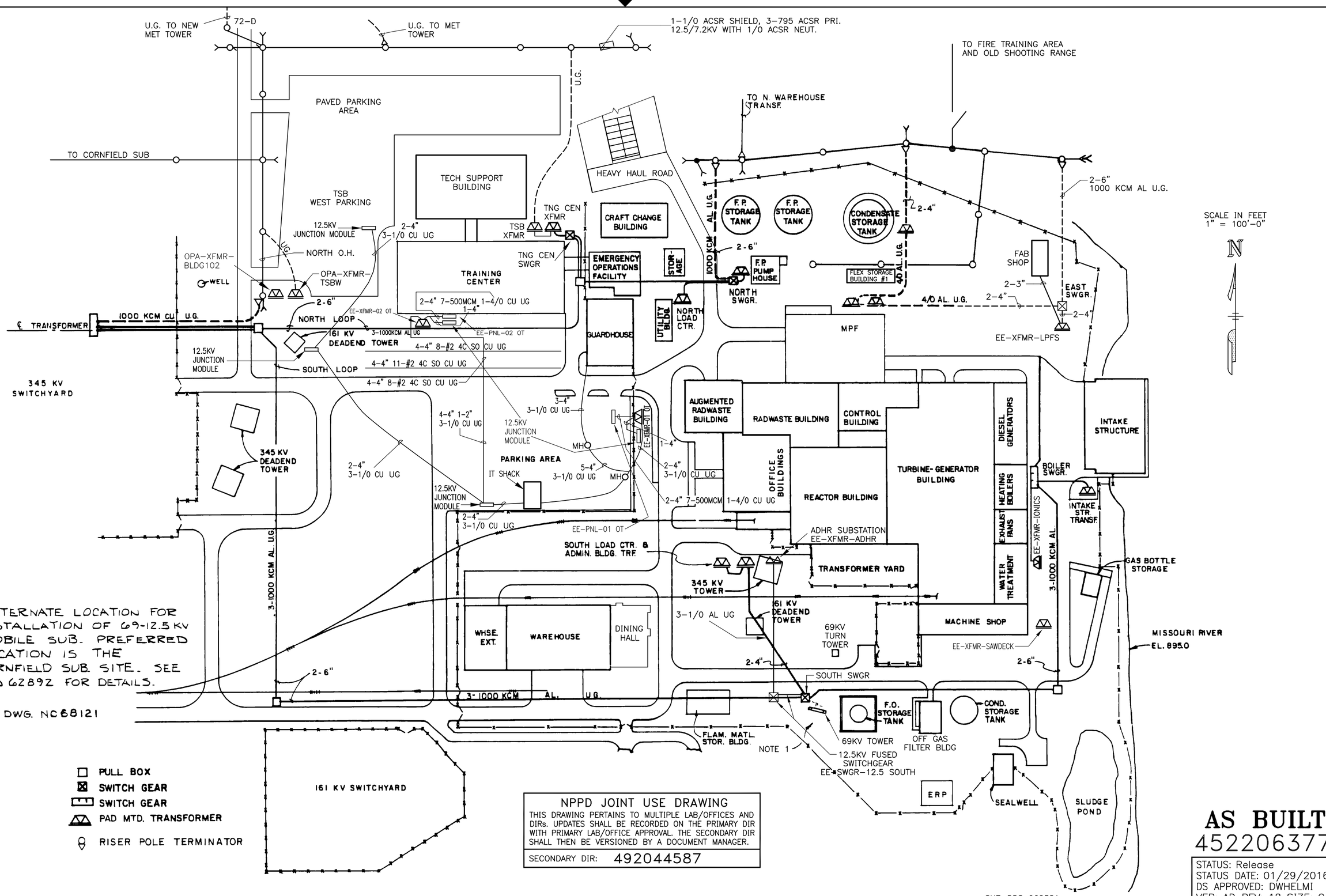

NOTE:

1. ALTERNATE LOCATION FOR INSTALLATION OF 69-12.5 KV MOBILE SUB. PREFERRED LOCATION IS THE CORNFIELD SUB. SITE. SEE ND 62892 FOR DETAILS.

REF. DWG. NC68121

NPPD JOINT USE DRAWING

THIS DRAWING PERTAINS TO MULTIPLE LAB/OFFICES AND DIRs. UPDATES SHALL BE RECORDED ON THE PRIMARY DIR WITH PRIMARY LAB/OFFICE APPROVAL. THE SECONDARY DIR SHALL THEN BE VERSIONED BY A DOCUMENT MANAGER.

SECONDARY DIR: 492044587

AS BUILT
452206377

STATUS: Release
STATUS DATE: 01/29/2016
DS APPROVED: DWHELMI
VER: AD REV: 18 SIZE: C

SKE-DDS 062381

FOR PREVIOUS REVISIONS, SEE SUPERSEDED CARDS.

VERSIONS/REVISIONS BY N.P.P.D.

NO.	DESCRIPTION	DFT	DATE	ENG
AC/16	DR-2014-0008	DLR	10/11/14	DJBUTLE
AE/17	DR-2014-0008	RLR	3/16/15	REJENSE
AD/18	DR-2013-0985	RLR	12/29/15	DWHELMI

SIGNIFICANT NUMBER	930096				2590	
GROUP	1	2	3	4	5	6

COOPER NUCLEAR STATION
ROUTING OF
12.5 KV UNDERGROUND SYSTEM

DRAWN DJF	DATE 6-23-81	
CHECKED WWW	DATE 8-28-81	
APPROVED GRK	DATE 8/28/81	
FILMED 9/10/81	NC44587	

Nebraska Public Power District

CADD FILE: E0023024

VERSIONS/REVISIONS

NO.

REV	CHANGE DETAIL	DATE
1	ITEM #40 WAS 102-218	1/20/89
2	REDRAWN-MOVED PARTS LIST	4/11/90
3	ADDED SECTION "BB"	8/9/91
4	ADD TORQUE CHART (ECR# 94)	11/25/92
5	NO CHANGE TO THIS DRAWING	3/27/97
6	REDRAWN PER ECR 231	8/14/98
7	CHANGE PER ECR 234	10/12/98
8	CHANGE PER ECR 502	4/15/08

ITEM No.	TORQUE
16, 28 29, 30 31,33,46	25 FT.-LBS
32	15 FT.-LBS
42	20 FT.-LBS
35 36, 59	30 IN.-LBS

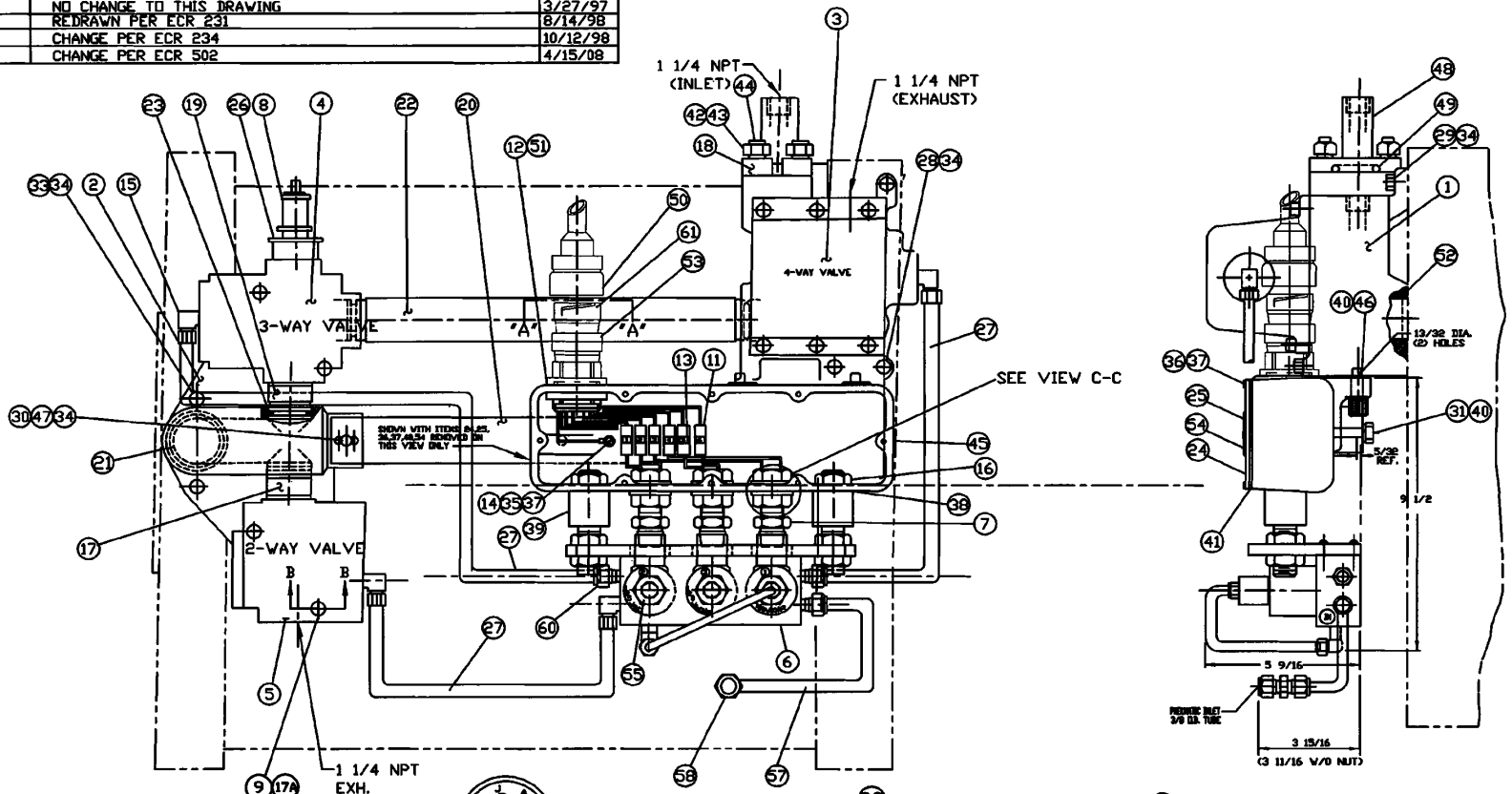

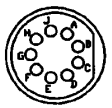

VIEW "A-A"
RECEPTACLE PIN CONFIG.

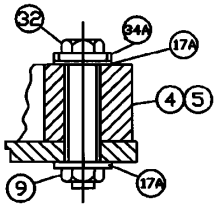

SECT. B-B
TYP. (4) PLACES

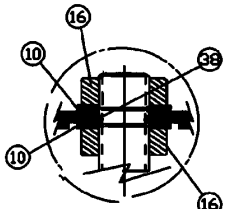

VIEW C-C

SOL. VALVE WIRE HOOK-UP				
FUNCTION	SOL.	PIN	WIRE	VOLTS
MAIN AC VALVE	1	C D	3 4	120V 60Hz
EXERCISE VALVE	3	E F	5 6	120V 60Hz
MAIN DC VALVE	2	A B	1 2	125VDC
		G H	NOT USED	
		J	⏚	

AS BUILT
450249440

STATUS: Release
STATUS DATE: 10/21/2014
DS APPROVED: KASCHIZ
VER: AB REV: 01 SIZE: A

VERSIONS/REVISIONS BY N.P.P.D.				
NO.	DESCRIPTION	DFT	DATE	ENG
AB/01	DR-2014-0255	DLR	4/8/14	KASCHIZ

REV.	ECR	APPROVED	CHECKED	DRAWN
9	941	[illegible] 1-12-12	-	MOB 1-11-12
8	502	BJS 4/15/08	-	JFM 4/15/08
7	234	RAC 10/15/98	MAC10/15/98	NJK10/15/98
6	231	DB 8/25/98	MAC8/24/98	NJK8/24/98

RALPH A. HILLER COMPANY
6005 ENTERPRISE DRIVE EXPORT PA. 15632

SHEET 4 OF 6 | SCALE: N. T. S.

TITLE: 20 X 5 MSIV ACTUATOR

DRAWING NUMBER: SA-A085

NOTES:

1. ALLOWABLE FASTENER TENSION TOL. ±5%.
2. TORQUE FASTENERS TO NORMAL VALUES LISTED.
3. TORQUE 4-WAY VALVE RETAINER SCREWS TO 10 FT.-LBS.

BY _____ DATE _____ SUBJECT NPPD CNS SHEET NO. 1 OF 1

CHKD. BY _____ DATE _____ CONTAINMENT PENETRATION ASSY & JOB NO. 2520.502

EXTERNAL PENETRATION CONTROLS SK 101670R

FOR DETAILS OF PENETRATION X-14, SEE IMPELL DWGS NO RWCU-1, RWCU-2, RWCU-8 AND-CB1 DWGS. NO. 61, 62, 63 & 64.

NO	REVISIONS	BY	CHK	APR	DATE
NO2	DCN 86-915 CORRECTED AND ADDED DCN 86-1125	JW	JA		2-21-91
NO1	VOID PER DCN 86-915	PA			1-8-87

DCN REVISIONS - BY NPPD

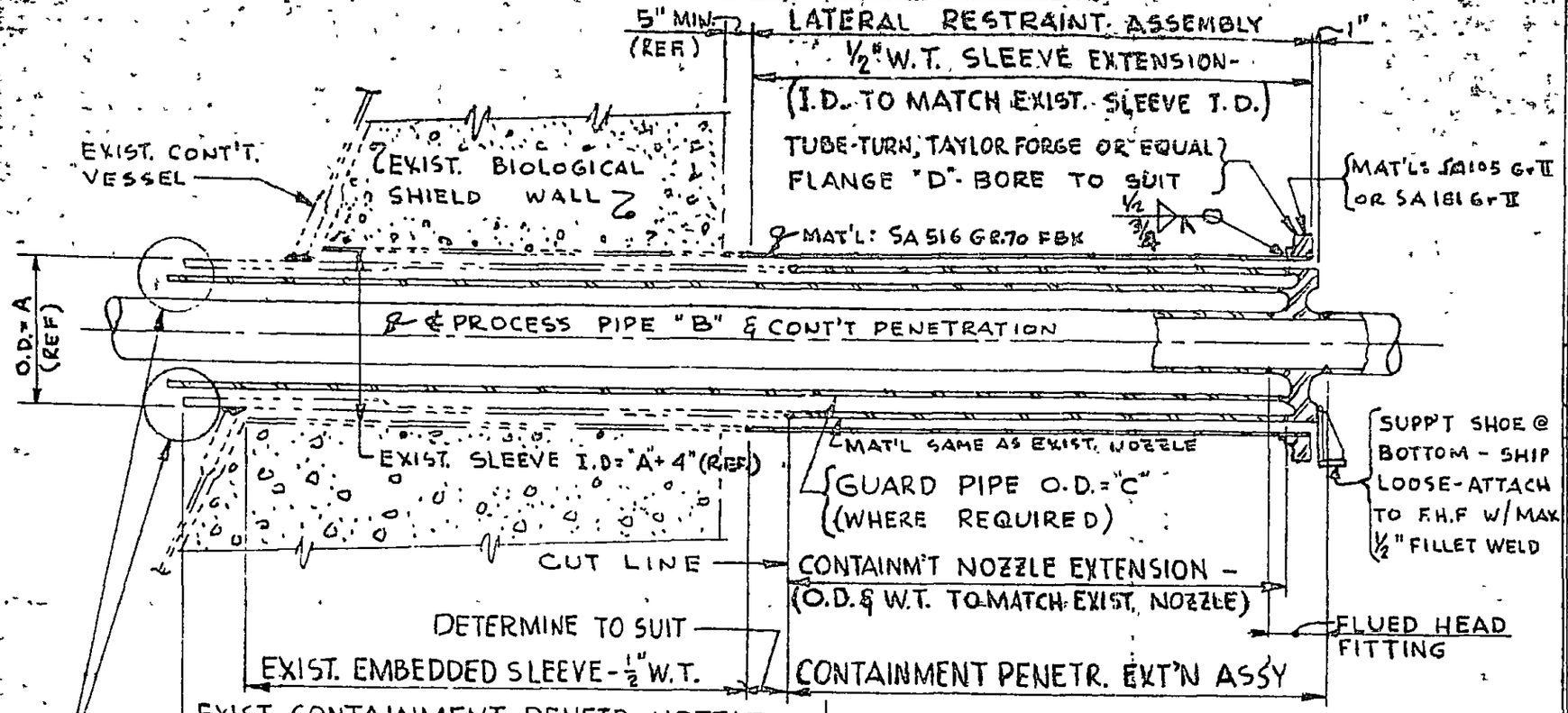

451200306

CONTAINMENT PENETRATION ASSEMBLY

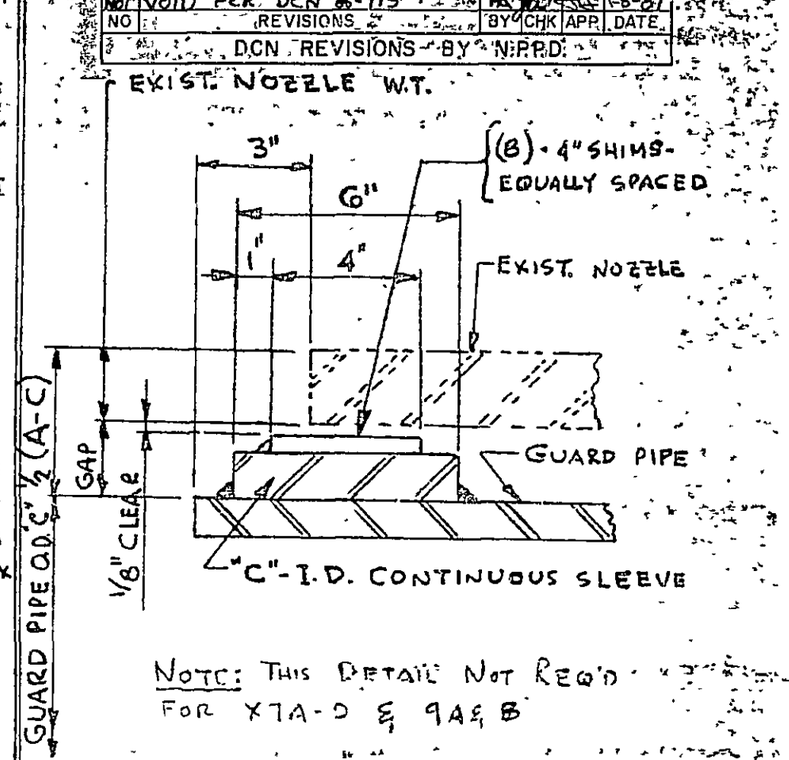

NOTE: THIS DETAIL NOT REQ'D FOR X7A-D & 9A & B

GUARD PIPE GUIDE DETAIL

REFERENCE:
1. APPENDIX ENCL. VII PG 300G OF SPEC. E 69-4

NOTE: THIS SKETCH PROVIDES INFORMATION REFERENCED IN REF. 1 - NOTE 2

PENETR. No.	A	PROCESS PIPE B	GUARD PIPE C	FLANGE D	REMARKS
X 8	18	3" SCH.	12	LAT RESTR ASSY NOT REQ.	ATTACH F.H.F. @ CUT LINE
X 10	18	3" SCH.	12	" " " " "	ATTACH F.H.F. @ CUT LINE
X 11	26	10" SCH.	20	32" Cl 350 SLIP ON	
X 12	36	20" O.D.	NONE	48" Cl 350 SLIP ON	
X 13A&B	42	24" O.D.	NONE	60" Cl 350 SLIP ON	
X 14	22	6" SCH	16	28" Cl 175 SLIP ON	SEE NOTE 1
X 16A&B	26	10 SCH.	NONE	32" Cl 350 SLIP ON	
X 17 (2)	22	6" SCH.	NONE	28" Cl 175 SLIP ON	
X 23	12 SCH	8" SCH.	NONE		
X 24	12 SCH.	8" SCH.	NONE		
X7A-D	42	24	SEE SKETCH M 200 FOR SPECIAL DETAILS		

PENETR. No.	A	PROCESS PIPE B	GUARD PIPE C	FLANGE D	REMARKS
X 18 (2)	6 SCH	3" SCH.	NONE	LAT. RESTR. ASSY NOT REQ'D	ATTACH FHF @ CUT LINE
X 19 (2)	6 SCH	3" SCH	NONE	LAT. RESTR. ASSY NOT REQ'D	ATTACH FHF @ CUT LINE
X 20	8 SCH	4" SCH.	NONE		
X 21	3 SCH	1" SCH	NONE		
X 22	3 SCH.	1" SCH.	NONE		
X 36	6 SCH	3" SCH	NONE	LAT. RESTR ASSY NOT REQ'D	ATTACH FHF @ CUTLINE
X 41 (2)	6 SCH	1" SCH	NONE	LAT. RESTRAINT ASSY NOT REQ'D	ATTACH FHF @ CUT LINE
X 42 (2)	4 SCH	1 1/2 SCH.	NONE	LAT. RESTR. ASSY NOT REQ'D	ATTACH FHF @ CUT LINE
X 43 (2)	18	4 SCH.	NONE	LAT. RESTR. ASSY NOT REQ'D	ATTACH FHF @ CUT LINE
X 44 (2)	18	4 SCH	NONE	LAT RESTR ASSY NOT REQ'D	ATTACH FHF @ CUT LINE
X 46B	34	18	SEE SKETCH M 200 FOR		SPECIAL DETAILS

SK 101670R
NPPD - CNS
CONT'T PENETR. ASS'Y & EXT. PENETRATION CONTROLS

ISSUE	DATE	
1	OCT 16, 1970	
2	NOV 23, 1970	

REV NO2

BY B.S.S. DATE 10-21-70 SUBJECT NPPD - CNS SHEET NO. 1 OF 1
CHKD. BY _____ DATE _____ CONTAINMENT PENETRATIONS X-7A-D, JOB NO. 2520-02
X-9A & X-9B; ASSY & EXTERIOR PENETRATION SKETCH M-200
CONTROLS

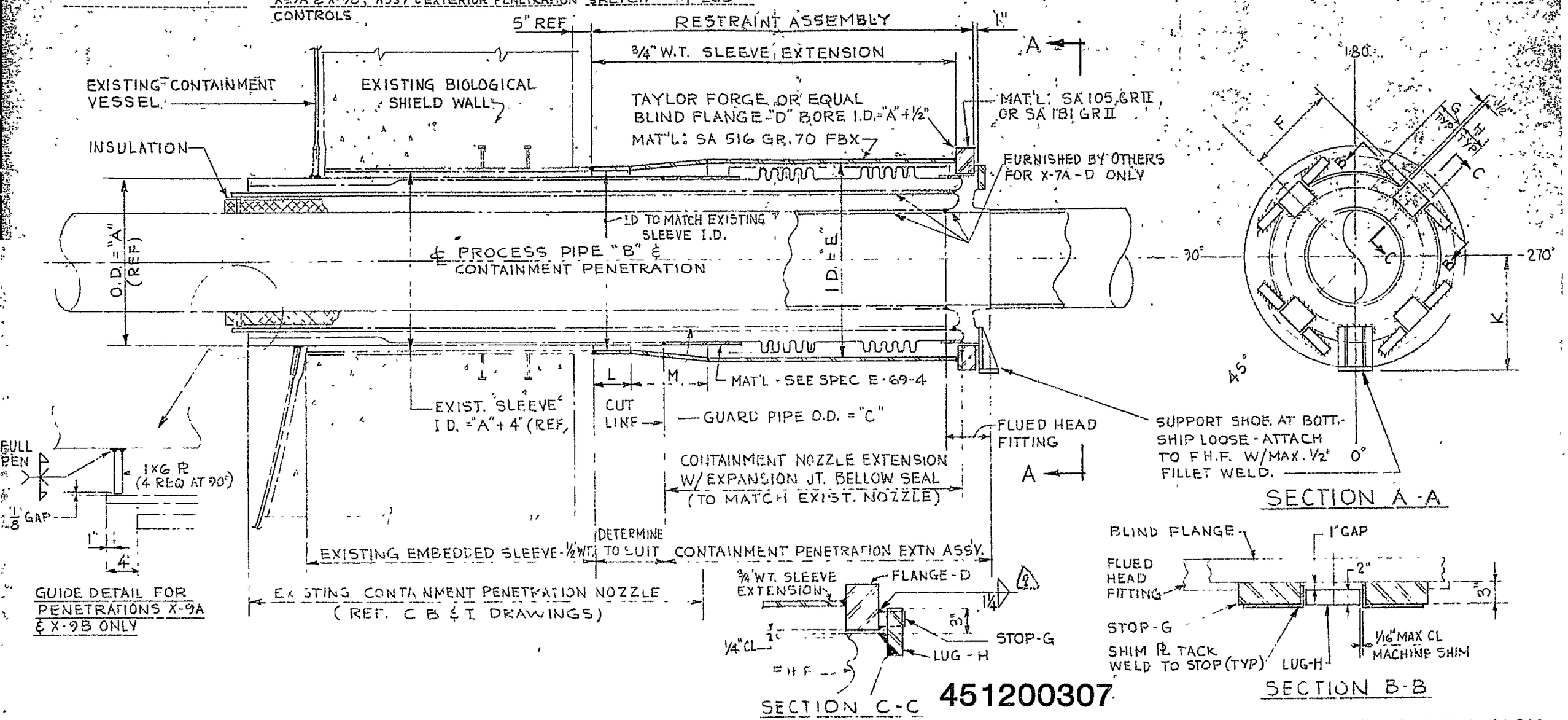

451200307

PENETR NO	A	PROCESS PIPE - B	GUARD PIPE C	FLANGE - D	RESTRAINT PL - E	F	STOP G	LUG H	K	L	M	REMARKS
X-7A	42	24 OD	36 OD	48" CLASS 350	52	24	2x3x8	2x6x7	29	10	20	
X-7B	42	24	36	48" CLASS 350	52	24	2x3x8	2x6x7	29	10	20	
X-7C	42	24	36	48" CLASS 350	52	24	2x3x8	2x6x7	29	10	20	
X-7D	42	24	36	48" CLASS 350	52	24	2x3x8	2x6x7	29	10	20	
X-9A	34	18	28	42" CLASS 350	44	20	2x3x8	2x6x7	26	10	20	
X-9B	34	18	28	42" CLASS 350	44	20	2x3x8	2x6x7	26	10	20	

SKETCH M-200
NPPD - CNS
CONTAINMENT PENETRATION
X-7A THRU X-7D,
X-9A & X-9B
ASS'Y & EXTERIOR PENETR CONTROLS

ISSUE	DATE
1	10-20-70
2	11-20-70