TABLE OF CONTENTS

Section	Title	Page
10.0	STEAM AND POWER CONVERSION SYSTEM	10.1-1
10.1	SUMMARY DESCRIPTION	10.1-1
10.2	TURBINE GENERATOR	10.2-1
10.2.1	DESIGN BASES	10.2-1
10.2.2	DESCRIPTION	10.2-1
10.2.2.1	General	10.2-1
10.2.2.2	Turbine Generator Control	10.2-2
10.2.2.3	Turbine Generator Overspeed Protection	10.2-3
10.2.2.4	Generator Gas System	10.2-4
10.2.3	TURBINE MISSILES	10.2-5
10.2.4	EVALUATION	10.2-7
10.2.5	REFERENCES	10.2-7
10.3	MAIN STEAM SUPPLY SYSTEM	10.3-1
10.3.1	DESIGN BASES	10.3-1
10.3.1.1	Codes and Standards	10.3-1
10.3.1.2	Heat Balance	10.3-2
10.3.1.3	Design Conditions	10.3-2
10.3.1.4	Environmental Conditions	10.3-2
10.3.2	DESCRIPTION	10.3-3
10.3.2.1	General	10.3-3
10.3.2.2	Main Steam System Piping	10.3-4
10.3.2.3	Main Steam Isolation Valves	10.3-5
10.3.2.4	Main Steam Safety Valves	10.3-6
10.3.3	EVALUATION	10.3-6
10.3.4	INSPECTION AND TESTING REQUIREMENTS	10.3-6
10.3.5	WATER CHEMISTRY	10.3-8
10.3.6	STEAM AND FEEDWATER SYSTEM MATERIALS	10.3-9
10.3.6.1	Fracture Toughness	10.3-9
10.3.6.2	Materials Selection and Fabrication	10.3-10
10.3.7	REFERENCES	10.3-11
10.4	OTHER FEATURES OF STEAM AND POWER CONVERSION SYSTEM	10.4-1
10.4.1	MAIN CONDENSER	10.4-1
10.4.1.1	Design Bases	10.4-1
10.4.1.2	System Description	10.4-2
10.4.1.3	Safety Evaluation	10.4-3
10.4.1.4	Tests and Inspections	10.4-3
10.4.1.5	Instrumentation	10.4-4
10.4.2	CONDENSER AIR REMOVAL SYSTEM	10.4-4
10.4.2.1	Design Bases	10.4-4
10.4.2.2	System Description	10.4-4
10.4.2.3	Safety Evaluation	10.4-5
10.4.2.4	Tests and Inspections	10.4-5
10.4.2.5	Instrumentation	10.4-5

TABLE OF CONTENTS (Continued)

Section	Title	Page
10.4.3	TURBINE GLAND SEALING SYSTEM	10.4-6
10.4.3.1	Design Bases	10.4-6
10.4.3.2	System Description	10.4-6
10.4.3.3	Safety Evaluation	10.4-7
10.4.3.4	Tests and Inspections	10.4-7
10.4.3.5	Instrumentation	10.4-7
10.4.4	TURBINE BYPASS SYSTEM	10.4-7
10.4.4.1	Design Bases	10.4-7
10.4.4.2	System Description	10.4-8
10.4.4.3	Safety Evaluation	10.4-10
10.4.4.4	Tests and Inspections	10.4-10
10.4.4.5	Instrumentation Applications	10.4-11
10.4.5	CIRCULATING WATER SYSTEM	10.4-11
10.4.5.1	Design Basis	10.4-11
10.4.5.2	System Description	10.4-12
10.4.5.3	Safety Evaluation	10.4-12
10.4.5.4	Tests and Inspections	10.4-13
10.4.5.5	Instrumentation	10.4-13
10.4.6	CONDENSATE CLEANUP SYSTEM	10.4-14
10.4.6.1	Design Bases	10.4-14
10.4.6.2	System Description	10.4-14
10.4.6.3	Safety Evaluation	10.4-16
10.4.6.4	Tests and Inspections	10.4-16
10.4.6.5	Instrumentation Application	10.4-17
10.4.7	CONDENSATE AND FEEDWATER SYSTEMS	10.4-17
10.4.7.1	Condensate System	10.4-17
10.4.7.2	Feedwater System	10.4-20
10.4.8	STEAM GENERATOR BLOWDOWN SYSTEM	10.4-25
10.4.8.1	Design Bases	10.4-25
10.4.8.2	System Description	10.4-27
10.4.8.3	Safety Evaluation	10.4-32
10.4.8.4	Tests and Inspections	10.4-33
10.4.8.5	Instrumentation Applications	10.4-33
10.4.9	EMERGENCY FEEDWATER SYSTEM	10.4-34
10.4.9.1	Design Bases	10.4-34
10.4.9.2	System Description	10.4-36
10.4.9.3	Safety Evaluation	10.4-38
10.4.9.4	Inspection and Testing Requirements	10.4-41
10.4.9.5	Instrumentation Requirements	10.4-41
10.4.10	TURBINE BUILDING CLOSED CYCLE COOLING WATER SYSTEM	10.4-44
10.4.10.1	Design Bases	10.4-44
10.4.10.2	System Description	10.4-45
10.4.10.3	Safety Evaluation	10.4-46
10.4.10.4	Tests and Inspection	10.4-46
10.4.10.5	Instrumentation	10.4-46
10.4.11	REFERENCES	10.4-47

LIST OF TABLES

Table	Title	Page No.	
10.1-1	Deleted (RN 01-020)	10.1-4	02-01
10.2-0	Turbine Shutdown Signals	10.2-8	
10.2-1	Turbine Generator Overspeed Protection System	10.2-10	
10.2-2	Turbine Overspeed Protection System Failure Analysis	10.2-11	
10.3-1	Environmental Conditions Considered in Main Steam Supply System Design	10.3-12	
10.3-1a	Main Steam Safety Valve Setpoints	10.3-13	
10.3-2	Steam Generator For Blowdown Rate	10.3-14	
10.4-1	Condenser Air Removal	10.4-48	
10.4-2	Turbine Bypass Valve Setpoints	10.4-50	
10.4-3	Circulating Water System Design Parameters	10.4-52	
10.4-3a	Water Level Versus Time for a Postulated Circulating Water System Expansion Joint Failure	10.4-54	
10.4-4	Condensate System Equipment Parameters	10.4-55	
10.4-5	Feedwater System Equipment Parameters	10.4-57	02-01
10.4-6	Feedwater System Failure Analysis	10.4-59	
10.4-7	Steam Generator Blowdown System Component Design Parameters	10.4-60	
10.4-8	Emergency Feedwater System Failure Analysis	10.4-63	
10.4-9	Turbine Building Closed Cycle Cooling Water System Design Parameters	10.4-65	

LIST OF FIGURES

Figure No.	Title	
10.1-1	Steam and Power Conversion Systems Composite (2 Sheets)	
10.1-2	Calculated Turbine Power Heat Balance	
10.1-3	Maximum Calculated Turbine Power Heat Balance	
10.2-1	Deleted (RN 01-043)	02-01
10.2-2	Turbine Control Diagram Stop Valves	
10.2-3	Deleted	
10.2-3a	Turbine Control Diagram Control & Combined Intermediate Valves	
10.2-3b	Turbine Control Diagram Control & Combined Intermediate Valves	
10.2-4	Turbine Control Diagram Trip	
10.2-5	Generator Gas System	
10.3-1	Main Steam (Nuclear)	
10.3-2	Main Steam (Non-Nuclear)	
10.3-3	Main and Reheat Steam (Non-Nuclear)	
10.3-4	Main Steam Dump System	
10.4-1	Condenser Air Removal	
10.4-2	Deleted	
10.4-2a	Deleted	
10.4-2b	Deleted	
10.4-3	Main Steam Dump System Loop Diagram	
10.4-4	Main Steam Dump System Loop Diagram (3 Sheets)	
10.4-4a	Functional Diagram Main Steam System (Nuclear)	
10.4-4b	Functional Diagram Main Steam System	
10.4-5	Circulating Water Cooling	
10.4-6	Deleted	
10.4-7	Deleted by Amendment 96-03	
10.4-7a	Condensate Polishing	
10.4-8	Condensate	
10.4-8a	Deleted (RN 06-041)	RN 06-041
10.4-9	Condensate - Auxiliary Condensers and Blowdown Heat Exchangers	
10.4-10	Feedwater (Non-Nuclear)	

LIST OF FIGURES (Continued)

Figure No.	Title
10.4-11	Feedwater (Non-Nuclear)
10.4-12	Feedwater (Nuclear)
10.4-13	Steam Generator Blowdown
10.4-14	Nuclear Blowdown Processing System Holdup Tank and Demineralizers
10.4-15	Nuclear Blowdown Processing System Spent Resin Storage Tank
10.4-16	Emergency Feedwater (Nuclear)
10.4-17	Liquid Effluents from Nuclear Plant to Fairfield Penstock

LIST OF EFFECTIVE PAGES (LEP)

The following list delineates pages to Chapter 10 of the Virgil C. Summer Nuclear Station Final Safety Analysis Report which are current through May 2018. The latest changes to pages and figures are indicated below by Revision Number (RN) in the Amendment column along with the Revision Number and date for each page and figure included in the Final Safety Analysis Report.

Page/Fig. No.		Amend. No.	Date
Page	10-i	Reset	May 2018
	10-ii	Reset	May 2018
	10-iii	Reset	May 2018
	10-iv	Reset	May 2018
	10-v	Reset	May 2018
	10-vi	Reset	May 2018
	10-vii	Reset	May 2018
	10-viii	Reset	May 2018
Page	10.1-1	99-01	June 1999
	10.1-2	RN02-022	October 2002
	10.1-3	00-01	December 2000
	10.1-4	02-01	May 2002
Fig.	10.1-1 (Sh 1)	02-01	May 2002
	10.1-1 (Sh 2)	02-01	May 2002
	10.1-2	02-01	May 2002
	10.1-3	02-01	May 2002
Page	10.2-1	RN05-038	June 2009
	10.2-2	RN11-015	November 2011
	10.2-3	RN11-015	November 2011
	10.2-4	RN11-015	November 2011
	10.2-5	RN11-015	November 2011
	10.2-6	RN11-015	November 2011
	10.2-7	RN11-015	November 2011
	10.2-8	RN11-015	November 2011
	10.2-9	RN11-015	November 2011
	10.2-10	RN11-015	November 2011
	10.2-11	RN11-015	November 2011
	10.2-12	RN11-015	November 2011
Fig.	10.2-1	02-01	Deleted
	10.2-2	RN12-013	May 2015
	10.2-3	96-03	Deleted
	10.2-3a	RN12-013	May 2015
	10.2-3b	RN12-013	May 2015
Fig.	10.2-4	RN11-015	November 2011
	10.2-5	RN12-010 RN05-043	December 2013 March 2014
Page	10.3-1	02-01	May 2002
	10.3-2	02-01	May 2002
	10.3-3	02-01	May 2002
	10.3-4	02-01	May 2002
	10.3-5	02-01	May 2002
	10.3-6	02-01	May 2002
	10.3-7	RN03-034	October 2003
	10.3-8	02-01	May 2002
	10.3-9	02-01	May 2002
	10.3-10	02-01	May 2002
	10.3-11	02-01	May 2002
	10.3-12	RN03-008	June 2003
	10.3-13	02-01	May 2002
	10.3-14	RN04-018	August 2004
	10.3-15	RN04-018	August 2004
	10.3-16	02-01	May 2002
Fig.	10.3-1	RN05-007 RN00-085 RN15-001	October 2006 November 2011 August 2017
	10.3-2	RN11-015 RN12-035 RN18-001	November 2011 April 2018 April 2018
	10.3-3	RN03-020	June 2003
	10.3-4	RN03-028	July 2003
Page	10.4-1	RN09-012	February 2010
	10.4-2	RN06-041	November 2011
	10.4-3	RN02-022	October 2002
	10.4-4	02-01	May 2002
	10.4-5	RN02-057	April 2004
	10.4-6	RN02-022	October 2002
	10.4-7	RN02-022	October 2002
	10.4-8	02-01	May 2002

LIST OF EFFECTIVE PAGES (LEP)

Page/Fig. No.	Amend. No.	Date
10.4-9	00-01	December 2000
10.4-10	RN04-012	July 2004
Page 10.4-11	RN08-001	May 2009
10.4-12	02-01	May 2002
10.4-13	02-01	May 2002
10.4-14	00-01	December 2000
10.4-15	RN06-041	November 2011
10.4-16	00-01	December 2000
10.4-17	02-01	May 2002
10.4-18	RN06-041	November 2011
10.4-19	RN06-041	November 2011
10.4-20	02-01	May 2002
10.4-21	02-01	May 2002
10.4-22	RN06-006	June 2006
10.4-23	02-01	May 2002
10.4-24	RN04-012	July 2004
10.4-25	02-01	May 2002
10.4-26	00-01	December 2000
10.4-27	RN04-026	August 2004
10.4-28	00-01	December 2000
10.4-29	00-01	December 2000
10.4-30	00-01	December 2000
10.4-31	00-01	December 2000
10.4-32	RN04-026	August 2004
10.4-33	00-01	December 2000
10.4-34	RN01-082	March 2003
10.4-35	02-01 RN12-030	May 2002 November 2017
10.4-36	00-01 RN12-030	December 2000 November 2017
10.4-37	00-01 RN12-030	December 2000 November 2017
10.4-38	00-01 RN12-030	December 2000 November 2017
10.4-39	00-01 RN12-030	December 2000 November 2017
10.4-40	02-01 RN12-030	May 2002 November 2017

Page/Fig. No.	Amend. No.	Date
10.4-41	RN11-022	August 2012
10.4-42	00-01 RN12-030	December 2000 November 2017
10.4-43	00-01	December 2000
10.4-44	RN10-018	November 2011
10.4-45	RN10-018	November 2011
10.4-46	00-01	December 2000
Page 10.4-47	02-01	May 2002
10.4-48	02-01	May 2002
10.4-49	02-01	May 2002
10.4-50	RN04-003	February 2004
10.4-51	RN04-003	February 2004
10.4-52	RN08-001	May 2009
10.4-53	02-01	May 2002
10.4-54	02-01	May 2002
10.4-55	02-01	May 2002
10.4-56	RN06-041	November 2011
10.4-57	02-01	May 2002
10.4-58	02-01	May 2002
10.4-59	02-01	May 2002
10.4-60	02-01	May 2002
10.4-61	RN05-008	October 2005
10.4-62	02-01	May 2002
10.4-63	02-01 RN12-030	May 2002 November 2017
10.4-64	02-01 RN12-030	May 2002 November 2017
10.4-65	02-01	May 2002
Fig. 10.4-1	RN09-012 RN06-024	February 2010 December 2012
10.4-2	96-03	(Deleted)
10.4-2a	96-03	(Deleted)
10.4-2b	96-03	(Deleted)
10.4-3	02-01	May 2002
10.4-4 (pg 1)	02-01	May 2002
10.4-4 (pg 2)	02-01	May 2002
10.4-4 (pg 3)	02-01	May 2002
10.4-4a	96-03	September 1996

Page/Fig. No.	Amend. No.	Date	Page/Fig. No.	Amend. No.	Date
10.4-4b	96-03	September 1996			
10.4-5	RN14-025	May 2015			
10.4-6	96-03	Deleted			
10.4-7	96-03	Deleted			
10.4-7a	RN06-041 RN10-014 RN10-018	November 2011 November 2011 November 2011			
Fig. 10.4-8	RN15-024 RN12-030	January 2016 November 2017			
10.4-8a	Deleted	November 2011			
10.4-9	RN06-024 RN18-010	December 2012 May 2018			
10.4-10	RN11-025	July 2012			
10.4-11	RN08-031	November 2011			
10.4-12	RN09-001	June 2010			
10.4-13	RN07-028	November 2008			
10.4-14	RN06-008 RN12-011	July 2012 November 2012			
10.4-15	RN04-037	May 2005			
10.4-16	RN14-029 RN15-024 RN16-004 RN12-030	January 2016 January 2016 July 2016 November 2017			
10.4-17	RN03-025	August 2003			

10.0 STEAM AND POWER CONVERSION SYSTEM

10.1 SUMMARY DESCRIPTION

The steam and power conversion system is shown schematically by Figure 10.1-1, Sheets 1 and 2. Principal design and performance characteristics are given in detail in Section 10.4. The heat balance guaranteed by the turbine manufacturer is shown by Figure 10.1-2. Figure 10.1-3 shows the maximum calculated turbine power (stretch power) heat balance. RN 02-022

The steam and power conversion system includes the following:

1. Main Steam System.

2. Turbine Generator.

3. Condensate System.

4. Condenser Air Removal System.

5. Feedwater System.

6. Turbine Bypass System.

7. Circulating Water System.

8. Steam Generator Blowdown System.

9. Emergency Feedwater System.

00-01

The thermal energy of steam generated by a 3 loop, Pressurized Water Reactor Nuclear Steam Supply System (NSSS) is converted to electrical energy through a tandem compound, 1800 rpm turbine generator.

Steam is produced in 3 steam generators where heat is transferred from the reactor coolant system to the feedwater. This steam flows from each steam generator to a distribution header. From this distribution header, 4 main steam lines convey the steam to a double flow, high pressure turbine. Steam exiting the high pressure turbine normally passes through 2 moisture separator reheaters prior to entering 2, double flow, low pressure turbines. Steam exits from the low pressure turbines to the main condenser. The high and low pressure turbines are equipped with a total of 6 extraction points which provide steam for feedwater heating. Moisture separator drains, steam reheater drains and high pressure heater drains are returned to a deaerating heater where they become part of the feedwater. Low pressure heater drains and steam packing condenser drains are cascaded to the main condenser. RN 02-022

Steam exhausted from the low pressure turbines is condensed and deaerated in a 2 shell surface condenser. Condensate is collected in a hotwell sized for a holding capacity of approximately 2 minutes at maximum condensate pump flow. Condensate is normally pumped from the hotwell by 2 of the 3 condensate pumps. The condensate passes through the steam packing condenser and 3 stages of low pressure heaters to the deaerating heater and deaerator storage tank. Each of the 3 stages of low pressure heaters is comprised of 2 parallel 50 percent capacity trains. RN 02-022

The feedwater booster pumps take suction from the deaerator storage tank and discharge to the feedwater pump suction. The feedwater pumps discharge to 2 trains of high pressure heaters. Feedwater exiting these heaters passes into a single header from which it is distributed to the feedwater flow control valves. The feedwater flows from the feedwater flow control valves through the containment isolation valves into the steam generators.

The Emergency Feedwater System provides an additional means for the supply of feedwater to the steam generators for use when the Feedwater System is not available. This permits continued transfer of reactor coolant thermal energy to feedwater in the steam generators. The Emergency Feedwater System consists of 2 electric motor driven and 1 turbine driven emergency feedwater pumps. These pumps, when required, provide feedwater to the steam generators from a reserve supply maintained in the condensate storage tank. A backup source of water is provided by connection to the Service Water System.

Noncondensible gases removed from the condenser by the Condenser Air Removal System are monitored for radioactivity. The condenser offgas is normally discharged to the Auxiliary Building Exhaust System charcoal filters. Provision is made for discharge of the noncondensibles to atmosphere. 02-01

Should a 100 percent loss of turbine load occur, reactor coolant thermal energy is dissipated through the formation of steam in the steam generators and subsequent bypassing of the steam to the condenser and/or the atmosphere through the Turbine Bypass System and through the power operated relief valves. 00-01

The following portions of the steam and power conversion system are safety-related:

1. Main Steam System piping inside the Reactor Building.
2. The portion of the Main Steam System which forms a part of the containment boundary, including main steam safety valves, power operated relief valves, and main and branch steam isolation valves.
3. The main steam piping to the emergency feedwater pump turbine.
4. The Emergency Feedwater System.
5. Feedwater System piping from the feedwater containment isolation valves to the steam generators.
6. Steam generator blowdown piping from the steam generator to and including the containment isolation valves.

TABLE 10.1-1

Deleted per RN 01-020

02-01

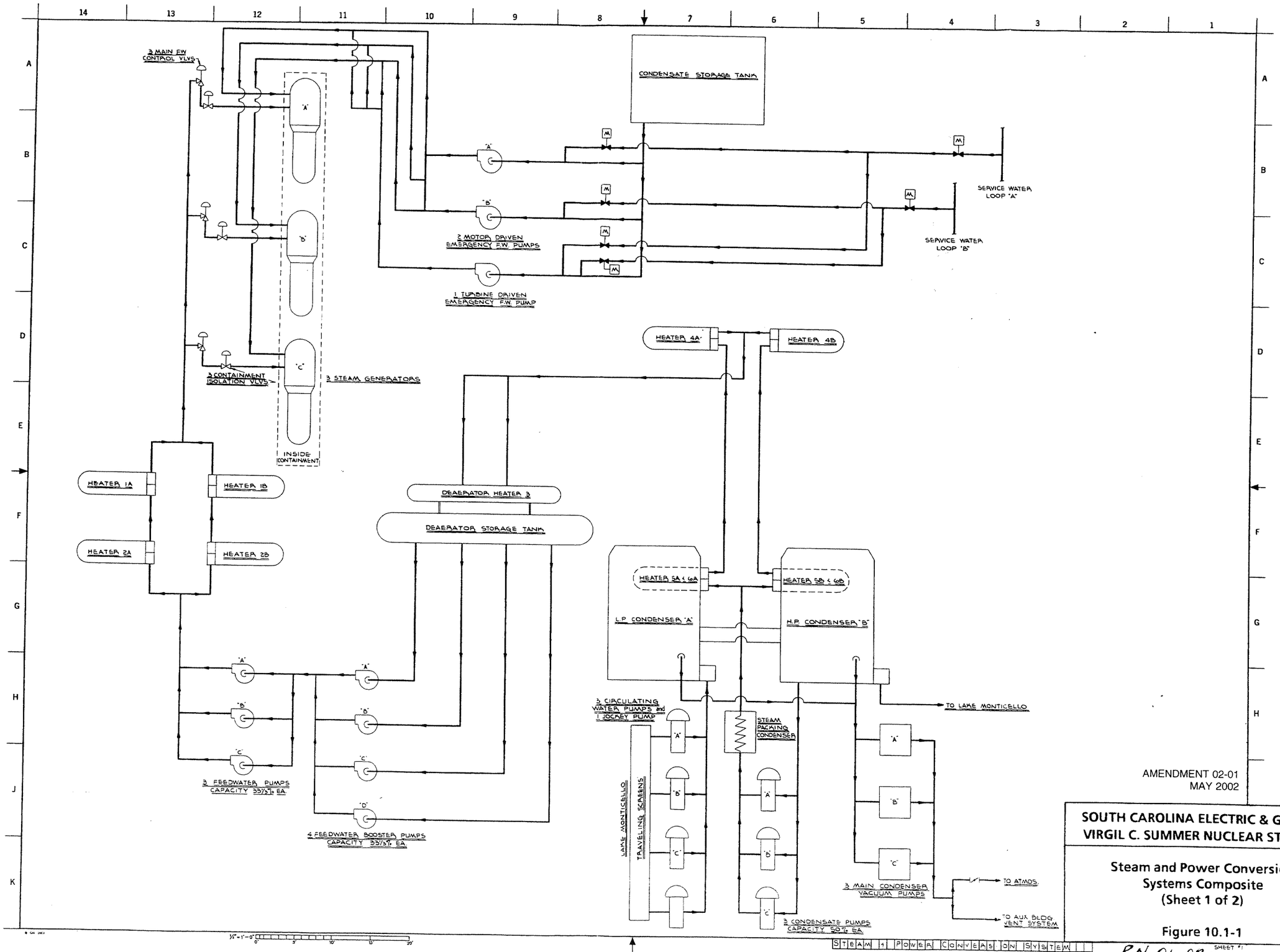

AMENDMENT 02-01
MAY 2002

SOUTH CAROLINA ELECTRIC & GAS CO.
VIRGIL C. SUMMER NUCLEAR STATION

Steam and Power Conversion Systems Composite (Sheet 1 of 2)

Figure 10.1-1

RN 01-020

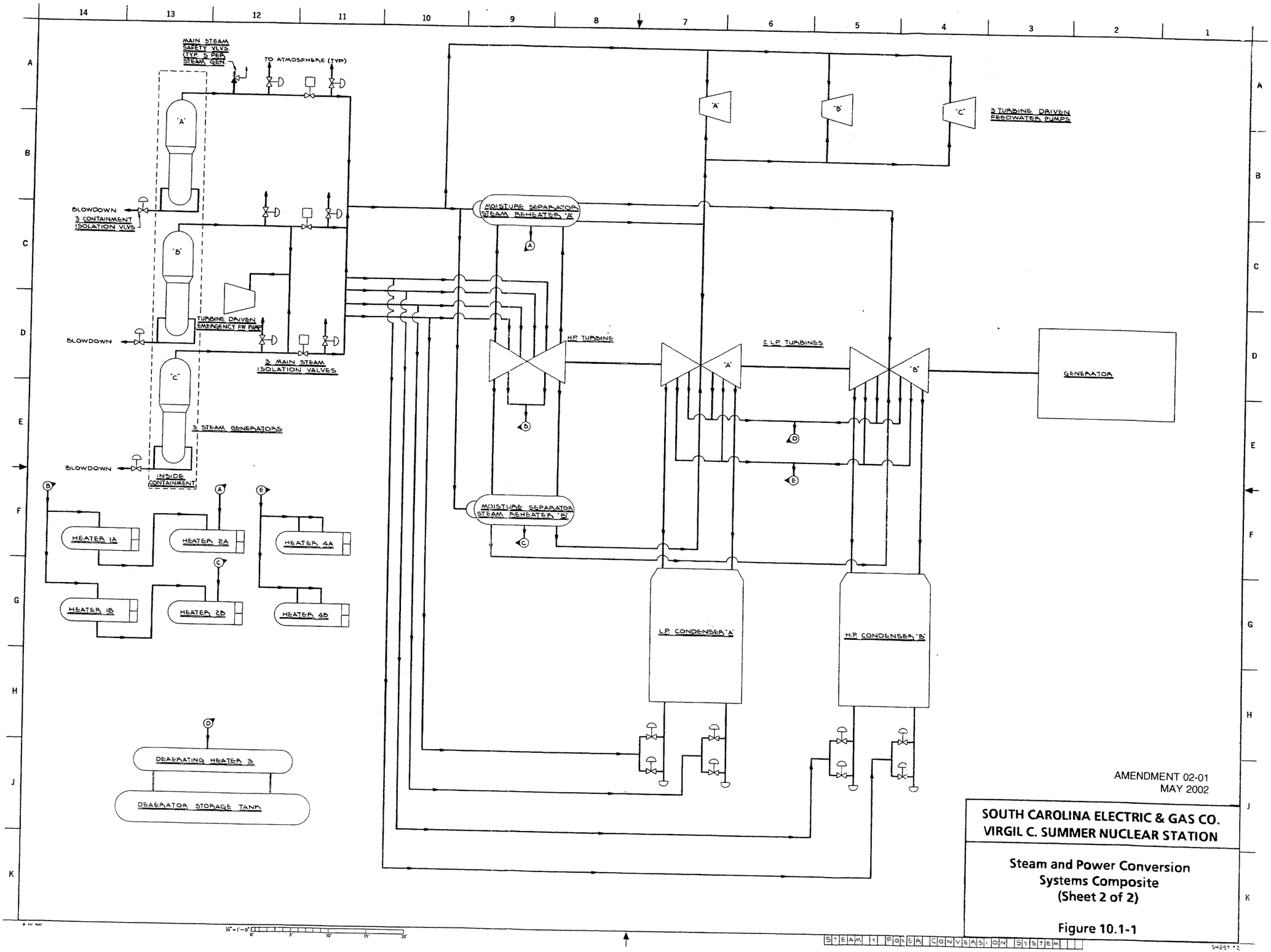

AMENDMENT 02-01
MAY 2002

SOUTH CAROLINA ELECTRIC & GAS CO.
VIRGIL C. SUMMER NUCLEAR STATION

Steam and Power Conversion Systems Composite (Sheet 2 of 2)

Figure 10.1-1

RN 01-020

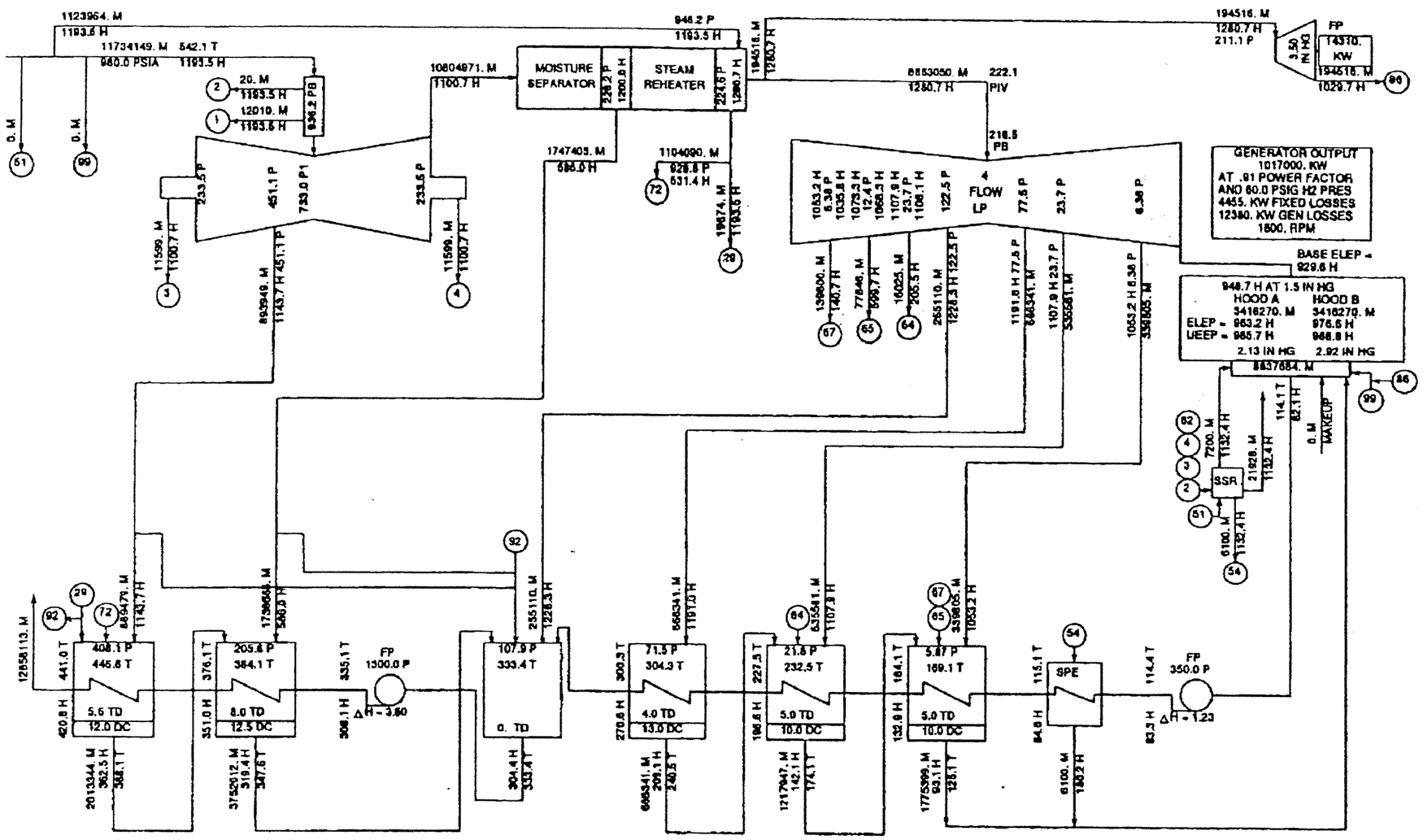

VALVE BEST POINT NET HEAT RATE = $\frac{11734149.\,(1193.5 - 420.8) + 1123964.\,(1193.5 - 420.8)}{1017000.} = 9770 \frac{\text{BTU}}{\text{KW-HR}}$

SOUTH CAROLINA ELECTRIC AND GAS
V.C. SUMMER NO. 1

100% RATED POWER
POST UPRATE

LEGEND - CALCULATIONS BASED ON 1967 ASME STEAM TABLES
M - FLOW-LB/HR
P - PRESSURE-PSIA
H - ENTHALPY-BTU/LB
T - TEMPERATURE-F DEGREES

953948. KW 2.00 / 2.30 IN HG ABS
TC4F 43.0 IN LSB 1800 RPM
980.0 PSIA 1193.5 BTU / LB 1 STAGE OF REHEAT
GEN- 1137700. KVA .90 PF LIQ 60.0 PSIG H2 PRES

AMENDMENT 02-01
MAY 2002

SOUTH CAROLINA ELECTRIC & GAS CO.
VIRGIL C. SUMMER NUCLEAR STATION

CALCULATED TURBINE POWER
HEAT BALANCE
(REFERENCE TR04730-001)
Figure 10.1-2

RN 01-020

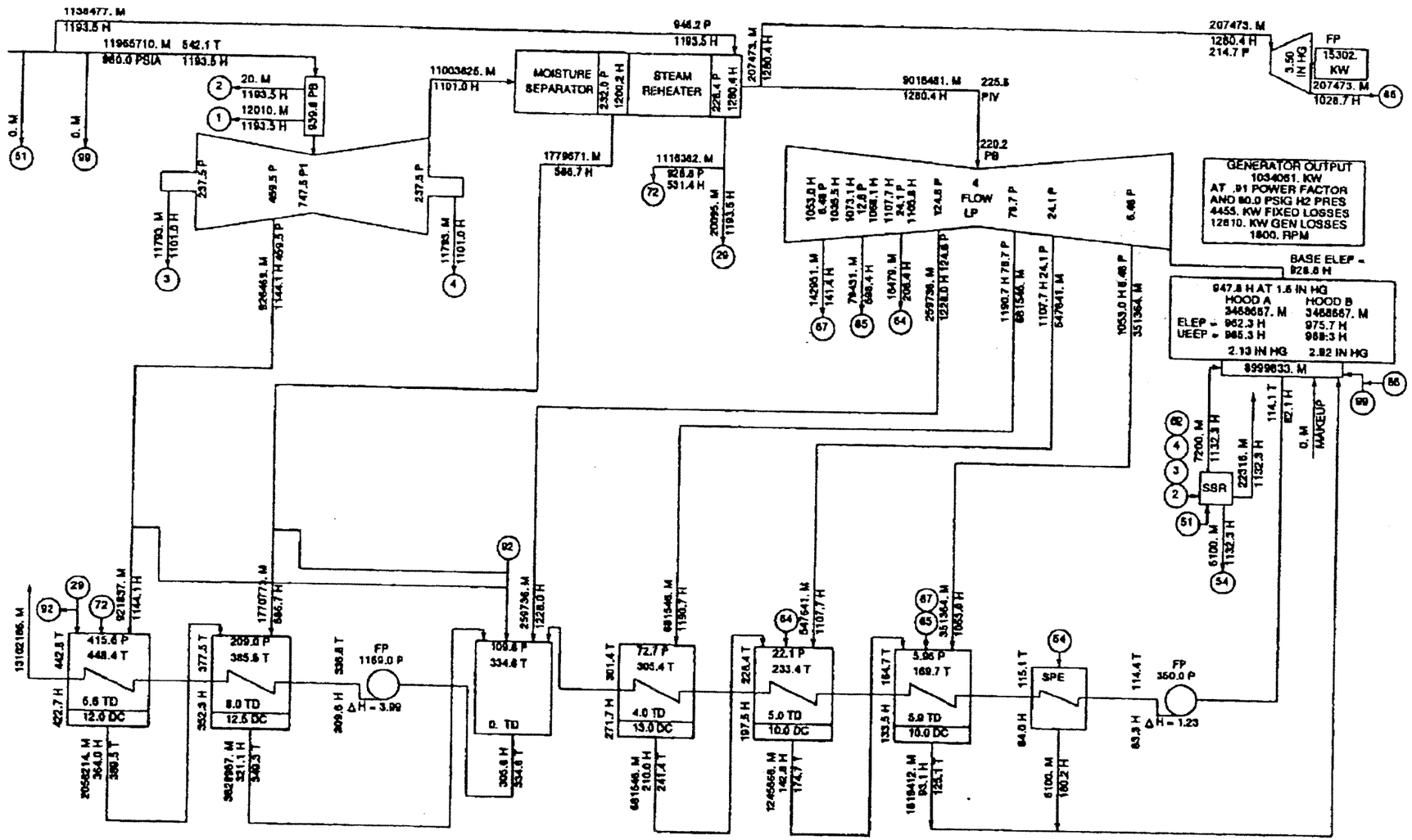

VALVE BEST POINT NET HEAT RATE = (11965710. (1193.5 - 422.7) + 1136477. (1193.5 - 422.7)) / 1034061. = 9787 BTU/KW-HR

SOUTH CAROLINA ELECTRIC AND GAS
V.C. SUMMER NO. 1

2960 MWTh
POST UPRATE

LEGEND - CALCULATIONS BASED ON 1967 ASME STEAM TABLES
M - FLOW-LB/HR
P - PRESSURE-PSIA
H - ENTHALPY-BTU/LB
T - TEMPERATURE-F DEGREES

953945. KW 2.00 / 2.30 IN HG ABS
TC4F 43.0-IN LSB 1800 RPM
980.0 PSIA 1193.5 BTU / LB 1 STAGE OF REHEAT
GEN- 1137700. KVA .90 PF LIQ 60.0 PSIG H2 PRES

AMENDMENT 02-01
MAY 2002

SOUTH CAROLINA ELECTRIC & GAS CO.
VIRGIL C. SUMMER NUCLEAR STATION

MAXIMUM CALCULATED TURBINE POWER
HEAT BALANCE
(REFERENCE TR04730-001)

Figure 10.1-3

...\ondeck\m-0108\fig_10.1-3.dgn Mar. 06, 2001 13:06:09

RN 01-020

10.2 TURBINE GENERATOR

10.2.1 DESIGN BASES

The turbine generator is a General Electric Company (GE) TC4F-43" LSB, tandem compound, 4 flow exhaust unit with moisture separation and reheat between the high pressure (HP) and low pressure (LP) sections. The unit operates at 1800 rpm and is rated at a gross generator output of 1,017,000 kW with all feedwater heaters in service, at the nominal plant exhaust pressure of 2.13/2.92 inches Hg (absolute) and zero makeup. 02-01

Steam conditions at the turbine inlet are 980 psia and 1193.5 BTU/lb. Normal and upset conditions are tabulated on the system diagram, Figure 10.3-2. 02-01

The turbine generator design capacity is 1,039,489 kW (Ref. Fig. 10.1-3). The turbine generator is expected to operate in the base load mode for the majority of its design life. Normal load swings are limited to 5% per minute which is the rate of change permitted by the Nuclear Steam Supply System (NSSS). A step load change of 10% of full power rating can be accommodated without use of the Turbine Bypass System. 02-01

10.2.2 DESCRIPTION

10.2.2.1 General

The turbine consists of 3 casings: a double flow HP section followed by 2 double flow LP casings. The last stage turbine wheels have 43 inch buckets. Mechanical moisture separation and reheat are provided between HP and LP sections. RN 02-022

The heat cycle provides for extraction at 6 pressure stages:

1. One (1) on the high pressure turbine casing (heater No. 1).

2. One (1) on the moisture separator (heater No. 2).

3. Four (4) on each of the 2 LP turbine casings (heaters No. 3 through 6).

The generator operates at 1800 rpm. It is a 3 phase, 60 Hz unit, rated 1,137,680 kVA at 22,000 volts, 0.905 pf and 60 psig hydrogen pressure. A shaft driven alternator exciter, rated at 2940 kVA @ 0.95 power factor (pf) provides the power necessary for field excitation. Section 10.2.2.4 presents a discussion of the Generator Gas System. RN 05-038

10.2.2.2 Turbine Generator Control

An Electrohydraulic Control System (EHC) (using electronic computing devices and high pressure, fire resistant fluid) actuates and controls the steam valves. This system is completely separated from the bearing oil supply.

The original EHC analog control cabinet and turbine-generator skid interfaces underwent a significant upgrade during RF-19 to replace obsolete equipment and to enhance overall system reliability. The upgrade consists of a "triple modular redundant" (TMR) digital control system, which utilizes three separate and independent controller processor modules and associated redundant input/output. EHC control logic algorithms utilize 2-of-3 (typical) “software implemented fault tolerance” (SIFT) voting techniques to optimize input/output signal data integrity and diagnostic trending. Primary <Q> controllers perform primary system control and trip protection functions (including primary overspeed protection). Emergency <P> controllers perform emergency (backup) overspeed protection function.

<Q> and <P> controller protection functions which result in a Turbine Trip condition (as described below and per Figure 7.2-1, Sheet 15) interface with downstream Trip Manifold Assembly (TMA) electromechanical and hydraulic devices, located in the Turbine front standard. The TMA is comprised of two independent trains of three sets of Electronic Trip Device (ETD) solenoids/pilot-actuated dump valves, of which 2-of-3 in either train must change position to trip the turbine. A trip condition results in pressure relief of the emergency trip system (ETS) header, which in turn causes turbine steam valves closure due to the loss of ETS hydraulic fluid pressure. RN 11-015

During normal operation, reactor power is controlled (using the Reactor Control System, as described in Section 7.7.1) to match turbine load as measured by turbine first stage pressure. The desired turbine steady-state load is established manually by the operator through inputs into EHC. EHC control logic algorithms establish/maintain the allowable turbine speed and turbine load conditions, ensure the required positioning of all turbine steam valves, and facilitate other loading/unloading evolutions (e.g., shell/chest warming, runbacks). These algorithms perform programmed control functions based upon comparison of: actual turbine-related operating parameters monitored by EHC (e.g., valve positions, system pressures); desired operator input settings; and pre-programmed system state point limits (e.g., control valve steam flow-to-valve lift position characterizations [per steam flow to turbine load demand correlations], runback conditions, overspeed regulation, other system limitations).

Table 10.2-0 provides a listing of signals that will shut down the turbine. Figure 7.2-1, Sheet 15 functionally shows EHC and turbine system interfaces which perform turbine trip-related functions. Receipt of 2-of-3 actuations via either <Q> Primary Trip Relays (PTRs) or <P> Emergency Trip Relays (ETRs), in either train of its <Q> or <P> controllers, will result in the corresponding change of state of its downstream TMA EHC interface devices (i.e., de-energized ETD solenoids and tripped-open ETD

pilot-actuated dump valves associated with the actuated train). The outcome of either train's 2-of-3 dump valve actuation is loss of ETS hydraulic fluid, closure of Turbine Stop and Control Valves, and a Turbine Trip condition. This 2-of-3 Turbine Trip actuation can also result from a complete loss of both non-safety related power supply feeders to the EHC control system cabinet (including the loss of a dedicated EHC battery-backed uninterruptible power supply, in the alternate feeder circuit). RN 11-015

10.2.2.3 Turbine Generator Overspeed Protection

The turbine's rotational speed is sensed by a total of six passive magnetic-type probes used in conjunction with a multi-toothed wheel on the turbine shaft. Three of these speed probes (in the <Q> controllers) provide input signals to speed control and primary trip protection algorithms. The remaining three speed probes (in the <P> controllers) provide input signals directly to emergency trip protection algorithms.

Steam valves associated with turbine generator overspeed protection are shown by Figure 10.3-2. Control details for the main stop valves (MSV) are shown by Figure 10.2-2. Control details for the control valves are shown by Figure 10.2-3a. Control details for the combined intermediate valves (CIV), which are the intermediate stop valve (ISV) and intercept valve (IV), are shown by Figure 10.2-3b. The ISV and IV are 2, independent, separately actuated valves in the same valve body, called the CIV.

Overspeed protection mechanisms and the hydraulic trip system are shown by Figure 10.2-4.

ETD components (as described in Section 10.2.2.2) receive high pressure (1600 psig nominal) hydraulic fluid from the EHC power unit, and regulate the ETS header pressure condition. ETS pressure is high when the hydraulic trip system is reset, and low (at drain pressure) when the system is tripped. The condition of the ETS header depends upon the state of 2-of-3 ETD solenoids/dump valves. RN 11-015

During a turbine generator overspeed occurrence, the EHC control system receives <Q> and/or <P> speed sensor input signals which exceed the pre-defined Primary and/or Emergency speed setpoint levels. Turbine trip logic actuation will occur when 2-of-3 <Q> speed signals or 2-of-3 <P> speed signals exceed their respective speed setpoint. (Note that turbine trip actuation will also occur in the event of postulated speed sensor failures, including the <Q> and <P> speed difference fault trip and zero speed mismatch trips functionally shown on Figure 8.3-8.) Overspeed-related turbine trip logic actuation will cause ETD solenoids to de-energize and ETD dump valves to de-pressurize the ETS hydraulic trip header (identical to other turbine trip conditions, as described in Section 10.2.2.2).

1. The disc dump valves of the MSV, CV, IV, and ISVs are opened causing rapid closure of the steam valves due to spring and steam force.
2. The ETS pressure transmitters maintain the tripped condition within the EHC control system.

3. The extraction relay dump valve isolates the air supply to and vents air from the air cylinders of the turbine extraction nonreturn valves. Spring assist on the air cylinder aids in positive closure of the nonreturn valves. RN 11-015

Frequent inservice testing of the overspeed trip mechanisms and steam valves ensures the reliability of the overspeed protection systems. All steam valves, except the nonreturn valves, located inside the condenser in the low pressure feedwater heater extraction piping, are capable of online testing.

This system is designed to be fail safe, i.e., a malfunction of the system will trip close all turbine steam source valves, limiting turbine overspeed. A high or moderate energy piping failure at the turbine, which would cause a loss of power (electric or hydraulic) to the overspeed protection system due to severance of electrical cable or hydraulic lines, would cause all turbine steam source valves to close. 02-01

The turbine trip logic also includes fail safe features which limit turbine overspeed. The trip logic verifies that at least 1 of the 2 low pressure steam source valves (i.e., intermediate stop valve or intercept valve) in each line to the turbine has closed and that all high pressure main turbine stop valves have closed before load is disconnected from the main generator. In the event of a pipe rupture, with manual turbine trip, load would not be disconnected from the main generator unless all turbine steam source valves, excluding extraction valves, were closed. The extraction valves are nonreturn (check) valves and, therefore, do not require external signals to close. 02-01

The connection from the low pressure turbine to the condenser is under vacuum during operation. In the event of failure of this connection, air would initially be drawn into the condenser and backpressure on the turbine would increase to the point where the turbine would trip due to the high backpressure. Venting of air into the condenser is a method normally used to quickly slow a turbine following a trip. Some steam may be released while the turbine is being tripped.

A turbine trip will initiate a reactor trip. The reactor trip from turbine trip will be automatically blocked by P-9 (power level less than 50% rated thermal power) and on increasing power reinstated automatically by P-9. 02-01

Since the turbine overspeed protection system is of a fail safe design and no credit is taken for reactor trip due to turbine trip in any accident analysis, protection from pipe rupture is neither required nor provided.

A failure analysis of the turbine generator overspeed protection system is presented by Table 10.2-2.

10.2.2.4 Generator Gas System

The bulk hydrogen and carbon dioxide storage facilities are located in the yard area south of the Turbine Building (see Figure 1.2-1). The hydrogen and carbon dioxide storage and distribution systems are schematically illustrated by Figure 10.2-5.

The hydrogen storage facility consists of 6 storage tanks, each pressurized to a nominal pressure of 2300 psig. Hydrogen pressure is reduced to the generator manufacturer's control panel supply pressure in 2 stages. 02-01

Liquid carbon dioxide is stored in a refrigerated storage tank and is vaporized in the Turbine Building as required for generator purging.

The Generator Gas System is equipped with an inservice gas analyzer. This analyzer actuates an alarm upon detection of low (<90%) hydrogen purity.

Safety features associated with the Generator Gas System include the following:

1. Remote, outdoor, bulk hydrogen storage and pressure reduction facilities are provided. Hydrogen supply piping from the storage facility to the Turbine Building is under low pressure and is also buried.

2. The inservice generator gas analyzer actuates an alarm to warn of low hydrogen purity in advance of formation of an explosive mixture. A generator differential fan pressure gage provides an independent check of hydrogen purity.

3. The Generator Gas System is operated by experienced personnel.

4. Generator gases are vented to atmosphere independent of other plant vents.

5. Operating procedures require complete purging of the generator before and after maintenance. Hydrogen is purged from the generator by carbon dioxide before it is opened. When maintenance is completed, the generator is again purged with carbon dioxide to remove the air prior to refilling with hydrogen.

6. The generator gas analyzer is periodically calibrated to assure accuracy.

7. System valves are periodically checked for indication of leakage to assure system leak tightness.

8. Physical separation of the Generator Gas System from safety related equipment required for safe plant shutdown provides additional safety.

10.2.3 TURBINE MISSILES

The LP turbine built up rotors consisting of wheels shrunk-on a central shaft have been replaced by single piece monoblock rotors in spring, 1996. The monoblock turbine rotor design eliminates the brittle fracture failure mode and the probability for a wheel burst and missile generation at normal operating speeds. Furthermore, the 2011 installation of the digital EHC control system provides significant redundancy and reliability enhancements over the original overspeed protection. The improvements to rotors and controls (relative to the original plant design) provide for a further reduction in the probability of turbine missile generation due to an overspeed protection system failure. RN 11-015

A compilation report [4] contains various missile probability and reliability analyses performed by the turbine manufacturer, which encompass the current system configuration details (of the monoblock rotors and the digital control system retrofit). These analyses document the following summary of pertinent results: RN 11-015

- The maximum attainable main turbine shaft speed is 214% - 217% of normal running speed at the worst possible operating conditions. At this point, the driving forces in the steam are counteracted by the drag forces and the rotor train can no longer accelerate.

- A complete failure of the Main Turbine Control System is required to achieve the maximum attainable overspeed. The annual probability of a complete control failure is in the range 10^{-8}.

- The LP monoblock overspeed capability based on material properties and rotor design is 221% for LPA and 222% for LPB. 02-01

1. Turbine Design 02-01

   The turbine assembly was designed to withstand normal conditions and anticipated transients, including those resulting in turbine trip, without loss of structural integrity. The design of the turbine assembly satisfied the following criteria:

   a. Turbine shaft bearings were designed to retain structural integrity under normal operating loads and anticipated transients, including those leading to turbine trips.

   b. The multitude of natural critical frequencies of the turbine shaft assemblies existing between zero speed and 20% overspeed were controlled in the design and operation so as to cause no distress to the unit during operation.

   c. The maximum tangential stress in rotors resulting from centrifugal forces, interference fit and thermal gradients does not exceed 0.75 of the yield strength of the materials at 115% of rated speed.

2. Inservice Inspection

   The inservice inspection program for the turbine assembly will include the following:

   a. Disassembly of the turbine at approximately 10 year intervals, during plant shutdown, and complete inspection of all normally inaccessible parts, such as couplings, coupling bolts, turbine shafts, low pressure turbine buckets, low pressure wheels, and high pressure rotors.

   b. Visual, surface, and volumetric examinations, as indicated below:

(1) A thorough volumetric examination of all low pressure wheels and high pressure rotors, including areas immediately adjacent to keyways and bores, will be conducted. This examination is predicated on the development of suitable remote inspection equipment.

(2) Visual examination of all accessible surfaces of rotors and wheels.

(3) Visual and surface examination of all low pressure buckets.

(4) Surface examination (100%) of couplings and coupling bolts.

The inservice inspection of main steam and reheat valves will include the following:

a. Dismantle at least 1 main steam stop valve, 1 main steam control valve, 1 reheat stop valve, and 1 reheat intercept valve at approximately 3-1/3 year intervals during refueling or maintenance shutdowns, and conduct a visual and surface examination of valve seats, discs, and stems. If unacceptable flaws or excessive corrosion are found in a valve, all valves of that type will be inspected. Valve bushings will be inspected and cleaned, and bore diameters will be checked for proper clearance.

b. Main steam stop and control, reheat stop and intercept valves will be exercised at least once during a 3 month operating interval, by closing each valve and observing, by the valve position indicator, that it moves smoothly to a fully closed position. This observation will be made by actually watching the valve motion. RN 11-015

10.2.4 EVALUATION

Turbine rotor missiles will not be generated with the rotor burst capability exceeding the overspeed potential. Therefore, the possibility of missiles being generated by a wheel burst due to stress corrosion cracking and causing damage to critical plant components, is no longer present, and there no longer exists any wheel disc integrity concern. 02-01 RN 11-015

Reference [4] provides a detailed safety evaluation of steam valve arrangement and trip devices, turbine extraction line overspeed trip protection, and operating and testing of overspeed protection systems. RN 11-015

10.2.5 REFERENCES

1. Deleted by RN 11-015.
2. Deleted by RN 11-015.
3. Deleted by RN 11-015.
4. V. C. Summer Nuclear Station, “Main Turbine Missile Probability and Reliability Reports”, VCSNS Technical Report TR03880-002, dated July 12, 2011.

RN 11-015

TABLE 10.2-0

TURBINE SHUTDOWN SIGNALS

1. Train A EHC external trips, from any one of the following conditions:
   - Train A Reactor Trip.
   - High-high steam generator level (2 of 3) or Train A Safety Injection.
   - Loss of 3-of-3 feedwater pumps.
   - Generator electrical fault.
   - LP Heater 5A, 5B, 6A, and/or 6B high-high levels (10 second time delay).
   - AMSAC actuation above C-20, due to low-low level in 2 of 3 steam generators.

2. Train B EHC external trips, from any one of the following conditions:
   - Train B Reactor Trip.
   - Hi-Hi steam generator level (2 of 3) or Train B Safety Injection.
   - AMSAC actuation above C-20, due to low-low level in 2 of 3 steam generators.

3. Manual turbine trip pushbuttons (2 of 2 at MCB, or 2 of 2 at Front Standard).

4. Main shaft oil pump discharge pressure low (2 of 3), and turbine speed greater than 1350 rpm.

5. Lube oil bearing header pressure low (2 of 3).

RN 11-015

6. EHC hydraulic header pressure low (2 of 3).

7. Speed signal mismatch trips, in Primary (<Q>) and/or Emergency (<P>) controllers, from any one of the following conditions:
   - <Q> zero speed mismatch fault (2 of 3 Primary <Q> speed sensors indicate zero speed condition while <P> Emergency sensors indicate greater than 15% of rated speed).
   - <P> zero speed mismatch fault (2 of 3 Emergency <P> speed sensors indicate zero speed condition while <Q> Primary sensors indicate greater than 15% of rated speed).
   - <Q> and <P> speed difference fault (difference greater than 5%).
   - <Q> excessive acceleration or deceleration rate change (2 of 3 <Q> speed sensors).
   - <P> excessive acceleration or deceleration rate change (2 of 3 <P> speed sensors).

8. Primary (<Q> controllers) overspeed trip (109.5% of rated speed).

9. Emergency (<P> controllers) overspeed trip (110% of rated speed).

TABLE 10.2-0 (Continued)

TURBINE SHUTDOWN SIGNALS

10. Exhaust vacuum (absolute) pressure high (2 of 3 in either [LP A or LP B] hood), and turbine speed greater than 150 rpm.

11. Exhaust hood high temperature (2 of 3 in either [LP A or LP B] hood).

12. Loss of stator cooling trip (due to failed runback).

13. Moisture separator reheater level high (15 second time delay) (2 of 3 in either A or B MSR). RN 11-015

14. Thrust bearing excessive wear detection (from 2 of 3 axial bearing position sensors).

15. Shaft bearing high vibration (10 second time delay); manual operator action required if automatic trip disabled.

16. Train A or Train B Off-line ETD Test tripped condition (2 of 3 electronic trip devices [ETDs] under test are de-energized [tripped]).

TABLE 10.2-1

TURBINE GENERATOR OVERSPEED PROTECTION SYSTEM

Overspeed Trip Mechanism	Set Speed	Action
Speed Governor (Normal)	1836 to 1872 RPM (102% to 104%)	Complete closure of intercept valves at 102% of rated speed; complete closure of control valves at 104% of rated speed. Loss of two speed signals actuates the hydraulic trip system.
Primary Overspeed Trip	1971 RPM (109.5%)	Actuates the hydraulic trip system.
Emergency Overspeed Trip	1980 RPM (110%)	Actuates the hydraulic trip system.

RN 11-015

TABLE 10.2-2

TURBINE OVERSPEED PROTECTION SYSTEM
FAILURE ANALYSIS

Component	Malfunction	Comment	
Steam Valve (MSV, CV, IV, ISV)	One valve fails to close on overspeed trip	Each steam line contains “paired” steam valves installed in series. Thus, failure of one valve (e.g., CV1) to close does not defeat its paired valve (e.g., MSV1). No impact to overspeed function exists.	RN 11-015
Turbine Extraction Nonreturn Valve	One valve fails to close	The overspeed potential of the feedwater heating system is small. The total uncontrolled energy can contribute no more than 1.5% to the running speed of the turbine generator.	
Primary <Q> Overspeed Trip Actuation Logic	One Train of <Q> protection logic fails to trip at Primary Overspeed setpoint	Two Trains of <Q> logic are installed. Thus, failure of one Train will not defeat the other Train. Furthermore, backup protection is provided by Emergency <P> Overspeed Trip Actuation Logic.	
Emergency <P> Overspeed Trip Actuation Logic	One Train of <P> protection logic fails to trip at its Overspeed setpoint	Two Trains of <P> logic are installed. Thus, failure of one Train will not defeat the other Train.	RN 11-015
Electronic Trip Device (ETD)	One Train of 2-of-3 ETD solenoid/dump valve components fail to trip	Trip manifold assembly consists of two trains of 2-of-3 ETD solenoid/dump valve components. Either ETD train will trip the turbine.	
Hydraulic Trip System Piping	Piping fails causing depressurization	All steam valves close as in overspeed trip.	

TABLE 10.2-2 (Continued)

TURBINE OVERSPEED PROTECTION SYSTEM
FAILURE ANALYSIS

Component	Malfunction	Comment
Primary AC Power Supply Feeder	Loss of primary power supply (failure or other unavailability) to EHC control system	No impact to overspeed protection function exists. - Alternate AC feeder will maintain EHC control system power, to assure actuation logic function. - Complete loss of power will de-energize/dump ETD components.
Alternate AC Power Supply Feeder	Loss of alternate power supply (failure or other unavailability) to EHC control system	No impact to overspeed protection function exists. - If available, primary feeder available will maintain EHC control system power and actuation logic function. - If primary feeder is not available, a battery-backed UPS (in alternate feeder circuit) will permit timely manual turbine trip and post-trip monitoring. - Complete loss of power will de-energize/dump ETD components.

RN 11-015

Figure 10.2-1
Deleted per RN 01-042

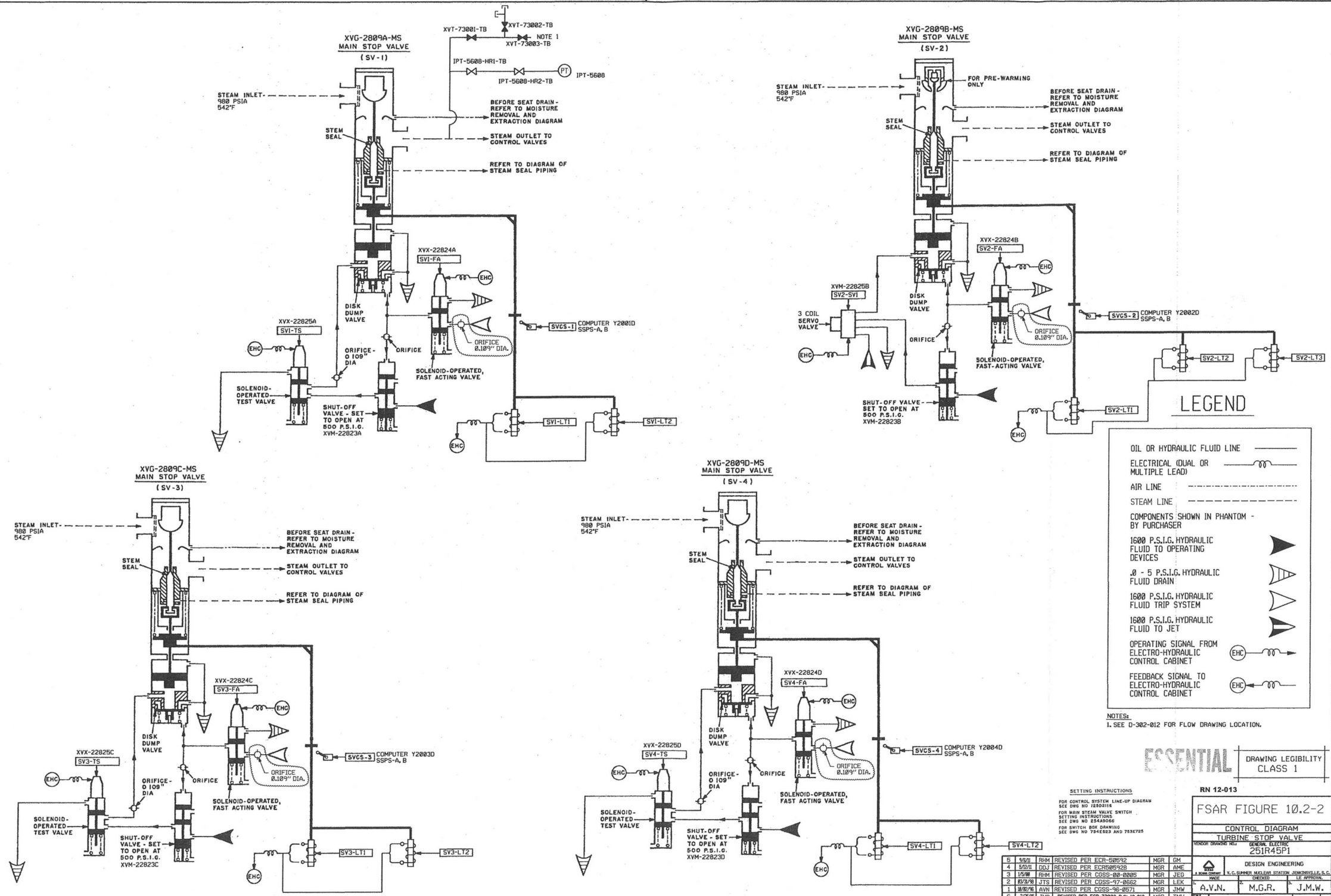

NOTES:
1. SEE D-302-012 FOR FLOW DRAWING LOCATION.

ESSENTIAL

DRAWING LEGIBILITY
CLASS 1

SETTING INSTRUCTIONS

FOR CONTROL SYSTEM LINE-UP DIAGRAM
SEE DWG NO 12S92116

FOR MAIN STEAM VALVE SWITCH
SETTING INSTRUCTIONS
SEE DWG NO 254A5066

FOR SWITCH BOX DRAWING
SEE DWG NO 754E523 AND 753E725

RN 12-013

FSAR FIGURE 10.2-2

CONTROL DIAGRAM
TURBINE STOP VALVE

VENDOR DRAWING NO.: GENERAL ELECTRIC 251R45P1

NO.	DATE	BY	REVISION	CKD. BY	LE APPROVAL
5	9/6/11	RHM	REVISED PER ECR-50592	MGR	GM
4	5/12/11	DDJ	REVISED PER ECR505928	MGR	AME
3	1/5/00	RHM	REVISED PER CGSS-00-0005	MGR	JEG
2	03/31/98	JTS	REVISED PER CGSS-97-0662	MGR	LEK
1	10/02/96	AVN	REVISED PER CGSS-96-0571	MGR	JMW
6	2/25/15	JMR	REVISED PER ECR-72033 R/N 12-013	MGR	TMH

DESIGN ENGINEERING
V. C. SUMMER NUCLEAR STATION JENKINSVILLE, S. C.

MADE: A.V.N. CHECKED: M.G.R. LE APPROVAL: J.M.W.

SCALE: NO SCALE
DRAWING NUMBER: 1MS-27-247
SHT. NUMBER:
REV: 6

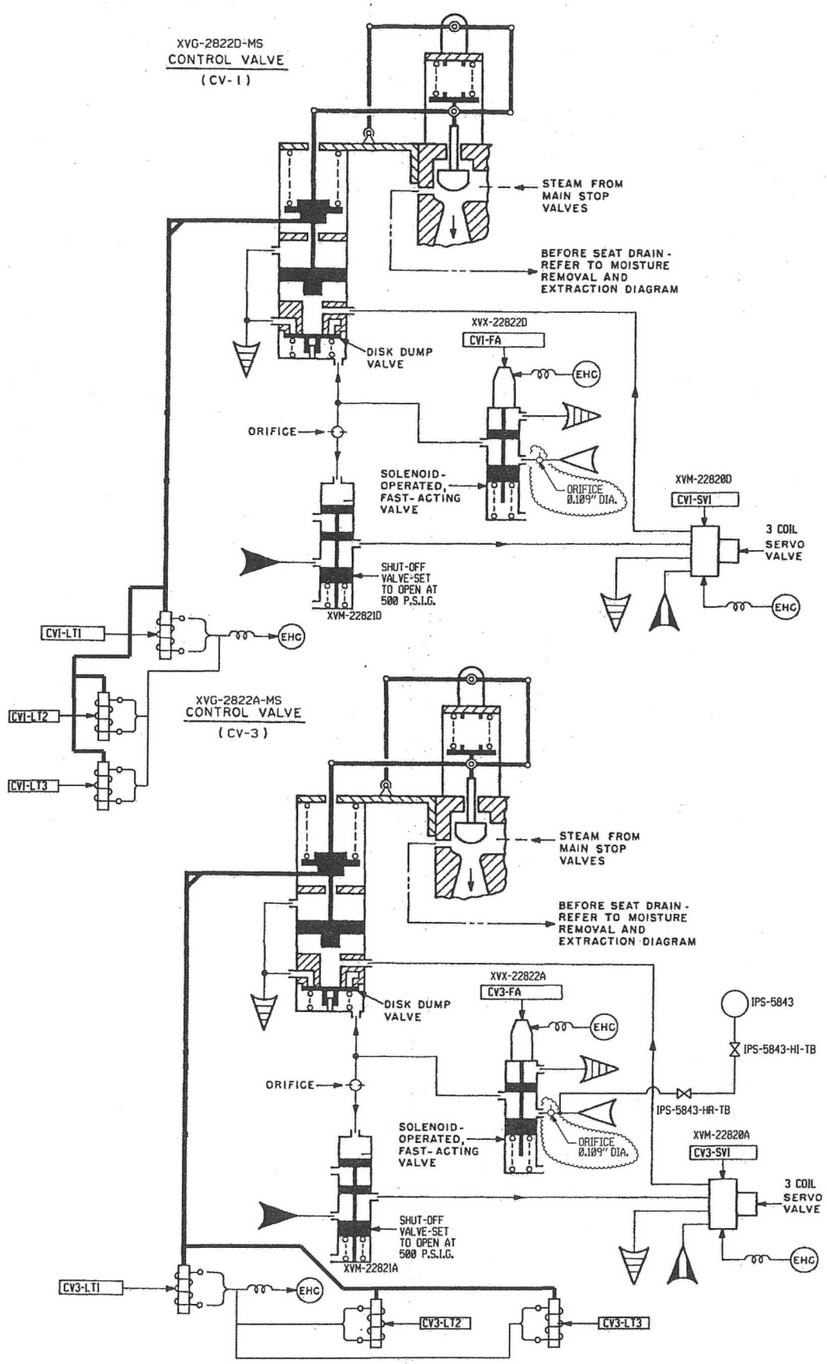

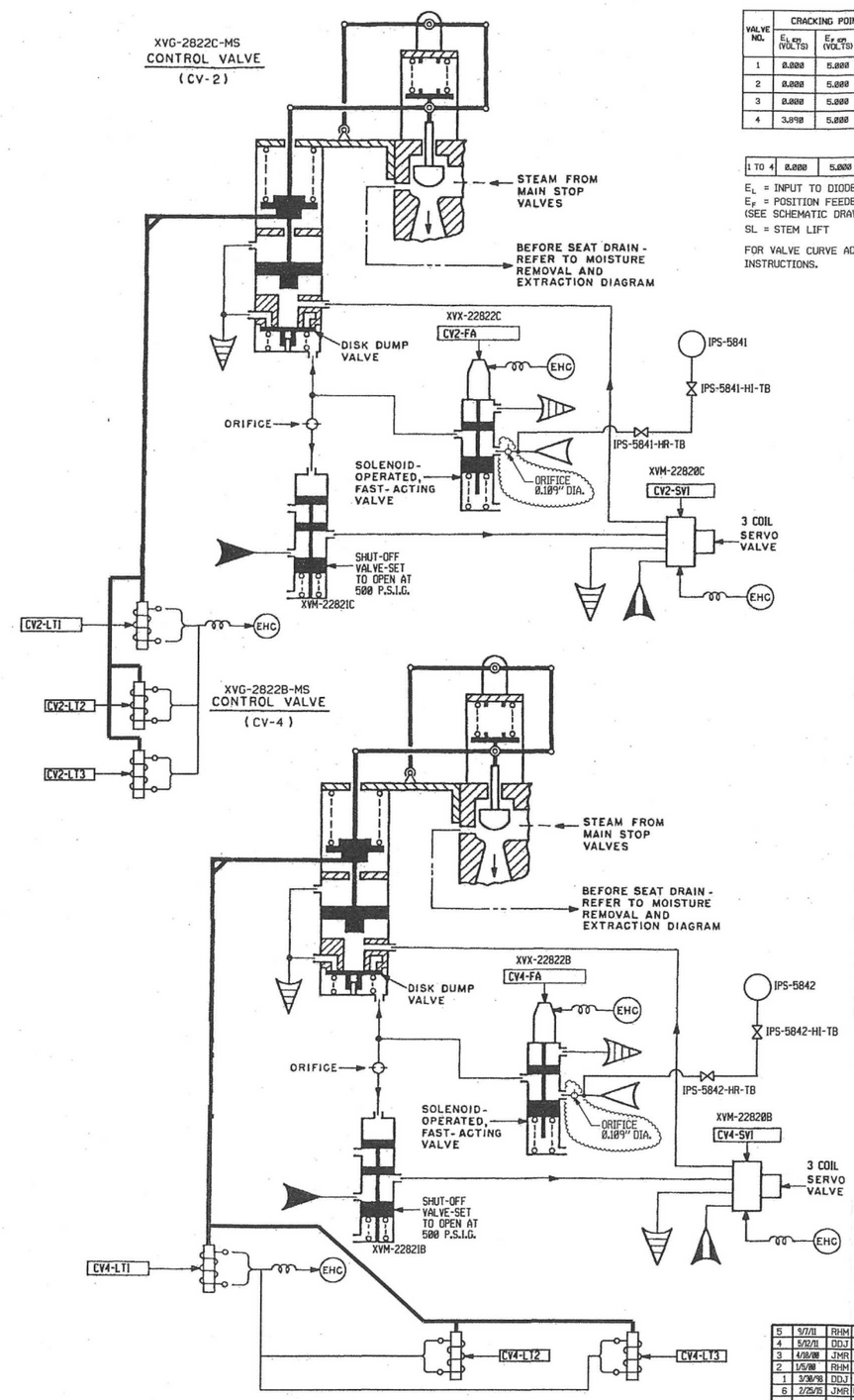

CONTROL VALVE DATA TABLE

SEQUENTIAL OPENING

VALVE NO.	CRACKING POINT (CP)			INTERCEPT POINT (IP)			OPEN (OE)			VALVE DIA. (INCHES)
	$E_{L\,cp}$ (VOLTS)	$E_{F\,cp}$ (VOLTS)	SL_{cp} (INCHES)	$E_{L\,ip}$ (VOLTS)	$E_{F\,ip}$ (VOLTS)	SL_{ip} (INCHES)	$E_{L\,oe}$ (VOLTS)	$E_{F\,oe}$ (VOLTS)	SL_{oe} (INCHES)	
1	0.000	5.000	0.089	3.898	2.527	2.315 WHEN #4 IS UP 0.089	4.344	0.000	4.589	18
2	0.000	5.000	0.089	3.898	2.559	2.286 WHEN #4 IS UP 0.089	4.345	0.000	4.589	18
3	0.000	5.000	0.089	3.898	2.572	2.275 WHEN #4 IS UP 0.089	4.345	0.000	4.589	18
4	3.898	5.000	0.089	—	—	—	5.000	0.000	4.589	18

FULL ARC OPERATOR

1 TO 4	0.000	5.000	0.089	—	—	—	5.000	0.000	4.589	18

E_L = INPUT TO DIODE FUNCTION GENERATOR BOARD
E_F = POSITION FEEDBACK TO PRE-AMPLIFIER BOARD (SEE SCHEMATIC DRAWING - VALVE POSITION UNIT)
SL = STEM LIFT

FOR VALVE CURVE ADJUSTMENTS, SEE FIELD LINE INSTRUCTIONS.

LEGEND

OIL OR HYDRAULIC FLUID LINE
ELECTRICAL CONNECTION
WATER LINE
COMPONENTS SHOWN IN PHANTOM - BY PURCHASER
1600 P.S.I.G. HYDRAULIC FLUID TO OPERATING DEVICES
.0 - 5 P.S.I.G. HYDRAULIC FLUID DRAIN
1600 P.S.I.G. HYDRAULIC FLUID TRIP SYSTEM
1600 P.S.I.G. HYDRAULIC FLUID TO JET
FEEDBACK SIGNAL TO ELECTRO-HYDRAULIC CONTROL CABINET — EHC

ESSENTIAL

RN 12-013

DRAWING LEGIBILITY CLASS 1
SCEAG CAD ENHANCED

NO.	DATE	BY	REVISION	CKD. BY	APPROVAL
5	9/7/11	RHM	REVISED PER ECR-50592	MGR	GM
4	5/12/11	DDJ	REV PER ECR50592B & ECR50592V	MGR	AME
3	4/18/08	JMR	REVISED PER MRF-22553	MGR	JMW
2	1/5/00	RHM	REVISED PER CGSS-00-0005	MGR	JEG
1	3/30/98	DDJ	REVISED PER CGSS-97-0662	MGR	LEK
6	2/25/12	JMR	REVISED PER ECR-72033 R/N 12-013	MGR	TMH

FSAR Figure 10.2-3a

CONTROL DIAGRAM
TURBINE CONTROL VALVE

VENDOR DRAWING NO.: GENERAL ELECTRIC 251R45P2a

A SCANA COMPANY — V. C. SUMMER NUCLEAR STATION JENKINSVILLE, S. C.
DESIGN ENGINEERING

MADE	CHECKED	LE APPROVAL
A.V.N.	M.G.R.	J.M.W.

SCALE NO SCALE — DRAWING NUMBER 1MS-27-248 — SHT. NUMBER — REV 6

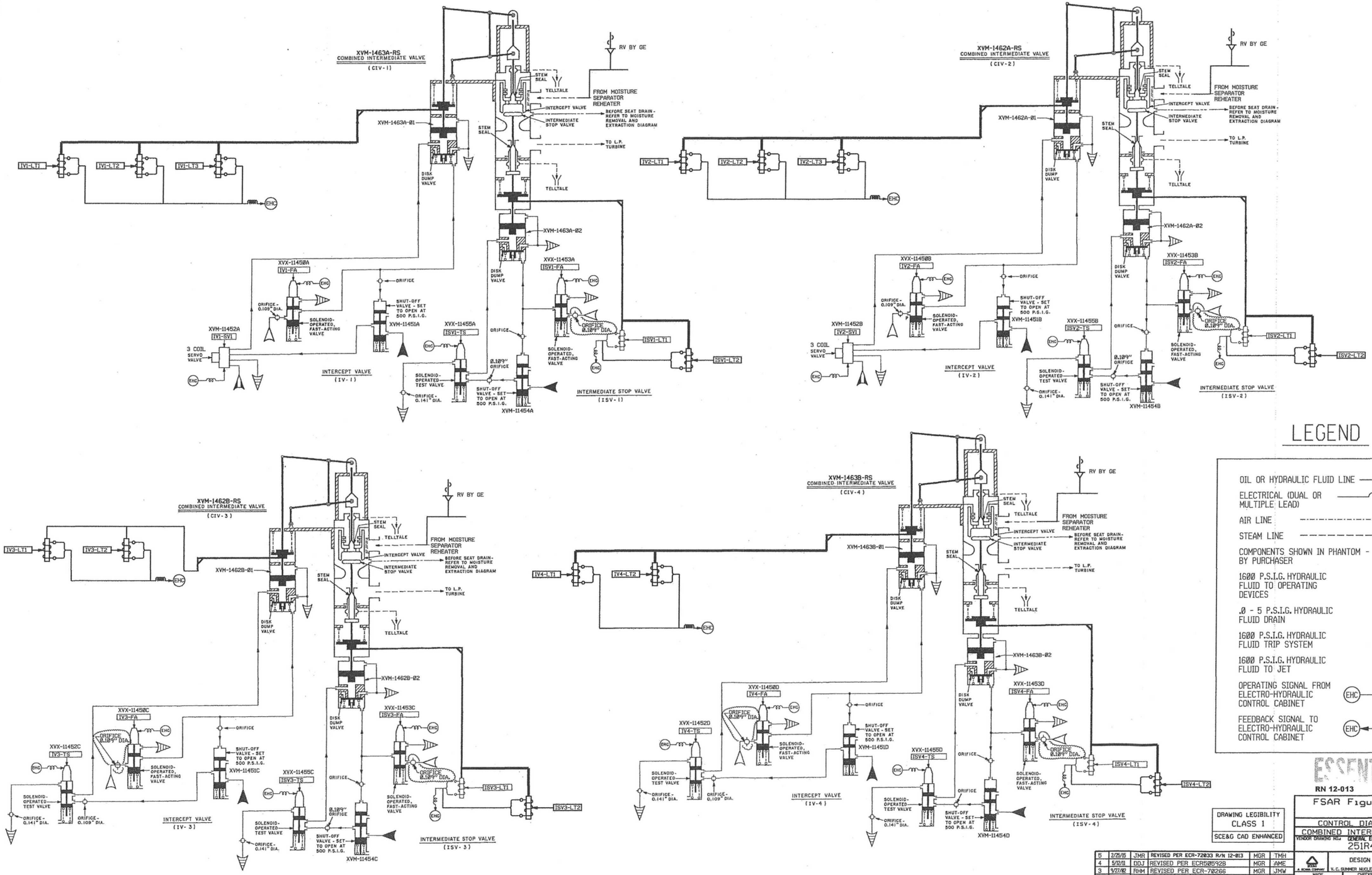

LEGEND

- OIL OR HYDRAULIC FLUID LINE
- ELECTRICAL (DUAL OR MULTIPLE LEAD)
- AIR LINE
- STEAM LINE
- COMPONENTS SHOWN IN PHANTOM - BY PURCHASER
- 1600 P.S.I.G. HYDRAULIC FLUID TO OPERATING DEVICES
- .0 - 5 P.S.I.G. HYDRAULIC FLUID DRAIN
- 1600 P.S.I.G. HYDRAULIC FLUID TRIP SYSTEM
- 1600 P.S.I.G. HYDRAULIC FLUID TO JET
- OPERATING SIGNAL FROM ELECTRO-HYDRAULIC CONTROL CABINET (EHC)
- FEEDBACK SIGNAL TO ELECTRO-HYDRAULIC CONTROL CABINET (EHC)

ESSENTIAL

RN 12-013

DRAWING LEGIBILITY CLASS 1

SCE&G CAD ENHANCED

NO.	DATE	BY	REVISION	CKD. BY	LE APPROVAL
5	2/25/15	JMR	REVISED PER ECR-72033 R/N 12-013	MGR	TMH
4	5/17/11	DDJ	REVISED PER ECR585928	MGR	AME
3	9/27/02	RHM	REVISED PER ECR-70266	MGR	JMW
2	1/5/00	RHM	REVISED PER CGSS-00-0005	MGR	JEG
1	3/30/98	DDJ	REVISED PER CGSS-97-0062	MGR	LEK
Ø	08/24/94	AVN	ISSUED PER MRF-22434	MGR	JMW

FSAR Figure 10.2-3b

CONTROL DIAGRAM TURBINE
COMBINED INTERMEDIATE VALVE

VENDOR DRAWING NO. GENERAL ELECTRIC 251R45P2b

A KOMA COMPANY — DESIGN ENGINEERING — V. C. SUMMER NUCLEAR STATION JENKINSVILLE, S. C.

MADE	CHECKED	LE APPROVAL
A.V.N.	M.G.R.	J.M.W.

SCALE NO SCALE — IMS-27-249 (DRAWING NUMBER) — DWG. NUMBER — REV 5

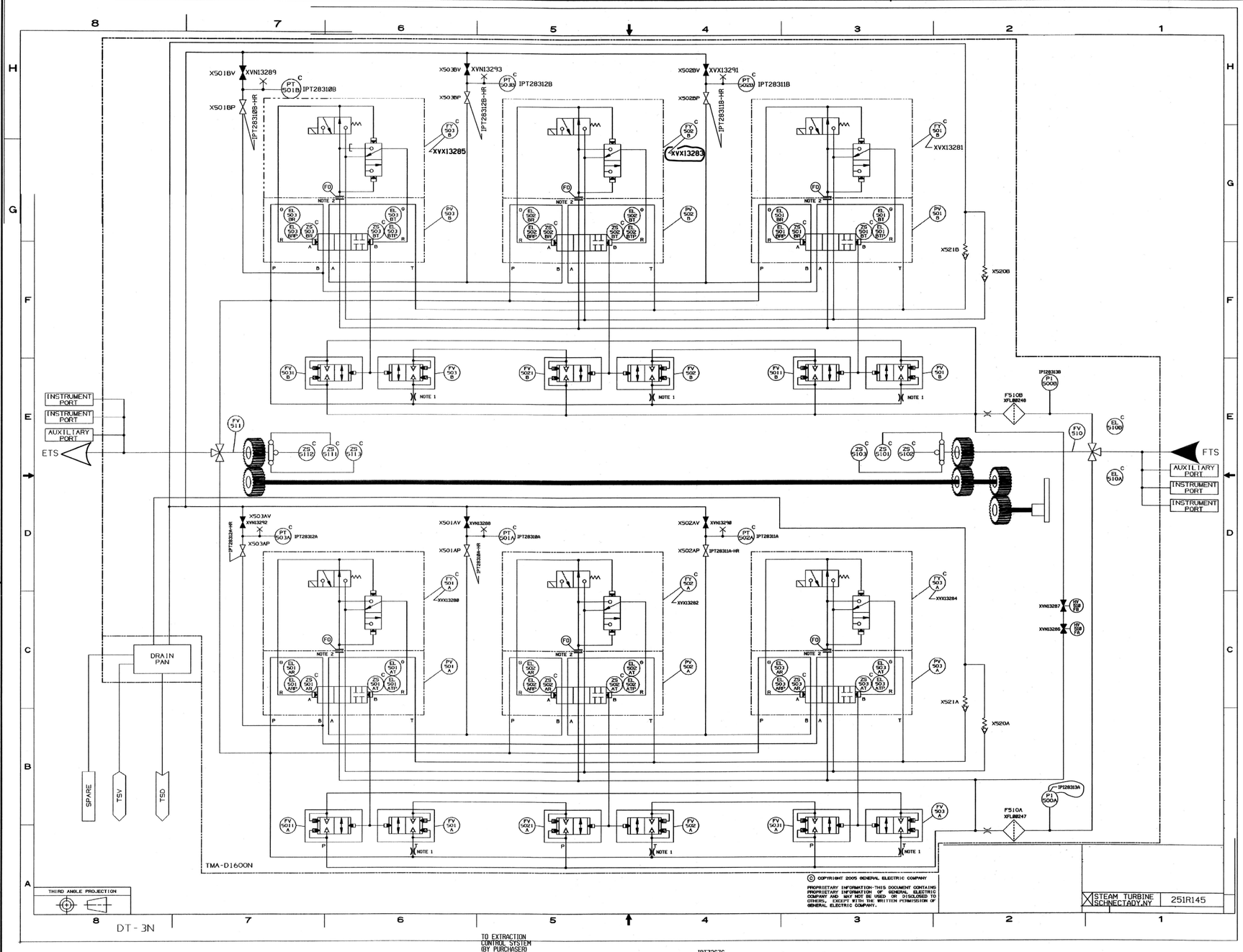

NOTES:
1. MANIFOLD BODY FLOW RESTRICTION PLUG LOCATION (GEK 111354)
2. PILOT RESTRICTION ORIFICE, 1.8 MM
3. FOR FLUID SELECTION SEE REFERENCE GEK 46357
4. SHOWN IN DE-ENERGIZED 'TRIPPED' STATE

LEGEND

- OIL OR HYDRAULIC FLUID LINE
- ELECTRICAL (DUAL OR MULTIPLE LEAD)
- AIR LINE
- COMPONENTS SHOWN IN PHANTOM - BY PURCHASER
- 225 P.S.I.G. MAIN PUMP DISCHARGE OIL
- 25 P.S.I.G. BEARING HEADER OIL
- 1600 P.S.I.G. AIR (BY PURCHASER)
- 1600 P.S.I.G. HYDRAULIC FLUID TO OPERATING DEVICES
- .0 - 5 P.S.I.G. HYDRAULIC FLUID DRAIN
- 1600 P.S.I.G. HYDRAULIC FLUID TRIP SYSTEM
- OPERATING SIGNAL FROM ELECTRO-HYDRAULIC CONTROL CABINET (EHC)
- FEEDBACK SIGNAL TO ELECTRO-HYDRAULIC CONTROL CABINET (EHC)

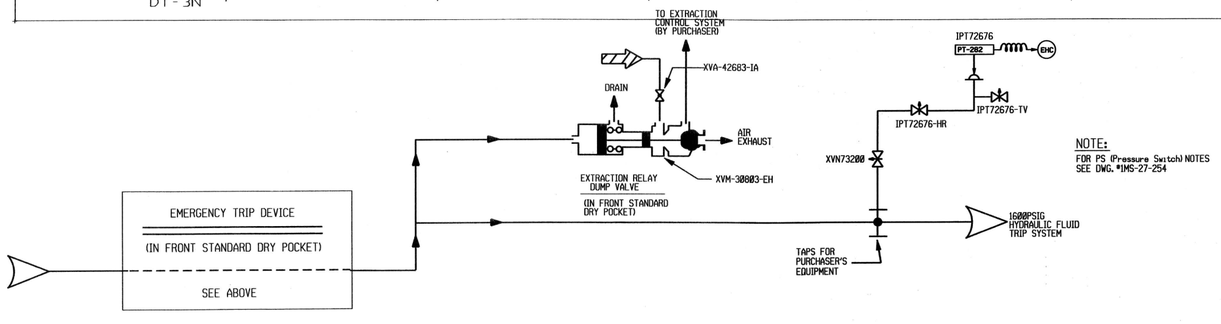

NOTE:
FOR PS (Pressure Switch) NOTES SEE DWG. #1MS-27-254

DRAWING LEGIBILITY CLASS 1

ESSENTIAL

RN 11-015

NO.	DATE	BY	REVISION	CKD. BY	APPROVAL
5	10/11/11	RHM	REVISED PER ECR-50592	MGR	GM
4	5/25/11	RHM	REVISED PER ECR-50592	MGR	GM
3	5/12/11	DDJ	REV PER ECR50592B & ECR50592V	MGR	AME
2	1/5/00	RHM	REVISED PER CGSS-00-0005	MGR	JEG
1	03/30/98	JTS	REVISED PER CGSS-97-0662	MGR	LEK
0	08/24/94	AVN	ISSUED PER MRF-22434	MGR	JMW

FSAR Figure 10.2-4

CONTROL DIAGRAM
TURBINE TRIP

VENDOR DRAWING NO.: GENERAL ELECTRIC 251R145

A SGRE COMPANY

DESIGN ENGINEERING
V. C. SUMMER NUCLEAR STATION JENKINSVILLE, S. C.

MADE	CHECKED	LE APPROVAL
1. A.V.N.	2. M.G.R.	3. J.M.W.

SCALE NO SCALE

1MS-27-250 (DRAWING NUMBER) — SHT. NUMBER 5 — REV

© COPYRIGHT 2005 GENERAL ELECTRIC COMPANY
PROPRIETARY INFORMATION-THIS DOCUMENT CONTAINS PROPRIETARY INFORMATION OF GENERAL ELECTRIC COMPANY. NO PART MAY BE REPRODUCED OR DISCLOSED OTHERWISE EXCEPT WITH THE WRITTEN PERMISSION OF GENERAL ELECTRIC COMPANY.

SYSTEM DATA					
#	PSIG	°F	SCFM	LB/HR	FLUID
1	2300	60	125	-	H_2 GAS
2	200	60	125	-	H_2 GAS
3	90	60	125	-	H_2 GAS
4	270	95	-	1235	CO_2 LIQUID
5	90	60	175	-	CO_2 GAS

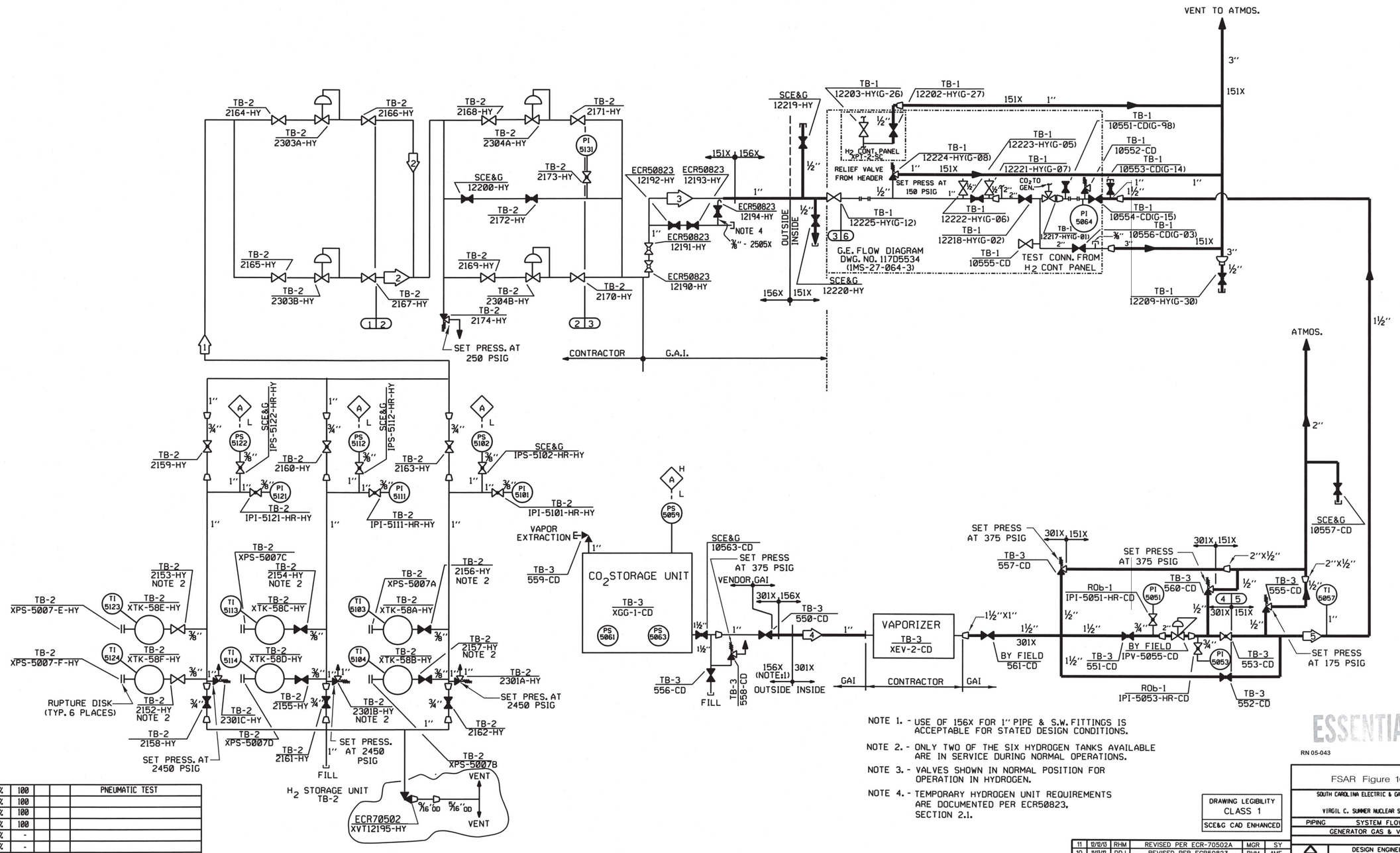

#	PSIG	°F	PSIG	°F	DURA.	HY-DRG	BY		REMARKS
	NORMAL		UPSET						
6	90	60	150	100	<1%	100			PNEUMATIC TEST
5	90	60	175	100	<1%	100			
4	300	60	375	100	<1%	100			
3	90	60	250	100	<1%	100			
2	200	60	250	100	<1%	-			
1	2300	60	2450	100	<1%	-			

DESIGN DATA

NOTE 1. - USE OF 156X OF 1" PIPE & S.W. FITTINGS IS ACCEPTABLE FOR STATED DESIGN CONDITIONS.

NOTE 2. - ONLY TWO OF THE SIX HYDROGEN TANKS AVAILABLE ARE IN SERVICE DURING NORMAL OPERATIONS.

NOTE 3. - VALVES SHOWN IN NORMAL POSITION FOR OPERATION IN HYDROGEN.

NOTE 4. - TEMPORARY HYDROGEN UNIT REQUIREMENTS ARE DOCUMENTED PER ECR50823, SECTION 2.1.

ESSENTIAL

RN 05-043

DRAWING LEGIBILITY CLASS 1

SCE&G CAD ENHANCED

NO.	DATE	BY	REVISION	CKD. BY	LE APPROVAL
11	12/12/13	RHM	REVISED PER ECR-70502A	MGR	SY
10	11/11/12	DDJ	REVISED PER ECR50823	RHM	AME
9	11/15/05	JMR	REVISED PER ECR-70502	MGR	GK
8	4/28/03	JMR	CADD ENHANCED PER ECR-50239	MGR	DDJ
7	10/17/01	DDJ	REVISED PER ECR-70028	MGR	DDJ
6	05/24/94	AVN	REVISED VLV. ALGN. PER MRF21934	MGR	LEK

FSAR Figure 10.2-5

SOUTH CAROLINA ELECTRIC & GAS COMPANY

VIRGIL C. SUMMER NUCLEAR STATION

PIPING SYSTEM FLOW DIAGRAM

GENERATOR GAS & VENTS

DESIGN ENGINEERING

A SCANA COMPANY

V. C. SUMMER NUCLEAR STATION JENKINSVILLE, S. C.

MADE: A.V.N. CHECKED: M.G.R. LE APPROVAL: L.E.K.

SCALE NO SCALE

D-302-301 (DRAWING NUMBER) SHT. NUMBER REV. 11

10.3 MAIN STEAM SUPPLY SYSTEM

The Main Steam Supply System conveys main steam from the steam generators to the turbine generator and, through branch lines, to the following: feedwater pump drive turbines, emergency feedwater pump drive turbine, moisture separator reheaters, auxiliary steam system, deaerating feedwater heater, and steam dumps to the condenser and atmosphere.

10.3.1 DESIGN BASES

10.3.1.1 Codes and Standards

The Main Steam Supply System is designed in conformance with the following codes and standards:

1. Steam generator secondary sides, piping and valves, between the steam generators and main steam isolation valves, including the main steam isolation valves, main steam safety valves, and power relief valves, are classified as Safety Class 2a and are designed in accordance with the ASME Code, Section III, Class 2.

2. Steam piping and components in the lines to the emergency feedwater pump drive turbine are classified as Safety Class 2b and are designed in accordance with the ASME Code, Section III, Class 3.

   The emergency feedwater pump drive turbine exhaust piping is classified as safety class 2b and is designed in accordance with the ASME Code, Section III, Class 3 except for hydrotesting and code stamping.

3. Main steam piping in the Intermediate Building between the main steam isolation valves and the Turbine Building wall is non-nuclear safety class. However, this piping excluding branch lines, satisfies the requirements except for stamping, of the ASME Code, Section III, Code Class 2. This provides greater assurance of design and fabrication integrity, thus, reducing risk of postulated pipe rupture in this area. This piping is identified as "Note 1" piping on Figures 10.3-1 and 10.3-2.

   Originally the main and branch lines were designated as "Note 1" piping to reduce the number of postulated pipe rupture locations by the use of a code stress analysis to choose intermediate breaks. In the final pipe rupture analysis of the branch lines, stress analysis was not used and intermediate breaks were postulated at each fitting (see Section 3.6.2.5.1). Therefore, it was no longer necessary to provide code piping and the "Note 1" designation for these branch lines was deleted.

4. Piping other than that noted in 1, 2 and 3, above, is non-nuclear safety class and is designed in accordance with ANSI B31.1[1].

\5. Cast steel valves, except those noted in 1, 2 and 3, above, are non-nuclear safety class and are designed in accordance with ANSI B16.5[2].

6. Main Steam Supply System drains are designed using "Recommended Practices for the Protection of Water Damage to Steam Turbines Used for Electric Power Generation, Part II,"[3] as a guide.

7. The Main Steam Supply System is designed to permit inservice inspection as required by the ASME Code, Section XI.

8. The Main Steam Supply System is designed with the capability to dump steam to the condenser and/or the atmosphere as discussed in Section 10.4.4.

10.3.1.2 Heat Balance

The Main Steam Supply System is designed to deliver 11,734,149 lb/hr of steam to the turbine control valves and 1,123,964 lb/hr to the moisture separator reheater for a total of 12,858,113 lb/hr. (See GE Heat balance 170x595-21, Rev. 1). 02-01

10.3.1.3 Design Conditions

The system is designed to withstand the same conditions as are the steam generator secondary sides. Design pressure is 1185 psig; design temperature is 600°F. Design pressures and temperatures for piping, valves, and pressure retaining components are tabulated on Figures 10.3-1 through 10.3-4.

10.3.1.4 Environmental Conditions

Environmental conditions considered in the design of the Main Steam Supply System are presented in Table 10.3-1.

The emergency and faulted conditions are based on the Main Steam Line Break and Loss of Coolant Accidents. Components within the Reactor Building are also subjected to a spray of borated water and sodium hydroxide as described in Section 6.2.2.2.1. 02-01

10.3.2 DESCRIPTION

10.3.2.1 General

The Main Steam Supply System consists of 3 steam generators, 3 flow restrictors, 15 safety valves, 3 steam generator power relief valves, 3 main steam isolation valves, 8 steam dump valves to the condenser, 3 atmospheric steam dump valves and other required valves, steam traps, instrumentation, controls, and associated piping. See Figures 10.3-1 through 10.3-4.

The Main Steam Supply System conveys saturated steam from the 3 steam generators to the turbine generator.

One (1) line from each of the 3 steam generators conveys main steam to a header located in the Intermediate Building. From the header a total of 4 lines proceed to the turbine stop valves. Steam flow to the high pressure turbine is regulated by the turbine control valves.

Moisture separator reheater units are located immediately beside the turbine between the high pressure and low pressure elements. Heating tube bundles within each moisture separator reheater, supplied with steam from the Main Steam Supply System, superheat high pressure turbine exhaust steam approximately 136°F before it enters the low pressure turbine elements.

Main steam is also supplied to the following:

1. Feedwater pump drive turbines for startup and runout.

2. Auxiliary Steam System for the liquid waste evaporator as required during normal operation and during plant shutdown until the auxiliary boiler is operational.

3. Extraction Steam System for pegging and sparging the deaerator.

4. Emergency feedwater pump drive turbine during emergency and normal plant shutdown to supply minimum feedwater requirements.

The Main Steam Supply System was originally designed to follow a full load rejection, defined as a reduction from 100% of rated turbine generator load to plant auxiliary load, without reactor trip through actuation of the steam dump to the condenser and atmosphere. With the transition to longer fuel cycles and less negative moderator temperature coefficients at the beginning of the fuel cycle, a full load rejection can no longer be sustained without a reactor trip for all times in core life and all allowable values of full power, average coolant temperatures within the Reactor Coolant System. 02-01

Steam dump valves permit unit operation at turbine loads lower than the minimum power setting (15% reactor power) of the Nuclear Steam Supply System (NSSS) automatic control. In addition, the steam dump valves permit reduction of turbine generator load at a rate greater than the 5% per minute maximum rate of load reduction for the NSSS.

Steam generator power relief valves provide a means for plant cooldown by controlled steam discharge to the atmosphere should the condenser not be available. These valves pass a total of ~ 18.76% of the rated maximum steam flow (at full load pressure). One (1) valve is provided in each generator line, upstream of the main steam isolation valves.

10.3.2.2 Main Steam System Piping

Each line from the steam generators is 32 inch nominal OD, 1.15 inch minimum wall, carbon steel pipe. The piping inside the Reactor and Intermediate Buildings is routed and restrained to minimize the possibility of a single line failure affecting the other piping. In the area where the safety valves are located, the pipe OD is increased and the nominal wall thickness is 1.90 inches to provide extra strength. The 3 lines from the steam generators are manifolded into a 32 inch nominal OD, 1.15 inch minimum wall, carbon steel header.

From the header, steam flows through four(4) 30 inch nominal OD, 1.125 inch nominal wall, carbon steel lines to the turbine generator. Steam also flows from the header through a 24 inch OD, schedule 80, carbon steel pipe to the moisture separator reheater and feedwater pump drive turbines.

A 4 inch OD, schedule 80, carbon steel pipe supplies steam from each of 2 steam generator main steam lines to the emergency feedwater pump drive turbine. Steam from only one steam generator is needed for pump operation; 2 sources are provided for required redundancy.

Steam generators and flow restrictors are discussed in detail in Section 5.5.

10.3.2.3 Main Steam Isolation Valves

Each of the 3 main steam lines proceeding from the steam generators to the main steam header is equipped with a quick closing main steam isolation valve capable of tight closure, regardless of flow direction. The main steam isolation valves are of the articulated poppet, wye type design. These nominal 32 inch valves have a capacity of 4,277,315 lb/hr steam flow with an approximately 2.26 psi maximum calculated pressure drop across the fully open valve. These valves are designed for 1284 psig at 600°F. The valves are actuated by an air cylinder operator (air to open; spring to close). Closure time is adjustable. Maximum closure time is 7 seconds after receipt of a closure signal. Main steam isolation valve closure signals are as follows:

1. High containment pressure.

2. High steam flow with coincident lo-lo average primary coolant temperature.

3. Low steam pressure.

4. Manual.

These valves are located in the Intermediate Building downstream of the main safety valves.

The quick closing main steam isolation valves prevent reverse flow of steam. If a steam line rupture occurs between an isolation valve and a steam generator, the affected steam generator continues to blow down, while the isolation valves are automatically closed to prevent blowdown from the unaffected steam generators. Should an isolation valve not close, flow from the Main Steam System downstream of the main isolation valves is limited by either normally closed valves or by valves that are automatically closed by interlocks from the NSSS system or from the turbine generator system as tabulated in Table 10.3-2. This small steam flow does not impact the results of the main steam line break analysis in Section 15.4-2.

If a main steam line rupture occurs downstream of an isolation valve, all 3 isolation valves are automatically closed, stopping main steam flow. Closure of the isolation valves terminates the sudden large release of energy in the escaping steam, thereby preventing rapid cooldown of the Reactor Coolant System. Closure of the isolation valves also ensures a supply of steam for the 100% capacity, turbine driven emergency feedwater pump.

The maximum permissible main steam isolation valve leakage in the direction of normal flow is in accordance with the recommendations of MSS SP-61[4]. In the direction of reverse flow, leakage is less than 1% of normal steam flow through the main steam isolation valve.

10.3.2.4 Main Steam Safety Valves

Main steam safety valves are located in each main steam line outside the Reactor Building, upstream of the main steam isolation valves to protect the steam generators against overpressure. These valves are designed, fabricated and stamped in accordance with the ASME Code, Section III. The safety valve setpoints are given in Table 10.3-1a. The safety valves are sized to pass the steam flow resulting from complete load rejection or shutoff of main steam flow without reactor trip. The maximum steam flow through each individual valve is limited to 970,000 lb/hr at steam generator design conditions, in accordance with Nuclear Steam Supply System criteria. In the event that a single main steam safety valve sticks in the full open position, uncontrolled blowdown from the affected steam generator is restricted within limits compatible with maintenance of reactor fuel integrity and integrity of the reactor internals.

10.3.3 EVALUATION

The Main Steam Supply System design limits the effects of a main steam line rupture. Seamless pipe is used inside the Reactor Building and for the spool piece of the penetration terminal end outside the Reactor Building. This minimizes the probability and consequences of postulated pipe rupture. Rupture of any main steam line, malfunction of any single isolation valve, or any consequential damage does not cause uncontrolled flow from more than 1 steam generator, nor does it result in containment pressure exceeding the design value.

The effects of pipe whip are considered in the layout of the system. Safety-related equipment is protected from the effects of pipe whip by restraints, physical separation, and/or barriers, if required. Pipe rupture is discussed in detail in Section 3.6, seismic design is discussed in Section 3.7.

10.3.4 INSPECTION AND TESTING REQUIREMENTS

Inspection and testing requirements for the Main Steam Supply System can be divided into 2 parts: preoperational testing and inservice testing and inspection.

1. Preoperational Testing

   Preoperational testing of the Main Steam Supply System includes:

   a. Cold hydrostatic testing.

   b. Hot functional testing, including test of the functional capability of system valves.

   c. Preservice inspection to establish baseline data for subsequent inservice inspection, as required by the ASME Code, Section XI.

2. Inservice Testing and Inspection

Inservice testing and inspection of the Main Steam Supply System includes:

a. Main steam isolation valve testing as follows:

(1) The main steam isolation valves are capable of being tested during normal plant operation to demonstrate their ability to respond to a "test close" signal. Upon receipt of a "test close" signal, the main steam isolation valve being tested moves to a 90 to 95% open (5 to 10% closed) position. Upon removal of the "test close" signal, the valve returns to the 100% open position. In the event that a close signal is received during this test, such a signal overrides the test signal and the isolation valve closes completely within the specified closing time. This testing is no longer performed based on NUREG 1482, "Guidelines for Inservice Testing at Nuclear Power Plants," Section 4.2.4 recommendation. RN 03-034 RN 03-034

(2) Testing for complete main steam isolation valve closure is performed under shutdown conditions and verifies the ability of the valves to fully close within the specified closure time.

b. Inservice inspection requirements, in accordance with the ASME Code, Section XI, apply to all Class 2 and Class 3 main steam piping from the steam generators to the point where the main steam piping enters the Turbine Building.

Weld examinations are performed in accordance with the ASME Code, Section XI. Inservice inspection of other Main Steam Supply System components within this boundary is discussed in Section 5.7. System components not within this boundary are not subject to inservice inspection.

10.3.5 WATER CHEMISTRY

Secondary side water chemistry "all volatile treatment" (AVT) for corrosion control consists of the following:

1. Addition of an amine or mixture of amines for pH control.

2. Addition of an oxygen scavenger to minimize dissolved oxygen concentration.

3. Continuous steam generator secondary side blowdown to limit concentrations of dissolved and suspended solids.

4. A Condensate Cleanup System, consisting of filter/demineralizers, operated during startup to approximately 50% flow and as required during condenser leakage and if needed, during shutdown. 98-01

5. Boric acid may be added to mitigate denting of steam generator tubes.

6. Ammonium Chloride may be added for molar ratio control.

7. Other chemicals may be added based on EPRI, NSSS supplier or SGOG guidelines and evaluation by SCE&G.

Secondary side water chemistry specifications are in accordance with the recommendations of EPRI. Recommendations of the NSSS supplier and/or the Steam Generator Owners Group (SGOG), may also be applied. 98-01

Samples of condensate, feedwater, steam, steam generator blowdown, and demineralized makeup water are available for use in monitoring and controlling secondary side water chemistry. Sampling equipment is located in the water treatment building and in the nuclear sampling room of the Control Building. Sampling equipment consists of pH, conductivity, cation conductivity, hydrazine, sodium, and dissolved oxygen analyzers for monitoring the appropriate samples at reduced temperature and pressure.
Steam generator blowdown samples are routed to the nuclear sampling room, as are other potentially radioactive samples (see Section 9.3.2). Samples from other secondary side sample points are routed to the sampling panel at the Water Treatment Building.

Grab samples are taken from secondary side sample points at regular intervals and are subjected to laboratory analyses to ensure that the analyzers are functioning properly and that secondary side water chemistry is within specification.

Steam generator water chemistry is controlled through sampling, steam generator secondary side blowdown, and chemical addition. During normal operation, amine injection for control of secondary side pH and oxygen scavenger for dissolved oxygen control may be regulated automatically or manually. Under transient conditions, amine and oxygen scavenger injections are manually regulated as required by grab sample analytical results. Amine and oxygen scavenger injection equipment is located in the Intermediate Building. 98-01

There are 3 possible mechanisms for hydrogen production in secondary side water. These mechanisms are as follows:

1. Corrosion.

2. Decomposition of hydrazine.

3. Leakage and/or diffusion from the primary side.

Hydrogen production rates will be inconsequential and any buildup in secondary side water will not be a safety hazard.

The secondary water chemistry control program will include a comprehensive monitoring program. The aim of this program is the minimization of overall system corrosion. Special emphasis will be placed on the inhibition of steam generator tube degradation. In general, the program will be based on recommendations and criteria supplied by EPRI. Recommendations from the NSSS vendor and/or the SGOG may also be incorporated. This program consists of procedures covering those items contained in Section 6.8 of the Technical Specifications. 98-01

10.3.6 STEAM AND FEEDWATER SYSTEM MATERIALS

10.3.6.1 Fracture Toughness

Where specified, test methods and acceptance criteria for fracture toughness are in compliance with the ASME Code, Section III, Article NC-2300. Charpy V-notch tests are specified for ferritic materials used in the following Class 2 components of the feedwater system:

1. Feedwater isolation valves.
2. Feedwater check valves.
3. Feedwater system Reactor Building penetration assemblies.
4. Feedwater piping.

Tests are specified for these feedwater system components because nominal pipe size exceeds 6 inches, material section thickness exceeds 5/8 inch and minimum service temperature can be as low as 50°F inside containment and 40°F outside containment.

Fracture toughness testing (impact testing) for ferritic materials used in the Main Steam System piping whose nominal pipe size exceeds 6 inches and material section thickness exceeds 5/8 inch was performed at a temperature of 120°F since minimum service temperature is approximately 327°F at 100 psia. This is the lowest temperature at which the steam generators are used to remove heat from the Reactor Coolant System. Testing was performed at 32°F on the main steam penetration process pipe. The Residual Heat Removal System is used at lower temperatures and pressures. The ASME Code, Section III does not specifically require impact testing of materials used in the Main Steam Supply System. The Code stipulates that the design specification must state whether or not impact testing is required. In consideration of the high minimum service temperature for the Main Steam Supply System, impact testing is not specified.

Fracture toughness testing (impact testing) is not required for ferritic Class 2 and Class 3 components of the Emergency Feedwater System, since pipe, fittings, pumps, and valves in this system have a nominal pipe size less than 6 inches. Articles NC-2311(b) and ND-2311(b) of the ASME Code, Section III exempt these materials from impact testing requirements.

10.3.6.2 Materials Selection and Fabrication

10.3.6.2.1 Materials Not Included in Appendix I to Section III of the ASME Code

Materials used are included in Appendix I to Section III of the ASME Code. Each line from the steam generators to the containment penetration assembly, inside the Reactor Building, is fabricated from SA-106, Grade C, seamless, carbon steel pipe material. The first straight piece of pipe attached to the containment penetration assembly outside the Reactor Building is also of this material. The main steam lines from this point to the Turbine Building wall, including piping in the penetration rooms and Intermediate Building, are fabricated from SA-155, KC-70, Class 1 welded, carbon steel pipe material.

Main steam piping within the Turbine Building is fabricated from A-155, KC-70, welded, carbon steel pipe material.

10.3.6.2.2 Austenitic Stainless Steel Components

No austenitic stainless steel components are used.

10.3.6.2.3 Cleaning and Handling of Class 2 and 3 Components

Cleaning and handling of components is performed in accordance with Regulatory Guide 1.37 (see Appendix 3A) and ANSI N45.2.1[5].

10.3.6.2.4 Preheat Temperatures

Compliance with Regulatory Guide 1.50 is discussed in Appendix 3A.

10.3.6.2.5 Welding Procedures

Compliance with Regulatory Guide 1.71 is discussed in Appendix 3A.

10.3.7 REFERENCES

1. American National Standards Institute, "Power Piping Code," ANSI B31.1.0, 1967, with Addenda through Summer, 1972. 02-01

2. American National Standards Institute, "Steel Pipe Flanges, Flanged Valves, and Fittings," ANSI B16.5, 1968.

3. American Society of Mechanical Engineers, "Recommended Practices for the Protection of Water Damage to Steam Turbines Used for Electric Power Generation, Part II," TWDPS-1, April, 1973.

4. Manufacturers Standardization Society of the Valve and Fitting Industry, "Hydrostatic Testing of Steel Valves," MSS SP-61, 1961.

5. American National Standards Institute, "Cleaning of Fluid Systems and Associated Components for Nuclear Power Plants," ANSI N45.2.1, 1973.

TABLE 10.3-1

ENVIRONMENTAL CONDITIONS CONSIDERED IN MAIN STEAM SUPPLY SYSTEM DESIGN

	Condition		
	Normal and Upset I	Upset II, Emergency, and Faulted	02-01
Piping Inside Reactor Building - Most Severe Conditions (Emergency and Upset)			
Ambient Temperature, °F	50 to 120	380, max.	02-01
Ambient Pressure, psia	14.7	68.2, max.	
Relative Humidity, %, max.	100	100	
Total Radiation, rad	2.5×10^7	1.9×10^8	RN 03-038
Piping in Penetration Rooms			
Ambient Temperature, °F	65 to 121	445, max.	02-01
Ambient Pressure, psia	14.7	20.3, max.	
Relative Humidity, %, max.	90	100	
Total Radiation, rad	2.4×10^6	1.6×10^7	RN 03-008
Piping in Intermediate Building			
Ambient Temperature, °F	65 to 131	398, max.	02-01
Ambient Pressure, psia	14.7	17.8, max.	
Relative Humidity, %, max.	90	100	
Total Radiation, rad	1.5×10^6	1.6×10^7	RN 03-008

TABLE 10.3-1a

MAIN STEAM SAFETY VALVE SETPOINTS

Main Steam Line	Valve	Setpoint (psig)
A	2806A-MS	1176
	2806B-MS	1190
	2806C-MS	1205
	2806D-MS	1220
	2806E-MS	1235
B	2806F-MS	1176
	2806G-MS	1190
	2806H-MS	1205
	2806I-MS	1220
	2806J-MS	1235
C	2806K-MS	1176
	2806L-MS	1190
	2806M-MS	1205
	2806N-MS	1220
	2806P-MS	1235

TABLE 10.3-2

STEAM GENERATOR FOR BLOWDOWN RATE

Flow Path	No. of Identical Paths	Max. Flow (all paths combined)	Type	Size, in.	Quality	Design Code	Valve Closure Time	Actuation	Closure Signal	Power Quality	Air Quality	
Atmospheric Dump	3	2,910,000 lb/hr	Globe	8	QR	B31.1.0	3	Air	Normally closed, see FSAR Section 10.4.4 for control, fails closed	1E (Assoc) and Non-1E	NNS	
Condenser Dump	8	7,760,000 lb/hr	Globe	8	QR	B31.1.0	3	Air	Normally closed, see FSAR Section 10.4.4 for control, fails closed	1E (Assoc) and Non-1E	NNS	02-01
Steam Dump Drains (Trap)	4	1,052 lb/hr*	Thermodynamic Steam Trap	1	NNS	N/A	N/A	Self	N/A	N/A	N/A	
Steam Dump Drains (Bypass)	4	93,272 lb/hr*	Globe	1-1/2	NNS	B31.1.0	5	Air	Normally closed - fails open	Non-1E	NNS	RN 04-018
Turbine Cycle Sampling	3	5,265 lb/hr*	Globe	3/8	NNS	B31.1.0	N/A	Manual	N/A 2 of 3 valves normally closed	N/A	N/A	
Main Steam Drains / Upstream MSIV (Trap)	6	2,364 lb/hr*	Thermodynamic Steam Trap	1	NNS	N/A	N/A	Self	N/A	N/A	N/A	02-01
Main Steam Drains / Upstream MSIV (Bypass)	6	42,336 lb/hr	Globe	1-1/2	NNS	B31.1.0	5	Air	Normally closed - opens on hi drain pot level switch signal	Non-1E	NNS	
Main Steam Drains / Downstream MSIV (Trap)	8	2,628 lb/hr*	Thermodynamic Steam Trap	1	NNS	N/A	N/A	Self	N/A	N/A	N/A	98-01
Main Steam to Turbine Stop Valve	4	11,722,000 lb/hr	Turbine Stop Valve	30	QR	B31.1.0	0.15	Hydraulic	Normally closed post accident	QR	N/A	RN 04-018

TABLE 10.3-2 (Continued)

STEAM GENERATOR FOR BLOWDOWN RATE

Flow Path	No. of Identical Paths	Max. Flow (all paths combined)	Type	Size, in.	Quality	Design Code	Valve Closure Time	Actuation	Closure Signal	Power Quality	Air Quality	
Main Steam Drains / Downstream MSIV (Bypass)	8	124,623 lb/hr	Globe	1-1/2	NNS	B31.1.0	5	Air	Normally closed - opens on hi-hi drain pot level switch signal	Non-1E	NNS	
Gland Steam	1	32,000 lb/hr*	Gate	4	NNS	B31.1.0	30	Motor	Manual remote closure - normally open	Non-1E	NNS	
Pegging Steam	1	160,000 lb/hr	Globe	8	NNS	B31.1.0	54	Air	Normally closed, fails closed. Remains closed for a FW isolation. (Modulating control from PT-2231)	Non-1E	NNS	02-01
Sparging Steam	1	16,000 lb/hr	Globe	2	NNS	B31.1.0	6	Air	Normally closed, fails closed. Remains closed for a FW isolation. (Modulating control from PC-2232)	Non-1E	NNS	
MS to FW Pump	3	144,300 lb/hr*	Turbine Control Valve	4	NNS	B31.1.0	1	Hydraulic	FW Pump Turbine Trip	Non-1E	N/A	RN 04-018
MS to FW Pump Drains (Trap)	3	789 lb/hr*	Thermodynamic Steam Trap	1	NNS	N/A	N/A	Self	N/A	N/A	N/A	
MS to FW Pump Drains (Bypass)	3	266,820 lb/hr	Globe	1-1/2	NNS	B31.1.0	N/A	Manual	N/A - Normally closed	N/A	N/A	02-01
MS to Aux. Steam	1	22,400 lb/hr	Globe	2	NNS	B31.1.0	6.1	Air	Normally closed with steam from extraction.	Non-1E	NNS	
MS to Aux. Steam (Bypass)	1	22,400 lb/hr	Globe	1	NNS	B31.1.0	N/A	Manual	N/A - Normally closed	N/A	N/A	98-01

* Paths that would normally be open following a Main Steam Line Break accident.

TABLE 10.3-2 (Continued)

STEAM GENERATOR FOR BLOWDOWN RATE

Flow Path	No. of Identical Paths	Max. Flow (all paths combined)	Type	Size, in.	Quality	Design Code	Valve Closure Time	Actuation	Closure Signal	Power Quality	Air Quality	
MS to Aux. Steam Drains (Trap)	1	263 lb/hr*	Thermodynamic Steam Trap	1	NNS	N/A	N/A	Self	N/A	N/A	N/A	
MS to Aux. Steam Drains (Bypass)	1	13,860 lb/hr	Globe	3/4	NNS	B31.1.0	N/A	Manual	N/A - Normally closed	N/A	N/A	
Reheat Steam	1	1,189,540 lb/hr	Gate	24	NNS	B31.1.0	100	Motor	Normally open. Closes on low pressure signal from PS-5635, following turbine trip.	Non-1E	N/A	02-01
Reheat Steam (Bypass)	1	148,000 lb/hr	Gate	4	NNS	B31.1.0	30	Motor	Normally open. Interlocked to close with Reheat Steam Valve.	Non-1E	N/A	
MS Stop Valve Upstream Drain	4	94,752 lb/hr *	Globe	1	NNS	B31.1.0	N/A	Motor	Open for startup, shutdown, turbine trip and <15% load.	Non-1E	N/A	
FW Turbine HP Stop Valve Upseat Drain	3	88,776 lb/hr *	Globe	1 1/2	NNS	B31.1.0	30	Motor	Open for startup, shutdown, turbine trip and <15% load.	Non-1E	N/A	98-01
EFW Pump Turbine Stop Valve Drain	2	7,146 lb/hr*	Globe	3/4	NNS	B31.1.0	N/A	Manual	Normally open.	Non-1E	N/A	

* Paths that would normally be open following a Main Steam Line Break accident.

SYSTEM DATA

⊕	6 LB X10 HR	PSIG	°F	REMARKS
1	4.273	991	545	100% LOAD
1	Minimal	1092	557	NO LOAD
14	0.786	951	540	POWER RELIEF TO ATMOS
15	0.025	1092	557	WHEN IN OPERATION
16	0.93	1176	—	SEE NOTE-A
17	0.93	1190	—	SEE NOTE-A
18	0.93	1205	—	SEE NOTE-A
19	0.93	1220	—	SEE NOTE-A
20	0.93	1235	—	SEE NOTE-A

NOTE:
A. FLOW LISTED IS THE ASME RATED CAPACITY (90% ACTUAL AT 3% ACCUMULATION) IN LB. PER HOUR WHEN THE SAFETY VALVE IS FULL OPEN AT THE HIGHEST SET SAFETY VALVE SET PRESSURE (1235 PSIG). THE PRESSURES LISTED ARE THE INDIVIDUAL SAFETY VALVES SET PRESSURE.

TURBINE DRIVEN EFP AUTO-START SIGNAL
1. 2/3 LOW-LOW LEVEL SIGNALS IN ANY 2 STEAM GENERATORS
2. UNDERVOLTAGE ON BOTH ESF BUSSES
3. AMSAC

EMERGENCY CLOSURE OF MAIN STEAM ISOLATION VALVE & BYPASS VALVE
1. 2/3 HI CONTAINMENT PRESSURE.
2. 2/3 HI STEAM FLOW WITH 2/3 LO-LO AVG. PRIMARY COOLANT TEMPERATURE.
3. MANUAL-CONTROL ROOM.(A TRAIN HAS INDIVIDUAL SW PER VALVE & B TRAIN HAS COMMON S.W. FOR 3 VALVES.
4. 2/3 LOW STEAM PRESSURE.

MS ISOLATION VALVE RE-OPEN SIGNAL

MS ISOLATION VALVE TEST CLOSE SIGNAL G.A.I. DWG. 808-001

TO CONTROL & PROTECTION LOGIC (M) DWGS. 1080932 & 1080837

OPEN LIMIT SWITCH ACTUATOR WILL ISOLATE BD. SEE B-208-009.

MOISTURE COLLECTOR OR VALVE CLOSURE
MANUAL - CONTROL ROOM "A" TRAIN HAS INDIVIDUAL SW PER VALVE "B" TRAIN HAS COMMON SW FOR 5 VALVES

FEEDWATER CONTROL (M) DWG. 1080932. SHEETS 3,4,8

TO SOLENOID VALVE CONTROL POWER DISCONNECT SWITCHES IN THE MCB OR IN TERM. CABINETS IN THE CABLE SPREADING ROOM.

(N) TO BE USED NEXT

NOTE:
B. TEMPORARY STRAINER FOR SYSTEM CLEAN UP. TO BE REMOVED AFTER FINAL FLUSH.

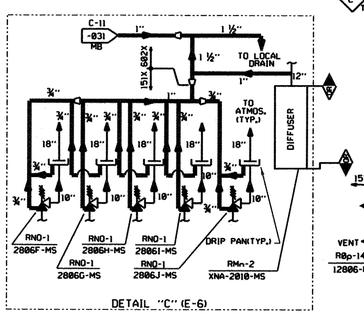

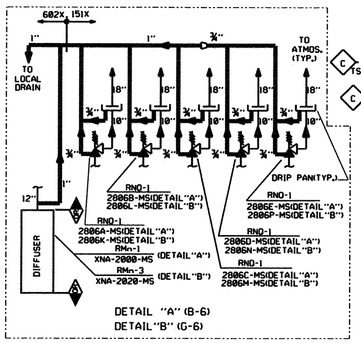

ALL PORTIONS OF THE MAIN STEAM PIPING WITH A WALL THICKNESS GREATER THAN ¾" TO BE HYDROSTATICALLY TESTED WITH WATER AT A MINIMUM TEMPERATURE OF 120°F. THE REMAINING PORTIONS OF THE SYSTEM MAY BE TESTED WITH WATER AT A TEMPERATURE OF 60°F.

DESIGN DATA

⊕	PSIG (NORMAL)	°F (NORMAL)	PSIG (UPSET)	°F (UPSET)	DURATION	HYDRO PSIG	BY	CHKD	REMARKS
4	0	AMB	145	365	<1%	—	HNG		
3	1185	600	1284	600	<1%	1780	HNG		
2	0	AMB	1	215	<1%	—	RJS		
1	1185	600	1284	600	<1%	1480	HNG		

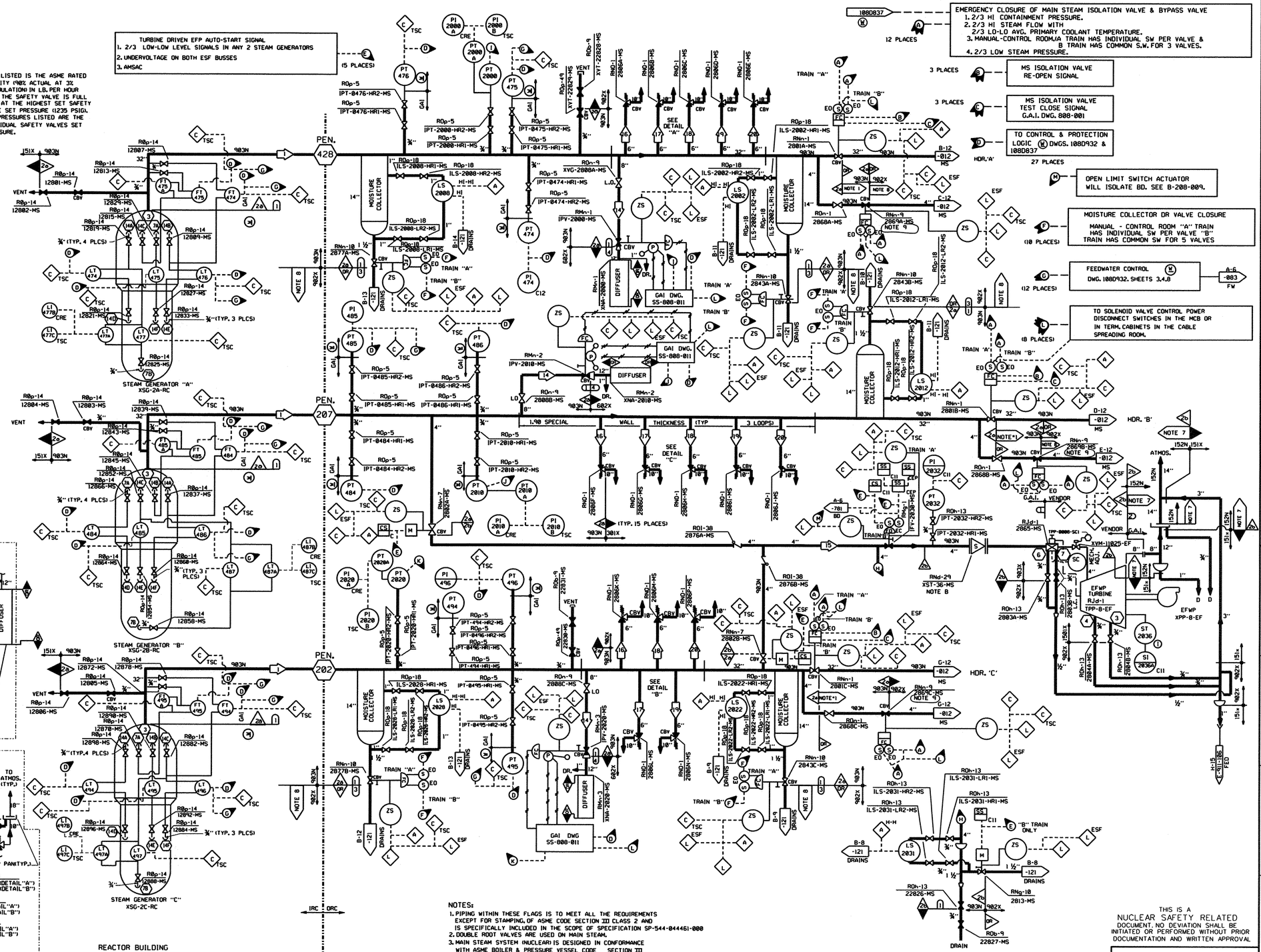

NOTES:
1. PIPING WITHIN THESE FLAGS IS TO MEET ALL THE REQUIREMENTS EXCEPT FOR STAMPING. OF ASME CODE SECTION III CLASS 2 AND IS SPECIFICALLY INCLUDED IN THE SCOPE OF SPECIFICATION SP-544-044461-000
2. DOUBLE ROOT VALVES ARE USED ON MAIN STEAM.
3. MAIN STEAM SYSTEM (NUCLEAR) IS DESIGNED IN CONFORMANCE WITH ASME BOILER & PRESSURE VESSEL CODE SECTION III 1971 AND S-73 ADDENDA.
4. ALL INSTRUMENTS WITH 400 TAG SERIES NUMBERS ARE SUPPLIED BY (9)
5. ALL (1) STATUS LIGHTS INDICATE BOTH OPEN & CLOSED POSITIONS UNLESS OTHERWISE NOTED.
6. FOR HYDRAULIC CLEANING OPENINGS. SEE PHYSICAL PIPING DWG.
7. THE EMERGENCY FEEDWATER PUMP DRIVE TURBINE EXHAUST PIPING SHALL BE DESIGNED FABRICATED & INSTALLED IN ACCORDANCE WITH ASME B & PV CODE SECTION III CLASS 3 RULES. HOWEVER, THIS PIPING DOES NOT REQUIRE HYDROSTATIC TESTING & CODE STAMPING. PIPING IS CLASSIFIED 2b. TECHNICAL REQUIREMENTS ARE DISCUSSED IN TRP-13.
8. Q.R. PER TRP-13. SECTION 8. PIPING CONTROLLED FOR BREAK ELIMINATION ANALYSIS.
9. MANUAL CONTROL CIRCUITRY FOR 2801A/B/C INTERLOCKED WITH 2869A/B/C OPEN LIMIT SWITCH CONTACT TO ENSURE 2869A/B/C FULL OPEN PRIOR TO 2801A/B/C OPENING. TRAIN A ONLY

ESSENTIAL

NO.	DATE	BY	REVISION	CKD. BY	LE APPROVAL
39	4/15/05	JTS	REVISED PER ECR-70670	RHM	BDL
38	8/3/03	JMR	CADD ENHANCED PER ECR-50239	MGR	DDJ
37	7/01/03	DDJ	REVISED PER MRF-90102	MGR	PRB
36	9/12/01	RHM	REVISED PER MRF-22553	MGR	JMW
35	04/03/01	JTS	REVISED PER ECR-50175	MGR	CCB
40	6/7/17	JMR	REVISED PER ECR-50828	RHM	NA

THIS IS A NUCLEAR SAFETY RELATED DOCUMENT. NO DEVIATION SHALL BE INITIATED OR PERFORMED WITHOUT PRIOR DOCUMENTATION AND WRITTEN APPROVAL

FSAR FIGURE 10.3-1

SOUTH CAROLINA ELECTRIC & GAS COMPANY
VIRGIL C. SUMMER NUCLEAR STATION

PIPING — SYSTEM FLOW DIAGRAM
MAIN STEAM (NUCLEAR)

SCE&G A SCANA COMPANY — DESIGN ENGINEERING — V. C. SUMMER NUCLEAR STATION JENKINSVILLE S. C.

MADE	CHECKED	LE APPROVAL
RHM	MGR	JEW

SCALE: NO SCALE — DRAWING NUMBER: D-302-011 — SHT. NUMBER: 40 — REV: 40

SYSTEM DATA						
#	x 10⁶ LB/HR	PSIG	°F	BY		REMARKS
1	4.273	991	545			100% LOAD
2	2.134	971	543			100% LOAD
3	0.832	965	542			GLAND STM START UP ONLY
4	1.168	973	543			100% LOAD
5	0.816	967	542			DEAERATOR SPARGING WHEN REQ'D
6	0.168	967	542			DEAERATOR PEGGING WHEN REQ'D
7	1.631	965	542			STEAM DUMP TO CONDENSER
8	0.879	991	545			STEAM DUMP TO ATMOS
10	0.195	196	523			FEED PUMPS

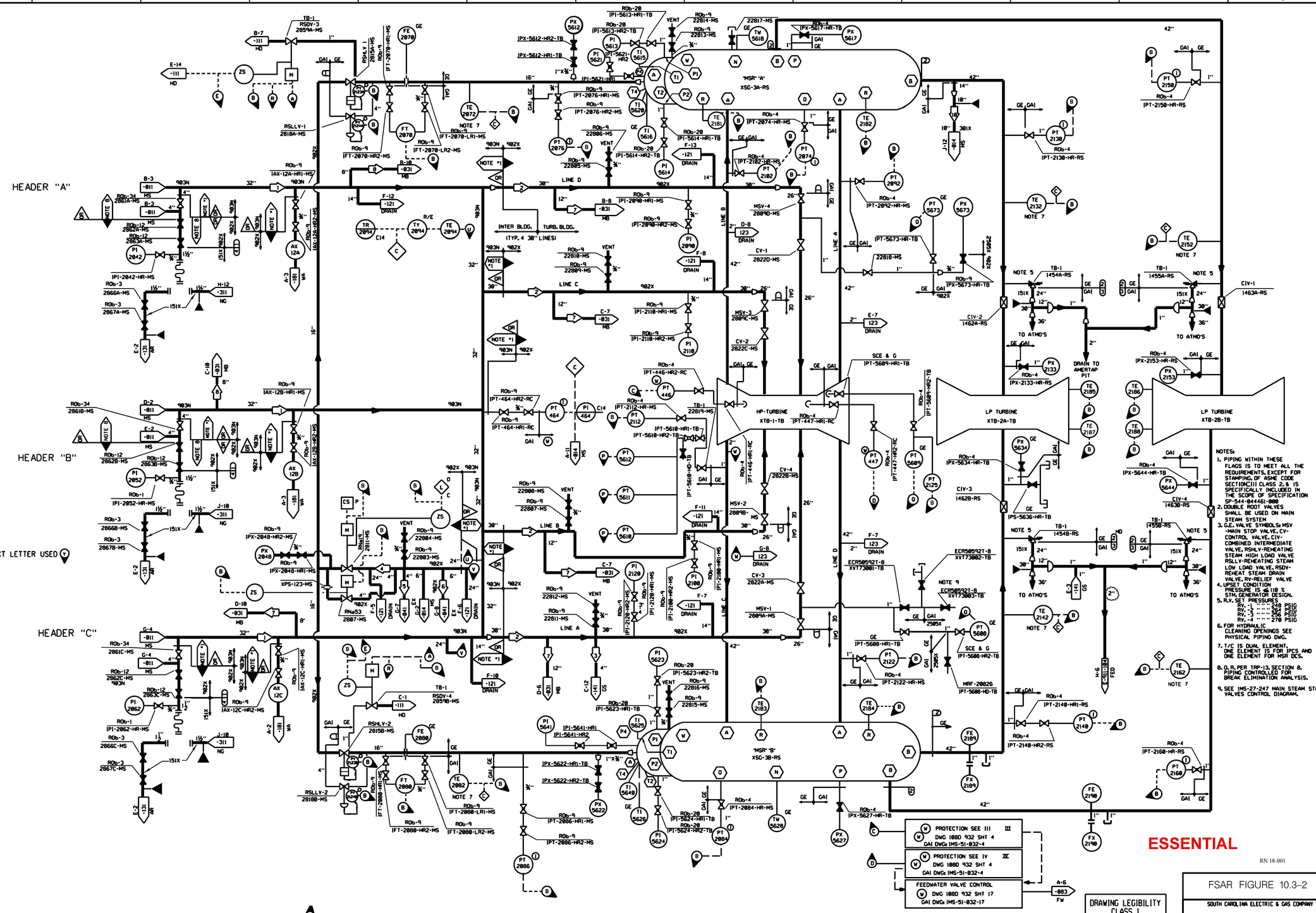

NOTES:

1. PIPING WITHIN THESE FLAGS IS TO MEET ALL THE REQUIREMENTS, EXCEPT FOR STAMPING, OF ASME CODE SECTION III CLASS 2 & IS SPECIFICALLY INCLUDED IN THE SCOPE OF SPECIFICATION SP-544-044461-000
2. DOUBLE ROOT VALVES SHALL BE USED ON MAIN STEAM SYSTEM
3. G.E. VALVE SYMBOLS: MSV -MAIN STOP VALVE, CV-CONTROL VALVE, CIV-COMBINED INTERMEDIATE VALVE, RSHLV-REHEATING STEAM HIGH LOAD VALVE RSLLV-REHEATING STEAM LOW LOAD VALVE, RSDV-REHEAT STEAM DRAIN VALVE, RV-RELIEF VALVE
4. UPSET CONDITION PRESSURE IS ≤ 110 % STM. GENERATOR DESIGN.
5. R.V. SET PRESSURES
   RV. -1 " " " " 248 PSIG
   RV. -2 " " " " 254 PSIG
   RV. -3 " " " " 256 PSIG
   RV. -4 " " " " 270 PSIG
6. FOR HYDRAULIC CLEANING OPENINGS SEE PHYSICAL PIPING DWG.
7. T/C IS DUAL ELEMENT, ONE ELEMENT IS FOR IPCS AND ONE ELEMENT FOR MSR DCS.
8. Q. R. PER TRP-13, SECTION 8. PIPING CONTROLLED FOR BREAK ELIMINATION ANALYSIS.
9. SEE IMS-27-247 MAIN STEAM STOP VALVES CONTROL DIAGRAM.

NOTE *1 PIPING HYDROSTATIC TEST PRESSURE 1480 PSIG

#	PSIG	°F	PSIG	°F	DURA.	HY-DRG	BY	CKD	REMARKS
	NORMAL		UPSET						
4	110	100	150	100	< 1%	225 HYD			(N)
3	60	518	100	600	< 1%	HYD			(N)
2	270	600	300	600	< 1%	GE			(N) —
1	1105	600	1204	600	< 1%	1780 HYD			(NOTE 4) (N)

DESIGN DATA

NO.	DATE	BY	REVISION	CKD. BY	LE APPROVAL
34	9/26/12	JMR	REVISED PER ECR-71780	MGR	GK
33	9/6/11	RHM	REVISED PER ECR-50592	MGR	GM
32	5/25/11	RHM	REVISED PER ECR-50592	MGR	AME
31	5/10/2011	TGB	REVISED PER ECR-50592	RHM	AME
36	1/8/08	JMR	REVISED PER ECR-72324	RHM	CB
35	6/5/2013	JTS	REVISED PER ECR-71780 & MRF-20826	MGR	GK

DRAWING LEGIBILITY CLASS I
SCE&G CAD ENHANCED

RN 18-001

FSAR FIGURE 10.3-2

SOUTH CAROLINA ELECTRIC & GAS COMPANY

VIRGIL C. SUMMER NUCLEAR STATION

PIPING — SYSTEM FLOW DIAGRAM

MAIN STEAM (NON-NUCLEAR)

A SCANA COMPANY — DESIGN ENGINEERING — V. C. SUMMER NUCLEAR STATION JENKINSVILLE S. C.

MADE	CHECKED	LE APPROVAL
1. AVN	2. MGR	3. JEW

SCALE: NO SCALE — DRAWING NUMBER: D-302-012 — SHT. NUMBER — REV: 36

SYSTEM DATA				
⇨	LB/HR	PSIG	°F	REMARKS
1	64,800	196	523	100% LOAD
1	66,141	185	504	RUNOUT (EMERG)
2	40,989	895	538	RUNOUT (EMERG)
3	22,400	100	335	WHEN REQ'D

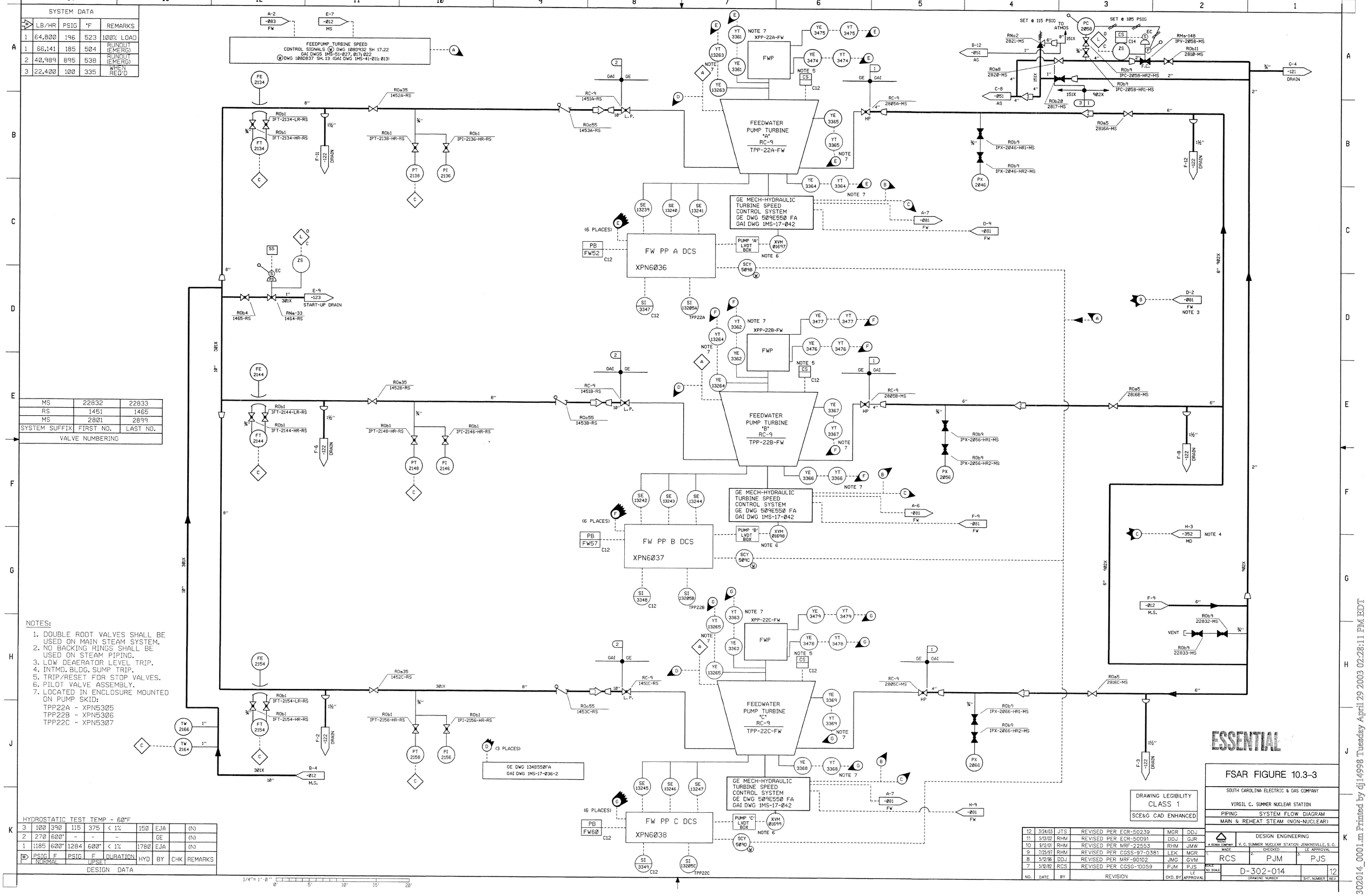

MS	22832	22833
RS	1451	1465
MS	2801	2899
SYSTEM SUFFIX	FIRST NO.	LAST NO.
VALVE NUMBERING		

NOTES:

1. DOUBLE ROOT VALVES SHALL BE USED ON MAIN STEAM SYSTEM.
2. NO BACKING RINGS SHALL BE USED ON STEAM PIPING.
3. LOW DEAERATOR LEVEL TRIP.
4. INTMD. BLDG. SUMP TRIP.
5. TRIP/RESET FOR STOP VALVES.
6. PILOT VALVE ASSEMBLY.
7. LOCATED IN ENCLOSURE MOUNTED ON PUMP SKID:
   TPP22A - XPN5305
   TPP22B - XPN5306
   TPP22C - XPN5307

HYDROSTATIC TEST TEMP - 60°F

3	100	390	115	375	< 1%	150	EJA		(N)
2	270	600*	-	-	-		GE		(N)
1	1185	600*	1284	600*	< 1%	1780	EJA		(N)
⇨	PSIG	F	PSIG	F	DURATION	HYD	BY	CHK	REMARKS
	NORMAL		UPSET						
DESIGN DATA									

NO.	DATE	BY	REVISION	CKD. BY	LE APPROVAL
12	3/24/03	JTS	REVISED PER ECR-50239	MGR	DDJ
11	5/13/02	RHM	REVISED PER ECR-50091	DDJ	GJR
10	9/12/01	RHM	REVISED PER MRF-22553	RHM	JMW
9	7/25/97	RHM	REVISED PER CGSS-97-0381	LEK	MGR
8	5/12/96	DDJ	REVISED PER MRF-90102	JMG	GVM
7	5/12/82	RCS	REVISED PER CGSG-10059	PJM	PJS

DRAWING LEGIBILITY CLASS 1
SCE&G CAD ENHANCED

FSAR FIGURE 10.3-3

SOUTH CAROLINA ELECTRIC & GAS COMPANY
VIRGIL C. SUMMER NUCLEAR STATION
PIPING SYSTEM FLOW DIAGRAM
MAIN & REHEAT STEAM (NON-NUCLEAR)

A SCANA COMPANY
DESIGN ENGINEERING
V. C. SUMMER NUCLEAR STATION JENKINSVILLE, S. C.

MADE	CHECKED	LE APPROVAL
RCS	PJM	PJS

SCALE NO SCALE
D-302-014 (DRAWING NUMBER) 12 (SHT. NUMBER / REV)

302014_0001.rm Printed by dj14998 Tuesday April 29 2003 02:28:11 PM EDT

SYSTEM DATA					
	LB/HR X 10⁶	PSIG	°F	BY	REMARKS
1	0.820	965	542		*
2	1.639	100	338		*
3	0.879	991	545		*
4					
5					
6					

* STEAM DUMP SYSTEM IN OPERATION FOLLOWING TURBINE TRIP. ACTUAL VALUES WILL VARY DEPENDING ON SPECIFIC OPERATING CONDITIONS DURING AND PRECEEDING STEAM DUMP.

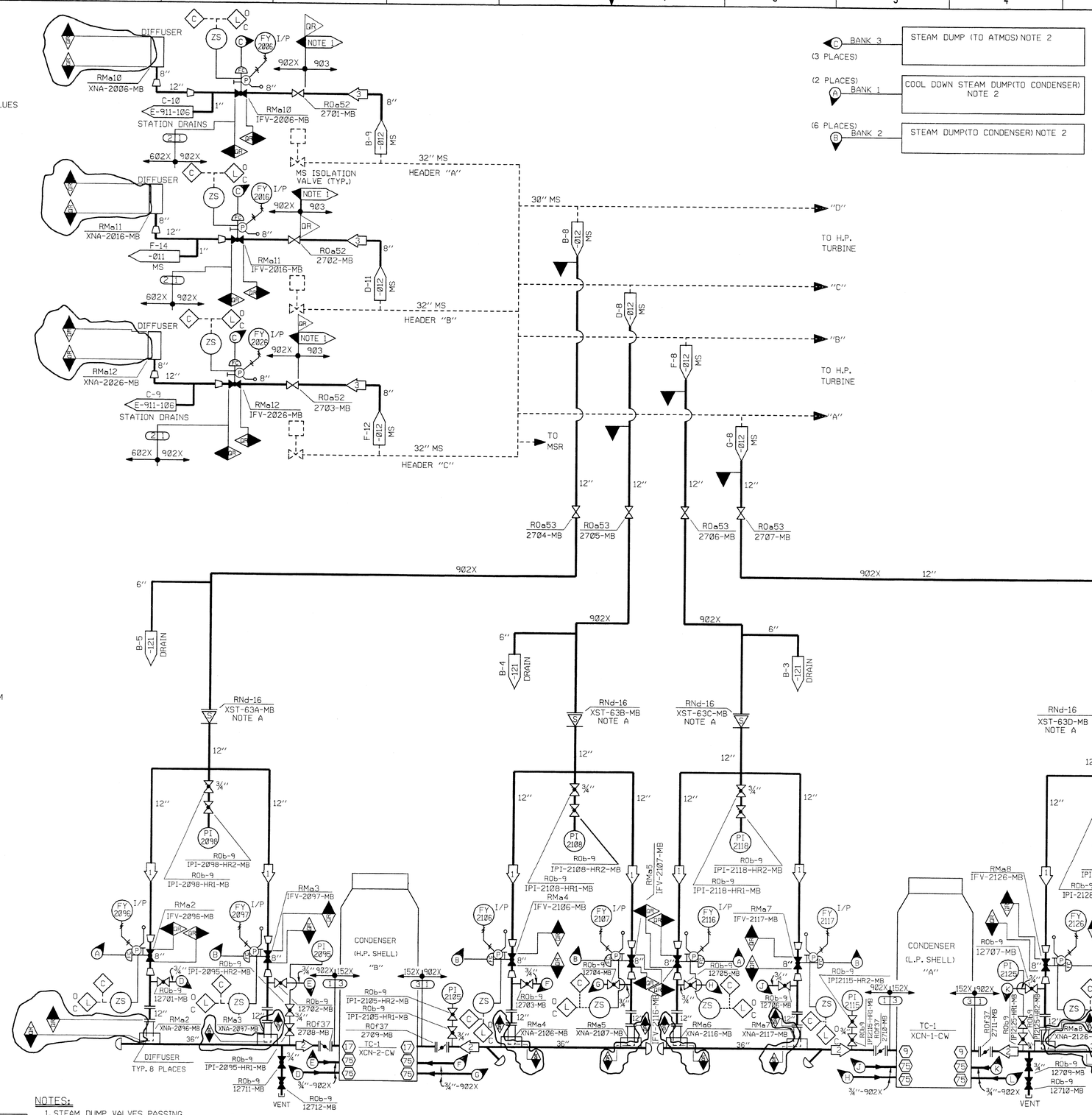

NOTES:

1. PIPING WITHIN THESE FLAGS IS TO MEET ALL THE REQUIREMENTS, EXCEPT FOR STAMPING, OF ASME CODE SECTION III CLASS 2 AND IS SPECIFICALLY INCLUDED IN THE SCOPE OF SPECIFICATION SP-544-044461-000.
2. SEE GAI DWG SS-808-031 SHS. 1-3
3. STEAM DUMP SYSTEM INCORPORATES POWER RELIEF VALVES IPV-2000-MS, IPV-2010-MS, AND IPV-2020-MS PER DWG D-302-011 (BANK 4).

NOTES:

A. TEMPORARY STRAINER FOR SYSTEM CLEAN UP, TO BE REMOVED AFTER FINAL FLUSH.

HYDROSTATIC TEST TEMP. 60° F									
3	100	400	130	380	<1%	—	HNG	HNG	NOTES 1&2
2	0	AMB	1005	560	<1%	1185	HNG	HNG	NOTES 1&2
1	1185	600	1284	600	<1%	1780	HNG	HNG	NOTE 3
DP	PSIG NORMAL	F NORMAL	PSIG UPSET	F UPSET	DURATION	HYD	BY	CKD	REMARKS

DESIGN DATA

NOTES:

1. STEAM DUMP VALVES PASSING NORMAL DUMP FLOW PER VALVE. 74 X 10^6 LB/HR FOR NORMAL DESIGN CONDITION.
2. STEAM DUMP VALVES PASSING MAXIMUM ALLOWABLE FLOW PER VALVE FOR .96 X 10^6 LB./HR. UPSET DESIGN CONDTION.
3. MAIN STEAM DESIGN CONDITIONS PER D-302-012.

1/4"= 1'-0" 0' 5' 10' 15' 20'

ESSENTIAL

HOLD
Use with reference to
MRF NO: 2[illegible]53K
DATE: 7/2/03
INITIALS: JDW

DRAWING LEGIBILITY
CLASS 1
SCE&G CAD ENHANCED

FSAR FIGURE 10.3-4

SOUTH CAROLINA ELECTRIC & GAS COMPANY

VIRGIL C. SUMMER NUCLEAR STATION

PIPING — SYSTEM FLOW DIAGRAM

MAIN STEAM DUMP SYSTEM

NO.	DATE	BY	REVISION	CKD. BY	LE APPROVAL
15	6/24/02	JMR	REVISED PER ECR-70025	MGR	JEG
14	7/25/97	RHM	REVISED PER CGCC-97-0381	LEK	MGR
13	5/12/96	DDJ	REVISED PER MRF-90102	JMG	GVM
12	07/26/93	ACI	REVISED PER MRF-22407	JHR	JAC
17	7/01/03	DDJ	REVISED PER MRF-90102	MGR	PRB
16	04/08/03	JTS	CADD ENHANCED PER ECR-50239	MGR	DDJ

DESIGN ENGINEERING
A SCANA COMPANY — V. C. SUMMER NUCLEAR STATION JENKINSVILLE, S. C.

MADE	CHECKED	LE APPROVAL
1. RHM	2. MGR	3. JEW

SCALE NO SCALE — D-302-031 (DRAWING NUMBER) — SHT. NUMBER — REV 17

302031_0001.tm Printed by dj14998 Tuesday July 01 2003 11:21:47 AM EDT

10.4 OTHER FEATURES OF STEAM AND POWER CONVERSION SYSTEM

10.4.1 MAIN CONDENSER

The main condenser acts as a heat sink for the 2 low pressure turbine exhausts, limiting the back pressure and thus increasing the amount of available work from the turbines. The main condenser also serves as a collection point for main steam dump flow, low pressure heater drains, and other miscellaneous flows, as well as, being the makeup point for the secondary cycle. It deaerates and provides storage capacity for the condensate system.

The auxiliary condensers are heat sinks for their individual feed pump turbines. Condensate from these condensers is returned to the main condenser.

10.4.1.1 Design Bases

The main condenser is of the dual shell, dual pressure type (a high pressure shell and a low pressure shell). The high pressure shell is designed to operate at ~2.91 inches, HgA. The low pressure shell is designed to operate at ~2.13 inches, HgA with a design cooling water inlet temperature of 77°F (circulating water temperature).

The low pressure shell features a false bottom plate which separates the low pressure condensing zone of the shell from a high pressure storage zone. The low pressure zone is connected to the high pressure zone by a downcomer. Condensate flows from the low pressure zone at a temperature of ~103.23°F to the high pressure zone by gravity. Condensate from the high pressure zone of the low pressure shell flows by gravity to the high pressure shell where it is reheated to 115.04°F by mixing with high pressure shell hotwell condensate. The condensate is reheated to the saturation temperature of the high pressure shell at the design point. The condensate pumps take suction from the high pressure shell. The design temperature of condensate out of the high pressure shell is ~ 115.04°F. Normal maximum operating pressure of the main condenser is limited to approximately 5 inches, HgA, and 175°F at the turbine exhaust to any shell. Condenser design capacities are listed in Table 10.4-1. Radioactivity concentrations in the condenser are expected to be approximately equivalent to the concentrations given in Table 11.1-5 for steam. Radioiodine concentrations in the condenser should be slightly lower because of a main condenser/air ejector partition factor of 0.15 for volatile iodine species. RN 99-01

Noncondensable gases are removed by the vacuum pumps described in Section 10.4.2. Design air inleakage rates are 40 scfm for normal main condenser operation and 15 scfm, total, for normal auxiliary condenser operation. RN 99-01

The main condenser will receive approximately 6.93 x 10^6 lb/hr of main steam from the Turbine Bypass System. This flow is bypassed to the condenser as required following a large load rejection, turbine trip, or other similar occurrence.

Main steam pressure is reduced to approximately 100 psig by the turbine bypass system at the condenser main steam dump inlet header. The steam is then dispersed by the main condenser through an internal spray pipe which directs the steam flow to a stainless steel baffle. This internal arrangement and the relatively low pressure (100 psig) protects the tubes and other components from impingement damage failure.

The condenser hotwell is capable of maintaining a normal water level corresponding to a retention time of at least 2 minutes (approximately 39,200 gallons).

Each condenser shell is provided with a compartmented hotwell and leak detection trays. A tray is located inside the hotwell adjacent to the tubesheet of each waterbox. The compartmented hotwells and leak detection trays are continuously sampled to provide early detection of tube leakage. Design of the compartmented hotwells and leak detection trays permits obtaining local samples to facilitate locating of tube leaks if necessary.

The combination of good quality (lake) cooling water and stainless steel tubes reduces corrosion and erosion of condenser tubes. An Amertap cleaning system is also provided for use in maintaining condenser tube cleanliness.

10.4.1.2 System Description

The main condenser is of the dual shell, dual pressure type with a rubber expansion joint in each neck. Circulating water is arranged to pass through the 2 sections in series. Condenser leakage is monitored by installed condensate monitoring instrumentation with an associated alarm in the control room. Heaters 5A and 6A are installed in the low pressure shell; heaters 5B and 6B are installed in the high pressure shell.

During normal operation the main condenser receives the following flows:

1. Main turbine exhaust steam.
2. Auxiliary condenser condensate and vents. 00-01
3. Low pressure heater drains.
4. Steam and water associated with the Turbine Gland Sealing System.
5. Condensate makeup. RN 06-041
6. Auxiliary condenser air removal (Low Pressure Condenser).

Possible additional flows during startup, shutdown or under transient conditions include:

1. Condensate pump and steam packing condenser minimum flow recirculation. RN 02-022

2. Startup vents.

3. Moisture separator/reheater drains.

4. Turbine bypass flow through the Main Steam Dump System.

10.4.1.3 Safety Evaluation

Disassociated hydrogen and other noncondensible gases are removed by the mechanical vacuum pumps to the atmosphere. These noncondensible gases may be routed to the Auxiliary Building Ventilation System charcoal filters if radiation levels in excess of established limits exist in the vacuum pump discharge. In the event 1 vacuum pump fails, another is available on standby. Thus, hydrogen buildup does not occur during operation of the condenser.

The influence of the main condenser on the Reactor Coolant System is reduced by the decoupling effect of the deaerator and steam generator water inventories. Therefore, control functions associated with the main condenser do not directly influence the operation of the Reactor Coolant System.

If the condenser pressure should start to rise, exhaust hood sprays are activated by a turbine exhaust hood temperature signal. Normal operation of the main condenser and its associated control functions do not affect the Reactor Coolant System. The only main condenser control function indirectly affecting the Reactor Coolant System is the loss of condenser vacuum which results in turbine trip. A turbine trip due to loss of condenser vacuum results in programmed steam dump to the atmosphere and reactor shutdown.

Provisions for protection of safety-related equipment from flooding as a result of condenser failure are discussed in Section 7.6.

10.4.1.4 Tests and Inspections

The condenser is subjected to a shell side hydrostatic test in the field. The pressure is limited to the static head of water at the turbine flange.

Condenser tubes are subjected to eddy current testing to ensure leak tight operation. The tubes are also subjected to periodic hydro cleaning to remove any scale, silt, or biological material which may inhibit heat transfer.

10.4.1.5 Instrumentation

The high pressure and low pressure condenser shells are equipped with level controllers for sensing of condenser water level. These level controllers provide signals to control valves which control the supply of condensate to the condensate storage tank and normal or emergency condensate flow to the condensate system. At low-low hotwell level, these level controllers open the demineralized water makeup valve to the low pressure hotwell. Monitoring of condenser water level is accomplished through level transmitters which provide signals to level indicators on the main control board in the control room. Each condenser shell has 1 pressure switch and 1 pressure transmitter to provide tripping and interlock functions upon loss of vacuum. If either of the pressure switches sense loss of vacuum, the turbine generator is tripped. The pressure transmitters operate bistables which interlock the turbine bypass system to prevent steam dump to the condenser upon loss of vacuum (see Section 10.4.4). Condenser vacuum is indicated and low vacuum is alarmed in the control room.

Condenser instrumentation is shown schematically on Figures 10.4-8 and 10.4-9.

10.4.2 CONDENSER AIR REMOVAL SYSTEM

The Condenser Air Removal System maintains main and auxiliary condenser vacuum by removing noncondensible gases, including dissociated hydrogen and oxygen from the main and auxiliary condensers.

10.4.2.1 Design Bases

The non-nuclear safety class Condenser Air Removal System is designed to establish main and auxiliary condenser vacuum during plant startup and to maintain vacuum during normal operation. Mechanical vacuum pumps remove noncondensible gases from the main condensers and the auxiliary condensers via the main condensers. Under normal conditions, discharge is through the Auxiliary Building Ventilation System charcoal filters. Provision is made for discharge of the noncondensibles to atmosphere. 99-01

Mechanical vacuum pumps are designed for the capacities listed in Table 10.4-1 in accordance with Heat Exchange Institute Standards[4]. Piping and valves are designed in accordance with ANSI B31.1[1] and B16.5[2], respectively. 02-01

10.4.2.2 System Description

Two (2) subsystems comprise the condenser air removal system: the main condenser air removal subsystem and the Auxiliary Condenser Air Removal Subsystem. Figure 10.4-1 provides the system diagram.

Each of the 2 main condenser shells is evacuated by an individual, 100% capacity, mechanical vacuum pump. A third pump is provided for backup. These pumps are used both to establish vacuum during plant startup (hogging) and to maintain vacuum during operation (holding).

99-01

The auxiliary condensers are piped to and normally aligned to the LP main condenser shell to maintain vacuum. Additionally, there are 2 mechanical vacuum pumps provided as back up for the auxiliary condensers. One (1) mechanical vacuum pump can be used to maintain vacuum in the three auxiliary condensers. A second pump is provided for backup.

All vacuum pumps can be operated during startup to speed the hogging operation.

Cooling water for the mechanical vacuum pumps is supplied from the Turbine Building Closed Cycle Cooling System. Seal water is provided by the condensate system. RN 99-01

Both subsystems discharge through the Auxiliary Building Ventilation System charcoal filters through a common line under normal conditions. Condenser discharge radiation monitor, RM-A9, is set to provide an alarm at approximately twice normal operating background. The high alarm is also normally set at approximately 2 times background. Provision is made for obtaining local samples for analysis and evaluation. RN 02-057

10.4.2.3 Safety Evaluation

The Condenser Air Removal System is not required to operate under emergency conditions nor is it necessary to achieve safe plant shutdown. Each subsystem is provided with a backup mechanical vacuum pump. Thus failure of an operating pump is not detrimental to continued plant operation.

Under normal conditions, the Condenser Air Removal System has no effect upon the Reactor Coolant System and radioactive leakage is negligible. However, should primary to secondary reactor coolant leakage occur, the flowpath through the Auxiliary Building charcoal filters limits the release of radioactivity to the environment. Anticipated release rates during normal operation are presented in Section 11.3.6.

10.4.2.4 Tests and Inspections

The Condenser Air Removal System is operated continuously during normal plant operation. Therefore, periodic testing is not required. System operation is verified prior to initial plant startup by preoperational and startup testing. During subsequent plant startups, system operation is verified by observation during hogging operations. System components are readily accessible for visual inspection under normal plant conditions.

10.4.2.5 Instrumentation

1. Main Condenser Air Removal

   Local pressure and air flow indication is provided to monitor vacuum pump performance. Lube oil pressure and discharge air temperature switches are provided for startup and shutdown interlocks. Alarms are sounded in the control room to alert the operator to vacuum pump trip, vacuum pump lube oil pump trip, low oil pressure, high off gas air temperature, and high off gas radiation. 99-01

2. Auxiliary Condenser Air Removal

Local pressure and air flow indication is provided to monitor vacuum pump performance. Lube oil pressure and discharge air temperature switches are provided for startup and shutdown interlocks. Alarms are sounded in the Control Room to alert the operator to vacuum pump trip and high lube oil temperature. 99-01

10.4.3 TURBINE GLAND SEALING SYSTEM

10.4.3.1 Design Bases

Main turbine and feedwater pump turbine shaft seals are of the injection/labyrinth/leakoff type. These seals are designed to prevent air leakage into and/or steam leakage out of the turbine casings.

The Turbine Gland Sealing System is not safety-related. Piping and valves associated with the system are designed in accordance with ANSI B.31.1[1] and ANSI B16.5[2], respectively.

10.4.3.2 System Description

Sealing steam is normally supplied to the Turbine Gland Sealing System from the Main Steam Supply System under all load conditions. Steam for turbine gland sealing may be provided by the auxiliary boiler through the Auxiliary Steam System. The sealing steam passes inward through the seals toward the turbines to a leakoff which is piped to the condenser. Gland sealing steam also passes though the seal toward the outside where it enters the vent annulus. The vent annulus is maintained at a slight vacuum by the steam packing condenser. RN 02-022

A small amount of air is drawn into the vent annulus and this air, together with the sealing steam, goes to the steam packing condenser. In the steam packing exhauster, the steam is condensed and the remaining saturated air is discharged to the atmosphere by a motor driven blower. RN 02-022

The turbine gland seal exhaust blower is part of the steam packing exhauster which is located in the Turbine Building at elevation 439'. Saturated air from this blower is discharged through a 12 inch pipe to the turbine building roof near the Intermediate Building wall. The saturated air is discharged to atmosphere approximately 8 feet above the roof (elevation 522').

This discharge is not monitored for radiation. Radiation monitor RM-A9, which monitors the Main Condenser Air Removal System discharge, actuates an alarm in the event of primary to secondary leakage.

The LP turbine seals operate against vacuum at all times.

Pressure in the steam seal header is automatically controlled by steam seal regulating valves.

10.4.3.3 Safety Evaluation

As long as a steam generator tube leak does not occur, the steam supplied to the Turbine Gland Sealing System is nonradioactive. A steam generator tube leak may result in small amounts of radioactive process steam leakage from the steam packing condenser. Such steam generator tube leakage would be detected by the Steam Generator Blowdown System radiation monitor (RM-L3) or the condenser exhaust radiation monitor (RM-A9). See Sections 10.4.8 and 11.4. RN 02-022

Suitable manual regulator bypass valves are provided for use under emergency conditions. Relief valves are included to protect the system from over pressurization.

10.4.3.4 Tests and Inspections

No special tests or inspections are required.

10.4.3.5 Instrumentation

Steam seal header pressure is automatically controlled by a steam seal feed valve and a steam packing unloading valve. Controls for system operation, such as pressure indicators, switches, transmitters, and controllers are mounted on a local panel and the main control board. Additionally, a local level alarm switch and temperature indicator are provided.

10.4.4 TURBINE BYPASS SYSTEM

10.4.4.1 Design Bases

The Turbine Bypass System is capable of bypassing main steam to the main condenser and/or to the atmosphere. This provides an artificial steam load for the steam generators so that differences between reactor output and turbine generator load can be absorbed without imposing undesirable transients upon the nuclear steam supply system.

System design permits the accommodation of large load reductions without reactor trip during most times in core life. The system also permits a gradual, orderly cooldown of the reactor to the point where the Residual Heat Removal System can assume the cooling function. The Turbine Bypass System is designed to operate in conjunction with the turbine generator, when available, or without the turbine generator if required. When including the power relief valves, it has sufficient capacity to pass ~ 93.6% of main steam flow at full load temperature and pressure. Capacities of individual valves in the Turbine Bypass System are presented in Section 10.4.4.2. The capacity of any 1 valve in the system does not exceed 970,000 lb/hr at 1,200 psia when fully open.

The Turbine Bypass System was originally designed to accommodate a full load rejection, defined as a reduction from 100% of rated turbine generator load to plant auxiliary load without a reactor trip. The transition to 18 months cycles, to less negative moderator temperature coefficients at the beginning of the fuel cycle, and to a full power T_{avg} operating window of 572°F to 587.4°F has, however, reduced this capability. Best estimate analyses indicated that a full load rejection is possible at all times in core life when operating with a full power T_{avg} of 587.4°F. However, at a full power T_{avg} of 572°F, full load rejection capability is feasible only for times in core burnup when the full power moderator temperature coefficient that is more negative than -18pcm/°F. Therefore, full load rejection capability cannot be guaranteed for all values of full power T_{avg} and for all time in core life. Generally, margin to trip improves with core burnup due to the more negative moderator temperature coefficient.

Step load changes of up to 10% can be accommodated by the reactor control system in automatic mode without a reactor trip or actuation of the turbine bypass system. 02-01

System valves, piping and related equipment are designed and fabricated to satisfy the requirements of the following codes and standards and are non-nuclear safety class, non-Seismic Category 1, except as noted below:

1. Power relief valves are designed and fabricated to satisfy the ASME Code, Section III, Class 2[5], and are classified Safety Class 2a, Seismic Category 1. 02-01

2. Atmospheric and condenser dump valves are designed and fabricated to satisfy ANSI B16.5[2]. 02-01

3. Vent diffusers are designed and fabricated to satisfy the ASME Code, Section VIII[6]. 02-01

4. Inline diffusers are designed and fabricated to satisfy ANSI B31.1[1]. 02-01

5. Piping is designed and fabricated to satisfy ANSI B31.1[1] and associated standards for fittings, flanges, etc. 02-01

Additionally, the Turbine Bypass System is designed to satisfy Occupational Safety and Health Act (OSHA) requirements concerning noise levels during operation.

10.4.4.2 System Description

The Turbine Bypass System is shown schematically by Figure 10.3-1. The system is comprised of the following components:

1. Condenser Dump Valve/Diffuser Combinations

   Eight condenser dump valved/diffuser combinations are provided and described in Table 10.3-2. The valve/diffuser combinations have an average rated/calculated capacity of ~ 6.74% of the main steam flow at full load pressure and temperature, thereby providing a bypass capacity to the condenser of ~ 53.95% of rated main steam flow. Each valve is provided with an inline diffuser mounted downstream of the valve. This combination produces reduced noise levels compared to levels generated by a valve without the diffusers. The system configuration separates the valve and diffuser, permitting location of the valve to allow easy access for maintenance. The diffusers are mounted in pairs in large, straight headers leading directly to the main condenser. Thus, problems associated with routing large diameter, hot piping are minimized.

2. Atmospheric Dump Valve/Diffuser Combinations

   Three atmospheric dump valve/diffuser combinations are provided and described in Table 10.3-2. The valve/diffuser combinations have an average rated/calculated capacity of ~ 6.95% of the main steam flow at full load pressure and temperature, thereby providing a bypass capacity to the atmosphere of ~ 20.85% of rated main steam flow. Each valve is provided with a diffuser mounted downstream of the valve. The system configuration separates the valve and diffuser, permitting location of the valve to allow easy access for maintenance. The diffusers are mounted on the intermediate building roof and discharge directly to the atmosphere.

3. Power Relief Valve/Diffuser Combinations

   Three power relief valve/diffuser combinations are provided. The power relief valves are similar to the atmospheric dump valves previously described, except for the design codes applied. The valve/diffuser combinations have an average rated capacity of ~ 6.25% of the main steam flow at full load pressure and temperature, thereby providing a bypass capacity to the atmosphere of ~ 18.76% of rated main steam flow. These valves serve a dual purpose. They operate in conjunction with the atmospheric dump valves to provide additional steam dump capacity to the atmosphere and they also serve as power operated relief valves for the steam generator secondary side.

   The power relief valves are Safety Class 2a and are located outside the Reactor Building, upstream of the main steam isolation valves in Safety Class 2a main steam piping. Piping downstream of the power relief valves, between the valves and diffusers is non-nuclear safety class.

Operability testing of the valves was performed in accordance with the recommendations of Regulatory Guide 1.48 [11] as discussed in Appendix 3A. Electrical components (solenoid valves and position indicator limit switches) mounted on the valves are qualified to satisfy IEEE-382-1972.[10] 02-01 02-01

4. Piping and Other Valves

System piping is provided to convey the steam to the condenser and to the Intermediate Building roof, where it may be discharged to the atmosphere. Manual isolation valves are provided for all control valves in the system to permit maintenance without shutting down.

Turbine Bypass System control functions and control interactions with other plant controls and systems are discussed in detail in Section 7.7.1. A detailed analysis of system design adequacy is presented in Section 7.7.2.

10.4.4.3 Safety Evaluation

The Turbine Bypass System is not required for plant control following an accident and is not a safety related system. Failure of any single control valve to a wide open position results in uncontrolled secondary side blowdown that is within limits compatible with maintenance of reactor fuel integrity and integrity of the reactor internals.

The capacity of the power relief valves is in addition to that required by the ASME Code, Section III [5] for overpressure protection of the steam generators. Steam generator overpressure protection is provided by the main steam safety valves, discussed in Section 10.3. 02-01

Failure of the Turbine Bypass System to operate does not preclude operation of any essential systems since this system does not interface with any essential systems. Postulated failure of Turbine Bypass System high energy piping will not adversely affect or preclude operation of any safety- related systems or components located close to the Turbine Bypass System. Postulated pipe rupture of high energy lines in the Turbine Bypass System is analyzed as discussed in Section 3.6.

10.4.4.4 Tests and Inspections

The Turbine Bypass System is tested prior to commercial operation. Proper system response to simulated temperature and pressure inputs is verified during preoperational testing. During hot functional testing, each valve is stroked open and closed to verify operation. After entering service, periodic testing is performed to assure availability. The power relief valves, which are Safety Class 2a, are tested and inspected in accordance with the applicable ASME Code, prescribed under 10CFR50.55a. This includes preservice and inservice inspection and test. Section 5.7 discusses a comprehensive program of compliance with the ASME Code, Section XI relative to inservice inspection. RN 04-012

10.4.4.5 Instrumentation Applications

Instrumentation and controls specifically related to the Turbine Bypass System are shown by Figures 10.3-1, and 10.4-3 through 10.4-4b. Setpoints are listed in Table 10.4-2. They are provided to permit monitoring of system performance and to permit manual valve operation if required.

10.4.5 CIRCULATING WATER SYSTEM

The Circulating Water System removes thermal energy from the main and auxiliary condensers and dissipates this energy to Monticello Reservoir.

10.4.5.1 Design Basis

The principal performance requirement for the Circulating Water System is that it provide cooling water to the main and auxiliary condensers. The system is capable of pumping ~ 5.34 x 10^5 gpm of circulating water through the plant. This provides a heat transfer capability to the environment of 6.675 x 10^9 BTU/hr, with a nominal system temperature rise of 25°F. This capability is adequate to satisfy system requirements for all normal and upset plant conditions, including turbine trip from full load. The system is not required to function under plant emergency or faulted conditions. 02-01

The following equipment is cooled by the Circulating Water System:

1. Main condenser - 2 shells.

2. Auxiliary condensers - 3 shells.

3. Circulating water motor bearing coolers are supplied only as backup cooling, (Normal Cooling Water Supply is from the Filtered Water System). RN 08-001

Circulating water is also used to wash the traveling screens and as a backup for circulating water pump motor bearings and jockey pump bearing lubrication.

Design parameters for major system components are presented in Table 10.4-3. The design pressure and temperature requirements for piping, valves, and pressure retaining parts are tabulated in the lower left margin of Figure 10.4-5. The upset condition tabulated is the shutoff head of the circulating water pumps. This condition occurs less than 1% of the time. 02-01

Circulating Water System piping and valves are designed in accordance with applicable industry codes and standards.

Condensers are designed in accordance with Heat Exchange Institute Standards. [4] 02-01

Pumps are designed in accordance with Hydraulic Institute Standards. [9] 02-01

10.4.5.2 System Description

Circulating Water System water requirements are supplied by three 33-1/3% capacity vertical wet pit pumps, located in the circulating water intake structure. The discharges from these pumps are headered into a main supply line to the plant. Two (2) or three (3) pumps are used during normal operation at reduced or full load. 99-01

The circulating water pumps can be controlled from the main control room or locally. Six (6) traveling water screens and two 100% capacity screen wash pumps with a strainer provide screened water to the pumps.

A circulating water jockey pump is included in the system to fill the circulating water system during startup. RN 98-185

The main condensers are supplied with cooling water through branches from the main circulating supply line. These branches are equipped with motor operated butterfly valves and expansion joints at the condenser waterbox inlet and discharge.

The auxiliary condensers, also supplied directly from the main circulating water line, are three (3) ~ 50% capacity units equipped with motor operated butterfly valves at the inlet and with manual butterfly valves at the discharge. Expansion joints are provided at the inlet and discharge.

The main and auxiliary condenser piping is equipped with automatic tube cleaning equipment of the sponge ball type.

10.4.5.3 Safety Evaluation

The Circulating Water System is independent of the emergency cooling facilities. It is not essential for safe operation and shutdown of the Nuclear Steam Supply System nor is it required to operate under accident conditions. Therefore, the system is non-nuclear safety class, non-Seismic Category 1.

A failure in the circulating water transport system inside the Turbine Building would be detected by a high water level alarm in the main condenser cleaning pit. As a result of effluent radiation monitor response capabilities the sump pumps located in this pit are limited to a combined maximum capacity of 2000 gpm. A leak exceeding the capacity of these pumps would activate an alarm when the water level in the main condenser cleaning pit approached elevation 390'. The main condenser cleaning pit is located within the Amertap strainer pit. RN 01-051

A continued rise of water into the Amertap strainer pit to elevation 400' actuates 2 groups of 3 level switches. The actuation of any 2 switches within either group trips the circulating water pumps and initiates pump discharge valve and high pressure condenser discharge valve closure. Another alarm signals tripping of the pumps and closure of the pump and condenser discharge valves.

The lowest design pressure for any component in the Main Circulating Water System is 50 psig. Design data and system data are shown on Figure 10.4-5. To reduce the possibility of water hammer, slow closing, motor operated butterfly valves are used for condenser isolation. RN 01-051

A postulated complete failure of the condenser inlet expansion joint, which would result in an estimated flow rate of 780 ft^3/sec, would actuate the condenser cleaning pit alarm in less than 5 seconds. The rise of water to elevation 400' and resultant actuation of the alarm and pump trip would require approximately 46 seconds.

At initiation of pump trip, the pump discharge valves and high pressure condenser discharge valves begin to close. These valves require approximately 120 seconds and 90 seconds, respectively, to reach the fully closed position.

Pump coastdown time is extremely short and, for all practical purposes, is considered to be negligible.

The total time required to stop circulating water flow from the instant of failure would be approximately 2 min - 50 sec. Water levels versus time for a postulated expansion joint failure are presented in Table 10.4-3a.

A completely failed expansion joint would cause flooding of the Turbine Building basement (see Figure 1.2-16) up to elevation 413.5'. No essential systems or components are located in the Turbine Building. The lowest penetration of the Control Building or Intermediate Building walls, that could cause flooding from the Turbine Building, is at elevation 427', considerably above the flood elevation of 413.5'. 02-01

The system may be operated with less than 3 circulating water pumps in operation. 99-01

10.4.5.4 Tests and Inspection

Testing of the Circulating Water System is limited to that normally provided for non-safety related systems and includes:

1. Hot functional testing.

2. Normal, operational checking, and routine maintenance of the system.

10.4.5.5 Instrumentation

System instrumentation is shown schematically on Figure 10.4-5. The following instrumentation is provided to permit operator evaluation of major equipment performance and to provide a performance record:

1. Pressure indicators, switches, and test connections.

2. Level switches.

3. Temperature indicators and test connections.

10.4.6 CONDENSATE CLEANUP SYSTEM

The Condensate Cleanup System is provided to aid in maintaining feedwater and steam generator water chemistry within specifications during all modes of plant operation and as required during condenser leakage. Figure 10.4-7a schematically illustrates the system.

10.4.6.1 Design Bases

1. The system is not safety related. Failure or malfunction of any system component will not affect the ability of the plant to achieve or maintain shutdown conditions.

2. The system is designed for cleaning up to approximately half of the maximum condensate flow.

3. System effluent purity will be within the limits provided in the Condensate System Design Basis Document as follows: RN 00-01

Total suspended solids, max. ppb	10
Sodium, max., ppb	1
Chloride. max., ppb	1

4. The system will be used when condensate polishing is required to maintain chemistry specifications.

5. Wastes from the system will be sent to the backwash receiving tank. Disposal from the tank will be dependent upon results of grab sample analysis.

10.4.6.2 System Description

The purpose of the Condensate Polishing System (CPS) is to minimize the time for plant startup. During plant operation, the Steam Generator Blowdown System is in service for system cleanup. However, the CPS will be used (assuming no SG leaks) to better maintain prescribed chemistry parameters in the condensate and feedwater cycle.

The CPS consists of 3 vessels in the condensate cycle. Two (2) vessels will be in service at a time with the third as a spare. The total flow through them will be a maximum of 8822 gpm (4411 each vessel). This is approximately 1/2 of the total condensate flow needed for full load capability of the V. C. Summer Nuclear Station, Unit 1.

The condensate polishers will be placed in service during plant startup for chemical cleaning of the condensate and feedwater cycles. There is a recirculation mode that will be used as a prestart cleanup of a major portion of the condensate and feedwater systems. This prestart cleanup will recirculate water using the condensate and feedwater booster pumps to the closed feed water isolation valves and back to the hotwell.

On unit startup, the polishers can be on line via the condensate pumps until the plant attains approximately 50% full load capacity. RN 06-041

During shutdown of the unit, the CPS could be placed in service when the plant load is approximately 50% if system chemistry indicates a need for cleanup.

If the condenser develops a leak, which will be detected by the Condenser Leak Detection System, the leak location will be determined and that half of the condenser will be taken out of service for repairs. At this time, the unit will be at a load of about 50% and the condensate polishers can be placed in service to assist in removing chemical impurities introduced by the detected leak.

If a primary to secondary leak occurs, it will be detected by the steam generator leak detection system and the CPS will be isolated. It is not intended to operate the CPS if a SG leak occurs. In the event that the condensate polishers are used in the presence of a steam generator tube leak, all applicable Health Physics measures and precautions will be observed.

Depleted resins are backflushed to a backwash receiving tank from which samples will be taken and analyzed prior to release. The results of gamma isotopic analyses are then utilized via established station procedures and administrative controls to determine if a release is possible. If a release is acceptable, the normally disconnected spool piece is installed and the depleted resins are discharged to the settling pond through RML-11. RML-11 will alarm on the local control panel and stop the backwash transfer pumps to prevent a release if its setpoint is exceeded.

If a release is not acceptable and the resin must be handled as solid radwaste, the contents of the backwash receiving tank are discharged to a DOT approved low level radwaste container. Using a preinstalled filter arrangement and the dewatering equipment shown in Figure 10.4-7a, excess water is removed from the powdex resin according to the Process Control Program for the packaging of low level radioactive waste. The resin may be dewatered to DOT requirements and shipped to a licensed low level radwaste burial facility. The dewatered resin may also be transported around to the Auxiliary Building truck bay entrance and solidified using the inplant solidification equipment.

The anticipated operational information is as follows:

1. Flow rate each vessel: condensate flow rate = 4411 gpm
   backwash flow = 375 gpm 00-01

2. Backwash frequency: 3 backwashes per 24 hr startup

3. Backwash holdup tank: 12,000 gallon capacity

4. Average backwash rate: 18 backwashes per year

5. Provisions exist for sampling condensate and resin backwash.

10.4.6.3 Safety Evaluation

The Condensate Cleanup System is not safety related and is not required to ensure any of the following:

1. The integrity of the reactor coolant pressure boundary.

2. The capability to shut down the reactor and maintain it in a safety shutdown condition.

3. The ability to prevent or mitigate the consequences of accidents which could result in potential offsite exposures in excess of established limits.

Dissolved and suspended solid impurities within the condensate and feedwater circuits are not expected to contribute to plant activity levels. Any radioactive contamination that might occur in the Main Steam/Condensate System is actually reduced during the condensate cleanup process.

Scheduled, infrequent operation of the condensate polishers minimizes the possibility of producing potentially radioactive waste.

10.4.6.4 Tests and Inspections

Prior to system startup, the service vessels are hydrostatically pressure tested and flushed clean. All components and instruments are checked for operational status. During plant operation, instruments are routinely calibrated with known standards for accurate monitoring of pH, dissolved oxygen, sodium and conductivity. Continual surveillance and prescribed inspections of system components are standard operating procedures.

To assure protection of plant personnel and the environment during suspected primary to secondary steam generator leakage the following precautions should be taken:

1. Increased radiation survey frequency in the condenser polisher area.

2. Grab sample analysis prior to backwash receiving tank discharge will be extended to include tritium and isotopic ß-*y* analysis.

10.4.6.5 Instrumentation Application

Manually initiated, automatic backwash sequence controls are provided for use in replacing exhausted powdered resins. Resin trap strainers in the effluent stream have differential pressure switches to actuate alarms upon detection of high pressure drop.

An automatic bypass valve around the demineralizer system opens upon detection of excessive differential pressure. Instrumentation also indicates high differential pressure across a demineralizer vessel. The demineralizer is then manually removed from service and replaced by the standby vessel. Instrumentation is also provided to monitor effluent for sodium, pH, dissolved oxygen, and conductivity.

10.4.7 CONDENSATE AND FEEDWATER SYSTEMS

10.4.7.1 Condensate System

The Condensate System pumps condensed turbine exhaust steam from the main condenser hotwell through the low pressure feedwater heaters to maintain deaerator storage tank level for anticipated operating conditions. It also serves as a source of cooling water for the steam packing condenser and the steam generator blowdown heat exchanger, and provides sealing water for various vacuum valves and the feedwater pump seals.

10.4.7.1.1 Design Bases

Design conditions for system piping, valves, and pressure retaining parts are tabulated in the lower left margin of Figures 10.4-8 and 10.4-9. At the discharge of the condensate pumps, the upset condition bounds the discharge pressure of the condensate pumps under minimum recirculation. This condition is expected to occur less than 1% of the time. 02-01

Condensate pumps are designed in accordance with the requirements of the Hydraulic Institute Standards.[9] The original pump design point was selected to satisfy the requirements of the turbine thermal cycle (at pre-uprate conditions) at the “valve wide open” condition, plus a wear margin. 02-01

For post-uprate operation, the design of the pumps was evaluated against predicted required flow plus an allowance for transients.

RN 06-041

Low pressure feedwater heaters, deaerator, and deaerator storage tank are designed, fabricated, inspected, tested, and stamped in accordance with the ASME Code, Section VIII, Division 1.[6] Thermal performance is governed by the Heat Exchange Institute Standards [7]. 02-01

The Condensate System, except for the condensate storage tank, is non-nuclear safety class. The condensate storage tank is Safety Class 2b, Seismic Category 1, since it is the primary inventory source for the Emergency Feedwater System.

The condensate storage tank is designed, fabricated, inspected, tested and stamped in accordance with the ASME Code, Section III.[5] During normal operation the 02-01 condensate storage tank water level is not permitted to fall below a level corresponding to a usable volume of 160,054 gallons (see section 9.2.6.1). Makeup to the condensate 99-01 storage tank is demineralized water, admitted through the condenser and condensate storage subsystem. See Section 9.2.6 for a description of condensate storage facilities.

Under transient conditions, the deaerator storage tank serves as an additional source of water for the Feedwater System, providing adequate net positive suction head (NPSH) for the feedwater booster pumps.

System piping and valves are designed in accordance with ANSI B31.1[1] and ANSI B16.5[2], respectively.

Design parameters of major components in the Condensate System are listed on Table 10.4-4.

10.4.7.1.2 System Description

The Condensate System contains three (3) 50% capacity motor driven condensate pumps, a 50% capacity powdered resin filter/demineralizer cleanup system (see Section 10.4.6), 3 stages of closed low pressure feedwater heaters, associated piping, valves, and instrumentation. The 2 lowest stages of feedwater heaters are located in the condenser neck.

Equipment interfacing with, but not part of, the Condensate System includes the steam packing condenser and steam generator blowdown heat exchangers.

Condensate is pumped from the hotwell storage area, located below the main high pressure condenser, by 2 normally operating condensate pumps through the steam packing condenser. The condenser then passes through two 50% capacity, parallel strings of low pressure heaters to the deaerator and deaerator storage tank.

Condensate pumps are of the 4 stage, vertical can, centrifugal type, and are electric motor-driven. Condensate flow is controlled by the deaerator level control valves which follow the difference between feedwater and condensate flow, trimmed by deaerator level. The pumps are protected from a low flow condition by individual recirculation valves back to the main condenser.

RN 06-041

The steam packing condenser is a shell and U-tube type heat exchanger. Condensate passes through the tube side. A manual bypass is provided for maintenance.

Low pressure feedwater heaters are shell and U-tube heat exchangers with 2 heating zones: A condensing zone and an integral drain cooling zone. The three (3) 50% capacity feedwater heaters in each string are bypassed and isolated as a group when necessary. A bypass line is provided for use when 1 heater string is out of service. Turbine load must be adjusted according to the manufacturers instructions when a feedwater heater string is isolated.

The deaerator is of the horizontal, direct contact, tray type. The preheated condensate drops onto the stainless steel trays where it is scrubbed by rising steam. Condensate then passes from the trays to the deaerator storage tank which has a capacity of 75,000 gallons.

Condensate is also supplied to the suction of the exhaust hood spray pumps. These pumps provide hood spray, gland sealing for various valves in vacuum service and seal water for vacuum pumps and feedwater pump seals. A small amount of condensate is used as the coolant for the steam generator blowdown heat exchangers.

10.4.7.1.3 Safety Evaluation

Three (3) 50% capacity condensate pumps are provided. Two (2) of these pumps are normally operated. The third is in standby. Upon the trip of an operating pump, which is annunciated in the control room, the standby pump is started by the operator. No detrimental effect upon the Reactor Coolant System is realized. 02-01

System makeup is provided directly from the condensate storage tank to the low pressure condenser shell. Makeup to the condensate storage tank is accomplished by injection of demineralized water to the low pressure condenser shell and thence through the Condensate System to the condensate storage tank.

Sentinel type, tube side relief valves are provided for all closed feedwater heaters. A feedwater heater tube rupture causes high level alarms in the Control Room and initiates automatic valve operation where appropriate. A high-high level alarm on condenser neck heaters initiates turbine trip if the condition exists more than 10 seconds.

Pressure, temperature, or flow deviations due to a malfunction in the Condensate System is not immediately felt by the Reactor Coolant System due to the capacity of the deaerator storage tank and the Feedwater System. The deaerator storage tank allows corrective action, an orderly runback to a compatible load, or shutdown. 02-01 02-01

10.4.7.1.4 Tests and Inspections

Tests of the Condensate System are limited to that normally provided for non-safety related systems and includes:

1. Hot functional testing. (Historical) 99-01

2. Normal, operational checking and routine maintenance of the system.

The closed, low pressure feedwater heaters were subjected to both shell and tube side hydrostatic tests at 150% of the respective design pressures. The shell sides were also tested for vacuum. Alterations to the shells to obtain higher maximum allowable working pressures call for leak tests at system operating conditions. 02-01

10.4.7.1.5 Instrumentation Applications

Instrumentation provided for the Condensate System is shown on Figures 10.4-8 and 10.4-11. This instrumentation is provided to permit operator evaluation of major equipment performance and to provide a record of equipment performance. Instrumentation includes the following:

1. Pressure indicators, switches, and test connections.

2. Flow indicators, recorders, switches and test connections.

3. Level indicators, recorders, controllers and switches.

4. Temperature indicators, controllers, switches and test connections.

10.4.7.2 <u>Feedwater System</u>

The Feedwater System is designed to pump feedwater from the deaerator storage tank through 2 stages of high pressure heaters to the steam generators. Thus, heated, deaerated water required to maintain steam generator water level is provided during normal operation, after startup, and before shutdown.

10.4.7.2.1 Design Bases

Design conditions for system piping, valves, and pressure retaining parts are tabulated in the lower left margin of Figures 10.4-10 through 10.4-12.

Feedwater System piping and valve components from and including the feedwater check valves to the steam generators are Safety Class 2a, Seismic Category 1 and are in accordance with ASME Code, Section III [5], Class 2 requirements. System components upstream of the feedwater check valves in the Intermediate Building, excluding branch lines 2 inches and less, are Quality Related safety class (QR), Seismic Category 1 and satisfy ASME Code, Section III [5], Code Class 2 requirements; however, are not code stamped. This piping is identified as “Note 1” piping on Figure 10.4-12. Feedwater piping in the Turbine Building is designed in accordance with ANSI B31.1 [1]; valves conform to ANSI B16.5. [2] 02-01 ~~99-01~~ 02-01

The feedwater booster pumps and feedwater pumps are designed in accordance with the requirements of the Hydraulic Institute Standards.[9] Original design points for these pumps were selected to satisfy the requirements of the turbine thermal cycle. At the "valve wide open" condition (pre-uprate power), plus a wear margin. 02-01

High pressure feedwater heaters are designed, fabricated, inspected, tested, and stamped in accordance with the ASME Code, Section VIII, Division 1.[6] Thermal performance of these feedwater heaters is governed by Heat Exchange Institute Standards.[7] 02-01 02-01

At less than approximately 3% plant load, the Emergency Feedwater System (see Section 10.4.9) is used to maintain steam generator water level. The Main Feedwater System is designed to overlap the Emergency Feedwater System down to the no load conditions but the Emergency Feedwater System is normally used for conditions such as startup and shutdown. 02-01

10.4.7.2.2 System Description

The Feedwater System is divided into nuclear safety class and non-nuclear safety class portions. The nuclear safety class portion, downstream of and including the containment isolation valves, is schematically shown on Figure 10.4-12. Feedwater System parameters are listed on Table 10.4-5.

The non-nuclear safety class portion of the Feedwater System includes four 33-1/3% capacity, constant speed, motor driven, feedwater booster pumps; three 50% capacity, variable speed, turbine driven, feedwater pumps; 2 stages of high pressure heaters; valves, instrumentation, controls; and associated piping. The feedwater booster pumps take suction from the deaerator storage tank and discharge to the feedwater pump suction. The feedwater pumps discharge through 2 strings of high pressure heaters into a single 30 inch diameter header which distributes the feedwater to 3 feedwater flow control valves and/or 3 feedwater bypass control valves. A recirculation line runs from the termination of the 30 inch diameter header near the feedwater flow control valves to the deaerator. This line is equipped with block valves and a pressure breakdown orifice and is used during startup to permit warming of the Feedwater system to and including the 30 inch diameter header. RN 06-006

Feedwater flows from the feedwater flow control valves through individual lines and the feedwater isolation valves to the three steam generators.

The feedwater booster pumps are horizontal, split case, single stage and centrifugal pumps. They are motor driven at a constant speed of 1780 rpm. Minimum recirculation flow is bypassed to the deaerator storage tank, as required. Normally, 2 feedwater booster pumps operate at low load; three or four at intermediate or full load. Feedwater booster pumps provide the necessary flow and suction pressure for the feedwater pumps.

Steam is supplied to the deaerator storage tank through a sparger during initial stages of Feedwater System warmup. This is followed by admission of pegging steam to the deaerator to complete Feedwater System warmup.

The feedwater pumps are horizontal, split case, single stage, double suction, and diffuser pumps. The speed of the variable speed turbine drive is varied and the feedwater flow control valves adjusted to maintain water levels in each steam generator. In general, 2 feedwater pumps are operated at low or intermediate loads. Three (3) feedwater pumps are operated at full load. Feedwater pumps are protected by minimum flow, recirculation lines to the deaerator storage tank.

High pressure feedwater heaters are shell and U-tube type heat exchangers with 2 heating zones: a condensing zone and an integral drain cooling zone. The two 50% capacity feedwater heaters in each string are manually bypassed and isolated as a group to remove the string from service if necessary. Turbine load must be adjusted according to the manufacturer's instructions when a feedwater heater string is isolated.

10.4.7.2.3 Safety Evaluation

1. General

If it becomes necessary to remove a feedwater booster pump or feedwater pump from service due to malfunction or failure or for maintenance, plant loads are reduced in accordance with a predetermined operating scheme. When the normal operating schemes are followed, the Feedwater System provides satisfactory service under plant operating conditions.

Reactor runback is minimized and reactor trip is avoided following loss of any 1 feedwater or feedwater booster pump from the normal operating scheme. It is possible to operate the Feedwater System beyond the normal operating scheme for short periods of time. Following the loss of any 1 operating feedwater booster pump or feedwater pumps, a power reduction may be necessary to prevent reactor trip due to low water level in the steam generators. Reactor trip is prevented when maximum pumping scheme capability satisfies or exceeds feedwater flow requirements at the time a pump is lost from service. The feedwater pumps and drive turbines may be operated at runout capacity temporarily, but extended off-design point operating results in drive turbine efficiency loss. The feedwater booster pumps may be operated up to their horsepower limits for extended periods of time without detrimental effects.

If a feedwater piping break should occur in the Intermediate Building, alarm and control devices act to prevent flooding of safety-related equipment on the floors. Section 7.6 outlines the details of provisions for leak detection. Pipe break is discussed in Sections 3.6 and 15.4.2. As noted in Section 10.4.7.2.1, feedwater piping in the Intermediate Building, excluding branch lines, satisfies the requirements, except for stamping, of the ASME Code, Section III [5], Code Class 2, to provide greater assurance of piping system integrity and to minimize the potential for postulated pipe rupture. 02-01

The feedwater isolation valves are designed to close within 5 seconds after receipt of a closure signal to provide containment isolation in the event of a feedwater line break either inside or outside the Reactor Building. These valves are designed with safety related air accumulators and fail as is upon loss of control air or loss of channel B electric power and to close upon loss of channel A electric power. Valve status is indicated by lights on the main control board and is monitored by the plant computer. The channel B solenoid valves associated with each feedwater isolation valve are of the energize to close type. However, either the channel A or channel B solenoid valve is sufficient to close the feedwater isolation valve. Any of the following signals initiate closure:

a. Feedwater isolation signal (channel A only, see Table 6.2-54 signal D for initiating conditions).

b. High-high Intermediate Building sump level switches energized (see Section 7.6 for initiating conditions, channel A only).

c. Intentionally left blank by RN 00-082 in Amendment 02-01. | 02-01

d. Intentionally left blank by Amendment 96-03. | 00-01

e. Intentionally left blank by RN 00-082 in Amendment 02-01. | 02-01

f. Manual switch train A in the control room.

g. Manual switch train B in the control room.

The recommendations of the NSSS vendor are followed in routing of feedwater piping to minimize flow instabilities in the Feedwater System.

Standard industry safety precautions are observed in the handling of feedwater chemicals.

Table 10.4-6 presents a Feedwater System failure analysis. | 02-01

10.4.7.2.4 Tests and Inspections

1. Operability Test for Containment Isolation Valves

   The containment isolation valves are subjected to periodic operability tests in accordance with the applicable ASME Code, prescribed under 10CFR50.55a. | RN 04-012

   There are 3 containment isolation valves in this system: three (3) on the main feedwater line. These valves are tested for operability by complete closure and opening during plant shutdown.

2. System Tests

   Major equipment is periodically inspected to ensure proper conditions and operation. Additional testing includes:

   a. Hydrostatic testing of safety class system piping and equipment following construction and prior to placing the system in service.

   b. Hot functional testing subsequent to cold hydrostatic testing.

   c. Normal, operational checking, and routine maintenance of the system.

| 02-01

Inservice inspection of safety class portions of the system is performed in accordance with the ASME Code, Section XI[8], requirements.

10.4.7.2.5 Instrumentation Applications

Instrumentation for the Feedwater System is shown schematically by Figures 10.4-10 through 10.4-12. The following instrumentation is supplied for the non-nuclear safety class portion of the system to permit operator evaluation of major equipment performance and to provide a performance record:

1. Pressure indicators, switches, and test connections.

2. Flow indicators, controllers, and test connections.

3. Level switches.

4. Temperature indicators and test connections.

In the nuclear safety class portion of the system, instrumentation to permit monitoring of the temperature of feedwater entering the steam generators is provided. Instrumentation associated with the development of control signals for the containment isolation valves is provided in Section 7.3 and Table 6.2-54.

10.4.8 STEAM GENERATOR BLOWDOWN SYSTEM

10.4.8.1 Design Bases

10.4.8.1.1 General

The Steam Generator Blowdown System continuously purges the steam generators of concentrated impurities, thereby maintaining secondary side steam generator water chemistry. The Nuclear Blowdown Processing System is used to process cooled steam generator blowdown fluid and return decontaminated water to the secondary cycle. The steam generator wet layup system skid provides forced circulation of the steam generator secondary side water inventory during cold shutdown conditions.

Steam generator blowdown fluid can be directed to any 1 of the following:

1. Nuclear Blowdown Processing System.

2. Circulating water discharge.

3. Alum sludge lagoon.

Steam generator blowdown fluid is normally directed to the Nuclear Blowdown Processing System or the circulating water discharge. During plant startup, steam generator blowdown fluid may be directed to the alum sludge lagoon for reduction of suspended solids content prior to discharge. Radiation monitoring controls divert steam generator blowdown fluid to the Nuclear Blowdown Processing System upon detection of radioactivity in the fluid, thus limiting release of radioactivity to the environment.

The ATWS (Anticipated Transient Without Scram) Mitigation System Actuation Circuitry (AMSAC) isolates steam generator blowdown when 2 of 3 steam generators are at low-low level. 98-01

During cold shutdown and refueling, the steam generator wet layup system skid may be attached between the blowdown and Emergency Feedwater Systems. The skid circulates water through the steam generators to provide improved mixing and less severe concentration gradients to mitigate steam generator fouling and corrosion.

10.4.8.1.2 Thermal

Blowdown fluid from each steam generator is directed to a separate heat exchanger for heat recovery. A portion of the condensate flow serves as the cooling fluid in these heat exchangers. The heat exchangers are designed to cool the steam generator blowdown fluid to 120°F.

10.4.8.1.3 Secondary Side Contaminants

Impurities associated with the secondary cycle include:

1. Dissolved amines and an oxygen scavenger, introduced for control of feedwater pH and oxygen.
2. Ammonium chloride for molar ration control if required.
3. Boric acid for mitigation of steam generator tube denting if required. 98-01
4. Impurities associated with condenser leakage.
5. Ingress from the demineralized water system and/or the water treatment plant.

10.4.8.1.4 Primary Side Contaminants

Impurities associated with the Reactor Coolant System may enter the steam generator secondary side should steam generator tube leakage occur. Such impurities include radioactive and nonradioactive particulate and dissolved material.

10.4.8.1.5 Operating Parameters

1. Total Blowdown Flow

   a. Minimum flow - 30 gpm.

   b. Normal flow - as required to maintain secondary side water chemistry.

   c. Design flow - 1.0% of main steam flow (nominally 250 gpm).

   d. Cold shutdown on steam generator wet layup system - 100 gpm (nominal flow). 98-01

2. Water Chemistry of Steam Generator Blowdown Fluid

   Blowdown flow from each steam generator aids in maintaining secondary side water chemistry specifications. The controlling parameters include pH, cation conductivity, sodium, chloride and sulfate. 98-01

3. Steam Generator Tube Leakage

   For purposes of radioactive release determinations, a primary to secondary leakage rate of 100 lb/day and 0.12% failed fuel is used. The leakage rate is derived from NUREG-0017[3].

   For the design of equipment, a primary to secondary leakage rate of 0.1 gpm (1195 lb/day) under standard conditions is assumed. Major contaminants considered include boron and lithium with primary coolant concentrations of 1000 ppm and 2 ppm, respectively.

10.4.8.1.6 Codes and Standards

The Steam Generator Blowdown System is non-nuclear safety class and quality related class, except for that portion inside the Reactor Building and up to the containment isolation valve which is Safety Class 2a, Seismic Category 1. Safety class and quality related class piping is designed in accordance with the ASME Code, Section III [5], Class 2. Non-nuclear safety class piping is designed in accordance with ANSI B31.1[1]. Equipment classification is presented in Table 3.2-1. RN 04-026

10.4.8.2 <u>System Description</u>

The Steam Generator Blowdown System is illustrated by Figure 10.4-13. Individually regulated blowdown from each steam generator is cooled and reduced in pressure prior to combination with other blowdown streams. The total blowdown is then processed through the Nuclear Blowdown Processing System or is routed into the circulating water discharge and thence to Monticello Reservoir.

The Nuclear Blowdown Processing System is illustrated by Figures 10.4-14 and 10.4-15. Should blowdown activity exceed preset levels, the blowdown flow is automatically diverted to the nuclear blowdown holdup tank. One (1) of 2 nuclear blowdown holdup tank pumps then takes suction from the holdup tank and delivers the fluid through a filter, 2 demineralizers in series, and a post filter from which it returns to the secondary cycle through the main condenser (an alternate path being to the penstocks of the Fairfield Pumped Storage Facility [see Figure 10.4-17] during operation of that facility in the generation mode).

The Nuclear Blowdown Processing System includes a sluicing pump and spent resin storage tank for transfer and storage of exhausted demineralizer resin. Processing of solid waste is accomplished by the Solid Waste Disposal System (see Section 11.5).

10.4.8.2.1 Component Description

The general arrangement of system equipment is shown by Figures 1.2-5 and 1.2-6. Design parameters for major components are presented in Table 10.4-7. Major components of the Steam Generator Blowdown System include:

1. Radiation Monitors

   Radiation monitoring equipment is located to sample continuously the total Steam Generator Blowdown and Nuclear Blowdown Processing System demineralizer effluent. Section 11.4 describes radiation monitoring equipment in detail.

2. Steam Generator Blowdown System Heat Exchangers

   Each of the 3 Steam Generator Blowdown System heat exchangers consist of 2 shell and tube vessels in series, designed to cool the steam generator blowdown fluid with condensate.

3. Nuclear Blowdown Holdup Tank

   The nuclear blowdown holdup tank retains potentially radioactive steam generator blowdown fluid for processing. 99-01

4. Nuclear Blowdown Monitor Tank

   The nuclear blowdown monitor tank is similar in design to the nuclear blowdown holdup tank. This tank provides additional holdup capacity, if required, as well as the capability for periodic effluent sampling.

5. Nuclear Blowdown Holdup Tank Pumps

   Two (2) 100% capacity, centrifugal, nuclear blowdown holdup tank pumps are provided. These pumps take suction from the nuclear blowdown holdup tank and discharge through the filter, demineralizers, and post filter.

6. Nuclear Blowdown Monitor Tank Pump

   A single, canned motor pump is provided. This pump takes suction from the nuclear blowdown monitor tank and discharges to the nuclear blowdown holdup tank or recirculates the monitor tank contents through the post filter.

7. Nuclear Blowdown Demineralizer Inlet Filter

   This inlet filter removes particulate matter from the holdup tank fluid upstream of the demineralizers, thus protecting against resin fouling and premature capacity loss. The filter is a disposable cartridge type. Pressure drop indication and an alarm are provided to alert the operator that filter media replacement is required. Since the filter is potentially radioactive, shielding is provided for personnel protection. Radiological controls to reduce personnel exposure are implemented during spent filter cartridge removal and transportation to the drumming station.

8. Nuclear Blowdown Demineralizer Discharge Filter

   This post filter traps and retains degraded or crushed resin particles which may pass through the demineralizers during normal operation. Design of this filter and radiation protection considerations are similar to those for the nuclear blowdown inlet filter.

9. Nuclear Blowdown Sluice Filter

   The sluice filter is located on the discharge side of the resin sluice pump. Its function is similar to that described for the nuclear blowdown demineralizer discharge filter.

10. Nuclear Blowdown Demineralizers

    Four (4) ion exchange vessels, arranged for 2 step demineralization with 100% standby capacity, are provided. This arrangement assures the capability for continuous removal of radionuclides as well as high effluent purity. Operation of each demineralizer is on a nonregenerable basis. Resin is removed and replaced as dictated by chemical analysis or radioactivity measurements.

11. Nuclear Blowdown Spent Resin Storage Tank

    The nuclear blowdown spent resin storage tank is provided to permit recycling of resin sluice water, storage of spent demineralizer resin, and transfer of spent resin to the drumming station.

12. Nuclear Blowdown Resin Sluice Pump

    The nuclear blowdown resin sluice pump is used to loosen resin in and transfer resin from nuclear blowdown demineralizers.

13. Steam Generator Wet Layup System Skid

The Steam Generator Wet Layup System Skid consists of a pump, two 100% filters in parallel, valves, connectors, flexible hoses, and a skid-mounted motor control center. When used, during cold shutdown conditions, the pump suction is connected by flexible hose to the blowdown system and the discharge is similarly connected to the Emergency Feedwater System.

10.4.8.2.2 System Operation

System operations are divided into three categories, as follows:

1. Normal Operation

During normal plant operation, steam generator blowdown is continuous to maintain secondary side steam generator water chemistry within the limits recommended by the Nuclear Steam Supply System (NSSS) vendor. Blowdown is normally directed to the Nuclear Blowdown Processing System or to the circulating water discharge after passing through the steam generator blowdown heat exchangers.

The combined blowdown from the 3 steam generators is continuously sampled and analyzed for radioactivity. Should the activity level reach a pre-established setpoint, the discharge paths are automatically isolated and the total blowdown flow is automatically diverted to the nuclear blowdown holdup tank.

Low specific activity effluent resulting predominately from continuous steam generator blowdown sampling may be processed from the nuclear blowdown holdup tank to the main condenser or Turbine Building sump. When high radiation setpoint is reached for RM-L3 or RM-L10 and steam generator blowdown has been diverted to the holdup tank, the process pathway to the Turbine Building sump is terminated. The contents of the nuclear blowdown holdup tank are periodically analyzed for radioactivity and chemical contamination.

2. Special or Infrequent Operation

As discussed in 1, above, blowdown radioactivity levels in excess of a pre-established setpoint (as sensed by RM-L3 and RM-L10) result in automatic diversion of blowdown flow to the nuclear blowdown holdup tank. Under such conditions, samples from each steam generator blowdown stream are analyzed to determine the source of the radioactivity. Once the source has been determined, the blowdown from the affected steam generator may be processed separately while blowdown from the remaining steam generators may continue to be discharged. If the faulty steam generator cannot be satisfactorily isolated, total blowdown flow continues to be directed to the nuclear blowdown holdup tank.

A nuclear blowdown holdup tank pump starts at a preset holdup tank level to deliver tank contents to the inlet filter, demineralizers, post filter and thence to the main condenser. Detection of abnormally high activity by RM-L7 downstream of the post filter results in automatic termination of flow to the condenser or through the alternate path to the penstocks of the Fairfield Pump Storage Facility. This flow is then directed to the nuclear blowdown monitor tank.

3. Startup

During plant startup and subsequent restarts, steam generator blowdown, up to the design flow rate, is used for removal of accumulated deposits from the steam generators and to bring steam generator water chemistry within recommended limits. The cooled steam generator blowdown fluid may be discharged through the circulating water discharge to Monticello Reservoir.

During these operations, however, the steam generator blowdown fluid may contain high concentrations of corrosion products in the form of iron oxides. Should the concentrations of these impurities exceed acceptable limits, the blowdown fluid is routed to the alum sludge lagoon through the clarifier blowdown sump for reduction of suspended solids content prior to discharge.

4. Cold Shutdown and Refueling

During cold shutdown and refueling the steam generator wet layup system skid may be attached, by flexible hoses, between the blowdown system and the Emergency Feedwater System. The skid takes suction from blowdown and returns water to the steam generators via the turbine-driven emergency feedwater pump header.

The Steam Generator Wet Layup System may be used only during modes 5 and 6. It must be isolated and disconnected before entering mode 4.

The blowdown and Emergency Feedwater System valves may be used to direct wet layup recirculation to any of the three steam generators, allowing one or more to be maintained in layup with one or more others open for maintenance.

Operation of the steam generator wet layup skid equipment is local and manual.

10.4.8.2.3 Radiological Considerations

Annual release quantities and expected doses to individuals at or beyond the site boundary are discussed in Section 11.2. Since heat exchangers are installed in the system to provide for cooling the blowdown fluid and to prevent flashing, negligible gaseous release is expected to result from this system. Process and effluent monitoring and sampling are discussed in Section 11.4. 99-01

10.4.8.3 Safety Evaluation

Steam generator blowdown flow is automatically terminated under the following conditions:

1. Receipt of a containment isolation signal.

2. Activation of the Emergency Feedwater System.

For 1, above, a containment isolation signal (S signal) is received which closes the steam generator blowdown containment isolation valves. For 2, above, a signal indicating emergency feedwater pump start is received resulting in closure of the steam generator blowdown containment isolation valves. The closure of valves resulting from 2, above, may be manually overridden, provided that plant and personnel safety requirements have been satisfied.

The Steam Generator Blowdown System is non-nuclear safety class and quality related class, except for that portion of the system inside the Reactor Building and up to the containment isolation valve, and is not required to function under accident conditions. RN 04-026 Termination of steam generator blowdown may be accomplished manually. If the Nuclear Blowdown Processing System is operating at the time steam generator blowdown is terminated, the nuclear blowdown holdup tank level controller stops the pump when holdup tank level reaches the low level setpoint. Thus, the system is isolated. RN 01-082

Section 10.3.5 provides more detail concerning secondary side water chemistry.

Safety considerations directly associated with the steam generators are discussed in Section 5.5.2.

Since radioactive materials are concentrated in filters and demineralizers, radiation shielding is provided to protect personnel from these potential hazards.

10.4.8.4 Tests and Inspections

Steam generator tests and inspections are discussed in Section 5.5.2. No special maintenance is required for Steam Generator Blowdown System components. Equipment and piping is periodically subjected to visual examination for evidence of leakage, corrosion, proper support bolting, wear points, and electrical arcing or burning. Active components, including manual valves and controls are operated periodically to ensure availability when required.

10.4.8.5 Instrumentation Applications

The following instrumentation is shown schematically on Figures 10.4-13 through 10.4-15 and is provided to permit the operator to evaluate major equipment performance and to provide a performance record:

1. Pressure indicators, transmitters, and switches.

2. Flow indicators, controllers, recorders, switches, and transmitters.

3. Level indicators, transmitters, controllers, and switches.

4. Temperature indicators, controllers, and switches.

5. Conductivity analyzers, indicators, and switches.

6. Analyzers, indicators, and switches for pH.

7. Engineered safety features monitor lights, located on the main control board, for the containment isolation valves (see Section 7.5 for detailed description).

8. Radiation monitors.

10.4.8.5.1 Temperature Control

Steam generator blowdown temperature reduction is controlled by regulating the cooling water flow through the heat exchangers. The blowdown temperature is controlled below saturation to preclude flashing.

Temperature protection is provided for the demineralizers by a temperature switch located on the discharge header of the blowdown holdup tank transfer pumps. At high temperature, an alarm is actuated and the demineralizer inlet valves are automatically closed.

Additional temperature switches actuate alarms upon detection of high blowdown heat exchanger effluent temperature.

10.4.8.5.2 Flow Control

The hydraulic design of the blowdown piping provides for minimal pressure drop up to the blowdown control valves, downstream of the respective heat exchangers. Each blowdown control valve is designed to regulate blowdown flow and thus maintains a relatively constant downstream pressure of approximately 40 psig.

Flow indicating transmitters provide electronic inputs for high and low blowdown flow and blowdown flow control valve closure upon detection of high flow and to a controller to regulate blowdown pressure control valves: Electronic hand controllers are provided to permit adjustment of individual blowdown flows through the respective flow control valves.

10.4.8.5.3 Level Control

The blowdown holdup tank level transmitter provides an electronic input for high and low level alarms, dual level pump actuation and low level pump trip. RN 01-082

The monitor tank level transmitter provides an electronic input for high and low level alarms, low level pump trip, and low level closure of the tank discharge valve.

The spent resin storage tank level transmitter provides an electronic input for high and low level alarms and low level pump trip.

10.4.9 EMERGENCY FEEDWATER SYSTEM

10.4.9.1 Design Bases

The Emergency Feedwater System is required to deliver sufficient feedwater to the steam generators for cooldown upon loss of the normal feedwater supply and during a ATWS (Anticipated Transient Without Scram) event. The Emergency Feedwater System is used, additionally, to supply feedwater to the steam generators during startup, shutdown, and layup operations. Emergency feedwater pump starting is automatic. The Emergency Feedwater System operates in conjunction with the Turbine Bypass System, if available, or the main steam power relief valves and safety valves, to remove thermal energy from the steam generators. 98-01

The system is designed to automatically deliver feedwater, at a minimum total flow of 380 gpm, to at least 2 steam generators pressurized to 1211 psig. There is sufficient redundancy to establish this flow while sustaining a single active failure in the system in the short term or a single active or passive failure in the long term. The Emergency Feedwater System operates until the Residual Heat Removal (RHR) System can be placed in operation. The RHR system is started when reactor coolant pressure and temperature are approximately 400 psig and less than 350°F, respectively. Corresponding steam generator shell side pressure is approximately 125 psia. This pressure and temperature condition represents the lower limit of Emergency Feedwater System functional requirements as long as the reactor coolant pumps are operating. 99-01

When forced circulation from the reactor coolant pumps is not available, Emergency Feedwater System operation is required down to a main steam pressure of 100 psia. This corresponds to a reactor coolant cold leg temperature of 325°F and a hot leg temperature of 350°F. The primary coolant temperature differential is required in order to maintain a density gradient to drive natural circulation of primary coolant, in the absence of reactor coolant pump operation.

Sufficient feedwater is available under emergency conditions to bring the plant to a safe shutdown condition. Assuming prior plant operation at engineered safety design rating (ESDR) of 2900 MWt in the core, the minimum required usable volume for the condensate storage tank is 158,570 gallons based on maintaining the plant at hot standby conditions for 11 hours. This volume also satisfies the minimum required volume to cool down the plant to hot shutdown conditions assuming the plant is maintained at hot standby for 2 hours and then cooled down to hot shutdown in 4 hours.

The condensate storage tank is a Safety Class 2b tank. The Service Water System provides an additional safety class backup source of emergency feedwater. Both service water loops can supply the Emergency Feedwater System if required.

System components are classified Safety Class 2a or 2b, except as noted on the system diagram, Figure 10.4-16. Pressure retaining components are designed, fabricated, tested and inspected in accordance with the ASME Code, Section III [5], Classes 2 and 3 as applicable. Normal operating and design conditions are tabulated on Figure 10.4-16. Design upset condition is considered to be the shutoff head of the pumps and is expected to occur less than 1% of the time. 02-01

Any two emergency feedwater pumps operating together are designed to deliver a total of 380 gpm of feedwater distributed between 2 steam intact generators at pressures of 1211 psig, while also feeding the faulted steam generator which has flow passively limited by the cavitating venturi in the faulted loop. Any one emergency feedwater pump is designed to deliver 400 gpm total to all three steam generators at a pressure of 1211 psig during the non-faulted event. Pump suction is from the Safety Class 2b condensate storage tank, or, if this source is not available, from the Service Water System. Although the condensate storage tank is used for normal plant makeup, a reserve is maintained for emergency feedwater purposes. (See Section 9.2.6.1). RN 12-030 99-01

This reserve is 160,054 gallons, based on the physical configuration of the tank from the bottom of the condensate to condenser nozzle to the top of the emergency feedwater suction nozzle. The actual usable amount of this reserve, however, is dependent on the instrument setpoints of the automatic switchover controls to the backup Service Water supply. 99-01

The design, with automatic switchover to Service Water occurring prior to full utilization of the dedicated inventory, satisfies safe shutdown requirements. It is considered that full utilization of the dedicated inventory of condensate quality water is highly desirable from a commercial risk viewpoint, but is not absolutely required for safe shutdown as long as a redundant safety class alternate source is available.

The Emergency Feedwater System is required for plant startup. Fill and maintenance of steam generator water level is accomplished by manual control of feedwater flow rates from the Control Room. The flow rate to each steam generator is individually adjusted as required in response to the Control Room steam generator water level indication. After normal steam generator water level is reached, flow rates are adjusted as required. A sampling connection is supplied on the electric motor driven emergency feedwater pump recirculation lines for oxygen level tests.

After reactor criticality is achieved, a limited amount of steam may be withdrawn from the steam generators for steam line warmup and other startup steam uses. The amount of steam that may be withdrawn is limited to the ability of the emergency feedwater pumps to maintain steam generator water level. Electric motor driven emergency feedwater pump head/flow characteristics result in flow rates of up to approximately 255 gpm per steam generator at hot standby conditions. Based on a nominal steam generator blowdown rate of 50 gpm per steam generator, (equivalent cold volume) approximately 307,488 lb/hr of steam may be withdrawn from the steam generators with 2 motor driven pumps operating. This corresponds to a nominal 3% plant load condition. The Main Feedwater System must be operated at loads which exceed the capacity of the Emergency Feedwater System. RN 12-030 RN 12-030

If a loss of steam generator water level incident occurs during startup, after the reactor becomes critical, Emergency Feedwater System controls operate automatically. This action enhances proper system operation for plant shutdown.

Seismic and quality group classifications for components in this system are discussed in detail in Section 3.2. Environmental conditions are discussed in Section 3.11.

10.4.9.2 System Description

The Emergency Feedwater System includes 2 electric motor driven emergency feedwater pumps, 1 turbine driven emergency feedwater pump, the condensate storage tank, necessary piping, valves, instrumentation, and controls. The Emergency Feedwater System is essential to safety. The system is designed such that no single failure prevents delivery of the minimum feedwater flow to at least 2 steam generators while passively limiting flow to a postulated secondary side line break by virtue of cavitating venturis installed in the piping to each of the three steam generators (one cavitating venturi per steam generator). Pump and turbine bearings are cooled by the pumped emergency feedwater, thereby making pump operation independent of plant cooling systems. The quick start, steam turbine driven emergency feedwater pump is supplied with steam from the Main Steam System and is designed to operate without air or electrical power. Both motor driven emergency feedwater pumps are provided with a mechanical-type, automatic recirculation control valves (ARC), which provides for pump protection for low flows and maximizes flow to the steam generators by automatically closing the recirculation line once the pumps' minimum flow requirement is met. Conversely, the turbine driven pump utilizes a fixed-restriction minimum-flow system, which provides for continuous recirculation and overall system diversity; this fixed RN 12-030 RN 12-030

recirculation flow design feature is made possible due to the performance margins inherent in the turbine driven pump.

Each pump motor is supplied from a separate, independent Class 1E electric system bus. Complete physical separation is followed throughout for control and instrumentation systems. The required instrumentation and control are powered from separate and independent vital buses.

The steam supply to the turbine driven emergency feedwater pump consists of connections to the safety class sections of 2 main steam lines upstream of the main steam isolation valves. Two (2) connections are provided to obtain redundancy of supply in the event of a main steam line break. Each connection is provided with a remote manual motor operated gate valve and a check valve for positive isolation in the event of a main steam break. In the common line to the pump turbine, a normally closed, fail open steam inlet valve is provided. This valve has slow opening characteristics to minimize shock to the turbine during automatic startup. This line then connects to a turbine trip and throttle valve which is part of the turbine package. The turbine discharge steam exhausts to atmosphere through a roof vent. Vent piping is safety-related since, if it were blocked, pump turbine operation would be affected.

The emergency feedwater pumps take suction from the condensate storage tank. There is an outlet valve and an outlet bypass valve in parallel at the EFW suction outlet in the tank. These valves are 10 inch manual valves feeding the 10 inch header and are locked open to prevent undesired isolation of the EFW system from its primary supply of water. Each pump draws from a common header through a locked open isolation valve and a check valve. The redundant backup source of supply is the Service Water System. The A service water loop can supply the A electric motor drive emergency feedwater pump and the turbine driven emergency feedwater pump. The B service water loop can also supply the turbine drive emergency feedwater pump and the B electric motor driven emergency feedwater pump. Suction lines to each pump from each service water loop have normally closed remote manual, motor operated isolation valves. These valves are automatically opened on low pressure in the emergency feedwater pump suction header from the condensate storage tank. The plant can operate indefinitely, if required, without normal feedwater. The Emergency Feedwater System can take suction from the Service Water System for an indefinite period of time. 99-01

There are 2 emergency feedwater headers supplying each steam generator, 1 header from the electric motor driven emergency feedwater pumps and one header from the turbine driven emergency feedwater pump. These headers join downstream of the flow control valves into one line for each steam generator. Each of the three parallel lines proceed through, a flow-limiting cavitating venturi, a containment isolation valve and a containment penetration to its respective steam generator. The containment isolation valve for each line is an air-piston assisted, hinged check valve that allows forward passage of emergency feedwater flow but closes to prevent reverse flow. RN 12-030

Each emergency feedwater pump discharge is provided with a check valve and locally operated isolation valve. These valves prevent backflow through an emergency

feedwater pump and permit maintenance of a pump and/or check valve. Two (2) sets of normally open isolation valves and normally open, pneumatically operated, flow control valves, designed to fail open upon loss of control signal or air, are provided on each line to each steam generator. One (1) set control flow from the electric motor driven emergency feedwater pumps; the other, flow from the turbine driven emergency feedwater pump. Remote manual control of the flow control valves from the control room and CREP is provided, as well as provision for local manual operation. Safety class air accumulators are provided for the pneumatically operated valves. These accumulators have sufficient capacity to permit remote valve closure for isolation of a secondary system break. The air operated nonreturn valve functions as a containment isolation valve to prevent back flow in the event of a pipe break on the pump side of the valve.

A connection is provided for steam generator wet layup during cold shutdown conditions, using the steam generator wet layup skid of the blowdown system. (Section 10.4.8)

The EF system also has an automatic detection and isolation system in the event of an EF system pipe break between the automatic isolation valves and the cativating venturis. RN 12-030

10.4.9.3 Safety Evaluation

Normal Emergency Feedwater System conditions encompass the automatic, startup, operating, shutdown and testing modes. During the automatic mode, the system is aligned and set for automatic startup upon receipt of a signal. During the other modes 1 or 2 emergency feedwater pumps may be operating.

During normal plant operation the Emergency Feedwater System is idle. Controls for the system are set for automatic operation to allow for quick system start if necessary. The electric motor driven emergency feedwater pumps start automatically upon receipt of any of the following signals:

1. Two (2) out of 3 low-low steam generator level signals from any 1 of the 3 steam generators.

2. Trip of all 3 main feedwater pumps.

3. Engineered safety features loading sequence (under voltage on 1E bus and/or safety injection signal).

4. The ATWS (Anticipated Transient Without Scram) Mitigation System Actuation Circuitry (AMSAC) starts the motor driven pumps on low-low level in 2 out of 3 steam generators. 98-01

The turbine driven emergency feedwater pump starts automatically upon receipt of any of the following signals:

1. Two (2) out of 3 low-low steam generator level signals from any 2 steam generators.

2. Under voltage on diesel buses.

3. The ATWS (Anticipated Transient Without Scram) Mitigation System Actuation Circuitry (AMSAC) starts the turbine driven pump on low-low level in 2 out of 3 steam generators. 98-01

The turbine driven emergency feedwater pump and the parts of the system necessary for its operation are designed to operate under loss of electrical power and loss of compressed air conditions. Flow control valves fail in the open position and are normally open. Root valves in the main steam branch lines to the emergency feedwater pump drive turbine are left open during normal plant operations. When either root valve is closed, it is annunciated in the control room.

The essential controls, valve operators, and other supporting systems associated with the turbine driven emergency feedwater pump are independent from a-c power. The lube oil cooler receives cooling water from the pump discharge.

Subsequent to a start signal, the Emergency Feedwater System, automatically delivers no less than a total flow of 380 gpm to both intact steam generators assuming a secondary line break. For non-faulted conditions no less than a total of 400 gpm to all three steam generators can be supplied. In the event that a secondary break results in a depressurized steam generator, the Emergency Feedwater System automatically (passively) limits the flow to the affected steam generator via cavitating venturis, thus resulting in more flow to the intact steam generators and less to the faulted steam generator. Also, since flow is immediately limited to the faulted steam generator, less mass and energy will be produced by the faulted steam generator before operator action is required to manually isolate the faulted steam generator. Thus, the cavitating venturis ensure sufficient flow is directed to the intact steam generators and limits flow to the faulted steam generator to ensure the design pressure of containment is not exceeded. Following an automatic startup signal, the operator adjusts flow rates to maintain steam generator water level while the plant is shut down or held at the hot standby condition. RN 12-030 RN 96-67

The following operator actions are required to limit generation of mass and energy from the faulted steam generator following a secondary side break:

After 10 minutes:

1. Determine which steam generator is faulted.

2. Manually terminate emergency feedwater flow on the line associated with the break from the control room if possible by closing both parallel flow-control valves leading to the faulted steam generator.

3. Adjust flow rates to maintain intact steam generator water levels.

4. Monitor condensate storage tank water level and provide makeup, if available, or shift alignment to the service water supply before the condensate storage tank inventory is expended.

Within the next 20 minutes:

1. Close any flow control valve supplying a faulted steam generator if it failed to close after the first 10 minutes, from the control room or locally. RN 96-67

2. Close at least one additional isolation valve in series with each of the two, closed, parallel flow-control valves leading to the faulted steam generator to reduce the possibility of emergency feedwater leak-by. RN 12-030

During the 30 minute period, flow to the affected steam generator is limited by the cavitating venturi, if one or both isolation valves failed to close from the control room.

It is important to note that to ensure acceptable results from the feedwater line break event (FSAR Section 15.4.2.2), the manual actions described above are not required; the above described actions are only concerned with containment pressure-and-temperature analysis and for determination of environmental conditions due to steam line breaks outside of containment. RN 12-030

The operator in the Control Room is provided with position indication for the six emergency feedwater isolation valves. In addition, isolation valve status is included in the ESF monitoring equipment on the main control board. RN 12-030

A summary failure analysis of the Emergency Feedwater System is presented by Table 10.4-8 for a secondary pipe break with a simultaneous loss of non-class 1E electrical power. A more detailed failure analysis, covering deterministic and probabilistic considerations, is documented in design calculations maintained by the PRA group. 98-053 RN 12-030

02-01

Failure to automatically isolate emergency feedwater to the affected SG is an important consideration within two secondary pipe break analyses. For secondary side pipe breaks inside containment (FSAR Section 6.2), operator action at 30 minutes is credited to isolate emergency feedwater to the affected SG. Local or remote operator action within 30 minutes is required to prevent overpressurizing the containment. Secondly, for secondary side pipe breaks outside containment (FSAR Section 3.11.2.2.2.2), credit is taken for operator action at 10 minutes to isolate emergency feedwater to the affected SG. Since the harsh environment will limit local manual actions, operator action from the control room is required for secondary pipe breaks outside containment to preserve environment conditions for equipment qualification. RN 98-053

Operator action is required within 24 hours after the secondary side line break to visually inspect Emergency Feedwater System piping for passive failure. 02-01

If a pipe break should occur in the Intermediate Building, alarm and control devices act to prevent flooding at safety-related equipment on the floors. Section 7.6.5.1.2 outlines the details of the provisions for leak detection.

The Emergency Feedwater System is used to bring the plant to a sufficiently cold condition to permit Residual Heat Removal (RHR) System operation. The plant can operate indefinitely, if required, without normal feedwater. The Emergency Feedwater System can take suction from the Service Water System for an indefinite period.

Table 10.4-8 presents an Emergency Feedwater System failure analysis which addresses the consequences of various single active failures within the system in conjunction with a secondary side pipe break and a simultaneous loss of non-Class 1E electrical power. These conditions are considered to establish the limiting conditions for Emergency Feedwater System design. In addition, the emergency feedwater piping has been laid out to minimize water hammer occurrences induced by the piping system. RN 98-053

10.4.9.4 Inspection and Testing Requirements

Inservice functional testing is performed by manual startup of the emergency feedwater pumps. Pumps and valves may be tested while the plant is in operation.

The actuation circuitry of the service water-to-emergency feedwater cross connect valves is periodically tested during normal power operations. Stroke testing of these motor-operated valves is performed during cold shutdown to preclude contamination of the steam generators. RN 11-022

To avoid injection of cold water into the steam generators during normal plant operation, the flow control valves associated with the pump under test (motor driven or turbine driven) are closed during the test.

Periodic system and component checks and inspections are performed as specified by the applicable ASME Code, prescribed under 10CFR50.55a. RN 04-012

10.4.9.5 Instrumentation Requirements

Emergency Feedwater System instrumentation provides the necessary inputs for control, operation, and performance/status monitoring of the system.

Those devices (indicators, switches, alarms, computer monitoring, etc.) available to the operator in the Control Room are shown schematically on Figure 10.4-16. In addition, indicators and/or controls are also located on the control room evacuation panel, local panels, and near the components.

10.4.9.5.1 Pressure Measurement

1. Pressure Transmitters

   Pressure transmitters are provided in the common feed line to each steam generator for control room indication.

   In addition to the above pressure transmitters, 4 pressure transmitters are provided in the emergency feedwater pump suction header from the condensate storage

tank. The output from these transmitters is arranged in a 2 out of 4 logic to automatically open the cross connect valves to the Service Water System (XVG-1037A-EF, XVG-1037B-EF, XVG-1001A-EF, XVG-1001B-EF, XVG-1002-EF, XVG-1008-EF) on low emergency feedwater pump suction header pressure.

2. Pressure Switches

   Pressure switches located in the suction line to each pump provide contacts for a low pressure alarm.

3. Pressure Indicators

   Pressure indicators are provided to monitor the availability of a water supply for each pump and to meet the inservice testing requirements for the pumps.

10.4.9.5.2 Level Measurement

Level Transmitters

Redundant level transmitters located on the condensate storage tank provide signals for low level alarms, computer inputs, and Control Room indicators (for post accident monitoring). In addition, the transmitters provide nonredundant signals for level indication at the panel supplied with the cycle makeup treatment plant and the control room evacuation panel.

10.4.9.5.3 Flow Measurement

Flow transmitters provide signals for alarms and redundant safety grade flow indication in the Control Room. Flow transmitters also provide signals for computer input, and for interlocks which automatically close the emergency feedwater flow control valves in case of a break in the emergency feedwater system between the flow control valves and the cavitating venturis. The emergency feedwater control valves are manually controlled from the Control Room or the control room evacuation panel for startup, shutdown and testing modes. Whenever an emergency feedwater control valve is in manual control and receives a signal indicative of an accident condition, the valve is automatically tripped open. During normal power operation, the emergency feedwater control valves are in the open position ready for automatic start of the emergency feedwater pumps. The control valves will remain open until throttled or closed by the operator or automatically closed by a high flow signal indicative of a break in the emergency feedwater system between the flow control valves and the cavitating venturis. Closure of the 2 emergency feedwater control valves terminates emergency feedwater flow only into the faulted steam generator loop. Due to the passive flow limitation of the cavitating venturis, the emergency feedwater control valves will not automatically close due to a faulted steam generator and will rely on operator action to isolate the faulted loop within 10 minutes.

RN 12-030

RN 12-030

For each emergency feedwater control valve (FV-3531, FV-3541, FV-3551, FV-3536, FV-3546, FV-3556), position indicating design provisions include the following:

1. Visual indication in the main control room by means of an ESF monitor light that will be "bright" when the valve is not open. Section 7.5.4 provides a more detailed explanation of the operation of the ESF monitor lights. An alarm will be annunciated via a common monitor light alarm if an emergency feedwater control valve is not open. This grouping highlights a valve not properly lined up. This light is energized from an ESF monitor light supply different from the valve control power and actuated by a valve limit switch. In addition to this visual position information, there are also red (open) and green (closed) position indicating lights at the control switch for each valve. These lights are actuated by valve limit switches and are powered by valve control power.

2. Audible and visual alarm annunciator points will be activated whenever an emergency feedwater control valve control switch is not in the auto position. The alarm activated by the control switch will be recycled by a timer at approximately 60 minute intervals to remind the operator of the improper valve line up. Both the alarm reflash annunciator point and the timer will be energized separately from the valve control power.

10.4.9.5.4 Speed Measurement

A speed transducer, supplied with the turbine driven emergency feedwater pump turbine, provides signals for Control Room indication.

10.4.9.5.5 Special Instrumentation

The main control board ESF monitor lights (see Section 7.5 for a more detailed explanation) provide an easily recognizable indication of the status of essential components and equipment. Included among the monitor lights for this system are status (position) indication of the flow control valves, the motor driven pumps, and the valve that admits steam to the turbine driven emergency feedwater pump.

An alarm is actuated if either control switch for the valve that admits steam to the turbine driven emergency feedwater pump is in the close position. The alarms ensure proper control switch alignment for normal operations. Switch covers are provided for these switches to prevent inadvertent operator action. 99-01

The emergency feedwater flow to each steam generator and condensate storage tank level are part of the post accident monitoring instrumentation (see Section 7.5 for a more detailed explanation).

10.4.9.5.6 Qualifications

Sections 3.10, 3.11, and 7.1 outline the qualifications and diversity of the instrumentation utilized in this system.

10.4.10 TURBINE BUILDING CLOSED CYCLE COOLING WATER SYSTEM

The Turbine Building Closed Cycle Cooling Water System provides cooling water to components associated with the steam and power conversion system. The energy is dissipated to the atmosphere by a wet surface industrial cooling water.

10.4.10.1 Design Basis

The Turbine Building Closed Cycle Cooling Water System supplies non-nuclear safety class cooling water to the following components:

1. Turbine oil coolers
2. Hydrogen coolers
3. Exciter air cooler
4. Stator coolers
5. Main condenser vacuum pump coolers
6. Auxiliary condenser vacuum pump coolers
7. Instrument/service air compressors
8. Non-nuclear sample coolers
9. Non-nuclear sample chiller
10. Feedwater pump and turbine oil coolers
11. Feedwater booster pump mechanical seals and oil coolers
12. EHC oil coolers
13. Isophase bus duct coolers 02-01
14. Condensate pump seal coolers
15. Condensate demineralizer system air compressor RN 10-018

Major design parameters for the cooling water system pumps and the cooling tower are presented in Table 10.4-9.

System piping and valves are designed in accordance with the applicable ANSI industry standards B31.1 [1] and B16.5 [2] respectively. Hydrogen coolers, stator coolers, exciter air cooler, and turbine oil coolers are designed in accordance with the ASME Code, Section VIII [6], Division 1. Pumps are designed in accordance with Hydraulic Institute Standards.[9] The system is sized to ensure adequate heat removal based on 95° F nominal cooling tower water outlet temperature. 02-01

10.4.10.2 System Description

The Turbine Building Closed Cycle Cooling Water System components include a wet surface industrial cooling tower, two 100% capacity tower spray pumps, 4 cooling tower fans, two 100% capacity closed cycle cooling pumps, two 100% capacity closed cycle cooling booster pumps, various equipment coolers, and a head tank. Chemical injection and blowdown are provided to maintain the quality of the spray water. RN 10-018

Under normal operation, 1 of the 2 cooling water pumps circulates treated water through the cooling tower coils transferring the heat removed from the various components to the spray water and then to the atmosphere by evaporation of the spray water in the air stream produced by cooling tower fans. The dispersant and anti-fouling chemicals added to the cooling tower raw water are sufficiently diluted to ensure negligible effect on the environment. Cooling tower effluents, including salt drift and chemical discharges, will have negligible effect on plant structures and systems.

In the event of loss of the operating closed cycle pump while a-c power is available, the non-operating closed cycle pump starts automatically on detection of a pressure drop in the pump header. RN 10-018

The head tank located at the highest point in the system provides makeup and storage for thermal volume changes.

10.4.10.3 Safety Evaluation

The Turbine Building Closed Cycle Cooling Water System is independent of the plant emergency cooling facilities. This system is not required for reactor protection nor for safe shutdown of the nuclear portion of the plant and is therefore classified as non-nuclear safety class, non-Seismic Category 1. Failure or malfunction of any system component will not affect the ability of the plant to achieve or maintain shutdown conditions.

A postulated failure in the Turbine Building Closed Cycle Cooling Water System inside the Turbine Building is bounded by the postulated failure of an expansion joint in the Circulating Water System piping as discussed in Section 10.4.5.3. Failure of the Turbine Building Closed Cycle Cooling Water System, having a limited volume of water which could be released into the turbine building, results in a lower flood level than the postulated event where circulating water is released through an expansion joint failure until the pump isolation valve closed.

The case of postulated missiles resulting from a broken cooling tower fiberglass fan blade is enveloped by the tornado missile spectrum applicable to the design of Seismic Category 1 structures.

10.4.10.4 Tests and Inspection

Testing of the Turbine Building Closed Cycle Cooling Water System is limited to that normally provided for non-safety related systems and includes:

1. Hot functional testing.

2. Normal, operational checking and routine maintenance of the system.

10.4.10.5 Instrumentation

System instrumentation to permit operator evaluation of equipment performance and to provide a performance record includes:

1. Pressure indicators, switches and test connections.

2. Flow indicators.

3. Level switches.

4. Temperature indicators and test connections.

5. Distributed Control System (DCS) for controlling and monitoring including operator interface.

10.4.11 REFERENCES

1. American National Standards Institute, "Power Piping," ANSI B31.1, 1967, Addenda through 1972.

2. American National Standards Institute, "Steel Pipe Flanges, flanged Valves and Fittings," ANSI B16.5, 1968.

3. U. S. Nuclear Regulatory Commission, "Calculation of Releases of Radioactive Materials in Gaseous and Liquid Effluents from Pressurized Water Reactors," NUREG-0017, April, 1976.

4. Heat Exchange Institute, "Standards for Steam Surface Condensers," Sixth Edition, 1970.

5. ASME Boiler and Pressure Vessel Code, Section III.

6. ASME Boiler and Pressure Vessel Code, Section VIII, Division 1.

7. Heat Exchange Institute, "Standard for Closed Feedwater Heaters," Second Edition, 1974.

8. ASME Boiler and Pressure Vessel Code, Section XI. 02-01

9. Hydraulic Institute Standards, for Centrifugal, Rotary, and Reciprocating Pumps.

10. IEEE - Standard 382-1972, "Type Test of Class 1 Electric Valve Operators."

11. Regulatory Guide 1.48, Rev. 0, "Design Limits and Leading Combinations for Seismic Category 1 Fluid System Components."

12. GAI Report No. 2203, "Emergency Feedwater System Reliability Assessment."

TABLE 10.4-1

CONDENSER DESIGN CAPACITIES

	Low Pressure Shell	High Pressure Shell	
Size, ft^2	300,000	300,000	
Shell Side			
Steam In, lbs/hr	3.43×10^6	3.43×10^6	
U Service BTU/hr-ft^2-°F	539.1	559.1	
Cleanliness factor, %	90	90	
Saturation Temperature, °F	103.22	114.02	
Log Mean Temperature Difference, °F	19.52	18.33	
Operating Pressure, in HgA	2.13	2.91	
Oxygen Guarantee in Hotwell,* cc/liter		0.005	02-01
Total Calculated Duty, BTU/hr	~ $6,232 \times 10^6$		
Tube Side			
Circulating Water Flow, gpm	~ 520,000	~ 520,000	
Water In, °F	77	89.1	
Water Out, °F	89.1	101	
Number of Passes	One	One	
Pressure Drop, ft of water	~ 12.7	~ 12.4	
Velocity, ft/sec	~ 8.030	~ 8.030	

* At turbine loads >50%. 02-01

TABLE 10.4-1 (Continued)

CONDENSER DESIGN CAPACITIES

Auxiliary Condensers	Each Shell
Quantity	3
Size ft^2	5,122
Shell Side (each condenser)	
Steam In, lb/hr	64,839
U Service BTU/hr-ft^2-°F	456
Cleanliness Factor, %	90
Saturation Temperature, °F	118.00
Log Mean Temperature Difference, °F	26.96
Operating Pressure, in HgA	3.2
Tube Side (each condenser)	
Circulating Water Flow, gpm	5,000
Water In, °F	77
Water Out, °F	101.4
Number of Passes	3
Pressure Drop, ft of water	12.6
Velocity, ft/sec	6.4 at 60°F
Main Condenser Vacuum Pumps	
Capacity, Free Dry Air, lb/hr (scfm)	90 (20), each pump
Capacity, Associated Vapor, lb/hr	198, each pump
Total Capacity, Air-Vapor Mixture, lb/hr	288, each pump
Auxiliary Condenser Vacuum Pumps	
Capacity, Free Dry Air, lb/hr (scfm)	67.5 (15), each pump
Capacity, Associated Vapor, lb/hr	147.5, each pump
Total Capacity, Air-Vapor Mixture, lb/hr	215.0, each pump

02-01

TABLE 10.4-2

TURBINE BYPASS VALVE SETPOINTS

Applicable Valves	Condition	Device	Setpoint	Reference FSAR Figure	
All	Lo-Lo T_{avg}	SSPS (K631)	552°F	10.4-4b	02-01
Condenser Dumps Only	Condenser Pressure	PY/3006A	5” HgA	10.4-4b	
Condenser Dumps Only	Condenser Pressure	PY/3016A	5” HgA	10.4-4b	
All	Turbine Impulse Chamber Pressure	PB447A	10% of load	10.4-4b	02-01
All	Turbine Impulse Chamber Pressure	PB447B	50% of load	10.4-4b	
Condenser Dumps Only	Hi T_{avg} Load Rejection Steam Dump	TB408F	Hi 1-5.7°F Hi 2-16.9°F	10.4-4b	
Atmospheric Relief and Power Relief Only	Hi T_{avg} Load Rejection Steam Dump	TB408P	Hi 3-22.4°F Hi 4-28°F	10.4-4b	02-01
Condenser Dumps Only	Hi T_{avg} Turbine Trip Steam Dump	TB408J	Hi 1-7.6°F Hi 2-30.4°F	10.4-4b	
Power Relief Valves Only	Pressure Controller	PC **	1107 psia	10.4-4a	
Power Relief Valves Only	Pressure Control	TY-408R1 TY-408R2	77.7 to 100% (1)	10.4-4a	RN 04-003
Power Relief Valves Only	Pressure Bistable	PB ***	1148 psia inc.; reset at 1105 psia, dec.	10.4-4a	
Atmospheric Relief Valves Only	Pressure Control	TY-408Q1 TY-408Q2	57.7 to 77.7% (1)	10.4-4a	RN 04-003
Condenser Cooldown Valves Only	Pressure Control	TY-408N1 TY-408N2	0 to 14.4% (1)	10.4-4a	

TABLE 10.4-2 (Continued)

TURBINE BYPASS VALVE SETPOINTS

Applicable Valves	Condition	Device	Setpoint	Reference FSAR Figure	
Condenser Dump Valves Only	Pressure Control	TY-408P1 TY-408P2 TY-408P3	14.4 to 57.7% (1)	10.4-4a	RN 04-003
IFV-2097-MB and IFV-2117-MB Only	Valve Open Permit	PY/3006B or PY/3016B	< 4.5" HgA	10.4-4a	02-01

(1) Operating bandwidth based on valve limitations. Percent of steam dump capacity (~ 93.6% of rated steam flow), as outlined on Figure 7.2-1, Sheet 10. RN 04-003

TABLE 10.4-3

CIRCULATING WATER SYSTEM DESIGN PARAMETERS

Traveling Screens		
Quantity	6	
Type	Through flow	
Screen Material	304 Stainless steel	
Screen Mesh Opening, in	3/8	
Design Water Velocity, fps	0.75 (approach)	02-01
Capacity, gpm	95,000 @ 1.32 fps 120,000 @ 1.67 fps	
Circulating Water Pumps		
Quantity	3	
Type	Vertical, wet pit	
Total Dynamic Head, ft	40.5	
Capacity, gpm	~178,000	RN 08-001
Speed (XPP0006A/B/C), rpm	(297/294/294)	
Shutoff Head, ft	89	
Horsepower	2250	
Circulating Water Jockey Pump		
Quantity	1	
Type	Vertical, wet pit	
Total Dynamic Head, ft	38	
Capacity, gpm	5000	
Speed, rpm	690	
Shutoff head, ft	50	
Horsepower	75	

TABLE 10.4-3 (Continued)

CIRCULATING WATER SYSTEM DESIGN PARAMETERS

Lube Water Booster Pump	
Quantity	1
Type	Vertical
Total Dynamic Head, ft	150
Capacity, gpm	50
Speed, rpm	3500
Shutoff Head, ft	170
Horsepower	7.5
Screen Wash Pumps	
Quantity	2
Type	Horizontal
Total Dynamic Head, ft	250
Capacity, gpm	2000
Speed, rpm	1750
Shutoff Head, ft	280
Horsepower	200

02-01

TABLE 10.4-3a

WATER LEVEL VERSUS TIME FOR A POSTULATED CIRCULATING WATER SYSTEM EXPANSION JOINT FAILURE

Elevation (ft)	Time (sec)	Event
390	0-5	Alarm in main condenser cleaning pit
400	46	Second alarm, trip of circulating water pumps
412	102	Amertap strainer pit over-flows to turbine building floor
413	147	-
413.5	170	Circulating water pumps discharge valves close fully, flow stops

NOTE: Prior to pump discharge valve closure, water rise in the Turbine Building is approximately 16 in/min.

TABLE 10.4-4

CONDENSATE SYSTEM EQUIPMENT PARAMETERS

Condensate Pumps		
Quantity	3	
Design capacity, gpm	9635	
Design Total Dynamic Head, ft	605	
Efficiency at Design Condition %	82	
NPSH Required at Design Point, ft	18	
Design Speed, rpm	1187	
Shutoff Head, ft	775	
Minimum Flow, gpm	1000	
Motor Rated Horsepower, HP	2000	
Normal Operating Point Conditions		
Total Dynamic Head, ft	630	
Flow, gpm	9177	02-01
Horsepower, BHP	1800	
Deaerator		
Quantity	1	
Condensate, lb/hr	8,837,684	
Temperature, °F	300.3	
Extraction Steam		
Flow, lb/hr	255,110	
Pressure (at inlet), psia	107.9	
Enthalpy, BTU/lb	1228.3	
High Pressure Heater Drain, lb/hr	3,752,012	

TABLE 10.4-4 (Continued)

CONDENSATE SYSTEM EQUIPMENT PARAMETERS

Capacity of Deaerator Storage			
Tank at Normal Water Level (5 ft above tank center line), gal		75,000	
0_2 Content Guarantee, cm^3/liter		0.005	
Vented Steam Flow (Predicted), lb/hr		< 300	
Design Pressure, psig		Full vacuum - 116	
Operating Pressure, psia		107.9	
Feedwater Heaters	Heater 4	Heaters 5 & 6	
Quantity	2	2/2	
Feedwater, lb/hr	4,418,842 (each)	4,418,842 (each)	
Extraction Steam, lb/hr (each)	333,171	267,781/169,903	
Drain, lb/hr Flow (from) each	333,171	608,974/887,700	
Steam Pressure at Inlet, psia	71.5	21.8/5.87	
Feedwater Inlet, °F	227.5	164.1/115.1	02-01
Feedwater Outlet, °F	300.3	227.5/164.1	
Steam In, °F	324.4	237.1/172.7	
Drains Out, °F	240.5	174.1/125.1	
Drain Cooler approach, °F	13	10/10	
Terminal Difference, °F	4.0	5/5	
Total Heat Transferred, BTU/hr	326,994,308	281,480,235/ 216,081,374	

RN 06-041

TABLE 10.4-5

FEEDWATER SYSTEM EQUIPMENT PARAMETERS

Feedwater Booster Pumps		
Quantity	4	
Configuration	Horizontal, single stage, double suction, horizontal split, dual volute casing	
Operating* NPSH Required, ft	28	
Operating* Total Dynamic Head, ft	565	
Operating* Capacity, gpm	7200	
Design NPSH Required, ft	29	02-01
Design Total Dynamic Head, ft	555	
Design Capacity, gpm	7556	
Design Shaft Horsepower Required, BHp	1150	
Speed, rpm	1780	
Feedwater Pumps		
Quantity	3	
Configuration	Horizontal, single state, double suction, diffuser type	
Operating* Capacity, gpm	9600 (each pump)	
Operating* Total Dynamic Head, ft	2365	
Operating* Speed, rpm	4550	
Operating* Efficiency, %	87.5	
Design Capacity, gpm	10,075 (each Pump)	02-01
Design Total Dynamic Head, ft	2585	
Design Speed, rpm	4800	
Maximum Shut Off Head, ft	4225 (± 6% at runout)	

* At 100% Rated Power w/1% Blowdown 02-01

TABLE 10.4-5 (Continued)

FEEDWATER SYSTEM EQUIPMENT PARAMETERS

Feedwater Heaters	Heaters 1A & 1B	Heaters 2A & 2B	
Quantity	2	2	
Type	Horizontal, U-tube, closed, with internal drains cooler		
Feedwater (In), lbs/hr; BTU/lb	6,429,057; 351.0	6,429,057; 308.1	
Steam, lbs/hr; BTU/lb	444,740; 1143.7	869,334; 586.0	
Drains to Heater lbs/hr; BTU/lb	552,045; 531.4	1,006,672;362.5	
Steam Pressure at Inlet, psia	408.1	205.6	02-01
Feedwater Inlet, °F	376.1	335.1	
Feedwater Outlet, °F	441.0	376.1	
Steam Inlet, °F	456.6	393.0	
Drains Out, °F	388.1	347.6	
Drain Cooler approach, °F	12	12.5	
Terminal Difference, °F	5.6	8.0	
Total Heat Transferred, BTU/hr	448,748,179	275,806,545	

TABLE 10.4-6

FEEDWATER SYSTEM FAILURE ANALYSIS

Component	Malfunction	Comment
Feedwater Booster Pump	1. Trip of one operating pump from normal operating scheme.	No effect.
	2. Trip of one operating pump from beyond normal operating scheme.	Limited power reduction in accordance with operating procedures.
Feedwater Pump	1. Trip of one operating pump from normal operating scheme.	Remaining feedwater pump(s) run out, no effect on NSSS.
	2. Trip of one operating pump from beyond normal operating scheme.	Reactor trip or runback in accordance with operating procedures.
Feedwater Flow Control Valve	Valve fails closed.	Reactor trip.
Feedwater Isolation Valve	Valve fails closed.	Reactor trip.
Feedwater Piping	Postulated pipe rupture.	See Section 10.4.7.2.3.

TABLE 10.4-7

STEAM GENERATOR BLOWDOWN SYSTEM
COMPONENT DESIGN PARAMETERS

Steam Generator Blowdown Heat Exchangers			
Quantity	3		
Type	Shell and tube		
	Shell Side	Tube Side	
Fluid	Condensate	Blowdown	02-01
Design Pressure, psig	250	1185	
Design Temperature, °F	400	650	
Inlet Temperature, °F	106	557	
Outlet Temperature, °F	338	120	02-01
Flow, lb/hr	79,450	40,700	
Material	SA-515-70	SA-249-304	
Effective Heat Transfer Area, ft^2	2082		
Heat Duty, BTU/hr	18.5×10^6		
Nuclear Blowdown Holdup Tank			
Quantity	1		
Capacity, gal	13,000		
Design Pressure	Atmospheric		
Design Temperature, °F	150		
Materials	Lined carbon steel		99-01
Nuclear Blowdown Monitor Tank			
Quantity	1		02-01
Capacity, gal	5,000		
Design Pressure	Atmospheric		
Design Temperature, °F	150		
Material	Type 304 stainless steel		99-01

TABLE 10.4-7 (Continued)

STEAM GENERATOR BLOWDOWN SYSTEM
COMPONENT DESIGN PARAMETERS

Nuclear Blowdown Holdup Tank Pumps		
Quantity	2	
Type	Canned motor, centrifugal	
Capacity, gpm (Includes 50 gpm of recirc flow)	300	02-01
Total Developed Head, ft	325	
Material	Wetted parts - type 316 stainless steel	
Nuclear Blowdown Monitor Tank Pump		
Quantity	1	
Type	Canned motor, centrifugal	
Capacity, gpm	250	
Total Developed Head, ft	250	
Material	Wetted parts - type 316 stainless steel	02-01
Nuclear Blowdown Demineralizer Inlet Filter		
Quantity	1	
Design Flow, gpm	250	
Design Pressure, psig	150	
Design Temperature, °F	150	
Pressure Drop		
Clean, psi	5	
Dirty, psi	20	
Particulate Retention, microns absolute	≤ 20	RN 05-008
Vessel Material	Type 304 stainless steel	

TABLE 10.4-7 (Continued)

STEAM GENERATOR BLOWDOWN SYSTEM
COMPONENT DESIGN PARAMETERS

Nuclear Blowdown Demineralizers	Primary	Polishing
Quantity	2	2
Resin Capacity, ft^3	150	90
Design Flow, gpm	250	250
Design Pressure, psig	150	150
Design Temperature, °F	140	140
Material	Type 304 stainless steel	
Resin Type	Anion and/or cation exchange resins as required	
Nuclear Blowdown Spent Resin Storage Tank		
Quantity	1	
Capacity, ft^3	600	
Design Pressure, psig	150	
Design Temperature, °F	140	
Material	Type 304 stainless steel	
Nuclear Blowdown Resin Sluice Pump		
Quantity	1	
Type	Canned motor, centrifugal	
Capacity, gpm	150	
Total Developed Head, ft	230	
Material	Wetted parts - type 304 stainless steel	

TABLE 10.4-8

EMERGENCY FEEDWATER SYSTEM FAILURE ANALYSIS FOR SECONDARY SIDE BREAK WITH LOSS OF NON-1E ELECTRICAL POWER 98-053

Component	Malfunction	Comment
Any Emergency Feedwater Pump	Fails to start	The two remaining emergency feedwater pumps feed all three steam generators with the two unaffected steam generators receiving required flow. Flow is passively limited to the faulted SG steam generator by the cavitating venturi for 10 minutes (until operator action is credited). [1, 2] 02-01
Motor Driven Pump ARC Valve	Fails to automatically isolate pump recirculation path	All three emergency feedwater pumps feed all three steam generators with the two unaffected steam generators receiving required flow. Flow is passively limited to the faulted SG steam generator by the cavitating venturi for 10 minutes (until operator action is credited). [1, 2] RN 12-030 98-053

98-053

TABLE 10.4-8 (Continued)

EMERGENCY FEEDWATER SYSTEM FAILURE ANALYSIS FOR SECONDARY SIDE BREAK WITH LOSS OF NON-1E ELECTRICAL POWER 98-053

Component	Malfunction	Comment	
Electrical Channel A (instrumentation and power)	Failure (total loss)	Channel B motor driven emergency feedwater pumps and the Turbine Driven pump feed all three steam generators with the two unaffected steam generators receiving required flow. Flow is passively limited to the faulted SG steam generator by the cavitating venturi for 10 minutes (until operator action is credited). [1, 2]	RN 12-030 98-053
Electrical Channel B (instrumentation and power)	Failure (total loss)	Channel A motor driven emergency feedwater pump and the Turbine Driven pump feed all three steam generators with the two unaffected steam generators receiving required flow. Flow is passively limited to the faulted SG steam generator by the cavitating venturi for 10 minutes (until operator action is credited). [1, 2]	RN 12-030 98-053

Notes:

1 The pressure and temperature analyses for secondary side pipe breaks inside containment credit operator action at 30 minutes to isolate emergency feedwater to the affected SG and thus allow for operator action outside of the control room. Action is required to prevent overpressurizing the containment. 9

2 The pressure and temperature analyses for secondary side pipe breaks outside containment credit operator action at 10 minutes to isolate emergency feedwater to the affected SG since the harsh environment will limit local manual actions. Action is required to prevent environment conditions for equipment qualifications.

TABLE 10.4-9

TURBINE BUILDING CLOSED CYCLE COOLING WATER SYSTEM DESIGN PARAMETERS

Turbine Building Closed Cycle Cooling Water System Pumps		
Quantity	2	
Type	Horizontal	
Total Dynamic Head, ft	165	02-01
Capacity, gpm	8750	02-01
Speed, rpm	1170	
Motor Horsepower	600	02-01
Turbine Building Closed Cycle Cooling Water System Cooling Tower		
Quantity	1	
Type	Wet Surface Air Cooler	
Number of Cells	2	
Number of Cooling Coils	8	
Number of Fan Assemblies	4	
Cooling Coil Water Flow, gpm	8800	
Entering Coil Water Temperature, °F	107.8	
Leaving Coil Water Temperature, °F	94	
Design Heat Load, Btu/Hr	60,720,000	02-01
Cooling Tower Spray Pumps		
Quantity	2	
Type	Vertical Turbine	
Manufacturer	Goulds	
Total Dynamic Head, ft	46	
Capacity, GPM	8500	
Speed, RPM	880	
Minimum Flow, GPM	2000	
Shut-off Head, ft	75	
Horsepower	125	

SYSTEM DATA					
#	GPM	PSIG	°F	BY	REMARKS
1	288 LB/HR	2.0"HG	102	KL	AIR WATER VAPOR MIXTURE
2		1	100	KL	
3	218 LB/HR	3.4"HG	112	KL	AIR WATER VAPOR MIXTURE
4	"0"	1	100	KL	
5	.5	125	101	KL	20 GPM FOR FILLING
6	2.0	125	101	KL	20 GPM FOR FILLING
7	300 MAX.		95	KL	ΔP AT 100± 2 PSIG
8					
9					

NOTE:
A. TEMPORARY STRAINER FOR SYSTEM CLEAN UP, TO BE REMOVED AFTER FINAL FLUSH.

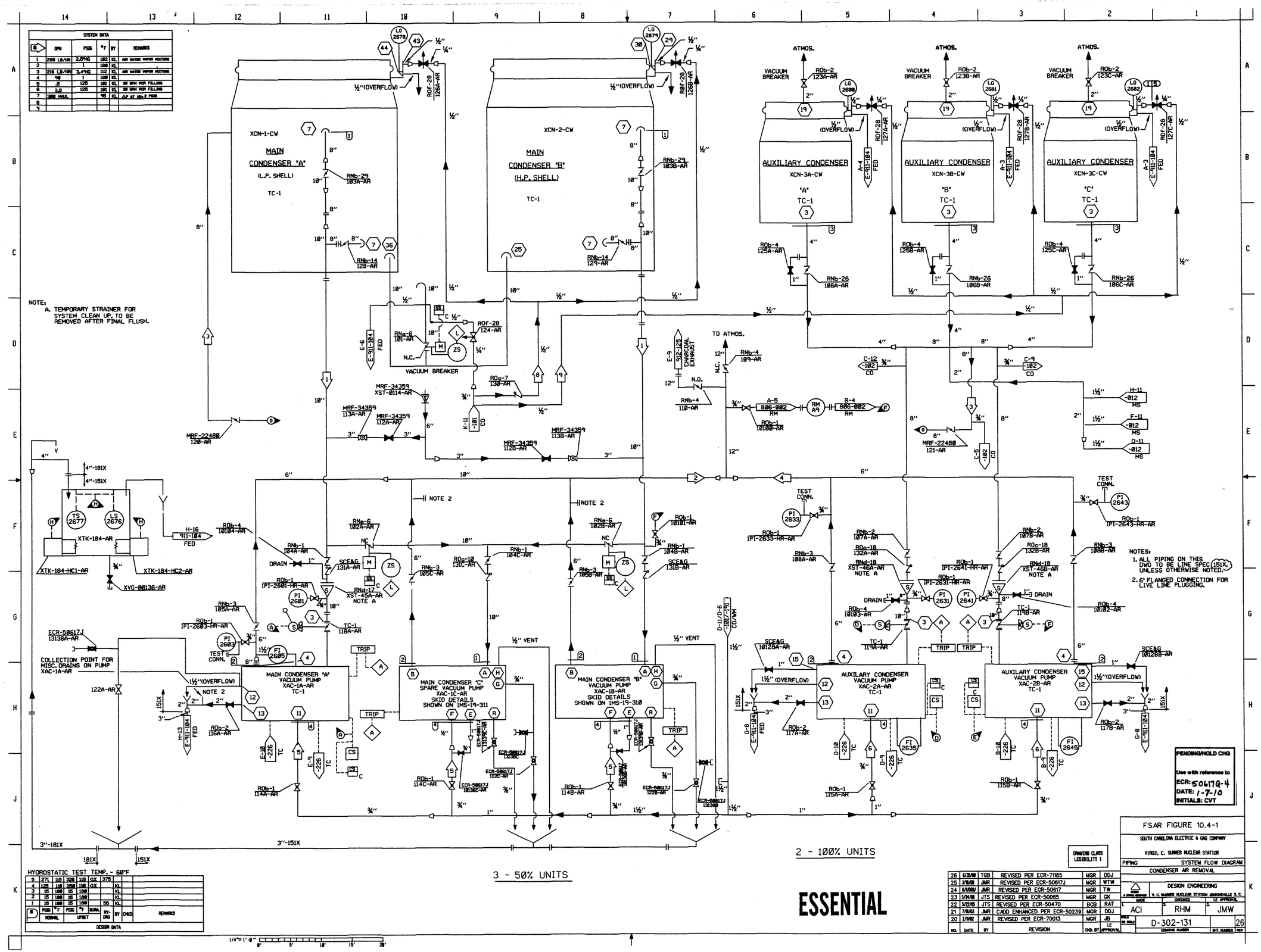

NOTES:
1. ALL PIPING ON THIS DWG TO BE LINE SPEC (151X) UNLESS OTHERWISE NOTED.
2. 6" FLANGED CONNECTION FOR LIVE LINE PLUGGING.

PENDING/HOLD CHG
Use with reference to
ECR: 50617Q-4
DATE: 1-7-10
INITIALS: CVT

HYDROSTATIC TEST TEMP. - 60°F

#	PSIG	°F	PSIG	°F	BURA.	HY-DRO	BY	CHKD	REMARKS
5	271	115	328	115	CIX	375			
4	125	115	250	115	CIX		KL		
3	15	100	15	100			KL		
2	15	100	15	100			KL		
1	15	100	15	100		55	KL		
	NORMAL		UPSET						DESIGN DATA

NO.	DATE	BY	REVISION	CKD. BY	LE APPROVAL
26	6/30/09	TGB	REVISED PER ECR-71185	MGR	DDJ
25	3/9/09	JMR	REVISED PER ECR-50617J	MGR	WTW
24	8/08/07	JMR	REVISED PER ECR-50617	MGR	TW
23	5/24/06	JTS	REVISED PER ECR-50065	MGR	GK
22	5/22/06	JTS	REVISED PER ECR-50470	BCB	RAT
21	7/16/03	JMR	CADD ENHANCED PER ECR-50239	MGR	DDJ
20	2/19/02	JMR	REVISED PER ECR-70013	MGR	JB

DRAWING CLASS LEGIBILITY 1

FSAR FIGURE 10.4-1

SOUTH CAROLINA ELECTRIC & GAS COMPANY

VIRGIL C. SUMMER NUCLEAR STATION

PIPING — SYSTEM FLOW DIAGRAM

CONDENSER AIR REMOVAL

SCE&G — A SCANA COMPANY

DESIGN ENGINEERING

V. C. SUMMER NUCLEAR STATION JENKINSVILLE S.C.

DRAWN	CHECKED	LE APPROVAL
ACI	RHM	JMW

SCALE: NO SCALE — D-302-131 — DRAWING NUMBER — SHT. NUMBER — REV. 26

Figures 10.4-2, 10.4-2a, and 10.4-2b
Deleted per Amendment 96-03

REFERENCES:

D-302-011 FLUID SYSTEM DIAGRAM
B-802-001 FUNCTIONAL DIAGRAMS
W108D932 (W) PROCESS CONTROL BLOCK DIAGRAMS, SHEET 18
W108D837 (W) FUNCTIONAL DIAGRAMS, SHEET 10

REV	REVISED PER ECR-70028	
6		
BY	CHECKED	LE APPROVAL
DDJ	MGR	DDJ 9/27/01

SOUTH CAROLINA ELECTRIC & GAS COMPANY
VIRGIL C. SUMMER NUCLEAR STATION UNIT #1
I & C LOOP DIAGRAM
MAIN STEAM SYSTEM
STEAM DUMP/TURBINE BYPASS (MS)

MADE	CHKD	DRAWING NUMBER	SHT. NO.	REV
MFP	DJM	04 4461 SS-808-011		6
DATE 1/7/77	ENG INTRF 1. N/A 2. N/A	DESIGN ENGINEERING V. C. SUMMER NUCLEAR STATION JENKINSVILLE, S. C.		
SCALE NO SCALE		ENG.		
W.O.		ENGINEER APPROVAL	DEPT	DATE

FSAR Figure 10.4-3

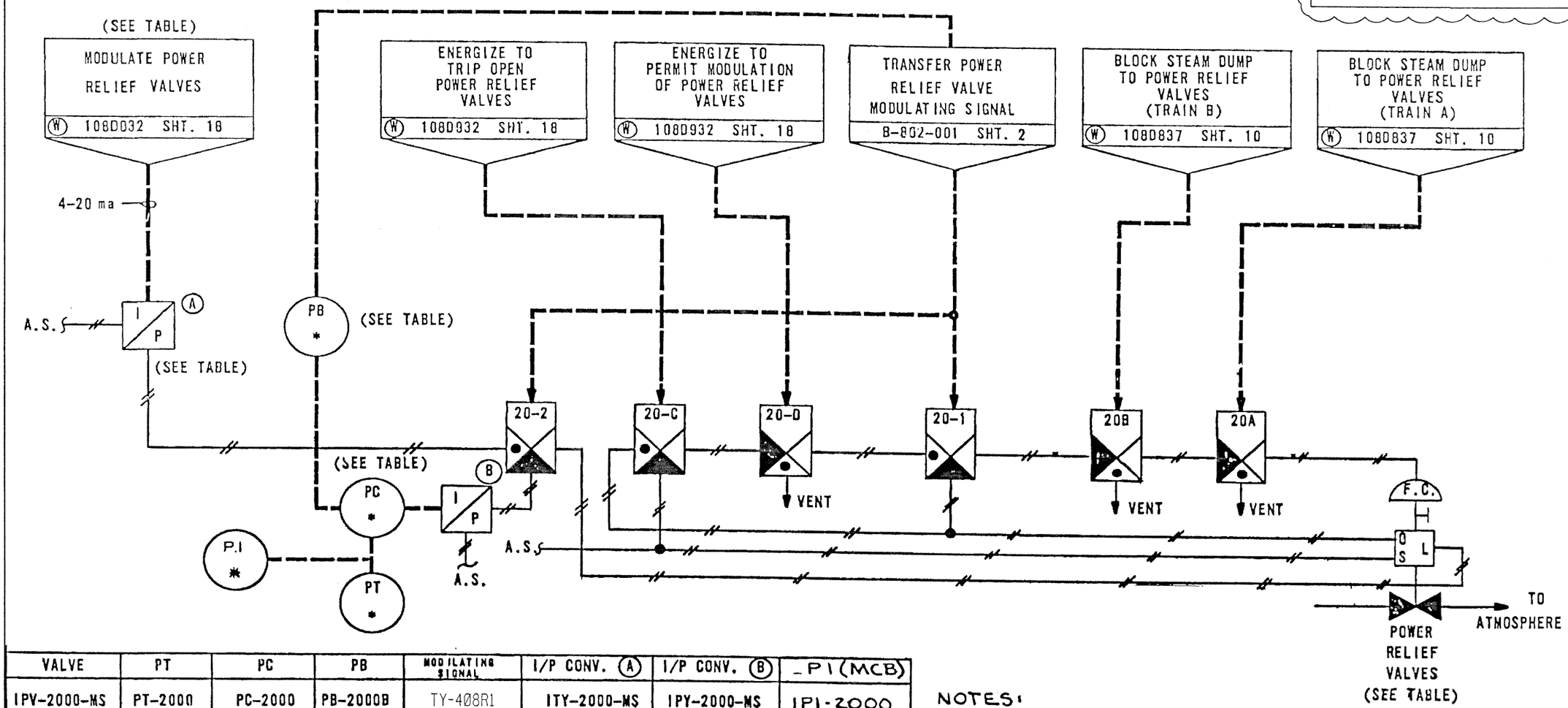

VALVE	PT	PC	PB	MODULATING SIGNAL	I/P CONV. (A)	I/P CONV. (B)	PI (MCB)
1PV-2000-MS	PT-2000	PC-2000	PB-2000B	TY-408R1	1TY-2000-MS	1PY-2000-MS	1PI-2000
1PV-2010-MS	PT-2010	PC-2010	PB-2010B	TY-408R1	1TY-2010-MS	1PY-2010-MS	1PI-2010
1PV-2020-MS	PT-2020	PC-2020	PB-2020B	TY-408R2	1TY-2020-MS	1PY-2020-MS	1PI-2020

NOTES:
1. SOLENOIDS SHOWN DE-ENERGIZED.
2. ENERGIZING 20-1 BYPASSES 20-C AND 20-D.
3. ENERGIZING 20-2 ALLOWS MODULATION ON PRESSURE CONTROL.

...\ondeck\dcn4\808011_0001.dgn Sep. 27, 2001 14:16:26

REFERENCES:

D-302-031 FLUID SYSTEM DIAGRAM
B-802-001 FUNCTIONAL DIAGRAMS
W108D932 (W) PROCESS CONTROL BLOCK DIAGRAMS, SHEET 18
W108D837 (W) FUNCTIONAL DIAGRAMS, SHEET 10

REV	REVISED PER ECR-70028	
3		
BY	CHECKED	LE APPROVAL
DDJ	MGR	DDJ 9/27/01

SOUTH CAROLINA ELECTRIC & GAS COMPANY
VIRGIL C. SUMMER NUCLEAR STATION UNIT #1
I & C LOOP DIAGRAM
MAIN STEAM SYSTEM
STEAM DUMP/TURBINE BYPASS (MB)

MADE	CHKD	DRAWING NUMBER	SHT. NO.	REV
MFP	DJM	04 4461 SS-808-031	1	3
DATE		ENG INTRF		
1/7/77		1. N/A	2. N/A	
SCALE NO SCALE				
W.O.				

DESIGN ENGINEERING
V. C. SUMMER NUCLEAR STATION
JENKINSVILLE, S. C.
ENG.
ENGINEER APPROVAL DEPT DATE

FSAR Figure 10.4–4, Sht. 1

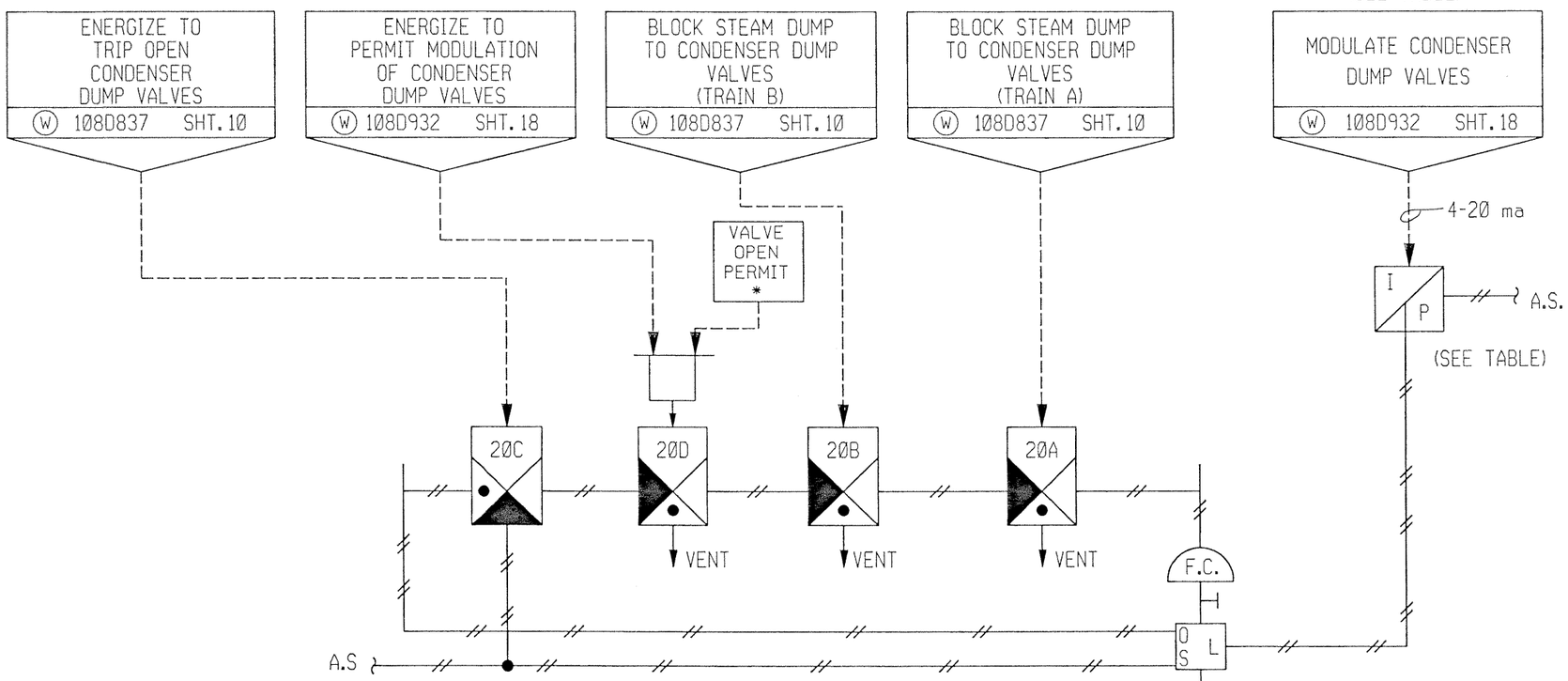

VALVE	I/P CONVERTER	MODULATING SIGNAL FROM	VALVE OPEN PERMIT*
IFV-2097-MB	IFY-2097-MB	TY-408P1	CONDENSER PRESSURE < 4.5" HGA
IFV-2106-MB	IFY-2106-MB	TY-408P2	NONE REQUIRED
IFV-2107-MB	IFY-2107-MB	TY-408P3	NO LOSS OF STATOR COOLANT
IFV-2117-MB	IFY-2117-MB	TY-408P1	CONDENSER PRESSURE < 4.5" HGA
IFV-2126-MB	IFY-2126-MB	TY-408P2	NONE REQUIRED
IFV-2127-MB	IFY-2127-MB	TY-408P3	NO LOSS OF STATOR COOLANT

TO CONDENSER

CONDENSER DUMP VALVE (SEE TABLE)

NOTES:
1. SOLENOIDS SHOWN DE-ENERGIZED.

REFERENCES:

D-302-031 FLUID SYSTEM DIAGRAM
B-802-001 FUNCTIONAL DIAGRAMS
W108D932 (W) PROCESS CONTROL BLOCK DIAGRAMS, SHEET 18
W108D837 (W) FUNCTIONAL DIAGRAMS, SHEET 10

REV	REVISED PER ECR-70028	
3		
BY	CHECKED	LE APPROVAL
DDJ	MGR	DDJ 9/27/01

SOUTH CAROLINA ELECTRIC & GAS COMPANY
VIRGIL C. SUMMER NUCLEAR STATION UNIT #1
I & C LOOP DIAGRAM
MAIN STEAM SYSTEM
STEAM DUMP/TURBINE BYPASS (MB)

MADE	CHKD	DRAWING NUMBER	SHT. NO.	REV
MFP	DJM	04 4461 SS-808-031	1	3
DATE		ENG INTRF		
1/7/77		1. N/A	2. N/A	
SCALE NO SCALE				
W.O.				

DESIGN ENGINEERING
V. C. SUMMER NUCLEAR STATION
JENKINSVILLE, S. C.
ENG.
ENGINEER APPROVAL DEPT DATE

FSAR Figure 10.4–4, Sht. 1

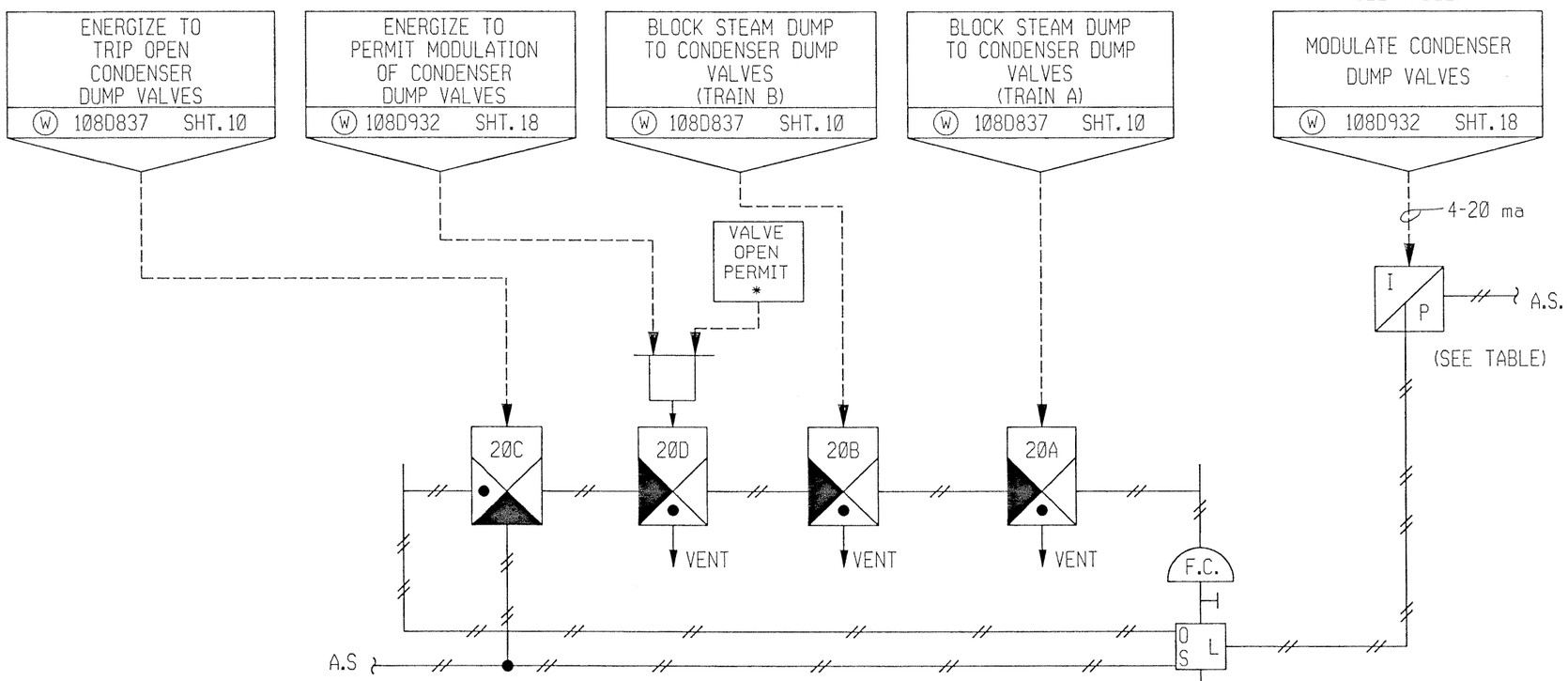

VALVE	I/P CONVERTER	MODULATING SIGNAL FROM	VALVE OPEN PERMIT*
IFV-2097-MB	IFY-2097-MB	TY-408P1	CONDENSER PRESSURE < 4.5" HGA
IFV-2106-MB	IFY-2106-MB	TY-408P2	NONE REQUIRED
IFV-2107-MB	IFY-2107-MB	TY-408P3	NO LOSS OF STATOR COOLANT
IFV-2117-MB	IFY-2117-MB	TY-408P1	CONDENSER PRESSURE < 4.5" HGA
IFV-2126-MB	IFY-2126-MB	TY-408P2	NONE REQUIRED
IFV-2127-MB	IFY-2127-MB	TY-408P3	NO LOSS OF STATOR COOLANT

TO CONDENSER

CONDENSER DUMP VALVE (SEE TABLE)

NOTES:
1. SOLENOIDS SHOWN DE-ENERGIZED.

REFERENCES:

D-302-031 FLUID SYSTEM DIAGRAM
B-802-001 FUNCTIONAL DIAGRAMS
W108D932 (W) PROCESS CONTROL BLOCK DIAGRAMS, SHEET 18
W108D837 (W) FUNCTIONAL DIAGRAMS, SHEET 10

REV	REVISED PER ECR-70028	
BY	CHECKED	LE APPROVAL
DDJ	MGR	DDJ 9/27/01

SOUTH CAROLINA ELECTRIC & GAS COMPANY
VIRGIL C. SUMMER NUCLEAR STATION UNIT #1
I & C LOOP DIAGRAM
MAIN STEAM SYSTEM
STEAM DUMP/TURBINE BYPASS (MB)

MADE	CHKD	DRAWING NUMBER	SHT. NO.	REV
MFP	DJM	04 4461 SS-808-031	2	3
DATE 1/7/77	ENG INTRF 1. N/A	2. N/A	DESIGN ENGINEERING V. C. SUMMER NUCLEAR STATION JENKINSVILLE, S. C.	
SCALE NO SCALE			ENG.	
W.O.			ENGINEER APPROVAL DEPT DATE	

FSAR Figure 10.4-4, Sht. 2

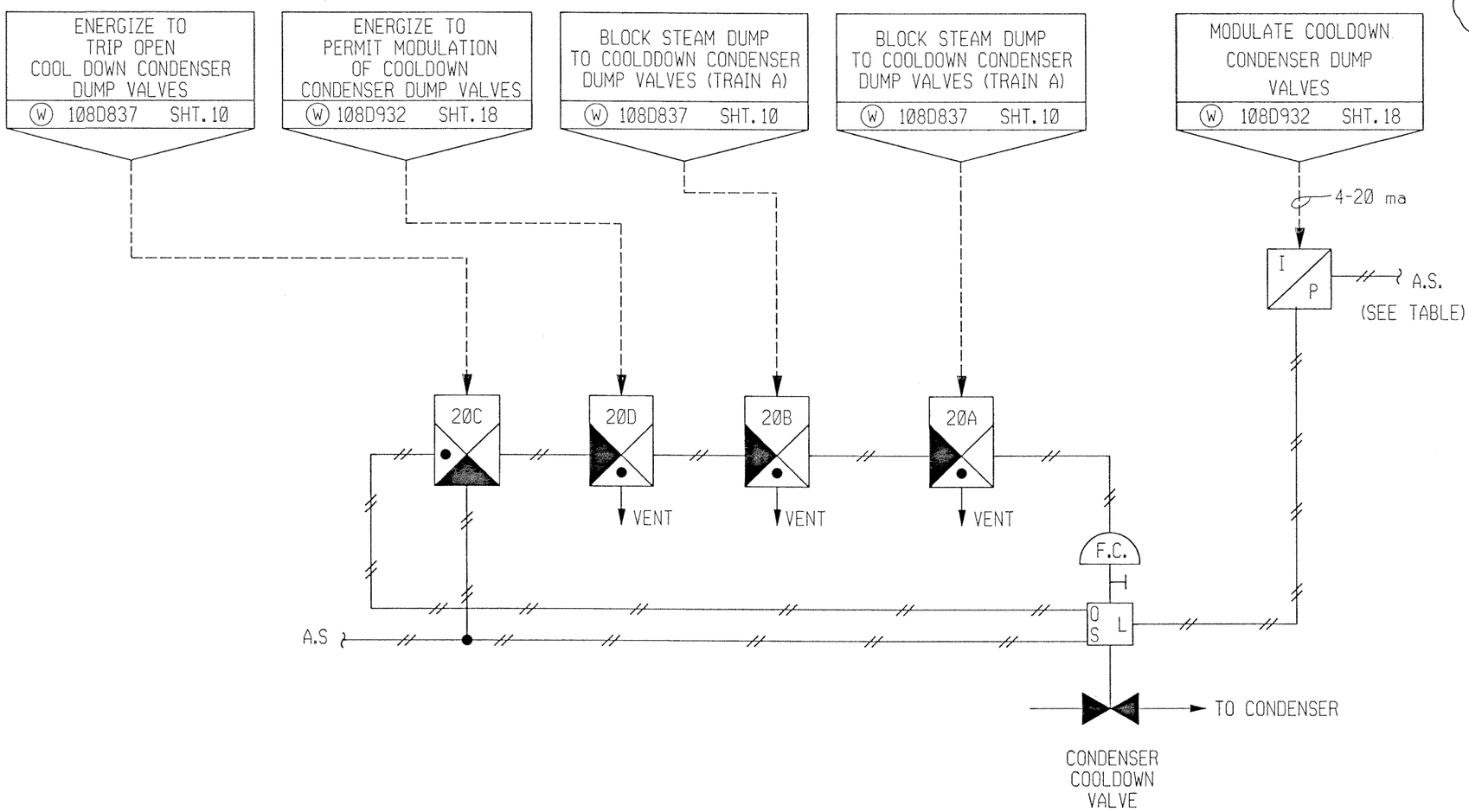

NOTES:
1. SOLENOIDS SHOWN DE-ENERGIZED.

VALVE	I/P CONVERTER	MODULATING SIGNAL FROM
IFV-2096-MB	IFY-2096-MB	TY-408N1
IFV-2116-MB	IFY-2116-MB	TY-408N2

...\ondeck\dcn4\808031_0002.dgn Sep. 27, 2001 14:52:56

REFERENCES:

D-302-031 FLUID SYSTEM DIAGRAM
B-802-001 FUNCTIONAL DIAGRAMS
W108D932 (W) PROCESS CONTROL BLOCK DIAGRAMS, SHEET 18
W108D837 (W) FUNCTIONAL DIAGRAMS, SHEET 10

REV	REVISED PER ECR-70028
3	
BY	CHECKED / LE APPROVAL
DDJ	MGR / DDJ 9/27/01

SOUTH CAROLINA ELECTRIC & GAS COMPANY
VIRGIL C. SUMMER NUCLEAR STATION UNIT #1
I & C LOOP DIAGRAM
MAIN STEAM SYSTEM
STEAM DUMP/TURBINE BYPASS (MB)

MADE	CHKD	DRAWING NUMBER	SHT. NO.	REV
MFP	DJM	04 4461 SS-808-031	3	3
DATE 1/7/77	ENG INTRF 1. N/A 2. N/A	DESIGN ENGINEERING V. C. SUMMER NUCLEAR STATION JENKINSVILLE, S. C.		
SCALE NO SCALE	W.O.	ENG.		
ENGINEER APPROVAL	DEPT	DATE		

FSAR Figure 10.4-4, Sht. 3

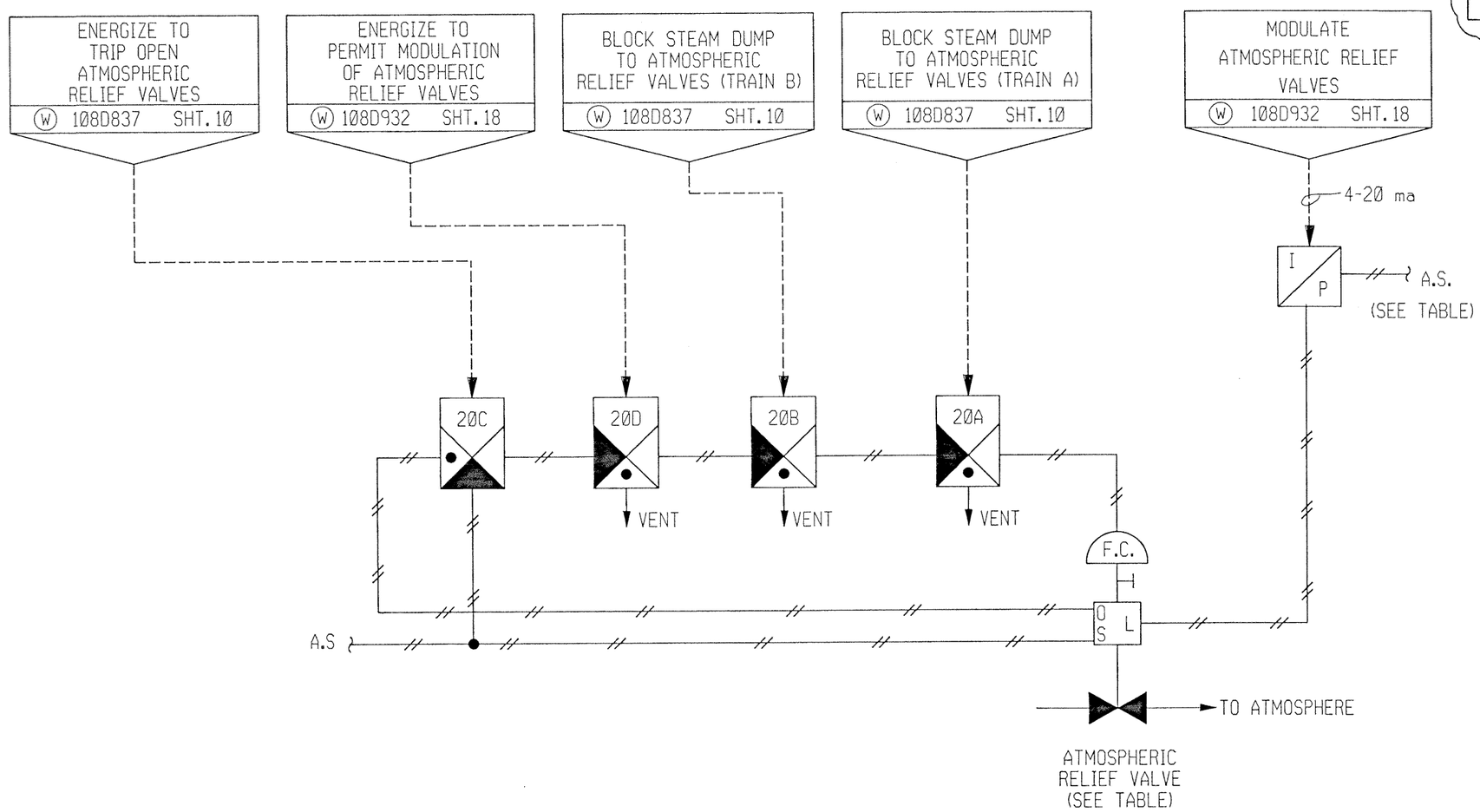

VALVE	I/P CONVERTER	MODULATING SIGNAL FROM
IFV-2006-MB	IFY-2006-MB	TY-408Q1
IFV-2016-MB	IFY-2016-MB	TY-408Q1
IFV-2026-MB	IFY-2026-MB	TY-408Q2

NOTES:
1. SOLENOIDS SHOWN DE-ENERGIZED.

...\ondeck\dcn4\808031_0003.dgn Sep. 27, 2001 15:04:06

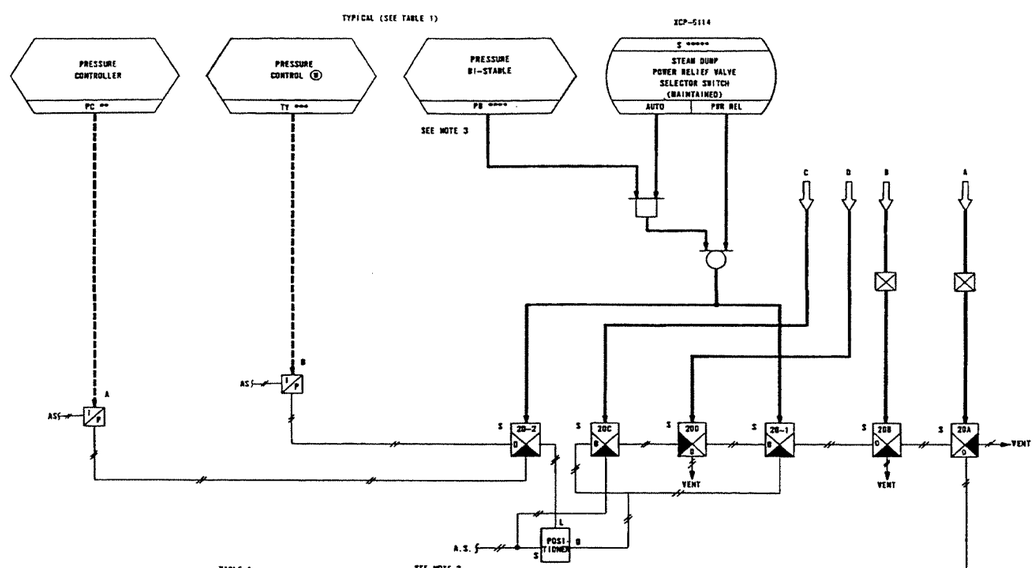

TABLE 1

I/P A	I/P B	VALVE *	SELECTOR SW. *****	PRESSURE CONTROLLER **	PRESSURE BI-STABLE ****	PRESSURE CONTROLLER (B) ***	SEE NOTE 2 A	B	C	D	COMPUTER INPUT †	TSC COMPUTER INPUT ††
IPY-2000-MS	ITY-2000-MS	IPV-2000-MS	SSMS20	PC-2000	PB-20000	TY-408R1	1	17	54	37	Y18040	AD1013
IPY-2010-MS	ITY-2010-MS	IPV-2010-MS	SSMS21	PC-2010	PB-20100	TY-408R1	2	18	55	38	Y18040	AD1014
IPY-2020-MS	ITY-2020-MS	IPV-2020-MS	SSMS22	PC-2020	PB-20200	TY-408R2	3	19	56	39	Y18040	AD1015

THIS PORTION NOT SAFETY RELATED

CHANNEL						
20 2	20C	20D	20 1	20B	20A	CONT. FROM TABLE ABOVE
XA	X	X	XA	B	A	
XA	X	X	XA	B	A	
XB	X	X	XB	B	A	

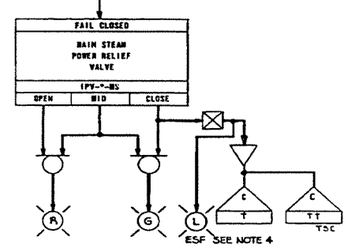

THIS PORTION NOT SAFETY RELATED

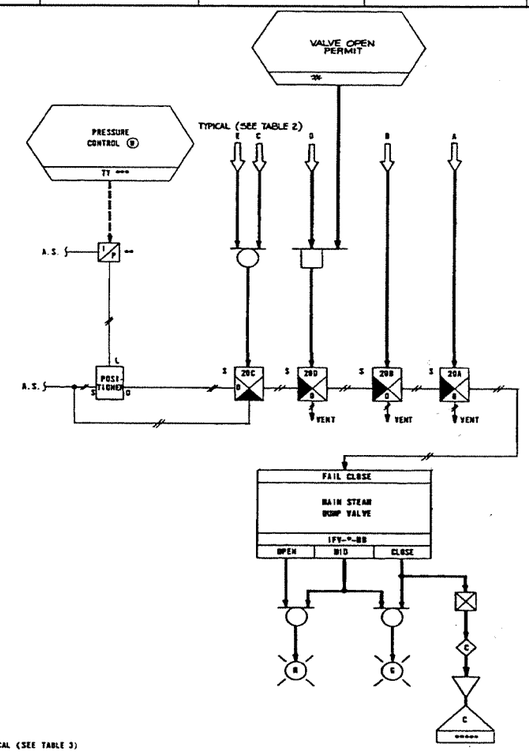

* VALVE OPEN PERMIT
N/A
PB-30068/30068
N/A
GE RELAY G3X13
N/A
PB-30068/30068
N/A
GE RELAY G3X13

CONT. FROM TABLE BELOW

TABLE 2

VALVE FUNCTION	COMPUTER INPUT ****	VALVE *	A	B	C	D	E	PRESSURE CONTROL ***	I/P CONVERTER **
CONDENSER COOLDOWN	Y18010	IFV-2096-MS	4	16	44	29	58	TY-408N	IFV-2096-MS
CONDENSER DUMP	Y18020	IFV-2097-MS	9	23	45	30	59	TY-408P	IFV-2097-MS
CONDENSER DUMP	Y18020	IFV-2106-MS	10	24	46	31	60	TY-408P	IFV-2106-MS
CONDENSER DUMP	Y18020	IFV-2107-MS	11	26	47	32	61	TY-408P	IFV-2107-MS
CONDENSER COOLDOWN	Y18010	IFV-2116-MS	5	15	43	33	57	TY-408N	IFV-2116-MS
CONDENSER DUMP	Y18020	IFV-2117-MS	12	25	48	34	62	TY-408P	IFV-2117-MS
CONDENSER DUMP	Y18020	IFV-2126-MS	13	27	49	35	63	TY-408P	IFV-2126-MS
CONDENSER DUMP	Y18020	IFV-2127-MS	14	28	50	36	64	TY-408P	IFV-2127-MS

SEE NOTE 2

CHANNEL			
20A	20B	20C	20D
XA	XB	X	X
XA	XB	X	X
XA	XB	X	X
XA	XB	X	X
XA	XB	X	X
XA	XB	X	X
XA	XB	X	X

CONT. FROM TABLE ABOVE

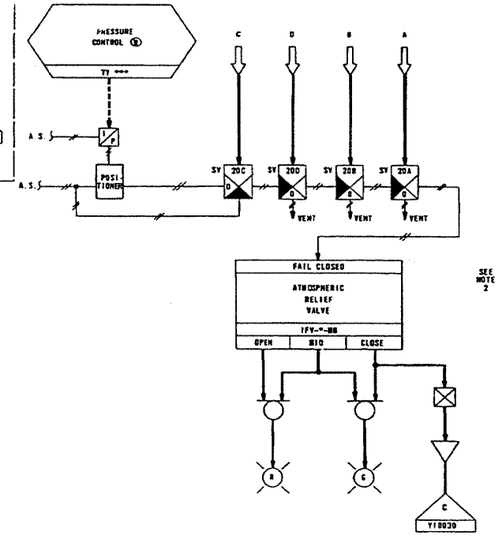

TABLE 3

VALVE *		IFV-2006-MS	IFV-2016-MS	IFV-2026-MS
SEE NOTE 2	A	6	7	8
	B	20	21	22
	C	51	52	53
	D	40	41	42
PRESSURE CONTROL ***		TY-40801	TY-40801	TY-40802
I/P CONVERTER **		IFY-2006-MS	IFY-2016-MS	IFY-2026-MS
CHANNEL	20A	XA	XA	XA
	20B	XB	XB	XB
	20C	X	X	X
	20D	X	X	X

NOTES: -

1. SOLENOID VALVES ARE SHOWN DE-ENERGIZED.
2. SIGNALS IN TABLES 1,2,3 ORIGINATE ON B-802-001, SHEET MS-03.
3. PRESSURE BI-STABLE PB-20000, PB-20100, PB-20200 CONTACTS CLOSE ON INCREASING PRESSURE AT 1140 PSI AND OPEN ON DECREASING PRESSURE AT 1105 PSI.
4. ESF MONITOR LIGHT IS BRIGHT WHEN VALVE IS NOT CLOSED.

AMENDMENT 96-03
SEPTEMBER 1996

SOUTH CAROLINA ELECTRIC & GAS CO.
VIRGIL C. SUMMER NUCLEAR STATION

FUNCTIONAL DIAGRAM
MAIN STEAM SYSTEM (NUCLEAR)

Figure 10.4-4a

DRAWING LEGIBILITY
CLASS 3
SCE&G CAD ENHANCED

1/4 = 1'-0"

x60000 m(1938,an15938) AN15938@an15938, Thu Jun 20 10:02:12 EDT 1996

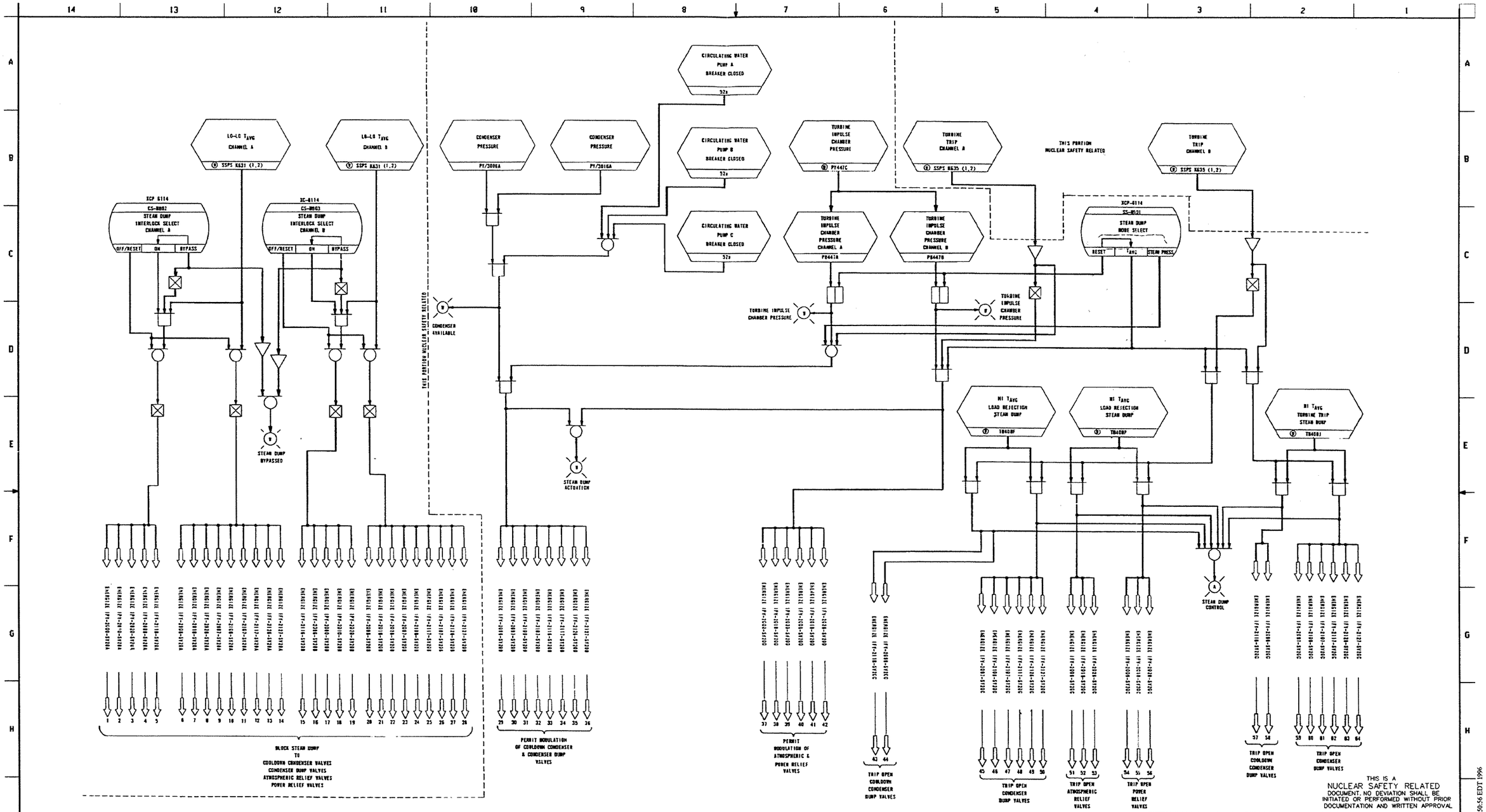

THIS IS A NUCLEAR SAFETY RELATED DOCUMENT. NO DEVIATION SHALL BE INITIATED OR PERFORMED WITHOUT PRIOR DOCUMENTATION AND WRITTEN APPROVAL

NOTES:-

1. INDICATING LIGHTS SHOWN ON THE SHEET ARE MAIN STEAM SYSTEM STATUS LIGHTS AND ARE LOCATED ON THE CONTROL BOARD.
2. BATCH LINE CONNECTIONS ARE ON D-802-001, SHEET 2.

AMENDMENT 96-03
SEPTEMBER 1996

DRAWING LEGIBILITY CLASS 3
SCE&G CAD ENHANCED

SOUTH CAROLINA ELECTRIC & GAS CO.
VIRGIL C. SUMMER NUCLEAR STATION

FUNCTIONAL DIAGRAM MAIN STEAM SYSTEM

Figure 10.4-4b

1/4 = 1'-0

x6000l0.m(1937,anl5938) AN15938@anl5938, Thu Jun 20 09:50:56 EDT 1996

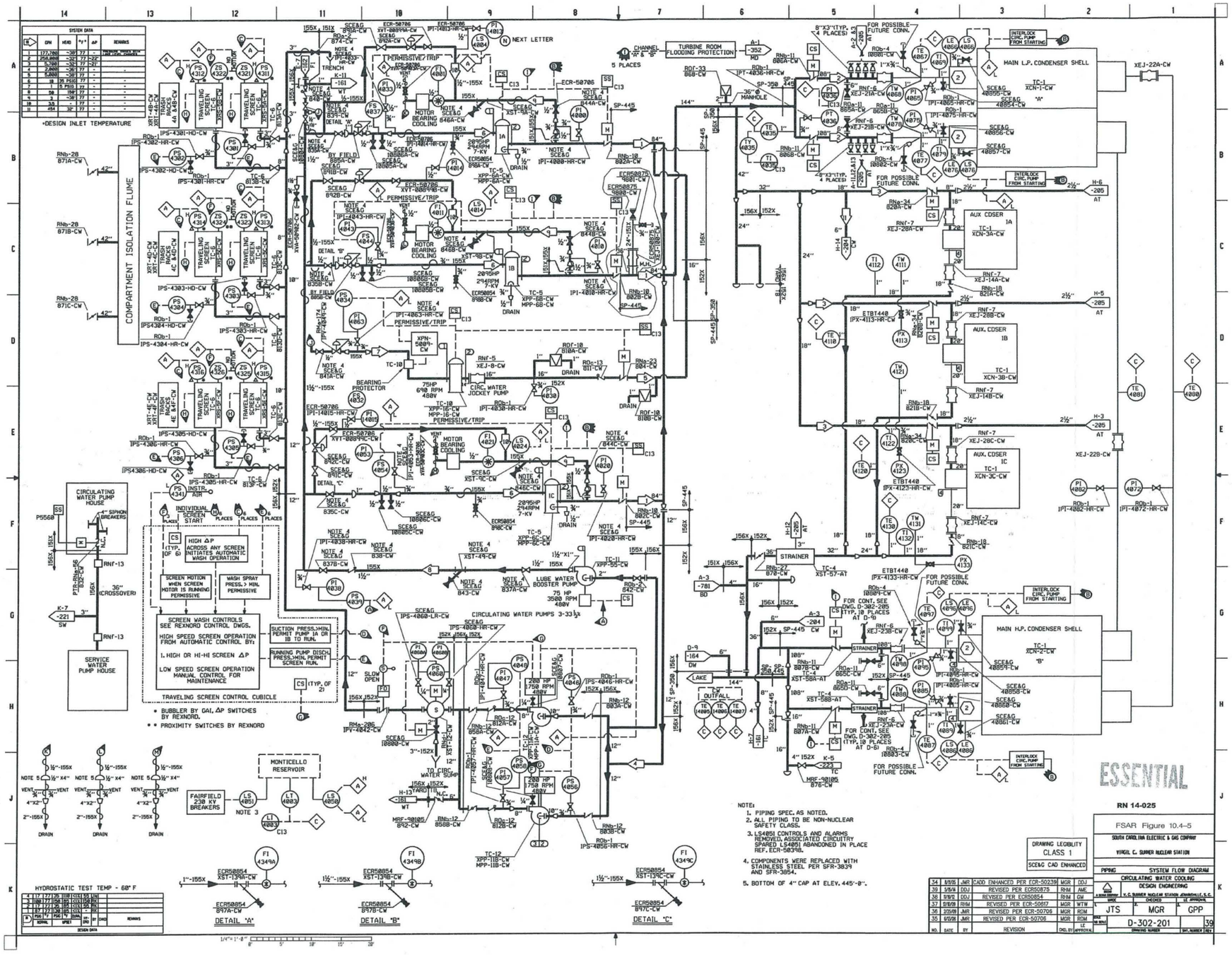
COMPARTMENT ISOLATION FLUME
CIRCULATING WATER PUMP HOUSE
SERVICE WATER PUMP HOUSE
TRAVELING SCREEN CONTROL CUBICLE
MONTICELLO RESERVOIR
FAIRFIELD 230 KV BREAKERS
TURBINE ROOM FLOODING PROTECTION
MAIN L.P. CONDENSER SHELL
MAIN H.P. CONDENSER SHELL
AUX. CONDSER 1A
AUX. CONDSER 1B
AUX. CONDSER 1C
CIRCULATING WATER PUMPS 3-33½
CIRC. WATER JOCKEY PUMP
LUBE WATER BOOSTER PUMP
STRAINER
ESSENTIAL
RN 14-025
FSAR Figure 10.4-5
SOUTH CAROLINA ELECTRIC & GAS COMPANY
VIRGIL C. SUMMER NUCLEAR STATION
CIRCULATING WATER COOLING
DESIGN ENGINEERING
JTS
MGR
GPP
D-302-201
39
DRAWING LEGIBILITY CLASS 1
SCE&G CAD ENHANCED
DETAIL "A"
DETAIL "B"
DETAIL "C"
HYDROSTATIC TEST TEMP - 60° F
NOTE:
1. PIPING SPEC. AS NOTED.
2. ALL PIPING TO BE NON-NUCLEAR SAFETY CLASS.
3. LS4051 CONTROLS AND ALARMS REMOVED; ASSOCIATED CIRCUITRY SPARED LS4051 ABANDONED IN PLACE REF. ECR-50398.
4. COMPONENTS WERE REPLACED WITH STAINLESS STEEL PER SFR-3839 AND SFR-3854.
5. BOTTOM OF 4" CAP AT ELEV. 445'-8".
34 1/12/0 JMR CADD ENHANCED PER ECR-50239 MGR DDJ
33 3/5/9 DDJ REVISED PER ECR50875 RHM AMC
32 8/8/2 DDJ REVISED PER ECR50854 RHM GM
31 5/6/9 RHM REVISED PER ECR-50617 MGR WTW
30 2/3/9 JMR REVISED PER ECR-50706 MGR RGM
29 6/3/9 JMR REVISED PER ECR-50706 MGR RGM
NO. DATE BY REVISION CHG. BY APPROVAL

Figures 10.4-6 and 10.4-7 Deleted per Amendment 96-03

G:\Working\OnDeck\50680asbuilts\302165.0001.dgn
DJ14998 18-MAY-2011 10:04

SYSTEM DATA				
#	GPM	PSIG	°F	REMARKS
1	4411	261	114	
2	200	7	106	1 PUMP
3	1940	26	106	PRECOAT
4	375	25	90	BACKWASH
4	600	25	90	FILL
5	25/50	100	90	TRANSFER
6	25/50	50	90	DISCHARGE

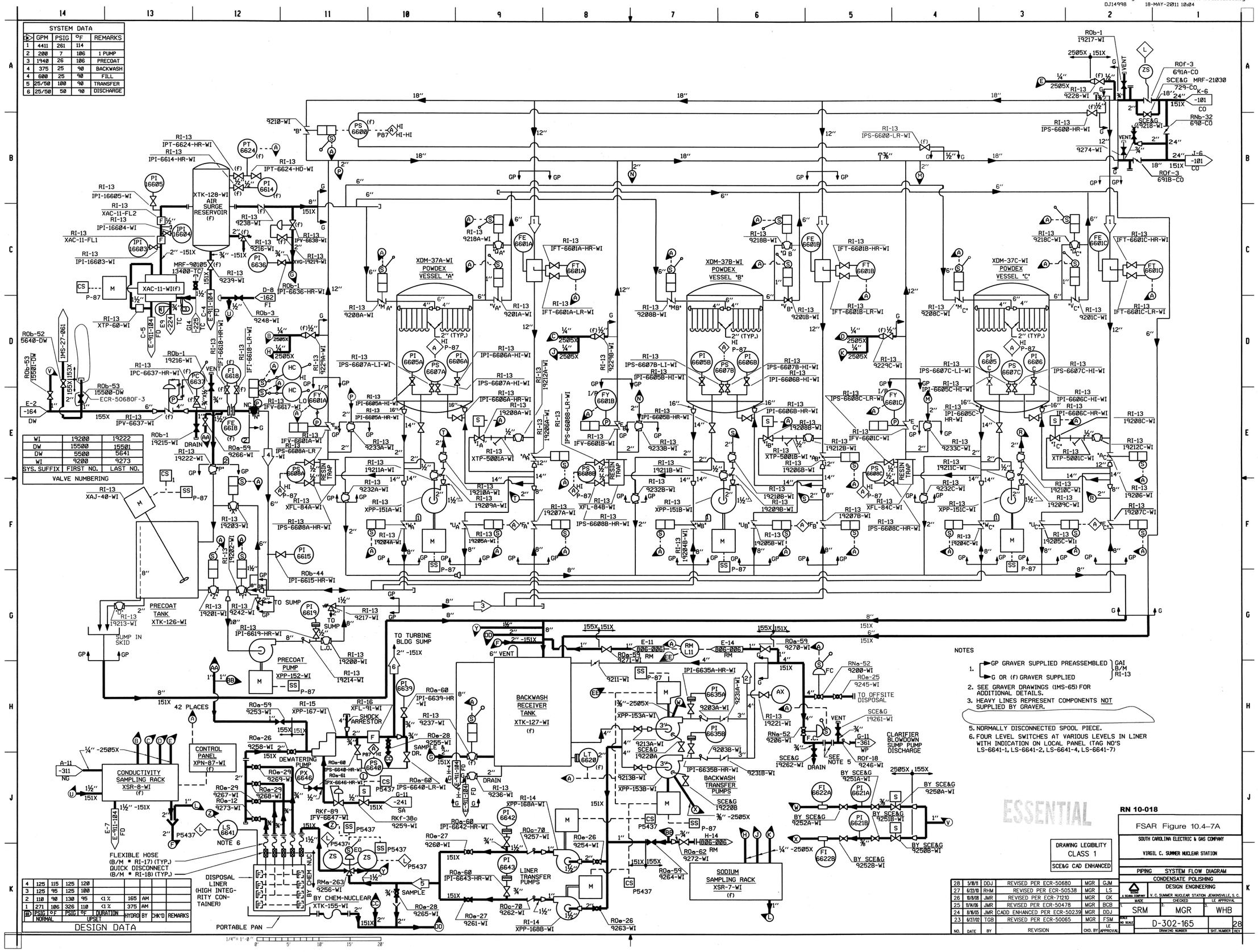

VALVE NUMBERING		
WI	19200	19222
DW	15500	15501
DW	5500	5641
WI	9200	9273
SYS. SUFFIX	FIRST NO.	LAST NO.

DESIGN DATA											
#	PSIG	°F	PSIG	°F	DURATION	HYDRO	BY	CHK'D	REMARKS
	NORMAL		UPSET						
4	125	115	125	120					
3	125	95	125	100					
2	110	90	130	95	<1%	165	AM		
1	271	106	326	110	<1%	375	AM		

NOTES

1. GP GRAVER SUPPLIED PREASSEMBLED; G OR (f) GRAVER SUPPLIED } GAI B/M RI-13
2. SEE GRAVER DRAWINGS (IMS-65) FOR ADDITIONAL DETAILS.
3. HEAVY LINES REPRESENT COMPONENTS NOT SUPPLIED BY GRAVER.
5. NORMALLY DISCONNECTED SPOOL PIECE.
6. FOUR LEVEL SWITCHES AT VARIOUS LEVELS IN LINER WITH INDICATION ON LOCAL PANEL (TAG NO'S LS-6641-1, LS-6641-2, LS-6641-4, LS-6641-7)

RN 10-018

DRAWING LEGIBILITY CLASS 1
SCE&G CAD ENHANCED

NO.	DATE	BY	REVISION	CKD. BY	LE APPROVAL
28	5/8/11	DDJ	REVISED PER ECR-50680	MGR	GJM
27	6/22/10	RHM	REVISED PER ECR-50538	MGR	LS
26	10/8/08	JMR	REVISED PER ECR-71210	MGR	GK
25	9/14/06	JMR	REVISED PER ECR-50478	MGR	BCB
24	8/16/05	JMR	CADD ENHANCED PER ECR-50239	MGR	DDJ
23	6/27/02	TGB	REVISED PER ECR-50065	MGR	FSM

FSAR Figure 10.4-7A

SOUTH CAROLINA ELECTRIC & GAS COMPANY
VIRGIL C. SUMMER NUCLEAR STATION

PIPING SYSTEM FLOW DIAGRAM
CONDENSATE POLISHING
DESIGN ENGINEERING
A SCANA COMPANY — V. C. SUMMER NUCLEAR STATION JENKINSVILLE, S. C.

MADE	CHECKED	LE APPROVAL
SRM	MGR	WHB

SCALE NO SCALE — D-302-165 (DRAWING NUMBER) — SHT. NUMBER — REV. 28

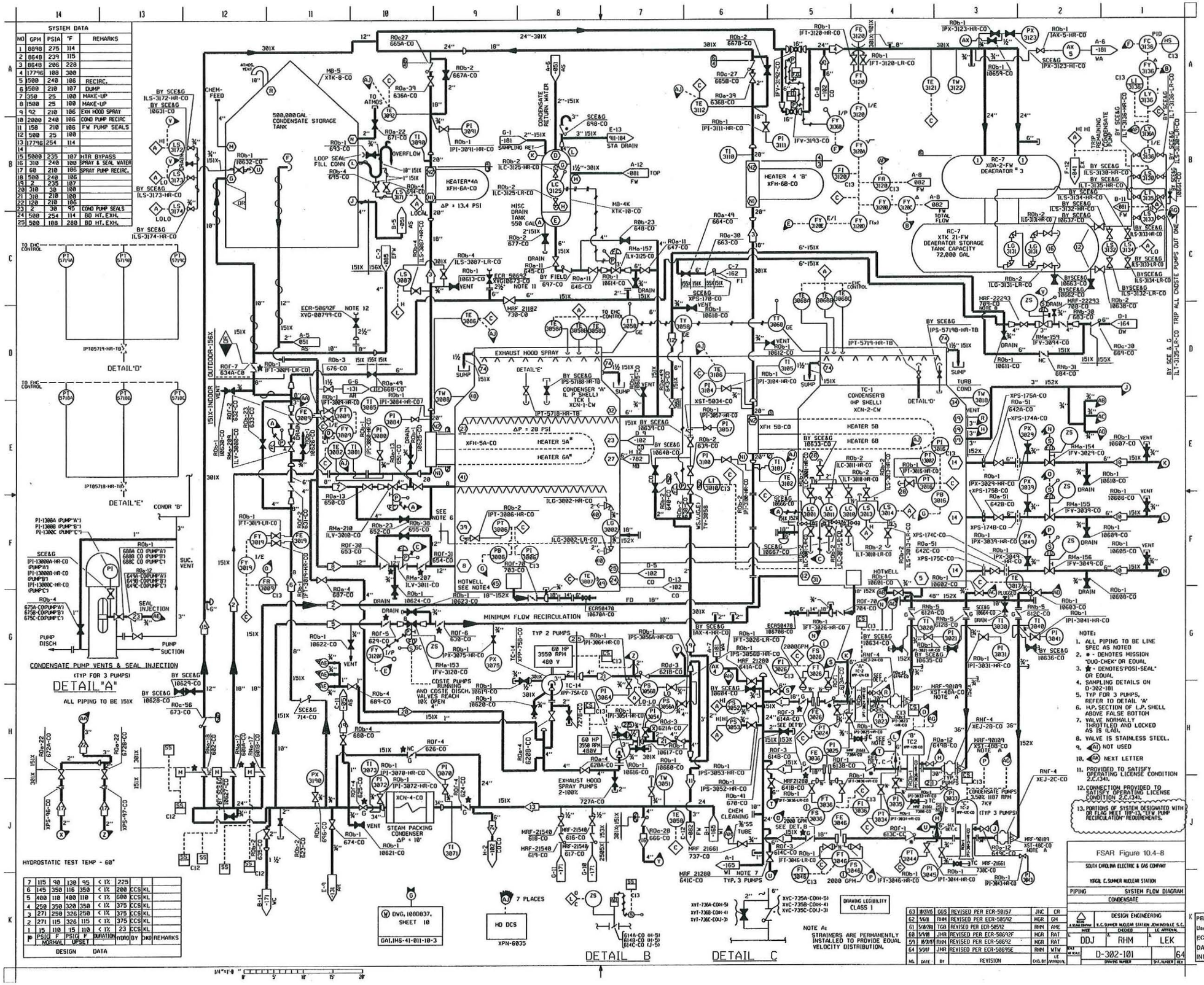
SYSTEM DATA
NO GPM PSIA °F REMARKS
1 8898 275 114
2 8648 239 115
3 8648 206 228
4 17796 108 300
5 1500 240 106 RECIRC.
6 1500 210 107 DUMP
7 350 25 100 MAKE-UP
8 1500 25 100 MAKE-UP
9 92 210 106 EXH HOOD SPRAY
10 2000 240 106 COND PUMP RECIRC
11 158 210 106 FW PUMP SEALS
12 500 25 100
13 17796 254 114
14
15 5000 235 107 HTR BYPASS
16 310 240 100 SPRAY & SEAL WATER
17 60 210 106 SPRAY PUMP RECIRC.
18 500 240 106
19 2 235 107
20 310 30 100
21 310 210 100
22 120 210 106
23 2 30 95 COND PUMP SEALS
24 500 254 114 BD HT.EXH.
25 500 108 200 BD HT.EXH.
500,000 GAL CONDENSATE STORAGE TANK
HEATER 4A XFH-6A-CO
HEATER 4 'B' XFH-6B-CO
RC-7 XDA-2-FW DEAERATOR # 3
RC-7 XTK 21-FW DEAERATOR STORAGE TANK CAPACITY 72,000 GAL
MISC DRAIN TANK 550 GAL
CONDENSATE RETURN WATER
EXHAUST HOOD SPRAY
CONDENSER 'A' (L P SHELL) TCK XCN-1-CW
TC-1 CONDENSER 'B' (HP SHELL) XCN-2-CW
HEATER 5A
HEATER 6A
HEATER 5B
HEATER 6B
MINIMUM FLOW RECIRCULATION
TYP 2 PUMPS
60 HP 3550 RPM 480 V
EXHAUST HOOD SPRAY PUMPS 2-100%
STEAM PACKING CONDENSER
CHEM CLEANING
CONDENSATE PUMPS 3,500 1187 RPM 7KV (TYP 3 PUMPS)
HOTWELL
DETAIL 'A'
DETAIL 'B'
DETAIL 'C'
DETAIL 'D'
DETAIL 'E'
CONDENSATE PUMP VENTS & SEAL INJECTION (TYP FOR 3 PUMPS)
ALL PIPING TO BE 151X
HYDROSTATIC TEST TEMP - 68°
DESIGN DATA
NORMAL UPSET
DWG.1080837, SHEET 10
7 PLACES
HD DCS
XPN-6035
DRAWING LEGIBILITY CLASS 1
NOTE A: STRAINERS ARE PERMANENTLY INSTALLED TO PROVIDE EQUAL VELOCITY DISTRIBUTION.
NOTE:
1. ALL PIPING TO BE LINE SPEC AS NOTED
2. ● - DENOTES MISSION 'DUO-CHEK' OR EQUAL
3. ★ - DENOTES 'POSI-SEAL' OR EQUAL
4. SAMPLING DETAILS ON D-302-181
5. TYP FOR 3 PUMPS, REFER TO DETAIL 'A'
6. H.P. SECTION OF L.P. SHELL ABOVE FALSE BOTTOM
7. VALVE NORMALLY THROTTLED AND LOCKED AS IS (L.H).
8. VALVE IS STAINLESS STEEL.
9. ◀A1 NOT USED
10. ◀AA NEXT LETTER
11. PROVIDED TO SATISFY OPERATING LICENSE CONDITION 2.C(34).
12. CONNECTION PROVIDED TO SATISFY OPERATING LICENSE CONDITION 2.C(34).
13. PORTIONS OF SYSTEM DESIGNATED WITH OR FLAG MEET 10P-13-"EFW PUMP RECIRCULATION" REQUIREMENTS.
FSAR Figure 10.4-8
SOUTH CAROLINA ELECTRIC & GAS COMPANY
VIRGIL C. SUMMER NUCLEAR STATION
PIPING SYSTEM FLOW DIAGRAM
CONDENSATE
DESIGN ENGINEERING
DDJ RHM LEK
D-302-101 64
PENDING/HOLD CHG
Use with reference to
ECR: 50592
DATE: 7-10-92
INITIALS: CVT
ESSENTIAL

SYSTEM DATA				
NO	GPM	PSIG	°F	REMARKS
1	128	13	120	
3	580	246	114	
4	167	238	208	

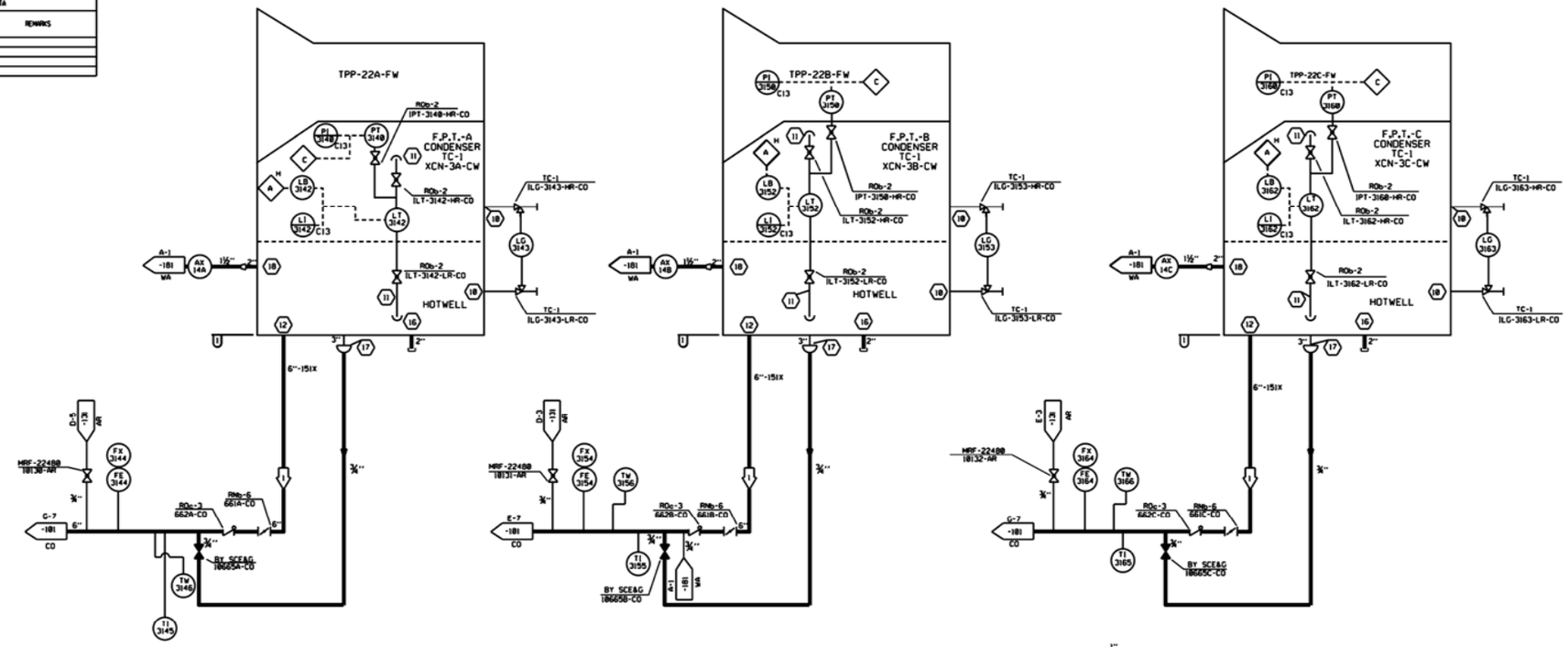

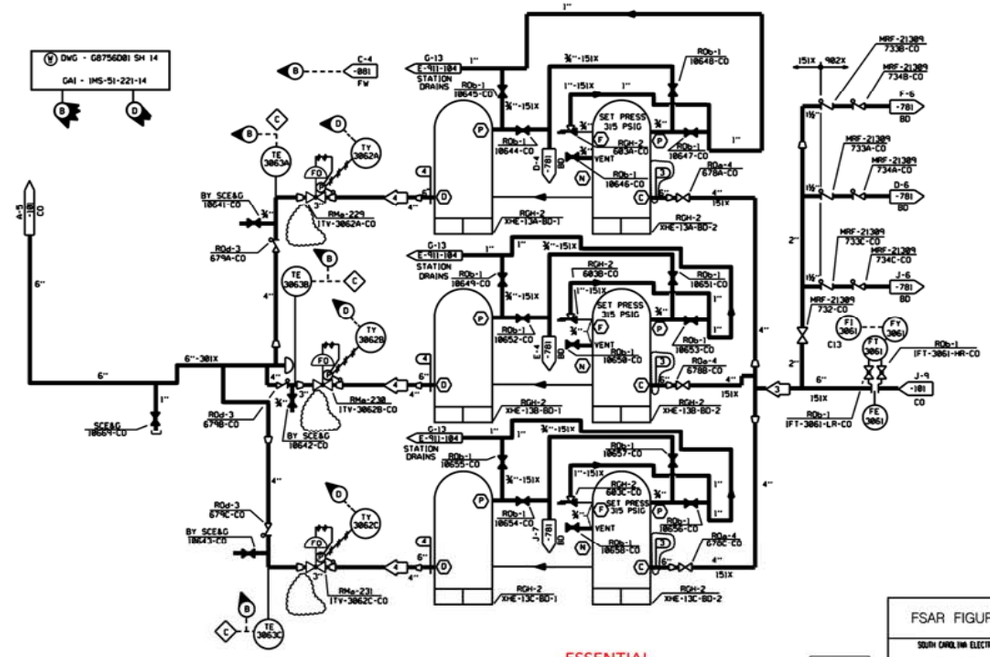

ESSENTIAL

4	300	348	SAME			450	KL	KL	
3	271	115	326	115	< 1%	375			
1	15	126°	SAME			23PSI	KL	KL	
III	PSIG	°F	PSIG	°F	DURA.	HYDRO	BY	CHKD	REMARKS
	NORMAL		UPSET						

DESIGN DATA

DRAWING CLASS LEGIBILITY 1

SCE&G CADD ENHANCED

28	9/24/98	JTS	REVISED PER ECR-50065	MGR	GK
27	4/9/03	JMR	CADD ENHANCED PER ECR-50239	MGR	DDJ
26	9/03/99	RHM	REVISED PER MRF-22553	MGR	JMW
25	2/14/98	TGB	REVISED PER ECR-50065	RHM	FSM
24	03/05/98	TGB	REVISED PER CGSS-99-052	TGB	MWD
29	4/1/18	JMR	REVISED PER CR-18-00310&ECM50065	AME	ASL

FSAR FIGURE 10.4-9

SOUTH CAROLINA ELECTRIC & GAS COMPANY

VIRGIL C. SUMMER NUCLEAR STATION

PIPING SYSTEM FLOW DIAGRAM

CONDENSATE-AUXILIARY CONDENSERS AND BLOWDOWN HEAT EXCHANGERS

DESIGN ENGINEERING

V. C. SUMMER NUCLEAR STATION JENKINSVILLE, S.C.

MADE	CHECKED	LE APPROVAL
DDJ	RHM	LEK

D-302-102 29

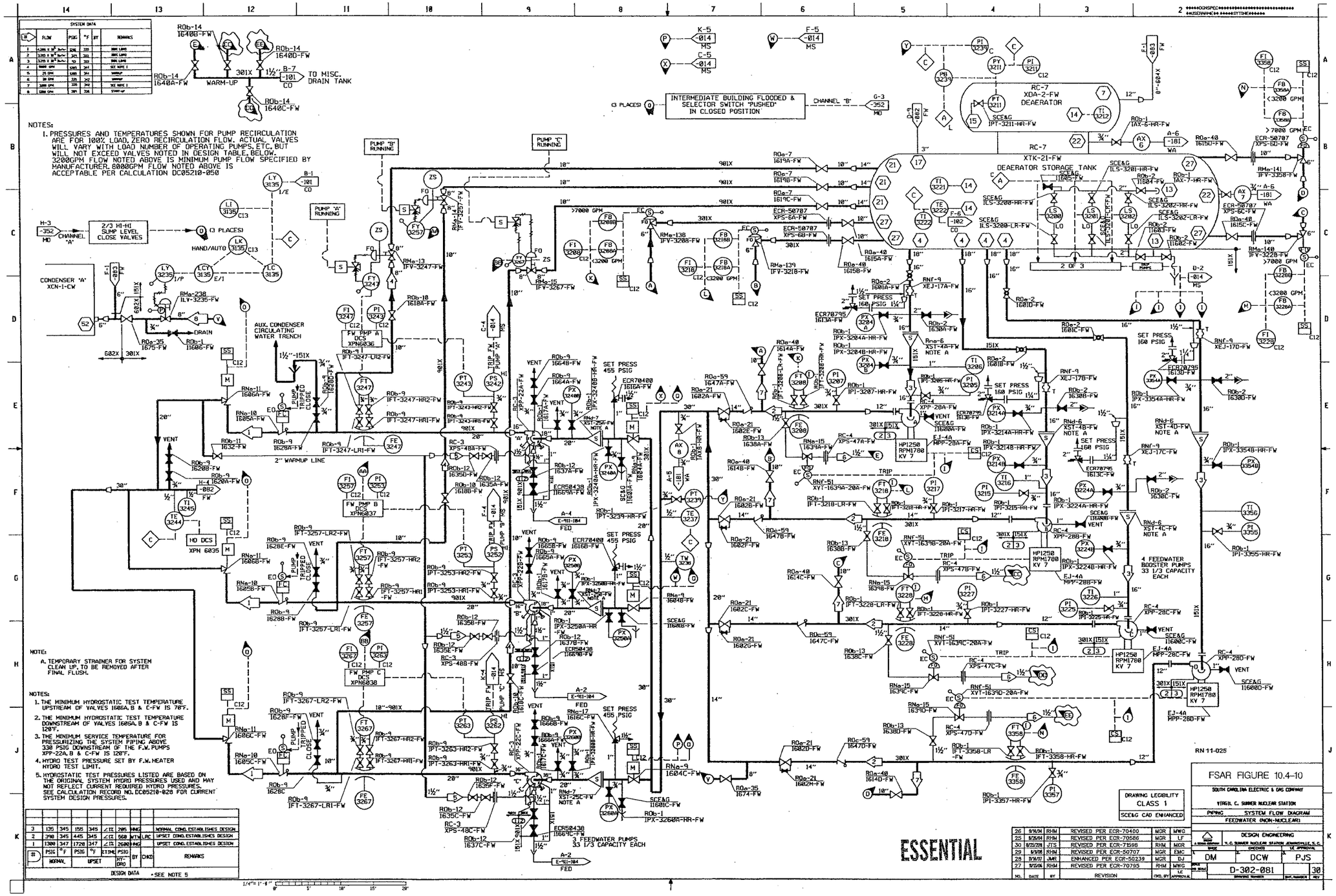
SYSTEM DATA
NOTES:
1. PRESSURES AND TEMPERATURES SHOWN FOR PUMP RECIRCULATION ARE FOR 100% LOAD, ZERO RECIRCULATION FLOW. ACTUAL VALVES WILL VARY WITH LOAD NUMBER OF OPERATING PUMPS, ETC. BUT WILL NOT EXCEED VALVES NOTED IN DESIGN TABLE, BELOW. 3200GPM FLOW NOTED ABOVE IS MINIMUM PUMP FLOW SPECIFIED BY MANUFACTURER. 8000GPM FLOW NOTED ABOVE IS ACCEPTABLE PER CALCULATION DC05210-050
NOTE:
A. TEMPORARY STRAINER FOR SYSTEM CLEAN UP, TO BE REMOVED AFTER FINAL FLUSH.
NOTES:
1. THE MINIMUM HYDROSTATIC TEST TEMPERATURE UPSTREAM OF VALVES 1605A, B & C-FW IS 70°F.
2. THE MINIMUM HYDROSTATIC TEST TEMPERATURE DOWNSTREAM OF VALVES 1605A, B & C-FW IS 120°F.
3. THE MINIMUM SERVICE TEMPERATURE FOR PRESSURIZING THE SYSTEM PIPING ABOVE 330 PSIG DOWNSTREAM OF THE F.W. PUMPS XPP-22A, B & C-FW IS 120°F.
4. HYDRO TEST PRESSURE SET BY F.W. HEATER HYDRO TEST LIMIT.
5. HYDROSTATIC TEST PRESSURES LISTED ARE BASED ON THE ORIGINAL SYSTEM HYDRO PRESSURES USED AND MAY NOT REFLECT CURRENT REQUIRED HYDRO PRESSURES. SEE CALCULATION RECORD NO. DC05210-028 FOR CURRENT SYSTEM DESIGN PRESSURES.
DESIGN DATA
• SEE NOTE 5
INTERMEDIATE BUILDING FLOODED & SELECTOR SWITCH 'PUSHED' IN CLOSED POSITION
CHANNEL "B"
2/3 HI-HI SUMP LEVEL CLOSE VALVES
CHANNEL "A"
CONDENSER "A" XCN-1-CW
AUX. CONDENSER CIRCULATING WATER TRENCH
2" WARMUP LINE
TO MISC. DRAIN TANK
WARM-UP
RC-7 XDA-2-FW DEAERATOR
RC-7 XTK-21-FW DEAERATOR STORAGE TANK
2 OF 3
4 FEEDWATER BOOSTER PUMPS 33 1/3 CAPACITY EACH
3 FEEDWATER PUMPS 33 1/3 CAPACITY EACH
ESSENTIAL
RN 11-025
DRAWING LEGIBILITY CLASS 1
SCE&G CAD ENHANCED
FSAR FIGURE 10.4-10
SOUTH CAROLINA ELECTRIC & GAS COMPANY
VIRGIL C. SUMMER NUCLEAR STATION
PIPING SYSTEM FLOW DIAGRAM
FEEDWATER (NON-NUCLEAR)
DESIGN ENGINEERING
DM DCW PJS
D-302-081
30

SYSTEM DATA				
#	FLOW	PSIG	°F	REMARKS
1	6.429×10^6 #/hr	1216	335	100% LOAD
2	6.429×10^6 #/hr	1190	376	100% LOAD
3	6.429×10^6 #/hr	1164	441	100% LOAD
4	126 GPM	205	115	SEAL INJECTION
5	42 GPM	ATMOS	135	SEAL LEAKOFF
6	114 GPM	115	350	HOT BLEED-OFF

TABLE 1	
TT 3487A	FT 3491A
TT 3487B	FT 3491B
TT 3488A	FT 3492A
TT 3488B	FT 3492B
TT 3489A	FT 3493A
TT 3489B	FT 3493B
TT 3490A	FT 3494A
TT 3490B	FT 3494B

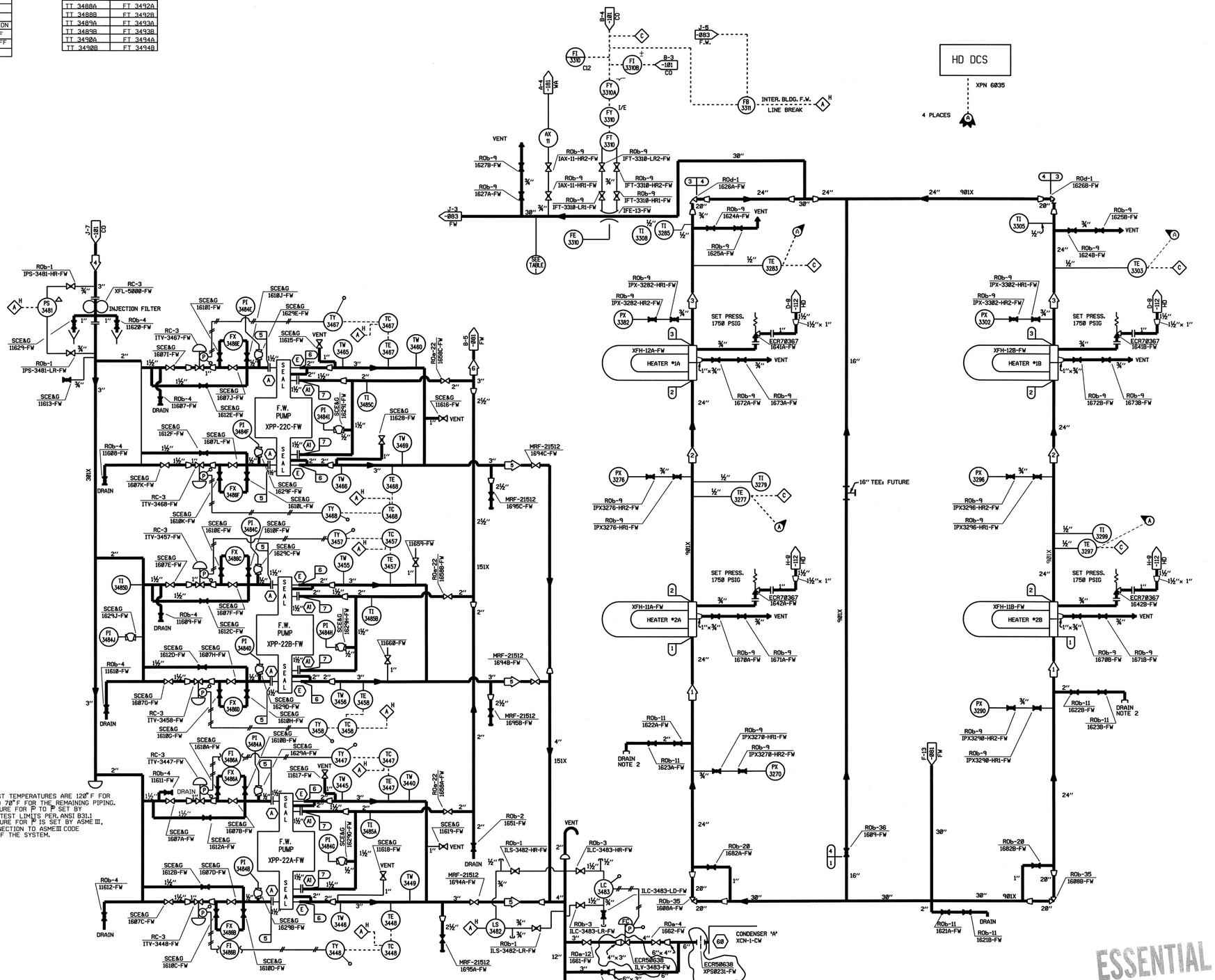

NOTE: MINIMUM HYDRO TEST TEMPERATURES ARE 120° F FOR THE 30" PIPING AND 70° F FOR THE REMAINING PIPING. HYDRO TEST PRESSURE FOR P TO P SET BY FW HEATER HYDRO TEST LIMITS PER, ANSI B31.1 HYDRO TEST PRESSURE FOR P IS SET BY ASME III, BY VIRTUE OF CONNECTION TO ASME III CODE CLASSED PORTION OF THE SYSTEM.

7	121	347	140	347	< 1%	180	HNG	NORMAL COND. ESTABLISHES DESIGN
6	10	135	10	135	< 1%	15	HNG	NORMAL COND. ESTABLISHES DESIGN
5	376	115	400	100	< 1%	565	HNG	NORMAL COND. ESTABLISHES DESIGN
4	1300	449	1720	449	< 1%	2150	HNG	UPSET COND. ESTABLISHES DESIGN
3	1300	449	1720	449	< 1%	2600	HNG	UPSET COND. ESTABLISHES DESIGN
2	1300	392	1720	392	< 1%	2600	HNG	UPSET COND. ESTABLISHES DESIGN
1	1300	347	1720	347	< 1%	2600	HNG	UPSET COND. ESTABLISHES DESIGN
#	PSIG	°F	PSIG	°F	% TIME	PSIG HYDRO	BY	CKD	REMARKS
	NORMAL		UPSET						
DESIGN DATA									*SEE NOTE 1

NOTES:

1. HYDROSTATIC TEST PRESSURES LISTED ARE BASED ON THE ORIGINAL SYSTEM HYDRO PRESSURES USED AND MAY NOT REFLECT CURRENT REQUIRED HYDRO PRESSURES. SEE CALCULATION RECORD NO. DC05210-028 FOR CURRENT SYSTEM DESIGN PRESSURES.
2. HOSE CONNECTION AVAILABLE TO SATISFY OPERATING LICENSE CONDITION 2.C.(34).

1/4" = 1'-0" 0' 5' 10' 15' 20'

ESSENTIAL

DRAWING LEGIBILITY CLASS 1

SCE&G CAD ENHANCED

NO.	DATE	BY	REVISION	CKD. BY	LE APPROVAL
24	5/20/08	RHM	REVISED PER ECR 50692A	MGR	RAT
23	10/30/03	JMR	REVISED PER ECR-70367	RHM	DDJ
22	6/16/03	JTS	ENHANCED PER ECR-50239	MGR	DDJ
21	9/12/01	RHM	REVISED PER MRF-22553	MGR	JMW
20	1/30/01	TGB	REVISED PER ECR-50092	MGR	TLW
25	11/10/09	DDJ	REVISED PER ECR-50638	RHM	AME

RN 08-031

FSAR FIGURE 10.4-11

SOUTH CAROLINA ELECTRIC & GAS COMPANY

VIRGIL C. SUMMER NUCLEAR STATION

PIPING SYSTEM FLOW DIAGRAM

FEEDWATER (NON-NUCLEAR)

BOEING A SCWA COMPANY — DESIGN ENGINEERING — V. C. SUMMER NUCLEAR STATION JENKINSVILLE, S. C.

MADE	CHECKED	LE APPROVAL
1. RHM	2. MGR	3. WHM

SCALE NO SCALE — D-302-082 — SHT. NUMBER — REV 25

DRAWING NUMBER

SYSTEM DATA				
#	FLOW	PSIG	°F	REMARKS
1	4.286×10^6 lb/hr	1029	441	100% LOAD
2	1.07×10^6 lb/hr	1136	325	0-25% LOAD
3	170 GPM	1136	225	STARTUP
4	295 GPM	1138	95	NORMAL STARTUP
5	1500 GPM	275	225	STARTUP/FWBP's ONLY

(AC) NEXT LETER

NOTES:

1. PIPING WITHIN THESE FLAGS IS TO MEET ALL THE REQUIREMENTS, EXCEPT FOR STAMPING, OF ASME CODE SECTION III, CLASS 2; AND IS SPECIFICALLY INCLUDED IN THE SCOPE OF SPEC SP-544-044461-000.
2. ROb47 SHOULD BE AS NEAR TO RNv8 AS POSSIBLE AND ALL THESE VALVES SHOULD BE PLACED FOR EASY OPERATION (ONCE A YEAR).
3. ALL (L) STATUS LIGHTS INDICATE BOTH OPEN AND CLOSED POSITIONS, UNLESS NOTED OTHERWISE.
5. CHECK VALVES 1839A, B, C-EF AND 1839A, B, C-EF WERE REMOVED BY MCN-90003H, DUE TO SYSTEM CONFIGURATION AND OPERATION. DESIGN AND PIPING SPECIFICATIONS REMAIN UNCHANGED. SEE CALCULATION DC05228-841 FOR DETAILS.
6. HYDROSTATIC TEST PRESSURES LISTED ARE BASED ON THE ORIGINAL SYSTEM HYDRO PRESSURES USED AND MAY NOT REFLECT CURRENT REQUIRED HYDRO PRESSURES. SEE CALCULATION RECORD MCL DC05218-020 FOR CURRENT DESIGN PRESSURES.
7. THE SOLENOID IS MECHANICALLY SPARED IN PLACE IN THE DE-ENERGIZED STATE.
8. CONNECTION PROVIDED OR AVAILABLE TO SATISFY OPERATING LICENSE CONDITION 2.C.(34).
9. THE DISC ON THE FW SYSTEM SIDE OF XVG11670-FW, XVG11671-FW, AND XVG11672-FW CONTAINS A 1/4" DRILLED HOLE AS AN INTERNAL EQUALIZER, THUS MAKING THESE VALVES NON BI-DIRECTIONAL. CREDIT CAN ONLY BE TAKEN FOR EFFECTIVE ISOLATION FOR THESE VALVES IN THEIR INTENDED CONTAINMENT BOUNDARY CONFIGURATION.

SAFETY CLASS VERIFICATION	
ORIGINATED BY	J.R.REED 2-14-74
REVIEWED BY	D.FERRIGAL 2-22-78

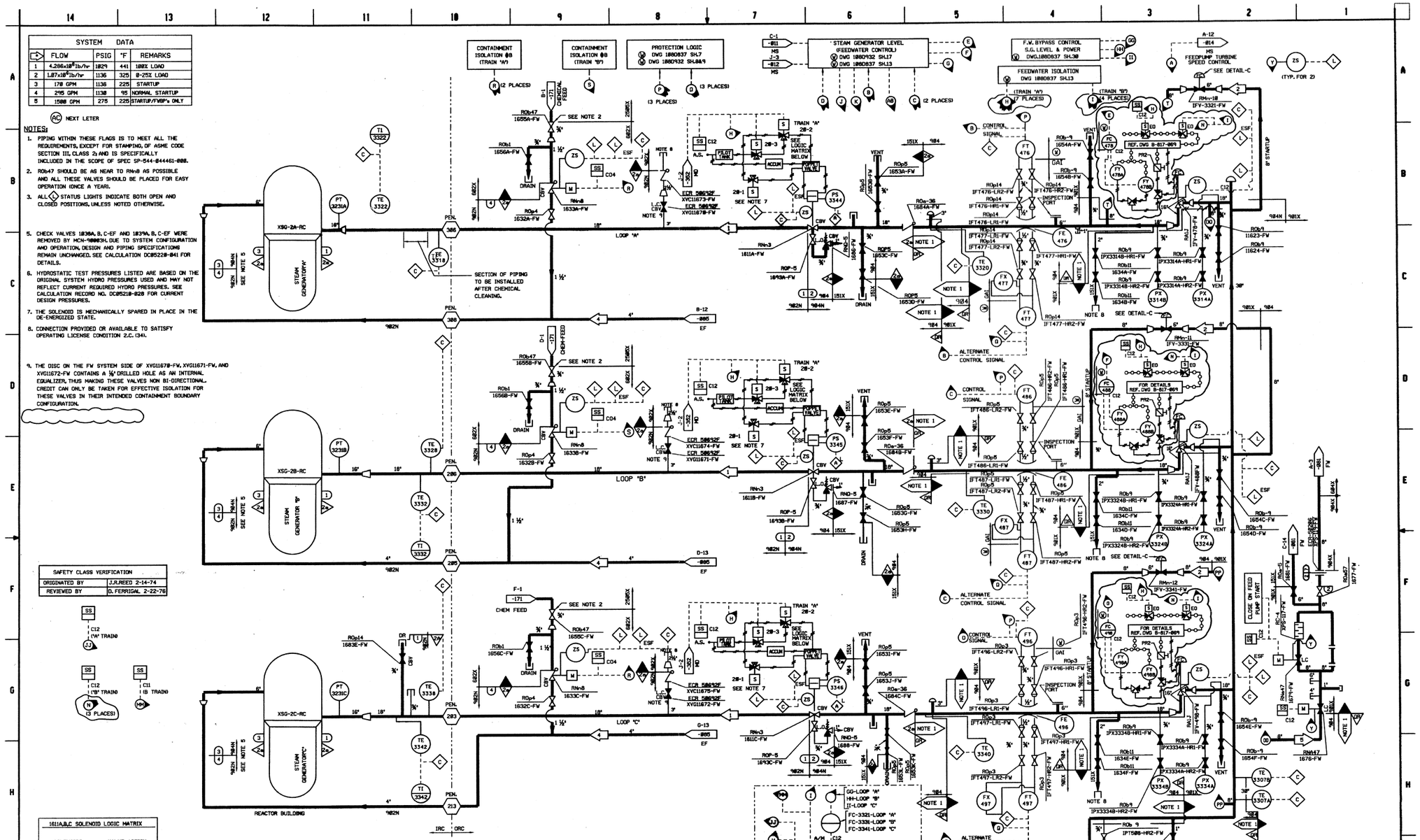

1811A,B,C SOLENOID LOGIC MATRIX		
SOLENOIDS #2	SOLENOIDS #3	VALVE ACTION
0	0	CLOSE
1	0	OPEN
0	1	OPEN
1	1	OPEN

0 = DE-ENERGIZED
1 = ENERGIZED

NOTE: MINIMUM HYDRO TEST TEMPERATURES ARE 128°F FOR THE STEAM GENERATOR AND 38° FEEDWATER PIPING AND 78°F FOR THE REMAINING PIPING.

7	400	449	500	449	<1%	-			WARM-UP
6	285	225	285	449		-	RB		
5	1185	600	1384	600	<1%	1400	DTK		WARM-UP
4	1220	150	1360	95	<1%	1400	EJA		NORMAL COND. ESTABLISHES DESIGN
3	1220	600	1360	600	<1%	1400	EJA		NORMAL COND. ESTABLISHES DESIGN
2	1300	449	1720	449	<1%	2150	HNG		UPSET COND. ESTABLISHES DESIGN
1	1100	449	1350	449	<1%	1400	WTW	LRC	NORMAL COND. ESTABLISHES DESIGN
#	PSIG	F	PSIG	F	%TIME	PSIG	BY	CHK'D	REMARKS
	NORMAL		UPSET			HYDRO			
	DESIGN DATA * SEE NOTE 6								

NO.	DATE	BY	REVISION	CKD. BY	APPROVAL
54	11/7/08	TGB	REVISED PER ECR-50583A	RHM	RJK
53	5/7/08	RHM	REVISED PER ECR-50708, ECR-50678 AND ECR-50692F	RHM	TW
					RAT
					BCB
52	12/15/07	RHM	REVISED PER ECR-50692A	MGR	RAT
51	2/5/02	JMR	REVISED PER ECR-70832	MGR	JEG
50	6/14/02	JMR	REVISED PER ECR-70025	MGR	JEG

DRAWING LEGIBILITY CLASS 1
SCE&G CAD ENHANCED

THIS IS A NUCLEAR SAFETY RELATED DOCUMENT. NO DEVIATION SHALL BE INITIATED OR PERFORMED WITHOUT PRIOR DOCUMENTATION AND WRITTEN APPROVAL.

FSAR FIGURE 10.4-12

SOUTH CAROLINA ELECTRIC & GAS COMPANY
VIRGIL C. SUMMER NUCLEAR STATION

PIPING — SYSTEM FLOW DIAGRAM
FEEDWATER (NUCLEAR)
DESIGN ENGINEERING
A BURNS COMPANY — V. C. SUMMER NUCLEAR STATION, JENKINSVILLE, S.C.

DRAWN	CHECKED	LE APPROVAL
RHM	MGR	JEW

SCALE: 1/4" = 1'-0"
DRAWING NUMBER: D-302-083
SHT. NUMBER: 54
REV.

SYSTEM DATA				
#	GPM	PSIG	°F	REMARKS
1	111	1893	557	MAX. BD RATE
2	1	130	120	SAMPLE FLOW
3	84	1800	120	MAX. BD RATE
4	250	40	120	MAX. BD RATE

DUPONT CLASS VERIFICATIONS	
DESIGNED BY	EJA 3-13-74
REVIEWED BY	RHK 3-22-74

ISOLATION VALVES CLOSE SIGNALS
1. CONTAINMENT ISOLATION SIGNAL PHASE 'A'
* 2. START OF EMERGENCY F.W. SYSTEM
NOTE:
A MANUAL OVERRIDE IS PROVIDED FOR SIGNAL (*) ABOVE.

SWITCHES FOR THESE VALVES ARE PROVIDED ON MAIN CONTROL BD (XCP-6112). A COMMON SWITCH IS USED FOR 'B' TRAIN VALVES.

HIGH RADIATION SIGNAL FROM RM-L3 CLOSES VALVE 524 & OPENS VALVES 525 & 541.

HIGH RADIATION SIGNAL FROM RM-L10 CLOSES VALVE 547

NOTES:
1. ALARMS LOCATED ON NUCLEAR BLOWDOWN PROCESSING PANEL (OPN8029) WITH ONE COMMON ALARM ON THE MAIN CONTROL BOARD.
2. QUALITY RELATED PER TRP-13, SECTION 9. PIPING CONTROLLED FOR BREAK ELIMINATION ANALYSIS.
3. HOSE CONNECTION AVAILABLE TO SATISFY OPERATING LICENSE CONDITION 2.C.(34).

ESSENTIAL

THIS IS A NUCLEAR SAFETY RELATED DOCUMENT. NO DEVIATION SHALL BE INITIATED OR PERFORMED WITHOUT PRIOR DOCUMENTATION AND WRITTEN APPROVAL

HYDROSTATIC TEST TEMP. TO BE 60°

#	PSIG (NORMAL)	°F (NORMAL)	PSIG (UPSET)	°F (UPSET)	DURA. (UPSET)	HY-DRO	BY	CHKD	REMARKS
4	40	125	40	125	<1%	60	JJW	PLS	
3	1185	125	1384	600	<1%	1490	EJA	KL	
2	1185	125	1384	600	<1%	1490	EJA	KL	
1	1185	600	1384	600	<1%	1490	EJA	KL	

DESIGN DATA

NO.	DATE	BY	REVISION	CHD. BY	LE APPROVAL
27	7/8/03	JMR	CADD ENHANCED PER ECR-50239	MGR	DDJ
26	9/15/97	AVN	REVISED PER CGSS-97-0579	LEK	MGR
31	12/8/07	RHM	REVISED PER ECR 50692A	MGR	RAT
30	8/4/06	RHM	REVISED PER ECR-70876	MGR	CCB
29	04/25/06	JTS	REVISED PER ECR-70799	MGR	LHF
28	7/13/04	DDJ	REVISED PER ECR-70481	MGR	CCB

DRAWING LEGIBILITY CLASS 1

SCE&G CAD ENHANCED

RN 07-028
November 2008

DESIGN ENGINEERING
V. C. SUMMER NUCLEAR STATION JENKINSVILLE, S. C.

MADE	CHECKED	LE APPROVAL
TAK	DCW	PJS

DRAWING NUMBER: D-302-781 — SHT. NUMBER: 31 — REV.

FSAR Figure 10.4-13

SOUTH CAROLINA ELECTRIC & GAS COMPANY
VIRGIL C. SUMMER NUCLEAR STATION
PIPING — SYSTEM FLOW DIAGRAM
STEAM GENERATOR BLOWDOWN

SYSTEM DATA					
ID	GPM	PSIG		ΔP	REMARKS
1	80	100			1 STM. GEN. (1 NON GRAD)
2	160	100			2 STM. GEN. (1 NON GRAD)
3	250	100			3 STM. GEN. (1 NON GRAD)
4	250	100			
5	500	100			SEE NOTE 2
6	25	100			
8	40	35			30 SEC EVERY 30 MINUTES

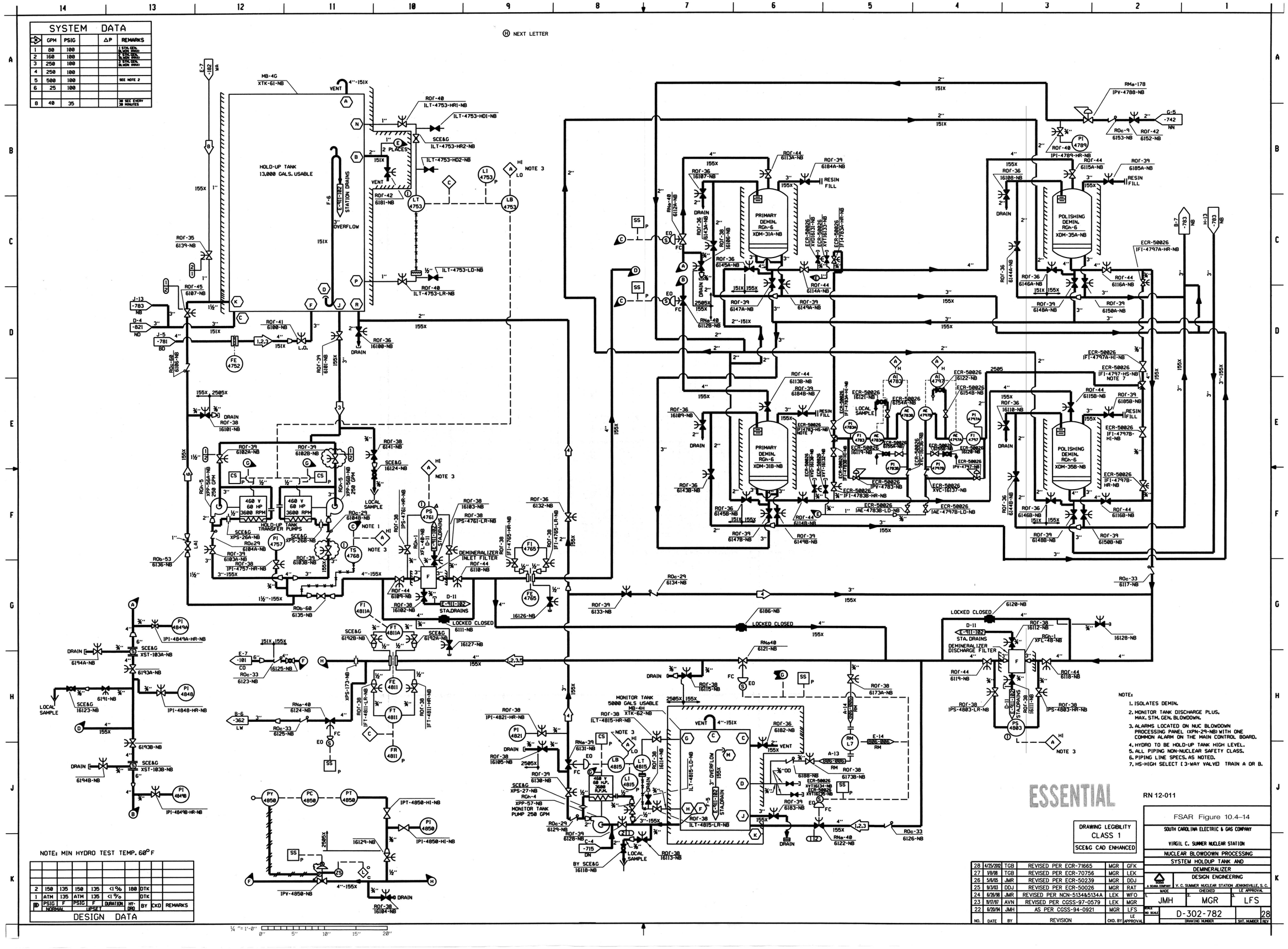

NO.	DATE	BY	REVISION	CKD. BY	LE APPROVAL
28	4/25/2012	TGB	REVISED PER ECR-71665	MGR	GFK
27	1/9/08	TGB	REVISED PER ECR-70756	MGR	LEK
26	5/6/05	JMR	REVISED PER ECR-50239	MGR	DDJ
25	9/3/03	DDJ	REVISED PER ECR-50026	MGR	RAT
24	6/26/98	JMR	REVISED PER NCN-5134&5134A	LEK	WFO
23	11/17/97	AVN	REVISED PER CGSS-97-0579	LEK	MGR
22	6/20/94	JMH	AS PER CGSS-94-0921	MGR	LFS

SYSTEM DATA					
#	SCFM	PSIG	°F	ΔP	REMARKS

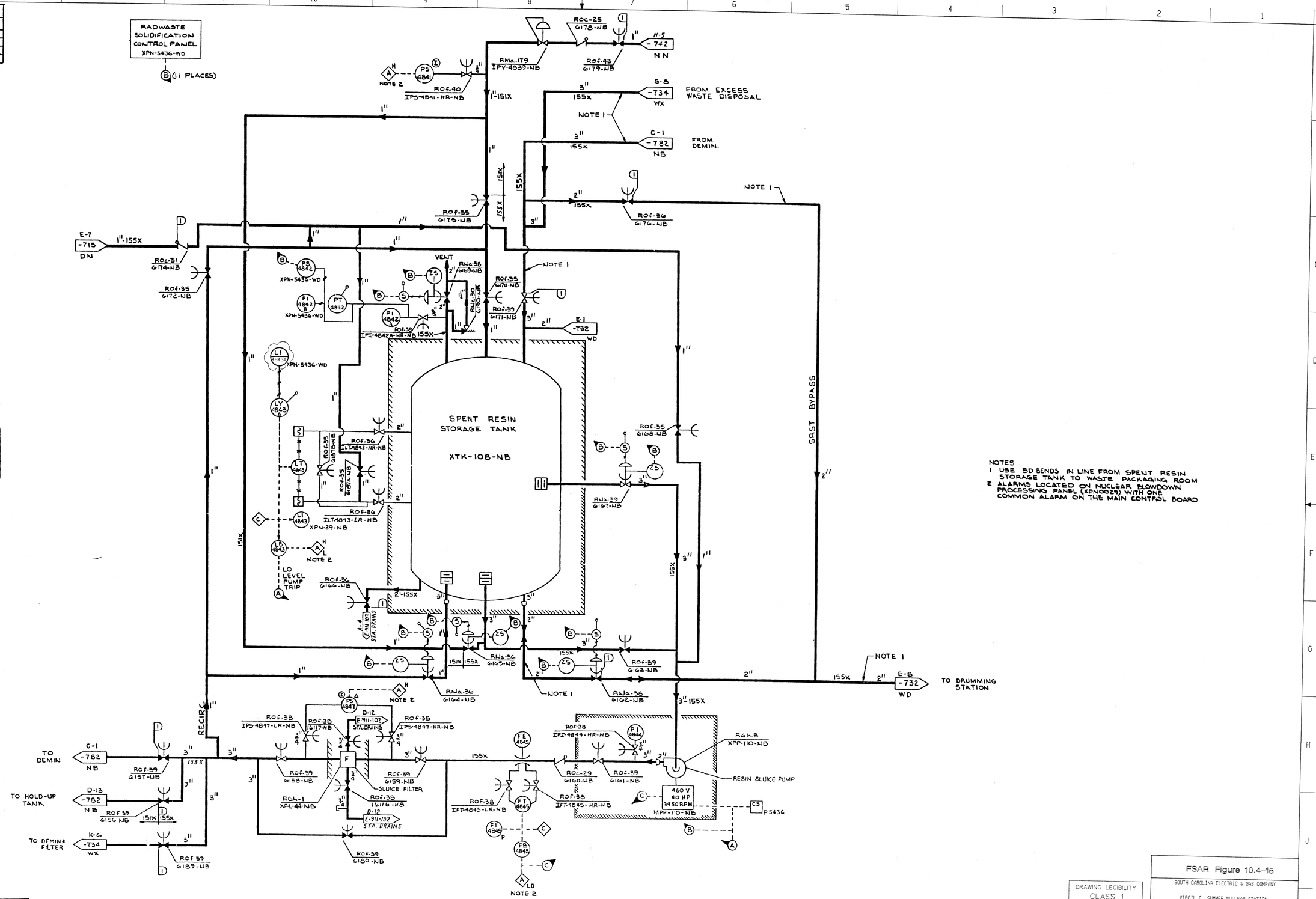

VALVE NUMBERING		
ND	16100	- 16124
UB	6100	6199
SYSTEM SUFFIX	FIRST NO	LAST NO

ROF 38 9

NOTE: MIN. HYDRO TEST TEMP. 60°F

DESIGN DATA									
1	150	70	150	70	<1%	180	DTK		
P	PSIG	°F	PSIG	°F	DURA-TION	HYDRO	BY	CHKD	REMARKS
	NORMAL		UPSET						

NO.	DATE	BY	REVISION	CKD. BY	LE APPROVAL
15	8/26/04	RHM	REVISED PER ECR-70576	MGR	SL
14	10/18/01	DDJ	REVISED PER ECR-70028	MGR	DDJ
13	08/13/82	JEV	REVISED PER SFRB-5040	PS	PJS

DRAWING LEGIBILITY CLASS 1

SCE&G CAD ENHANCED

FSAR Figure 10.4-15

SOUTH CAROLINA ELECTRIC & GAS COMPANY

VIRGIL C. SUMMER NUCLEAR STATION

PIPING — SYSTEM FLOW DIAGRAM

NUCLEAR BLOWDOWN PROCESSING SYSTEM

SPENT RESIN STORAGE TANK

DESIGN ENGINEERING

A SCANA COMPANY — V. C. SUMMER NUCLEAR STATION JENKINSVILLE, S. C.

MADE: HEW — CHECKED: DM — LE APPROVAL: PJS

SCALE: NO SCALE — D-302-783 — SHT. NUMBER 15 — REV

302783_0001.m Printed by rm15043 Friday August 27 2004 12:13:43 PM EDT

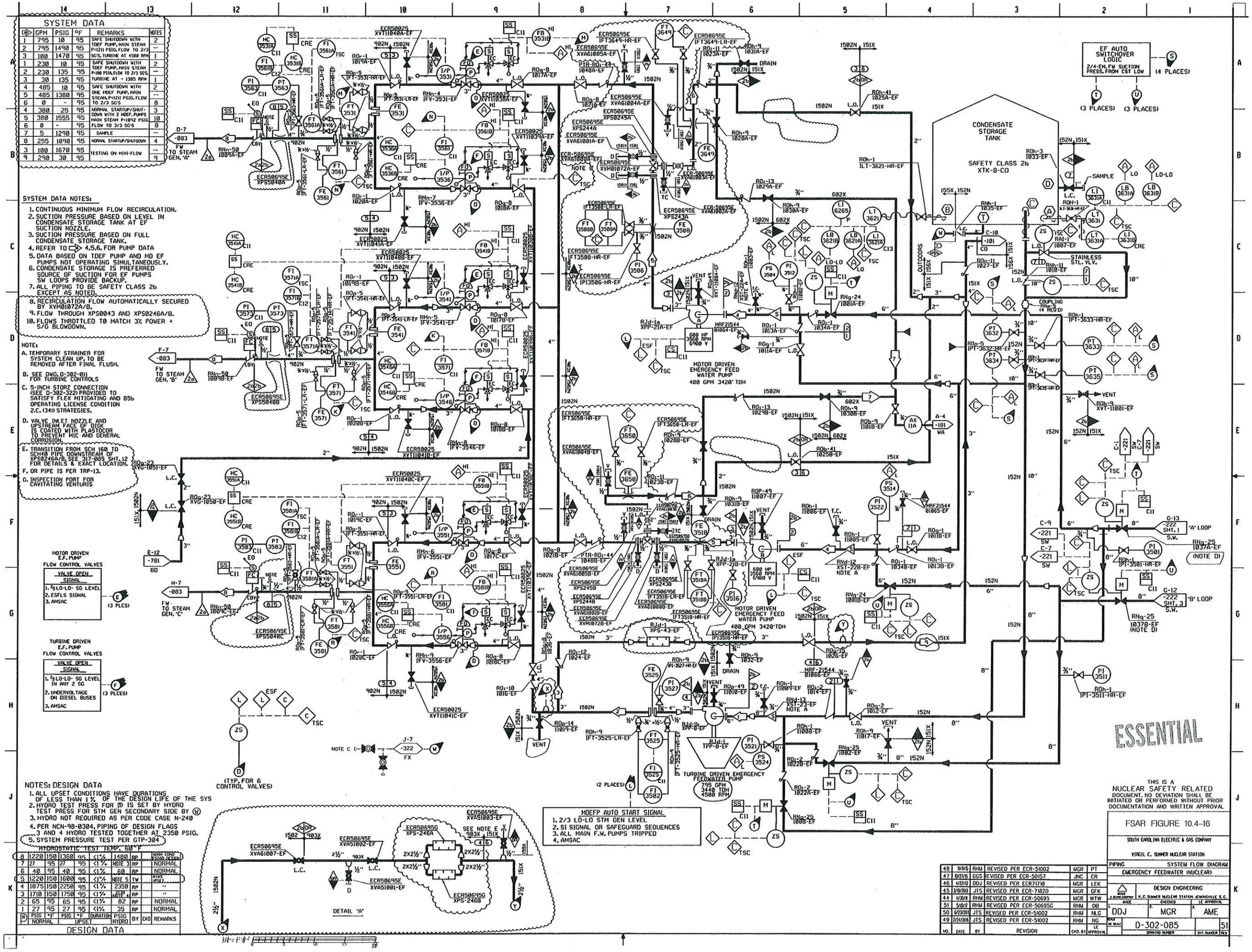

SYSTEM DATA

⊕	GPM	PSIG	°F	REMARKS	NOTES
1	795	10	95	SAFE SHUTDOWN WITH TDEF PUMP, MAIN STEAM P=1211 PSIG, FLOW TO 2/3 SG'S, TURBINE AT 4500 RPM	2
2	795	1490	95		—
3	100	1470	95		—
1	230	10	95	SAFE SHUTDOWN WITH TDEF PUMP, MAIN STEAM P=IN PSIA, FLOW TO 2/3 SG'S, TURBINE AT ~ 1305 RPM	2
2	230	135	95		—
3	30	135	95		1
4	485	10	95	SAFE SHUTDOWN WITH ONE MDEF PUMP, MAIN STEAM, P=1211 PSIG, FLOW TO 2/3 SG'S	2
5	485	1380	95		—
6	0	-	95		8
4	380	25	95	NORMAL STARTUP/SHUTDOWN WITH 2 MDEF PUMPS MAIN STEAM P=1892 PSIG, FLOW TO 2/3 SG'S	3
5	380	1555	95		10
6	0	-	95		8
7	5	1290	95	SAMPLE	—
8	255	1090	95	NORMAL STARTUP/SHUTDOWN	4
3	100	1670	95	TESTING ON MINI-FLOW	—
9	290	30	95		9

SYSTEM DATA NOTES:

1. CONTINUOUS MINIMUM FLOW RECIRCULATION.
2. SUCTION PRESSURE BASED ON LEVEL IN CONDENSATE STORAGE TANK AT EF SUCTION NOZZLE.
3. SUCTION PRESSURE BASED ON FULL CONDENSATE STORAGE TANK.
4. REFER TO ⊕ 4,5,6, FOR PUMP DATA
5. DATA BASED ON TDEF PUMP AND MD EF PUMPS NOT OPERATING SIMULTANEOUSLY.
6. CONDENSATE STORAGE IS PREFERRED SOURCE OF SUCTION FOR EF PUMPS SW LOOPS PROVIDE BACKUP.
7. ALL PIPING TO BE SAFETY CLASS 2b EXCEPT AS NOTED.
8. RECIRCULATION FLOW AUTOMATICALLY SECURED BY XVM01072A/B.
9. FLOW THROUGH XPS0043 AND XPS0246A/B.
10. FLOWS THROTTLED TO MATCH 3% POWER + S/G BLOWDOWN.

NOTE:

A. TEMPORARY STRAINER FOR SYSTEM CLEAN UP, TO BE REMOVED AFTER FINAL FLUSH.

B. SEE DWG. D-302-011 FOR TURBINE CONTROLS

C. 5-INCH STORZ CONNECTION (SEE D-302-322) PROVIDED TO SATISFY FLEX MITIGATING AND B5b OPERATING LICENSE CONDITION 2.C.(34)) STRATEGIES.

D. VALVE INLET NOZZLE AND UPSTREAM FACE OF DISK IS COATED WITH PLASTOCOR TO PREVENT MIC AND GENERAL CORROSION.

E. TRANSITION FROM SCH 160 TO SCH40 PIPE DOWNSTREAM OF XPS0246A/B, SEE 317-085 SHT.12 FOR DETAILS & EXACT LOCATION.

F. OR PIPE IS PER TRP-13.

G. INSPECTION PORT FOR CAVITATING VENTURIS

NOTES: DESIGN DATA

1. ALL UPSET CONDITIONS HAVE DURATIONS OF LESS THAN 1% OF THE DESIGN LIFE OF THE SYS
2. HYDRO TEST PRESS FOR ⊕ IS SET BY HYDRO TEST PRESS FOR STM GEN SECONDARY SIDE BY ⊕
3. HYDRO NOT REQUIRED AS PER CODE CASE N-240
4. PER NCN-98-0304, PIPING OF DESIGN FLAGS 3 AND 4 HYDRO TESTED TOGETHER AT 2350 PSIG.
5. SYSTEM PRESSURE TEST PER GTP-304

HYDROSTATIC TEST TEMP. 60°F

⊕	PSIG	°F	PSIG	°F	DURATION	PSIG HYDRO	BY	OKD	REMARKS
	NORMAL		UPSET						
8	1220	150	1350	95	<1%	1490	RP		NORM COND ROOM SCALE
7	27	95	27	95	<1%	NOTE 3	RP		NORMAL
6	40	95	40	95	<1%	60	RP		NORMAL
5	1220	150	1600	95	<1%	NOTE 5	TW		ATWS UPSET
4	1875	150	2250	95	<1%	2350	RP		"
3	1710	150	1750	95	<1%	STEP NOTE 4	RP		"
2	65	95	65	95	<1%	82	RP		NORMAL
1	27	95	27	95	<1%	35	RP		NORMAL

DESIGN DATA

NO.	DATE	BY	REVISION	CKD. BY	LC APPROVAL
48	11/1/16	RHM	REVISED PER ECR-51002	MGR	PT
47	10/27/16	GGS	REVISED PER ECR-50157	JNC	CR
46	4/22/13	DDJ	REVISED PER ECR71718	MGR	LEK
45	3/18/08	JTS	REVISED PER ECR-71820	MGR	GFK
44	4/3/14	RHM	REVISED PER ECR-50695	MGR	WTW
51	5/9/17	RHM	REVISED PER ECR-50695G	RHM	DB
50	6/13/2016	JTS	REVISED PER ECR-51002	RHM	NLG
49	2/24/2016	JTS	REVISED PER ECR-51002	RHM	NG

SYSTEM DATA					
NO.	GPM	PSIG			REMARKS
1	100	100			
2	250	110			MAX. NORMAL OPERATION
3	350	110			

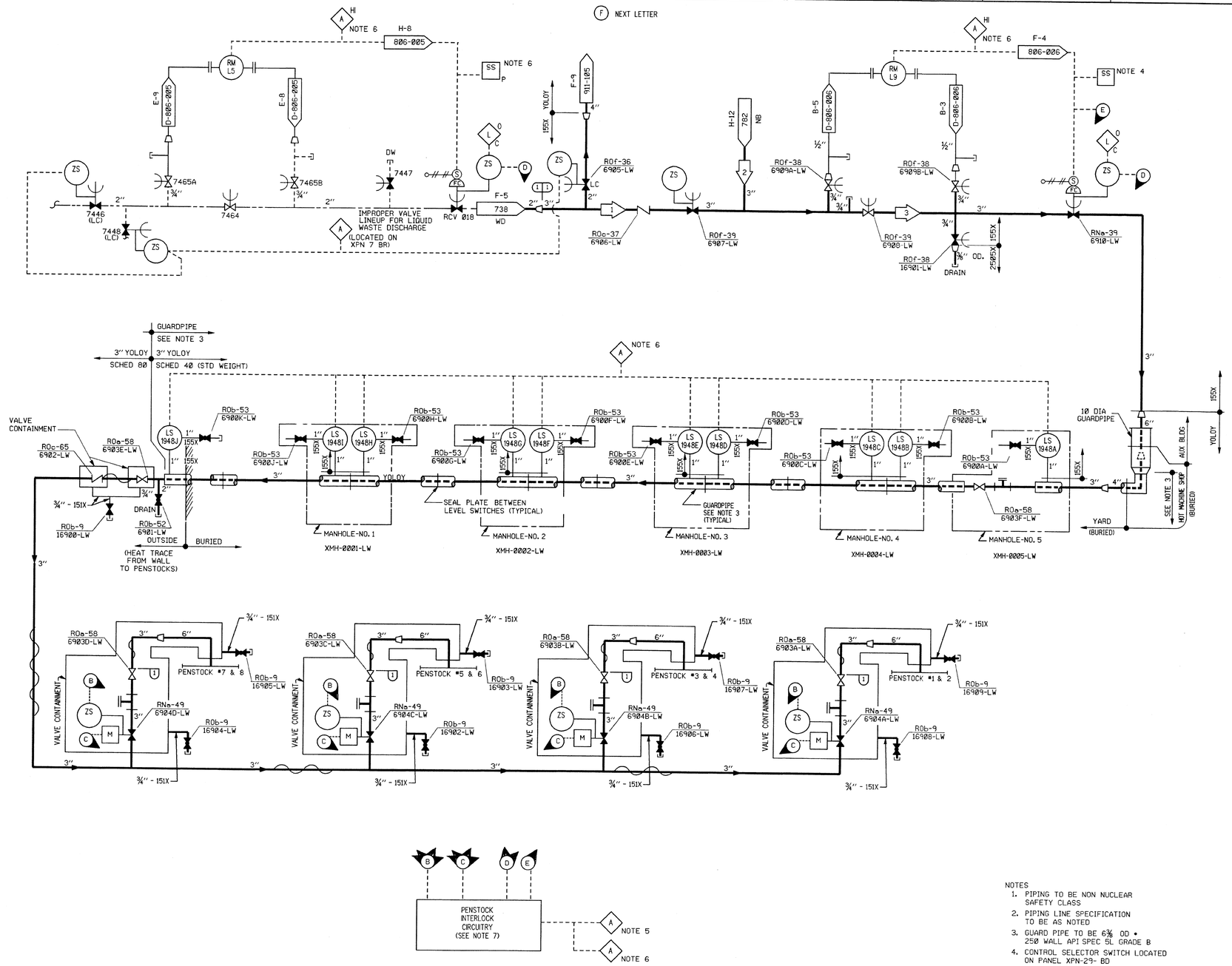

NOTES
1. PIPING TO BE NON NUCLEAR SAFETY CLASS
2. PIPING LINE SPECIFICATION TO BE AS NOTED
3. GUARD PIPE TO BE 6⅝ OD • 250 WALL API SPEC 5L GRADE B
4. CONTROL SELECTOR SWITCH LOCATED ON PANEL XPN-29- BD
5. ANNUNCIATION AT PUMPED STORAGE PLANT WHEN 6904 VALVE IS OPEN & IT'S ASSOCIATED GENERATION UNIT IS BELOW THE SPECIFIED GENERATION LEVEL
6. LOCATED ON PANEL XPN-7-BR
7. REFERENCE GIBBS & HILL DIAGRAM M-3CA (GAI DWG 1MS-09-186-SH. 1.)

ESSENTIAL

RN 03-025
August 2003

DRAWING CLASS LEGIBILITY 1

MIN HYDRO TEST TEMP. 40°F

NO.	PSIG (NORMAL)	°F (NORMAL)	PSIG (UPSET)	F (UPSET)	DURATION (UPSET)	HYDRO	BY	CHK'D	REMARKS
1	110	100	125	135	< 1%	180	DJK		

DESIGN DATA

NO.	DATE	BY	REVISION	CKD. BY	LE APPROVAL
10	5/20/03	JTS	CADD ENHANCED PER ECR-50239	MGR	DDJ
09	8/1/96	RHM	REVISED PER MRF-22467	MGR	RLB
08	10/26/92	SRM	REVISED PER CGSS-29153-DE.	RHM	GAR

FSAR Figure 10.4–17

SOUTH CAROLINA ELECTRIC & GAS COMPANY

VIRGIL C. SUMMER NUCLEAR STATION

PIPING — SYSTEM FLOW DIAGRAM

LIQUID EFFLUENTS FROM NUCLEAR PLANT TO FAIRFIELD PENSTOCK

SCE&G A SCANA COMPANY — DESIGN ENGINEERING — V. C. SUMMER NUCLEAR STATION JENKINSVILLE S. C.

MADE: SRM — CHECKED: RHM — LE APPROVAL: GAR

SCALE: NO SCALE — DRAWING NUMBER: D-302-362 — SHT. NUMBER: 10 — REV

302362_0001.nm Printed by dj14998 Tuesday July 01 2003 02:17:48 PM EDT