MA4

REGULATORY INFORMATION DISTRIBUTION SYSTEM (RIDS)

ACCESSION NBR:8309210020 DOC.DATE: 83/09/09 NOTARIZED: NO DOCKET #
FACIL:50-410 Nine Mile Point Nuclear Station, Unit 2, Niagara Moha 05000410
AUTH.NAME AUTHOR AFFILIATION
MANGAN,C.V. Niagara Mohawk Power Corp.
RECIP.NAME RECIPIENT AFFILIATION
EISENHUT,D.G. Division of Licensing

SUBJECT: Forwards util response to acceptance review Requests E-320.1 & 320.2 re cost analysis & present worth values, respectively. see rpt.

DISTRIBUTION CODE: ZZZZS COPIES RECEIVED:LTR 1 ENCL 8 SIZE: 12+200
TITLE: * * * * * * S P E C I A L D I S T R I B U T I O N C O D E * * * * *

NOTES:PNL 1cy FSAR'S & AMDTS ONLY. 05000410
Dist Per M. Haughey

RECIPIENT ID CODE/NAME	COPIES LTTR	COPIES ENCL	RECIPIENT ID CODE/NAME	COPIES LTTR	COPIES ENCL
NOTES:	1	1			
POR	1	1			
LPDR	1	1			
NSIC	1	1			
NTIS	1	1			
Reg File	1	1			
AEAB/Bull Lambe	1	1			

TOTAL NUMBER OF COPIES REQUIRED: LTTR 7 ENCL 7

NIAGARA MOHAWK

NIAGARA MOHAWK POWER CORPORATION/300 ERIE BOULEVARD WEST, SYRACUSE, N.Y. 13202/TELEPHONE (315) 474-1511

September 9, 1983
(7393)

Mr. Darrell G. Eisenhut, Director
Division of Licensing
Office of Nuclear Reactor Regulation
U.S. Nuclear Regulatory Commission
Washington, DC 20555

Dear Mr. Eisenhut:

Subject: Nine Mile Point Unit 2
Operating License Application
Docket No. 50-410
Responses to Acceptance Review Questions

Enclosed are eight (8) copies of Niagara Mohawk's responses to NRC acceptance review requests E-320.1 and 320.2.

Very truly yours,

C. V. Mangan
Vice President
Nuclear Engineering & Licensing

CVM/JAM:ja
Enclosure

DIST: PER M. HAUGHY

	LTR	ENC
	1	1
PDR	1	1
LPDR	1	1
NSIC	1	1
NTIS	1	1
REG FILE	1	1
AEAB/BILL LAMBE	1	1

2222
1/8

QUESTION E320.1

Provide the following:

A production cost analysis which shows the difference in system production costs associated with the availability vs. unavailability of the proposed nuclear addition. Note, the resulting cost differential should be limited solely to the variable or incremental costs associated with generating electricity from the proposed nuclear addition and the sources of replacement energy. If, in your analysis, other factors influence the cost differential, explain in detail.

a. The analysis should provide results on an annual basis covering the period from initial operation of the first unit through five full years of operation of the last unit.

b. Where more than one utility shares ownership in the proposed nuclear addition or where the proposed facility is centrally dispatched as part of an interconnected pool, the results of the analysis may be aggregated for all participating systems.

c. The analysis should assume electrical energy requirements grow at (1) the system's latest official forecasted growth rate, and (2) zero growth from the latest actual annual energy requirement.

d. All underlying assumptions should be explicitly identified and explained.

e. For each year (and for each growth rate scenario) the following results should be clearly stated: (1) system production costs with the proposed nuclear addition available as scheduled; (2) system production costs without the proposed nuclear addition available; (3) the capacity factor assumed for the nuclear addition; (4) the average fuel cost and variable O&M for the nuclear addition and the sources of replacement energy (by fuel type) - both expressed in mills per kWh; and (5) the proportion of replacement energy assumed to be provided by coal, oil, gas, etc. (The base year for all costs should be identified.)

QUESTION E320.1

RESPONSE:

We have answered Question E320.1 on a pool basis since the proposed facility will have more than one utility share in the ownership. Question E320.1 c(1) was responded to using three sets of assumptions as explained below:

EXHIBIT NO.	CASE NAME	LOAD FORECAST*	FUEL COST**	GNP DEFLATOR	NM2 CAPACITY FACTOR IMMATURE	NM2 CAPACITY FACTOR MATURE
1	N1	1983 5-112	High ICF	7%	63%	70%
2	N2	1983 5-112	Low ICF	6%	63%	70%
3	N3	1983 5-112	Low ICF	6%	62%	62%

* 1983 5-112 submittal to the New York State Energy Office is the latest official energy forecast.

** Fuel costs obtained from November 1982 forecast by ICF, Inc. of Washington, D.C.

Question E320.1 c(2) was responded to using the same assumptions as Case N2 except with zero load growth from 1982 actual levels as explained below:

EXHIBIT NO.	CASE NAME	LOAD FORECAST*	FUEL COST**	GNP DEFLATOR	NM2 CAPACITY FACTOR IMMATURE	NM2 CAPACITY FACTOR MATURE
4	N4	No Growth	Low ICF	6%	63%	70%

Also enclosed are Volumes I and II which include data assumptions used to complete the production cost analyses.

CASE N1

NIAGARA MOHAWK POWER CORPORATION

RESPONSE TO NRC INTERROGATORY ON
AVAILABILITY VS. UNAVAILABILITY OF 9 MILE PT. #2

ITEM E 320.1

NEW YORK POWER POOL RESULTS
(CURRENT YEAR COSTS)

ASSUME: Latest Forecast Growth Rate (1983 5-112 Report)
High ICF Fuel Forecast with 7% GNP
Average Nuclear Plant Capacity Factors

YEARS	(1) SYSTEM PRODUCTION COST 9 MILE PT. #2 I/S NOVEMBER 1986 ($ x 1000)	(2) SYSTEM PRODUCTION COST 9 MILE PT. #2 NOT IN SERVICE ($ x 1000)	Increase In Cost ($ x 1000)	(3) 9 MILE PT. #2 CAPACITY FACTOR - % IN ITEM (1)
1986	3,944,225	3,981,843	37,618	73
1987	4,206,181	4,446,011	239,830	73
1988	4,973,186	5,332,883	359,697	73
1989	5,601,533	5,900,257	298,724	53
1990	6,106,877	6,685,719	578,842	81
1991	6,907,421	7,409,916	502,495	59

CASE N1

NIAGARA MOHAWK POWER CORPORATION

RESPONSE TO NRC INTERROGATORY ON
AVAILABILITY VS. UNAVAILABILITY OF 9 MILE PT. #2

ITEM E 320.1

NEW YORK POWER POOL RESULTS
(CURRENT YEAR COSTS)

ASSUME: Latest Forecast Growth Rate (1983 5-112 Report)
High ICF Fuel Forecast with 7% GNP.
Average Nuclear Plant Capacity Factors

(4)
AVERAGE FUEL COSTS - MILLS/KWHR

YEAR	9 MILE PT. UNIT 2	OTHER NUCLEAR	COAL	RESIDUAL OIL	DIST. OIL	GAS	OTHER* (INCL. CANADIAN PURCH.)
1986	9.42	8.56	35.23	84.13	134.91	107.5	32.29
1987	9.81	9.16	38.31	96.91	148.90	122.5	35.77
1988	10.49	9.78	41.63	109.66	166.55	136.5	43.95
1989	11.29	10.50	45.67	124.97	185.39	149.5	49.33
1990	12.01	11.20	50.04	146.17	209.34	167.0	58.20
1991	12.92	12.01	55.04	164.98	230.33	185.0	69.69

(5)
REPLACEMENT ENERGY - %

YEAR	ENERGY-GWH 9 MILE PT. UNIT 2	OTHER NUCLEAR	COAL	RESIDUAL OIL	DIST. OIL AND GAS	OTHER (INCL. CANADIAN PURCH.)
1986	1167	0	65	1	Less than 1%	34
1987	6971	0	66	1	Less than 1%	33
1988	6991	0	55	5	Less than 1%	40
1989	5096	0	59	5	Less than 1%	36
1990	7745	0	57	11	Less than 1%	32
1991	5661	0	46	23	Less than 1%	31

* Excludes Hydro Resources Within New York State.

CASE N2

NIAGARA MOHAWK POWER CORPORATION

RESPONSE TO NRC INTERROGATORY ON
AVAILABILITY VS. UNAVAILABILITY OF 9 MILE PT. #2

ITEM E 320.1

NEW YORK POWER POOL RESULTS
(CURRENT YEAR COSTS)

ASSUME: Latest Forecast Growth Rate (1983 5-112 Report)
Low ICF Fuel Forecast with 6% GNP
Average Nuclear Plant Capacity Factors

YEARS	(1) SYSTEM PRODUCTION COST 9 MILE PT. #2 I/S NOVEMBER 1986 ($ x 1000)	(2) SYSTEM PRODUCTION COST 9 MILE PT. #2 NOT IN SERVICE ($ x 1000)	Increase In Cost ($ x 1000)	(3) 9 MILE PT. #2 CAPACITY FACTOR - % IN ITEM (1)
1986	2,954,341	2,977,168	22,827	73
1987	3,053,407	3,214,558	161,151	73
1988	3,524,041	3,760,433	236,392	73
1989	3,871,374	4,061,604	190,230	53
1990	4,128,113	4,495,635	367,522	81
1991	4,564,316	4,869,953	305,637	59

CASE N2

NIAGARA MOHAWK POWER CORPORATION

RESPONSE TO NRC INTERROGATORY ON
AVAILABILITY VS. UNAVAILABILITY OF 9 MILE PT. #2

ITEM E 320.1

NEW YORK POWER POOL RESULTS
(CURRENT YEAR COSTS)

ASSUME: Latest Forecast Growth Rate (1983 5-112 Report)
Low ICF Fuel Forecast with 6% GNP.
Average Nuclear Plant Capacity Factors

(4)
AVERAGE FUEL COSTS - MILLS/KWHR

	9 MILE PT. UNIT 2	OTHER NUCLEAR	COAL	RESIDUAL OIL	DIST. OIL	GAS	OTHER* (INCL. CANADIAN PURCH.)
1986	6.46	5.92	24.08	61.14	103.27	81.20	23.32
1987	6.68	6.27	25.73	69.02	110.20	90.50	24.96
1988	7.08	6.64	28.66	74.60	122.63	102.00	30.09
1989	7.54	7.05	29.51	84.07	130.09	111.22	32.87
1990	7.95	7.46	31.65	95.90	151.32	123.50	37.64
1991	8.47	7.92	33.84	106.01	158.25	135.00	44.24

(5)
REPLACEMENT ENERGY - %

YEAR	ENERGY-GWH 9 MILE PT. UNIT 2	OTHER NUCLEAR	COAL	RESIDUAL OIL	DIST. OIL AND GAS	OTHER (INCL. CANADIAN PURCH.)
1986	1167	0	82	(2)	Less than 1%	20
1987	6971	0	69	1	Less than 1%	30
1988	6991	0	55	0	Less than 1%	45
1989	5096	0	59	4	Less than 1%	37
1990	7745	0	61	11	Less than 1%	28
1991	5661	0	50	23	Less than 1%	27

* Excludes Hydro Resources Within New York State.

CASE N3

NIAGARA MOHAWK POWER CORPORATION

RESPONSE TO NRC INTERROGATORY ON
AVAILABILITY VS. UNAVAILABILITY OF 9 MILE PT. #2

ITEM E 320.1

NEW YORK POWER POOL RESULTS
(CURRENT YEAR COSTS)

ASSUME: Latest Forecast Growth Rate (1983 5-112 Report)
Low ICF Fuel Forecast with 6% GNP
Below Average Nuclear Plant Capacity Factors

YEARS	(1) SYSTEM PRODUCTION COST 9 MILE PT. #2 I/S NOVEMBER 1986 ($ x 1000)	(2) SYSTEM PRODUCTION COST 9 MILE PT. #2 NOT IN SERVICE ($ x 1000)	Increase In Cost ($ x 1000)	(3) 9 MILE PT. #2 CAPACITY FACTOR - % IN ITEM (1)
1986	2,955,037	2,977,168	22,131	71
1987	3,058,038	3,214,558	156,520	71
1988	3,530,661	3,760,433	229,772	71
1989	3,876,891	4,061,604	184,713	52
1990	4,172,799	4,495,635	322,836	71
1991	4,602,568	4,869,953	267,385	52

Note: Average system fuel costs and sources or replacement energy are not included for this case but would be very similar to the values shown on Exhibit #2, Page 2 (except Nine Mile 2 energy which would be lower).

CASE N4

NIAGARA MOHAWK POWER CORPORATION

RESPONSE TO NRC INTERROGATORY ON
AVAILABILITY VS. UNAVAILABILITY OF 9 MILE PT. #2

ITEM E 320.1

NEW YORK POWER POOL RESULTS
(CURRENT YEAR COSTS)

ASSUME: Zero Load Growth
Low ICF Fuel Forecast with 6% GNP
Average Nuclear Plant Capacity Factors

YEARS	(1) SYSTEM PRODUCTION COST 9 MILE PT. #2 I/S NOVEMBER 1986 ($ x 1000)	(2) SYSTEM PRODUCTION COST 9 MILE PT. #2 NOT IN SERVICE ($ x 1000)	Increase In Cost ($ x 1000)	(3) 9 MILE PT. #2 CAPACITY FACTOR - % IN ITEM (1)
1986	2,785,459	2,807,144	21,685	72
1987	2,804,196	2,946,842	142,646	70
1988	3,121,796	3,317,757	195,961	72
1989	3,318,129	3,466,158	148,029	52
1990	3,418,795	3,684,746	265,951	81
1991	3,658,986	3,864,065	205,079	59

CASE N5

NIAGARA MOHAWK POWER CORPORATION

RESPONSE TO NRC INTERROGATORY ON
AVAILABILITY VS. UNAVAILABILITY OF 9 MILE PT. #2

ITEM E 320.1

NEW YORK POWER POOL RESULTS
(CURRENT YEAR COSTS)

ASSUME: Zero Load Growth
Low ICF Fuel Forecast with 6% GNP.
Average Nuclear Plant Capacity Factors

(4)
AVERAGE FUEL COSTS - MILLS/KWHR

YEAR	9 MILE PT. UNIT 2	OTHER NUCLEAR	COAL	RESIDUAL OIL	DIST. OIL	GAS	OTHER* (INCL. CANADIAN PURCH.)
1986	6.46	5.92	24.40	62924	103.27	80.00	23.36
1987	6.69	6.27	31.52	69.70	110.02	89.30	23.69
1988	7.08	6.64	27.59	77.91	121.22	102.30	28.28
1989	7.54	7.05	29.60	87.17	130.17	111.40	29.92
1990	7.95	7.46	31.44	101.28	144.51	123.90	33.35
1991	8.47	7.92	33.38	113.39	155.95	135.70	38.22

(5)
REPLACEMENT ENERGY - %

YEAR	ENERGY-GWH 9 MILE PT. UNIT 2	OTHER NUCLEAR	COAL	RESIDUAL OIL	DIST. OIL AND GAS		OTHER (INCL. CANADIAN PURCH.)
1986	1152	0	76	(1)	0	0	25
1987	6678	0	70	0	0	0	30
1988	6902	0	63	1	Less than 1%		36
1989	5013	0	62	0	Less than 1%		38
1990	7743	0	57	1	Less than 1%		42
1991	5659	0	61	2	Less than 1%		37

* Excludes Hydro Resources Within New York State.

QUESTION E320.2

Provide average, present worth fuel and O and M costs for the Nuclear Unit. (This cost should be calculated for both a 30-year and a 40-year operating life.) Provide escalation, discount rates, and all other variables assumed in calculating these costs.

RESPONSE

Question E320.2 is answered with Exhibit #5 and includes the present worth values for Nine Mile 2 Fuel and O&M cost over both 30 and 40 years of operation. These were computed using the following assumptions:

	LOW ICF CASE N2	HIGH ICF CASE N1
Nine Mile 2 Heat Rate	10270 BTU/KWH	10270 BTU/KWH
1987 Nine Mile 2 Fuel Cost	65¢/MBTU	95.4¢/MBTU
Annual Escalation Rate of Nuclear Fuel	6%	7%
Average Annual Nine Mile 2 Energy Output (Assuming a Refueling Every Two Years and a Mature Capacity Factor Over the Entire Service Life)	6700 GWH	6700 GWH
1987 Nine Mile 2 Fixed O&M Cost	$15.6 Million	$15.6 Million
Annual Escalation Rate for Fixed O&M	6%	7%
Resulting 1987 Total Fuel and O&M Cost	$60.3 Million	$81.2 Million
30 Service Life	1987-2016	1987-2016
40 Service Life	1987-2026	1987-2026
Discount Rate	12.08%	12.08%

Nine Mile Point Unit 2 ER-OLS

NIAGARA MOHAWK POWER CORPORATION

RESPONSE TO NRC INTERROGATORY ON
AVAILABILITY VS. UNAVAILABILITY OF 9 MILE PT. #2

ITEM E 320.2

NEW YORK POWER POOL RESULTS

AVERAGE ANNUAL FUEL AND O&M COSTS
(IN $MILLIONS PRESENT VALUED TO JAN, 1987)

	LOW ICF CASE N2	HIGH ICF CASE N1
Annual Levelized Amount Over First 30 Years	$112.8	$168
Annual Levelized Amount Over First 40 Years	$121.1	$184.5

E 320.1 (D)

NRC INTERROGATORY ON PRODUCTION COSTS ASSOCIATED WITH AVAILABILITY VS. UNAVAILABILITY OF NINEMILE POINT 2

PROMOD III BASECASE DATA

VOLUME I

TABLE OF CONTENTS

INTRODUCTION

This document contained the PROMOD III base case for the New York Utilities. It is intended that this data will serve as the base case for analyses of NRC Interrogatory E320.1 on production costs associated with availability vs. unavailability of Nine Mile Point Nuclear Unit No. 2 during the 1986 through 1991 time period. The data presented is in general format for use with either the multi-area or single area versions of PROMOD III.

The "PROMOD III Overview" describes the PROMOD III multi-area production cost simulation model. Volume I contains the key information concerning inter area transmission limits, load shapes, load forecasts, and fuel costs. Volume II contains information concerning generating unit characteristics, hydro generation and external purchases from Canadian sources.

I.A. PROMOD III Overview

PROMOD III OVERVIEW

The PROMOD III System is a comprehensive tool for performing major production cost analyses. The PROMOD III System is fully capable of simulating the operation of an integrated power pool in which transmission limitations affect the commitment and dispatch of generating units. The PROMOD III System incorporates a large number of features to facilitate the accurate modeling of the operating behavior of a power pool with transmission limitations. Among these features are:

(1) Automatic maintenance scheduling to develop a system-wide generating unit maintenance schedule using a criterion which levelizes the overall system reliability while satisfying general maintenance constraints. These constraints include minimum area reserve requirements, forbidden maintenance periods and starting date tolerances.

(2) Probabilistic simulation method to evaluate system reliability and production costs using three separate load duration curves to separately model weekday, weeknight and weekend load hours.

(3) Probabilistic generating unit availability model to represent each unit by up to seven non-zero capacity states with different outage rates allowing an accurate representation of partial outages.

(4) Generating unit capacity variations to permit seasonal capacity adjustments as well as partial maintenance derations for weekday, weeknight or weekend subperiods.

(5) Limited energy hydro generation that can be modeled as either a storage or run-of-river resource.

(6) Pumped storage generation schedule determined according to economic criteria. The need for the user to guess at an economically optimal pumped storage schedule for each month is eliminated.

(7) Multi-Area Production Costing Capability. This module performs a pool economic dispatch of the several user-defined interconnected load and generating areas. Maximum transfer capability can be specified bidirectionally. The pool-wide economic dispatch recognizes tie limit constraints, area reserve requirements, and transmission loss factors. Energy transfers from a company with excess capacity to one which is capacity-deficient are scheduled whenever the tie capability permits, in order to increase overall system economics.

(8) Realistic unit commitment within the multi-area probabilistic modeling environment. PROMOD III's unit commitment logic includes consideration of the following factors:

- must-run generation - day only, day and night, or all week
- average and incremental operating cost of each generating unit
- startup cost of each generating unit
- expected operating hours if unit is committed
- penalty factors to approximate transmission losses from remote generation
- load in each area
- operating and spinning reserve requirements
- transmission tie loading
- precommitment of generation in anticipation of peak load.

PROMOD III does not require a fixed commitment order. Rather, for each commitment decision, all units not yet committed are considered as potential candidates. The unit chosen is the one which will minimize production costs, provided it satisfies all of the non-economic constraints.

Unit commitment and economic dispatch are done on a system-wide basis using all pool resources economically, with consideration of special pool constraints, in addition to the non-economic operating restrictions imposed normally on a single utility dispatch. A non-economic loading of capacity may be forced in an area due to maximum loading of its import tie.

Another non-economic commitment situation occurs when the export transmission tie of an area is fully loaded and generating capacity of that area is relatively less expensive than that of other areas. Capacity may be loaded in those other areas because the less expensive capacity cannot be transferred to them.

Generating units which are jointly-owned by several utilities are dispatched for the greatest benefit of the pool. One advantage of PROMOD III's modeling of these units is that the power transfers from these units are included in the tie loadings of each area involved. Another important concern is that the unavailability of these units affects all utilities simultaneously. PROMOD III models outages on these units more accurately than if each jointly-owned unit were modeled as several generating units, with prorated capacities split among the owning companies.

(9) Company internal interchange accounting is performed hourly, using the full probabilistic pool dispatch to obtain each member utility's forecast generation. A partial reconstruction of each utility's operation under zero-interchange, hour by hour, provides hourly net interchange energy. Billing dollars and split savings dollars are derived from

the average sellers' cost of energy interchanged and the average buyers' value of displaced energy, which are calculated from the companies' thermal cost curves. Internal export and import energy, billing dollars, savings dollars, and savings rates are summarized on a subperiod basis and displayed monthly, quarterly, annually, and for the entire study.

(10) External transactions are negotiated by the pool for the benefit of all pool members. Such transactions will displace the most expensive generation in the pool. In a transaction of this type energy may flow into the pool through one or more areas, as specified by the user, subject to the transmission constraints.

For the NYPP, both economy purchases from Hydro Quebec (HQ) and Ontario Hydro (OH) are modeled in addition to firm capacity purchases. PROMOD III allocates this energy to the member companies of the pool at hourly intervals based on the current expected marginal cost of each company. Energy purchased from OH and HQ is priced at the average of the OH or HQ cost and the company decremental cost. The difference between this average and the receiving company's decremental cost is paid into the Pool Savings Account for subsequent distribution among the pool members. Each hour, a member company, which is a net buyer during that hour, receives a payment from the savings account that is proportional to the total energy it buys from HQ, OH and internal pool transactions, divided by the sum of the energy that every pool company purchases from HQ, OH and internal pool transactions.

I.B Company/Area Definition

COMPANY DEFINITION TABLE

This table displays the company identification number with the associated company name as it is referenced throughout PROMOD III.

Each company is defined by loads and resources. The loads must be those of one or more areas. The resource ownership may be the full or partial ownership of any number of units and transactions.

COMPANY IDENTIFICATION NUMBER	COMPANY NAME
1	CENT HUD
2	CON ED
3	LILCO
4	NYSEG
5	NMPC
6	O&R
7	RG&E
8	PASNY

AREA DEFINITIONS

The following table displays the area name with the associated NYPP transmission area letter and the load area identification number. An attached map shows the transmission areas and the 27 load areas. Each company owns one or more of these load areas.

Areas represent geographic portions of a utility system. Within an area, there are no recognizable transmission limitations. Electrical load must be defined for each area. Each generating unit is located within an area.

Each area has a load. It can have transactions with entities external to the utility system being modeled. It may have limited transmission capacity connecting it to other areas with which it can have economy energy interchange.

AREA DEFINITION TABLE

COMPANY NAME	AREA NAME	AREA IDENTIFICATION NUMBER	NYPP TRANSMISSION AREA
NMPC	WEST	1	A
	CENTRAL	2	C
	CENTRAL EAST	3	E
	EAST	4	F
NYSEG	WEST	5	A
	CENTRAL	6	C
	EAST	7	E
	HUDSON	8	G
	NORTH	19	D
	MECHANICSVILLE	21	F
RG&E		9	B
CENT HUD		10	G
O&R		11	G
LILCO		12	K
PASNY	WEST	13	A
	NORTH	14	D
	B	16	B
	C	17	C
	E	18	E
	F	20	F
	H	22	H
	I	24	I
	J	26	J
	K	27	K
CON ED		15	J
	NORTH	23	H
	CENTRAL	25	I

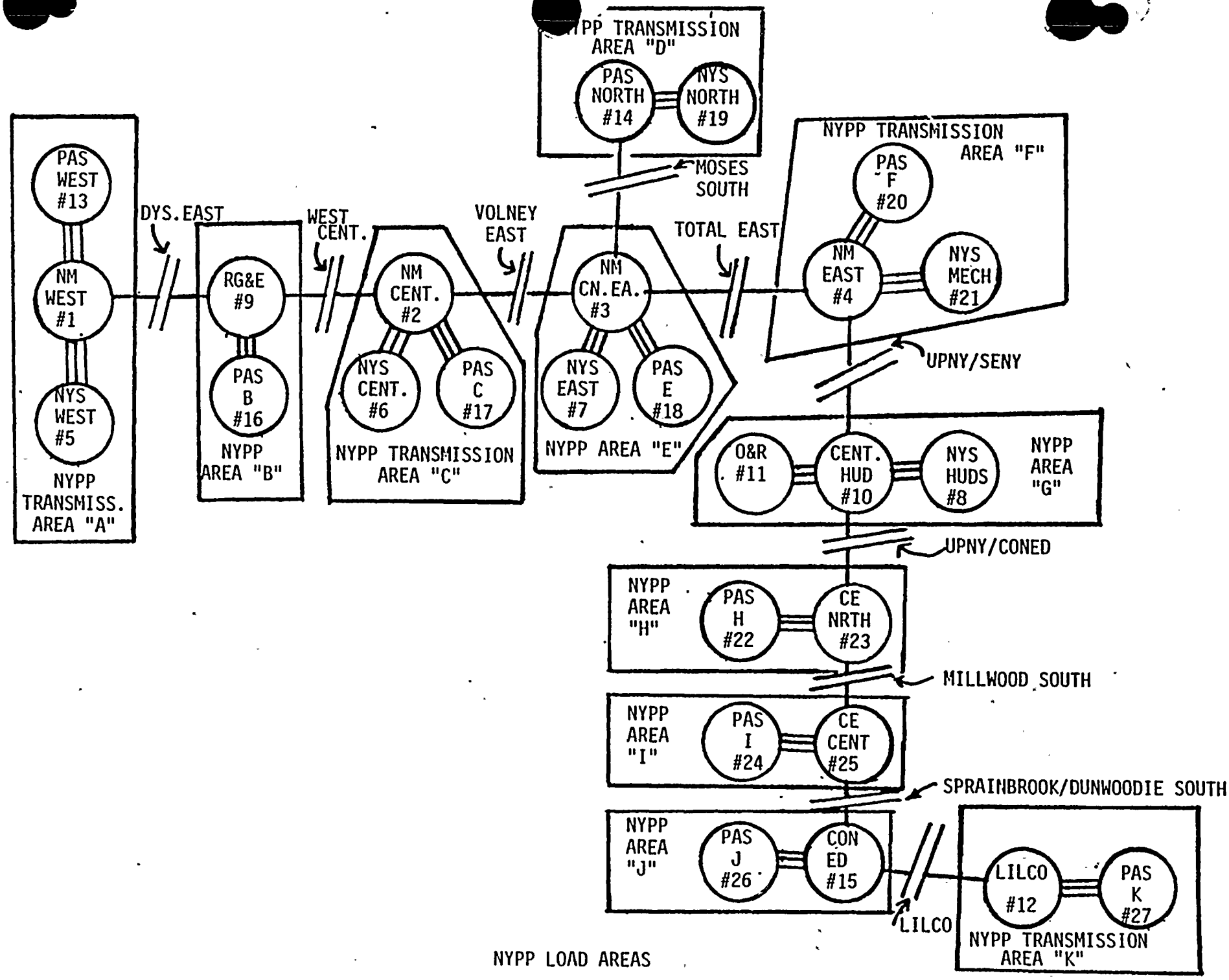

NYPP LOAD AREAS

I.C. Inter Area Transmission Limits

INTER AREA TRANSMISSION LIMITS

This report defines the transmission limits between areas within the New York Power Pool. Import and export transmission capacities are defined relative to the "from" area specified in the report.

The reports are included only for the month of July. The data is identical for all months in a year.

***** AREA INTERCHANGE CAPACITIES INPUT SUMMARY *****

JUL 1986

--AREAS--		---IMPORT CAPACITIES(MW)---			---EXPORT CAPACITIES(MW)---		
FROM	TO	WEEKDAY	WEEKNIGHT	WEEKEND	WEEKDAY	WEEKNIGHT	WEEKEND
1	9	4100.	4100.	4100.	4100.	4100.	4100.
2	9	3700.	3700.	3700.	3700.	3700.	3700.
2	3	5900.	5900.	5900.	5900.	5900.	5900.
3	14	2800.	2800.	2800.	2800.	2800.	2800.
3	4	3850.	3850.	3850.	3850.	3850.	3850.
4	10	2700.	2700.	2700.	2700.	2700.	2700.
10	23	5450.	5450.	5450.	5450.	5450.	5450.
23	25	5600.	5600.	5600.	5600.	5600.	5600.
15	25	5250.	5250.	5250.	5250.	5250.	5250.
12	15	300.	300.	300.	500.	500.	500.

***** AREA INTERCHANGE CAPACITIES INPUT SUMMARY *****

JUL 1987

--AREAS--		---IMPORT CAPACITIES(MW)---			---EXPORT CAPACITIES(MW)---		
FROM	TO	WEEKDAY	WEEKNIGHT	WEEKEND	WEEKDAY	WEEKNIGHT	WEEKEND
1	9	4250.	4250.	4250.	4250.	4250.	4250.
2	9	3950.	3950.	3950.	3950.	3950.	3950.
2	3	7450.	7450.	7450.	7450.	7450.	7450.
3	14	2800.	2800.	2800.	2800.	2800.	2800.
3	4	6350.	6350.	6350.	6350.	6350.	6350.
4	10	5000.	5000.	5000.	5000.	5000.	5000.
10	23	7500.	7500.	7500.	7500.	7500.	7500.
23	25	7250.	7250.	7250.	7250.	7250.	7250.
15	25	5000.	5000.	5000.	5000.	5000.	5000.
12	15	300.	300.	300.	500.	500.	500.

***** AREA INTERCHANGE CAPACITIES INPUT SUMMARY *****

JUL 1986

--AREAS--		---IMPORT CAPACITIES(MW)---			---EXPORT CAPACITIES(MW)---		
FROM	TO	WEEKDAY	WEEKNIGHT	WEEKEND	WEEKDAY	WEEKNIGHT	WEEKEND
1	9	4250.	4250.	4250.	4250.	4250.	4250.
2	9	3950.	3950.	3950.	3950.	3950.	3950.
2	3	7450.	7450.	7450.	7450.	7450.	7450.
3	14	2800.	2800.	2800.	2800.	2800.	2800.
3	4	6350.	6350.	6350.	6350.	6350.	6350.
4	10	5000.	5000.	5000.	5000.	5000.	5000.
10	23	7500.	7500.	7500.	7500.	7500.	7500.
23	25	7250.	7250.	7250.	7250.	7250.	7250.
15	25	5000.	5000.	5000.	5000.	5000.	5000.
12	15	300.	300.	300.	500.	500.	500.

***** AREA INTERCHANGE CAPACITIES INPUT SUMMARY *****

JUL 1989

--AREAS--		---IMPORT CAPACITIES(MW)---			---EXPORT CAPACITIES(MW)---		
FROM	TO	WEEKDAY	WEEKNIGHT	WEEKEND	WEEKDAY	WEEKNIGHT	WEEKEND
1	9	4250.	4250.	4250.	4250.	4250.	4250.
2	9	3950.	3950.	3950.	3950.	3950.	3950.
2	3	7450.	7450.	7450.	7450.	7450.	7450.
3	14	2800.	2800.	2800.	2800.	2800.	2800.
3	4	6350.	6350.	6350.	6350.	6350.	6350.
4	10	5000.	5000.	5000.	5000.	5000.	5000.
10	23	7500.	7500.	7500.	7500.	7500.	7500.
23	25	7250.	7250.	7250.	7250.	7250.	7250.
15	25	5000.	5000.	5000.	5000.	5000.	5000.
12	15	300.	300.	300.	500.	500.	500.

***** AREA INTERCHANGE CAPACITIES INPUT SUMMARY *****

JUL 1990

--AREAS--		---IMPORT CAPACITIES(MW)---			---EXPORT CAPACITIES(MW)---		
FROM	TO	WEEKDAY	WEEKNIGHT	WEEKEND	WEEKDAY	WEEKNIGHT	WEEKEND
1	9	4250.	4250.	4250.	4250.	4250.	4250.
2	9	3950.	3950.	3950.	3950.	3950.	3950.
2	3	7450.	7450.	7450.	7450.	7450.	7450.
3	14	2800.	2800.	2800.	2800.	2800.	2800.
3	4	6350.	6350.	6350.	6350.	6350.	6350.
4	10	5000.	5000.	5000.	5000.	5000.	5000.
10	23	7500.	7500.	7500.	7500.	7500.	7500.
23	25	7250.	7250.	7250.	7250.	7250.	7250.
15	25	5000.	5000.	5000.	5000.	5000.	5000.
12	15	900.	900.	900.	500.	500.	500.

***** AREA INTERCHANGE CAPACITIES INPUT SUMMARY *****

JUL 1991

--AREAS--		---IMPORT CAPACITIES(MW)---			---EXPORT CAPACITIES(MW)---		
FROM	TO	WEEKDAY	WEEKNIGHT	WEEKEND	WEEKDAY	WEEKNIGHT	WEEKEND
1	9	4250.	4250.	4250.	4250.	4250.	4250.
2	9	3950.	3950.	3950.	3950.	3950.	3950.
2	3	7450.	7450.	7450.	7450.	7450.	7450.
3	14	2800.	2800.	2800.	2800.	2800.	2800.
3	4	6350.	6350.	6350.	6350.	6350.	6350.
4	10	5000.	5000.	5000.	5000.	5000.	5000.
10	23	7500.	7500.	7500.	7500.	7500.	7500.
23	25	7250.	7250.	7250.	7250.	7250.	7250.
15	25	5000.	5000.	5000.	5000.	5000.	5000.
12	15	900.	900.	900.	500.	500.	500.

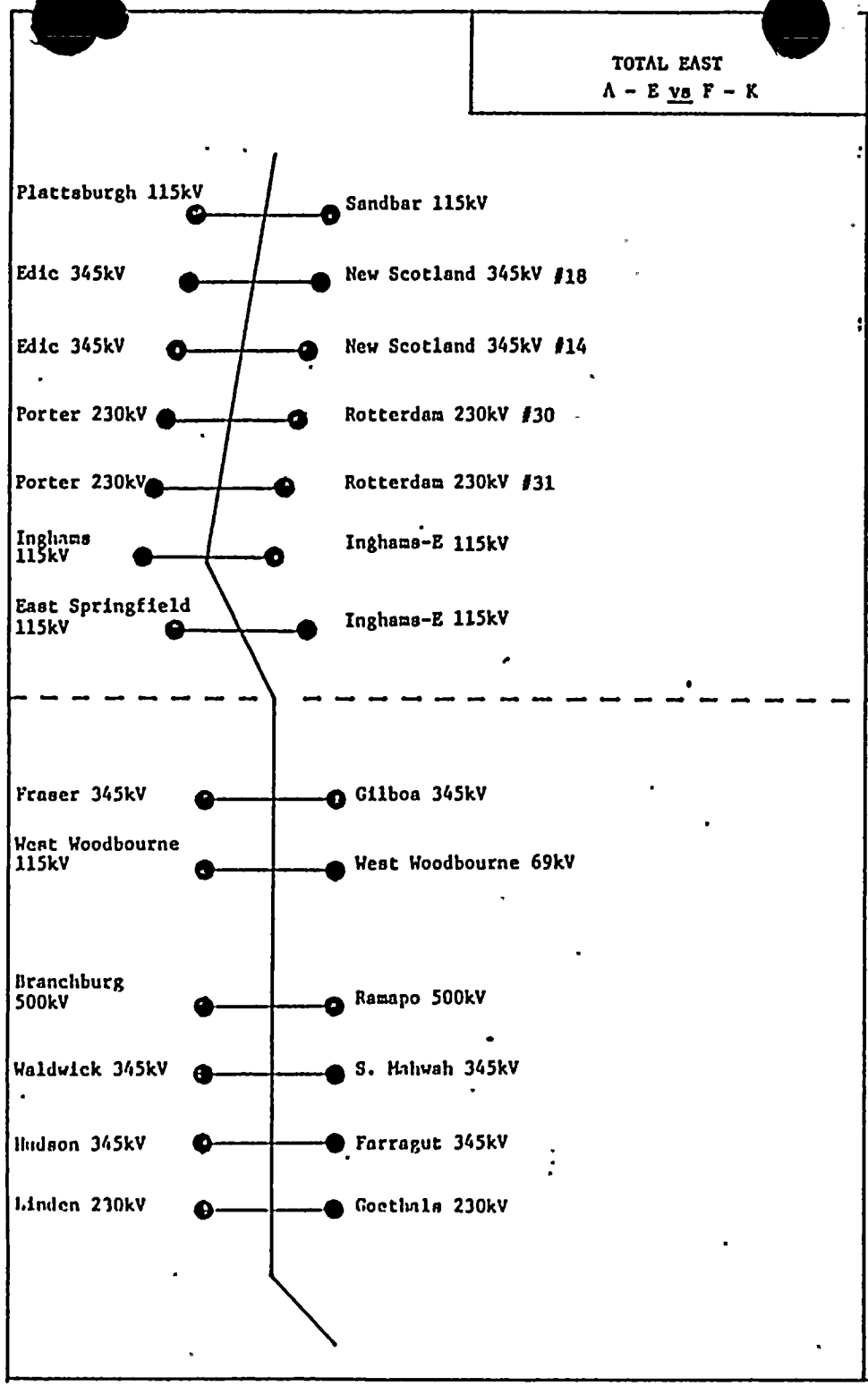
TOTAL EAST
A - E vs F - K
Plattsburgh 115kV
Sandbar 115kV
Edic 345kV
New Scotland 345kV #18
Edic 345kV
New Scotland 345kV #14
Porter 230kV
Rotterdam 230kV #30
Porter 230kV
Rotterdam 230kV #31
Inghams 115kV
Inghams-E 115kV
East Springfield 115kV
Inghams-E 115kV
Fraser 345kV
Gilboa 345kV
West Woodbourne 115kV
West Woodbourne 69kV
Branchburg 500kV
Ramapo 500kV
Waldwick 345kV
S. Mahwah 345kV
Hudson 345kV
Farragut 345kV
Linden 230kV
Goethals 230kV

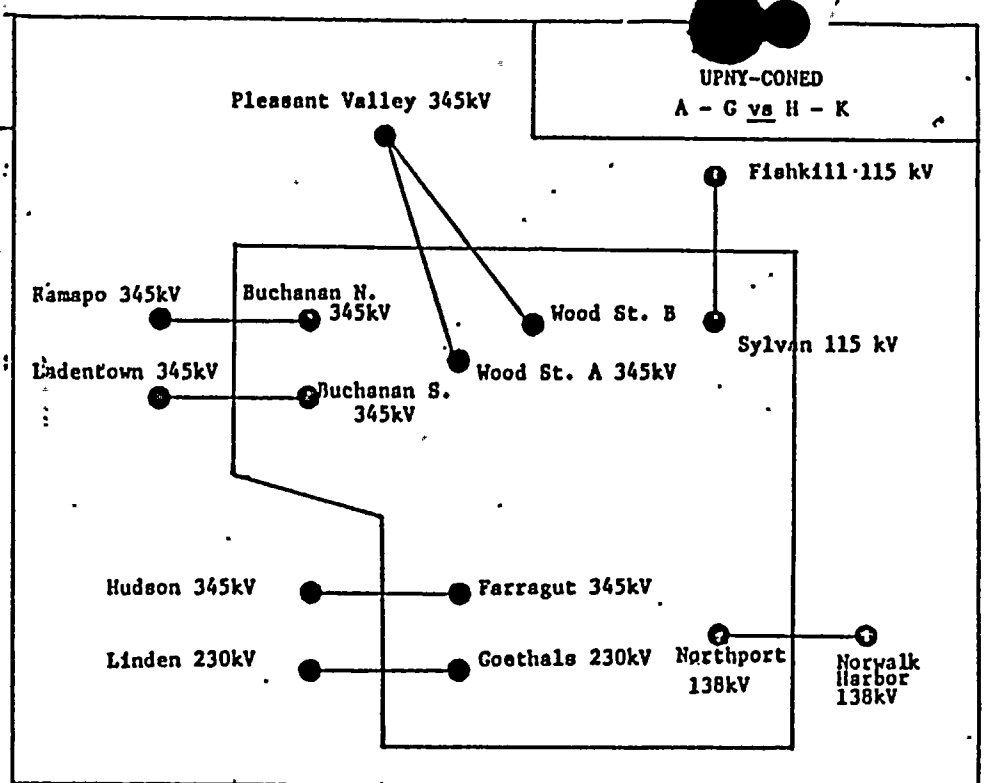
UPNY-CONED
A - G vs H - K
Pleasant Valley 345kV
Fishkill 115 kV
Ramapo 345kV
Buchanan N. 345kV
Wood St. B
Sylvan 115 kV
Ladentown 345kV
Buchanan S. 345kV
Wood St. A 345kV
Hudson 345kV
Farragut 345kV
Linden 230kV
Goethals 230kV
Northport 138kV
Norwalk Harbor 138kV

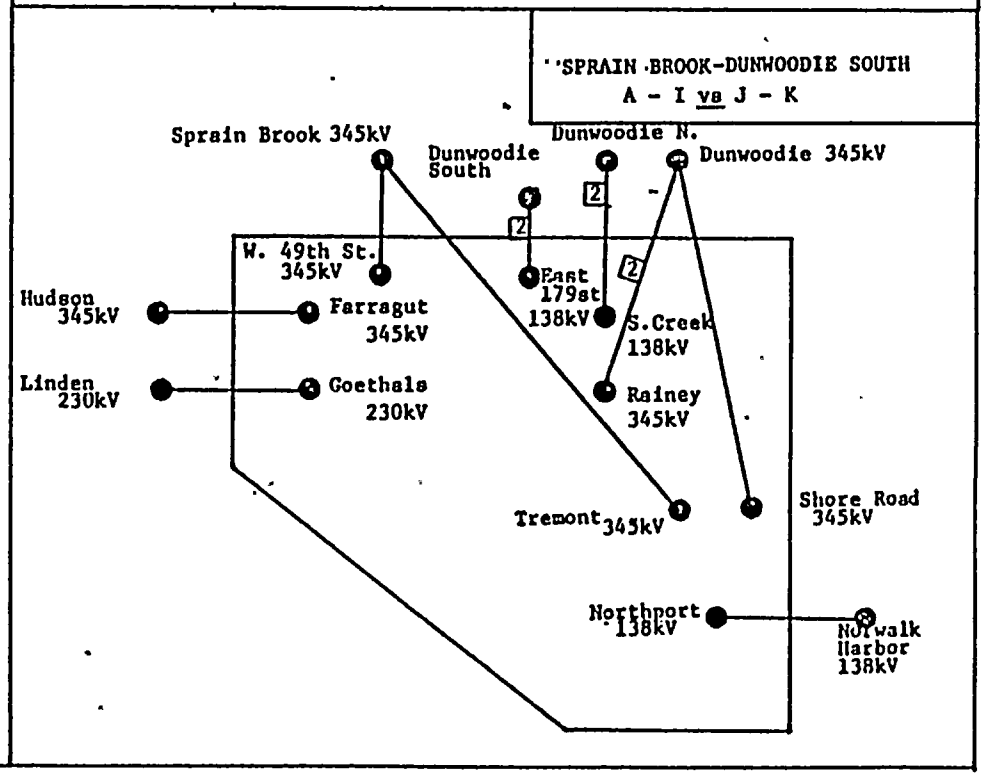
SPRAIN BROOK-DUNWOODIE SOUTH
A - I vs J - K
Sprain Brook 345kV
Dunwoodie South
Dunwoodie N.
Dunwoodie 345kV
W. 49th St. 345kV
East 179st 138kV
S.Creek 138kV
Hudson 345kV
Farragut 345kV
Linden 230kV
Goethals 230kV
Rainey 345kV
Tremont 345kV
Shore Road 345kV
Northport 138kV
Norwalk Harbor 138kV

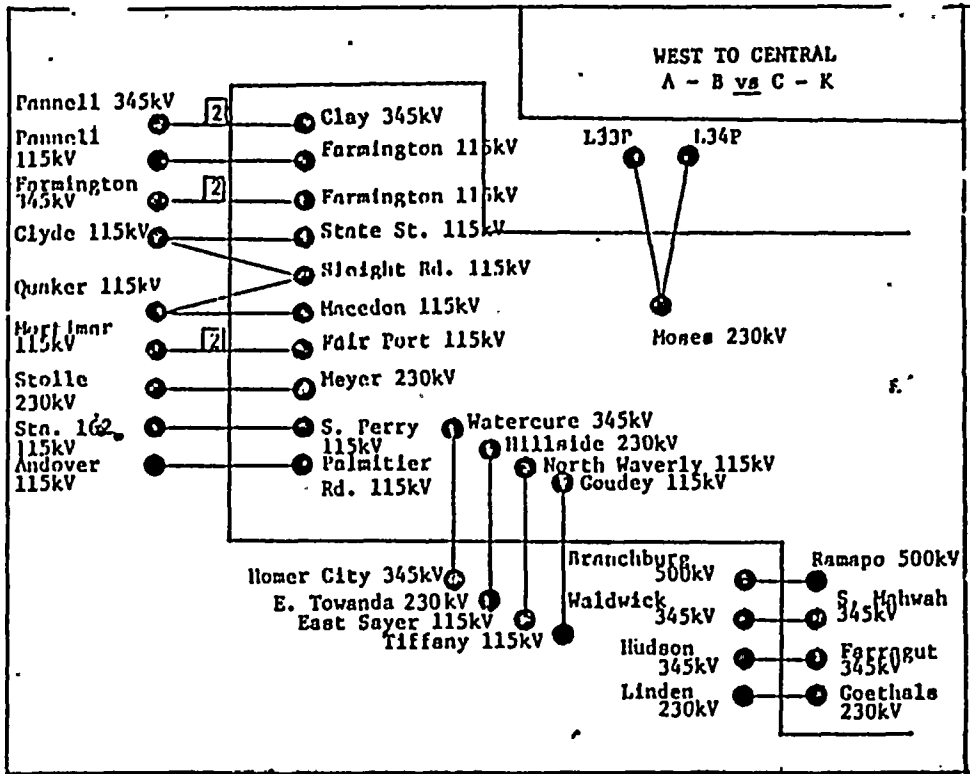
WEST TO CENTRAL
A - B vs C - K
Pannell 345kV
Pannell 115kV
Farmington 345kV
Clyde 115kV
Quaker 115kV
Hartlmar 115kV
Stolle 230kV
Sta. 162 115kV
Andover 115kV
Clay 345kV
Farmington 115kV
Farmington 115kV
State St. 115kV
Sloight Rd. 115kV
Macedon 115kV
Fair Port 115kV
Meyer 230kV
S. Perry 115kV
Palmitier Rd. 115kV
Watercure 345kV
Hillside 230kV
North Waverly 115kV
Goudey 115kV
L33P
L34P
Moses 230kV
Homer City 345kV
E. Towanda 230kV
East Sayer 115kV
Tiffany 115kV
Branchburg 500kV
Waldwick 345kV
Hudson 345kV
Linden 230kV
Ramapo 500kV
S. Mahwah 345kV
Farragut 345kV
Goethals 230kV

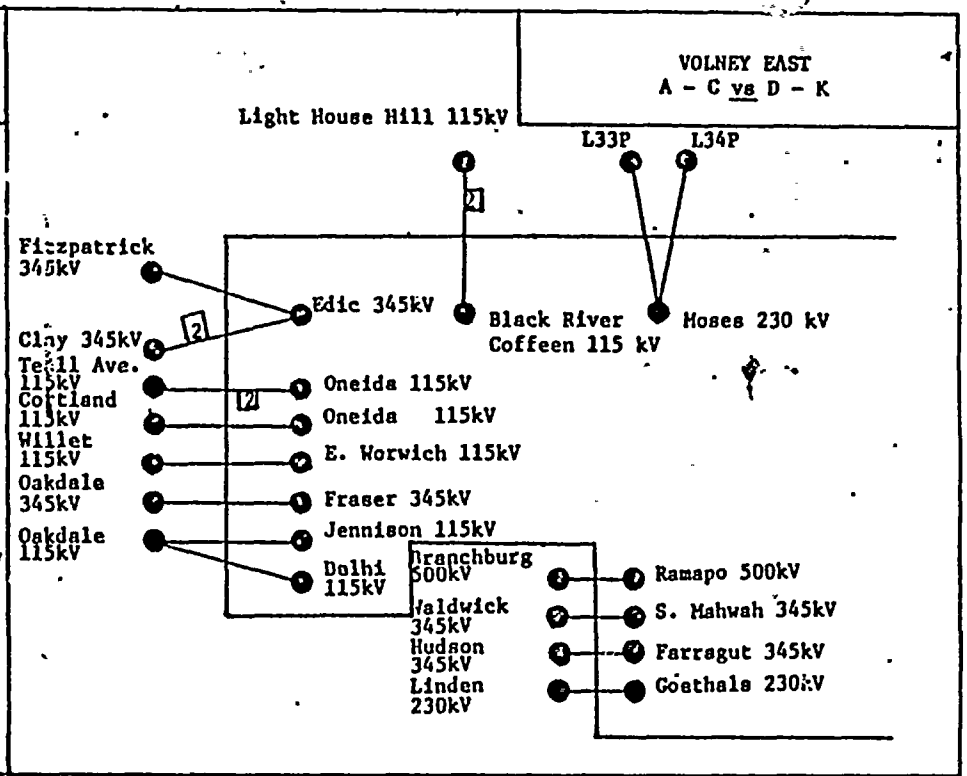
VOLNEY EAST
A - C vs D - K
Light House Hill 115kV
L33P
L34P
Fitzpatrick 345kV
Clay 345kV
Teall Ave. 115kV
Cortland 115kV
Willet 115kV
Oakdale 345kV
Oakdale 115kV
Edic 345kV
Black River
Coffeen 115 kV
Moses 230 kV
Oneida 115kV
Oneida 115kV
E. Worwich 115kV
Fraser 345kV
Jennison 115kV
Dolhi 115kV
Branchburg 500kV
Waldwick 345kV
Hudson 345kV
Linden 230kV
Ramapo 500kV
S. Mahwah 345kV
Farragut 345kV
Goethals 230kV

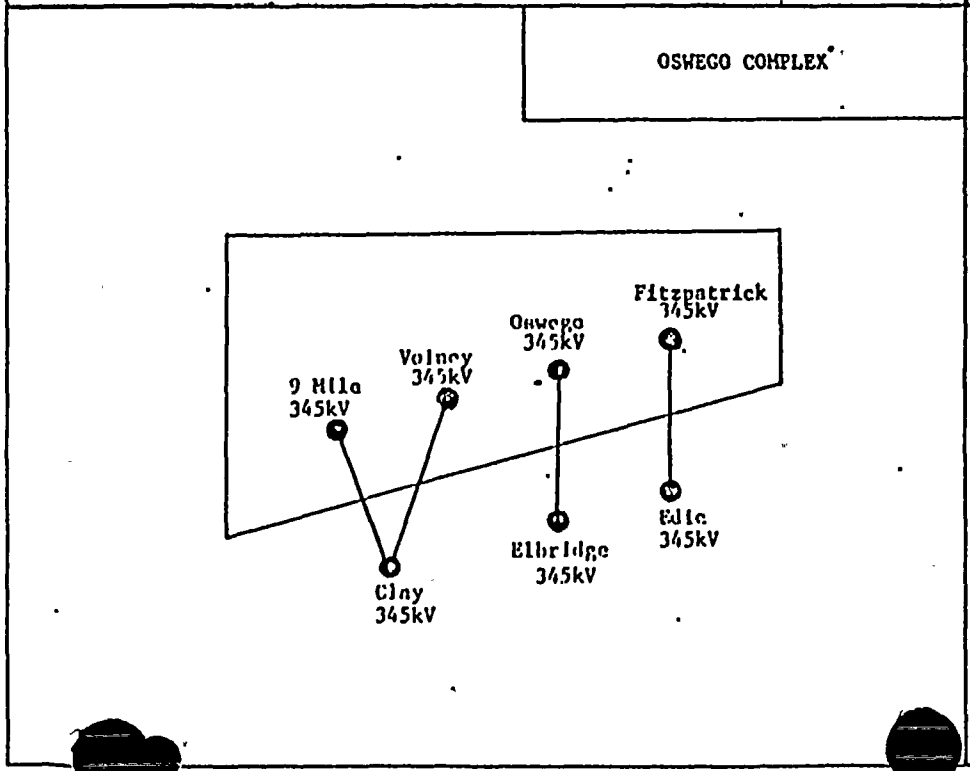
OSWEGO COMPLEX
9 Mile 345kV
Volney 345kV
Oswego 345kV
Fitzpatrick 345kV
Clay 345kV
Elbridge 345kV
Edic 345kV

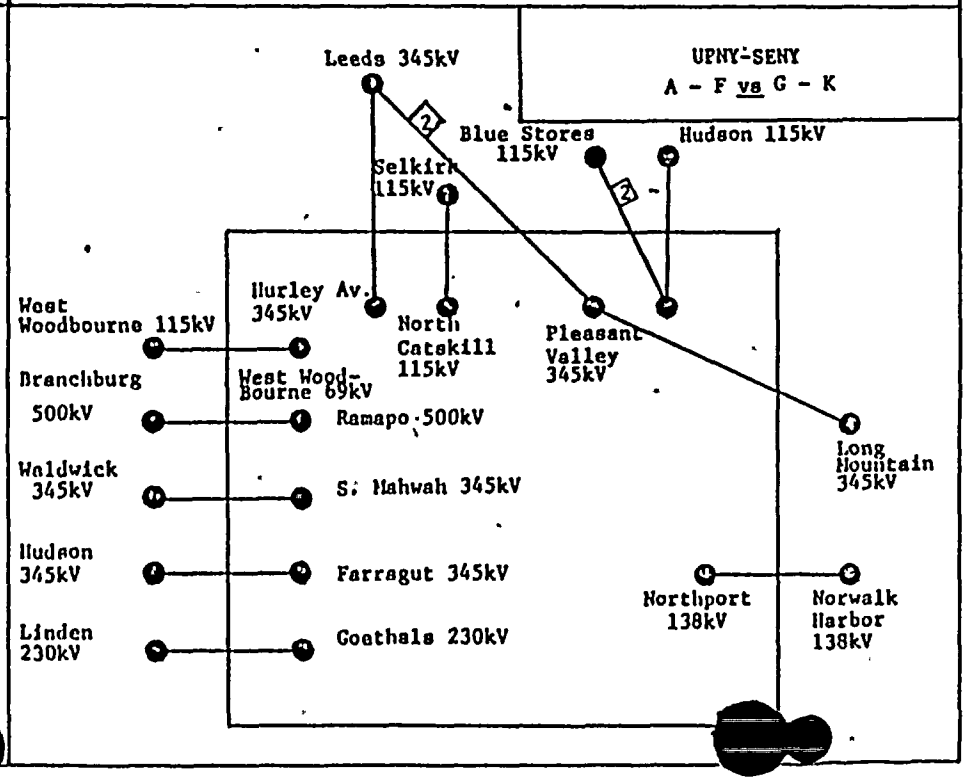
UPNY-SENY
A - F vs G - K
Leeds 345kV
Blue Stores 115kV
Hudson 115kV
Selkirk 115kV
West Woodbourne 115kV
Hurley Av. 345kV
North Catskill 115kV
Pleasant Valley 345kV
Branchburg 500kV
West Wood-Bourne 69kV
Ramapo 500kV
Waldwick 345kV
S. Mahwah 345kV
Hudson 345kV
Farragut 345kV
Linden 230kV
Goethals 230kV
Long Mountain 345kV
Northport 138kV
Norwalk Harbor 138kV

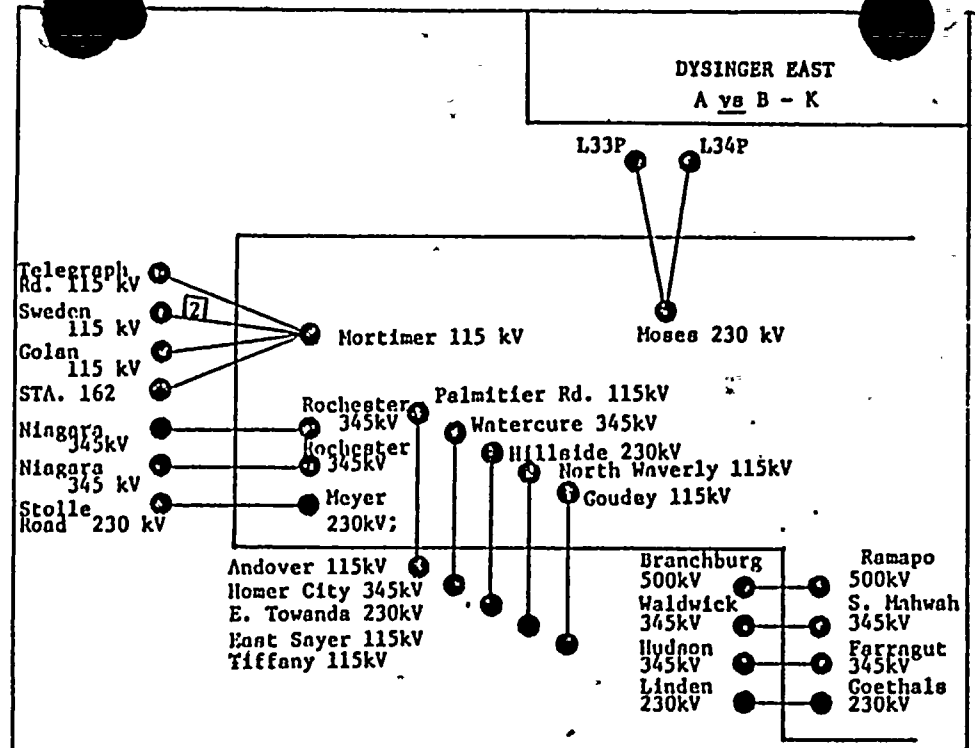
DYSINGER EAST
A vs B - K
L33P
L34P
Telegraph Rd. 115 kV
Sweden 115 kV
Golan 115 kV
STA. 162
Niagara 345kV
Niagara 345 kV
Stolle Road 230 kV
Mortimer 115 kV
Moses 230 kV
Rochester 345kV
Rochester 345kV
Meyer 230kV;
Palmitier Rd. 115kV
Watercure 345kV
Hillside 230kV
North Waverly 115kV
Goudey 115kV
Andover 115kV
Homer City 345kV
E. Towanda 230kV
East Sayer 115kV
Tiffany 115kV
Branchburg 500kV
Waldwick 345kV
Hudson 345kV
Linden 230kV
Ramapo 500kV
S. Mahwah 345kV
Farragut 345kV
Goethals 230kV

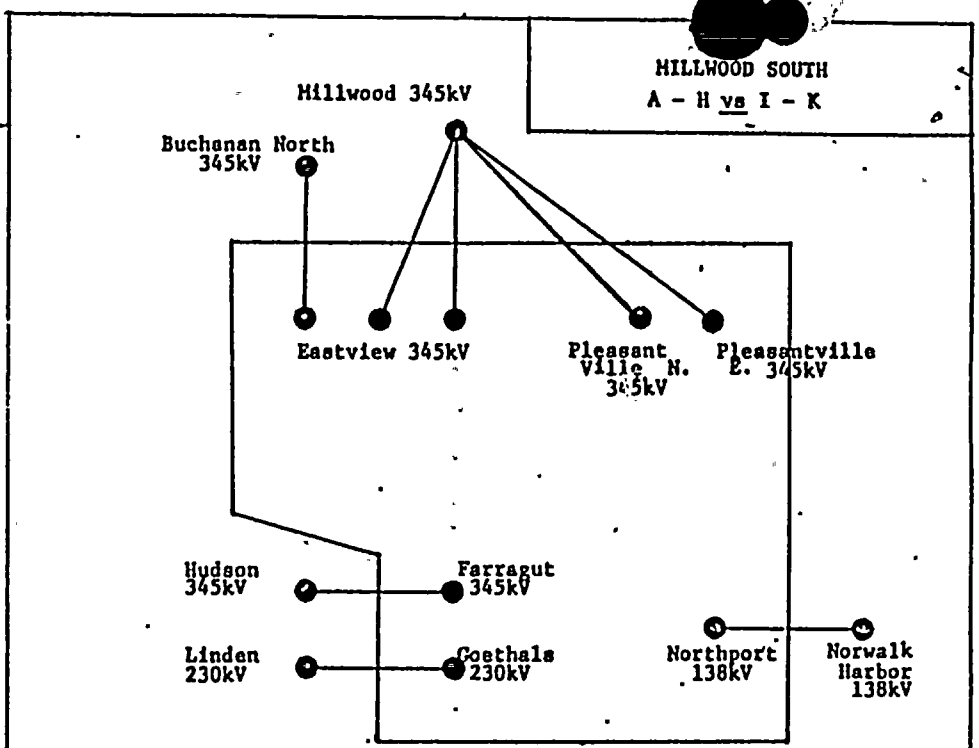
HILLWOOD SOUTH
A - H vs I - K
Hillwood 345kV
Buchanan North 345kV
Eastview 345kV
Pleasant Ville N. 345kV
Pleasantville E. 345kV
Hudson 345kV
Farragut 345kV
Linden 230kV
Goethals 230kV
Northport 138kV
Norwalk Harbor 138kV

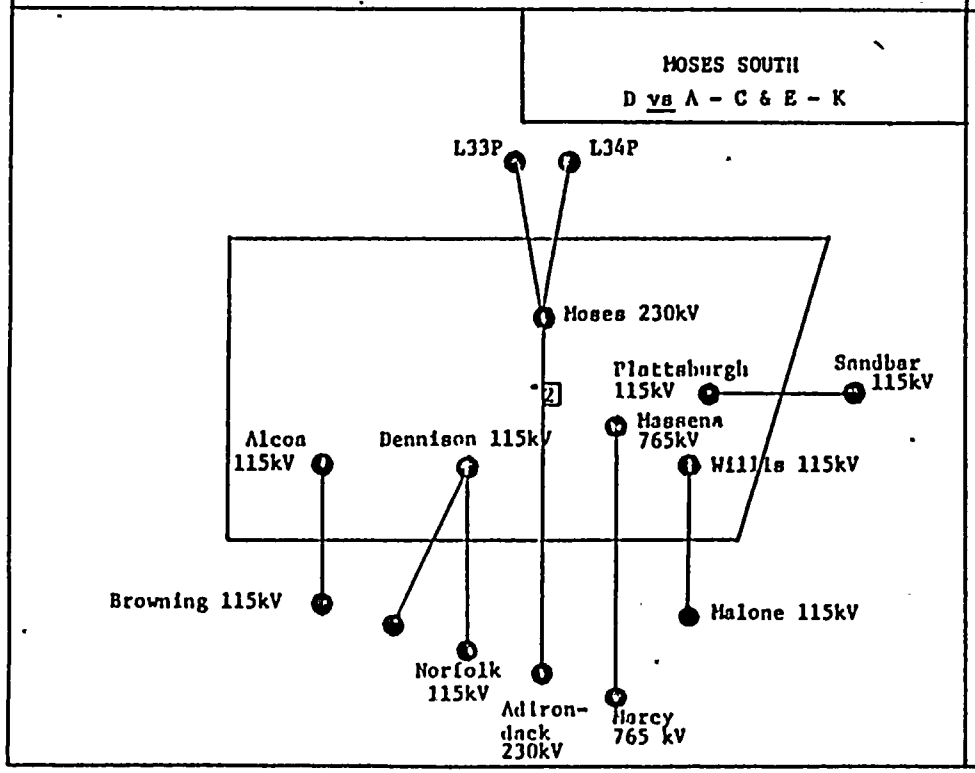
MOSES SOUTH
D vs A - C & E - K
L33P
L34P
Moses 230kV
Plattsburgh 115kV
Sandbar 115kV
Massena 765kV
Alcoa 115kV
Dennison 115kV
Willis 115kV
Browning 115kV
Malone 115kV
Norfolk 115kV
Adiron-dack 230kV
Harcy 765 kV

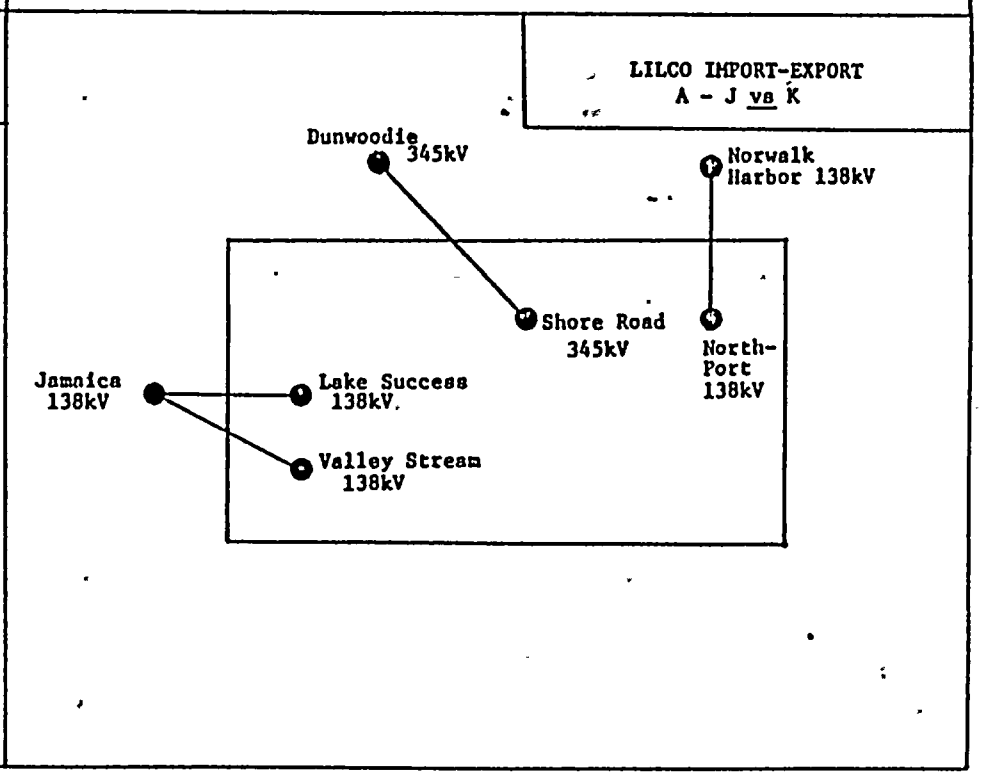
LILCO IMPORT-EXPORT
A - J vs K
Dunwoodie 345kV
Norwalk Harbor 138kV
Shore Road 345kV
North-Port 138kV
Jamaica 138kV
Lake Success 138kV.
Valley Stream 138kV

I.D Week Definitions

WEEK DEFINITION REPORT

This report defines the hours in each of the three subperiods for a typical week. A subperiod represents a group of hours in which similar operating conditions exist. The three subperiods (weekday, weeknight, and weekend) account for all hours.

********** WEEK DEFINITION **********

	MON	TUE	WED	THU	FRI	SAT	SUN
HOUR 1:	WEEKEND	NIGHT	NIGHT	NIGHT	NIGHT	NIGHT	WEEKEND
HOUR 2:	WEEKEND	NIGHT	NIGHT	NIGHT	NIGHT	NIGHT	WEEKEND
HOUR 3:	WEEKEND	NIGHT	NIGHT	NIGHT	NIGHT	NIGHT	WEEKEND
HOUR 4:	WEEKEND	NIGHT	NIGHT	NIGHT	NIGHT	NIGHT	WEEKEND
HOUR 5:	WEEKEND	NIGHT	NIGHT	NIGHT	NIGHT	NIGHT	WEEKEND
HOUR 6:	WEEKEND	NIGHT	NIGHT	NIGHT	NIGHT	NIGHT	WEEKEND
HOUR 7:	WEEKEND	NIGHT	NIGHT	NIGHT	NIGHT	NIGHT	WEEKEND
HOUR 8:	WEEKEND	NIGHT	NIGHT	NIGHT	NIGHT	NIGHT	WEEKEND
HOUR 9:	DAY	DAY	DAY	DAY	DAY	WEEKEND	WEEKEND
HOUR 10:	DAY	DAY	DAY	DAY	DAY	WEEKEND	WEEKEND
HOUR 11:	DAY	DAY	DAY	DAY	DAY	WEEKEND	WEEKEND
HOUR 12:	DAY	DAY	DAY	DAY	DAY	WEEKEND	WEEKEND
HOUR 13:	DAY	DAY	DAY	DAY	DAY	WEEKEND	WEEKEND
HOUR 14:	DAY	DAY	DAY	DAY	DAY	WEEKEND	WEEKEND
HOUR 15:	DAY	DAY	DAY	DAY	DAY	WEEKEND	WEEKEND
HOUR 16:	DAY	DAY	DAY	DAY	DAY	WEEKEND	WEEKEND
HOUR 17:	DAY	DAY	DAY	DAY	DAY	WEEKEND	WEEKEND
HOUR 18:	DAY	DAY	DAY	DAY	DAY	WEEKEND	WEEKEND
HOUR 19:	DAY	DAY	DAY	DAY	DAY	WEEKEND	WEEKEND
HOUR 20:	DAY	DAY	DAY	DAY	DAY	WEEKEND	WEEKEND
HOUR 21:	DAY	DAY	DAY	DAY	DAY	WEEKEND	WEEKEND
HOUR 22:	DAY	DAY	DAY	DAY	DAY	WEEKEND	WEEKEND
HOUR 23:	NIGHT	NIGHT	NIGHT	NIGHT	NIGHT	WEEKEND	WEEKEND
HOUR 24:	NIGHT	NIGHT	NIGHT	NIGHT	NIGHT	WEEKEND	WEEKEND

I.E. Load Shape Report

LOAD SHAPE REPORT

The nine load shapes identified in the data base are as follows:

LOAD SHAPE FOR	LOAD SHAPE ID IN PROMOD III
NMPC	1
PASNY - UPNY	13
PASNY - SENY	26
NYSEG	5
RG&E	9
LILCO	12
CENT HUD	10
O&R	11
CON ED	15

The load shapes are defined using 1981 EEI format hourly loads.

The PASNY - Long Island Munies use the LILCO load shape.

LOAD SHAPE REPORT

The following load models are the typical week profiles used in PROMOD for each of the 12 months and each of the nine identified Corporate load shapes.

The Load Model headings are identified as 1 through 12.(Jan. through Dec.). The subheadings for areas are consistent with the Corporate identifiers on the previous page. The second subheading is the monthly load factor.

The columns represent typical hourly loads for each day of the week preceeded by a subperiod identifier (W-Weekend, D-Daytime, N-Night). The final entry is the daily load factor.

These load models are scaled by the values shown in the previous section (II.C Demand and Energy Forecast) to develop future years models.

NMPC AREA 1

********** LOAD MODEL 1 FOR 1986 **********

FOR AREA 1

LOAD FACTOR 0.782

HOUR	...MON...	...TUE...	...WED...	...THU...	...FRI...	...SAT...	...SUN...
1	W 3610.	N 3831.	N 3709.	N 3758.	N 3684.	N 3696.	W 3602.
2	W 3561.	N 3747.	N 3569.	N 3595.	N 3471.	N 3481.	W 3466.
3	W 3429.	N 3689.	N 3493.	N 3506.	N 3309.	N 3330.	W 3280.
4	W 3439.	N 3622.	N 3378.	N 3414.	N 3250.	N 3101.	W 3189.
5	W 3551.	N 3669.	N 3541.	N 3448.	N 3346.	N 2998.	W 3149.
6	W 3717.	N 3781.	N 3700.	N 3650.	N 3575.	N 3294.	W 3212.
7	W 4242.	N 4282.	N 4123.	N 3967.	N 3958.	N 3528.	W 3459.
8	W 4810.	N 4785.	N 4700.	N 4381.	N 4413.	N 3727.	W 3586.
9	D 5044.	D 4972.	D 4900.	D 4587.	D 4725.	W 3917.	W 3773.
10	D 5203.	D 5023.	D 4983.	D 4708.	D 4817.	W 4211.	W 3838.
11	D 5296.	D 5030.	D 4990.	D 4759.	D 4862.	W 4307.	W 3990.
12	D 5236.	D 4943.	D 4912.	D 4771.	D 4800.	W 4325.	W 4065.
13	D 5065.	D 4823.	D 4796.	D 4649.	D 4747.	W 4258.	W 4076.
14	D 5050.	D 4830.	D 4806.	D 4579.	D 4672.	W 4095.	W 4051.
15	D 5000.	D 4733.	D 4717.	D 4508.	D 4577.	W 4012.	W 3924.
16	D 4924.	D 4682.	D 4612.	D 4436.	D 4492.	W 4041.	W 3888.
17	D 5143.	D 4836.	D 4892.	D 4656.	D 4664.	W 4156.	W 4108.
18	D 5346.	D 5121.	D 5111.	D 4934.	D 4961.	W 4541.	W 4390.
19	D 5475.	D 5096.	D 5167.	D 4952.	D 4995.	W 4561.	W 4424.
20	D 5318.	D 5008.	D 5037.	D 4883.	D 4870.	W 4461.	W 4372.
21	D 5267.	D 4851.	D 4877.	D 4744.	D 4692.	W 4366.	W 4341.
22	D 4905.	D 4549.	D 4634.	D 4480.	D 4403.	W 4164.	W 4140.
23	N 4523.	N 4298.	N 4357.	N 4271.	N 4181.	W 3976.	W 3908.
24	N 4228.	N 3945.	N 4000.	N 3803.	N 3865.	W 3796.	W 3737.
DAILY LOAD FACTOR	0.848	0.880	0.863	0.870	0.862	0.862	0.866

********** LOAD MODEL 2 FOR 1986 **********

FOR AREA 1

LOAD FACTOR 0.752

HOUR	...MON...	...TUE...	...WED...	...THU...	...FRI...	...SAT...	...SUN...
1	W 3026.	N 3424.	N 3485.	N 3818.	N 3651.	N 3375.	W 3195.
2	W 2900.	N 3185.	N 3325.	N 3749.	N 3432.	N 3205.	W 3049.
3	W 2767.	N 3165.	N 3249.	N 3659.	N 3361.	N 3124.	W 3003.
4	W 2721.	N 3146.	N 3239.	N 3581.	N 3304.	N 3039.	W 2931.
5	W 2977.	N 3177.	N 3279.	N 3616.	N 3351.	N 3030.	W 2826.
6	W 3113.	N 3412.	N 3507.	N 3792.	N 3606.	N 3087.	W 2954.
7	W 3678.	N 3878.	N 4023.	N 4157.	N 3975.	N 3225.	W 3013.
8	W 4150.	N 4262.	N 4355.	N 4550.	N 4303.	N 3390.	W 3061.
9	D 4269.	D 4468.	D 4761.	D 4869.	D 4667.	W 3759.	W 3292.
10	D 4412.	D 4647.	D 4978.	D 5012.	D 4822.	W 3931.	W 3497.
11	D 4485.	D 4733.	D 5047.	D 5073.	D 4854.	W 4063.	W 3552.
12	D 4453.	D 4598.	D 5033.	D 4988.	D 4678.	W 4077.	W 3685.
13	D 4327.	D 4507.	D 4966.	D 4811.	D 4535.	W 3890.	W 3635.
14	D 4364.	D 4539.	D 5000.	D 4745.	D 4492.	W 3826.	W 3526.
15	D 4256.	D 4428.	D 4951.	D 4657.	D 4312.	W 3768.	W 3448.
16	D 4221.	D 4391.	D 4887.	D 4545.	D 4238.	W 3728.	W 3470.
17	D 4381.	D 4524.	D 5114.	D 4585.	D 4274.	W 3813.	W 3670.
18	D 4570.	D 4839.	D 5164.	D 4910.	D 4402.	W 4085.	W 3845.
19	D 4775.	D 4937.	D 5354.	D 5100.	D 4629.	W 4143.	W 3992.
20	D 4611.	D 4788.	D 5235.	D 4932.	D 4515.	W 4046.	W 3949.
21	D 4339.	D 4475.	D 5131.	D 4701.	D 4288.	W 3864.	W 3856.
22	D 4211.	D 4248.	D 4718.	D 4372.	D 4193.	W 3782.	W 3704.
23	N 4011.	N 4101.	N 4298.	N 4172.	N 3960.	W 3565.	W 3440.
24	N 3717.	N 3804.	N 4126.	N 3915.	N 3736.	W 3257.	W 3219.
DAILY LOAD FACTOR	0.827	0.841	0.834	0.869	0.855	0.876	0.854

********** LOAD MODEL 3 FOR 1986 **********

FOR AREA 1

LOAD FACTOR 0.779

HOUR	...MON...	...TUE...	...WED...	...THU...	...FRI...	...SAT...	...SUN...
1	W 3016.	N 3410.	N 3621.	N 3517.	N 3396.	N 3341.	W 3104.
2	W 2986.	N 3278.	N 3552.	N 3363.	N 3236.	N 3203.	W 3050.
3	W 2888.	N 3229.	N 3457.	N 3302.	N 3187.	N 3093.	W 2951.
4	W 2911.	N 3212.	N 3399.	N 3257.	N 3156.	N 3086.	W 2665.
5	W 2940.	N 3247.	N 3431.	N 3319.	N 3195.	N 3068.	W 2606.
6	W 3082.	N 3493.	N 3606.	N 3532.	N 3379.	N 3116.	W 2795.
7	W 3578.	N 3916.	N 4048.	N 3888.	N 3831.	N 3172.	W 2842.
8	W 4155.	N 4342.	N 4507.	N 4305.	N 4268.	N 3442.	W 3036.
9	D 4497.	D 4748.	D 4782.	D 4600.	D 4584.	W 3693.	W 3221.
10	D 4613.	D 4837.	D 4825.	D 4642.	D 4648.	W 3989.	W 3355.
11	D 4659.	D 4855.	D 4817.	D 4620.	D 4700.	W 4029.	W 3474.
12	D 468[illegible].	D 4802.	D 4726.	D 4564.	D 4589.	W 4012.	W 3503.
13	D 455[illegible].	D 4738.	D 4581.	D 4404.	D 4475.	W 3847.	W 3484.
14	D 4536.	D 4757.	D 4570.	D 4393.	D 4467.	W 3806.	W 3422.
15	D 4379.	D 4657.	D 4490.	D 4331.	D 4357.	W 3706.	W 3329.
16	D 4295.	D 4596.	D 4361.	D 4242.	D 4180.	W 3634.	W 3289.
17	D 4417.	D 4764.	D 4481.	D 4317.	D 4195.	W 3748.	W 3370.
18	D 4526.	D 4882.	D 4551.	D 4455.	D 4257.	W 3861.	W 3558.
19	D 4666.	D 4943.	D 4771.	D 4635.	D 4446.	W 4112.	W 3723.
20	D 4716.	D 5068.	D 4791.	D 4673.	D 4433.	W 4124.	W 3821.
21	D 4546.	D 4915.	D 4626.	D 4520.	D 4287.	W 3945.	W 3732.
22	D 4211.	D 4690.	D 4349.	D 4227.	D 4171.	W 3768.	W 3568.
23	N 4089.	N 4278.	N 4135.	N 4071.	N 3976.	W 3545.	W 3389.
24	N 3670.	N 3994.	N 3789.	N 3652.	N 3591.	W 3313.	W 3136.
DAILY LOAD FACTOR	0.854	0.852	0.883	0.881	0.860	0.875	0.855

********** LOAD MODEL 4 FOR 1986 **********

FOR AREA 1

LOAD FACTOR 0.775

HOUR	...MON...	...TUE...	...WED...	...THU...	...FRI...	...SAT...	...SUN...
1	W 2922.	N 3317.	N 3323.	N 3214.	N 3202.	N 2870.	W 2787.
2	W 2805.	N 3170.	N 3154.	N 3010.	N 2959.	N 2773.	W 2764.
3	W 2797.	N 3075.	N 3052.	N 2939.	N 2878.	N 2734.	W 2646.
4	W 2838.	N 3031.	N 2990.	N 2912.	N 2824.	N 2676.	W 2593.
5	W 2898.	N 3088.	N 3018.	N 2931.	N 2858.	N 2612.	W 2524.
6	W 3145.	N 3238.	N 3180.	N 3134.	N 2983.	N 2664.	W 2430.
7	W 3549.	N 3628.	N 3605.	N 3460.	N 3332.	N 2704.	W 2552.
8	W 4134.	N 4105.	N 3964.	N 3954.	N 3809.	N 2949.	W 2754.
9	D 4445.	D 4390.	D 4300.	D 4309.	D 4119.	W 3290.	W 2889.
10	D 4523.	D 4436.	D 4360.	D 4397.	D 4195.	W 3497.	W 3119.
11	D 4678.	D 4499.	D 4363.	D 4403.	D 4239.	W 3691.	W 3186.
12	D 4550.	D 4414.	D 4333.	D 4376.	D 4181.	W 3669.	W 3231.
13	D 4483.	D 4348.	D 4199.	D 4271.	D 4039.	W 3585.	W 3224.
14	D 4457.	D 4341.	D 4208.	D 4317.	D 4026.	W 3428.	W 3176.
15	D 4373.	D 4232.	D 4161.	D 4167.	D 3913.	W 3352.	W 3065.
16	D 4282.	D 4098.	D 3998.	D 4018.	D 3875.	W 3342.	W 3001.
17	D 4252.	D 4154.	D 4092.	D 4076.	D 3897.	W 3377.	W 3100.
18	D 4225.	D 4145.	D 4067.	D 4054.	D 3907.	W 3517.	W 3194.
19	D 4260.	D 4140.	D 4126.	D 4085.	D 3948.	W 3649.	W 3303.
20	D 4367.	D 4322.	D 4266.	D 4217.	D 4006.	W 3730.	W 3408.
21	D 4353.	D 4291.	D 4193.	D 4189.	D 3932.	W 3679.	W 3480.
22	D 4173.	D 4111.	D 3987.	D 3975.	D 3795.	W 3386.	W 3369.
23	N 3851.	N 3831.	N 3774.	N 3760.	N 3560.	W 3256.	W 3275.
24	N 3617.	N 3534.	N 3447.	N 3401.	N 3247.	W 2971.	W 2998.
DAILY LOAD FACTOR	0.837	0.870	0.880	0.867	0.862	0.865	0.863

*********** LOAD MODEL 5 FOR 1986 ***********

FOR AREA 1

LOAD FACTOR 0.771

HOUR	...MON...	...TUE...	...WED...	...THU...	...FRI...	...SAT...	...SUN...
1	W 2709.	N 2883.	N 3084.	N 3069.	N 3036.	N 2948.	W 2757.
2	W 2611.	N 2774.	N 2991.	N 2984.	N 2927.	N 2765.	W 2641.
3	W 2585.	N 2751.	N 2874.	N 2899.	N 2785.	N 2690.	W 2530.
4	W 2508.	N 2733.	N 2844.	N 2834.	N 2778.	N 2666.	W 2479.
5	W 2548.	N 2745.	N 2907.	N 2825.	N 2805.	N 2653.	W 2439.
6	W 2677.	N 2818.	N 3023.	N 3003.	N 2964.	N 2630.	W 2393.
7	W 2974.	N 3161.	N 3350.	N 3275.	N 3237.	N 2657.	W 2346.
8	W 3387.	N 3810.	N 3956.	N 3868.	N 3843.	N 2862.	W 2622.
9	D 3763.	D 4104.	D 4348.	D 4172.	D 4151.	W 3132.	W 2792.
10	D 3905.	D 4236.	D 4398.	D 4310.	D 4264.	W 3310.	W 3009.
11	D 4017.	D 4317.	D 4415.	D 4360.	D 4295.	W 3451.	W 3028.
12	D 3975.	D 4305.	D 4467.	D 4333.	D 4220.	W 3433.	W 3050.
13	D 3892.	D 4207.	D 4373.	D 4182.	D 4130.	W 3335.	W 3043.
14	D 3915.	D 4280.	D 4388.	D 4196.	D 4165.	W 3258.	W 3016.
15	D 3823.	D 4190.	D 4353.	D 4161.	D 4098.	W 3178.	W 2913.
16	D 3625.	D 4121.	D 4252.	D 4090.	D 3964.	W 3138.	W 2891.
17	D 3745.	D 4157.	D 4224.	D 4084.	D 3947.	W 3208.	W 2921.
18	D 3604.	D 4112.	D 4143.	D 4035.	D 3883.	W 3247.	W 2956.
19	D 3513.	D 3986.	D 4027.	D 3875.	D 3796.	W 3195.	W 2982.
20	D 3490.	D 3924.	D 3856.	D 3831.	D 3535.	W 3147.	W 2987.
21	D 3559.	D 4056.	D 4044.	D 3933.	D 3783.	W 3252.	W 3124.
22	D 3581.	D 4078.	D 4069.	D 4004.	D 3716.	W 3267.	W 3224.
23	N 3411.	N 3646.	N 3689.	N 3671.	N 3473.	W 3112.	W 3058.
24	N 3100.	N 3299.	N 3320.	N 3292.	N 3151.	W 2933.	W 2852.
DAILY LOAD FACTOR	0.839	0.856	0.853	0.853	0.843	0.887	0.880

********** LOAD MODEL 6 FOR 1986 **********

FOR AREA 1

LOAD FACTOR 0.719

HOUR	...MON...	...TUE...	...WED...	...THU...	...FRI...	...SAT...	...SUN...
1	W 2817.	N 3307.	N 3387.	N 3118.	N 3148.	N 2979.	W 2796.
2	W 2756.	N 3161.	N 3182.	N 2915.	N 2926.	N 2858.	W 2630.
3	W 2656.	N 3075.	N 2997.	N 2848.	N 2854.	N 2762.	W 2564.
4	W 2697.	N 3024.	N 2959.	N 2805.	N 2844.	N 2727.	W 2523.
5	W 2743.	N 3064.	N 2938.	N 2823.	N 2831.	N 2647.	W 2504.
6	W 2769.	N 3190.	N 3006.	N 2861.	N 2890.	N 2606.	W 2349.
7	W 3131.	N 3568.	N 3373.	N 3265.	N 3274.	N 2673.	W 2464.
8	W 3743.	N 4045.	N 3904.	N 3819.	N 3773.	N 2879.	W 2589.
9	D 4055.	D 4453.	D 4191.	D 4115.	D 4095.	W 3175.	W 2785.
10	D 4249.	D 4563.	D 4350.	D 4265.	D 4242.	W 3504.	W 2952.
11	D 4447.	D 4611.	D 4432.	D 4389.	D 4375.	W 3603.	W 3111.
12	D 4480.	D 4850.	D 4465.	D 4398.	D 4372.	W 3698.	W 3211.
13	D 4419.	D 4633.	D 4366.	D 4326.	D 4289.	W 3546.	W 3227.
14	D 4520.	D 5030.	D 4393.	D 4383.	D 4357.	W 3521.	W 3139.
15	D 4408.	D 4686.	D 4315.	D 4298.	D 4279.	W 3416.	W 3044.
16	D 4331.	D 4594.	D 4224.	D 4212.	D 4199.	W 3344.	W 2991.
17	D 4340.	D 4580.	D 4237.	D 4218.	D 4161.	W 3429.	W 3084.
18	D 4232.	D 4540.	D 4182.	D 4175.	D 4103.	W 3447.	W 3145.
19	D 4128.	D 4504.	D 4017.	D 4030.	D 3987.	W 3357.	W 3093.
20	D 4009.	D 4273.	D 3924.	D 3915.	D 3873.	W 3281.	W 3103.
21	D 4080.	D 4260.	D 3963.	D 3952.	D 3859.	W 3296.	W 3238.
22	D 4140.	D 4307.	D 3981.	D 3995.	D 3848.	W 3401.	W 3323.
23	N 3942.	N 4073.	N 3793.	N 3833.	N 3721.	W 3253.	W 3205.
24	N 3665.	N 3732.	N 3462.	N 3479.	N 3381.	W 2968.	W 2899.
DAILY LOAD FACTOR	0.837	0.813	0.859	0.857	0.854	0.860	0.877

********** LOAD MODEL 7 FOR 1986 **********

FOR AREA 1

LOAD FACTOR 0.725

HOUR	...MON...	...TUE...	...WED...	...THU...	...FRI...	...SAT...	...SUN...
1	W 2910.	N 3137.	N 3168.	N 3411.	N 3264.	N 3001.	W 2780.
2	W 2764.	N 2974.	N 2992.	N 3185.	N 3054.	N 2796.	W 2681.
3	W 2700.	N 2850.	N 2899.	N 3082.	N 2958.	N 2674.	W 2660.
4	W 2688.	N 2814.	N 2821.	N 3071.	N 2890.	N 2665.	W 2564.
5	W 2715.	N 2805.	N 2837.	N 3119.	N 2870.	N 2648.	W 2525.
6	W 2735.	N 2880.	N 2942.	N 3206.	N 2929.	N 2585.	W 2470.
7	W 3039.	N 3124.	N 3160.	N 3588.	N 3097.	N 2610.	W 2371.
8	W 3673.	N 3740.	N 3762.	N 4039.	N 3654.	N 2726.	W 2639.
9	D 3982.	D 3959.	D 4055.	D 4528.	D 3836.	W 3013.	W 2751.
10	D 4256.	D 4181.	D 4238.	D 4685.	D 4095.	W 3309.	W 2985.
11	D 4503.	D 4328.	D 4420.	D 4824.	D 4280.	W 3568.	W 3154.
12	D 4601.	D 4442.	D 4482.	D 4993.	D 4296.	W 3638.	W 3240.
13	D 4542.	D 4335.	D 4430.	D 4753.	D 4212.	W 3611.	W 3322.
14	D 4578.	D 4348.	D 4557.	D 4790.	D 4248.	W 3543.	W 3257.
15	D 4472.	D 4317.	D 4455.	D 4713.	D 4200.	W 3459.	W 3213.
16	D 4408.	D 4167.	D 4374.	D 4655.	D 4110.	W 3500.	W 3227.
17	D 4395.	D 4192.	D 4355.	D 4636.	D 4105.	W 3520.	W 3275.
18	D 4224.	D 4148.	D 4268.	D 4620.	D 4062.	W 3532.	W 3299.
19	D 4082.	D 4014.	D 4125.	D 4343.	D 3884.	W 3446.	W 3383.
20	D 3912.	D 3817.	D 4029.	D 4160.	D 3803.	W 3349.	W 3398.
21	D 3941.	D 3827.	D 4005.	D 4135.	D 3777.	W 3288.	W 3487.
22	D 3996.	D 3854.	D 4068.	D 4155.	D 3782.	W 3512.	W 3630.
23	N 3787.	N 3772.	N 3871.	N 3897.	N 3703.	W 3248.	W 3429.
24	N 3558.	N 3440.	N 3726.	N 3659.	N 3372.	W 3024.	W 3106.
DAILY LOAD FACTOR	0.819	0.839	0.842	0.820	0.858	0.873	0.836

********** LOAD MODEL 8 FOR 1986 **********

FOR AREA 1

LOAD FACTOR 0.757

HOUR	...MON...	...TUE...	...WED...	...THU...	...FRI...	...SAT...	...SUN...
1	W 2899.	N 3175.	N 3055.	N 3041.	N 3069.	N 2964.	W 2780.
2	W 2794.	N 2998.	N 2939.	N 2892.	N 2928.	N 2808.	W 2652.
3	W 2715.	N 2913.	N 2835.	N 2785.	N 2827.	N 2665.	W 2543.
4	W 2679.	N 2843.	N 2752.	N 2722.	N 2734.	N 2640.	W 2515.
5	W 2690.	N 2848.	N 2758.	N 2705.	N 2741.	N 2559.	W 2484.
6	W 2867.	N 2955.	N 2882.	N 2853.	N 2860.	N 2588.	W 2453.
7	W 3157.	N 3191.	N 3115.	N 3091.	N 3100.	N 2619.	W 2371.
8	W 3637.	N 3611.	N 3596.	N 3576.	N 3553.	N 2816.	W 2531.
9	D 4115.	D 4037.	D 3944.	D 3871.	D 3915.	W 3081.	W 2775.
10	D 4461.	D 4261.	D 4180.	D 4186.	D 4168.	W 3328.	W 3028.
11	D 4533.	D 4453.	D 4297.	D 4330.	D 4325.	W 3537.	W 3143.
12	D 4618.	D 4471.	D 4378.	D 4393.	D 4410.	W 3590.	W 3281.
13	D 4581.	D 4447.	D 4319.	D 4268.	D 4358.	W 3522.	W 3293.
14	D 4695.	D 4481.	D 4363.	D 4399.	D 4382.	W 3503.	W 3274.
15	D 4550.	D 4440.	D 4310.	D 4346.	D 4281.	W 3428.	W 3206.
16	D 4514.	D 4371.	D 4193.	D 4241.	D 4227.	W 3355.	W 3135.
17	D 4491.	D 4336.	D 4235.	D 4213.	D 4142.	W 3454.	W 3225.
18	D 4426.	D 4247.	D 4127.	D 4156.	D 4089.	W 3459.	W 3259.
19	D 4253.	D 4066.	D 4000.	D 4045.	D 4021.	W 3443.	W 3236.
20	D 4132.	D 3963.	D 3763.	D 3893.	D 3787.	W 3371.	W 3218.
21	D 4200.	D 4058.	D 4012.	D 4054.	D 3972.	W 3478.	W 3397.
22	D 4103.	D 4028.	D 3827.	D 3989.	D 3716.	W 3435.	W 3412.
23	N 3695.	N 3681.	N 3620.	N 3669.	N 3605.	W 3269.	W 3249.
24	N 3464.	N 3385.	N 3309.	N 3342.	N 3301.	W 3015.	W 2978.
DAILY LOAD FACTOR	0.819	0.849	0.845	0.844	0.836	0.881	0.872

********** LOAD MODEL 9 FOR 1986 **********

FOR AREA 1

LOAD FACTOR 0.779

HOUR	...MON...	...TUE...	...WED...	...THU...	...FRI...	...SAT...	...SUN...
1	W 2889.	N 3192.	N 3087.	N 3056.	N 2940.	N 2956.	W 2693.
2	W 2744.	N 3028.	N 2949.	N 2916.	N 2861.	N 2770.	W 2573.
3	W 2681.	N 2941.	N 2851.	N 2823.	N 2780.	N 2629.	W 2512.
4	W 2667.	N 2868.	N 2810.	N 2798.	N 2716.	N 2610.	W 2473.
5	W 2732.	N 2880.	N 2835.	N 2790.	N 2701.	N 2561.	W 2331.
6	W 2931.	N 3024.	N 2995.	N 2975.	N 2905.	N 2599.	W 2428.
7	W 3271.	N 3443.	N 3403.	N 3376.	N 3258.	N 2647.	W 2489.
8	W 3743.	N 3851.	N 3933.	N 3892.	N 3783.	N 2842.	W 2533.
9	D 4120.	D 4231.	D 4223.	D 4200.	D 4104.	W 3150.	W 2756.
10	D 4376.	D 4394.	D 4341.	D 4331.	D 4243.	W 3391.	W 3015.
11	D 4517.	D 4470.	D 4441.	D 4427.	D 4371.	W 3541.	W 3120.
12	D 4568.	D 4483.	D 4381.	D 4434.	D 4336.	W 3605.	W 3231.
13	D 4536.	D 4453.	D 4317.	D 4325.	D 4237.	W 3525.	W 3217.
14	D 4602.	D 4462.	D 4363.	D 4348.	D 4283.	W 3458.	W 3176.
15	D 4500.	D 4419.	D 4291.	D 4274.	D 4206.	W 3318.	W 3107.
16	D 4410.	D 4279.	D 4184.	D 4142.	D 4096.	W 3279.	W 3076.
17	D 4388.	D 4310.	D 4210.	D 4194.	D 4059.	W 3308.	W 3158.
18	D 4358.	D 4268.	D 4170.	D 4161.	D 4027.	W 3415.	W 3206.
19	D 4251.	D 4151.	D 4112.	D 4131.	D 3963.	W 3431.	W 3238.
20	D 4367.	D 4263.	D 4213.	D 4218.	D 4006.	W 3509.	W 3394.
21	D 4300.	D 4257.	D 4227.	D 4175.	D 3992.	W 3554.	W 3495.
22	D 4073.	D 4049.	D 4041.	D 3977.	D 3820.	W 3358.	W 3288.
23	N 3709.	N 3687.	N 3625.	N 3643.	N 3583.	W 3169.	W 3136.
24	N 3475.	N 3386.	N 3334.	N 3299.	N 3225.	W 2966.	W 2896.
DAILY LOAD FACTOR	0.835	0.862	0.857	0.854	0.845	0.874	0.841

********** LOAD MODEL 10 FOR 1986 **********

FOR AREA 1

LOAD FACTOR 0.787

HOUR	...MON...	...TUE...	...WED...	...THU...	...FRI...	...SAT...	...SUN...
1	W 2781.	N 3042.	N 3096.	N 3226.	N 3086.	N 3017.	W 2788.
2	W 2720.	N 2900.	N 2942.	N 3056.	N 2931.	N 2870.	W 2735.
3	W 2679.	N 2854.	N 2907.	N 2992.	N 2877.	N 2799.	W 2753.
4	W 2654.	N 2831.	N 2894.	N 2947.	N 2847.	N 2772.	W 2592.
5	W 2698.	N 2841.	N 2921.	N 2960.	N 2864.	N 2762.	W 2542.
6	W 2820.	N 2986.	N 3105.	N 3152.	N 3028.	N 2804.	W 2624.
7	W 3336.	N 3501.	N 3633.	N 3585.	N 3487.	N 2884.	W 2744.
8	W 3818.	N 4003.	N 4067.	N 4055.	N 3944.	N 3068.	W 2812.
9	D 4156.	D 4266.	D 4365.	D 4329.	D 4261.	W 3366.	W 2978.
10	D 4286.	D 4325.	D 4421.	D 4384.	D 4322.	W 3534.	W 3158.
11	D 4336.	D 4348.	D 4446.	D 4414.	D 4354.	W 3613.	W 3252.
12	D 4302.	D 4297.	D 4460.	D 4373.	D 4289.	W 3623.	W 3270.
13	D 4233.	D 4197.	D 4391.	D 4282.	D 4209.	W 3516.	W 3294.
14	D 4240.	D 4223.	D 4436.	D 4307.	D 4228.	W 3440.	W 3193.
15	D 4163.	D 4119.	D 4398.	D 4212.	D 4100.	W 3316.	W 3120.
16	D 4030.	D 4039.	D 4369.	D 4093.	D 3986.	W 3235.	W 3076.
17	D 4084.	D 4105.	D 4491.	D 4174.	D 4016.	W 3346.	W 3170.
18	D 4203.	D 4188.	D 4610.	D 4253.	D 4048.	W 3464.	W 3328.
19	D 4271.	D 4258.	D 4532.	D 4331.	D 4149.	W 3642.	W 3453.
20	D 4277.	D 4317.	D 4506.	D 4361.	D 4141.	W 3668.	W 3558.
21	D 4131.	D 4182.	D 4406.	D 4248.	D 4011.	W 3570.	W 3473.
22	D 3907.	D 3931.	D 4219.	D 3957.	D 3798.	W 3426.	W 3379.
23	N 3702.	N 3734.	N 3870.	N 3759.	N 3656.	W 3211.	W 3135.
24	N 3399.	N 3386.	N 3542.	N 3413.	N 3358.	W 3007.	W 2915.
DAILY LOAD FACTOR	0.857	0.871	0.859	0.877	0.861	0.886	0.859

********** LOAD MODEL 11 FOR 1986 **********

FOR AREA 1

LOAD FACTOR 0.765

HOUR	...MON...	...TUE...	...WED...	...THU...	...FRI...	...SAT...	...SUN...
1	W 2885.	N 3239.	N 3091.	N 3142.	N 2958.	N 3044.	W 2900.
2	W 2837.	N 3153.	N 3076.	N 2995.	N 2891.	N 2878.	W 2735.
3	W 2764.	N 3114.	N 2968.	N 2938.	N 2864.	N 2780.	W 2651.
4	W 2751.	N 3054.	N 2947.	N 2922.	N 2791.	N 2718.	W 2580.
5	W 2870.	N 3105.	N 2979.	N 2932.	N 2817.	N 2693.	W 2486.
6	W 3018.	N 3184.	N 3165.	N 3130.	N 2950.	N 2805.	W 2615.
7	W 3518.	N 3646.	N 3597.	N 3440.	N 3394.	N 2911.	W 2667.
8	W 4161.	N 4174.	N 3989.	N 3851.	N 3837.	N 3123.	W 2856.
9	D 4521.	D 4477.	D 4410.	D 4094.	D 4122.	W 3378.	W 3032.
10	D 4586.	D 4491.	D 4485.	D 4252.	D 4324.	W 3626.	W 3180.
11	D 4619.	D 4503.	D 4545.	D 4309.	D 4316.	W 3696.	W 3306.
12	D 4601.	D 4429.	D 4512.	D 4259.	D 4298.	W 3661.	W 3351.
13	D 4570.	D 4331.	D 4425.	D 4142.	D 4193.	W 3631.	W 3367.
14	D 4558.	D 4378.	D 4437.	D 4059.	D 4109.	W 3535.	W 3324.
15	D 4479.	D 4281.	D 4339.	D 3910.	D 4014.	W 3457.	W 3226.
16	D 4454.	D 4035.	D 4246.	D 3883.	D 3968.	W 3468.	W 3259.
17	D 4627.	D 4444.	D 4465.	D 4047.	D 4240.	W 3683.	W 3507.
18	D 4841.	D 4738.	D 4663.	D 4394.	D 4448.	W 3940.	W 3733.
19	D 4756.	D 4642.	D 4614.	D 4365.	D 4387.	W 3904.	W 3757.
20	D 4710.	D 4551.	D 4538.	D 4221.	D 4203.	W 3749.	W 3705.
21	D 4531.	D 4403.	D 4354.	D 3976.	D 3963.	W 3638.	W 3613.
22	D 4266.	D 4084.	D 4001.	D 3816.	D 3798.	W 3487.	W 3429.
23	N 3863.	N 3777.	N 3720.	N 3583.	N 3558.	W 3286.	W 3192.
24	N 3549.	N 3334.	N 3412.	N 3213.	N 3276.	W 3136.	W 3063.
DAILY LOAD FACTOR	0.829	0.840	0.849	0.852	0.840	0.848	0.838

********** LOAD MODEL 12 FOR 1986 **********

FOR AREA 1

LOAD FACTOR 0.764

HOUR	...MON...	...TUE...	...WED...	...THU...	...FRI...	...SAT...	...SUN...
1	W 3137.	N 3320.	N 3331.	N 3396.	N 3419.	N 3210.	W 3162.
2	W 3020.	N 3151.	N 3179.	N 3284.	N 3347.	N 3033.	W 2994.
3	W 2971.	N 3076.	N 3108.	N 3243.	N 3281.	N 2897.	W 2878.
4	W 2941.	N 3045.	N 3051.	N 3201.	N 3224.	N 2849.	W 2744.
5	W 3013.	N 3065.	N 3096.	N 3255.	N 3217.	N 2823.	W 2655.
6	W 3192.	N 3265.	N 3303.	N 3376.	N 3337.	N 2922.	W 2863.
7	W 3521.	N 3641.	N 3652.	N 3778.	N 3690.	N 3040.	W 3027.
8	W 4124.	N 4212.	N 4133.	N 4264.	N 4065.	N 3275.	W 3127.
9	D 4506.	D 4526.	D 4513.	D 4581.	D 4358.	W 3436.	W 3354.
10	D 4603.	D 4638.	D 4628.	D 4753.	D 4456.	W 3771.	W 3477.
11	D 4655.	D 4689.	D 4697.	D 4791.	D 4417.	W 3822.	W 3633.
12	D 4593.	D 4714.	D 4670.	D 4766.	D 4372.	W 3847.	W 3705.
13	D 4467.	D 4560.	D 4540.	D 4664.	D 4233.	W 3727.	W 3718.
14	D 4398.	D 4574.	D 4570.	D 4648.	D 4201.	W 3611.	W 3678.
15	D 4323.	D 4478.	D 4488.	D 4608.	D 4038.	W 3505.	W 3566.
16	D 4284.	D 4407.	D 4445.	D 4618.	D 3988.	W 3541.	W 3595.
17	D 4597.	D 4703.	D 4738.	D 4889.	D 4220.	W 3859.	W 3865.
18	D 4862.	D 4910.	D 4954.	D 5125.	D 4521.	W 4146.	W 4174.
19	D 4808.	D 4829.	D 4847.	D 5007.	D 4436.	W 4089.	W 4110.
20	D 4679.	D 4745.	D 4776.	D 4874.	D 4302.	W 3960.	W 4000.
21	D 4496.	D 4533.	D 4586.	D 4730.	D 4045.	W 3875.	W 3948.
22	D 4242.	D 4275.	D 4338.	D 4427.	D 3931.	W 3740.	W 3830.
23	N 3891.	N 3905.	N 3969.	N 4021.	N 3796.	W 3451.	W 3580.
24	N 3467.	N 3489.	N 3666.	N 3814.	N 3407.	W 3364.	W 3385.
DAILY LOAD FACTOR	0.829	0.838	0.835	0.830	0.869	0.842	0.829

NYSE&G AREA 5

********** LOAD MODEL 1 FOR 1986 **********

FOR AREA 5

LOAD FACTOR 0.765

HOUR	...MON...	...TUE...	...WED...	...THU...	...FRI...	...SAT...	...SUN...
1	W 1478.	N 1566.	N 1464.	N 1494.	N 1438.	N 1471.	W 1487.
2	W 1459.	N 1505.	N 1377.	N 1446.	N 1347.	N 1382.	W 1424.
3	W 1400.	N 1461.	N 1311.	N 1355.	N 1246.	N 1301.	W 1362.
4	W 1391.	N 1428.	N 1253.	N 1323.	N 1158.	N 1235.	W 1332.
5	W 1416.	N 1431.	N 1291.	N 1286.	N 1188.	N 1219.	W 1275.
6	W 1511.	N 1501.	N 1454.	N 1412.	N 1371.	N 1266.	W 1340.
7	W 1713.	N 1685.	N 1651.	N 1585.	N 1581.	N 1405.	W 1408.
8	W 1942.	N 1923.	N 1845.	N 1735.	N 1751.	N 1498.	W 1481.
9	D 2009.	D 1937.	D 1894.	D 1783.	D 1828.	W 1595.	W 1550.
10	D 2078.	D 1968.	D 1917.	D 1812.	D 1856.	W 1674.	W 1607.
11	D 2087.	D 1965.	D 1890.	D 1820.	D 1884.	W 1689.	W 1612.
12	D 2026.	D 1927.	D 1876.	D 1788.	D 1838.	W 1696.	W 1625.
13	D 1956.	D 1832.	D 1802.	D 1748.	D 1775.	W 1676.	W 1635.
14	D 1934.	D 1824.	D 1770.	D 1724.	D 1743.	W 1619.	W 1600.
15	D 1911.	D 1766.	D 1740.	D 1701.	D 1705.	W 1578.	W 1546.
16	D 1896.	D 1754.	D 1716.	D 1693.	D 1708.	W 1573.	W 1561.
17	D 2031.	D 1871.	D 1809.	D 1789.	D 1805.	W 1660.	W 1639.
18	D 2140.	D 2063.	D 2000.	D 1948.	D 1963.	W 1849.	W 1792.
19	D 2195.	D 2038.	D 2018.	D 1981.	D 1988.	W 1879.	W 1816.
20	D 2174.	D 1975.	D 1995.	D 1930.	D 1908.	W 1811.	W 1762.
21	D 2108.	D 1887.	D 1903.	D 1867.	D 1840.	W 1737.	W 1720.
22	D 1962.	D 1772.	D 1797.	D 1727.	D 1731.	W 1682.	W 1671.
23	N 1780.	N 1648.	N 1667.	N 1631.	N 1643.	W 1589.	W 1555.
24	N 1656.	N 1528.	N 1535.	N 1517.	N 1541.	W 1521.	W 1491.
DAILY LOAD FACTOR	0.839	0.853	0.846	0.843	0.835	0.834	0.856

********** LOAD MODEL 2 FOR 1986 **********

FOR AREA 5

LOAD FACTOR 0.724

HOUR	...MON...	...TUE...	...WED...	...THU...	...FRI...	...SAT...	...SUN...
1	W 1136.	N 1292.	N 1348.	N 1498.	N 1428.	N 1279.	W 1218.
2	W 1081.	N 1211.	N 1271.	N 1462.	N 1324.	N 1199.	W 1170.
3	W 989.	N 1162.	N 1230.	N 1403.	N 1264.	N 1120.	W 1099.
4	W 1003.	N 1144.	N 1204.	N 1365.	N 1259.	N 1073.	W 1036.
5	W 1016.	N 1152.	N 1240.	N 1359.	N 1250.	N 1059.	W 914.
6	W 1176.	N 1287.	N 1347.	N 1467.	N 1353.	N 1111.	W 1046.
7	W 1438.	N 1510.	N 1527.	N 1589.	N 1530.	N 1186.	W 1130.
8	W 1560.	N 1630.	N 1720.	N 1813.	N 1689.	N 1298.	W 1196.
9	D 1613.	D 1734.	D 1839.	D 1888.	D 1788.	W 1452.	W 1313.
10	D 1678.	D 1743.	D 1880.	D 1929.	D 1802.	W 1496.	W 1381.
11	D 1699.	D 1710.	D 1951.	D 1913.	D 1782.	W 1512.	W 1417.
12	D 1684.	D 1674.	D 1920.	D 1832.	D 1725.	W 1503.	W 1442.
13	D 1636.	D 1618.	D 1867.	D 1751.	D 1639.	W 1471.	W 1424.
14	D 1598.	D 1607.	D 1899.	D 1717.	D 1611.	W 1450.	W 1373.
15	D 1584.	D 1593.	D 1874.	D 1655.	D 1579.	W 1376.	W 1331.
16	D 1566.	D 1597.	D 1906.	D 1643.	D 1554.	W 1393.	W 1343.
17	D 1615.	D 1652.	D 1992.	D 1702.	D 1575.	W 1459.	W 1400.
18	D 1767.	D 1819.	D 2021.	D 1875.	D 1649.	W 1518.	W 1488.
19	D 1847.	D 1933.	D 2101.	D 1976.	D 1775.	W 1563.	W 1534.
20	D 1794.	D 1856.	D 2052.	D 1965.	D 1693.	W 1526.	W 1524.
21	D 1669.	D 1759.	D 2001.	D 1826.	D 1623.	W 1486.	W 1493.
22	D 1573.	D 1603.	D 1942.	D 1663.	D 1543.	W 1408.	W 1445.
23	N 1483.	N 1515.	N 1660.	N 1539.	N 1480.	W 1308.	W 1338.
24	N 1361.	N 1455.	N 1549.	N 1476.	N 1388.	W 1223.	W 1234.
DAILY LOAD FACTOR	0.802	0.803	0.820	0.850	0.863	0.866	0.850

********** LOAD MODEL 3 FOR 1986 **********

FOR AREA 5

LOAD FACTOR 0.756

HOUR	...MON...	...TUE...	...WED...	...THU...	...FRI...	...SAT...	...SUN...
1	W 1102.	N 1284.	N 1398.	N 1307.	N 1262.	N 1269.	W 1215.
2	W 1050.	N 1194.	N 1349.	N 1250.	N 1199.	N 1210.	W 1153.
3	W 972.	N 1172.	N 1291.	N 1187.	N 1166.	N 1158.	W 1110.
4	W 912.	N 1168.	N 1281.	N 1179.	N 1136.	N 1131.	W 1084.
5	W 995.	N 1186.	N 1277.	N 1189.	N 1160.	N 1125.	W 1028.
6	W 1118.	N 1294.	N 1376.	N 1302.	N 1249.	N 1175.	W 1074.
7	W 1370.	N 1490.	N 1533.	N 1483.	N 1447.	N 1223.	W 1094.
8	W 1537.	N 1663.	N 1739.	N 1635.	N 1588.	N 1317.	W 1140.
9	D 1642.	D 1753.	D 1798.	D 1714.	D 1667.	W 1426.	W 1241.
10	D 1711.	D 1812.	D 1839.	D 1731.	D 1688.	W 1502.	W 1312.
11	D 1701.	D 1806.	D 1778.	D 1690.	D 1704.	W 1513.	W 1324.
12	D 1664.	D 1760.	D 1735.	D 1647.	D 1655.	W 1508.	W 1334.
13	D 1637.	D 1728.	D 1660.	D 1606.	D 1609.	W 1459.	W 1313.
14	D 1622.	D 1743.	D 1653.	D 1590.	D 1601.	W 1417.	W 1256.
15	D 1592.	D 1726.	D 1610.	D 1548.	D 1553.	W 1396.	W 1234.
16	D 1560.	D 1707.	D 1564.	D 1523.	D 1519.	W 1390.	W 1205.
17	D 1630.	D 1767.	D 1627.	D 1574.	D 1556.	W 1413.	W 1254.
18	D 1672.	D 1851.	D 1693.	D 1640.	D 1595.	W 1472.	W 1346.
19	D 1772.	D 1888.	D 1791.	D 1747.	D 1680.	W 1539.	W 1422.
20	D 1781.	D 1938.	D 1823.	D 1757.	D 1696.	W 1543.	W 1433.
21	D 1719.	D 1867.	D 1724.	D 1686.	D 1620.	W 1488.	W 1407.
22	D 1582.	D 1786.	D 1615.	D 1569.	D 1527.	W 1403.	W 1352.
23	N 1465.	N 1585.	N 1493.	N 1455.	N 1438.	W 1340.	W 1246.
24	N 1358.	N 1477.	N 1384.	N 1355.	N 1364.	W 1237.	W 1146.
DAILY LOAD FACTOR	0.823	0.831	0.862	0.862	0.872	0.882	0.864

********** LOAD MODEL 4 FOR 1986 **********

FOR AREA 5

LOAD FACTOR 0.758

HOUR	...MON...	...TUE...	...WED...	...THU...	...FRI...	...SAT...	...SUN...
1	W 1040.	N 1178.	N 1190.	N 1116.	N 1128.	N 1022.	W 1007.
2	W 1019.	N 1144.	N 1142.	N 1054.	N 1025.	N 972.	W 968.
3	W 987.	N 1098.	N 1092.	N 1016.	N 1013.	N 934.	W 958.
4	W 976.	N 1076.	N 1043.	N 996.	N 981.	N 919.	W 892.
5	W 999.	N 1082.	N 1048.	N 1002.	N 993.	N 878.	W 828.
6	W 1102.	N 1167.	N 1140.	N 1069.	N 1030.	N 914.	W 864.
7	W 1300.	N 1339.	N 1331.	N 1256.	N 1196.	N 946.	W 922.
8	W 1500.	N 1498.	N 1479.	N 1430.	N 1372.	N 1036.	W 962.
9	D 1644.	D 1577.	D 1552.	D 1517.	D 1425.	W 1174.	W 1050.
10	D 1657.	D 1611.	D 1563.	D 1534.	D 1465.	W 1267.	W 1137.
11	D 1699.	D 1629.	D 1555.	D 1558.	D 1455.	W 1309.	W 1153.
12	D 1666.	D 1595.	D 1522.	D 1530.	D 1450.	W 1292.	W 1162.
13	D 1619.	D 1549.	D 1488.	D 1476.	D 1404.	W 1248.	W 1158.
14	D 1586.	D 1514.	D 1472.	D 1446.	D 1388.	W 1224.	W 1123.
15	D 1536.	D 1486.	D 1432.	D 1414.	D 1380.	W 1183.	W 1094.
16	D 1493.	D 1435.	D 1406.	D 1398.	D 1361.	W 1180.	W 1087.
17	D 1509.	D 1442.	D 1427.	D 1409.	D 1370.	W 1216.	W 1107.
18	D 1527.	D 1452.	D 1438.	D 1423.	D 1382.	W 1286.	W 1147.
19	D 1540.	D 1490.	D 1483.	D 1469.	D 1393.	W 1328.	W 1204.
20	D 1600.	D 1572.	D 1546.	D 1512.	D 1461.	W 1367.	W 1276.
21	D 1582.	D 1567.	D 1505.	D 1507.	D 1400.	W 1335.	W 1297.
22	D 1497.	D 1458.	D 1419.	D 1411.	D 1348.	W 1243.	W 1231.
23	N 1379.	N 1354.	N 1318.	N 1324.	N 1210.	W 1150.	W 1170.
24	N 1282.	N 1236.	N 1186.	N 1202.	N 1134.	W 1060.	W 1065.
DAILY LOAD FACTOR	0.827	0.858	0.874	0.858	0.875	0.838	0.831

********** LOAD MODEL 5 FOR 1986 **********

FOR AREA 5

LOAD FACTOR 0.777

HOUR	...MON...	...TUE...	...WED...	...THU...	...FRI...	...SAT...	...SUN...
1	W 1001.	N 1058.	N 1067.	N 1072.	N 1062.	N 1023.	W 984.
2	W 997.	N 1017.	N 1026.	N 1035.	N 1021.	N 991.	W 929.
3	W 981.	N 967.	N 995.	N 988.	N 974.	N 921.	W 907.
4	W 952.	N 944.	N 940.	N 962.	N 948.	N 901.	W 872.
5	W 979.	N 935.	N 932.	N 956.	N 949.	N 885.	W 825.
6	W 1039.	N 1008.	N 1019.	N 1011.	N 1013.	N 893.	W 848.
7	W 1164.	N 1145.	N 1167.	N 1161.	N 1158.	N 915.	W 859.
8	W 1332.	N 1353.	N 1381.	N 1347.	N 1367.	N 1031.	W 925.
9	D 1482.	D 1489.	D 1480.	D 1469.	D 1476.	W 1124.	W 1052.
10	D 1561.	D 1537.	D 1533.	D 1504.	D 1515.	W 1212.	W 1091.
11	D 1577.	D 1556.	D 1543.	D 1519.	D 1523.	W 1241.	W 1098.
12	D 1567.	D 1550.	D 1527.	D 1493.	D 1499.	W 1234.	W 1106.
13	D 1530.	D 1510.	D 1485.	D 1454.	D 1464.	W 1200.	W 1095.
14	D 1513.	D 1508.	D 1495.	D 1462.	D 1466.	W 1169.	W 1088.
15	D 1449.	D 1473.	D 1456.	D 1429.	D 1422.	W 1139.	W 1070.
16	D 1410.	D 1447.	D 1432.	D 1390.	D 1371.	W 1136.	W 1047.
17	D 1424.	D 1458.	D 1445.	D 1396.	D 1378.	W 1153.	W 1076.
18	D 1419.	D 1451.	D 1440.	D 1376.	D 1340.	W 1176.	W 1079.
19	D 1363.	D 1414.	D 1359.	D 1314.	D 1307.	W 1180.	W 1083.
20	D 1286.	D 1344.	D 1291.	D 1275.	D 1270.	W 1149.	W 1085.
21	D 1403.	D 1435.	D 1399.	D 1405.	D 1322.	W 1192.	W 1142.
22	D 1386.	D 1427.	D 1401.	D 1394.	D 1296.	W 1189.	W 1185.
23	N 1246.	N 1264.	N 1259.	N 1253.	N 1228.	W 1122.	W 1109.
24	N 1130.	N 1117.	N 1116.	N 1112.	N 1100.	W 1055.	W 1006.
DAILY LOAD FACTOR	0.824	0.841	0.842	0.844	0.834	0.881	0.864

********** LOAD MODEL 6 FOR 1986 **********

FOR AREA 5

LOAD FACTOR 0.706

HOUR	...MON...	...TUE...	...WED...	...THU...	...FRI...	...SAT...	...SUN...
1	W 987.	N 1173.	N 1197.	N 1068.	N 1062.	N 1036.	W 983.
2	W 969.	N 1132.	N 1130.	N 1017.	N 1013.	N 1002.	W 955.
3	W 944.	N 1079.	N 1051.	N 993.	N 973.	N 965.	W 909.
4	W 938.	N 1055.	N 1011.	N 961.	N 947.	N 933.	W 885.
5	W 925.	N 1043.	N 1001.	N 949.	N 953.	N 900.	W 873.
6	W 957.	N 1102.	N 1025.	N 976.	N 980.	N 891.	W 854.
7	W 1107.	N 1280.	N 1211.	N 1119.	N 1114.	N 941.	W 815.
8	W 1356.	N 1467.	N 1376.	N 1351.	N 1346.	N 1006.	W 917.
9	D 1451.	D 1618.	D 1490.	D 1433.	D 1437.	W 1158.	W 997.
10	D 1506.	D 1631.	D 1535.	D 1479.	D 1487.	W 1253.	W 1074.
11	D 1574.	D 1653.	D 1562.	D 1518.	D 1533.	W 1319.	W 1125.
12	D 1585.	D 1751.	D 1567.	D 1525.	D 1527.	W 1327.	W 1165.
13	D 1549.	D 1686.	D 1537.	D 1503.	D 1501.	W 1290.	W 1185.
14	D 1595.	D 1812.	D 1539.	D 1507.	D 1510.	W 1259.	W 1146.
15	D 1557.	D 1661.	D 1514.	D 1493.	D 1495.	W 1227.	W 1091.
16	D 1530.	D 1646.	D 1498.	D 1469.	D 1464.	W 1216.	W 1086.
17	D 1551.	D 1638.	D 1500.	D 1471.	D 1476.	W 1242.	W 1097.
18	D 1522.	D 1626.	D 1473.	D 1460.	D 1454.	W 1263.	W 1135.
19	D 1485.	D 1607.	D 1442.	D 1425.	D 1427.	W 1234.	W 1143.
20	D 1446.	D 1547.	D 1402.	D 1408.	D 1372.	W 1223.	W 1122.
21	D 1457.	D 1542.	D 1413.	D 1384.	D 1367.	W 1207.	W 1152.
22	D 1488.	D 1560.	D 1418.	D 1422.	D 1362.	W 1249.	W 1246.
23	N 1391.	N 1430.	N 1333.	N 1338.	N 1305.	W 1161.	W 1178.
24	N 1269.	N 1298.	N 1201.	N 1193.	N 1169.	W 1047.	W 1033.
DAILY LOAD FACTOR	0.840	0.806	0.862	0.860	0.850	0.859	0.842

********** LOAD MODEL 7 FOR 1986 **********

FOR AREA 5

LOAD FACTOR 0.724

HOUR	...MON...	...TUE...	...WED...	...THU...	...FRI...	...SAT...	...SUN...
1	W 1050.	N 1138.	N 1108.	N 1177.	N 1165.	N 1070.	W 1046.
2	W 1038.	N 1059.	N 1076.	N 1151.	N 1100.	N 1041.	W 983.
3	W 974.	N 1030.	N 1009.	N 1104.	N 1054.	N 954.	W 945.
4	W 952.	N 985.	N 978.	N 1065.	N 1025.	N 940.	W 910.
5	W 949.	N 958.	N 966.	N 1062.	N 987.	N 921.	W 898.
6	W 971.	N 1015.	N 1002.	N 1116.	N 996.	N 906.	W 836.
7	W 1081.	N 1129.	N 1142.	N 1280.	N 1087.	N 930.	W 871.
8	W 1344.	N 1360.	N 1363.	N 1399.	N 1294.	N 991.	W 934.
9	D 1437.	D 1442.	D 1431.	D 1634.	D 1382.	W 1121.	W 1021.
10	D 1531.	D 1506.	D 1525.	D 1699.	D 1464.	W 1240.	W 1090.
11	D 1636.	D 1582.	D 1595.	D 1750.	D 1519.	W 1328.	W 1154.
12	D 1665.	D 1574.	D 1600.	D 1802.	D 1529.	W 1350.	W 1186.
13	D 1648.	D 1553.	D 1607.	D 1728.	D 1509.	W 1331.	W 1218.
14	D 1658.	D 1564.	D 1604.	D 1717.	D 1522.	W 1301.	W 1205.
15	D 1625.	D 1548.	D 1586.	D 1707.	D 1492.	W 1275.	W 1172.
16	D 1579.	D 1542.	D 1556.	D 1692.	D 1480.	W 1233.	W 1160.
17	D 1568.	D 1545.	D 1562.	D 1681.	D 1470.	W 1287.	W 1180.
18	D 1558.	D 1495.	D 1544.	D 1672.	D 1467.	W 1310.	W 1227.
19	D 1498.	D 1473.	D 1487.	D 1614.	D 1427.	W 1305.	W 1252.
20	D 1449.	D 1419.	D 1453.	D 1513.	D 1373.	W 1238.	W 1214.
21	D 1445.	D 1415.	D 1459.	D 1502.	D 1375.	W 1267.	W 1273.
22	D 1474.	D 1409.	D 1483.	D 1536.	D 1387.	W 1285.	W 1335.
23	N 1371.	N 1366.	N 1394.	N 1405.	N 1356.	W 1200.	W 1262.
24	N 1255.	N 1193.	N 1316.	N 1322.	N 1170.	W 1096.	W 1112.
DAILY LOAD FACTOR	0.820	0.851	0.852	0.817	0.862	0.862	0.827

********** LOAD MODEL 8 FOR 1986 **********

FOR AREA 5

LOAD FACTOR 0.760

HOUR	...MON...	...TUE...	...WED...	...THU...	...FRI...	...SAT...	...SUN...
1	W 1013.	N 1141.	N 1110.	N 1078.	N 1099.	N 1076.	W 1036.
2	W 990.	N 1073.	N 1062.	N 1048.	N 1058.	N 1031.	W 985.
3	W 952.	N 1053.	N 1024.	N 999.	N 1002.	N 982.	W 944.
4	W 929.	N 1018.	N 979.	N 966.	N 970.	N 942.	W 907.
5	W 920.	N 1009.	N 977.	N 948.	N 960.	N 914.	W 849.
6	W 994.	N 1068.	N 1027.	N 1007.	N 1004.	N 924.	W 887.
7	W 1127.	N 1224.	N 1146.	N 1115.	N 1137.	N 973.	W 900.
8	W 1292.	N 1366.	N 1310.	N 1268.	N 1298.	N 1033.	W 939.
9	D 1441.	D 1530.	D 1430.	D 1372.	D 1399.	W 1154.	W 1043.
10	D 1547.	D 1615.	D 1512.	D 1481.	D 1503.	W 1249.	W 1132.
11	D 1634.	D 1668.	D 1574.	D 1540.	D 1589.	W 1327.	W 1156.
12	D 1646.	D 1702.	D 1592.	D 1571.	D 1600.	W 1343.	W 1230.
13	D 1620.	D 1671.	D 1562.	D 1552.	D 1585.	W 1333.	W 1238.
14	D 1641.	D 1683.	D 1576.	D 1557.	D 1595.	W 1296.	W 1219.
15	D 1604.	D 1660.	D 1545.	D 1549.	D 1578.	W 1276.	W 1161.
16	D 1567.	D 1626.	D 1514.	D 1506.	D 1525.	W 1263.	W 1151.
17	D 1581.	D 1654.	D 1522.	D 1516.	D 1519.	W 1300.	W 1171.
18	D 1553.	D 1610.	D 1499.	D 1511.	D 1495.	W 1317.	W 1206.
19	D 1507.	D 1532.	D 1446.	D 1455.	D 1460.	W 1305.	W 1212.
20	D 1463.	D 1488.	D 1382.	D 1425.	D 1419.	W 1287.	W 1199.
21	D 1527.	D 1536.	D 1451.	D 1493.	D 1485.	W 1318.	W 1245.
22	D 1476.	D 1491.	D 1411.	D 1436.	D 1389.	W 1280.	W 1257.
23	N 1359.	N 1351.	N 1313.	N 1337.	N 1321.	W 1215.	W 1194.
24	N 1234.	N 1241.	N 1166.	N 1182.	N 1176.	W 1124.	W 1085.
DAILY LOAD FACTOR	0.826	0.833	0.841	0.846	0.838	0.877	0.873

********** LOAD MODEL 9 FOR 1986 **********

FOR AREA 5

LOAD FACTOR 0.775

HOUR	...MON...	...TUE...	...WED...	...THU...	...FRI...	...SAT...	...SUN...
1	W 1022.	N 1131.	N 1106.	N 1082.	N 1090.	N 1069.	W 987.
2	W 1009.	N 1097.	N 1066.	N 1053.	N 1043.	N 994.	W 938.
3	W 973.	N 1037.	N 1019.	N 997.	N 1004.	N 930.	W 895.
4	W 951.	N 1015.	N 982.	N 955.	N 954.	N 912.	W 874.
5	W 958.	N 1000.	N 970.	N 945.	N 964.	N 906.	W 823.
6	W 1048.	N 1077.	N 1073.	N 1032.	N 1031.	N 918.	W 863.
7	W 1232.	N 1248.	N 1279.	N 1239.	N 1223.	N 960.	W 883.
8	W 1377.	N 1428.	N 1418.	N 1403.	N 1390.	N 1033.	W 924.
9	D 151[illegible].	D 1540.	D 1530.	D 1502.	D 1494.	W 1171.	W 1027.
10	D 1594.	D 1587.	D 1571.	D 1537.	D 1534.	W 1258.	W 1114.
11	D 1637.	D 1622.	D 1589.	D 1579.	D 1553.	W 1306.	W 1142.
12	D 1649.	D 1628.	D 1577.	D 1560.	D 1544.	W 1323.	W 1192.
13	D 1643.	D 1599.	D 1547.	D 1526.	D 1520.	W 1304.	W 1197.
14	D 1675.	D 1591.	D 1535.	D 1528.	D 1505.	W 1251.	W 1175.
15	D 1633.	D 1573.	D 1515.	D 1511.	D 1492.	W 1227.	W 1162.
16	D 1609.	D 1542.	D 1491.	D 1487.	D 1435.	W 1210.	W 1145.
17	D 1612.	D 1565.	D 1524.	D 1501.	D 1452.	W 1244.	W 1166.
18	D 1602.	D 1569.	D 1532.	D 1513.	D 1460.	W 1293.	W 1182.
19	D 1582.	D 1549.	D 1508.	D 1496.	D 1439.	W 1299.	W 1201.
20	D 1617.	D 1581.	D 1562.	D 1555.	D 1485.	W 1330.	W 1266.
21	D 1606.	D 1570.	D 1551.	D 1558.	D 1484.	W 1310.	W 1300.
22	D 1489.	D 1482.	D 1466.	D 1476.	D 1363.	W 1236.	W 1217.
23	N 1352.	N 1335.	N 1340.	N 1317.	N 1288.	W 1152.	W 1122.
24	N 1205.	N 1187.	N 1177.	N 1189.	N 1138.	W 1061.	W 1023.
DAILY LOAD FACTOR	0.836	0.859	0.863	0.859	0.855	0.868	0.827

*********** LOAD MODEL 10 FOR 1986 **********

FOR AREA 5

LOAD FACTOR 0.763

HOUR	...MON...	...TUE...	...WED...	...THU...	...FRI...	...SAT...	...SUN...
1	W 1075.	N 1198.	N 1108.	N 1117.	N 1122.	N 1127.	W 1068.
2	W 1061.	N 1147.	N 1053.	N 1056.	N 1059.	N 1073.	W 1065.
3	W 1046.	N 1113.	N 1023.	N 1043.	N 1031.	N 1038.	W 982.
4	W 1040.	N 1070.	N 995.	N 1013.	N 1000.	N 992.	W 958.
5	W 1051.	N 1087.	N 1003.	N 1019.	N 1006.	N 986.	W 938.
6	W 1138.	N 1159.	N 1098.	N 1120.	N 1102.	N 1035.	W 976.
7	W 1358.	N 1406.	N 1318.	N 1334.	N 1312.	N 1093.	W 1028.
8	W 1542.	N 1581.	N 1525.	N 1508.	N 1494.	N 1188.	W 1104.
9	D 1629.	D 1613.	D 1577.	D 1583.	D 1569.	W 1296.	W 1176.
10	D 1650.	D 1620.	D 1586.	D 1596.	D 1589.	W 1379.	W 1241.
11	D 1673.	D 1616.	D 1594.	D 1599.	D 1595.	W 1390.	W 1250.
12	D 1654.	D 1592.	D 1563.	D 1556.	D 1567.	W 1362.	W 1267.
13	D 1634.	D 1544.	D 1526.	D 1532.	D 1537.	W 1303.	W 1254.
14	D 1637.	D 1540.	D 1529.	D 1520.	D 1511.	W 1278.	W 1202.
15	D 1632.	D 1491.	D 1486.	D 1482.	D 1479.	W 1235.	W 1154.
16	D 1625.	D 1471.	D 1473.	D 1461.	D 1448.	W 1217.	W 1169.
17	D 1662.	D 1500.	D 1514.	D 1504.	D 1476.	W 1275.	W 1220.
18	D 1767.	D 1552.	D 1565.	D 1559.	D 1547.	W 1343.	W 1285.
19	D 1721.	D 1600.	D 1606.	D 1602.	D 1585.	W 1416.	W 1340.
20	D 1686.	D 1605.	D 1608.	D 1610.	D 1579.	W 1423.	W 1368.
21	D 1644.	D 1549.	D 1554.	D 1572.	D 1523.	W 1372.	W 1324.
22	D 1574.	D 1441.	D 1455.	D 1469.	D 1437.	W 1289.	W 1257.
23	N 1430.	N 1330.	N 1356.	N 1350.	N 1346.	W 1206.	W 1164.
24	N 1293.	N 1183.	N 1212.	N 1193.	N 1228.	W 1132.	W 1082.
DAILY LOAD FACTOR	0.831	0.875	0.864	0.864	0.866	0.862	0.849

********** LOAD MODEL 11 FOR 1986 **********

FOR AREA 5

LOAD FACTOR 0.737

HOUR	...MON...	...TUE...	...WED...	...THU...	...FRI...	...SAT...	...SUN...
1	W 1149.	N 1250.	N 1197.	N 1183.	N 1153.	N 1162.	W 1144.
2	W 1095.	N 1187.	N 1138.	N 1126.	N 1075.	N 1100.	W 1067.
3	W 1062.	N 1154.	N 1092.	N 1071.	N 1034.	N 1040.	W 1002.
4	W 1059.	N 1132.	N 1081.	N 1042.	N 990.	N 1011.	W 966.
5	W 1078.	N 1135.	N 1088.	N 1055.	N 1028.	N 1021.	W 936.
6	W 1170.	N 1221.	N 1176.	N 1159.	N 1108.	N 1051.	W 980.
7	W 1388.	N 1429.	N 1375.	N 1306.	N 1290.	N 1142.	W 1044.
8	W 1616.	N 1618.	N 1559.	N 1481.	N 1450.	N 1208.	W 1116.
9	D 1713.	D 1681.	D 1635.	D 1545.	D 1533.	W 1320.	W 1192.
10	D 1738.	D 1697.	D 1663.	D 1564.	D 1572.	W 1416.	W 1254.
11	D 1752.	D 1687.	D 1667.	D 1556.	D 1581.	W 1455.	W 1280.
12	D 1725.	D 1642.	D 1629.	D 1530.	D 1540.	W 1437.	W 1296.
13	D 1694.	D 1593.	D 1603.	D 1482.	D 1492.	W 1398.	W 1284.
14	D 1691.	D 1588.	D 1585.	D 1441.	D 1487.	W 1361.	W 1266.
15	D 1656.	D 1577.	D 1562.	D 1409.	D 1463.	W 1339.	W 1239.
16	D 1660.	D 1552.	D 1537.	D 1403.	D 1445.	W 1350.	W 1245.
17	D 1769.	D 1675.	D 1637.	D 1498.	D 1567.	W 1469.	W 1344.
18	D 1898.	D 1802.	D 1785.	D 1651.	D 1703.	W 1625.	W 1501.
19	D 1847.	D 1791.	D 1761.	D 1632.	D 1671.	W 1612.	W 1508.
20	D 1819.	D 1719.	D 1706.	D 1599.	D 1606.	W 1515.	W 1459.
21	D 1758.	D 1646.	D 1622.	D 1527.	D 1522.	W 1433.	W 1392.
22	D 1631.	D 1548.	D 1524.	D 1413.	D 1422.	W 1355.	W 1314.
23	N 1476.	N 1386.	N 1379.	N 1300.	N 1326.	W 1262.	W 1231.
24	N 1332.	N 1275.	N 1259.	N 1211.	N 1225.	W 1203.	W 1165.
DAILY LOAD FACTOR	0.807	0.832	0.823	0.837	0.814	0.802	0.807

********** LOAD MODEL 12 FOR 1986 **********

FOR AREA 5

LOAD FACTOR 0.744

HOUR	...MON...	...TUE...	...WED...	...THU...	...FRI...	...SAT...	...SUN...
1	W 1312.	N 1363.	N 1305.	N 1318.	N 1301.	N 1291.	W 1323.
2	W 1283.	N 1308.	N 1197.	N 1231.	N 1215.	N 1204.	W 1258.
3	W 1225.	N 1265.	N 1182.	N 1190.	N 1164.	N 1150.	W 1184.
4	W 1211.	N 1237.	N 1127.	N 1142.	N 1112.	N 1055.	W 1134.
5	W 1254.	N 1207.	N 1154.	N 1174.	N 1116.	N 1094.	W 1104.
6	W 1339.	N 1329.	N 1278.	N 1273.	N 1248.	N 1158.	W 1179.
7	W 1556.	N 1496.	N 1455.	N 1394.	N 1411.	N 1252.	W 1242.
8	W 1798.	N 1727.	N 1655.	N 1608.	N 1615.	N 1334.	W 1296.
9	D 1851.	D 1810.	D 1736.	D 1683.	D 1676.	W 1405.	W 1379.
10	D 1876.	D 1830.	D 1764.	D 1718.	D 1709.	W 1520.	W 1451.
11	D 1885.	D 1848.	D 1789.	D 1715.	D 1688.	W 1547.	W 1480.
12	D 1855.	D 1821.	D 1747.	D 1692.	D 1641.	W 1541.	W 1483.
13	D 1824.	D 1772.	D 1703.	D 1629.	D 1600.	W 1476.	W 1487.
14	D 1819.	D 1753.	D 1686.	D 1612.	D 1562.	W 1446.	W 1466.
15	D 1801.	D 1722.	D 1652.	D 1575.	D 1535.	W 1400.	W 1421.
16	D 1818.	D 1733.	D 1646.	D 1595.	D 1529.	W 1440.	W 1436.
17	D 1939.	D 1834.	D 1786.	D 1720.	D 1624.	W 1585.	W 1579.
18	D 2067.	D 1959.	D 1926.	D 1868.	D 1793.	W 1778.	W 1750.
19	D 1995.	D 1913.	D 1894.	D 1838.	D 1757.	W 1743.	W 1739.
20	D 1975.	D 1860.	D 1843.	D 1774.	D 1712.	W 1668.	W 1706.
21	D 1904.	D 1803.	D 1769.	D 1699.	D 1636.	W 1605.	W 1633.
22	D 1806.	D 1671.	D 1661.	D 1588.	D 1568.	W 1512.	W 1552.
23	N 1618.	N 1505.	N 1515.	N 1463.	N 1470.	W 1389.	W 1428.
24	N 1459.	N 1370.	N 1385.	N 1349.	N 1354.	W 1346.	W 1344.
DAILY LOAD FACTOR	0.816	0.832	0.819	0.822	0.837	0.795	0.811

RG&E AREA 9

*********** LOAD MODEL 1 FOR 1986 **********

FOR AREA 9

LOAD FACTOR 0.751

HOUR	...MON...	...TUE...	...WED...	...THU...	...FRI...	...SAT...	...SUN...
1	W 584.	N 618.	N 601.	N 593.	N 584.	N 588.	W 567.
2	W 568.	N 595.	N 578.	N 574.	N 551.	N 561.	W 533.
3	W 569.	N 585.	N 562.	N 553.	N 539.	N 541.	W 496.
4	W 555.	N 575.	N 549.	N 548.	N 524.	N 519.	W 491.
5	W 566.	N 581.	N 558.	N 545.	N 528.	N 515.	W 459.
6	W 597.	N 599.	N 591.	N 572.	N 564.	N 530.	W 477.
7	W 687.	N 693.	N 680.	N 656.	N 646.	N 570.	W 507.
8	W 821.	N 829.	N 788.	N 733.	N 739.	N 607.	W 547.
9	D 860.	D 857.	D 843.	D 766.	D 781.	W 649.	W 579.
10	D 876.	D 874.	D 851.	D 808.	D 831.	W 682.	W 612.
11	D 891.	D 886.	D 864.	D 827.	D 835.	W 716.	W 616.
12	D 889.	D 872.	D 853.	D 820.	D 832.	W 714.	W 632.
13	D 884.	D 852.	D 842.	D 794.	D 823.	W 707.	W 652.
14	D 877.	D 854.	D 845.	D 796.	D 817.	W 684.	W 658.
15	D 870.	D 849.	D 838.	D 776.	D 800.	W 675.	W 628.
16	D 857.	D 840.	D 833.	D 774.	D 790.	W 672.	W 634.
17	D 894.	D 859.	D 855.	D 819.	D 824.	W 698.	W 669.
18	D 937.	D 919.	D 908.	D 868.	D 867.	W 770.	W 737.
19	D 958.	D 914.	D 903.	D 863.	D 862.	W 786.	W 743.
20	D 926.	D 885.	D 881.	D 841.	D 837.	W 753.	W 725.
21	D 899.	D 850.	D 854.	D 815.	D 806.	W 735.	W 710.
22	D 847.	D 803.	D 810.	D 756.	D 748.	W 690.	W 678.
23	N 760.	N 721.	N 729.	N 701.	N 704.	W 667.	W 644.
24	N 685.	N 663.	N 664.	N 620.	N 638.	W 609.	W 605.
DAILY LOAD FACTOR	0.820	0.842	0.839	0.836	0.840	0.829	0.819

********** LOAD MODEL 2 FOR 1986 **********

FOR AREA 9

LOAD FACTOR 0.727

HOUR	...MON...	...TUE...	...WED...	...THU...	...FRI...	...SAT...	...SUN...
1	W 507.	N 588.	N 631.	N 615.	N 609.	N 545.	W 503.
2	W 499.	N 551.	N 606.	N 566.	N 555.	N 510.	W 483.
3	W 484.	N 532.	N 573.	N 539.	N 523.	N 501.	W 463.
4	W 480.	N 526.	N 564.	N 535.	N 520.	N 490.	W 457.
5	W 492.	N 541.	N 560.	N 543.	N 531.	N 487.	W 444.
6	W 517.	N 583.	N 593.	N 586.	N 568.	N 495.	W 420.
7	W 634.	N 693.	N 680.	N 676.	N 664.	N 515.	W 469.
8	W 726.	N 752.	N 737.	N 740.	N 730.	N 571.	W 475.
9	D 758.	D 848.	D 791.	D 807.	D 773.	W 625.	W 514.
10	D 783.	D 869.	D 826.	D 845.	D 805.	W 663.	W 549.
11	D 818.	D 890.	D 850.	D 858.	D 830.	W 701.	W 574.
12	D 812.	D 876.	D 838.	D 852.	D 800.	W 697.	W 608.
13	D 787.	D 875.	D 822.	D 836.	D 770.	W 673.	W 612.
14	D 781.	D 888.	D 829.	D 824.	D 775.	W 655.	W 597.
15	D 780.	D 879.	D 798.	D 790.	D 760.	W 652.	W 580.
16	D 779.	D 885.	D 793.	D 769.	D 756.	W 640.	W 576.
17	D 815.	D 896.	D 842.	D 777.	D 744.	W 643.	W 598.
18	D 863.	D 922.	D 866.	D 832.	D 762.	W 683.	W 636.
19	D 873.	D 947.	D 882.	D 871.	D 788.	W 712.	W 667.
20	D 851.	D 904.	D 860.	D 854.	D 767.	W 694.	W 659.
21	D 785.	D 892.	D 803.	D 795.	D 742.	W 657.	W 646.
22	D 734.	D 840.	D 749.	D 745.	D 719.	W 628.	W 617.
23	N 705.	N 735.	N 716.	N 715.	N 685.	W 600.	W 590.
24	N 641.	N 689.	N 655.	N 649.	N 621.	W 530.	W 537.
DAILY LOAD FACTOR	0.807	0.818	0.844	0.843	0.843	0.852	0.829

********** LOAD MODEL 3 FOR 1986 **********

FOR AREA 9

LOAD FACTOR 0.754

HOUR	...MON...	...TUE...	...WED...	...THU...	...FRI...	...SAT...	...SUN...
1	W 493.	N 568.	N 607.	N 563.	N 554.	N 544.	W 507.
2	W 477.	N 542.	N 588.	N 541.	N 532.	N 508.	W 482.
3	W 472.	N 526.	N 578.	N 524.	N 517.	N 497.	W 461.
4	W 469.	N 521.	N 565.	N 520.	N 509.	N 491.	W 454.
5	W 486.	N 534.	N 571.	N 529.	N 518.	N 488.	W 392.
6	W 511.	N 574.	N 590.	N 555.	N 549.	N 504.	W 437.
7	W 598.	N 657.	N 686.	N 642.	N 638.	N 514.	W 421.
8	W 710.	N 742.	N 746.	N 718.	N 717.	N 560.	W 465.
9	D 757.	D 822.	D 819.	D 783.	D 771.	W 604.	W 499.
10	D 802.	D 837.	D 830.	D 813.	D 796.	W 662.	W 536.
11	D 832.	D 846.	D 833.	D 820.	D 823.	W 680.	W 552.
12	D 826.	D 843.	D 829.	D 802.	D 806.	W 690.	W 572.
13	D 807.	D 835.	D 800.	D 786.	D 776.	W 665.	W 580.
14	D 809.	D 842.	D 799.	D 780.	D 764.	W 648.	W 566.
15	D 800.	D 838.	D 794.	D 769.	D 749.	W 634.	W 550.
16	D 769.	D 834.	D 766.	D 754.	D 738.	W 621.	W 546.
17	D 779.	D 840.	D 779.	D 752.	D 727.	W 630.	W 561.
18	D 792.	D 849.	D 773.	D 761.	D 721.	W 646.	W 584.
19	D 816.	D 858.	D 804.	D 810.	D 748.	W 673.	W 617.
20	D 828.	D 887.	D 815.	D 817.	D 759.	W 696.	W 635.
21	D 789.	D 853.	D 798.	D 775.	D 744.	W 651.	W 623.
22	D 740.	D 813.	D 730.	D 725.	D 714.	W 628.	W 593.
23	N 704.	N 733.	N 700.	N 693.	N 668.	W 582.	W 558.
24	N 611.	N 676.	N 626.	N 602.	N 596.	W 538.	W 523.
DAILY LOAD FACTOR	0.836	0.839	0.872	0.855	0.832	0.859	0.834

********** LOAD MODEL 4 FOR 1986 **********

FOR AREA 9

LOAD FACTOR 0.749

HOUR	...MON...	...TUE...	...WED...	...THU...	...FRI...	...SAT...	...SUN...
1	W 478.	N 538.	N 542.	N 522.	N 497.	N 468.	W 443.
2	W 460.	N 510.	N 507.	N 483.	N 466.	N 439.	W 435.
3	W 454.	N 492.	N 488.	N 474.	N 451.	N 425.	W 420.
4	W 457.	N 475.	N 481.	N 461.	N 441.	N 414.	W 402.
5	W 470.	N 486.	N 479.	N 473.	N 447.	N 409.	W 394.
6	W 504.	N 518.	N 513.	N 495.	N 463.	N 412.	W 364.
7	W 583.	N 602.	N 585.	N 566.	N 532.	N 429.	W 383.
8	W 696.	N 691.	N 676.	N 662.	N 625.	N 465.	W 432.
9	D 768.	D 753.	D 733.	D 732.	D 680.	W 535.	W 448.
10	D 792.	D 770.	D 751.	D 751.	D 710.	W 580.	W 479.
11	D 798.	D 779.	D 765.	D 763.	D 727.	W 610.	W 502.
12	D 814.	D 775.	D 758.	D 757.	D 721.	W 619.	W 520.
13	D 788.	D 759.	D 746.	D 741.	D 708.	W 606.	W 525.
14	D 783.	D 760.	D 747.	D 743.	D 705.	W 594.	W 524.
15	D 773.	D 748.	D 745.	D 739.	D 693.	W 563.	W 511.
16	D 762.	D 738.	D 735.	D 729.	D 687.	W 555.	W 499.
17	D 755.	D 737.	D 731.	D 724.	D 673.	W 558.	W 516.
18	D 740.	D 725.	D 723.	D 707.	D 654.	W 569.	W 526.
19	D 730.	D 715.	D 717.	D 701.	D 657.	W 588.	W 549.
20	D 744.	D 741.	D 736.	D 719.	D 689.	W 623.	W 577.
21	D 750.	D 749.	D 738.	D 722.	D 668.	W 614.	W 597.
22	D 728.	D 713.	D 703.	D 685.	D 633.	W 573.	W 560.
23	N 652.	N 644.	N 638.	N 629.	N 590.	W 548.	W 546.
24	N 599.	N 593.	N 568.	N 552.	N 528.	W 485.	W 506.
DAILY LOAD FACTOR	0.823	0.856	0.860	0.848	0.840	0.849	0.814

********** LOAD MODEL 5 FOR 1986 **********

FOR AREA 9

LOAD FACTOR 0.710

HOUR	...MON...	...TUE...	...WED...	...THU...	...FRI...	...SAT...	...SUN...
1	W 435.	N 470.	N 494.	N 493.	N 505.	N 499.	W 442.
2	W 418.	N 447.	N 460.	N 463.	N 490.	N 466.	W 414.
3	W 401.	N 443.	N 455.	N 456.	N 480.	N 452.	W 391.
4	W 397.	N 424.	N 449.	N 453.	N 466.	N 438.	W 378.
5	W 408.	N 428.	N 451.	N 457.	N 484.	N 426.	W 371.
6	W 421.	N 459.	N 465.	N 468.	N 500.	N 433.	W 363.
7	W 486.	N 512.	N 525.	N 529.	N 559.	N 440.	W 348.
8	W 552.	N 630.	N 641.	N 639.	N 698.	N 475.	W 386.
9	D 636.	D 722.	D 725.	D 729.	D 775.	W 517.	W 430.
10	D 662.	D 743.	D 746.	D 744.	D 798.	W 555.	W 464.
11	D 713.	D 759.	D 769.	D 784.	D 803.	W 579.	W 489.
12	D 718.	D 756.	D 763.	D 768.	D 812.	W 582.	W 496.
13	D 708.	D 749.	D 751.	D 757.	D 819.	W 571.	W 498.
14	D 703.	D 761.	D 752.	D 779.	D 828.	W 561.	W 491.
15	D 682.	D 754.	D 745.	D 765.	D 806.	W 551.	W 487.
16	D 664.	D 742.	D 736.	D 747.	D 794.	W 539.	W 472.
17	D 649.	D 739.	D 731.	D 740.	D 772.	W 541.	W 477.
18	D 645.	D 727.	D 715.	D 732.	D 734.	W 548.	W 482.
19	D 595.	D 683.	D 656.	D 694.	D 705.	W 531.	W 479.
20	D 586.	D 653.	D 643.	D 668.	D 660.	W 519.	W 478.
21	D 613.	D 673.	D 659.	D 711.	D 677.	W 536.	W 502.
22	D 625.	D 690.	D 671.	D 720.	D 685.	W 549.	W 521.
23	N 567.	N 607.	N 601.	N 647.	N 621.	W 515.	W 503.
24	N 509.	N 545.	N 538.	N 564.	N 557.	W 488.	W 469.
DAILY LOAD FACTOR	0.800	0.828	0.820	0.824	0.807	0.881	0.866

********** LOAD MODEL 6 FOR 1986 **********

FOR AREA 9

LOAD FACTOR 0.632

HOUR	...MON...	...TUE...	...WED...	...THU...	...FRI...	...SAT...	...SUN...
1	W 481.	N 616.	N 598.	N 534.	N 513.	N 489.	W 456.
2	W 461.	N 575.	N 558.	N 487.	N 484.	N 469.	W 431.
3	W 457.	N 563.	N 536.	N 476.	N 470.	N 452.	W 420.
4	W 449.	N 557.	N 497.	N 466.	N 462.	N 436.	W 408.
5	W 457.	N 565.	N 495.	N 468.	N 463.	N 427.	W 401.
6	W 473.	N 584.	N 504.	N 478.	N 472.	N 424.	W 394.
7	W 544.	N 653.	N 594.	N 560.	N 541.	N 443.	W 374.
8	W 662.	N 765.	N 697.	N 679.	N 658.	N 482.	W 414.
9	D 743.	D 875.	D 759.	D 737.	D 722.	W 547.	W 446.
10	D 799.	D 895.	D 802.	D 778.	D 769.	W 612.	W 479.
11	D 839.	D 928.	D 824.	D 811.	D 793.	W 643.	W 492.
12	D 845.	D 969.	D 826.	D 820.	D 807.	W 648.	W 521.
13	D 866.	D 984.	D 823.	D 816.	D 804.	W 632.	W 538.
14	D 884.	D 1028.	D 836.	D 830.	D 809.	W 628.	W 530.
15	D 870.	D 998.	D 817.	D 828.	D 814.	W 623.	W 528.
16	D 859.	D 955.	D 806.	D 813.	D 783.	W 592.	W 501.
17	D 841.	D 905.	D 788.	D 791.	D 761.	W 586.	W 507.
18	D 833.	D 891.	D 756.	D 771.	D 734.	W 589.	W 524.
19	D 780.	D 850.	D 716.	D 729.	D 713.	W 572.	W 519.
20	D 748.	D 822.	D 699.	D 703.	D 688.	W 552.	W 511.
21	D 753.	D 797.	D 691.	D 693.	D 684.	W 554.	W 526.
22	D 775.	D 795.	D 709.	D 706.	D 687.	W 580.	W 577.
23	N 725.	N 739.	N 665.	N 673.	N 650.	W 550.	W 567.
24	N 675.	N 669.	N 605.	N 601.	N 583.	W 490.	W 516.
DAILY LOAD FACTOR	0.793	0.769	0.827	0.816	0.812	0.837	0.836

********** LOAD MODEL 7 FOR 1986 **********

FOR AREA 9

LOAD FACTOR 0.646

HOUR	...MON...	...TUE...	...WED...	...THU...	...FRI...	...SAT...	...SUN...
1	W 537.	N 573.	N 559.	N 628.	N 639.	N 531.	W 505.
2	W 502.	N 541.	N 526.	N 569.	N 566.	N 477.	W 470.
3	W 480.	N 516.	N 490.	N 555.	N 545.	N 468.	W 459.
4	W 472.	N 494.	N 478.	N 548.	N 528.	N 463.	W 443.
5	W 475.	N 487.	N 482.	N 551.	N 520.	N 457.	W 435.
6	W 484.	N 518.	N 511.	N 583.	N 522.	N 454.	W 428.
7	W 552.	N 563.	N 562.	N 655.	N 557.	N 447.	W 406.
8	W 676.	N 692.	N 684.	N 741.	N 668.	N 473.	W 440.
9	D 747.	D 757.	D 743.	D 863.	D 715.	W 533.	W 466.
10	D 805.	D 796.	D 797.	D 924.	D 778.	W 597.	W 498.
11	D 892.	D 840.	D 843.	D 941.	D 803.	W 646.	W 539.
12	D 911.	D 856.	D 870.	D 967.	D 822.	W 666.	W 560.
13	D 906.	D 845.	D 868.	D 979.	D 812.	W 663.	W 610.
14	D 916.	D 874.	D 887.	D 1009.	D 825.	W 660.	W 600.
15	D 918.	D 847.	D 896.	D 1048.	D 816.	W 650.	W 579.
16	D 913.	D 830.	D 880.	D 991.	D 801.	W 642.	W 577.
17	D 901.	D 818.	D 858.	D 957.	D 786.	W 645.	W 593.
18	D 853.	D 790.	D 819.	D 927.	D 753.	W 643.	W 607.
19	D 793.	D 738.	D 781.	D 909.	D 720.	W 631.	W 587.
20	D 761.	D 709.	D 731.	D 833.	D 701.	W 622.	W 575.
21	D 736.	D 703.	D 728.	D 809.	D 694.	W 615.	W 619.
22	D 775.	D 706.	D 766.	D 815.	D 698.	W 636.	W 647.
23	N 711.	N 689.	N 724.	N 770.	N 673.	W 604.	W 634.
24	N 674.	N 625.	N 679.	N 696.	N 603.	W 550.	W 572.
DAILY LOAD FACTOR	0.789	0.801	0.798	0.766	0.836	0.862	0.827

********** LOAD MODEL 8 FOR 1986 **********

FOR AREA 9

LOAD FACTOR 0.706

HOUR	...MON...	...TUE...	...WED...	...THU...	...FRI...	...SAT...	...SUN...
1	W 522.	N 577.	N 524.	N 532.	N 539.	N 529.	W 500.
2	W 493.	N 526.	N 496.	N 505.	N 511.	N 498.	W 459.
3	W 489.	N 515.	N 480.	N 488.	N 486.	N 475.	W 441.
4	W 485.	N 503.	N 470.	N 473.	N 476.	N 454.	W 437.
5	W 487.	N 501.	N 468.	N 477.	N 483.	N 448.	W 432.
6	W 518.	N 517.	N 491.	N 508.	N 495.	N 443.	W 423.
7	W 586.	N 581.	N 549.	N 544.	N 551.	N 462.	W 408.
8	W 683.	N 675.	N 646.	N 644.	N 650.	N 510.	W 427.
9	D 778.	D 757.	D 731.	D 728.	D 718.	W 571.	W 466.
10	D 844.	D 801.	D 768.	D 781.	D 772.	W 616.	W 513.
11	D 890.	D 842.	D 808.	D 821.	D 814.	W 660.	W 541.
12	D 895.	D 876.	D 812.	D 840.	D 837.	W 679.	W 567.
13	D 907.	D 858.	D 816.	D 845.	D 834.	W 671.	W 584.
14	D 927.	D 880.	D 830.	D 864.	D 854.	W 657.	W 579.
15	D 915.	D 872.	D 832.	D 862.	D 851.	W 648.	W 568.
16	D 90[illegible].	D 848.	D 818.	D 835.	D 824.	W 640.	W 561.
17	D 88[illegible].	D 827.	D 806.	D 810.	D 795.	W 641.	W 575.
18	D 866.	D 793.	D 775.	D 791.	D 764.	W 635.	W 573.
19	D 798.	D 756.	D 751.	D 754.	D 741.	W 629.	W 557.
20	D 762.	D 709.	D 696.	D 703.	D 701.	W 613.	W 553.
21	D 786.	D 744.	D 737.	D 749.	D 724.	W 624.	W 594.
22	D 759.	D 706.	D 713.	D 726.	D 690.	W 619.	W 609.
23	N 686.	N 663.	N 665.	N 667.	N 654.	W 590.	W 580.
24	N 631.	N 607.	N 602.	N 604.	N 599.	W 535.	W 537.
DAILY LOAD FACTOR	0.786	0.802	0.816	0.798	0.798	0.850	0.854

********** LOAD MODEL 9 FOR 1986 **********

FOR AREA 9

LOAD FACTOR 0.688

HOUR	...MON...	...TUE...	...WED...	...THU...	...FRI...	...SAT...	...SUN...
1	W 464.	N 559.	N 571.	N 517.	N 519.	N 482.	W 466.
2	W 456.	N 514.	N 526.	N 486.	N 486.	N 464.	W 441.
3	W 438.	N 508.	N 511.	N 477.	N 473.	N 454.	W 420.
4	W 429.	N 495.	N 503.	N 469.	N 467.	N 449.	W 408.
5	W 429.	N 505.	N 500.	N 470.	N 468.	N 425.	W 390.
6	W 463.	N 538.	N 524.	N 492.	N 484.	N 431.	W 403.
7	W 530.	N 635.	N 612.	N 581.	N 577.	N 458.	W 412.
8	W 617.	N 734.	N 705.	N 686.	N 675.	N 481.	W 417.
9	D 681.	D 810.	D 772.	D 750.	D 736.	W 553.	W 457.
10	D 725.	D 845.	D 801.	D 779.	D 770.	W 600.	W 488.
11	D 757.	D 865.	D 819.	D 799.	D 785.	W 633.	W 512.
12	D 761.	D 879.	D 815.	D 794.	D 791.	W 640.	W 545.
13	D 758.	D 886.	D 796.	D 789.	D 782.	W 629.	W 567.
14	D 760.	D 893.	D 803.	D 807.	D 787.	W 620.	W 569.
15	D 754.	D 924.	D 788.	D 797.	D 780.	W 603.	W 544.
16	D 747.	D 884.	D 778.	D 783.	D 768.	W 594.	W 536.
17	D 748.	D 873.	D 775.	D 776.	D 756.	W 592.	W 533.
18	D 741.	D 855.	D 763.	D 765.	D 721.	W 601.	W 548.
19	D 718.	D 833.	D 731.	D 739.	D 693.	W 584.	W 555.
20	D 729.	D 826.	D 745.	D 752.	D 700.	W 605.	W 574.
21	D 743.	D 838.	D 759.	D 767.	D 707.	W 608.	W 597.
22	D 698.	D 774.	D 702.	D 713.	D 667.	W 588.	W 572.
23	N 642.	N 696.	N 655.	N 647.	N 614.	W 563.	W 542.
24	N 584.	N 622.	N 575.	N 578.	N 565.	W 497.	W 490.
DAILY LOAD FACTOR	0.841	0.802	0.841	0.837	0.831	0.856	0.837

********** LOAD MODEL 10 FOR 1986 **********

FOR AREA 9

LOAD FACTOR 0.751

HOUR	...MON...	...TUE...	...WED...	...THU...	...FRI...	...SAT...	...SUN...
1	W 472.	N 519.	N 528.	N 563.	N 515.	N 508.	W 466.
2	W 461.	N 490.	N 498.	N 514.	N 495.	N 473.	W 447.
3	W 452.	N 476.	N 486.	N 502.	N 482.	N 463.	W 439.
4	W 450.	N 470.	N 483.	N 493.	N 468.	N 457.	W 419.
5	W 458.	N 479.	N 489.	N 497.	N 477.	N 454.	W 400.
6	W 488.	N 509.	N 517.	N 531.	N 506.	N 464.	W 426.
7	W 592.	N 615.	N 634.	N 627.	N 604.	N 491.	W 445.
8	W 680.	N 719.	N 731.	N 728.	N 701.	N 534.	W 456.
9	D 744.	D 775.	D 796.	D 790.	D 752.	W 585.	W 485.
10	D 785.	D 792.	D 810.	D 805.	D 786.	W 619.	W 511.
11	D 804.	D 802.	D 814.	D 809.	D 799.	W 651.	W 532.
12	D 802.	D 797.	D 818.	D 808.	D 793.	W 641.	W 542.
13	D 787.	D 777.	D 810.	D 799.	D 778.	W 624.	W 552.
14	D 791.	D 788.	D 821.	D 801.	D 780.	W 608.	W 546.
15	D 776.	D 783.	D 816.	D 794.	D 754.	W 598.	W 536.
16	D 758.	D 762.	D 811.	D 771.	D 740.	W 573.	W 525.
17	D 764.	D 760.	D 829.	D 766.	D 730.	W 587.	W 540.
18	D 773.	D 768.	D 855.	D 771.	D 726.	W 606.	W 567.
19	D 769.	D 756.	D 837.	D 777.	D 735.	W 632.	W 576.
20	D 781.	D 782.	D 824.	D 788.	D 738.	W 647.	W 610.
21	D 742.	D 746.	D 807.	D 751.	D 721.	W 621.	W 601.
22	D 705.	D 712.	D 748.	D 714.	D 672.	W 596.	W 574.
23	N 657.	N 667.	N 690.	N 661.	N 637.	W 557.	W 549.
24	N 579.	N 589.	N 628.	N 597.	N 570.	W 504.	W 499.
DAILY LOAD FACTOR	0.833	0.849	0.832	0.858	0.833	0.863	0.836

********** LOAD MODEL 11 FOR 1986 **********

FOR AREA 9

LOAD FACTOR 0.715

HOUR	...MON...	...TUE...	...WED...	...THU...	...FRI...	...SAT...	...SUN...
1	W 496.	N 555.	N 535.	N 525.	N 517.	N 508.	W 489.
2	W 477.	N 528.	N 514.	N 499.	N 487.	N 482.	W 450.
3	W 472.	N 515.	N 501.	N 480.	N 468.	N 452.	W 431.
4	W 470.	N 510.	N 491.	N 464.	N 453.	N 447.	W 421.
5	W 484.	N 519.	N 494.	N 475.	N 460.	N 443.	W 401.
6	W 520.	N 538.	N 526.	N 505.	N 495.	N 455.	W 428.
7	W 608.	N 633.	N 606.	N 575.	N 571.	N 503.	W 438.
8	W 748.	N 775.	N 711.	N 657.	N 653.	N 530.	W 441.
9	D 816.	D 818.	D 799.	D 693.	D 706.	W 579.	W 490.
10	D 832.	D 826.	D 816.	D 752.	D 764.	W 623.	W 522.
11	D 849.	D 829.	D 819.	D 779.	D 783.	W 639.	W 533.
12	D 852.	D 825.	D 819.	D 779.	D 778.	W 646.	W 540.
13	D 840.	D 814.	D 805.	D 768.	D 759.	W 630.	W 557.
14	D 845.	D 815.	D 808.	D 761.	D 767.	W 615.	W 559.
15	D 843.	D 810.	D 802.	D 727.	D 739.	W 603.	W 542.
16	D 836.	D 802.	D 794.	D 718.	D 733.	W 599.	W 545.
17	D 865.	D 820.	D 817.	D 773.	D 782.	W 637.	W 591.
18	D 912.	D 874.	D 858.	D 795.	D 804.	W 681.	W 642.
19	D 879.	D 846.	D 831.	D 786.	D 791.	W 677.	W 648.
20	D 855.	D 822.	D 812.	D 771.	D 757.	W 663.	W 628.
21	D 824.	D 796.	D 789.	D 708.	D 700.	W 626.	W 610.
22	D 793.	D 744.	D 714.	D 673.	D 670.	W 600.	W 593.
23	N 688.	N 667.	N 650.	N 613.	N 616.	W 565.	W 549.
24	N 619.	N 597.	N 587.	N 562.	N 566.	W 524.	W 526.
DAILY LOAD FACTOR	0.796	0.824	0.820	0.830	0.819	0.840	0.809

********** LOAD MODEL 12 FOR 1986 **********

FOR AREA 9

LOAD FACTOR 0.719

HOUR	...MON...	...TUE...	...WED...	...THU...	...FRI...	...SAT...	...SUN...
1	W 518.	N 544.	N 555.	N 570.	N 584.	N 536.	W 521.
2	W 494.	N 515.	N 523.	N 539.	N 565.	N 504.	W 497.
3	W 484.	N 505.	N 506.	N 526.	N 541.	N 491.	W 456.
4	W 472.	N 498.	N 502.	N 525.	N 529.	N 467.	W 444.
5	W 489.	N 509.	N 507.	N 532.	N 535.	N 462.	W 430.
6	W 520.	N 533.	N 538.	N 558.	N 551.	N 476.	W 451.
7	W 611.	N 616.	N 626.	N 640.	N 629.	N 513.	W 479.
8	W 719.	N 729.	N 727.	N 740.	N 706.	N 547.	W 500.
9	D 788.	D 794.	D 799.	D 795.	D 764.	W 574.	W 530.
10	D 828.	D 826.	D 830.	D 835.	D 780.	W 636.	W 568.
11	D 841.	D 837.	D 843.	D 860.	D 784.	W 659.	W 571.
12	D 834.	D 835.	D 839.	D 861.	D 774.	W 660.	W 588.
13	D 808.	D 820.	D 831.	D 847.	D 761.	W 656.	W 606.
14	D 814.	D 817.	D 834.	D 857.	D 759.	W 634.	W 591.
15	D 813.	D 816.	D 824.	D 846.	D 735.	W 620.	W 583.
16	D 803.	D 805.	D 814.	D 850.	D 709.	W 623.	W 586.
17	D 854.	D 867.	D 851.	D 882.	D 751.	W 671.	W 647.
18	D 889.	D 896.	D 906.	D 948.	D 804.	W 745.	W 702.
19	D 870.	D 872.	D 875.	D 917.	D 787.	W 723.	W 698.
20	D 838.	D 844.	D 864.	D 878.	D 772.	W 694.	W 680.
21	D 801.	D 811.	D 823.	D 849.	D 732.	W 678.	W 669.
22	D 756.	D 767.	D 778.	D 791.	D 691.	W 650.	W 654.
23	N 675.	N 683.	N 686.	N 715.	N 658.	W 594.	W 603.
24	N 597.	N 614.	N 631.	N 664.	N 579.	W 561.	W 553.
DAILY LOAD FACTOR	0.802	0.807	0.806	0.792	0.854	0.804	0.808

CENTRAL HUDSON AREA 10

********** LOAD MODEL 1 FOR 1986 **********

FOR AREA 10

LOAD FACTOR 0.740

HOUR	...MON...	...TUE...	...WED...	...THU...	...FRI...	...SAT...	...SUN...
1	W 389.	N 425.	N 439.	N 431.	N 398.	N 413.	W 411.
2	W 338.	N 409.	N 427.	N 417.	N 377.	N 380.	W 386.
3	W 332.	N 406.	N 424.	N 400.	N 355.	N 362.	W 374.
4	W 321.	N 405.	N 415.	N 392.	N 342.	N 352.	W 360.
5	W 358.	N 418.	N 419.	N 391.	N 350.	N 354.	W 365.
6	W 402.	N 434.	N 429.	N 415.	N 394.	N 382.	W 384.
7	W 456.	N 482.	N 467.	N 450.	N 444.	N 403.	W 396.
8	W 510.	N 557.	N 521.	N 483.	N 479.	N 428.	W 423.
9	D 550.	D 584.	D 540.	D 503.	D 500.	W 447.	W 440.
10	D 561.	D 588.	D 544.	D 519.	D 523.	W 473.	W 457.
11	D 561.	D 594.	D 551.	D 526.	D 528.	W 477.	W 464.
12	D 547.	D 586.	D 538.	D 512.	D 509.	W 484.	W 475.
13	D 533.	D 562.	D 514.	D 499.	D 498.	W 470.	W 468.
14	D 517.	D 566.	D 507.	D 498.	D 493.	W 460.	W 459.
15	D 502.	D 564.	D 495.	D 487.	D 486.	W 451.	W 454.
16	D 497.	D 572.	D 490.	D 486.	D 480.	W 445.	W 447.
17	D 536.	D 615.	D 521.	D 516.	D 504.	W 474.	W 471.
18	D 607.	D 648.	D 591.	D 577.	D 568.	W 542.	W 531.
19	D 603.	D 626.	D 598.	D 574.	D 563.	W 539.	W 532.
20	D 583.	D 621.	D 580.	D 558.	D 543.	W 514.	W 507.
21	D 554.	D 609.	D 553.	D 534.	D 522.	W 488.	W 492.
22	D 506.	D 567.	D 505.	D 489.	D 488.	W 466.	W 472.
23	N 475.	N 524.	N 469.	N 462.	N 463.	W 455.	W 443.
24	N 441.	N 465.	N 438.	N 433.	N 436.	W 433.	W 422.
DAILY LOAD FACTOR	0.802	0.825	0.834	0.835	0.825	0.822	0.833

*********** LOAD MODEL 2 FOR 1986 *********

FOR AREA 10

LOAD FACTOR 0.729

HOUR	...MON...	...TUE...	...WED...	...THU...	...FRI...	...SAT...	...SUN...
1	W 298.	N 346.	N 356.	N 361.	N 397.	N 372.	W 350.
2	W 288.	N 329.	N 330.	N 345.	N 390.	N 359.	W 319.
3	W 278.	N 327.	N 317.	N 336.	N 378.	N 342.	W 308.
4	W 265.	N 311.	N 313.	N 352.	N 374.	N 335.	W 300.
5	W 296.	N 325.	N 322.	N 364.	N 376.	N 339.	W 303.
6	W 309.	N 354.	N 355.	N 380.	N 394.	N 351.	W 306.
7	W 381.	N 413.	N 411.	N 433.	N 433.	N 370.	W 328.
8	W 425.	N 448.	N 440.	N 481.	N 474.	N 387.	W 333.
9	D 456.	D 471.	D 469.	D 517.	D- 511.	W 419.	W 373.
10	D 474.	D 481.	D 485.	D 540.	D 521.	W 434.	W 398.
11	D 486.	D 478.	D 488.	D 545.	D 532.	W 439.	W 401.
12	D 479.	D 468.	D 477.	D 535.	D 509.	W 434.	W 410.
13	D 459.	D 454.	D 462.	D 512.	D 487.	W 425.	W 408.
14	D 456.	D 455.	D 466.	D 516.	D 483.	W 415.	W 399.
15	D 451.	D 453.	D 460.	D 507.	D 469.	W 407.	W 392.
16	D 452.	D 442.	D 458.	D 504.	D 461.	W 407.	W 393.
17	D 464.	D 464.	D 470.	D 548.	D 467.	W 416.	W 402.
18	D 499.	D 495.	D 514.	D 564.	D 490.	W 444.	W 432.
19	D 519.	D 525.	D 529.	D 583.	D 523.	W 457.	W 435.
20	D 491.	D 497.	D 501.	D 555.	D 493.	W 437.	W 429.
21	D 471.	D 473.	D 476.	D 553.	D 472.	W 426.	W 417.
22	D 439.	D 450.	D 443.	D 518.	D 449.	W 414.	W 404.
23	N 421.	N 422.	N 423.	N 470.	N 431.	W 388.	W 377.
24	N 383.	N 385.	N 395.	N 428.	N 405.	W 367.	W 330.
DAILY LOAD FACTOR	0.798	0.815	0.816	0.818	0.855	0.874	0.856

********** LOAD MODEL 3 FOR 1986 **********

FOR AREA 10

LOAD FACTOR 0.762

HOUR	...MON...	...TUE...	...WED...	...THU...	...FRI...	...SAT...	...SUN...
1	W 296.	N 340.	N 371.	N 341.	N 339.	N 345.	W 337.
2	W 289.	N 330.	N 362.	N 336.	N 332.	N 332.	W 314.
3	W 283.	N 323.	N 358.	N 327.	N 321.	N 319.	W 309.
4	W 257.	N 329.	N 346.	N 324.	N 320.	N 317.	W 300.
5	W 293.	N 333.	N 348.	N 335.	N 326.	N 318.	W 298.
6	W 305.	N 355.	N 366.	N 356.	N 343.	N 334.	W 302.
7	W 363.	N 403.	N 423.	N 401.	N 394.	N 338.	W 311.
8	W 421.	N 449.	N 461.	N 438.	N 437.	N 373.	W 320.
9	D 452.	D 483.	D 489.	D 468.	D 466.	W 407.	W 353.
10	D 465.	D 491.	D 494.	D 472.	D 472.	W 429.	W 370.
11	D 467.	D 495.	D 496.	D 480.	D 475.	W 432.	W 379.
12	D 464.	D 488.	D 477.	D 470.	D 466.	W 430.	W 382.
13	D 446.	D 473.	D 463.	D 453.	D 447.	W 419.	W 378.
14	D 455.	D 476.	D 465.	D 459.	D 446.	W 408.	W 365.
15	D 440.	D 469.	D 450.	D 448.	D 438.	W 391.	W 360.
16	D 439.	D 474.	D 444.	D 443.	D 434.	W 392.	W 351.
17	D 460.	D 492.	D 458.	D 452.	D 435.	W 399.	W 362.
18	D 471.	D 513.	D 481.	D 469.	D 456.	W 425.	W 376.
19	D 500.	D 537.	D 511.	D 502.	D 482.	W 442.	W 410.
20	D 498.	D 523.	D 506.	D 504.	D 479.	W 435.	W 411.
21	D 476.	D 517.	D 484.	D 485.	D 462.	W 427.	W 395.
22	D 441.	D 487.	D 453.	D 449.	D 433.	W 397.	W 388.
23	N 415.	N 436.	N 417.	N 418.	N 413.	W 384.	W 357.
24	N 368.	N 405.	N 380.	N 374.	N 381.	W 354.	W 316.
DAILY LOAD FACTOR	0.813	0.824	0.856	0.844	0.865	0.871	0.855

********** LOAD MODEL 4 FOR 1986 **********

FOR AREA 10

LOAD FACTOR 0.765

HOUR	...MON...	...TUE...	...WED...	...THU...	...FRI...	...SAT...	...SUN...
1	W 286.	N 325.	N 324.	N 331.	N 347.	N 303.	W 294.
2	W 280.	N 307.	N 314.	N 312.	N 330.	N 295.	W 282.
3	W 266.	N 297.	N 302.	N 306.	N 322.	N 287.	W 271.
4	W 268.	N 297.	N 300.	N 308.	N 320.	N 283.	W 263.
5	W 278.	N 299.	N 304.	N 310.	N 319.	N 284.	W 259.
6	W 288.	N 316.	N 318.	N 328.	N 326.	N 280.	W 251.
7	W 333.	N 360.	N 368.	N 375.	N 357.	N 292.	W 276.
8	W 391.	N 416.	N 413.	N 418.	N 402.	N 321.	W 290.
9	D 429.	D 448.	D 442.	D 456.	D 421.	W 356.	W 315.
10	D 445.	D 450.	D 448.	D 470.	D 441.	W 386.	W 341.
11	D 449.	D 452.	D 451.	D 475.	D 438.	W 394.	W 348.
12	D 449.	D 455.	D 445.	D 478.	D 432.	W 387.	W 351.
13	D 439.	D 444.	D 433.	D 463.	D 417.	W 379.	W 349.
14	D 436.	D 447.	D 436.	D 468.	D 417.	W 371.	W 344.
15	D 430.	D 437.	D 427.	D 467.	D 414.	W 365.	W 338.
16	D 428.	D 433.	D 422.	D 465.	D 408.	W 358.	W 335.
17	D 428.	D 435.	D 426.	D 473.	D 407.	W 372.	W 343.
18	D 434.	D 444.	D 437.	D 483.	D 410.	W 384.	W 346.
19	D 441.	D 442.	D 446.	D 498.	D 419.	W 397.	W 363.
20	D 453.	D 460.	D 462.	D 487.	D 440.	W 411.	W 380.
21	D 450.	D 455.	D 451.	D 481.	D 419.	W 396.	W 383.
22	D 432.	D 434.	D 425.	D 458.	D 403.	W 377.	W 370.
23	N 405.	N 400.	N 401.	N 423.	N 374.	W 345.	W 337.
24	N 353.	N 361.	N 366.	N 389.	N 342.	W 318.	W 298.
DAILY LOAD FACTOR	0.855	0.871	0.862	0.847	0.881	0.845	0.841

********** LOAD MODEL 5 FOR 1986 **********

FOR AREA 10

LOAD FACTOR 0.734

HOUR	...MON...	...TUE...	...WED...	...THU...	...FRI...	...SAT...	...SUN...
1	W 280.	N 305.	N 330.	N 348.	N 318.	N 317.	W 299.
2	W 273.	N 296.	N 316.	N 328.	N 300.	N 298.	W 283.
3	W 243.	N 289.	N 308.	N 321.	N 297.	N 293.	W 275.
4	W 238.	N 289.	N 304.	N 312.	N 294.	N 284.	W 269.
5	W 256.	N 287.	N 310.	N 311.	N 295.	N 285.	W 267.
6	W 277.	N 296.	N 325.	N 324.	N 301.	N 281.	W 262.
7	W 302.	N 333.	N 362.	N 357.	N 344.	N 291.	W 270.
8	W 352.	N 396.	N 430.	N 423.	N 397.	N 314.	W 290.
9	D 393.	D 439.	D 464.	D 445.	D 436.	W 355.	W 316.
10	D 415.	D 450.	D 475.	D 462.	D 444.	W 377.	W 341.
11	D 428.	D 459.	D 483.	D 469.	D 457.	W 390.	W 347.
12	D 429.	D 463.	D 493.	D 467.	D 456.	W 391.	W 353.
13	D 419.	D 446.	D 486.	D 451.	D 442.	W 383.	W 351.
14	D 419.	D 457.	D 496.	D 455.	D 443.	W 372.	W 346.
15	D 409.	D 447.	D 499.	D 453.	D 441.	W 366.	W 338.
16	D 405.	D 448.	D 503.	D 447.	D 436.	W 363.	W 334.
17	D 413.	D 454.	D 517.	D 443.	D 433.	W 370.	W 343.
18	D 417.	D 452.	D 510.	D 442.	D 431.	W 381.	W 345.
19	D 410.	D 440.	D 490.	D 434.	D 424.	W 374.	W 335.
20	D 400.	D 437.	D 471.	D 425.	D 421.	W 369.	W 346.
21	D 429.	D 449.	D 479.	D 439.	D 432.	W 385.	W 360.
22	D 423.	D 442.	D 472.	D 438.	D 426.	W 379.	W 360.
23	N 376.	N 402.	N 437.	N 399.	N 392.	W 356.	W 332.
24	N 339.	N 358.	N 387.	N 349.	N 354.	W 326.	W 303.
DAILY LOAD FACTOR	0.849	0.858	0.834	0.866	0.859	0.885	0.886

********** LOAD MODEL 6 FOR 1986 **********

FOR AREA 10

LOAD FACTOR 0.657

HOUR	...MON...	...TUE...	...WED...	...THU...	...FRI...	...SAT...	...SUN...
1	W 303.	N 359.	N 399.	N 323.	N 328.	N 321.	W 312.
2	W 286.	N 347.	N 377.	N 313.	N 315.	N 310.	W 298.
3	W 282.	N 331.	N 357.	N 310.	N 311.	N 300.	W 279.
4	W 278.	N 328.	N 343.	N 301.	N 307.	N 295.	W 276.
5	W 281.	N 338.	N 336.	N 305.	N 306.	N 290.	W 275.
6	W 293.	N 355.	N 334.	N 309.	N 308.	N 287.	W 262.
7	W 317.	N 401.	N 391.	N 330.	N 325.	N 296.	W 274.
8	W 392.	N 457.	N 437.	N 405.	N 394.	N 319.	W 294.
9	D 434.	D 509.	D 461.	D 448.	D 440.	W 368.	W 314.
10	D 456.	D 515.	D 493.	D 463.	D 459.	W 403.	W 350.
11	D 467.	D 519.	D 508.	D 485.	D 471.	W 418.	W 371.
12	D 478.	D 521.	D 501.	D 490.	D 473.	W 427.	W 384.
13	D 475.	D 526.	D 476.	D 477.	D 463.	W 417.	W 388.
14	D 488.	D 541.	D 494.	D 503.	D 468.	W 415.	W 382.
15	D 495.	D 570.	D 486.	D 507.	D 471.	W 407.	W 374.
16	D 483.	D 621.	D 484.	D 500.	D 462.	W 410.	W 365.
17	D 488.	D 599.	D 482.	D 496.	D 460.	W 419.	W 376.
18	D 498.	D 533.	D 466.	D 481.	D 454.	W 430.	W 380.
19	D 474.	D 517.	D 453.	D 462.	D 451.	W 408.	W 361.
20	D 460.	D 513.	D 447.	D 452.	D 442.	W 397.	W 357.
21	D 470.	D 512.	D 450.	D 457.	D 443.	W 402.	W 375.
22	D 465.	D 510.	D 449.	D 457.	D 438.	W 407.	W 393.
23	N 445.	N 505.	N 423.	N 432.	N 412.	W 381.	W 352.
24	N 404.	N 446.	N 379.	N 385.	N 372.	W 342.	W 316.
DAILY LOAD FACTOR	0.829	0.763	0.855	0.830	0.860	0.860	0.860

*********** LOAD MODEL 7 FOR 1986 ***********

FOR AREA 10

LOAD FACTOR 0.679

HOUR	...MON...	...TUE...	...WED...	...THU...	...FRI...	...SAT...	...SUN...
1	W 331.	N 369.	N 348.	N 377.	N 406.	N 353.	W 329.
2	W 321.	N 332.	N 330.	N 358.	N 386.	N 328.	W 304.
3	W 308.	N 325.	N 322.	N 343.	N 371.	N 307.	W 294.
4	W 306.	N 311.	N 314.	N 338.	N 350.	N 302.	W 291.
5	W 303.	N 316.	N 310.	N 341.	N 346.	N 300.	W 289.
6	W 312.	N 318.	N 319.	N 360.	N 342.	N 296.	W 285.
7	W 334.	N 340.	N 336.	N 379.	N 374.	N 302.	W 270.
8	W 389.	N 393.	N 395.	N 454.	N 405.	N 324.	W 297.
9	D 457.	D 455.	D 454.	D 483.	D 459.	W 363.	W 329.
10	D 482.	D 472.	D 473.	D 559.	D 475.	W 398.	W 366.
11	D 498.	D 486.	D 489.	D 575.	D 486.	W 428.	W 382.
12	D 551.	D 510.	D 503.	D 584.	D 494.	W 452.	W 403.
13	D 502.	D 497.	D 513.	D 586.	D 494.	W 446.	W 419.
14	D 539.	D 542.	D 526.	D 593.	D 499.	W 450.	W 422.
15	D 530.	D 518.	D 547.	D 597.	D 505.	W 432.	W 409.
16	D 515.	D 516.	D 520.	D 615.	D 496.	W 438.	W 407.
17	D 523.	D 505.	D 535.	D 632.	D 490.	W 443.	W 430.
18	D 508.	D 492.	D 497.	D 606.	D 488.	W 452.	W 441.
19	D 487.	D 478.	D 483.	D 590.	D 481.	W 435.	W 424.
20	D 478.	D 467.	D 470.	D 580.	D 468.	W 416.	W 414.
21	D 480.	D 470.	D 474.	D 572.	D 469.	W 410.	W 426.
22	D 477.	D 463.	D 479.	D 564.	D 465.	W 412.	W 445.
23	N 456.	N 440.	N 460.	N 511.	N 449.	W 386.	W 400.
24	N 400.	N 384.	N 411.	N 461.	N 391.	W 364.	W 376.
DAILY LOAD FACTOR	0.793	0.799	0.801	0.795	0.874	0.851	0.828

********** LOAD MODEL 8 FOR 1986 **********

FOR AREA 10

LOAD FACTOR 0.708

HOUR	...MON...	...TUE...	...WED...	...THU...	...FRI...	...SAT...	...SUN...
1	W 322.	N 363.	N 389.	N 349.	N 347.	N 358.	W 328.
2	W 29[illegible].	N 352.	N 360.	N 325.	N 324.	N 331.	W 313.
3	W 29[illegible].	N 332.	N 353.	N 314.	N 316.	N 318.	W 295.
4	W 290.	N 329.	N 336.	N 308.	N 302.	N 310.	W 288.
5	W 292.	N 330.	N 334.	N 307.	N 299.	N 305.	W 287.
6	W 301.	N 345.	N 343.	N 319.	N 314.	N 303.	W 282.
7	W 326.	N 371.	N 367.	N 341.	N 342.	N 313.	W 272.
8	W 379.	N 423.	N 411.	N 381.	N 387.	N 338.	W 297.
9	D 435.	D 460.	D 449.	D 433.	D 438.	W 373.	W 335.
10	D 458.	D 520.	D 472.	D 454.	D 459.	W 404.	W 365.
11	D 479.	D 536.	D 498.	D 469.	D 473.	W 431.	W 390.
12	D 505.	D 550.	D 533.	D 476.	D 476.	W 447.	W 399.
13	D 500.	D 554.	D 503.	D 471.	D 473.	W 445.	W 409.
14	D 528.	D 560.	D 532.	D 485.	D 496.	W 434.	W 410.
15	D 525.	D 565.	D 519.	D 482.	D 491.	W 426.	W 408.
16	D 523.	D 578.	D 517.	D 482.	D 489.	W 421.	W 402.
17	D 513.	D 590.	D 510.	D 488.	D 484.	W 432.	W 413.
18	D 507.	D 572.	D 493.	D 474.	D 478.	W 443.	W 416.
19	D 474.	D 557.	D 465.	D 465.	D 468.	W 440.	W 406.
20	D 465.	D 542.	D 455.	D 456.	D 459.	W 425.	W 401.
21	D 460.	D 546.	D 467.	D 462.	D 469.	W 439.	W 425.
22	D 463.	D 534.	D 453.	D 450.	D 452.	W 418.	W 416.
23	N 446.	N 461.	N 427.	N 419.	N 429.	W 393.	W 377.
24	N 396.	N 420.	N 376.	N 385.	N 392.	W 364.	W 354.
DAILY LOAD FACTOR	0.805	0.804	0.826	0.854	0.845	0.867	0.852

********** LOAD MODEL 9 FOR 1986 **********

FOR AREA 10

LOAD FACTOR 0.742

HOUR	...HON...	...TUE...	...WED...	...THU...	...FRI...	...SAT...	...SUN...
1	W 302.	N 358.	N 327.	N 321.	N 314.	N 315.	W 292.
2	W 290.	N 335.	N 308.	N 305.	N 301.	N 299.	W 270.
3	W 287.	N 326.	N 297.	N 296.	N 289.	N 281.	W 267.
4	W 281.	N 319.	N 294.	N 288.	N 283.	N 274.	W 261.
5	W 285.	N 322.	N 293.	N 290.	N 286.	N 277.	W 240.
6	W 305.	N 328.	N 310.	N 304.	N 303.	N 278.	W 249.
7	W 338.	N 372.	N 361.	N 348.	N 339.	N 292.	W 265.
8	W 389.	N 417.	N 408.	N 399.	N 391.	N 312.	W 269.
9	D 425.	D 453.	D 429.	D 423.	D 419.	W 352.	W 310.
10	D 458.	D 467.	D 448.	D 445.	D 436.	W 375.	W 333.
11	D 472.	D 474.	D 455.	D 450.	D 452.	W 401.	W 343.
12	D 478.	D 477.	D 460.	D 454.	D 457.	W 403.	W 365.
13	D 479.	D 468.	D 446.	D 441.	D 437.	W 397.	W 369.
14	D 481.	D 471.	D 451.	D 446.	D 444.	W 384.	W 360.
15	D 484.	D 464.	D 448.	D 441.	D 440.	W 379.	W 346.
16	D 488.	D 463.	D 442.	D 436.	D 432.	W 373.	W 353.
17	D 518.	D 465.	D 444.	D 437.	D 431.	W 382.	W 360.
18	D 499.	D 469.	D 451.	D 447.	D 427.	W 395.	W 364.
19	D 487.	D 462.	D 443.	D 435.	D 421.	W 390.	W 366.
20	D 493.	D 470.	D 459.	D 456.	D 439.	W 412.	W 380.
21	D 482.	D 461.	D 455.	D 450.	D 433.	W 411.	W 381.
22	D 464.	D 430.	D 426.	D 420.	D 415.	W 376.	W 371.
23	N 428.	N 405.	N 393.	N 387.	N 383.	W 351.	W 330.
24	N 386.	N 357.	N 354.	N 350.	N 356.	W 324.	W 307.
DAILY LOAD FACTOR	0.804	0.876	0.870	0.865	0.850	0.853	0.847

********** LOAD MODEL 10 FOR 1986 **********

FOR AREA 10

3	W	289.	N	320.	N	300.	N	301.	N	300.	N	300.	W	290.
4	W	290.	N	317.	N	300.	N	294.	N	307.	N	296.	W	270.
5	W	295.	N	320.	N	302.	N	299.	N	309.	N	292.	W	277.
6	W	316.	N	335.	N	326.	N	315.	N	328.	N	305.	W	286.
7	W	379.	N	399.	N	382.	N	377.	N	389.	N	319.	W	304.
8	W	430.	N	443.	N	421.	N	429.	N	434.	N	344.	W	322.
9	D	466.	D	472.	D	452.	D	448.	D	462.	W	391.	W	349.
10	D	486.	D	475.	D	458.	D	464.	D	470.	W	408.	W	368.
11	D	490.	D	470.	D	461.	D	462.	D	468.	W	414.	W	375.
12	D	489.	D	467.	D	461.	D	463.	D	464.	W	410.	W	385.
13	D	484.	D	455.	D	436.	D	444.	D	449.	W	399.	W	381.
14	D	487.	D	460.	D	438.	D	453.	D	446.	W	383.	W	371.
15	D	484.	D	454.	D	437.	D	445.	D	445.	W	366.	W	363.
16	D	488.	D	449.	D	435.	D	441.	D	439.	W	361.	W	358.
17	D	499.	D	459.	D	442.	D	447.	D	442.	W	387.	W	386.
18	D	530.	D	473.	D	456.	D	468.	D	458.	W	405.	W	395.
19	D	512.	D	476.	D	469.	D	477.	D	470.	W	417.	W	407.
20	D	505.	D	478.	D	474.	D	481.	D	471.	W	418.	W	411.
21	D	493.	D	464.	D	457.	D	465.	D	450.	W	415.	W	400.
22	D	471.	D	435.	D	426.	D	438.	D	433.	W	393.	W	373.
23	N	431.	N	403.	N	397.	N	404.	N	402.	W	365.	W	347.
24	N	392.	N	354.	N	353.	N	356.	N	364.	W	341.	W	311.
DAILY LOAD FACTOR		0.810		0.877		0.854		0.849		0.871		0.874		0.844

********** LOAD MODEL 11 FOR 1986 **********

FOR AREA 10

LOAD FACTOR 0.731

HOUR	...MON...	...TUE...	...WED...	...THU...	...FRI...	...SAT...	...SUN...
1	W 319.	N 351.	N 365.	N 349.	N 333.	N 340.	W 338.
2	W 306.	N 335.	N 350.	N 329.	N 317.	N 320.	W 318.
3	W 293.	N 324.	N 348.	N 322.	N 307.	N 309.	W 303.
4	W 289.	N 326.	N 346.	N 319.	N 311.	N 297.	W 296.
5	W 299.	N 334.	N 342.	N 323.	N 314.	N 295.	W 283.
6	W 331.	N 353.	N 359.	N 344.	N 327.	N 315.	W 301.
7	W 381.	N 403.	N 399.	N 378.	N 372.	N 331.	W 316.
8	W 435.	N 455.	N 443.	N 419.	N 411.	N 356.	W 328.
9	D 472.	D 494.	D 477.	D 441.	D 442.	W 395.	W 362.
10	D 483.	D 505.	D 487.	D 454.	D 457.	W 426.	W 376.
11	D 479.	D 509.	D 494.	D 455.	D 456.	W 432.	W 387.
12	D 485.	D 503.	D 484.	D 442.	D 446.	W 429.	W 392.
13	D 465.	D 490.	D 469.	D 431.	D 436.	W 422.	W 397.
14	D 468.	D 489.	D 466.	D 427.	D 434.	W 408.	W 388.
15	D 460.	D 493.	D 454.	D 413.	D 429.	W 405.	W 379.
16	D 458.	D 495.	D 450.	D 417.	D 432.	W 406.	W 382.
17	D 501.	D 522.	D 486.	D 440.	D 459.	W 448.	W 420.
18	D 547.	D 565.	D 528.	D 491.	D 511.	W 502.	W 462.
19	D 524.	D 553.	D 519.	D 476.	D 498.	W 481.	W 452.
20	D 513.	D 534.	D 507.	D 471.	D 473.	W 463.	W 438.
21	D 491.	D 516.	D 478.	D 444.	D 446.	W 439.	W 424.
22	D 459.	D 474.	D 450.	D 424.	D 428.	W 408.	W 394.
23	N 421.	N 433.	N 415.	N 384.	N 398.	W 385.	W 369.
24	N 374.	N 390.	N 374.	N 357.	N 367.	W 363.	W 343.
DAILY LOAD FACTOR	0.781	0.800	0.828	0.828	0.800	0.778	0.798

********** LOAD MODEL 12 FOR 1986 **********

FOR AREA 10

LOAD FACTOR 0.757

HOUR	...MON...	...TUE...	...WED...	...THU...	...FRI...	...SAT...	...SUN...
1	W 363.	N 377.	N 374.	N 388.	N 392.	N 386.	W 378.
2	W 349.	N 359.	N 356.	N 370.	N 384.	N 367.	W 356.
3	W 329.	N 342.	N 337.	N 361.	N 369.	N 353.	W 348.
4	W 334.	N 345.	N 328.	N 361.	N 360.	N 338.	W 319.
5	W 351.	N 355.	N 324.	N 368.	N 363.	N 340.	W 309.
6	W 375.	N 373.	N 372.	N 389.	N 382.	N 358.	W 354.
7	W 413.	N 410.	N 406.	N 420.	N 411.	N 379.	W 365.
8	W 472.	N 457.	N 448.	N 469.	N 460.	N 393.	W 381.
9	D 505.	D 489.	D 485.	D 503.	D 480.	W 425.	W 403.
10	D 520.	D 511.	D 504.	D 522.	D 494.	W 452.	W 418.
11	D 524.	D 515.	D 512.	D 529.	D 499.	W 462.	W 441.
12	D 507.	D 511.	D 507.	D 520.	D 488.	W 455.	W 443.
13	D 487.	D 492.	D 482.	D 502.	D 473.	W 446.	W 444.
14	D 474.	D 498.	D 481.	D 501.	D 464.	W 439.	W 436.
15	D 465.	D 491.	D 471.	D 496.	D 459.	W 423.	W 422.
16	D 466.	D 500.	D 468.	D 505.	D 451.	W 432.	W 427.
17	D 528.	D 535.	D 516.	D 550.	D 489.	W 475.	W 464.
18	D 566.	D 572.	D 562.	D 591.	D 533.	W 534.	W 522.
19	D 553.	D 556.	D 546.	D 579.	D 526.	W 531.	W 514.
20	D 539.	D 543.	D 536.	D 559.	D 498.	W 497.	W 493.
21	D 509.	D 518.	D 513.	D 532.	D 484.	W 476.	W 477.
22	D 476.	D 478.	D 479.	D 495.	D 457.	W 450.	W 447.
23	N 438.	N 441.	N 444.	N 463.	N 433.	W 429.	W 412.
24	N 395.	N 396.	N 408.	N 415.	N 401.	W 399.	W 390.
DAILY LOAD FACTOR	0.806	0.806	0.805	0.803	0.840	0.799	0.795

O&R AREA 11

********** LOAD MODEL 1 FOR 1986 **********

FOR AREA 11

LOAD FACTOR 0.736

HOUR	...MON...	...TUE...	...WED...	...THU...	...FRI...	...SAT...	...SUN...
1	W 309.	N 327.	N 312.	N 323.	N 314.	N 322.	W 320.
2	W 300.	N 310.	N 293.	N 308.	N 296.	N 304.	W 301.
3	W 291.	N 307.	N 280.	N 297.	N 284.	N 290.	W 274.
4	W 289.	N 302.	N 268.	N 286.	N 269.	N 283.	W 262.
5	W 292.	N 303.	N 270.	N 279.	N 276.	N 272.	W 256.
6	W 310.	N 315.	N 303.	N 299.	N 295.	N 282.	W 267.
7	W 356.	N 360.	N 331.	N 324.	N 325.	N 306.	W 288.
8	W 401.	N 397.	N 384.	N 371.	N 373.	N 317.	W 294.
9	D 452.	D 443.	D 420.	D 395.	D 409.	W 336.	W 316.
10	D 471.	D 455.	D 445.	D 413.	D 438.	W 375.	W 335.
11	D 480.	D 461.	D 449.	D 423.	D 446.	W 378.	W 346.
12	D 478.	D 454.	D 447.	D 428.	D 448.	W 381.	W 358.
13	D 469.	D 444.	D 433.	D 404.	D 433.	W 377.	W 353.
14	D 462.	D 450.	D 430.	D 419.	D 436.	W 372.	W 351.
15	D 457.	D 440.	D 427.	D 415.	D 420.	W 364.	W 355.
16	D 464.	D 434.	D 422.	D 409.	D 424.	W 366.	W 363.
17	D 472.	D 451.	D 441.	D 431.	D 437.	W 391.	W 393.
18	D 506.	D 489.	D 482.	D 467.	D 466.	W 432.	W 403.
19	D 519.	D 494.	D 485.	D 473.	D 468.	W 442.	W 406.
20	D 502.	D 476.	D 475.	D 465.	D 456.	W 425.	W 394.
21	D 498.	D 460.	D 459.	D 453.	D 451.	W 408.	W 385.
22	D 456.	D 421.	D 428.	D 417.	D 412.	W 392.	W 361.
23	N 399.	N 387.	N 379.	N 379.	N 382.	W 368.	W 338.
24	N 363.	N 333.	N 332.	N 328.	N 340.	W 342.	W 349.
DAILY LOAD FACTOR	0.802	0.819	0.806	0.811	0.828	0.804	0.828

********** LOAD MODEL 2 FOR 1986 **********

FOR AREA 11

LOAD FACTOR 0.726

HOUR	...MON...	...TUE...	...WED...	...THU...	...FRI...	...SAT...	...SUN...
1	W 265.	N 285.	N 293.	N 302.	N 328.	N 305.	W 297.
2	W 250.	N 269.	N 271.	N 289.	N 304.	N 290.	W 271.
3	W 247.	N 258.	N 259.	N 279.	N 299.	N 273.	W 251.
4	W 241.	N 253.	N 252.	N 276.	N 295.	N 263.	W 248.
5	W 222.	N 255.	N 256.	N 281.	N 292.	N 262.	W 246.
6	W 260.	N 277.	N 275.	N 300.	N 304.	N 266.	W 235.
7	W 307.	N 323.	N 317.	N 339.	N 341.	N 283.	W 243.
8	W 344.	N 364.	N 361.	N 380.	N 381.	N 301.	W 258.
9	D 383.	D 391.	D 401.	D 414.	D 421.	W 326.	W 290.
10	D 405.	D 420.	D 423.	D 445.	D 439.	W 348.	W 299.
11	D 415.	D 425.	D 435.	D 466.	D 447.	W 358.	W 309.
12	D 413.	D 418.	D 429.	D 456.	D 446.	W 356.	W 314.
13	D 402.	D 399.	D 412.	D 448.	D 428.	W 354.	W 318.
14	D 396.	D 407.	D 415.	D 449.	D 427.	W 347.	W 315.
15	D 390.	D 393.	D 417.	D 443.	D 422.	W 340.	W 312.
16	D 387.	D 395.	D 409.	D 451.	D 411.	W 340.	W 312.
17	D 394.	D 408.	D 421.	D 454.	D 404.	W 346.	W 331.
18	D 431.	D 433.	D 444.	D 472.	D 424.	W 370.	W 353.
19	D 444.	D 458.	D 470.	D 493.	D 463.	W 386.	W 375.
20	D 441.	D 452.	D 460.	D 480.	D 440.	W 383.	W 372.
21	D 422.	D 430.	D 438.	D 476.	D 426.	W 377.	W 360.
22	D 384.	D 387.	D 398.	D 436.	D 389.	W 349.	W 343.
23	N 352.	N 363.	N 366.	N 385.	N 368.	W 338.	W 330.
24	N 311.	N 320.	N 333.	N 351.	N 336.	W 307.	W 296.
DAILY LOAD FACTOR	0.798	0.799	0.794	0.808	0.831	0.849	0.809

********** LOAD MODEL 3 FOR 1986 **********

FOR AREA 11

LOAD FACTOR 0.744

HOUR	...MON...	...TUE...	...WED...	...THU...	...FRI...	...SAT...	...SUN...
1	W 248.	N 282.	N 302.	N 286.	N 283.	N 291.	W 284.
2	W 239.	N 271.	N 285.	N 273.	N 272.	N 269.	W 264.
3	W 235.	N 263.	N 280.	N 267.	N 266.	N 257.	W 250.
4	W 230.	N 260.	N 276.	N 262.	N 258.	N 256.	W 247.
5	W 220.	N 264.	N 278.	N 265.	N 260.	N 255.	W 242.
6	W 251.	N 275.	N 290.	N 278.	N 274.	N 259.	W 246.
7	W 294.	N 309.	N 323.	N 311.	N 306.	N 267.	W 244.
8	W 349.	N 369.	N 370.	N 366.	N 356.	N 288.	W 252.
9	D 385.	D 394.	D 409.	D 396.	D 387.	W 318.	W 274.
10	D 409.	D 423.	D 432.	D 417.	D 408.	W 342.	W 292.
11	D 419.	D 434.	D 434.	D 428.	D 418.	W 351.	W 299.
12	D 412.	D 426.	D 422.	D 425.	D 410.	W 353.	W 304.
13	D 404.	D 415.	D 413.	D 411.	D 398.	W 344.	W 303.
14	D 407.	D 421.	D 414.	D 418.	D 398.	W 338.	W 297.
15	D 402.	D 421.	D 412.	D 403.	D 389.	W 328.	W 296.
16	D 398.	D 414.	D 406.	D 401.	D 392.	W 325.	W 295.
17	D 396.	D 413.	D 402.	D 391.	D 379.	W 326.	W 300.
18	D 405.	D 420.	D 403.	D 400.	D 383.	W 345.	W 317.
19	D 437.	D 452.	D 441.	D 439.	D 425.	W 375.	W 348.
20	D 439.	D 467.	D 448.	D 445.	D 430.	W 377.	W 366.
21	D 428.	D 458.	D 436.	D 431.	D 415.	W 373.	W 354.
22	D 388.	D 416.	D 399.	D 391.	D 380.	W 361.	W 336.
23	N 359.	N 371.	N 364.	N 363.	N 359.	W 331.	W 306.
24	N 315.	N 334.	N 322.	N 313.	N 319.	W 305.	W 279.
DAILY LOAD FACTOR	0.803	0.800	0.833	0.822	0.831	0.843	0.797

********** LOAD MODEL 4 FOR 1986 **********

FOR AREA 11

LOAD FACTOR 0.747

HOUR	...MON...	...TUE...	...WED...	...THU...	...FRI...	...SAT...	...SUN...
1	W 241.	N 276.	N 273.	N 266.	N 263.	N 256.	W 253.
2	W 226.	N 259.	N 255.	N 249.	N 247.	N 243.	W 236.
3	W 222.	N 252.	N 248.	N 242.	N 240.	N 234.	W 230.
4	W 221.	N 252.	N 245.	N 238.	N 236.	N 229.	W 217.
5	W 223.	N 254.	N 243.	N 240.	N 234.	N 224.	W 214.
6	W 233.	N 257.	N 249.	N 244.	N 237.	N 220.	W 203.
7	W 267.	N 296.	N 291.	N 270.	N 269.	N 232.	W 211.
8	W 328.	N 350.	N 337.	N 330.	N 318.	N 251.	W 228.
9	D 367.	D 398.	D 373.	D 363.	D 347.	W 292.	W 246.
10	D 395.	D 414.	D 390.	D 394.	D 366.	W 320.	W 264.
11	D 405.	D 424.	D 404.	D 399.	D 382.	W 333.	W 271.
12	D 398.	D 431.	D 393.	D 401.	D 378.	W 330.	W 282.
13	D 393.	D 421.	D 386.	D 395.	D 370.	W 323.	W 286.
14	D 394.	D 415.	D 390.	D 397.	D 375.	W 315.	W 277.
15	D 389.	D 410.	D 388.	D 391.	D 362.	W 306.	W 279.
16	D 381.	D 405.	D 381.	D 388.	D 360.	W 303.	W 275.
17	D 369.	D 396.	D 374.	D 378.	D 359.	W 304.	W 280.
18	D 360.	D 383.	D 364.	D 371.	D 352.	W 312.	W 287.
19	D 379.	D 389.	D 383.	D 385.	D 363.	W 332.	W 301.
20	D 400.	D 418.	D 406.	D 404.	D 386.	W 355.	W 325.
21	D 402.	D 408.	D 403.	D 401.	D 380.	W 345.	W 334.
22	D 384.	D 384.	D 376.	D 377.	D 358.	W 335.	W 322.
23	N 344.	N 342.	N 339.	N 338.	N 331.	W 307.	W 294.
24	N 310.	N 309.	N 298.	N 300.	N 295.	W 283.	W 261.
DAILY LOAD FACTOR	0.826	0.826	0.840	0.842	0.843	0.820	0.795

********** LOAD MODEL 5 FOR 1986 **********

FOR AREA 11

LOAD FACTOR 0.622

HOUR	...MON...	...TUE...	...WED...	...THU...	...FRI...	...SAT...	...SUN...
1	W 236.	N 251.	N 298.	N 307.	N 251.	N 262.	W 259.
2	W 222.	N 245.	N 278.	N 293.	N 244.	N 247.	W 245.
3	W 218.	N 237.	N 270.	N 273.	N 239.	N 242.	W 233.
4	W 211.	N 231.	N 266.	N 266.	N 237.	N 238.	W 226.
5	W 215.	N 232.	N 268.	N 265.	N 234.	N 228.	W 220.
6	W 224.	N 239.	N 281.	N 263.	N 241.	N 229.	W 217.
7	W 243.	N 260.	N 314.	N 301.	N 253.	N 235.	W 190.
8	W 283.	N 331.	N 383.	N 346.	N 317.	N 250.	W 231.
9	D 331.	D 381.	D 421.	D 390.	D 367.	W 279.	W 249.
10	D 341.	D 399.	D 426.	D 405.	D 388.	W 303.	W 255.
11	D 366.	D 406.	D 462.	D 411.	D 397.	W 328.	W 272.
12	D 370.	D 410.	D 477.	D 411.	D 396.	W 324.	W 284.
13	D 374.	D 410.	D 483.	D 413.	D 395.	W 329.	W 286.
14	D 377.	D 414.	D 496.	D 418.	D 394.	W 323.	W 285.
15	D 379.	D 420.	D 507.	D 409.	D 400.	W 309.	W 276.
16	D 366.	D 417.	D 529.	D 404.	D 389.	W 308.	W 275.
17	D 362.	D 403.	D 491.	D 392.	D 380.	W 310.	W 274.
18	D 352.	D 399.	D 467.	D 384.	D 372.	W 319.	W 277.
19	D 349.	D 402.	D 455.	D 373.	D 356.	W 312.	W 279.
20	D 343.	D 393.	D 431.	D 375.	D 359.	W 320.	W 291.
21	D 383.	D 407.	D 445.	D 386.	D 380.	W 337.	W 305.
22	D 364.	D 401.	D 423.	D 385.	D 368.	W 335.	W 322.
23	N 325.	N 378.	N 401.	N 338.	N 333.	W 315.	W 299.
24	N 295.	N 327.	N 340.	N 297.	N 302.	W 289.	W 256.
DAILY LOAD FACTOR	0.819	0.832	0.757	0.847	0.833	0.863	0.816

********** LOAD MODEL 6 FOR 1986 **********

FOR AREA 11

LOAD FACTOR 0.570

HOUR	...MON...	...TUE...	...WED...	...THU...	...FRI...	...SAT...	...SUN...
1	W 271.	N 353.	N 400.	N 286.	N 289.	N 288.	W 283.
2	W 258.	N 314.	N 358.	N 275.	N 274.	N 273.	W 267.
3	W 250.	N 298.	N 342.	N 265.	N 263.	N 263.	W 251.
4	W 243.	N 301.	N 310.	N 261.	N 259.	N 254.	W 237.
5	W 242.	N 303.	N 296.	N 255.	N 253.	N 246.	W 234.
6	W 248.	N 312.	N 294.	N 257.	N 249.	N 239.	W 231.
7	W 277.	N 368.	N 324.	N 281.	N 279.	N 244.	W 219.
8	W 345.	N 422.	N 402.	N 354.	N 339.	N 269.	W 235.
9	D 403.	D 493.	D 430.	D 405.	D 400.	W 292.	W 262.
10	D 425.	D 514.	D 455.	D 428.	D 420.	W 347.	W 278.
11	D 444.	D 525.	D 486.	D 449.	D 433.	W 363.	W 291.
12	D 466.	D 533.	D 478.	D 473.	D 447.	W 371.	W 305.
13	D 487.	D 539.	D 469.	D 475.	D 440.	W 373.	W 319.
14	D 508.	D 565.	D 479.	D 489.	D 456.	W 377.	W 333.
15	D 495.	D 629.	D 484.	D 491.	D 461.	W 380.	W 322.
16	D 501.	D 667.	D 462.	D 494.	D 457.	W 395.	W 327.
17	D 498.	D 599.	D 450.	D 464.	D 440.	W 391.	W 336.
18	D 481.	D 546.	D 437.	D 459.	D 431.	W 398.	W 331.
19	D 453.	D 527.	D 416.	D 439.	D 413.	W 393.	W 320.
20	D 443.	D 523.	D 409.	D 436.	D 405.	W 387.	W 329.
21	D 448.	D 520.	D 423.	D 435.	D 406.	W 390.	W 355.
22	D 452.	D 517.	D 412.	D 432.	D 407.	W 384.	W 366.
23	N 418.	N 504.	N 397.	N 402.	N 391.	W 356.	W 344.
24	N 389.	N 426.	N 349.	N 351.	N 326.	W 317.	W 285.
DAILY LOAD FACTOR	0.774	0.706	0.837	0.789	0.808	0.837	0.804

********** LOAD MODEL 7 FOR 1986 **********

FOR AREA 11

LOAD FACTOR 0.602

HOUR	...MON...	...TUE...	...WED...	...THU...	...FRI...	...SAT...	...SUN...
1	W 325.	N 340.	N 333.	N 368.	N 433.	N 320.	W 314.
2	W 307.	N 315.	N 308.	N 345.	N 377.	N 303.	W 291.
3	W 293.	N 298.	N 295.	N 336.	N 357.	N 283.	W 268.
4	W 286.	N 289.	N 288.	N 328.	N 342.	N 271.	W 265.
5	W 273.	N 275.	N 279.	N 330.	N 322.	N 264.	W 262.
6	W 277.	N 282.	N 284.	N 339.	N 319.	N 258.	W 253.
7	W 302.	N 296.	N 306.	N 370.	N 338.	N 255.	W 243.
8	W 361.	N 359.	N 364.	N 452.	N 382.	N 266.	W 261.
9	D 442.	D 450.	D 448.	D 489.	D 454.	W 311.	W 279.
10	D 468.	D 466.	D 463.	D 598.	D 470.	W 348.	W 317.
11	D 495.	D 493.	D 490.	D 623.	D 485.	W 379.	W 351.
12	D 509.	D 504.	D 508.	D 634.	D 502.	W 386.	W 374.
13	D 518.	D 516.	D 525.	D 643.	D 506.	W 412.	W 388.
14	D 536.	D 532.	D 565.	D 659.	D 521.	W 408.	W 430.
15	D 543.	D 546.	D 593.	D 679.	D 534.	W 416.	W 423.
16	D 574.	D 549.	D 583.	D 704.	D 538.	W 419.	W 440.
17	D 541.	D 529.	D 555.	D 665.	D 510.	W 425.	W 438.
18	D 523.	D 499.	D 514.	D 652.	D 500.	W 434.	W 409.
19	D 505.	D 473.	D 497.	D 638.	D 474.	W 421.	W 397.
20	D 487.	D 464.	D 476.	D 629.	D 471.	W 391.	W 387.
21	D 482.	D 469.	D 478.	D 616.	D 464.	W 405.	W 429.
22	D 474.	D 460.	D 480.	D 607.	D 458.	W 399.	W 445.
23	N 455.	N 446.	N 456.	N 511.	N 444.	W 384.	W 395.
24	N 385.	N 373.	N 402.	N 458.	N 375.	W 355.	W 362.
DAILY LOAD FACTOR	0.752	0.776	0.737	0.750	0.819	0.817	0.788

********** LOAD MODEL 8 FOR 1986 **********

FOR AREA 11

LOAD FACTOR 0.632

HOUR	...MON...	...TUE...	...WED...	...THU...	...FRI...	...SAT...	...SUN...
1	W 296.	N 337.	N 361.	N 310.	N 317.	N 332.	W 305.
2	W 278.	N 315.	N 345.	N 289.	N 292.	N 306.	W 282.
3	W 264.	N 299.	N 324.	N 273.	N 277.	N 284.	W 255.
4	W 256.	N 297.	N 314.	N 259.	N 261.	N 275.	W 251.
5	W 254.	N 294.	N 303.	N 253.	N 260.	N 270.	W 246.
6	W 263.	N 301.	N 313.	N 258.	N 268.	N 270.	W 240.
7	W 286.	N 322.	N 325.	N 281.	N 287.	N 265.	W 226.
8	W 339.	N 384.	N 367.	N 343.	N 335.	N 291.	W 249.
9	D 410.	D 438.	D 421.	D 386.	D 402.	W 319.	W 271.
10	D 436.	D 499.	D 453.	D 425.	D 426.	W 354.	W 309.
11	D 458.	D 544.	D 474.	D 442.	D 450.	W 379.	W 331.
12	D 469.	D 555.	D 506.	D 457.	D 465.	W 393.	W 350.
13	D 494.	D 574.	D 510.	D 462.	D 471.	W 414.	W 358.
14	D 519.	D 591.	D 526.	D 472.	D 503.	W 405.	W 363.
15	D 537.	D 604.	D 521.	D 488.	D 496.	W 408.	W 369.
16	D 531.	D 610.	D 515.	D 476.	D 485.	W 394.	W 377.
17	D 518.	D 622.	D 480.	D 467.	D 470.	W 400.	W 381.
18	D 482.	D 595.	D 460.	D 452.	D 456.	W 403.	W 382.
19	D 467.	D 585.	D 444.	D 439.	D 447.	W 390.	W 375.
20	D 454.	D 558.	D 433.	D 431.	D 440.	W 392.	W 373.
21	D 490.	D 567.	D 447.	D 448.	D 449.	W 417.	W 396.
22	D 455.	D 551.	D 426.	D 429.	D 428.	W 386.	W 388.
23	N 420.	N 464.	N 413.	N 418.	N 415.	W 360.	W 359.
24	N 364.	N 423.	N 349.	N 352.	N 356.	W 333.	W 328.
DAILY LOAD FACTOR	0.755	0.759	0.795	0.795	0.783	0.844	0.817

********** LOAD MODEL 9 FOR 1986 **********

FOR AREA 11

LOAD FACTOR 0.650

HOUR	...MON...	...TUE...	...WED...	...THU...	...FRI...	...SAT...	...SUN...
1	W 289.	N 336.	N 279.	N 265.	N 271.	N 287.	W 275.
2	W 268.	N 305.	N 256.	N 250.	N 252.	N 254.	W 243.
3	W 259.	N 296.	N 251.	N 242.	N 243.	N 248.	W 233.
4	W 262.	N 283.	N 246.	N 234.	N 239.	N 241.	W 228.
5	W 266.	N 276.	N 245.	N 237.	N 235.	N 231.	W 225.
6	W 285.	N 290.	N 253.	N 251.	N 247.	N 240.	W 213.
7	W 327.	N 326.	N 294.	N 277.	N 282.	N 242.	W 222.
8	W 381.	N 379.	N 338.	N 331.	N 335.	N 257.	W 230.
9	D 427.	D 421.	D 387.	D 384.	D 386.	W 298.	W 249.
10	D 446.	D 442.	D 408.	D 402.	D 412.	W 330.	W 260.
11	D 455.	D 451.	D 423.	D 425.	D 428.	W 343.	W 292.
12	D 478.	D 453.	D 424.	D 419.	D 431.	W 357.	W 301.
13	D 488.	D 445.	D 411.	D 407.	D 432.	W 348.	W 306.
14	D 519.	D 452.	D 422.	D 418.	D 437.	W 352.	W 311.
15	D 540.	D 448.	D 425.	D 410.	D 433.	W 345.	W 313.
16	D 500.	D 444.	D 418.	D 406.	D 427.	W 341.	W 308.
17	D 482.	D 440.	D 404.	D 403.	D 403.	W 347.	W 324.
18	D 469.	D 434.	D 400.	D 394.	D 397.	W 344.	W 323.
19	D 451.	D 429.	D 395.	D 392.	D 395.	W 346.	W 328.
20	D 474.	D 439.	D 416.	D 412.	D 414.	W 372.	W 353.
21	D 467.	D 438.	D 421.	D 420.	D 413.	W 383.	W 361.
22	D 449.	D 405.	D 389.	D 387.	D 391.	W 359.	W 340.
23	N 417.	N 364.	N 343.	N 348.	N 350.	W 333.	W 310.
24	N 368.	N 320.	N 304.	N 302.	N 316.	W 299.	W 271.
DAILY LOAD FACTOR	0.754	0.857	0.838	0.825	0.817	0.816	0.788

********** LOAD MODEL 10 FOR 1986 **********

FOR AREA 11

LOAD FACTOR 0.744

HOUR	...MON...	...TUE...	...WED...	...THU...	...FRI...	...SAT...	...SUN...
1	W 249.	N 277.	N 273.	N 280.	N 291.	N 282.	W 265.
2	W 238.	N 251.	N 253.	N 262.	N 269.	N 258.	W 250.
3	W 233.	N 251.	N 248.	N 255.	N 261.	N 250.	W 238.
4	W 225.	N 243.	N 242.	N 251.	N 256.	N 244.	W 235.
5	W 230.	N 246.	N 247.	N 252.	N 253.	N 242.	W 232.
6	W 247.	N 259.	N 257.	N 263.	N 271.	N 245.	W 237.
7	W 28[illegible].	N 307.	N 300.	N 318.	N 311.	N 255.	W 240.
8	W 34[illegible].	N 357.	N 354.	N 367.	N 361.	N 278.	W 246.
9	D 375.	D 392.	D 385.	D 409.	D 394.	W 308.	W 264.
10	D 399.	D 414.	D 410.	D 426.	D 420.	W 333.	W 287.
11	D 418.	D 418.	D 416.	D 430.	D 422.	W 340.	W 296.
12	D 411.	D 411.	D 412.	D 431.	D 422.	W 345.	W 305.
13	D 405.	D 405.	D 402.	D 429.	D 413.	W 335.	W 309.
14	D 405.	D 408.	D 403.	D 436.	D 415.	W 326.	W 310.
15	D 396.	D 406.	D 394.	D 427.	D 407.	W 320.	W 298.
16	D 389.	D 395.	D 393.	D 423.	D 402.	W 316.	W 303.
17	D 390.	D 389.	D 388.	D 424.	D 398.	W 322.	W 317.
18	D 398.	D 396.	D 401.	D 441.	D 401.	W 337.	W 324.
19	D 417.	D 421.	D 421.	D 458.	D 420.	W 359.	W 342.
20	D 423.	D 429.	D 433.	D 449.	D 425.	W 371.	W 348.
21	D 413.	D 419.	D 422.	D 445.	D 411.	W 363.	W 349.
22	D 381.	D 383.	D 387.	D 407.	D 380.	W 346.	W 332.
23	N 347.	N 348.	N 353.	N 369.	N 351.	W 323.	W 302.
24	N 299.	N 294.	N 314.	N 330.	N 312.	W 293.	W 275.
DAILY LOAD FACTOR	0.818	0.827	0.818	0.817	0.850	0.830	0.823

********** LOAD MODEL 11 FOR 1986 **********

FOR AREA 11

LOAD FACTOR 0.721

HOUR	...MON...	...TUE...	...WED...	...THU...	...FRI...	...SAT...	...SUN...
1	W 258.	N 286.	N 295.	N 282.	N 268.	N 281.	W 275.
2	W 248.	N 269.	N 280.	N 266.	N 255.	N 259.	W 260.
3	W 241.	N 263.	N 270.	N 255.	N 249.	N 255.	W 246.
4	W 238.	N 262.	N 267.	N 253.	N 247.	N 251.	W 236.
5	W 244.	N 265.	N 262.	N 254.	N 245.	N 243.	W 228.
6	W 258.	N 279.	N 275.	N 266.	N 257.	N 251.	W 234.
7	W 299.	N 320.	N 319.	N 293.	N 289.	N 259.	W 239.
8	W 349.	N 360.	N 354.	N 326.	N 329.	N 278.	W 252.
9	D 401.	D 413.	D 409.	D 359.	D 369.	W 304.	W 272.
10	D 420.	D 429.	D 421.	D 385.	D 397.	W 331.	W 291.
11	D 428.	D 440.	D 424.	D 396.	D 405.	W 344.	W 301.
12	D 426.	D 444.	D 422.	D 394.	D 401.	W 346.	W 309.
13	D 416.	D 431.	D 413.	D 380.	D 397.	W 338.	W 314.
14	D 418.	D 439.	D 412.	D 377.	D 393.	W 335.	W 311.
15	D 415.	D 437.	D 415.	D 368.	D 390.	W 328.	W 307.
16	D 415.	D 442.	D 412.	D 362.	D 389.	W 325.	W 312.
17	D 433.	D 453.	D 417.	D 388.	D 407.	W 358.	W 333.
18	D 462.	D 482.	D 447.	D 425.	D 436.	W 407.	W 383.
19	D 458.	D 472.	D 456.	D 427.	D 434.	W 399.	W 384.
20	D 448.	D 468.	D 445.	D 419.	D 423.	W 391.	W 364.
21	D 435.	D 450.	D 428.	D 411.	D 402.	W 366.	W 353.
22	D 409.	D 422.	D 399.	D 373.	D 372.	W 351.	W 342.
23	N 353.	N 375.	N 348.	N 336.	N 341.	W 323.	W 318.
24	N 315.	N 321.	N 306.	N 297.	N 304.	W 302.	W 284.
DAILY LOAD FACTOR	0.792	0.797	0.813	0.809	0.802	0.781	0.775

********** LOAD MODEL 12 FOR 1986 **********

FOR AREA 11

LOAD FACTOR 0.731

HOUR	...MON...	...TUE...	...WED...	...THU...	...FRI...	...SAT...	...SUN...
1	W 289.	N 305.	N 297.	N 295.	N 300.	N 301.	W 304.
2	W 275.	N 291.	N 281.	N 281.	N 284.	N 286.	W 282.
3	W 267.	N 286.	N 272.	N 274.	N 269.	N 271.	W 264.
4	W 266.	N 279.	N 264.	N 255.	N 257.	N 263.	W 248.
5	W 273.	N 277.	N 270.	N 265.	N 252.	N 260.	W 236.
6	W 287.	N 290.	N 282.	N 278.	N 275.	N 271.	W 243.
7	W 324.	N 331.	N 317.	N 310.	N 308.	N 283.	W 262.
8	W 376.	N 378.	N 364.	N 357.	N 349.	N 296.	W 274.
9	D 433.	D 430.	D 406.	D 385.	D 383.	W 319.	W 293.
10	D 455.	D 447.	D 437.	D 414.	D 408.	W 351.	W 315.
11	D 459.	D 456.	D 439.	D 421.	D 417.	W 361.	W 331.
12	D 453.	D 458.	D 439.	D 413.	D 419.	W 362.	W 333.
13	D 448.	D 446.	D 433.	D 398.	D 407.	W 360.	W 339.
14	D 445.	D 448.	D 429.	D 393.	D 401.	W 347.	W 338.
15	D 444.	D 443.	D 412.	D 389.	D 391.	W 343.	W 336.
16	D 449.	D 441.	D 411.	D 388.	D 390.	W 345.	W 342.
17	D 470.	D 462.	D 438.	D 422.	D 427.	W 372.	W 368.
18	D 497.	D 489.	D 479.	D 464.	D 455.	W 434.	W 418.
19	D 504.	D 484.	D 475.	D 461.	D 450.	W 436.	W 423.
20	D 493.	D 473.	D 467.	D 451.	D 440.	W 425.	W 409.
21	D 481.	D 460.	D 457.	D 438.	D 435.	W 405.	W 396.
22	D 453.	D 434.	D 432.	D 400.	D 404.	W 381.	W 379.
23	N 386.	N 376.	N 374.	N 366.	N 370.	W 354.	W 347.
24	N 340.	N 329.	N 327.	N 322.	N 334.	W 326.	W 312.
DAILY LOAD FACTOR	0.791	0.811	0.801	0.794	0.808	0.778	0.768

LILCO AREA 12

oooooooooo LOAD MODEL 1 FOR 1986 oooooooooo

FOR AREA 12

LOAD FACTOR 0.690

HOUR	...MON...	...TUE...	...WED...	...THU...	...FRI...	...SAT...	...SUN...
1	W 1422.	N 1479.	N 1386.	N 1439.	N 1398.	N 1435.	W 1473.
2	W 1361.	N 1413.	N 1255.	N 1378.	N 1286.	N 1355.	W 1390.
3	W 1323.	N 1369.	N 1143.	N 1291.	N 1207.	N 1233.	W 1312.
4	W 1305.	N 1334.	N 1116.	N 1249.	N 1172.	N 1183.	W 1241.
5	W 1347.	N 1338.	N 1127.	N 1223.	N 1166.	N 1157.	W 1215.
6	W 1406.	N 1393.	N 1261.	N 1319.	N 1273.	N 1198.	W 1225.
7	W 1602.	N 1555.	N 1467.	N 1456.	N 1445.	N 1299.	W 1279.
8	W 1805.	N 1787.	N 1646.	N 1609.	N 1641.	N 1401.	W 1330.
9	D 2015.	D 1914.	D 1801.	D 1760.	D 1796.	W 1536.	W 1431.
10	D 2091.	D 2009.	D 1944.	D 1817.	D 1898.	W 1660.	W 1488.
11	D 2146.	D 2044.	D 1976.	D 1853.	D 1970.	W 1767.	W 1596.
12	D 2154.	D 2005.	D 1961.	D 1873.	D 1978.	W 1783.	W 1615.
13	D 2121.	D 1955.	D 1888.	D 1848.	D 1925.	W 1777.	W 1676.
14	D 2101.	D 1911.	D 1827.	D 1844.	D 1903.	W 1745.	W 1668.
15	D 2096.	D 1869.	D 1820.	D 1838.	D 1856.	W 1704.	W 1620.
16	D 2116.	D 1882.	D 1825.	D 1833.	D 1866.	W 1696.	W 1634.
17	D 2231.	D 2050.	D 1985.	D 2000.	D 2003.	W 1792.	W 1772.
18	D 2504.	D 2293.	D 2222.	D 2174.	D 2191.	W 2078.	W 2037.
19	D 2401.	D 2254.	D 2213.	D 2184.	D 2202.	W 2087.	W 2024.
20	D 2336.	D 2161.	D 2139.	D 2131.	D 2125.	W 2034.	W 1993.
21	D 2309.	D 2069.	D 2064.	D 2057.	D 2054.	W 1931.	W 1905.
22	D 2109.	D 1938.	D 1948.	D 1917.	D 1892.	W 1810.	W 1812.
23	N 1878.	N 1720.	N 1740.	N 1732.	N 1754.	W 1712.	W 1683.
24	N 1626.	N 1506.	N 1512.	N 1524.	N 1565.	W 1578.	W 1499.
DAILY LOAD FACTOR	0.762	0.786	0.774	0.789	0.787	0.778	0.776

********** LOAD MODEL 2 FOR 1986 **********

FOR AREA 12

LOAD FACTOR 0.669

HOUR	...MON...	...TUE...	...WED...	...THU...	...FRI...	...SAT...	...SUN...
1	W 1175.	N 1245.	N 1264.	N 1300.	N 1437.	N 1342.	W 1296.
2	W 1079.	N 1140.	N 1156.	N 1231.	N 1347.	N 1242.	W 1218.
3	W 997.	N 1070.	N 1097.	N 1191.	N 1289.	N 1149.	W 1131.
4	W 967.	N 1029.	N 1075.	N 1183.	N 1257.	N 1120.	W 1037.
5	W 1006.	N 1046.	N 1059.	N 1226.	N 1249.	N 1101.	W 1012.
6	W 1112.	N 1168.	N 1163.	N 1280.	N 1335.	N 1143.	W 1019.
7	W 1320.	N 1356.	N 1351.	N 1490.	N 1477.	N 1204.	W 1088.
8	W 1503.	N 1554.	N 1550.	N 1661.	N 1656.	N 1272.	W 1107.
9	D 1635.	D 1682.	D 1678.	D 1881.	D 1829.	W 1424.	W 1236.
10	D 1718.	D 1761.	D 1821.	D 1946.	D 1911.	W 1533.	W 1330.
11	D 1816.	D 1857.	D 1871.	D 2034.	D 1941.	W 1590.	W 1367.
12	D 1806.	D 1852.	D 1874.	D 2045.	D 1918.	W 1613.	W 1406.
13	D 1754.	D 1763.	D 1836.	D 1990.	D 1897.	W 1592.	W 1428.
14	D 1705.	D 1728.	D 1825.	D 1983.	D 1877.	W 1561.	W 1417.
15	D 1686.	D 1701.	D 1802.	D 1964.	D 1847.	W 1521.	W 1385.
16	D 1693.	D 1708.	D 1832.	D 1997.	D 1778.	W 1513.	W 1394.
17	D 1795.	D 1839.	D 1889.	D 2107.	D 1791.	W 1570.	W 1499.
18	D 1973.	D 2014.	D 2075.	D 2212.	D 1934.	W 1722.	W 1629.
19	D 2069.	D 2128.	D 2140.	D 2362.	D 2092.	W 1864.	W 1675.
20	D 1952.	D 2003.	D 2055.	D 2264.	D 1958.	W 1745.	W 1647.
21	D 1885.	D 1914.	D 1925.	D 2158.	D 1906.	W 1669.	W 1619.
22	D 1713.	D 1766.	D 1811.	D 2061.	D 1738.	W 1578.	W 1542.
23	N 1566.	N 1600.	N 1625.	N 1842.	N 1608.	W 1507.	W 1464.
24	N 1376.	N 1402.	N 1456.	N 1574.	N 1494.	W 1362.	W 1311.
DAILY LOAD FACTOR	0.751	0.750	0.764	0.758	0.808	0.781	0.802

********** LOAD MODEL 3 FOR 1986 **********

FOR AREA 12

LOAD FACTOR 0.721

HOUR	...MON...	...TUE...	...WED...	...THU...	...FRI...	...SAT...	...SUN...
1	W 1116.	N 1229.	N 1297.	N 1268.	N 1223.	N 1274.	W 1280.
2	W 1053.	N 1159.	N 1238.	N 1154.	N 1149.	N 1146.	W 1173.
3	W 997.	N 1139.	N 1211.	N 1125.	N 1129.	N 1091.	W 1084.
4	W 914.	N 1135.	N 1186.	N 1108.	N 1105.	N 1066.	W 1060.
5	W 970.	N 1143.	N 1199.	N 1122.	N 1096.	N 1063.	W 1047.
6	W 1069.	N 1203.	N 1252.	N 1177.	N 1166.	N 1071.	W 1036.
7	W 1261.	N 1349.	N 1400.	N 1305.	N 1301.	N 1138.	W 1019.
8	W 1477.	N 1583.	N 1630.	N 1568.	N 1540.	N 1247.	W 1077.
9	D 1661.	D 1715.	D 1735.	D 1702.	D 1672.	W 1436.	W 1195.
10	D 1769.	D 1853.	D 1861.	D 1815.	D 1772.	W 1531.	W 1288.
11	D 1812.	D 1873.	D 1868.	D 1864.	D 1789.	W 1615.	W 1313.
12	D 1796.	D 1881.	D 1836.	D 1859.	D 1766.	W 1634.	W 1372.
13	D 1748.	D 1823.	D 1776.	D 1782.	D 1712.	W 1573.	W 1393.
14	D 1745.	D 1819.	D 1761.	D 1732.	D 1692.	W 1547.	W 1364.
15	D 1740.	D 1857.	D 1758.	D 1723.	D 1680.	W 1493.	W 1339.
16	D 1753.	D 1847.	D 1779.	D 1707.	D 1664.	W 1466.	W 1321.
17	D 1832.	D 1892.	D 1827.	D 1728.	D 1679.	W 1502.	W 1367.
18	D 1951.	D 1966.	D 1913.	D 1886.	D 1771.	W 1657.	W 1447.
19	D 2064.	D 2127.	D 2041.	D 1995.	D 1957.	W 1803.	W 1619.
20	D 1984.	D 2079.	D 2005.	D 1977.	D 1925.	W 1785.	W 1641.
21	D 1921.	D 2024.	D 1938.	D 1909.	D 1841.	W 1696.	W 1606.
22	D 1773.	D 1901.	D 1806.	D 1764.	D 1685.	W 1649.	W 1517.
23	N 1593.	N 1668.	N 1624.	N 1610.	N 1558.	W 1486.	W 1416.
24	N 1378.	N 1458.	N 1407.	N 1384.	N 1425.	W 1354.	W 1217.
DAILY LOAD FACTOR	0.755	0.778	0.803	0.799	0.794	0.793	0.792

********** LOAD MODEL 4 FOR 1986 **********

FOR AREA 12

LOAD FACTOR 0.710

HOUR	...MON...	...TUE...	...WED...	...THU...	...FRI...	...SAT...	...SUN...
1	W 1005.	N 1160.	N 1236.	N 1124.	N 1115.	N 1117.	W 1102.
2	W 962.	N 1057.	N 1154.	N 1023.	N 1011.	N 1001.	W 989.
3	W 934.	N 1034.	N 1061.	N 984.	N 983.	N 971.	W 959.
4	W 914.	N 1027.	N 1042.	N 975.	N 968.	N 944.	W 921.
5	W 928.	N 1030.	N 1039.	N 977.	N 964.	N 938.	W 883.
6	W 956.	N 1077.	N 1049.	N 994.	N 981.	N 903.	W 871.
7	W 1090.	N 1202.	N 1175.	N 1144.	N 1108.	N 949.	W 823.
8	W 1354.	N 1529.	N 1458.	N 1364.	N 1336.	N 1052.	W 940.
9	D 1549.	D 1675.	D 1607.	D 1556.	D 1513.	W 1211.	W 1019.
10	D 1644.	D 1733.	D 1690.	D 1652.	D 1597.	W 1404.	W 1134.
11	D 1685.	D 1773.	D 1701.	D 1674.	D 1618.	W 1478.	W 1168.
12	D 1695.	D 1799.	D 1700.	D 1672.	D 1622.	W 1507.	W 1226.
13	D 1664.	D 1787.	D 1667.	D 1655.	D 1605.	W 1470.	W 1280.
14	D 1661.	D 1793.	D 1662.	D 1646.	D 1594.	W 1426.	W 1265.
15	D 1636.	D 1811.	D 1658.	D 1641.	D 1589.	W 1401.	W 1245.
16	D 1626.	D 1829.	D 1638.	D 1632.	D 1583.	W 1359.	W 1255.
17	D 1634.	D 1847.	D 1650.	D 1649.	D 1576.	W 1407.	W 1288.
18	D 1669.	D 1965.	D 1680.	D 1679.	D 1601.	W 1464.	W 1326.
19	D 1704.	D 1861.	D 1712.	D 1708.	D 1682.	W 1540.	W 1393.
20	D 1748.	D 1876.	D 1755.	D 1727.	D 1716.	W 1614.	W 1443.
21	D 1742.	D 1854.	D 1722.	D 1718.	D 1670.	W 1569.	W 1486.
22	D 1688.	D 1763.	D 1660.	D 1629.	D 1586.	W 1501.	W 1437.
23	N 1536.	N 1610.	N 1519.	N 1494.	N 1452.	W 1380.	W 1314.
24	N 1344.	N 1412.	N 1299.	N 1275.	N 1271.	W 1186.	W 1147.
DAILY LOAD FACTOR	0.819	0.795	0.844	0.835	0.819	0.795	0.783

********** LOAD MODEL 5 FOR 1986 **********

FOR AREA 12

LOAD FACTOR 0.658

HOUR	...MON...	...TUE...	...WED...	...THU...	...FRI...	...SAT...	...SUN...
1	W 980.	N 1056.	N 1155.	N 1244.	N 1091.	N 1117.	W 1109.
2	W 944.	N 967.	N 1104.	N 1121.	N 972.	N 1004.	W 991.
3	W 908.	N 940.	N 1049.	N 1071.	N 948.	N 965.	W 959.
4	W 881.	N 933.	N 1031.	N 1021.	N 923.	N 951.	W 916.
5	W 869.	N 930.	N 1039.	N 998.	N 927.	N 936.	W 913.
6	W 898.	N 957.	N 1084.	N 1009.	N 953.	N 920.	W 889.
7	W 974.	N 1098.	N 1241.	N 1145.	N 1077.	N 946.	W 848.
8	W 1169.	N 1368.	N 1490.	N 1424.	N 1341.	N 1043.	W 931.
9	D 1372.	D 1531.	D 1685.	D 1638.	D 1512.	W 1217.	W 1012.
10	D 1484.	D 1668.	D 1763.	D 1682.	D 1655.	W 1360.	W 1128.
11	D 1556.	D 1704.	D 1865.	D 1712.	D 1677.	W 1454.	W 1234.
12	D 1625.	D 1728.	D 1905.	D 1724.	D 1684.	W 1476.	W 1302.
13	D 1605.	D 1717.	D 1926.	D 1697.	D 1673.	W 1466.	W 1329.
14	D 1615.	D 1720.	D 1978.	D 1701.	D 1675.	W 1446.	W 1314.
15	D 1590.	D 1732.	D 2044.	D 1708.	D 1666.	W 1398.	W 1280.
16	D 1576.	D 1736.	D 2115.	D 1688.	D 1661.	W 1388.	W 1250.
17	D 1621.	D 1741.	D 2085.	D 1686.	D 1653.	W 1412.	W 1263.
18	D 1636.	D 1756.	D 1937.	D 1679.	D 1642.	W 1460.	W 1269.
19	D 1550.	D 1694.	D 1830.	D 1660.	D 1597.	W 1442.	W 1259.
20	D 1520.	D 1671.	D 1804.	D 1651.	D 1561.	W 1429.	W 1292.
21	D 1657.	D 1746.	D 1889.	D 1692.	D 1663.	W 1508.	W 1418.
22	D 1630.	D 1689.	D 1779.	D 1667.	D 1648.	W 1500.	W 1450.
23	N 1406.	N 1541.	N 1665.	N 1480.	N 1472.	W 1380.	W 1347.
24	N 1201.	N 1336.	N 1437.	N 1254.	N 1320.	W 1247.	W 1136.
DAILY LOAD FACTOR	0.811	0.830	0.766	0.854	0.841	0.842	0.800

********** LOAD MODEL 6 FOR 1986 **********

FOR AREA 12

LOAD FACTOR 0.643

HOUR	...MON...	...TUE...	...WED...	...THU...	...FRI...	...SAT...	...SUN...
1	W 1174.	N 1389.	N 1486.	N 1255.	N 1302.	N 1291.	W 1324.
2	W 1095.	N 1245.	N 1399.	N 1134.	N 1162.	N 1150.	W 1199.
3	W 1019.	N 1220.	N 1267.	N 1106.	N 1122.	N 1111.	W 1118.
4	W 981.	N 1142.	N 1232.	N 1065.	N 1089.	N 1052.	W 1057.
5	W 967.	N 1137.	N 1227.	N 1045.	N 1078.	N 1016.	W 987.
6	W 1000.	N 1207.	N 1212.	N 1061.	N 1084.	N 975.	W 952.
7	W 1125.	N 1361.	N 1308.	N 1179.	N 1185.	N 1028.	W 924.
8	W 1414.	N 1625.	N 1615.	N 1437.	N 1427.	N 1139.	W 1012.
9	D 1652.	D 1842.	D 1809.	D 1684.	D 1720.	W 1395.	W 1128.
10	D 1822.	D 2082.	D 1931.	D 1834.	D 1860.	W 1587.	W 1279.
11	D 1919.	D 2199.	D 2035.	D 1902.	D 1941.	W 1663.	W 1405.
12	D 1965.	D 2255.	D 2129.	D 1961.	D 1975.	W 1763.	W 1461.
13	D 1991.	D 2277.	D 2074.	D 2011.	D 1999.	W 1786.	W 1562.
14	D 2067.	D 2380.	D 2021.	D 2112.	D 2027.	W 1778.	W 1537.
15	D 2143.	D 2423.	D 2055.	D 2134.	D 2088.	W 1740.	W 1512.
16	D 2171.	D 2436.	D 2041.	D 2137.	D 2095.	W 1734.	W 1550.
17	D 2185.	D 2550.	D 2101.	D 2152.	D 1986.	W 1783.	W 1600.
18	D 2161.	D 2468.	D 2016.	D 2120.	D 1925.	W 1808.	W 1576.
19	D 1959.	D 2327.	D 1911.	D 1950.	D 1870.	W 1773.	W 1490.
20	D 1877.	D 2242.	D 1830.	D 1889.	D 1813.	W 1711.	W 1479.
21	D 1883.	D 2224.	D 1848.	D 1935.	D 1826.	W 1757.	W 1607.
22	D 1915.	D 2209.	D 1852.	D 1896.	D 1816.	W 1794.	W 1621.
23	N 1805.	N 1945.	N 1725.	N 1800.	N 1694.	W 1639.	W 1525.
24	N 1591.	N 1749.	N 1447.	N 1503.	N 1469.	W 1455.	W 1341.
DAILY LOAD FACTOR	0.761	0.751	0.814	0.780	0.787	0.828	0.829

********** LOAD MODEL 7 FOR 1986 **********

FOR AREA 12

LOAD FACTOR 0.613

HOUR	...MON...	...TUE...	...WED...	...THU...	...FRI...	...SAT...	...SUN...
1	W 1522.	N 1569.	N 1516.	N 1678.	N 2033.	N 1584.	W 1503.
2	W 1411.	N 1418.	N 1383.	N 1529.	N 1761.	N 1401.	W 1368.
3	W 1340.	N 1352.	N 1312.	N 1490.	N 1698.	N 1322.	W 1275.
4	W 1302.	N 1283.	N 1204.	N 1447.	N 1615.	N 1185.	W 1177.
5	W 1250.	N 1229.	N 1190.	N 1432.	N 1537.	N 1172.	W 1168.
6	W 1265.	N 1214.	N 1196.	N 1461.	N 1494.	N 1140.	W 1102.
7	W 1361.	N 1358.	N 1330.	N 1597.	N 1553.	N 1128.	W 1044.
8	W 1654.	N 1646.	N 1638.	N 1895.	N 1732.	N 1240.	W 1154.
9	D 1953.	D 1912.	D 1866.	D 2119.	D 2038.	W 1480.	W 1259.
10	D 2110.	D 2087.	D 2075.	D 2362.	D 2128.	W 1690.	W 1443.
11	D 2197.	D 2155.	D 2142.	D 2693.	D 2225.	W 1770.	W 1626.
12	D 2295.	D 2210.	D 2192.	D 2711.	D 2328.	W 1949.	W 1720.
13	D 2489.	D 2247.	D 2217.	D 2727.	D 2335.	W 2005.	W 1788.
14	D 2414.	D 2310.	D 2284.	D 2832.	D 2379.	W 1989.	W 1837.
15	D 2425.	D 2400.	D 2371.	D 2887.	D 2392.	W 1974.	W 1821.
16	D 2440.	D 2467.	D 2516.	D 2951.	D 2350.	W 1967.	W 1811.
17	D 2555.	D 2594.	D 2630.	D 3011.	D 2321.	W 1996.	W 1846.
18	D 2503.	D 2452.	D 2536.	D 3132.	D 2235.	W 2021.	W 1832.
19	D 2277.	D 2203.	D 2261.	D 2923.	D 2174.	W 1981.	W 1796.
20	D 2160.	D 2139.	D 2146.	D 2858.	D 2106.	W 1875.	W 1754.
21	D 2181.	D 2132.	D 2177.	D 2810.	D 2113.	W 1942.	W 1927.
22	D 2168.	D 2123.	D 2187.	D 2767.	D 2100.	W 1976.	W 2029.
23	N 2059.	N 2051.	N 2094.	N 2669.	N 2014.	W 1778.	W 1937.
24	N 1767.	N 1745.	N 1881.	N 2151.	N 1739.	W 1665.	W 1705.
DAILY LOAD FACTOR	0.768	0.744	0.734	0.747	0.843	0.829	0.779

********** LOAD MODEL 8 FOR 1986 **********

FOR AREA 12

LOAD FACTOR 0.647

HOUR	...MON...	...TUE...	...WED...	...THU...	...FRI...	...SAT...	...SUN...
1	W 1453.	N 1610.	N 1481.	N 1365.	N 1414.	N 1460.	W 1405.
2	W 1373.	N 1510.	N 1359.	N 1207.	N 1292.	N 1334.	W 1298.
3	W 1314.	N 1435.	N 1256.	N 1134.	N 1165.	N 1242.	W 1163.
4	W 1286.	N 1381.	N 1192.	N 1069.	N 1114.	N 1146.	W 1084.
5	W 1275.	N 1345.	N 1153.	N 1062.	N 1081.	N 1121.	W 1058.
6	W 1325.	N 1355.	N 1181.	N 1076.	N 1107.	N 1093.	W 1035.
7	W 1423.	N 1397.	N 1309.	N 1172.	N 1221.	N 1099.	W 987.
8	W 1619.	N 1588.	N 1517.	N 1444.	N 1473.	N 1268.	W 1049.
9	D 1911.	D 1868.	D 1739.	D 1631.	D 1699.	W 1468.	W 1229.
10	D 2248.	D 1955.	D 1907.	D 1884.	D 1897.	W 1606.	W 1389.
11	D 2389.	D 2109.	D 1977.	D 1933.	D 1960.	W 1790.	W 1527.
12	D 2468.	D 2267.	D 2048.	D 1985.	D 2027.	W 1863.	W 1600.
13	D 2497.	D 2290.	D 2076.	D 2010.	D 2057.	W 1870.	W 1644.
14	D 2572.	D 2307.	D 2134.	D 2059.	D 2142.	W 1856.	W 1681.
15	D 2607.	D 2324.	D 2118.	D 2130.	D 2171.	W 1834.	W 1689.
16	D 2649.	D 2349.	D 2103.	D 2216.	D 2205.	W 1808.	W 1711.
17	D 2687.	D 2375.	D 2088.	D 2191.	D 2099.	W 1829.	W 1759.
18	D 2631.	D 2332.	D 2032.	D 2068.	D 2020.	W 1845.	W 1725.
19	D 2533.	D 2283.	D 1949.	D 1965.	D 1951.	W 1772.	W 1669.
20	D 2413.	D 2035.	D 1917.	D 1937.	D 1930.	W 1765.	W 1653.
21	D 2440.	D 2230.	D 1944.	D 1991.	D 1970.	W 1851.	W 1822.
22	D 2367.	D 2005.	D 1903.	D 1926.	D 1922.	W 1804.	W 1783.
23	N 2044.	N 1893.	N 1748.	N 1815.	N 1797.	W 1636.	W 1612.
24	N 1877.	N 1624.	N 1539.	N 1562.	N 1573.	W 1555.	W 1496.
DAILY LOAD FACTOR	0.766	0.805	0.814	0.768	0.780	0.845	0.802

********** LOAD MODEL 9 FOR 1986 **********

FOR AREA 12

LOAD FACTOR 0.632

HOUR	...MON...	...TUE...	...WED...	...THU...	...FRI...	...SAT...	...SUN...
1	W 1228.	N 1476.	N 1191.	N 1087.	N 1101.	N 1175.	W 1170.
2	W 1136.	N 1287.	N 1084.	N 1034.	N 1045.	N 1076.	W 1068.
3	W 1093.	N 1249.	N 1059.	N 980.	N 995.	N 1021.	W 1002.
4	W 1090.	N 1204.	N 1026.	N 952.	N 973.	N 985.	W 945.
5	W 1116.	N 1166.	N 1015.	N 941.	N 966.	N 957.	W 926.
6	W 1182.	N 1221.	N 1052.	N 999.	N 1006.	N 948.	W 912.
7	W 1333.	N 1304.	N 1153.	N 1111.	N 1121.	N 990.	W 890.
8	W 1544.	N 1529.	N 1395.	N 1354.	N 1365.	N 1071.	W 934.
9	D 1792.	D 1696.	D 1585.	D 1539.	D 1563.	W 1233.	W 1063.
10	D 1932.	D 1896.	D 1665.	D 1638.	D 1670.	W 1441.	W 1158.
11	D 2017.	D 1949.	D 1756.	D 1692.	D 1788.	W 1513.	W 1263.
12	D 2031.	D 1986.	D 1799.	D 1718.	D 1833.	W 1578.	W 1339.
13	D 2067.	D 1972.	D 1767.	D 1701.	D 1825.	W 1603.	W 1415.
14	D 2086.	D 1961.	D 1731.	D 1716.	D 1849.	W 1592.	W 1436.
15	D 2176.	D 1957.	D 1762.	D 1722.	D 1866.	W 1549.	W 1420.
16	D 2385.	D 1943.	D 1751.	D 1726.	D 1843.	W 1555.	W 1431.
17	D 2301.	D 1938.	D 1783.	D 1745.	D 1810.	W 1597.	W 1453.
18	D 2110.	D 1927.	D 1806.	D 1774.	D 1736.	W 1633.	W 1463.
19	D 2046.	D 1903.	D 1779.	D 1706.	D 1713.	W 1626.	W 1469.
20	D 2077.	D 1919.	D 1860.	D 1855.	D 1876.	W 1648.	W 1517.
21	D 2037.	D 1916.	D 1818.	D 1868.	D 1872.	W 1661.	W 1573.
22	D 1998.	D 1815.	D 1643.	D 1656.	D 1680.	W 1622.	W 1494.
23	N 1887.	N 1619.	N 1489.	N 1505.	N 1522.	W 1484.	W 1405.
24	N 1611.	N 1382.	N 1269.	N 1276.	N 1347.	W 1325.	W 1215.
DAILY LOAD FACTOR	0.739	0.844	0.812	0.787	0.808	0.825	0.794

********** LOAD MODEL 10 FOR 1986 **********

FOR AREA 12

LOAD FACTOR 0.695

HOUR	...MON...	...TUE...	...WED...	...THU...	...FRI...	...SAT...	...SUN...
1	W 995.	N 1120.	N 1174.	N 1064.	N 1093.	N 1139.	W 1129.
2	W 938.	N 1026.	N 1075.	N 972.	N 978.	N 1016.	W 1013.
3	W 912.	N 1006.	N 1020.	N 955.	N 960.	N 964.	W 951.
4	W 878.	N 981.	N 997.	N 930.	N 942.	N 947.	W 926.
5	W 905.	N 1001.	N 987.	N 937.	N 934.	N 932.	W 920.
6	W 958.	N 1054.	N 1039.	N 975.	N 969.	N 949.	W 923.
7	W 1155.	N 1274.	N 1235.	N 1170.	N 1187.	N 992.	W 931.
8	W 1356.	N 1535.	N 1476.	N 1411.	N 1433.	N 1101.	W 966.
9	D 1550.	D 1701.	D 1604.	D 1563.	D 1585.	W 1259.	W 1085.
10	D 1641.	D 1750.	D 1702.	D 1644.	D 1684.	W 1417.	W 1199.
11	D 1707.	D 1783.	D 1715.	D 1689.	D 1713.	W 1470.	W 1256.
12	D 1705.	D 1802.	D 1709.	D 1677.	D 1711.	W 1480.	W 1291.
13	D 1697.	D 1787.	D 1674.	D 1649.	D 1686.	W 1456.	W 1340.
14	D 1681.	D 1808.	D 1657.	D 1638.	D 1669.	W 1426.	W 1312.
15	D 1662.	D 1824.	D 1653.	D 1626.	D 1664.	W 1394.	W 1299.
16	D 1672.	D 1863.	D 1655.	D 1622.	D 1665.	W 1371.	W 1325.
17	D 1717.	D 1888.	D 1694.	D 1656.	D 1699.	W 1406.	W 1387.
18	D 1755.	D 2035.	D 1736.	D 1728.	D 1733.	W 1507.	W 1444.
19	D 1833.	D 1975.	D 1791.	D 1775.	D 1763.	W 1615.	W 1500.
20	D 1853.	D 1921.	D 1795.	D 1814.	D 1759.	W 1635.	W 1519.
21	D 1746.	D 1874.	D 1735.	D 1740.	D 1721.	W 1568.	W 1494.
22	D 1659.	D 1743.	D 1624.	D 1630.	D 1590.	W 1490.	W 1423.
23	N 1484.	N 1575.	N 1461.	N 1453.	N 1465.	W 1400.	W 1280.
24	N 1263.	N 1379.	N 1251.	N 1248.	N 1287.	W 1225.	W 1109.
DAILY LOAD FACTOR	0.781	0.772	0.823	0.794	0.825	0.794	0.796

********** LOAD MODEL 11 FOR 1986 **********

FOR AREA 12

LOAD FACTOR 0.669

HOUR	...MON...	...TUE...	...WED...	...THU...	...FRI...	...SAT...	...SUN...
1	W 1056.	N 1120.	N 1158.	N 1230.	N 1127.	N 1149.	W 1171.
2	W 989.	N 1024.	N 1078.	N 1144.	N 1042.	N 1049.	W 1071.
3	W 938.	N 992.	N 1028.	N 1103.	N 988.	N 995.	W 998.
4	W 910.	N 976.	N 1014.	N 1065.	N 968.	N 973.	W 957.
5	W 922.	N 982.	N 1018.	N 1062.	N 953.	N 944.	W 916.
6	W 1011.	N 1044.	N 1091.	N 1109.	N 1008.	N 979.	W 929.
7	W 1195.	N 1214.	N 1260.	N 1243.	N 1176.	N 1036.	W 964.
8	W 1446.	N 1442.	N 1481.	N 1423.	N 1342.	N 1135.	W 1001.
9	D 1584.	D 1576.	D 1653.	D 1545.	D 1507.	W 1317.	W 1115.
10	D 1718.	D 1710.	D 1792.	D 1649.	D 1628.	W 1438.	W 1200.
11	D 1780.	D 1760.	D 1812.	D 1677.	D 1655.	W 1514.	W 1291.
12	D 1755.	D 1749.	D 1823.	D 1657.	D 1651.	W 1538.	W 1333.
13	D 1707.	D 1702.	D 1803.	D 1641.	D 1635.	W 1524.	W 1394.
14	D 1683.	D 1688.	D 1783.	D 1604.	D 1596.	W 1493.	W 1373.
15	D 1661.	D 1691.	D 1809.	D 1563.	D 1570.	W 1464.	W 1348.
16	D 1696.	D 1745.	D 1816.	D 1554.	D 1610.	W 1471.	W 1406.
17	D 1851.	D 1887.	D 1951.	D 1672.	D 1775.	W 1632.	W 1502.
18	D 2042.	D 2093.	D 2141.	D 1915.	D 1974.	W 1878.	W 1727.
19	D 1995.	D 2018.	D 2189.	D 1903.	D 1927.	W 1842.	W 1665.
20	D 1938.	D 1964.	D 2068.	D 1829.	D 1848.	W 1763.	W 1624.
21	D 1836.	D 1864.	D 1988.	D 1769.	D 1753.	W 1645.	W 1558.
22	D 1692.	D 1735.	D 1855.	D 1619.	D 1589.	W 1535.	W 1476.
23	N 1487.	N 1496.	N 1637.	N 1456.	N 1450.	W 1430.	W 1355.
24	N 1276.	N 1309.	N 1412.	N 1269.	N 1284.	W 1298.	W 1188.
DAILY LOAD FACTOR	0.738	0.732	0.736	0.777	0.740	0.733	0.737

********** LOAD MODEL 12 FOR 1986 **********

FOR AREA 12

LOAD FACTOR 0.694

HOUR	...MON...	...TUE...	...WED...	...THU...	...FRI...	...SAT...	...SUN...
1	W 1256.	N 1325.	N 1240.	N 1284.	N 1297.	N 1313.	W 1367.
2	W 1197.	N 1221.	N 1171.	N 1182.	N 1212.	N 1217.	W 1235.
3	W 1145.	N 1174.	N 1085.	N 1118.	N 1125.	N 1138.	W 1167.
4	W 1135.	N 1128.	N 1033.	N 1099.	N 1082.	N 1092.	W 1115.
5	W 1163.	N 1122.	N 999.	N 1105.	N 1040.	N 1056.	W 1046.
6	W 1228.	N 1203.	N 1154.	N 1180.	N 1140.	N 1108.	W 1068.
7	W 1423.	N 1377.	N 1338.	N 1354.	N 1305.	N 1191.	W 1131.
8	W 1629.	N 1607.	N 1560.	N 1511.	N 1502.	N 1247.	W 1188.
9	D 1812.	D 1756.	D 1690.	D 1687.	D 1658.	W 1410.	W 1271.
10	D 1949.	D 1905.	D 1851.	D 1775.	D 1748.	W 1534.	W 1396.
11	D 1984.	D 1959.	D 1872.	D 1832.	D 1824.	W 1637.	W 1482.
12	D 1969.	D 1953.	D 1863.	D 1825.	D 1819.	W 1650.	W 1523.
13	D 1928.	D 1921.	D 1847.	D 1737.	D 1800.	W 1635.	W 1572.
14	D 1909.	D 1918.	D 1805.	D 1714.	D 1793.	W 1601.	W 1551.
15	D 1881.	D 1914.	D 1760.	D 1693.	D 1731.	W 1582.	W 1541.
16	D 1924.	D 1939.	D 1762.	D 1699.	D 1744.	W 1611.	W 1566.
17	D 2101.	D 2082.	D 1936.	D 1933.	D 1898.	W 1785.	W 1704.
18	D 2329.	D 2254.	D 2176.	D 2154.	D 2071.	W 2064.	W 1975.
19	D 2275.	D 2212.	D 2163.	D 2134.	D 2039.	W 2015.	W 1945.
20	D 2243.	D 2110.	D 2092.	D 2047.	D 1991.	W 1964.	W 1865.
21	D 2120.	D 2029.	D 2006.	D 1967.	D 1887.	W 1857.	W 1840.
22	D 2000.	D 1892.	D 1877.	D 1807.	D 1766.	W 1723.	W 1718.
23	N 1728.	N 1668.	N 1678.	N 1654.	N 1645.	W 1622.	W 1593.
24	N 1492.	N 1438.	N 1450.	N 1458.	N 1465.	W 1461.	W 1388.
DAILY LOAD FACTOR	0.748	0.760	0.755	0.753	0.776	0.737	0.744

PASNY UPSTATE AREA 13

********** LOAD MODEL 1 FOR 1986 **********

FOR AREA 13

LOAD FACTOR 0.889

HOUR	...MON...	...TUE...	...WED...	...THU...	...FRI...	...SAT...	...SUN...
1	W 1132.	N 1162.	N 1105.	N 1126.	N 1103.	N 1109.	W 1113.
2	W 1120.	N 1154.	N 1099.	N 1101.	N 1107.	N 1082.	W 1095.
3	W 1093.	N 1151.	N 1094.	N 1110.	N 1096.	N 1066.	W 1088.
4	W 1072.	N 1145.	N 1096.	N 1100.	N 1099.	N 1049.	W 1079.
5	W 1122.	N 1150.	N 1108.	N 1117.	N 1112.	N 1091.	W 1086.
6	W 1137.	N 1156.	N 1125.	N 1130.	N 1134.	N 1106.	W 1097.
7	W 1178.	N 1203.	N 1166.	N 1163.	N 1174.	N 1160.	W 1123.
8	W 1250.	N 1257.	N 1226.	N 1215.	N 1233.	N 1204.	W 1157.
9	D 1266.	D 1255.	D 1249.	D 1241.	D 1242.	W 1214.	W 1196.
10	D 1304.	D 1273.	D 1286.	D 1275.	D 1263.	W 1218.	W 1181.
11	D 1309.	D 1294.	D 1271.	D 1279.	D 1277.	W 1237.	W 1186.
12	D 1289.	D 1257.	D 1250.	D 1251.	D 1244.	W 1235.	W 1184.
13	D 1254.	D 1221.	D 1227.	D 1220.	D 1213.	W 1197.	W 1177.
14	D 1248.	D 1228.	D 1216.	D 1211.	D 1208.	W 1182.	W 1189.
15	D 1247.	D 1202.	D 1201.	D 1198.	D 1191.	W 1168.	W 1173.
16	D 1239.	D 1200.	D 1209.	D 1193.	D 1185.	W 1170.	W 1161.
17	D 1282.	D 1225.	D 1233.	D 1207.	D 1223.	W 1208.	W 1179.
18	D 1315.	D 1269.	D 1283.	D 1253.	D 1265.	W 1228.	W 1215.
19	D 1321.	D 1291.	D 1300.	D 1267.	D 1297.	W 1246.	W 1210.
20	D 1343.	D 1261.	D 1279.	D 1252.	D 1259.	W 1234.	W 1206.
21	D 1312.	D 1253.	D 1240.	D 1231.	D 1230.	W 1217.	W 1204.
22	D 1265.	D 1234.	D 1194.	D 1197.	D 1205.	W 1190.	W 1171.
23	N 1236.	N 1187.	N 1157.	N 1167.	N 1169.	W 1164.	W 1152.
24	N 1180.	N 1147.	N 1116.	N 1141.	N 1148.	W 1140.	W 1114.
DAILY LOAD FACTOR	0.916	0.939	0.921	0.933	0.921	0.940	0.951

********** LOAD MODEL 2 FOR 1986 **********

FOR AREA 13

LOAD FACTOR 0.867

HOUR	...MON...	...TUE...	...WED...	...THU...	...FRI...	...SAT...	...SUN...
1	W 1104.	N 1140.	N 1131.	N 1101.	N 1114.	N 1091.	W 1119.
2	W 1100.	N 1143.	N 1097.	N 1094.	N 1090.	N 1080.	W 1085.
3	W 1096.	N 1151.	N 1116.	N 1102.	N 1108.	N 1060.	W 1067.
4	W 1081.	N 1152.	N 1130.	N 1093.	N 1103.	N 1077.	W 1027.
5	W 1086.	N 1159.	N 1136.	N 1106.	N 1123.	N 1087.	W 1070.
6	W 1128.	N 1182.	N 1154.	N 1133.	N 1138.	N 1125.	W 1083.
7	W 1175.	N 1233.	N 1198.	N 1185.	N 1188.	N 1164.	W 1110.
8	W 1248.	N 1312.	N 1265.	N 1252.	N 1242.	N 1207.	W 1145.
9	D 1280.	D 1349.	D 1281.	D 1297.	D 1278.	W 1228.	W 1157.
10	D 1283.	D 1360.	D 1319.	D 1339.	D 1321.	W 1257.	W 1167.
11	D 1314.	D 1391.	D 1335.	D 1332.	D 1329.	W 1264.	W 1181.
12	D 1280.	D 1345.	D 1292.	D 1277.	D 1284.	W 1262.	W 1179.
13	D 1221.	D 1308.	D 1256.	D 1251.	D 1236.	W 1199.	W 1170.
14	D 1235.	D 1260.	D 1231.	D 1237.	D 1250.	W 1203.	W 1161.
15	D 1222.	D 1275.	D 1231.	D 1226.	D 1239.	W 1192.	W 1148.
16	D 1219.	D 1254.	D 1205.	D 1224.	D 1211.	W 1171.	W 1137.
17	D 1244.	D 1287.	D 1229.	D 1255.	D 1232.	W 1191.	W 1149.
18	D 1243.	D 1276.	D 1268.	D 1267.	D 1274.	W 1215.	W 1173.
19	D 1316.	D 1355.	D 1300.	D 1306.	D 1310.	W 1230.	W 1219.
20	D 1324.	D 1331.	D 1299.	D 1286.	D 1295.	W 1223.	W 1202.
21	D 1272.	D 1303.	D 1252.	D 1257.	D 1271.	W 1201.	W 1196.
22	D 1263.	D 1240.	D 1163.	D 1224.	D 1213.	W 1189.	W 1187.
23	N 1209.	N 1217.	N 1176.	N 1193.	N 1183.	W 1160.	W 1158.
24	N 1165.	N 1190.	N 1147.	N 1143.	N 1155.	W 1122.	W 1126.
DAILY LOAD FACTOR	0.916	0.905	0.912	0.908	0.915	0.930	0.937

********** LOAD MODEL 3 FOR 1986 **********

FOR AREA 13

LOAD FACTOR 0.897

HOUR	...MON...	...TUE...	...WED...	...THU...	...FRI...	...SAT...	...SUN...
1	W 1075.	N 1089.	N 1109.	N 1112.	N 1093.	N 1094.	W 1089.
2	W 1074.	N 1080.	N 1104.	N 1095.	N 1079.	N 1081.	W 1081.
3	W 1070.	N 1057.	N 1103.	N 1090.	N 1059.	N 1069.	W 1050.
4	W 1067.	N 1066.	N 1108.	N 1099.	N 1003.	N 1063.	W 1047.
5	W 1085.	N 1082.	N 1118.	N 1091.	N 1064.	N 1076.	W 1040.
6	W 1096.	N 1110.	N 1140.	N 1077.	N 1091.	N 1083.	W 1055.
7	W 1130.	N 1128.	N 1174.	N 1114.	N 1124.	N 1132.	W 1080.
8	W 1190.	N 1193.	N 1235.	N 1158.	N 1183.	N 1178.	W 1105.
9	D 1225.	D 1249.	D 1258.	D 1214.	D 1220.	W 1191.	W 1122.
10	D 1215.	D 1233.	D 1282.	D 1207.	D 1229.	W 1180.	W 1143.
11	D 1223.	D 1237.	D 1255.	D 1194.	D 1243.	W 1198.	W 1128.
12	D 1208.	D 1210.	D 1245.	D 1172.	D 1212.	W 1194.	W 1123.
13	D 1187.	D 1201.	D 1219.	D 1200.	D 1179.	W 1174.	W 1116.
14	D 1181.	D 1192.	D 1200.	D 1210.	D 1173.	W 1163.	W 1097.
15	D 1172.	D 1168.	D 1184.	D 1160.	D 1165.	W 1151.	W 1078.
16	D 1166.	D 1155.	D 1189.	D 1156.	D 1150.	W 1148.	W 1077.
17	D 1186.	D 1176.	D 1197.	D 1186.	D 1162.	W 1152.	W 1086.
18	D 1184.	D 1189.	D 1204.	D 1177.	D 1175.	W 1167.	W 1107.
19	D 1199.	D 1218.	D 1232.	D 1203.	D 1206.	W 1187.	W 1133.
20	D 1226.	D 1239.	D 1252.	D 1221.	D 1224.	W 1188.	W 1145.
21	D 1196.	D 1208.	D 1209.	D 1200.	D 1195.	W 1169.	W 1141.
22	D 1154.	D 1171.	D 1171.	D 1156.	D 1159.	W 1147.	W 1121.
23	N 1138.	N 1149.	N 1142.	N 1134.	N 1137.	W 1111.	W 1101.
24	N 1098.	N 1127.	N 1120.	N 1100.	N 1099.	W 1088.	W 1072.
DAILY LOAD FACTOR	0.943	0.932	0.925	0.946	0.926	0.952	0.958

********** LOAD MODEL 4 FOR 1986 **********

FOR AREA 13

LOAD FACTOR 0.870

HOUR	...MON...	...TUE...	...WED...	...THU...	...FRI...	...SAT...	...SUN...
1	W 997.	N 1004.	N 987.	N 978.	N 1010.	N 993.	W 965.
2	W 971.	N 1002.	N 967.	N 990.	N 984.	N 989.	W 954.
3	W 1001.	N 998.	N 970.	N 982.	N 956.	N 980.	W 948.
4	W 987.	N 996.	N 992.	N 994.	N 995.	N 969.	W 926.
5	W 1000.	N 1020.	N 1006.	N 998.	N 991.	N 979.	W 960.
6	W 1025.	N 1018.	N 1023.	N 1010.	N 1003.	N 988.	W 974.
7	W 1069.	N 1048.	N 1044.	N 1042.	N 1035.	N 1013.	W 976.
8	W 1140.	N 1091.	N 1088.	N 1097.	N 1077.	N 1062.	W 999.
9	D 1164.	D 1120.	D 1123.	D 1128.	D 1110.	W 1079.	W 1016.
10	D 1198.	D 1161.	D 1141.	D 1159.	D 1152.	W 1122.	W 1053.
11	D 1237.	D 1191.	D 1193.	D 1185.	D 1189.	W 1152.	W 1059.
12	D 1203.	D 1183.	D 1176.	D 1180.	D 1172.	W 1144.	W 1066.
13	D 1166.	D 1138.	D 1133.	D 1129.	D 1142.	W 1116.	W 1063.
14	D 1170.	D 1130.	D 1131.	D 1128.	D 1127.	W 1116.	W 1047.
15	D 1155.	D 1098.	D 1109.	D 1100.	D 1094.	W 1086.	W 1027.
16	D 1134.	D 1099.	D 1104.	D 1096.	D 1101.	W 1081.	W 1012.
17	D 1139.	D 1121.	D 1118.	D 1107.	D 1115.	W 1092.	W 1015.
18	D 1137.	D 1117.	D 1126.	D 1118.	D 1123.	W 1105.	W 1029.
19	D 1167.	D 1157.	D 1154.	D 1145.	D 1146.	W 1113.	W 1056.
20	D 1156.	D 1143.	D 1150.	D 1134.	D 1136.	W 1117.	W 1084.
21	D 1148.	D 1135.	D 1132.	D 1125.	D 1119.	W 1106.	W 1071.
22	D 1117.	D 1113.	D 1112.	D 1102.	D 1095.	W 1073.	W 1061.
23	N 1078.	N 1083.	N 1075.	N 1070.	N 1067.	W 1051.	W 1036.
24	N 1065.	N 1033.	N 1037.	N 1039.	N 1031.	W 985.	W 1026.
DAILY LOAD FACTOR	0.897	0.917	0.911	0.915	0.910	0.923	0.939

********** LOAD MODEL 5 FOR 1988 **********

FOR AREA 13

LOAD FACTOR 0.773

HOUR	...MON...	...TUE...	...WED...	...THU...	...FRI...	...SAT...	...SUN...
1	W 792.	N 1069.	N 1001.	N 980.	N 968.	N 984.	W 990.
2	W 488.	N 1029.	N 986.	N 976.	N 951.	N 972.	W 982.
3	W 941.	N 1057.	N 996.	N 985.	N 956.	N 973.	W 970.
4	W 948.	N 1032.	N 987.	N 962.	N 959.	N 975.	W 969.
5	W 953.	N 1041.	N 991.	N 994.	N 966.	N 974.	W 978.
6	W 1006.	N 1047.	N 1004.	N 998.	N 993.	N 1003.	W 965.
7	W 1114.	N 1120.	N 1061.	N 1039.	N 1060.	N 1037.	W 979.
8	W 1176.	N 1139.	N 1143.	N 1118.	N 1120.	N 1117.	W 1000.
9	D 1184.	D 1159.	D 1137.	D 1127.	D 1145.	W 1130.	W 1028.
10	D 1191.	D 1172.	D 1147.	D 1150.	D 1155.	W 1131.	W 1064.
11	D 1197.	D 1174.	D 1170.	D 1163.	D 1157.	W 1141.	W 1065.
12	D 1211.	D 1166.	D 1153.	D 1148.	D 1152.	W 1125.	W 1067.
13	D 1201.	D 1136.	D 1129.	D 1123.	D 1130.	W 1119.	W 1051.
14	D 1332.	D 1160.	D 1133.	D 1132.	D 1134.	W 1118.	W 1024.
15	D 1262.	D 1128.	D 1116.	D 1110.	D 1115.	W 1082.	W 1018.
16	D 1389.	D 1087.	D 1071.	D 1077.	D 1100.	W 1072.	W 1015.
17	D 1219.	D 1104.	D 1088.	D 1113.	D 1111.	W 1078.	W 1016.
18	D 1207.	D 1109.	D 1082.	D 1105.	D 1096.	W 1101.	W 1023.
19	D 1194.	D 1095.	D 1092.	D 1107.	D 1076.	W 1094.	W 1025.
20	D 1188.	D 1085.	D 1080.	D 1075.	D 1073.	W 1090.	W 1030.
21	D 1181.	D 1098.	D 1122.	D 1113.	D 1108.	W 1112.	W 1044.
22	D 1178.	D 1102.	D 1084.	D 1115.	D 1109.	W 1099.	W 1054.
23	N 1168.	N 1035.	N 1034.	N 1055.	N 1063.	W 1049.	W 1019.
24	N 1125.	N 1013.	N 1009.	N 1010.	N 1007.	W 1012.	W 995.
DAILY LOAD FACTOR	0.805	0.935	0.919	0.923	0.926	0.934	0.952

********** LOAD MODEL 6 FOR 1986 **********

FOR AREA 13

LOAD FACTOR 0.854

HOUR	...MON...	...TUE...	...WED...	...THU...	...FRI...	...SAT...	...SUN...
1	W 992.	N 985.	N 972.	N 966.	N 998.	N 964.	W 988.
2	W 98[illegible].	N 971.	N 975.	N 969.	N 983.	N 960.	W 951.
3	W 98[illegible].	N 971.	N 982.	N 962.	N 970.	N 964.	W 955.
4	W 977.	N 973.	N 978.	N 943.	N 963.	N 958.	W 905.
5	W 994.	N 969.	N 979.	N 947.	N 965.	N 949.	W 934.
6	W 1004.	N 980.	N 990.	N 965.	N 978.	N 974.	W 948.
7	W 1032.	N 1013.	N 1015.	N 1001.	N 1018.	N 1010.	W 945.
8	W 1124.	N 1076.	N 1075.	N 1062.	N 1081.	N 1080.	W 967.
9	D 1164.	D 1107.	D 1134.	D 1099.	D 1111.	W 1104.	W 1014.
10	D 1199.	D 1147.	D 1126.	D 1123.	D 1125.	W 1121.	W 1023.
11	D 1246.	D 1196.	D 1179.	D 1169.	D 1181.	W 1149.	W 1036.
12	D 1203.	D 1151.	D 1176.	D 1166.	D 1170.	W 1134.	W 1054.
13	D 1173.	D 1119.	D 1140.	D 1144.	D 1136.	W 1117.	W 1046.
14	D 1192.	D 1142.	D 1159.	D 1188.	D 1155.	W 1115.	W 1027.
15	D 1153.	D 1120.	D 1138.	D 1131.	D 1128.	W 1092.	W 1024.
16	D 1137.	D 1096.	D 1110.	D 1112.	D 1102.	W 1086.	W 1011.
17	D 1127.	D 1101.	D 1106.	D 1109.	D 1098.	W 1081.	W 1020.
18	D 1132.	D 1107.	D 1109.	D 1108.	D 1099.	W 1083.	W 1019.
19	D 1113.	D 1090.	D 1098.	D 1102.	D 1093.	W 1079.	W 1043.
20	D 1100.	D 1089.	D 1091.	D 1095.	D 1085.	W 1063.	W 1041.
21	D 1094.	D 1088.	D 1093.	D 1096.	D 1114.	W 1073.	W 1058.
22	D 1116.	D 1097.	D 1103.	D 1118.	D 1105.	W 1082.	W 1065.
23	N 1071.	N 1075.	N 1078.	N 1084.	N 1067.	W 1056.	W 1029.
24	N 1025.	N 1007.	N 1017.	N 1051.	N 1000.	W 1003.	W 1006.
DAILY LOAD FACTOR	0.881	0.894	0.913	0.902	0.908	0.917	0.943

********** LOAD MODEL 7 FOR 1986 **********

FOR AREA 13

LOAD FACTOR 0.851

HOUR	...MON...	...TUE...	...WED...	...THU...	...FRI...	...SAT...	...SUN...
1	W 977.	N 980.	N 977.	N 1007.	N 1006.	N 981.	W 973.
2	W 972.	N 974.	N 970.	N 984.	N 1001.	N 969.	W 937.
3	W 958.	N 966.	N 974.	N 997.	N 999.	N 974.	W 905.
4	W 953.	N 962.	N 965.	N 986.	N 979.	N 957.	W 921.
5	W 959.	N 963.	N 960.	N 989.	N 978.	N 951.	W 946.
6	W 968.	N 966.	N 976.	N 992.	N 985.	N 955.	W 948.
7	W 994.	N 1004.	N 1003.	N 1041.	N 982.	N 971.	W 943.
8	W 1072.	N 1055.	N 1077.	N 1118.	N 1087.	N 1035.	W 975.
9	D 1096.	D 1105.	D 1121.	D 1155.	D 1125.	W 1093.	W 1009.
10	D 1111.	D 1097.	D 1126.	D 1165.	D 1135.	W 1095.	W 1037.
11	D 1129.	D 1130.	D 1144.	D 1176.	D 1146.	W 1123.	W 1049.
12	D 1144.	D 1158.	D 1159.	D 1187.	D 1159.	W 1108.	W 1061.
13	D 1133.	D 1134.	D 1139.	D 1179.	D 1137.	W 1101.	W 1057.
14	D 1150.	D 1148.	D 1163.	D 1192.	D 1161.	W 1099.	W 1032.
15	D 1152.	D 1136.	D 1156.	D 1253.	D 1153.	W 1089.	W 1028.
16	D 1115.	D 1120.	D 1130.	D 1169.	D 1124.	W 1086.	W 1011.
17	D 1134.	D 1138.	D 1143.	D 1182.	D 1141.	W 1067.	W 1026.
18	D 1117.	D 1112.	D 1131.	D 1172.	D 1124.	W 1074.	W 1038.
19	D 1106.	D 1110.	D 1128.	D 1167.	D 1123.	W 1066.	W 1046.
20	D 1096.	D 1107.	D 1128.	D 1164.	D 1119.	W 1076.	W 1030.
21	D 1100.	D 1116.	D 1113.	D 1157.	D 1114.	W 1081.	W 1039.
22	D 1102.	D 1110.	D 1127.	D 1148.	D 1113.	W 1091.	W 1069.
23	N 1071.	N 1084.	N 1104.	N 1122.	N 1083.	W 1052.	W 1044.
24	N 1024.	N 1014.	N 1022.	N 1063.	N 1020.	W 988.	W 998.
DAILY LOAD FACTOR	0.927	0.924	0.929	0.890	0.933	0.931	0.940

********** LOAD MODEL 8 FOR 1986 **********

FOR AREA 13

LOAD FACTOR 0.888

HOUR	...MON...	...TUE...	...WED...	...THU...	...FRI...	...SAT...	...SUN...
1	W 986.	N 1007.	N 1009.	N 1015.	N 997.	N 974.	W 978.
2	W 957.	N 970.	N 1001.	N 1002.	N 988.	N 968.	W 885.
3	W 955.	N 982.	N 993.	N 1005.	N 976.	N 960.	W 933.
4	W 958.	N 981.	N 999.	N 989.	N 964.	N 973.	W 951.
5	W 954.	N 984.	N 1001.	N 996.	N 962.	N 971.	W 941.
6	W 967.	N 995.	N 1059.	N 999.	N 980.	N 983.	W 946.
7	W 1007.	N 1013.	N 1025.	N 1018.	N 991.	N 1008.	W 919.
8	W 1054.	N 1078.	N 1089.	N 1073.	N 1065.	N 1056.	W 992.
9	D 1111.	D 1110.	D 1132.	D 1103.	D 1114.	W 1084.	W 1004.
10	D 1137.	D 1099.	D 1163.	D 1143.	D 1138.	W 1097.	W 1027.
11	D 1154.	D 1155.	D 1210.	D 1177.	D 1179.	W 1139.	W 1035.
12	D 1147.	D 1151.	D 1193.	D 1170.	D 1159.	W 1136.	W 1042.
13	D 1140.	D 1141.	D 1181.	D 1158.	D 1142.	W 1118.	W 1044.
14	D 1172.	D 1183.	D 1200.	D 1190.	D 1173.	W 1124.	W 1033.
15	D 1155.	D 1175.	D 1186.	D 1176.	D 1153.	W 1122.	W 1019.
16	D 1145.	D 1134.	D 1174.	D 1161.	D 1153.	W 1085.	W 1011.
17	D 1150.	D 1156.	D 1168.	D 1165.	D 1167.	W 1100.	W 1023.
18	D 1131.	D 1146.	D 1157.	D 1142.	D 1149.	W 1107.	W 1031.
19	D 1115.	D 1125.	D 1135.	D 1123.	D 1130.	W 1096.	W 1037.
20	D 1092.	D 1126.	D 1141.	D 1119.	D 1117.	W 1101.	W 1049.
21	D 1102.	D 1136.	D 1148.	D 1132.	D 1120.	W 1105.	W 1071.
22	D 1090.	D 1129.	D 1144.	D 1128.	D 1121.	W 1093.	W 1068.
23	N 1062.	N 1106.	N 1113.	N 1087.	N 1075.	W 1080.	W 1047.
24	N 1029.	N 1051.	N 1052.	N 1040.	N 1022.	W 1032.	W 1010.
DAILY LOAD FACTOR	0.916	0.920	0.918	0.921	0.920	0.933	0.937

********** LOAD MODEL 9 FOR 1986 **********

FOR AREA 13

LOAD FACTOR 0.811

HOUR	...MON...	...TUE...	...WED...	...THU...	...FRI...	...SAT...	...SUN...
1	W 897.	N 940.	N 936.	N 989.	N 979.	N 937.	W 906.
2	W 874.	N 939.	N 923.	N 984.	N 955.	N 926.	W 890.
3	W 894.	N 914.	N 930.	N 977.	N 962.	N 918.	W 825.
4	W 869.	N 925.	N 933.	N 974.	N 954.	N 910.	W 878.
5	W 901.	N 920.	N 928.	N 981.	N 948.	N 909.	W 886.
6	W 904.	N 941.	N 944.	N 1001.	N 973.	N 912.	W 906.
7	W 967.	N 999.	N 996.	N 1058.	N 1014.	N 957.	W 908.
8	W 1031.	N 1056.	N 1059.	N 1117.	N 1073.	N 1022.	W 932.
9	D 1051.	D 1093.	D 1097.	D 1145.	D 1106.	W 1043.	W 960.
10	D 1080.	D 1095.	D 1098.	D 1153.	D 1114.	W 1076.	W 985.
11	D 1111.	D 1136.	D 1129.	D 1268.	D 1131.	W 1075.	W 1017.
12	D 1103.	D 1117.	D 1122.	D 1176.	D 1134.	W 1055.	W 1009.
13	D 1068.	D 1084.	D 1086.	D 1150.	D 1089.	W 1029.	W 1006.
14	D 1084.	D 1104.	D 1121.	D 1159.	D 1119.	W 1079.	W 998.
15	D 1060.	D 1088.	D 1113.	D 1148.	D 1102.	W 1041.	W 970.
16	D 1047.	D 1067.	D 1087.	D 1128.	D 1072.	W 1045.	W 958.
17	D 1044.	D 1076.	D 1099.	D 1137.	D 1078.	W 1048.	W 963.
18	D 1046.	D 1071.	D 1101.	D 1143.	D 1070.	W 1040.	W 983.
19	D 1049.	D 1075.	D 1115.	D 1125.	D 1066.	W 1039.	W 972.
20	D 1064.	D 1081.	D 1121.	D 1141.	D 1083.	W 1053.	W 992.
21	D 1074.	D 1109.	D 1124.	D 1139.	D 1092.	W 1063.	W 1015.
22	D 1038.	D 1058.	D 1094.	D 1108.	D 1052.	W 1027.	W 986.
23	N 1018.	N 1037.	N 1062.	N 1065.	N 1035.	W 1003.	W 955.
24	N 951.	N 968.	N 1025.	N 1011.	N 965.	W 942.	W 917.
DAILY LOAD FACTOR	0.909	0.913	0.932	0.863	0.925	0.933	0.935

********** LOAD MODEL 10 FOR 1986 **********

FOR AREA 13

LOAD FACTOR 0.849

HOUR	...MON...	...TUE...	...WED...	...THU...	...FRI...	...SAT...	...SUN...
1	W 932.	N 958.	N 961.	N 974.	N 1128.	N 970.	W 944.
2	W 927.	N 954.	N 955.	N 966.	N 1115.	N 960.	W 935.
3	W 925.	N 947.	N 951.	N 961.	N 1108.	N 969.	W 921.
4	W 906.	N 953.	N 950.	N 964.	N 1098.	N 963.	W 943.
5	W 937.	N 949.	N 941.	N 965.	N 1089.	N 972.	W 946.
6	W 959.	N 957.	N 963.	N 984.	N 1094.	N 979.	W 952.
7	W 999.	N 1011.	N 1006.	N 1043.	N 1120.	N 1022.	W 938.
8	W 1088.	N 1099.	N 1073.	N 1123.	N 1159.	N 1084.	W 977.
9	D 1125.	D 1121.	D 1117.	D 1150.	D 1172.	W 1110.	W 1015.
10	D 1124.	D 1133.	D 1114.	D 1144.	D 1163.	W 1109.	W 1031.
11	D 1130.	D 1127.	D 1132.	D 1155.	D 1166.	W 1105.	W 1037.
12	D 1118.	D 1112.	D 1111.	D 1147.	D 1153.	W 1102.	W 1034.
13	D 1102.	D 1095.	D 1105.	D 1138.	D 1136.	W 1080.	W 1032.
14	D 1100.	D 1070.	D 1101.	D 1141.	D 1134.	W 1071.	W 1018.
15	D 1096.	D 1066.	D 1087.	D 1136.	D 1122.	W 1054.	W 1003.
16	D 1079.	D 1059.	D 1065.	D 1131.	D 1104.	W 1041.	W 987.
17	D 1087.	D 1048.	D 1067.	D 1140.	D 1108.	W 1052.	W 990.
18	D 1093.	D 1058.	D 1076.	D 1151.	D 1113.	W 1062.	W 976.
19	D 1116.	D 1106.	D 1119.	D 1175.	D 1129.	W 1078.	W 981.
20	D 1120.	D 1097.	D 1119.	D 1176.	D 1127.	W 1091.	W 995.
21	D 1099.	D 1081.	D 1107.	D 1179.	D 1112.	W 1086.	W 1021.
22	D 1069.	D 1060.	D 1082.	D 1185.	D 1090.	W 1045.	W 1009.
23	N 1025.	N 1030.	N 1040.	N 1170.	N 1039.	W 1028.	W 985.
24	N 975.	N 989.	N 1002.	N 1243.	N 992.	W 968.	W 954.
DAILY LOAD FACTOR	0.927	0.922	0.929	0.890	0.952	0.938	0.949

********** LOAD MODEL 11 FOR 1986 **********

FOR AREA 13

LOAD FACTOR 0.850

HOUR	...MON...	...TUE...	...WED...	...THU...	...FRI...	...SAT...	...SUN...
1	W 998.	N 1040.	N 978.	N 990.	N 1008.	N 947.	W 987.
2	W 994.	N 1018.	N 980.	N 989.	N 1037.	N 964.	W 983.
3	W 1021.	N 1004.	N 971.	N 985.	N 999.	N 977.	W 930.
4	W 997.	N 995.	N 962.	N 975.	N 999.	N 984.	W 912.
5	W 996.	N 1049.	N 954.	N 974.	N 992.	N 1009.	W 967.
6	W 1031.	N 1026.	N 982.	N 988.	N 1011.	N 1012.	W 1019.
7	W 1059.	N 1065.	N 1002.	N 1025.	N 1053.	N 1047.	W 965.
8	W 1132.	N 1117.	N 1067.	N 1062.	N 1096.	N 1083.	W 989.
9	D 1171.	D 1152.	D 1115.	D 1088.	D 1136.	W 1141.	W 1029.
10	D 1210.	D 1165.	D 1155.	D 1092.	D 1160.	W 1140.	W 1042.
11	D 1228.	D 1196.	D 1167.	D 1157.	D 1190.	W 1149.	W 1051.
12	D 1205.	D 1173.	D 1139.	D 1145.	D 1158.	W 1154.	W 1057.
13	D 1187.	D 1156.	D 1127.	D 1127.	D 1148.	W 1129.	W 1044.
14	D 1193.	D 1138.	D 1124.	D 1130.	D 1147.	W 1119.	W 1023.
15	D 1182.	D 1110.	D 1100.	D 1106.	D 1113.	W 1112.	W 1016.
16	D 1174.	D 1126.	D 1082.	D 1097.	D 1096.	W 1098.	W 1014.
17	D 1201.	D 1135.	D 1101.	D 1128.	D 1116.	W 1123.	W 1046.
18	D 1235.	D 1184.	D 1146.	D 1170.	D 1168.	W 1154.	W 1085.
19	D 1276.	D 1185.	D 1150.	D 1164.	D 1176.	W 1151.	W 1090.
20	D 1217.	D 1179.	D 1132.	D 1159.	D 1162.	W 1144.	W 1080.
21	D 1192.	D 1134.	D 1108.	D 1142.	D 1131.	W 1122.	W 1071.
22	D 1161.	D 1094.	D 1078.	D 1126.	D 1107.	W 1105.	W 1054.
23	N 1133.	N 1073.	N 1056.	N 1096.	N 1060.	W 1075.	W 1033.
24	N 1069.	N 1027.	N 1003.	N 1045.	N 1001.	W 1030.	W 992.
DAILY LOAD FACTOR	0.890	0.925	0.917	0.925	0.920	0.938	0.936

********** LOAD MODEL 12 FOR 1986 **********

FOR AREA 13

LOAD FACTOR 0.875

HOUR	...MON...	...TUE...	...WED...	...THU...	...FRI...	...SAT...	...SUN...
1	W 1058.	N 1076.	N 1094.	N 1072.	N 1073.	N 1023.	W 1050.
2	W 1062.	N 1059.	N 1093.	N 1048.	N 1053.	N 963.	W 1045.
3	W 1069.	N 1066.	N 1098.	N 1071.	N 1035.	N 1043.	W 1003.
4	W 1065.	N 1056.	N 1104.	N 1065.	N 1039.	N 1051.	W 1014.
5	W 1079.	N 1061.	N 1111.	N 1074.	N 1055.	N 1057.	W 1030.
6	W 1089.	N 1085.	N 1149.	N 1087.	N 1067.	N 1075.	W 1047.
7	W 1160.	N 1121.	N 1201.	N 1133.	N 1107.	N 1126.	W 1056.
8	W 1215.	N 1200.	N 1269.	N 1213.	N 1167.	N 1191.	W 1086.
9	D 1265.	D 1252.	D 1327.	D 1239.	D 1214.	W 1205.	W 1100.
10	D 1263.	D 1245.	D 1292.	D 1247.	D 1221.	W 1207.	W 1109.
11	D 1254.	D 1246.	D 1288.	D 1227.	D 1212.	W 1220.	W 1122.
12	D 1238.	D 1235.	D 1279.	D 1210.	D 1195.	W 1202.	W 1130.
13	D 1222.	D 1223.	D 1258.	D 1199.	D 1186.	W 1187.	W 1115.
14	D 1216.	D 1215.	D 1251.	D 1183.	D 1172.	W 1175.	W 1103.
15	D 1198.	D 1166.	D 1225.	D 1169.	D 1137.	W 1163.	W 1088.
16	D 1190.	D 1188.	D 1217.	D 1171.	D 1145.	W 1161.	W 1088.
17	D 1220.	D 1234.	D 1249.	D 1197.	D 1177.	W 1187.	W 1097.
18	D 1271.	D 1275.	D 1285.	D 1266.	D 1242.	W 1231.	W 1153.
19	D 1272.	D 1278.	D 1283.	D 1267.	D 1256.	W 1233.	W 1161.
20	D 1260.	D 1253.	D 1274.	D 1236.	D 1229.	W 1219.	W 1156.
21	D 1235.	D 1230.	D 1244.	D 1209.	D 1192.	W 1203.	W 1140.
22	D 1223.	D 1209.	D 1218.	D 1189.	D 1164.	W 1193.	W 1117.
23	N 1180.	N 1184.	N 1178.	N 1157.	N 1119.	W 1143.	W 1095.
24	N 1124.	N 1135.	N 1113.	N 1092.	N 1077.	W 1082.	W 1084.
DAILY LOAD FACTOR	0.932	0.922	0.914	0.922	0.913	0.931	0.940

CON ED AREA 15

********** LOAD MODEL 1 FOR 1986 **********

FOR AREA 15

LOAD FACTOR 0.727

HOUR	...MON...	...TUE...	...WED...	...THU...	...FRI...	...SAT...	...SUN...
1	W 2814.	N 2836.	N 2778.	N 2944.	N 2785.	N 2864.	W 2887.
2	W 2687.	N 2644.	N 2566.	N 2762.	N 2607.	N 2704.	W 2722.
3	W 2617.	N 2527.	N 2395.	N 2629.	N 2438.	N 2572.	W 2578.
4	W 2611.	N 2476.	N 2250.	N 2546.	N 2317.	N 2483.	W 2405.
5	W 2638.	N 2457.	N 2295.	N 2503.	N 2348.	N 2429.	W 2377.
6	W 2822.	N 2673.	N 2601.	N 2658.	N 2621.	N 2588.	W 2515.
7	W 3259.	N 3057.	N 2995.	N 2986.	N 2971.	N 2744.	W 2653.
8	W 3868.	N 3737.	N 3675.	N 3529.	N 3560.	N 2959.	W 2770.
9	D 4437.	D 4145.	D 4059.	D 3921.	D 3979.	W 3241.	W 2909.
10	D 4826.	D 4551.	D 4484.	D 4112.	D 4287.	W 3487.	W 3073.
11	D 5005.	D 4778.	D 4648.	D 4324.	D 4528.	W 3644.	W 3273.
12	D 4927.	D 4791.	D 4758.	D 4395.	D 4612.	W 3769.	W 3311.
13	D 4892.	D 4731.	D 4707.	D 4406.	D 4582.	W 3787.	W 3424.
14	D 4870.	D 4718.	D 4735.	D 4492.	D 4592.	W 3748.	W 3451.
15	D 4852.	D 4698.	D 4685.	D 4458.	D 4558.	W 3663.	W 3388.
16	D 4840.	D 4659.	D 4601.	D 4359.	D 4503.	W 3611.	W 3325.
17	D 4815.	D 4631.	D 4539.	D 4366.	D 4422.	W 3709.	W 3470.
18	D 4807.	D 4567.	D 4519.	D 4380.	D 4341.	W 3930.	W 3695.
19	D 4675.	D 4474.	D 4447.	D 4270.	D 4199.	W 3941.	W 3835.
20	D 4498.	D 4238.	D 4220.	D 4173.	D 4098.	W 3845.	W 3793.
21	D 4261.	D 4042.	D 4080.	D 4020.	D 3955.	W 3759.	W 3722.
22	D 4001.	D 3882.	D 3894.	D 3856.	D 3608.	W 3603.	W 3589.
23	N 3627.	N 3572.	N 3583.	N 3544.	N 3508.	W 3352.	W 3284.
24	N 3221.	N 3137.	N 3148.	N 3111.	N 3196.	W 3171.	W 3018.
DAILY LOAD FACTOR	0.798	0.800	0.794	0.823	0.802	0.842	0.820

********** LOAD MODEL 2 FOR 1986 **********

FOR AREA 15

LOAD FACTOR 0.692

HOUR	...MON...	...TUE...	...WED...	...THU...	...FRI...	...SAT...	...SUN...
1	W 2371.	N 2542.	N 2548.	N 2666.	N 2738.	N 2622.	W 2571.
2	W 2213.	N 2252.	N 2329.	N 2516.	N 2532.	N 2457.	W 2391.
3	W 2061.	N 2147.	N 2204.	N 2420.	N 2404.	N 2260.	W 2236.
4	W 1968.	N 2031.	N 2114.	N 2386.	N 2343.	N 2170.	W 2124.
5	W 2017.	N 2092.	N 2138.	N 2486.	N 2305.	N 2154.	W 2075.
6	W 2220.	N 2292.	N 2357.	N 2612.	N 2502.	N 2273.	W 2188.
7	W 2598.	N 2781.	N 2769.	N 3106.	N 2827.	N 2471.	W 2281.
8	W 3165.	N 3448.	N 3431.	N 3650.	N 3473.	N 2653.	W 2432.
9	D 3564.	D 3846.	D 3950.	D 4261.	D 3965.	W 2921.	W 2558.
10	D 3825.	D 4217.	D 4249.	D 4595.	D 4324.	W 3193.	W 2708.
11	D 4137.	D 4393.	D 4421.	D 4660.	D 4482.	W 3370.	W 2840.
12	D 4206.	D 4411.	D 4502.	D 4858.	D 4564.	W 3468.	W 2864.
13	D 4169.	D 4346.	D 4443.	D 4750.	D 4430.	W 3463.	W 2937.
14	D 4178.	D 4384.	D 4545.	D 4709.	D 4455.	W 3392.	W 2989.
15	D 4144.	D 4332.	D 4526.	D 4635.	D 4404.	W 3310.	W 3038.
16	D 4077.	D 4302.	D 4493.	D 4616.	D 4315.	W 3244.	W 3063.
17	D 3990.	D 4273.	D 4368.	D 4576.	D 4169.	W 3254.	W 3127.
18	D 3892.	D 4190.	D 4236.	D 4511.	D 4050.	W 3411.	W 3185.
19	D 4009.	D 4160.	D 4226.	D 4465.	D 4064.	W 3477.	W 3356.
20	D 3913.	D 4031.	D 4105.	D 4284.	D 3798.	W 3436.	W 3295.
21	D 3713.	D 3747.	D 3872.	D 4153.	D 3690.	W 3321.	W 3217.
22	D 3552.	D 3586.	D 3611.	D 3775.	D 3518.	W 3179.	W 3156.
23	N 3274.	N 3335.	N 3423.	N 3504.	N 3267.	W 2953.	W 2972.
24	N 2858.	N 2876.	N 3082.	N 3141.	N 2905.	W 2802.	W 2684.
DAILY LOAD FACTOR	0.794	0.794	0.788	0.783	0.781	0.854	0.823

********** LOAD MODEL 3 FOR 1986 **********

FOR AREA 15

LOAD FACTOR 0.692

HOUR	...MON...	...TUE...	...WED...	...THU...	...FRI...	...SAT...	...SUN...
1	W 2158.	N 2418.	N 2459.	N 2587.	N 2599.	N 2507.	W 2494.
2	W 2046.	N 2238.	N 2302.	N 2407.	N 2391.	N 2327.	W 2270.
3	W 2006.	N 2141.	N 2227.	N 2316.	N 2256.	N 2212.	W 2149.
4	W 1916.	N 2068.	N 2163.	N 2263.	N 2221.	N 2126.	W 2056.
5	W 1982.	N 2113.	N 2194.	N 2282.	N 2173.	N 2123.	W 2037.
6	W 2079.	N 2250.	N 2369.	N 2432.	N 2381.	N 2181.	W 2102.
7	W 2564.	N 2646.	N 2695.	N 2890.	N 2673.	N 2293.	W 2132.
8	W 3324.	N 3376.	N 3441.	N 3571.	N 3465.	N 2629.	W 2338.
9	D 3809.	D 3867.	D 3929.	D 4144.	D 3907.	W 2946.	W 2479.
10	D 4070.	D 4106.	D 4201.	D 4414.	D 4192.	W 3027.	W 2609.
11	D 4301.	D 4239.	D 4350.	D 4438.	D 4340.	W 3259.	W 2726.
12	D 4332.	D 4314.	D 4385.	D 4580.	D 4323.	W 3344.	W 2815.
13	D 4251.	D 4264.	D 4376.	D 4461.	D 4168.	W 3314.	W 2908.
14	D 4306.	D 4276.	D 4402.	D 4715.	D 4124.	W 3279.	W 2846.
15	D 4295.	D 4272.	D 4368.	D 4496.	D 4053.	W 3186.	W 2787.
16	D 4283.	D 4213.	D 4355.	D 4429.	D 4080.	W 3147.	W 2770.
17	D 4157.	D 4039.	D 4206.	D 4395.	D 3981.	W 3094.	W 2797.
18	D 3948.	D 3818.	D 3965.	D 4091.	D 3718.	W 3058.	W 2830.
19	D 3988.	D 3889.	D 4023.	D 4222.	D 3833.	W 3364.	W 3130.
20	D 3937.	D 3916.	D 4007.	D 4177.	D 3765.	W 3393.	W 3223.
21	D 3735.	D 3796.	D 3847.	D 3995.	D 3602.	W 3301.	W 3203.
22	D 3519.	D 3540.	D 3635.	D 3691.	D 3491.	W 3110.	W 3002.
23	N 3248.	N 3288.	N 3349.	N 3412.	N 3156.	W 2956.	W 2877.
24	N 2736.	N 2862.	N 2929.	N 2984.	N 2746.	W 2660.	W 2527.
DAILY LOAD FACTOR	0.779	0.792	0.797	0.772	0.784	0.845	0.816

********** LOAD MODEL 4 FOR 1986 **********

FOR AREA 15

LOAD FACTOR 0.680

HOUR	...MON...	...TUE...	...WED...	...THU...	...FRI...	...SAT...	...SUN...
1	W 2134.	N 2441.	N 2449.	N 2342.	N 2369.	N 2309.	W 2297.
2	W 1990.	N 2222.	N 2273.	N 2108.	N 2159.	N 2122.	W 2091.
3	W 1930.	N 2151.	N 2170.	N 2026.	N 2043.	N 2034.	W 1999.
4	W 1894.	N 2115.	N 2082.	N 1976.	N 2009.	N 1964.	W 1945.
5	W 1901.	N 2098.	N 2066.	N 1971.	N 2018.	N 1940.	W 1835.
6	W 1965.	N 2204.	N 2186.	N 2054.	N 2060.	N 1951.	W 1880.
7	W 2329.	N 2522.	N 2468.	N 2397.	N 2382.	N 2022.	W 1909.
8	W 3162.	N 3395.	N 3320.	N 3194.	N 3117.	N 2352.	W 2072.
9	D 3699.	D 3966.	D 3830.	D 3747.	D 3600.	W 2665.	W 2247.
10	D 4013.	D 4264.	D 4173.	D 4083.	D 3941.	W 2960.	W 2414.
11	D 4197.	D 4316.	D 4254.	D 4203.	D 4117.	W 3108.	W 2487.
12	D 4222.	D 4329.	D 4297.	D 4236.	D 4166.	W 3225.	W 2600.
13	D 4179.	D 4353.	D 4248.	D 4186.	D 4064.	W 3179.	W 2694.
14	D 4211.	D 4403.	D 4284.	D 4219.	D 4143.	W 3127.	W 2715.
15	D 4208.	D 4501.	D 4274.	D 4214.	D 4031.	W 3090.	W 2736.
16	D 4193.	D 4585.	D 4227.	D 4189.	D 3991.	W 3040.	W 2793.
17	D 4053.	D 4310.	D 4158.	D 4152.	D 3852.	W 3010.	W 2634.
18	D 3728.	D 4134.	D 3805.	D 3789.	D 3551.	W 2910.	W 2542.
19	D 3667.	D 3886.	D 3705.	D 3693.	D 3518.	W 3065.	W 2807.
20	D 3769.	D 3913.	D 3758.	D 3740.	D 3621.	W 3206.	W 2935.
21	D 3713.	D 3818.	D 3682.	D 3651.	D 3443.	W 3136.	W 3023.
22	D 3500.	D 3574.	D 3486.	D 3409.	D 3290.	W 3054.	W 2986.
23	N 3261.	N 3360.	N 3238.	N 3143.	N 3078.	W 2856.	W 2766.
24	N 2842.	N 2878.	N 2819.	N 2679.	N 2653.	W 2508.	W 2431.
DAILY LOAD FACTOR	0.777	0.761	0.788	0.781	0.772	0.838	0.811

********** LOAD MODEL 5 FOR 15 **********

FOR AREA 15

LOAD FACTOR 0.556

HOUR	...MON...	...TUE...	...WED...	...THU...	...FRI...	...SAT...	...SUN...
1	W 1996.	N 2181.	N 2663.	N 2805.	N 2199.	N 2340.	W 2313.
2	W 1881.	N 2117.	N 2434.	N 2528.	N 2097.	N 2135.	W 2144.
3	W 1836.	N 2035.	N 2391.	N 2396.	N 2013.	N 2046.	W 2071.
4	W 1467.	N 2000.	N 2323.	N 2295.	N 1956.	N 1985.	W 1976.
5	W 1691.	N 2005.	N 2380.	N 2214.	N 1930.	N 1937.	W 1913.
6	W 1864.	N 2056.	N 2483.	N 2237.	N 2018.	N 1949.	W 1898.
7	W 2029.	N 2363.	N 2925.	N 2678.	N 2269.	N 2079.	W 1966.
8	W 2422.	N 3083.	N 3622.	N 3193.	N 2954.	N 2188.	W 2060.
9	D 3000.	D 3778.	D 4220.	D 3923.	D 3564.	W 2503.	W 2163.
10	D 3265.	D 4081.	D 4520.	D 4176.	D 4040.	W 2834.	W 2350.
11	D 3533.	D 4212.	D 4962.	D 4228.	D 4089.	W 3017.	W 2449.
12	D 3675.	D 4289.	D 5148.	D 4358.	D 4159.	W 3089.	W 2646.
13	D 3638.	D 4278.	D 5280.	D 4257.	D 4122.	W 3094.	W 2701.
14	D 3735.	D 4425.	D 5570.	D 4332.	D 4185.	W 3065.	W 2687.
15	D 3744.	D 4463.	D 5647.	D 4376.	D 4149.	W 3041.	W 2636.
16	D 3828.	D 4447.	D 5396.	D 4302.	D 4103.	W 2965.	W 2587.
17	D 3697.	D 4320.	D 5036.	D 4135.	D 4026.	W 2902.	W 2548.
18	D 3523.	D 4067.	D 4748.	D 3986.	D 3598.	W 2950.	W 2572.
19	D 3436.	D 3955.	D 4394.	D 3690.	D 3472.	W 2883.	W 2655.
20	D 3313.	D 3860.	D 4201.	D 3554.	D 3341.	W 2866.	W 2730.
21	D 3427.	D 3889.	D 4115.	D 3578.	D 3399.	W 2980.	W 2823.
22	D 3216.	D 3713.	D 4051.	D 3508.	D 3163.	W 2940.	W 2852.
23	N 3010.	N 3452.	N 3651.	N 3121.	N 3027.	W 2815.	W 2768.
24	N 2624.	N 3051.	N 3144.	N 2791.	N 2743.	W 2601.	W 2407.
DAILY LOAD FACTOR	0.760	0.767	0.703	0.787	0.763	0.851	0.846

********** LOAD MODEL 6 FOR 1986 **********

FOR AREA 15

LOAD FACTOR 0.581

HOUR	...MON...	...TUE...	...WED...	...THU...	...FRI...	...SAT...	...SUN...
1	W 2827.	N 3322.	N 2962.	N 2794.	N 2910.	N 2876.	W 2842.
2	W 2681.	N 2993.	N 2706.	N 2490.	N 2539.	N 2577.	W 2564.
3	W 2548.	N 2776.	N 2526.	N 2339.	N 2399.	N 2388.	W 2374.
4	W 2533.	N 2667.	N 2437.	N 2197.	N 2323.	N 2249.	W 2216.
5	W 2593.	N 2584.	N 2408.	N 2130.	N 2271.	N 2106.	W 2029.
6	W 2761.	N 2622.	N 2461.	N 2155.	N 2306.	N 2080.	W 1963.
7	W 3344.	N 3072.	N 2979.	N 2730.	N 2813.	N 2357.	W 2047.
8	W 4073.	N 3954.	N 3825.	N 3629.	N 3643.	N 2633.	W 2291.
9	D 4698.	D 4544.	D 4403.	D 4335.	D 4304.	W 3010.	W 2508.
10	D 5492.	D 4852.	D 4806.	D 4770.	D 4751.	W 3455.	W 2744.
11	D 5812.	D 5273.	D 5069.	D 5236.	D 4886.	W 3678.	W 2938.
12	D 5940.	D 5419.	D 5260.	D 5325.	D 5001.	W 3840.	W 3025.
13	D 6083.	D 5392.	D 4954.	D 5361.	D 4980.	W 3878.	W 3125.
14	D 6183.	D 5588.	D 5202.	D 5378.	D 5157.	W 3814.	W 3170.
15	D 6509.	D 5625.	D 5118.	D 5469.	D 5094.	W 3760.	W 3160.
16	D 6281.	D 5548.	D 5178.	D 5441.	D 4912.	W 3731.	W 3139.
17	D 6006.	D 5349.	D 4838.	D 5301.	D 4734.	W 3705.	W 3060.
18	D 5673.	D 4678.	D 4610.	D 4658.	D 4379.	W 3656.	W 3038.
19	D 5034.	D 4446.	D 4209.	D 4493.	D 4086.	W 3607.	W 3091.
20	D 4639.	D 4173.	D 4052.	D 4283.	D 3989.	W 3515.	W 3189.
21	D 4571.	D 4120.	D 4018.	D 4147.	D 3909.	W 3482.	W 3312.
22	D 4521.	D 4103.	D 3974.	D 4034.	D 3854.	W 3547.	W 3390.
23	N 4133.	N 3936.	N 3583.	N 3799.	N 3563.	W 3426.	W 3282.
24	N 3719.	N 3438.	N 3225.	N 3361.	N 3244.	W 3204.	W 2923.
DAILY LOAD FACTOR	0.696	0.744	0.751	0.730	0.744	0.823	0.829

*********** LOAD MODEL 7 FOR 1986 ***********

FOR AREA 15

LOAD FACTOR 0.607

HOUR	...MON...	...TUE...	...WED...	...THU...	...FRI...	...SAT...	...SUN...
1	W 3365.	N 3505.	N 3339.	N 3551.	N 4152.	N 3379.	W 3133.
2	W 3086.	N 3261.	N 2982.	N 3354.	N 3636.	N 3028.	W 2883.
3	W 2955.	N 3002.	N 2692.	N 3181.	N 3471.	N 2714.	W 2616.
4	W 2819.	N 2932.	N 2638.	N 3051.	N 3331.	N 2602.	W 2506.
5	W 2797.	N 2770.	N 2587.	N 3070.	N 3235.	N 2539.	W 2382.
6	W 2968.	N 2909.	N 2656.	N 3278.	N 3209.	N 2475.	W 2236.
7	W 3432.	N 3410.	N 3315.	N 3837.	N 3525.	N 2565.	W 2429.
8	W 4257.	N 4270.	N 4233.	N 4451.	N 4244.	N 2851.	W 2521.
9	D 5038.	D 4957.	D 4792.	D 5233.	D 4728.	W 3296.	W 2675.
10	D 5359.	D 5343.	D 5285.	D 5925.	D 5177.	W 3560.	W 3040.
11	D 5740.	D 5544.	D 5474.	D 6493.	D 5379.	W 3965.	W 3345.
12	D 5945.	D 5863.	D 5624.	D 6578.	D 5433.	W 4106.	W 3543.
13	D 6027.	D 5844.	D 5699.	D 6670.	D 5424.	W 4206.	W 3602.
14	D 6231.	D 5901.	D 5879.	D 6742.	D 5506.	W 4075.	W 3738.
15	D 6323.	D 6006.	D 6046.	D 6813.	D 5449.	W 4029.	W 3693.
16	D 6130.	D 5975.	D 6081.	D 7063.	D 5411.	W 4055.	W 3710.
17	D 5793.	D 5573.	D 5650.	D 6704.	D 5207.	W 4023.	W 3672.
18	D 5297.	D 5195.	D 5271.	D 6421.	D 4888.	W 3992.	W 3657.
19	D 5067.	D 4834.	D 4990.	D 5601.	D 4535.	W 3894.	W 3764.
20	D 4685.	D 4624.	D 4642.	D 5318.	D 4403.	W 3822.	W 3869.
21	D 4655.	D 4472.	D 4553.	D 5162.	D 4315.	W 3724.	W 4002.
22	D 4597.	D 4433.	D 4504.	D 5116.	D 4284.	W 3789.	W 4221.
23	N 4368.	N 4301.	N 4344.	N 4772.	N 4130.	W 3586.	W 4115.
24	N 4094.	N 3926.	N 4180.	N 4419.	N 3622.	W 3452.	W 3809.
DAILY LOAD FACTOR	0.732	0.755	0.736	0.724	0.807	0.829	0.781

********** LOAD MODEL 8 FOR 1986 **********

FOR AREA 15

LOAD FACTOR 0.598

HOUR	...MON...	...TUE...	...WED...	...THU...	...FRI...	...SAT...	...SUN...
1	W 2768.	N 3301.	N 3489.	N 2930.	N 3018.	N 3085.	W 2836.
2	W 2607.	N 3115.	N 3225.	N 2668.	N 2746.	N 2792.	W 2727.
3	W 2362.	N 2997.	N 3095.	N 2485.	N 2577.	N 2699.	W 2458.
4	W 2314.	N 2886.	N 2981.	N 2326.	N 2439.	N 2557.	W 2275.
5	W 2292.	N 2906.	N 2943.	N 2265.	N 2331.	N 2408.	W 2224.
6	W 2521.	N 3062.	N 2952.	N 2382.	N 2545.	N 2423.	W 2141.
7	W 3042.	N 3430.	N 3287.	N 2858.	N 2969.	N 2628.	W 2255.
8	W 3699.	N 4057.	N 3956.	N 3610.	N 3692.	N 2876.	W 2344.
9	D 4393.	D 4824.	D 4574.	D 4217.	D 4360.	W 3208.	W 2648.
10	D 4787.	D 5895.	D 4973.	D 4669.	D 4724.	W 3551.	W 2810.
11	D 5020.	D 5964.	D 5366.	D 4892.	D 4958.	W 3798.	W 3072.
12	D 5313.	D 6099.	D 5706.	D 4993.	D 5046.	W 3836.	W 3188.
13	D 5481.	D 6148.	D 5660.	D 5010.	D 5080.	W 3888.	W 3264.
14	D 5596.	D 6334.	D 5839.	D 5097.	D 5186.	W 3822.	W 3314.
15	D 5754.	D 6390.	D 5874.	D 5230.	D 5252.	W 3775.	W 3367.
16	D 5774.	D 6512.	D 5735.	D 5202.	D 5121.	W 3723.	W 3416.
17	D 5279.	D 6265.	D 5057.	D 4924.	D 4842.	W 3667.	W 3382.
18	D 4772.	D 5922.	D 4630.	D 4554.	D 4471.	W 3626.	W 3356.
19	D 4507.	D 5154.	D 4279.	D 4252.	D 4161.	W 3600.	W 3394.
20	D 4430.	D 4870.	D 4115.	D 4148.	D 4032.	W 3512.	W 3467.
21	D 4407.	D 4799.	D 4043.	D 4083.	D 4018.	W 3581.	W 3529.
22	D 4186.	D 4595.	D 3942.	D 3975.	D 3860.	W 3480.	W 3501.
23	N 3998.	N 4318.	N 3711.	N 3744.	N 3649.	W 3325.	W 3444.
24	N 3680.	N 3911.	N 3241.	N 3339.	N 3252.	W 3141.	W 3173.
DAILY LOAD FACTOR	0.714	0.728	0.728	0.748	0.748	0.847	0.845

LOAD MODEL 9 FOR 1986

FOR AREA 15

LOAD FACTOR 0.552

HOUR	...MON...	...TUE...	...WED...	...THU...	...FRI...	...SAT...	...SUN...
1	W 2631.	N 3388.	N 2434.	N 2317.	N 2277.	N 2386.	W 2368.
2	W 2551.	N 3044.	N 2306.	N 2168.	N 2132.	N 2259.	W 2195.
3	W 2426.	N 2921.	N 2250.	N 2053.	N 2013.	N 2108.	W 2067.
4	W 2411.	N 2758.	N 2143.	N 2003.	N 1926.	N 2046.	W 1950.
5	W 2527.	N 2647.	N 2120.	N 1993.	N 1911.	N 1975.	W 1860.
6	W 2697.	N 2724.	N 2209.	N 2087.	N 2038.	N 2009.	W 1894.
7	W 3247.	N 3178.	N 2487.	N 2395.	N 2374.	N 2150.	W 2026.
8	W 3783.	N 3853.	N 3214.	N 3101.	N 3092.	N 2290.	W 2076.
9	D 4383.	D 4604.	D 3841.	D 3757.	D 3737.	W 2568.	W 2228.
10	D 4787.	D 4728.	D 4052.	D 4000.	D 4021.	W 2989.	W 2348.
11	D 5131.	D 4840.	D 4230.	D 4160.	D 4202.	W 3109.	W 2463.
12	D 5261.	D 5002.	D 4445.	D 4220.	D 4424.	W 3307.	W 2593.
13	D 5433.	D 4899.	D 4260.	D 4183.	D 4301.	W 3361.	W 2785.
14	D 5490.	D 4936.	D 4542.	D 4283.	D 4516.	W 3298.	W 2895.
15	D 5750.	D 4977.	D 4573.	D 4323.	D 4616.	W 3268.	W 2877.
16	D 6114.	D 4870.	D 4238.	D 4354.	D 4497.	W 3232.	W 2851.
17	D 5655.	D 4710.	D 4042.	D 4095.	D 4075.	W 3141.	W 2807.
18	D 5186.	D 4656.	D 3919.	D 3937.	D 3894.	W 3151.	W 2827.
19	D 5098.	D 4110.	D 3769.	D 3812.	D 3623.	W 3195.	W 2931.
20	D 5033.	D 4068.	D 3865.	D 3878.	D 3716.	W 3332.	W 3117.
21	D 4751.	D 3957.	D 3667.	D 3646.	D 3577.	W 3287.	W 3161.
22	D 4690.	D 3680.	D 3557.	D 3513.	D 3428.	W 3080.	W 3008.
23	N 3976.	N 3458.	N 3132.	N 3032.	N 3064.	W 2947.	W 2903.
24	N 3602.	N 2969.	N 2664.	N 2580.	N 2742.	W 2614.	W 2503.
DAILY LOAD FACTOR	0.699	0.791	0.747	0.765	0.724	0.832	0.801

********** LOAD MODEL 10 FOR 1986 **********

FOR AREA 15

LOAD FACTOR 0.697

HOUR	...MON...	...TUE...	...WED...	...THU...	...FRI...	...SAT...	...SUN...
1	W 2065.	N 2328.	N 2452.	N 2250.	N 2292.	N 2350.	W 2311.
2	W 1943.	N 2151.	N 2218.	N 2044.	N 2101.	N 2172.	W 2121.
3	W 1881.	N 2075.	N 2086.	N 1955.	N 1985.	N 2037.	W 1970.
4	W 1801.	N 2022.	N 2008.	N 1916.	N 1950.	N 1979.	W 1908.
5	W 1855.	N 2049.	N 2003.	N 1922.	N 1934.	N 1961.	W 1896.
6	W 1964.	N 2166.	N 2133.	N 2013.	N 2055.	N 1995.	W 1928.
7	W 2421.	N 2611.	N 2553.	N 2512.	N 2531.	N 2196.	W 2033.
8	W 3029.	N 3328.	N 3246.	N 3116.	N 3214.	N 2383.	W 2112.
9	D 3470.	D 3772.	D 3701.	D 3540.	D 3681.	W 2621.	W 2268.
10	D 3752.	D 4219.	D 4076.	D 3968.	D 4099.	W 2947.	W 2496.
11	D 3980.	D 4364.	D 4200.	D 4138.	D 4287.	W 3122.	W 2592.
12	D 4030.	D 4382.	D 4265.	D 4158.	D 4339.	W 3195.	W 2643.
13	D 4022.	D 4410.	D 4185.	D 4120.	D 4306.	W 3178.	W 2702.
14	D 4130.	D 4420.	D 4230.	D 4152.	D 4351.	W 3142.	W 2757.
15	D 4059.	D 4440.	D 4242.	D 4145.	D 4327.	W 3039.	W 2781.
16	D 4111.	D 4482.	D 4175.	D 4103.	D 4204.	W 3008.	W 2819.
17	D 3995.	D 4374.	D 4013.	D 3954.	D 4042.	W 2977.	W 2855.
18	D 3788.	D 4253.	D 3943.	D 3737.	D 3912.	W 3061.	W 2926.
19	D 3841.	D 4208.	D 3934.	D 3887.	D 3742.	W 3259.	W 3079.
20	D 3826.	D 4167.	D 3802.	D 3813.	D 3721.	W 3306.	W 3167.
21	D 3611.	D 3865.	D 3658.	D 3585.	D 3489.	W 3157.	W 3091.
22	D 3448.	D 3509.	D 3400.	D 3430.	D 3358.	W 2986.	W 2936.
23	N 3151.	N 3275.	N 3147.	N 3111.	N 3101.	W 2880.	W 2689.
24	N 2732.	N 2900.	N 2652.	N 2635.	N 2670.	W 2564.	W 2402.
DAILY LOAD FACTOR	0.776	0.779	0.785	0.784	0.763	0.826	0.796

********** LOAD MODEL 11 FOR 1988 **********

FOR AREA 15

LOAD FACTOR 0.701

HOUR	...MON...	...TUE...	...WED...	...THU...	...FRI...	...SAT...	...SUN...
1	W 2216.	N 2462.	N 2489.	N 2387.	N 2350.	N 2448.	W 2370.
2	W 2059.	N 2269.	N 2318.	N 2221.	N 2186.	N 2228.	W 2241.
3	W 1968.	N 2165.	N 2181.	N 2108.	N 2078.	N 2134.	W 2083.
4	W 1885.	N 2127.	N 2117.	N 2066.	N 2015.	N 2053.	W 1995.
5	W 1940.	N 2143.	N 2104.	N 2071.	N 2005.	N 2024.	W 1985.
6	W 2157.	N 2335.	N 2278.	N 2204.	N 2172.	N 2091.	W 2043.
7	W 2594.	N 2680.	N 2658.	N 2540.	N 2525.	N 2258.	W 2098.
8	W 3317.	N 3420.	N 3340.	N 3014.	N 3122.	N 2510.	W 2299.
9	D 3831.	D 4022.	D 3816.	D 3510.	D 3556.	W 2799.	W 2413.
10	D 4278.	D 4297.	D 4270.	D 3681.	D 4006.	W 2956.	W 2635.
11	D 4393.	D 4419.	D 4316.	D 3964.	D 4192.	W 3154.	W 2727.
12	D 4430.	D 4475.	D 4378.	D 4057.	D 4233.	W 3260.	W 2821.
13	D 4409.	D 4468.	D 4302.	D 3991.	D 4145.	W 3270.	W 2890.
14	D 4439.	D 4495.	D 4321.	D 3973.	D 4173.	W 3255.	W 2911.
15	D 4457.	D 4505.	D 4338.	D 3943.	D 4205.	W 3188.	W 2923.
16	D 4463.	D 4519.	D 4311.	D 3894.	D 4227.	W 3218.	W 2941.
17	D 4486.	D 4609.	D 4370.	D 4045.	D 4258.	W 3403.	W 3079.
18	D 4449.	D 4544.	D 4358.	D 4069.	D 4116.	W 3492.	W 3284.
19	D 4287.	D 4413.	D 4221.	D 3741.	D 3784.	W 3433.	W 3299.
20	D 4084.	D 4249.	D 3862.	D 3591.	D 3603.	W 3395.	W 3244.
21	D 3701.	D 3922.	D 3638.	D 3479.	D 3455.	W 3210.	W 3166.
22	D 3528.	D 3574.	D 3442.	D 3386.	D 3373.	W 3038.	W 2979.
23	N 3234.	N 3358.	N 3144.	N 2970.	N 2999.	W 2855.	W 2834.
24	N 2813.	N 2874.	N 2782.	N 2711.	N 2760.	W 2691.	W 2566.
DAILY LOAD FACTOR	0.775	0.781	0.793	0.795	0.778	0.816	0.806

********** LOAD MODEL 12 FOR 1986 **********

FOR AREA 15

LOAD FACTOR 0.712

HOUR	...MON...	...TUE...	...WED...	...THU...	...FRI...	...SAT...	...SUN...
1	W 2555.	N 2764.	N 2580.	N 2602.	N 2638.	N 2702.	W 2665.
2	W 2443.	N 2526.	N 2406.	N 2417.	N 2450.	N 2458.	W 2495.
3	W 2337.	N 2375.	N 2293.	N 2278.	N 2304.	N 2327.	W 2342.
4	W 2313.	N 2346.	N 2227.	N 2193.	N 2181.	N 2266.	W 2215.
5	W 2316.	N 2351.	N 2235.	N 2249.	N 2130.	N 2204.	W 2156.
6	W 2507.	N 2516.	N 2391.	N 2431.	N 2360.	N 2319.	W 2285.
7	W 2926.	N 2908.	N 2813.	N 2791.	N 2725.	N 2472.	W 2366.
8	W 3660.	N 3615.	N 3571.	N 3454.	N 3225.	N 2747.	W 2538.
9	D 4306.	D 4179.	D 4101.	D 3901.	D 3751.	W 2952.	W 2692.
10	D 4603.	D 4524.	D 4481.	D 4369.	D 3944.	W 3150.	W 2844.
11	D 4654.	D 4618.	D 4582.	D 4469.	D 4123.	W 3356.	W 3075.
12	D 4722.	D 4648.	D 4612.	D 4496.	D 4209.	W 3467.	W 3103.
13	D 4702.	D 4625.	D 4561.	D 4443.	D 4264.	W 3493.	W 3182.
14	D 4731.	D 4661.	D 4575.	D 4399.	D 4188.	W 3428.	W 3191.
15	D 4758.	D 4678.	D 4551.	D 4355.	D 4166.	W 3388.	W 3244.
16	D 4779.	D 4713.	D 4539.	D 4335.	D 4141.	W 3441.	W 3292.
17	D 4898.	D 4741.	D 4590.	D 4414.	D 4315.	W 3630.	W 3522.
18	D 4805.	D 4635.	D 4567.	D 4432.	D 4222.	W 3785.	W 3648.
19	D 4628.	D 4508.	D 4458.	D 4239.	D 4014.	W 3777.	W 3675.
20	D 4530.	D 4377.	D 4285.	D 3968.	D 3863.	W 3693.	W 3606.
21	D 4383.	D 4069.	D 3983.	D 3824.	D 3722.	W 3586.	W 3597.
22	D 3999.	D 3836.	D 3799.	D 3637.	D 3580.	W 3372.	W 3408.
23	N 3713.	N 3554.	N 3510.	N 3322.	N 3262.	W 3166.	W 3134.
24	N 3116.	N 3045.	N 3007.	N 2997.	N 2984.	W 2936.	W 2888.
DAILY LOAD FACTOR	0.786	0.798	0.802	0.797	0.799	0.816	0.807

PASNY DOWNSTATE AREA 26

********** LOAD MODEL 1 FOR 1986 **********

FOR AREA 26

LOAD FACTOR 0.634

HOUR	...MON...	...TUE...	...WED...	...THU...	...FRI...	...SAT...	...SUN...
1	W 660.	N 657.	N 669.	N 627.	N 654.	N 649.	W 634.
2	W 636.	N 635.	N 641.	N 599.	N 624.	N 630.	W 600.
3	W 602.	N 605.	N 606.	N 564.	N 585.	N 576.	W 572.
4	W 587.	N 591.	N 597.	N 544.	N 578.	N 555.	W 547.
5	W 588.	N 594.	N 593.	N 537.	N 581.	N 531.	W 522.
6	W 617.	N 622.	N 619.	N 562.	N 605.	N 507.	W 479.
7	W 733.	N 736.	N 727.	N 642.	N 707.	N 515.	W 445.
8	W 877.	N 890.	N 870.	N 737.	N 858.	N 466.	W 377.
9	D 1081.	D 1089.	D 1075.	D 915.	D 1055.	W 518.	W 417.
10	D 1108.	D 1129.	D 1106.	D 944.	D 1084.	W 610.	W 472.
11	D 1027.	D 1047.	D 1022.	D 887.	D 1006.	W 614.	W 484.
12	D 978.	D 986.	D 964.	D 850.	D 955.	W 605.	W 510.
13	D 950.	D 965.	D 939.	D 826.	D 930.	W 575.	W 513.
14	D 942.	D 972.	D 935.	D 794.	D 923.	W 558.	W 489.
15	D 968.	D 982.	D 960.	D 834.	D 947.	W 570.	W 503.
16	D 1000.	D 1035.	D 988.	D 869.	D 979.	W 575.	W 496.
17	D 1100.	D 1119.	D 1073.	D 953.	D 1067.	W 612.	W 566.
18	D 1208.	D 1222.	D 1190.	D 1051.	D 1162.	W 714.	W 673.
19	D 1125.	D 1138.	D 1105.	D 997.	D 1094.	W 743.	W 698.
20	D 995.	D 1014.	D 976.	D 912.	D 962.	W 721.	W 704.
21	D 915.	D 916.	D 900.	D 800.	D 897.	W 694.	W 687.
22	D 843.	D 851.	D 808.	D 756.	D 785.	W 685.	W 690.
23	N 761.	N 776.	N 752.	N 716.	N 749.	W 676.	W 681.
24	N 711.	N 722.	N 701.	N 665.	N 699.	W 646.	W 653.
DAILY LOAD FACTOR	0.725	0.726	0.729	0.737	0.735	0.816	0.794

********** LOAD MODEL 2 FOR 1986 **********

FOR AREA 26

LOAD FACTOR 0.623

HOUR	...MON...	...TUE...	...WED...	...THU...	...FRI...	...SAT...	...SUN...
1	W 616.	N 640.	N 642.	N 667.	N 688.	N 638.	W 600.
2	W 582.	N 607.	N 610.	N 632.	N 653.	N 613.	W 574.
3	W 553.	N 576.	N 579.	N 598.	N 620.	N 560.	W 530.
4	W 541.	N 562.	N 567.	N 587.	N 606.	N 547.	W 517.
5	W 546.	N 564.	N 569.	N 588.	N 604.	N 526.	W 512.
6	W 570.	N 591.	N 596.	N 618.	N 628.	N 499.	W 463.
7	W 679.	N 688.	N 692.	N 727.	N 729.	N 503.	W 438.
8	W 767.	N 811.	N 822.	N 832.	N 846.	N 448.	W 363.
9	D 983.	D 1021.	D 1027.	D 1058.	D 1050.	W 509.	W 408.
10	D 1018.	D 1062.	D 1086.	D 1105.	D 1096.	W 589.	W 457.
11	D 929.	D 968.	D 975.	D 1004.	D 992.	W 605.	W 470.
12	D 881.	D 923.	D 934.	D 968.	D 957.	W 594.	W 489.
13	D 861.	D 898.	D 905.	D 954.	D 927.	W 565.	W 495.
14	D 851.	D 889.	D 902.	D 953.	D 919.	W 551.	W 478.
15	D 873.	D 916.	D 926.	D 979.	D 945.	W 556.	W 486.
16	D 907.	D 950.	D 964.	D 1013.	D 972.	W 558.	W 482.
17	D 987.	D 1030.	D 1038.	D 1119.	D 1073.	W 599.	W 537.
18	D 1108.	D 1130.	D 1150.	D 1222.	D 1188.	W 704.	W 646.
19	D 1008.	D 1045.	D 1076.	D 1122.	D 1094.	W 721.	W 671.
20	D 886.	D 938.	D 942.	D 997.	D 960.	W 714.	W 682.
21	D 806.	D 838.	D 855.	D 912.	D 866.	W 684.	W 655.
22	D 745.	D 773.	D 791.	D 826.	D 797.	W 676.	W 658.
23	N 717.	N 738.	N 742.	N 784.	N 754.	W 668.	W 650.
24	N 663.	N 686.	N 697.	N 734.	N 709.	W 635.	W 625.
DAILY LOAD FACTOR	0.717	0.732	0.728	0.716	0.725	0.824	0.787

********** LOAD MODEL 3 FOR 1[illegible] **********

FOR AREA 26

LOAD FACTOR 0.646

HOUR	...MON...	...TUE...	...WED...	...THU...	...FRI...	...SAT...	...SUN...
1	W 652.	N 655.	N 657.	N 659.	N 673.	N 643.	W 618.
2	W 620.	N 621.	N 625.	N 628.	N 636.	N 623.	W 583.
3	W 579.	N 584.	N 590.	N 591.	N 595.	N 568.	W 546.
4	W 559.	N 564.	N 575.	N 581.	N 589.	N 550.	W 523.
5	W 561.	N 572.	N 575.	N 585.	N 588.	N 532.	W 518.
6	W 592.	N 593.	N 601.	N 609.	N 615.	N 503.	W 465.
7	W 697.	N 700.	N 705.	N 723.	N 719.	N 510.	W 430.
8	W 812.	N 818.	N 831.	N 847.	N 835.	N 450.	W 361.
9	D 1014.	D 1007.	D 1020.	D 1038.	D 1025.	W 514.	W 397.
10	D 1058.	D 1051.	D 1068.	D 1091.	D 1080.	W 598.	W 458.
11	D 981.	D 977.	D 985.	D 1002.	D 997.	W 619.	W 477.
12	D 936.	D 930.	D 947.	D 962.	D 953.	W 603.	W 499.
13	D 909.	D 901.	D 915.	D 939.	D 927.	W 577.	W 507.
14	D 899.	D 894.	D 905.	D 931.	D 912.	W 552.	W 484.
15	D 923.	D 920.	D 934.	D 964.	D 944.	W 556.	W 494.
16	D 957.	D 955.	D 971.	D 991.	D 974.	W 573.	W 487.
17	D 1032.	D 1045.	D 1053.	D 1084.	D 1048.	W 604.	W 540.
18	D 1115.	D 1148.	D 1176.	D 1189.	D 1156.	W 711.	W 649.
19	D 1063.	D 1072.	D 1099.	D 1103.	D 1075.	W 735.	W 676.
20	D 942.	D 950.	D 960.	D 980.	D 951.	W 728.	W 685.
21	D 853.	D 862.	D 876.	D 885.	D 872.	W 689.	W 667.
22	D 785.	D 807.	D 826.	D 838.	D 790.	W 682.	W 671.
23	N 745.	N 761.	N 768.	N 781.	N 753.	W 678.	W 663.
24	N 693.	N 704.	N 708.	N 726.	N 702.	W 640.	W 632.
DAILY LOAD FACTOR	0.747	0.729	0.722	0.726	0.736	0.818	0.793

********** LOAD MODEL 4 FOR 1986 **********

FOR AREA 26

LOAD FACTOR 0.643

HOUR	...MON...	...TUE...	...WED...	...THU...	...FRI...	...SAT...	...SUN...
1	W 593.	N 615.	N 627.	N 594.	N 573.	N 626.	W 592.
2	W 572.	N 580.	N 592.	N 572.	N 548.	N 592.	W 560.
3	W 543.	N 552.	N 558.	N 547.	N 484.	N 548.	W 529.
4	W 513.	N 546.	N 549.	N 524.	N 482.	N 516.	W 491.
5	W 520.	N 547.	N 548.	N 531.	N 483.	N 487.	W 485.
6	W 551.	N 567.	N 562.	N 558.	N 511.	N 456.	W 447.
7	W 633.	N 670.	N 668.	N 644.	N 613.	N 462.	W 433.
8	W 729.	N 758.	N 748.	N 736.	N 720.	N 429.	W 361.
9	D 927.	D 963.	D 957.	D 944.	D 892.	W 476.	W 395.
10	D 994.	D 1017.	D 1009.	D 995.	D 916.	W 572.	W 445.
11	D 901.	D 937.	D 911.	D 906.	D 836.	W 588.	W 451.
12	D 864.	D 906.	D 882.	D 872.	D 782.	W 577.	W 479.
13	D 818.	D 885.	D 850.	D 835.	D 776.	W 556.	W 480.
14	D 807.	D 894.	D 835.	D 829.	D 776.	W 541.	W 457.
15	D 838.	D 908.	D 871.	D 868.	D 781.	W 547.	W 470.
16	D 888.	D 920.	D 899.	D 898.	D 797.	W 549.	W 467.
17	D 969.	D 1019.	D 993.	D 977.	D 907.	W 585.	W 534.
18	D 1075.	D 1102.	D 1094.	D 1093.	D 1017.	W 674.	W 631.
19	D 999.	D 1021.	D 1014.	D 1004.	D 931.	W 682.	W 668.
20	D 878.	D 909.	D 891.	D 879.	D 784.	W 679.	W 671.
21	D 777.	D 834.	D 781.	D 778.	D 741.	W 671.	W 654.
22	D 728.	D 767.	D 731.	D 728.	D 704.	W 664.	W 658.
23	N 698.	N 726.	N 712.	N 690.	N 668.	W 639.	W 646.
24	N 651.	N 672.	N 653.	N 648.	N 599.	W 618.	W 626.
DAILY LOAD FACTOR	0.716	0.730	0.721	0.711	0.710	0.839	0.784

********** LOAD MODEL 5 FOR 1986 **********

FOR AREA 26

LOAD FACTOR 0.639

HOUR	...MON...	...TUE...	...WED...	...THU...	...FRI...	...SAT...	...SUN...
1	W 737.	N 605.	N 672.	N 646.	N 608.	N 641.	W 588.
2	W 675.	N 574.	N 625.	N 587.	N 575.	N 584.	W 557.
3	W 657.	N 549.	N 599.	N 571.	N 552.	N 566.	W 535.
4	W 632.	N 545.	N 592.	N 560.	N 546.	N 547.	W 514.
5	W 619.	N 536.	N 592.	N 555.	N 541.	N 528.	W 504.
6	W 648.	N 567.	N 642.	N 578.	N 572.	N 493.	W 475.
7	W 700.	N 630.	N 718.	N 652.	N 635.	N 442.	W 379.
8	W 914.	N 906.	N 983.	N 917.	N 908.	N 484.	W 423.
9	D 1053.	D 1072.	D 1156.	D 1098.	D 1077.	W 565.	W 461.
10	D 1043.	D 1049.	D 1119.	D 1069.	D 1059.	W 583.	W 488.
11	D 957.	D 994.	D 1082.	D 1014.	D 1000.	W 594.	W 532.
12	D 904.	D 955.	D 1039.	D 977.	D 971.	W 586.	W 526.
13	D 891.	D 932.	D 1002.	D 952.	D 947.	W 576.	W 543.
14	D 810.	D 912.	D 987.	D 936.	D 927.	W 569.	W 521.
15	D 835.	D 930.	D 991.	D 950.	D 942.	W 564.	W 516.
16	D 896.	D 962.	D 1030.	D 981.	D 974.	W 562.	W 509.
17	D 900.	D 1024.	D 1086.	D 1045.	D 1035.	W 597.	W 550.
18	D 883.	D 997.	D 1064.	D 1019.	D 1006.	W 581.	W 539.
19	D 759.	D 863.	D 923.	D 873.	D 855.	W 554.	W 500.
20	D 677.	D 772.	D 793.	D 768.	D 765.	W 556.	W 518.
21	D 685.	D 762.	D 784.	D 753.	D 750.	W 590.	W 579.
22	D 692.	D 757.	D 777.	D 744.	D 741.	W 637.	W 623.
23	N 668.	N 730.	N 748.	N 713.	N 709.	W 628.	W 614.
24	N 651.	N 680.	N 705.	N 665.	N 661.	W 613.	W 603.
DAILY LOAD FACTOR	0.747	0.750	0.746	0.745	0.749	0.887	0.842

********** LOAD MODEL 6 FOR 1986 **********

FOR AREA 26

LOAD FACTOR 0.690

HOUR	...MON...	...TUE...	...WED...	...THU...	...FRI...	...SAT...	...SUN...
1	W 716.	N 730.	N 754.	N 709.	N 705.	N 696.	W 661.
2	W 667.	N 679.	N 688.	N 659.	N 656.	N 633.	W 606.
3	W 634.	N 639.	N 650.	N 625.	N 620.	N 601.	W 586.
4	W 618.	N 632.	N 636.	N 615.	N 614.	N 590.	W 576.
5	W 616.	N 628.	N 626.	N 610.	N 608.	N 575.	W 555.
6	W 654.	N 671.	N 664.	N 644.	N 643.	N 541.	W 532.
7	W 720.	N 747.	N 738.	N 715.	N 713.	N 474.	W 415.
8	W 965.	N 975.	N 969.	N 959.	N 957.	N 511.	W 445.
9	D 1136.	D 1152.	D 1143.	D 1126.	D 1121.	W 596.	W 492.
10	D 1130.	D 1146.	D 1135.	D 1114.	D 1111.	W 619.	W 521.
11	D 1071.	D 1098.	D 1080.	D 1064.	D 1061.	W 646.	W 573.
12	D 1032.	D 1057.	D 1046.	D 1026.	D 1024.	W 631.	W 566.
13	D 1018.	D 1047.	D 1020.	D 1010.	D 1008.	W 613.	W 579.
14	D 1013.	D 1029.	D 1014.	D 988.	D 992.	W 604.	W 563.
15	D 1021.	D 1054.	D 1015.	D 997.	D 1003.	W 600.	W 560.
16	D 1055.	D 1092.	D 1049.	D 1037.	D 1041.	W 599.	W 550.
17	D 1120.	D 1169.	D 1106.	D 1099.	D 1101.	W 651.	W 595.
18	D 1094.	D 1141.	D 1089.	D 1077.	D 1086.	W 623.	W 583.
19	D 966.	D 982.	D 949.	D 932.	D 943.	W 588.	W 546.
20	D 871.	D 922.	D 851.	D 843.	D 844.	W 593.	W 571.
21	D 859.	D 907.	D 841.	D 833.	D 838.	W 650.	W 637.
22	D 852.	D 890.	D 828.	D 818.	D 823.	W 699.	W 702.
23	N 810.	N 813.	N 806.	N 798.	N 802.	W 689.	W 693.
24	N 782.	N 792.	N 772.	N 760.	N 765.	W 674.	W 682.
DAILY LOAD FACTOR	0.786	0.784	0.783	0.779	0.783	0.876	0.818

********** LOAD MODEL 7 FOR 1986 **********

FOR AREA 26

LOAD FACTOR 0.696

HOUR	...MON...	...TUE...	...WED...	...THU...	...FRI...	...SAT...	...SUN...
1	W 767.	N 740.	N 718.	N 737.	N 757.	N 699.	W 693.
2	W 695.	N 683.	N 674.	N 686.	N 689.	N 639.	W 632.
3	W 669.	N 643.	N 629.	N 648.	N 655.	N 607.	W 602.
4	W 651.	N 626.	N 617.	N 637.	N 635.	N 589.	W 590.
5	W 647.	N 618.	N 613.	N 630.	N 624.	N 576.	W 581.
6	W 686.	N 664.	N 659.	N 682.	N 668.	N 545.	W 557.
7	W 762.	N 723.	N 713.	N 748.	N 728.	N 472.	W 435.
8	W 962.	N 946.	N 933.	N 965.	N 947.	N 512.	W 446.
9	D 1130.	D 1116.	D 1100.	D 1146.	D 1110.	W 564.	W 490.
10	D 1125.	D 1097.	D 1089.	D 1135.	D 1093.	W 599.	W 526.
11	D 1068.	D 1059.	D 1048.	D 1080.	D 1053.	W 622.	W 569.
12	D 1036.	D 1023.	D 1015.	D 1047.	D 1011.	W 613.	W 571.
13	D 1020.	D 1001.	D 998.	D 1037.	D 986.	W 611.	W 587.
14	D 1005.	D 993.	D 977.	D 1030.	D 970.	W 604.	W 579.
15	D 1025.	D 1003.	D 994.	D 1043.	D 974.	W 596.	W 574.
16	D 1062.	D 1039.	D 1033.	D 1077.	D 1029.	W 595.	W 568.
17	D 1140.	D 1105.	D 1085.	D 1165.	D 1079.	W 641.	W 606.
18	D 1110.	D 1083.	D 1072.	D 1152.	D 1064.	W 620.	W 594.
19	D 996.	D 966.	D 953.	D 981.	D 921.	W 584.	W 573.
20	D 915.	D 886.	D 847.	D 911.	D 818.	W 597.	W 592.
21	D 904.	D 861.	D 839.	D 898.	D 811.	W 660.	W 679.
22	D 902.	D 878.	D 842.	D 891.	D 814.	W 709.	W 731.
23	N 837.	N 807.	N 805.	N 829.	N 801.	W 705.	W 714.
24	N 803.	N 796.	N 779.	N 800.	N 773.	W 690.	W 708.
DAILY LOAD FACTOR	0.801	0.797	0.797	0.785	0.789	0.861	0.809

********** LOAD MODEL 8 FOR 1986 **********

FOR AREA 26

LOAD FACTOR 0.685

HOUR	...MON...	...TUE...	...WED...	...THU...	...FRI...	...SAT...	...SUN...
1	W 722.	N 708.	N 723.	N. 683.	N 678.	N 693.	W 666.
2	W 663.	N 660.	N 668.	N 644.	N 634.	N 643.	W 613.
3	W 636.	N 632.	N 640.	N 611.	N 601.	N 606.	W 585.
4	W 629.	N 623.	N 627.	N 600.	N 593.	N 589.	W 571.
5	W 618.	N 618.	N 614.	N 596.	N 590.	N 574.	W 564.
6	W 65[illegible].	N 657.	N 650.	N 631.	N 621.	N 532.	W 522.
7	W 71[illegible].	N 718.	N 698.	N 678.	N 674.	N 464.	W 418.
8	W 921.	N 937.	N 912.	N 893.	N 875.	N 502.	W 448.
9	D 1122.	D 1127.	D 1111.	D 1093.	D 1075.	W 584.	W 483.
10	D 1118.	D 1124.	D 1107.	D 1088.	D 1071.	W 615.	W 512.
11	D 1064.	D 1078.	D 1047.	D 1033.	D 1028.	W 637.	W 555.
12	D 1023.	D 1034.	D 1004.	D 991.	D 987.	W 625.	W 557.
13	D 1009.	D 1025.	D 981.	D 967.	D 958.	W 608.	W 576.
14	D 999.	D 1020.	D 960.	D 955.	D 944.	W 603.	W 568.
15	D 1005.	D 1030.	D 975.	D 963.	D 953.	W 600.	W 552.
16	D 1037.	D 1073.	D 1016.	D 1013.	D 995.	W 597.	W 547.
17	D 1115.	D 1148.	D 1080.	D 1066.	D 1060.	W 648.	W 588.
18	D 1099.	D 1131.	D 1055.	D 1050.	D 1042.	W 630.	W 580.
19	D 949.	D 983.	D 904.	D 887.	D 872.	W 586.	W 542.
20	D 842.	D 865.	D 814.	D 798.	D 771.	W 591.	W 569.
21	D 835.	D 858.	D 800.	D 793.	D 780.	W 653.	W 647.
22	D 847.	D 852.	D 804.	D 795.	D 790.	W 687.	W 695.
23	N 810.	N 822.	N 766.	N 743.	N 738.	W 678.	W 681.
24	N 762.	N 753.	N 733.	N 730.	N 727.	W 671.	W 675.
DAILY LOAD FACTOR	0.787	0.779	0.776	0.774	0.777	0.879	0.822

********** LOAD MODEL 9 FOR 1986 **********

FOR AREA 26

LOAD FACTOR 0.675

HOUR	...MON...	...TUE...	...WED...	...THU...	...FRI...	...SAT...	...SUN...
1	W 686.	N 709.	N 679.	N 682.	N 715.	N 694.	W 659.
2	W 638.	N 649.	N 628.	N 637.	N 665.	N 646.	W 607.
3	W 614.	N 618.	N 598.	N 609.	N 643.	N 615.	W 577.
4	W 596.	N 601.	N 588.	N 594.	N 627.	N 582.	W 566.
5	W 586.	N 597.	N 584.	N 587.	N 624.	N 569.	W 551.
6	W 611.	N 633.	N 619.	N 622.	N 666.	N 541.	W 527.
7	W 629.	N 701.	N 677.	N 680.	N 722.	N 460.	W 420.
8	W 805.	N 955.	N 941.	N 948.	N 1002.	N 501.	W 441.
9	D 965.	D 1139.	D 1100.	D 1118.	D 1142.	W 590.	W 486.
10	D 973.	D 1126.	D 1094.	D 1096.	D 1157.	W 623.	W 521.
11	D 959.	D 1075.	D 1048.	D 1056.	D 1110.	W 655.	W 563.
12	D 934.	D 1040.	D 1019.	D 1024.	D 1076.	W 631.	W 568.
13	D 913.	D 1016.	D 988.	D 1008.	D 1041.	W 617.	W 572.
14	D 887.	D 1004.	D 963.	D 970.	D 1029.	W 604.	W 561.
15	D 896.	D 1013.	D 977.	D 994.	D 1036.	W 592.	W 556.
16	D 928.	D 1039.	D 1020.	D 1026.	D 1065.	W 592.	W 549.
17	D 982.	D 1089.	D 1078.	D 1083.	D 1130.	W 651.	W 583.
18	D 961.	D 1067.	D 1046.	D 1060.	D 1084.	W 621.	W 570.
19	D 849.	D 938.	D 920.	D 924.	D 952.	W 574.	W 532.
20	D 759.	D 819.	D 797.	D 803.	D 877.	W 580.	W 560.
21	D 772.	D 840.	D 799.	D 807.	D 868.	W 657.	W 634.
22	D 792.	D 846.	D 801.	D 837.	D 854.	W 685.	W 684.
23	N 745.	N 787.	N 768.	N 789.	N 794.	W 675.	W 672.
24	N 720.	N 730.	N 725.	N 733.	N 764.	W 663.	W 668.
DAILY LOAD FACTOR	0.815	0.769	0.775	0.771	0.779	0.878	0.830

********** LOAD MODEL 10 FOR 1986 **********

FOR AREA 26

LOAD FACTOR 0.679

HOUR	...MON...	...TUE...	...WED...	...THU...	...FRI...	...SAT...	...SUN...
1	W 649.	N 664.	N 666.	N 683.	N 674.	N 653.	W 611.
2	W 596.	N 616.	N 617.	N 638.	N 624.	N 605.	W 565.
3	W 577.	N 589.	N 591.	N 622.	N 595.	N 572.	W 542.
4	W 560.	N 579.	N 582.	N 610.	N 584.	N 548.	W 533.
5	W 555.	N 570.	N 573.	N 609.	N 583.	N 536.	W 530.
6	W 587.	N 598.	N 601.	N 633.	N 614.	N 512.	W 493.
7	W 660.	N 670.	N 672.	N 713.	N 678.	N 456.	W 425.
8	W 847.	N 858.	N 870.	N 930.	N 876.	N 478.	W 354.
9	D 1024.	D 1070.	D 1049.	D 1099.	D 1080.	W 553.	W 438.
10	D 1030.	D 1073.	D 1059.	D 1087.	D 1077.	W 593.	W 471.
11	D 974.	D 992.	D 988.	D 1035.	D 1000.	W 607.	W 520.
12	D 944.	D 962.	D 952.	D 998.	D 965.	W 593.	W 523.
13	D 893.	D 935.	D 926.	D 970.	D 940.	W 568.	W 531.
14	D 880.	D 914.	D 906.	D 956.	D 912.	W 557.	W 516.
15	D 884.	D 916.	D 914.	D 966.	D 920.	W 551.	W 507.
16	D 932.	D 946.	D 949.	D 978.	D 959.	W 550.	W 500.
17	D 982.	D 1002.	D 1003.	D 1074.	D 1012.	W 594.	W 539.
18	D 984.	D 1008.	D 1015.	D 1063.	D 1006.	W 603.	W 553.
19	D 874.	D 898.	D 910.	D 924.	D 888.	W 580.	W 545.
20	D 787.	D 799.	D 804.	D 823.	D 796.	W 585.	W 562.
21	D 778.	D 789.	D 794.	D 801.	D 788.	W 626.	W 620.
22	D 766.	D 779.	D 784.	D 791.	D 780.	W 663.	W 661.
23	N 725.	N 728.	N 754.	N 759.	N 742.	W 657.	W 643.
24	N 680.	N 683.	N 718.	N 723.	N 690.	W 631.	W 628.
DAILY LOAD FACTOR	0.775	0.763	0.775	0.777	0.763	0.872	0.807

********** LOAD MODEL 11 FOR 1988 **********

FOR AREA 26

LOAD FACTOR 0.649

HOUR	...MON...	...TUE...	...WED...	...THU...	...FRI...	...SAT...	...SUN...
1	W 620.	N 601.	N 661.	N 605.	N 599.	N 596.	W 575.
2	W 582.	N 577.	N 615.	N 580.	N 567.	N 571.	W 545.
3	W 561.	N 557.	N 586.	N 555.	N 552.	N 532.	W 500.
4	W 553.	N 540.	N 578.	N 536.	N 518.	N 492.	W 487.
5	W 551.	N 547.	N 569.	N 522.	N 510.	N 489.	W 484.
6	W 563.	N 560.	N 583.	N 527.	N 554.	N 469.	W 438.
7	W 675.	N 668.	N 689.	N 603.	N 652.	N 482.	W 435.
8	W 747.	N 725.	N 792.	N 657.	N 723.	N 394.	W 354.
9	D 965.	D 957.	D 984.	D 794.	D 953.	W 473.	W 371.
10	D 1003.	D 1000.	D 1017.	D 867.	D 990.	W 559.	W 432.
11	D 961.	D 959.	D 983.	D 828.	D 938.	W 584.	W 459.
12	D 908.	D 911.	D 917.	D 789.	D 884.	W 573.	W 479.
13	D 890.	D 900.	D 903.	D 776.	D 876.	W 553.	W 478.
14	D 882.	D 896.	D 893.	D 734.	D 862.	W 525.	W 476.
15	D 881.	D 906.	D 885.	D 730.	D 850.	W 503.	W 443.
16	D 912.	D 928.	D 915.	D 781.	D 888.	W 514.	W 452.
17	D 1000.	D 1012.	D 1001.	D 877.	D 976.	W 572.	W 496.
18	D 1077.	D 1100.	D 1087.	D 970.	D 1075.	W 672.	W 610.
19	D 1006.	D 1032.	D 1008.	D 914.	D 997.	W 678.	W 632.
20	D 924.	D 956.	D 920.	D 848.	D 905.	W 682.	W 647.
21	D 874.	D 879.	D 857.	D 787.	D 798.	W 663.	W 642.
22	D 779.	D 783.	D 779.	D 704.	D 712.	W 645.	W 640.
23	N 696.	N 699.	N 693.	N 684.	N 686.	W 630.	W 624.
24	N 664.	N 666.	N 654.	N 638.	N 634.	W 594.	W 592.
DAILY LOAD FACTOR	0.746	0.733	0.750	0.743	0.725	0.821	0.792

********** LOAD MODEL 12 FOR 1986 **********

FOR AREA 26

LOAD FACTOR 0.655

HOUR	...MON...	...TUE...	...WED...	...THU...	...FRI...	...SAT...	...SUN...
1	W 651.	N 661.	N 643.	N 625.	N 633.	N 629.	W 604.
2	W 610.	N 615.	N 603.	N 590.	N 597.	N 599.	W 569.
3	W 583.	N 595.	N 578.	N 564.	N 574.	N 560.	W 530.
4	W 571.	N 577.	N 562.	N 539.	N 545.	N 523.	W 521.
5	W 565.	N 575.	N 554.	N 536.	N 540.	N 519.	W 513.
6	W 592.	N 594.	N 581.	N 572.	N 549.	N 489.	W 462.
7	W 712.	N 702.	N 693.	N 688.	N 639.	N 501.	W 448.
8	W 811.	N 809.	N 806.	N 789.	N 696.	N 434.	W 366.
9	D 1008.	D 993.	D 1003.	D 970.	D 865.	W 497.	W 390.
10	D 1046.	D 1032.	D 1043.	D 1025.	D 912.	W 587.	W 452.
11	D 1006.	D 981.	D 986.	D 962.	D 881.	W 617.	W 493.
12	D 955.	D 948.	D 950.	D 928.	D 855.	W 607.	W 508.
13	D 937.	D 921.	D 925.	D 900.	D 630.	W 580.	W 505.
14	D 931.	D 909.	D 916.	D 889.	D 825.	W 563.	W 500.
15	D 935.	D 907.	D 914.	D 885.	D 814.	W 543.	W 476.
16	D 959.	D 944.	D 952.	D 929.	D 841.	W 557.	W 487.
17	D 1054.	D 1012.	D 1027.	D 1010.	D 923.	W 600.	W 526.
18	D 1137.	D 1105.	D 1120.	D 1087.	D 1017.	W 709.	W 647.
19	D 1061.	D 1030.	D 1033.	D 1022.	D 957.	W 716.	W 667.
20	D 965.	D 939.	D 953.	D 933.	D 893.	W 731.	W 689.
21	D 905.	D 868.	D 874.	D 861.	D 835.	W 699.	W 681.
22	D 820.	D 795.	D 799.	D 768.	D 754.	W 685.	W 679.
23	N 751.	N 741.	N 744.	N 722.	N 737.	W 664.	W 657.
24	N 690.	N 671.	N 676.	N 654.	N 674.	W 627.	W 622.
DAILY LOAD FACTOR	0.742	0.752	0.742	0.745	0.753	0.811	0.786

I.F Demand and Energy Forecast

DEMAND AND ENERGY FORECAST

This report displays the monthly Minimum Load (MW), Peak Load (MW) and Energy (GWH) Forecast for each of the 27 Area Load Centers of the New York Power Pool.

General format of report is as follows:

- Month (Jan....Dec.)
- Load Shape (1 = Jan....12 = Dec.)
- Load Area (Company Identifier
  See Load Shape Report Section)
- Min. MW (Monthly Min. Load)
- Peak Demand (Monthly Peak Load)
- Energy (Monthly GWH)
- Energy/Peak Inconsistency (Comparison check on input forecasts with historical load shapes).

1986

********** DEMAND INPUT SUMMARY FOR 1986 **********

FOR AREA 1

	LOAD SHAPE	LOAD AREA	MIN MW	-- PEAK DEMAND -- MW	DEV(%)	---- ENERGY ----- GWH	DEV(%)	ENERGY/PEAK INCONSISTENCY (%)	---- INTERRUPTIBLE LOAD ---- WEEK DAY	WEEK NITE	WEEK END	POOL -- PEAK --
JAN	1	1	1184.	2162.	0.	1236.	0.	1.7	0.	0.	0.	20027.
FEB	2	1	1065.	2095.	0.	1061.	0.	-0.2	0.	0.	0.	19456.
MAR	3	1	986.	1917.	0.	1084.	0.	2.4	0.	0.	0.	18324.
APR	4	1	1004.	1933.	0.	1060.	0.	1.7	0.	0.	0.	18065.
MAY	5	1	963.	1834.	0.	1066.	0.	-1.3	0.	0.	0.	18193.
JUN	6	1	898.	1923.	0.	983.	0.	1.2	0.	0.	0.	20781.
JUL	7	1	923.	1944.	0.	1053.	0.	-0.5	0.	0.	0.	21957.
AUG	8	1	980.	1940.	0.	1103.	0.	-1.0	0.	0.	0.	22040.
SEP	9	1	959.	1693.	0.	1062.	0.	-0.0	0.	0.	0.	20627.
OCT	10	1	1039.	1885.	0.	1075.	0.	2.5	0.	0.	0.	18358.
NOV	11	1	1040.	2025.	0.	1080.	0.	3.2	0.	0.	0.	19266.
DEC	12	1	1108.	2139.	0.	1189.	0.	2.2	0.	0.	0.	20234.

********** DEMAND INPUT SUMMARY FOR 1986 **********

FOR AREA 2

	LOAD SHAPE	LOAD AREA	MIN MW	-- PEAK DEMAND -- MW	DEV(%)	---- ENERGY ----- GWH	DEV(%)	ENERGY/PEAK INCONSISTENCY (%)	---- INTERRUPTIBLE LOAD ---- WEEK DAY	WEEK NITE	WEEK END
JAN	1	1	527.	963.	0.	551.	0.	1.7	0.	0.	0.
FEB	2	1	474.	933.	0.	473.	0.	-0.2	0.	0.	0.
MAR	3	1	439.	854.	0.	483.	0.	2.4	0.	0.	0.
APR	4	1	447.	861.	0.	472.	0.	1.7	0.	0.	0.
MAY	5	1	409.	780.	0.	453.	0.	-1.3	0.	0.	0.
JUN	6	1	382.	817.	0.	418.	0.	1.2	0.	0.	0.
JUL	7	1	392.	826.	0.	448.	0.	-0.5	0.	0.	0.
AUG	8	1	416.	824.	0.	469.	0.	-1.0	0.	0.	0.
SEP	9	1	408.	805.	0.	451.	0.	-0.0	0.	0.	0.
OCT	10	1	442.	801.	0.	457.	0.	2.5	0.	0.	0.
NOV	11	1	468.	912.	0.	466.	0.	3.2	0.	0.	0.
DEC	12	1	499.	963.	0.	535.	0.	2.2	0.	0.	0.

********** DEMAND INPUT SUMMARY FOR 1986 **********

FOR AREA 3

	LOAD SHAPE	LOAD AREA	MIN MW	-- PEAK DEMAND -- MW	DEV(%)	---- ENERGY ----- GWH	DEV(%)	ENERGY/PEAK INCONSISTENCY (%)	---- INTERRUPTIBLE LOAD ---- WEEK DAY	WEEK NITE	WEEK END
JAN	1	1	434.	792.	0.	453.	0.	1.7	0.	0.	0.
FEB	2	1	390.	768.	0.	389.	0.	-0.2	0.	0.	0.
MAR	3	1	361.	702.	0.	397.	0.	2.4	0.	0.	0.
APR	4	1	368.	708.	0.	388.	0.	1.7	0.	0.	0.
MAY	5	1	349.	665.	0.	386.	0.	-1.3	0.	0.	0.
JUN	6	1	325.	697.	0.	356.	0.	1.2	0.	0.	0.
JUL	7	1	335.	705.	0.	382.	0.	-0.5	0.	0.	0.
AUG	8	1	355.	703.	0.	400.	0.	-1.0	0.	0.	0.
SEP	9	1	348.	686.	0.	385.	0.	-0.0	0.	0.	0.
OCT	10	1	377.	683.	0.	390.	0.	2.5	0.	0.	0.
NOV	11	1	383.	746.	0.	398.	0.	3.2	0.	0.	0.
DEC	12	1	408.	788.	0.	438.	0.	2.2	0.	0.	0.

********** DEMAND INPUT SUMMARY FOR 1986 **********

FOR AREA 4

	LOAD SHAPE	LOAD AREA	MIN MW	-- PEAK DEMAND -- MW	DEV(%)	---- ENERGY ----- GWH	DEV(%)	ENERGY/PEAK INCONSISTENCY (%)	---- INTERRUPTIBLE LOAD ---- WEEK DAY	WEEK NITE	WEEK END
JAN	1	1	867.	1584.	0.	906.	0.	1.7	0.	0.	0.
FEB	2	1	790.	1535.	0.	778.	0.	-0.2	0.	0.	0.
MAR	3	1	722.	1405.	0.	794.	0.	2.4	0.	0.	0.
APR	4	1	736.	1417.	0.	777.	0.	1.7	0.	0.	0.
MAY	5	1	686.	1307.	0.	759.	0.	-1.3	0.	0.	0.
JUN	6	1	640.	1370.	0.	700.	0.	1.2	0.	0.	0.
JUL	7	1	658.	1385.	0.	750.	0.	-0.5	0.	0.	0.
AUG	8	1	698.	1382.	0.	786.	0.	-1.0	0.	0.	0.
SEP	9	1	683.	1349.	0.	757.	0.	-0.0	0.	0.	0.
OCT	10	1	740.	1343.	0.	766.	0.	2.5	0.	0.	0.
NOV	11	1	769.	1497.	0.	798.	0.	3.2	0.	0.	0.
DEC	12	1	319.	1581.	0.	879.	0.	2.2	0.	0.	0.

********** DEMAND INPUT SUMMARY FOR 1986 **********

FOR AREA 5

	LOAD SHAPE	LOAD AREA	MIN MW	-- PEAK DEMAND -- MW	DEV(%)	---- ENERGY ----- GWH	DEV(%)	ENERGY/PEAK INCONSISTENCY (%)	---- INTERRUPTIBLE LOAD ---- WEEK DAY	WEEK NITE	WEEK END
JAN	1	5	270.	511.	0.	289.	0.	0.6	0.	0.	0.
FEB	2	5	218.	502.	0.	251.	0.	-2.9	0.	0.	0.
MAR	3	5	213.	453.	0.	253.	0.	0.7	0.	0.	0.
APR	4	5	204.	419.	0.	227.	0.	0.7	0.	0.	0.
MAY	5	5	193.	369.	0.	212.	0.	0.8	0.	0.	0.
JUN	6	5	184.	409.	0.	206.	0.	0.8	0.	0.	0.
JUL	7	5	194.	416.	0.	224.	0.	0.7	0.	0.	0.
AUG	8	5	212.	426.	0.	239.	0.	0.7	0.	0.	0.
SEP	9	5	192.	390.	0.	216.	0.	0.7	0.	0.	0.
OCT	10	5	217.	409.	0.	230.	0.	0.7	0.	0.	0.
NOV	11	5	236.	479.	0.	252.	0.	0.7	0.	0.	0.
DEC	12	5	262.	513.	0.	282.	0.	0.6	0.	0.	0.

********** DEMAND INPUT SUMMARY FOR 1986 **********

FOR AREA 6

	LOAD SHAPE	LOAD AREA	MIN MW	-- PEAK DEMAND -- MW	DEV(%)	---- ENERGY ----- GWH	DEV(%)	ENERGY/PEAK INCONSISTENCY (%)	---- INTERRUPTIBLE LOAD ---- WEEK DAY	WEEK NITE	WEEK END
JAN	1	5	506.	959.	0.	543.	0.	0.6	0.	0.	0.
FEB	2	5	409.	940.	0.	471.	0.	-2.9	0.	0.	0.
MAR	3	5	400.	849.	0.	475.	0.	0.7	0.	0.	0.
APR	4	5	383.	785.	0.	425.	0.	0.8	0.	0.	0.
MAY	5	5	428.	818.	0.	469.	0.	0.8	0.	0.	0.
JUN	6	5	408.	907.	0.	457.	0.	0.8	0.	0.	0.
JUL	7	5	430.	928.	0.	496.	0.	0.7	0.	0.	0.
AUG	8	5	471.	944.	0.	530.	0.	0.7	0.	0.	0.
SEP	9	5	425.	865.	0.	479.	0.	0.7	0.	0.	0.
OCT	10	5	481.	907.	0.	511.	0.	0.7	0.	0.	0.
NOV	11	5	443.	897.	0.	473.	0.	0.7	0.	0.	0.
DEC	12	5	491.	963.	0.	530.	0.	0.6	0.	0.	0.

********** DEMAND INPUT SUMMARY FOR 1986 **********

FOR AREA 7

	LOAD SHAPE	LOAD AREA	MIN MW	-- PEAK DEMAND -- MW	DEV(%)	---- ENERGY ----- GWH	DEV(%)	ENERGY/PEAK INCONSISTENCY (%)	---- INTERRUPTIBLE LOAD ---- WEEK DAY	WEEK NITE	WEEK END
JAN	1	5	169.	320.	0.	181.	0.	0.6	0.	0.	0.
FEB	2	5	136.	313.	0.	157.	0.	-2.9	0.	0.	0.
MAR	3	5	133.	283.	0.	158.	0.	0.7	0.	0.	0.
APR	4	5	128.	262.	0.	142.	0.	0.8	0.	0.	0.
MAY	5	5	101.	193.	0.	110.	0.	0.8	0.	0.	0.
JUN	6	5	96.	213.	0.	108.	0.	0.8	0.	0.	0.
JUL	7	5	101.	218.	0.	117.	0.	0.7	0.	0.	0.
AUG	8	5	111.	222.	0.	125.	0.	0.7	0.	0.	0.
SEP	9	5	100.	204.	0.	113.	0.	0.7	0.	0.	0.
OCT	10	5	113.	213.	0.	120.	0.	0.7	0.	0.	0.
NOV	11	5	148.	299.	0.	158.	0.	0.7	0.	0.	0.
DEC	12	5	164.	321.	0.	177.	0.	0.6	0.	0.	0.

********** DEMAND INPUT SUMMARY FOR 1986 **********

FOR AREA 8

	LOAD SHAPE	LOAD AREA	MIN MW	-- PEAK DEMAND -- MW	DEV(%)	---- ENERGY ----- GWH	DEV(%)	ENERGY/PEAK INCONSISTENCY (%)	---- INTERRUPTIBLE LOAD ---- WEEK DAY	WEEK NITE	WEEK END
JAN	1	5	90.	170.	0.	96.	0.	0.6	0.	0.	0.
FEB	2	5	73.	167.	0.	84.	0.	-2.8	0.	0.	0.
MAR	3	5	71.	151.	0.	84.	0.	0.7	0.	0.	0.
APR	4	5	68.	140.	0.	76.	0.	0.8	0.	0.	0.
MAY	5	5	59.	112.	0.	64.	0.	0.7	0.	0.	0.
JUN	6	5	56.	125.	0.	63.	0.	0.8	0.	0.	0.
JUL	7	5	59.	127.	0.	68.	0.	0.8	0.	0.	0.
AUG	8	5	65.	130.	0.	73.	0.	0.7	0.	0.	0.
SEP	9	5	58.	119.	0.	66.	0.	0.8	0.	0.	0.
OCT	10	5	66.	125.	0.	70.	0.	0.7	0.	0.	0.
NOV	11	5	79.	160.	0.	84.	0.	0.6	0.	0.	0.
DEC	12	5	87.	171.	0.	94.	0.	0.6	0.	0.	0.

********** DEMAND INPUT SUMMARY FOR 1986 **********

FOR AREA 9

	LOAD SHAPE	LOAD AREA	MIN MW	-- PEAK DEMAND -- MW	DEV(%)	---- ENERGY ----- GWH	DEV(%)	ENERGY/PEAK INCONSISTENCY (%)	---- INTERRUPTIBLE LOAD ---- WEEK DAY	WEEK NITE	WEEK END
JAN	1	9	484.	1010.	0.	542.	0.	3.8	0.	0.	0.
FEB	2	9	437.	984.	0.	463.	0.	3.6	0.	0.	0.
MAR	3	9	419.	949.	0.	501.	0.	5.8	0.	0.	0.
APR	4	9	399.	892.	0.	454.	0.	5.6	0.	0.	0.
MAY	5	9	373.	886.	0.	480.	0.	-2.5	0.	0.	0.
JUN	6	9	367.	1009.	0.	480.	0.	-4.6	0.	0.	0.
JUL	7	9	418.	1080.	0.	549.	0.	-5.8	0.	0.	0.
AUG	8	9	444.	1009.	0.	538.	0.	-1.6	0.	0.	0.
SEP	9	9	419.	993.	0.	521.	0.	-6.0	0.	0.	0.
OCT	10	9	422.	902.	0.	479.	0.	4.9	0.	0.	0.
NOV	11	9	430.	978.	0.	486.	0.	3.4	0.	0.	0.
DEC	12	9	462.	1020.	0.	532.	0.	2.5	0.	0.	0.

********** DEMAND INPUT SUMMARY FOR 1986 **********

FOR AREA 10

	LOAD SHAPE	LOAD AREA	MIN MW	-- PEAK DEMAND -- MW	DEV(%)	---- ENERGY ----- GWH	DEV(%)	ENERGY/PEAK INCONSISTENCY (%)	---- INTERRUPTIBLE LOAD ---- WEEK DAY	WEEK NITE	WEEK END
JAN	1	10	334.	675.	0.	367.	0.	1.3	0.	0.	0.
FEB	2	10	286.	628.	0.	314.	0.	-2.0	0.	0.	0.
MAR	3	10	281.	587.	0.	328.	0.	1.4	0.	0.	0.
APR	4	10	280.	556.	0.	301.	0.	1.6	0.	0.	0.
MAY	5	10	276.	599.	0.	322.	0.	1.5	0.	0.	0.
JUN	6	10	270.	641.	0.	296.	0.	1.6	0.	0.	0.
JUL	7	10	310.	725.	0.	362.	0.	1.3	0.	0.	0.
AUG	8	10	327.	709.	0.	369.	0.	1.3	0.	0.	0.
SEP	9	10	304.	657.	0.	346.	0.	1.4	0.	0.	0.
OCT	10	10	308.	604.	0.	333.	0.	1.4	0.	0.	0.
NOV	11	10	317.	632.	0.	328.	0.	1.4	0.	0.	0.
DEC	12	10	350.	669.	0.	372.	0.	1.3	0.	0.	0.

********** DEMAND INPUT SUMMARY FOR 1986 **********

FOR AREA 11

	LOAD SHAPE	LOAD AREA	MIN MW	-- PEAK DEMAND -- MW	DEV(%)	---- ENERGY ----- GWH	DEV(%)	ENERGY/PEAK INCONSISTENCY (%)	---- INTERRUPTIBLE LOAD ---- WEEK DAY	WEEK NITE	WEEK END
JAN	1	11	266.	540.	0.	263.	0.	11.1	0.	0.	0.
FEB	2	11	243.	540.	0.	228.	0.	13.6	0.	0.	0.
MAR	3	11	252.	535.	0.	257.	0.	13.3	0.	0.	0.
APR	4	11	237.	504.	0.	230.	0.	15.0	0.	0.	0.
MAY	5	11	222.	617.	0.	312.	0.	-9.3	0.	0.	0.
JUN	6	11	212.	646.	0.	284.	0.	-7.1	0.	0.	0.
JUL	7	11	266.	770.	0.	371.	0.	-7.4	0.	0.	0.
AUG	8	11	280.	770.	0.	391.	0.	-8.1	0.	0.	0.
SEP	9	11	264.	671.	0.	330.	0.	-5.1	0.	0.	0.
OCT	10	11	257.	523.	0.	252.	0.	12.9	0.	0.	0.
NOV	11	11	260.	550.	0.	247.	0.	13.3	0.	0.	0.
DEC	12	11	258.	550.	0.	260.	0.	13.1	0.	0.	0.

********** DEMAND INPUT SUMMARY FOR 1986 **********

FOR AREA 12

	LOAD SHAPE	LOAD AREA	MIN MW	-- PEAK DEMAND -- MW	DEV(%)	---- ENERGY ----- GWH	DEV(%)	ENERGY/PEAK INCONSISTENCY (%)	---- INTERRUPTIBLE LOAD ---- WEEK DAY	WEEK NITE	WEEK END
JAN	1	12	1133.	2542.	0.	1289.	0.	1.1	0.	0.	0.
FEB	2	12	1013.	2473.	0.	1137.	0.	-2.3	0.	0.	0.
MAR	3	12	995.	2316.	0.	1227.	0.	1.2	0.	0.	0.
APR	4	12	908.	2169.	0.	1094.	0.	1.3	0.	0.	0.
MAY	5	12	809.	2017.	0.	973.	0.	1.5	0.	0.	0.
JUN	6	12	822.	2269.	0.	1036.	0.	1.4	0.	0.	0.
JUL	7	12	1092.	3275.	0.	1479.	0.	1.0	0.	0.	0.
AUG	8	12	1203.	3275.	0.	1562.	0.	0.9	0.	0.	0.
SEP	9	12	939.	2515.	0.	1130.	0.	1.3	0.	0.	0.
OCT	10	12	906.	2100.	0.	1071.	0.	1.3	0.	0.	0.
NOV	11	12	1041.	2503.	0.	1191.	0.	1.2	0.	0.	0.
DEC	12	12	1147.	2675.	0.	1367.	0.	1.0	0.	0.	0.

********** DEMAND INPUT SUMMARY FOR 1986 **********

FOR AREA 13

	LOAD SHAPE	LOAD AREA	MIN MW	-- PEAK DEMAND -- MW	DEV(%)	---- ENERGY ---- GWH	DEV(%)	ENERGY/PEAK INCONSISTENCY (%)	---- INTERRUPTIBLE LOAD ---- WEEK DAY	WEEK NITE	WEEK END
JAN	1	13	257.	330.	0.	224.	0.	-2.7	0.	0.	0.
FEB	2	13	229.	310.	0.	193.	0.	-6.8	0.	0.	0.
MAR	3	13	241.	308.	0.	211.	0.	-2.9	0.	0.	0.
APR	4	13	227.	304.	0.	196.	0.	-3.1	0.	0.	0.
MAY	5	13	103.	295.	0.	176.	0.	-3.8	0.	0.	0.
JUN	6	13	214.	294.	0.	187.	0.	-3.6	0.	0.	0.
JUL	7	13	214.	296.	0.	194.	0.	-3.4	0.	0.	0.
AUG	8	13	215.	293.	0.	200.	0.	-3.4	0.	0.	0.
SEP	9	13	195.	299.	0.	181.	0.	-3.7	0.	0.	0.
OCT	10	13	230.	316.	0.	206.	0.	-3.3	0.	0.	0.
NOV	11	13	215.	301.	0.	190.	0.	-3.2	0.	0.	0.
DEC	12	13	226.	314.	0.	210.	0.	-2.9	0.	0.	0.

********** DEMAND INPUT SUMMARY FOR 1986 **********

FOR AREA 14

	LOAD SHAPE	LOAD AREA	MIN MW	-- PEAK DEMAND -- MW	DEV(%)	---- ENERGY ---- GWH	DEV(%)	ENERGY/PEAK INCONSISTENCY (%)	---- INTERRUPTIBLE LOAD ---- WEEK DAY	WEEK NITE	WEEK END
JAN	1	13	634.	812.	0.	552.	0.	-2.7	0.	0.	0.
FEB	2	13	565.	765.	0.	476.	0.	-6.8	0.	0.	0.
MAR	3	13	594.	759.	0.	521.	0.	-2.9	0.	0.	0.
APR	4	13	561.	749.	0.	484.	0.	-3.1	0.	0.	0.
MAY	5	13	239.	681.	0.	407.	0.	-3.8	0.	0.	0.
JUN	6	13	494.	680.	0.	433.	0.	-3.6	0.	0.	0.
JUL	7	13	494.	685.	0.	449.	0.	-3.4	0.	0.	0.
AUG	8	13	496.	678.	0.	463.	0.	-3.4	0.	0.	0.
SEP	9	13	450.	692.	0.	419.	0.	-3.7	0.	0.	0.
OCT	10	13	532.	729.	0.	476.	0.	-3.2	0.	0.	0.
NOV	11	13	517.	724.	0.	457.	0.	-3.2	0.	0.	0.
DEC	12	13	547.	754.	0.	505.	0.	-2.9	0.	0.	0.

********** DEMAND INPUT SUMMARY FOR 1986 **********

FOR AREA 15

	LOAD SHAPE	LOAD AREA	MIN MW	-- PEAK DEMAND -- MW	DEV(%)	---- ENERGY ---- GWH	DEV(%)	ENERGY/PEAK INCONSISTENCY (%)	---- INTERRUPTIBLE LOAD ---- WEEK DAY	WEEK NITE	WEEK END
JAN	1	15	1898.	4223.	0.	2160.	0.	5.4	0.	0.	0.
FEB	2	15	1691.	4175.	0.	1886.	0.	2.8	0.	0.	0.
MAR	3	15	1649.	4058.	0.	1965.	0.	5.9	0.	0.	0.
APR	4	15	1699.	4245.	0.	1956.	0.	6.0	0.	0.	0.
MAY	5	15	1307.	5031.	0.	1959.	0.	5.9	0.	0.	0.
JUN	6	15	1876.	6221.	0.	2481.	0.	4.7	0.	0.	0.
JUL	7	15	1969.	6221.	0.	2684.	0.	4.4	0.	0.	0.
AUG	8	15	2045.	6221.	0.	2644.	0.	4.5	0.	0.	0.
SEP	9	15	1892.	6221.	0.	2351.	0.	5.0	0.	0.	0.
OCT	10	15	1893.	4706.	0.	2317.	0.	5.1	0.	0.	0.
NOV	11	15	1706.	4172.	0.	1981.	0.	5.9	0.	0.	0.
DEC	12	15	1854.	4264.	0.	2136.	0.	5.5	0.	0.	0.

********** DEMAND INPUT SUMMARY FOR 1986 **********

FOR AREA 16

	LOAD SHAPE	LOAD AREA	MIN MW	-- PEAK DEMAND -- MW	DEV(%)	---- ENERGY ---- GWH	DEV(%)	ENERGY/PEAK INCONSISTENCY (%)	---- INTERRUPTIBLE LOAD ---- WEEK DAY	WEEK NITE	WEEK END
JAN	1	13	71.	91.	0.	62.	0.	-2.7	0.	0.	0.
FEB	2	13	63.	85.	0.	53.	0.	-6.9	0.	0.	0.
MAR	3	13	66.	85.	0.	58.	0.	-2.9	0.	0.	0.
APR	4	13	63.	84.	0.	54.	0.	-3.1	0.	0.	0.
MAY	5	13	21.	59.	0.	35.	0.	-3.9	0.	0.	0.
JUN	6	13	43.	59.	0.	37.	0.	-3.6	0.	0.	0.
JUL	7	13	43.	59.	0.	39.	0.	-3.4	0.	0.	0.
AUG	8	13	43.	58.	0.	40.	0.	-3.4	0.	0.	0.
SEP	9	13	39.	60.	0.	36.	0.	-3.7	0.	0.	0.
OCT	10	13	46.	63.	0.	41.	0.	-3.3	0.	0.	0.
NOV	11	13	59.	62.	0.	52.	0.	-3.3	0.	0.	0.
DEC	12	13	62.	85.	0.	57.	0.	-2.9	0.	0.	0.

********** DEMAND INPUT SUMMARY FOR 1986 **********

FOR AREA 17

	LOAD SHAPE	LOAD AREA	MIN MW	-- PEAK DEMAND -- MW	DEV(%)	---- ENERGY ----- GWH	DEV(%)	ENERGY/PEAK INCONSISTENCY (%)	---- INTERRUPTIBLE LOAD ---- WEEK DAY	WEEK NITE	WEEK END
JAN	1	13	117.	150.	0.	102.	0.	-2.7	0.	0.	0.
FEB	2	13	104.	141.	0.	88.	0.	-6.9	0.	0.	0.
MAR	3	13	110.	140.	0.	96.	0.	-2.9	0.	0.	0.
APR	4	13	103.	138.	0.	89.	0.	-3.1	0.	0.	0.
MAY	5	13	38.	107.	0.	64.	0.	-3.8	0.	0.	0.
JUN	6	13	78.	107.	0.	68.	0.	-3.6	0.	0.	0.
JUL	7	13	78.	108.	0.	71.	0.	-3.4	0.	0.	0.
AUG	8	13	78.	107.	0.	73.	0.	-3.3	0.	0.	0.
SEP	9	13	71.	109.	0.	66.	0.	-3.7	0.	0.	0.
OCT	10	13	84.	115.	0.	75.	0.	-3.3	0.	0.	0.
NOV	11	13	98.	137.	0.	87.	0.	-3.2	0.	0.	0.
DEC	12	13	104.	143.	0.	96.	0.	-2.9	0.	0.	0.

********** DEMAND INPUT SUMMARY FOR 1986 **********

FOR AREA 18

	LOAD SHAPE	LOAD AREA	MIN MW	-- PEAK DEMAND -- MW	DEV(%)	---- ENERGY ----- GWH	DEV(%)	ENERGY/PEAK INCONSISTENCY (%)	---- INTERRUPTIBLE LOAD ---- WEEK DAY	WEEK NITE	WEEK END
JAN	1	13	117.	150.	0.	102.	0.	-2.7	0.	0.	0.
FEB	2	13	104.	141.	0.	88.	0.	-6.9	0.	0.	0.
MAR	3	13	110.	140.	0.	96.	0.	-2.9	0.	0.	0.
APR	4	13	103.	138.	0.	89.	0.	-3.1	0.	0.	0.
MAY	5	13	38.	107.	0.	64.	0.	-3.8	0.	0.	0.
JUN	6	13	78.	107.	0.	68.	0.	-3.6	0.	0.	0.
JUL	7	13	78.	108.	0.	71.	0.	-3.4	0.	0.	0.
AUG	8	13	78.	107.	0.	73.	0.	-3.3	0.	0.	0.
SEP	9	13	71.	109.	0.	66.	0.	-3.7	0.	0.	0.
OCT	10	13	84.	115.	0.	75.	0.	-3.3	0.	0.	0.
NOV	11	13	101.	141.	0.	89.	0.	-3.2	0.	0.	0.
DEC	12	13	107.	147.	0.	99.	0.	-2.9	0.	0.	0.

********** DEMAND INPUT SUMMARY FOR 1986 **********

FOR AREA 19

	LOAD SHAPE	LOAD AREA	MIN MW	-- PEAK DEMAND -- MW	DEV(%)	---- ENERGY ---- GWH	DEV(%)	ENERGY/PEAK INCONSISTENCY (%)	---- INTERRUPTIBLE LOAD ---- WEEK DAY	WEEK NITE	WEEK END
JAN	1	5	45.	85.	0.	48.	0.	0.6	0.	0.	0.
FEB	2	5	36.	84.	0.	42.	0.	-2.8	0.	0.	0.
MAR	3	5	36.	76.	0.	42.	0.	0.7	0.	0.	0.
APR	4	5	34.	70.	0.	38.	0.	0.8	0.	0.	0.
MAY	5	5	25.	48.	0.	28.	0.	0.7	0.	0.	0.
JUN	6	5	24.	53.	0.	27.	0.	0.9	0.	0.	0.
JUL	7	5	25.	55.	0.	29.	0.	0.8	0.	0.	0.
AUG	8	5	28.	56.	0.	31.	0.	0.7	0.	0.	0.
SEP	9	5	25.	51.	0.	28.	0.	0.7	0.	0.	0.
OCT	10	5	28.	53.	0.	30.	0.	0.8	0.	0.	0.
NOV	11	5	39.	80.	0.	42.	0.	0.7	0.	0.	0.
DEC	12	5	44.	86.	0.	47.	0.	0.6	0.	0.	0.

********** DEMAND INPUT SUMMARY FOR 1986 **********

FOR AREA 20

	LOAD SHAPE	LOAD AREA	MIN MW	-- PEAK DEMAND -- MW	DEV(%)	---- ENERGY ---- GWH	DEV(%)	ENERGY/PEAK INCONSISTENCY (%)	---- INTERRUPTIBLE LOAD ---- WEEK DAY	WEEK NITE	WEEK END
JAN	1	13	23.	30.	0.	20.	0.	-2.6	0.	0.	0.
FEB	2	13	21.	28.	0.	17.	0.	-6.6	0.	0.	0.
MAR	3	13	22.	28.	0.	19.	0.	-3.0	0.	0.	0.
APR	4	13	21.	27.	0.	18.	0.	-3.0	0.	0.	0.
MAY	5	13	9.	27.	0.	16.	0.	-3.7	0.	0.	0.
JUN	6	13	19.	27.	0.	17.	0.	-3.8	0.	0.	0.
JUL	7	13	19.	27.	0.	18.	0.	-3.5	0.	0.	0.
AUG	8	13	20.	27.	0.	18.	0.	-3.2	0.	0.	0.
SEP	9	13	18.	27.	0.	16.	0.	-3.7	0.	0.	0.
OCT	10	13	21.	29.	0.	19.	0.	-3.2	0.	0.	0.
NOV	11	13	20.	28.	0.	18.	0.	-3.2	0.	0.	0.
DEC	12	13	21.	29.	0.	20.	0.	-3.1	0.	0.	0.

********** DEMAND INPUT SUMMARY FOR 1986 **********

FOR AREA 21

	LOAD SHAPE	LOAD AREA	MIN MW	-- PEAK DEMAND -- MW	DEV(%)	---- ENERGY ---- GWH	DEV(%)	ENERGY/PEAK INCONSISTENCY (%)	---- INTERRUPTIBLE LOAD ---- WEEK DAY	WEEK NITE	WEEK END
JAN	1	5	45.	85.	0.	48.	0.	0.6	0.	0.	0.
FEB	2	5	36.	84.	0.	42.	0.	-2.8	0.	0.	0.
MAR	3	5	36.	76.	0.	42.	0.	0.7	0.	0.	0.
APR	4	5	34.	70.	0.	38.	0.	0.8	0.	0.	0.
MAY	5	5	34.	64.	0.	37.	0.	0.8	0.	0.	0.
JUN	6	5	32.	71.	0.	36.	0.	0.7	0.	0.	0.
JUL	7	5	34.	73.	0.	39.	0.	0.8	0.	0.	0.
AUG	8	5	37.	74.	0.	42.	0.	0.7	0.	0.	0.
SEP	9	5	33.	68.	0.	38.	0.	0.8	0.	0.	0.
OCT	10	5	38.	71.	0.	40.	0.	0.7	0.	0.	0.
NOV	11	5	39.	80.	0.	42.	0.	0.7	0.	0.	0.
DEC	12	5	44.	86.	0.	47.	0.	0.6	0.	0.	0.

********** DEMAND INPUT SUMMARY FOR 1986 **********

FOR AREA 22

	LOAD SHAPE	LOAD AREA	MIN MW	-- PEAK DEMAND -- MW	DEV(%)	---- ENERGY ---- GWH	DEV(%)	ENERGY/PEAK INCONSISTENCY (%)	---- INTERRUPTIBLE LOAD ---- WEEK DAY	WEEK NITE	WEEK END
JAN	1	26	7.	24.	0.	12.	0.	-5.3	0.	0.	0.
FEB	2	26	7.	22.	0.	10.	0.	-10.1	0.	0.	0.
MAR	3	26	7.	22.	0.	11.	0.	-5.9	0.	0.	0.
APR	4	26	7.	22.	0.	11.	0.	-6.1	0.	0.	0.
MAY	5	26	7.	22.	0.	11.	0.	-6.0	0.	0.	0.
JUN	6	26	8.	22.	0.	12.	0.	-5.6	0.	0.	0.
JUL	7	26	8.	22.	0.	12.	0.	-5.6	0.	0.	0.
AUG	8	26	8.	22.	0.	12.	0.	-5.6	0.	0.	0.
SEP	9	26	8.	23.	0.	12.	0.	-6.0	0.	0.	0.
OCT	10	26	8.	24.	0.	13.	0.	-5.3	0.	0.	0.
NOV	11	26	7.	22.	0.	11.	0.	-6.2	0.	0.	0.
DEC	12	26	8.	23.	0.	12.	0.	-5.8	0.	0.	0.

********** DEMAND INPUT SUMMARY FOR 1986 **********

FOR AREA 23

	LOAD SHAPE	LOAD AREA	MIN MW	-- PEAK DEMAND -- MW	DEV(%)	---- ENERGY ----- GWH	DEV(%)	ENERGY/PEAK INCONSISTENCY (%)	---- INTERRUPTIBLE LOAD ---- WEEK DAY	WEEK NITE	WEEK END
JAN	1	15	40.	88.	0.	45.	0.	5.4	0.	0.	0.
FEB	2	15	35.	87.	0.	39.	0.	2.8	0.	0.	0.
MAR	3	15	34.	85.	0.	41.	0.	5.9	0.	0.	0.
APR	4	15	35.	89.	0.	41.	0.	5.9	0.	0.	0.
MAY	5	15	29.	111.	0.	43.	0.	5.9	0.	0.	0.
JUN	6	15	42.	138.	0.	55.	0.	4.7	0.	0.	0.
JUL	7	15	44.	138.	0.	59.	0.	4.4	0.	0.	0.
AUG	8	15	45.	138.	0.	59.	0.	4.4	0.	0.	0.
SEP	9	15	42.	138.	0.	52.	0.	5.0	0.	0.	0.
OCT	10	15	42.	104.	0.	51.	0.	5.0	0.	0.	0.
NOV	11	15	38.	92.	0.	44.	0.	5.9	0.	0.	0.
DEC	12	15	41.	94.	0.	47.	0.	5.4	0.	0.	0.

********** DEMAND INPUT SUMMARY FOR 1986 **********

FOR AREA 24

	LOAD SHAPE	LOAD AREA	MIN MW	-- PEAK DEMAND -- MW	DEV(%)	---- ENERGY ----- GWH	DEV(%)	ENERGY/PEAK INCONSISTENCY (%)	---- INTERRUPTIBLE LOAD ---- WEEK DAY	WEEK NITE	WEEK END
JAN	1	26	49.	158.	0.	78.	0.	-5.5	0.	0.	0.
FEB	2	26	44.	149.	0.	68.	0.	-10.1	0.	0.	0.
MAR	3	26	45.	147.	0.	75.	0.	-5.7	0.	0.	0.
APR	4	26	48.	145.	0.	71.	0.	-6.1	0.	0.	0.
MAY	5	26	47.	144.	0.	73.	0.	-6.0	0.	0.	0.
JUN	6	26	51.	144.	0.	76.	0.	-5.8	0.	0.	0.
JUL	7	26	54.	145.	0.	79.	0.	-5.5	0.	0.	0.
AUG	8	26	52.	144.	0.	77.	0.	-5.7	0.	0.	0.
SEP	9	26	53.	147.	0.	75.	0.	-5.9	0.	0.	0.
OCT	10	26	50.	155.	0.	82.	0.	-5.3	0.	0.	0.
NOV	11	26	47.	145.	0.	72.	0.	-6.1	0.	0.	0.
DEC	12	26	49.	151.	0.	78.	0.	-5.6	0.	0.	0.

********** DEMAND INPUT SUMMARY FOR 1986 **********

FOR AREA 25

	LOAD SHAPE	LOAD AREA	MIN MW	-- PEAK DEMAND -- MW	DEV(%)	---- ENERGY ----- GWH	DEV(%)	ENERGY/PEAK INCONSISTENCY (%)	---- INTERRUPTIBLE LOAD ---- WEEK DAY	WEEK NITE	WEEK END
JAN	1	15	267.	594.	0.	304.	0.	5.4	0.	0.	0.
FEB	2	15	238.	587.	0.	265.	0.	2.8	0.	0.	0.
MAR	3	15	232.	570.	0.	276.	0.	5.9	0.	0.	0.
APR	4	15	239.	597.	0.	275.	0.	5.9	0.	0.	0.
MAY	5	15	187.	721.	0.	281.	0.	5.9	0.	0.	0.
JUN	6	15	269.	892.	0.	356.	0.	4.7	0.	0.	0.
JUL	7	15	282.	892.	0.	385.	0.	4.4	0.	0.	0.
AUG	8	15	293.	892.	0.	379.	0.	4.4	0.	0.	0.
SEP	9	15	271.	892.	0.	337.	0.	5.0	0.	0.	0.
OCT	10	15	271.	675.	0.	332.	0.	5.1	0.	0.	0.
NOV	11	15	245.	598.	0.	284.	0.	5.9	0.	0.	0.
DEC	12	15	266.	611.	0.	306.	0.	5.5	0.	0.	0.

********** DEMAND INPUT SUMMARY FOR 1986 **********

FOR AREA 26

	LOAD SHAPE	LOAD AREA	MIN MW	-- PEAK DEMAND -- MW	DEV(%)	---- ENERGY ----- GWH	DEV(%)	ENERGY/PEAK INCONSISTENCY (%)	---- INTERRUPTIBLE LOAD ---- WEEK DAY	WEEK NITE	WEEK END
JAN	1	26	346.	1122.	0.	558.	0.	-5.5	0.	0.	0.
FEB	2	26	314.	1057.	0.	487.	0.	-10.1	0.	0.	0.
MAR	3	26	318.	1049.	0.	533.	0.	-5.8	0.	0.	0.
APR	4	26	339.	1034.	0.	508.	0.	-6.1	0.	0.	0.
MAY	5	26	330.	1007.	0.	508.	0.	-6.0	0.	0.	0.
JUN	6	26	357.	1006.	0.	528.	0.	-5.8	0.	0.	0.
JUL	7	26	378.	1012.	0.	553.	0.	-5.5	0.	0.	0.
AUG	8	26	365.	1002.	0.	539.	0.	-5.7	0.	0.	0.
SEP	9	26	371.	1022.	0.	526.	0.	-5.8	0.	0.	0.
OCT	10	26	347.	1079.	0.	574.	0.	-5.3	0.	0.	0.
NOV	11	26	326.	1013.	0.	502.	0.	-6.1	0.	0.	0.
DEC	12	26	339.	1054.	0.	543.	0.	-5.6	0.	0.	0.

********** DEMAND INPUT SUMMARY FOR 1986 **********

FOR AREA 27

	LOAD SHAPE	LOAD AREA	MIN MW	-- PEAK DEMAND -- MW	DEV(%)	---- ENERGY ---- GWH	DEV(%)	ENERGY/PEAK INCONSISTENCY (%)	---- INTERRUPTIBLE LOAD ---- WEEK DAY	WEEK NITE	WEEK END
JAN	1	12	17.	39.	0.	18.	0.	9.0	0.	0.	0.
FEB	2	12	16.	38.	0.	16.	0.	6.8	0.	0.	0.
MAR	3	12	15.	36.	0.	17.	0.	9.4	0.	0.	0.
APR	4	12	14.	33.	0.	15.	0.	10.5	0.	0.	0.
MAY	5	12	18.	45.	0.	20.	0.	8.1	0.	0.	0.
JUN	6	12	18.	51.	0.	22.	0.	7.6	0.	0.	0.
JUL	7	12	17.	52.	0.	22.	0.	7.6	0.	0.	0.
AUG	8	12	19.	52.	0.	23.	0.	7.1	0.	0.	0.
SEP	9	12	17.	46.	0.	19.	0.	8.7	0.	0.	0.
OCT	10	12	20.	47.	0.	22.	0.	7.4	0.	0.	0.
NOV	11	12	16.	39.	0.	17.	0.	9.7	0.	0.	0.
DEC	12	12	18.	41.	0.	19.	0.	8.5	0.	0.	0.

1987

********** DEMAND INPUT SUMMARY FOR 1987 **********

FOR AREA 1

	LOAD SHAPE	LOAD AREA	MIN MW	-- PEAK DEMAND -- MW	DEV(%)	---- ENERGY ----- GWH	DEV(%)	ENERGY/PEAK INCONSISTENCY (%)	---- INTERRUPTIBLE LOAD ---- WEEK DAY	WEEK NITE	WEEK END	POOL -- PEAK --
JAN	1	1	1201.	2194.	0.	1253.	0.	1.9	0.	0.	0.	20376.
FEB	2	1	1081.	2126.	0.	1075.	0.	-0.1	0.	0.	0.	19795.
MAR	3	1	1000.	1945.	0.	1098.	0.	2.6	0.	0.	0.	18643.
APR	4	1	1019.	1962.	0.	1074.	0.	1.9	0.	0.	0.	18379.
MAY	5	1	976.	1859.	0.	1078.	0.	-1.1	0.	0.	0.	18457.
JUN	6	1	910.	1949.	0.	994.	0.	1.4	0.	0.	0.	21083.
JUL	7	1	936.	1970.	0.	1065.	0.	-0.3	0.	0.	0.	22276.
AUG	8	1	993.	1966.	0.	1116.	0.	-0.8	0.	0.	0.	22360.
SEP	9	1	972.	1919.	0.	1074.	0.	0.1	0.	0.	0.	20926.
OCT	10	1	1053.	1910.	0.	1088.	0.	2.7	0.	0.	0.	18624.
NOV	11	1	1057.	2058.	0.	1096.	0.	3.3	0.	0.	0.	19596.
DEC	12	1	1126.	2173.	0.	1207.	0.	2.4	0.	0.	0.	20585.

********** DEMAND INPUT SUMMARY FOR 1987 **********

FOR AREA 2

	LOAD SHAPE	LOAD AREA	MIN MW	-- PEAK DEMAND -- MW	DEV(%)	---- ENERGY ----- GWH	DEV(%)	ENERGY/PEAK INCONSISTENCY (%)	---- INTERRUPTIBLE LOAD ---- WEEK DAY	WEEK NITE	WEEK END
JAN	1	1	541.	987.	0.	564.	0.	1.9	0.	0.	0.
FEB	2	1	486.	957.	0.	484.	0.	-0.1	0.	0.	0.
MAR	3	1	450.	876.	0.	494.	0.	2.6	0.	0.	0.
APR	4	1	459.	883.	0.	483.	0.	1.9	0.	0.	0.
MAY	5	1	419.	799.	0.	463.	0.	-1.1	0.	0.	0.
JUN	6	1	391.	837.	0.	427.	0.	1.4	0.	0.	0.
JUL	7	1	402.	846.	0.	458.	0.	-0.3	0.	0.	0.
AUG	8	1	427.	845.	0.	480.	0.	-0.8	0.	0.	0.
SEP	9	1	418.	824.	0.	462.	0.	0.1	0.	0.	0.
OCT	10	1	453.	821.	0.	467.	0.	2.7	0.	0.	0.
NOV	11	1	481.	936.	0.	499.	0.	3.3	0.	0.	0.
DEC	12	1	512.	989.	0.	549.	0.	2.4	0.	0.	0.

********** DEMAND INPUT SUMMARY FOR 1987 **********

FOR AREA 3

	LOAD SHAPE	LOAD AREA	MIN MW	-- PEAK DEMAND -- MW	DEV(%)	---- ENERGY ----- GWH	DEV(%)	ENERGY/PEAK INCONSISTENCY (%)	---- INTERRUPTIBLE LOAD ---- WEEK DAY	WEEK NITE	WEEK END
JAN	1	1	442.	808.	0.	461.	0.	1.9	0.	0.	0.
FEB	2	1	398.	783.	0.	396.	0.	-0.1	0.	0.	0.
MAR	3	1	368.	716.	0.	405.	0.	2.6	0.	0.	0.
APR	4	1	375.	723.	0.	396.	0.	1.9	0.	0.	0.
MAY	5	1	358.	682.	0.	396.	0.	-1.1	0.	0.	0.
JUN	6	1	334.	715.	0.	365.	0.	1.4	0.	0.	0.
JUL	7	1	343.	723.	0.	391.	0.	-0.3	0.	0.	0.
AUG	8	1	364.	721.	0.	409.	0.	-0.8	0.	0.	0.
SEP	9	1	356.	704.	0.	394.	0.	0.1	0.	0.	0.
OCT	10	1	386.	701.	0.	399.	0.	2.7	0.	0.	0.
NOV	11	1	391.	762.	0.	406.	0.	3.3	0.	0.	0.
DEC	12	1	417.	805.	0.	447.	0.	2.4	0.	0.	0.

********** DEMAND INPUT SUMMARY FOR 1987 **********

FOR AREA 4

	LOAD SHAPE	LOAD AREA	MIN MW	-- PEAK DEMAND -- MW	DEV(%)	---- ENERGY ----- GWH	DEV(%)	ENERGY/PEAK INCONSISTENCY (%)	---- INTERRUPTIBLE LOAD ---- WEEK DAY	WEEK NITE	WEEK END
JAN	1	1	888.	1621.	0.	926.	0.	1.9	0.	0.	0.
FEB	2	1	799.	1572.	0.	795.	0.	-0.1	0.	0.	0.
MAR	3	1	739.	1438.	0.	812.	0.	2.6	0.	0.	0.
APR	4	1	753.	1450.	0.	794.	0.	1.9	0.	0.	0.
MAY	5	1	699.	1331.	0.	772.	0.	-1.1	0.	0.	0.
JUN	6	1	652.	1395.	0.	712.	0.	1.4	0.	0.	0.
JUL	7	1	670.	1411.	0.	763.	0.	-0.3	0.	0.	0.
AUG	8	1	711.	1408.	0.	799.	0.	-0.8	0.	0.	0.
SEP	9	1	696.	1374.	0.	769.	0.	0.1	0.	0.	0.
OCT	10	1	754.	1368.	0.	779.	0.	2.7	0.	0.	0.
NOV	11	1	788.	1534.	0.	817.	0.	3.3	0.	0.	0.
DEC	12	1	839.	1620.	0.	900.	0.	2.4	0.	0.	0.

********** DEMAND INPUT SUMMARY FOR 1987 **********

FOR AREA 5

	LOAD SHAPE	LOAD AREA	MIN MW	-- PEAK DEMAND -- MW	DEV(%)	---- ENERGY ----- GWH	DEV(%)	ENERGY/PEAK INCONSISTENCY (%)	---- INTERRUPTIBLE LOAD ---- WEEK DAY	WEEK NITE	WEEK END
JAN	1	5	275.	521.	0.	296.	0.	0.4	0.	0.	0.
FEB	2	5	222.	511.	0.	256.	0.	-3.2	0.	0.	0.
MAR	3	5	217.	461.	0.	259.	0.	0.4	0.	0.	0.
APR	4	5	208.	427.	0.	232.	0.	0.5	0.	0.	0.
MAY	5	5	196.	375.	0.	216.	0.	0.5	0.	0.	0.
JUN	6	5	187.	416.	0.	210.	0.	0.5	0.	0.	0.
JUL	7	5	197.	425.	0.	228.	0.	0.4	0.	0.	0.
AUG	8	5	216.	432.	0.	244.	0.	0.4	0.	0.	0.
SEP	9	5	195.	397.	0.	220.	0.	0.5	0.	0.	0.
OCT	10	5	221.	416.	0.	235.	0.	0.4	0.	0.	0.
NOV	11	5	241.	490.	0.	259.	0.	0.4	0.	0.	0.
DEC	12	5	268.	525.	0.	290.	0.	0.4	0.	0.	0.

********** DEMAND INPUT SUMMARY FOR 1987 **********

FOR AREA 6

	LOAD SHAPE	LOAD AREA	MIN MW	-- PEAK DEMAND -- MW	DEV(%)	---- ENERGY ----- GWH	DEV(%)	ENERGY/PEAK INCONSISTENCY (%)	---- INTERRUPTIBLE LOAD ---- WEEK DAY	WEEK NITE	WEEK END
JAN	1	5	515.	977.	0.	554.	0.	0.4	0.	0.	0.
FEB	2	5	417.	958.	0.	481.	0.	-3.2	0.	0.	0.
MAR	3	5	407.	865.	0.	485.	0.	0.4	0.	0.	0.
APR	4	5	390.	800.	0.	434.	0.	0.4	0.	0.	0.
MAY	5	5	435.	832.	0.	479.	0.	0.5	0.	0.	0.
JUN	6	5	415.	922.	0.	466.	0.	0.5	0.	0.	0.
JUL	7	5	437.	943.	0.	506.	0.	0.4	0.	0.	0.
AUG	8	5	478.	959.	0.	540.	0.	0.4	0.	0.	0.
SEP	9	5	432.	879.	0.	488.	0.	0.4	0.	0.	0.
OCT	10	5	489.	922.	0.	521.	0.	0.4	0.	0.	0.
NOV	11	5	453.	918.	0.	485.	0.	0.4	0.	0.	0.
DEC	12	5	503.	985.	0.	543.	0.	0.4	0.	0.	0.

********** DEMAND INPUT SUMMARY FOR 1987 **********

FOR AREA 7

	LOAD SHAPE	LOAD AREA	MIN MW	-- PEAK DEMAND -- MW	DEV(%)	---- ENERGY ---- GWH	DEV(%)	ENERGY/PEAK INCONSISTENCY (%)	---- INTERRUPTIBLE LOAD ---- WEEK DAY	WEEK NITE	WEEK END
JAN	1	5	172.	326.	0.	185.	0.	0.4	0.	0.	0.
FEB	2	5	139.	319.	0.	160.	0.	-3.2	0.	0.	0.
MAR	3	5	136.	288.	0.	162.	0.	0.4	0.	0.	0.
APR	4	5	130.	267.	0.	145.	0.	0.4	0.	0.	0.
MAY	5	5	102.	196.	0.	113.	0.	0.5	0.	0.	0.
JUN	6	5	98.	217.	0.	110.	0.	0.5	0.	0.	0.
JUL	7	5	103.	222.	0.	119.	0.	0.5	0.	0.	0.
AUG	8	5	113.	226.	0.	127.	0.	0.4	0.	0.	0.
SEP	9	5	102.	207.	0.	115.	0.	0.4	0.	0.	0.
OCT	10	5	115.	217.	0.	123.	0.	0.4	0.	0.	0.
NOV	11	5	151.	306.	0.	162.	0.	0.4	0.	0.	0.
DEC	12	5	168.	328.	0.	181.	0.	0.3	0.	0.	0.

********** DEMAND INPUT SUMMARY FOR 1987 **********

FOR AREA 8

	LOAD SHAPE	LOAD AREA	MIN MW	-- PEAK DEMAND -- MW	DEV(%)	---- ENERGY ---- GWH	DEV(%)	ENERGY/PEAK INCONSISTENCY (%)	---- INTERRUPTIBLE LOAD ---- WEEK DAY	WEEK NITE	WEEK END
JAN	1	5	92.	174.	0.	99.	0.	0.4	0.	0.	0.
FEB	2	5	74.	170.	0.	85.	0.	-3.2	0.	0.	0.
MAR	3	5	72.	154.	0.	86.	0.	0.4	0.	0.	0.
APR	4	5	69.	142.	0.	77.	0.	0.5	0.	0.	0.
MAY	5	5	60.	114.	0.	66.	0.	0.5	0.	0.	0.
JUN	6	5	57.	127.	0.	64.	0.	0.5	0.	0.	0.
JUL	7	5	60.	129.	0.	69.	0.	0.4	0.	0.	0.
AUG	8	5	66.	132.	0.	74.	0.	0.4	0.	0.	0.
SEP	9	5	59.	121.	0.	67.	0.	0.4	0.	0.	0.
OCT	10	5	67.	127.	0.	71.	0.	0.4	0.	0.	0.
NOV	11	5	80.	163.	0.	86.	0.	0.4	0.	0.	0.
DEC	12	5	69.	175.	0.	97.	0.	0.4	0.	0.	0.

********** DEMAND INPUT SUMMARY FOR 1987 **********

FOR AREA 9

	LOAD SHAPE	LOAD AREA	MIN MW	-- PEAK DEMAND -- MW	DEV(%)	---- ENERGY ---- GWH	DEV(%)	ENERGY/PEAK INCONSISTENCY (%)	---- INTERRUPTIBLE LOAD ---- WEEK DAY	WEEK NITE	WEEK END
JAN	1	9	493.	1030.	0.	552.	0.	4.0	0.	0.	0.
FEB	2	9	445.	1004.	0.	471.	0.	3.9	0.	0.	0.
MAR	3	9	427.	967.	0.	510.	0.	6.0	0.	0.	0.
APR	4	9	407.	910.	0.	462.	0.	5.9	0.	0.	0.
MAY	5	9	376.	895.	0.	483.	0.	-2.2	0.	0.	0.
JUN	6	9	370.	1018.	0.	483.	0.	-4.2	0.	0.	0.
JUL	7	9	422.	1090.	0.	553.	0.	-5.5	0.	0.	0.
AUG	8	9	448.	1018.	0.	541.	0.	-1.3	0.	0.	0.
SEP	9	9	423.	1003.	0.	525.	0.	-5.6	0.	0.	0.
OCT	10	9	426.	910.	0.	482.	0.	5.2	0.	0.	0.
NOV	11	9	434.	987.	0.	489.	0.	3.7	0.	0.	0.
DEC	12	9	467.	1029.	0.	535.	0.	2.8	0.	0.	0.

********** DEMAND INPUT SUMMARY FOR 1987 **********

FOR AREA 10

	LOAD SHAPE	LOAD AREA	MIN MW	-- PEAK DEMAND -- MW	DEV(%)	---- ENERGY ---- GWH	DEV(%)	ENERGY/PEAK INCONSISTENCY (%)	---- INTERRUPTIBLE LOAD ---- WEEK DAY	WEEK NITE	WEEK END
JAN	1	10	339.	685.	0.	375.	0.	0.5	0.	0.	0.
FEB	2	10	290.	638.	0.	322.	0.	-3.0	0.	0.	0.
MAR	3	10	285.	595.	0.	336.	0.	0.5	0.	0.	0.
APR	4	10	284.	564.	0.	309.	0.	0.6	0.	0.	0.
MAY	5	10	283.	615.	0.	334.	0.	0.5	0.	0.	0.
JUN	6	10	278.	659.	0.	310.	0.	0.6	0.	0.	0.
JUL	7	10	318.	745.	0.	375.	0.	0.5	0.	0.	0.
AUG	8	10	336.	729.	0.	382.	0.	0.5	0.	0.	0.
SEP	9	10	313.	675.	0.	359.	0.	0.5	0.	0.	0.
OCT	10	10	316.	621.	0.	345.	0.	0.5	0.	0.	0.
NOV	11	10	328.	655.	0.	343.	0.	0.5	0.	0.	0.
DEC	12	10	363.	694.	0.	389.	0.	0.5	0.	0.	0.

********** DEMAND INPUT SUMMARY FOR 1987 **********

FOR AREA 11

	LOAD SHAPE	LOAD AREA	MIN MW	-- PEAK DEMAND -- MW	DEV(%)	---- ENERGY ----- GWH	DEV(%)	ENERGY/PEAK INCONSISTENCY (%)	---- INTERRUPTIBLE LOAD ---- WEEK DAY	WEEK NITE	WEEK END
JAN	1	11	271.	550.	0.	269.	0.	10.8	0.	0.	0.
FEB	2	11	248.	550.	0.	233.	0.	13.3	0.	0.	0.
MAR	3	11	257.	545.	0.	262.	0.	13.1	0.	0.	0.
APR	4	11	242.	513.	0.	235.	0.	14.7	0.	0.	0.
MAY	5	11	227.	633.	0.	322.	0.	-9.7	0.	0.	0.
JUN	6	11	218.	663.	0.	293.	0.	-7.6	0.	0.	0.
JUL	7	11	273.	790.	0.	381.	0.	-7.7	0.	0.	0.
AUG	8	11	287.	790.	0.	403.	0.	-8.4	0.	0.	0.
SEP	9	11	271.	688.	0.	339.	0.	-5.5	0.	0.	0.
OCT	10	11	263.	536.	0.	260.	0.	12.5	0.	0.	0.
NOV	11	11	265.	560.	0.	253.	0.	13.0	0.	0.	0.
DEC	12	11	262.	560.	0.	266.	0.	12.8	0.	0.	0.

********** DEMAND INPUT SUMMARY FOR 1987 **********

FOR AREA 12

	LOAD SHAPE	LOAD AREA	MIN MW	-- PEAK DEMAND -- MW	DEV(%)	---- ENERGY ----- GWH	DEV(%)	ENERGY/PEAK INCONSISTENCY (%)	---- INTERRUPTIBLE LOAD ---- WEEK DAY	WEEK NITE	WEEK END
JAN	1	12	1159.	2600.	0.	1310.	0.	1.8	0.	0.	0.
FEB	2	12	1036.	2530.	0.	1155.	0.	-1.5	0.	0.	0.
MAR	3	12	1018.	2369.	0.	1247.	0.	1.8	0.	0.	0.
APR	4	12	929.	2218.	0.	1111.	0.	2.1	0.	0.	0.
MAY	5	12	826.	2061.	0.	985.	0.	2.3	0.	0.	0.
JUN	6	12	840.	2317.	0.	1049.	0.	2.2	0.	0.	0.
JUL	7	12	1115.	3345.	0.	1502.	0.	1.5	0.	0.	0.
AUG	8	12	1229.	3345.	0.	1587.	0.	1.4	0.	0.	0.
SEP	9	12	959.	2569.	0.	1146.	0.	2.0	0.	0.	0.
OCT	10	12	925.	2144.	0.	1085.	0.	2.1	0.	0.	0.
NOV	11	12	1064.	2559.	0.	1209.	0.	1.9	0.	0.	0.
DEC	12	12	1173.	2735.	0.	1389.	0.	1.7	0.	0.	0.

********** DEMAND INPUT SUMMARY FOR 1987 **********

FOR AREA 13

	LOAD SHAPE	LOAD AREA	MIN MW	-- PEAK DEMAND -- MW	DEV(%)	---- ENERGY ----- GWH	DEV(%)	ENERGY/PEAK INCONSISTENCY (%)	---- INTERRUPTIBLE LOAD ---- WEEK DAY	WEEK NITE	WEEK END
JAN	1	13	264.	339.	0.	230.	0.	-2.6	0.	0.	0.
FEB	2	13	235.	319.	0.	198.	0.	-6.6	0.	0.	0.
MAR	3	13	247.	316.	0.	217.	0.	-2.7	0.	0.	0.
APR	4	13	234.	312.	0.	201.	0.	-2.9	0.	0.	0.
MAY	5	13	105.	300.	0.	179.	0.	-3.7	0.	0.	0.
JUN	6	13	217.	299.	0.	190.	0.	-3.4	0.	0.	0.
JUL	7	13	218.	301.	0.	197.	0.	-3.3	0.	0.	0.
AUG	8	13	218.	298.	0.	203.	0.	-3.2	0.	0.	0.
SEP	9	13	198.	305.	0.	184.	0.	-3.5	0.	0.	0.
OCT	10	13	234.	321.	0.	209.	0.	-3.1	0.	0.	0.
NOV	11	13	221.	309.	0.	195.	0.	-3.0	0.	0.	0.
DEC	12	13	234.	322.	0.	215.	0.	-2.8	0.	0.	0.

********** DEMAND INPUT SUMMARY FOR 1987 **********

FOR AREA 14

	LOAD SHAPE	LOAD AREA	MIN MW	-- PEAK DEMAND -- MW	DEV(%)	---- ENERGY ----- GWH	DEV(%)	ENERGY/PEAK INCONSISTENCY (%)	---- INTERRUPTIBLE LOAD ---- WEEK DAY	WEEK NITE	WEEK END
JAN	1	13	635.	814.	0.	552.	0.	-2.6	0.	0.	0.
FEB	2	13	566.	766.	0.	476.	0.	-6.6	0.	0.	0.
MAR	3	13	595.	760.	0.	521.	0.	-2.7	0.	0.	0.
APR	4	13	561.	750.	0.	484.	0.	-2.9	0.	0.	0.
MAY	5	13	238.	676.	0.	403.	0.	-3.7	0.	0.	0.
JUN	6	13	491.	676.	0.	429.	0.	-3.4	0.	0.	0.
JUL	7	13	491.	680.	0.	445.	0.	-3.3	0.	0.	0.
AUG	8	13	493.	674.	0.	459.	0.	-3.2	0.	0.	0.
SEP	9	13	447.	687.	0.	415.	0.	-3.5	0.	0.	0.
OCT	10	13	528.	725.	0.	472.	0.	-3.1	0.	0.	0.
NOV	11	13	517.	723.	0.	456.	0.	-3.1	0.	0.	0.
DEC	12	13	547.	753.	0.	504.	0.	-2.8	0.	0.	0.

********** DEMAND INPUT SUMMARY FOR 1987 **********

FOR AREA 15

	LOAD SHAPE	LOAD AREA	MIN MW	-- PEAK DEMAND -- MW	DEV(%)	---- ENERGY ---- GWH	DEV(%)	ENERGY/PEAK INCONSISTENCY (%)	---- INTERRUPTIBLE LOAD ---- WEEK DAY	WEEK NITE	WEEK END
JAN	1	15	1909.	4247.	0.	2182.	0.	5.0	0.	0.	0.
FEB	2	15	1701.	4199.	0.	1906.	0.	2.3	0.	0.	0.
MAR	3	15	1658.	4080.	0.	1986.	0.	5.5	0.	0.	0.
APR	4	15	1708.	4269.	0.	1976.	0.	5.5	0.	0.	0.
MAY	5	15	1313.	5054.	0.	1977.	0.	5.5	0.	0.	0.
JUN	6	15	1885.	6249.	0.	2501.	0.	4.4	0.	0.	0.
JUL	7	15	1978.	6249.	0.	2705.	0.	4.1	0.	0.	0.
AUG	8	15	2054.	6249.	0.	2665.	0.	4.1	0.	0.	0.
SEP	9	15	1901.	6249.	0.	2371.	0.	4.6	0.	0.	0.
OCT	10	15	1902.	4727.	0.	2337.	0.	4.7	0.	0.	0.
NOV	11	15	1718.	4200.	0.	2004.	0.	5.4	0.	0.	0.
DEC	12	15	1867.	4293.	0.	2160.	0.	5.0	0.	0.	0.

********** DEMAND INPUT SUMMARY FOR 1987 **********

FOR AREA 16

	LOAD SHAPE	LOAD AREA	MIN MW	-- PEAK DEMAND -- MW	DEV(%)	---- ENERGY ---- GWH	DEV(%)	ENERGY/PEAK INCONSISTENCY (%)	---- INTERRUPTIBLE LOAD ---- WEEK DAY	WEEK NITE	WEEK END
JAN	1	13	72.	92.	0.	63.	0.	-2.5	0.	0.	0.
FEB	2	13	64.	87.	0.	54.	0.	-6.6	0.	0.	0.
MAR	3	13	67.	86.	0.	59.	0.	-2.8	0.	0.	0.
APR	4	13	64.	85.	0.	55.	0.	-2.9	0.	0.	0.
MAY	5	13	23.	64.	0.	38.	0.	-3.6	0.	0.	0.
JUN	6	13	47.	64.	0.	41.	0.	-3.5	0.	0.	0.
JUL	7	13	47.	65.	0.	42.	0.	-3.2	0.	0.	0.
AUG	8	13	47.	64.	0.	44.	0.	-3.3	0.	0.	0.
SEP	9	13	42.	65.	0.	39.	0.	-3.6	0.	0.	0.
OCT	10	13	50.	69.	0.	45.	0.	-3.1	0.	0.	0.
NOV	11	13	61.	85.	0.	53.	0.	-3.1	0.	0.	0.
DEC	12	13	64.	88.	0.	59.	0.	-2.8	0.	0.	0.

********** DEMAND INPUT SUMMARY FOR 1987 **********

FOR AREA 17

	LOAD SHAPE	LOAD AREA	MIN MW	-- PEAK DEMAND -- MW	DEV(%)	---- ENERGY ---- GWH	DEV(%)	ENERGY/PEAK INCONSISTENCY (%)	---- INTERRUPTIBLE LOAD ---- WEEK DAY	WEEK NITE	WEEK END
JAN	1	13	120.	154.	0.	105.	0.	-2.6	0.	0.	0.
FEB	2	13	107.	145.	0.	90.	0.	-6.6	0.	0.	0.
MAR	3	13	113.	144.	0.	99.	0.	-2.8	0.	0.	0.
APR	4	13	106.	142.	0.	92.	0.	-2.9	0.	0.	0.
MAY	5	13	38.	109.	0.	65.	0.	-3.7	0.	0.	0.
JUN	6	13	79.	109.	0.	69.	0.	-3.4	0.	0.	0.
JUL	7	13	79.	110.	0.	72.	0.	-3.3	0.	0.	0.
AUG	8	13	80.	109.	0.	74.	0.	-3.2	0.	0.	0.
SEP	9	13	72.	111.	0.	67.	0.	-3.5	0.	0.	0.
OCT	10	13	85.	117.	0.	76.	0.	-3.1	0.	0.	0.
NOV	11	13	101.	141.	0.	89.	0.	-3.1	0.	0.	0.
DEC	12	13	106.	147.	0.	98.	0.	-2.8	0.	0.	0.

********** DEMAND INPUT SUMMARY FOR 1987 **********

FOR AREA 18

	LOAD SHAPE	LOAD AREA	MIN MW	-- PEAK DEMAND -- MW	DEV(%)	---- ENERGY ---- GWH	DEV(%)	ENERGY/PEAK INCONSISTENCY (%)	---- INTERRUPTIBLE LOAD ---- WEEK DAY	WEEK NITE	WEEK END
JAN	1	13	124.	159.	0.	108.	0.	-2.6	0.	0.	0.
FEB	2	13	111.	150.	0.	93.	0.	-6.6	0.	0.	0.
MAR	3	13	116.	149.	0.	102.	0.	-2.7	0.	0.	0.
APR	4	13	110.	147.	0.	94.	0.	-2.9	0.	0.	0.
MAY	5	13	38.	109.	0.	65.	0.	-3.7	0.	0.	0.
JUN	6	13	79.	109.	0.	69.	0.	-3.4	0.	0.	0.
JUL	7	13	79.	110.	0.	72.	0.	-3.3	0.	0.	0.
AUG	8	13	80.	109.	0.	74.	0.	-3.2	0.	0.	0.
SEP	9	13	72.	111.	0.	67.	0.	-3.5	0.	0.	0.
OCT	10	13	85.	117.	0.	76.	0.	-3.1	0.	0.	0.
NOV	11	13	108.	151.	0.	95.	0.	-3.0	0.	0.	0.
DEC	12	13	114.	157.	0.	105.	0.	-2.8	0.	0.	0.

********** DEMAND INPUT SUMMARY FOR 1987 **********

FOR AREA 19

	LOAD SHAPE	LOAD AREA	MIN MW	-- PEAK DEMAND -- MW	DEV(%)	---- ENERGY ----- GWH	DEV(%)	ENERGY/PEAK INCONSISTENCY (%)	---- INTERRUPTIBLE LOAD ---- WEEK DAY	WEEK NITE	WEEK END
JAN	1	5	46.	87.	0.	49.	0.	0.4	0.	0.	0.
FEB	2	5	37.	85.	0.	43.	0.	-3.2	0.	0.	0.
MAR	3	5	36.	77.	0.	43.	0.	0.4	0.	0.	0.
APR	4	5	35.	71.	0.	39.	0.	0.5	0.	0.	0.
MAY	5	5	26.	49.	0.	28.	0.	0.4	0.	0.	0.
JUN	6	5	24.	54.	0.	27.	0.	0.4	0.	0.	0.
JUL	7	5	26.	56.	0.	30.	0.	0.5	0.	0.	0.
AUG	8	5	28.	56.	0.	32.	0.	0.4	0.	0.	0.
SEP	9	5	25.	52.	0.	29.	0.	0.4	0.	0.	0.
OCT	10	5	29.	54.	0.	31.	0.	0.4	0.	0.	0.
NOV	11	5	40.	82.	0.	43.	0.	0.4	0.	0.	0.
DEC	12	5	45.	88.	0.	48.	0.	0.3	0.	0.	0.

********** DEMAND INPUT SUMMARY FOR 1987 **********

FOR AREA 20

	LOAD SHAPE	LOAD AREA	MIN MW	-- PEAK DEMAND -- MW	DEV(%)	---- ENERGY ----- GWH	DEV(%)	ENERGY/PEAK INCONSISTENCY (%)	---- INTERRUPTIBLE LOAD ---- WEEK DAY	WEEK NITE	WEEK END
JAN	1	13	25.	32.	0.	22.	0.	-2.5	0.	0.	0.
FEB	2	13	22.	30.	0.	19.	0.	-6.8	0.	0.	0.
MAR	3	13	23.	30.	0.	20.	0.	-2.7	0.	0.	0.
APR	4	13	22.	29.	0.	19.	0.	-2.9	0.	0.	0.
MAY	5	13	9.	27.	0.	16.	0.	-3.7	0.	0.	0.
JUN	6	13	20.	27.	0.	17.	0.	-3.3	0.	0.	0.
JUL	7	13	20.	27.	0.	18.	0.	-3.1	0.	0.	0.
AUG	8	13	20.	27.	0.	18.	0.	-3.2	0.	0.	0.
SEP	9	13	18.	27.	0.	17.	0.	-3.6	0.	0.	0.
OCT	10	13	21.	29.	0.	19.	0.	-3.2	0.	0.	0.
NOV	11	13	21.	29.	0.	18.	0.	-2.9	0.	0.	0.
DEC	12	13	22.	30.	0.	20.	0.	-2.9	0.	0.	0.

********** DEMAND INPUT SUMMARY FOR 1987 **********

FOR AREA 21

	LOAD SHAPE	LOAD AREA	MIN MW	-- PEAK DEMAND -- MW	DEV(%)	---- ENERGY ----- GWH	DEV(%)	ENERGY/PEAK INCONSISTENCY (%)	---- INTERRUPTIBLE LOAD ---- WEEK DAY	WEEK NITE	WEEK END
JAN	1	5	46.	87.	0.	49.	0.	0.4	0.	0.	0.
FEB	2	5	37.	85.	0.	43.	0.	-3.2	0.	0.	0.
MAR	3	5	36.	77.	0.	43.	0.	0.4	0.	0.	0.
APR	4	5	35.	71.	0.	39.	0.	0.5	0.	0.	0.
MAY	5	5	34.	65.	0.	38.	0.	0.4	0.	0.	0.
JUN	6	5	33.	72.	0.	37.	0.	0.5	0.	0.	0.
JUL	7	5	34.	74.	0.	40.	0.	0.5	0.	0.	0.
AUG	8	5	38.	75.	0.	42.	0.	0.4	0.	0.	0.
SEP	9	5	34.	69.	0.	38.	0.	0.5	0.	0.	0.
OCT	10	5	38.	72.	0.	41.	0.	0.4	0.	0.	0.
NOV	11	5	40.	82.	0.	43.	0.	0.4	0.	0.	0.
DEC	12	5	45.	88.	0.	48.	0.	0.3	0.	0.	0.

********** DEMAND INPUT SUMMARY FOR 1987 **********

FOR AREA 22

	LOAD SHAPE	LOAD AREA	MIN MW	-- PEAK DEMAND -- MW	DEV(%)	---- ENERGY ----- GWH	DEV(%)	ENERGY/PEAK INCONSISTENCY (%)	---- INTERRUPTIBLE LOAD ---- WEEK DAY	WEEK NITE	WEEK END
JAN	1	26	8.	25.	0.	13.	0.	-5.3	0.	0.	0.
FEB	2	26	7.	24.	0.	11.	0.	-10.1	0.	0.	0.
MAR	3	26	7.	24.	0.	12.	0.	-5.8	0.	0.	0.
APR	4	26	8.	23.	0.	11.	0.	-5.9	0.	0.	0.
MAY	5	26	7.	23.	0.	11.	0.	-5.8	0.	0.	0.
JUN	6	26	8.	23.	0.	12.	0.	-5.4	0.	0.	0.
JUL	7	26	9.	23.	0.	12.	0.	-5.4	0.	0.	0.
AUG	8	26	8.	23.	0.	12.	0.	-5.4	0.	0.	0.
SEP	9	26	8.	23.	0.	12.	0.	-5.8	0.	0.	0.
OCT	10	26	8.	24.	0.	13.	0.	-5.2	0.	0.	0.
NOV	11	26	7.	23.	0.	11.	0.	-6.0	0.	0.	0.
DEC	12	26	8.	24.	0.	12.	0.	-5.6	0.	0.	0.

********** DEMAND INPUT SUMMARY FOR 1987 **********

FOR AREA 23

	LOAD SHAPE	LOAD AREA	MIN MW	-- PEAK DEMAND -- MW	DEV(%)	---- ENERGY ----- GWH	DEV(%)	ENERGY/PEAK INCONSISTENCY (%)	---- INTERRUPTIBLE LOAD ---- WEEK DAY	WEEK NITE	WEEK END
JAN	1	15	42.	94.	0.	48.	0.	5.0	0.	0.	0.
FEB	2	15	38.	93.	0.	42.	0.	2.4	0.	0.	0.
MAR	3	15	37.	90.	0.	44.	0.	5.5	0.	0.	0.
APR	4	15	38.	95.	0.	44.	0.	5.5	0.	0.	0.
MAY	5	15	29.	112.	0.	44.	0.	5.5	0.	0.	0.
JUN	6	15	42.	139.	0.	56.	0.	4.4	0.	0.	0.
JUL	7	15	44.	139.	0.	60.	0.	4.1	0.	0.	0.
AUG	8	15	46.	139.	0.	59.	0.	4.1	0.	0.	0.
SEP	9	15	42.	139.	0.	53.	0.	4.6	0.	0.	0.
OCT	10	15	42.	105.	0.	52.	0.	4.7	0.	0.	0.
NOV	11	15	38.	93.	0.	44.	0.	5.4	0.	0.	0.
DEC	12	15	41.	95.	0.	48.	0.	5.1	0.	0.	0.

********** DEMAND INPUT SUMMARY FOR 1987 **********

FOR AREA 24

	LOAD SHAPE	LOAD AREA	MIN MW	-- PEAK DEMAND -- MW	DEV(%)	---- ENERGY ----- GWH	DEV(%)	ENERGY/PEAK INCONSISTENCY (%)	---- INTERRUPTIBLE LOAD ---- WEEK DAY	WEEK NITE	WEEK END
JAN	1	26	50.	163.	0.	81.	0.	-5.3	0.	0.	0.
FEB	2	26	46.	154.	0.	71.	0.	-9.9	0.	0.	0.
MAR	3	26	46.	152.	0.	77.	0.	-5.6	0.	0.	0.
APR	4	26	49.	150.	0.	74.	0.	-5.9	0.	0.	0.
MAY	5	26	49.	150.	0.	75.	0.	-5.8	0.	0.	0.
JUN	6	26	53.	150.	0.	79.	0.	-5.6	0.	0.	0.
JUL	7	26	56.	151.	0.	82.	0.	-5.3	0.	0.	0.
AUG	8	26	54.	149.	0.	80.	0.	-5.5	0.	0.	0.
SEP	9	26	55.	152.	0.	78.	0.	-5.6	0.	0.	0.
OCT	10	26	52.	161.	0.	85.	0.	-5.2	0.	0.	0.
NOV	11	26	48.	149.	0.	74.	0.	-6.0	0.	0.	0.
DEC	12	26	50.	155.	0.	80.	0.	-5.5	0.	0.	0.

********** DEMAND INPUT SUMMARY FOR 1987 **********

FOR AREA 25

	LOAD SHAPE	LOAD AREA	MIN MW	-- PEAK DEMAND -- MW	DEV(%)	---- ENERGY ---- GWH	DEV(%)	ENERGY/PEAK INCONSISTENCY (%)	---- INTERRUPTIBLE LOAD ---- WEEK DAY	WEEK NITE	WEEK END
JAN	1	15	274.	609.	0.	313.	0.	5.0	0.	0.	0.
FEB	2	15	244.	602.	0.	273.	0.	2.3	0.	0.	0.
MAR	3	15	238.	585.	0.	285.	0.	5.5	0.	0.	0.
APR	4	15	245.	612.	0.	283.	0.	5.5	0.	0.	0.
MAY	5	15	192.	738.	0.	289.	0.	5.5	0.	0.	0.
JUN	6	15	275.	913.	0.	365.	0.	4.4	0.	0.	0.
JUL	7	15	289.	913.	0.	395.	0.	4.1	0.	0.	0.
AUG	8	15	300.	913.	0.	389.	0.	4.1	0.	0.	0.
SEP	9	15	278.	913.	0.	346.	0.	4.6	0.	0.	0.
OCT	10	15	278.	690.	0.	341.	0.	4.7	0.	0.	0.
NOV	11	15	251.	613.	0.	293.	0.	5.4	0.	0.	0.
DEC	12	15	273.	627.	0.	315.	0.	5.1	0.	0.	0.

********** DEMAND INPUT SUMMARY FOR 1987 **********

FOR AREA 26

	LOAD SHAPE	LOAD AREA	MIN MW	-- PEAK DEMAND -- MW	DEV(%)	---- ENERGY ---- GWH	DEV(%)	ENERGY/PEAK INCONSISTENCY (%)	---- INTERRUPTIBLE LOAD ---- WEEK DAY	WEEK NITE	WEEK END
JAN	1	26	351.	1138.	0.	565.	0.	-5.3	0.	0.	0.
FEB	2	26	318.	1072.	0.	493.	0.	-9.9	0.	0.	0.
MAR	3	26	323.	1063.	0.	540.	0.	-5.6	0.	0.	0.
APR	4	26	343.	1048.	0.	514.	0.	-5.9	0.	0.	0.
MAY	5	26	337.	1027.	0.	517.	0.	-5.8	0.	0.	0.
JUN	6	26	364.	1026.	0.	538.	0.	-5.6	0.	0.	0.
JUL	7	26	385.	1032.	0.	563.	0.	-5.3	0.	0.	0.
AUG	8	26	372.	1022.	0.	549.	0.	-5.5	0.	0.	0.
SEP	9	26	378.	1043.	0.	535.	0.	-5.6	0.	0.	0.
OCT	10	26	354.	1100.	0.	585.	0.	-5.1	0.	0.	0.
NOV	11	26	328.	1019.	0.	504.	0.	-6.0	0.	0.	0.
DEC	12	26	341.	1060.	0.	545.	0.	-5.5	0.	0.	0.

********** DEMAND INPUT SUMMARY FOR 1987 **********

FOR AREA 27

	LOAD SHAPE	LOAD AREA	MIN MW	-- PEAK DEMAND -- MW	DEV(%)	---- ENERGY ---- G*H	DEV(%)	ENERGY/PEAK INCONSISTENCY (%)	---- INTERRUPTIBLE LOAD ---- WEEK DAY	WEEK NITE	WEEK END
JAN	1	12	18.	40.	0.	19.	0.	9.2	0.	0.	0.
FEB	2	12	16.	39.	0.	16.	0.	7.4	0.	0.	0.
MAR	3	12	16.	36.	0.	18.	0.	9.9	0.	0.	0.
APR	4	12	14.	34.	0.	16.	0.	11.1	0.	0.	0.
MAY	5	12	18.	46.	0.	21.	0.	8.6	0.	0.	0.
JUN	6	12	19.	52.	0.	22.	0.	8.0	0.	0.	0.
JUL	7	12	18.	53.	0.	22.	0.	7.9	0.	0.	0.
AUG	8	12	19.	53.	0.	24.	0.	7.5	0.	0.	0.
SEP	9	12	17.	47.	0.	19.	0.	9.0	0.	0.	0.
OCT	10	12	21.	48.	0.	23.	0.	7.8	0.	0.	0.
NOV	11	12	16.	39.	0.	17.	0.	10.0	0.	0.	0.
DEC	12	12	18.	42.	0.	20.	0.	8.8	0.	0.	0.

1988

********** DEMAND INPUT SUMMARY FOR 1988 **********

FOR AREA 1

	LOAD SHAPE	LOAD AREA	MIN MW	-- PEAK DEMAND -- MW	DEV(%)	---- ENERGY ---- GWH	DEV(%)	ENERGY/PEAK INCONSISTENCY (%)	---- INTERRUPTIBLE LOAD ---- WEEK DAY	WEEK NITE	WEEK END	POOL -- PEAK --
JAN	1	1	1221.	2229.	0.	1273.	0.	1.9	0.	0.	0.	20724.
FEB	2	1	1098.	2161.	0.	1093.	0.	3.4	0.	0.	0.	20133.
MAR	3	1	1016.	1977.	0.	1116.	0.	2.6	0.	0.	0.	18962.
APR	4	1	1036.	1994.	0.	1091.	0.	1.9	0.	0.	0.	18694.
MAY	5	1	993.	1892.	0.	1097.	0.	-1.1	0.	0.	0.	18754.
JUN	6	1	926.	1983.	0.	1012.	0.	1.4	0.	0.	0.	21422.
JUL	7	1	952.	2005.	0.	1084.	0.	-0.3	0.	0.	0.	22634.
AUG	8	1	1010.	2001.	0.	1136.	0.	-0.8	0.	0.	0.	22720.
SEP	9	1	989.	1953.	0.	1093.	0.	0.1	0.	0.	0.	21263.
OCT	10	1	1072.	1944.	0.	1107.	0.	2.7	0.	0.	0.	18924.
NOV	11	1	1074.	2092.	0.	1114.	0.	3.3	0.	0.	0.	20030.
DEC	12	1	1145.	2209.	0.	1227.	0.	2.4	0.	0.	0.	21043.

********** DEMAND INPUT SUMMARY FOR 1988 **********

FOR AREA 2

	LOAD SHAPE	LOAD AREA	MIN MW	-- PEAK DEMAND -- MW	DEV(%)	---- ENERGY ---- GWH	DEV(%)	ENERGY/PEAK INCONSISTENCY (%)	---- INTERRUPTIBLE LOAD ---- WEEK DAY	WEEK NITE	WEEK END
JAN	1	1	555.	1014.	0.	579.	0.	1.9	0.	0.	0.
FEB	2	1	500.	983.	0.	497.	0.	3.4	0.	0.	0.
MAR	3	1	462.	899.	0.	508.	0.	2.6	0.	0.	0.
APR	4	1	471.	907.	0.	497.	0.	1.9	0.	0.	0.
MAY	5	1	428.	815.	0.	473.	0.	-1.1	0.	0.	0.
JUN	6	1	399.	854.	0.	436.	0.	1.4	0.	0.	0.
JUL	7	1	410.	864.	0.	467.	0.	-0.3	0.	0.	0.
AUG	8	1	435.	862.	0.	489.	0.	-0.8	0.	0.	0.
SEP	9	1	426.	841.	0.	471.	0.	0.1	0.	0.	0.
OCT	10	1	462.	837.	0.	477.	0.	2.7	0.	0.	0.
NOV	11	1	490.	954.	0.	508.	0.	3.3	0.	0.	0.
DEC	12	1	522.	1008.	0.	560.	0.	2.4	0.	0.	0.

********** DEMAND INPUT SUMMARY FOR 1988 **********

FOR AREA 3

	LOAD SHAPE	LOAD AREA	MIN MW	-- PEAK DEMAND -- MW	DEV(%)	---- ENERGY ---- GWH	DEV(%)	ENERGY/PEAK INCONSISTENCY (%)	---- INTERRUPTIBLE LOAD ---- WEEK DAY	WEEK NITE	WEEK END
JAN	1	1	452.	825.	0.	471.	0.	1.9	0.	0.	0.
FEB	2	1	406.	800.	0.	404.	0.	3.4	0.	0.	0.
MAR	3	1	376.	732.	0.	413.	0.	2.6	0.	0.	0.
APR	4	1	383.	738.	0.	404.	0.	1.9	0.	0.	0.
MAY	5	1	365.	696.	0.	404.	0.	-1.1	0.	0.	0.
JUN	6	1	341.	729.	0.	372.	0.	1.4	0.	0.	0.
JUL	7	1	350.	737.	0.	399.	0.	-0.3	0.	0.	0.
AUG	8	1	372.	736.	0.	418.	0.	-0.8	0.	0.	0.
SEP	9	1	364.	718.	0.	402.	0.	0.1	0.	0.	0.
OCT	10	1	394.	715.	0.	407.	0.	2.7	0.	0.	0.
NOV	11	1	401.	782.	0.	416.	0.	3.3	0.	0.	0.
DEC	12	1	428.	826.	0.	458.	0.	2.4	0.	0.	0.

********** DEMAND INPUT SUMMARY FOR 1988 **********

FOR AREA 4

	LOAD SHAPE	LOAD AREA	MIN MW	-- PEAK DEMAND -- MW	DEV(%)	---- ENERGY ---- GWH	DEV(%)	ENERGY/PEAK INCONSISTENCY (%)	---- INTERRUPTIBLE LOAD ---- WEEK DAY	WEEK NITE	WEEK END
JAN	1	1	910.	1662.	0.	949.	0.	1.9	0.	0.	0.
FEB	2	1	819.	1611.	0.	814.	0.	3.4	0.	0.	0.
MAR	3	1	758.	1474.	0.	832.	0.	2.6	0.	0.	0.
APR	4	1	772.	1486.	0.	814.	0.	1.9	0.	0.	0.
MAY	5	1	716.	1363.	0.	790.	0.	-1.1	0.	0.	0.
JUN	6	1	667.	1429.	0.	729.	0.	1.4	0.	0.	0.
JUL	7	1	686.	1444.	0.	781.	0.	-0.3	0.	0.	0.
AUG	8	1	728.	1441.	0.	818.	0.	-0.8	0.	0.	0.
SEP	9	1	712.	1407.	0.	786.	0.	0.1	0.	0.	0.
OCT	10	1	772.	1400.	0.	797.	0.	2.7	0.	0.	0.
NOV	11	1	803.	1564.	0.	833.	0.	3.3	0.	0.	0.
DEC	12	1	855.	1651.	0.	917.	0.	2.4	0.	0.	0.

********** DEMAND INPUT SUMMARY FOR 1988 **********

FOR AREA 5

	LOAD SHAPE	LOAD AREA	MIN MW	-- PEAK DEMAND -- MW	DEV(%)	---- ENERGY ----- GWH	DEV(%)	ENERGY/PEAK INCONSISTENCY (%)	---- INTERRUPTIBLE LOAD ---- WEEK DAY	WEEK NITE	WEEK END
JAN	1	5	281.	533.	0.	302.	0.	0.4	0.	0.	0.
FEB	2	5	227.	523.	0.	262.	0.	0.5	0.	0.	0.
MAR	3	5	222.	472.	0.	264.	0.	0.4	0.	0.	0.
APR	4	5	213.	436.	0.	237.	0.	0.5	0.	0.	0.
MAY	5	5	200.	383.	0.	220.	0.	0.5	0.	0.	0.
JUN	6	5	191.	425.	0.	215.	0.	0.5	0.	0.	0.
JUL	7	5	201.	434.	0.	233.	0.	0.5	0.	0.	0.
AUG	8	5	220.	442.	0.	249.	0.	0.4	0.	0.	0.
SEP	9	5	199.	405.	0.	225.	0.	0.5	0.	0.	0.
OCT	10	5	225.	425.	0.	240.	0.	0.5	0.	0.	0.
NOV	11	5	247.	501.	0.	265.	0.	0.4	0.	0.	0.
DEC	12	5	274.	537.	0.	296.	0.	0.4	0.	0.	0.

********** DEMAND INPUT SUMMARY FOR 1988 **********

FOR AREA 6

	LOAD SHAPE	LOAD AREA	MIN MW	-- PEAK DEMAND -- MW	DEV(%)	---- ENERGY ----- GWH	DEV(%)	ENERGY/PEAK INCONSISTENCY (%)	---- INTERRUPTIBLE LOAD ---- WEEK DAY	WEEK NITE	WEEK END
JAN	1	5	527.	999.	0.	567.	0.	0.4	0.	0.	0.
FEB	2	5	426.	980.	0.	492.	0.	0.4	0.	0.	0.
MAR	3	5	416.	885.	0.	496.	0.	0.4	0.	0.	0.
APR	4	5	399.	818.	0.	444.	0.	0.5	0.	0.	0.
MAY	5	5	444.	849.	0.	488.	0.	0.5	0.	0.	0.
JUN	6	5	423.	941.	0.	476.	0.	0.5	0.	0.	0.
JUL	7	5	447.	963.	0.	510.	0.	0.5	0.	0.	0.
AUG	8	5	488.	979.	0.	552.	0.	0.4	0.	0.	0.
SEP	9	5	441.	898.	0.	496.	0.	0.5	0.	0.	0.
OCT	10	5	500.	941.	0.	532.	0.	0.5	0.	0.	0.
NOV	11	5	463.	939.	0.	496.	0.	0.4	0.	0.	0.
DEC	12	5	514.	1007.	0.	555.	0.	0.4	0.	0.	0.

********** DEMAND INPUT SUMMARY FOR 1988 **********

FOR AREA 7

	LOAD SHAPE	LOAD AREA	MIN MW	-- PEAK DEMAND -- MW	DEV(%)	---- ENERGY ----- GWH	DEV(%)	ENERGY/PEAK INCONSISTENCY (%)	---- INTERRUPTIBLE LOAD ---- WEEK DAY	WEEK NITE	WEEK END
JAN	1	5	176.	333.	0.	189.	0.	0.4	0.	0.	0.
FEB	2	5	142.	327.	0.	164.	0.	0.5	0.	0.	0.
MAR	3	5	139.	295.	0.	165.	0.	0.4	0.	0.	0.
APR	4	5	133.	273.	0.	148.	0.	0.5	0.	0.	0.
MAY	5	5	105.	200.	0.	115.	0.	0.5	0.	0.	0.
JUN	6	5	100.	222.	0.	112.	0.	0.5	0.	0.	0.
JUL	7	5	105.	227.	0.	121.	0.	0.5	0.	0.	0.
AUG	8	5	115.	230.	0.	130.	0.	0.4	0.	0.	0.
SEP	9	5	104.	211.	0.	117.	0.	0.5	0.	0.	0.
OCT	10	5	118.	222.	0.	125.	0.	0.5	0.	0.	0.
NOV	11	5	154.	313.	0.	165.	0.	0.4	0.	0.	0.
DEC	12	5	171.	336.	0.	185.	0.	0.4	0.	0.	0.

********** DEMAND INPUT SUMMARY FOR 1988 **********

FOR AREA 8

	LOAD SHAPE	LOAD AREA	MIN MW	-- PEAK DEMAND -- MW	DEV(%)	---- ENERGY ----- GWH	DEV(%)	ENERGY/PEAK INCONSISTENCY (%)	---- INTERRUPTIBLE LOAD ---- WEEK DAY	WEEK NITE	WEEK END
JAN	1	5	94.	178.	0.	101.	0.	0.4	0.	0.	0.
FEB	2	5	76.	174.	0.	87.	0.	0.4	0.	0.	0.
MAR	3	5	74.	157.	0.	88.	0.	0.4	0.	0.	0.
APR	4	5	71.	146.	0.	79.	0.	0.5	0.	0.	0.
MAY	5	5	61.	117.	0.	67.	0.	0.5	0.	0.	0.
JUN	6	5	58.	129.	0.	65.	0.	0.5	0.	0.	0.
JUL	7	5	61.	132.	0.	71.	0.	0.5	0.	0.	0.
AUG	8	5	67.	134.	0.	76.	0.	0.4	0.	0.	0.
SEP	9	5	61.	123.	0.	66.	0.	0.5	0.	0.	0.
OCT	10	5	69.	129.	0.	73.	0.	0.5	0.	0.	0.
NOV	11	5	82.	167.	0.	86.	0.	0.4	0.	0.	0.
DEC	12	5	91.	179.	0.	99.	0.	0.4	0.	0.	0.

********** DEMAND INPUT SUMMARY FOR 1988 **********

FOR AREA 9

	LOAD SHAPE	LOAD AREA	MIN MW	-- PEAK DEMAND -- MW	DEV(%)	---- ENERGY ---- GWH	DEV(%)	ENERGY/PEAK INCONSISTENCY (%)	---- INTERRUPTIBLE LOAD ---- WEEK DAY	WEEK NITE	WEEK END
JAN	1	9	498.	1040.	0.	558.	0.	3.9	0.	0.	0.
FEB	2	9	450.	1014.	0.	477.	0.	7.0	0.	0.	0.
MAR	3	9	432.	977.	0.	516.	0.	5.8	0.	0.	0.
APR	4	9	411.	919.	0.	467.	0.	5.7	0.	0.	0.
MAY	5	9	386.	919.	0.	497.	0.	-2.5	0.	0.	0.
JUN	6	9	381.	1046.	0.	498.	0.	-4.6	0.	0.	0.
JUL	7	9	434.	1120.	0.	570.	0.	-5.7	0.	0.	0.
AUG	8	9	460.	1046.	0.	558.	0.	-1.5	0.	0.	0.
SEP	9	9	435.	1030.	0.	541.	0.	-5.9	0.	0.	0.
OCT	10	9	437.	935.	0.	497.	0.	4.9	0.	0.	0.
NOV	11	9	447.	1016.	0.	505.	0.	3.4	0.	0.	0.
DEC	12	9	480.	1059.	0.	552.	0.	2.5	0.	0.	0.

********** DEMAND INPUT SUMMARY FOR 1988 **********

FOR AREA 10

	LOAD SHAPE	LOAD AREA	MIN MW	-- PEAK DEMAND -- MW	DEV(%)	---- ENERGY ---- GWH	DEV(%)	ENERGY/PEAK INCONSISTENCY (%)	---- INTERRUPTIBLE LOAD ---- WEEK DAY	WEEK NITE	WEEK END
JAN	1	10	352.	710.	0.	387.	0.	1.1	0.	0.	0.
FEB	2	10	300.	661.	0.	331.	0.	1.3	0.	0.	0.
MAR	3	10	295.	617.	0.	346.	0.	1.3	0.	0.	0.
APR	4	10	295.	584.	0.	317.	0.	1.4	0.	0.	0.
MAY	5	10	291.	632.	0.	341.	0.	1.3	0.	0.	0.
JUN	6	10	285.	676.	0.	315.	0.	1.4	0.	0.	0.
JUL	7	10	327.	765.	0.	382.	0.	1.2	0.	0.	0.
AUG	8	10	345.	748.	0.	390.	0.	1.1	0.	0.	0.
SEP	9	10	321.	693.	0.	366.	0.	1.2	0.	0.	0.
OCT	10	10	325.	638.	0.	352.	0.	1.3	0.	0.	0.
NOV	11	10	335.	669.	0.	348.	0.	1.3	0.	0.	0.
DEC	12	10	370.	708.	0.	395.	0.	1.1	0.	0.	0.

********** DEMAND INPUT SUMMARY FOR 1988 **********

FOR AREA 11

	LOAD SHAPE	LOAD AREA	MIN MW	-- PEAK DEMAND -- MW	DEV(%)	---- ENERGY ----- GWH	DEV(%)	ENERGY/PEAK INCONSISTENCY (%)	---- INTERRUPTIBLE LOAD ---- WEEK DAY	WEEK NITE	WEEK END
JAN	1	11	276.	560.	0.	276.	0.	10.1	0.	0.	0.
FEB	2	11	252.	560.	0.	239.	0.	15.6	0.	0.	0.
MAR	3	11	261.	555.	0.	269.	0.	12.4	0.	0.	0.
APR	4	11	246.	522.	0.	242.	0.	14.0	0.	0.	0.
MAY	5	11	232.	645.	0.	330.	0.	-10.4	0.	0.	0.
JUN	6	11	222.	676.	0.	300.	0.	-8.3	0.	0.	0.
JUL	7	11	278.	805.	0.	391.	0.	-8.3	0.	0.	0.
AUG	8	11	292.	805.	0.	412.	0.	-8.9	0.	0.	0.
SEP	9	11	277.	701.	0.	348.	0.	-6.1	0.	0.	0.
OCT	10	11	268.	547.	0.	267.	0.	11.8	0.	0.	0.
NOV	11	11	272.	575.	0.	262.	0.	12.2	0.	0.	0.
DEC	12	11	269.	575.	0.	275.	0.	12.0	0.	0.	0.

********** DEMAND INPUT SUMMARY FOR 1988 **********

FOR AREA 12

	LOAD SHAPE	LOAD AREA	MIN MW	-- PEAK DEMAND -- MW	DEV(%)	---- ENERGY ----- GWH	DEV(%)	ENERGY/PEAK INCONSISTENCY (%)	---- INTERRUPTIBLE LOAD ---- WEEK DAY	WEEK NITE	WEEK END
JAN	1	12	1185.	2658.	0.	1331.	0.	2.4	0.	0.	0.
FEB	2	12	1059.	2587.	0.	1172.	0.	2.8	0.	0.	0.
MAR	3	12	1041.	2422.	0.	1266.	0.	2.5	0.	0.	0.
APR	4	12	950.	2268.	0.	1127.	0.	2.9	0.	0.	0.
MAY	5	12	835.	2082.	0.	986.	0.	3.2	0.	0.	0.
JUN	6	12	848.	2342.	0.	1051.	0.	3.1	0.	0.	0.
JUL	7	12	1127.	3380.	0.	1508.	0.	2.1	0.	0.	0.
AUG	8	12	1242.	3380.	0.	1594.	0.	2.0	0.	0.	0.
SEP	9	12	969.	2596.	0.	1148.	0.	2.8	0.	0.	0.
OCT	10	12	935.	2167.	0.	1087.	0.	2.9	0.	0.	0.
NOV	11	12	1085.	2611.	0.	1224.	0.	2.6	0.	0.	0.
DEC	12	12	1197.	2790.	0.	1408.	0.	2.3	0.	0.	0.

********** DEMAND INPUT SUMMARY FOR 1988 **********

FOR AREA 13

	LOAD SHAPE	LOAD AREA	MIN MW	-- PEAK DEMAND -- MW	DEV(%)	---- ENERGY ---- GWH	DEV(%)	ENERGY/PEAK INCONSISTENCY (%)	---- INTERRUPTIBLE LOAD ---- WEEK DAY	WEEK NITE	WEEK END
JAN	1	13	271.	347.	0.	236.	0.	-2.9	0.	0.	0.
FEB	2	13	242.	327.	0.	204.	0.	-3.3	0.	0.	0.
MAR	3	13	254.	325.	0.	223.	0.	-3.1	0.	0.	0.
APR	4	13	240.	320.	0.	207.	0.	-3.3	0.	0.	0.
MAY	5	13	106.	302.	0.	181.	0.	-4.2	0.	0.	0.
JUN	6	13	219.	302.	0.	193.	0.	-3.9	0.	0.	0.
JUL	7	13	219.	304.	0.	200.	0.	-3.8	0.	0.	0.
AUG	8	13	220.	301.	0.	206.	0.	-3.7	0.	0.	0.
SEP	9	13	200.	307.	0.	187.	0.	-4.0	0.	0.	0.
OCT	10	13	236.	324.	0.	212.	0.	-3.6	0.	0.	0.
NOV	11	13	225.	315.	0.	199.	0.	-3.5	0.	0.	0.
DEC	12	13	238.	327.	0.	220.	0.	-3.1	0.	0.	0.

********** DEMAND INPUT SUMMARY FOR 1988 **********

FOR AREA 14

	LOAD SHAPE	LOAD AREA	MIN MW	-- PEAK DEMAND -- MW	DEV(%)	---- ENERGY ---- GWH	DEV(%)	ENERGY/PEAK INCONSISTENCY (%)	---- INTERRUPTIBLE LOAD ---- WEEK DAY	WEEK NITE	WEEK END
JAN	1	13	635.	813.	0.	553.	0.	-2.9	0.	0.	0.
FEB	2	13	565.	766.	0.	477.	0.	-3.4	0.	0.	0.
MAR	3	13	594.	760.	0.	523.	0.	-3.1	0.	0.	0.
APR	4	13	561.	749.	0.	485.	0.	-3.3	0.	0.	0.
MAY	5	13	234.	666.	0.	399.	0.	-4.2	0.	0.	0.
JUN	6	13	483.	666.	0.	425.	0.	-3.9	0.	0.	0.
JUL	7	13	484.	670.	0.	440.	0.	-3.8	0.	0.	0.
AUG	8	13	485.	664.	0.	454.	0.	-3.7	0.	0.	0.
SEP	9	13	440.	677.	0.	411.	0.	-4.0	0.	0.	0.
OCT	10	13	520.	714.	0.	467.	0.	-3.5	0.	0.	0.
NOV	11	13	517.	724.	0.	458.	0.	-3.5	0.	0.	0.
DEC	12	13	547.	753.	0.	506.	0.	-3.1	0.	0.	0.

********** DEMAND INPUT SUMMARY FOR 1988 **********

FOR AREA 15

	LOAD SHAPE	LOAD AREA	MIN MW	-- PEAK DEMAND -- MW	DEV(%)	---- ENERGY ---- GWH	DEV(%)	ENERGY/PEAK INCONSISTENCY (%)	---- INTERRUPTIBLE LOAD ---- WEEK DAY	WEEK NITE	WEEK END
JAN	1	15	1922.	4275.	0.	2213.	0.	4.3	0.	0.	0.
FEB	2	15	1712.	4227.	0.	1935.	0.	4.9	0.	0.	0.
MAR	3	15	1669.	4108.	0.	2015.	0.	4.7	0.	0.	0.
APR	4	15	1720.	4297.	0.	2006.	0.	4.7	0.	0.	0.
MAY	5	15	1317.	5071.	0.	2000.	0.	4.7	0.	0.	0.
JUN	6	15	1891.	6270.	0.	2526.	0.	3.8	0.	0.	0.
JUL	7	15	1985.	6270.	0.	2730.	0.	3.5	0.	0.	0.
AUG	8	15	2061.	6270.	0.	2690.	0.	3.5	0.	0.	0.
SEP	9	15	1907.	6270.	0.	2395.	0.	4.0	0.	0.	0.
OCT	10	15	1908.	4743.	0.	2361.	0.	4.0	0.	0.	0.
NOV	11	15	1727.	4223.	0.	2031.	0.	4.6	0.	0.	0.
DEC	12	15	1877.	4316.	0.	2188.	0.	4.3	0.	0.	0.

********** DEMAND INPUT SUMMARY FOR 1988 **********

FOR AREA 16

	LOAD SHAPE	LOAD AREA	MIN MW	-- PEAK DEMAND -- MW	DEV(%)	---- ENERGY ---- GWH	DEV(%)	ENERGY/PEAK INCONSISTENCY (%)	---- INTERRUPTIBLE LOAD ---- WEEK DAY	WEEK NITE	WEEK END
JAN	1	13	74.	95.	0.	65.	0.	-2.9	0.	0.	0.
FEB	2	13	66.	90.	0.	56.	0.	-3.4	0.	0.	0.
MAR	3	13	70.	89.	0.	61.	0.	-3.1	0.	0.	0.
APR	4	13	66.	88.	0.	57.	0.	-3.3	0.	0.	0.
MAY	5	13	25.	71.	0.	42.	0.	-4.2	0.	0.	0.
JUN	6	13	51.	71.	0.	45.	0.	-3.9	0.	0.	0.
JUL	7	13	51.	71.	0.	47.	0.	-3.8	0.	0.	0.
AUG	8	13	51.	70.	0.	48.	0.	-3.7	0.	0.	0.
SEP	9	13	47.	72.	0.	44.	0.	-4.0	0.	0.	0.
OCT	10	13	55.	76.	0.	50.	0.	-3.5	0.	0.	0.
NOV	11	13	61.	86.	0.	54.	0.	-3.5	0.	0.	0.
DEC	12	13	65.	89.	0.	60.	0.	-3.2	0.	0.	0.

********** DEMAND INPUT SUMMARY FOR 1988 **********

FOR AREA 17

	LOAD SHAPE	LOAD AREA	MIN MW	-- PEAK DEMAND -- MW	DEV(%)	---- ENERGY ---- GWH	DEV(%)	ENERGY/PEAK INCONSISTENCY (%)	---- INTERRUPTIBLE LOAD ---- WEEK DAY	WEEK NITE	WEEK END
JAN	1	13	124.	158.	0.	108.	0.	-2.9	0.	0.	0.
FEB	2	13	110.	149.	0.	93.	0.	-3.3	0.	0.	0.
MAR	3	13	116.	148.	0.	102.	0.	-3.1	0.	0.	0.
APR	4	13	109.	146.	0.	95.	0.	-3.3	0.	0.	0.
MAY	5	13	38.	109.	0.	66.	0.	-4.2	0.	0.	0.
JUN	6	13	79.	109.	0.	70.	0.	-3.9	0.	0.	0.
JUL	7	13	79.	110.	0.	72.	0.	-3.8	0.	0.	0.
AUG	8	13	80.	109.	0.	75.	0.	-3.6	0.	0.	0.
SEP	9	13	72.	111.	0.	67.	0.	-4.0	0.	0.	0.
OCT	10	13	85.	117.	0.	77.	0.	-3.6	0.	0.	0.
NOV	11	13	102.	143.	0.	90.	0.	-3.4	0.	0.	0.
DEC	12	13	108.	149.	0.	100.	0.	-3.1	0.	0.	0.

********** DEMAND INPUT SUMMARY FOR 1988 **********

FOR AREA 18

	LOAD SHAPE	LOAD AREA	MIN MW	-- PEAK DEMAND -- MW	DEV(%)	---- ENERGY ---- GWH	DEV(%)	ENERGY/PEAK INCONSISTENCY (%)	---- INTERRUPTIBLE LOAD ---- WEEK DAY	WEEK NITE	WEEK END
JAN	1	13	133.	170.	0.	115.	0.	-2.9	0.	0.	0.
FEB	2	13	116.	160.	0.	100.	0.	-3.4	0.	0.	0.
MAR	3	13	124.	159.	0.	109.	0.	-3.1	0.	0.	0.
APR	4	13	117.	156.	0.	101.	0.	-3.3	0.	0.	0.
MAY	5	13	38.	109.	0.	66.	0.	-4.2	0.	0.	0.
JUN	6	13	79.	109.	0.	70.	0.	-3.9	0.	0.	0.
JUL	7	13	79.	110.	0.	72.	0.	-3.8	0.	0.	0.
AUG	8	13	80.	109.	0.	75.	0.	-3.6	0.	0.	0.
SEP	9	13	72.	111.	0.	67.	0.	-4.0	0.	0.	0.
OCT	10	13	85.	117.	0.	77.	0.	-3.6	0.	0.	0.
NOV	11	13	114.	160.	0.	101.	0.	-3.5	0.	0.	0.
DEC	12	13	121.	167.	0.	112.	0.	-3.2	0.	0.	0.

********** DEMAND INPUT SUMMARY FOR 1988 **********

FOR AREA 19

	LOAD SHAPE	LOAD AREA	MIN MW	-- PEAK DEMAND -- MW	DEV(%)	---- ENERGY ---- GWH	DEV(%)	ENERGY/PEAK INCONSISTENCY (%)	---- INTERRUPTIBLE LOAD ---- WEEK DAY	WEEK NITE	WEEK END
JAN	1	5	47.	89.	0.	50.	0.	0.4	0.	0.	0.
FEB	2	5	38.	87.	0.	44.	0.	0.4	0.	0.	0.
MAR	3	5	37.	79.	0.	44.	0.	0.5	0.	0.	0.
APR	4	5	35.	73.	0.	39.	0.	0.5	0.	0.	0.
MAY	5	5	26.	50.	0.	29.	0.	0.6	0.	0.	0.
JUN	6	5	25.	55.	0.	28.	0.	0.6	0.	0.	0.
JUL	7	5	26.	57.	0.	30.	0.	0.4	0.	0.	0.
AUG	8	5	29.	58.	0.	32.	0.	0.4	0.	0.	0.
SEP	9	5	26.	53.	0.	29.	0.	0.5	0.	0.	0.
OCT	10	5	29.	55.	0.	31.	0.	0.5	0.	0.	0.
NOV	11	5	41.	83.	0.	44.	0.	0.4	0.	0.	0.
DEC	12	5	46.	90.	0.	49.	0.	0.4	0.	0.	0.

********** DEMAND INPUT SUMMARY FOR 1988 **********

FOR AREA 20

	LOAD SHAPE	LOAD AREA	MIN MW	-- PEAK DEMAND -- MW	DEV(%)	---- ENERGY ---- GWH	DEV(%)	ENERGY/PEAK INCONSISTENCY (%)	---- INTERRUPTIBLE LOAD ---- WEEK DAY	WEEK NITE	WEEK END
JAN	1	13	25.	32.	0.	22.	0.	-3.0	0.	0.	0.
FEB	2	13	22.	30.	0.	19.	0.	-3.5	0.	0.	0.
MAR	3	13	24.	30.	0.	21.	0.	-3.1	0.	0.	0.
APR	4	13	22.	30.	0.	19.	0.	-3.3	0.	0.	0.
MAY	5	13	10.	28.	0.	17.	0.	-4.2	0.	0.	0.
JUN	6	13	21.	28.	0.	18.	0.	-3.8	0.	0.	0.
JUL	7	13	21.	29.	0.	19.	0.	-3.6	0.	0.	0.
AUG	8	13	21.	28.	0.	19.	0.	-3.6	0.	0.	0.
SEP	9	13	19.	29.	0.	17.	0.	-4.2	0.	0.	0.
OCT	10	13	22.	30.	0.	20.	0.	-3.6	0.	0.	0.
NOV	11	13	21.	29.	0.	18.	0.	-3.5	0.	0.	0.
DEC	12	13	22.	30.	0.	20.	0.	-3.2	0.	0.	0.

********** DEMAND INPUT SUMMARY FOR 1988 **********

FOR AREA 21

	LOAD SHAPE	LOAD AREA	MIN MW	-- PEAK DEMAND -- MW	DEV(%)	---- ENERGY ----- GWH	DEV(%)	ENERGY/PEAK INCONSISTENCY (%)	---- INTERRUPTIBLE LOAD ---- WEEK DAY	WEEK NITE	WEEK END
JAN	1	5	47.	89.	0.	50.	0.	0.4	0.	0.	0.
FEB	2	5	38.	87.	0.	44.	0.	0.4	0.	0.	0.
MAR	3	5	37.	79.	0.	44.	0.	0.5	0.	0.	0.
APR	4	5	35.	73.	0.	39.	0.	0.5	0.	0.	0.
MAY	5	5	35.	67.	0.	38.	0.	0.5	0.	0.	0.
JUN	6	5	33.	74.	0.	37.	0.	0.5	0.	0.	0.
JUL	7	5	35.	76.	0.	40.	0.	0.5	0.	0.	0.
AUG	8	5	38.	77.	0.	43.	0.	0.4	0.	0.	0.
SEP	9	5	35.	70.	0.	39.	0.	0.5	0.	0.	0.
OCT	10	5	39.	74.	0.	42.	0.	0.4	0.	0.	0.
NOV	11	5	41.	83.	0.	44.	0.	0.4	0.	0.	0.
DEC	12	5	46.	90.	0.	49.	0.	0.4	0.	0.	0.

********** DEMAND INPUT SUMMARY FOR 1988 **********

FOR AREA 22

	LOAD SHAPE	LOAD AREA	MIN MW	-- PEAK DEMAND -- MW	DEV(%)	---- ENERGY ----- GWH	DEV(%)	ENERGY/PEAK INCONSISTENCY (%)	---- INTERRUPTIBLE LOAD ---- WEEK DAY	WEEK NITE	WEEK END
JAN	1	26	8.	25.	0.	13.	0.	-5.1	0.	0.	0.
FEB	2	26	7.	24.	0.	11.	0.	-5.9	0.	0.	0.
MAR	3	26	7.	24.	0.	12.	0.	-5.5	0.	0.	0.
APR	4	26	8.	23.	0.	11.	0.	-5.6	0.	0.	0.
MAY	5	26	8.	25.	0.	12.	0.	-5.5	0.	0.	0.
JUN	6	26	9.	25.	0.	13.	0.	-5.2	0.	0.	0.
JUL	7	26	9.	25.	0.	14.	0.	-4.8	0.	0.	0.
AUG	8	26	9.	25.	0.	13.	0.	-5.1	0.	0.	0.
SEP	9	26	9.	25.	0.	13.	0.	-5.3	0.	0.	0.
OCT	10	26	9.	27.	0.	14.	0.	-4.8	0.	0.	0.
NOV	11	26	8.	24.	0.	12.	0.	-5.8	0.	0.	0.
DEC	12	26	8.	25.	0.	13.	0.	-5.3	0.	0.	0.

********** DEMAND INPUT SUMMARY FOR 1988 **********

FOR AREA 23

	LOAD SHAPE	LOAD AREA	MIN MW	-- PEAK DEMAND -- MW	DEV(%)	---- ENERGY ----- GWH	DEV(%)	ENERGY/PEAK INCONSISTENCY (%)	---- INTERRUPTIBLE LOAD ---- WEEK DAY	WEEK NITE	WEEK END
JAN	1	15	43.	95.	0.	49.	0.	4.3	0.	0.	0.
FEB	2	15	38.	94.	0.	43.	0.	4.9	0.	0.	0.
MAR	3	15	37.	91.	0.	45.	0.	4.7	0.	0.	0.
APR	4	15	38.	95.	0.	45.	0.	4.7	0.	0.	0.
MAY	5	15	31.	119.	0.	47.	0.	4.7	0.	0.	0.
JUN	6	15	44.	147.	0.	59.	0.	3.8	0.	0.	0.
JUL	7	15	47.	147.	0.	64.	0.	3.5	0.	0.	0.
AUG	8	15	48.	147.	0.	63.	0.	3.5	0.	0.	0.
SEP	9	15	45.	147.	0.	56.	0.	4.0	0.	0.	0.
OCT	10	15	45.	111.	0.	55.	0.	4.0	0.	0.	0.
NOV	11	15	40.	99.	0.	48.	0.	4.6	0.	0.	0.
DEC	12	15	44.	101.	0.	51.	0.	4.3	0.	0.	0.

********** DEMAND INPUT SUMMARY FOR 1988 **********

FOR AREA 24

	LOAD SHAPE	LOAD AREA	MIN MW	-- PEAK DEMAND -- MW	DEV(%)	---- ENERGY ----- GWH	DEV(%)	ENERGY/PEAK INCONSISTENCY (%)	---- INTERRUPTIBLE LOAD ---- WEEK DAY	WEEK NITE	WEEK END
JAN	1	26	52.	167.	0.	83.	0.	-5.1	0.	0.	0.
FEB	2	26	47.	157.	0.	72.	0.	-5.8	0.	0.	0.
MAR	3	26	47.	156.	0.	79.	0.	-5.3	0.	0.	0.
APR	4	26	50.	154.	0.	75.	0.	-5.6	0.	0.	0.
MAY	5	26	52.	158.	0.	79.	0.	-5.3	0.	0.	0.
JUN	6	26	56.	158.	0.	83.	0.	-5.1	0.	0.	0.
JUL	7	26	59.	159.	0.	86.	0.	-4.9	0.	0.	0.
AUG	8	26	57.	158.	0.	84.	0.	-5.0	0.	0.	0.
SEP	9	26	58.	161.	0.	82.	0.	-5.2	0.	0.	0.
OCT	10	26	55.	170.	0.	90.	0.	-4.7	0.	0.	0.
NOV	11	26	50.	154.	0.	76.	0.	-5.6	0.	0.	0.
DEC	12	26	52.	160.	0.	82.	0.	-5.2	0.	0.	0.

********** DEMAND INPUT SUMMARY FOR 1988 **********

FOR AREA 25

	LOAD SHAPE	LOAD AREA	MIN MW	-- PEAK DEMAND -- MW	DEV(%)	---- ENERGY ---- GWH	DEV(%)	ENERGY/PEAK INCONSISTENCY (%)	---- INTERRUPTIBLE LOAD ---- WEEK DAY	WEEK NITE	WEEK END
JAN	1	15	281.	624.	0.	323.	0.	4.3	0.	0.	0.
FEB	2	15	250.	617.	0.	283.	0.	4.9	0.	0.	0.
MAR	3	15	244.	600.	0.	294.	0.	4.7	0.	0.	0.
APR	4	15	251.	628.	0.	293.	0.	4.7	0.	0.	0.
MAY	5	15	196.	755.	0.	298.	0.	4.7	0.	0.	0.
JUN	6	15	281.	933.	0.	376.	0.	3.8	0.	0.	0.
JUL	7	15	295.	933.	0.	407.	0.	3.5	0.	0.	0.
AUG	8	15	307.	933.	0.	401.	0.	3.5	0.	0.	0.
SEP	9	15	284.	933.	0.	357.	0.	4.0	0.	0.	0.
OCT	10	15	284.	706.	0.	352.	0.	4.0	0.	0.	0.
NOV	11	15	257.	629.	0.	302.	0.	4.6	0.	0.	0.
DEC	12	15	279.	643.	0.	326.	0.	4.3	0.	0.	0.

********** DEMAND INPUT SUMMARY FOR 1988 **********

FOR AREA 26

	LOAD SHAPE	LOAD AREA	MIN MW	-- PEAK DEMAND -- MW	DEV(%)	---- ENERGY ---- GWH	DEV(%)	ENERGY/PEAK INCONSISTENCY (%)	---- INTERRUPTIBLE LOAD ---- WEEK DAY	WEEK NITE	WEEK END
JAN	1	26	353.	1145.	0.	567.	0.	-5.0	0.	0.	0.
FEB	2	26	320.	1078.	0.	494.	0.	-5.8	0.	0.	0.
MAR	3	26	325.	1070.	0.	541.	0.	-5.3	0.	0.	0.
APR	4	26	345.	1055.	0.	515.	0.	-5.6	0.	0.	0.
MAY	5	26	349.	1064.	0.	533.	0.	-5.4	0.	0.	0.
JUN	6	26	377.	1063.	0.	555.	0.	-5.1	0.	0.	0.
JUL	7	26	399.	1069.	0.	580.	0.	-4.9	0.	0.	0.
AUG	8	26	385.	1059.	0.	566.	0.	-5.0	0.	0.	0.
SEP	9	26	392.	1080.	0.	552.	0.	-5.2	0.	0.	0.
OCT	10	26	367.	1140.	0.	603.	0.	-4.7	0.	0.	0.
NOV	11	26	333.	1034.	0.	510.	0.	-5.6	0.	0.	0.
DEC	12	26	346.	1076.	0.	552.	0.	-5.2	0.	0.	0.

********** DEMAND INPUT SUMMARY FOR 1988 **********

FOR AREA 27

	LOAD SHAPE	LOAD AREA	MIN MW	-- PEAK DEMAND -- MW	DEV(%)	---- ENERGY ---- GWH	DEV(%)	ENERGY/PEAK INCONSISTENCY (%)	---- INTERRUPTIBLE LOAD ---- WEEK DAY	WEEK NITE	WEEK END
JAN	1	12	18.	41.	0.	21.	0.	0.5	0.	0.	0.
FEB	2	12	16.	40.	0.	18.	0.	0.5	0.	0.	0.
MAR	3	12	16.	37.	0.	20.	0.	0.6	0.	0.	0.
APR	4	12	15.	35.	0.	18.	0.	0.6	0.	0.	0.
MAY	5	12	42.	105.	0.	41.	0.	20.5	0.	0.	0.
JUN	6	12	43.	119.	0.	44.	0.	19.3	0.	0.	0.
JUL	7	12	41.	122.	0.	45.	0.	19.1	0.	0.	0.
AUG	8	12	45.	122.	0.	48.	0.	18.0	0.	0.	0.
SEP	9	12	40.	107.	0.	38.	0.	21.7	0.	0.	0.
OCT	10	12	47.	110.	0.	46.	0.	18.7	0.	0.	0.
NOV	11	12	55.	133.	0.	54.	0.	16.5	0.	0.	0.
DEC	12	12	61.	142.	0.	63.	0.	14.4	0.	0.	0.

1989

********** DEMAND INPUT SUMMARY FOR 1989 **********

FOR AREA 1

	LOAD SHAPE	LOAD AREA	MIN MW	-- PEAK DEMAND -- MW	DEV(%)	---- ENERGY ----- GWH	DEV(%)	ENERGY/PEAK INCONSISTENCY (%)	---- INTERRUPTIBLE LOAD ---- WEEK DAY	WEEK NITE	WEEK END	POOL -- PEAK --
JAN	1	1	1241.	2266.	0.	1293.	0.	2.0	0.	0.	0.	21183.
FEB	2	1	1116.	2196.	0.	1109.	0.	0.0	0.	0.	0.	20579.
MAR	3	1	1033.	2009.	0.	1133.	0.	2.7	0.	0.	0.	19382.
APR	4	1	1053.	2027.	0.	1108.	0.	2.0	0.	0.	0.	19107.
MAY	5	1	1006.	1916.	0.	1110.	0.	-1.0	0.	0.	0.	19026.
JUN	6	1	938.	2008.	0.	1023.	0.	1.5	0.	0.	0.	21734.
JUL	7	1	964.	2030.	0.	1097.	0.	-0.2	0.	0.	0.	22963.
AUG	8	1	1023.	2026.	0.	1149.	0.	-0.7	0.	0.	0.	23050.
SEP	9	1	1002.	1977.	0.	1106.	0.	0.2	0.	0.	0.	21572.
OCT	10	1	1085.	1969.	0.	1120.	0.	2.8	0.	0.	0.	19199.
NOV	11	1	1091.	2124.	0.	1130.	0.	3.4	0.	0.	0.	20359.
DEC	12	1	1162.	2243.	0.	1244.	0.	2.5	0.	0.	0.	21395.

********** DEMAND INPUT SUMMARY FOR 1989 **********

FOR AREA 2

	LOAD SHAPE	LOAD AREA	MIN MW	-- PEAK DEMAND -- MW	DEV(%)	---- ENERGY ----- GWH	DEV(%)	ENERGY/PEAK INCONSISTENCY (%)	---- INTERRUPTIBLE LOAD ---- WEEK DAY	WEEK NITE	WEEK END
JAN	1	1	566.	1034.	0.	590.	0.	2.0	0.	0.	0.
FEB	2	1	509.	1002.	0.	506.	0.	0.0	0.	0.	0.
MAR	3	1	471.	917.	0.	517.	0.	2.7	0.	0.	0.
APR	4	1	480.	925.	0.	506.	0.	2.0	0.	0.	0.
MAY	5	1	436.	834.	0.	483.	0.	-1.0	0.	0.	0.
JUN	6	1	408.	875.	0.	446.	0.	1.5	0.	0.	0.
JUL	7	1	420.	884.	0.	478.	0.	-0.2	0.	0.	0.
AUG	8	1	446.	882.	0.	500.	0.	-0.7	0.	0.	0.
SEP	9	1	435.	861.	0.	482.	0.	0.2	0.	0.	0.
OCT	10	1	473.	657.	0.	488.	0.	2.8	0.	0.	0.
NOV	11	1	503.	979.	0.	521.	0.	3.4	0.	0.	0.
DEC	12	1	536.	1034.	0.	574.	0.	2.5	0.	0.	0.

********** DEMAND INPUT SUMMARY FOR 1989 **********

FOR AREA 3

	LOAD SHAPE	LOAD AREA	MIN MW	-- PEAK DEMAND -- MW	DEV(%)	---- ENERGY ----- GWH	DEV(%)	ENERGY/PEAK INCONSISTENCY (%)	---- INTERRUPTIBLE LOAD ---- WEEK DAY	WEEK NITE	WEEK END
JAN	1	1	464.	847.	0.	483.	0.	2.0	0.	0.	0.
FEB	2	1	417.	821.	0.	415.	0.	0.0	0.	0.	0.
MAR	3	1	366.	751.	0.	424.	0.	2.7	0.	0.	0.
APR	4	1	393.	757.	0.	414.	0.	2.0	0.	0.	0.
MAY	5	1	374.	713.	0.	413.	0.	-1.0	0.	0.	0.
JUN	6	1	349.	747.	0.	381.	0.	1.5	0.	0.	0.
JUL	7	1	359.	756.	0.	406.	0.	-0.2	0.	0.	0.
AUG	8	1	381.	754.	0.	428.	0.	-0.7	0.	0.	0.
SEP	9	1	373.	736.	0.	412.	0.	0.2	0.	0.	0.
OCT	10	1	404.	733.	0.	417.	0.	2.8	0.	0.	0.
NOV	11	1	410.	798.	0.	424.	0.	3.4	0.	0.	0.
DEC	12	1	437.	843.	0.	467.	0.	2.5	0.	0.	0.

********** DEMAND INPUT SUMMARY FOR 1989 **********

FOR AREA 4

	LOAD SHAPE	LOAD AREA	MIN MW	-- PEAK DEMAND -- MW	DEV(%)	---- ENERGY ----- GWH	DEV(%)	ENERGY/PEAK INCONSISTENCY (%)	---- INTERRUPTIBLE LOAD ---- WEEK DAY	WEEK NITE	WEEK END
JAN	1	1	927.	1694.	0.	966.	0.	2.0	0.	0.	0.
FEB	2	1	834.	1642.	0.	829.	0.	0.0	0.	0.	0.
MAR	3	1	772.	1502.	0.	847.	0.	2.7	0.	0.	0.
APR	4	1	787.	1515.	0.	828.	0.	2.0	0.	0.	0.
MAY	5	1	728.	1387.	0.	804.	0.	-1.0	0.	0.	0.
JUN	6	1	679.	1454.	0.	741.	0.	1.5	0.	0.	0.
JUL	7	1	698.	1470.	0.	794.	0.	-0.2	0.	0.	0.
AUG	8	1	741.	1467.	0.	832.	0.	-0.7	0.	0.	0.
SEP	9	1	725.	1432.	0.	801.	0.	0.2	0.	0.	0.
OCT	10	1	786.	1425.	0.	811.	0.	2.8	0.	0.	0.
NOV	11	1	822.	1601.	0.	852.	0.	3.4	0.	0.	0.
DEC	12	1	876.	1691.	0.	938.	0.	2.5	0.	0.	0.

********** DEMAND INPUT SUMMARY FOR 1989 **********

FOR AREA 5

	LOAD SHAPE	LOAD AREA	MIN MW	-- PEAK DEMAND -- MW	DEV(%)	---- ENERGY ----- GWH	DEV(%)	ENERGY/PEAK INCONSISTENCY (%)	---- INTERRUPTIBLE LOAD ---- WEEK DAY	WEEK NITE	WEEK END
JAN	1	5	207.	545.	0.	309.	0.	0.4	0.	0.	0.
FEB	2	5	232.	534.	0.	268.	0.	-3.1	0.	0.	0.
MAR	3	5	227.	463.	0.	270.	0.	0.4	0.	0.	0.
APR	4	5	217.	446.	0.	242.	0.	0.5	0.	0.	0.
MAY	5	5	205.	391.	0.	225.	0.	0.5	0.	0.	0.
JUN	6	5	195.	433.	0.	219.	0.	0.5	0.	0.	0.
JUL	7	5	206.	443.	0.	238.	0.	0.5	0.	0.	0.
AUG	8	5	225.	451.	0.	254.	0.	0.4	0.	0.	0.
SEP	9	5	203.	413.	0.	230.	0.	0.5	0.	0.	0.
OCT	10	5	230.	433.	0.	245.	0.	0.5	0.	0.	0.
NOV	11	5	252.	512.	0.	270.	0.	0.4	0.	0.	0.
DEC	12	5	280.	549.	0.	303.	0.	0.4	0.	0.	0.

********** DEMAND INPUT SUMMARY FOR 1989 **********

FOR AREA 6

	LOAD SHAPE	LOAD AREA	MIN MW	-- PEAK DEMAND -- MW	DEV(%)	---- ENERGY ----- GWH	DEV(%)	ENERGY/PEAK INCONSISTENCY (%)	---- INTERRUPTIBLE LOAD ---- WEEK DAY	WEEK NITE	WEEK END
JAN	1	5	539.	1022.	0.	580.	0.	0.4	0.	0.	0.
FEB	2	5	436.	1002.	0.	503.	0.	-3.1	0.	0.	0.
MAR	3	5	426.	905.	0.	507.	0.	0.4	0.	0.	0.
APR	4	5	408.	837.	0.	454.	0.	0.5	0.	0.	0.
MAY	5	5	454.	867.	0.	499.	0.	0.5	0.	0.	0.
JUN	6	5	432.	961.	0.	486.	0.	0.5	0.	0.	0.
JUL	7	5	456.	983.	0.	527.	0.	0.5	0.	0.	0.
AUG	8	5	499.	1000.	0.	563.	0.	0.4	0.	0.	0.
SEP	9	5	450.	917.	0.	509.	0.	0.5	0.	0.	0.
OCT	10	5	510.	961.	0.	543.	0.	0.4	0.	0.	0.
NOV	11	5	473.	960.	0.	507.	0.	0.4	0.	0.	0.
DEC	12	5	525.	1029.	0.	567.	0.	0.4	0.	0.	0.

********** DEMAND INPUT SUMMARY FOR 1989 **********

FOR AREA 7

	LOAD SHAPE	LOAD AREA	MIN MW	-- PEAK DEMAND -- MW	DEV(%)	---- ENERGY ----- GWH	DEV(%)	ENERGY/PEAK INCONSISTENCY (%)	---- INTERRUPTIBLE LOAD ---- WEEK DAY	WEEK NITE	WEEK END
JAN	1	5	180.	341.	0.	193.	0.	0.4	0.	0.	0.
FEB	2	5	145.	334.	0.	168.	0.	-3.1	0.	0.	0.
MAR	3	5	142.	302.	0.	169.	0.	0.4	0.	0.	0.
APR	4	5	136.	279.	0.	151.	0.	0.5	0.	0.	0.
MAY	5	5	107.	204.	0.	117.	0.	0.5	0.	0.	0.
JUN	6	5	102.	226.	0.	114.	0.	0.5	0.	0.	0.
JUL	7	5	107.	231.	0.	124.	0.	0.5	0.	0.	0.
AUG	8	5	117.	235.	0.	133.	0.	0.4	0.	0.	0.
SEP	9	5	106.	216.	0.	120.	0.	0.5	0.	0.	0.
OCT	10	5	120.	226.	0.	128.	0.	0.4	0.	0.	0.
NOV	11	5	158.	320.	0.	169.	0.	0.4	0.	0.	0.
DEC	12	5	175.	343.	0.	189.	0.	0.4	0.	0.	0.

********** DEMAND INPUT SUMMARY FOR 1989 **********

FOR AREA 8

	LOAD SHAPE	LOAD AREA	MIN MW	-- PEAK DEMAND -- MW	DEV(%)	---- ENERGY ----- GWH	DEV(%)	ENERGY/PEAK INCONSISTENCY (%)	---- INTERRUPTIBLE LOAD ---- WEEK DAY	WEEK NITE	WEEK END
JAN	1	5	96.	182.	0.	103.	0.	0.4	0.	0.	0.
FEB	2	5	77.	178.	0.	89.	0.	-3.2	0.	0.	0.
MAR	3	5	76.	161.	0.	90.	0.	0.4	0.	0.	0.
APR	4	5	72.	149.	0.	81.	0.	0.4	0.	0.	0.
MAY	5	5	62.	119.	0.	68.	0.	0.5	0.	0.	0.
JUN	6	5	59.	132.	0.	67.	0.	0.5	0.	0.	0.
JUL	7	5	63.	135.	0.	72.	0.	0.4	0.	0.	0.
AUG	8	5	68.	137.	0.	77.	0.	0.4	0.	0.	0.
SEP	9	5	62.	126.	0.	70.	0.	0.4	0.	0.	0.
OCT	10	5	70.	132.	0.	75.	0.	0.5	0.	0.	0.
NOV	11	5	84.	171.	0.	90.	0.	0.4	0.	0.	0.
DEC	12	5	93.	183.	0.	101.	0.	0.4	0.	0.	0.

********** DEMAND INPUT SUMMARY FOR 1989 **********

FOR AREA 9

	LOAD SHAPE	LOAD AREA	MIN MW	-- PEAK DEMAND -- MW	DEV(%)	---- ENERGY ----- GWH	DEV(%)	ENERGY/PEAK INCONSISTENCY (%)	---- INTERRUPTIBLE LOAD ---- WEEK DAY	WEEK NITE	WEEK END
JAN	1	9	513.	1070.	0.	573.	0.	4.0	0.	0.	0.
FEB	2	9	462.	1043.	0.	490.	0.	3.8	0.	0.	0.
MAR	3	9	444.	1005.	0.	530.	0.	6.0	0.	0.	0.
APR	4	9	423.	945.	0.	480.	0.	5.9	0.	0.	0.
MAY	5	9	397.	944.	0.	510.	0.	-2.3	0.	0.	0.
JUN	6	9	391.	1074.	0.	510.	0.	-4.4	0.	0.	0.
JUL	7	9	446.	1150.	0.	584.	0.	-5.6	0.	0.	0.
AUG	8	9	473.	1074.	0.	572.	0.	-1.4	0.	0.	0.
SEP	9	9	446.	1058.	0.	554.	0.	-5.8	0.	0.	0.
OCT	10	9	449.	960.	0.	509.	0.	5.1	0.	0.	0.
NOV	11	9	459.	1044.	0.	518.	0.	3.6	0.	0.	0.
DEC	12	9	494.	1089.	0.	567.	0.	2.6	0.	0.	0.

********** DEMAND INPUT SUMMARY FOR 1989 **********

FOR AREA 10

	LOAD SHAPE	LOAD AREA	MIN MW	-- PEAK DEMAND -- MW	DEV(%)	---- ENERGY ----- GWH	DEV(%)	ENERGY/PEAK INCONSISTENCY (%)	---- INTERRUPTIBLE LOAD ---- WEEK DAY	WEEK NITE	WEEK END
JAN	1	10	359.	725.	0.	396.	0.	0.8	0.	0.	0.
FEB	2	10	307.	675.	0.	339.	0.	-2.6	0.	0.	0.
MAR	3	10	302.	630.	0.	354.	0.	0.9	0.	0.	0.
APR	4	10	301.	597.	0.	325.	0.	1.0	0.	0.	0.
MAY	5	10	297.	644.	0.	348.	0.	1.0	0.	0.	0.
JUN	6	10	291.	690.	0.	323.	0.	1.0	0.	0.	0.
JUL	7	10	333.	780.	0.	391.	0.	0.8	0.	0.	0.
AUG	8	10	352.	763.	0.	399.	0.	0.8	0.	0.	0.
SEP	9	10	327.	707.	0.	374.	0.	0.9	0.	0.	0.
OCT	10	10	331.	650.	0.	360.	0.	0.9	0.	0.	0.
NOV	11	10	342.	683.	0.	356.	0.	0.9	0.	0.	0.
DEC	12	10	378.	723.	0.	404.	0.	0.8	0.	0.	0.

********** DEMAND INPUT SUMMARY FOR 1989 **********

FOR AREA 11

	LOAD SHAPE	LOAD AREA	MIN MW	-- PEAK DEMAND -- MW	DEV(%)	---- ENERGY ----- GWH	DEV(%)	ENERGY/PEAK INCONSISTENCY (%)	---- INTERRUPTIBLE LOAD ---- WEEK DAY	WEEK NITE	WEEK END
JAN	1	11	264.	575.	0.	284.	0.	9.8	0.	0.	0.
FEB	2	11	259.	575.	0.	246.	0.	12.2	0.	0.	0.
MAR	3	11	268.	570.	0.	277.	0.	12.1	0.	0.	0.
APR	4	11	253.	536.	0.	249.	0.	13.6	0.	0.	0.
MAY	5	11	236.	657.	0.	337.	0.	-10.6	0.	0.	0.
JUN	6	11	226.	688.	0.	307.	0.	-8.5	0.	0.	0.
JUL	7	11	283.	820.	0.	399.	0.	-8.5	0.	0.	0.
AUG	8	11	298.	820.	0.	421.	0.	-9.1	0.	0.	0.
SEP	9	11	282.	714.	0.	355.	0.	-6.3	0.	0.	0.
OCT	10	11	273.	557.	0.	273.	0.	11.6	0.	0.	0.
NOV	11	11	279.	590.	0.	270.	0.	11.9	0.	0.	0.
DEC	12	11	276.	590.	0.	283.	0.	11.7	0.	0.	0.

********** DEMAND INPUT SUMMARY FOR 1989 **********

FOR AREA 12

	LOAD SHAPE	LOAD AREA	MIN MW	-- PEAK DEMAND -- MW	DEV(%)	---- ENERGY ----- GWH	DEV(%)	ENERGY/PEAK INCONSISTENCY (%)	---- INTERRUPTIBLE LOAD ---- WEEK DAY	WEEK NITE	WEEK END
JAN	1	12	1209.	2712.	0.	1373.	0.	1.3	0.	0.	0.
FEB	2	12	1080.	2639.	0.	1211.	0.	-2.0	0.	0.	0.
MAR	3	12	1062.	2471.	0.	1307.	0.	1.4	0.	0.	0.
APR	4	12	969.	2314.	0.	1165.	0.	1.5	0.	0.	0.
MAY	5	12	842.	2101.	0.	1010.	0.	1.8	0.	0.	0.
JUN	6	12	856.	2362.	0.	1075.	0.	1.7	0.	0.	0.
JUL	7	12	1137.	3410.	0.	1536.	0.	1.2	0.	0.	0.
AUG	8	12	1253.	3410.	0.	1623.	0.	1.1	0.	0.	0.
SEP	9	12	977.	2619.	0.	1173.	0.	1.5	0.	0.	0.
OCT	10	12	943.	2186.	0.	1112.	0.	1.6	0.	0.	0.
NOV	11	12	1107.	2662.	0.	1264.	0.	1.4	0.	0.	0.
DEC	12	12	1220.	2845.	0.	1451.	0.	1.2	0.	0.	0.

********** DEMAND INPUT SUMMARY FOR 1989 **********

FOR AREA 13

	LOAD SHAPE	LOAD AREA	MIN MW	-- PEAK DEMAND -- MW	DEV(%)	---- ENERGY ----- GWH	DEV(%)	ENERGY/PEAK INCONSISTENCY (%)	---- INTERRUPTIBLE LOAD ---- WEEK DAY	WEEK NITE	WEEK END
JAN	1	13	276.	353.	0.	241.	0.	-3.0	0.	0.	0.
FEB	2	13	246.	333.	0.	208.	0.	-7.2	0.	0.	0.
MAR	3	13	258.	330.	0.	227.	0.	-3.2	0.	0.	0.
APR	4	13	244.	326.	0.	211.	0.	-3.4	0.	0.	0.
MAY	5	13	108.	307.	0.	184.	0.	-4.4	0.	0.	0.
JUN	6	13	222.	306.	0.	196.	0.	-4.1	0.	0.	0.
JUL	7	13	223.	308.	0.	203.	0.	-3.9	0.	0.	0.
AUG	8	13	223.	305.	0.	209.	0.	-3.9	0.	0.	0.
SEP	9	13	203.	312.	0.	190.	0.	-4.2	0.	0.	0.
OCT	10	13	239.	329.	0.	215.	0.	-3.7	0.	0.	0.
NOV	11	13	230.	321.	0.	204.	0.	-3.6	0.	0.	0.
DEC	12	13	243.	335.	0.	225.	0.	-3.3	0.	0.	0.

********** DEMAND INPUT SUMMARY FOR 1989 **********

FOR AREA 14

	LOAD SHAPE	LOAD AREA	MIN MW	-- PEAK DEMAND -- MW	DEV(%)	---- ENERGY ----- GWH	DEV(%)	ENERGY/PEAK INCONSISTENCY (%)	---- INTERRUPTIBLE LOAD ---- WEEK DAY	WEEK NITE	WEEK END
JAN	1	13	635.	813.	0.	554.	0.	-3.0	0.	0.	0.
FEB	2	13	565.	766.	0.	478.	0.	-7.2	0.	0.	0.
MAR	3	13	595.	760.	0.	523.	0.	-3.2	0.	0.	0.
APR	4	13	561.	750.	0.	486.	0.	-3.5	0.	0.	0.
MAY	5	13	231.	658.	0.	395.	0.	-4.4	0.	0.	0.
JUN	6	13	478.	658.	0.	421.	0.	-4.1	0.	0.	0.
JUL	7	13	478.	662.	0.	436.	0.	-3.9	0.	0.	0.
AUG	8	13	480.	656.	0.	450.	0.	-3.8	0.	0.	0.
SEP	9	13	435.	669.	0.	407.	0.	-4.2	0.	0.	0.
OCT	10	13	514.	706.	0.	462.	0.	-3.7	0.	0.	0.
NOV	11	13	514.	720.	0.	456.	0.	-3.6	0.	0.	0.
DEC	12	13	544.	749.	0.	504.	0.	-3.3	0.	0.	0.

********** DEMAND INPUT SUMMARY FOR 1989 **********

FOR AREA 15

	LOAD SHAPE	LOAD AREA	MIN MW	-- PEAK DEMAND -- MW	DEV(%)	---- ENERGY ----- GWH	DEV(%)	ENERGY/PEAK INCONSISTENCY (%)	---- INTERRUPTIBLE LOAD ---- WEEK DAY	WEEK NITE	WEEK END
JAN	1	15	1932.	4298.	0.	2229.	0.	4.1	0.	0.	0.
FEB	2	15	1721.	4250.	0.	1950.	0.	1.3	0.	0.	0.
MAR	3	15	1678.	4130.	0.	2030.	0.	4.5	0.	0.	0.
APR	4	15	1729.	4320.	0.	2021.	0.	4.5	0.	0.	0.
MAY	5	15	1323.	5093.	0.	2012.	0.	4.5	0.	0.	0.
JUN	6	15	1899.	6297.	0.	2541.	0.	3.6	0.	0.	0.
JUL	7	15	1994.	6297.	0.	2746.	0.	3.4	0.	0.	0.
AUG	8	15	2070.	6297.	0.	2706.	0.	3.4	0.	0.	0.
SEP	9	15	1916.	6297.	0.	2409.	0.	3.8	0.	0.	0.
OCT	10	15	1916.	4764.	0.	2375.	0.	3.9	0.	0.	0.
NOV	11	15	1738.	4251.	0.	2048.	0.	4.5	0.	0.	0.
DEC	12	15	1889.	4344.	0.	2206.	0.	4.2	0.	0.	0.

********** DEMAND INPUT SUMMARY FOR 1989 **********

FOR AREA 16

	LOAD SHAPE	LOAD AREA	MIN MW	-- PEAK DEMAND -- MW	DEV(%)	---- ENERGY ----- GWH	DEV(%)	ENERGY/PEAK INCONSISTENCY (%)	---- INTERRUPTIBLE LOAD ---- WEEK DAY	WEEK NITE	WEEK END
JAN	1	13	75.	97.	0.	66.	0.	-3.0	0.	0.	0.
FEB	2	13	67.	91.	0.	57.	0.	-7.2	0.	0.	0.
MAR	3	13	71.	90.	0.	62.	0.	-3.2	0.	0.	0.
APR	4	13	67.	89.	0.	58.	0.	-3.4	0.	0.	0.
MAY	5	13	27.	78.	0.	47.	0.	-4.4	0.	0.	0.
JUN	6	13	56.	78.	0.	50.	0.	-4.2	0.	0.	0.
JUL	7	13	56.	78.	0.	51.	0.	-4.0	0.	0.	0.
AUG	8	13	57.	77.	0.	53.	0.	-3.8	0.	0.	0.
SEP	9	13	51.	79.	0.	48.	0.	-4.2	0.	0.	0.
OCT	10	13	61.	83.	0.	55.	0.	-3.7	0.	0.	0.
NOV	11	13	63.	89.	0.	56.	0.	-3.6	0.	0.	0.
DEC	12	13	67.	92.	0.	62.	0.	-3.3	0.	0.	0.

********** DEMAND INPUT SUMMARY FOR 1989 **********

FOR AREA 17

	LOAD SHAPE	LOAD AREA	MIN MW	-- PEAK DEMAND -- MW	DEV(%)	---- ENERGY ---- GWH	DEV(%)	ENERGY/PEAK INCONSISTENCY (%)	---- INTERRUPTIBLE LOAD ---- WEEK DAY	WEEK NITE	WEEK END
JAN	1	13	125.	160.	0.	109.	0.	-3.0	0.	0.	0.
FEB	2	13	111.	151.	0.	94.	0.	-7.2	0.	0.	0.
MAR	3	13	117.	150.	0.	103.	0.	-3.2	0.	0.	0.
APR	4	13	111.	148.	0.	96.	0.	-3.5	0.	0.	0.
MAY	5	13	39.	111.	0.	67.	0.	-4.4	0.	0.	0.
JUN	6	13	81.	111.	0.	71.	0.	-4.1	0.	0.	0.
JUL	7	13	81.	112.	0.	74.	0.	-3.9	0.	0.	0.
AUG	8	13	81.	111.	0.	76.	0.	-3.8	0.	0.	0.
SEP	9	13	74.	113.	0.	69.	0.	-4.2	0.	0.	0.
OCT	10	13	87.	119.	0.	78.	0.	-3.7	0.	0.	0.
NOV	11	13	104.	146.	0.	93.	0.	-3.6	0.	0.	0.
DEC	12	13	110.	152.	0.	102.	0.	-3.3	0.	0.	0.

********** DEMAND INPUT SUMMARY FOR 1989 **********

FOR AREA 18

	LOAD SHAPE	LOAD AREA	MIN MW	-- PEAK DEMAND -- MW	DEV(%)	---- ENERGY ---- GWH	DEV(%)	ENERGY/PEAK INCONSISTENCY (%)	---- INTERRUPTIBLE LOAD ---- WEEK DAY	WEEK NITE	WEEK END
JAN	1	13	141.	180.	0.	123.	0.	-3.0	0.	0.	0.
FEB	2	13	125.	170.	0.	106.	0.	-7.2	0.	0.	0.
MAR	3	13	132.	168.	0.	116.	0.	-3.2	0.	0.	0.
APR	4	13	124.	166.	0.	108.	0.	-3.5	0.	0.	0.
MAY	5	13	39.	111.	0.	67.	0.	-4.4	0.	0.	0.
JUN	6	13	81.	111.	0.	71.	0.	-4.1	0.	0.	0.
JUL	7	13	81.	112.	0.	74.	0.	-3.9	0.	0.	0.
AUG	8	13	81.	111.	0.	76.	0.	-3.8	0.	0.	0.
SEP	9	13	74.	113.	0.	69.	0.	-4.2	0.	0.	0.
OCT	10	13	87.	119.	0.	78.	0.	-3.7	0.	0.	0.
NOV	11	13	121.	170.	0.	107.	0.	-3.6	0.	0.	0.
DEC	12	13	128.	177.	0.	119.	0.	-3.2	0.	0.	0.

********** DEMAND INPUT SUMMARY FOR 1989 **********

FOR AREA 19

	LOAD SHAPE	LOAD AREA	MIN MW	-- PEAK DEMAND -- MW	DEV(%)	---- ENERGY ----- GWH	DEV(%)	ENERGY/PEAK INCONSISTENCY (%)	---- INTERRUPTIBLE LOAD ---- WEEK DAY	WEEK NITE	WEEK END
JAN	1	5	48.	91.	0.	52.	0.	0.4	0.	0.	0.
FEB	2	5	39.	89.	0.	45.	0.	-3.1	0.	0.	0.
MAR	3	5	38.	80.	0.	45.	0.	0.4	0.	0.	0.
APR	4	5	36.	74.	0.	40.	0.	0.5	0.	0.	0.
MAY	5	5	27.	51.	0.	29.	0.	0.5	0.	0.	0.
JUN	6	5	25.	57.	0.	29.	0.	0.5	0.	0.	0.
JUL	7	5	27.	58.	0.	31.	0.	0.4	0.	0.	0.
AUG	8	5	29.	59.	0.	33.	0.	0.4	0.	0.	0.
SEP	9	5	26.	54.	0.	30.	0.	0.4	0.	0.	0.
OCT	10	5	30.	57.	0.	32.	0.	0.4	0.	0.	0.
NOV	11	5	42.	85.	0.	45.	0.	0.4	0.	0.	0.
DEC	12	5	47.	92.	0.	50.	0.	0.4	0.	0.	0.

********** DEMAND INPUT SUMMARY FOR 1989 **********

FOR AREA 20

	LOAD SHAPE	LOAD AREA	MIN MW	-- PEAK DEMAND -- MW	DEV(%)	---- ENERGY ----- GWH	DEV(%)	ENERGY/PEAK INCONSISTENCY (%)	---- INTERRUPTIBLE LOAD ---- WEEK DAY	WEEK NITE	WEEK END
JAN	1	13	26.	33.	0.	22.	0.	-3.1	0.	0.	0.
FEB	2	13	23.	31.	0.	19.	0.	-7.3	0.	0.	0.
MAR	3	13	24.	31.	0.	21.	0.	-3.1	0.	0.	0.
APR	4	13	23.	30.	0.	20.	0.	-3.3	0.	0.	0.
MAY	5	13	10.	29.	0.	17.	0.	-4.2	0.	0.	0.
JUN	6	13	21.	28.	0.	18.	0.	-4.2	0.	0.	0.
JUL	7	13	21.	29.	0.	19.	0.	-4.0	0.	0.	0.
AUG	8	13	21.	28.	0.	19.	0.	-4.0	0.	0.	0.
SEP	9	13	19.	29.	0.	18.	0.	-4.3	0.	0.	0.
OCT	10	13	22.	31.	0.	20.	0.	-3.7	0.	0.	0.
NOV	11	13	21.	30.	0.	19.	0.	-3.6	0.	0.	0.
DEC	12	13	22.	31.	0.	21.	0.	-3.3	0.	0.	0.

********** DEMAND INPUT SUMMARY FOR 1989 **********

FOR AREA 21

	LOAD SHAPE	LOAD AREA	MIN MW	-- PEAK DEMAND -- MW	DEV(%)	---- ENERGY ---- GWH	DEV(%)	ENERGY/PEAK INCONSISTENCY (%)	---- INTERRUPTIBLE LOAD ---- WEEK DAY	WEEK NITE	WEEK END
JAN	1	5	48.	91.	0.	52.	0.	0.4	0.	0.	0.
FEB	2	5	39.	89.	0.	45.	0.	-3.1	0.	0.	0.
MAR	3	5	38.	80.	0.	45.	0.	0.4	0.	0.	0.
APR	4	5	36.	74.	0.	40.	0.	0.5	0.	0.	0.
MAY	5	5	36.	68.	0.	39.	0.	0.5	0.	0.	0.
JUN	6	5	34.	75.	0.	38.	0.	0.5	0.	0.	0.
JUL	7	5	36.	77.	0.	41.	0.	0.5	0.	0.	0.
AUG	8	5	39.	78.	0.	44.	0.	0.4	0.	0.	0.
SEP	9	5	35.	72.	0.	40.	0.	0.5	0.	0.	0.
OCT	10	5	40.	75.	0.	43.	0.	0.5	0.	0.	0.
NOV	11	5	42.	85.	0.	45.	0.	0.4	0.	0.	0.
DEC	12	5	47.	92.	0.	50.	0.	0.4	0.	0.	0.

********** DEMAND INPUT SUMMARY FOR 1989 **********

FOR AREA 22

	LOAD SHAPE	LOAD AREA	MIN MW	-- PEAK DEMAND -- MW	DEV(%)	---- ENERGY ---- GWH	DEV(%)	ENERGY/PEAK INCONSISTENCY (%)	---- INTERRUPTIBLE LOAD ---- WEEK DAY	WEEK NITE	WEEK END
JAN	1	26	8.	27.	0.	13.	0.	-5.1	0.	0.	0.
FEB	2	26	8.	26.	0.	12.	0.	-9.3	0.	0.	0.
MAR	3	26	8.	26.	0.	13.	0.	-5.0	0.	0.	0.
APR	4	26	8.	25.	0.	12.	0.	-5.5	0.	0.	0.
MAY	5	26	8.	25.	0.	13.	0.	-5.5	0.	0.	0.
JUN	6	26	9.	25.	0.	13.	0.	-5.1	0.	0.	0.
JUL	7	26	9.	25.	0.	14.	0.	-4.7	0.	0.	0.
AUG	8	26	9.	25.	0.	13.	0.	-5.1	0.	0.	0.
SEP	9	26	9.	26.	0.	13.	0.	-5.2	0.	0.	0.
OCT	10	26	9.	27.	0.	14.	0.	-4.8	0.	0.	0.
NOV	11	26	8.	24.	0.	12.	0.	-5.4	0.	0.	0.
DEC	12	26	8.	25.	0.	13.	0.	-5.3	0.	0.	0.

********** DEMAND INPUT SUMMARY FOR 1989 **********

FOR AREA 23

	LOAD SHAPE	LOAD AREA	MIN MW	-- PEAK DEMAND -- MW	DEV(%)	---- ENERGY ---- GWH	DEV(%)	ENERGY/PEAK INCONSISTENCY (%)	---- INTERRUPTIBLE LOAD ---- WEEK DAY	WEEK NITE	WEEK END
JAN	1	15	45.	101.	0.	52.	0.	4.1	0.	0.	0.
FEB	2	15	40.	100.	0.	46.	0.	1.3	0.	0.	0.
MAR	3	15	39.	97.	0.	48.	0.	4.5	0.	0.	0.
APR	4	15	41.	101.	0.	47.	0.	4.5	0.	0.	0.
MAY	5	15	31.	120.	0.	47.	0.	4.5	0.	0.	0.
JUN	6	15	45.	148.	0.	60.	0.	3.6	0.	0.	0.
JUL	7	15	47.	148.	0.	65.	0.	3.4	0.	0.	0.
AUG	8	15	49.	148.	0.	64.	0.	3.4	0.	0.	0.
SEP	9	15	45.	148.	0.	57.	0.	3.8	0.	0.	0.
OCT	10	15	45.	112.	0.	56.	0.	3.9	0.	0.	0.
NOV	11	15	41.	100.	0.	48.	0.	4.5	0.	0.	0.
DEC	12	15	44.	102.	0.	52.	0.	4.2	0.	0.	0.

********** DEMAND INPUT SUMMARY FOR 1989 **********

FOR AREA 24

	LOAD SHAPE	LOAD AREA	MIN MW	-- PEAK DEMAND -- MW	DEV(%)	---- ENERGY ---- GWH	DEV(%)	ENERGY/PEAK INCONSISTENCY (%)	---- INTERRUPTIBLE LOAD ---- WEEK DAY	WEEK NITE	WEEK END
JAN	1	26	53.	173.	0.	86.	0.	-4.9	0.	0.	0.
FEB	2	26	48.	163.	0.	75.	0.	-9.4	0.	0.	0.
MAR	3	26	49.	162.	0.	82.	0.	-5.2	0.	0.	0.
APR	4	26	52.	159.	0.	78.	0.	-5.5	0.	0.	0.
MAY	5	26	53.	163.	0.	81.	0.	-5.3	0.	0.	0.
JUN	6	26	58.	163.	0.	85.	0.	-5.1	0.	0.	0.
JUL	7	26	61.	164.	0.	89.	0.	-4.8	0.	0.	0.
AUG	8	26	59.	162.	0.	87.	0.	-5.0	0.	0.	0.
SEP	9	26	60.	165.	0.	84.	0.	-5.1	0.	0.	0.
OCT	10	26	56.	174.	0.	92.	0.	-4.7	0.	0.	0.
NOV	11	26	51.	157.	0.	77.	0.	-5.6	0.	0.	0.
DEC	12	26	53.	164.	0.	84.	0.	-5.1	0.	0.	0.

********** DEMAND INPUT SUMMARY FOR 1989 **********

FOR AREA 25

	LOAD SHAPE	LOAD AREA	MIN MW	-- PEAK DEMAND -- MW	DEV(%)	---- ENERGY ----- GWH	DEV(%)	ENERGY/PEAK INCONSISTENCY (%)	---- INTERRUPTIBLE LOAD ---- WEEK DAY	WEEK NITE	WEEK END
JAN	1	15	280.	640.	0.	332.	0.	4.1	0.	0.	0.
FEB	2	15	256.	633.	0.	290.	0.	1.3	0.	0.	0.
MAR	3	15	250.	615.	0.	302.	0.	4.5	0.	0.	0.
APR	4	15	257.	643.	0.	301.	0.	4.5	0.	0.	0.
MAY	5	15	201.	772.	0.	305.	0.	4.5	0.	0.	0.
JUN	6	15	288.	955.	0.	385.	0.	3.6	0.	0.	0.
JUL	7	15	302.	955.	0.	416.	0.	3.4	0.	0.	0.
AUG	8	15	314.	955.	0.	410.	0.	3.4	0.	0.	0.
SEP	9	15	290.	955.	0.	365.	0.	3.8	0.	0.	0.
OCT	10	15	290.	722.	0.	360.	0.	3.9	0.	0.	0.
NOV	11	15	264.	644.	0.	311.	0.	4.5	0.	0.	0.
DEC	12	15	286.	659.	0.	334.	0.	4.2	0.	0.	0.

********** DEMAND INPUT SUMMARY FOR 1989 **********

FOR AREA 26

	LOAD SHAPE	LOAD AREA	MIN MW	-- PEAK DEMAND -- MW	DEV(%)	---- ENERGY ----- GWH	DEV(%)	ENERGY/PEAK INCONSISTENCY (%)	---- INTERRUPTIBLE LOAD ---- WEEK DAY	WEEK NITE	WEEK END
JAN	1	26	358.	1162.	0.	575.	0.	-5.0	0.	0.	0.
FEB	2	26	325.	1095.	0.	501.	0.	-9.5	0.	0.	0.
MAR	3	26	330.	1086.	0.	549.	0.	-5.2	0.	0.	0.
APR	4	26	351.	1071.	0.	523.	0.	-5.5	0.	0.	0.
MAY	5	26	352.	1074.	0.	538.	0.	-5.3	0.	0.	0.
JUN	6	26	381.	1073.	0.	560.	0.	-5.1	0.	0.	0.
JUL	7	26	403.	1080.	0.	586.	0.	-4.9	0.	0.	0.
AUG	8	26	389.	1069.	0.	572.	0.	-5.0	0.	0.	0.
SEP	9	26	396.	1091.	0.	557.	0.	-5.1	0.	0.	0.
OCT	10	26	371.	1151.	0.	609.	0.	-4.7	0.	0.	0.
NOV	11	26	333.	1036.	0.	511.	0.	-5.6	0.	0.	0.
DEC	12	26	347.	1079.	0.	553.	0.	-5.1	0.	0.	0.

00000000000 DEMAND INPUT SUMMARY FOR 1989 00000000000

FOR AREA 27

	LOAD SHAPE	LOAD AREA	MIN MW	-- PEAK DEMAND -- MW	DEV(%)	---- ENERGY ----- GWH	DEV(%)	ENERGY/PEAK INCONSISTENCY (%)	---- INTERRUPTIBLE LOAD ---- WEEK DAY	WEEK NITE	WEEK END
JAN	1	12	62.	138.	0.	69.	0.	2.9	0.	0.	0.
FEB	2	12	55.	135.	0.	61.	0.	-0.3	0.	0.	0.
MAR	2	01	43.	015.	?.	55.	?.	2.7	?.	?.	?.
APR	4	12	49.	116.	0.	58.	0.	3.4	0.	0.	0.
MAY	5	12	43.	106.	0.	50.	0.	3.9	0.	0.	0.
JUN	6	12	43.	120.	0.	53.	0.	3.7	0.	0.	0.
JUL	7	12	41.	123.	0.	54.	0.	3.5	0.	0.	0.
AUG	8	12	45.	123.	0.	57.	0.	3.4	0.	0.	0.
SEP	9	12	40.	108.	0.	47.	0.	4.1	0.	0.	0.
OCT	10	12	48.	111.	0.	55.	0.	3.5	0.	0.	0.
NOV	11	12	56.	134.	0.	63.	0.	3.1	0.	0.	0.
DEC	12	12	61.	143.	0.	72.	0.	2.7	0.	0.	0.

1990

********** DEMAND INPUT SUMMARY FOR 1990 **********

FOR AREA 1

	LOAD SHAPE	LOAD AREA	MIN MW	-- PEAK DEMAND -- MW	DEV(%)	---- ENERGY ---- GWH	DEV(%)	ENERGY/PEAK INCONSISTENCY (%)	---- INTERRUPTIBLE LOAD ---- WEEK DAY	WEEK NITE	WEEK END	POOL -- PEAK --
JAN	1	1	1260.	2301.	0.	1312.	0.	2.0	0.	0.	0.	21531.
FEB	2	1	1133.	2230.	0.	1126.	0.	0.1	0.	0.	0.	20917.
MAR	3	1	1049.	2040.	0.	1150.	0.	2.8	0.	0.	0.	19701.
APR	4	1	1069.	2058.	0.	1124.	0.	2.0	0.	0.	0.	19422.
MAY	5	1	1016.	1936.	0.	1121.	0.	-0.9	0.	0.	0.	19249.
JUN	6	1	948.	2029.	0.	1033.	0.	1.6	0.	0.	0.	21988.
JUL	7	1	974.	2052.	0.	1107.	0.	-0.1	0.	0.	0.	23232.
AUG	8	1	1034.	2047.	0.	1160.	0.	-0.6	0.	0.	0.	23320.
SEP	9	1	1012.	1998.	0.	1117.	0.	0.3	0.	0.	0.	21824.
OCT	10	1	1097.	1989.	0.	1131.	0.	2.9	0.	0.	0.	19424.
NOV	11	1	1101.	2145.	0.	1140.	0.	3.5	0.	0.	0.	20670.
DEC	12	1	1173.	2265.	0.	1256.	0.	2.5	0.	0.	0.	21724.

********** DEMAND INPUT SUMMARY FOR 1990 **********

FOR AREA 2

	LOAD SHAPE	LOAD AREA	MIN MW	-- PEAK DEMAND -- MW	DEV(%)	---- ENERGY ---- GWH	DEV(%)	ENERGY/PEAK INCONSISTENCY (%)	---- INTERRUPTIBLE LOAD ---- WEEK DAY	WEEK NITE	WEEK END
JAN	1	1	581.	1061.	0.	605.	0.	2.0	0.	0.	0.
FEB	2	1	523.	1028.	0.	519.	0.	0.1	0.	0.	0.
MAR	3	1	484.	941.	0.	530.	0.	2.8	0.	0.	0.
APR	4	1	493.	949.	0.	519.	0.	2.0	0.	0.	0.
MAY	5	1	445.	847.	0.	491.	0.	-0.9	0.	0.	0.
JUN	6	1	415.	888.	0.	452.	0.	1.6	0.	0.	0.
JUL	7	1	426.	898.	0.	485.	0.	-0.1	0.	0.	0.
AUG	8	1	452.	896.	0.	508.	0.	-0.6	0.	0.	0.
SEP	9	1	443.	874.	0.	489.	0.	0.3	0.	0.	0.
OCT	10	1	480.	871.	0.	495.	0.	2.9	0.	0.	0.
NOV	11	1	513.	1000.	0.	531.	0.	3.5	0.	0.	0.
DEC	12	1	547.	1056.	0.	585.	0.	2.5	0.	0.	0.

********** DEMAND INPUT SUMMARY FOR 1990 **********

FOR AREA 3

	LOAD SHAPE	LOAD AREA	MIN MW	-- PEAK DEMAND -- MW	DEV(%)	---- ENERGY ----- GWH	DEV(%)	ENERGY/PEAK INCONSISTENCY (%)	---- INTERRUPTIBLE LOAD ---- WEEK DAY	WEEK NITE	WEEK END
JAN	1	1	473.	864.	0.	493.	0.	2.0	0.	0.	0.
FEB	2	1	426.	838.	0.	423.	0.	0.1	0.	0.	0.
MAR	3	1	394.	766.	0.	432.	0.	2.8	0.	0.	0.
APR	4	1	402.	773.	0.	422.	0.	2.0	0.	0.	0.
MAY	5	1	360.	724.	0.	419.	0.	-0.9	0.	0.	0.
JUN	6	1	354.	759.	0.	386.	0.	1.6	0.	0.	0.
JUL	7	1	364.	767.	0.	414.	0.	-0.1	0.	0.	0.
AUG	8	1	367.	766.	0.	434.	0.	-0.6	0.	0.	0.
SEP	9	1	379.	747.	0.	418.	0.	0.3	0.	0.	0.
OCT	10	1	410.	744.	0.	423.	0.	2.9	0.	0.	0.
NOV	11	1	416.	810.	0.	431.	0.	3.5	0.	0.	0.
DEC	12	1	443.	855.	0.	474.	0.	2.5	0.	0.	0.

********** DEMAND INPUT SUMMARY FOR 1990 **********

FOR AREA 4

	LOAD SHAPE	LOAD AREA	MIN MW	-- PEAK DEMAND -- MW	DEV(%)	---- ENERGY ----- GWH	DEV(%)	ENERGY/PEAK INCONSISTENCY (%)	---- INTERRUPTIBLE LOAD ---- WEEK DAY	WEEK NITE	WEEK END
JAN	1	1	950.	1734.	0.	989.	0.	2.0	0.	0.	0.
FEB	2	1	854.	1681.	0.	849.	0.	0.1	0.	0.	0.
MAR	3	1	791.	1538.	0.	867.	0.	2.8	0.	0.	0.
APR	4	1	806.	1551.	0.	848.	0.	2.0	0.	0.	0.
MAY	5	1	745.	1418.	0.	821.	0.	-0.9	0.	0.	0.
JUN	6	1	694.	1487.	0.	757.	0.	1.6	0.	0.	0.
JUL	7	1	714.	1503.	0.	812.	0.	-0.1	0.	0.	0.
AUG	8	1	750.	1500.	0.	850.	0.	-0.6	0.	0.	0.
SEP	9	1	742.	1464.	0.	818.	0.	0.3	0.	0.	0.
OCT	10	1	804.	1458.	0.	829.	0.	2.9	0.	0.	0.
NOV	11	1	838.	1631.	0.	867.	0.	3.5	0.	0.	0.
DEC	12	1	892.	1723.	0.	955.	0.	2.5	0.	0.	0.

********** DEMAND INPUT SUMMARY FOR 1990 **********

FOR AREA 5

	LOAD SHAPE	LOAD AREA	MIN MW	-- PEAK DEMAND -- MW	DEV(%)	---- ENERGY ----- GWH	DEV(%)	ENERGY/PEAK INCONSISTENCY (%)	---- INTERRUPTIBLE LOAD ---- WEEK DAY	WEEK NITE	WEEK END
JAN	1	5	294.	557.	0.	316.	0.	0.3	0.	0.	0.
FEB	2	5	238.	546.	0.	274.	0.	-3.2	0.	0.	0.
MAR	3	5	232.	493.	0.	277.	0.	0.3	0.	0.	0.
APR	4	5	222.	456.	0.	248.	0.	0.4	0.	0.	0.
MAY	5	5	209.	399.	0.	230.	0.	0.4	0.	0.	0.
JUN	6	5	199.	442.	0.	224.	0.	0.4	0.	0.	0.
JUL	7	5	210.	452.	0.	243.	0.	0.4	0.	0.	0.
AUG	8	5	229.	460.	0.	259.	0.	0.3	0.	0.	0.
SEP	9	5	207.	422.	0.	234.	0.	0.4	0.	0.	0.
OCT	10	5	235.	442.	0.	250.	0.	0.3	0.	0.	0.
NOV	11	5	258.	523.	0.	276.	0.	0.3	0.	0.	0.
DEC	12	5	286.	561.	0.	309.	0.	0.3	0.	0.	0.

********** DEMAND INPUT SUMMARY FOR 1990 **********

FOR AREA 6

	LOAD SHAPE	LOAD AREA	MIN MW	-- PEAK DEMAND -- MW	DEV(%)	---- ENERGY ----- GWH	DEV(%)	ENERGY/PEAK INCONSISTENCY (%)	---- INTERRUPTIBLE LOAD ---- WEEK DAY	WEEK NITE	WEEK END
JAN	1	5	551.	1044.	0.	593.	0.	0.3	0.	0.	0.
FEB	2	5	446.	1024.	0.	514.	0.	-3.2	0.	0.	0.
MAR	3	5	435.	925.	0.	519.	0.	0.3	0.	0.	0.
APR	4	5	417.	855.	0.	465.	0.	0.4	0.	0.	0.
MAY	5	5	463.	885.	0.	509.	0.	0.4	0.	0.	0.
JUN	6	5	441.	981.	0.	496.	0.	0.4	0.	0.	0.
JUL	7	5	465.	1003.	0.	539.	0.	0.4	0.	0.	0.
AUG	8	5	509.	1020.	0.	575.	0.	0.3	0.	0.	0.
SEP	9	5	460.	936.	0.	520.	0.	0.4	0.	0.	0.
OCT	10	5	521.	981.	0.	554.	0.	0.4	0.	0.	0.
NOV	11	5	483.	980.	0.	518.	0.	0.3	0.	0.	0.
DEC	12	5	537.	1051.	0.	580.	0.	0.3	0.	0.	0.

********** DEMAND INPUT SUMMARY FOR 1990 **********

FOR AREA 7

	LOAD SHAPE	LOAD AREA	MIN MW	-- PEAK DEMAND -- MW	DEV(%)	---- ENERGY ----- GWH	DEV(%)	ENERGY/PEAK INCONSISTENCY (%)	---- INTERRUPTIBLE LOAD ---- WEEK DAY	WEEK NITE	WEEK END
JAN	1	5	184.	348.	0.	198.	0.	0.3	0.	0.	0.
FEB	2	5	149.	341.	0.	171.	0.	-3.2	0.	0.	0.
MAR	3	5	145.	308.	0.	173.	0.	0.3	0.	0.	0.
APR	4	5	139.	265.	0.	155.	0.	0.4	0.	0.	0.
MAY	5	5	109.	208.	0.	120.	0.	0.4	0.	0.	0.
JUN	6	5	104.	231.	0.	117.	0.	0.4	0.	0.	0.
JUL	7	5	109.	236.	0.	127.	0.	0.3	0.	0.	0.
AUG	8	5	120.	240.	0.	135.	0.	0.3	0.	0.	0.
SEP	9	5	108.	220.	0.	122.	0.	0.4	0.	0.	0.
OCT	10	5	122.	231.	0.	130.	0.	0.3	0.	0.	0.
NOV	11	5	161.	327.	0.	173.	0.	0.3	0.	0.	0.
DEC	12	5	179.	350.	0.	193.	0.	0.3	0.	0.	0.

********** DEMAND INPUT SUMMARY FOR 1990 **********

FOR AREA 8

	LOAD SHAPE	LOAD AREA	MIN MW	-- PEAK DEMAND -- MW	DEV(%)	---- ENERGY ----- GWH	DEV(%)	ENERGY/PEAK INCONSISTENCY (%)	---- INTERRUPTIBLE LOAD ---- WEEK DAY	WEEK NITE	WEEK END
JAN	1	5	98.	186.	0.	105.	0.	0.3	0.	0.	0.
FEB	2	5	79.	182.	0.	91.	0.	-3.2	0.	0.	0.
MAR	3	5	77.	164.	0.	92.	0.	0.3	0.	0.	0.
APR	4	5	74.	152.	0.	83.	0.	0.4	0.	0.	0.
MAY	5	5	64.	121.	0.	70.	0.	0.3	0.	0.	0.
JUN	6	5	61.	135.	0.	68.	0.	0.4	0.	0.	0.
JUL	7	5	64.	138.	0.	74.	0.	0.4	0.	0.	0.
AUG	8	5	70.	140.	0.	79.	0.	0.3	0.	0.	0.
SEP	9	5	63.	128.	0.	71.	0.	0.4	0.	0.	0.
OCT	10	5	71.	135.	0.	76.	0.	0.4	0.	0.	0.
NOV	11	5	86.	174.	0.	92.	0.	0.3	0.	0.	0.
DEC	12	5	95.	187.	0.	103.	0.	0.3	0.	0.	0.

********** DEMAND INPUT SUMMARY FOR 1990 **********

FOR AREA 9

	LOAD SHAPE	LOAD AREA	MIN MW	-- PEAK DEMAND -- MW	DEV(%)	---- ENERGY ----- GWH	DEV(%)	ENERGY/PEAK INCONSISTENCY (%)	---- INTERRUPTIBLE LOAD ---- WEEK DAY	WEEK NITE	WEEK END
JAN	1	9	527.	1100.	0.	589.	0.	4.1	0.	0.	0.
FEB	2	9	475.	1072.	0.	503.	0.	3.9	0.	0.	0.
MAR	3	9	457.	1033.	0.	544.	0.	6.1	0.	0.	0.
APR	4	9	434.	972.	0.	493.	0.	5.9	0.	0.	0.
MAY	5	9	404.	960.	0.	518.	0.	-2.1	0.	0.	0.
JUN	6	9	396.	1093.	0.	518.	0.	-4.2	0.	0.	0.
JUL	7	9	453.	1170.	0.	593.	0.	-5.4	0.	0.	0.
AUG	8	9	481.	1093.	0.	581.	0.	-1.2	0.	0.	0.
SEP	9	9	454.	1076.	0.	563.	0.	-5.6	0.	0.	0.
OCT	10	9	457.	977.	0.	517.	0.	5.2	0.	0.	0.
NOV	11	9	467.	1063.	0.	527.	0.	3.7	0.	0.	0.
DEC	12	9	503.	1109.	0.	576.	0.	2.8	0.	0.	0.

********** DEMAND INPUT SUMMARY FOR 1990 **********

FOR AREA 10

	LOAD SHAPE	LOAD AREA	MIN MW	-- PEAK DEMAND -- MW	DEV(%)	---- ENERGY ----- GWH	DEV(%)	ENERGY/PEAK INCONSISTENCY (%)	---- INTERRUPTIBLE LOAD ---- WEEK DAY	WEEK NITE	WEEK END
JAN	1	10	367.	740.	0.	404.	0.	0.9	0.	0.	0.
FEB	2	10	313.	689.	0.	346.	0.	-2.5	0.	0.	0.
MAR	3	10	308.	643.	0.	361.	0.	1.0	0.	0.	0.
APR	4	10	307.	609.	0.	332.	0.	1.1	0.	0.	0.
MAY	5	10	304.	661.	0.	357.	0.	1.0	0.	0.	0.
JUN	6	10	298.	707.	0.	331.	0.	1.0	0.	0.	0.
JUL	7	10	342.	800.	0.	401.	0.	0.9	0.	0.	0.
AUG	8	10	361.	783.	0.	409.	0.	0.9	0.	0.	0.
SEP	9	10	336.	725.	0.	384.	0.	0.9	0.	0.	0.
OCT	10	10	340.	667.	0.	369.	0.	1.0	0.	0.	0.
NOV	11	10	351.	702.	0.	366.	0.	1.0	0.	0.	0.
DEC	12	10	368.	743.	0.	415.	0.	0.9	0.	0.	0.

********** DEMAND INPUT SUMMARY FOR 1990 **********

FOR AREA 11

	LOAD SHAPE	LOAD AREA	MIN MW	-- PEAK DEMAND -- MW	DEV(%)	---- ENERGY ---- GWH	DEV(%)	ENERGY/PEAK INCONSISTENCY (%)	---- INTERRUPTIBLE LOAD ---- WEEK DAY	WEEK NITE	WEEK END
JAN	1	11	291.	590.	0.	293.	0.	9.5	0.	0.	0.
FEB	2	11	266.	590.	0.	254.	0.	11.8	0.	0.	0.
MAR	3	11	275.	584.	0.	285.	0.	11.7	0.	0.	0.
APR	4	11	259.	550.	0.	257.	0.	13.2	0.	0.	0.
MAY	5	11	240.	669.	0.	343.	0.	-10.9	0.	0.	0.
JUN	6	11	230.	701.	0.	313.	0.	-8.8	0.	0.	0.
JUL	7	11	288.	835.	0.	407.	0.	-8.7	0.	0.	0.
AUG	8	11	303.	835.	0.	429.	0.	-9.3	0.	0.	0.
SEP	9	11	287.	727.	0.	362.	0.	-6.5	0.	0.	0.
OCT	10	11	278.	567.	0.	278.	0.	11.4	0.	0.	0.
NOV	11	11	284.	600.	0.	275.	0.	11.7	0.	0.	0.
DEC	12	11	281.	600.	0.	289.	0.	11.5	0.	0.	0.

********** DEMAND INPUT SUMMARY FOR 1990 **********

FOR AREA 12

	LOAD SHAPE	LOAD AREA	MIN MW	-- PEAK DEMAND -- MW	DEV(%)	---- ENERGY ---- GWH	DEV(%)	ENERGY/PEAK INCONSISTENCY (%)	---- INTERRUPTIBLE LOAD ---- WEEK DAY	WEEK NITE	WEEK END
JAN	1	12	1232.	2765.	0.	1405.	0.	0.9	0.	0.	0.
FEB	2	12	1102.	2691.	0.	1240.	0.	-2.5	0.	0.	0.
MAR	3	12	1083.	2519.	0.	1338.	0.	1.0	0.	0.	0.
APR	4	12	988.	2359.	0.	1193.	0.	1.1	0.	0.	0.
MAY	5	12	851.	2122.	0.	1025.	0.	1.3	0.	0.	0.
JUN	6	12	865.	2387.	0.	1091.	0.	1.2	0.	0.	0.
JUL	7	12	1148.	3445.	0.	1557.	0.	0.8	0.	0.	0.
AUG	8	12	1265.	3445.	0.	1645.	0.	0.8	0.	0.	0.
SEP	9	12	987.	2646.	0.	1191.	0.	1.1	0.	0.	0.
OCT	10	12	953.	2209.	0.	1126.	0.	1.2	0.	0.	0.
NOV	11	12	1130.	2718.	0.	1296.	0.	1.0	0.	0.	0.
DEC	12	12	1246.	2905.	0.	1487.	0.	0.9	0.	0.	0.

********** DEMAND INPUT SUMMARY FOR 1990 **********

FOR AREA 13

	LOAD SHAPE	LOAD AREA	MIN MW	-- PEAK DEMAND -- MW	DEV(%)	---- ENERGY ---- GWH	DEV(%)	ENERGY/PEAK INCONSISTENCY (%)	---- INTERRUPTIBLE LOAD ---- WEEK DAY	WEEK NITE	WEEK END
JAN	1	13	282.	361.	0.	246.	0.	-2.9	0.	0.	0.
FEB	2	13	251.	340.	0.	212.	0.	-7.1	0.	0.	0.
MAR	3	13	264.	338.	0.	232.	0.	-3.1	0.	0.	0.
APR	4	13	249.	333.	0.	216.	0.	-3.3	0.	0.	0.
MAY	5	13	109.	311.	0.	187.	0.	-4.3	0.	0.	0.
JUN	6	13	226.	311.	0.	199.	0.	-4.0	0.	0.	0.
JUL	7	13	226.	313.	0.	206.	0.	-3.8	0.	0.	0.
AUG	8	13	227.	310.	0.	212.	0.	-3.7	0.	0.	0.
SEP	9	13	206.	316.	0.	192.	0.	-4.1	0.	0.	0.
OCT	10	13	243.	333.	0.	218.	0.	-3.6	0.	0.	0.
NOV	11	13	235.	328.	0.	208.	0.	-3.5	0.	0.	0.
DEC	12	13	248.	342.	0.	230.	0.	-3.2	0.	0.	0.

********** DEMAND INPUT SUMMARY FOR 1990 **********

FOR AREA 14

	LOAD SHAPE	LOAD AREA	MIN MW	-- PEAK DEMAND -- MW	DEV(%)	---- ENERGY ---- GWH	DEV(%)	ENERGY/PEAK INCONSISTENCY (%)	---- INTERRUPTIBLE LOAD ---- WEEK DAY	WEEK NITE	WEEK END
JAN	1	13	632.	809.	0.	550.	0.	-2.9	0.	0.	0.
FEB	2	13	562.	762.	0.	475.	0.	-7.1	0.	0.	0.
MAR	3	13	591.	756.	0.	520.	0.	-3.1	0.	0.	0.
APR	4	13	558.	746.	0.	463.	0.	-3.3	0.	0.	0.
MAY	5	13	229.	651.	0.	390.	0.	-4.3	0.	0.	0.
JUN	6	13	472.	650.	0.	415.	0.	-4.0	0.	0.	0.
JUL	7	13	472.	654.	0.	430.	0.	-3.8	0.	0.	0.
AUG	8	13	474.	648.	0.	444.	0.	-3.8	0.	0.	0.
SEP	9	13	430.	601.	0.	402.	0.	-4.1	0.	0.	0.
OCT	10	13	508.	697.	0.	456.	0.	-3.6	0.	0.	0.
NOV	11	13	512.	716.	0.	454.	0.	-3.5	0.	0.	0.
DEC	12	13	541.	746.	0.	501.	0.	-3.2	0.	0.	0.

********** DEMAND INPUT SUMMARY FOR 1990 **********

FOR AREA 15

	LOAD SHAPE	LOAD AREA	MIN MW	-- PEAK DEMAND -- MW	DEV(%)	---- ENERGY ---- GWH	DEV(%)	ENERGY/PEAK INCONSISTENCY (%)	---- INTERRUPTIBLE LOAD ---- WEEK DAY	WEEK NITE	WEEK END
JAN	1	15	1945.	4326.	0.	2253.	0.	3.7	0.	0.	0.
FEB	2	15	1733.	4277.	0.	1973.	0.	0.8	0.	0.	0.
MAR	3	15	1689.	4157.	0.	2054.	0.	4.0	0.	0.	0.
APR	4	15	1740.	4349.	0.	2044.	0.	4.0	0.	0.	0.
MAY	5	15	1327.	5110.	0.	2029.	0.	4.1	0.	0.	0.
JUN	6	15	1905.	6318.	0.	2559.	0.	3.3	0.	0.	0.
JUL	7	15	2000.	6318.	0.	2765.	0.	3.0	0.	0.	0.
AUG	8	15	2077.	6318.	0.	2725.	0.	3.1	0.	0.	0.
SEP	9	15	1922.	6318.	0.	2427.	0.	3.4	0.	0.	0.
OCT	10	15	1922.	4779.	0.	2393.	0.	3.5	0.	0.	0.
NOV	11	15	1751.	4281.	0.	2074.	0.	4.0	0.	0.	0.
DEC	12	15	1903.	4375.	0.	2232.	0.	3.7	0.	0.	0.

********** DEMAND INPUT SUMMARY FOR 1990 **********

FOR AREA 16

	LOAD SHAPE	LOAD AREA	MIN MW	-- PEAK DEMAND -- MW	DEV(%)	---- ENERGY ---- GWH	DEV(%)	ENERGY/PEAK INCONSISTENCY (%)	---- INTERRUPTIBLE LOAD ---- WEEK DAY	WEEK NITE	WEEK END
JAN	1	13	78.	99.	0.	68.	0.	-2.9	0.	0.	0.
FEB	2	13	69.	94.	0.	58.	0.	-7.1	0.	0.	0.
MAR	3	13	73.	93.	0.	64.	0.	-3.1	0.	0.	0.
APR	4	13	69.	92.	0.	59.	0.	-3.3	0.	0.	0.
MAY	5	13	30.	85.	0.	51.	0.	-4.2	0.	0.	0.
JUN	6	13	61.	85.	0.	54.	0.	-4.0	0.	0.	0.
JUL	7	13	61.	85.	0.	56.	0.	-3.9	0.	0.	0.
AUG	8	13	62.	84.	0.	58.	0.	-3.8	0.	0.	0.
SEP	9	13	56.	86.	0.	52.	0.	-4.1	0.	0.	0.
OCT	10	13	56.	91.	0.	59.	0.	-3.6	0.	0.	0.
NOV	11	13	64.	90.	0.	57.	0.	-3.5	0.	0.	0.
DEC	12	13	68.	93.	0.	63.	0.	-3.2	0.	0.	0.

********** DEMAND INPUT SUMMARY FOR 1990 **********

FOR AREA 17

	LOAD SHAPE	LOAD AREA	MIN MW	-- PEAK DEMAND -- MW	DEV(%)	---- ENERGY ---- GWH	DEV(%)	ENERGY/PEAK INCONSISTENCY (%)	---- INTERRUPTIBLE LOAD ---- WEEK DAY	WEEK NITE	WEEK END
JAN	1	13	128.	164.	0.	112.	0.	-2.9	0.	0.	0.
FEB	2	13	114.	155.	0.	96.	0.	-7.1	0.	0.	0.
MAR	3	13	120.	153.	0.	105.	0.	-3.1	0.	0.	0.
APR	4	13	113.	151.	0.	98.	0.	-3.4	0.	0.	0.
MAY	5	13	40.	113.	0.	68.	0.	-4.3	0.	0.	0.
JUN	6	13	82.	113.	0.	72.	0.	-4.0	0.	0.	0.
JUL	7	13	82.	114.	0.	75.	0.	-3.9	0.	0.	0.
AUG	8	13	82.	113.	0.	77.	0.	-3.8	0.	0.	0.
SEP	9	13	75.	115.	0.	70.	0.	-4.1	0.	0.	0.
OCT	10	13	88.	121.	0.	79.	0.	-3.6	0.	0.	0.
NOV	11	13	107.	149.	0.	94.	0.	-3.5	0.	0.	0.
DEC	12	13	113.	155.	0.	104.	0.	-3.1	0.	0.	0.

********** DEMAND INPUT SUMMARY FOR 1990 **********

FOR AREA 18

	LOAD SHAPE	LOAD AREA	MIN MW	-- PEAK DEMAND -- MW	DEV(%)	---- ENERGY ---- GWH	DEV(%)	ENERGY/PEAK INCONSISTENCY (%)	---- INTERRUPTIBLE LOAD ---- WEEK DAY	WEEK NITE	WEEK END
JAN	1	13	149.	191.	0.	130.	0.	-2.9	0.	0.	0.
FEB	2	13	133.	180.	0.	112.	0.	-7.1	0.	0.	0.
MAR	3	13	139.	178.	0.	123.	0.	-3.1	0.	0.	0.
APR	4	13	132.	176.	0.	114.	0.	-3.3	0.	0.	0.
MAY	5	13	40.	113.	0.	66.	0.	-4.3	0.	0.	0.
JUN	6	13	82.	113.	0.	72.	0.	-4.0	0.	0.	0.
JUL	7	13	82.	114.	0.	75.	0.	-3.9	0.	0.	0.
AUG	8	13	82.	113.	0.	77.	0.	-3.8	0.	0.	0.
SEP	9	13	75.	115.	0.	70.	0.	-4.1	0.	0.	0.
OCT	10	13	88.	121.	0.	79.	0.	-3.6	0.	0.	0.
NOV	11	13	128.	179.	0.	113.	0.	-3.5	0.	0.	0.
DEC	12	13	135.	187.	0.	125.	0.	-3.1	0.	0.	0.

********** DEMAND INPUT SUMMARY FOR 1990 **********

FOR AREA 19

	LOAD SHAPE	LOAD AREA	MIN MW	-- PEAK DEMAND -- MW	DEV(%)	---- ENERGY ----- GWH	DEV(%)	ENERGY/PEAK INCONSISTENCY (%)	---- INTERRUPTIBLE LOAD ---- WEEK DAY	WEEK NITE	WEEK END
JAN	1	5	49.	93.	0.	53.	0.	0.3	0.	0.	0.
FEB	2	5	40.	91.	0.	46.	0.	-3.3	0.	0.	0.
MAR	3	5	39.	82.	0.	46.	0.	0.3	0.	0.	0.
APR	4	5	37.	76.	0.	41.	0.	0.4	0.	0.	0.
MAY	5	5	27.	52.	0.	30.	0.	0.3	0.	0.	0.
JUN	6	5	26.	58.	0.	29.	0.	0.4	0.	0.	0.
JUL	7	5	27.	59.	0.	32.	0.	0.3	0.	0.	0.
AUG	8	5	30.	60.	0.	34.	0.	0.3	0.	0.	0.
SEP	9	5	27.	55.	0.	31.	0.	0.3	0.	0.	0.
OCT	10	5	31.	58.	0.	33.	0.	0.4	0.	0.	0.
NOV	11	5	43.	87.	0.	46.	0.	0.3	0.	0.	0.
DEC	12	5	48.	93.	0.	52.	0.	0.2	0.	0.	0.

********** DEMAND INPUT SUMMARY FOR 1990 **********

FOR AREA 20

	LOAD SHAPE	LOAD AREA	MIN MW	-- PEAK DEMAND -- MW	DEV(%)	---- ENERGY ----- GWH	DEV(%)	ENERGY/PEAK INCONSISTENCY (%)	---- INTERRUPTIBLE LOAD ---- WEEK DAY	WEEK NITE	WEEK END
JAN	1	13	26.	33.	0.	23.	0.	-3.0	0.	0.	0.
FEB	2	13	23.	31.	0.	19.	0.	-7.1	0.	0.	0.
MAR	3	13	24.	31.	0.	21.	0.	-3.0	0.	0.	0.
APR	4	13	23.	31.	0.	20.	0.	-3.2	0.	0.	0.
MAY	5	13	10.	29.	0.	17.	0.	-4.4	0.	0.	0.
JUN	6	13	21.	29.	0.	18.	0.	-4.0	0.	0.	0.
JUL	7	13	21.	29.	0.	19.	0.	-3.8	0.	0.	0.
AUG	8	13	21.	29.	0.	20.	0.	-3.8	0.	0.	0.
SEP	9	13	19.	29.	0.	18.	0.	-4.0	0.	0.	0.
OCT	10	13	22.	31.	0.	20.	0.	-3.5	0.	0.	0.
NOV	11	13	21.	30.	0.	19.	0.	-3.7	0.	0.	0.
DEC	12	13	23.	31.	0.	21.	0.	-3.1	0.	0.	0.

********** DEMAND INPUT SUMMARY FOR 1990 **********

FOR AREA 21

	LOAD SHAPE	LOAD AREA	MIN MW	-- PEAK DEMAND -- MW	DEV(%)	---- ENERGY ----- GWH	DEV(%)	ENERGY/PEAK INCONSISTENCY (%)	---- INTERRUPTIBLE LOAD ---- WEEK DAY	WEEK NITE	WEEK END
JAN	1	5	49.	93.	0.	53.	0.	0.3	0.	0.	0.
FEB	2	5	40.	91.	0.	46.	0.	-3.3	0.	0.	0.
MAR	3	5	39.	82.	0.	46.	0.	0.3	0.	0.	0.
APR	4	5	37.	76.	0.	41.	0.	0.4	0.	0.	0.
MAY	5	5	36.	69.	0.	40.	0.	0.4	0.	0.	0.
JUN	6	5	35.	77.	0.	39.	0.	0.4	0.	0.	0.
JUL	7	5	37.	79.	0.	42.	0.	0.4	0.	0.	0.
AUG	8	5	40.	80.	0.	45.	0.	0.3	0.	0.	0.
SEP	9	5	36.	73.	0.	41.	0.	0.4	0.	0.	0.
OCT	10	5	41.	77.	0.	43.	0.	0.3	0.	0.	0.
NOV	11	5	43.	87.	0.	46.	0.	0.3	0.	0.	0.
DEC	12	5	48.	93.	0.	52.	0.	0.2	0.	0.	0.

********** DEMAND INPUT SUMMARY FOR 1990 **********

FOR AREA 22

	LOAD SHAPE	LOAD AREA	MIN MW	-- PEAK DEMAND -- MW	DEV(%)	---- ENERGY ----- GWH	DEV(%)	ENERGY/PEAK INCONSISTENCY (%)	---- INTERRUPTIBLE LOAD ---- WEEK DAY	WEEK NITE	WEEK END
JAN	1	26	8.	27.	0.	14.	0.	-4.9	0.	0.	0.
FEB	2	26	8.	26.	0.	12.	0.	-9.4	0.	0.	0.
MAR	3	26	8.	26.	0.	13.	0.	-5.1	0.	0.	0.
APR	4	26	8.	25.	0.	12.	0.	-5.6	0.	0.	0.
MAY	5	26	9.	27.	0.	13.	0.	-5.3	0.	0.	0.
JUN	6	26	10.	27.	0.	14.	0.	-5.0	0.	0.	0.
JUL	7	26	10.	27.	0.	15.	0.	-5.0	0.	0.	0.
AUG	8	26	10.	27.	0.	14.	0.	-4.9	0.	0.	0.
SEP	9	26	10.	27.	0.	14.	0.	-5.2	0.	0.	0.
OCT	10	26	9.	29.	0.	15.	0.	-4.7	0.	0.	0.
NOV	11	26	8.	26.	0.	13.	0.	-5.8	0.	0.	0.
DEC	12	26	9.	27.	0.	14.	0.	-5.1	0.	0.	0.

********** DEMAND INPUT SUMMARY FOR 1990 **********

FOR AREA 23

	LOAD SHAPE	LOAD AREA	MIN MW	-- PEAK DEMAND -- MW	DEV(%)	---- ENERGY ----- GWH	DEV(%)	ENERGY/PEAK INCONSISTENCY (%)	---- INTERRUPTIBLE LOAD ---- WEEK DAY	WEEK NITE	WEEK END
JAN	1	15	46.	102.	0.	53.	0.	3.7	0.	0.	0.
FEB	2	15	41.	101.	0.	46.	0.	0.8	0.	0.	0.
MAR	3	15	40.	98.	0.	48.	0.	4.0	0.	0.	0.
APR	4	15	41.	102.	0.	48.	0.	4.0	0.	0.	0.
MAY	5	15	33.	127.	0.	50.	0.	4.0	0.	0.	0.
JUN	6	15	47.	156.	0.	63.	0.	3.2	0.	0.	0.
JUL	7	15	50.	156.	0.	68.	0.	3.0	0.	0.	0.
AUG	8	15	51.	156.	0.	67.	0.	3.0	0.	0.	0.
SEP	9	15	48.	156.	0.	60.	0.	3.4	0.	0.	0.
OCT	10	15	48.	118.	0.	59.	0.	3.4	0.	0.	0.
NOV	11	15	43.	106.	0.	51.	0.	4.0	0.	0.	0.
DEC	12	15	47.	108.	0.	55.	0.	3.8	0.	0.	0.

********** DEMAND INPUT SUMMARY FOR 1990 **********

FOR AREA 24

	LOAD SHAPE	LOAD AREA	MIN MW	-- PEAK DEMAND -- MW	DEV(%)	---- ENERGY ----- GWH	DEV(%)	ENERGY/PEAK INCONSISTENCY (%)	---- INTERRUPTIBLE LOAD ---- WEEK DAY	WEEK NITE	WEEK END
JAN	1	26	54.	177.	0.	87.	0.	-5.0	0.	0.	0.
FEB	2	26	49.	166.	0.	76.	0.	-9.5	0.	0.	0.
MAR	3	26	50.	165.	0.	83.	0.	-5.3	0.	0.	0.
APR	4	26	53.	163.	0.	79.	0.	-5.5	0.	0.	0.
MAY	5	26	55.	167.	0.	84.	0.	-5.3	0.	0.	0.
JUN	6	26	59.	167.	0.	87.	0.	-5.1	0.	0.	0.
JUL	7	26	63.	168.	0.	91.	0.	-4.9	0.	0.	0.
AUG	8	26	61.	166.	0.	89.	0.	-5.0	0.	0.	0.
SEP	9	26	62.	170.	0.	87.	0.	-5.1	0.	0.	0.
OCT	10	26	56.	179.	0.	95.	0.	-4.7	0.	0.	0.
NOV	11	26	52.	161.	0.	79.	0.	-5.7	0.	0.	0.
DEC	12	26	54.	167.	0.	86.	0.	-5.2	0.	0.	0.

********** DEMAND INPUT SUMMARY FOR 1990 **********

FOR AREA 25

	LOAD SHAPE	LOAD AREA	MIN MW	-- PEAK DEMAND -- MW	DEV(%)	---- ENERGY ---- GWH	DEV(%)	ENERGY/PEAK INCONSISTENCY (%)	---- INTERRUPTIBLE LOAD ---- WEEK DAY	WEEK NITE	WEEK END
JAN	1	15	295.	656.	0.	342.	0.	3.7	0.	0.	0.
FEB	2	15	263.	648.	0.	299.	0.	0.8	0.	0.	0.
MAR	3	15	256.	630.	0.	311.	0.	4.0	0.	0.	0.
APR	4	15	264.	659.	0.	310.	0.	4.0	0.	0.	0.
MAY	5	15	205.	789.	0.	313.	0.	4.1	0.	0.	0.
JUN	6	15	294.	976.	0.	395.	0.	3.2	0.	0.	0.
JUL	7	15	309.	976.	0.	427.	0.	3.0	0.	0.	0.
AUG	8	15	321.	976.	0.	421.	0.	3.0	0.	0.	0.
SEP	9	15	297.	976.	0.	375.	0.	3.4	0.	0.	0.
OCT	10	15	297.	738.	0.	370.	0.	3.5	0.	0.	0.
NOV	11	15	270.	661.	0.	320.	0.	4.0	0.	0.	0.
DEC	12	15	294.	676.	0.	345.	0.	3.7	0.	0.	0.

********** DEMAND INPUT SUMMARY FOR 1990 **********

FOR AREA 26

	LOAD SHAPE	LOAD AREA	MIN MW	-- PEAK DEMAND -- MW	DEV(%)	---- ENERGY ---- GWH	DEV(%)	ENERGY/PEAK INCONSISTENCY (%)	---- INTERRUPTIBLE LOAD ---- WEEK DAY	WEEK NITE	WEEK END
JAN	1	26	359.	1164.	0.	577.	0.	-5.0	0.	0.	0.
FEB	2	26	326.	1097.	0.	503.	0.	-9.5	0.	0.	0.
MAR	3	26	330.	1088.	0.	550.	0.	-5.2	0.	0.	0.
APR	4	26	351.	1073.	0.	524.	0.	-5.5	0.	0.	0.
MAY	5	26	355.	1082.	0.	542.	0.	-5.3	0.	0.	0.
JUN	6	26	384.	1091.	0.	564.	0.	-5.1	0.	0.	0.
JUL	7	26	406.	1088.	0.	590.	0.	-4.9	0.	0.	0.
AUG	8	26	392.	1077.	0.	576.	0.	-5.0	0.	0.	0.
SEP	9	26	399.	1099.	0.	562.	0.	-5.1	0.	0.	0.
OCT	10	26	373.	1159.	0.	614.	0.	-4.7	0.	0.	0.
NOV	11	26	334.	1039.	0.	513.	0.	-5.6	0.	0.	0.
DEC	12	26	346.	1082.	0.	555.	0.	-5.2	0.	0.	0.

********** DEMAND INPUT SUMMARY FOR 1990 **********

FOR AREA 27

	LOAD SHAPE	LOAD AREA	MIN MW	-- PEAK DEMAND -- MW	DEV(%)	---- ENERGY ----- GWH	DEV(%)	ENERGY/PEAK INCONSISTENCY (%)	---- INTERRUPTIBLE LOAD ---- WEEK DAY	WEEK NITE	WEEK END
JAN	1	12	62.	139.	0.	70.	0.	2.7	0.	0.	0.
FEB	2	12	56.	136.	0.	61.	0.	-0.3	0.	0.	0.
MAR	3	12	55.	127.	0.	66.	0.	2.9	0.	0.	0.
APR	4	12	50.	119.	0.	59.	0.	3.2	0.	0.	0.
MAY	5	12	43.	107.	0.	50.	0.	3.7	0.	0.	0.
JUN	6	12	44.	121.	0.	54.	0.	3.5	0.	0.	0.
JUL	7	12	41.	124.	0.	55.	0.	3.5	0.	0.	0.
AUG	8	12	46.	124.	0.	58.	0.	3.3	0.	0.	0.
SEP	9	12	41.	109.	0.	48.	0.	4.0	0.	0.	0.
OCT	10	12	48.	112.	0.	56.	0.	3.4	0.	0.	0.
NOV	11	12	56.	135.	0.	63.	0.	3.0	0.	0.	0.
DEC	12	12	62.	144.	0.	72.	0.	2.6	0.	0.	0.

1991

********** DEMAND INPUT SUMMARY FOR 1991 **********

FOR AREA 1

	LOAD SHAPE	LOAD AREA	MIN MW	-- PEAK DEMAND -- MW	DEV(%)	---- ENERGY ----- GWH	DEV(%)	ENERGY/PEAK INCONSISTENCY (%)	---- INTERRUPTIBLE LOAD ---- WEEK DAY	WEEK NITE	WEEK END	POOL -- PEAK --
JAN	1	1	1272.	2323.	0.	1325.	0.	2.0	0.	0.	0.	21860.
FEB	2	1	1144.	2252.	0.	1136.	0.	0.1	0.	0.	0.	21237.
MAR	3	1	1059.	2060.	0.	1161.	0.	2.8	0.	0.	0.	20002.
APR	4	1	1079.	2078.	0.	1135.	0.	2.1	0.	0.	0.	19718.
MAY	5	1	1027.	1955.	0.	1132.	0.	-0.9	0.	0.	0.	19489.
JUN	6	1	957.	2050.	0.	1043.	0.	1.6	0.	0.	0.	22262.
JUL	7	1	964.	2072.	0.	1118.	0.	-0.1	0.	0.	0.	23521.
AUG	8	1	1044.	2068.	0.	1172.	0.	-0.6	0.	0.	0.	23610.
SEP	9	1	1022.	2018.	0.	1128.	0.	0.3	0.	0.	0.	22096.
OCT	10	1	1108.	2009.	0.	1142.	0.	2.9	0.	0.	0.	19665.
NOV	11	1	1114.	2169.	0.	1153.	0.	3.5	0.	0.	0.	21009.
DEC	12	1	1187.	2291.	0.	1270.	0.	2.5	0.	0.	0.	22072.

********** DEMAND INPUT SUMMARY FOR 1991 **********

FOR AREA 2

	LOAD SHAPE	LOAD AREA	MIN MW	-- PEAK DEMAND -- MW	DEV(%)	---- ENERGY ----- GWH	DEV(%)	ENERGY/PEAK INCONSISTENCY (%)	---- INTERRUPTIBLE LOAD ---- WEEK DAY	WEEK NITE	WEEK END
JAN	1	1	593.	1083.	0.	617.	0.	2.0	0.	0.	0.
FEB	2	1	533.	1050.	0.	530.	0.	0.1	0.	0.	0.
MAR	3	1	494.	960.	0.	541.	0.	2.8	0.	0.	0.
APR	4	1	503.	969.	0.	529.	0.	2.1	0.	0.	0.
MAY	5	1	454.	865.	0.	501.	0.	-0.9	0.	0.	0.
JUN	6	1	424.	907.	0.	462.	0.	1.6	0.	0.	0.
JUL	7	1	435.	917.	0.	495.	0.	-0.1	0.	0.	0.
AUG	8	1	462.	915.	0.	518.	0.	-0.6	0.	0.	0.
SEP	9	1	452.	893.	0.	499.	0.	0.3	0.	0.	0.
OCT	10	1	490.	889.	0.	505.	0.	2.9	0.	0.	0.
NOV	11	1	522.	1016.	0.	540.	0.	3.5	0.	0.	0.
DEC	12	1	556.	1073.	0.	595.	0.	2.5	0.	0.	0.

********** DEMAND INPUT SUMMARY FOR 1991 **********

FOR AREA 3

	LOAD SHAPE	LOAD AREA	MIN MW	-- PEAK DEMAND -- MW	DEV(%)	---- ENERGY ----- GWH	DEV(%)	ENERGY/PEAK INCONSISTENCY (%)	---- INTERRUPTIBLE LOAD ---- WEEK DAY	WEEK NITE	WEEK END
JAN	1	1	480.	877.	0.	500.	0.	2.0	0.	0.	0.
FEB	2	1	432.	850.	0.	429.	0.	0.1	0.	0.	0.
MAR	3	1	400.	778.	0.	438.	0.	2.8	0.	0.	0.
APR	4	1	408.	785.	0.	429.	0.	2.1	0.	0.	0.
MAY	5	1	386.	735.	0.	426.	0.	-0.9	0.	0.	0.
JUN	6	1	360.	771.	0.	392.	0.	1.6	0.	0.	0.
JUL	7	1	370.	779.	0.	420.	0.	-0.1	0.	0.	0.
AUG	8	1	393.	777.	0.	441.	0.	-0.6	0.	0.	0.
SEP	9	1	384.	759.	0.	424.	0.	0.3	0.	0.	0.
OCT	10	1	417.	755.	0.	429.	0.	2.9	0.	0.	0.
NOV	11	1	426.	829.	0.	441.	0.	3.5	0.	0.	0.
DEC	12	1	454.	876.	0.	485.	0.	2.5	0.	0.	0.

********** DEMAND INPUT SUMMARY FOR 1991 **********

FOR AREA 4

	LOAD SHAPE	LOAD AREA	MIN MW	-- PEAK DEMAND -- MW	DEV(%)	---- ENERGY ----- GWH	DEV(%)	ENERGY/PEAK INCONSISTENCY (%)	---- INTERRUPTIBLE LOAD ---- WEEK DAY	WEEK NITE	WEEK END
JAN	1	1	967.	1767.	0.	1007.	0.	2.0	0.	0.	0.
FEB	2	1	870.	1712.	0.	864.	0.	0.1	0.	0.	0.
MAR	3	1	806.	1567.	0.	883.	0.	2.8	0.	0.	0.
APR	4	1	821.	1580.	0.	863.	0.	2.1	0.	0.	0.
MAY	5	1	759.	1445.	0.	837.	0.	-0.9	0.	0.	0.
JUN	6	1	708.	1515.	0.	771.	0.	1.6	0.	0.	0.
JUL	7	1	727.	1532.	0.	827.	0.	-0.1	0.	0.	0.
AUG	8	1	772.	1528.	0.	866.	0.	-0.6	0.	0.	0.
SEP	9	1	756.	1492.	0.	833.	0.	0.3	0.	0.	0.
OCT	10	1	819.	1485.	0.	844.	0.	2.9	0.	0.	0.
NOV	11	1	854.	1664.	0.	884.	0.	3.5	0.	0.	0.
DEC	12	1	910.	1757.	0.	974.	0.	2.5	0.	0.	0.

********** DEMAND INPUT SUMMARY FOR 1991 **********

FOR AREA 5

	LOAD SHAPE	LOAD AREA	MIN MW	-- PEAK DEMAND -- MW	DEV(%)	---- ENERGY ----- GWH	DEV(%)	ENERGY/PEAK INCONSISTENCY (%)	---- INTERRUPTIBLE LOAD ---- WEEK DAY	WEEK NITE	WEEK END
JAN	1	5	300.	569.	0.	323.	0.	0.3	0.	0.	0.
FEB	2	5	243.	558.	0.	260.	0.	-3.3	0.	0.	0.
MAR	3	5	237.	504.	0.	283.	0.	0.3	0.	0.	0.
APR	4	5	227.	466.	0.	253.	0.	0.3	0.	0.	0.
MAY	5	5	213.	407.	0.	234.	0.	0.4	0.	0.	0.
JUN	6	5	203.	451.	0.	228.	0.	0.4	0.	0.	0.
JUL	7	5	214.	461.	0.	248.	0.	0.3	0.	0.	0.
AUG	8	5	234.	469.	0.	265.	0.	0.3	0.	0.	0.
SEP	9	5	211.	430.	0.	239.	0.	0.3	0.	0.	0.
OCT	10	5	239.	451.	0.	255.	0.	0.3	0.	0.	0.
NOV	11	5	264.	536.	0.	284.	0.	0.3	0.	0.	0.
DEC	12	5	293.	575.	0.	317.	0.	0.3	0.	0.	0.

********** DEMAND INPUT SUMMARY FOR 1991 **********

FOR AREA 6

	LOAD SHAPE	LOAD AREA	MIN MW	-- PEAK DEMAND -- MW	DEV(%)	---- ENERGY ----- GWH	DEV(%)	ENERGY/PEAK INCONSISTENCY (%)	---- INTERRUPTIBLE LOAD ---- WEEK DAY	WEEK NITE	WEEK END
JAN	1	5	563.	1067.	0.	606.	0.	0.3	0.	0.	0.
FEB	2	5	455.	1046.	0.	526.	0.	-3.3	0.	0.	0.
MAR	3	5	445.	945.	0.	530.	0.	0.3	0.	0.	0.
APR	4	5	426.	874.	0.	475.	0.	0.3	0.	0.	0.
MAY	5	5	472.	902.	0.	520.	0.	0.3	0.	0.	0.
JUN	6	5	450.	1000.	0.	506.	0.	0.4	0.	0.	0.
JUL	7	5	475.	1023.	0.	549.	0.	0.3	0.	0.	0.
AUG	8	5	519.	1040.	0.	587.	0.	0.3	0.	0.	0.
SEP	9	5	469.	954.	0.	530.	0.	0.3	0.	0.	0.
OCT	10	5	531.	1000.	0.	566.	0.	0.3	0.	0.	0.
NOV	11	5	496.	1005.	0.	532.	0.	0.3	0.	0.	0.
DEC	12	5	550.	1078.	0.	595.	0.	0.3	0.	0.	0.

********** DEMAND INPUT SUMMARY FOR 1991 **********

FOR AREA 7

	LOAD SHAPE	LOAD AREA	MIN MW	-- PEAK DEMAND -- MW	DEV(%)	---- ENERGY ----- GWH	DEV(%)	ENERGY/PEAK INCONSISTENCY (%)	---- INTERRUPTIBLE LOAD ---- WEEK DAY	WEEK NITE	WEEK END
JAN	1	5	188.	356.	0.	202.	0.	0.3	0.	0.	0.
FEB	2	5	152.	349.	0.	175.	0.	-3.3	0.	0.	0.
MAR	3	5	148.	315.	0.	177.	0.	0.3	0.	0.	0.
APR	4	5	142.	291.	0.	158.	0.	0.3	0.	0.	0.
MAY	5	5	111.	212.	0.	122.	0.	0.3	0.	0.	0.
JUN	6	5	106.	235.	0.	119.	0.	0.3	0.	0.	0.
JUL	7	5	112.	241.	0.	129.	0.	0.3	0.	0.	0.
AUG	8	5	122.	245.	0.	138.	0.	0.3	0.	0.	0.
SEP	9	5	110.	225.	0.	125.	0.	0.3	0.	0.	0.
OCT	10	5	125.	235.	0.	133.	0.	0.3	0.	0.	0.
NOV	11	5	165.	335.	0.	177.	0.	0.3	0.	0.	0.
DEC	12	5	183.	359.	0.	198.	0.	0.3	0.	0.	0.

********** DEMAND INPUT SUMMARY FOR 1991 **********

FOR AREA 8

	LOAD SHAPE	LOAD AREA	MIN MW	-- PEAK DEMAND -- MW	DEV(%)	---- ENERGY ----- GWH	DEV(%)	ENERGY/PEAK INCONSISTENCY (%)	---- INTERRUPTIBLE LOAD ---- WEEK DAY	WEEK NITE	WEEK END
JAN	1	5	100.	190.	0.	108.	0.	0.3	0.	0.	0.
FEB	2	5	81.	186.	0.	93.	0.	-3.3	0.	0.	0.
MAR	3	5	79.	168.	0.	94.	0.	0.3	0.	0.	0.
APR	4	5	76.	155.	0.	84.	0.	0.3	0.	0.	0.
MAY	5	5	65.	124.	0.	71.	0.	0.4	0.	0.	0.
JUN	6	5	62.	137.	0.	70.	0.	0.4	0.	0.	0.
JUL	7	5	65.	140.	0.	75.	0.	0.3	0.	0.	0.
AUG	8	5	71.	143.	0.	81.	0.	0.3	0.	0.	0.
SEP	9	5	64.	131.	0.	73.	0.	0.4	0.	0.	0.
OCT	10	5	73.	137.	0.	78.	0.	0.3	0.	0.	0.
NOV	11	5	88.	179.	0.	95.	0.	0.3	0.	0.	0.
DEC	12	5	99.	192.	0.	106.	0.	0.3	0.	0.	0.

********** DEMAND INPUT SUMMARY FOR 1991 **********

FOR AREA 9

	LOAD SHAPE	LOAD AREA	MIN MW	-- PEAK DEMAND -- MW	DEV(%)	---- ENERGY ----- GWH	DEV(%)	ENERGY/PEAK INCONSISTENCY (%)	---- INTERRUPTIBLE LOAD ---- WEEK DAY	WEEK NITE	WEEK END
JAN	1	9	537.	1120.	0.	602.	0.	3.8	0.	0.	0.
FEB	2	9	484.	1092.	0.	514.	0.	3.6	0.	0.	0.
MAR	3	9	465.	1052.	0.	556.	0.	5.8	0.	0.	0.
APR	4	9	442.	989.	0.	503.	0.	5.6	0.	0.	0.
MAY	5	9	414.	985.	0.	533.	0.	-2.5	0.	0.	0.
JUN	6	9	408.	1121.	0.	533.	0.	-4.6	0.	0.	0.
JUL	7	9	465.	1200.	0.	610.	0.	-5.8	0.	0.	0.
AUG	8	9	493.	1121.	0.	598.	0.	-1.6	0.	0.	0.
SEP	9	9	466.	1104.	0.	580.	0.	-6.0	0.	0.	0.
OCT	10	9	469.	1002.	0.	532.	0.	4.9	0.	0.	0.
NOV	11	9	480.	1092.	0.	543.	0.	3.4	0.	0.	0.
DEC	12	9	516.	1138.	0.	594.	0.	2.4	0.	0.	0.

********** DEMAND INPUT SUMMARY FOR 1991 **********

FOR AREA 10

	LOAD SHAPE	LOAD AREA	MIN MW	-- PEAK DEMAND -- MW	DEV(%)	---- ENERGY ----- GWH	DEV(%)	ENERGY/PEAK INCONSISTENCY (%)	---- INTERRUPTIBLE LOAD ---- WEEK DAY	WEEK NITE	WEEK END
JAN	1	10	376.	760.	0.	415.	0.	0.9	0.	0.	0.
FEB	2	10	322.	707.	0.	355.	0.	-2.4	0.	0.	0.
MAR	3	10	316.	661.	0.	371.	0.	1.0	0.	0.	0.
APR	4	10	315.	626.	0.	340.	0.	1.1	0.	0.	0.
MAY	5	10	312.	677.	0.	366.	0.	1.1	0.	0.	0.
JUN	6	10	306.	725.	0.	339.	0.	1.1	0.	0.	0.
JUL	7	10	350.	820.	0.	411.	0.	0.9	0.	0.	0.
AUG	8	10	370.	802.	0.	419.	0.	0.9	0.	0.	0.
SEP	9	10	344.	743.	0.	393.	0.	1.0	0.	0.	0.
OCT	10	10	348.	683.	0.	376.	0.	1.0	0.	0.	0.
NOV	11	10	358.	715.	0.	372.	0.	1.0	0.	0.	0.
DEC	12	10	396.	757.	0.	423.	0.	0.9	0.	0.	0.

********** DEMAND INPUT SUMMARY FOR 1991 **********

FOR AREA 11

	LOAD SHAPE	LOAD AREA	MIN MW	-- PEAK DEMAND -- MW	DEV(%)	---- ENERGY ---- GWH	DEV(%)	ENERGY/PEAK INCONSISTENCY (%)	---- INTERRUPTIBLE LOAD ---- WEEK DAY	WEEK NITE	WEEK END
JAN	1	11	296.	600.	0.	299.	0.	9.0	0.	0.	0.
FEB	2	11	270.	600.	0.	260.	0.	11.3	0.	0.	0.
MAR	3	11	280.	594.	0.	292.	0.	11.3	0.	0.	0.
APR	4	11	264.	560.	0.	263.	0.	12.7	0.	0.	0.
MAY	5	11	245.	681.	0.	351.	0.	-11.4	0.	0.	0.
JUN	6	11	234.	714.	0.	320.	0.	-9.3	0.	0.	0.
JUL	7	11	293.	850.	0.	415.	0.	-9.1	0.	0.	0.
AUG	8	11	309.	850.	0.	438.	0.	-9.7	0.	0.	0.
SEP	9	11	292.	740.	0.	370.	0.	-7.0	0.	0.	0.
OCT	10	11	284.	577.	0.	285.	0.	10.9	0.	0.	0.
NOV	11	11	291.	615.	0.	284.	0.	11.1	0.	0.	0.
DEC	12	11	288.	615.	0.	298.	0.	11.0	0.	0.	0.

********** DEMAND INPUT SUMMARY FOR 1991 **********

FOR AREA 12

	LOAD SHAPE	LOAD AREA	MIN MW	-- PEAK DEMAND -- MW	DEV(%)	---- ENERGY ---- GWH	DEV(%)	ENERGY/PEAK INCONSISTENCY (%)	---- INTERRUPTIBLE LOAD ---- WEEK DAY	WEEK NITE	WEEK END
JAN	1	12	1258.	2823.	0.	1443.	0.	0.4	0.	0.	0.
FEB	2	12	1125.	2748.	0.	1275.	0.	-3.1	0.	0.	0.
MAR	3	12	1105.	2573.	0.	1374.	0.	0.4	0.	0.	0.
APR	4	12	1009.	2409.	0.	1227.	0.	0.4	0.	0.	0.
MAY	5	12	858.	2141.	0.	1043.	0.	0.5	0.	0.	0.
JUN	6	12	872.	2407.	0.	1109.	0.	0.5	0.	0.	0.
JUL	7	12	1158.	3475.	0.	1579.	0.	0.3	0.	0.	0.
AUG	8	12	1276.	3475.	0.	1668.	0.	0.3	0.	0.	0.
SEP	9	12	996.	2669.	0.	1209.	0.	0.4	0.	0.	0.
OCT	10	12	961.	2228.	0.	1146.	0.	0.4	0.	0.	0.
NOV	11	12	1151.	2770.	0.	1329.	0.	0.4	0.	0.	0.
DEC	12	12	1270.	2960.	0.	1524.	0.	0.3	0.	0.	0.

********** DEMAND INPUT SUMMARY FOR 1991 **********

FOR AREA 13

	LOAD SHAPE	LOAD AREA	MIN MW	-- PEAK DEMAND -- MW	DEV(%)	---- ENERGY ---- GWH	DEV(%)	ENERGY/PEAK INCONSISTENCY (%)	---- INTERRUPTIBLE LOAD ---- WEEK DAY	WEEK NITE	WEEK END
JAN	1	13	288.	369.	0.	251.	0.	-2.8	0.	0.	0.
FEB	2	13	257.	348.	0.	216.	0.	-7.0	0.	0.	0.
MAR	3	13	270.	345.	0.	237.	0.	-3.0	0.	0.	0.
APR	4	13	255.	340.	0.	220.	0.	-3.2	0.	0.	0.
MAY	5	13	110.	313.	0.	188.	0.	-4.2	0.	0.	0.
JUN	6	13	227.	313.	0.	200.	0.	-3.9	0.	0.	0.
JUL	7	13	227.	315.	0.	207.	0.	-3.7	0.	0.	0.
AUG	8	13	228.	312.	0.	213.	0.	-3.6	0.	0.	0.
SEP	9	13	207.	318.	0.	193.	0.	-4.0	0.	0.	0.
OCT	10	13	244.	335.	0.	219.	0.	-3.5	0.	0.	0.
NOV	11	13	237.	331.	0.	209.	0.	-3.4	0.	0.	0.
DEC	12	13	250.	345.	0.	231.	0.	-3.0	0.	0.	0.

********** DEMAND INPUT SUMMARY FOR 1991 **********

FOR AREA 14

	LOAD SHAPE	LOAD AREA	MIN MW	-- PEAK DEMAND -- MW	DEV(%)	---- ENERGY ---- GWH	DEV(%)	ENERGY/PEAK INCONSISTENCY (%)	---- INTERRUPTIBLE LOAD ---- WEEK DAY	WEEK NITE	WEEK END
JAN	1	13	629.	805.	0.	548.	0.	-2.8	0.	0.	0.
FEB	2	13	560.	758.	0.	472.	0.	-7.0	0.	0.	0.
MAR	3	13	589.	752.	0.	517.	0.	-3.0	0.	0.	0.
APR	4	13	556.	742.	0.	480.	0.	-3.2	0.	0.	0.
MAY	5	13	228.	649.	0.	389.	0.	-4.2	0.	0.	0.
JUN	6	13	471.	649.	0.	414.	0.	-3.9	0.	0.	0.
JUL	7	13	472.	653.	0.	429.	0.	-3.7	0.	0.	0.
AUG	8	13	473.	647.	0.	443.	0.	-3.7	0.	0.	0.
SEP	9	13	429.	660.	0.	401.	0.	-4.0	0.	0.	0.
OCT	10	13	507.	696.	0.	455.	0.	-3.5	0.	0.	0.
NOV	11	13	512.	717.	0.	453.	0.	-3.4	0.	0.	0.
DEC	12	13	542.	746.	0.	501.	0.	-3.1	0.	0.	0.

********** DEMAND INPUT SUMMARY FOR 1991 **********

FOR AREA 15

	LOAD SHAPE	LOAD AREA	MIN MW	-- PEAK DEMAND -- MW	DEV(%)	---- ENERGY ---- GWH	DEV(%)	ENERGY/PEAK INCONSISTENCY (%)	---- INTERRUPTIBLE LOAD ---- WEEK DAY	WEEK NITE	WEEK END
JAN	1	15	1959.	4358.	0.	2277.	0.	3.4	0.	0.	0.
FEB	2	15	1745.	4308.	0.	1994.	0.	0.4	0.	0.	0.
MAR	3	15	1701.	4187.	0.	2076.	0.	3.7	0.	0.	0.
APR	4	15	1753.	4380.	0.	2066.	0.	3.7	0.	0.	0.
MAY	5	15	1335.	5138.	0.	2047.	0.	3.7	0.	0.	0.
JUN	6	15	1916.	6353.	0.	2580.	0.	3.0	0.	0.	0.
JUL	7	15	2011.	6353.	0.	2787.	0.	2.8	0.	0.	0.
AUG	8	15	2089.	6353.	0.	2747.	0.	2.8	0.	0.	0.
SEP	9	15	1933.	6353.	0.	2447.	0.	3.2	0.	0.	0.
OCT	10	15	1933.	4805.	0.	2413.	0.	3.2	0.	0.	0.
NOV	11	15	1766.	4317.	0.	2098.	0.	3.6	0.	0.	0.
DEC	12	15	1919.	4413.	0.	2258.	0.	3.4	0.	0.	0.

********** DEMAND INPUT SUMMARY FOR 1991 **********

FOR AREA 16

	LOAD SHAPE	LOAD AREA	MIN MW	-- PEAK DEMAND -- MW	DEV(%)	---- ENERGY ---- GWH	DEV(%)	ENERGY/PEAK INCONSISTENCY (%)	---- INTERRUPTIBLE LOAD ---- WEEK DAY	WEEK NITE	WEEK END
JAN	1	13	79.	101.	0.	68.	0.	-2.9	0.	0.	0.
FEB	2	13	70.	95.	0.	59.	0.	-6.9	0.	0.	0.
MAR	3	13	74.	94.	0.	65.	0.	-3.0	0.	0.	0.
APR	4	13	69.	93.	0.	60.	0.	-3.2	0.	0.	0.
MAY	5	13	30.	85.	0.	51.	0.	-4.2	0.	0.	0.
JUN	6	13	62.	85.	0.	54.	0.	-3.9	0.	0.	0.
JUL	7	13	62.	86.	0.	56.	0.	-3.7	0.	0.	0.
AUG	8	13	62.	85.	0.	58.	0.	-3.6	0.	0.	0.
SEP	9	13	56.	87.	0.	53.	0.	-4.0	0.	0.	0.
OCT	10	13	66.	91.	0.	60.	0.	-3.5	0.	0.	0.
NOV	11	13	68.	95.	0.	60.	0.	-3.4	0.	0.	0.
DEC	12	13	72.	99.	0.	67.	0.	-3.0	0.	0.	0.

********** DEMAND INPUT SUMMARY FOR 1991 **********

FOR AREA 17

	LOAD SHAPE	LOAD AREA	MIN MW	-- PEAK DEMAND -- MW	DEV(%)	---- ENERGY ----- GWH	DEV(%)	ENERGY/PEAK INCONSISTENCY (%)	---- INTERRUPTIBLE LOAD ---- WEEK DAY	WEEK NITE	WEEK END
JAN	1	13	131.	168.	0.	114.	0.	-2.8	0.	0.	0.
FEB	2	13	117.	158.	0.	98.	0.	-6.9	0.	0.	0.
MAR	3	13	123.	157.	0.	108.	0.	-3.0	0.	0.	0.
APR	4	13	116.	155.	0.	100.	0.	-3.2	0.	0.	0.
MAY	5	13	42.	119.	0.	71.	0.	-4.2	0.	0.	0.
JUN	6	13	87.	119.	0.	76.	0.	-3.8	0.	0.	0.
JUL	7	13	87.	120.	0.	79.	0.	-3.8	0.	0.	0.
AUG	8	13	87.	119.	0.	81.	0.	-3.6	0.	0.	0.
SEP	9	13	79.	121.	0.	74.	0.	-4.0	0.	0.	0.
OCT	10	13	93.	128.	0.	84.	0.	-3.5	0.	0.	0.
NOV	11	13	108.	151.	0.	96.	0.	-3.4	0.	0.	0.
DEC	12	13	114.	157.	0.	106.	0.	-3.1	0.	0.	0.

********** DEMAND INPUT SUMMARY FOR 1991 **********

FOR AREA 18

	LOAD SHAPE	LOAD AREA	MIN MW	-- PEAK DEMAND -- MW	DEV(%)	---- ENERGY ----- GWH	DEV(%)	ENERGY/PEAK INCONSISTENCY (%)	---- INTERRUPTIBLE LOAD ---- WEEK DAY	WEEK NITE	WEEK END
JAN	1	13	157.	201.	0.	137.	0.	-2.9	0.	0.	0.
FEB	2	13	140.	190.	0.	118.	0.	-6.9	0.	0.	0.
MAR	3	13	147.	188.	0.	129.	0.	-3.0	0.	0.	0.
APR	4	13	139.	186.	0.	120.	0.	-3.3	0.	0.	0.
MAY	5	13	40.	114.	0.	68.	0.	-4.2	0.	0.	0.
JUN	6	13	83.	114.	0.	73.	0.	-3.9	0.	0.	0.
JUL	7	13	83.	115.	0.	75.	0.	-3.7	0.	0.	0.
AUG	8	13	83.	114.	0.	78.	0.	-3.6	0.	0.	0.
SEP	9	13	75.	116.	0.	70.	0.	-4.0	0.	0.	0.
OCT	10	13	89.	122.	0.	80.	0.	-3.5	0.	0.	0.
NOV	11	13	133.	186.	0.	118.	0.	-3.4	0.	0.	0.
DEC	12	13	140.	194.	0.	130.	0.	-3.1	0.	0.	0.

********** DEMAND INPUT SUMMARY FOR 1991 **********

FOR AREA 19

	LOAD SHAPE	LOAD AREA	MIN MW	-- PEAK DEMAND -- MW	DEV(%)	---- ENERGY ---- GWH	DEV(%)	ENERGY/PEAK INCONSISTENCY (%)	---- INTERRUPTIBLE LOAD ---- WEEK DAY	WEEK NITE	WEEK END
JAN	1	5	50.	95.	0.	54.	0.	0.3	0.	0.	0.
FEB	2	5	40.	93.	0.	47.	0.	-3.3	0.	0.	0.
MAR	3	5	40.	84.	0.	47.	0.	0.3	0.	0.	0.
APR	4	5	38.	78.	0.	42.	0.	0.3	0.	0.	0.
MAY	5	5	28.	53.	0.	31.	0.	0.4	0.	0.	0.
JUN	6	5	26.	59.	0.	30.	0.	0.3	0.	0.	0.
JUL	7	5	28.	60.	0.	32.	0.	0.4	0.	0.	0.
AUG	8	5	31.	61.	0.	35.	0.	0.3	0.	0.	0.
SEP	9	5	28.	56.	0.	31.	0.	0.3	0.	0.	0.
OCT	10	5	31.	59.	0.	33.	0.	0.3	0.	0.	0.
NOV	11	5	44.	89.	0.	47.	0.	0.3	0.	0.	0.
DEC	12	5	49.	96.	0.	53.	0.	0.3	0.	0.	0.

********** DEMAND INPUT SUMMARY FOR 1991 **********

FOR AREA 20

	LOAD SHAPE	LOAD AREA	MIN MW	-- PEAK DEMAND -- MW	DEV(%)	---- ENERGY ---- GWH	DEV(%)	ENERGY/PEAK INCONSISTENCY (%)	---- INTERRUPTIBLE LOAD ---- WEEK DAY	WEEK NITE	WEEK END
JAN	1	13	26.	34.	0.	23.	0.	-3.0	0.	0.	0.
FEB	2	13	23.	32.	0.	20.	0.	-6.9	0.	0.	0.
MAR	3	13	24.	31.	0.	22.	0.	-3.2	0.	0.	0.
APR	4	13	23.	31.	0.	20.	0.	-3.3	0.	0.	0.
MAY	5	13	10.	29.	0.	17.	0.	-4.2	0.	0.	0.
JUN	6	13	21.	29.	0.	18.	0.	-3.8	0.	0.	0.
JUL	7	13	21.	29.	0.	19.	0.	-3.6	0.	0.	0.
AUG	8	13	21.	29.	0.	20.	0.	-3.6	0.	0.	0.
SEP	9	13	19.	29.	0.	18.	0.	-3.9	0.	0.	0.
OCT	10	13	23.	31.	0.	20.	0.	-3.4	0.	0.	0.
NOV	11	13	23.	32.	0.	20.	0.	-3.5	0.	0.	0.
DEC	12	13	24.	33.	0.	22.	0.	-2.9	0.	0.	0.

********** DEMAND INPUT SUMMARY FOR 1991 **********

FOR AREA 21

	LOAD SHAPE	LOAD AREA	MIN MW	-- PEAK DEMAND -- MW	DEV(%)	---- ENERGY ---- GWH	DEV(%)	ENERGY/PEAK INCONSISTENCY (%)	---- INTERRUPTIBLE LOAD ---- WEEK DAY	WEEK NITE	WEEK END
JAN	1	5	50.	95.	0.	54.	0.	0.3	0.	0.	0.
FEB	2	5	40.	93.	0.	47.	0.	-3.3	0.	0.	0.
MAR	3	5	40.	84.	0.	47.	0.	0.3	0.	0.	0.
APR	4	5	38.	78.	0.	42.	0.	0.3	0.	0.	0.
MAY	5	5	37.	71.	0.	41.	0.	0.4	0.	0.	0.
JUN	6	5	35.	78.	0.	40.	0.	0.3	0.	0.	0.
JUL	7	5	37.	80.	0.	43.	0.	0.3	0.	0.	0.
AUG	8	5	41.	82.	0.	46.	0.	0.3	0.	0.	0.
SEP	9	5	37.	75.	0.	42.	0.	0.3	0.	0.	0.
OCT	10	5	42.	78.	0.	44.	0.	0.3	0.	0.	0.
NOV	11	5	44.	89.	0.	47.	0.	0.3	0.	0.	0.
DEC	12	5	49.	96.	0.	53.	0.	0.3	0.	0.	0.

********** DEMAND INPUT SUMMARY FOR 1991 **********

FOR AREA 22

	LOAD SHAPE	LOAD AREA	MIN MW	-- PEAK DEMAND -- MW	DEV(%)	---- ENERGY ---- GWH	DEV(%)	ENERGY/PEAK INCONSISTENCY (%)	---- INTERRUPTIBLE LOAD ---- WEEK DAY	WEEK NITE	WEEK END
JAN	1	26	9.	29.	0.	14.	0.	-5.1	0.	0.	0.
FEB	2	26	8.	27.	0.	12.	0.	-9.7	0.	0.	0.
MAR	3	26	8.	27.	0.	14.	0.	-5.3	0.	0.	0.
APR	4	26	9.	27.	0.	13.	0.	-5.7	0.	0.	0.
MAY	5	26	9.	27.	0.	14.	0.	-5.2	0.	0.	0.
JUN	6	26	10.	27.	0.	14.	0.	-4.9	0.	0.	0.
JUL	7	26	10.	27.	0.	15.	0.	-5.0	0.	0.	0.
AUG	8	26	10.	27.	0.	14.	0.	-4.8	0.	0.	0.
SEP	9	26	10.	28.	0.	14.	0.	-5.1	0.	0.	0.
OCT	10	26	9.	29.	0.	15.	0.	-4.7	0.	0.	0.
NOV	11	26	8.	26.	0.	13.	0.	-5.8	0.	0.	0.
DEC	12	26	9.	27.	0.	14.	0.	-5.2	0.	0.	0.

********** DEMAND INPUT SUMMARY FOR 1991 **********

FOR AREA 23

	LOAD SHAPE	LOAD AREA	MIN MW	-- PEAK DEMAND -- MW	DEV(%)	---- ENERGY ----- GWH	DEV(%)	ENERGY/PEAK INCONSISTENCY (%)	---- INTERRUPTIBLE LOAD ---- WEEK DAY	WEEK NITE	WEEK END
JAN	1	15	49.	108.	0.	56.	0.	3.4	0.	0.	0.
FEB	2	15	43.	107.	0.	49.	0.	0.4	0.	0.	0.
MAR	3	15	42.	104.	0.	51.	0.	3.7	0.	0.	0.
APR	4	15	43.	109.	0.	51.	0.	3.7	0.	0.	0.
MAY	5	15	33.	127.	0.	51.	0.	3.7	0.	0.	0.
JUN	6	15	47.	158.	0.	64.	0.	3.0	0.	0.	0.
JUL	7	15	50.	158.	0.	69.	0.	2.8	0.	0.	0.
AUG	8	15	52.	158.	0.	68.	0.	2.8	0.	0.	0.
SEP	9	15	48.	158.	0.	61.	0.	3.2	0.	0.	0.
OCT	10	15	48.	119.	0.	60.	0.	3.1	0.	0.	0.
NOV	11	15	44.	107.	0.	52.	0.	3.6	0.	0.	0.
DEC	12	15	48.	109.	0.	56.	0.	3.4	0.	0.	0.

********** DEMAND INPUT SUMMARY FOR 1991 **********

FOR AREA 24

	LOAD SHAPE	LOAD AREA	MIN MW	-- PEAK DEMAND -- MW	DEV(%)	---- ENERGY ----- GWH	DEV(%)	ENERGY/PEAK INCONSISTENCY (%)	---- INTERRUPTIBLE LOAD ---- WEEK DAY	WEEK NITE	WEEK END
JAN	1	26	56.	180.	0.	89.	0.	-5.0	0.	0.	0.
FEB	2	26	50.	170.	0.	78.	0.	-9.5	0.	0.	0.
MAR	3	26	51.	169.	0.	85.	0.	-5.2	0.	0.	0.
APR	4	26	54.	166.	0.	81.	0.	-5.5	0.	0.	0.
MAY	5	26	56.	170.	0.	85.	0.	-5.2	0.	0.	0.
JUN	6	26	60.	170.	0.	89.	0.	-5.0	0.	0.	0.
JUL	7	26	64.	171.	0.	93.	0.	-4.8	0.	0.	0.
AUG	8	26	62.	170.	0.	91.	0.	-4.9	0.	0.	0.
SEP	9	26	63.	173.	0.	88.	0.	-5.1	0.	0.	0.
OCT	10	26	59.	182.	0.	97.	0.	-4.7	0.	0.	0.
NOV	11	26	52.	163.	0.	80.	0.	-5.6	0.	0.	0.
DEC	12	26	54.	169.	0.	87.	0.	-5.2	0.	0.	0.

********** DEMAND INPUT SUMMARY FOR 1991 **********

FOR AREA 25

	LOAD SHAPE	LOAD AREA	MIN MW	-- PEAK DEMAND -- MW	DEV(%)	---- ENERGY ---- GWH	DEV(%)	ENERGY/PEAK INCONSISTENCY (%)	---- INTERRUPTIBLE LOAD ---- WEEK DAY	WEEK NITE	WEEK END
JAN	1	15	303.	673.	0.	352.	0.	3.4	0.	0.	0.
FEB	2	15	270.	666.	0.	306.	0.	0.4	0.	0.	0.
MAR	3	15	263.	647.	0.	321.	0.	3.7	0.	0.	0.
APR	4	15	271.	677.	0.	319.	0.	3.7	0.	0.	0.
MAY	5	15	208.	801.	0.	319.	0.	3.7	0.	0.	0.
JUN	6	15	299.	990.	0.	402.	0.	3.0	0.	0.	0.
JUL	7	15	313.	990.	0.	434.	0.	2.8	0.	0.	0.
AUG	8	15	325.	990.	0.	428.	0.	2.8	0.	0.	0.
SEP	9	15	301.	990.	0.	381.	0.	3.2	0.	0.	0.
OCT	10	15	301.	749.	0.	376.	0.	3.2	0.	0.	0.
NOV	11	15	275.	673.	0.	327.	0.	3.6	0.	0.	0.
DEC	12	15	299.	688.	0.	352.	0.	3.4	0.	0.	0.

********** DEMAND INPUT SUMMARY FOR 1991 **********

FOR AREA 26

	LOAD SHAPE	LOAD AREA	MIN MW	-- PEAK DEMAND -- MW	DEV(%)	---- ENERGY ---- GWH	DEV(%)	ENERGY/PEAK INCONSISTENCY (%)	---- INTERRUPTIBLE LOAD ---- WEEK DAY	WEEK NITE	WEEK END
JAN	1	26	360.	1168.	0.	578.	0.	-5.0	0.	0.	0.
FEB	2	26	327.	1100.	0.	504.	0.	-9.5	0.	0.	0.
MAR	3	26	331.	1091.	0.	552.	0.	-5.2	0.	0.	0.
APR	4	26	352.	1076.	0.	526.	0.	-5.5	0.	0.	0.
MAY	5	26	358.	1092.	0.	547.	0.	-5.3	0.	0.	0.
JUN	6	26	387.	1091.	0.	570.	0.	-5.1	0.	0.	0.
JUL	7	26	410.	1099.	0.	596.	0.	-4.8	0.	0.	0.
AUG	8	26	396.	1087.	0.	581.	0.	-4.9	0.	0.	0.
SEP	9	26	403.	1110.	0.	567.	0.	-5.1	0.	0.	0.
OCT	10	26	377.	1171.	0.	619.	0.	-4.7	0.	0.	0.
NOV	11	26	335.	1043.	0.	515.	0.	-5.6	0.	0.	0.
DEC	12	26	349.	1085.	0.	557.	0.	-5.2	0.	0.	0.

********** DEMAND INPUT SUMMARY FOR 1991 **********

FOR AREA 27

	LOAD SHAPE	LOAD AREA	MIN MW	-- PEAK DEMAND -- MW	DEV(%)	---- ENERGY ---- GWH	DEV(%)	ENERGY/PEAK INCONSISTENCY (%)	---- INTERRUPTIBLE LOAD ---- WEEK DAY	WEEK NITE	WEEK END
JAN	1	12	63.	140.	0.	70.	0.	2.8	0.	0.	0.
FEB	2	12	56.	137.	0.	62.	0.	-0.3	0.	0.	0.
MAR	3	12	55.	126.	0.	67.	0.	3.0	0.	0.	0.
APR	4	12	50.	120.	0.	59.	0.	3.3	0.	0.	0.
MAY	5	12	43.	108.	0.	51.	0.	3.8	0.	0.	0.
JUN	6	12	44.	122.	0.	54.	0.	3.6	0.	0.	0.
JUL	7	12	42.	125.	0.	55.	0.	3.5	0.	0.	0.
AUG	8	12	46.	125.	0.	58.	0.	3.3	0.	0.	0.
SEP	9	12	41.	110.	0.	48.	0.	4.0	0.	0.	0.
OCT	10	12	49.	113.	0.	56.	0.	3.4	0.	0.	0.
NOV	11	12	57.	136.	0.	64.	0.	3.1	0.	0.	0.
DEC	12	12	62.	145.	0.	73.	0.	2.7	0.	0.	0.

I.G Fuel Cost Summary Report

FUEL COST SUMMARY REPORT

Fuel costs are provided by fuel by month for 1986 to 1991. It is important to check that the fuel type used by the units is properly identified. These checks can be conducted by comparing the unit summaries in Volume II with the fuel data in this section.

From 1986 onward, fuel costs are based upon the November, 1982, ICF, Inc. forecasts and are given for the following conditions:

General Inflation Rate 6% & Low Range Fuel Prices

General Inflation Rate 7% & High Range Fuel Prices

ESEP Copy

1986

********** FUEL CATEGORY INPUT SUMMARY F[illegible]986 **********

OH FUEL UNLIMITED 1.000 MBTU/TONS ESCALATION RATE 7.0 %/YR INVENTORY CARRYING CHARGE 7.0 %/YR UNLOADING CHARGE 0. C/MBTU
FUEL ID998
SULFUR CONCENTRATION 0.0 LB/MBTU
MINIMUM AMOUNT 0.0 TONS/DAY
INITIAL INVENTORY: LEVEL 0. TONS VALUE 0. $
INVENTORY ADD ON COST 0. $

	JAN	FEB	MAR	APR	MAY	JUN	JUL	AUG	SEP	OCT	NOV	DEC
FUEL COST (C/MBTU)	265.80	267.00	268.20	269.40	249.80	251.00	273.10	253.30	254.40	255.60	278.20	279.40
INVENTORY(KTONS)	0.	0.	0.	0.	0.	0.	0.	0.	0.	0.	0.	0.

OH FUEL UNLIMITED 1.000 MBTU/TONS ESCALATION RATE 7.0 %/YR INVENTORY CARRYING CHARGE 7.0 %/YR UNLOADING CHARGE 0. C/MBTU
FUEL ID999
SULFUR CONCENTRATION 0.0 LB/MBTU
MINIMUM AMOUNT 0.0 TONS/DAY
INITIAL INVENTORY: LEVEL 0. TONS VALUE 0. $
INVENTORY ADD ON COST 0. $

	JAN	FEB	MAR	APR	MAY	JUN	JUL	AUG	SEP	OCT	NOV	DEC
FUEL COST (C/MBTU)	306.70	308.10	309.50	310.90	291.50	292.80	294.20	295.50	296.80	298.20	321.00	322.40
INVENTORY(KTONS)	0.	0.	0.	0.	0.	0.	0.	0.	0.	0.	0.	0.

RES 0.7U UNLIMITED 6.200 MBTU/BBLS ESCALATION RATE 9.1 %/YR INVENTORY CARRYING CHARGE 9.1 %/YR UNLOADING CHARGE 0. C/MBTU
FUEL ID902
SULFUR CONCENTRATION 0.0 LB/MBTU
MINIMUM AMOUNT 0.0 BBLS/DAY
INITIAL INVENTORY: LEVEL 0. BBLS VALUE 0. $
INVENTORY ADD ON COST 0. $

	JAN	FEB	MAR	APR	MAY	JUN	JUL	AUG	SEP	OCT	NOV	DEC
FUEL COST (C/MBTU)	580.15	584.39	588.67	592.98	597.32	601.69	606.09	610.53	614.99	619.49	624.03	628.59
INVENTORY(KBBLS)	0.	0.	0.	0.	0.	0.	0.	0.	0.	0.	0.	0.

RES 1.0U UNLIMITED 6.220 MBTU/BBLS ESCALATION RATE 9.5 %/YR INVENTORY CARRYING CHARGE 9.5 %/YR UNLOADING CHARGE 0. C/MBTU
FUEL ID903
SULFUR CONCENTRATION 0.0 LB/MBTU
MINIMUM AMOUNT 0.0 BBLS/DAY
INITIAL INVENTORY: LEVEL 0. BBLS VALUE 0. $
INVENTORY ADD ON COST 0. $

	JAN	FEB	MAR	APR	MAY	JUN	JUL	AUG	SEP	OCT	NOV	DEC
FUEL COST (C/MBTU)	562.35	566.60	570.88	575.19	579.54	583.92	588.33	592.77	597.25	601.76	606.31	610.89
INVENTORY(KBBLS)	0.	0.	0.	0.	0.	0.	0.	0.	0.	0.	0.	0.

********** FUEL CATEGORY INPUT SUMMARY FOR 1986 **********

RES 2.0U UNLIMITED 6,250 MBTU/BBLS ESCALATION RATE 10.2 %/YR INVENTORY CARRYING CHARGE 10.2 %/YR UNLOADING CHARGE 0. C/MBTU
FUEL 10904
SULFUR CONCENTRATION 0.0 LB/MBTU
MINIMUM AMOUNT 0.0 BBLS/DAY
INITIAL INVENTORY: LEVEL 0. BBLS VALUE 0. $
INVENTORY ADD ON COST 0. $

	JAN	FEB	MAR	APR	MAY	JUN	JUL	AUG	SEP	OCT	NOV	DEC
FUEL COST (C/MBTU)	519.20	523.40	527.65	531.92	536.23	540.58	544.96	549.38	553.83	558.32	562.84	567.40
INVENTORY(KBBLS)	0.	0.	0.	0.	0.	0.	0.	0.	0.	0.	0.	0.

RES 2.8U UNLIMITED 6,280 MBTU/BBLS ESCALATION RATE 10.7 %/YR INVENTORY CARRYING CHARGE 10.7 %/YR UNLOADING CHARGE 0. C/MBTU
FUEL 10905
SULFUR CONCENTRATION 0.0 LB/MBTU
MINIMUM AMOUNT 0.0 BBLS/DAY
INITIAL INVENTORY: LEVEL 0. BBLS VALUE 0. $
INVENTORY ADD ON COST 0. $

	JAN	FEB	MAR	APR	MAY	JUN	JUL	AUG	SEP	OCT	NOV	DEC
FUEL COST (C/MBTU)	490.45	494.62	498.82	503.06	507.33	511.65	516.00	520.38	524.80	529.26	533.76	538.30
INVENTORY(KBBLS)	0.	0.	0.	0.	0.	0.	0.	0.	0.	0.	0.	0.

DIS OILU UNLIMITED 5,830 MBTU/BBLS ESCALATION RATE 6.9 %/YR INVENTORY CARRYING CHARGE 6.9 %/YR UNLOADING CHARGE 0. C/MBTU
FUEL 10931
SULFUR CONCENTRATION 0.0 LB/MBTU
MINIMUM AMOUNT 0.0 BBLS/DAY
INITIAL INVENTORY: LEVEL 0. BBLS VALUE 0. $
INVENTORY ADD ON COST 0. $

	JAN	FEB	MAR	APR	MAY	JUN	JUL	AUG	SEP	OCT	NOV	DEC
FUEL COST (C/MBTU)	707.07	711.02	714.99	718.99	723.00	727.04	731.10	735.18	739.29	743.42	747.57	751.74
INVENTORY(KBBLS)	0.	0.	0.	0.	0.	0.	0.	0.	0.	0.	0.	0.

RES 0.3D UNLIMITED 6,190 MBTU/BBLS ESCALATION RATE 8.9 %/YR INVENTORY CARRYING CHARGE 8.9 %/YR UNLOADING CHARGE 0. C/MBTU
FUEL 10921
SULFUR CONCENTRATION 0.0 LB/MBTU
MINIMUM AMOUNT 0.0 BBLS/DAY
INITIAL INVENTORY: LEVEL 0. BBLS VALUE 0. $
INVENTORY ADD ON COST 0. $

	JAN	FEB	MAR	APR	MAY	JUN	JUL	AUG	SEP	OCT	NOV	DEC
FUEL COST (C/MBTU)	584.28	588.43	592.61	596.83	601.07	605.34	609.65	613.98	618.35	622.75	627.17	631.63
INVENTORY(KBBLS)	0.	0.	0.	0.	0.	0.	0.	0.	0.	0.	0.	0.

********** FUEL CATEGORY INPUT SUMMARY FOR 1986 **********

RES 0.75 UNLIMITED 6,200 MBTU/BBLS ESCALATION RATE 9.3 %/YR INVENTORY CARRYING CHARGE 9.3 %/YR UNLOADING CHARGE 0. C/MBTU
FUEL ID922
SULFUR CONCENTRATION 0.0 LB/MBTU
MINIMUM AMOUNT 0.0 BBLS/DAY
INITIAL INVENTORY: LEVEL 0. BBLS VALUE 0. $
INVENTORY ADD ON COST 0. $

	JAN	FEB	MAR	APR	MAY	JUN	JUL	AUG	SEP	OCT	NOV	DEC
FUEL COST (C/MBTU)	557.95	562.09	566.25	570.45	574.68	578.93	583.22	587.55	591.90	596.29	600.70	605.15
INVENTORY (KBBLS)	0.	0.	0.	0.	0.	0.	0.	0.	0.	0.	0.	0.

RES 1.00 UNLIMITED 6,220 MBTU/BBLS ESCALATION RATE 9.5 %/YR INVENTORY CARRYING CHARGE 9.5 %/YR UNLOADING CHARGE 0. C/MBTU
FUEL ID923
SULFUR CONCENTRATION 0.0 LB/MBTU
MINIMUM AMOUNT 0.0 BBLS/DAY
INITIAL INVENTORY: LEVEL 0. BBLS VALUE 0. $
INVENTORY ADD ON COST 0. $

	JAN	FEB	MAR	APR	MAY	JUN	JUL	AUG	SEP	OCT	NOV	DEC
FUEL COST (C/MBTU)	541.27	545.39	549.54	553.73	557.95	562.20	566.48	570.80	575.14	579.53	583.94	588.39
INVENTORY (KBBLS)	0.	0.	0.	0.	0.	0.	0.	0.	0.	0.	0.	0.

RES 1.50 UNLIMITED 6,235 MBTU/BBLS ESCALATION RATE 9.9 %/YR INVENTORY CARRYING CHARGE 9.9 %/YR UNLOADING CHARGE 0. C/MBTU
FUEL ID924
SULFUR CONCENTRATION 0.0 LB/MBTU
MINIMUM AMOUNT 0.0 BBLS/DAY
INITIAL INVENTORY: LEVEL 0. BBLS VALUE 0. $
INVENTORY ADD ON COST 0. $

	JAN	FEB	MAR	APR	MAY	JUN	JUL	AUG	SEP	OCT	NOV	DEC
FUEL COST (C/MBTU)	519.57	523.66	527.78	531.93	536.11	540.33	544.58	548.86	553.18	557.53	561.92	566.33
INVENTORY (KBBLS)	0.	0.	0.	0.	0.	0.	0.	0.	0.	0.	0.	0.

RES 2.00 UNLIMITED 6,250 MBTU/BBLS ESCALATION RATE 10.3 %/YR INVENTORY CARRYING CHARGE 10.3 %/YR UNLOADING CHARGE 0. C/MBTU
FUEL ID925
SULFUR CONCENTRATION 0.0 LB/MBTU
MINIMUM AMOUNT 0.0 BBLS/DAY
INITIAL INVENTORY: LEVEL 0. BBLS VALUE 0. $
INVENTORY ADD ON COST 0. $

	JAN	FEB	MAR	APR	MAY	JUN	JUL	AUG	SEP	OCT	NOV	DEC
FUEL COST (C/MBTU)	496.96	501.03	505.14	509.29	513.46	517.67	521.92	526.20	530.52	534.87	539.26	543.68
INVENTORY (KBBLS)	0.	0.	0.	0.	0.	0.	0.	0.	0.	0.	0.	0.

********** FUEL CATEGORY INPUT SUMMARY FOR 1986 **********

RES 2.80 UNLIMITED 6,280 MBTU/BBLS ESCALATION RATE 10.9 %/YR INVENTORY CARRYING CHARGE 10.9 %/YR UNLOADING CHARGE 0. C/MBTU
FUEL I0926
SULFUR CONCENTRATION 0.0 LB/MBTU
MINIMUM AMOUNT 0.0 BBLS/DAY
INITIAL INVENTORY: LEVEL 0. BBLS VALUE 0. $
INVENTORY ADD ON COST 0. $

	JAN	FEB	MAR	APR	MAY	JUN	JUL	AUG	SEP	OCT	NOV	DEC
FUEL COST (C/MBTU)	468.23	472.28	476.37	480.49	484.65	488.85	493.08	497.35	501.66	506.00	510.38	514.80
INVENTORY (KBBLS)	0.	0.	0.	0.	0.	0.	0.	0.	0.	0.	0.	0.

DIS OILD UNLIMITED 5,830 MBTU/BBLS ESCALATION RATE 6.9 %/YR INVENTORY CARRYING CHARGE 6.9 %/YR UNLOADING CHARGE 0. C/MBTU
FUEL I0935
SULFUR CONCENTRATION 0.0 LB/MBTU
MINIMUM AMOUNT 0.0 BBLS/DAY
INITIAL INVENTORY: LEVEL 0. BBLS VALUE 0. $
INVENTORY ADD ON COST 0. $

	JAN	FEB	MAR	APR	MAY	JUN	JUL	AUG	SEP	OCT	NOV	DEC
FUEL COST (C/MBTU)	716.90	720.90	724.91	728.96	733.02	737.11	741.22	745.35	749.51	753.69	757.89	762.12
INVENTORY (KBBLS)	0.	0.	0.	0.	0.	0.	0.	0.	0.	0.	0.	0.

COAL1.0U UNLIMITED 25,000 MBTU/TONS ESCALATION RATE 7.2 %/YR INVENTORY CARRYING CHARGE 7.2 %/YR UNLOADING CHARGE 0. C/MBTU
FUEL I0941
SULFUR CONCENTRATION 0.0 LB/MBTU
MINIMUM AMOUNT 0.0 TONS/DAY
INITIAL INVENTORY: LEVEL 0. TONS VALUE 0. $
INVENTORY ADD ON COST 0. $

	JAN	FEB	MAR	APR	MAY	JUN	JUL	AUG	SEP	OCT	NOV	DEC
FUEL COST (C/MBTU)	251.16	252.62	254.09	255.58	257.07	258.56	260.07	261.59	263.11	264.65	266.19	267.74
INVENTORY (KTONS)	0.	0.	0.	0.	0.	0.	0.	0.	0.	0.	0.	0.

COAL1.4U UNLIMITED 24,000 MBTU/TONS ESCALATION RATE 8.4 %/YR INVENTORY CARRYING CHARGE 8.4 %/YR UNLOADING CHARGE 0. C/MBTU
FUEL I0942
SULFUR CONCENTRATION 0.0 LB/MBTU
MINIMUM AMOUNT 0.0 TONS/DAY
INITIAL INVENTORY: LEVEL 0. TONS VALUE 0. $
INVENTORY ADD ON COST 0. $

	JAN	FEB	MAR	APR	MAY	JUN	JUL	AUG	SEP	OCT	NOV	DEC
FUEL COST (C/MBTU)	234.40	235.98	237.56	239.16	240.77	242.36	244.01	245.65	247.31	248.97	250.64	252.33
INVENTORY (KTONS)	0.	0.	0.	0.	0.	0.	0.	0.	0.	0.	0.	0.

********** FUEL CATEGORY INPUT SUMMARY FOR 1986 **********

COAL2.0U UNLIMITED 24.000 MBTU/TONS ESCALATION RATE 7.8 %/YR INVENTORY CARRYING CHARGE 7.8 %/YR UNLOADING CHARGE 0. C/MBTU
FUEL ID943
SULFUR CONCENTRATION 0.0 LB/MBTU
MINIMUM AMOUNT 0.0 TONS/DAY
INITIAL INVENTORY: LEVEL 0. TONS VALUE 0. $
INVENTORY ADD ON COST 0. $

	JAN	FEB	MAR	APR	MAY	JUN	JUL	AUG	SEP	OCT	NOV	DEC
FUEL COST (C/MBTU)	221.28	222.68	224.08	225.50	226.92	228.35	229.79	231.24	232.70	234.17	235.65	237.13
INVENTORY (KTONS)	0.	0.	0.	0.	0.	0.	0.	0.	0.	0.	0.	0.

COAL >2U UNLIMITED 24.000 MBTU/TONS ESCALATION RATE 5.6 %/YR INVENTORY CARRYING CHARGE 5.6 %/YR UNLOADING CHARGE 0. C/MBTU
FUEL ID944
SULFUR CONCENTRATION 0.0 LB/MBTU
MINIMUM AMOUNT 0.0 TONS/DAY
INITIAL INVENTORY: LEVEL 0. TONS VALUE 0. $
INVENTORY ADD ON COST 0. $

	JAN	FEB	MAR	APR	MAY	JUN	JUL	AUG	SEP	OCT	NOV	DEC
FUEL COST (C/MBTU)	209.35	210.31	211.27	212.23	213.20	214.18	215.16	216.14	217.13	218.12	219.12	220.12
INVENTORY (KTONS)	0.	0.	0.	0.	0.	0.	0.	0.	0.	0.	0.	0.

COAL1.0D UNLIMITED 25.000 MBTU/TONS ESCALATION RATE 7.1 %/YR INVENTORY CARRYING CHARGE 7.1 %/YR UNLOADING CHARGE 0. C/MBTU
FUEL ID951
SULFUR CONCENTRATION 0.0 LB/MBTU
MINIMUM AMOUNT 0.0 TONS/DAY
INITIAL INVENTORY: LEVEL 0. TONS VALUE 0. $
INVENTORY ADD ON COST 0. $

	JAN	FEB	MAR	APR	MAY	JUN	JUL	AUG	SEP	OCT	NOV	DEC
FUEL COST (C/MBTU)	269.56	271.11	272.67	274.25	275.83	277.42	279.02	280.62	282.24	283.87	285.51	287.15
INVENTORY (KTONS)	0.	0.	0.	0.	0.	0.	0.	0.	0.	0.	0.	0.

COAL1.4D UNLIMITED 24.000 MBTU/TONS ESCALATION RATE 8.2 %/YR INVENTORY CARRYING CHARGE 8.2 %/YR UNLOADING CHARGE 0. C/MBTU
FUEL ID952
SULFUR CONCENTRATION 0.0 LB/MBTU
MINIMUM AMOUNT 0.0 TONS/DAY
INITIAL INVENTORY: LEVEL 0. TONS VALUE 0. $
INVENTORY ADD ON COST 0. $

	JAN	FEB	MAR	APR	MAY	JUN	JUL	AUG	SEP	OCT	NOV	DEC
FUEL COST (C/MBTU)	256.46	258.17	259.86	261.57	263.29	265.01	266.76	268.51	270.27	272.05	273.83	275.63
INVENTORY (KTONS)	0.	0.	0.	0.	0.	0.	0.	0.	0.	0.	0.	0.

********** FUEL CATEGORY INPUT SUMMARY FOR 1986 **********

COAL2.0D UNLIMITED 24.000 MBTU/TONS ESCALATION RATE 7.7 %/YR INVENTORY CARRYING CHARGE 7.7 %/YR UNLOADING CHARGE 0. C/MBTU
FUEL ID953
SULFUR CONCENTRATION 0.0 LB/MBTU
MINIMUM AMOUNT 0.0 TONS/DAY
INITIAL INVENTORY: LEVEL 0. TONS VALUE 0. $
INVENTORY ADD ON COST 0. $

	JAN	FEB	MAR	APR	MAY	JUN	JUL	AUG	SEP	OCT	NOV	DEC
FUEL COST (C/MBTU)	243.36	244.86	246.38	247.90	249.43	250.97	252.53	254.09	255.66	257.24	258.83	260.43
INVENTORY (KTONS)	0.	0.	0.	0.	0.	0.	0.	0.	0.	0.	0.	0.

COAL >2D UNLIMITED 24.000 MBTU/TONS ESCALATION RATE 5.7 %/YR INVENTORY CARRYING CHARGE 5.7 %/YR UNLOADING CHARGE 0. C/MBTU
FUEL ID954
SULFUR CONCENTRATION 0.0 LB/MBTU
MINIMUM AMOUNT 0.0 TONS/DAY
INITIAL INVENTORY: LEVEL 0. TONS VALUE 0. $
INVENTORY ADD ON COST 0. $

SEE PAGES 137-138 @ END OF THIS SECTION

	JAN	FEB	MA	JUN	JUL	AUG	SEP	OCT	NOV	DEC
FUEL COST (C/MBTU)	238.78	239.88	240		245.46	246.59	247.73	248.87	250.01	251.17
INVENTORY (KTONS)	0.	0.				0.	0.	0.	0.	0.

URANIUM2 UNLIMITED 1.000 MBTU/ INVENTORY CARRYING CHARGE 6.0 %/YR UNLOADING CHARGE 0. C/MBTU
FUEL ID962
SULFUR CONCENTRATION 0.0 LB/MBTU
MINIMUM AMOUNT 0.0 MBTU/DAY
INITIAL INVENTORY: LEVEL 0. MBTU VALUE 0.
INVENTORY ADD ON COST 0. $

	JAN	FEB	MAR	APR	MAY	JUN	JUL	AUG	SEP	OCT	NOV	DEC
FUEL COST (C/MBTU)	73.52	73.87	74.23	74.60	74.96	75.32	75.69	76.06	76.43	76.80	77.17	77.55
INVENTORY (KMBTU)	0.	0.	0.	0.	0.	0.	0.	0.	0.	0.	0.	0.

URANIUM3 UNLIMITED 1.000 MBTU/MBTU ESCALATION RATE 6.0 %/YR INVENTORY CARRYING CHARGE 6.0 %/YR UNLOADING CHARGE 0. C/MBTU
FUEL ID963
SULFUR CONCENTRATION 0.0 LB/MBTU
MINIMUM AMOUNT 0.0 MBTU/DAY
INITIAL INVENTORY: LEVEL 0. MBTU VALUE 0. $
INVENTORY ADD ON COST 0. $

	JAN	FEB	MAR	APR	MAY	JUN	JUL	AUG	SEP	OCT	NOV	DEC
FUEL COST (C/MBTU)	84.30	84.71	85.12	85.53	85.95	86.37	86.79	87.21	87.64	88.06	88.49	88.92
INVENTORY (KMBTU)	0.	0.	0.	0.	0.	0.	0.	0.	0.	0.	0.	0.

********** FUEL CATEGORY INPUT SUMMARY FOR 1986 **********

URANIUM5 UNLIMITED 1.000 MBTU/MBTU ESCALATION RATE 6.0 %/YR INVENTORY CARRYING CHARGE 6.0 %/YR UNLOADING CHARGE 0. C/MBTU
FUEL ID965
SULFUR CONCENTRATION 0.0 LB/MBTU
MINIMUM AMOUNT 0.0 MBTU/DAY
INITIAL INVENTORY: LEVEL 0. MBTU VALUE 0. $
INVENTORY ADD ON COST 0. $

	JAN	FEB	MAR	APR	MAY	JUN	JUL	AUG	SEP	OCT	NOV	DEC
FUEL COST (C/MBTU)	85.97	86.39	86.81	87.23	87.66	88.09	88.51	88.95	89.38	89.81	90.25	90.69
INVENTORY(KMBTU)	0.	0.	0.	0.	0.	0.	0.	0.	0.	0.	0.	0.

URANIUM7 UNLIMITED 1.000 MBTU/MBTU ESCALATION RATE 6.0 %/YR INVENTORY CARRYING CHARGE 6.0 %/YR UNLOADING CHARGE 0. C/MBTU
FUEL ID967
SULFUR CONCENTRATION 0.0 LB/MBTU
MINIMUM AMOUNT 0.0 MBTU/DAY
INITIAL INVENTORY: LEVEL 0. MBTU VALUE 0. $
INVENTORY ADD ON COST 0. $

	JAN	FEB	MA	MAY	JUN	JUL	AUG	SEP	OCT	NOV	DEC
FUEL COST (C/MBTU)	80.01	80.40	80			82.38	82.78	83.18	83.59	84.00	84.40
INVENTORY(KMBTU)	0.	0.					0.	0.	0.	0.	0.

SEE PAGES 137-138 @ END OF THIS SECTION

NATGASU UNLIMITED 8.9[illegible] INVENTORY CARRYING CHARGE 12.7 %/YR UNLOADING CHARGE 0. C/MBTU
FUEL ID970
SULFUR CONCENTRATION 0.0 LB/MBTU
MINIMUM AMOUNT 0.0 MCF /DAY
INITIAL INVENTORY: LEVEL 0. MCF VALUE 0.
INVENTORY ADD ON COST 0. $

	JAN	FEB	MAR	APR	MAY	JUN	JUL	AUG	SEP	OCT	NOV	DEC
FUEL COST (C/MBTU)	485.60	490.45	495.35	500.30	505.30	510.35	515.44	520.59	525.79	531.05	536.35	541.71
INVENTORY(KMCF)	0.	0.	0.	0.	0.	0.	0.	0.	0.	0.	0.	0.

NATGASO UNLIMITED 8.930 MBTU/MCF ESCALATION RATE 12.3 %/YR INVENTORY CARRYING CHARGE 12.3 %/YR UNLOADING CHARGE 0. C/MBTU
FUEL ID971
SULFUR CONCENTRATION 0.0 LB/MBTU
MINIMUM AMOUNT 0.0 MCF /DAY
INITIAL INVENTORY: LEVEL 0. MCF VALUE 0. $
INVENTORY ADD ON COST 0. $

	JAN	FEB	MAR	APR	MAY	JUN	JUL	AUG	SEP	OCT	NOV	DEC
FUEL COST (C/MBTU)	499.69	504.54	509.43	514.37	519.36	524.40	529.48	534.62	539.80	545.04	550.33	555.66
INVENTORY(KMCF)	0.	0.	0.	0.	0.	0.	0.	0.	0.	0.	0.	0.

********** FUEL CATEGORY INPUT SUMMARY FOR 1986 **********

DIS OILR UNLIMITED 5.400 MBTU/BBLS ESCALATION RATE 6.8 %/YR INVENTORY CARRYING CHARGE 6.8 %/YR UNLOADING CHARGE 0. C/MBTU
FUEL ID536
SULFUR CONCENTRATION 0.0 LB/MBTU
MINIMUM AMOUNT 0.0 BBLS/DAY
INITIAL INVENTORY: LEVEL 0. BBLS VALUE 0. $
INVENTORY ADD ON COST 0. $

	JAN	FEB	MAR	APR	MAY	JUN	JUL	AUG	SEP	OCT	NOV	DEC
FUEL COST (C/MBTU)	819.96	824.46	828.98	833.53	838.11	842.71	847.33	851.98	856.66	861.36	866.09	870.84
INVENTORY(KBBLS)	0.	0.	0.	0.	0.	0.	0.	0.	0.	0.	0.	0.

DIS OILA UNLIMITED 5.300 MBTU/BBLS ESCALATION RATE 6.7 %/YR INVENTORY CARRYING CHARGE 6.7 %/YR UNLOADING CHARGE 0. C/MBTU
FUEL ID537
SULFUR CONCENTRATION 0.0 LB/MBTU
MINIMUM AMOUNT 0.0 BBLS/DAY
INITIAL INVENTORY: LEVEL 0. BBLS VALUE 0. $
INVENTORY ADD ON COST 0. $

	JAN	FEB	MAR	APR	MAY	JUN	JUL	AUG	SEP	OCT	NOV	DEC
FUEL COST (C/MBTU)	992.92	998.26	1003.63	1009.03	1014.46	1019.92	1025.41	1030.93	1036.47	1042.05	1047.66	1053.29
INVENTORY(KBBLS)	0.	0.	0.	0.	0.	0.	0.	0.	0.	0.	0.	0.

LFCL 1.8 UNLIMITED 25.000 MBTU/TONS ESCALATION RATE 7.9 %/YR INVENTORY CARRYING CHARGE 7.9 %/YR UNLOADING CHARGE 0. C/MBTU
FUEL ID510
SULFUR CONCENTRATION 0.0 LB/MBTU
MINIMUM AMOUNT 0.0 TONS/DAY
INITIAL INVENTORY: LEVEL 0. TONS VALUE 0. $
INVENTORY ADD ON COST 0. $

	JAN	FEB	MAR	APR	MAY	JUN	JUL	AUG	SEP	OCT	NOV	DEC
FUEL COST (C/MBTU)	261.09	262.74	264.40	266.07	267.75	269.44	271.14	272.86	274.58	276.32	278.06	279.82
INVENTORY(KTONS)	0.	0.	0.	0.	0.	0.	0.	0.	0.	0.	0.	0.

HFCL 1.8 UNLIMITED 25.000 MBTU/TONS ESCALATION RATE 7.9 %/YR INVENTORY CARRYING CHARGE 7.9 %/YR UNLOADING CHARGE 0. C/MBTU
FUEL ID511
SULFUR CONCENTRATION 0.0 LB/MBTU
MINIMUM AMOUNT 0.0 TONS/DAY
INITIAL INVENTORY: LEVEL 0. TONS VALUE 0. $
INVENTORY ADD ON COST 0. $

	JAN	FEB	MAR	APR	MAY	JUN	JUL	AUG	SEP	OCT	NOV	DEC
FUEL COST (C/MBTU)	217.59	218.97	220.36	221.75	223.16	224.57	225.99	227.43	228.87	230.32	231.77	233.24
INVENTORY(KTONS)	0.	0.	0.	0.	0.	0.	0.	0.	0.	0.	0.	0.

********** FUEL CATEGORY INPUT SUMMARY FOR 1986 **********

COAL2.4 UNLIMITED 25.000 MBTU/TONS ESCALATION RATE 5.6 %/YR INVENTORY CARRYING CHARGE 5.6 %/YR UNLOADING CHARGE 0. C/MBTU
FUEL ID514
SULFUR CONCENTRATION 0.0 LB/MBTU
MINIMUM AMOUNT 0.0 TONS/DAY
INITIAL INVENTORY: LEVEL 0. TONS VALUE 0. $
INVENTORY ADD ON COST 0. $

	JAN	FEB	MAR	APR	MAY	JUN	JUL	AUG	SEP	OCT	NOV	DEC
FUEL COST (C/MBTU)	204.45	205.38	206.32	207.26	208.20	209.15	210.11	211.07	212.03	213.00	213.97	214.94
INVENTORY (KTONS)	0.	0.	0.	0.	0.	0.	0.	0.	0.	0.	0.	0.

NATGAS A UNLIMITED 1.000 MBTU/DT ESCALATION RATE 11.6 %/YR INVENTORY CARRYING CHARGE 11.6 %/YR UNLOADING CHARGE 0. C/MBTU
FUEL ID580
SULFUR CONCENTRATION 0.0 LB/MBTU
MINIMUM AMOUNT 0.0 DT /DAY
INITIAL INVENTORY: LEVEL 0. DT VALUE 0. $
INVENTORY ADD ON COST 0. $

	JAN	FEB	MAR	APR	MAY	JUN	JUL	AUG	SEP	OCT	NOV	DEC
FUEL COST (C/MBTU)	524.67	529.50	534.37	539.28	544.24	549.24	554.29	559.39	564.53	569.73	574.96	580.25
INVENTORY (KDT)	0.	0.	0.	0.	0.	0.	0.	0.	0.	0.	0.	0.

********** FUEL CATEGORY INPUT SUMMARY FOR 1986 **********

COAL2.0D UNLIMITED 24,000 MBTU/TONS ESCALATION RATE 7.7 %/YR INVENTORY CARRYING CHARGE 7.7 %/YR UNLOADING CHARGE 0. C/MBTU
FUEL ID953
SULFUR CONCENTRATION 0.0 LB/MBTU
MINIMUM AMOUNT 0.0 TONS/DAY
INITIAL INVENTORY: LEVEL 0. TONS VALUE 0. $
INVENTORY ADD ON COST 0. $

	JAN	FEB	MAR	APR	MAY	JUN	JUL	AUG	SEP	OCT	NOV	DEC
FUEL COST (C/MBTU)	243.36	244.86	246.38	247.90	249.43	250.97	252.53	254.09	255.66	257.24	258.83	260.43
INVENTORY(KTONS)	0.	0.	0.	0.	0.	0.	0.	0.	0.	0.	0.	0.

COAL >2D UNLIMITED 24,000 MBTU/TONS ESCALATION RATE 5.7 %/YR INVENTORY CARRYING CHARGE 5.7 %/YR UNLOADING CHARGE 0. C/MBTU
FUEL ID954
SULFUR CONCENTRATION 0.0 LB/MBTU
MINIMUM AMOUNT 0.0 TONS/DAY
INITIAL INVENTORY: LEVEL 0. TONS VALUE 0. $
INVENTORY ADD ON COST 0. $

	JAN	FEB	MAR	APR	MAY	JUN	JUL	AUG	SEP	OCT	NOV	DEC
FUEL COST (C/MBTU)	238.78	239.88	240.99	242.10	243.21	244.33	245.46	246.59	247.73	248.87	250.01	251.17
INVENTORY(KTONS)	0.	0.	0.	0.	0.	0.	0.	0.	0.	0.	0.	0.

URANIUM2 UNLIMITED 1.000 MBTU/MBTU ESCALATION RATE 6.0 %/YR INVENTORY CARRYING CHARGE 6.0 %/YR UNLOADING CHARGE 0. C/MBTU
FUEL ID962
SULFUR CONCENTRATION. 0.0 LB/MBTU
MINIMUM AMOUNT 0.0 MBTU/DAY
INITIAL INVENTORY: LEVEL 0. MBTU VALUE 0. $
INVENTORY ADD ON COST 0. $

	JAN	FEB	MAR	APR	MAY	JUN	JUL	AUG	SEP	OCT	NOV	DEC
FUEL COST (C/MBTU)	51.48	51.73	51.98	52.23	52.49	52.74	53.00	53.26	53.52	53.78	54.04	54.30
INVENTORY(KMBTU)	0.	0.	0.	0.	0.	0.	0.	0.	0.	0.	0.	0.

URANIUM3 UNLIMITED 1.000 MBTU/MBTU ESCALATION RATE 6.0 %/YR INVENTORY CARRYING CHARGE 6.0 %/YR UNLOADING CHARGE 0. C/MBTU
FUEL ID963
SULFUR CONCENTRATION 0.0 LB/MBTU
MINIMUM AMOUNT 0.0 MBTU/DAY
INITIAL INVENTORY: LEVEL. 0. MBTU VALUE 0. $
INVENTORY ADD ON COST 0. $

	JAN	FEB	MAR	APR	MAY	JUN	JUL	AUG	SEP	OCT	NOV	DEC
FUEL COST (C/MBTU)	58.69	58.97	59.26	59.55	59.84	60.13	60.42	60.71	61.01	61.31	61.60	61.90
INVENTORY(KMBTU)	0.	0.	0.	0.	0.	0.	0.	0.	0.	0.	0.	0.

********** FUEL CATEGORY INPUT SUMMARY FOR 1986 **********

URANIUM5 UNLIMITED 1.000 MBTU/MBTU ESCALATION RATE 6.0 %/YR INVENTORY CARRYING CHARGE 6.0 %/YR UNLOADING CHARGE 0. C/MBTU
FUEL ID965
SULFUR CONCENTRATION 0.0 LB/MBTU
MINIMUM AMOUNT 0.0 MBTU/DAY
INITIAL INVENTORY: LEVEL 0. MBTU VALUE 0. $
INVENTORY ADD ON COST 0. $

	JAN	FEB	MAR	APR	MAY	JUN	JUL	AUG	SEP	OCT	NOV	DEC
FUEL COST (C/MBTU)	59.71	60.01	60.30	60.59	60.89	61.18	61.48	61.79	62.08	62.38	62.69	62.99
INVENTORY (KMBTU)	0.	0.	0.	0.	0.	0.	0.	0.	0.	0.	0.	0.

URANIUM7 UNLIMITED 1.000 MBTU/MBTU ESCALATION RATE 6.0 %/YR INVENTORY CARRYING CHARGE 6.0 %/YR UNLOADING CHARGE 0. C/MBTU
FUEL ID967
SULFUR CONCENTRATION 0.0 LB/MBTU
MINIMUM AMOUNT 0.0 MBTU/DAY
INITIAL INVENTORY: LEVEL 0. MBTU VALUE 0. $
INVENTORY ADD ON COST 0. $

	JAN	FEB	MAR	APR	MAY	JUN	JUL	AUG	SEP	OCT	NOV	DEC
FUEL COST (C/MBTU)	55.60	55.87	56.14	56.41	56.69	56.96	57.24	57.52	57.80	58.08	58.36	58.65
INVENTORY (KMBTU)	0.	0.	0.	0.	0.	0.	0.	0.	0.	0.	0.	0.

NATGASU UNLIMITED 8.930 MBTU/MCF ESCALATION RATE 12.7 %/YR INVENTORY CARRYING CHARGE 12.7 %/YR UNLOADING CHARGE 0. C/MBTU
FUEL ID970
SULFUR CONCENTRATION 0.0 LB/MBTU
MINIMUM AMOUNT 0.0 MCF /DAY
INITIAL INVENTORY: LEVEL 0. MCF VALUE 0. $
INVENTORY ADD ON COST 0. $

	JAN	FEB	MAR	APR	MAY	JUN	JUL	AUG	SEP	OCT	NOV	DEC
FUEL COST (C/MBTU)	485.60	490.45	495.35	500.30	505.30	510.35	515.44	520.59	525.79	531.05	536.35	541.71
INVENTORY (KMCF)	0.	0.	0.	0.	0.	0.	0.	0.	0.	0.	0.	0.

NATGASD UNLIMITED 8.930 MBTU/MCF ESCALATION RATE 12.3 %/YR INVENTORY CARRYING CHARGE 12.3 %/YR UNLOADING CHARGE 0. C/MBTU
FUEL ID971
SULFUR CONCENTRATION 0.0 LB/MBTU
MINIMUM AMOUNT 0.0 MCF /DAY
INITIAL INVENTORY: LEVEL 0. MCF VALUE 0. $
INVENTORY ADD ON COST 0. $

	JAN	FEB	MAR	APR	MAY	JUN	JUL	AUG	SEP	OCT	NOV	DEC
FUEL COST (C/MBTU)	499.69	504.54	509.43	514.37	519.36	524.40	529.48	534.62	539.80	545.04	550.33	555.66
INVENTORY (KMCF)	0.	0.	0.	0.	0.	0.	0.	0.	0.	0.	0.	0.

********** FUEL CATEGORY INPUT SUMMARY FOR 1986 **********

OH FUEL UNLIMITED 1.000 MBTU/TONS ESCALATION RATE 7.0 %/YR INVENTORY CARRYING CHARGE 7.0 %/YR UNLOADING CHARGE 0. C/MBTU
FUEL ID998
SULFUR CONCENTRATION 0.0 LB/MBTU
MINIMUM AMOUNT 0.0 TONS/DAY
INITIAL INVENTORY: LEVEL 0. TONS VALUE 0. $
INVENTORY ADD ON COST 0. $

	JAN	FEB	MAR	APR	MAY	JUN	JUL	AUG	SEP	OCT	NOV	DEC
FUEL COST (C/MBTU)	364.10	366.70	369.30	372.00	345.90	348.30	350.80	353.40	355.90	358.50	391.10	393.90
INVENTORY(KTONS)	0.	0.	0.	0.	0.	0.	0.	0.	0.	0.	0.	0.

OH FUEL UNLIMITED 1.000 MBTU/TONS ESCALATION RATE 7.0 %/YR INVENTORY CARRYING CHARGE 7.0 %/YR UNLOADING CHARGE 0. C/MBTU
FUEL ID999
SULFUR CONCENTRATION 0.0 LB/MBTU
MINIMUM AMOUNT 0.0 TONS/DAY
INITIAL INVENTORY: LEVEL 0. TONS VALUE 0. $
INVENTORY ADD ON COST 0. $

	JAN	FEB	MAR	APR	MAY	JUN	JUL	AUG	SEP	OCT	NOV	DEC
FUEL COST (C/MBTU)	420.10	423.10	426.20	429.20	403.50	406.40	409.30	412.30	415.20	418.20	451.30	454.50
INVENTORY(KTONS)	0.	0.	0.	0.	0.	0.	0.	0.	0.	0.	0.	0.

RES 0.7U UNLIMITED 6.200 MBTU/BBLS ESCALATION RATE 12.4 %/YR INVENTORY CARRYING CHARGE 12.4 %/YR UNLOADING CHARGE 0. C/MBTU
FUEL ID902
SULFUR CONCENTRATION 0.0 LB/MBTU
MINIMUM AMOUNT 0.0 BBLS/DAY
INITIAL INVENTORY: LEVEL 0. BBLS VALUE 0. $
INVENTORY ADD ON COST 0. $

	JAN	FEB	MAR	APR	MAY	JUN	JUL	AUG	SEP	OCT	NOV	DEC
FUEL COST (C/MBTU)	769.91	777.44	785.05	792.72	800.48	808.31	816.21	824.20	832.26	840.40	848.62	856.92
INVENTORY(KBBLS)	0.	0.	0.	0.	0.	0.	0.	0.	0.	0.	0.	0.

RES 1.0U UNLIMITED 6.220 MBTU/BBLS ESCALATION RATE 12.6 %/YR INVENTORY CARRYING CHARGE 12.6 %/YR UNLOADING CHARGE 0. C/MBTU
FUEL ID903
SULFUR CONCENTRATION 0.0 LB/MBTU
MINIMUM AMOUNT 0.0 BBLS/DAY
INITIAL INVENTORY: LEVEL 0. BBLS VALUE 0. $
INVENTORY ADD ON COST 0. $

	JAN	FEB	MAR	APR	MAY	JUN	JUL	AUG	SEP	OCT	NOV	DEC
FUEL COST (C/MBTU)	750.13	757.61	765.17	772.80	780.51	788.29	796.16	804.10	812.12	820.22	828.40	836.67
INVENTORY(KBBLS)	0.	0.	0.	0.		0.	0.	0.	0.	0.	0.	0.

********** FUEL CATEGORY INPUT SUMMARY FOR 1986 **********

RES 2.0U UNLIMITED 6.250 MBTU/BBLS ESCALATION RATE 13.3 %/YR INVENTORY CARRYING CHARGE 13.3 %/YR UNLOADING CHARGE 0. C/MBTU

FUEL ID904
SULFUR CONCENTRATION 0.0 LB/MBTU
MINIMUM AMOUNT 0.0 BBLS/DAY
INITIAL INVENTORY: LEVEL 0. BBLS VALUE 0. $
INVENTORY ADD ON COST 0. $

	JAN	FEB.	MAR	APR	MAY	JUN	JUL	AUG	SEP	OCT	NOV	DEC
FUEL COST (C/MBTU)	700.14	707.47	714.88	722.37	729.94	737.58	745.31	753.12	761.01	768.98	777.03	785.17
INVENTORY(KBBLS)	0.	0.	0.	0.	0.	0.	0.	0.	0.	0.	0.	0.

RES 2.8U UNLIMITED 6.280 MBTU/BBLS ESCALATION RATE 13.8 %/YR INVENTORY CARRYING CHARGE 13.8 %/YR UNLOADING CHARGE 0. C/MBTU

FUEL ID905
SULFUR CONCENTRATION 0.0 LB/MBTU
MINIMUM AMOUNT 0.0 BBLS/DAY
INITIAL INVENTORY: LEVEL 0. BBLS VALUE 0. $
INVENTORY ADD ON COST 0. $

	JAN	FEB	MAR	APR	MAY	JUN	JUL	AUG	SEP	OCT	NOV	DEC
FUEL COST (C/MBTU)	666.59	673.84	681.16	688.56	696.05	703.61	711.26	718.99	726.80	734.70	742.69	750.76
INVENTORY(KBBLS)	0.	0.	0.	0.	0.	0.	0.	0.	0.	0.	0.	0.

DIS OILU UNLIMITED 5.830 MBTU/BBLS ESCALATION RATE 9.9 %/YR INVENTORY CARRYING CHARGE 9.9 %/YR UNLOADING CHARGE 0. C/MBTU

FUEL ID931
SULFUR CONCENTRATION 0.0 LB/MBTU
MINIMUM AMOUNT 0.0 BBLS/DAY
INITIAL INVENTORY: LEVEL 0. BBLS VALUE 0. $
INVENTORY ADD ON COST 0. $

	JAN	FEB	MAR	APR	MAY	JUN	JUL	AUG	SEP	OCT	NOV	DEC
FUEL COST (C/MBTU)	917.59	924.82	932.10	939.44	946.84	954.30	961.82	969.40	977.03	984.73	992.49	1000.30
INVENTORY(KBBLS)	0.	0.	0.	0.	0.	0.	0.	0.	0.	0.	0.	0.

RES 0.3D UNLIMITED 6.190 MBTU/BBLS ESCALATION RATE 12.1 %/YR INVENTORY CARRYING CHARGE 12.1 %/YR UNLOADING CHARGE 0. C/MBTU

FUEL ID921
SULFUR CONCENTRATION 0.0 LB/MBTU
MINIMUM AMOUNT 0.0 BBLS/DAY
INITIAL INVENTORY: LEVEL 0. BBLS VALUE 0. $
INVENTORY ADD ON COST 0. $

	JAN	FEB	MAR	APR	MAY	JUN	JUL	AUG	SEP	OCT	NOV	DEC
FUEL COST (C/MBTU)	773.97	781.36	788.87	796.42	[illegible]	811.75	819.53	827.38	835.30	843.31	851.38	859.54
INVENTORY(KBBLS)	0.	0.	0.	0.	[illegible]	0.	0.	0.	0.	0.	0.	0.

********** FUEL CATEGORY INPUT SUMMARY FOR 1986 **********

RES 0.7D UNLIMITED 6.200 MBTU/BBLS ESCALATION RATE 12.5 %/YR INVENTORY CARRYING CHARGE 12.5 %/YR UNLOADING CHARGE 0. C/MBTU
FUEL ID922
SULFUR CONCENTRATION 0.0 LB/MBTU
MINIMUM AMOUNT 0.0 BBLS/DAY
INITIAL INVENTORY: LEVEL 0. BBLS VALUE 0. $
INVENTORY ADD ON COST 0. $

	JAN	FEB	MAR	APR	MAY	JUN	JUL	AUG	SEP	OCT	NOV	DEC
FUEL COST (C/MBTU)	744.15	751.49	758.90	766.38	773.94	781.58	789.29	797.07	804.93	812.87	820.89	828.99
INVENTORY(KBBLS)	0.	0.	0.	0.	0.	0.	0.	0.	0.	0.	0.	0.

RES 1.0D UNLIMITED 6.220 MBTU/BBLS ESCALATION RATE 12.8 %/YR INVENTORY CARRYING CHARGE 12.8 %/YR UNLOADING CHARGE 0. C/MBTU
FUEL ID923
SULFUR CONCENTRATION 0.0 LB/MBTU
MINIMUM AMOUNT 0.0 BBLS/DAY
INITIAL INVENTORY: LEVEL 0. BBLS VALUE 0. $
INVENTORY ADD ON COST 0. $

	JAN	FEB	MAR	APR	MAY	JUN	JUL	AUG	SEP	OCT	NOV	DEC
FUEL COST (C/MBTU)	724.28	731.57	738.94	746.37	753.89	761.47	769.14	776.88	784.70	792.60	800.58	808.63
INVENTORY(KBBLS)	0.	0.	0.	0.	0.	0.	0.	0.	0.	0.	0.	0.

RES 1.5D UNLIMITED 6.235 MBTU/BBLS ESCALATION RATE 13.1 %/YR INVENTORY CARRYING CHARGE 13.1 %/YR UNLOADING CHARGE 0. C/MBTU
FUEL ID924
SULFUR CONCENTRATION 0.0 LB/MBTU
MINIMUM AMOUNT 0.0 BBLS/DAY
INITIAL INVENTORY: LEVEL 0. BBLS VALUE 0. $
INVENTORY ADD ON COST 0. $

	JAN	FEB	MAR	APR	MAY	JUN	JUL	AUG	SEP	OCT	NOV	DEC
FUEL COST (C/MBTU)	699.61	706.84	714.14	721.52	728.98	736.51	744.12	751.81	759.58	767.43	775.36	783.37
INVENTORY(KBBLS)	0.	0.	0.	0.	0.	0.	0.	0.	0.	0.	0.	0.

RES 2.0D UNLIMITED 6.250 MBTU/BBLS ESCALATION RATE 13.5 %/YR INVENTORY CARRYING CHARGE 13.5 %/YR UNLOADING CHARGE 0. C/MBTU
FUEL ID925
SULFUR CONCENTRATION 0.0 LB/MBTU
MINIMUM AMOUNT 0.0 BBLS/DAY
INITIAL INVENTORY: LEVEL 0. BBLS VALUE 0. $
INVENTORY ADD ON COST 0. $

	JAN	FEB	MAR	APR	MAY	JUN	JUL	AUG	SEP	OCT	NOV	DEC
FUEL COST (C/MBTU)	674.56	681.70	688.92	696.21	703.58	711.03	718.56	726.14	733.85	741.62	749.47	757.41
INVENTORY(KBBLS)	0.	0.	0.	0.		0.	0.	0.	0.	0.	0.	0.

*********** FUEL CATEGORY INPUT SUMMARY FOR 1986 ***********

RES 0.7D UNLIMITED 6.200 MBTU/BBLS ESCALATION RATE 12.5 %/YR INVENTORY CARRYING CHARGE 12.5 %/YR UNLOADING CHARGE 0. C/MBTU
FUEL ID922
SULFUR CONCENTRATION 0.0 LB/MBTU
MINIMUM AMOUNT 0.0 BBLS/DAY
INITIAL INVENTORY: LEVEL 0. BBLS VALUE 0. $
INVENTORY ADD ON COST 0. $

	JAN	FEB	MAR	APR	MAY	JUN	JUL	AUG	SEP	OCT	NOV	DEC
FUEL COST (C/MBTU)	744.15	751.49	758.90	766.38	773.94	781.58	789.29	797.07	804.93	812.87	820.89	828.99
INVENTORY(KBBLS)	0.	0.	0.	0.	0.	0.	0.	0.	0.	0.	0.	0.

RES 1.0D UNLIMITED 6.220 MBTU/BBLS ESCALATION RATE 12.8 %/YR INVENTORY CARRYING CHARGE 12.8 %/YR UNLOADING CHARGE 0. C/MBTU
FUEL ID923
SULFUR CONCENTRATION 0.0 LB/MBTU
MINIMUM AMOUNT 0.0 BBLS/DAY
INITIAL INVENTORY: LEVEL 0. BBLS VALUE 0. $
INVENTORY ADD ON COST 0. $

	JAN	FEB	MAR	APR	MAY	JUN	JUL	AUG	SEP	OCT	NOV	DEC
FUEL COST (C/MBTU)	724.28	731.57	738.94	746.37	753.89	761.47	769.14	776.88	784.70	792.60	800.58	808.63
INVENTORY(KBBLS)	0.	0.	0.	0.	0.	0.	0.	0.	0.	0.	0.	0.

RES 1.5D UNLIMITED 6.235 MBTU/BBLS ESCALATION RATE 13.1 %/YR INVENTORY CARRYING CHARGE 13.1 %/YR UNLOADING CHARGE 0. C/MBTU
FUEL ID924
SULFUR CONCENTRATION 0.0 LB/MBTU
MINIMUM AMOUNT 0.0 BBLS/DAY
INITIAL INVENTORY: LEVEL 0. BBLS VALUE 0. $
INVENTORY ADD ON COST 0. $

	JAN	FEB	MAR	APR	MAY	JUN	JUL	AUG	SEP	OCT	NOV	DEC
FUEL COST (C/MBTU)	699.61	706.84	714.14	721.52	728.98	736.51	744.12	751.81	759.58	767.43	775.36	783.37
INVENTORY(KBBLS)	0.	0.	0.	0.	0.	0.	0.	0.	0.	0.	0.	0.

RES 2.0D UNLIMITED 6.250 MBTU/BBLS ESCALATION RATE 13.5 %/YR INVENTORY CARRYING CHARGE 13.5 %/YR UNLOADING CHARGE 0. C/MBTU
FUEL ID925
SULFUR CONCENTRATION 0.0 LB/MBTU
MINIMUM AMOUNT 0.0 BBLS/DAY
INITIAL INVENTORY: LEVEL 0. BBLS VALUE 0. $
INVENTORY ADD ON COST 0. $

	JAN	FEB	MAR	APR	MAY	JUN	JUL	AUG	SEP	OCT	NOV	DEC
FUEL COST (C/MBTU)	674.56	681.70	688.92	696.21	703.58	711.03	718.56	726.16	733.85	741.62	749.47	757.41
INVENTORY(KBBLS)	0.	0.	0.	0.	0.	0.	0.	0.	0.	0.	0.	0.

********** FUEL CATEGORY INPUT SUMMARY FOR 1986 **********

RES 2.8D UNLIMITED 6.280 MBTU/BBLS ESCALATION RATE 14.0 %/YR INVENTORY CARRYING CHARGE 14.0 %/YR UNLOADING CHARGE 0. C/MBTU
FUEL ID926
SULFUR CONCENTRATION 0.0 LB/MBTU
MINIMUM AMOUNT 0.0 BBLS/DAY
INITIAL INVENTORY: LEVEL 0. BBLS VALUE 0. $
INVENTORY ADD ON COST 0. $

	JAN	FEB	MAR	APR	MAY	JUN	JUL	AUG	SEP	OCT	NOV	DEC
FUEL COST (C/MBTU)	640.84	647.89	655.02	662.22	669.51	676.87	684.32	691.84	699.46	707.15	714.93	722.79
INVENTORY(KBBLS)	0.	0.	0.	0.	0.	0.	0.	0.	0.	0.	0.	0.

DIS OILD UNLIMITED 5.830 MBTU/BBLS ESCALATION RATE 9.9 %/YR INVENTORY CARRYING CHARGE 9.9 %/YR UNLOADING CHARGE 0. C/MBTU
FUEL ID935
SULFUR CONCENTRATION 0.0 LB/MBTU
MINIMUM AMOUNT 0.0 BBLS/DAY
INITIAL INVENTORY: LEVEL 0. BBLS VALUE 0. $
INVENTORY ADD ON COST 0. $

	JAN	FEB	MAR	APR	MAY	JUN	JUL	AUG	SEP	OCT	NOV	DEC
FUEL COST (C/MBTU)	930.67	938.03	945.45	952.92	960.46	968.06	975.71	983.43	991.21	999.05	1006.95	1014.91
INVENTORY(KBBLS)	0.	0.	0.	0.	0.	0.	0.	0.	0.	0.	0.	0.

COAL1.0U UNLIMITED 25.000 MBTU/TONS ESCALATION RATE 9.0 %/YR INVENTORY CARRYING CHARGE 9.0 %/YR UNLOADING CHARGE 0. C/MBTU
FUEL ID941
SULFUR CONCENTRATION 0.0 LB/MBTU
MINIMUM AMOUNT 0.0 TONS/DAY
INITIAL INVENTORY: LEVEL 0. TONS VALUE 0. $
INVENTORY ADD ON COST 0. $

	JAN	FEB	MAR	APR	MAY	JUN	JUL	AUG	SEP	OCT	NOV	DEC
FUEL COST (C/MBTU)	374.09	376.78	379.49	382.22	384.96	387.73	390.51	393.32	396.15	398.99	401.86	404.75
INVENTORY(KTONS)	0.	0.	0.	0.	0.	0.	0.	0.	0.	0.	0.	0.

COAL1.4U UNLIMITED 24.000 MBTU/TONS ESCALATION RATE 8.9 %/YR INVENTORY CARRYING CHARGE 8.9 %/YR UNLOADING CHARGE 0. C/MBTU
FUEL ID942
SULFUR CONCENTRATION 0.0 LB/MBTU
MINIMUM AMOUNT 0.0 TONS/DAY
INITIAL INVENTORY: LEVEL 0. TONS VALUE 0. $
INVENTORY ADD ON COST 0. $

	JAN	FEB	MAR	APR	MAY	JUN	JUL	AUG	SEP	OCT	NOV	DEC
FUEL COST (C/MBTU)	368.92	371.55	374.21	376.89	379.58	382.30	385.03	387.79	390.56	393.35	396.17	399.00
INVENTORY(KTONS)	0.	0.	0.	0.	0.	0.	0.	0.	0.	0.	0.	0.

*********** FUEL CATEGORY INPUT SUMMARY FOR 1986 ***********

COAL2.0U UNLIMITED 24.000 MBTU/TONS ESCALATION RATE 8.7 %/YR INVENTORY CARRYING CHARGE 8.7 %/YR UNLOADING CHARGE 0. C/MBTU
FUEL ID943
SULFUR CONCENTRATION 0.0 LB/MBTU
MINIMUM AMOUNT 0.0 TONS/DAY
INITIAL INVENTORY: LEVEL 0. TONS VALUE 0. $
INVENTORY ADD ON COST 0. $

	JAN	FEB	MAR	APR	MAY	JUN	JUL	AUG	SEP	OCT	NOV	DEC
FUEL COST (C/MBTU)	340.56	342.94	345.33	347.74	350.17	352.62	355.08	357.56	360.05	362.57	365.10	367.65
INVENTORY(KTONS)	0.	0.	0.	0.	0.	0.	0.	0.	0.	0.	0.	0.

COAL >2U UNLIMITED 24.000 MBTU/TONS ESCALATION RATE 8.9 %/YR INVENTORY CARRYING CHARGE 8.9 %/YR UNLOADING CHARGE 0. C/MBTU
FUEL ID944
SULFUR CONCENTRATION 0.0 LB/MBTU
MINIMUM AMOUNT 0.0 TONS/DAY
INITIAL INVENTORY: LEVEL 0. TONS VALUE 0. $
INVENTORY ADD ON COST 0. $

	JAN	FEB	MAR	APR	MAY	JUN	JUL	AUG	SEP	OCT	NOV	DEC
FUEL COST (C/MBTU)	284.97	287.02	289.07	291.14	293.23	295.33	297.44	299.57	301.72	303.88	306.06	308.25
INVENTORY(KTONS)	0.	0.	0.	0.	0.	0.	0.	0.	0.	0.	0.	0.

COAL1.0D UNLIMITED 25.000 MBTU/TONS ESCALATION RATE 8.9 %/YR INVENTORY CARRYING CHARGE 8.9 %/YR UNLOADING CHARGE 0. C/MBTU
FUEL ID951
SULFUR CONCENTRATION 0.0 LB/MBTU
MINIMUM AMOUNT 0.0 TONS/DAY
INITIAL INVENTORY: LEVEL 0. TONS VALUE 0. $
INVENTORY ADD ON COST 0. $

	JAN	FEB	MAR	APR	MAY	JUN	JUL	AUG	SEP	OCT	NOV	DEC
FUEL COST (C/MBTU)	394.33	397.13	399.96	402.80	405.66	408.55	411.45	414.38	417.32	420.29	423.28	426.28
INVENTORY(KTONS)	0.	0.	0.	0.	0.	0.	0.	0.	0.	0.	0.	0.

COAL1.4D UNLIMITED 24.000 MBTU/TONS ESCALATION RATE 8.8 %/YR INVENTORY CARRYING CHARGE 8.8 %/YR UNLOADING CHARGE 0. C/MBTU
FUEL ID952
SULFUR CONCENTRATION 0.0 LB/MBTU
MINIMUM AMOUNT 0.0 TONS/DAY
INITIAL INVENTORY: LEVEL 0. TONS VALUE 0. $
INVENTORY ADD ON COST 0. $

	JAN	FEB	MAR	APR	MAY	JUN	JUL	AUG	SEP	OCT	NOV	DEC
FUEL COST (C/MBTU)	392.97	395.74	398.54	401.35	404.19	407.04	409.92	412.81	415.73	418.66	421.62	424.60
INVENTORY(KTONS)	0.	0.	0.	0.	0.	0.	0.	0.	0.	0.	0.	0.

********** FUEL CATEGORY INPUT SUMMARY FOR 1986 **********

COAL2.0D UNLIMITED 24.000 MBTU/TONS ESCALATION RATE 8.6 %/YR INVENTORY CARRYING CHARGE 8.6 %/YR UNLOADING CHARGE 0. C/MBTU
FUEL ID953
SULFUR CONCENTRATION 0.0 LB/MBTU
MINIMUM AMOUNT 0.0 TONS/DAY
INITIAL INVENTORY: LEVEL 0. TONS VALUE 0. $
INVENTORY ADD ON COST 0. $

	JAN	FEB	MAR	APR	MAY	JUN	JUL	AUG	SEP	OCT	NOV	DEC
FUEL COST (C/MBTU)	364.60	367.12	369.65	372.20	374.77	377.35	379.95	382.57	385.21	387.87	390.54	393.24
INVENTORY(KTONS)	0.	0.	0.	0.	0.	0.	0.	0.	0.	0.	0.	0.

COAL >2D UNLIMITED 24.000 MBTU/TONS ESCALATION RATE 8.7 %/YR INVENTORY CARRYING CHARGE 8.7 %/YR UNLOADING CHARGE 0. C/MBTU
FUEL ID954
SULFUR CONCENTRATION 0.0 LB/MBTU
MINIMUM AMOUNT 0.0 TONS/DAY
INITIAL INVENTORY: LEVEL 0. TONS VALUE 0. $
INVENTORY ADD ON COST 0. $

	JAN	FEB	MAR	APR	MAY	JUN	JUL	AUG	SEP	OCT	NOV	DEC
FUEL COST (C/MBTU)	320.43	322.68	324.94	327.21	329.50	331.81	334.13	336.47	338.83	341.20	343.59	345.99
INVENTORY(KTONS)	0.	0.	0.	0.	0.	0.	0.	0.	0.	0.	0.	0.

URANIUM2 UNLIMITED 1.000 MBTU/MBTU ESCALATION RATE 7.0 %/YR INVENTORY CARRYING CHARGE 7.0 %/YR UNLOADING CHARGE 0. C/MBTU
FUEL ID962
SULFUR CONCENTRATION 0.0 LB/MBTU
MINIMUM AMOUNT 0.0 MBTU/DAY
INITIAL INVENTORY: LEVEL 0. MBTU VALUE 0. $
INVENTORY ADD ON COST 0. $

	JAN	FEB	MAR	APR	MAY	JUN	JUL	AUG	SEP	OCT	NOV	DEC
FUEL COST (C/MBTU)	73.92	74.34	74.76	75.18	75.61	76.03	76.46	76.90	77.33	77.77	78.21	78.65
INVENTORY(KMBTU)	0.	0.	0.	0.	0.	0.	0.	0.	0.	0.	0.	0.

URANIUM3 UNLIMITED 1.000 MBTU/MBTU ESCALATION RATE 7.0 %/YR INVENTORY CARRYING CHARGE 7.0 %/YR UNLOADING CHARGE 0. C/MBTU
FUEL ID963
SULFUR CONCENTRATION 0.0 LB/MBTU
MINIMUM AMOUNT 0.0 MBTU/DAY
INITIAL INVENTORY: LEVEL 0. MBTU VALUE 0. $
INVENTORY ADD ON COST 0. $

	JAN	FEB	MAR	APR	MAY	JUN	JUL	AUG	SEP	OCT	NOV	DEC
FUEL COST (C/MBTU)	84.76	85.24	85.72	86.21	86.69	87.18	87.68	88.17	88.67	89.17	89.68	90.18
INVENTORY(KMBTU)	0.	0.	0.	0.	0.	0.	0.	0.	0.	0.	0.	0.

*********** FUEL CATEGORY INPUT SUMMARY FOR 1986 ***********

URANIUM5 UNLIMITED 1.000 MBTU/MBTU ESCALATION RATE 7.0 %/YR INVENTORY CARRYING CHARGE 7.0 %/YR UNLOADING CHARGE 0. C/MBTU
FUEL ID965
SULFUR CONCENTRATION 0.0 LB/MBTU
MINIMUM AMOUNT 0.0 MBTU/DAY
INITIAL INVENTORY: LEVEL 0. MBTU VALUE 0. $
INVENTORY ADD ON COST 0. $

		JAN	FEB	MAR	APR	MAY	JUN	JUL	AUG	SEP	OCT	NOV	DEC
FUEL COST	(C/MBTU)	86.45	86.93	87.43	87.92	88.42	88.92	89.42	89.93	90.43	90.95	91.46	91.98
INVENTORY	(KMBTU)	0.	0.	0.	0.	0.	0.	0.	0.	0.	0.	0.	0.

URANIUM7 UNLIMITED 1.000 MBTU/MBTU ESCALATION RATE 7.0 %/YR INVENTORY CARRYING CHARGE 7.0 %/YR UNLOADING CHARGE 0. C/MBTU
FUEL ID967
SULFUR CONCENTRATION 0.0 LB/MBTU
MINIMUM AMOUNT 0.0 MBTU/DAY
INITIAL INVENTORY: LEVEL 0. MBTU VALUE 0. $
INVENTORY ADD ON COST 0. $

		JAN	FEB	MAR	APR	MAY	JUN	JUL	AUG	SEP	OCT	NOV	DEC
FUEL COST	(C/MBTU)	80.45	80.91	81.37	81.83	82.29	82.75	83.22	83.69	84.17	84.64	85.12	85.60
INVENTORY	(KMBTU)	0.	0.	0.	0.	0.	0.	0.	0.	0.	0.	0.	0.

NATGASU UNLIMITED 8.930 MBTU/MCF ESCALATION RATE 12.8 %/YR INVENTORY CARRYING CHARGE 12.8 %/YR UNLOADING CHARGE 0. C/MBTU
FUEL ID970
SULFUR CONCENTRATION 0.0 LB/MBTU
MINIMUM AMOUNT 0.0 MCF /DAY
INITIAL INVENTORY: LEVEL 0. MCF VALUE 0. $
INVENTORY ADD ON COST 0. $

		JAN	FEB	MAR	APR	MAY	JUN	JUL	AUG	SEP	OCT	NOV	DEC
FUEL COST	(C/MBTU)	663.18	669.86	676.60	683.41	690.29	697.24	704.26	711.34	718.50	725.74	733.04	740.42
INVENTORY	(KMCF)	0.	0.	0.	0.	0.	0.	0.	0.	0.	0.	0.	0.

NATGASU UNLIMITED 8.930 MBTU/MCF ESCALATION RATE 12.2 %/YR INVENTORY CARRYING CHARGE 12.2 %/YR UNLOADING CHARGE 0. C/MBTU
FUEL ID971
SULFUR CONCENTRATION 0.0 LB/MBTU
MINIMUM AMOUNT 0.0 MCF /DAY
INITIAL INVENTORY: LEVEL 0. MCF VALUE 0. $
INVENTORY ADD ON COST 0. $

		JAN	FEB	MAR	APR	MAY	JUN	JUL	AUG	SEP	OCT	NOV	DEC
FUEL COST	(C/MBTU)	690.92	697.57	704.29	711.06	717.91	724.82	731.79	738.83	745.94	753.12	760.37	767.69
INVENTORY	(KMCF)	0.	0.	0.	0.	0.	0.	0.	0.	0.	0.	0.	0.

********** FUEL CATEGORY INPUT SUMMARY FOR 1986 **********

DIS OILR UNLIMITED 5.400 MBTU/BBLS ESCALATION RATE 6.8 %/YR INVENTORY CARRYING CHARGE 6.8 %/YR UNLOADING CHARGE 0. C/MBTU
FUEL ID536
SULFUR CONCENTRATION 0.0 LB/MBTU
MINIMUM AMOUNT 0.0 BBLS/DAY
INITIAL INVENTORY: LEVEL 0. BBLS VALUE 0. $
INVENTORY ADD ON COST 0. $

	JAN	FEB	MAR	APR	MAY	JUN	JUL	AUG	SEP	OCT	NOV	DEC
FUEL COST (C/MBTU)	819.96	824.46	828.98	833.53	838.11	842.71	847.33	851.98	856.66	861.36	866.09	870.84
INVENTORY(KBBLS)	0.	0.	0.	0.	0.	0.	0.	0.	0.	0.	0.	0.

DIS OILA UNLIMITED 5.300 MBTU/BBLS ESCALATION RATE 6.7 %/YR INVENTORY CARRYING CHARGE 6.7 %/YR UNLOADING CHARGE 0. C/MBTU
FUEL ID537
SULFUR CONCENTRATION 0.0 LB/MBTU
MINIMUM AMOUNT 0.0 BBLS/DAY
INITIAL INVENTORY: LEVEL 0. BBLS VALUE 0. $
INVENTORY ADD ON COST 0. $

	JAN	FEB	MAR	APR	MAY	JUN	JUL	AUG	SEP	OCT	NOV	DEC
FUEL COST (C/MBTU)	992.92	998.26	1003.63	1009.03	1014.46	1019.92	1025.41	1030.93	1036.47	1042.05	1047.66	1053.29
INVENTORY(KBBLS)	0.	0.	0.	0.	0.	0.	0.	0.	0.	0.	0.	0.

LFCL 1.8 UNLIMITED 25.000 MBTU/TONS ESCALATION RATE 8.7 %/YR INVENTORY CARRYING CHARGE 8.7 %/YR UNLOADING CHARGE 0. C/MBTU
FUEL ID510
SULFUR CONCENTRATION 0.0 LB/MBTU
MINIMUM AMOUNT 0.0 TONS/DAY
INITIAL INVENTORY: LEVEL 0. TONS VALUE 0. $
INVENTORY ADD ON COST 0. $

	JAN	FEB	MAR	APR	MAY	JUN	JUL	AUG	SEP	OCT	NOV	DEC
FUEL COST (C/MBTU)	403.07	405.89	408.72	411.58	414.45	417.34	420.26	423.19	426.14	429.12	432.11	435.13
INVENTORY(KTONS)	0.	0.	0.	0.	0.	0.	0.	0.	0.	0.	0.	0.

HFCL 1.8 UNLIMITED 25.000 MBTU/TONS ESCALATION RATE 8.7 %/YR INVENTORY CARRYING CHARGE 8.7 %/YR UNLOADING CHARGE 0. C/MBTU
FUEL ID511
SULFUR CONCENTRATION 0.0 LB/MBTU
MINIMUM AMOUNT 0.0 TONS/DAY
INITIAL INVENTORY: LEVEL 0. TONS VALUE 0. $
INVENTORY ADD ON COST 0. $

	JAN	FEB	MAR	APR	MAY	JUN	JUL	AUG	SEP	OCT	NOV	DEC
FUEL COST (C/MBTU)	335.53	337.88	340.25	342.63	345.03	347.44	349.88	352.33	354.79	357.28	359.78	362.30
INVENTORY(KTONS)	0.	0.	0.	0.	0.	0.	0.	0.	0.	0.	0.	0.

********** FUEL CATEGORY INPUT SUMMARY FOR 1986 **********

COAL2.4 UNLIMITED 25.000 MBTU/TONS ESCALATION RATE 9.0 %/YR INVENTORY CARRYING CHARGE 9.0 %/YR UNLOADING CHARGE 0. C/MBTU
FUEL ID514
SULFUR CONCENTRATION 0.0 LB/MBTU
MINIMUM AMOUNT 0.0 TONS/DAY
INITIAL INVENTORY: LEVEL 0. TONS VALUE 0. $
INVENTORY ADD ON COST 0. $

		JAN	FEB	MAR	APR	MAY	JUN	JUL	AUG	SEP	OCT	NOV	DEC
FUEL COST	(C/MBTU)	279.94	281.95	283.98	286.02	288.08	290.15	292.24	294.34	296.46	298.59	300.73	302.90
INVENTORY(KTONS)		0.	0.	0.	0.	0.	0.	0.	0.	0.	0.	0.	0.

NATGAS A UNLIMITED 1.000 MBTU/DT ESCALATION RATE 12.5 %/YR INVENTORY CARRYING CHARGE 12.5 %/YR UNLOADING CHARGE 0. C/MBTU
FUEL ID580
SULFUR CONCENTRATION 0.0 LB/MBTU
MINIMUM AMOUNT 0.0 DT /DAY
INITIAL INVENTORY: LEVEL 0. DT VALUE 0. $
INVENTORY ADD ON COST 0. $

		JAN	FEB	MAR	APR	MAY	JUN	JUL	AUG	SEP	OCT	NOV	DEC
FUEL COST	(C/MBTU)	687.14	693.90	700.73	707.62	714.59	721.62	728.72	735.89	743.14	750.45	757.83	765.29
INVENTORY(KDT)		0.	0.	0.	0.	0.	0.	0.	0.	0.	0.	0.	0.

BEGIN PROCESSING FOR YEAR 1987 MONTH 1 FOR PASS 0
BEGIN PROCESSING FOR YEAR 1987 MONTH 2 FOR PASS 0
BEGIN PROCESSING FOR YEAR 1987 MONTH 3 FOR PASS 0
BEGIN PROCESSING FOR YEAR 1987 MONTH 4 FOR PASS 0
BEGIN PROCESSING FOR YEAR 1987 MONTH 5 FOR PASS 0
BEGIN PROCESSING FOR YEAR 1987 MONTH 6 FOR PASS 0
BEGIN PROCESSING FOR YEAR 1987 MONTH 7 FOR PASS 0
BEGIN PROCESSING FOR YEAR 1987 MONTH 8 FOR PASS 0
BEGIN PROCESSING FOR YEAR 1987 MONTH 9 FOR PASS 0
BEGIN PROCESSING FOR YEAR 1987 MONTH 10 FOR PASS 0
BEGIN PROCESSING FOR YEAR 1987 MONTH 11 FOR PASS 0
BEGIN PROCESSING FOR YEAR 1987 MONTH 12 FOR PASS 0

1987

********** FUEL CATEGORY INPUT SUMMARY FOR 1987 **********

OH FUEL UNLIMITED 1.000 MBTU/TONS ESCALATION RATE 7.0 %/YR INVENTORY CARRYING CHARGE 7.0 %/YR UNLOADING CHARGE 0. C/MBTU
FUEL 10998
SULFUR CONCENTRATION 0.0 LB/MBTU
MINIMUM AMOUNT 0.0 TONS/DAY

	JAN	FEB	MAR	APR	MAY	JUN	JUL	AUG	SEP	OCT	NOV	DEC
FUEL COST (C/MBTU)	280.70	282.00	283.30	284.60	263.90	265.10	266.30	267.50	268.70	270.00	293.80	295.10
INVENTORY(KTONS)	0.	0.	0.	0.	0.	0.	0.	0.	0.	0.	0.	0.

OH FUEL UNLIMITED 1.000 MBTU/TONS ESCALATION RATE 7.0 %/YR INVENTORY CARRYING CHARGE 7.0 %/YR UNLOADING CHARGE 0. C/MBTU
FUEL 10999
SULFUR CONCENTRATION 0.0 LB/MBTU
MINIMUM AMOUNT 0.0 TONS/DAY

	JAN	FEB	MAR	APR	MAY	JUN	JUL	AUG	SEP	OCT	NOV	DEC
FUEL COST (C/MBTU)	323.90	325.40	326.90	328.30	307.80	309.30	310.70	312.10	313.50	314.90	339.00	340.50
INVENTORY(KTONS)	0.	0.	0.	0.	0.	0.	0.	0.	0.	0.	0.	0.

RES 0.7U UNLIMITED 6.200 MBTU/BBLS ESCALATION RATE 9.1 %/YR INVENTORY CARRYING CHARGE 9.1 %/YR UNLOADING CHARGE 0. C/MBTU
FUEL 10902
SULFUR CONCENTRATION 0.0 LB/MBTU
MINIMUM AMOUNT 0.0 BBLS/DAY

	JAN	FEB	MAR	APR	MAY	JUN	JUL	AUG	SEP	OCT	NOV	DEC
FUEL COST (C/MBTU)	633.19	637.83	642.49	647.19	651.93	656.70	661.51	666.35	671.22	676.13	681.08	686.07
INVENTORY(KBBLS)	0.	0.	0.	0.	0.	0.	0.	0.	0.	0.	0.	0.

RES 1.0U UNLIMITED 6.220 MBTU/BBLS ESCALATION RATE 9.5 %/YR INVENTORY CARRYING CHARGE 9.5 %/YR UNLOADING CHARGE 0. C/MBTU
FUEL 10903
SULFUR CONCENTRATION 0.0 LB/MBTU
MINIMUM AMOUNT 0.0 BBLS/DAY

	JAN	FEB	MAR	APR	MAY	JUN	JUL	AUG	SEP	OCT	NOV	DEC
FUEL COST (C/MBTU)	615.50	620.15	624.83	629.55	634.31	639.10	643.93	648.79	653.69	658.63	663.61	668.62
INVENTORY(KBBLS)	0.	0.	0.	0.	0.	0.	0.	0.	0.	0.	0.	0.

RES 2.0U UNLIMITED 6.250 MBTU/BBLS ESCALATION RATE 10.2 %/YR INVENTORY CARRYING CHARGE 10.2 %/YR UNLOADING CHARGE 0. C/MBTU
FUEL 10904
SULFUR CONCENTRATION 0.0 LB/MBTU
MINIMUM AMOUNT 0.0 BBLS/DAY

	JAN	FEB	MAR	APR	MAY	JUN	JUL	AUG	SEP	OCT	NOV	DEC
FUEL COST (C/MBTU)	572.00	576.64	581.31	586.02	590.77	595.56	600.39	605.25	610.16	615.10	620.09	625.11
INVENTORY(KBBLS)	0.	0.	0.	0.	0.	0.	0.	0.	0.	0.	0.	0.

**********FUEL CATEGORY INPUT SUMMARY FOR 1987**********

RES 2.00 UNLIMITED 5.299 MBTU/BBLS ESCALATION RATE 10.7 %/YR INVENTORY CARRYING CHARGE 10.7 %/YR UNLOADING CHARGE 0. C/MBTU
FUEL 10000
SULFUR CONCENTRATION 0.0 LB/MBTU
DISTILLATE MODEL 0.0 BBLS/DAY

	JAN	FEB	MAR	APR	MAY	JUN	JUL	AUG	SEP	OCT	NOV	DEC
FUEL COST (C/MBTU)	542.97	547.69	552.14	556.83	561.57	566.34	571.15	576.01	580.90	585.84	590.82	595.84
INVENTORY(MBBLS)	0.	0.	0.	0.	0.	0.	0.	0.	0.	0.	0.	0.

DIS 0.10 UNLIMITED 5.830 MBTU/BBLS ESCALATION RATE 6.9 %/YR INVENTORY CARRYING CHARGE 6.9 %/YR UNLOADING CHARGE 0. C/MBTU
FUEL 10931
SULFUR CONCENTRATION 0.0 LB/MBTU
DISTILLATE MODEL 0.0 BBLS/DAY

	JAN	FEB	MAR	APR	MAY	JUN	JUL	AUG	SEP	OCT	NOV	DEC
FUEL COST (C/MBTU)	755.94	760.15	764.41	768.68	772.97	777.29	781.63	785.99	790.38	794.80	799.24	803.70
INVENTORY(MBBLS)	0.	0.	0.	0.	0.	0.	0.	0.	0.	0.	0.	0.

RES 0.30 UNLIMITED 6.100 MBTU/BBLS ESCALATION RATE 8.9 %/YR INVENTORY CARRYING CHARGE 8.9 %/YR UNLOADING CHARGE 0. C/MBTU
FUEL 10921
SULFUR CONCENTRATION 0.0 LB/MBTU
DISTILLATE MODEL 0.0 BBLS/DAY

	JAN	FEB	MAR	APR	MAY	JUN	JUL	AUG	SEP	OCT	NOV	DEC
FUEL COST (C/MBTU)	636.13	640.65	645.20	649.79	654.41	659.07	663.75	668.47	673.22	678.01	682.83	687.69
INVENTORY(MBBLS)	0.	0.	0.	0.	0.	0.	0.	0.	0.	0.	0.	0.

RES 0.75 UNLIMITED 6.200 MBTU/MBLS ESCALATION RATE 9.3 %/YR INVENTORY CARRYING CHARGE 9.3 %/YR UNLOADING CHARGE 0. C/MBTU
FUEL 10922
SULFUR CONCENTRATION 0.0 LB/MBTU
DISTILLATE MODEL 0.0 BBLS/DAY

	JAN	FEB	MAR	APR	MAY	JUN	JUL	AUG	SEP	OCT	NOV	DEC
FUEL COST (C/MBTU)	609.64	614.16	618.71	623.29	627.91	632.56	637.25	641.97	646.73	651.52	656.35	661.21
INVENTORY(MBBLS)	0.	0.	0.	0.	0.	0.	0.	0.	0.	0.	0.	0.

RES 1.50 UNLIMITED 6.220 MBTU/MBLS ESCALATION RATE 9.5 %/YR INVENTORY CARRYING CHARGE 9.5 %/YR UNLOADING CHARGE 0. C/MBTU
FUEL 10923
SULFUR CONCENTRATION 0.0 LB/MBTU
DISTILLATE MODEL 0.0 BBLS/DAY

	JAN	FEB	MAR	APR	MAY	JUN	JUL	AUG	SEP	OCT	NOV	DEC
FUEL COST (C/MBTU)	592.97	597.39	601.84	606.52	611.14	615.80	620.49	625.22	629.98	634.78	639.62	644.49
INVENTORY(MBBLS)	0.	0.	0.	0.	0.	0.	0.	0.	0.	0.	0.	0.

********** FUEL CATEGORY [illegible] **********

RES 1.50 UNLIMITED 6.235 MBTU/BBLS ESCALATION RATE 9.9 %/YR INVENTORY CARRYING CHARGE 9.9 %/YR UNLOADING CHARGE 0. C/MBTU
FUEL 10[illegible]
SULFUR CONCENTRATION 0.0 LB/MBTU
MINIMUM AMOUNT 0.0 BBLS/DAY

	JAN	FEB	MAR	APR	MAY	JUN	JUL	AUG	SEP	OCT	NOV	DEC
FUEL COST (C/MBTU)	570.72	575.23	579.69	584.36	588.96	593.59	598.26	602.96	607.71	612.49	617.30	622.16
INVENTORY(MBBLS)	0.	0.	0.	0.	0.	0.	0.	0.	0.	0.	0.	0.

RES 2.00 UNLIMITED 6.250 MBTU/BBLS ESCALATION RATE 10.3 %/YR INVENTORY CARRYING CHARGE 10.3 %/YR UNLOADING CHARGE 0. C/MBTU
FUEL 10[illegible]25
SULFUR CONCENTRATION 0.0 LB/MBTU
MINIMUM AMOUNT 0.0 BBLS/DAY

	JAN	FEB	MAR	APR	MAY	JUN	JUL	AUG	SEP	OCT	NOV	DEC
FUEL COST (C/MBTU)	548.14	552.64	557.17	561.74	566.35	570.99	575.68	580.40	585.16	589.96	594.80	599.68
INVENTORY(MBBLS)	0.	0.	0.	0.	0.	0.	0.	0.	0.	0.	0.	0.

RES 2.80 UNLIMITED 6.280 MBTU/BBLS ESCALATION RATE 10.9 %/YR INVENTORY CARRYING CHARGE 10.9 %/YR UNLOADING CHARGE 0. C/MBTU
FUEL 10[illegible]26
SULFUR CONCENTRATION 0.0 LB/MBTU
MINIMUM AMOUNT 0.0 BBLS/DAY

	JAN	FEB	MAR	APR	MAY	JUN	JUL	AUG	SEP	OCT	NOV	DEC
FUEL COST (C/MBTU)	519.26	523.76	528.29	532.86	537.48	542.13	546.83	551.56	556.34	561.15	566.01	570.91
INVENTORY(MBBLS)	0.	0.	0.	0.	0.	0.	0.	0.	0.	0.	0.	0.

DIS OIL UNLIMITED 5.830 MBTU/BBLS ESCALATION RATE 6.9 %/YR INVENTORY CARRYING CHARGE 6.9 %/YR UNLOADING CHARGE 0. C/MBTU
FUEL 10[illegible]35
SULFUR CONCENTRATION 0.0 LB/MBTU
MINIMUM AMOUNT 0.0 BBLS/DAY

	JAN	FEB	MAR	APR	MAY	JUN	JUL	AUG	SEP	OCT	NOV	DEC
FUEL COST (C/MBTU)	766.37	770.64	774.94	779.26	783.60	787.97	792.37	796.78	801.23	805.69	810.19	814.71
INVENTORY(MBBLS)	0.	0.	0.	0.	0.	0.	0.	0.	0.	0.	0.	0.

COAL1.00 UNLIMITED 25.[illegible] MBTU/TONS ESCALATION RATE 7.2 %/YR INVENTORY CARRYING CHARGE 7.2 %/YR UNLOADING CHARGE 0. C/MBTU
FUEL 10[illegible]1
SULFUR CONCENTRATION 0.0 LB/MBTU
MINIMUM AMOUNT 0.0 TONS/DAY

	JAN	FEB	MAR	APR	MAY	JUN	JUL	AUG	SEP	OCT	NOV	DEC
FUEL COST (C/MBTU)	209.31	270.[illegible]	232.45	278.[illegible]	215.54	217.24	278.86	208.69	282.12	283.77	285.42	267.08
INVENTORY(TONS)	0.	0.	0.	0.	0.	0.	0.	0.	0.	0.	0.	0.

********** FUEL CATEGORY INPUT SUMMARY FOR 1987 **********

COAL1.40 UNLIMITED 24,000 MBTU/TONS ESCALATION RATE 8.4 %/YR INVENTORY CARRYING CHARGE 8.4 %/YR UNLOADING CHARGE 0. C/MBTU
FUEL I0942
SULFUR CONCENTRATION 0.0 LB/MBTU
MINIMUM AMOUNT 0.0 TONS/DAY

	JAN	FEB	MAR	APR	MAY	JUN	JUL	AUG	SEP	OCT	NOV	DEC
FUEL COST (C/MBTU)	254.02	255.73	257.45	259.18	260.92	262.68	264.44	266.22	268.01	269.81	271.62	273.45
INVENTORY(KTONS)	0.	0.	0.	0.	0.	0.	0.	0.	0.	0.	0.	0.

COAL2.00 UNLIMITED 24,000 MBTU/TONS ESCALATION RATE 7.8 %/YR INVENTORY CARRYING CHARGE 7.8 %/YR UNLOADING CHARGE 0. C/MBTU
FUEL I0943
SULFUR CONCENTRATION 0.0 LB/MBTU
MINIMUM AMOUNT 0.0 TONS/DAY

	JAN	FEB	MAR	APR	MAY	JUN	JUL	AUG	SEP	OCT	NOV	DEC
FUEL COST (C/MBTU)	238.63	240.14	241.65	243.18	244.71	246.25	247.81	249.37	250.95	252.53	254.12	255.73
INVENTORY(KTONS)	0.	0.	0.	0.	0.	0.	0.	0.	0.	0.	0.	0.

COAL >20 UNLIMITED 24,000 MBTU/TONS ESCALATION RATE 5.6 %/YR INVENTORY CARRYING CHARGE 5.6 %/YR UNLOADING CHARGE 0. C/MBTU
FUEL I0944
SULFUR CONCENTRATION 0.0 LB/MBTU
MINIMUM AMOUNT 0.0 TONS/DAY

	JAN	FEB	MAR	APR	MAY	JUN	JUL	AUG	SEP	OCT	NOV	DEC
FUEL COST (C/MBTU)	221.13	222.14	223.15	224.17	225.20	226.23	227.26	228.30	229.34	230.39	231.44	232.50
INVENTORY(KTONS)	0.	0.	0.	0.	0.	0.	0.	0.	0.	0.	0.	0.

COAL1.00 UNLIMITED 25,000 MBTU/TONS ESCALATION RATE 7.1 %/YR INVENTORY CARRYING CHARGE 7.1 %/YR UNLOADING CHARGE 0. C/MBTU
FUEL I0951
SULFUR CONCENTRATION 0.0 LB/MBTU
MINIMUM AMOUNT 0.0 TONS/DAY

	JAN	FEB	MAR	APR	MAY	JUN	JUL	AUG	SEP	OCT	NOV	DEC
FUEL COST (C/MBTU)	288.81	290.47	292.15	293.83	295.52	297.23	298.94	300.67	302.40	304.14	305.90	307.66
INVENTORY(KTONS)	0.	0.	0.	0.	0.	0.	0.	0.	0.	0.	0.	0.

COAL1.40 UNLIMITED 24,000 MBTU/TONS ESCALATION RATE 8.2 %/YR INVENTORY CARRYING CHARGE 8.2 %/YR UNLOADING CHARGE 0. C/MBTU
FUEL I0952
SULFUR CONCENTRATION 0.0 LB/MBTU
MINIMUM AMOUNT 0.0 TONS/DAY

	JAN	FEB	MAR	APR	MAY	JUN	JUL	AUG	SEP	OCT	NOV	DEC
FUEL COST (C/MBTU)	277.44	279.26	281.12	282.94	284.80	286.67	288.56	290.45	292.36	294.28	296.21	298.16
INVENTORY(KTONS)	0.	0.	0.	0.	0.	0.	0.	0.	0.	0.	0.	0.

********** FUEL CATEGORY INPUT SUMMARY FOR 1987 **********

COAL 2** UNLIMITED 24,000 MBTU/TONS ESCALATION RATE 7.7 %/YR INVENTORY CARRYING CHARGE 7.7 %/YR UNLOADING CHARGE 0. C/MBTU
FUEL ID953
SULFUR CONCENTRATION 0.0 LB/MBTU
MINIMUM AMOUNT 0.0 TONS/DAY

		JAN	FEB	MAR	APR	MAY	JUN	JUL	AUG	SEP	OCT	NOV	DEC
FUEL COST	(C/MBTU)	252.04	263.65	265.29	266.93	268.58	270.24	271.91	273.59	275.28	276.98	278.70	280.42
INVENTORY(KTONS)		0.	0.	0.	0.	0.	0.	0.	0.	0.	0.	0.	0.

COAL 3** UNLIMITED 24,000 MBTU/TONS ESCALATION RATE 5.7 %/YR INVENTORY CARRYING CHARGE 5.7 %/YR UNLOADING CHARGE 0. C/MBTU
FUEL ID954
SULFUR CONCENTRATION 0.0 LB/MBTU
MINIMUM AMOUNT 0.0 TONS/DAY

		JAN	FEB	MAR	APR	MAY	JUN	JUL	AUG	SEP	OCT	NOV	DEC
FUEL COST	(C/MBTU)	252.32	253.49	254.[illegible]	255.83	257.01	258.19	259.38	260.57	261.78	262.98	264.19	265.41
INVENTORY(KTONS)		0.	0.			0.	0.	0.	0.	0.	0.	0.	0.

SEE PAGES 187-188 @ END OF THIS SECTION

URANIUM 2 UNLIMITED 1. 6.0 %/YR INVENTORY CARRYING CHARGE 6.0 %/YR UNLOADING CHARGE 0. C/MBTU
FUEL ID962
SULFUR CONCENTRATION 0.0
MINIMUM AMOUNT 0.0

		JAN	FEB	MAR	[illegible]				AUG	SEP	OCT	NOV	DEC
FUEL COST	(C/MBTU)	77.93	78.31	78.69	79.07	79.[illegible]		23	80.62	81.01	81.41	81.81	82.20
INVENTORY(KTONS)		0.	0.	0.	0.	0.		0.	0.	0.	0.	0.	0.

URANIUM 3 UNLIMITED 1,000 MBTU/MBTU ESCALATION RATE 6.0 %/YR INVENTORY CARRYING CHARGE 6.0 %/YR UNLOADING CHARGE 0. C/MBTU
FUEL ID963
SULFUR CONCENTRATION 0.0 LB/MBTU
MINIMUM AMOUNT 0.0 MBTU/DAY

		JAN	FEB	MAR	APR	MAY	JUN	JUL	AUG	SEP	OCT	NOV	DEC
FUEL COST	(C/MBTU)	89.35	89.79	90.23	90.67	91.11	91.55	92.00	92.44	92.89	93.35	93.80	94.26
INVENTORY(KTONS)		0.	0.	0.	0.	0.	0.	0.	0.	0.	0.	0.	0.

URANIUM 5 UNLIMITED 1,000 MBTU/MBTU ESCALATION RATE 6.0 %/YR INVENTORY CARRYING CHARGE 6.0 %/YR UNLOADING CHARGE 0. C/MBTU
FUEL ID965
SULFUR CONCENTRATION 0.0 LB/MBTU
MINIMUM AMOUNT 0.0 MBTU/DAY

		JAN	FEB	MAR	APR	MAY	JUN	JUL	AUG	SEP	OCT	NOV	DEC
FUEL COST	(C/MBTU)	91.13	91.58	92.02	92.47	92.92	93.37	93.83	94.28	94.74	95.20	95.67	96.13
INVENTORY(KTONS)		0.	0.	0.	0.	0.	0.	0.	0.	0.	0.	0.	0.

********** FUEL CATEGORY INPUT SUMMARY FOR 1987 **********

OIL/DIST 7 — UNLIMITED — 1.000 MBTU/BBTU — ESCALATION RATE 6.0 %/YR — INVENTORY CARRYING CHARGE 6.0 %/YR — UNLOADING CHARGE 0. C/MBTU
FUEL ID 967
SULFUR CONCENTRATION 0.0 LB/MBTU
MINIMUM AMOUNT 0.0 MBTU/DAY.

		JAN	FEB	MAR	APR	MAY	JUN	JUL	AUG	SEP	OCT	NOV	DEC
FUEL COST	(C/MBTU)	84.61	85.23	85.64	86.06	86.48	86.90	87.32	87.75	88.17	88.60	89.03	89.47
INVENTORY(MBTU)		0.	0.	0.	0.	0.	0.	0.	0.	0.	0.	0.	0.

NATGAS — UNLIMITED — 0.930 MBTU/MCF — ESCALATION RATE 12.7 %/YR — INVENTORY CARRYING CHARGE 12.7 %/YR — UNLOADING CHARGE 0. C/MBTU
FUEL ID 970
SULFUR CONCENTRATION 0.0 LB/MBTU
MINIMUM AMOUNT 0.0 MCF /DAY

		JAN	FEB	MAR	APR	MAY	JUN	JUL	AUG	SEP	OCT	NOV	DEC
FUEL COST	(C/MBTU)	547.12	552.59	558.11	563.69	569.32	575.01	580.75	586.55	592.41	598.33	604.31	610.35
INVENTORY(MCF)		0.	0.	0.	0.	0.	0.	0.	0.	0.	0.	0.	0.

NATGAS — UNLIMITED — ESCALATION RATE 12.3 %/YR — INVENTORY CARRYING CHARGE 12.3 %/YR — UNLOADING CHARGE 0. C/MBTU
FUEL ID 971
SULFUR CONCENTRATION
MINIMUM AMOUNT

SEE PAGES 187-188 @ END OF THIS SECTION

		JAN	FEB	MAR	APR	MAY	JUN	JUL	AUG	SEP	OCT	NOV	DEC
FUEL COST	(C/MBTU)	561.05	566.49	571.99	0.			594.50	600.27	606.09	611.97	617.91	623.90
INVENTORY(MCF)		0.	0.	0.	0.			0.	0.	0.	0.	0.	0.

DIS OIL — UNLIMITED — 5.400 MBTU/BBLS — ESCALATION RATE 6.8 %/YR — INVENTORY CARRYING CHARGE 6.8 %/YR — UNLOADING CHARGE 0. C/MBTU
FUEL ID 536
SULFUR CONCENTRATION 0.0 LB/MBTU
MINIMUM AMOUNT 0.0 BBLS/DAY

		JAN	FEB	MAR	APR	MAY	JUN	JUL	AUG	SEP	OCT	NOV	DEC
FUEL COST	(C/MBTU)	875.02	880.43	885.28	890.12	895.00	899.92	904.85	909.82	914.81	919.83	924.88	929.96
INVENTORY(BBLS)		0.	0.	0.	0.	0.	0.	0.	0.	0.	0.	0.	0.

DIS OIL — UNLIMITED — 5.200 MBTU/BBLS — ESCALATION RATE 6.7 %/YR — INVENTORY CARRYING CHARGE 6.7 %/YR — UNLOADING CHARGE 0. C/MBTU
FUEL ID 537
SULFUR CONCENTRATION 0.0 LB/MBTU
MINIMUM AMOUNT 0.0 BBLS/DAY

		JAN	FEB	MAR	APR	MAY	JUN	JUL	AUG	SEP	OCT	NOV	DEC
FUEL COST	(C/MBTU)	1059.95	1064.66	1070.39	1076.15	1081.94	1087.76	1093.61	1099.50	1105.41	1111.36	1117.34	1123.35
INVENTORY(BBLS)		0.	0.	0.	0.	0.	0.	0.	0.	0.	0.	0.	0.

********** FUEL CATEGORY INPUT SUMMARY FOR 1987 **********

LFCL 1.0 UNLIMITED 25.000 MBTU/TONS ESCALATION RATE 7.9 %/YR INVENTORY CARRYING CHARGE 7.9 %/YR UNLOADING CHARGE 0. C/MBTU
FUEL 10512
SULFUR CONCENTRATION 0.0 LB/MBTU
MINIMUM AMOUNT 0.0 TONS/DAY

	JAN	FEB	MAR	APR	MAY	JUN	JUL	AUG	SEP	OCT	NOV	DEC
FUEL COST (C/MBTU)	281.59	283.37	285.16	286.96	288.77	290.60	292.43	294.29	296.14	298.01	299.90	301.79
INVENTORY(KTONS)	0.	0.	0.	0.	0.	0.	0.	0.	0.	0.	0.	0.

HFCL 1.0 UNLIMITED 25.000 MBTU/TONS ESCALATION RATE 7.9 %/YR INVENTORY CARRYING CHARGE 7.9 %/YR UNLOADING CHARGE 0. C/MBTU
FUEL 10511
SULFUR CONCENTRATION 0.0 LB/MBTU
MINIMUM AMOUNT 0.0 TONS/DAY

	JAN	FEB	MAR	APR	MAY	JUN	JUL	AUG	SEP	OCT	NOV	DEC
FUEL COST (C/MBTU)	234.72	236.21	237.70	239.21	240.72	242.25	243.78	245.32	246.88	248.44	250.02	251.60
INVENTORY(KTONS)	0.	0.	0.	0.	0.	0.	0.	0.	0.	0.	0.	0.

COAL2.0 UNLIMITED 25.000 MBTU/TONS ESCALATION RATE 5.6 %/YR INVENTORY CARRYING CHARGE 5.6 %/YR UNLOADING CHARGE 0. C/MBTU
FUEL 10514
SULFUR CONCENTRATION 0.0 LB/MBTU
MINIMUM AMOUNT 0.0 TONS/DAY

	JAN	FEB	MAR	APR	MAY	JUN	JUL	AUG	SEP	OCT	NOV	DEC
FUEL COST (C/MBTU)	215.93	216.91	217.90	218.89	219.89	220.90	221.90	222.92	223.93	224.96	225.98	227.01
INVENTORY(KTONS)	0.	0.	0.	0.	0.	0.	0.	0.	0.	0.	0.	0.

NATGAS 1.0 UNLIMITED 1.000 MCFD/DT ESCALATION RATE 11.5 %/YR INVENTORY CARRYING CHARGE 11.6 %/YR UNLOADING CHARGE 0. C/MBTU
FUEL 10550
SULFUR CONCENTRATION 0.0 LB/MBTU
MINIMUM AMOUNT 0.0 DT /DAY

	JAN	FEB	MAR	APR	MAY	JUN	JUL	AUG	SEP	OCT	NOV	DEC
FUEL COST (C/MBTU)	585.59	590.97	596.41	601.89	607.42	613.01	618.65	624.34	630.08	635.87	641.72	647.62
INVENTORY(KT)	0.	0.	0.	0.	0.	0.	0.	0.	0.	0.	0.	0.

********** FUEL CATEGORY INPUT SUMMARY FOR 1987 **********

COAL2.0D UNLIMITED 24.000 MBTU/TONS ESCALATION RATE 7.7 %/YR INVENTORY CARRYING CHARGE 7.7 %/YR UNLOADING CHARGE 0. C/MBTU
FUEL ID953
SULFUR CONCENTRATION 0.0 LB/MBTU
MINIMUM AMOUNT 0.0 TONS/DAY

	JAN	FEB	MAR	APR	MAY	JUN	JUL	AUG	SEP	OCT	NOV	DEC
FUEL COST (C/MBTU)	262.04	263.66	265.29	266.93	268.58	270.24	271.91	273.59	275.28	276.96	278.70	280.42
INVENTORY(KTONS)	0.	0.	0.	0.	0.	0.	0.	0.	0.	0.	0.	0.

COAL >2D UNLIMITED 24.000 MBTU/TONS ESCALATION RATE 5.7 %/YR INVENTORY CARRYING CHARGE 5.7 %/YR UNLOADING CHARGE 0. C/MBTU
FUEL ID954
SULFUR CONCENTRATION 0.0 LB/MBTU
MINIMUM AMOUNT 0.0 TONS/DAY

	JAN	FEB	MAR	APR	MAY	JUN	JUL	AUG	SEP	OCT	NOV	DEC
FUEL COST (C/MBTU)	252.32	253.49	254.65	255.83	257.01	258.19	259.38	260.57	261.78	262.98	264.19	265.41
INVENTORY(KTONS)	0.	0.	0.	0.	0.	0.	0.	0.	0.	0.	0.	0.

URANIUM2 UNLIMITED 1.000 MBTU/MBTU ESCALATION RATE 6.0 %/YR INVENTORY CARRYING CHARGE 6.0 %/YR UNLOADING CHARGE 0. C/MBTU
FUEL ID962
SULFUR CONCENTRATION 0.0 LB/MBTU
MINIMUM AMOUNT 0.0 MBTU/DAY

	JAN	FEB	MAR	APR	MAY	JUN	JUL	AUG	SEP	OCT	NOV	DEC
FUEL COST (C/MBTU)	54.57	54.83	55.10	55.37	55.64	55.91	56.18	56.45	56.73	57.00	57.28	57.56
INVENTORY(KMBTU)	0.	0.	0.	0.	0.	0.	0.	0.	0.	0.	0.	0.

URANIUM3 UNLIMITED 1.000 MBTU/MBTU ESCALATION RATE 6.0 %/YR INVENTORY CARRYING CHARGE 6.0 %/YR UNLOADING CHARGE 0. C/MBTU
FUEL ID963
SULFUR CONCENTRATION 0.0 LB/MBTU
MINIMUM AMOUNT 0.0 MBTU/DAY

	JAN	FEB	MAR	APR	MAY	JUN	JUL	AUG	SEP	OCT	NOV	DEC
FUEL COST (C/MBTU)	62.21	62.51	62.81	63.12	63.43	63.73	64.05	64.36	64.67	64.98	65.30	65.62
INVENTORY(KMBTU)	0.	0.	0.	0.	0.	0.	0.	0.	0.	0.	0.	0.

URANIUM5 UNLIMITED 1.000 MBTU/MBTU ESCALATION RATE 6.0 %/YR INVENTORY CARRYING CHARGE 6.0 %/YR UNLOADING CHARGE 0. C/MBTU
FUEL ID965
SULFUR CONCENTRATION 0.0 LB/MBTU
MINIMUM AMOUNT 0.0 MBTU/DAY

	JAN	FEB	MAR	APR	MAY	JUN	JUL	AUG	SEP	OCT	NOV	DEC
FUEL COST (C/MBTU)	63.30	63.61	63.92	64.23	64.54	64.85	65.17	65.49	65.80	66.12	66.45	66.77
INVENTORY(KMBTU)	0.	0.	0.	0.	0.	0.	0.	0.	0.	0.	0.	0.

********** FUEL CATEGORY INPUT SUMMARY FOR 1987 **********

URANIUM7 UNLIMITED 1.000 MBTU/MBTU ESCALATION RATE 6.0 %/YR INVENTORY CARRYING CHARGE 6.0 %/YR UNLOADING CHARGE 0. C/MBTU
FUEL ID967
SULFUR CONCENTRATION 0.0 LB/MBTU
MINIMUM AMOUNT 0.0 MBTU/DAY

	JAN	FEB	MAR	APR	MAY	JUN	JUL	AUG	SEP	OCT	NOV	DEC
FUEL COST (C/MBTU)	58.93	59.22	59.51	59.80	60.09	60.38	60.67	60.97	61.27	61.56	61.86	62.17
INVENTORY(KMBTU)	0.	0.	0.	0.	0.	0.	0.	0.	0.	0.	0.	0.

NATGASU UNLIMITED 8.930 MBTU/MCF ESCALATION RATE 12.7 %/YR INVENTORY CARRYING CHARGE 12.7 %/YR UNLOADING CHARGE 0. C/MBTU
FUEL ID970
SULFUR CONCENTRATION 0.0 LB/MBTU
MINIMUM AMOUNT 0.0 MCF /DAY

	JAN	FEB	MAR	APR	MAY	JUN	JUL	AUG	SEP	OCT	NOV	DEC
FUEL COST (C/MBTU)	547.12	552.59	558.11	563.69	569.32	575.01	580.75	586.55	592.41	598.33	604.31	610.35
INVENTORY(KMCF)	0.	0.	0.	0.	0.	0.	0.	0.	0.	0.	0.	0.

NATGASD UNLIMITED 8.930 MBTU/MCF ESCALATION RATE 12.3 %/YR INVENTORY CARRYING CHARGE 12.3 %/YR UNLOADING CHARGE 0. C/MBTU
FUEL ID971
SULFUR CONCENTRATION 0.0 LB/MBTU
MINIMUM AMOUNT 0.0 MCF /DAY

	JAN	FEB	MAR	APR	MAY	JUN	JUL	AUG	SEP	OCT	NOV	DEC
FUEL COST (C/MBTU)	561.05	566.49	571.99	577.54	583.14	588.79	594.50	600.27	606.09	611.97	617.91	623.90
INVENTORY(KMCF)	0.	0.	0.	0.	0.	0.	0.	0.	0.	0.	0.	0.

DIS OILR UNLIMITED 5.400 MBTU/BBLS ESCALATION RATE 6.8 %/YR INVENTORY CARRYING CHARGE 6.8 %/YR UNLOADING CHARGE 0. C/MBTU
FUEL ID536
SULFUR CONCENTRATION 0.0 LB/MBTU
MINIMUM AMOUNT 0.0 BBLS/DAY

	JAN	FEB	MAR	APR	MAY	JUN	JUL	AUG	SEP	OCT	NOV	DEC
FUEL COST (C/MBTU)	875.62	880.43	885.26	890.12	895.00	899.92	904.85	909.82	914.81	919.83	924.88	929.96
INVENTORY(KBBLS)	0.	0.	0.	0.	0.	0.	0.	0.	0.	0.	0.	0.

DIS OILA UNLIMITED 5.300 MBTU/BBLS ESCALATION RATE 6.7 %/YR INVENTORY CARRYING CHARGE 6.7 %/YR UNLOADING CHARGE 0. C/MBTU
FUEL ID537
SULFUR CONCENTRATION 0.0 LB/MBTU
MINIMUM AMOUNT 0.0 BBLS/DAY

	JAN	FEB	MAR	APR	MAY	JUN	JUL	AUG	SEP	OCT	NOV	DEC
FUEL COST (C/MBTU)	1058.96	1064.66	1070.39	1076.15	1081.94	1087.76	1093.61	1099.50	1105.41	1111.36	1117.34	1123.35
INVENTORY(KBBLS)	0.	0.	0.	0.	0.	0.	0.	0.	0.	0.	0.	0.

********** FUEL CATEGORY INPUT SUMMARY FOR 1987 **********

OH FUEL UNLIMITED 1.000 MBTU/TONS ESCALATION RATE 7.0 %/YR INVENTORY CARRYING CHARGE 7.0 %/YR UNLOADING CHARGE 0. C/MBTU
FUEL ID998
SULFUR CONCENTRATION 0.0 LB/MBTU
MINIMUM AMOUNT 0.0 TONS/DAY

		JAN	FEB	MAR	APR	MAY	JUN	JUL	AUG	SEP	OCT	NOV	DEC
FUEL COST	(C/MBTU)	396.80	399.60	402.50	405.40	376.90	379.60	382.30	385.10	387.90	390.60	426.20	429.30
INVENTORY	(KTONS)	0.	0.	0.	0.	0.	0.	0.	0.	0.	0.	0.	0.

OH FUEL UNLIMITED 1.000 MBTU/TONS ESCALATION RATE 7.0 %/YR INVENTORY CARRYING CHARGE 7.0 %/YR UNLOADING CHARGE 0. C/MBTU
FUEL ID999
SULFUR CONCENTRATION 0.0 LB/MBTU
MINIMUM AMOUNT 0.0 TONS/DAY

		JAN	FEB	MAR	APR	MAY	JUN	JUL	AUG	SEP	OCT	NOV	DEC
FUEL COST	(C/MBTU)	457.80	461.10	464.40	467.80	439.70	442.90	446.10	449.30	452.50	455.80	491.80	495.40
INVENTORY	(KTONS)	0.	0.	0.	0.	0.	0.	0.	0.	0.	0.	0.	0.

RES 0.7U UNLIMITED 6.200 MBTU/BBLS ESCALATION RATE 12.4 %/YR INVENTORY CARRYING CHARGE 12.4 %/YR UNLOADING CHARGE 0. C/MBTU
FUEL ID902
SULFUR CONCENTRATION 0.0 LB/MBTU
MINIMUM AMOUNT 0.0 BBLS/DAY

		JAN	FEB	MAR	APR	MAY	JUN	JUL	AUG	SEP	OCT	NOV	DEC
FUEL COST	(C/MBTU)	865.30	873.76	882.31	890.94	899.65	908.45	917.34	926.31	935.37	944.52	953.76	963.08
INVENTORY	(KBBLS)	0.	0.	0.	0.	0.	0.	0.	0.	0.	0.	0.	0.

RES 1.0U UNLIMITED 6.220 MBTU/BBLS ESCALATION RATE 12.6 %/YR INVENTORY CARRYING CHARGE 12.6 %/YR UNLOADING CHARGE 0. C/MBTU
FUEL ID903
SULFUR CONCENTRATION 0.0 LB/MBTU
MINIMUM AMOUNT 0.0 BBLS/DAY

		JAN	FEB	MAR	APR	MAY	JUN	JUL	AUG	SEP	OCT	NOV	DEC
FUEL COST	(C/MBTU)	845.01	853.44	861.96	870.56	879.24	888.01	896.87	905.82	914.85	923.98	933.19	942.50
INVENTORY	(KBBLS)	0.	0.	0.	0.	0.	0.	0.	0.	0.	0.	0.	0.

RES 2.0U UNLIMITED 6.250 MBTU/BBLS ESCALATION RATE 13.3 %/YR INVENTORY CARRYING CHARGE 13.3 %/YR UNLOADING CHARGE 0. C/MBTU
FUEL ID904
SULFUR CONCENTRATION 0.0 LB/MBTU
MINIMUM AMOUNT 0.0 BBLS/DAY

		JAN	FEB	MAR	APR	MAY	JUN	JUL	AUG	SEP	OCT	NOV	DEC
FUEL [illegible]T	(C/MBTU)	793.40	801.71	810.11	818.59	827[illegible]	835.83	844.59	853.43	862.37	871.41	880.54	[illegible].76
INVENTORY	(KBBLS)	0.	0.	0.	0.	0.	0.	0.	0.	0.	0.	.0.	0.

********** FUEL CATEGORY INPUT SUMMARY FOR 1987 **********

RES 2.8U UNLIMITED 6.280 MBTU/BBLS ESCALATION RATE 13.8 %/YR INVENTORY CARRYING CHARGE 13.8 %/YR UNLOADING CHARGE 0. C/MBTU
FUEL ID905
SULFUR CONCENTRATION 0.0 LB/MBTU
MINIMUM AMOUNT 0.0 BBLS/DAY

	JAN	FEB	MAR	APR	MAY	JUN	JUL	AUG	SEP	OCT	NOV	DEC
FUEL COST (C/MBTU)	758.92	767.17	775.50	783.93	792.45	801.06	809.77	818.57	827.47	836.46	845.55	854.74
INVENTORY(KBBLS)	0.	0.	0.	0.	0.	0.	0.	0.	0.	0.	0.	0.

DIS OILU UNLIMITED 5.830 MBTU/BBLS ESCALATION RATE 9.9 %/YR INVENTORY CARRYING CHARGE 9.9 %/YR UNLOADING CHARGE 0. C/MBTU
FUEL ID931
SULFUR CONCENTRATION 0.0 LB/MBTU
MINIMUM AMOUNT 0.0 BBLS/DAY

	JAN	FEB	MAR	APR	MAY	JUN	JUL	AUG	SEP	OCT	NOV	DEC
FUEL COST (C/MBTU)	1008.18	1016.13	1024.13	1032.20	1040.33	1048.52	1056.78	1065.11	1073.50	1081.95	1090.48	1099.07
INVENTORY(KBBLS)	0.	0.	0.	0.	0.	0.	0.	0.	0.	0.	0.	0.

RES 0.3D UNLIMITED 6.190 MBTU/BBLS ESCALATION RATE 12.1 %/YR INVENTORY CARRYING CHARGE 12.1 %/YR UNLOADING CHARGE 0. C/MBTU
FUEL ID921
SULFUR CONCENTRATION 0.0 LB/MBTU
MINIMUM AMOUNT 0.0 BBLS/DAY

	JAN	FEB	MAR	APR	MAY	JUN	JUL	AUG	SEP	OCT	NOV	DEC
FUEL COST (C/MBTU)	867.77	876.08	884.48	892.95	901.50	910.14	918.85	927.66	936.54	945.51	954.57	963.71
INVENTORY(KBBLS)	0.	0.	0.	0.	0.	0.	0.	0.	0.	0.	0.	0.

RES 0.7D UNLIMITED 6.200 MBTU/BBLS ESCALATION RATE 12.5 %/YR INVENTORY CARRYING CHARGE 12.5 %/YR UNLOADING CHARGE 0. C/MBTU
FUEL ID922
SULFUR CONCENTRATION 0.0 LB/MBTU
MINIMUM AMOUNT 0.0 BBLS/DAY

	JAN	FEB	MAR	APR	MAY	JUN	JUL	AUG	SEP	OCT	NOV	DEC
FUEL COST (C/MBTU)	837.17	845.42	853.76	862.18	870.69	879.28	887.95	896.71	905.55	914.49	923.51	932.61
INVENTORY(KBBLS)	0.	0.	0.	0.	0.	0.	0.	0.	0.	0.	0.	0.

RES 1.0D UNLIMITED 6.220 MBTU/BBLS ESCALATION RATE 12.8 %/YR INVENTORY CARRYING CHARGE 12.8 %/YR UNLOADING CHARGE 0. C/MBTU
FUEL ID923
SULFUR CONCENTRATION 0.0 LB/MBTU
MINIMUM AMOUNT 0.0 BBLS/DAY

	JAN	FEB	MAR	APR	MAY	JUN	JUL	AUG	SEP	OCT	NOV	DEC
FUEL COST (C/MBTU)	816.77	824.99	833.30	841.68	850.16	858.71	867.36	876.08	884.90	893.81	902.81	911.89
INVENTORY(KBBLS)	0.	0.	0.	0.	0.	0.	0.	0.	0.	0.	0.	0.

********** FUEL CATEGORY INPUT SUMMARY FOR 1987 **********

RES 1.5D UNLIMITED 6.235 MBTU/BBLS ESCALATION RATE 13.1 %/YR INVENTORY CARRYING CHARGE 13.1 %/YR UNLOADING CHARGE 0. C/MBTU
FUEL ID924
SULFUR CONCENTRATION 0.0 LB/MBTU
MINIMUM AMOUNT 0.0 BBLS/DAY

	JAN	FEB	MAR	APR	MAY	JUN	JUL	AUG	SEP	OCT	NOV	DEC
FUEL COST (C/MBTU)	791.47	799.65	807.91	816.26	824.69	833.22	841.83	850.53	859.31	868.19	877.17	886.23
INVENTORY(KBBLS)	0.	0.	0.	0.	0.	0.	0.	0.	0.	0.	0.	0.

RES 2.0D UNLIMITED 6.250 MBTU/BBLS ESCALATION RATE 13.5 %/YR INVENTORY CARRYING CHARGE 13.5 %/YR UNLOADING CHARGE 0. C/MBTU
FUEL ID925
SULFUR CONCENTRATION 0.0 LB/MBTU
MINIMUM AMOUNT 0.0 BBLS/DAY

	JAN	FEB	MAR	APR	MAY	JUN	JUL	AUG	SEP	OCT	NOV	DEC
FUEL COST (C/MBTU)	765.43	773.53	781.72	789.99	798.36	806.81	815.35	823.98	832.71	841.52	850.43	859.43
INVENTORY(KBBLS)	0.	0.	0.	0.	0.	0.	0.	0.	0.	0.	0.	0.

RES 2.8D UNLIMITED 6.280 MBTU/BBLS ESCALATION RATE 14.0 %/YR INVENTORY CARRYING CHARGE 14.0 %/YR UNLOADING CHARGE 0. C/MBTU
FUEL ID926
SULFUR CONCENTRATION 0.0 LB/MBTU
MINIMUM AMOUNT 0.0 BBLS/DAY

	JAN	FEB	MAR	APR	MAY	JUN	JUL	AUG	SEP	OCT	NOV	DEC
FUEL COST (C/MBTU)	730.74	738.78	746.91	755.13	763.43	771.83	780.32	788.91	797.58	806.36	815.23	824.20
INVENTORY(KBBLS)	0.	0.	0.	0.	0.	0.	0.	0.	0.	0.	0.	0.

DIS OILD UNLIMITED 5.830 MBTU/BBLS ESCALATION RATE 9.9 %/YR INVENTORY CARRYING CHARGE 9.9 %/YR UNLOADING CHARGE 0. C/MBTU
FUEL ID935
SULFUR CONCENTRATION 0.0 LB/MBTU
MINIMUM AMOUNT 0.0 BBLS/DAY

	JAN	FEB	MAR	APR	MAY	JUN	JUL	AUG	SEP	OCT	NOV	DEC
FUEL COST (C/MBTU)	1022.94	1031.03	1039.18	1047.40	1055.69	1064.03	1072.45	1080.93	1089.48	1098.10	1106.78	1115.53
INVENTORY(KBBLS)	0.	0.	0.	0.	0.	0.	0.	0.	0.	0.	0.	0.

COAL1.0U UNLIMITED 25.000 MBTU/TONS ESCALATION RATE 9.0 %/YR INVENTORY CARRYING CHARGE 9.0 %/YR UNLOADING CHARGE 0. C/MBTU
FUEL ID941
SULFUR CONCENTRATION 0.0 LB/MBTU
MINIMUM AMOUNT 0.0 TONS/DAY

	JAN	FEB	MAR	APR	MAY	JUN	JUL	AUG	SEP	OCT	NOV	DEC
FUEL COST (C/MBTU)	407.65	410.58	413.53	416.50	419.50	422.51	425.55	428.60	431.68	434.78	437.91	441.05
INVENTORY(KTONS)	0.	0.	0.	0.	0.	0.	0.	0.	0.	0.	0.	0.

********** FUEL CATEGORY INPUT SUMMARY FOR 1987 **********

COAL1.4U UNLIMITED 24.000 MBTU/TONS ESCALATION RATE 8.9 %/YR INVENTORY CARRYING CHARGE 8.9 %/YR UNLOADING CHARGE 0. C/MBTU
FUEL ID942
SULFUR CONCENTRATION 0.0 LB/MBTU
MINIMUM AMOUNT 0.0 TONS/DAY

	JAN	FEB	MAR	APR	MAY	JUN	JUL	AUG	SEP	OCT	NOV	DEC
FUEL COST (C/MBTU)	401.86	404.73	407.62	410.54	413.48	416.43	419.41	422.41	425.43	428.48	431.54	434.63
INVENTORY(KTONS)	0.	0.	0.	0.	0.	0.	0.	0.	0.	0.	0.	0.

COAL2.0U UNLIMITED 24.000 MBTU/TONS ESCALATION RATE 8.7 %/YR INVENTORY CARRYING CHARGE 8.7 %/YR UNLOADING CHARGE 0. C/MBTU
FUEL ID943
SULFUR CONCENTRATION 0.0 LB/MBTU
MINIMUM AMOUNT 0.0 TONS/DAY

	JAN	FEB	MAR	APR	MAY	JUN	JUL	AUG	SEP	OCT	NOV	DEC
FUEL COST (C/MBTU)	370.21	372.80	375.40	378.02	380.66	383.32	385.99	388.69	391.40	394.14	396.89	399.66
INVENTORY(KTONS)	0.	0.	0.	0.	0.	0.	0.	0.	0.	0.	0.	0.

COAL >2U UNLIMITED 24.000 MBTU/TONS ESCALATION RATE 8.9 %/YR INVENTORY CARRYING CHARGE 8.9 %/YR UNLOADING CHARGE 0. C/MBTU
FUEL ID944
SULFUR CONCENTRATION 0.0 LB/MBTU
MINIMUM AMOUNT 0.0 TONS/DAY

	JAN	FEB	MAR	APR	MAY	JUN	JUL	AUG	SEP	OCT	NOV	DEC
FUEL COST (C/MBTU)	310.46	312.68	314.92	317.18	319.45	321.74	324.04	326.36	328.70	331.05	333.43	335.81
INVENTORY(KTONS)	0.	0.	0.	0.	0.	0.	0.	0.	0.	0.	0.	0.

COAL1.0D UNLIMITED 25.000 MBTU/TONS ESCALATION RATE 8.9 %/YR INVENTORY CARRYING CHARGE 8.9 %/YR UNLOADING CHARGE 0. C/MBTU
FUEL ID951
SULFUR CONCENTRATION 0.0 LB/MBTU
MINIMUM AMOUNT 0.0 TONS/DAY

	JAN	FEB	MAR	APR	MAY	JUN	JUL	AUG	SEP	OCT	NOV	DEC
FUEL COST (C/MBTU)	429.31	432.37	435.44	438.54	441.65	444.79	447.95	451.14	454.35	457.57	460.83	464.10
INVENTORY(KTONS)	0.	0.	0.	0.	0.	0.	0.	0.	0.	0.	0.	0.

COAL1.4D UNLIMITED 24.000 MBTU/TONS ESCALATION RATE 8.8 %/YR INVENTORY CARRYING CHARGE 8.8 %/YR UNLOADING CHARGE 0. C/MBTU
FUEL ID952
SULFUR CONCENTRATION 0.0 LB/MBTU
MINIMUM AMOUNT 0.0 TONS/DAY

	JAN	FEB	MAR	APR	MAY	JUN	JUL	AUG	SEP	OCT	NOV	DEC
FUEL COST (C/MBTU)	427.60	430.62	433.66	436.72	439.81	442.91	446.04	449.19	452.36	455.56	458.78	462.02
INVENTORY(KTONS)	0.	0.	0.	0.	0.	0.	0.	0.	0.	0.	0.	0.

********** FUEL CATEGORY INPUT SUMMARY FOR 1987 **********

COAL2.0D UNLIMITED 24.000 MBTU/TONS ESCALATION RATE 8.6 %/YR INVENTORY CARRYING CHARGE 8.6 %/YR UNLOADING CHARGE 0. C/MBTU
FUEL ID953
SULFUR CONCENTRATION 0.0 LB/MBTU
MINIMUM AMOUNT 0.0 TONS/DAY

	JAN	FEB	MAR	APR	MAY	JUN	JUL	AUG	SEP	OCT	NOV	DEC
FUEL COST (C/MBTU)	395.95	398.68	401.43	404.20	406.99	409.79	412.62	415.47	418.33	421.22	424.12	427.05
INVENTORY(KTONS)	0.	0.	0.	0.	0.	0.	0.	0.	0.	0.	0.	0.

COAL >2D UNLIMITED 24.000 MBTU/TONS ESCALATION RATE 8.7 %/YR INVENTORY CARRYING CHARGE 8.7 %/YR UNLOADING CHARGE 0. C/MBTU
FUEL ID954
SULFUR CONCENTRATION 0.0 LB/MBTU
MINIMUM AMOUNT 0.0 TONS/DAY

	JAN	FEB	MAR	APR	MAY	JUN	JUL	AUG	SEP	OCT	NOV	DEC
FUEL COST (C/MBTU)	348.42	350.86	353.31	355.79	358.28	360.79	363.31	365.86	368.42	371.00	373.60	376.21
INVENTORY(KTONS)	0.	0.	0.	0.	0.	0.	0.	0.	0.	0.	0.	0.

URANIUM2 UNLIMITED 1.000 MBTU/MBTU ESCALATION RATE 7.0 %/YR INVENTORY CARRYING CHARGE 7.0 %/YR UNLOADING CHARGE 0. C/MBTU
FUEL ID962
SULFUR CONCENTRATION 0.0 LB/MBTU
MINIMUM AMOUNT 0.0 MBTU/DAY

	JAN	FEB	MAR	APR	MAY	JUN	JUL	AUG	SEP	OCT	NOV	DEC
FUEL COST (C/MBTU)	79.10	79.54	79.99	80.44	80.90	81.36	81.82	82.28	82.74	83.21	83.68	84.16
INVENTORY(KMBTU)	0.	0.	0.	0.	0.	0.	0.	0.	0.	0.	0.	0.

URANIUM3 UNLIMITED 1.000 MBTU/MBTU ESCALATION RATE 7.0 %/YR INVENTORY CARRYING CHARGE 7.0 %/YR UNLOADING CHARGE 0. C/MBTU
FUEL ID963
SULFUR CONCENTRATION 0.0 LB/MBTU
MINIMUM AMOUNT 0.0 MBTU/DAY

	JAN	FEB	MAR	APR	MAY	JUN	JUL	AUG	SEP	OCT	NOV	DEC
FUEL COST (C/MBTU)	90.69	91.21	91.72	92.24	92.76	93.29	93.81	94.34	94.88	95.41	95.95	96.50
INVENTORY(KMBTU)	0.	0.	0.	0.	0.	0.	0.	0.	0.	0.	0.	0.

URANIUM5 UNLIMITED 1.000 MBTU/MBTU ESCALATION RATE 7.0 %/YR INVENTORY CARRYING CHARGE 7.0 %/YR UNLOADING CHARGE 0. C/MBTU
FUEL ID965
SULFUR CONCENTRATION 0.0 LB/MBTU
MINIMUM AMOUNT 0.0 MBTU/DAY

	JAN	FEB	MAR	APR	MAY	JUN	JUL	AUG	SEP	OCT	NOV	DEC
FUEL COST (C/MBTU)	92.50	93.02	93.55	94.07	94.61	95.14	95.68	96.22	96.76	97.31	97.86	98.42
INVENTORY(KMBTU)	0.	0.	0.	0.	0.	0.	0.	0.	0.	0.	0.	0.

********** FUEL CATEGORY INPUT SUMMARY FOR 1987 **********

URANIUM7 UNLIMITED 1.000 MBTU/MBTU ESCALATION RATE 7.0 %/YR INVENTORY CARRYING CHARGE 7.0 %/YR UNLOADING CHARGE 0. C/MBTU
FUEL ID967
SULFUR CONCENTRATION 0.0 LB/MBTU
MINIMUM AMOUNT 0.0 MBTU/DAY

	JAN	FEB	MAR	APR	MAY	JUN	JUL	AUG	SEP	OCT	NOV	DEC
FUEL COST (C/MBTU)	86.09	86.57	87.06	87.55	88.05	88.55	89.05	89.55	90.06	90.57	91.08	91.59
INVENTORY(KMBTU)	0.	0.	0.	0.	0.	0.	0.	0.	0.	0.	0.	0.

NATGASU UNLIMITED 8.930 MBTU/MCF ESCALATION RATE 12.8 %/YR INVENTORY CARRYING CHARGE 12.8 %/YR UNLOADING CHARGE 0. C/MBTU
FUEL ID970
SULFUR CONCENTRATION 0.0 LB/MBTU
MINIMUM AMOUNT 0.0 MCF /DAY

	JAN	FEB	MAR	APR	MAY	JUN	JUL	AUG	SEP	OCT	NOV	DEC
FUEL COST (C/MBTU)	747.87	755.40	763.00	770.68	778.44	786.27	794.19	802.18	810.25	818.41	826.65	834.97
INVENTORY(KMCF)	0.	0.	0.	0.	0.	0.	0.	0.	0.	0.	0.	0.

NATGASD UNLIMITED 8.930 MBTU/MCF ESCALATION RATE 12.2 %/YR INVENTORY CARRYING CHARGE 12.2 %/YR UNLOADING CHARGE 0. C/MBTU
FUEL ID971
SULFUR CONCENTRATION 0.0 LB/MBTU
MINIMUM AMOUNT 0.0 MCF /DAY

	JAN	FEB	MAR	APR	MAY	JUN	JUL	AUG	SEP	OCT	NOV	DEC
FUEL COST (C/MBTU)	775.07	782.53	790.06	797.67	805.34	813.09	820.92	828.82	836.79	844.85	852.98	861.19
INVENTORY(KMCF)	0.	0.	0.	0.	0.	0.	0.	0.	0.	0.	0.	0.

DIS OILR UNLIMITED 5.400 MBTU/BBLS ESCALATION RATE 6.8 %/YR INVENTORY CARRYING CHARGE 6.8 %/YR UNLOADING CHARGE 0. C/MBTU
FUEL ID536
SULFUR CONCENTRATION 0.0 LB/MBTU
MINIMUM AMOUNT 0.0 BBLS/DAY

	JAN	FEB	MAR	APR	MAY	JUN	JUL	AUG	SEP	OCT	NOV	DEC
FUEL COST (C/MBTU)	875.62	880.43	885.26	890.12	895.00	899.92	904.85	909.82	914.81	919.83	924.88	929.96
INVENTORY(KBBLS)	0.	0.	0.	0.	0.	0.	0.	0.	0.	0.	0.	0.

DIS OILA UNLIMITED 5.300 MBTU/BBLS ESCALATION RATE 6.7 %/YR INVENTORY CARRYING CHARGE 6.7 %/YR UNLOADING CHARGE 0. C/MBTU
FUEL ID537
SULFUR CONCENTRATION 0.0 LB/MBTU
MINIMUM AMOUNT 0.0 BBLS/DAY

	JAN	FEB	MAR	APR	MAY	JUN	JUL	AUG	SEP	OCT	NOV	DEC
FUEL COST (C/MBTU)	1058.96	1064.66	1070.39	1076.15	1081.94	1087.76	1093.61	1099.50	1105.41	1111.36	1117.34	1123.35
INVENTORY(KBBLS)	0.	0.	0.	0.	0.	0.	0.	0.	0.	0.	0.	0.

********** FUEL CATEGORY INPUT SUMMARY FOR 1987 **********

LFCL 1.6 UNLIMITED 25.000 MBTU/TONS ESCALATION RATE 8.7 %/YR INVENTORY CARRYING CHARGE 8.7 %/YR UNLOADING CHARGE 0. C/MBTU
FUEL ID510
SULFUR CONCENTRATION 0.0 LB/MBTU
MINIMUM AMOUNT 0.0 TONS/DAY

	JAN	FEB	MAR	APR	MAY	JUN	JUL	AUG	SEP	OCT	NOV	DEC
FUEL COST (C/MBTU)	438.17	441.23	444.31	447.41	450.53	453.68	456.84	460.03	463.24	466.48	469.73	473.01
INVENTORY(KTONS)	0.	0.	0.	0.	0.	0.	0.	0.	0.	0.	0.	0.

HFCL 1.8 UNLIMITED 25.000 MBTU/TONS ESCALATION RATE 8.7 %/YR INVENTORY CARRYING CHARGE 8.7 %/YR UNLOADING CHARGE 0. C/MBTU
FUEL ID511
SULFUR CONCENTRATION 0.0 LB/MBTU
MINIMUM AMOUNT 0.0 TONS/DAY

	JAN	FEB	MAR	APR	MAY	JUN	JUL	AUG	SEP	OCT	NOV	DEC
FUEL COST (C/MBTU)	364.84	367.39	369.96	372.55	375.16	377.79	380.43	383.10	385.78	388.48	391.20	393.94
INVENTORY(KTONS)	0.	0.	0.	0.	0.	0.	0.	0.	0.	0.	0.	0.

COAL2.4 UNLIMITED 25.000 MBTU/TONS ESCALATION RATE 9.0 %/YR INVENTORY CARRYING CHARGE 9.0 %/YR UNLOADING CHARGE 0. C/MBTU
FUEL ID514
SULFUR CONCENTRATION 0.0 LB/MBTU
MINIMUM AMOUNT 0.0 TONS/DAY

	JAN	FEB	MAR	APR	MAY	JUN	JUL	AUG	SEP	OCT	NOV	DEC
FUEL COST (C/MBTU)	305.07	307.27	309.48	311.70	313.94	316.20	318.48	320.77	323.07	325.40	327.74	330.09
INVENTORY(KTONS)	0.	0.	0.	0.	0.	0.	0.	0.	0.	0.	0.	0.

NATGAS A UNLIMITED 1.000 MBTU/DT ESCALATION RATE 12.5 %/YR INVENTORY CARRYING CHARGE 12.5 %/YR UNLOADING CHARGE 0. C/MBTU
FUEL ID580
SULFUR CONCENTRATION 0.0 LB/MBTU
MINIMUM AMOUNT 0.0 DT /DAY

	JAN	FEB	MAR	APR	MAY	JUN	JUL	AUG	SEP	OCT	NOV	DEC
FUEL COST (C/MBTU)	772.82	780.43	788.11	795.86	803.70	811.60	819.59	827.66	835.80	844.03	852.33	860.72
INVENTORY(KDT)	0.	0.	0.	0.	0.	0.	0.	0.	0.	0.	0.	0.

BEGIN PROCESSING FOR YEAR 1988 MONTH 1 FOR PASS 0
BEGIN PROCESSING FOR YEAR 1988 MONTH 2 FOR PASS 0
BEGIN PROCESSING FOR YEAR 1988 MONTH 3 FOR PASS 0
BEGIN PROCESSING FOR YEAR 1988 MONTH 4 FOR PASS 0
BEGIN PROCESSING FOR YEAR 1988 MONTH 5 FOR PASS 0
BEGIN PROCESSING FOR YEAR 1988 MONTH 6 FOR PASS 0
BEGIN PROCESSING FOR YEAR 1988 MONTH 7 FOR PASS 0
BEGIN PROCESSING FOR YEAR 1988 MONTH 8 FOR PASS 0
BEGIN PROCESSING FOR YEAR 1988 MONTH 9 FOR PASS 0
BEGIN PROCESSING FOR YEAR 1988 MONTH 10 FOR PASS 0
BEGIN PROCESSING FOR YEAR 1988 MONTH 11 FOR PASS 0

BEGIN PROCESSING FOR YEAR 1980 MONTH 12 FOR PASS 0

1988

********** FUEL CATEGORY INPUT SUMMARY FOR 1988 **********

OH FUEL UNLIMITED 1.000 MBTU/TONS ESCALATION RATE 7.0 %/YR INVENTORY CARRYING CHARGE 7.0 %/YR UNLOADING CHARGE 0. C/MBTU
FUEL ID998
SULFUR CONCENTRATION 0.0 LB/MBTU
MINIMUM AMOUNT 0.0 TONS/DAY

	JAN	FEB	MAR	APR	MAY	JUN	JUL	AUG	SEP	OCT	NOV	DEC
FUEL COST (C/MBTU)	296.50	297.80	299.20	300.50	278.70	280.00	281.20	282.50	283.80	285.10	310.30	311.70
INVENTORY (KTONS)	0.	0.	0.	0.	0.	0.	0.	0.	0.	0.	0.	0.

OH FUEL UNLIMITED 1.000 MBTU/TONS ESCALATION RATE 7.0 %/YR INVENTORY CARRYING CHARGE 7.0 %/YR UNLOADING CHARGE 0. C/MBTU
FUEL ID999
SULFUR CONCENTRATION 0.0 LB/MBTU
MINIMUM AMOUNT 0.0 TONS/DAY

	JAN	FEB	MAR	APR	MAY	JUN	JUL	AUG	SEP	OCT	NOV	DEC
FUEL COST (C/MBTU)	342.10	343.60	345.20	346.80	325.10	326.60	328.10	329.60	331.10	332.60	358.00	359.60
INVENTORY (KTONS)	0.	0.	0.	0.	0.	0.	0.	0.	0.	0.	0.	0.

RES 0.7U UNLIMITED 6.200 MBTU/BBLS ESCALATION RATE 9.1 %/YR INVENTORY CARRYING CHARGE 9.1 %/YR UNLOADING CHARGE 0. C/MBTU
FUEL ID902
SULFUR CONCENTRATION 0.0 LB/MBTU
MINIMUM AMOUNT 0.0 BBLS/DAY

	JAN	FEB	MAR	APR	MAY	JUN	JUL	AUG	SEP	OCT	NOV	DEC
FUEL COST (C/MBTU)	691.09	696.14	701.24	706.37	711.54	716.74	721.99	727.27	732.59	737.95	743.35	748.79
INVENTORY (KBBLS)	0.	0.	0.	0.	0.	0.	0.	0.	0.	0.	0.	0.

RES 1.0U UNLIMITED 6.220 MBTU/BBLS ESCALATION RATE 9.5 %/YR INVENTORY CARRYING CHARGE 9.5 %/YR UNLOADING CHARGE 0. C/MBTU
FUEL ID903
SULFUR CONCENTRATION 0.0 LB/MBTU
MINIMUM AMOUNT 0.0 BBLS/DAY

	JAN	FEB	MAR	APR	MAY	JUN	JUL	AUG	SEP	OCT	NOV	DEC
FUEL COST (C/MBTU)	673.67	678.76	683.89	689.05	694.26	699.50	704.79	710.11	715.48	720.88	726.33	731.81
INVENTORY (KBBLS)	0.	0.	0.	0.	0.	0.	0.	0.	0.	0.	0.	0.

RES 2.0U UNLIMITED 6.250 MBTU/BBLS ESCALATION RATE 10.2 %/YR INVENTORY CARRYING CHARGE 10.2 %/YR UNLOADING CHARGE 0. C/MBTU
FUEL ID904
SULFUR CONCENTRATION 0.0 LB/MBTU
MINIMUM AMOUNT 0.0 BBLS/DAY

	JAN	FEB	MAR	APR	MAY	JUN	JUL	AUG	SEP	OCT	NOV	DEC
FUEL COST (C/MBTU)	630.18	635.28	640.43	645.62	650.86	656.13	661.45	666.81	672.21	677.66	683.15	688.69
INVENTORY (KBBLS)	0.	0.	0.	0.	0.	0.	0.	0.	0.	0.	0.	0.

********** FUEL CATEGORY INPUT SUMMARY FOR 1988 **********

RES 2.8U UNLIMITED 6,280 MBTU/BBLS ESCALATION RATE 10.7 %/YR INVENTORY CARRYING CHARGE 10.7 %/YR UNLOADING CHARGE 0. C/MBTU
FUEL ID905
SULFUR CONCENTRATION 0.0 LB/MBTU
MINIMUM AMOUNT 0.0 BBLS/DAY

	JAN	FEB	MAR	APR	MAY	JUN	JUL	AUG	SEP	OCT	NOV	DEC
FUEL COST (C/MBTU)	600.90	606.01	611.16	616.35	621.59	626.88	632.20	637.58	643.00	648.46	653.97	659.53
INVENTORY(KBBLS)	0.	0.	0.	0.	0.	0.	0.	0.	0.	0.	0.	0.

DIS OILU UNLIMITED 5,830 MBTU/BBLS ESCALATION RATE 6.9 %/YR INVENTORY CARRYING CHARGE 6.9 %/YR UNLOADING CHARGE 0. C/MBTU
FUEL ID931
SULFUR CONCENTRATION 0.0 LB/MBTU
MINIMUM AMOUNT 0.0 BBLS/DAY

	JAN	FEB	MAR	APR	MAY	JUN	JUL	AUG	SEP	OCT	NOV	DEC
FUEL COST (C/MBTU)	808.19	812.70	817.24	821.80	826.39	831.01	835.65	840.32	845.01	849.73	854.47	859.25
INVENTORY(KBBLS)	0.	0.	0.	0.	0.	0.	0.	0.	0.	0.	0.	0.

RES 0.3D UNLIMITED 6,190 MBTU/BBLS ESCALATION RATE 8.9 %/YR INVENTORY CARRYING CHARGE 8.9 %/YR UNLOADING CHARGE 0. C/MBTU
FUEL ID921
SULFUR CONCENTRATION 0.0 LB/MBTU
MINIMUM AMOUNT 0.0 BBLS/DAY

	JAN	FEB	MAR	APR	MAY	JUN	JUL	AUG	SEP	OCT	NOV	DEC
FUEL COST (C/MBTU)	692.58	697.50	702.46	707.46	712.49	717.55	722.66	727.79	732.97	738.18	743.43	748.72
INVENTORY(KBBLS)	0.	0.	0.	0.	0.	0.	0.	0.	0.	0.	0.	0.

RES 0.7D UNLIMITED 6,200 MBTU/BBLS ESCALATION RATE 9.3 %/YR INVENTORY CARRYING CHARGE 9.3 %/YR UNLOADING CHARGE 0. C/MBTU
FUEL ID922
SULFUR CONCENTRATION 0.0 LB/MBTU
MINIMUM AMOUNT 0.0 BBLS/DAY

	JAN	FEB	MAR	APR	MAY	JUN	JUL	AUG	SEP	OCT	NOV	DEC
FUEL COST (C/MBTU)	666.11	671.05	676.02	681.03	686.08	691.16	696.28	701.44	706.64	711.88	717.15	722.46
INVENTORY(KBBLS)	0.	0.	0.	0.	0.	0.	0.	0.	0.	0.	0.	0.

RES 1.0D UNLIMITED 6,220 MBTU/BBLS ESCALATION RATE 9.5 %/YR INVENTORY CARRYING CHARGE 9.5 %/YR UNLOADING CHARGE 0. C/MBTU
FUEL ID923
SULFUR CONCENTRATION 0.0 LB/MBTU
MINIMUM AMOUNT 0.0 BBLS/DAY

	JAN	FEB	MAR	APR	MAY	JUN	JUL	AUG	SEP	OCT	NOV	DEC
FUEL COST (C/MBTU)	649.40	654.34	659.33	664.35	669.41	674.51	679.65	684.83	690.05	695.30	700.60	705.94
INVENTORY(KBBLS)	0.	0.	0.	0.	0.	0.	0.	0.	0.	0.	0.	0.

********** FUEL CATEGORY INPUT SUMMARY FOR 1988 **********

RES 1.50 UNLIMITED 6,235 MBTU/BBLS ESCALATION RATE 9.9 %/YR INVENTORY CARRYING CHARGE 9.9 %/YR UNLOADING CHARGE 0. C/MBTU
FUEL ID924
SULFUR CONCENTRATION 0.0 LB/MBTU
MINIMUM AMOUNT 0.0 BBLS/DAY

	JAN	FEB	MAR	APR	MAY	JUN	JUL	AUG	SEP	OCT	NOV	DEC
FUEL COST (C/MBTU)	627.05	631.98	636.95	641.96	647.01	652.10	657.23	662.40	667.61	672.86	678.15	683.48
INVENTORY(KBBLS)	0.	0.	0.	0.	0.	0.	0.	0.	0.	0.	0.	0.

RES 2.00 UNLIMITED 6,250 MBTU/BBLS ESCALATION RATE 10.3 %/YR INVENTORY CARRYING CHARGE 10.3 %/YR UNLOADING CHARGE 0. C/MBTU
FUEL ID925
SULFUR CONCENTRATION 0.0 LB/MBTU
MINIMUM AMOUNT 0.0 BBLS/DAY

	JAN	FEB	MAR	APR	MAY	JUN	JUL	AUG	SEP	OCT	NOV	DEC
FUEL COST (C/MBTU)	604.59	609.55	614.55	619.59	624.68	629.80	634.97	640.17	645.43	650.72	656.06	661.44
INVENTORY(KBBLS)	0.	0.	0.	0.	0.	0.	0.	0.	0.	0.	0.	0.

RES 2.80 UNLIMITED 6,280 MBTU/BBLS ESCALATION RATE 10.9 %/YR INVENTORY CARRYING CHARGE 10.9 %/YR UNLOADING CHARGE 0. C/MBTU
FUEL ID926
SULFUR CONCENTRATION 0.0 LB/MBTU
MINIMUM AMOUNT 0.0 BBLS/DAY

	JAN	FEB	MAR	APR	MAY	JUN	JUL	AUG	SEP	OCT	NOV	DEC
FUEL COST (C/MBTU)	575.86	580.84	585.87	590.94	596.06	601.22	606.43	611.68	616.97	622.31	627.70	633.14
INVENTORY(KBBLS)	0.	0.	0.	0.	0.	0.	0.	0.	0.	0.	0.	0.

DIS OILC UNLIMITED 5,830 MBTU/BBLS ESCALATION RATE 6.9 %/YR INVENTORY CARRYING CHARGE 6.9 %/YR UNLOADING CHARGE 0. C/MBTU
FUEL ID935
SULFUR CONCENTRATION 0.0 LB/MBTU
MINIMUM AMOUNT 0.0 BBLS/DAY

	JAN	FEB	MAR	APR	MAY	JUN	JUL	AUG	SEP	OCT	NOV	DEC
FUEL COST (C/MBTU)	819.25	823.82	828.41	833.03	837.67	842.34	847.04	851.77	856.51	861.29	866.09	870.92
INVENTORY(KBBLS)	0.	0.	0.	0.	0.	0.	0.	0.	0.	0.	0.	0.

COAL1.00 UNLIMITED 25,000 MBTU/TONS ESCALATION RATE 7.2 %/YR INVENTORY CARRYING CHARGE 7.2 %/YR UNLOADING CHARGE 0. C/MBTU
FUEL ID941
SULFUR CONCENTRATION 0.0 LB/MBTU
MINIMUM AMOUNT 0.0 TONS/DAY

	JAN	FEB	MAR	APR	MAY	JUN	JUL	AUG	SEP	OCT	NOV	DEC
FUEL COST (C/MBTU)	288.75	290.44	292.13	293.84	295.55	297.27	299.01	300.75	302.50	304.27	306.04	307.82
INVENTORY(KTONS)	0.	0.	0.	0.	0.	0.	0.	0.	0.	0.	0.	0.

********** FUEL CATEGORY INPUT SUMMARY FOR 1988 **********

COAL1.4U UNLIMITED 24.000 MBTU/TONS ESCALATION RATE 8.4 %/YR INVENTORY CARRYING CHARGE 8.4 %/YR UNLOADING CHARGE 0. C/MBTU
FUEL ID942
SULFUR CONCENTRATION 0.0 LB/MBTU
MINIMUM AMOUNT 0.0 TONS/DAY

	JAN	FEB	MAR	APR	MAY	JUN	JUL	AUG	SEP	OCT	NOV	DEC
FUEL COST (C/MBTU)	275.29	277.14	279.00	280.88	282.77	284.67	286.58	288.51	290.45	292.40	294.36	296.34
INVENTORY(KTONS)	0.	0.	0.	0.	0.	0.	0.	0.	0.	0.	0.	0.

COAL2.0U UNLIMITED 24.000 MBTU/TONS ESCALATION RATE 7.8 %/YR INVENTORY CARRYING CHARGE 7.8 %/YR UNLOADING CHARGE 0. C/MBTU
FUEL ID943
SULFUR CONCENTRATION 0.0 LB/MBTU
MINIMUM AMOUNT 0.0 TONS/DAY

	JAN	FEB	MAR	APR	MAY	JUN	JUL	AUG	SEP	OCT	NOV	DEC
FUEL COST (C/MBTU)	257.34	258.96	260.60	262.24	263.90	265.56	267.24	268.93	270.62	272.33	274.05	275.78
INVENTORY(KTONS)	0.	0.	0.	0.	0.	0.	0.	0.	0.	0.	0.	0.

COAL >2U UNLIMITED 24.000 MBTU/TONS ESCALATION RATE 5.6 %/YR INVENTORY CARRYING CHARGE 5.6 %/YR UNLOADING CHARGE 0. C/MBTU
FUEL ID944
SULFUR CONCENTRATION 0.0 LB/MBTU
MINIMUM AMOUNT 0.0 TONS/DAY

	JAN	FEB	MAR	APR	MAY	JUN	JUL	AUG	SEP	OCT	NOV	DEC
FUEL COST (C/MBTU)	233.56	234.63	235.70	236.78	237.86	238.95	240.04	241.14	242.24	243.35	244.46	245.58
INVENTORY(KTONS)	0.	0.	0.	0.	0.	0.	0.	0.	0.	0.	0.	0.

COAL1.0D UNLIMITED 25.000 MBTU/TONS ESCALATION RATE 7.1 %/YR INVENTORY CARRYING CHARGE 7.1 %/YR UNLOADING CHARGE 0. C/MBTU
FUEL ID951
SULFUR CONCENTRATION 0.0 LB/MBTU
MINIMUM AMOUNT 0.0 TONS/DAY

	JAN	FEB	MAR	APR	MAY	JUN	JUL	AUG	SEP	OCT	NOV	DEC
FUEL COST (C/MBTU)	309.43	311.22	313.01	314.81	316.63	318.45	320.29	322.14	323.99	325.86	327.74	329.63
INVENTORY(KTONS)	0.	0.	0.	0.	0.	0.	0.	0.	0.	0.	0.	0.

COAL1.4U UNLIMITED 24.000 MBTU/TONS ESCALATION RATE 8.2 %/YR INVENTORY CARRYING CHARGE 8.2 %/YR UNLOADING CHARGE 0. C/MBTU
FUEL ID952
SULFUR CONCENTRATION 0.0 LB/MBTU
MINIMUM AMOUNT 0.0 TONS/DAY

	JAN	FEB	MAR	APR	MAY	JUN	JUL	AUG	SEP	OCT	NOV	DEC
FUEL COST (C/MBTU)	300.11	302.09	304.07	306.07	308.08	310.10	312.14	314.19	316.25	318.33	320.42	322.52
INVENTORY(KTONS)	0.	0.	0.	0.	0.	0.	0.	0.	0.	0.	0.	0.

********** FUEL CATEGORY INPUT SUMMARY FOR 1988 **********

COAL2.0D UNLIMITED 24.000 MBTU/TONS ESCALATION RATE 7.7 %/YR INVENTORY CARRYING CHARGE 7.7 %/YR UNLOADING CHARGE 0. C/MBTU
FUEL ID953
SULFUR CONCENTRATION 0.0 LB/MBTU
MINIMUM AMOUNT 0.0 TONS/DAY

	JAN	FEB	MAR	APR	MAY	JUN	JUL	AUG	SEP	OCT	NOV	DEC
FUEL COST (C/MBTU)	282.15	283.90	285.65	287.42	289.20	290.98	292.78	294.59	296.42	298.25	300.09	301.95
INVENTORY(KTONS)	0.	0.	0.	0.	0.	0.	0.	0.	0.	0.	0.	0.

COAL >2D UNLIMITED 24.000 MBTU/TONS ESCALATION RATE 5.7 %/YR INVENTORY CARRYING CHARGE 5.7 %/YR UNLOADING CHARGE 0. C/MBTU
FUEL ID954
SULFUR CONCENTRATION 0.0 LB/MBTU
MINIMUM AMOUNT 0.0 TONS/DAY

	JAN	FEB	MAR	APR	MAY	JUN	JUL	AUG	SEP	OCT	NOV	DEC
FUEL COST (C/MBTU)	266.63	267.86	269.10	270.34	271.58	272.83	274.09	275.35	276.62	277.90	279.18	280.46
INVENTORY(KTONS)	0.	0.	0.	0.	0.	0.	0.	0.	0.	0.	0.	0.

URANIUM2 UNLIMITED 1.000 ESCALATION 6.0 %/YR INVENTORY CARRYING CHARGE 6.0 %/YR UNLOADING CHARGE 0. C/MBTU
FUEL ID962
SULFUR CONCENTRATION 0.0 L
MINIMUM AMOUNT 0.0 M

SEE PAGES 237-238 @ END OF THIS SECTION

	JAN	FEB	M/					AUG	SEP	OCT	NOV	DEC
FUEL COST (C/MBTU)	82.60	83.01	83.41					85.46	85.88	86.29	86.71	87.14
INVENTORY(KMBTU)	0.	0.	0.	0.				0.	0.	0.	0.	0.

URANIUM3 UNLIMITED 1.000 MBTU/MBTU ESCALATION RATE 6.0 %/YR INVENTORY CARRYING CHARGE 6.0 %/YR UNLOADING CHARGE 0. C/MBTU
FUEL ID963
SULFUR CONCENTRATION 0.0 LB/MBTU
MINIMUM AMOUNT 0.0 MBTU/DAY

	JAN	FEB	MAR	APR	MAY	JUN	JUL	AUG	SEP	OCT	NOV	DEC
FUEL COST (C/MBTU)	94.72	95.18	95.64	96.11	96.57	97.04	97.52	97.99	98.47	98.95	99.43	99.91
INVENTORY(KMBTU)	0.	0.	0.	0.	0.	0.	0.	0.	0.	0.	0.	0.

URANIUM5 UNLIMITED 1.000 MBTU/MBTU ESCALATION RATE 6.0 %/YR INVENTORY CARRYING CHARGE 6.0 %/YR. UNLOADING CHARGE 0. C/MBTU
FUEL ID965
SULFUR CONCENTRATION 0.0 LB/MBTU
MINIMUM AMOUNT 0.0 MBTU/DAY

	JAN	FEB	MAR	APR	MAY	JUN	JUL	AUG	SEP	OCT	NOV	DEC
FUEL COST (C/MBTU)	96.60	97.07	97.54	98.02	98.49	98.97	99.46	99.94	100.43	100.91	101.41	101.90
INVENTORY(KMBTU)	0.	0.	0.	0.	0.	0.	0.	0.	0.	0.	0.	0.

********** FUEL CATEGORY INPUT SUMMARY FOR 1988 **********

URANIUM7 UNLIMITED 1.000 MBTU/MBTU ESCALATION RATE 6.0 %/YR INVENTORY CARRYING CHARGE 6.0 %/YR UNLOADING CHARGE 0. C/MBTU
FUEL 10967
SULFUR CONCENTRATION 0.0 LB/MBTU
MINIMUM AMOUNT 0.0 MBTU/DAY

	JAN	FEB	MAR	APR	MAY	JUN	JUL	AUG	SEP	OCT	NOV	DEC
FUEL COST (C/MBTU)	89.90	90.34	90.78	91.22	91.67	92.11	92.56	93.01	93.46	93.92	94.38	94.84
INVENTORY (KMBTU)	0.	0.	0.	0.	0.	0.	0.	0.	0.	0.	0.	0.

NATGASU UNLIMITED 8.930 MBTU/MCF ESCALATION RATE 12.7 %/YR INVENTORY CARRYING CHARGE 12.7 %/YR UNLOADING CHARGE 0. C/MBTU
FUEL 10970
SULFUR CONCENTRATION 0.0 LB/MBTU
MINIMUM AMOUNT 0.0 MCF /DAY

	JAN	FEB	MAR	APR	MAY	JUN	JUL	AUG	SEP	OCT	NOV	DEC
FUEL COST (C/MBTU)	616.44	622.60	[illegible]	[illegible].11	641.45	647.86	654.33	660.87	667.47	674.14	680.87	687.68
INVENTORY (KMCF)	0.	0.				0.	0.	0.	0.	0.	0.	0.

SEE PAGES 237 - 238 @ END OF THIS SECTION

NATGASD UNLIMITED INVENTORY CARRYING CHARGE 12.3 %/YR UNLOADING CHARGE 0. C/MBTU
FUEL 10971
SULFUR CONCENTRATION
MINIMUM AMOUNT

	JAN	FEB	MAR	APR	MAY		JUL	AUG	SEP	OCT	NOV	DEC
FUEL COST (C/MBTU)	629.95	636.06	642.23	648.46	654.75	661.10	667.51	673.98	680.52	687.12	693.78	700.51
INVENTORY (KMCF)	0.	0.	0.	0.	0.	0.	0.	0.	0.	0.	0.	0.

DIS OILR UNLIMITED 5.400 MBTU/BBLS ESCALATION RATE 6.8 %/YR INVENTORY CARRYING CHARGE 6.8 %/YR UNLOADING CHARGE 0. C/MBTU
FUEL 10536
SULFUR CONCENTRATION 0.0 LB/MBTU
MINIMUM AMOUNT 0.0 BBLS/DAY

	JAN	FEB	MAR	APR	MAY	JUN	JUL	AUG	SEP	OCT	NOV	DEC
FUEL COST (C/MBTU)	935.06	940.20	945.36	950.54	955.76	961.01	966.28	971.58	976.92	982.28	987.67	993.09
INVENTORY (KBBLS)	0.	0.	0.	0.	0.	0.	0.	0.	0.	0.	0.	0.

DIS OILA UNLIMITED 5.300 MBTU/BBLS ESCALATION RATE 6.7 %/YR INVENTORY CARRYING CHARGE 6.7 %/YR UNLOADING CHARGE 0. C/MBTU
FUEL 10537
SULFUR CONCENTRATION 0.0 LB/MBTU
MINIMUM AMOUNT 0.0 BBLS/DAY

	JAN	FEB	MAR	APR	MAY	JUN	JUL	AUG	SEP	OCT	NOV	DEC
FUEL COST (C/MBTU)	1129.39	1135.47	1141.56	1147.72	1153.90	1160.11	1166.35	1172.63	1178.93	1185.28	1191.66	1198.07
INVENTORY (KBBLS)	0.	0.	0.	0.	0.	0.	0.	0.	0.	0.	0.	0.

********** FUEL CATEGORY INPUT SUMMARY FOR 1988 **********

LFCL 1.6 UNLIMITED 25,000 MBTU/TONS ESCALATION RATE 7.9 %/YR INVENTORY CARRYING CHARGE 7.9 %/YR UNLOADING CHARGE 0. C/MBTU
FUEL ID510
SULFUR CONCENTRATION 0.0 LB/MBTU
MINIMUM AMOUNT 0.0 TONS/DAY

	JAN	FEB	MAR	APR	MAY	JUN	JUL	AUG	SEP	OCT	NOV	DEC
FUEL COST (C/MBTU)	303.70	305.62	307.55	309.49	311.45	313.41	315.40	317.39	319.39	321.41	323.44	325.49
INVENTORY(KTONS)	0.	0.	0.	0.	0.	0.	0.	0.	0.	0.	0.	0.

HFCL 1.8 UNLIMITED 25,000 MBTU/TONS ESCALATION RATE 7.9 %/YR INVENTORY CARRYING CHARGE 7.9 %/YR UNLOADING CHARGE 0. C/MBTU
FUEL ID511
SULFUR CONCENTRATION 0.0 LB/MBTU
MINIMUM AMOUNT 0.0 TONS/DAY

	JAN	FEB	MAR	APR	MAY	JUN	JUL	AUG	SEP	OCT	NOV	DEC
FUEL COST (C/MBTU)	253.19	254.80	256.41	258.03	259.67	261.31	262.97	264.63	266.31	267.99	269.69	271.40
INVENTORY(KTONS)	0.	0.	0.	0.	0.	0.	0.	0.	0.	0.	0.	0.

COAL2.4 UNLIMITED 25,000 MBTU/TONS ESCALATION RATE 5.6 %/YR INVENTORY CARRYING CHARGE 5.6 %/YR UNLOADING CHARGE 0. C/MBTU
FUEL ID514
SULFUR CONCENTRATION 0.0 LB/MBTU
MINIMUM AMOUNT 0.0 TONS/DAY

	JAN	FEB	MAR	APR	MAY	JUN	JUL	AUG	SEP	OCT	NOV	DEC
FUEL COST (C/MBTU)	228.05	229.09	230.14	231.19	232.24	233.30	234.37	235.43	236.51	237.59	238.67	239.76
INVENTORY(KTONS)	0.	0.	0.	0.	0.	0.	0.	0.	0.	0.	0.	0.

NATGAS A UNLIMITED 1,000 MBTU/DT ESCALATION RATE 11.6 %/YR INVENTORY CARRYING CHARGE 11.6 %/YR UNLOADING CHARGE 0. C/MBTU
FUEL ID580
SULFUR CONCENTRATION 0.0 LB/MBTU
MINIMUM AMOUNT 0.0 DT /DAY

	JAN	FEB	MAR	APR	MAY	JUN	JUL	AUG	SEP	OCT	NOV	DEC
FUEL COST (C/MBTU)	653.57	659.58	665.65	671.77	677.95	684.18	690.47	696.82	703.23	709.69	716.22	722.80
INVENTORY(KDT)	0.	0.	0.	0.	0.	0.	0.	0.	0.	0.	0.	0.

********** FUEL CATEGORY INPUT SUMMARY FOR 1988 **********

COAL2.0D UNLIMITED 24.000 MBTU/TONS ESCALATION RATE 7.7 %/YR INVENTORY CARRYING CHARGE 7.7 %/YR UNLOADING CHARGE 0. C/MBTU
FUEL ID953
SULFUR CONCENTRATION 0.0 LB/MBTU
MINIMUM AMOUNT 0.0 TONS/DAY

	JAN	FEB	MAR	APR	MAY	JUN	JUL	AUG	SEP	OCT	NOV	DEC
FUEL COST (C/MBTU)	282.15	283.90	285.65	287.42	289.20	290.98	292.78	294.59	296.42	298.25	300.09	301.95
INVENTORY(KTONS)	0.	0.	0.	0.	0.	0.	0.	0.	0.	0.	0.	0.

COAL >2D UNLIMITED 24.000 MBTU/TONS ESCALATION RATE 5.7 %/YR INVENTORY CARRYING CHARGE 5.7 %/YR UNLOADING CHARGE 0. C/MBTU
FUEL ID954
SULFUR CONCENTRATION 0.0 LB/MBTU
MINIMUM AMOUNT 0.0 TONS/DAY

	JAN	FEB	MAR	APR	MAY	JUN	JUL	AUG	SEP	OCT	NOV	DEC
FUEL COST (C/MBTU)	266.63	267.86	269.10	270.34	271.58	272.83	274.09	275.35	276.62	277.90	279.18	280.46
INVENTORY(KTONS)	0.	0.	0.	0.	0.	0.	0.	0.	0.	0.	0.	0.

URANIUM2 UNLIMITED 1.000 MBTU/MBTU ESCALATION RATE 6.0 %/YR INVENTORY CARRYING CHARGE 6.0 %/YR UNLOADING CHARGE 0. C/MBTU
FUEL ID962
SULFUR CONCENTRATION 0.0 LB/MBTU
MINIMUM AMOUNT 0.0 MBTU/DAY

	JAN	FEB	MAR	APR	MAY	JUN	JUL	AUG	SEP	OCT	NOV	DEC
FUEL COST (C/MBTU)	57.84	58.12	58.41	58.69	58.98	59.26	59.55	59.84	60.13	60.42	60.72	61.01
INVENTORY(KMBTU)	0.	0.	0.	0.	0.	0.	0.	0.	0.	0.	0.	0.

URANIUM3 UNLIMITED 1.000 MBTU/MBTU ESCALATION RATE 6.0 %/YR INVENTORY CARRYING CHARGE 6.0 %/YR UNLOADING CHARGE 0. C/MBTU
FUEL ID963
SULFUR CONCENTRATION 0.0 LB/MBTU
MINIMUM AMOUNT 0.0 MBTU/DAY

	JAN	FEB	MAR	APR	MAY	JUN	JUL	AUG	SEP	OCT	NOV	DEC
FUEL COST (C/MBTU)	65.94	66.26	66.58	66.91	67.23	67.56	67.89	68.22	68.55	68.88	69.22	69.56
INVENTORY(KMBTU)	0.	0.	0.	0.	0.	0.	0.	0.	0.	0.	0.	0.

URANIUM5 UNLIMITED 1.000 MBTU/MBTU ESCALATION RATE 6.0 %/YR INVENTORY CARRYING CHARGE 6.0 %/YR UNLOADING CHARGE 0. C/MBTU
FUEL ID965
SULFUR CONCENTRATION 0.0 LB/MBTU
MINIMUM AMOUNT 0.0 MBTU/DAY

	JAN	FEB	MAR	APR	MAY	JUN	JUL	AUG	SEP	OCT	NOV	DEC
FUEL COST (C/MBTU)	67.10	67.42	67.75	68.08	68.41	68.74	69.08	69.42	69.75	70.09	70.43	70.78
INVENTORY(KMBTU)	0.	0.	0.	0.	0.	0.	0.	0.	0.	0.	0.	0.

*********** FUEL CATEGORY INPUT SUMMARY FOR 1988 ***********

URANIUM7 UNLIMITED 1.000 MMBTU/MBTU ESCALATION RATE 6.0 %/YR INVENTORY CARRYING CHARGE 6.0 %/YR UNLOADING CHARGE 0. C/MBTU
FUEL ID967
SULFUR CONCENTRATION 0.0 LB/MBTU
MINIMUM AMOUNT 0.0 MBTU/DAY

	JAN	FEB	MAR	APR	MAY	JUN	JUL	AUG	SEP	OCT	NOV	DEC
FUEL COST (C/MBTU)	62.47	62.77	63.08	63.38	63.69	64.00	64.31	64.63	64.94	65.26	65.58	65.90
INVENTORY(KMBTU)	0.	0.	0.	0.	0.	0.	0.	0.	0.	0.	0.	0.

NATGASU UNLIMITED 8.930 MBTU/MCF ESCALATION RATE 12.7 %/YR INVENTORY CARRYING CHARGE 12.7 %/YR UNLOADING CHARGE 0. C/MBTU
FUEL ID970
SULFUR CONCENTRATION 0.0 LB/MBTU
MINIMUM AMOUNT 0.0 MCF /DAY

	JAN	FEB	MAR	APR	MAY	JUN	JUL	AUG	SEP	OCT	NOV	DEC
FUEL COST (C/MBTU)	616.44	622.60	628.82	635.11	641.45	647.86	654.33	660.87	667.47	674.14	680.87	687.68
INVENTORY(KMCF)	0.	0.	0.	0.	0.	0.	0.	0.	0.	0.	0.	0.

NATGASD UNLIMITED 8.930 MBTU/MCF ESCALATION RATE 12.3 %/YR INVENTORY CARRYING CHARGE 12.3 %/YR UNLOADING CHARGE 0. C/MBTU
FUEL ID971
SULFUR CONCENTRATION 0.0 LB/MBTU
MINIMUM AMOUNT 0.0 MCF /DAY

	JAN	FEB	MAR	APR	MAY	JUN	JUL	AUG	SEP	OCT	NOV	DEC
FUEL COST (C/MBTU)	629.95	636.06	642.23	648.46	654.75	661.10	667.51	673.98	680.52	687.12	693.78	700.51
INVENTORY(KMCF)	0.	0.	0.	0.	0.	0.	0.	0.	0.	0.	0.	0.

DIS OILR UNLIMITED 5.400 MBTU/BBLS ESCALATION RATE 6.8 %/YR INVENTORY CARRYING CHARGE 6.8 %/YR UNLOADING CHARGE 0. C/MBTU
FUEL ID536
SULFUR CONCENTRATION 0.0 LB/MBTU
MINIMUM AMOUNT 0.0 BBLS/DAY

	JAN	FEB	MAR	APR	MAY	JUN	JUL	AUG	SEP	OCT	NOV	DEC
FUEL COST (C/MBTU)	935.06	940.20	945.36	950.54	955.76	961.01	966.28	971.58	976.92	982.28	987.67	993.09
INVENTORY(KBBLS)	0.	0.	0.	0.	0.	0.	0.	0.	0.	0.	0.	0.

DIS OILA UNLIMITED 5.300 MBTU/BBLS ESCALATION RATE 6.7 %/YR INVENTORY CARRYING CHARGE 6.7 %/YR UNLOADING CHARGE 0. C/MBTU
FUEL ID537
SULFUR CONCENTRATION 0.0 LB/MBTU
MINIMUM AMOUNT 0.0 BBLS/DAY

	JAN	FEB	MAR	APR	MAY	JUN	JUL	AUG	SEP	OCT	NOV	DEC
FUEL COST (C/MBTU)	1129.39	1135.47	1141.58	1147.72	1153.90	1160.11	1166.35	1172.63	1178.93	1185.28	1191.66	1198.07
INVENTORY(KBBLS)	0.	0.	0.	0.	0.	0.	0.	0.	0.	0.	0.	0.

********** FUEL CATEGORY INPUT SUMMARY FOR 1988 **********

OH FUEL UNLIMITED 1.000 MBTU/TONS ESCALATION RATE 7.0 %/YR INVENTORY CARRYING CHARGE 7.0 %/YR UNLOADING CHARGE 0. C/MBTU
FUEL ID998
SULFUR CONCENTRATION 0.0 LB/MBTU
MINIMUM AMOUNT 0.0 TONS/DAY

	JAN	FEB	MAR	APR	MAY	JUN	JUL	AUG	SEP	OCT	NOV	DEC
FUEL COST (C/MBTU)	432.40	435.50	438.60	441.80	410.70	413.70	416.70	419.70	422.70	425.70	464.50	467.90
INVENTORY(KTONS)	0.	0.	0.	0.	0.	0.	0.	0.	0.	0.	0.	0.

OH FUEL UNLIMITED 1.000 MBTU/TONS ESCALATION RATE 7.0 %/YR INVENTORY CARRYING CHARGE 7.0 %/YR UNLOADING CHARGE 0. C/MBTU
FUEL ID999
SULFUR CONCENTRATION 0.0 LB/MBTU
MINIMUM AMOUNT 0.0 TONS/DAY

	JAN	FEB	MAR	APR	MAY	JUN	JUL	AUG	SEP	OCT	NOV	DEC
FUEL COST (C/MBTU)	498.90	502.50	506.10	509.80	479.20	482.60	486.10	489.60	493.10	496.70	536.00	539.80
INVENTORY(KTONS)	0.	0.	0.	0.	0.	0.	0.	0.	0.	0.	0.	0.

RES 0.7U UNLIMITED 6.200 MBTU/BBLS ESCALATION RATE 12.4 %/YR INVENTORY CARRYING CHARGE 12.4 %/YR UNLOADING CHARGE 0. C/MBTU
FUEL ID902
SULFUR CONCENTRATION 0.0 LB/MBTU
MINIMUM AMOUNT 0.0 BBLS/DAY

	JAN	FEB	MAR	APR	MAY	JUN	JUL	AUG	SEP	OCT	NOV	DEC
FUEL COST (C/MBTU)	972.50	982.02	991.62	1001.32	1011.11	1021.00	1030.99	1041.07	1051.26	1061.54	1071.92	1082.41
INVENTORY(KBBLS)	0.	0.	0.	0.	0.	0.	0.	0.	0.	0.	0.	0.

RES 1.0U UNLIMITED 6.220 MBTU/BBLS ESCALATION RATE 12.6 %/YR INVENTORY CARRYING CHARGE 12.6 %/YR UNLOADING CHARGE 0. C/MBTU
FUEL ID903
SULFUR CONCENTRATION 0.0 LB/MBTU
MINIMUM AMOUNT 0.0 BBLS/DAY

	JAN	FEB	MAR	APR	MAY	JUN	JUL	AUG	SEP	OCT	NOV	DEC
FUEL COST (C/MBTU)	951.91	961.40	970.99	980.68	990.46	1000.34	1010.32	1020.40	1030.58	1040.86	1051.24	1061.73
INVENTORY(KBBLS)	0.	0.	0.	0.	0.	0.	0.	0.	0.	0.	0.	0.

RES 2.0U UNLIMITED 6.250 MBTU/BBLS ESCALATION RATE 13.3 %/YR INVENTORY CARRYING CHARGE 13.3 %/YR UNLOADING CHARGE 0. C/MBTU
FUEL ID904
SULFUR CONCENTRATION 0.0 LB/MBTU
MINIMUM AMOUNT 0.0 BBLS/DAY

	JAN	FEB	MAR	APR	MAY	JUN	JUL	AUG	SEP	OCT	NOV	DEC
FUEL COST (C/MBTU)	899.00	908.50	918.01	927.63	937.35	947.17	957.09	967.11	977.24	987.48	997.82	1008.28
INVENTORY(KBBLS)	0.	0.	0.	0.	0.	0.	0.	0.	0.	0.	0.	0.

********** FUEL CATEGORY INPUT SUMMARY FOR 1988 **********

RES 2.8U UNLIMITED 6.280 MBTU/BBLS ESCALATION 13.8 %/YR INVENTORY 13.8 %/YR UNLOADING 0. C/MBTU
FUEL ID905 RATE CARRYING CHARGE CHARGE
SULFUR CONCENTRATION 0.0 LB/MBTU
MINIMUM AMOUNT 0.0 BBLS/DAY

	JAN	FEB	MAR	APR	MAY	JUN	JUL	AUG	SEP	OCT	NOV	DEC
FUEL COST (C/MBTU)	864.03	873.42	882.91	892.51	902.21	912.01	921.92	931.94	942.07	952.31	962.66	973.12
INVENTORY(KBBLS)	0.	0.	0.	0.	0.	0.	0.	0.	0.	0.	0.	0.

DIS OILU UNLIMITED 5.830 MBTU/BBLS ESCALATION 9.9 %/YR INVENTORY 9.9 %/YR UNLOADING 0. C/MBTU
FUEL ID931 RATE CARRYING CHARGE CHARGE
SULFUR CONCENTRATION 0.0 LB/MBTU
MINIMUM AMOUNT 0.0 BBLS/DAY

	JAN	FEB	MAR	APR	MAY	JUN	JUL	AUG	SEP	OCT	NOV	DEC
FUEL COST (C/MBTU)	1107.72	1116.45	1125.25	1134.11	1143.04	1152.05	1161.12	1170.27	1179.49	1188.78	1198.14	1207.58
INVENTORY(KBBLS)	0.	0.	0.	0.	0.	0.	0.	0.	0.	0.	0.	0.

RES 0.3D UNLIMITED 6.190 MBTU/BBLS ESCALATION 12.1 %/YR INVENTORY 12.1 %/YR UNLOADING 0. C/MBTU
FUEL ID921 RATE CARRYING CHARGE CHARGE
SULFUR CONCENTRATION 0.0 LB/MBTU
MINIMUM AMOUNT 0.0 BBLS/DAY

	JAN	FEB	MAR	APR	MAY	JUN	JUL	AUG	SEP	OCT	NOV	DEC
FUEL COST (C/MBTU)	972.94	982.26	991.67	1001.17	1010.76	1020.44	1030.22	1040.08	1050.05	1060.10	1070.26	1080.51
INVENTORY(KBBLS)	0.	0.	0.	0.	0.	0.	0.	0.	0.	0.	0.	0.

RES 0.7D UNLIMITED 6.200 MBTU/BBLS ESCALATION 12.5 %/YR INVENTORY 12.5 %/YR UNLOADING 0. C/MBTU
FUEL ID922 RATE CARRYING CHARGE CHARGE
SULFUR CONCENTRATION 0.0 LB/MBTU
MINIMUM AMOUNT 0.0 BBLS/DAY

	JAN	FEB	MAR	APR	MAY	JUN	JUL	AUG	SEP	OCT	NOV	DEC
FUEL COST (C/MBTU)	941.81	951.10	960.49	969.96	979.53	989.19	998.95	1008.80	1018.75	1028.80	1038.95	1049.19
INVENTORY(KBBLS)	0.	0.	0.	0.	0.	0.	0.	0.	0.	0.	0.	0.

RES 1.0D UNLIMITED 6.220 MBTU/BBLS ESCALATION 12.8 %/YR INVENTORY 12.8 %/YR UNLOADING 0. C/MBTU
FUEL ID923 RATE CARRYING CHARGE CHARGE
SULFUR CONCENTRATION 0.0 LB/MBTU
MINIMUM AMOUNT 0.0 BBLS/DAY

	JAN	FEB	MAR	APR	MAY	JUN	JUL	AUG	SEP	OCT	NOV	DEC
FUEL COST (C/MBTU)	921.07	930.34	939.71	949.16	958.72	968.37	978.11	987.96	997.90	1007.95	1018.09	1028.34
INVENTORY(KBBLS)	0.	0.	0.	0.	0.	0.	0.	0.	0.	0.	0.	0.

********** FUEL CATEGORY INPUT SUMMARY FOR 1988 **********

RES 1.5D UNLIMITED 6.235 MBTU/BBLS ESCALATION RATE 13.1 %/YR INVENTORY CARRYING CHARGE 13.1 %/YR UNLOADING CHARGE 0. C/MBTU
FUEL ID924
SULFUR CONCENTRATION 0.0 LB/MBTU
MINIMUM AMOUNT 0.0 BBLS/DAY

	JAN	FEB	MAR	APR	MAY	JUN	JUL	AUG	SEP	OCT	NOV	DEC
FUEL COST (C/MBTU)	895.39	904.64	913.99	923.44	932.98	942.62	952.36	962.20	972.15	982.19	992.34	1002.60
INVENTORY (KBBLS)	0.	0.	0.	0.	0.	0.	0.	0.	0.	0.	0.	0.

RES 2.0D UNLIMITED 6.250 MBTU/BBLS ESCALATION RATE 13.5 %/YR INVENTORY CARRYING CHARGE 13.5 %/YR UNLOADING CHARGE 0. C/MBTU
FUEL ID925
SULFUR CONCENTRATION 0.0 LB/MBTU
MINIMUM AMOUNT 0.0 BBLS/DAY

	JAN	FEB	MAR	APR	MAY	JUN	JUL	AUG	SEP	OCT	NOV	DEC
FUEL COST (C/MBTU)	868.53	877.73	887.02	896.41	905.90	915.49	925.18	934.98	944.87	954.88	964.99	975.20
INVENTORY (KBBLS)	0.	0.	0.	0.	0.	0.	0.	0.	0.	0.	0.	0.

RES 2.8D UNLIMITED 6.280 MBTU/BBLS ESCALATION RATE 14.0 %/YR INVENTORY CARRYING CHARGE 14.0 %/YR UNLOADING CHARGE 0. C/MBTU
FUEL ID926
SULFUR CONCENTRATION 0.0 LB/MBTU
MINIMUM AMOUNT 0.0 BBLS/DAY

	JAN	FEB	MAR	APR	MAY	JUN	JUL	AUG	SEP	OCT	NOV	DEC
FUEL COST (C/MBTU)	833.26	842.43	851.70	861.07	870.54	880.11	889.80	899.59	909.48	919.49	929.60	939.83
INVENTORY (KBBLS)	0.	0.	0.	0.	0.	0.	0.	0.	0.	0.	0.	0.

DIS OILD UNLIMITED 5.830 MBTU/BBLS ESCALATION RATE 9.9 %/YR INVENTORY CARRYING CHARGE 9.9 %/YR UNLOADING CHARGE 0. C/MBTU
FUEL ID935
SULFUR CONCENTRATION 0.0 LB/MBTU
MINIMUM AMOUNT 0.0 BBLS/DAY

	JAN	FEB	MAR	APR	MAY	JUN	JUL	AUG	SEP	OCT	NOV	DEC
FUEL COST (C/MBTU)	1124.36	1133.25	1142.21	1151.25	1160.35	1169.53	1178.78	1188.10	1197.50	1206.97	1216.51	1226.13
INVENTORY (KBBLS)	0.	0.	0.	0.	0.	0.	0.	0.	0.	0.	0.	0.

COAL1.0U UNLIMITED 25.000 MBTU/TONS ESCALATION RATE 9.0 %/YR INVENTORY CARRYING CHARGE 9.0 %/YR UNLOADING CHARGE 0. C/MBTU
FUEL ID941
SULFUR CONCENTRATION 0.0 LB/MBTU
MINIMUM AMOUNT 0.0 TONS/DAY

	JAN	FEB	MAR	APR	MAY	JUN	JUL	AUG	SEP	OCT	NOV	DEC
FUEL COST (C/MBTU)	444.22	447.42	450.63	453.87	457.13	460.41	463.72	467.05	470.41	473.79	477.19	480.62
INVENTORY (KTONS)	0.	0.	0.	0.	0.	0.	0.	0.	0.	0.	0.	0.

********** FUEL CATEGORY INPUT SUMMARY FOR 1988 **********

COAL1.4U UNLIMITED 24.000 MBTU/TONS ESCALATION 8.9 %/YR INVENTORY 8.9 %/YR UNLOADING 0. C/MBTU
FUEL ID942 RATE CARRYING CHARGE CHARGE
SULFUR CONCENTRATION 0.0 LB/MBTU
MINIMUM AMOUNT 0.0 TONS/DAY

	JAN	FEB	MAR	APR	MAY	JUN	JUL	AUG	SEP	OCT	NOV	DEC
FUEL COST (C/MBTU)	437.74	440.87	444.02	447.20	450.39	453.62	456.86	460.13	463.42	466.73	470.07	473.43
INVENTORY(KTONS)	0.	0.	0.	0.	0.	0.	0.	0.	0.	0.	0.	0.

COAL2.0U UNLIMITED 24.000 MBTU/TONS ESCALATION 8.7 %/YR INVENTORY 8.7 %/YR UNLOADING 0. C/MBTU
FUEL ID943 RATE CARRYING CHARGE CHARGE
SULFUR CONCENTRATION 0.0 LB/MBTU
MINIMUM AMOUNT 0.0 TONS/DAY

	JAN	FEB	MAR	APR	MAY	JUN	JUL	AUG	SEP	OCT	NOV	DEC
FUEL COST (C/MBTU)	402.45	405.26	408.09	410.94	413.81	416.70	419.60	422.53	425.48	428.46	431.45	434.46
INVENTORY(KTONS)	0.	0.	0.	0.	0.	0.	0.	0.	0.	0.	0.	0.

COAL >2U UNLIMITED 24.000 MBTU/TONS ESCALATION 8.9 %/YR INVENTORY 8.9 %/YR UNLOADING 0. C/MBTU
FUEL ID944 RATE CARRYING CHARGE CHARGE
SULFUR CONCENTRATION 0.0 LB/MBTU
MINIMUM AMOUNT 0.0 TONS/DAY

	JAN	FEB	MAR	APR	MAY	JUN	JUL	AUG	SEP	OCT	NOV	DEC
FUEL COST (C/MBTU)	338.22	340.64	343.08	345.54	348.01	350.51	353.02	355.55	358.09	360.66	363.24	365.84
INVENTORY(KTONS)	0.	0.	0.	0.	0.	0.	0.	0.	0.	0.	0.	0.

COAL1.0D UNLIMITED 25.000 MBTU/TONS ESCALATION 8.9 %/YR INVENTORY 8.9 %/YR UNLOADING 0. C/MBTU
FUEL ID951 RATE CARRYING CHARGE CHARGE
SULFUR CONCENTRATION 0.0 LB/MBTU
MINIMUM AMOUNT 0.0 TONS/DAY

	JAN	FEB	MAR	APR	MAY	JUN	JUL	AUG	SEP	OCT	NOV	DEC
FUEL COST (C/MBTU)	467.40	470.73	474.07	477.44	480.84	484.25	487.70	491.16	494.65	498.17	501.71	505.28
INVENTORY(KTONS)	0.	0.	0.	0.	0.	0.	0.	0.	0.	0.	0.	0.

COAL1.4D UNLIMITED 24.000 MBTU/TONS ESCALATION 8.8 %/YR INVENTORY 8.8 %/YR UNLOADING 0. C/MBTU
FUEL ID952 RATE CARRYING CHARGE CHARGE
SULFUR CONCENTRATION 0.0 LB/MBTU
MINIMUM AMOUNT 0.0 TONS/DAY

	JAN	FEB	MAR	APR	MAY	JUN	JUL	AUG	SEP	OCT	NOV	DEC
FUEL COST (C/MBTU)	465.28	468.57	471.87	475.21	478.56	481.94	485.35	488.78	492.23	495.70	499.21	502.73
INVENTORY(KTONS)	0.	0.	0.	0.	[illegible]	0.	0.	0.	0.	0.	0	0.

********** FUEL CATEGORY INPUT SUMMARY FOR 1988 **********

COAL2.0D UNLIMITED 24,000 MBTU/TONS ESCALATION RATE 8.6 %/YR INVENTORY CARRYING CHARGE 8.6 %/YR UNLOADING CHARGE 0. C/MBTU
FUEL ID953
SULFUR CONCENTRATION 0.0 LB/MBTU
MINIMUM AMOUNT 0.0 TONS/DAY

	JAN	FEB	MAR	APR	MAY	JUN	JUL	AUG	SEP	OCT	NOV	DEC
FUEL COST (C/MBTU)	429.99	432.96	435.94	438.95	441.98	445.03	448.10	451.19	454.30	457.43	460.59	463.76
INVENTORY(KTONS)	0.	0.	0.	0.	0.	0.	0.	0.	0.	0.	0.	0.

COAL >2D UNLIMITED 24,000 MBTU/TONS ESCALATION RATE 8.7 %/YR INVENTORY CARRYING CHARGE 8.7 %/YR UNLOADING CHARGE 0. C/MBTU
FUEL ID954
SULFUR CONCENTRATION 0.0 LB/MBTU
MINIMUM AMOUNT 0.0 TONS/DAY

	JAN	FEB	MAR	APR	MAY	JUN	JUL	AUG	SEP	OCT	NOV	DEC
FUEL COST (C/MBTU)	378.85	381.50	384.17	386.86	389.57	392.30	395.04	397.81	400.59	403.40	406.22	409.07
INVENTORY(KTONS)	0.	0.	0.	0.	0.	0.	0.	0.	0.	0.	0.	0.

URANIUM2 UNLIMITED 1.000 MBTU/MBTU ESCALATION RATE 7.0 %/YR INVENTORY CARRYING CHARGE 7.0 %/YR UNLOADING CHARGE 0. C/MBTU
FUEL ID962
SULFUR CONCENTRATION 0.0 LB/MBTU
MINIMUM AMOUNT 0.0 MBTU/DAY

	JAN	FEB	MAR	APR	MAY	JUN	JUL	AUG	SEP	OCT	NOV	DEC
FUEL COST (C/MBTU)	84.63	85.11	85.59	86.08	86.56	87.05	87.54	88.04	88.54	89.04	89.54	90.05
INVENTORY(KMBTU)	0.	0.	0.	0.	0.	0.	0.	0.	0.	0.	0.	0.

URANIUM3 UNLIMITED 1.000 MBTU/MBTU ESCALATION RATE 7.0 %/YR INVENTORY CARRYING CHARGE 7.0 %/YR UNLOADING CHARGE 0. C/MBTU
FUEL ID963
SULFUR CONCENTRATION 0.0 LB/MBTU
MINIMUM AMOUNT 0.0 MBTU/DAY

	JAN	FEB	MAR	APR	MAY	JUN	JUL	AUG	SEP	OCT	NOV	DEC
FUEL COST (C/MBTU)	97.04	97.59	98.14	98.70	99.26	99.82	100.38	100.95	101.52	102.09	102.67	103.25
INVENTORY(KMBTU)	0.	0.	0.	0.	0.	0.	0.	0.	0.	0.	0.	0.

URANIUM5 UNLIMITED 1.000 MBTU/MBTU ESCALATION RATE 7.0 %/YR INVENTORY CARRYING CHARGE 7.0 %/YR UNLOADING CHARGE 0. C/MBTU
FUEL ID965
SULFUR CONCENTRATION 0.0 LB/MBTU
MINIMUM AMOUNT 0.0 MBTU/DAY

	JAN	FEB	MAR	APR	MAY	JUN	JUL	AUG	SEP	OCT	NOV	DEC
FUEL COST (C/MBTU)	98.97	99.53	100.09	100.66	101.23	101.80	102.38	102.96	103.54	104.12	104.71	105.30
INVENTORY(KMBTU)	0.	0.	0.	0.	0.	0.	0.	0.	0.	0.	0.	0.

*********** FUEL CATEGORY INPUT SUMMARY FOR 1988 ***********

URANIUM7 UNLIMITED 1.000 MBTU/MBTU ESCALATION RATE 7.0 %/YR INVENTORY CARRYING CHARGE 7.0 %/YR UNLOADING CHARGE 0. C/MBTU
FUEL ID967
SULFUR CONCENTRATION 0.0 LB/MBTU
MINIMUM AMOUNT 0.0 MBTU/DAY

	JAN	FEB	MAR	APR	MAY	JUN	JUL	AUG	SEP	OCT	NOV	DEC
FUEL COST (C/MBTU)	92.11	92.63	93.16	93.68	94.21	94.75	95.28	95.82	96.36	96.91	97.45	98.01
INVENTORY(KMBTU)	0.	0.	0.	0.	0.	0.	0.	0.	0.	0.	0.	0.

NATGASU UNLIMITED 8.930 MBTU/MCF ESCALATION RATE 12.8 %/YR INVENTORY CARRYING CHARGE 12.8 %/YR UNLOADING CHARGE 0. C/MBTU
FUEL ID970
SULFUR CONCENTRATION 0.0 LB/MBTU
MINIMUM AMOUNT 0.0 MCF /DAY

	JAN	FEB	MAR	APR	MAY	JUN	JUL	AUG	SEP	OCT	NOV	DEC
FUEL COST (C/MBTU)	843.37	851.86	860.43	869.09	877.84	886.68	895.60	904.61	913.72	922.92	932.21	941.59
INVENTORY(KMCF)	0.	0.	0.	0.	0.	0.	0.	0.	0.	0.	0.	0.

NATGASD UNLIMITED 8.930 MBTU/MCF ESCALATION RATE 12.2 %/YR INVENTORY CARRYING CHARGE 12.2 %/YR UNLOADING CHARGE 0. C/MBTU
FUEL ID971
SULFUR CONCENTRATION 0.0 LB/MBTU
MINIMUM AMOUNT 0.0 MCF /DAY

	JAN	FEB	MAR	APR	MAY	JUN	JUL	AUG	SEP	OCT	NOV	DEC
FUEL COST (C/MBTU)	869.47	877.84	886.29	894.82	903.43	912.12	920.90	929.76	938.71	947.75	956.87	966.07
INVENTORY(KMCF)	0.	0.	0.	0.	0.	0.	0.	0.	0.	0.	0.	0.

DIS OILR UNLIMITED 5.400 MBTU/BBLS ESCALATION RATE 6.8 %/YR INVENTORY CARRYING CHARGE 6.8 %/YR UNLOADING CHARGE 0. C/MBTU
FUEL ID536
SULFUR CONCENTRATION 0.0 LB/MBTU
MINIMUM AMOUNT 0.0 BBLS/DAY

	JAN	FEB	MAR	APR	MAY	JUN	JUL	AUG	SEP	OCT	NOV	DEC
FUEL COST (C/MBTU)	935.06	940.20	945.36	950.54	955.76	961.01	966.28	971.58	976.92	982.28	987.67	993.09
INVENTORY(KBBLS)	0.	0.	0.	0.	0.	0.	0.	0.	0.	0.	0.	0.

DIS OILA UNLIMITED 5.300 MBTU/BBLS ESCALATION RATE 6.7 %/YR INVENTORY CARRYING CHARGE 6.7 %/YR UNLOADING CHARGE 0. C/MBTU
FUEL ID537
SULFUR CONCENTRATION 0.0 LB/MBTU
MINIMUM AMOUNT 0.0 BBLS/DAY

	JAN	FEB	MAR	APR	MAY	JUN	JUL	AUG	SEP	OCT	NOV	DEC
FUEL COST (C/MBTU)	1129.39	1135.47	1141.58	1147.72	1153.90	1160.11	1166.35	1172.63	1178.93	1185.28	1191.66	1198.07
INVENTORY(KBBLS)	0.	0.	0.	0.	0.	0.	0.	0.	0.	0.	0.	0.

********** FUEL CATEGORY INPUT SUMMARY FOR 1988 **********

LFCL 1.8 UNLIMITED 25.000 MBTU/TONS ESCALATION RATE 8.7 %/YR INVENTORY CARRYING CHARGE 8.7 %/YR UNLOADING CHARGE 0. C/MBTU
FUEL ID510
SULFUR CONCENTRATION 0.0 LB/MBTU
MINIMUM AMOUNT 0.0 TONS/DAY

	JAN	FEB	MAR	APR	MAY	JUN	JUL	AUG	SEP	OCT	NOV	DEC
FUEL COST (C/MBTU)	476.32	479.64	482.99	486.36	489.76	493.17	496.62	500.08	503.57	507.09	510.63	514.19
INVENTORY(KTONS)	0.	0.	0.	0.	0.	0.	0.	0.	0.	0.	0.	0.

HFCL 1.8 UNLIMITED 25.000 MBTU/TONS ESCALATION RATE 8.7 %/YR INVENTORY CARRYING CHARGE 8.7 %/YR UNLOADING CHARGE 0. C/MBTU
FUEL ID511
SULFUR CONCENTRATION 0.0 LB/MBTU
MINIMUM AMOUNT 0.0 TONS/DAY

	JAN	FEB	MAR	APR	MAY	JUN	JUL	AUG	SEP	OCT	NOV	DEC
FUEL COST (C/MBTU)	396.70	399.48	402.27	405.09	407.93	410.78	413.66	416.55	419.47	422.41	425.37	428.34
INVENTORY(KTONS)	0.	0.	0.	0.	0.	0.	0.	0.	0.	0.	0.	0.

COAL2.4 UNLIMITED 25.000 MBTU/TONS ESCALATION RATE 9.0 %/YR INVENTORY CARRYING CHARGE 9.0 %/YR UNLOADING CHARGE 0. C/MBTU
FUEL ID514
SULFUR CONCENTRATION 0.0 LB/MBTU
MINIMUM AMOUNT 0.0 TONS/DAY

	JAN	FEB	MAR	APR	MAY	JUN	JUL	AUG	SEP	OCT	NOV	DEC
FUEL COST (C/MBTU)	332.47	334.86	337.26	339.69	342.13	344.59	347.07	349.56	352.08	354.61	357.16	359.73
INVENTORY(KTONS)	0.	0.	0.	0.	0.	0.	0.	0.	0.	0.	0.	0.

NATGAS A UNLIMITED 1.000 MBTU/DT ESCALATION RATE 12.5 %/YR INVENTORY CARRYING CHARGE 12.5 %/YR UNLOADING CHARGE 0. C/MBTU
FUEL ID580
SULFUR CONCENTRATION 0.0 LB/MBTU
MINIMUM AMOUNT 0.0 DT /DAY

	JAN	FEB	MAR	APR	MAY	JUN	JUL	AUG	SEP	OCT	NOV	DEC
FUEL COST (C/MBTU)	869.19	877.74	886.38	895.11	903.91	912.81	921.79	930.86	940.02	949.27	958.62	968.05
INVENTORY(KDT)	0.	0.	0.	0.	0.	0.	0.	0.	0.	0.	0.	0.

BEGIN PROCESSING FOR YEAR 1989 MONTH 1 FOR PASS 0
BEGIN PROCESSING FOR YEAR 1989 MONTH 2 FOR PASS 0
BEGIN PROCESSING FOR YEAR 1989 MONTH 3 FOR PASS 0
BEGIN PROCESSING FOR YEAR 1989 MONTH 4 FOR PASS 0
BEGIN PROCESSING FOR YEAR 1989 MONTH 5 FOR PASS 0
BEGIN PROCESSING FOR YEAR 1989 MONTH 6 FOR PASS 0
BEGIN PROCESSING FOR YEAR 1989 MONTH 7 FOR PASS 0
BEGIN PROCESSING FOR YEAR 1989 MONTH 8 FOR PASS 0
BEGIN PROCESSING FOR YEAR 1989 MONTH 9 FOR PASS 0
BEGIN PROCESSING FOR YEAR 1989 MONTH 10 FOR PASS 0
BEGIN PROCESSING FOR YEAR 1989 MONTH 11 FOR PASS 0

BEGIN PROCESSING FOR YEAR 1989 MONTH 12 FOR PASS 0

1989

********** FUEL CATEGORY INPUT SUM[illegible] FOR 1989 **********

OH FUEL UNLIMITED 1.000 MBTU/TONS ESCALATION RATE 7.0 %/YR INVENTORY CARRYING CHARGE 7.0 %/YR UNLOADING CHARGE 0. C/MBTU
FUEL ID998
SULFUR CONCENTRATION 0.0 LB/MBTU
MINIMUM AMOUNT 0.0 TONS/DAY

	JAN	FEB	MAR	APR	MAY	JUN	JUL	AUG	SEP	OCT	NOV	DEC
FUEL COST (C/MBTU)	313.10	314.50	316.00	317.40	294.30	295.70	297.00	298.40	299.70	301.10	327.70	329.20
INVENTORY(KTONS)	0.	0.	0.	0.	0.	0.	0.	0.	0.	0.	0.	0.

OH FUEL UNLIMITED 1.000 MBTU/TONS ESCALATION RATE 7.0 %/YR INVENTORY CARRYING CHARGE 7.0 %/YR UNLOADING CHARGE 0. C/MBTU
FUEL ID999
SULFUR CONCENTRATION 0.0 LB/MBTU
MINIMUM AMOUNT 0.0 TONS/DAY

	JAN	FEB	MAR	APR	MAY	JUN	JUL	AUG	SEP	OCT	NOV	DEC
FUEL COST (C/MBTU)	361.30	362.90	364.60	366.30	343.40	345.00	346.50	348.10	349.70	351.30	378.10	379.80
INVENTORY(KTONS)	0.	0.	0.	0.	0.	0.	0.	0.	0.	0.	0.	0.

RES 0.7U UNLIMITED 6.200 MBTU/BBLS ESCALATION RATE 9.1 %/YR INVENTORY CARRYING CHARGE 9.1 %/YR UNLOADING CHARGE 0. C/MBTU
FUEL ID902
SULFUR CONCENTRATION 0.0 LB/MBTU
MINIMUM AMOUNT 0.0 BBLS/DAY

	JAN	FEB	MAR	APR	MAY	JUN	JUL	AUG	SEP	OCT	NOV	DEC
FUEL COST (C/MBTU)	754.27	759.79	765.35	770.95	776.59	782.28	788.00	793.77	799.57	805.43	811.32	817.26
INVENTORY(KBBLS)	0.	0.	0.	0.	0.	0.	0.	0.	0.	0.	0.	0.

RES 1.0U UNLIMITED 6.220 MBTU/BBLS ESCALATION RATE 9.5 %/YR INVENTORY CARRYING CHARGE 9.5 %/YR UNLOADING CHARGE 0. C/MBTU
FUEL ID903
SULFUR CONCENTRATION 0.0 LB/MBTU
MINIMUM AMOUNT 0.0 BBLS/DAY

	JAN	FEB	MAR	APR	MAY	JUN	JUL	AUG	SEP	OCT	NOV	DEC
FUEL COST (C/MBTU)	737.34	742.91	748.52	754.18	759.87	765.61	771.40	777.22	783.09	789.01	794.97	800.98
INVENTORY(KBBLS)	0.	0.	0.	0.	0.	0.	0.	0.	0.	0.	0.	0.

RES 2.0U UNLIMITED 6.250 MBTU/BBLS ESCALATION RATE 10.2 %/YR INVENTORY CARRYING CHARGE 10.2 %/YR UNLOADING CHARGE 0. C/MBTU
FUEL ID904
SULFUR CONCENTRATION 0.0 LB/MBTU
MINIMUM AMOUNT 0.0 BBLS/DAY

	JAN	FEB	MAR	APR	MAY	JUN	JUL	AUG	SEP	OCT	NOV	DEC
FUEL COST (C/MBTU)	694.27	699.90	705.57	711.29	717.05	722.86	728.72	734.63	740.58	746.58	752.63	758.73
INVENTORY(KBBLS)	0.	0.	0.	0.	0.	0.	0.	0.	0.	0.	0.	0.

********** FUEL CATEGORY INPUT SUMMARY FOR 1989 **********

RES 2.00 UNLIMITED 6.280 MBTU/BBLS ESCALATION RATE 10.7 %/YR INVENTORY CARRYING CHARGE 10.7 %/YR UNLOADING CHARGE 0. C/MBTU
FUEL ID905
SULFUR CONCENTRATION 0.0 LB/MBTU
MINIMUM AMOUNT 0.0 BBLS/DAY

	JAN	FEB	MAR	APR	MAY	JUN	JUL	AUG	SEP	OCT	NOV	DEC
FUEL COST (C/MBTU)	665.14	670.79	676.49	682.24	688.04	693.89	699.78	705.73	711.73	717.78	723.88	730.03
INVENTORY (KBBLS)	0.	0.	0.	0.	0.	0.	0.	0.	0.	0.	0.	0.

DIS OILU UNLIMITED 5.830 MBTU/BBLS ESCALATION RATE 6.9 %/YR INVENTORY CARRYING CHARGE 6.9 %/YR UNLOADING CHARGE 0. C/MBTU
FUEL ID931
SULFUR CONCENTRATION 0.0 LB/MBTU
MINIMUM AMOUNT 0.0 BBLS/DAY

	JAN	FEB	MAR	APR	MAY	JUN	JUL	AUG	SEP	OCT	NOV	DEC
FUEL COST (C/MBTU)	864.04	868.87	873.72	878.60	883.51	888.44	893.40	898.39	903.41	908.46	913.53	918.63
INVENTORY (KBBLS)	0.	0.	0.	0.	0.	0.	0.	0.	0.	0.	0.	0.

RES 0.30 UNLIMITED 6.190 MBTU/BBLS ESCALATION RATE 8.9 %/YR INVENTORY CARRYING CHARGE 8.9 %/YR UNLOADING CHARGE 0. C/MBTU
FUEL ID921
SULFUR CONCENTRATION 0.0 LB/MBTU
MINIMUM AMOUNT 0.0 BBLS/DAY

	JAN	FEB	MAR	APR	MAY	JUN	JUL	AUG	SEP	OCT	NOV	DEC
FUEL COST (C/MBTU)	754.04	759.40	764.80	770.24	775.72	781.23	786.79	792.38	798.02	803.69	809.40	815.16
INVENTORY (KBBLS)	0.	0.	0.	0.	0.	0.	0.	0.	0.	0.	0.	0.

RES 0.70 UNLIMITED 6.200 MBTU/BBLS ESCALATION RATE 9.3 %/YR INVENTORY CARRYING CHARGE 9.3 %/YR UNLOADING CHARGE 0. C/MBTU
FUEL ID922
SULFUR CONCENTRATION 0.0 LB/MBTU
MINIMUM AMOUNT 0.0 BBLS/DAY

	JAN	FEB	MAR	APR	MAY	JUN	JUL	AUG	SEP	OCT	NOV	DEC
FUEL COST (C/MBTU)	727.82	733.21	738.64	744.12	749.63	755.19	760.78	766.42	772.10	777.82	783.58	789.39
INVENTORY (KBBLS)	0.	0.	0.	0.	0.	0.	0.	0.	0.	0.	0.	0.

RES 1.00 UNLIMITED 6.220 MBTU/BBLS ESCALATION RATE 9.5 %/YR INVENTORY CARRYING CHARGE 9.5 %/YR UNLOADING CHARGE 0. C/MBTU
FUEL ID923
SULFUR CONCENTRATION 0.0 LB/MBTU
MINIMUM AMOUNT 0.0 BBLS/DAY

	JAN	FEB	MAR	APR	MAY	JUN	JUL	AUG	SEP	OCT	NOV	DEC
FUEL COST (C/MBTU)	711.31	716.73	722.19	727.69	733.24	738.82	744.45	750.12	755.84	761.59	767.40	773.24
INVENTORY (KBBLS)	0.	0.	0.	0.	0.	0.	0.	0.	0.	0.	0.	0.

********** FUEL CATEGORY INPUT SUMMARY FOR 1989 **********

RES 1.50 UNLIMITED 6.235 MBTU/BBLS ESCALATION RATE 9.9 %/YR INVENTORY CARRYING CHARGE 9.9 %/YR UNLOADING CHARGE 0. C/MBTU
FUEL 10924
SULFUR CONCENTRATION 0.0 LB/MBTU
MINIMUM AMOUNT 0.0 BBLS/DAY

	JAN	FEB	MAR	APR	MAY	JUN	JUL	AUG	SEP	OCT	NOV	DEC
FUEL COST (C/MBTU)	688.86	694.28	699.74	705.24	710.79	716.38	722.01	727.69	733.41	739.18	745.00	750.85
INVENTORY (KBBLS)	0.	0.	0.	0.	0.	0.	0.	0.	0.	0.	0.	0.

RES 2.00 UNLIMITED 6.250 MBTU/BBLS ESCALATION RATE 10.3 %/YR INVENTORY CARRYING CHARGE 10.3 %/YR UNLOADING CHARGE 0. C/MBTU
FUEL 10925
SULFUR CONCENTRATION 0.0 LB/MBTU
MINIMUM AMOUNT 0.0 BBLS/DAY

	JAN	FEB	MAR	APR	MAY	JUN	JUL	AUG	SEP	OCT	NOV	DEC
FUEL COST (C/MBTU)	666.86	672.33	677.85	683.41	689.01	694.67	700.36	706.11	711.90	717.74	723.63	729.56
INVENTORY (KBBLS)	0.	0.	0.	0.	0.	0.	0.	0.	0.	0.	0.	0.

RES 2.80 UNLIMITED 6.280 MBTU/BBLS ESCALATION RATE 10.9 %/YR INVENTORY CARRYING CHARGE 10.9 %/YR UNLOADING CHARGE 0. C/MBTU
FUEL 10926
SULFUR CONCENTRATION 0.0 LB/MBTU
MINIMUM AMOUNT 0.0 BBLS/DAY

	JAN	FEB	MAR	APR	MAY	JUN	JUL	AUG	SEP	OCT	NOV	DEC
FUEL COST (C/MBTU)	638.62	644.15	649.73	655.35	661.03	666.75	672.52	678.35	684.22	690.14	696.12	702.15
INVENTORY (KBBLS)	0.	0.	0.	0.	0.	0.	0.	0.	0.	0.	0.	0.

DIS OILD UNLIMITED 5.830 MBTU/BBLS ESCALATION RATE 6.9 %/YR INVENTORY CARRYING CHARGE 6.9 %/YR UNLOADING CHARGE 0. C/MBTU
FUEL 10935
SULFUR CONCENTRATION 0.0 LB/MBTU
MINIMUM AMOUNT 0.0 BBLS/DAY

	JAN	FEB	MAR	APR	MAY	JUN	JUL	AUG	SEP	OCT	NOV	DEC
FUEL COST (C/MBTU)	875.78	880.66	885.57	890.51	895.48	900.47	905.49	910.54	915.62	920.72	925.86	931.02
INVENTORY (KBBLS)	0.	0.	0.	0.	0.	0.	0.	0.	0.	0.	0.	0.

COAL1.00 UNLIMITED 25.000 MBTU/TONS ESCALATION RATE 7.2 %/YR INVENTORY CARRYING CHARGE 7.2 %/YR UNLOADING CHARGE 0. C/MBTU
FUEL 10941
SULFUR CONCENTRATION 0.0 LB/MBTU
MINIMUM AMOUNT 0.0 TONS/DAY

	JAN	FEB	MAR	APR	MAY	JUN	JUL	AUG	SEP	OCT	NOV	DEC
FUEL COST (C/MBTU)	309.62	311.42	313.24	315.06	316.90	318.75	320.61	322.48	324.36	326.25	328.15	330.06
INVENTORY (KTONS)	0.	0.	0.	0.	0.	0.	0.	0.	0.	0.	0.	0.

********** FUEL CATEGORY INPUT SUMMARY FOR 1989 **********

COAL1.4U UNLIMITED 24.000 MBTU/TONS ESCALATION RATE 8.4 %/YR INVENTORY CARRYING CHARGE 8.4 %/YR UNLOADING CHARGE 0. C/MBTU
FUEL ID942
SULFUR CONCENTRATION 0.0 LB/MBTU
MINIMUM AMOUNT 0.0 TONS/DAY

		JAN	FEB	MAR	APR	MAY	JUN	JUL	AUG	SEP	OCT	NOV	DEC
FUEL COST	(C/MBTU)	298.34	300.34	302.36	304.39	306.44	308.50	310.57	312.66	314.76	316.88	319.01	321.15
INVENTORY	(KTONS)	0.	0.	0.	0.	0.	0.	0.	0.	0.	0.	0.	0.

COAL2.0U UNLIMITED 24.000 MBTU/TONS ESCALATION RATE 7.8 %/YR INVENTORY CARRYING CHARGE 7.8 %/YR UNLOADING CHARGE 0. C/MBTU
FUEL ID943
SULFUR CONCENTRATION 0.0 LB/MBTU
MINIMUM AMOUNT 0.0 TONS/DAY

		JAN	FEB	MAR	APR	MAY	JUN	JUL	AUG	SEP	OCT	NOV	DEC
FUEL COST	(C/MBTU)	277.52	279.27	281.03	282.80	284.59	286.39	288.19	290.01	291.84	293.68	295.54	297.40
INVENTORY	(KTONS)	0.	0.	0.	0.	0.	0.	0.	0.	0.	0.	0.	0.

COAL >2U UNLIMITED 24.000 MBTU/TONS ESCALATION RATE 5.6 %/YR INVENTORY CARRYING CHARGE 5.6 %/YR UNLOADING CHARGE 0. C/MBTU
FUEL ID944
SULFUR CONCENTRATION 0.0 LB/MBTU
MINIMUM AMOUNT 0.0 TONS/DAY

		JAN	FEB	MAR	APR	MAY	JUN	JUL	AUG	SEP	OCT	NOV	DEC
FUEL COST	(C/MBTU)	246.70	247.83	248.96	250.10	251.24	252.39	253.54	254.70	255.87	257.04	258.21	259.39
INVENTORY	(KTONS)	0.	0.	0.	0.	0.	0.	0.	0.	0.	0.	0.	0.

COAL1.0U UNLIMITED 25.000 MBTU/TONS ESCALATION RATE 7.1 %/YR INVENTORY CARRYING CHARGE 7.1 %/YR UNLOADING CHARGE 0. C/MBTU
FUEL ID951
SULFUR CONCENTRATION 0.0 LB/MBTU
MINIMUM AMOUNT 0.0 TONS/DAY

		JAN	FEB	MAR	APR	MAY	JUN	JUL	AUG	SEP	OCT	NOV	DEC
FUEL COST	(C/MBTU)	331.53	333.44	335.36	337.30	339.24	341.20	343.16	345.14	347.13	349.13	351.15	353.17
INVENTORY	(KTONS)	0.	0.	0.	0.	0.	0.	0.	0.	0.	0.	0.	0.

COAL1.4U UNLIMITED 24.000 MBTU/TONS ESCALATION RATE 8.2 %/YR INVENTORY CARRYING CHARGE 8.2 %/YR UNLOADING CHARGE 0. C/MBTU
FUEL ID952
SULFUR CONCENTRATION 0.0 LB/MBTU
MINIMUM AMOUNT 0.0 TONS/DAY

		JAN	FEB	MAR	APR	MAY	JUN	JUL	AUG	SEP	OCT	NOV	DEC
FUEL COST	(C/MBTU)	324.64	326.77	328.92	331.06	333.25	335.44	337.65	339.86	342.10	344.34	346.60	348.88
INVENTORY	(KTONS)	0.	0.	0.	0.	0.	0.	0.	0.	0.	0.	0.	0.

********** FUEL CATEGORY INPUT SUMMARY FOR 1989 **********

COAL2.00 UNLIMITED 24.000 MBTU/TONS ESCALATION RATE 7.7 %/YR INVENTORY CARRYING CHARGE 7.7 %/YR UNLOADING CHARGE 0. C/MBTU
FUEL 10953
SULFUR CONCENTRATION 0.0 LB/MBTU
MINIMUM AMOUNT 0.0 TONS/DAY

	JAN	FEB	MAR	APR	MAY	JUN	JUL	AUG	SEP	OCT	NOV	DEC
FUEL COST (C/MBTU)	303.81	305.69	307.58	309.48	311.40	313.32	315.26	317.21	319.17	321.14	323.13	325.13
INVENTORY (KTONS)	0.	0.	0.	0.	0.	0.	0.	0.	0.	0.	0.	0.

COAL >20 UNLIMITED 24.000 MBTU/TONS ESCALATION RATE 5.7 %/YR INVENTORY CARRYING CHARGE 5.7 %/YR UNLOADING CHARGE 0. C/MBTU
FUEL 10954
SULFUR CONCENTRATION 0.0 LB/MBTU
MINIMUM AMOUNT 0.0 TONS/DAY

	JAN	FEB	MAR	APR	MAY	JUN	JUL	AUG	SEP	OCT	NOV	DEC
FUEL COST (C/MBTU)	281.76	283.06	284.36	285.67	286.99	288.31	289.64	290.97	292.31	293.66	295.01	296.37
INVENTORY (KTONS)	0.	0.	0.	0.	0.	0.	0.	0.	0.	0.	0.	0.

URANIUM2 UNLIMITED 1 [illegible] ESCALATION 6.0 %/YR INVENTORY CARRYING CHARGE 6.0 %/YR UNLOADING CHARGE 0. C/MBTU
FUEL 10962
SULFUR CONCENTRATION 0.
MINIMUM AMOUNT 0

SEE PAGES 290-291 @ END OF THIS SECTION

	JAN	FEB	MAR				L	AUG	SEP	OCT	NOV	DEC
FUEL COST (C/MBTU)	87.56	87.99	88.41				.15	90.59	91.03	91.47	91.92	92.36
INVENTORY (KMBTU)	0.	0.	0.				0.	0.	0.	0.	0.	0.

URANIUM3 UNLIMITED 1.000 MBTU/MBTU ESCALATION RATE 6.0 %/YR INVENTORY CARRYING CHARGE 6.0 %/YR UNLOADING CHARGE 0. C/MBTU
FUEL 10963
SULFUR CONCENTRATION 0.0 LB/MBTU
MINIMUM AMOUNT 0.0 MBTU/DAY

	JAN	FEB	MAR	APR	MAY	JUN	JUL	AUG	SEP	OCT	NOV	DEC
FUEL COST (C/MBTU)	100.40	100.89	101.38	101.87	102.37	102.87	103.37	103.87	104.38	104.88	105.39	105.91
INVENTORY (KMBTU)	0.	0.	0.	0.	0.	0.	0.	0.	0.	0.	0.	0.

URANIUM5 UNLIMITED 1.000 MBTU/MBTU ESCALATION RATE 6.0 %/YR INVENTORY CARRYING CHARGE 6.0 %/YR UNLOADING CHARGE 0. C/MBTU
FUEL 10965
SULFUR CONCENTRATION 0.0 LB/MBTU
MINIMUM AMOUNT 0.0 MBTU/DAY

	JAN	FEB	MAR	APR	MAY	JUN	JUL	AUG	SEP	OCT	NOV	DEC
FUEL COST (C/MBTU)	102.39	102.89	103.39	103.90	104.40	104.91	105.42	105.93	106.45	106.97	107.49	108.01
INVENTORY (KMBTU)	0.	0.	0.	0.	0.	0.	0.	0.	0.	0.	0.	0.

********** FUEL CATEGORY INPUT SUMMARY 1989 **********

URANIUM7 UNLIMITED 1.000 MBTU/MBTU ESCALATION RATE 6.0 %/YR INVENTORY CARRYING CHARGE 6.0 %/YR UNLOADING CHARGE 0. C/MBTU
FUEL 10967
SULFUR CONCENTRATION 0.0 LB/MBTU
MINIMUM AMOUNT 0.0 MBTU/DAY

	JAN	FEB	MAR	APR	MAY	JUN	JUL	AUG	SEP	OCT	NOV	DEC
FUEL COST (C/MBTU)	95.30	95.76	96.23	96.70	97.17	97.64	98.12	98.59	99.07	99.55	100.04	100.53
INVENTORY(KMBTU)	0.	0.	0.	0.	0.	0.	0.	0.	0.	0.	0.	0.

NATGAS0 UNLIMITED 8.930 MBTU/MCF ESCALATION RATE 12.7 %/YR INVENTORY CARRYING CHARGE 12.7 %/YR UNLOADING CHARGE 0. C/MBTU
FUEL 10970
SULFUR CONCENTRATION 0.0 LB/MBTU
MINIMUM AMOUNT 0.0 MCF /DAY

	JAN	FEB	MAR	APR	MAY	JUN	JUL	AUG	SEP	OCT	NOV	DEC
FUEL COST (C/MBTU)	694.55	701.49	708.49	715.57	722.72	729.94	737.23	744.60	752.04	759.55	767.14	774.80
INVENTORY(KMCF)	0.	0.	0.	0.	0.	0.	0.	0.	0.	0.	0.	0.

NATGAS0 UNLIMITED [illegible] MBTU/MCF ESCALATION RATE 12.3 %/YR INVENTORY CARRYING CHARGE 12.3 %/YR UNLOADING CHARGE 0. C/MBTU
FUEL 10971
SULFUR CONCENTRATION
MINIMUM AMOUNT

SEE PAGES 290-291 @ END OF THIS SECTION

	JAN	FEB					JUL	AUG	SEP	OCT	NOV	DEC
FUEL COST (C/MBTU)	707.31	714.1.					749.48	756.75	764.09	771.50	778.98	786.54
INVENTORY(KMCF)	0.	0.					0.	0.	0.	0.	0.	0.

DIS OILR UNLIMITED 5.400 MBTU/BBLS ESCALATION RATE /YR INVENTORY CARRYING CHARGE 6.8 %/YR UNLOADING CHARGE 0. C/MBTU
FUEL 10536
SULFUR CONCENTRATION 0.0 LB/MBTU
MINIMUM AMOUNT 0.0 BBLS/DAY

	JAN	FEB	MAR	APR	MAY	JUN	JUL	AUG	SEP	OCT	NOV	DEC
FUEL COST (C/MBTU)	998.54	1004.02	1009.53	1015.07	1020.64	1026.24	1031.88	1037.54	1043.23	1048.96	1054.72	1060.51
INVENTORY(KBBLS)	0.	0.	0.	0.	0.	0.	0.	0.	0.	0.	0.	0.

DIS OILR UNLIMITED 5.300 MBTU/BBLS ESCALATION RATE 6.7 %/YR INVENTORY CARRYING CHARGE 6.7 %/YR UNLOADING CHARGE 0. C/MBTU
FUEL 10537
SULFUR CONCENTRATION 0.0 LB/MBTU
MINIMUM AMOUNT 0.0 BBLS/DAY

	JAN	FEB	MAR	APR	MAY	JUN	JUL	AUG	SEP	OCT	NOV	DEC
FUEL COST (C/MBTU)	1204.51	1210.99	1217.51	1224.06	1230.65	1237.27	1243.93	1250.62	1257.35	1264.11	1270.92	1277.75
INVENTORY(KBBLS)	0.	0.	0.	0.	0.	0.	0.	0.	0.	0.	0.	0.

********** FUEL CATEGORY INPUT SUMMARY FOR 1989 **********

LFCL 1.8 UNLIMITED 25,000 MBTU/TONS ESCALATION RATE 7.9 %/YR INVENTORY CARRYING CHARGE 7.9 %/YR UNLOADING CHARGE 0. C/MBTU
FUEL ID510
SULFUR CONCENTRATION 0.0 LB/MBTU
MINIMUM AMOUNT 0.0 TONS/DAY

	JAN	FEB	MAR	APR	MAY	JUN	JUL	AUG	SEP	OCT	NOV	DEC
FUEL COST (C/MBTU)	327.54	329.61	331.70	333.79	335.90	338.02	340.16	342.31	344.47	346.65	348.84	351.04
INVENTORY(KTONS)	0.	0.	0.	0.	0.	0.	0.	0.	0.	0.	0.	0.

HFCL 1.8 UNLIMITED 25,000 MBTU/TONS ESCALATION RATE 7.9 %/YR INVENTORY CARRYING CHARGE 7.9 %/YR UNLOADING CHARGE 0. C/MBTU
FUEL ID511
SULFUR CONCENTRATION 0.0 LB/MBTU
MINIMUM AMOUNT 0.0 TONS/DAY

	JAN	FEB	MAR	APR	MAY	JUN	JUL	AUG	SEP	OCT	NOV	DEC
FUEL COST (C/MBTU)	273.12	274.85	276.59	278.34	280.10	281.88	283.66	285.46	287.27	289.09	290.92	292.76
INVENTORY(KTONS)	0.	0.	0.	0.	0.	0.	0.	0.	0.	0.	0.	0.

COAL2.4 UNLIMITED 25,000 MBTU/TONS ESCALATION RATE 5.6 %/YR INVENTORY CARRYING CHARGE 5.6 %/YR UNLOADING CHARGE 0. C/MBTU
FUEL ID514
SULFUR CONCENTRATION 0.0 LB/MBTU
MINIMUM AMOUNT 0.0 TONS/DAY

	JAN	FEB	MAR	APR	MAY	JUN	JUL	AUG	SEP	OCT	NOV	DEC
FUEL COST (C/MBTU)	240.86	241.95	243.06	244.17	245.28	246.40	247.53	248.66	249.79	250.93	252.07	253.23
INVENTORY(KTONS)	0.	0.	0.	0.	0.	0.	0.	0.	0.	0.	0.	0.

NATGAS A UNLIMITED 1.000 MBTU/DT ESCALATION RATE 11.6 %/YR INVENTORY CARRYING CHARGE 11.6 %/YR UNLOADING CHARGE 0. C/MBTU
FUEL ID580
SULFUR CONCENTRATION 0.0 LB/MBTU
MINIMUM AMOUNT 0.0 DT /DAY

	JAN	FEB	MAR	APR	MAY	JUN	JUL	AUG	SEP	OCT	NOV	DEC
FUEL COST (C/MBTU)	729.45	736.16	742.93	749.76	756.65	763.61	770.63	777.72	784.87	792.09	799.37	806.72
INVENTORY(KDT)	0.	0.	0.	0.	0.	0.	0.	0.	0.	0.	0.	0.

********** FUEL CATEGORY INPUT SUMMARY FOR 1989 **********

COAL2.0D UNLIMITED 24.000 MBTU/TONS ESCALATION RATE 7.7 %/YR INVENTORY CARRYING CHARGE 7.7 %/YR UNLOADING CHARGE 0. C/MBTU
FUEL ID953
SULFUR CONCENTRATION 0.0 LB/MBTU
MINIMUM AMOUNT 0.0 TONS/DAY

	JAN	FEB	MAR	APR	MAY	JUN	JUL	AUG	SEP	OCT	NOV	DEC
FUEL COST (C/MBTU)	303.81	305.69	307.58	309.48	311.40	313.32	315.26	317.21	319.17	321.14	323.13	325.13
INVENTORY(KTONS)	0.	0.	0.	0.	0.	0.	0.	0.	0.	0.	0.	0.

COAL >2D UNLIMITED 24.000 MBTU/TONS ESCALATION RATE 5.7 %/YR INVENTORY CARRYING CHARGE 5.7 %/YR UNLOADING CHARGE 0. C/MBTU
FUEL ID954
SULFUR CONCENTRATION 0.0 LB/MBTU
MINIMUM AMOUNT 0.0 TONS/DAY

	JAN	FEB	MAR	APR	MAY	JUN	JUL	AUG	SEP	OCT	NOV	DEC
FUEL COST (C/MBTU)	281.76	283.06	284.36	285.67	286.99	288.31	289.64	290.97	292.31	293.66	295.01	296.37
INVENTORY(KTONS)	0.	0.	0.	0.	0.	0.	0.	0.	0.	0.	0.	0.

URANIUM2 UNLIMITED 1.000 MBTU/MBTU ESCALATION RATE 6.0 %/YR INVENTORY CARRYING CHARGE 6.0 %/YR UNLOADING CHARGE 0. C/MBTU
FUEL ID962
SULFUR CONCENTRATION 0.0 LB/MBTU
MINIMUM AMOUNT 0.0 MBTU/DAY

	JAN	FEB	MAR	APR	MAY	JUN	JUL	AUG	SEP	OCT	NOV	DEC
FUEL COST (C/MBTU)	61.31	61.61	61.91	62.21	62.51	62.82	63.12	63.43	63.74	64.05	64.36	64.68
INVENTORY(KMBTU)	0.	0.	0.	0.	0.	0.	0.	0.	0.	0.	0.	0.

URANIUM3 UNLIMITED 1.000 MBTU/MBTU ESCALATION RATE 6.0 %/YR INVENTORY CARRYING CHARGE 6.0 %/YR UNLOADING CHARGE 0. C/MBTU
FUEL ID963
SULFUR CONCENTRATION 0.0 LB/MBTU
MINIMUM AMOUNT 0.0 MBTU/DAY

	JAN	FEB	MAR	APR	MAY	JUN	JUL	AUG	SEP	OCT	NOV	DEC
FUEL COST (C/MBTU)	69.89	70.23	70.58	70.92	71.27	71.61	71.96	72.31	72.66	73.02	73.37	73.73
INVENTORY(KMBTU)	0.	0.	0.	0.	0.	0.	0.	0.	0.	0.	0.	0.

URANIUM5 UNLIMITED 1.000 MBTU/MBTU ESCALATION RATE 6.0 %/YR INVENTORY CARRYING CHARGE 6.0 %/YR UNLOADING CHARGE 0. C/MBTU
FUEL ID965
SULFUR CONCENTRATION 0.0 LB/MBTU
MINIMUM AMOUNT 0.0 MBTU/DAY

	JAN	FEB	MAR	APR	MAY	JUN	JUL	AUG	SEP	OCT	NOV	DEC
FUEL COST (C/MBTU)	71.12	71.47	71.82	72.16	72.52	72.87	73.22	73.58	73.94	74.30	74.66	75.02
INVENTORY(KMBTU)	0.	0.	0.	0.	0.	0.	0.	0.	0.	0.	0.	0.

********** FUEL CATEGORY INPUT SUMMARY FOR 1989 **********

URANIUM7 UNLIMITED 1.000 MBTU/MBTU ESCALATION RATE 6.0 %/YR INVENTORY CARRYING CHARGE 6.0 %/YR UNLOADING CHARGE 0. C/MBTU
FUEL ID967
SULFUR CONCENTRATION 0.0 LB/MBTU
MINIMUM AMOUNT 0.0 MBTU/DAY

	JAN	FEB	MAR	APR	MAY	JUN	JUL	AUG	SEP	OCT	NOV	DEC
FUEL COST (C/MBTU)	66.22	66.54	66.86	67.19	67.51	67.84	68.17	68.51	68.84	69.17	69.51	69.85
INVENTORY(KMBTU)	0.	0.	0.	0.	0.	0.	0.	0.	0.	0.	0.	0.

NATGASU UNLIMITED 8.930 MBTU/MCF ESCALATION RATE 12.7 %/YR INVENTORY CARRYING CHARGE 12.7 %/YR UNLOADING CHARGE 0. C/MBTU
FUEL ID970
SULFUR CONCENTRATION 0.0 LB/MBTU
MINIMUM AMOUNT 0.0 MCF /DAY

	JAN	FEB	MAR	APR	MAY	JUN	JUL	AUG	SEP	OCT	NOV	DEC
FUEL COST (C/MBTU)	694.55	701.49	708.49	715.57	722.72	729.94	737.23	744.60	752.04	759.55	767.14	774.80
INVENTORY(KMCF)	0.	0.	0.	0.	0.	0.	0.	0.	0.	0.	0.	0.

NATGASD UNLIMITED 8.930 MBTU/MCF ESCALATION RATE 12.3 %/YR INVENTORY CARRYING CHARGE 12.3 %/YR UNLOADING CHARGE 0. C/MBTU
FUEL ID971
SULFUR CONCENTRATION 0.0 LB/MBTU
MINIMUM AMOUNT 0.0 MCF /DAY

	JAN	FEB	MAR	APR	MAY	JUN	JUL	AUG	SEP	OCT	NOV	DEC
FUEL COST (C/MBTU)	707.31	714.17	721.09	728.09	735.15	742.28	749.48	756.75	764.09	771.50	778.98	786.54
INVENTORY(KMCF)	0.	0.	0.	0.	0.	0.	0.	0.	0.	0.	0.	0.

DIS OILR UNLIMITED 5.400 MBTU/BBLS ESCALATION RATE 6.8 %/YR INVENTORY CARRYING CHARGE 6.8 %/YR UNLOADING CHARGE 0. C/MBTU
FUEL ID536
SULFUR CONCENTRATION 0.0 LB/MBTU
MINIMUM AMOUNT 0.0 BBLS/DAY

	JAN	FEB	MAR	APR	MAY	JUN	JUL	AUG	SEP	OCT	NOV	DEC
FUEL COST (C/MBTU)	998.54	1004.02	1009.53	1015.07	1020.64	1026.24	1031.88	1037.54	1043.23	1048.96	1054.72	1060.51
INVENTORY(KBBLS)	0.	0.	0.	0.	0.	0.	0.	0.	0.	0.	0.	0.

DIS OILA UNLIMITED 5.300 MBTU/BBLS ESCALATION RATE 6.7 %/YR INVENTORY CARRYING CHARGE 6.7 %/YR UNLOADING CHARGE 0. C/MBTU
FUEL ID537
SULFUR CONCENTRATION 0.0 LB/MBTU
MINIMUM AMOUNT 0.0 BBLS/DAY

	JAN	FEB	MAR	APR	MAY	JUN	JUL	AUG	SEP	OCT	NOV	DEC
FUEL COST (C/MBTU)	1204.51	1210.99	1217.51	1224.06	1230.65	1237.27	1243.93	1250.62	1257.35	1264.11	1270.92	1277.75
INVENTORY(KBBLS)	0.	0.	0.	0.	0.	0.	0.	0.	0.	0.	0.	0.

********** FUEL CATEGORY INPUT SUMMARY FOR 1989 **********

OH FUEL UNLIMITED 1.000 MBTU/TONS ESCALATION RATE 7.0 %/YR INVENTORY CARRYING CHARGE 7.0 %/YR UNLOADING CHARGE 0. C/MBTU
FUEL ID998
SULFUR CONCENTRATION 0.0 LB/MBTU
MINIMUM AMOUNT 0.0 TONS/DAY

	JAN	FEB	MAR	APR	MAY	JUN	JUL	AUG	SEP	OCT	NOV	DEC
FUEL COST (C/MBTU)	471.20	474.60	478.00	481.50	447.60	450.80	454.10	457.30	460.60	463.90	506.20	509.90
INVENTORY(KTONS)	0.	0.	0.	0.	0.	0.	0.	0.	0.	0.	0.	0.

OH FUEL UNLIMITED 1.000 MBTU/TONS ESCALATION RATE 7.0 %/YR INVENTORY CARRYING CHARGE 7.0 %/YR UNLOADING CHARGE 0. C/MBTU
FUEL ID999
SULFUR CONCENTRATION 0.0 LB/MBTU
MINIMUM AMOUNT 0.0 TONS/DAY

	JAN	FEB	MAR	APR	MAY	JUN	JUL	AUG	SEP	OCT	NOV	DEC
FUEL COST (C/MBTU)	543.70	547.60	551.60	555.50	522.20	526.00	529.80	533.60	537.40	541.30	584.10	588.30
INVENTORY(KTONS)	0.	0.	0.	0.	0.	0.	0.	0.	0.	0.	0.	0.

RES 0.7U UNLIMITED 6.200 MBTU/BBLS ESCALATION RATE 12.4 %/YR INVENTORY CARRYING CHARGE 12.4 %/YR UNLOADING CHARGE 0. C/MBTU
FUEL ID902
SULFUR CONCENTRATION 0.0 LB/MBTU
MINIMUM AMOUNT 0.0 BBLS/DAY

	JAN	FEB	MAR	APR	MAY	JUN	JUL	AUG	SEP	OCT	NOV	DEC
FUEL COST (C/MBTU)	1092.99	1103.68	1114.48	1125.38	1136.39	1147.50	1158.72	1170.06	1181.50	1193.06	1204.73	1216.51
INVENTORY(KBBLS)	0.	0.	0.	0.	0.	0.	0.	0.	0.	0.	0.	0.

RES 1.0U UNLIMITED 6.220 MBTU/BBLS ESCALATION RATE 12.6 %/YR INVENTORY CARRYING CHARGE 12.6 %/YR UNLOADING CHARGE 0. C/MBTU
FUEL ID903
SULFUR CONCENTRATION 0.0 LB/MBTU
MINIMUM AMOUNT 0.0 BBLS/DAY

	JAN	FEB	MAR	APR	MAY	JUN	JUL	AUG	SEP	OCT	NOV	DEC
FUEL COST (C/MBTU)	1072.32	1083.01	1093.82	1104.73	1115.75	1126.88	1138.12	1149.47	1160.94	1172.52	1184.22	1196.03
INVENTORY(KBBLS)	0.	0.	0.	0.	0.	0.	0.	0.	0.	0.	0.	0.

RES 2.0U UNLIMITED 6.250 MBTU/BBLS ESCALATION RATE 13.3 %/YR INVENTORY CARRYING CHARGE 13.3 %/YR UNLOADING CHARGE 0. C/MBTU
FUEL ID904
SULFUR CONCENTRATION 0.0 LB/MBTU
MINIMUM AMOUNT 0.0 BBLS/DAY

	JAN	FEB	MAR	APR	MAY	JUN	JUL	AUG	SEP	OCT	NOV	DEC
FUEL COST (C/MBTU)	1018.84	1029.51	1040.30	1051.19	1062.20	1073.33	1084.57	1095.94	1107.42	1119.02	1130.74	1142.58
INVENTORY(KBBLS)	0.	0.	0.	0.	0.	0.	0.	0.	0.	0.	0.	0.

********** FUEL CATEGORY INPUT SUMMARY FOR 1989 **********

RES 2.8U UNLIMITED 6.280 MBTU/BBLS ESCALATION RATE 13.8 %/YR INVENTORY CARRYING CHARGE 13.8 %/YR UNLOADING CHARGE 0. C/MBTU
FUEL ID905
SULFUR CONCENTRATION 0.0 LB/MBTU
MINIMUM AMOUNT 0.0 BBLS/DAY

	JAN	FEB	MAR	APR	MAY	JUN	JUL	AUG	SEP	OCT	NOV	DEC
FUEL COST (C/MBTU)	983.70	994.39	1005.20	1016.12	1027.16	1038.33	1049.61	1061.02	1072.55	1084.21	1095.99	1107.90
INVENTORY(KBBLS)	0.	0.	0.	0.	0.	0.	0.	0.	0.	0.	0.	0.

DIS OILU UNLIMITED 5.830 MBTU/BBLS ESCALATION RATE 9.9 %/YR INVENTORY CARRYING CHARGE 9.9 %/YR UNLOADING CHARGE 0. C/MBTU
FUEL ID931
SULFUR CONCENTRATION 0.0 LB/MBTU
MINIMUM AMOUNT 0.0 BBLS/DAY

	JAN	FEB	MAR	APR	MAY	JUN	JUL	AUG	SEP	OCT	NOV	DEC
FUEL COST (C/MBTU)	1217.09	1226.68	1236.34	1246.08	1255.90	1265.79	1275.76	1285.81	1295.94	1306.15	1316.44	1326.81
INVENTORY(KBBLS)	0.	0.	0.	0.	0.	0.	0.	0.	0.	0.	0.	0.

RES 0.3D UNLIMITED 6.190 MBTU/BBLS ESCALATION RATE 12.1 %/YR INVENTORY CARRYING CHARGE 12.1 %/YR UNLOADING CHARGE 0. C/MBTU
FUEL ID921
SULFUR CONCENTRATION 0.0 LB/MBTU
MINIMUM AMOUNT 0.0 BBLS/DAY

	JAN	FEB	MAR	APR	MAY	JUN	JUL	AUG	SEP	OCT	NOV	DEC
FUEL COST (C/MBTU)	1090.86	1101.31	1111.86	1122.51	1133.26	1144.12	1155.08	1166.14	1177.31	1188.59	1199.97	1211.47
INVENTORY(KBBLS)	0.	0.	0.	0.	0.	0.	0.	0.	0.	0.	0.	0.

RES 0.7D UNLIMITED 6.200 MBTU/BBLS ESCALATION RATE 12.5 %/YR INVENTORY CARRYING CHARGE 12.5 %/YR UNLOADING CHARGE 0. C/MBTU
FUEL ID922
SULFUR CONCENTRATION 0.0 LB/MBTU
MINIMUM AMOUNT 0.0 BBLS/DAY

	JAN	FEB	MAR	APR	MAY	JUN	JUL	AUG	SEP	OCT	NOV	DEC
FUEL COST (C/MBTU)	1059.54	1069.99	1080.55	1091.21	1101.97	1112.84	1123.82	1134.90	1146.10	1157.40	1168.82	1180.35
INVENTORY(KBBLS)	0.	0.	0.	0.	0.	0.	0.	0.	0.	0.	0.	0.

RES 1.0D UNLIMITED 6.220 MBTU/BBLS ESCALATION RATE 12.8 %/YR INVENTORY CARRYING CHARGE 12.8 %/YR UNLOADING CHARGE 0. C/MBTU
FUEL ID923
SULFUR CONCENTRATION 0.0 LB/MBTU
MINIMUM AMOUNT 0.0 BBLS/DAY

	JAN	FEB	MAR	APR	MAY	JUN	JUL	AUG	SEP	OCT	NOV	DEC
FUEL COST (C/MBTU)	1038.69	1049.14	1059.70	1070.37	1081.14	1092.02	1103.01	1114.12	1125.33	1136.66	1148.10	1159.65
INVENTORY(KBBLS)	0.	0.	0.	0.	0.	0.	0.	0.	0.	0.	[illegible]	0.

********** FUEL CATEGORY INPUT SUMMARY FOR 1989 **********

RES 1.5D UNLIMITED 6.235 MBTU/BBLS ESCALATION RATE 13.1 %/YR INVENTORY CARRYING CHARGE 13.1 %/YR UNLOADING CHARGE 0. C/MBTU
FUEL ID924
SULFUR CONCENTRATION 0.0 LB/MBTU
MINIMUM AMOUNT 0.0 BBLS/DAY

	JAN	FEB	MAR	APR	MAY	JUN	JUL	AUG	SEP	OCT	NOV	DEC
FUEL COST (C/MBTU)	1012.96	1023.43	1034.00	1044.69	1055.48	1066.39	1077.41	1088.54	1099.79	1111.16	1122.64	1134.24
INVENTORY(KBBLS)	0.	0.	0.	0.	0.	0.	0.	0.	0.	0.	0.	0.

RES 2.0D UNLIMITED 6.250 MBTU/BBLS ESCALATION RATE 13.5 %/YR INVENTORY CARRYING CHARGE 13.5 %/YR UNLOADING CHARGE 0. C/MBTU
FUEL ID925
SULFUR CONCENTRATION 0.0 LB/MBTU
MINIMUM AMOUNT 0.0 BBLS/DAY

	JAN	FEB	MAR	APR	MAY	JUN	JUL	AUG	SEP	OCT	NOV	DEC
FUEL COST (C/MBTU)	985.53	995.96	1006.50	1017.16	1027.93	1038.81	1049.81	1060.92	1072.15	1083.50	1094.98	1106.57
INVENTORY(KBBLS)	0.	0.	0.	0.	0.	0.	0.	0.	0.	0.	0.	0.

RES 2.8D UNLIMITED 6.280 MBTU/BBLS ESCALATION RATE 14.0 %/YR INVENTORY CARRYING CHARGE 14.0 %/YR UNLOADING CHARGE 0. C/MBTU
FUEL ID926
SULFUR CONCENTRATION 0.0 LB/MBTU
MINIMUM AMOUNT 0.0 BBLS/DAY

	JAN	FEB	MAR	APR	MAY	JUN	JUL	AUG	SEP	OCT	NOV	DEC
FUEL COST (C/MBTU)	950.17	960.62	971.19	981.87	992.67	1003.59	1014.63	1025.79	1037.08	1048.48	1060.02	1071.68
INVENTORY(KBBLS)	0.	0.	0.	0.	0.	0.	0.	0.	0.	0.	0.	0.

DIS OILD UNLIMITED 5.830 MBTU/BBLS ESCALATION RATE 9.9 %/YR INVENTORY CARRYING CHARGE 9.9 %/YR UNLOADING CHARGE 0. C/MBTU
FUEL ID935
SULFUR CONCENTRATION 0.0 LB/MBTU
MINIMUM AMOUNT 0.0 BBLS/DAY

	JAN	FEB	MAR	APR	MAY	JUN	JUL	AUG	SEP	OCT	NOV	DEC
FUEL COST (C/MBTU)	1235.83	1245.60	1255.46	1265.39	1275.39	1285.48	1295.65	1305.89	1316.22	1326.63	1337.12	1347.70
INVENTORY(KBBLS)	0.	0.	0.	0.	0.	0.	0.	0.	0.	0.	0.	0.

COAL1.0U UNLIMITED 25.000 MBTU/TONS ESCALATION RATE 9.0 %/YR INVENTORY CARRYING CHARGE 9.0 %/YR UNLOADING CHARGE 0. C/MBTU
FUEL ID941
SULFUR CONCENTRATION 0.0 LB/MBTU
MINIMUM AMOUNT 0.0 TONS/DAY

	JAN	FEB	MAR	APR	MAY	JUN	JUL	AUG	SEP	OCT	NOV	DEC
FUEL COST (C/MBTU)	464.07	467.55	491.06	494.56	498.14	501.72	505.32	508.95	512.61	516.29	520.00	523.74
INVENTORY(KTONS)	0.	0.	0.	0.	0.	0.	0.	0.	0.	0.	0.	0.

********** FUEL CATEGORY INPUT SUMMARY FOR 1989 **********

COAL1.4U UNLIMITED 24.000 MBTU/TONS ESCALATION RATE 8.9 %/YR INVENTORY CARRYING CHARGE 8.9 %/YR UNLOADING CHARGE 0. C/MBTU
FUEL ID942
SULFUR CONCENTRATION 0.0 LB/MBTU
MINIMUM AMOUNT 0.0 TONS/DAY

	JAN	FEB	MAR	APR	MAY	JUN	JUL	AUG	SEP	OCT	NOV	DEC
FUEL COST (C/MBTU)	476.82	480.23	483.67	487.13	490.61	494.12	497.65	501.21	504.80	508.41	512.04	515.71
INVENTORY (KTONS)	0.	0.	0.	0.	0.	0.	0.	0.	0.	0.	0.	0.

COAL2.0U UNLIMITED 24.000 MBTU/TONS ESCALATION RATE 8.7 %/YR INVENTORY CARRYING CHARGE 8.7 %/YR UNLOADING CHARGE 0. C/MBTU
FUEL ID943
SULFUR CONCENTRATION 0.0 LB/MBTU
MINIMUM AMOUNT 0.0 TONS/DAY

	JAN	FEB	MAR	APR	MAY	JUN	JUL	AUG	SEP	OCT	NOV	DEC
FUEL COST (C/MBTU)	437.49	440.55	443.62	446.72	449.84	452.98	456.14	459.33	462.53	465.76	469.01	472.29
INVENTORY (KTONS)	0.	0.	0.	0.	0.	0.	0.	0.	0.	0.	0.	0.

COAL >2U UNLIMITED 24.000 MBTU/TONS ESCALATION RATE 8.9 %/YR INVENTORY CARRYING CHARGE 8.9 %/YR UNLOADING CHARGE 0. C/MBTU
FUEL ID944
SULFUR CONCENTRATION 0.0 LB/MBTU
MINIMUM AMOUNT 0.0 TONS/DAY

	JAN	FEB	MAR	APR	MAY	JUN	JUL	AUG	SEP	OCT	NOV	DEC
FUEL COST (C/MBTU)	368.46	371.10	373.76	376.44	379.14	381.85	384.59	387.34	390.12	392.91	395.72	398.56
INVENTORY (KTONS)	0.	0.	0.	0.	0.	0.	0.	0.	0.	0.	0.	0.

COAL1.0D UNLIMITED 25.000 MBTU/TONS ESCALATION RATE 8.9 %/YR INVENTORY CARRYING CHARGE 8.9 %/YR UNLOADING CHARGE 0. C/MBTU
FUEL ID951
SULFUR CONCENTRATION 0.0 LB/MBTU
MINIMUM AMOUNT 0.0 TONS/DAY

	JAN	FEB	MAR	APR	MAY	JUN	JUL	AUG	SEP	OCT	NOV	DEC
FUEL COST (C/MBTU)	508.87	512.49	516.13	519.80	523.49	527.22	530.96	534.74	538.54	542.37	546.22	550.11
INVENTORY (KTONS)	0.	0.	0.	0.	0.	0.	0.	0.	0.	0.	0.	0.

COAL1.4D UNLIMITED 24.000 MBTU/TONS ESCALATION RATE 8.8 %/YR INVENTORY CARRYING CHARGE 8.8 %/YR UNLOADING CHARGE 0. C/MBTU
FUEL ID952
SULFUR CONCENTRATION 0.0 LB/MBTU
MINIMUM AMOUNT 0.0 TONS/DAY

	JAN	FEB	MAR	APR	MAY	JUN	JUL	AUG	SEP	OCT	NOV	DEC
FUEL COST (C/MBTU)	506.28	509.86	513.46	517.09	520.74	524.42	528.12	531.85	535.61	539.39	543.20	547.03
INVENTORY (KTONS)	0.	0.	0.	0.	[illegible]	0.	0.	0.	0.	0.	0	0.

********** FUEL CATEGORY INPUT SUMMARY FOR 1989 **********

COAL2.00 UNLIMITED 24.000 MBTU/TONS ESCALATION RATE 8.6 %/YR INVENTORY CARRYING CHARGE 8.6 %/YR UNLOADING CHARGE 0. C/MBTU
FUEL ID953
SULFUR CONCENTRATION 0.0 LB/MBTU
MINIMUM AMOUNT 0.0 TONS/DAY

	JAN	FEB	MAR	APR	MAY	JUN	JUL	AUG	SEP	OCT	NOV	DEC
FUEL COST (C/MBTU)	466.96	470.18	473.42	476.69	479.98	483.29	486.62	489.98	493.36	496.76	500.18	503.63
INVENTORY(KTONS)	0.	0.	0.	0.	0.	0.	0.	0.	0.	0.	0.	0.

COAL >20 UNLIMITED 24.000 MBTU/TONS ESCALATION RATE 8.7 %/YR INVENTORY CARRYING CHARGE 8.7 %/YR UNLOADING CHARGE 0. C/MBTU
FUEL ID954
SULFUR CONCENTRATION 0.0 LB/MBTU
MINIMUM AMOUNT 0.0 TONS/DAY

	JAN	FEB	MAR	APR	MAY	JUN	JUL	AUG	SEP	OCT	NOV	DEC
FUEL COST (C/MBTU)	411.93	414.82	417.72	420.65	423.59	426.56	429.54	432.55	435.58	438.63	441.70	444.79
INVENTORY(KTONS)	0.	0.	0.	0.	0.	0.	0.	0.	0.	0.	0.	0.

URANIUM2 UNLIMITED 1.000 MBTU/MBTU ESCALATION RATE 7.0 %/YR INVENTORY CARRYING CHARGE 7.0 %/YR UNLOADING CHARGE 0. C/MBTU
FUEL ID962
SULFUR CONCENTRATION 0.0 LB/MBTU
MINIMUM AMOUNT 0.0 MBTU/DAY

	JAN	FEB	MAR	APR	MAY	JUN	JUL	AUG	SEP	OCT	NOV	DEC
FUEL COST (C/MBTU)	90.56	91.07	91.58	92.10	92.62	93.15	93.67	94.20	94.73	95.27	95.81	96.35
INVENTORY(KMBTU)	0.	0.	0.	0.	0.	0.	0.	0.	0.	0.	0.	0.

URANIUM3 UNLIMITED 1.000 MBTU/MBTU ESCALATION RATE 7.0 %/YR INVENTORY CARRYING CHARGE 7.0 %/YR UNLOADING CHARGE 0. C/MBTU
FUEL ID963
SULFUR CONCENTRATION 0.0 LB/MBTU
MINIMUM AMOUNT 0.0 MBTU/DAY

	JAN	FEB	MAR	APR	MAY	JUN	JUL	AUG	SEP	OCT	NOV	DEC
FUEL COST (C/MBTU)	103.84	104.42	105.01	105.61	106.20	106.80	107.41	108.02	108.63	109.24	109.86	110.48
INVENTORY(KMBTU)	0.	0.	0.	0.	0.	0.	0.	0.	0.	0.	0.	0.

URANIUM5 UNLIMITED 1.000 MBTU/MBTU ESCALATION RATE 7.0 %/YR INVENTORY CARRYING CHARGE 7.0 %/YR UNLOADING CHARGE 0. C/MBTU
FUEL ID965
SULFUR CONCENTRATION 0.0 LB/MBTU
MINIMUM AMOUNT 0.0 MBTU/DAY

	JAN	FEB	MAR	APR	MAY	JUN	JUL	AUG	SEP	OCT	NOV	DEC
FUEL COST (C/MBTU)	105.99	106.50	107.10	107.71	108.31	108.93	109.54	110.16	110.79	111.41	112.04	112.67
INVENTORY(KMBTU)	0.	0.	0.	0.	0.	0.	0.	0.	0.	0.	0.	0.

********** FUEL CATEGORY INPUT SUMMARY FOR 1989 **********

URANIUM7 UNLIMITED 1.000 MBTU/MBTU ESCALATION RATE 7.0 %/YR INVENTORY CARRYING CHARGE 7.0 %/YR UNLOADING CHARGE 0. C/MBTU
FUEL ID967
SULFUR CONCENTRATION 0.0 LB/MBTU
MINIMUM AMOUNT 0.0 MBTU/DAY

	JAN	FEB	MAR	APR	MAY	JUN	JUL	AUG	SEP	OCT	NOV	DEC
FUEL COST (C/MBTU)	98.56	99.12	99.68	100.24	100.81	101.38	101.95	102.53	103.11	103.69	104.28	104.87
INVENTORY(KMBTU)	0.	0.	0.	0.	0.	0.	0.	0.	0.	0.	0.	0.

NATGASU UNLIMITED 8.930 MBTU/MCF ESCALATION RATE 12.8 %/YR INVENTORY CARRYING CHARGE 12.8 %/YR UNLOADING CHARGE 0. C/MBTU
FUEL ID970
SULFUR CONCENTRATION 0.0 LB/MBTU
MINIMUM AMOUNT 0.0 MCF /DAY

	JAN	FEB	MAR	APR	MAY	JUN	JUL	AUG	SEP	OCT	NOV	DEC
FUEL COST (C/MBTU)	951.07	960.64	970.31	980.07	989.94	999.90	1009.97	1020.13	1030.40	1040.77	1051.24	1061.83
INVENTORY(KMCF)	0.	0.	0.	0.	0.	0.	0.	0.	0.	0.	0.	0.

NATGASD UNLIMITED 8.930 MBTU/MCF ESCALATION RATE 12.2 %/YR INVENTORY CARRYING CHARGE 12.2 %/YR UNLOADING CHARGE 0. C/MBTU
FUEL ID971
SULFUR CONCENTRATION 0.0 LB/MBTU
MINIMUM AMOUNT 0.0 MCF /DAY

	JAN	FEB	MAR	APR	MAY	JUN	JUL	AUG	SEP	OCT	NOV	DEC
FUEL COST (C/MBTU)	975.37	984.76	994.23	1003.80	1013.46	1023.22	1033.06	1043.00	1053.04	1063.18	1073.41	1083.74
INVENTORY(KMCF)	0.	0.	0.	0.	0.	0.	0.	0.	0.	0.	0.	0.

DIS OILR UNLIMITED 5.400 MBTU/BBLS ESCALATION RATE 6.8 %/YR INVENTORY CARRYING CHARGE 6.8 %/YR UNLOADING CHARGE 0. C/MBTU
FUEL ID536
SULFUR CONCENTRATION 0.0 LB/MBTU
MINIMUM AMOUNT 0.0 BBLS/DAY

	JAN	FEB	MAR	APR	MAY	JUN	JUL	AUG	SEP	OCT	NOV	DEC
FUEL COST (C/MBTU)	998.54	1004.02	1009.53	1015.07	1020.64	1026.24	1031.88	1037.54	1043.23	1048.96	1054.72	1060.51
INVENTORY(KBBLS)	0.	0.	0.	0.	0.	0.	0.	0.	0.	0.	0.	0.

DIS OILA UNLIMITED 5.300 MBTU/BBLS ESCALATION RATE 6.7 %/YR INVENTORY CARRYING CHARGE 6.7 %/YR UNLOADING CHARGE 0. C/MBTU
FUEL ID537
SULFUR CONCENTRATION 0.0 LB/MBTU
MINIMUM AMOUNT 0.0 BBLS/DAY

	JAN	FEB	MAR	APR	MAY	JUN	JUL	AUG	SEP	OCT	NOV	DEC
FUEL COST (C/MBTU)	1204.51	1210.99	1217.51	1224.06	1230.65	1237.27	1243.93	1250.62	1257.35	1264.11	1270.92	1277.75
INVENTORY(KBBLS)	0.	0.	0.	0.	[illegible]	0.	0.	0.	0.	0.	[illegible]	0.

********** FUEL CATEGORY INPUT SUMMARY FOR 1989 **********

LFCL 1.8 UNLIMITED 25.000 MBTU/TONS ESCALATION RATE 8.7 %/YR INVENTORY CARRYING CHARGE 8.7 %/YR UNLOADING CHARGE 0. C/MBTU
FUEL ID510
SULFUR CONCENTRATION 0.0 LB/MBTU
MINIMUM AMOUNT 0.0 TONS/DAY

	JAN	FEB	MAR	APR	MAY	JUN	JUL	AUG	SEP	OCT	NOV	DEC
FUEL COST (C/MBTU)	517.78	521.40	525.04	528.70	532.39	536.11	539.85	543.62	547.42	551.24	555.09	558.96
INVENTORY(KTONS)	0.	0.	0.	0.	0.	0.	0.	0.	0.	0.	0.	0.

HFCL 1.8 UNLIMITED 25.000 MBTU/TONS ESCALATION RATE 8.7 %/YR INVENTORY CARRYING CHARGE 8.7 %/YR UNLOADING CHARGE 0. C/MBTU
FUEL ID511
SULFUR CONCENTRATION 0.0 LB/MBTU
MINIMUM AMOUNT 0.0 TONS/DAY

	JAN	FEB	MAR	APR	MAY	JUN	JUL	AUG	SEP	OCT	NOV	DEC
FUEL COST (C/MBTU)	431.34	434.36	437.40	440.47	443.55	446.66	449.78	452.93	456.10	459.30	462.51	465.75
INVENTORY(KTONS)	0.	0.	0.	0.	0.	0.	0.	0.	0.	0.	0.	0.

COAL2.4 UNLIMITED 25.000 MBTU/TONS ESCALATION RATE 9.0 %/YR INVENTORY CARRYING CHARGE 9.0 %/YR UNLOADING CHARGE 0. C/MBTU
FUEL ID514
SULFUR CONCENTRATION 0.0 LB/MBTU
MINIMUM AMOUNT 0.0 TONS/DAY

	JAN	FEB	MAR	APR	MAY	JUN	JUL	AUG	SEP	OCT	NOV	DEC
FUEL COST (C/MBTU)	362.31	364.92	367.54	370.19	372.85	375.53	378.23	380.95	383.69	386.45	389.23	392.03
INVENTORY(KTONS)	0.	0.	0.	0.	0.	0.	0.	0.	0.	0.	0.	0.

NATGAS A UNLIMITED 1.000 MBTU/DT ESCALATION RATE 12.5 %/YR INVENTORY CARRYING CHARGE 12.5 %/YR UNLOADING CHARGE 0. C/MBTU
FUEL ID580
SULFUR CONCENTRATION 0.0 LB/MBTU
MINIMUM AMOUNT 0.0 DT /DAY

	JAN	FEB	MAR	APR	MAY	JUN	JUL	AUG	SEP	OCT	NOV	DEC
FUEL COST (C/MBTU)	977.58	987.20	996.91	1006.72	1016.63	1026.63	1036.74	1046.94	1057.24	1067.65	1078.15	1088.76
INVENTORY(KDT)	0.	0.	0.	0.	0.	0.	0.	0.	0.	0.	0.	0.

BEGIN PROCESSING FOR YEAR 1990 MONTH 1 FOR PASS 0
BEGIN PROCESSING FOR YEAR 1990 MONTH 2 FOR PASS 0
BEGIN PROCESSING FOR YEAR 1990 MONTH 3 FOR PASS 0
BEGIN PROCESSING FOR YEAR 1990 MONTH 4 FOR PASS 0
BEGIN PROCESSING FOR YEAR 1990 MONTH 5 FOR PASS 0
BEGIN PROCESSING FOR YEAR 1990 MONTH 6 FOR PASS 0
BEGIN PROCESSING FOR YEAR 1990 MONTH 7 FOR PASS 0
BEGIN PROCESSING FOR YEAR 1990 MONTH 8 FOR PASS 0
BEGIN PROCESSING FOR YEAR 1990 MONTH 9 FOR PASS 0
BEGIN PROCESSING FOR YEAR 1990 MONTH 10 FOR PASS 0
BEGIN PROCESSING FOR YEAR 1990 MONTH 11 FOR PASS 0

BEGIN PROCESSING FOR YEAR 1990 MONTH 12 FOR PASS 0

1990

********** FUEL CATEGORY INPUT [illegible]Y FOR 1990 **********

OH FUEL UNLIMITED 1,000 MBTU/TONS ESCALATION RATE 7.0 %/YR INVENTORY CARRYING CHARGE 7.0 %/YR UNLOADING CHARGE 0. C/MBTU
FUEL ID998
SULFUR CONCENTRATION 0.0 LB/MBTU
MINIMUM AMOUNT 0.0 TONS/DAY

	JAN	FEB	MAR	APR	MAY	JUN	JUL	AUG	SEP	OCT	NOV	DEC
FUEL COST (C/MBTU)	330.70	306.60	333.70	335.20	310.90	312.30	313.70	315.10	316.60	318.00	346.10	347.70
INVENTORY(KTONS)	0.	0.	0.	0.	0.	0.	0.	0.	0.	0.	0.	0.

OH FUEL UNLIMITED 1,000 MBTU/TONS ESCALATION RATE 7.0 %/YR INVENTORY CARRYING CHARGE 7.0 %/YR UNLOADING CHARGE 0. C/MBTU
FUEL ID999
SULFUR CONCENTRATION 0.0 LB/MBTU
MINIMUM AMOUNT 0.0 TONS/DAY

	JAN	FEB	MAR	APR	MAY	JUN	JUL	AUG	SEP	OCT	NOV	DEC
FUEL COST (C/MBTU)	381.60	383.30	385.10	386.60	362.70	364.30	366.00	367.70	369.30	371.00	399.30	347.70
INVENTORY(KTONS)	0.	0.	0.	0.	0.	0.	0.	0.	0.	0.	0.	0.

RES 0.7U UNLIMITED 6,200 MBTU/BBLS ESCALATION RATE 7.2 %/YR INVENTORY CARRYING CHARGE 7.2 %/YR UNLOADING CHARGE 0. C/MBTU
FUEL ID902
SULFUR CONCENTRATION 0.0 LB/MBTU
MINIMUM AMOUNT 0.0 BBLS/DAY

	JAN	FEB	MAR	APR	MAY	JUN	JUL	AUG	SEP	OCT	NOV	DEC
FUEL COST (C/MBTU)	823.24	829.26	835.33	841.44	847.60	853.80	858.76	863.75	868.76	873.81	878.88	883.99
INVENTORY(KBBLS)	0.	0.	0.	0.	0.	0.	0.	0.	0.	0.	0.	0.

RES 1.0U UNLIMITED 6,220 MBTU/BBLS ESCALATION RATE 7.4 %/YR INVENTORY CARRYING CHARGE 7.4 %/YR UNLOADING CHARGE 0. C/MBTU
FUEL ID903
SULFUR CONCENTRATION 0.0 LB/MBTU
MINIMUM AMOUNT 0.0 BBLS/DAY

	JAN	FEB	MAR	APR	MAY	JUN	JUL	AUG	SEP	OCT	NOV	DEC
FUEL COST (C/MBTU)	807.03	813.12	819.26	825.45	831.69	837.97	842.95	847.97	853.01	858.08	863.18	868.31
INVENTORY(KBBLS)	0.	0.	0.	0.	0.	0.	0.	0.	0.	0.	0.	0.

RES 2.0U UNLIMITED 6,250 MBTU/BBLS ESCALATION RATE 7.8 %/YR INVENTORY CARRYING CHARGE 7.8 %/YR UNLOADING CHARGE 0. C/MBTU
FUEL ID904
SULFUR CONCENTRATION 0.0 LB/MBTU
MINIMUM AMOUNT 0.0 BBLS/DAY

	JAN	FEB	MAR	APR	MAY	JUN	JUL	AUG	SEP	OCT	NOV	DEC
FUEL COST (C/MBTU)	764.88	771.08	777.33	783.63	789.98	796.36	801.40	806.46	811.55	816.67	821.82	827.00
INVENTORY(KBBLS)	0.	0.	0.	0.	0.	0.	0.	0.	0.	0.	0.	0.

********** FUEL CATEGORY INPUT SUMMARY FOR 1990 **********

RES 2.8U UNLIMITED 6.280 MBTU/BBLS ESCALATION RATE 8.2 %/YR INVENTORY CARRYING CHARGE 8.2 %/YR UNLOADING CHARGE 0. C/MBTU
FUEL ID905
SULFUR CONCENTRATION 0.0 LB/MBTU
MINIMUM AMOUNT 0.0 BBLS/DAY

	JAN	FEB	MAR	APR	MAY	JUN	JUL	AUG	SEP	OCT	NOV	DEC
FUEL COST (C/MBTU)	736.24	742.49	748.80	755.17	761.59	768.06	773.14	778.25	783.40	788.58	793.79	799.04
INVENTORY(KBBLS)	0.	0.	0.	0.	0.	0.	0.	0.	0.	0.	0.	0.

DIS OILU UNLIMITED 5.830 MBTU/BBLS ESCALATION RATE 7.9 %/YR INVENTORY CARRYING CHARGE 7.9 %/YR UNLOADING CHARGE 0. C/MBTU
FUEL ID931
SULFUR CONCENTRATION 0.0 LB/MBTU
MINIMUM AMOUNT 0.0 BBLS/DAY

	JAN	FEB	MAR	APR	MAY	JUN	JUL	AUG	SEP	OCT	NOV	DEC
FUEL COST (C/MBTU)	923.76	928.92	934.11	939.32	944.57	949.85	955.85	961.89	967.97	974.09	980.25	986.44
INVENTORY(KBBLS)	0.	0.	0.	0.	0.	0.	0.	0.	0.	0.	0.	0.

RES 0.3D UNLIMITED 6.190 MBTU/BBLS ESCALATION RATE 6.9 %/YR INVENTORY CARRYING CHARGE 6.9 %/YR UNLOADING CHARGE 0. C/MBTU
FUEL ID921
SULFUR CONCENTRATION 0.0 LB/MBTU
MINIMUM AMOUNT 0.0 BBLS/DAY

	JAN	FEB	MAR	APR	MAY	JUN	JUL	AUG	SEP	OCT	NOV	DEC
FUEL COST (C/MBTU)	820.96	826.79	832.67	838.59	844.56	850.56	855.33	860.12	864.94	869.78	874.66	879.56
INVENTORY(KBBLS)	0.	0.	0.	0.	0.	0.	0.	0.	0.	0.	0.	0.

RES 0.7D UNLIMITED 6.200 MBTU/BBLS ESCALATION RATE 7.2 %/YR INVENTORY CARRYING CHARGE 7.2 %/YR UNLOADING CHARGE 0. C/MBTU
FUEL ID922
SULFUR CONCENTRATION 0.0 LB/MBTU
MINIMUM AMOUNT 0.0 BBLS/DAY

	JAN	FEB	MAR	APR	MAY	JUN	JUL	AUG	SEP	OCT	NOV	DEC
FUEL COST (C/MBTU)	795.24	801.13	807.07	813.05	819.07	825.14	829.94	834.76	839.61	844.48	849.39	854.32
INVENTORY(KBBLS)	0.	0.	0.	0.	0.	0.	0.	0.	0.	0.	0.	0.

RES 1.0D UNLIMITED 6.220 MBTU/BBLS ESCALATION RATE 7.4 %/YR INVENTORY CARRYING CHARGE 7.4 %/YR UNLOADING CHARGE 0. C/MBTU
FUEL ID923
SULFUR CONCENTRATION 0.0 LB/MBTU
MINIMUM AMOUNT 0.0 BBLS/DAY

	JAN	FEB	MAR	APR	MAY	JUN	JUL	AUG	SEP	OCT	NOV	DEC
FUEL COST (C/MBTU)	779.13	785.07	791.05	797.08	803.15	809.27	814.08	818.93	823.80	828.70	833.63	838.59
INVENTORY(KBBLS)	0.	0.	0.	0.	0.	0.	0.	0.	0.	0.	0.	0.

********** FUEL CATEGORY INPUT SUMMARY FOR 1990 **********

RES 1.50 UNLIMITED 6,235 MBTU/BBLS ESCALATION RATE 7.7 %/YR INVENTORY CARRYING CHARGE 7.7 %/YR UNLOADING CHARGE 0. C/MBTU
FUEL ID924
SULFUR CONCENTRATION 0.0 LB/MBTU
MINIMUM AMOUNT 0.0 BBLS/DAY

	JAN	FEB	MAR	APR	MAY	JUN	JUL	AUG	SEP	OCT	NOV	DEC
FUEL COST (C/MBTU)	756.76	762.71	768.71	774.76	780.85	786.99	791.85	796.73	801.65	806.59	811.57	816.58
INVENTORY(KBBLS)	0.	0.	0.	0.	0.	0.	0.	0.	0.	0.	0.	0.

RES 2.00 UNLIMITED 6,250 MBTU/BBLS ESCALATION RATE 7.9 %/YR INVENTORY CARRYING CHARGE 7.9 %/YR UNLOADING CHARGE 0. C/MBTU
FUEL ID925
SULFUR CONCENTRATION 0.0 LB/MBTU
MINIMUM AMOUNT 0.0 BBLS/DAY

	JAN	FEB	MAR	APR	MAY	JUN	JUL	AUG	SEP	OCT	NOV	DEC
FUEL COST (C/MBTU)	735.55	741.58	747.66	753.80	759.98	766.21	771.09	775.99	780.93	785.90	790.90	795.93
INVENTORY(KBBLS)	0.	0.	0.	0.	0.	0.	0.	0.	0.	0.	0.	0.

RES 2.60 UNLIMITED 6,280 MBTU/BBLS ESCALATION RATE 8.3 %/YR INVENTORY CARRYING CHARGE 8.3 %/YR UNLOADING CHARGE 0. C/MBTU
FUEL ID926
SULFUR CONCENTRATION 0.0 LB/MBTU
MINIMUM AMOUNT 0.0 BBLS/DAY

	JAN	FEB	MAR	APR	MAY	JUN	JUL	AUG	SEP	OCT	NOV	DEC
FUEL COST (C/MBTU)	708.23	714.36	720.54	726.78	733.07	739.42	744.33	749.28	754.26	759.27	764.31	769.39
INVENTORY(KBBLS)	0.	0.	0.	0.	0.	0.	0.	0.	0.	0.	0.	0.

DIS OILD UNLIMITED 5,830 MBTU/BBLS ESCALATION RATE 7.9 %/YR INVENTORY CARRYING CHARGE 7.9 %/YR UNLOADING CHARGE 0. C/MBTU
FUEL ID935
SULFUR CONCENTRATION 0.0 LB/MBTU
MINIMUM AMOUNT 0.0 BBLS/DAY

	JAN	FEB	MAR	APR	MAY	JUN	JUL	AUG	SEP	OCT	NOV	DEC
FUEL COST (C/MBTU)	936.21	941.43	946.68	951.96	957.27	962.61	968.70	974.83	981.00	987.21	993.45	999.74
INVENTORY(KBBLS)	0.	0.	0.	0.	0.	0.	0.	0.	0.	0.	0.	0.

COAL1.0U UNLIMITED 25,000 MBTU/TONS ESCALATION RATE 6.5 %/YR INVENTORY CARRYING CHARGE 6.5 %/YR UNLOADING CHARGE 0. C/MBTU
FUEL ID941
SULFUR CONCENTRATION 0.0 LB/MBTU
MINIMUM AMOUNT 0.0 TONS/DAY

	JAN	FEB	MAR	APR	MAY	JUN	JUL	AUG	SEP	OCT	NOV	DEC
FUEL COST (C/MBTU)	331.99	333.92	335.87	337.83	339.79	341.78	343.57	345.37	347.19	349.01	350.84	352.69
INVENTORY(KTONS)	0.	0.	0.	0.	0.	0.	0.	0.	0.	0.	0.	0.

********** FUEL CATEGORY INPUT SUMMARY FOR 1990 **********

COAL1.4U UNLIMITED 24.000 MBTU/TONS ESCALATION 6.5 %/YR INVENTORY 6.5 %/YR UNLOADING 0. C/MBTU
FUEL ID942 RATE CARRYING CHARGE CHARGE
SULFUR CONCENTRATION 0.0 LB/MBTU
MINIMUM AMOUNT 0.0 TONS/DAY

	JAN	FEB	MAR	APR	MAY	JUN	JUL	AUG	SEP	OCT	NOV	DEC
FUEL COST (C/MBTU)	323.31	325.48	327.67	329.88	332.09	334.33	336.08	337.85	339.63	341.42	343.21	345.02
INVENTORY (KTONS)	0.	0.	0.	0.	0.	0.	0.	0.	0.	0.	0.	0.

COAL2.0U UNLIMITED 24.000 MBTU/TONS ESCALATION 6.1 %/YR INVENTORY 6.1 %/YR UNLOADING 0. C/MBTU
FUEL ID943 RATE CARRYING CHARGE CHARGE
SULFUR CONCENTRATION 0.0 LB/MBTU
MINIMUM AMOUNT 0.0 TONS/DAY

	JAN	FEB	MAR	APR	MAY	JUN	JUL	AUG	SEP	OCT	NOV	DEC
FUEL COST (C/MBTU)	299.28	301.17	303.07	304.98	306.90	308.84	310.37	311.91	313.45	315.00	316.57	318.13
INVENTORY (KTONS)	0.	0.	0.	0.	0.	0.	0.	0.	0.	0.	0.	0.

COAL >2U UNLIMITED 24.000 MBTU/TONS ESCALATION 5.6 %/YR INVENTORY 5.6 %/YR UNLOADING 0. C/MBTU
FUEL ID944 RATE CARRYING CHARGE CHARGE
SULFUR CONCENTRATION 0.0 LB/MBTU
MINIMUM AMOUNT 0.0 TONS/DAY

	JAN	FEB	MAR	APR	MAY	JUN	JUL	AUG	SEP	OCT	NOV	DEC
FUEL COST (C/MBTU)	260.58	261.77	262.97	264.17	265.37	266.59	267.80	269.03	270.26	271.49	272.73	273.97
INVENTORY (KTONS)	0.	0.	0.	0.	0.	0.	0.	0.	0.	0.	0.	0.

COAL1.0D UNLIMITED 25.000 MBTU/TONS ESCALATION 6.5 %/YR INVENTORY 6.5 %/YR UNLOADING 0. C/MBTU
FUEL ID951 RATE CARRYING CHARGE CHARGE
SULFUR CONCENTRATION 0.0 LB/MBTU
MINIMUM AMOUNT 0.0 TONS/DAY

	JAN	FEB	MAR	APR	MAY	JUN	JUL	AUG	SEP	OCT	NOV	DEC
FUEL COST (C/MBTU)	355.21	357.25	359.31	361.38	363.47	365.56	367.47	369.40	371.33	373.27	375.22	377.18
INVENTORY (KTONS)	0.	0.	0.	0.	0.	0.	0.	0.	0.	0.	0.	0.

COAL1.4O UNLIMITED 24.000 MBTU/TONS ESCALATION 6.5 %/YR INVENTORY 6.5 %/YR UNLOADING 0. C/MBTU
FUEL ID952 RATE CARRYING CHARGE CHARGE
SULFUR CONCENTRATION 0.0 LB/MBTU
MINIMUM AMOUNT 0.0 TONS/DAY

	JAN	FEB	MAR	APR	MAY	JUN	JUL	AUG	SEP	OCT	NOV	DEC
FUEL COST (C/MBTU)	351.17	353.46	355.80	358.14	360.49	362.86	364.76	366.66	368.58	370.51	372.45	374.40
INVENTORY (KTONS)	0.	0.	0.	0.	0.	0.	0.	0.	0.	0.	0.	0.

********** FUEL CATEGORY INPUT SUMMARY [illegible] 1990 **********

COAL2.0D UNLIMITED 24.000 MBTU/TONS ESCALATION RATE 6.1 %/YR INVENTORY CARRYING CHARGE 6.1 %/YR UNLOADING CHARGE 0. C/MBTU
FUEL ID953
SULFUR CONCENTRATION 0.0 LB/MBTU
MINIMUM AMOUNT 0.0 TONS/DAY

	JAN	FEB	MAR	APR	MAY	JUN	JUL	AUG	SEP	OCT	NOV	DEC
FUEL COST (C/MBTU)	327.14	329.16	331.19	333.24	335.30	337.37	339.04	340.72	342.41	344.10	345.80	347.51
INVENTORY (KTONS)	0.	0.	0.	0.	0.	0.	0.	0.	0.	0.	0.	0.

COAL >20 UNLIMITED 24.000 MBTU/TONS ESCALATION RATE 5.7 %/YR INVENTORY CARRYING CHARGE 5.7 %/YR UNLOADING CHARGE 0. C/MBTU
FUEL ID954
SULFUR CONCENTRATION 0.0 LB/MBTU
MINIMUM AMOUNT 0.0 TONS/DAY

	JAN	FEB	MAR	APR	MAY	JUN	JUL	AUG	SEP	OCT	NOV	DEC
FUEL COST (C/MBTU)	297.74	299.11	300.49	301.87	303.26	304.66	306.06	307.47	308.89	310.31	311.74	313.18
INVENTORY (KTONS)	0.	0.	0.	0.	0.	0.	0.	0.	0.	0.	0.	0.

URANIUM2 UNLIMITED 1.000 MBTU/MBTU ESCALATION RATE 6.0 %/YR INVENTORY CARRYING CHARGE 6.0 %/YR UNLOADING CHARGE 0. C/MBTU
FUEL ID962
SULFUR CONCENTRATION 0.0 [illegible]BTU
MINIMUM AMOUNT 0.

SEE PAGES 341-342 @ END OF THIS SECTION

	JAN	FEB	JUN	JUL	AUG	SEP	OCT	NOV	DEC
FUEL COST (C/MBTU)	92.81	93.26	[illegible]	[illegible].56	96.02	96.49	96.96	97.43	97.91
INVENTORY (KMBTU)	0.	0.	[illegible]	0.	0.	0.	0.	0.	0.

URANIUM3 UNLIMITED 1.000 MBTU/MB[illegible] INVENTORY CARRYING CHARGE 6.0 %/YR UNLOADING CHARGE 0. C/MBTU
FUEL ID963
SULFUR CONCENTRATION 0.0 LB/MBTU
MINIMUM AMOUNT 0.0 MBTU/DAY

	JAN	FEB	MAR	APR	MAY	JUN	JUL	AUG	SEP	OCT	NOV	DEC
FUEL COST (C/MBTU)	106.42	106.94	107.46	107.98	108.51	109.04	109.57	110.10	110.64	111.18	111.72	112.26
INVENTORY (KMBTU)	0.	0.	0.	0.	0.	0.	0.	0.	0.	0.	0.	0.

URANIUM5 UNLIMITED 1.000 MBTU/MBTU ESCALATION RATE 6.0 %/YR INVENTORY CARRYING CHARGE 6.0 %/YR UNLOADING CHARGE 0. C/MBTU
FUEL ID965
SULFUR CONCENTRATION 0.0 LB/MBTU
MINIMUM AMOUNT 0.0 MBTU/DAY

	JAN	FEB	MAR	APR	MAY	JUN	JUL	AUG	SEP	OCT	NOV	DEC
FUEL COST (C/MBTU)	108.54	109.07	109.60	110.13	110.67	111.21	111.75	112.29	112.84	113.39	113.94	114.49
INVENTORY (KMBTU)	0.	0.	0.	0.	0.	0.	0.	0.	0.	0.	0.	0.

********** FUEL CATEGORY INPUT SUMMARY FOR [redacted] **********

URANIUM7 UNLIMITED 1.000 MBTU/MBTU ESCALATION RATE 6.0 %/YR INVENTORY CARRYING CHARGE 6.0 %/YR UNLOADING CHARGE 0. C/MBTU
FUEL ID967
SULFUR CONCENTRATION 0.0 LB/MBTU
MINIMUM AMOUNT 0.0 MBTU/DAY

	JAN	FEB	MAR	APR	MAY	JUN	JUL	AUG	SEP	OCT	NOV	DEC
FUEL COST (C/MBTU)	101.02	101.51	102.00	102.50	103.00	103.50	104.00	104.51	105.02	105.53	106.04	106.56
INVENTORY(KMBTU)	0.	0.	0.	0.	0.	0.	0.	0.	0.	0.	0.	0.

NATGASU UNLIMITED 8.930 MBTU/MCF ESCALATION RATE 9.5 %/YR INVENTORY CARRYING CHARGE 9.5 %/YR UNLOADING CHARGE 0. C/MBTU
FUEL ID970
SULFUR CONCENTRATION 0.0 LB/MBTU
MINIMUM AMOUNT 0.0 MCF /DAY

	JAN	FEB	MAR	APR	MAY	JUN	JUL	AUG	SEP	OCT	NOV	DEC
FUEL COST (C/MBTU)	782.55	790.36	798.26	806.24	814.29	822.43	828.65	834.92	841.24	847.60	854.02	860.48
INVENTORY(KMCF)	0.	0.	0.	0.	0.	0.	0.	0.	0.	0.	0.	0.

NATGASD UNLIMITED 8.930 [illegible]/YR INVENTORY CARRYING CHARGE 9.3 %/YR UNLOADING CHARGE 0. C/MBTU
FUEL ID971
SULFUR CONCENTRATION 0.0 [illegible]
MINIMUM AMOUNT 0.0 M[illegible]

SEE PAGES 341-342 @ END OF this SECTION

	JAN	FEB	MAR	APR	MAY	JUN	JUL	AUG	SEP	OCT	NOV	DEC
FUEL COST (C/MBTU)	794.16	801.87	809.64	817.50	825.43	[illegible]	[illegible]	845.90	852.20	858.56	864.95	871.40
INVENTORY(KMCF)	0.	0.	0.	0.	0.	0.	[illegible]	0.	0.	0.	0.	0.

DIS OILR UNLIMITED 5.400 MBTU/BBLS ESCALATION RATE 7.6 %/YR INVENTORY CARRYING CHARGE 7.6 %/YR UNLOADING CHARGE 0. C/MBTU
FUEL ID536
SULFUR CONCENTRATION 0.0 LB/MBTU
MINIMUM AMOUNT 0.0 BBLS/DAY

	JAN	FEB	MAR	APR	MAY	JUN	JUL	AUG	SEP	OCT	NOV	DEC
FUEL COST (C/MBTU)	1066.33	1072.18	1078.06	1083.98	1089.93	1095.91	1102.66	1109.45	1116.27	1123.15	1130.06	1137.02
INVENTORY(KBBLS)	0.	0.	0.	0.	0.	0.	0.	0.	0.	0.	0.	0.

DIS OILA UNLIMITED 5.300 MBTU/BBLS ESCALATION RATE 7.4 %/YR INVENTORY CARRYING CHARGE 7.4 %/YR UNLOADING CHARGE 0. C/MBTU
FUEL ID537
SULFUR CONCENTRATION 0.0 LB/MBTU
MINIMUM AMOUNT 0.0 BBLS/DAY

	JAN	FEB	MAR	APR	MAY	JUN	JUL	AUG	SEP	OCT	NOV	DEC
FUEL COST (C/MBTU)	1284.63	1291.54	1298.49	1305.49	1312.50	1319.56	1327.41	1335.30	1343.23	1351.22	1359.25	1367.33
INVENTORY(KBBLS)	0.	0.	0.	0.	0.	0.	0.	0.	0.	0.	0.	0.

********** FUEL CATEGORY INPUT SUMMARY FOR 1990 **********

LFCL 1.8 UNLIMITED 25.000 MBTU/TONS ESCALATION RATE 6.1 %/YR INVENTORY CARRYING CHARGE 6.1 %/YR UNLOADING CHARGE 0. C/MBTU
FUEL ID510
SULFUR CONCENTRATION 0.0 LB/MBTU
MINIMUM AMOUNT 0.0 TONS/DAY

	JAN	FEB	MAR	APR	MAY	JUN	JUL	AUG	SEP	OCT	NOV	DEC
FUEL COST (C/MBTU)	353.26	355.49	357.74	360.00	362.28	364.56	366.37	368.18	369.99	371.82	373.66	375.50
INVENTORY(KTONS)	0.	0.	0.	0.	0.	0.	0.	0.	0.	0.	0.	0.

HFCL 1.8 UNLIMITED 25.000 MBTU/TONS ESCALATION RATE 6.1 %/YR INVENTORY CARRYING CHARGE 6.1 %/YR UNLOADING CHARGE 0. C/MBTU
FUEL ID511
SULFUR CONCENTRATION 0.0 LB/MBTU
MINIMUM AMOUNT 0.0 TONS/DAY

	JAN	FEB	MAR	APR	MAY	JUN	JUL	AUG	SEP	OCT	NOV	DEC
FUEL COST (C/MBTU)	294.61	296.48	298.36	300.25	302.15	304.06	305.57	307.08	308.60	310.13	311.67	313.22
INVENTORY(KTONS)	0.	0.	0.	0.	0.	0.	0.	0.	0.	0.	0.	0.

COAL2.4 UNLIMITED 25.000 MBTU/TONS ESCALATION RATE 5.6 %/YR INVENTORY CARRYING CHARGE 5.6 %/YR UNLOADING CHARGE 0. C/MBTU
FUEL ID514
SULFUR CONCENTRATION 0.0 LB/MBTU
MINIMUM AMOUNT 0.0 TONS/DAY

	JAN	FEB	MAR	APR	MAY	JUN	JUL	AUG	SEP	OCT	NOV	DEC
FUEL COST (C/MBTU)	254.38	255.54	256.71	257.88	259.06	260.24	261.42	262.62	263.81	265.02	266.22	267.44
INVENTORY(KTONS)	0.	0.	0.	0.	0.	0.	0.	0.	0.	0.	0.	0.

NATGAS A UNLIMITED 1.000 MBTU/DT ESCALATION RATE 9.3 %/YR INVENTORY CARRYING CHARGE 9.3 %/YR UNLOADING CHARGE 0. C/MBTU
FUEL ID580
SULFUR CONCENTRATION 0.0 LB/MBTU
MINIMUM AMOUNT 0.0 DT /DAY

	JAN	FEB	MAR	APR	MAY	JUN	JUL	AUG	SEP	OCT	NOV	DEC
FUEL COST (C/MBTU)	814.14	821.63	829.18	836.81	844.50	852.27	858.59	864.96	871.38	877.85	884.36	890.93
INVENTORY(KDT)	0.	0.	0.	0.	0.	0.	0.	0.	0.	0.	0.	0.

*********** FUEL CATEGORY INPUT SUMMARY FOR 1990 ***********

COAL2.0D UNLIMITED 24.000 MBTU/TONS ESCALATION RATE 6.1 %/YR INVENTORY CARRYING CHARGE 6.1 %/YR UNLOADING CHARGE 0. C/MBTU
FUEL ID953
SULFUR CONCENTRATION 0.0 LB/MBTU
MINIMUM AMOUNT 0.0 TONS/DAY

	JAN	FEB	MAR	APR	MAY	JUN	JUL	AUG	SEP	OCT	NOV	DEC
FUEL COST (C/MBTU)	327.14	329.16	331.19	333.24	335.30	337.37	339.04	340.72	342.41	344.10	345.80	347.51
INVENTORY(KTONS)	0.	0.	0.	0.	0.	0.	0.	0.	0.	0.	0.	0.

COAL >2D UNLIMITED 24.000 MBTU/TONS ESCALATION RATE 5.7 %/YR INVENTORY CARRYING CHARGE 5.7 %/YR UNLOADING CHARGE 0. C/MBTU
FUEL ID954
SULFUR CONCENTRATION 0.0 LB/MBTU
MINIMUM AMOUNT 0.0 TONS/DAY

	JAN	FEB	MAR	APR	MAY	JUN	JUL	AUG	SEP	OCT	NOV	DEC
FUEL COST (C/MBTU)	297.74	299.11	300.49	301.87	303.26	304.66	306.06	307.47	308.89	310.31	311.74	313.18
INVENTORY(KTONS)	0.	0.	0.	0.	0.	0.	0.	0.	0.	0.	0.	0.

URANIUM2 UNLIMITED 1.000 MBTU/MBTU ESCALATION RATE 6.0 %/YR INVENTORY CARRYING CHARGE 6.0 %/YR UNLOADING CHARGE 0. C/MBTU
FUEL ID962
SULFUR CONCENTRATION 0.0 LB/MBTU
MINIMUM AMOUNT 0.0 MBTU/DAY

	JAN	FEB	MAR	APR	MAY	JUN	JUL	AUG	SEP	OCT	NOV	DEC
FUEL COST (C/MBTU)	64.99	65.31	65.62	65.94	66.26	66.59	66.91	67.24	67.56	67.89	68.22	68.56
INVENTORY(KMBTU)	0.	0.	0.	0.	0.	0.	0.	0.	0.	0.	0.	0.

URANIUM3 UNLIMITED 1.000 MBTU/MBTU ESCALATION RATE 6.0 %/YR INVENTORY CARRYING CHARGE 6.0 %/YR UNLOADING CHARGE 0. C/MBTU
FUEL ID963
SULFUR CONCENTRATION 0.0 LB/MBTU
MINIMUM AMOUNT 0.0 MBTU/DAY

	JAN	FEB	MAR	APR	MAY	JUN	JUL	AUG	SEP	OCT	NOV	DEC
FUEL COST (C/MBTU)	74.09	74.45	74.81	75.18	75.54	75.91	76.28	76.65	77.02	77.40	77.77	78.15
INVENTORY(KMBTU)	0.	0.	0.	0.	0.	0.	0.	0.	0.	0.	0.	0.

URANIUM5 UNLIMITED 1.000 MBTU/MBTU ESCALATION RATE 6.0 %/YR INVENTORY CARRYING CHARGE 6.0 %/YR UNLOADING CHARGE 0. C/MBTU
FUEL ID965
SULFUR CONCENTRATION 0.0 LB/MBTU
MINIMUM AMOUNT 0.0 MBTU/DAY

	JAN	FEB	MAR	APR	MAY	JUN	JUL	AUG	SEP	OCT	NOV	DEC
FUEL COST (C/MBTU)	75.39	75.76	76.12	76.49	76.87	77.24	77.62	77.99	78.37	78.76	79.14	79.52
INVENTORY(KMBTU)	0.	0.	0.	0.	0.	0.	0.	0.	0.	0.	0.	0.

********** FUEL CATEGORY INPUT SUMMARY [illegible] 1990 **********

URANIUM7 UNLIMITED 1.000 MBTU/MBTU ESCALATION 6.0 %/YR INVENTORY 6.0 %/YR UNLOADING 0. C/MBTU
FUEL ID967 RATE CARRYING CHARGE CHARGE
SULFUR CONCENTRATION 0.0 LB/MBTU
MINIMUM AMOUNT 0.0 MBTU/DAY

	JAN	FEB	MAR	APR	MAY	JUN	JUL	AUG	SEP	OCT	NOV	DEC
FUEL COST (C/MBTU)	70.19	70.53	70.87	71.22	71.57	71.91	72.26	72.62	72.97	73.32	73.68	74.04
INVENTORY(KMBTU)	0.	0.	0.	0.	0.	0.	0.	0.	0.	0.	0.	0.

NATGASU UNLIMITED 8.930 MBTU/MCF ESCALATION 9.5 %/YR INVENTORY 9.5 %/YR UNLOADING 0. C/MBTU
FUEL ID970 RATE CARRYING CHARGE CHARGE
SULFUR CONCENTRATION 0.0 LB/MBTU
MINIMUM AMOUNT 0.0 MCF /DAY

	JAN	FEB	MAR	APR	MAY	JUN	JUL	AUG	SEP	OCT	NOV	DEC
FUEL COST (C/MBTU)	782.55	790.36	798.26	806.24	814.29	822.43	828.65	834.92	841.24	847.60	854.02	860.48
INVENTORY(KMCF)	0.	0.	0.	0.	0.	0.	0.	0.	0.	0.	0.	0.

NATGASU UNLIMITED 8.930 MBTU/MCF ESCALATION 9.3 %/YR INVENTORY 9.3 %/YR UNLOADING 0. C/MBTU
FUEL ID971 RATE CARRYING CHARGE CHARGE
SULFUR CONCENTRATION 0.0 LB/MBTU
MINIMUM AMOUNT 0.0 MCF /DAY

	JAN	FEB	MAR	APR	MAY	JUN	JUL	AUG	SEP	OCT	NOV	DEC
FUEL COST (C/MBTU)	794.16	801.87	809.64	817.50	825.43	833.43	839.64	845.90	852.20	858.56	864.95	871.40
INVENTORY(KMCF)	0.	0.	0.	0.	0.	0.	0.	0.	0.	0.	0.	0.

DIS OILR UNLIMITED 5.400 MBTU/BBLS ESCALATION 7.6 %/YR INVENTORY 7.6 %/YR UNLOADING 0. C/MBTU
FUEL ID536 RATE CARRYING CHARGE CHARGE
SULFUR CONCENTRATION 0.0 LB/MBTU
MINIMUM AMOUNT 0.0 BBLS/DAY

	JAN	FEB	MAR	APR	MAY	JUN	JUL	AUG	SEP	OCT	NOV	DEC
FUEL COST (C/MBTU)	1066.33	1072.18	1078.06	1083.98	1089.93	1095.91	1102.66	1109.45	1116.27	1123.15	1130.06	1137.02
INVENTORY(KBBLS)	0.	0.	0.	0.	0.	0.	0.	0.	0.	0.	0.	0.

DIS OILA UNLIMITED 5.300 MBTU/BBLS ESCALATION 7.4 %/YR INVENTORY 7.4 %/YR UNLOADING 0. C/MBTU
FUEL ID537 RATE CARRYING CHARGE CHARGE
SULFUR CONCENTRATION 0.0 LB/MBTU
MINIMUM AMOUNT 0.0 BBLS/DAY

	JAN	FEB	MAR	APR	MAY	JUN	JUL	AUG	SEP	OCT	NOV	DEC
FUEL COST (C/MBTU)	1284.63	1291.54	1298.49	1305.48	1312.50	1319.56	1327.41	1335.30	1343.23	1351.22	1359.25	1367.33
INVENTORY(KBBLS)	0.	0.	0.	0.	0.	0.	0.	0.	0.	0.	0.	0.

********** FUEL CATEGORY INPUT SUMMARY FOR 1990 **********

OH FUEL UNLIMITED 1.000 MBTU/TONS ESCALATION RATE 7.0 %/YR INVENTORY CARRYING CHARGE 7.0 %/YR UNLOADING CHARGE 0. C/MBTU
FUEL ID998
SULFUR CONCENTRATION 0.0 LB/MBTU
MINIMUM AMOUNT 0.0 TONS/DAY

	JAN	FEB	MAR	APR	MAY	JUN	JUL	AUG	SEP	OCT	NOV	DEC
FUEL COST (C/MBTU)	513.50	517.20	520.90	524.70	487.80	491.30	494.80	499.10	503.40	507.80	554.90	559.70
INVENTORY(KTONS)	0.	0.	0.	0.	0.	0.	0.	0.	0.	0.	0.	0.

OH FUEL UNLIMITED 1.000 MBTU/TONS ESCALATION RATE 7.0 %/YR INVENTORY CARRYING CHARGE 7.0 %/YR UNLOADING CHARGE 0. C/MBTU
FUEL ID999
SULFUR CONCENTRATION 0.0 LB/MBTU
MINIMUM AMOUNT 0.0 TONS/DAY

	JAN	FEB	MAR	APR	MAY	JUN	JUL	AUG	SEP	OCT	NOV	DEC
FUEL COST (C/MBTU)	592.50	596.80	601.10	605.40	569.10	573.20	577.30	582.30	587.30	592.40	640.20	645.80
INVENTORY(KTONS)	0.	0.	0.	0.	0.	0.	0.	0.	0.	0.	0.	0.

RES 0.7U UNLIMITED 6.200 MBTU/BBLS ESCALATION RATE 9.4 %/YR INVENTORY CARRYING CHARGE 9.4 %/YR UNLOADING CHARGE 0. C/MBTU
FUEL ID902
SULFUR CONCENTRATION 0.0 LB/MBTU
MINIMUM AMOUNT 0.0 BBLS/DAY

	JAN	FEB	MAR	APR	MAY	JUN	JUL	AUG	SEP	OCT	NOV	DEC
FUEL COST (C/MBTU)	1228.41	1240.42	1252.56	1264.81	1277.18	1289.67	1299.37	1309.14	1318.98	1328.90	1338.89	1348.95
INVENTORY(KBBLS)	0.	0.	0.	0.	0.	0.	0.	0.	0.	0.	0.	0.

RES 1.0U UNLIMITED 6.220 MBTU/BBLS ESCALATION RATE 9.6 %/YR INVENTORY CARRYING CHARGE 9.6 %/YR UNLOADING CHARGE 0. C/MBTU
FUEL ID903
SULFUR CONCENTRATION 0.0 LB/MBTU
MINIMUM AMOUNT 0.0 BBLS/DAY

	JAN	FEB	MAR	APR	MAY	JUN	JUL	AUG	SEP	OCT	NOV	DEC
FUEL COST (C/MBTU)	1207.96	1220.01	1232.18	1244.47	1256.89	1269.42	1279.13	1288.91	1298.77	1308.70	1318.71	1328.80
INVENTORY(KBBLS)	0.	0.	0.	0.	0.	0.	0.	0.	0.	0.	0.	0.

RES 2.0U UNLIMITED 6.250 MBTU/BBLS ESCALATION RATE 10.0 %/YR INVENTORY CARRYING CHARGE 10.0 %/YR UNLOADING CHARGE 0. C/MBTU
FUEL ID904
SULFUR CONCENTRATION 0.0 LB/MBTU
MINIMUM AMOUNT 0.0 BBLS/DAY

	JAN	FEB	MAR	APR	MAY	JUN	JUL	AUG	SEP	OCT	NOV	DEC
FUEL COST (C/MBTU)	1154.55	1166.64	1178.87	1191.21	1203.69	1216.30	1225.00	1235.78	1245.63	1255.56	1265.57	1275.66
INVENTORY(KBBLS)	0.	0.	0.	0.	0.	0.	0.	0.	0.	0.	0.	0.

********** FUEL CATEGORY INPUT SUMMARY FOR 1990 **********

RES 2.8U UNLIMITED 6.280 MBTU/BBLS ESCALATION RATE 10.3 %/YR INVENTORY CARRYING CHARGE 10.3 %/YR UNLOADING CHARGE 0. C/MBTU
FUEL ID905
SULFUR CONCENTRATION 0.0 LB/MBTU
MINIMUM AMOUNT 0.0 BBLS/DAY

	JAN	FEB	MAR	APR	MAY	JUN	JUL	AUG	SEP	OCT	NOV	DEC
FUEL COST (C/MBTU)	1119.94	1132.11	1144.42	1156.85	1169.43	1182.14	1191.81	1201.57	1211.41	1221.33	1231.33	1241.41
INVENTORY(KBBLS)	0.	0.	0.	0.	0.	0.	0.	0.	0.	0.	0.	0.

DIS OILU UNLIMITED 5.830 MBTU/BBLS ESCALATION RATE 9.9 %/YR INVENTORY CARRYING CHARGE 9.9 %/YR UNLOADING CHARGE 0. C/MBTU
FUEL ID931
SULFUR CONCENTRATION 0.0 LB/MBTU
MINIMUM AMOUNT 0.0 BBLS/DAY

	JAN	FEB	MAR	APR	MAY	JUN	JUL	AUG	SEP	OCT	NOV	DEC
FUEL COST (C/MBTU)	1337.26	1347.79	1358.41	1369.11	1379.90	1390.77	1401.76	1412.85	1424.02	1435.28	1446.63	1458.07
INVENTORY(KBBLS)	0.	0.	0.	0.	0.	0.	0.	0.	0.	0.	0.	0.

RES 0.3D UNLIMITED 6.190 MBTU/BBLS ESCALATION RATE 9.2 %/YR INVENTORY CARRYING CHARGE 9.2 %/YR UNLOADING CHARGE 0. C/MBTU
FUEL ID921
SULFUR CONCENTRATION 0.0 LB/MBTU
MINIMUM AMOUNT 0.0 BBLS/DAY

	JAN	FEB	MAR	APR	MAY	JUN	JUL	AUG	SEP	OCT	NOV	DEC
FUEL COST (C/MBTU)	1223.07	1234.79	1246.61	1258.55	1270.61	1282.78	1292.23	1301.75	1311.34	1321.01	1330.74	1340.54
INVENTORY(KBBLS)	0.	0.	0.	0.	0.	0.	0.	0.	0.	0.	0.	0.

RES 0.7D UNLIMITED 6.200 MBTU/BBLS ESCALATION RATE 9.4 %/YR INVENTORY CARRYING CHARGE 9.4 %/YR UNLOADING CHARGE 0. C/MBTU
FUEL ID922
SULFUR CONCENTRATION 0.0 LB/MBTU
MINIMUM AMOUNT 0.0 BBLS/DAY

	JAN	FEB	MAR	APR	MAY	JUN	JUL	AUG	SEP	OCT	NOV	DEC
FUEL COST (C/MBTU)	1191.99	1203.75	1215.62	1227.61	1239.72	1251.95	1261.40	1270.93	1280.52	1290.19	1299.94	1309.75
INVENTORY(KBBLS)	0.	0.	0.	0.	0.	0.	0.	0.	0.	0.	0.	0.

RES 1.0D UNLIMITED 6.220 MBTU/BBLS ESCALATION RATE 9.6 %/YR INVENTORY CARRYING CHARGE 9.6 %/YR UNLOADING CHARGE 0. C/MBTU
FUEL ID923
SULFUR CONCENTRATION: 0.0 LB/MBTU
MINIMUM AMOUNT 0.0 BBLS/DAY

	JAN	FEB	MAR	APR	MAY	JUN	JUL	AUG	SEP	OCT	NOV	DEC
FUEL COST (C/MBTU)	1171.32	1183.11	1195.02	1207.05	1219.20	1231.47	1240.91	1250.42	1260.00	1269.66	1279.39	1289.19
INVENTORY(KBBLS)	0.	0.	0.	0.	[illegible]	0.	0.	0.	0.	0.	0	0.

********** FUEL CATEGORY INPUT SUMMARY FOR 1990 **********

RES 1.5D UNLIMITED 6.235 MBTU/BBLS ESCALATION RATE 9.8 %/YR INVENTORY CARRYING CHARGE 9.8 %/YR UNLOADING CHARGE 0. C/MBTU
FUEL ID924
SULFUR CONCENTRATION 0.0 LB/MBTU
MINIMUM AMOUNT 0.0 BBLS/DAY

	JAN	FEB	MAR	APR	MAY	JUN	JUL	AUG	SEP	OCT	NOV	DEC
FUEL COST (C/MBTU)	1145.96	1157.81	1169.77	1181.86	1194.07	1206.41	1215.86	1225.38	1234.97	1244.64	1254.39	1264.21
INVENTORY(KBBLS)	0.	0.	0.	0.	0.	0.	0.	0.	0.	0.	0.	0.

RES 2.0D UNLIMITED 6.250 MBTU/BBLS ESCALATION RATE 10.0 %/YR INVENTORY CARRYING CHARGE 10.0 %/YR UNLOADING CHARGE 0. C/MBTU
FUEL ID925
SULFUR CONCENTRATION 0.0 LB/MBTU
MINIMUM AMOUNT 0.0 BBLS/DAY

	JAN	FEB	MAR	APR	MAY	JUN	JUL	AUG	SEP	OCT	NOV	DEC
FUEL COST (C/MBTU)	1118.28	1130.12	1142.09	1154.18	1166.40	1178.74	1188.18	1197.69	1207.28	1216.94	1226.69	1236.50
INVENTORY(KBBLS)	0.	0.	0.	0.	0.	0.	0.	0.	0.	0.	0.	0.

RES 2.8D UNLIMITED 6.280 MBTU/BBLS ESCALATION RATE 10.3 %/YR INVENTORY CARRYING CHARGE 10.3 %/YR UNLOADING CHARGE 0. C/MBTU
FUEL ID926
SULFUR CONCENTRATION 0.0 LB/MBTU
MINIMUM AMOUNT 0.0 BBLS/DAY

	JAN	FEB	MAR	APR	MAY	JUN	JUL	AUG	SEP	OCT	NOV	DEC
FUEL COST (C/MBTU)	1083.47	1095.39	1107.44	1119.62	1131.94	1144.39	1153.79	1163.27	1172.83	1182.47	1192.19	1201.99
INVENTORY(KBBLS)	0.	0.	0.	0.	0.	0.	0.	0.	0.	0.	0.	0.

DIS OILD UNLIMITED 5.830 MBTU/BBLS ESCALATION RATE 9.9 %/YR INVENTORY CARRYING CHARGE 9.9 %/YR UNLOADING CHARGE 0. C/MBTU
FUEL ID935
SULFUR CONCENTRATION 0.0 LB/MBTU
MINIMUM AMOUNT 0.0 BBLS/DAY

	JAN	FEB	MAR	APR	MAY	JUN	JUL	AUG	SEP	OCT	NOV	DEC
FUEL COST (C/MBTU)	1358.36	1369.10	1379.93	1390.84	1401.84	1412.93	1424.10	1435.37	1446.72	1458.17	1469.70	1481.32
INVENTORY(KBBLS)	0.	0.	0.	0.	0.	0.	0.	0.	0.	0.	0.	0.

COAL1.0U UNLIMITED 25.000 MBTU/TONS ESCALATION RATE 8.6 %/YR INVENTORY CARRYING CHARGE 8.6 %/YR UNLOADING CHARGE 0. C/MBTU
FUEL ID941
SULFUR CONCENTRATION 0.0 LB/MBTU
MINIMUM AMOUNT 0.0 TONS/DAY

	JAN	FEB	MAR	APR	MAY	JUN	JUL	AUG	SEP	OCT	NOV	DEC
FUEL COST (C/MBTU)	527.50	531.29	535.11	538.95	542.82	546.72	550.50	554.31	558.14	562.00	565.88	569.79
INVENTORY(KTONS)	0.	0.	0.	0.	0.	0.	0.	0.	0.	0.	0.	0.

*********** FUEL CATEGORY INPUT SUMMARY FOR 1990 ***********

COAL1.4U UNLIMITED 24,000 MBTU/TONS ESCALATION RATE 8.8 %/YR INVENTORY CARRYING CHARGE 8.8 %/YR UNLOADING CHARGE 0. C/MBTU
FUEL ID942
SULFUR CONCENTRATION 0.0 LB/MBTU
MINIMUM AMOUNT 0.0 TONS/DAY

	JAN	FEB	MAR	APR	MAY	JUN	JUL	AUG	SEP	OCT	NOV	DEC
FUEL COST (C/MBTU)	519.39	523.11	526.85	530.62	534.41	538.24	542.02	545.83	549.67	553.53	557.42	561.34
INVENTORY(KTONS)	0.	0.	0.	0.	0.	0.	0.	0.	0.	0.	0.	0.

COAL2.0U UNLIMITED 24,000 MBTU/TONS ESCALATION RATE 9.1 %/YR INVENTORY CARRYING CHARGE 9.1 %/YR UNLOADING CHARGE 0. C/MBTU
FUEL ID943
SULFUR CONCENTRATION 0.0 LB/MBTU
MINIMUM AMOUNT 0.0 TONS/DAY

	JAN	FEB	MAR	APR	MAY	JUN	JUL	AUG	SEP	OCT	NOV	DEC
FUEL COST (C/MBTU)	475.59	478.91	482.25	485.62	489.01	492.42	496.02	499.65	503.30	506.98	510.69	514.42
INVENTORY(KTONS)	0.	0.	0.	0.	0.	0.	0.	0.	0.	0.	0.	0.

COAL >2U UNLIMITED 24,000 MBTU/TONS ESCALATION RATE 10.8 %/YR INVENTORY CARRYING CHARGE 10.8 %/YR UNLOADING CHARGE 0. C/MBTU
FUEL ID944
SULFUR CONCENTRATION 0.0 LB/MBTU
MINIMUM AMOUNT 0.0 TONS/DAY

	JAN	FEB	MAR	APR	MAY	JUN	JUL	AUG	SEP	OCT	NOV	DEC
FUEL COST (C/MBTU)	401.41	404.29	407.18	410.10	413.04	416.00	419.58	423.19	426.84	430.52	434.22	437.96
INVENTORY(KTONS)	0.	0.	0.	0.	0.	0.	0.	0.	0.	0.	0.	0.

COAL1.0D UNLIMITED 25,000 MBTU/TONS ESCALATION RATE 8.5 %/YR INVENTORY CARRYING CHARGE 8.5 %/YR UNLOADING CHARGE 0. C/MBTU
FUEL ID951
SULFUR CONCENTRATION 0.0 LB/MBTU
MINIMUM AMOUNT 0.0 TONS/DAY

	JAN	FEB	MAR	APR	MAY	JUN	JUL	AUG	SEP	OCT	NOV	DEC
FUEL COST (C/MBTU)	554.02	557.95	561.92	565.92	569.94	573.99	577.92	581.88	585.87	589.89	593.93	598.00
INVENTORY(KTONS)	0.	0.	0.	0.	0.	0.	0.	0.	0.	0.	0.	0.

COAL1.4D UNLIMITED 24,000 MBTU/TONS ESCALATION RATE 8.7 %/YR INVENTORY CARRYING CHARGE 8.7 %/YR UNLOADING CHARGE 0. C/MBTU
FUEL ID952
SULFUR CONCENTRATION 0.0 LB/MBTU
MINIMUM AMOUNT 0.0 TONS/DAY

	JAN	FEB	MAR	APR	MAY	JUN	JUL	AUG	SEP	OCT	NOV	DEC
FUEL COST (C/MBTU)	550.90	554.79	558.71	562.65	566.63	570.63	574.60	578.59	582.62	586.67	590.75	594.86
INVENTORY(KTONS)	0.	0.	0.	0.	0.	0.	0.	0.	0.	0.	0.	0.

*********** FUEL CATEGORY INPUT SUMMARY FOR 1990 ***********

COAL2.00 UNLIMITED 24.000 MBTU/TONS ESCALATION RATE 9.0 %/YR INVENTORY CARRYING CHARGE 9.0 %/YR UNLOADING CHARGE 0. C/MBTU
FUEL ID953
SULFUR CONCENTRATION 0.0 LB/MBTU
MINIMUM AMOUNT 0.0 TONS/DAY

	JAN	FEB	MAR	APR	MAY	JUN	JUL	AUG	SEP	OCT	NOV	DEC
FUEL COST (C/MBTU)	507.11	510.61	514.13	517.67	521.24	524.84	528.62	532.44	536.28	540.15	544.04	547.97
INVENTORY(KTONS)	0.	0.	0.	0.	0.	0.	0.	0.	0.	0.	0.	0.

COAL >2D UNLIMITED 24.000 MBTU/TONS ESCALATION RATE 10.5 %/YR INVENTORY CARRYING CHARGE 10.5 %/YR UNLOADING CHARGE 0. C/MBTU
FUEL ID954
SULFUR CONCENTRATION 0.0 LB/MBTU
MINIMUM AMOUNT 0.0 TONS/DAY

	JAN	FEB	MAR	APR	MAY	JUN	JUL	AUG	SEP	OCT	NOV	DEC
FUEL COST (C/MBTU)	447.91	451.04	454.20	457.38	460.58	463.81	467.67	471.57	475.50	479.46	483.46	487.48
INVENTORY(KTONS)	0.	0.	0.	0.	0.	0.	0.	0.	0.	0.	0.	0.

URANIUM2 UNLIMITED 1.000 MBTU/MBTU ESCALATION RATE 7.0 %/YR INVENTORY CARRYING CHARGE 7.0 %/YR UNLOADING CHARGE 0. C/MBTU
FUEL ID962
SULFUR CONCENTRATION 0.0 LB/MBTU
MINIMUM AMOUNT 0.0 MBTU/DAY

	JAN	FEB	MAR	APR	MAY	JUN	JUL	AUG	SEP	OCT	NOV	DEC
FUEL COST (C/MBTU)	96.90	97.44	97.99	98.55	99.11	99.67	100.23	100.80	101.37	101.94	102.52	103.10
INVENTORY(KMBTU)	0.	0.	0.	0.	0.	0.	0.	0.	0.	0.	0.	0.

URANIUM3 UNLIMITED 1.000 MBTU/MBTU ESCALATION RATE 7.0 %/YR INVENTORY CARRYING CHARGE 7.0 %/YR UNLOADING CHARGE 0. C/MBTU
FUEL ID963
SULFUR CONCENTRATION 0.0 LB/MBTU
MINIMUM AMOUNT 0.0 MBTU/DAY

	JAN	FEB	MAR	APR	MAY	JUN	JUL	AUG	SEP	OCT	NOV	DEC
FUEL COST (C/MBTU)	111.10	111.73	112.36	113.00	113.64	114.28	114.93	115.58	116.23	116.89	117.55	118.21
INVENTORY(KMBTU)	0.	0.	0.	0.	0.	0.	0.	0.	0.	0.	0.	0.

URANIUM5 UNLIMITED 1.000 MBTU/MBTU ESCALATION RATE 7.0 %/YR INVENTORY CARRYING CHARGE 7.0 %/YR UNLOADING CHARGE 0. C/MBTU
FUEL ID965
SULFUR CONCENTRATION 0.0 LB/MBTU
MINIMUM AMOUNT 0.0 MBTU/DAY

	JAN	FEB	MAR	APR	MAY	JUN	JUL	AUG	SEP	OCT	NOV	DEC
FUEL COST (C/MBTU)	113.31	113.95	114.60	115.24	115.90	116.55	117.21	117.87	118.54	119.21	119.88	120.56
INVENTORY(KMBTU)	0.	0.	0.	0.	0.	0.	0.	0.	0.	0.	0.	0.

********** FUEL CATEGORY INPUT SUMMARY FOR 1990 **********

URANIUM7 UNLIMITED 1.000 MBTU/MBTU ESCALATION RATE 7.0 %/YR INVENTORY CARRYING CHARGE 7.0 %/YR UNLOADING CHARGE 0. C/MBTU
FUEL ID967
SULFUR CONCENTRATION 0.0 LB/MBTU
MINIMUM AMOUNT 0.0 MBTU/DAY

	JAN	FEB	MAR	APR	MAY	JUN	JUL	AUG	SEP	OCT	NOV	DEC
FUEL COST (C/MBTU)	105.46	106.05	106.65	107.26	107.86	108.47	109.09	109.70	110.32	110.95	111.58	112.21
INVENTORY(KMBTU)	0.	0.	0.	0.	0.	0.	0.	0.	0.	0.	0.	0.

NATGASU UNLIMITED 8.930 MBTU/MCF ESCALATION RATE 10.2 %/YR INVENTORY CARRYING CHARGE 10.2 %/YR UNLOADING CHARGE 0. C/MBTU
FUEL ID970
SULFUR CONCENTRATION 0.0 LB/MBTU
MINIMUM AMOUNT 0.0 MCF /DAY

	JAN	FEB	MAR	APR	MAY	JUN	JUL	AUG	SEP	OCT	NOV	DEC
FUEL COST (C/MBTU)	1072.51	1083.31	1094.21	1105.22	1116.35	1127.58	1136.79	1146.07	1155.43	1164.86	1174.37	1183.96
INVENTORY(KMCF)	0.	0.	0.	0.	0.	0.	0.	0.	0.	0.	0.	0.

NATGASD UNLIMITED 8.930 MBTU/MCF ESCALATION RATE 10.0 %/YR INVENTORY CARRYING CHARGE 10.0 %/YR UNLOADING CHARGE 0. C/MBTU
FUEL ID971
SULFUR CONCENTRATION 0.0 LB/MBTU
MINIMUM AMOUNT 0.0 MCF /DAY

	JAN	FEB	MAR	APR	MAY	JUN	JUL	AUG	SEP	OCT	NOV	DEC
FUEL COST (C/MBTU)	1094.17	1104.70	1115.33	1126.06	1136.90	1147.84	1157.03	1166.30	1175.65	1185.07	1194.56	1204.13
INVENTORY(KMCF)	0.	0.	0.	0.	0.	0.	0.	0.	0.	0.	0.	0.

DIS OILR UNLIMITED 5.400 MBTU/BBLS ESCALATION RATE 7.6 %/YR INVENTORY CARRYING CHARGE 7.6 %/YR UNLOADING CHARGE 0. C/MBTU
FUEL ID536
SULFUR CONCENTRATION 0.0 LB/MBTU
MINIMUM AMOUNT 0.0 BBLS/DAY

	JAN	FEB	MAR	APR	MAY	JUN	JUL	AUG	SEP	OCT	NOV	DEC
FUEL COST (C/MBTU)	1066.33	1072.18	1078.06	1083.98	1089.93	1095.91	1102.66	1109.45	1116.27	1123.15	1130.06	1137.02
INVENTORY(KBBLS)	0.	0.	0.	0.	0.	0.	0.	0.	0.	0.	0.	0.

DIS OILA UNLIMITED 5.300 MBTU/BBLS ESCALATION RATE 7.4 %/YR INVENTORY CARRYING CHARGE 7.4 %/YR UNLOADING CHARGE 0. C/MBTU
FUEL ID537
SULFUR CONCENTRATION 0.0 LB/MBTU
MINIMUM AMOUNT 0.0 BBLS/DAY

	JAN	FEB	MAR	APR	MAY	JUN	JUL	AUG	SEP	OCT	NOV	DEC
FUEL COST (C/MBTU)	1284.63	1291.54	1298.49	1305.46	1312.50	1319.56	1327.41	1335.30	1343.23	1351.22	1359.25	1367.33
INVENTORY(KBBLS)	0.	0.	0.	0.		0.	0.	0.	0.	0.	0	0.

********** FUEL CATEGORY INPUT SUMMARY FOR 1990 **********

LFCL 1.8 UNLIMITED 25.000 MBTU/TONS ESCALATION RATE 9.2 %/YR INVENTORY CARRYING CHARGE 9.2 %/YR UNLOADING CHARGE 0. C/MBTU
FUEL ID510
SULFUR CONCENTRATION 0.0 LB/MBTU
MINIMUM AMOUNT 0.0 TONS/DAY

	JAN	FEB	MAR	APR	MAY	JUN	JUL	AUG	SEP	OCT	NOV	DEC
FUEL COST (C/MBTU)	562.86	566.79	570.75	574.73	578.75	582.79	587.06	591.36	595.70	600.07	604.47	608.90
INVENTORY(KTONS)	0.	0.	0.	0.	0.	0.	0.	0.	0.	0.	0.	0.

HFCL 1.8 UNLIMITED 25.000 MBTU/TONS ESCALATION RATE 9.2 %/YR INVENTORY CARRYING CHARGE 9.2 %/YR UNLOADING CHARGE 0. C/MBTU
FUEL ID511
SULFUR CONCENTRATION 0.0 LB/MBTU
MINIMUM AMOUNT 0.0 TONS/DAY

	JAN	FEB	MAR	APR	MAY	JUN	JUL	AUG	SEP	OCT	NOV	DEC
FUEL COST (C/MBTU)	469.01	472.30	475.60	478.93	482.29	485.67	489.23	492.81	496.43	500.07	503.73	507.43
INVENTORY(KTONS)	0.	0.	0.	0.	0.	0.	0.	0.	0.	0.	0.	0.

COAL2.4 UNLIMITED 25.000 MBTU/TONS ESCALATION RATE 10.9 %/YR INVENTORY CARRYING CHARGE 10.9 %/YR UNLOADING CHARGE 0. C/MBTU
FUEL ID514
SULFUR CONCENTRATION 0.0 LB/MBTU
MINIMUM AMOUNT 0.0 TONS/DAY

	JAN	FEB	MAR	APR	MAY	JUN	JUL	AUG	SEP	OCT	NOV	DEC
FUEL COST (C/MBTU)	394.84	397.68	400.54	403.42	406.32	409.25	412.79	416.36	419.97	423.60	427.27	430.97
INVENTORY(KTONS)	0.	0.	0.	0.	0.	0.	0.	0.	0.	0.	0.	0.

NATGAS A UNLIMITED 1.000 MBTU/DT ESCALATION RATE 10.1 %/YR INVENTORY CARRYING CHARGE 10.1 %/YR UNLOADING CHARGE 0. C/MBTU
FUEL ID580
SULFUR CONCENTRATION 0.0 LB/MBTU
MINIMUM AMOUNT 0.0 DT /DAY

	JAN	FEB	MAR	APR	MAY	JUN	JUL	AUG	SEP	OCT	NOV	DEC
FUEL COST (C/MBTU)	1099.46	1110.30	1121.22	1132.26	1143.40	1154.65	1163.96	1173.35	1182.82	1192.35	1201.97	1211.67
INVENTORY(KDT.)	0.	0.	0.	0.	0.	0.	0.	0.	0.	0.	0.	0.

BEGIN PROCESSING FOR YEAR 1991 MONTH 1 FOR PASS 0
BEGIN PROCESSING FOR YEAR 1991 MONTH 2 FOR PASS 0
BEGIN PROCESSING FOR YEAR 1991 MONTH 3 FOR PASS 0
BEGIN PROCESSING FOR YEAR 1991 MONTH 4 FOR PASS 0
BEGIN PROCESSING FOR YEAR 1991 MONTH 5 FOR PASS 0
BEGIN PROCESSING FOR YEAR 1991 MONTH 6 FOR PASS 0
BEGIN PROCESSING FOR YEAR 1991 MONTH 7 FOR PASS 0
BEGIN PROCESSING FOR YEAR 1991 MONTH 8 FOR PASS 0
BEGIN PROCESSING FOR YEAR 1991 MONTH 9 FOR PASS 0
BEGIN PROCESSING FOR YEAR 1991 MONTH 10 FOR PASS 0
BEGIN PROCESSING FOR YEAR 1991 MONTH 11 FOR PASS 0

BEGIN PROCESSING FOR YEAR 1991 MONTH 12 FOR PASS 0

1991

********** FUEL CATEGORY INPUT SUMMARY FOR 1991 **********

OH FUEL UNLIMITED 1.000 MBTU/TONS ESCALATION RATE 7.0 %/YR INVENTORY CARRYING CHARGE 7.0 %/YR UNLOADING CHARGE 0. C/MBTU
FUEL ID998
SULFUR CONCENTRATION 0.0 LB/MBTU
MINIMUM AMOUNT 0.0 TONS/DAY

	JAN	FEB	MAR	APR	MAY	JUN	JUL	AUG	SEP	OCT	NOV	DEC
FUEL COST (C/MBTU)	349.30	350.80	352.40	354.10	328.30	329.80	331.30	332.80	334.30	335.90	365.50	367.20
INVENTORY(KTONS)	0.	0.	0.	0.	0.	0.	0.	0.	0.	0.	0.	0.

OH FUEL UNLIMITED 1.000 MBTU/TONS ESCALATION RATE 7.0 %/YR INVENTORY CARRYING CHARGE 7.0 %/YR UNLOADING CHARGE 0. C/MBTU
FUEL ID999
SULFUR CONCENTRATION 0.0 LB/MBTU
MINIMUM AMOUNT 0.0 TONS/DAY

	JAN	FEB	MAR	APR	MAY	JUN	JUL	AUG	SEP	OCT	NOV	DEC
FUEL COST (C/MBTU)	403.00	404.80	406.70	408.50	383.00	384.80	386.50	388.30	390.10	391.80	421.70	423.70
INVENTORY(KTONS)	0.	0.	0.	0.	0.	0.	0.	0.	0.	0.	0.	0.

RES 0.7U UNLIMITED 6.200 MBTU/BBLS ESCALATION RATE 7.2 %/YR INVENTORY CARRYING CHARGE 7.2 %/YR UNLOADING CHARGE 0. C/MBTU
FUEL ID902
SULFUR CONCENTRATION 0.0 LB/MBTU
MINIMUM AMOUNT 0.0 BBLS/DAY

	JAN	FEB	MAR	APR	MAY	JUN	JUL	AUG	SEP	OCT	NOV	DEC
FUEL COST (C/MBTU)	889.12	894.29	899.48	904.70	909.96	915.24	920.56	925.91	931.28	936.69	942.13	947.60
INVENTORY(KBBLS)	0.	0.	0.	0.	0.	0.	0.	0.	0.	0.	0.	0.

RES 1.0U UNLIMITED 6.220 MBTU/BBLS ESCALATION RATE 7.4 %/YR INVENTORY CARRYING CHARGE 7.4 %/YR UNLOADING CHARGE 0. C/MBTU
FUEL ID903
SULFUR CONCENTRATION 0.0 LB/MBTU
MINIMUM AMOUNT 0.0 BBLS/DAY

	JAN	FEB	MAR	APR	MAY	JUN	JUL	AUG	SEP	OCT	NOV	DEC
FUEL COST (C/MBTU)	873.47	878.67	883.89	889.14	894.43	899.75	905.10	910.48	915.89	921.34	926.81	932.32
INVENTORY(KBBLS)	0.	0.	0.	0.	0.	0.	0.	0.	0.	0.	0.	0.

RES 2.0U UNLIMITED 6.250 MBTU/BBLS ESCALATION RATE 7.8 %/YR INVENTORY CARRYING CHARGE 7.8 %/YR UNLOADING CHARGE 0. C/MBTU
FUEL ID904
SULFUR CONCENTRATION 0.0 LB/MBTU
MINIMUM AMOUNT 0.0 BBLS/DAY

	JAN	FEB	MAR	APR	MAY	JUN	JUL	AUG	SEP	OCT	NOV	DEC
FUEL COST (C/MBTU)	832.22	837.47	842.75	848.07	853.42	858.80	864.22	869.67	875.16	880.68	886.24	891.83
INVENTORY(KBBLS)	0.	0.	0.	0.	0.	0.	0.	0.	0.	0.	0.	0.

********** FUEL CATEGORY INPUT SUMMARY FOR 1991 **********

RES 2.8U UNLIMITED 6.280 MBTU/BBLS ESCALATION RATE 8.2 %/YR INVENTORY CARRYING CHARGE 8.2 %/YR UNLOADING CHARGE 0. C/MBTU
FUEL ID905
SULFUR CONCENTRATION 0.0 LB/MBTU
MINIMUM AMOUNT 0.0 BBLS/DAY

	JAN	FEB	MAR	APR	MAY	JUN	JUL	AUG	SEP	OCT	NOV	DEC
FUEL COST (C/MBTU)	804.32	809.64	815.00	820.39	825.81	831.27	836.77	842.30	847.87	853.48	859.12	864.80
INVENTORY(KBBLS)	0.	0.	0.	0.	0.	0.	0.	0.	0.	0.	0.	0.

DIS OILU UNLIMITED 5.830 MBTU/BBLS ESCALATION RATE 7.9 %/YR INVENTORY CARRYING CHARGE 7.9 %/YR UNLOADING CHARGE 0. C/MBTU
FUEL ID931
SULFUR CONCENTRATION 0.0 LB/MBTU
MINIMUM AMOUNT 0.0 BBLS/DAY

	JAN	FEB	MAR	APR	MAY	JUN	JUL	AUG	SEP	OCT	NOV	DEC
FUEL COST (C/MBTU)	992.68	998.95	1005.27	1011.62	1018.02	1024.45	1030.93	1037.44	1044.00	1050.60	1057.24	1063.92
INVENTORY(KBBLS)	0.	0.	0.	0.	0.	0.	0.	0.	0.	0.	0.	0.

RES 0.3D UNLIMITED 6.190 MBTU/BBLS ESCALATION RATE 6.9 %/YR INVENTORY CARRYING CHARGE 6.9 %/YR UNLOADING CHARGE 0. C/MBTU
FUEL ID921
SULFUR CONCENTRATION 0.0 LB/MBTU
MINIMUM AMOUNT 0.0 BBLS/DAY

	JAN	FEB	MAR	APR	MAY	JUN	JUL	AUG	SEP	OCT	NOV	DEC
FUEL COST (C/MBTU)	884.49	889.44	894.43	899.44	904.48	909.54	914.64	919.76	924.92	930.10	935.31	940.55
INVENTORY(KBBLS)	0.	0.	0.	0.	0.	0.	0.	0.	0.	0.	0.	0.

RES 0.7D UNLIMITED 6.200 MBTU/BBLS ESCALATION RATE 7.2 %/YR INVENTORY CARRYING CHARGE 7.2 %/YR UNLOADING CHARGE 0. C/MBTU
FUEL ID922
SULFUR CONCENTRATION 0.0 LB/MBTU
MINIMUM AMOUNT 0.0 BBLS/DAY

	JAN	FEB	MAR	APR	MAY	JUN	JUL	AUG	SEP	OCT	NOV	DEC
FUEL COST (C/MBTU)	859.28	864.28	869.30	874.35	879.42	884.53	889.67	894.84	900.04	905.26	910.52	915.81
INVENTORY(KBBLS)	0.	0.	0.	0.	0.	0.	0.	0.	0.	0.	0.	0.

RES 1.0D UNLIMITED 6.220 MBTU/BBLS ESCALATION RATE 7.4 %/YR INVENTORY CARRYING CHARGE 7.4 %/YR UNLOADING CHARGE 0. C/MBTU
FUEL ID923
SULFUR CONCENTRATION 0.0 LB/MBTU
MINIMUM AMOUNT 0.0 BBLS/DAY

	JAN	FEB	MAR	APR	MAY	JUN	JUL	AUG	SEP	OCT	NOV	DEC
FUEL COST (C/MBTU)	843.58	848.60	853.65	858.73	863.84	868.98	874.16	879.36	884.59	889.86	895.15	900.48
INVENTORY(KBBLS)	0.	0.	0.	0.	0.	0.	0.	0.	0.	0.	0.	0.

********** FUEL CATEGORY INPUT SUMMARY 1991 **********

RES 1.5D UNLIMITED 6.235 MBTU/BBLS ESCALATION RATE 7.7 %/YR INVENTORY CARRYING CHARGE 7.7 %/YR UNLOADING CHARGE 0. C/MBTU
FUEL ID924
SULFUR CONCENTRATION 0.0 LB/MBTU
MINIMUM AMOUNT 0.0 BBLS/DAY

	JAN	FEB	MAR	APR	MAY	JUN	JUL	AUG	SEP	OCT	NOV	DEC
FUEL COST (C/MBTU)	821.61	826.68	831.78	836.91	842.08	847.27	852.50	857.76	863.05	868.37	873.73	879.12
INVENTORY(KBBLS)	0.	0.	0.	0.	0.	0.	0.	0.	0.	0.	0.	0.

RES 2.0D UNLIMITED 6.250 MBTU/BBLS ESCALATION RATE 7.9 %/YR INVENTORY CARRYING CHARGE 7.9 %/YR UNLOADING CHARGE 0. C/MBTU
FUEL ID925
SULFUR CONCENTRATION 0.0 LB/MBTU
MINIMUM AMOUNT 0.0 BBLS/DAY

	JAN	FEB	MAR	APR	MAY	JUN	JUL	AUG	SEP	OCT	NOV	DEC
FUEL COST (C/MBTU)	801.00	806.10	811.22	816.39	821.58	826.81	832.07	837.36	842.69	848.05	853.45	858.88
INVENTORY(KBBLS)	0.	0.	0.	0.	0.	0.	0.	0.	0.	0.	0.	0.

RES 2.8D UNLIMITED 6.280 MBTU/BBLS ESCALATION RATE 8.3 %/YR INVENTORY CARRYING CHARGE 8.3 %/YR UNLOADING CHARGE 0. C/MBTU
FUEL ID926
SULFUR CONCENTRATION 0.0 LB/MBTU
MINIMUM AMOUNT 0.0 BBLS/DAY

	JAN	FEB	MAR	APR	MAY	JUN	JUL	AUG	SEP	OCT	NOV	DEC
FUEL COST (C/MBTU)	774.50	779.65	784.83	790.05	795.29	800.58	805.90	811.25	816.64	822.07	827.53	833.03
INVENTORY(KBBLS)	0.	0.	0.	0.	0.	0.	0.	0.	0.	0.	0.	0.

DIS OILD UNLIMITED 5.830 MBTU/BBLS ESCALATION RATE 7.9 %/YR INVENTORY CARRYING CHARGE 7.9 %/YR UNLOADING CHARGE 0. C/MBTU
FUEL ID935
SULFUR CONCENTRATION 0.0 LB/MBTU
MINIMUM AMOUNT 0.0 BBLS/DAY

	JAN	FEB	MAR	APR	MAY	JUN	JUL	AUG	SEP	OCT	NOV	DEC
FUEL COST (C/MBTU)	1006.07	1012.43	1018.84	1025.29	1031.78	1038.31	1044.88	1051.49	1058.15	1064.84	1071.58	1078.36
INVENTORY(KBBLS)	0.	0.	0.	0.	0.	0.	0.	0.	0.	0.	0.	0.

COAL1.0U UNLIMITED 25.000 MBTU/TONS ESCALATION RATE 6.5 %/YR INVENTORY CARRYING CHARGE 6.5 %/YR UNLOADING CHARGE 0. C/MBTU
FUEL ID941
SULFUR CONCENTRATION 0.0 LB/MBTU
MINIMUM AMOUNT 0.0 TONS/DAY

	JAN	FEB	MAR	APR	MAY	JUN	JUL	AUG	SEP	OCT	NOV	DEC
FUEL COST (C/MBTU)	354.54	356.40	358.27	360.16	362.05	363.95	365.86	367.78	369.71	371.65	373.61	375.57
INVENTORY(KTONS)	0.	0.	0.	0.	0.	0.	0.	0.	0.	0.	0.	0.

********** FUEL CATEGORY INPUT SUMMARY FOR 1991 **********

COAL1.4U UNLIMITED 24.000 MBTU/TONS ESCALATION RATE 6.5 %/YR INVENTORY CARRYING CHARGE 6.5 %/YR UNLOADING CHARGE 0. C/MBTU
FUEL ID942
SULFUR CONCENTRATION 0.0 LB/MBTU
MINIMUM AMOUNT 0.0 TONS/DAY

	JAN	FEB	MAR	APR	MAY	JUN	JUL	AUG	SEP	OCT	NOV	DEC
FUEL COST (C/MBTU)	346.83	348.66	350.49	352.34	354.19	356.05	357.93	359.81	361.70	363.61	365.52	367.44
INVENTORY (KTONS)	0.	0.	0.	0.	0.	0.	0.	0.	0.	0.	0.	0.

COAL2.0U UNLIMITED 24.000 MBTU/TONS ESCALATION RATE 6.1 %/YR INVENTORY CARRYING CHARGE 6.1 %/YR UNLOADING CHARGE 0. C/MBTU
FUEL ID943
SULFUR CONCENTRATION 0.0 LB/MBTU
MINIMUM AMOUNT 0.0 TONS/DAY

	JAN	FEB	MAR	APR	MAY	JUN	JUL	AUG	SEP	OCT	NOV	DEC
FUEL COST (C/MBTU)	319.71	321.29	322.88	324.48	326.09	327.71	329.33	330.96	332.60	334.25	335.90	337.57
INVENTORY (KTONS)	0.	0.	0.	0.	0.	0.	0.	0.	0.	0.	0.	0.

COAL >2U UNLIMITED 24.000 MBTU/TONS ESCALATION RATE 5.6 %/YR INVENTORY CARRYING CHARGE 5.6 %/YR UNLOADING CHARGE 0. C/MBTU
FUEL ID944
SULFUR CONCENTRATION 0.0 LB/MBTU
MINIMUM AMOUNT 0.0 TONS/DAY

	JAN	FEB	MAR	APR	MAY	JUN	JUL	AUG	SEP	OCT	NOV	DEC
FUEL COST (C/MBTU)	275.23	276.48	277.74	279.01	280.29	281.57	282.85	284.14	285.44	286.74	288.05	289.37
INVENTORY (KTONS)	0.	0.	0.	0.	0.	0.	0.	0.	0.	0.	0.	0.

COAL1.0D UNLIMITED 25.000 MBTU/TONS ESCALATION RATE 6.5 %/YR INVENTORY CARRYING CHARGE 6.5 %/YR UNLOADING CHARGE 0. C/MBTU
FUEL ID951
SULFUR CONCENTRATION 0.0 LB/MBTU
MINIMUM AMOUNT 0.0 TONS/DAY

	JAN	FEB	MAR	APR	MAY	JUN	JUL	AUG	SEP	OCT	NOV	DEC
FUEL COST (C/MBTU)	379.15	381.14	383.13	385.13	387.14	389.17	391.20	393.25	395.30	397.37	399.45	401.54
INVENTORY (KTONS)	0.	0.	0.	0.	0.	0.	0.	0.	0.	0.	0.	0.

COAL1.4D UNLIMITED 24.000 MBTU/TONS ESCALATION RATE 6.5 %/YR INVENTORY CARRYING CHARGE 6.5 %/YR UNLOADING CHARGE 0. C/MBTU
FUEL ID952
SULFUR CONCENTRATION 0.0 LB/MBTU
MINIMUM AMOUNT 0.0 TONS/DAY

	JAN	FEB	MAR	APR	MAY	JUN	JUL	AUG	SEP	OCT	NOV	DEC
FUEL COST (C/MBTU)	376.35	378.32	380.30	382.29	384.29	386.30	388.32	390.35	392.39	394.45	396.51	398.58
INVENTORY (KTONS)	0.	0.	0.	0.	0.	0.	0.	0.	0.	0.	0.	0.

********** FUEL CATEGORY INPUT SUMMARY 1991 **********

COAL2.0D UNLIMITED 24,000 MBTU/TONS ESCALATION RATE 6.1 %/YR INVENTORY CARRYING CHARGE 6.1 %/YR UNLOADING CHARGE 0. C/MBTU
FUEL ID953
SULFUR CONCENTRATION 0.0 LB/MBTU
MINIMUM AMOUNT 0.0 TONS/DAY

	JAN	FEB	MAR	APR	MAY	JUN	JUL	AUG	SEP	OCT	NOV	DEC
FUEL COST (C/MBTU)	349.23	350.96	352.70	354.44	356.19	357.95	359.73	361.50	363.29	365.09	366.90	368.71
INVENTORY(KTONS)	0.	0.	0.	0.	0.	0.	0.	0.	0.	0.	0.	0.

COAL >2D UNLIMITED 24,000 MBTU/TONS ESCALATION RATE 5.7 %/YR INVENTORY CARRYING CHARGE 5.7 %/YR UNLOADING CHARGE 0. C/MBTU
FUEL ID954
SULFUR CONCENTRATION 0.0 LB/MBTU
MINIMUM AMOUNT 0.0 TONS/DAY

	JAN	FEB	MAR	APR	MAY	JUN	JUL	AUG	SEP	OCT	NOV	DEC
FUEL COST (C/MBTU)	314.62	316.07	317.52	318.98	320.45	321.93	323.41	324.90	326.39	327.90	329.41	330.92
INVENTORY(KTONS)	0.	0.	0.	0.	0.	0.	0.	0.	0.	0.	0.	0.

URANIUM2 UNLIMITED 1.00 ESCALATION RATE 6.0 %/YR INVENTORY CARRYING CHARGE 6.0 %/YR UNLOADING CHARGE 0. C/MBTU
FUEL ID962
SULFUR CONCENTRATION 0.0
MINIMUM AMOUNT 0.0

SEE PAGES 391-392 @ END OF THIS SECTION

	JAN	FEB	MAR	APR	MAY	JUN	JUL	AUG	SEP	OCT	NOV	DEC
FUEL COST (C/MBTU)	98.38	98.86	99.34	[illegible]	[illegible]	[illegible]	[illegible]	101.78	102.28	102.78	103.28	103.78
INVENTORY(KMBTU)	0.	0.	0.	[illegible]	[illegible]	[illegible]	[illegible]	0.	0.	0.	0.	0.

URANIUM3 UNLIMITED 1.000 MBTU/MBTU ESCALATION RATE 6.0 %/YR INVENTORY CARRYING CHARGE 6.0 %/YR UNLOADING CHARGE 0. C/MBTU
FUEL ID963
SULFUR CONCENTRATION 0.0 LB/MBTU
MINIMUM AMOUNT 0.0 MBTU/DAY

	JAN	FEB	MAR	APR	MAY	JUN	JUL	AUG	SEP	OCT	NOV	DEC
FUEL COST (C/MBTU)	112.81	113.36	113.91	114.46	115.02	115.58	116.14	116.71	117.28	117.85	118.42	119.00
INVENTORY(KMBTU)	0.	0.	0.	0.	0.	0.	0.	0.	0.	0.	0.	0.

URANIUM5 UNLIMITED 1.000 MBTU/MBTU ESCALATION RATE 6.0 %/YR INVENTORY CARRYING CHARGE 6.0 %/YR UNLOADING CHARGE 0. C/MBTU
FUEL ID965
SULFUR CONCENTRATION 0.0 LB/MBTU
MINIMUM AMOUNT 0.0 MBTU/DAY

	JAN	FEB	MAR	APR	MAY	JUN	JUL	AUG	SEP	OCT	NOV	DEC
FUEL COST (C/MBTU)	115.05	115.61	116.17	116.74	117.31	117.86	118.45	119.03	119.61	120.19	120.77	121.36
INVENTORY(KMBTU)	0.	0.	0.	0.	0.	0.	0.	0.	0.	0.	0.	0.

********** FUEL CATEGORY INPUT SUMM[illegible]OR 1991 **********

URANIUM7 UNLIMITED 1.000 MBTU/MBTU ESCALATION RATE 6.0 %/YR INVENTORY CARRYING CHARGE 6.0 %/YR UNLOADING CHARGE 0. C/MBTU
FUEL ID967
SULFUR CONCENTRATION 0.0 LB/MBTU
MINIMUM AMOUNT 0.0 MBTU/DAY

	JAN	FEB	MAR	APR	MAY	JUN	JUL	AUG	SEP	OCT	NOV	DEC
FUEL COST (C/MBTU)	107.08	107.60	108.12	108.65	109.18	109.71	110.24	110.78	111.32	111.86	112.40	112.95
INVENTORY(KMBTU)	0.	0.	0.	0.	0.	0.	0.	0.	0.	0.	0.	0.

NATGASU UNLIMITED 8.930 MBTU/MCF ESCALATION RATE 9.5 %/YR INVENTORY CARRYING CHARGE 9.5 %/YR UNLOADING CHARGE 0. C/MBTU
FUEL ID970
SULFUR CONCENTRATION 0.0 LB/MBTU
MINIMUM AMOUNT 0.0 MCF /DAY

	JAN	FEB		APR	MAY	JUN	JUL	AUG	SEP	OCT	NOV	DEC
FUEL COST (C/MBTU)	866.99	873.55			[illegible]	900.30	907.11	913.97	920.89	927.86	934.88	941.95
INVENTORY(KMCF)	0.	0.				0.	0.	0.	0.	0.	0.	0.

SEE PAGES 391-392 @ END OF THIS SECTION

NATGASD UNLIMITED INVENTORY CARRYING CHARGE 9.3 %/YR UNLOADING CHARGE 0. C/MBTU
FUEL ID971
SULFUR CONCENTRATION 0.0 LB/[illegible]
MINIMUM AMOUNT 0.0 MCF /DAY

	JAN	FEB	MAR	APR	MAY		JUL	AUG	SEP	OCT	NOV	DEC
FUEL COST (C/MBTU)	877.90	884.44	891.03	897.67	904.36	911.10	917.89	924.73	931.62	938.57	945.56	952.61
INVENTORY(KMCF)	0.	0.	0.	0.	0.	0.	0.	0.	0.	0.	0.	0.

DIS OILR UNLIMITED 5.400 MBTU/BBLS ESCALATION RATE 7.6 %/YR INVENTORY CARRYING CHARGE 7.6 %/YR UNLOADING CHARGE 0. C/MBTU
FUEL ID536
SULFUR CONCENTRATION 0.0 LB/MBTU
MINIMUM AMOUNT 0.0 BBLS/DAY

	JAN	FEB	MAR	APR	MAY	JUN	JUL	AUG	SEP	OCT	NOV	DEC
FUEL COST (C/MBTU)	1144.02	1151.06	1158.14	1165.27	1172.45	1179.67	1186.93	1194.23	1201.59	1208.98	1216.42	1223.91
INVENTORY(KBBLS)	0.	0.	0.	0.	0.	0.	0.	0.	0.	0.	0.	0.

DIS OILA UNLIMITED 5.300 MBTU/BBLS ESCALATION RATE 7.4 %/YR INVENTORY CARRYING CHARGE 7.4 %/YR UNLOADING CHARGE 0. C/MBTU
FUEL ID537
SULFUR CONCENTRATION 0.0 LB/MBTU
MINIMUM AMOUNT 0.0 BBLS/DAY

	JAN	FEB	MAR	APR	MAY	JUN	JUL	AUG	SEP	OCT	NOV	DEC
FUEL COST (C/MBTU)	1375.46	1383.63	1391.86	1400.13	1408.46	1416.83	1425.25	1433.72	1442.24	1450.82	1459.44	1468.12
INVENTORY(KBBLS)	0.	0.	0.	0.	0.	0.	0.	0.	0.	0.	0.	0.

********** FUEL CATEGORY INPUT SUMMARY 1991 **********

LFCL 1.8 UNLIMITED 25,000 MBTU/TONS ESCALATION RATE 6.1 %/YR INVENTORY CARRYING CHARGE 6.1 %/YR UNLOADING CHARGE 0. C/MBTU
FUEL ID510
SULFUR CONCENTRATION 0.0 LB/MBTU
MINIMUM AMOUNT 0.0 TONS/DAY

	JAN	FEB	MAR	APR	MAY	JUN	JUL	AUG	SEP	OCT	NOV	DEC
FUEL COST (C/MBTU)	377.36	379.22	381.10	382.98	384.87	386.77	388.68	390.60	392.53	394.47	396.42	398.38
INVENTORY(KTONS)	0.	0.	0.	0.	0.	0.	0.	0.	0.	0.	0.	0.

HFCL 1.8 UNLIMITED 25,000 MBTU/TONS ESCALATION RATE 6.1 %/YR INVENTORY CARRYING CHARGE 6.1 %/YR UNLOADING CHARGE 0. C/MBTU
FUEL ID511
SULFUR CONCENTRATION 0.0 LB/MBTU
MINIMUM AMOUNT 0.0 TONS/DAY

	JAN	FEB	MAR	APR	MAY	JUN	JUL	AUG	SEP	OCT	NOV	DEC
FUEL COST (C/MBTU)	314.77	316.33	317.89	319.47	321.05	322.64	324.24	325.85	327.46	329.09	330.72	332.36
INVENTORY(KTONS)	0.	0.	0.	0.	0.	0.	0.	0.	0.	0.	0.	0.

COAL2.4 UNLIMITED 25,000 MBTU/TONS ESCALATION RATE 5.6 %/YR INVENTORY CARRYING CHARGE 5.6 %/YR UNLOADING CHARGE 0. C/MBTU
FUEL ID514
SULFUR CONCENTRATION 0.0 LB/MBTU
MINIMUM AMOUNT 0.0 TONS/DAY

	JAN	FEB	MAR	APR	MAY	JUN	JUL	AUG	SEP	OCT	NOV	DEC
FUEL COST (C/MBTU)	268.66	269.88	271.11	272.35	273.59	274.84	276.09	277.35	278.61	279.88	281.16	282.44
INVENTORY(KTONS)	0.	0.	0.	0.	0.	0.	0.	0.	0.	0.	0.	0.

NATGAS A UNLIMITED 1,000 MBTU/DT ESCALATION RATE 9.3 %/YR INVENTORY CARRYING CHARGE 9.3 %/YR UNLOADING CHARGE 0. C/MBTU
FUEL ID580
SULFUR CONCENTRATION 0.0 LB/MBTU
MINIMUM AMOUNT 0.0 DT /DAY

	JAN	FEB	MAR	APR	MAY	JUN	JUL	AUG	SEP	OCT	NOV	DEC
FUEL COST (C/MBTU)	897.54	904.20	910.91	917.67	924.48	931.34	938.25	945.22	952.23	959.30	966.42	973.59
INVENTORY(KDT)	0.	0.	0.	0.	0.	0.	0.	0.	0.	0.	0.	0.

********** FUEL CATEGORY INPUT SUMMARY FOR 1991 **********

COAL2.0D UNLIMITED 24.000 MBTU/TONS ESCALATION RATE 6.1 %/YR INVENTORY CARRYING CHARGE 6.1 %/YR UNLOADING CHARGE 0. C/MBTU
FUEL ID953
SULFUR CONCENTRATION 0.0 LB/MBTU
MINIMUM AMOUNT 0.0 TONS/DAY

	JAN	FEB	MAR	APR	MAY	JUN	JUL	AUG	SEP	OCT	NOV	DEC
FUEL COST (C/MBTU)	349.23	350.96	352.70	354.44	356.19	357.95	359.73	361.50	363.29	365.09	366.90	368.71
INVENTORY(KTONS)	0.	0.	0.	0.	0.	0.	0.	0.	0.	0.	0.	0.

COAL >20 UNLIMITED 24.000 MBTU/TONS ESCALATION RATE 5.7 %/YR INVENTORY CARRYING CHARGE 5.7 %/YR UNLOADING CHARGE 0. C/MBTU
FUEL ID954
SULFUR CONCENTRATION 0.0 LB/MBTU
MINIMUM AMOUNT 0.0 TONS/DAY

	JAN	FEB	MAR	APR	MAY	JUN	JUL	AUG	SEP	OCT	NOV	DEC
FUEL COST (C/MBTU)	314.62	316.07	317.52	318.98	320.45	321.93	323.41	324.90	326.39	327.90	329.41	330.92
INVENTORY(KTONS)	0.	0.	0.	0.	0.	0.	0.	0.	0.	0.	0.	0.

URANIUM2 UNLIMITED 1.000 MBTU/MBTU ESCALATION RATE 6.0 %/YR INVENTORY CARRYING CHARGE 6.0 %/YR UNLOADING CHARGE 0. C/MBTU
FUEL ID962
SULFUR CONCENTRATION 0.0 LB/MBTU
MINIMUM AMOUNT 0.0 MBTU/DAY

	JAN	FEB	MAR	APR	MAY	JUN	JUL	AUG	SEP	OCT	NOV	DEC
FUEL COST (C/MBTU)	68.89	69.22	69.56	69.90	70.24	70.58	70.93	71.27	71.62	71.97	72.32	72.67
INVENTORY(KMBTU)	0.	0.	0.	0.	0.	0.	0.	0.	0.	0.	0.	0.

URANIUM3 UNLIMITED 1.000 MBTU/MBTU ESCALATION RATE 6.0 %/YR INVENTORY CARRYING CHARGE 6.0 %/YR UNLOADING CHARGE 0. C/MBTU
FUEL ID963
SULFUR CONCENTRATION 0.0 LB/MBTU
MINIMUM AMOUNT 0.0 MBTU/DAY

	JAN	FEB	MAR	APR	MAY	JUN	JUL	AUG	SEP	OCT	NOV	DEC
FUEL COST (C/MBTU)	78.53	78.92	79.30	79.69	80.07	80.46	80.86	81.25	81.64	82.04	82.44	82.84
INVENTORY(KMBTU)	0.	0.	0.	0.	0.	0.	0.	0.	0.	0.	0.	0.

URANIUM5 UNLIMITED 1.000 MBTU/MBTU ESCALATION RATE 6.0 %/YR INVENTORY CARRYING CHARGE 6.0 %/YR UNLOADING CHARGE 0. C/MBTU
FUEL ID965
SULFUR CONCENTRATION 0.0 LB/MBTU
MINIMUM AMOUNT 0.0 MBTU/DAY

	JAN	FEB	MAR	APR	MAY	JUN	JUL	AUG	SEP	OCT	NOV	DEC
FUEL COST (C/MBTU)	79.91	80.30	80.69	81.08	81.48	81.88	82.27	82.67	83.08	83.48	83.89	84.30
INVENTORY(KMBTU)	0.	0.	0.	0.	0.	0.	0.	0.	0.	0.	0.	0.

********** FUEL CATEGORY INPUT SUMMARY FOR 1991 **********

URANIUM7 UNLIMITED 1.000 MBTU/MBTU ESCALATION RATE 6.0 %/YR INVENTORY CARRYING CHARGE 6.0 %/YR UNLOADING CHARGE 0. C/MBTU
FUEL ID967
SULFUR CONCENTRATION 0.0 LB/MBTU
MINIMUM AMOUNT 0.0 MBTU/DAY

	JAN	FEB	MAR	APR	MAY	JUN	JUL	AUG	SEP	OCT	NOV	DEC
FUEL COST (C/MBTU)	74.40	74.76	75.13	75.49	75.86	76.23	76.60	76.97	77.35	77.72	78.10	78.48
INVENTORY(KMBTU)	0.	0.	0.	0.	0.	0.	0.	0.	0.	0.	0.	0.

NATGASU UNLIMITED 8.930 MBTU/MCF ESCALATION RATE 9.5 %/YR INVENTORY CARRYING CHARGE 9.5 %/YR UNLOADING CHARGE 0. C/MBTU
FUEL ID970
SULFUR CONCENTRATION 0.0 LB/MBTU
MINIMUM AMOUNT 0.0 MCF /DAY

	JAN	FEB	MAR	APR	MAY	JUN	JUL	AUG	SEP	OCT	NOV	DEC
FUEL COST (C/MBTU)	866.99	873.55	880.16	886.82	893.53	900.30	907.11	913.97	920.89	927.86	934.88	941.95
INVENTORY(KMCF)	0.	0.	0.	0.	0.	0.	0.	0.	0.	0.	0.	0.

NATGASD UNLIMITED 8.930 MBTU/MCF ESCALATION RATE 9.3 %/YR INVENTORY CARRYING CHARGE 9.3 %/YR UNLOADING CHARGE 0. C/MBTU
FUEL ID971
SULFUR CONCENTRATION 0.0 LB/MBTU
MINIMUM AMOUNT 0.0 MCF /DAY

	JAN	FEB	MAR	APR	MAY	JUN	JUL	AUG	SEP	OCT	NOV	DEC
FUEL COST (C/MBTU)	877.90	884.44	891.03	897.67	904.36	911.10	917.89	924.73	931.62	938.57	945.56	952.61
INVENTORY(KMCF)	0.	0.	0.	0.	0.	0.	0.	0.	0.	0.	0.	0.

DIS OILR UNLIMITED 5.400 MBTU/BBLS ESCALATION RATE 7.6 %/YR INVENTORY CARRYING CHARGE 7.6 %/YR UNLOADING CHARGE 0. C/MBTU
FUEL ID536
SULFUR CONCENTRATION 0.0 LB/MBTU
MINIMUM AMOUNT 0.0 BBLS/DAY

	JAN	FEB	MAR	APR	MAY	JUN	JUL	AUG	SEP	OCT	NOV	DEC
FUEL COST (C/MBTU)	1144.02	1151.06	1158.14	1165.27	1172.45	1179.67	1186.93	1194.23	1201.59	1208.98	1216.42	1223.91
INVENTORY(KBBLS)	0.	0.	0.	0.	0.	0.	0.	0.	0.	0.	0.	0.

DIS OILA UNLIMITED 5.300 MBTU/BBLS ESCALATION RATE 7.4 %/YR INVENTORY CARRYING CHARGE 7.4 %/YR UNLOADING CHARGE 0. C/MBTU
FUEL ID537
SULFUR CONCENTRATION 0.0 LB/MBTU
MINIMUM AMOUNT 0.0 BBLS/DAY

	JAN	FEB	MAR	APR	MAY	JUN	JUL	AUG	SEP	OCT	NOV	DEC
FUEL COST (C/MBTU)	1375.46	1383.63	1391.86	1400.13	1408.46	1416.83	1425.25	1433.72	1442.24	1450.82	1459.44	1468.12
INVENTORY(KBBLS)	0.	0.	0.	0.	0.	0.	0.	0.	0.	0.	0.	0.

********** FUEL CATEGORY INPUT SUMMARY FOR 1991 **********

OH FUEL UNLIMITED 1.000 MBTU/TONS ESCALATION RATE 7.0 %/YR INVENTORY CARRYING CHARGE 7.0 %/YR UNLOADING CHARGE 0. C/MBTU
FUEL ID998
SULFUR CONCENTRATION 0.0 LB/MBTU
MINIMUM AMOUNT 0.0 TONS/DAY

	JAN	FEB	MAR	APR	MAY	JUN	JUL	AUG	SEP	OCT	NOV	DEC
FUEL COST (C/MBTU)	564.50	569.40	574.30	579.30	539.40	544.00	548.80	553.50	558.30	563.10	615.30	620.70
INVENTORY (KTONS)	0.	0.	0.	0.	0.	0.	0.	0.	0.	0.	0.	0.

OH FUEL UNLIMITED 1.000 MBTU/TONS ESCALATION RATE 7.0 %/YR INVENTORY CARRYING CHARGE 7.0 %/YR UNLOADING CHARGE 0. C/MBTU
FUEL ID999
SULFUR CONCENTRATION 0.0 LB/MBTU
MINIMUM AMOUNT 0.0 TONS/DAY

	JAN	FEB	MAR	APR	MAY	JUN	JUL	AUG	SEP	OCT	NOV	DEC
FUEL COST (C/MBTU)	651.40	657.00	662.70	668.40	629.30	634.70	640.20	645.80	651.30	657.00	710.00	716.20
INVENTORY (KTONS)	0.	0.	0.	0.	0.	0.	0.	0.	0.	0.	0.	0.

RES 0.7U UNLIMITED 6.200 MBTU/BBLS ESCALATION RATE 9.4 %/YR INVENTORY CARRYING CHARGE 9.4 %/YR UNLOADING CHARGE 0. C/MBTU
FUEL ID902
SULFUR CONCENTRATION 0.0 LB/MBTU
MINIMUM AMOUNT 0.0 BBLS/DAY

	JAN	FEB	MAR	APR	MAY	JUN	JUL	AUG	SEP	OCT	NOV	DEC
FUEL COST (C/MBTU)	1359.10	1369.31	1379.61	1389.98	1400.43	1410.96	1421.57	1432.26	1443.03	1453.88	1464.81	1475.82
INVENTORY (KBBLS)	0.	0.	0.	0.	0.	0.	0.	0.	0.	0.	0.	0.

RES 1.0U UNLIMITED 6.220 MBTU/BBLS ESCALATION RATE 9.6 %/YR INVENTORY CARRYING CHARGE 9.6 %/YR UNLOADING CHARGE 0. C/MBTU
FUEL ID903
SULFUR CONCENTRATION 0.0 LB/MBTU
MINIMUM AMOUNT 0.0 BBLS/DAY

	JAN	FEB	MAR	APR	MAY	JUN	JUL	AUG	SEP	OCT	NOV	DEC
FUEL COST (C/MBTU)	1338.96	1349.20	1359.52	1369.91	1380.39	1390.95	1401.58	1412.30	1423.10	1433.99	1444.95	1456.00
INVENTORY (KBBLS)	0.	0.	0.	0.	0.	0.	0.	0.	0.	0.	0.	0.

RES 2.0U UNLIMITED 6.250 MBTU/BBLS ESCALATION RATE 10.0 %/YR INVENTORY CARRYING CHARGE 10.0 %/YR UNLOADING CHARGE 0. C/MBTU
FUEL ID904
SULFUR CONCENTRATION 0.0 LB/MBTU
MINIMUM AMOUNT 0.0 BBLS/DAY

	JAN	FEB	MAR	APR	MAY	JUN	JUL	AUG	SEP	OCT	NOV	DEC
FUEL COST (C/MBTU)	1285.84	1296.09	1306.42	1316.84	1327.34	1337.92	1348.59	1359.34	1370.18	1381.11	1392.12	1403.22
INVENTORY (KBBLS)	0.	0.	0.	0.	0.	0.	0.	0.	0.	0.	0.	0.

********** FUEL CATEGORY INPUT SUMMARY FOR 1991 **********

RES 2.8U UNLIMITED 6.280 MBTU/BBLS ESCALATION RATE 10.3 %/YR INVENTORY CARRYING CHARGE 10.3 %/YR UNLOADING CHARGE 0. C/MBTU
FUEL ID905
SULFUR CONCENTRATION 0.0 LB/MBTU
MINIMUM AMOUNT 0.0 BBLS/DAY

		JAN	FEB	MAR	APR	MAY	JUN	JUL	AUG	SEP	OCT	NOV	DEC
FUEL COST	(C/MBTU)	1251.57	1261.82	1272.15	1282.56	1293.07	1303.65	1314.33	1325.09	1335.93	1346.87	1357.90	1369.02
INVENTORY	(KBBLS)	0.	0.	0.	0.	0.	0.	0.	0.	0.	0.	0.	0.

DIS OILU UNLIMITED 5.830 MBTU/BBLS ESCALATION RATE 9.9 %/YR INVENTORY CARRYING CHARGE 9.9 %/YR UNLOADING CHARGE 0. C/MBTU
FUEL ID931
SULFUR CONCENTRATION 0.0 LB/MBTU
MINIMUM AMOUNT 0.0 BBLS/DAY

		JAN	FEB	MAR	APR	MAY	JUN	JUL	AUG	SEP	OCT	NOV	DEC
FUEL COST	(C/MBTU)	1469.60	1481.22	1492.94	1504.74	1516.64	1528.64	1540.72	1552.91	1565.19	1577.57	1590.04	1602.61
INVENTORY	(KBBLS)	0.	0.	0.	0.	0.	0.	0.	0.	0.	0.	0.	0.

RES 0.3D UNLIMITED 6.190 MBTU/BBLS ESCALATION RATE 9.2 %/YR INVENTORY CARRYING CHARGE 9.2 %/YR UNLOADING CHARGE 0. C/MBTU
FUEL ID921
SULFUR CONCENTRATION 0.0 LB/MBTU
MINIMUM AMOUNT 0.0 BBLS/DAY

		JAN	FEB	MAR	APR	MAY	JUN	JUL	AUG	SEP	OCT	NOV	DEC
FUEL COST	(C/MBTU)	1350.42	1360.37	1370.39	1380.49	1390.66	1400.91	1411.23	1421.63	1432.10	1442.66	1453.29	1463.99
INVENTORY	(KBBLS)	0.	0.	0.	0.	0.	0.	0.	0.	0.	0.	0.	0.

RES 0.7D UNLIMITED 6.200 MBTU/BBLS ESCALATION RATE 9.4 %/YR INVENTORY CARRYING CHARGE 9.4 %/YR UNLOADING CHARGE 0. C/MBTU
FUEL ID922
SULFUR CONCENTRATION 0.0 LB/MBTU
MINIMUM AMOUNT 0.0 BBLS/DAY

		JAN	FEB	MAR	APR	MAY	JUN	JUL	AUG	SEP	OCT	NOV	DEC
FUEL COST	(C/MBTU)	1319.64	1329.61	1339.65	1349.76	1359.96	1370.22	1380.57	1391.00	1401.50	1412.08	1422.75	1433.49
INVENTORY	(KBBLS)	0.	0.	0.	0.	0.	0.	0.	0.	0.	0.	0.	0.

RES 1.0D UNLIMITED 6.220 MBTU/BBLS ESCALATION RATE 9.6 %/YR INVENTORY CARRYING CHARGE 9.6 %/YR UNLOADING CHARGE 0. C/MBTU
FUEL ID923
SULFUR CONCENTRATION 0.0 LB/MBTU
MINIMUM AMOUNT 0.0 BBLS/DAY

		JAN	FEB	MAR	APR	MAY	JUN	JUL	AUG	SEP	OCT	NOV	DEC
FUEL COST	(C/MBTU)	1299.07	1309.03	1319.06	1329.17	1339.35	1349.62	1359.96	1370.38	1380.89	1391.47	1402.13	1412.88
INVENTORY	(KBBLS)	0.	0.	0.	0.	0.	0.	0.	0.	0.	0.	0.	0.

********** FUEL CATEGORY INPUT SUMMARY FOR 1991 **********

RES 1.5D UNLIMITED 6.235 MBTU/BBLS ESCALATION RATE 9.8 %/YR INVENTORY CARRYING CHARGE 9.8 %/YR UNLOADING CHARGE 0. C/MBTU
FUEL ID924
SULFUR CONCENTRATION 0.0 LB/MBTU
MINIMUM AMOUNT 0.0 BBLS/DAY

	JAN	FEB	MAR	APR	MAY	JUN	JUL	AUG	SEP	OCT	NOV	DEC
FUEL COST (C/MBTU)	1274.11	1284.08	1294.14	1304.27	1314.48	1324.77	1335.15	1345.60	1356.13	1366.75	1377.45	1388.24
INVENTORY(KBBLS)	0.	0.	0.	0.	0.	0.	0.	0.	0.	0.	0.	0.

RES 2.0D UNLIMITED 6.250 MBTU/BBLS ESCALATION RATE 10.0 %/YR INVENTORY CARRYING CHARGE 10.0 %/YR UNLOADING CHARGE 0. C/MBTU
FUEL ID925
SULFUR CONCENTRATION 0.0 LB/MBTU
MINIMUM AMOUNT 0.0 BBLS/DAY

	JAN	FEB	MAR	APR	MAY	JUN	JUL	AUG	SEP	OCT	NOV	DEC
FUEL COST (C/MBTU)	1246.40	1256.38	1266.44	1276.58	1286.80	1297.10	1307.48	1317.95	1328.50	1339.13	1349.85	1360.66
INVENTORY(KBBLS)	0.	0.	0.	0.	0.	0.	0.	0.	0.	0.	0.	0.

RES 2.8D UNLIMITED 6.280 MBTU/BBLS ESCALATION RATE 10.3 %/YR INVENTORY CARRYING CHARGE 10.3 %/YR UNLOADING CHARGE 0. C/MBTU
FUEL ID926
SULFUR CONCENTRATION 0.0 LB/MBTU
MINIMUM AMOUNT 0.0 BBLS/DAY

	JAN	FEB	MAR	APR	MAY	JUN	JUL	AUG	SEP	OCT	NOV	DEC
FUEL COST (C/MBTU)	1211.86	1221.82	1231.86	1241.99	1252.19	1262.48	1272.86	1283.32	1293.86	1304.50	1315.22	1326.02
INVENTORY(KBBLS)	0.	0.	0.	0.	0.	0.	0.	0.	0.	0.	0.	0.

DIS OILD UNLIMITED 5.830 MBTU/BBLS ESCALATION RATE 9.9 %/YR INVENTORY CARRYING CHARGE 9.9 %/YR UNLOADING CHARGE 0. C/MBTU
FUEL ID935
SULFUR CONCENTRATION 0.0 LB/MBTU
MINIMUM AMOUNT 0.0 BBLS/DAY

	JAN	FEB	MAR	APR	MAY	JUN	JUL	AUG	SEP	OCT	NOV	DEC
FUEL COST (C/MBTU)	1493.04	1504.85	1516.75	1528.75	1540.84	1553.03	1565.31	1577.70	1590.17	1602.75	1615.43	1628.20
INVENTORY(KBBLS)	0.	0.	0.	0.	0.	0.	0.	0.	0.	0.	0.	0.

COAL1.0U UNLIMITED 25.000 MBTU/TONS ESCALATION RATE 8.6 %/YR INVENTORY CARRYING CHARGE 8.6 %/YR UNLOADING CHARGE 0. C/MBTU
FUEL ID941
SULFUR CONCENTRATION 0.0 LB/MBTU
MINIMUM AMOUNT 0.0 TONS/DAY

	JAN	FEB	MAR	APR	MAY	JUN	JUL	AUG	SEP	OCT	NOV	DEC
FUEL COST (C/MBTU)	573.73	577.70	581.69	585.71	589.76	593.84	597.94	602.08	606.24	610.43	614.65	618.90
INVENTORY(KTONS)	0.	0.	0.	0.	0.	0.	0.	0.	0.	0.	0.	0.

********** FUEL CATEGORY INPUT SUMMARY FOR 1991 **********

COAL1.4U UNLIMITED 24.000 MBTU/TONS ESCALATION RATE 8.8 %/YR INVENTORY CARRYING CHARGE 8.8 %/YR UNLOADING CHARGE 0. C/MBTU
FUEL ID942
SULFUR CONCENTRATION 0.0 LB/MBTU
MINIMUM AMOUNT 0.0 TONS/DAY

	JAN	FEB	MAR	APR	MAY	JUN	JUL	AUG	SEP	OCT	NOV	DEC
FUEL COST (C/MBTU)	565.29	569.26	573.26	577.29	581.35	585.44	589.55	593.70	597.87	602.07	606.30	610.57
INVENTORY(KTONS)	0.	0.	0.	0.	0.	0.	0.	0.	0.	0.	0.	0.

COAL2.0U UNLIMITED 24.000 MBTU/TONS ESCALATION RATE 9.1 %/YR INVENTORY CARRYING CHARGE 9.1 %/YR UNLOADING CHARGE 0. C/MBTU
FUEL ID943
SULFUR CONCENTRATION 0.0 LB/MBTU
MINIMUM AMOUNT 0.0 TONS/DAY

	JAN	FEB	MAR	APR	MAY	JUN	JUL	AUG	SEP	OCT	NOV	DEC
FUEL COST (C/MBTU)	518.18	521.97	525.79	529.63	533.50	537.40	541.33	545.29	549.28	553.29	557.34	561.41
INVENTORY(KTONS)	0.	0.	0.	0.	0.	0.	0.	0.	0.	0.	0.	0.

COAL >2U UNLIMITED 24.000 MBTU/TONS ESCALATION RATE 10.8 %/YR INVENTORY CARRYING CHARGE 10.8 %/YR UNLOADING CHARGE 0. C/MBTU
FUEL ID944
SULFUR CONCENTRATION 0.0 LB/MBTU
MINIMUM AMOUNT 0.0 TONS/DAY

	JAN	FEB	MAR	APR	MAY	JUN	JUL	AUG	SEP	OCT	NOV	DEC
FUEL COST (C/MBTU)	441.74	445.54	449.38	453.25	457.15	461.09	465.06	469.07	473.11	477.19	481.30	485.44
INVENTORY(KTONS)	0.	0.	0.	0.	0.	0.	0.	0.	0.	0.	0.	0.

COAL1.0D UNLIMITED 25.000 MBTU/TONS ESCALATION RATE 8.5 %/YR INVENTORY CARRYING CHARGE 8.5 %/YR UNLOADING CHARGE 0. C/MBTU
FUEL ID951
SULFUR CONCENTRATION 0.0 LB/MBTU
MINIMUM AMOUNT 0.0 TONS/DAY

	JAN	FEB	MAR	APR	MAY	JUN	JUL	AUG	SEP	OCT	NOV	DEC
FUEL COST (C/MBTU)	602.10	606.23	610.36	614.57	618.78	623.02	627.29	631.59	635.92	640.28	644.67	649.08
INVENTORY(KTONS)	0.	0.	0.	0.	0.	0.	0.	0.	0.	0.	0.	0.

COAL1.4D UNLIMITED 24.000 MBTU/TONS ESCALATION RATE 8.7 %/YR INVENTORY CARRYING CHARGE 8.7 %/YR UNLOADING CHARGE 0. C/MBTU
FUEL ID952
SULFUR CONCENTRATION 0.0 LB/MBTU
MINIMUM AMOUNT 0.0 TONS/DAY

	JAN	FEB	MAR	APR	MAY	JUN	JUL	AUG	SEP	OCT	NOV	DEC
FUEL COST (C/MBTU)	598.99	603.16	607.35	611.58	615.83	620.11	624.42	628.77	633.14	637.54	641.98	646.44
INVENTORY(KTONS)	0.	0.	0.	0.	0.	0.	0.	0.	0.	0.	0.	0.

********** FUEL CATEGORY INPUT SUMMARY FOR 1991 **********

COAL2.00 UNLIMITED 24.000 MBTU/TONS ESCALATION RATE 9.0 %/YR INVENTORY CARRYING CHARGE 9.0 %/YR UNLOADING CHARGE 0. C/MBTU
FUEL ID953
SULFUR CONCENTRATION 0.0 LB/MBTU
MINIMUM AMOUNT 0.0 TONS/DAY

	JAN	FEB	MAR	APR	MAY	JUN	JUL	AUG	SEP	OCT	NOV	DEC
FUEL COST (C/MBTU)	551.92	555.90	559.91	563.95	568.02	572.12	576.24	580.40	584.59	588.80	593.05	597.33
INVENTORY(KTONS)	0.	0.	0.	0.	0.	0.	0.	0.	0.	0.	0.	0.

COAL >2D UNLIMITED 24.000 MBTU/TONS ESCALATION RATE 10.5 %/YR INVENTORY CARRYING CHARGE 10.5 %/YR UNLOADING CHARGE 0. C/MBTU
FUEL ID954
SULFUR CONCENTRATION 0.0 LB/MBTU
MINIMUM AMOUNT 0.0 TONS/DAY

	JAN	FEB	MAR	APR	MAY	JUN	JUL	AUG	SEP	OCT	NOV	DEC
FUEL COST (C/MBTU)	491.55	495.64	499.77	503.94	508.13	512.37	516.64	520.94	525.28	529.66	534.07	538.52
INVENTORY(KTONS)	0.	0.	0.	0.	0.	0.	0.	0.	0.	0.	0.	0.

URANIUM2 UNLIMITED 1.000 MBTU/MBTU ESCALATION RATE 7.0 %/YR INVENTORY CARRYING CHARGE 7.0 %/YR UNLOADING CHARGE 0. C/MBTU
FUEL ID962
SULFUR CONCENTRATION 0.0 LB/MBTU
MINIMUM AMOUNT 0.0 MBTU/DAY

	JAN	FEB	MAR	APR	MAY	JUN	JUL	AUG	SEP	OCT	NOV	DEC
FUEL COST (C/MBTU)	103.68	104.26	104.85	105.45	106.04	106.64	107.25	107.85	108.46	109.07	109.69	110.31
INVENTORY(KMBTU)	0.	0.	0.	0.	0.	0.	0.	0.	0.	0.	0.	0.

URANIUM3 UNLIMITED 1.000 MBTU/MBTU ESCALATION RATE 7.0 %/YR INVENTORY CARRYING CHARGE 7.0 %/YR UNLOADING CHARGE 0. C/MBTU
FUEL ID963
SULFUR CONCENTRATION 0.0 LB/MBTU
MINIMUM AMOUNT 0.0 MBTU/DAY

	JAN	FEB	MAR	APR	MAY	JUN	JUL	AUG	SEP	OCT	NOV	DEC
FUEL COST (C/MBTU)	118.88	119.55	120.23	120.91	121.59	122.28	122.97	123.67	124.37	125.07	125.78	126.49
INVENTORY(KMBTU)	0.	0.	0.	0.	0.	0.	0.	0.	0.	0.	0.	0.

URANIUM5 UNLIMITED 1.000 MBTU/MBTU ESCALATION RATE 7.0 %/YR INVENTORY CARRYING CHARGE 7.0 %/YR UNLOADING CHARGE 0. C/MBTU
FUEL ID965
SULFUR CONCENTRATION 0.0 LB/MBTU
MINIMUM AMOUNT 0.0 MBTU/DAY

	JAN	FEB	MAR	APR	MAY	JUN	JUL	AUG	SEP	OCT	NOV	DEC
FUEL COST (C/MBTU)	121.24	121.93	122.62	123.31	124.01	124.71	125.42	126.12	126.84	127.55	128.28	129.00
INVENTORY(KMBTU)	0.	0.	0.	0.	0.	0.	0.	0.	0.	0.	0.	0.

********** FUEL CATEGORY INPUT SUMMARY FOR 1991 **********

URANIUM7 UNLIMITED 1.000 MBTU/MBTU ESCALATION RATE 7.0 %/YR INVENTORY CARRYING CHARGE 7.0 %/YR UNLOADING CHARGE 0. C/MBTU
FUEL ID967
SULFUR CONCENTRATION 0.0 LB/MBTU
MINIMUM AMOUNT 0.0 MBTU/DAY

	JAN	FEB	MAR	APR	MAY	JUN	JUL	AUG	SEP	OCT	NOV	DEC
FUEL COST (C/MBTU)	112.84	113.48	114.12	114.77	115.41	116.07	116.72	117.38	118.05	118.71	119.38	120.06
INVENTORY(KMBTU)	0.	0.	0.	0.	0.	0.	0.	0.	0.	0.	0.	0.

NATGASU UNLIMITED 8.930 MBTU/MCF ESCALATION RATE 10.2 %/YR INVENTORY CARRYING CHARGE 10.2 %/YR UNLOADING CHARGE 0. C/MBTU
FUEL ID970
SULFUR CONCENTRATION 0.0 LB/MBTU
MINIMUM AMOUNT 0.0 MCF /DAY

	JAN	FEB	MAR	APR	MAY	JUN	JUL	AUG	SEP	OCT	NOV	DEC
FUEL COST (C/MBTU)	1193.63	1203.37	1213.20	1223.10	1233.09	1243.16	1253.30	1263.54	1273.85	1284.25	1294.74	1305.31
INVENTORY(KMCF)	0.	0.	0.	0.	0.	0.	0.	0.	0.	0.	0.	0.

NATGASD UNLIMITED 8.930 MBTU/MCF ESCALATION RATE 10.0 %/YR INVENTORY CARRYING CHARGE 10.0 %/YR UNLOADING CHARGE 0. C/MBTU
FUEL ID971
SULFUR CONCENTRATION 0.0 LB/MBTU
MINIMUM AMOUNT 0.0 MCF /DAY

	JAN	FEB	MAR	APR	MAY	JUN	JUL	AUG	SEP	OCT	NOV	DEC
FUEL COST (C/MBTU)	1213.78	1223.50	1233.31	1243.19	1253.15	1263.19	1273.31	1283.51	1293.79	1304.16	1314.61	1325.14
INVENTORY(KMCF)	0.	0.	0.	0.	0.	0.	0.	0.	0.	0.	0.	0.

DIS OILR UNLIMITED 5.400 MBTU/BBLS ESCALATION RATE 7.6 %/YR INVENTORY CARRYING CHARGE 7.6 %/YR UNLOADING CHARGE 0. C/MBTU
FUEL ID536
SULFUR CONCENTRATION 0.0 LB/MBTU
MINIMUM AMOUNT 0.0 BBLS/DAY

	JAN	FEB	MAR	APR	MAY	JUN	JUL	AUG	SEP	OCT	NOV	DEC
FUEL COST (C/MBTU)	1144.02	1151.06	1158.14	1165.27	1172.45	1179.67	1186.93	1194.23	1201.59	1208.98	1216.42	1223.91
INVENTORY(KBBLS)	0.	0.	0.	0.	0.	0.	0.	0.	0.	0.	0.	0.

DIS OILA UNLIMITED 5.300 MBTU/BBLS ESCALATION RATE 7.4 %/YR INVENTORY CARRYING CHARGE 7.4 %/YR UNLOADING CHARGE 0. C/MBTU
FUEL ID537
SULFUR CONCENTRATION 0.0 LB/MBTU
MINIMUM AMOUNT 0.0 BBLS/DAY

	JAN	FEB	MAR	APR	MAY	JUN	JUL	AUG	SEP	OCT	NOV	DEC
FUEL COST (C/MBTU)	1375.46	1383.63	1391.86	1400.13	1408.46	1416.83	1425.25	1433.72	1442.24	1450.82	1459.44	1468.12
INVENTORY(KBBLS)	0.	0.	0.	0.	[illegible]	0.	0.	0.	0.	0.	[illegible]	0.

********** FUEL CATEGORY INPUT SUMMARY FOR 1991 **********

LFCL 1.8 UNLIMITED 25.000 MBTU/TONS ESCALATION RATE 9.2 %/YR INVENTORY CARRYING CHARGE 9.2 %/YR UNLOADING CHARGE 0. C/MBTU
FUEL ID510
SULFUR CONCENTRATION 0.0 LB/MBTU
MINIMUM AMOUNT 0.0 TONS/DAY

	JAN	FEB	MAR	APR	MAY	JUN	JUL	AUG	SEP	OCT	NOV	DEC
FUEL COST (C/MBTU)	613.37	617.86	622.39	626.96	631.56	636.19	640.85	645.55	650.28	655.05	659.86	664.69
INVENTORY (KTONS)	0.	0.	0.	0.	0.	0.	0.	0.	0.	0.	0.	0.

HFCL 1.8 UNLIMITED 25.000 MBTU/TONS ESCALATION RATE 9.2 %/YR INVENTORY CARRYING CHARGE 9.2 %/YR UNLOADING CHARGE 0. C/MBTU
FUEL ID511
SULFUR CONCENTRATION 0.0 LB/MBTU
MINIMUM AMOUNT 0.0 TONS/DAY

	JAN	FEB	MAR	APR	MAY	JUN	JUL	AUG	SEP	OCT	NOV	DEC
FUEL COST (C/MBTU)	511.15	514.90	518.67	522.48	526.31	530.17	534.05	537.97	541.91	545.89	549.89	553.92
INVENTORY (KTONS)	0.	0.	0.	0.	0.	0.	0.	0.	0.	0.	0.	0.

COAL2.4 UNLIMITED 25.000 MBTU/TONS ESCALATION RATE 10.9 %/YR INVENTORY CARRYING CHARGE 10.9 %/YR UNLOADING CHARGE 0. C/MBTU
FUEL ID514
SULFUR CONCENTRATION 0.0 LB/MBTU
MINIMUM AMOUNT 0.0 TONS/DAY

	JAN	FEB	MAR	APR	MAY	JUN	JUL	AUG	SEP	OCT	NOV	DEC
FUEL COST (C/MBTU)	434.70	438.47	442.26	446.09	449.95	453.85	457.78	461.74	465.74	469.77	473.84	477.94
INVENTORY (KTONS)	0.	0.	0.	0.	0.	0.	0.	0.	0.	0.	0.	0.

NATGAS A UNLIMITED 1.000 MBTU/DT ESCALATION RATE 10.1 %/YR INVENTORY CARRYING CHARGE 10.1 %/YR UNLOADING CHARGE 0. C/MBTU
FUEL ID580
SULFUR CONCENTRATION 0.0 LB/MBTU
MINIMUM AMOUNT 0.0 DT /DAY

	JAN	FEB	MAR	APR	MAY	JUN	JUL	AUG	SEP	OCT	NOV	DEC
FUEL COST (C/MBTU)	1221.44	1231.29	1241.22	1251.23	1261.32	1271.49	1281.75	1292.09	1302.51	1313.01	1323.60	1334.28
INVENTORY (KDT)	0.	0.	0.	0.	0.	0.	0.	0.	0.	0.	0.	0.

I.H Maintenance Dates Summary

MAINTENANCE DATA SUMMARY FOR 1986

UNIT		START DATE	END DATE	TYPE	COST(K$) OR MW DERATION	START DATE	END DATE	TYPE	COST(K$) OR MW DERATION
OH-FIRM	0	DEC 1	DEC 31	M	0.0 K$				
ROSETON	1	MAY 3	JUN 2	M	0.0 K$				
ROSETON	2	AUG 30	SEP 29	M	0.0 K$				
DANSKMR	1	MAR 29	OCT 31	M	0.0 K$				
DANSKMR	2	JAN 4	MAR 3	M	0.0 K$	APR 1	OCT 31	M	0.0 K$
DANSKMR	4	NOV 1	DEC 1	M	0.0 K$				
DANSKAMG	1	JAN 1	APR 21	M	0.0 K$	NOV 1	DEC 31	M	0.0 K$
DANSKAMG	2	JAN 1	MAR 31	M	0.0 K$	NOV 1	DEC 31	M	0.0 K$
ASTORIA	1	APR 5	MAY 23	M	0.0 K$				
ASTORIA	2	MAY 1	JUN 30	M	0.0 K$				
ASTORIA	3	OCT 6	NOV 16	M	0.0 K$				
ASTORIA	4	MAR 3	APR 13	M	0.0 K$				
ASTORIA	5	MAR 31	MAY 19	M	0.0 K$				
EAST RV	5	MAY 5	JUN 15	M	0.0 K$				
EAST RV	6	APR 14	MAY 25	M	0.0 K$				
EAST RV	7	NOV 19	DEC 31	M	0.0 K$				
RAVENS	1	FEB 17	MAR 30	M	0.0 K$				
RAVENS	2	JAN 6	FEB 16	M	0.0 K$				
INDIAN	2	MAY 1	JUN 25	M	0.0 K$				
WATERSD	1	FEB 1	MAR 14	M	0.0 K$				
59TH ST	1	NOV 1	NOV 21	M	0.0 K$				
74TH ST	1	OCT 1	NOV 11	M	0.0 K$				
HUDSON	1	OCT 1	NOV 11	M	0.0 K$				
BARRETT	1	AUG 30	SEP 21	M	0.0 K$				
BARRETT	2	SEP 22	OCT 5	M	0.0 K$				
PT JEFF	3	APR 26	MAY 18	M	0.0 K$				
PT JEFF	4	MAY 19	JUN 8	M	0.0 K$				
GLENWOOD	4	NOV 25	DEC 16	M	0.0 K$				
GLENWOOD	5	APR 30	MAY 16	M	0.0 K$				
PT JEFF	1	MAR 1	MAR 16	M	0.0 K$				
PT JEFF	2	MAR 22	APR 13	M	0.0 K$				
N PORT	1	JAN 1	JAN 26	M	0.0 K$				
N PORT	2	JAN 27	FEB 23	M	0.0 K$				
N PORT	3	FEB 24	MAR 23	M	0.0 K$				
N PORT	4	MAR 24	APR 20	M	0.0 K$				
GOUDEY	7	JAN 1	DEC 31	F	4.4 MW	JAN 1	DEC 31	G	4.4 MW
		AUG 4	AUG 31	M	0.0 K$				
GOUDEY	8	JAN 1	DEC 31	F	8.4 MW	JAN 1	DEC 31	G	8.4 MW
		OCT 13	NOV 9	M	0.0 K$				
GRENIDGE	1	JAN 1	DEC 31	F	2.2 MW	JAN 1	DEC 31	G	2.2 MW
		FEB 24	MAR 23	M	0.0 K$				
GRENIDGE	2	JAN 1	DEC 31	F	2.3 MW	JAN 1	DEC 31	G	2.3 MW
		MAY 26	JUN 22	M	0.0 K$				
GRENIDGE	3	JAN 1	DEC 31	F	5.5 MW	JAN 1	DEC 31	G	5.5 MW
		JUN 30	JUL 27	M	0.0 K$				

MAINTENANCE DATES SUMMARY FOR 1986

UNIT	START DATE	END DATE	TYPE	COST(K$) OR MW DERATION	START DATE	END DATE	TYPE	COST(K$) OR MW DERATION
GREENIDGE 4	JAN 1	DEC 31	F	10.4 MW	JAN 1	DEC 31	G	10.4 MW
	JUN 2	JUN 29	M	0.0 K$				
HICKLING 1	JAN 1	DEC 31	F	3.7 MW	JAN 1	DEC 31	G	3.7 MW
	SEP 29	OCT 26	M	0.0 K$				
HICKLING 2	JAN 1	DEC 31	F	5.0 MW	JAN 1	DEC 31	G	5.0 MW
	AUG 18	SEP 14	M	0.0 K$				
JENNISON 1	JAN 1	DEC 31	F	3.5 MW	JAN 1	DEC 31	G	3.5 MW
	OCT 13	NOV 9	M	0.0 K$				
JENNISON 2	JAN 1	DEC 31	F	4.1 MW	JAN 1	DEC 31	G	4.1 MW
	JUL 7	AUG 3	M	0.0 K$				
MILLIKEN 1	JAN 1	DEC 31	F	14.3 MW	JAN 1	DEC 31	G	14.3 MW
	APR 28	MAY 25	M	0.0 K$				
MILLIKEN 2	JAN 1	DEC 31	F	14.7 MW	JAN 1	DEC 31	G	14.7 MW
	MAR 17	APR 13	M	0.0 K$				
HOMERCTY 1	JAN 1	DEC 31	F	30.9 MW	JAN 1	DEC 31	G	30.9 MW
	JUL 7	AUG 17	M	0.0 K$				
HOMERCTY 2	JAN 1	DEC 31	F	30.9 MW	JAN 1	DEC 31	G	30.9 MW
	MAY 26	JUL 6	M	0.0 K$				
HOMERCTY 3	JAN 1	DEC 31	F	32.5 MW	JAN 1	DEC 31	G	32.5 MW
	SEP 1	OCT 12	M	0.0 K$				
9-MILE 1	FEB 22	MAY 30	M	0.0 K$				
DUNKIRK 1	JUL 1	AUG 25	M	0.0 K$				
DUNKIRK 2	SEP 30	OCT 27	M	0.0 K$				
DUNKIRK 3	SEP 2	SEP 29	M	0.0 K$				
DUNKIRK 4	SEP 30	OCT 27	M	0.0 K$				
HUNTLEY 63	MAR 18	APR 14	M	0.0 K$				
HUNTLEY 64	SEP 30	OCT 27	M	0.0 K$				
HUNTLEY 65	APR 15	MAY 12	M	0.0 K$				
HUNTLEY 66	JUL 29	SEP 22	M	0.0 K$				
HUNTLEY 67	OCT 28	NOV 24	M	0.0 K$				
HUNTLEY 68	MAY 13	JUN 9	M	0.0 K$				
OSWEGO 3	MAY 27	JUN 30	M	0.0 K$				
OSWEGO 4	MAR 24	APR 20	M	0.0 K$				
OSWEGO 5	SEP 23	NOV 17	M	0.0 K$				
OSWEGO 6	FEB 24	MAR 23	M	0.0 K$				
ALBANY 1	JAN 1	JAN 14	M	0.0 K$				
ALBANY 2	JAN 15	FEB 4	M	0.0 K$				
ALBANY 3	FEB 5	FEB 25	M	0.0 K$				
ALBANY 4	FEB 26	MAR 17	M	0.0 K$				
BOWLINE 1	MAR 22	JUN 28	M	0.0 K$				
BOWLINE 2	SEP 7	OCT 18	M	0.0 K$				
LOVETT 3	JAN 5	FEB 1	M	0.0 K$				
HILLBRIT 1	MAY 4	MAY 10	M	0.0 K$				
SHOEMKT 1	APR 20	APR 26	M	0.0 K$				
RUSSELL 1	SEP 8	NOV 9	M	0.0 K$				

MAINTENANCE DATES SUMMARY FOR 1986

UNIT	START DATE	END DATE	TYPE	COST(K$) OR MW DERATION
RUSSELL 2	JAN 1	DEC 31	F	10.0 MW
RUSSELL 3	JAN 1	DEC 31	F	10.0 MW
RUSSELL 4	NOV 3	NOV 30	M	0.0 K$
BEEBEE 12	MAY 19	JUN 15	M	0.0 K$
BEEBEE 11	AUG 7	AUG 17	P	6.0 MW
GINNA 1	MAR 31	MAY 18	R	0.0 K$
FITZPAT 1	SEP 4	OCT 29	M	0.0 K$
INDIAN 3	NOV 6	DEC 31	M	0.0 K$
ASTORIA 6	APR 17	MAY 28	M	0.0 K$
A KILL 13	FEB 1	MAR 21	M	0.0 K$
RAVENS 13	SEP 15	OCT 27	M	0.0 K$
LOVETT 14	OCT 25	NOV 22	M	0.0 K$
LOVETT 15	FEB 8	MAR 22	M	0.0 K$
SHOREHAM 1	SEP 29	NOV 22	M	0.0 K$
SOMERSET 1	APR 14	MAY 25	M	0.0 K$

START DATE	END DATE	TYPE	COST(K$) OR MW DERATION
SEP 29	OCT 26	M	0.0 K$
NOV 10	DEC 31	M	0.0 K$
AUG 20	AUG 30	P	6.0 MW

MAINTENANCE DATES SUMMARY FOR 1987

UNIT		START DATE	END DATE	TYPE	COST(K$) OR MW DERATION	START DATE	END DATE	TYPE	COST(K$) OR MW DERATION
OH-FIRM	0	JAN 1	DEC 31	M	0.0 K$				
ROSETON	1	MAY 3	JUN 2	M	0.0 K$				
ROSETON	2	AUG 30	SEP 29	M	0.0 K$				
DANSKMR	1	MAR 29	OCT 31	M	0.0 K$				
DANSKMR	2	JAN 4	MAR 3	M	0.0 K$	APR 1	OCT 31	M	0.0 K$
DANSKMR	4	NOV 1	DEC 1	M	0.0 K$				
DANSKAMG	1	JAN 1	APR 21	M	0.0 K$	NOV 1	DEC 31	M	0.0 K$
DANSKAMG	2	JAN 1	MAR 31	M	0.0 K$	NOV 1	DEC 31	M	0.0 K$
ASTORIA	1	APR 5	MAY 23	M	0.0 K$				
ASTORIA	2	MAY 1	JUN 30	M	0.0 K$				
ASTORIA	3	OCT 6	NOV 16	M	0.0 K$				
ASTORIA	4	MAR 3	APR 13	M	0.0 K$				
ASTORIA	5	MAR 31	MAY 19	M	0.0 K$				
EAST RV	5	MAY 5	JUN 15	M	0.0 K$				
EAST RV	6	APR 14	MAY 25	M	0.0 K$				
EAST RV	7	NOV 19	DEC 31	M	0.0 K$				
RAVENS	1	FEB 17	MAR 30	M	0.0 K$				
RAVENS	2	JAN 6	FEB 16	M	0.0 K$				
INDIAN	2	MAY 1	JUN 25	M	0.0 K$				
WATERSD	1	FEB 1	MAR 14	M	0.0 K$				
59TH ST	1	NOV 1	NOV 21	M	0.0 K$				
74TH ST	1	OCT 1	NOV 11	M	0.0 K$				
HUDSON	1	OCT 1	NOV 11	M	0.0 K$				
BARRETT	1	AUG 30	SEP 21	M	0.0 K$				
BARRETT	2	SEP 22	OCT 5	M	0.0 K$				
PT JEFF	4	MAY 19	JUN 8	M	0.0 K$				
GLENWOOD	4	NOV 25	DEC 16	M	0.0 K$				
GLENWOOD	5	APR 30	MAY 16	M	0.0 K$				
PT JEFF	1	MAR 1	MAR 16	M	0.0 K$				
PT JEFF	2	MAR 22	APR 13	M	0.0 K$				
N PORT	1	JAN 1	JAN 26	M	0.0 K$				
N PORT	2	JAN 27	FEB 23	M	0.0 K$				
N PORT	3	FEB 24	MAR 23	M	0.0 K$				
N PORT	4	MAR 24	APR 20	M	0.0 K$				
GOUDEY	7	JAN 1	DEC 31	F	4.4 MW	JAN 1	DEC 31	G	4.4 MW
		AUG 4	AUG 31	M	0.0 K$				
GOUDEY	8	JAN 1	DEC 31	F	8.4 MW	JAN 1	DEC 31	G	8.4 MW
		OCT 13	NOV 9	M	0.0 K$				
GRENIDGE	1	JAN 1	DEC 31	F	2.2 MW	JAN 1	DEC 31	G	2.2 MW
		FEB 24	MAR 23	M	0.0 K$				
GRENIDGE	2	JAN 1	DEC 31	F	2.3 MW	JAN 1	DEC 31	G	2.3 MW
		MAY 26	JUN 22	M	0.0 K$				
GRENIDGE	3	JAN 1	DEC 31	F	5.5 MW	JAN 1	DEC 31	G	5.5 MW
		JUN 30	JUL 27	M	0.0 K$				
GRENIDGE	4	JAN 1	DEC 31	F	10.4 MW	JAN 1	DEC 31	G	10.4 MW

MAINTENANCE DATES SUMMARY FOR 1987

UNIT	START DATE	END DATE	TYPE	COST(K$) OR MW DERATION	START DATE	END DATE	TYPE	COST(K$) OR MW DERATION
	JUN 2	JUN 29	M	0.0 K$				
HICKLING 1	JAN 1	DEC 31	F	3.7 MW	JAN 1	DEC 31	G	3.7 MW
	SEP 29	OCT 26	M	0.0 K$				
HICKLING 2	JAN 1	DEC 31	F	5.0 MW	JAN 1	DEC 31	G	5.0 MW
	AUG 18	SEP 14	M	0.0 K$				
JENNISON 1	JAN 1	DEC 31	F	3.5 MW	JAN 1	DEC 31	G	3.5 MW
	OCT 13	NOV 9	M	0.0 K$				
JENNISON 2	JAN 1	DEC 31	F	4.1 MW	JAN 1	DEC 31	G	4.1 MW
	JUL 7	AUG 3	M	0.0 K$				
MILLIKEN 1	JAN 1	DEC 31	F	14.3 MW	JAN 1	DEC 31	G	14.3 MW
	APR 28	MAY 25	M	0.0 K$				
MILLIKEN 2	JAN 1	DEC 31	F	14.7 MW	JAN 1	DEC 31	G	14.7 MW
	MAR 17	APR 13	M	0.0 K$				
HOMERCTY 1	JAN 1	DEC 31	F	30.9 MW	JAN 1	DEC 31	G	30.9 MW
	JUL 7	AUG 17	M	0.0 K$				
HOMERCTY 2	JAN 1	DEC 31	F	30.9 MW	JAN 1	DEC 31	G	30.9 MW
	MAY 26	JUL 6	M	0.0 K$				
HOMERCTY 3	JAN 1	DEC 31	F	32.5 MW	JAN 1	DEC 31	G	32.5 MW
	SEP 1	OCT 12	M	0.0 K$				
DUNKIRK 1	JUL 1	AUG 25	M	0.0 K$				
DUNKIRK 2	SEP 30	OCT 27	M	0.0 K$				
DUNKIRK 3	SEP 2	SEP 29	M	0.0 K$				
DUNKIRK 4	SEP 30	OCT 27	M	0.0 K$				
HUNTLEY 63	MAR 18	APR 14	M	0.0 K$				
HUNTLEY 64	SEP 30	OCT 27	M	0.0 K$				
HUNTLEY 65	APR 15	MAY 12	M	0.0 K$				
HUNTLEY 66	JUL 29	SEP 22	M	0.0 K$				
HUNTLEY 67	OCT 28	NOV 24	M	0.0 K$				
HUNTLEY 68	MAY 13	JUN 9	M	0.0 K$				
OSWEGO 3	MAY 27	JUN 30	M	0.0 K$				
OSWEGO 4	MAR 24	APR 20	M	0.0 K$				
OSWEGO 5	SEP 23	NOV 17	M	0.0 K$				
OSWEGO 6	FEB 24	MAR 23	M	0.0 K$				
ALBANY 1	JAN 1	JAN 14	M	0.0 K$				
ALBANY 2	JAN 15	FEB 4	M	0.0 K$				
ALBANY 3	FEB 5	FEB 25	M	0.0 K$				
ALBANY 4	FEB 26	MAR 17	M	0.0 K$				
BOWLINE 1	MAY 10	JUN 20	M	0.0 K$				
BOWLINE 2	SEP 13	OCT 3	M	0.0 K$				
LOVETT 3	JAN 11	FEB 7	M	0.0 K$				
HILLBN T 1	APR 12	APR 25	M	0.0 K$				
SHOEMK T 1	MAR 22	APR 4	M	0.0 K$				
RUSSELL 1	OCT 5	NOV 1	M	0.0 K$				
RUSSELL 2	JAN 1	DEC 31	F	10.0 MW	AUG 31	SEP 27	M	0.0 K$
RUSSELL 3	JAN 1	JAN 11	M	0.0 K$	JAN 1	DEC 31	F	10.0 MW

MAINTENANCE DATES SUMMARY FOR 1987

UNIT	START DATE	END DATE	TYPE	COST(K$) OR MW DERATION	START DATE	END DATE	TYPE	COST(K$) OR MW DERATION
	NOV 2	NOV 29	M	0.0 K$				
RUSSELL 4	SEP 28	OCT 25	M	0.0 K$				
BEEBEE 12	MAY 18	JUL 19	M	0.0 K$				
BEEBEE 11	AUG 7	AUG 17	P	6.0 MW	AUG 20	AUG 30	P	6.0 MW
GINNA 1	MAR 30	MAY 17	R	0.0 K$				
FITZPAT 1	SEP 4	OCT 29	M	0.0 K$				
INDIAN 3	NOV 6	DEC 31	M	0.0 K$				
ASTORIA 6	APR 17	MAY 28	M	0.0 K$				
DANSKAMC 3	OCT 20	NOV 19	M	0.0 K$				
A KILL 12	APR 1	APR 27	M	0.0 K$				
A KILL 13	FEB 1	MAR 21	M	0.0 K$				
RAVENS 13	SEP 15	OCT 27	M	0.0 K$				
LOVETT 14	SEP 6	DEC 5	M	0.0 K$				
LOVETT 15	FEB 15	MAR 14	M	0.0 K$				
SHOREHAM 1	SEP 29	NOV 22	M	0.0 K$				
SOMERSET 1	APR 14	MAY 25	M	0.0 K$				

MAINTENANCE DATES SUMMARY FOR 1988

UNIT		START DATE	END DATE	TYPE	COST(K$) OR MW DERATION	START DATE	END DATE	TYPE	COST(K$) OR MW DERATION
OH-FIRM	0	JAN 1	DEC 31	M	0.0 K$				
ROSETON	1	MAY 3	JUN 2	M	0.0 K$				
ROSETON	2	AUG 30	SEP 29	M	0.0 K$				
DANSKMR	1	MAR 29	OCT 31	M	0.0 K$				
DANSKMR	2	JAN 4	MAR 3	M	0.0 K$	APR 1	OCT 31	M	0.0 K$
DANSKAMG	1	JAN 1	APR 21	M	0.0 K$	NOV 1	DEC 31	M	0.0 K$
DANSKAMG	2	JAN 1	MAR 31	M	0.0 K$	NOV 1	DEC 31	M	0.0 K$
ASTORIA	1	APR 5	MAY 23	M	0.0 K$				
ASTORIA	2	MAY 1	JUN 30	M	0.0 K$				
ASTORIA	3	OCT 6	NOV 16	M	0.0 K$				
ASTORIA	4	MAR 3	APR 13	M	0.0 K$				
ASTORIA	5	MAR 31	MAY 19	M	0.0 K$				
EAST RV	5	MAY 5	JUN 15	M	0.0 K$				
EAST RV	6	APR 14	MAY 25	M	0.0 K$				
EAST RV	7	NOV 19	DEC 31	M	0.0 K$				
RAVENS	1	FEB 17	MAR 30	M	0.0 K$				
RAVENS	2	JAN 6	FEB 16	M	0.0 K$				
INDIAN	2	MAY 1	JUN 25	M	0.0 K$				
WATERSD	1	FEB 1	MAR 14	M	0.0 K$				
59TH ST	1	NOV 1	NOV 21	M	0.0 K$				
74TH ST	1	OCT 1	NOV 11	M	0.0 K$				
HUDSON	1	OCT 1	NOV 11	M	0.0 K$				
BARRETT	1	AUG 30	SEP 21	M	0.0 K$				
BARRETT	2	SEP 22	OCT 5	M	0.0 K$				
GLENWOOD	4	NOV 25	DEC 16	M	0.0 K$				
GLENWOOD	5	APR 30	MAY 16	M	0.0 K$				
PT JEFF	1	MAR 1	MAR 16	M	0.0 K$				
PT JEFF	2	MAR 22	APR 13	M	0.0 K$				
N PORT	1	JAN 1	JAN 26	M	0.0 K$				
N PORT	2	JAN 27	FEB 23	M	0.0 K$				
N PORT	3	FEB 24	MAR 23	M	0.0 K$				
N PORT	4	MAR 24	APR 20	M	0.0 K$				
GOUDEY	7	JAN 1	DEC 31	F	4.4 MW	JAN 1	DEC 31	G	4.4 MW
		AUG 4	AUG 31	M	0.0 K$				
GOUDEY	8	JAN 1	DEC 31	F	8.4 MW	JAN 1	DEC 31	G	8.4 MW
		OCT 13	NOV 9	M	0.0 K$				
GRENIDGE	1	JAN 1	DEC 31	F	2.2 MW	JAN 1	DEC 31	G	2.2 MW
		FEB 24	MAR 23	M	0.0 K$				
GRENIDGE	2	JAN 1	DEC 31	F	2.3 MW	JAN 1	DEC 31	G	2.3 MW
		MAY 26	JUN 22	M	0.0 K$				
GRENIDGE	3	JAN 1	DEC 31	F	5.5 MW	JAN 1	DEC 31	G	5.5 MW
		JUN 30	JUL 27	M	0.0 K$				
GRENIDGE	4	JAN 1	DEC 31	F	10.4 MW	JAN 1	DEC 31	G	10.4 MW
		JUN 2	JUN 29	M	0.0 K$				
HICKLING	1	JAN 1	DEC 31	F	3.7 MW	JAN 1	DEC 31	G	3.7 MW

MAINTENANCE DATES SUMMARY FOR 1988

UNIT	START DATE	END DATE	TYPE	COST(K$) OR MW DERATION	START DATE	END DATE	TYPE	COST(K$) OR MW DERATION
	SEP 29	OCT 26	M	0.0 K$				
HICKLING 2	JAN 1	DEC 31	F	5.0 MW	JAN 1	DEC 31	G	5.0 MW
	AUG 18	SEP 14	M	0.0 K$				
JENNISON 1	JAN 1	DEC 31	F	3.5 MW	JAN 1	DEC 31	G	3.5 MW
	OCT 13	NOV 9	M	0.0 K$				
JENNISON 2	JAN 1	DEC 31	F	4.1 MW	JAN 1	DEC 31	G	4.1 MW
	JUL 7	AUG 3	M	0.0 K$				
MILLIKEN 1	JAN 1	DEC 31	F	14.3 MW	JAN 1	DEC 31	G	14.3 MW
	APR 28	MAY 25	M	0.0 K$				
MILLIKEN 2	JAN 1	DEC 31	F	14.7 MW	JAN 1	DEC 31	G	14.7 MW
	MAR 17	APR 13	M	0.0 K$				
HOMERCTY 1	JAN 1	DEC 31	F	30.9 MW	JAN 1	DEC 31	G	30.9 MW
	JUL 7	AUG 17	M	0.0 K$				
HOMERCTY 2	JAN 1	DEC 31	F	30.9 MW	JAN 1	DEC 31	G	30.9 MW
	MAY 26	JUL 6	M	0.0 K$				
HOMERCTY 3	JAN 1	DEC 31	F	32.5 MW	JAN 1	DEC 31	G	32.5 MW
	SEP 1	OCT 12	M	0.0 K$				
9-MILE 1	FEB 22	MAY 30	M	0.0 K$				
DUNKIRK 1	JUL 1	AUG 25	M	0.0 K$				
DUNKIRK 2	SEP 30	OCT 27	M	0.0 K$				
DUNKIRK 3	SEP 2	SEP 29	M	0.0 K$				
DUNKIRK 4	SEP 30	OCT 27	M	0.0 K$				
HUNTLEY 63	MAR 18	APR 14	M	0.0 K$				
HUNTLEY 64	SEP 30	OCT 27	M	0.0 K$				
HUNTLEY 65	APR 15	MAY 12	M	0.0 K$				
HUNTLEY 66	JUL 29	SEP 22	M	0.0 K$				
HUNTLEY 67	OCT 28	NOV 24	M	0.0 K$				
HUNTLEY 68	MAY 13	JUN 9	M	0.0 K$				
OSWEGO 3	MAY 27	JUN 30	M	0.0 K$				
OSWEGO 4	MAR 24	APR 20	M	0.0 K$				
OSWEGO 5	SEP 23	NOV 17	M	0.0 K$				
OSWEGO 6	FEB 24	MAR 23	M	0.0 K$				
ALBANY 1	JAN 1	JAN 14	M	0.0 K$				
ALBANY 2	JAN 15	FEB 4	M	0.0 K$				
ALBANY 3	FEB 5	FEB 25	M	0.0 K$				
ALBANY 4	FEB 26	MAR 17	M	0.0 K$				
BOWLINE 1	MAY 10	JUN 20	M	0.0 K$				
BOWLINE 2	SEP 13	OCT 3	M	0.0 K$				
LOVETT 3	MAR 1	MAY 1	M	0.0 K$				
HILLBN T 1	APR 12	APR 25	M	0.0 K$				
SHOEMK T 1	MAR 22	APR 4	M	0.0 K$				
RUSSELL 1	SEP 5	OCT 2	M	0.0 K$				
RUSSELL 2	JAN 1	DEC 31	F	10.0 MW	AUG 29	SEP 25	M	0.0 K$
RUSSELL 3	JAN 1	DEC 31	F	10.0 MW	OCT 3	OCT 30	M	0.0 K$
RUSSELL 4	SEP 26	NOV 27	M	0.0 K$				

MAINTENANCE DATES SUMMARY FOR 1988

UNIT		START DATE	END DATE	TYPE	COST(K$) OR MW DERATION
BEEBEE	12	JUN 6	JUL 3	M	0.0 K$
BEEBEE	11	AUG 7	AUG 17	P	6.0 MW
GINNA	1	MAR 28	MAY 15	R	0.0 K$
FITZPAT	1	SEP 4	OCT 29	M	0.0 K$
INDIAN	3	NOV 6	DEC 31	M	0.0 K$
ASTORIA	6	APR 17	MAY 28	M	0.0 K$
DANSKAMC	3	OCT 20	NOV 19	M	0.0 K$
A KILL	12	APR 1	APR 27	M	0.0 K$
A KILL	13	FEB 1	MAR 21	M	0.0 K$
RAVENS	13	SEP 15	OCT 27	M	0.0 K$
PT JEFF	13	APR 26	MAY 18	M	0.0 K$
LOVETT	14	SEP 6	DEC 5	M	0.0 K$
LOVETT	15	FEB 15	MAR 14	M	0.0 K$
SHOREHAM	1	SEP 29	NOV 22	M	0.0 K$
SOMERSET	1	APR 14	MAY 25	M	0.0 K$

START DATE	END DATE	TYPE	COST(K$) OR MW DERATION
AUG 20	AUG 30	P	6.0 MW

MAINTENANCE DATES SUMMARY FOR 1989

UNIT		START DATE	END DATE	TYPE	COST(K$) OR MW DERATION	START DATE	END DATE	TYPE	COST(K$) OR MW DERATION
OH-FIRM	0	JAN 1	DEC 31	M	0.0 K$				
ROSETON	1	MAY 3	JUN 2	M	0.0 K$				
ROSETON	2	AUG 30	SEP 29	M	0.0 K$				
DANSKMR	1	MAR 29	OCT 31	M	0.0 K$				
DANSKMR	2	JAN 4	MAR 3	M	0.0 K$	APR 1	OCT 31	M	0.0 K$
DANSKAMG	1	JAN 1	APR 21	M	0.0 K$	NOV 1	DEC 31	M	0.0 K$
DANSKAMG	2	JAN 1	MAR 31	M	0.0 K$	NOV 1	DEC 31	M	0.0 K$
ASTORIA	1	APR 5	MAY 23	M	0.0 K$				
ASTORIA	2	MAY 1	JUN 30	M	0.0 K$				
ASTORIA	3	OCT 6	NOV 16	M	0.0 K$				
ASTORIA	4	MAR 3	APR 13	M	0.0 K$				
ASTORIA	5	MAR 31	MAY 19	M	0.0 K$				
EAST RV	5	MAY 5	JUN 15	M	0.0 K$				
EAST RV	6	APR 14	MAY 25	M	0.0 K$				
EAST RV	7	NOV 19	DEC 31	M	0.0 K$				
RAVENS	1	FEB 17	MAR 30	M	0.0 K$				
RAVENS	2	JAN 6	FEB 16	M	0.0 K$				
INDIAN	2	MAY 1	JUN 25	M	0.0 K$				
WATERSD	1	FEB 1	MAR 14	M	0.0 K$				
59TH ST	1	NOV 1	NOV 21	M	0.0 K$				
74TH ST	1	OCT 1	NOV 11	M	0.0 K$				
HUDSON	1	OCT 1	NOV 11	M	0.0 K$				
BARRETT	1	AUG 30	SEP 21	M	0.0 K$				
BARRETT	2	SEP 22	OCT 5	M	0.0 K$				
GLENWOOD	4	NOV 25	DEC 16	M	0.0 K$				
GLENWOOD	5	APR 30	MAY 16	M	0.0 K$				
PT JEFF	1	MAR 1	MAR 16	M	0.0 K$				
PT JEFF	2	MAR 22	APR 13	M	0.0 K$				
N PORT	1	JAN 1	JAN 26	M	0.0 K$				
N PORT	2	JAN 27	FEB 23	M	0.0 K$				
N PORT	3	FEB 24	MAR 23	M	0.0 K$				
N PORT	4	MAR 24	APR 20	M	0.0 K$				
GOUDEY	7	JAN 1	DEC 31	F	4.4 MW	JAN 1	DEC 31	G	4.4 MW
		AUG 4	AUG 31	M	0.0 K$				
GOUDEY	8	JAN 1	DEC 31	F	8.4 MW	JAN 1	DEC 31	G	8.4 MW
		OCT 13	NOV 9	M	0.0 K$				
GRENIDGE	1	JAN 1	DEC 31	F	2.2 MW	JAN 1	DEC 31	G	2.2 MW
		FEB 24	MAR 23	M	0.0 K$				
GRENIDGE	2	JAN 1	DEC 31	F	2.3 MW	JAN 1	DEC 31	G	2.3 MW
		MAY 26	JUN 22	M	0.0 K$				
GRENIDGE	3	JAN 1	DEC 31	F	5.5 MW	JAN 1	DEC 31	G	5.5 MW
		JUN 30	JUL 27	M	0.0 K$				
GRENIDGE	4	JAN 1	DEC 31	F	10.4 MW	JAN 1	DEC 31	G	10.4 MW
		JUN 2	JUN 29	M	0.0 K$				
HICKLING	1	JAN 1	DEC 31	F	3.7 MW	JAN 1	DEC 31	G	3.7 MW

MAINTENANCE DATES SUMMARY FOR 1989

UNIT	START DATE	END DATE	TYPE	COST(K$) OR MW DERATION	START DATE	END DATE	TYPE	COST(K$) OR MW DERATION
	SEP 29	OCT 26	M	0.0 K$				
HICKLING 2	JAN 1	DEC 31	F	5.0 MW	JAN 1	DEC 31	G	5.0 MW
	AUG 18	SEP 14	M	0.0 K$				
JENNISON 1	JAN 1	DEC 31	F	3.5 MW	JAN 1	DEC 31	G	3.5 MW
	OCT 13	NOV 9	M	0.0 K$				
JENNISON 2	JAN 1	DEC 31	F	4.1 MW	JAN 1	DEC 31	G	4.1 MW
	JUL 7	AUG 3	M	0.0 K$				
MILLIKEN 1	JAN 1	DEC 31	F	14.3 MW	JAN 1	DEC 31	G	14.3 MW
	APR 28	MAY 25	M	0.0 K$				
MILLIKEN 2	JAN 1	DEC 31	F	14.7 MW	JAN 1	DEC 31	G	14.7 MW
	MAR 17	APR 13	M	0.0 K$				
HOMERCTY 1	JAN 1	DEC 31	F	30.9 MW	JAN 1	DEC 31	G	30.9 MW
	JUL 7	AUG 17	M	0.0 K$				
HOMERCTY 2	JAN 1	DEC 31	F	30.9 MW	JAN 1	DEC 31	G	30.9 MW
	MAY 26	JUL 6	M	0.0 K$				
HOMERCTY 3	JAN 1	DEC 31	F	32.5 MW	JAN 1	DEC 31	G	32.5 MW
	SEP 1	OCT 12	M	0.0 K$				
DUNKIRK 1	JUL 1	AUG 25	M	0.0 K$				
DUNKIRK 2	SEP 30	OCT 27	M	0.0 K$				
DUNKIRK 3	SEP 2	SEP 29	M	0.0 K$				
DUNKIRK 4	SEP 30	OCT 27	M	0.0 K$				
HUNTLEY 63	MAR 18	APR 14	M	0.0 K$				
HUNTLEY 64	SEP 30	OCT 27	M	0.0 K$				
HUNTLEY 65	APR 15	MAY 12	M	0.0 K$				
HUNTLEY 66	JUL 29	SEP 22	M	0.0 K$				
HUNTLEY 67	OCT 28	NOV 24	M	0.0 K$				
HUNTLEY 68	MAY 13	JUN 9	M	0.0 K$				
OSWEGO 3	MAY 27	JUN 30	M	0.0 K$				
OSWEGO 4	MAR 24	APR 20	M	0.0 K$				
OSWEGO 5	SEP 23	NOV 17	M	0.0 K$				
OSWEGO 6	FEB 24	MAR 23	M	0.0 K$				
ALBANY 1	JAN 1	JAN 14	M	0.0 K$				
ALBANY 2	JAN 15	FEB 4	M	0.0 K$				
ALBANY 3	FEB 5	FEB 25	M	0.0 K$				
ALBANY 4	FEB 26	MAR 17	M	0.0 K$				
BOWLINE 1	MAY 10	JUN 20	M	0.0 K$				
BOWLINE 2	SEP 13	OCT 3	M	0.0 K$				
HILLSN T 1	APR 12	APR 25	M	0.0 K$				
SHOEMK T 1	MAR 22	APR 4	M	0.0 K$				
RUSSELL 1	NOV 6	DEC 3	M	0.0 K$				
RUSSELL 2	JAN 1	DEC 31	F	10.0 MW	SEP 25	NOV 26	M	0.0 K$
RUSSELL 3	JAN 1	DEC 31	F	10.0 MW	SEP 4	OCT 1	M	0.0 K$
RUSSELL 4	OCT 2	OCT 29	M	0.0 K$				
BEEBEE 12	MAY 15	JUN 11	M	0.0 K$				
BEEBEE 11	AUG 7	AUG 17	P	6.0 MW	AUG 20	AUG 30	P	6.0 MW

MAINTENANCE DATES SUMMARY FOR 1989

UNIT		START DATE	END DATE	TYPE	COST(K$) OR MW DERATION	START DATE	END DATE	TYPE	COST(K$) OR MW DERATION
GINNA	1	MAR 27	MAY 14	R	0.0 K$				
FITZPAT	1	SEP 4	OCT 29	M	0.0 K$				
INDIAN	3	NOV 6	DEC 31	M	0.0 K$				
ASTORIA	6	APR 17	MAY 28	M	0.0 K$				
DANSKAMC	3	OCT 20	NOV 19	M	0.0 K$				
DANSKAMC	4	NOV 1	DEC 1	M	0.0 K$				
A KILL	12	APR 1	APR 27	M	0.0 K$				
A KILL	13	FEB 1	MAR 21	M	0.0 K$				
RAVENS	13	SEP 15	OCT 27	M	0.0 K$				
PT JEFF	13	APR 26	MAY 18	M	0.0 K$				
PT JEFF	14	MAY 19	JUN 8	M	0.0 K$				
LOVETT	13	JAN 11	FEB 7	M	0.0 K$				
LOVETT	14	SEP 6	DEC 5	M	0.0 K$				
LOVETT	15	FEB 15	MAR 14	M	0.0 K$				
SHOREHAM	1	SEP 29	NOV 22	M	0.0 K$				
SOMERSET	1	APR 14	MAY 25	M	0.0 K$				
9-MILE	2	FEB 22	MAY 30	M	0.0 K$				

MAINTENANCE DATES SUMMARY FOR 1990

UNIT		START DATE	END DATE	TYPE	COST(K$) OR MW DERATION	START DATE	END DATE	TYPE	COST(K$) OR MW DERATION
OH-FIRM	0	JAN 1	DEC 31	M	0.0 K$				
ROSETON	1	MAY 3	JUN 2	M	0.0 K$				
ROSETON	2	AUG 30	SEP 29	M	0.0 K$				
DANSKMR	1	MAR 29	OCT 31	M	0.0 K$				
DANSKMR	2	JAN 4	MAR 3	M	0.0 K$	APR 1	OCT 31	M	0.0 K$
DANSKAMG	1	JAN 1	APR 21	M	0.0 K$	NOV 1	DEC 31	M	0.0 K$
DANSKAMG	2	JAN 1	MAR 31	M	0.0 K$	NOV 1	DEC 31	M	0.0 K$
ASTORIA	1	APR 5	MAY 23	M	0.0 K$				
ASTORIA	2	MAY 1	JUN 30	M	0.0 K$				
ASTORIA	3	OCT 6	NOV 16	M	0.0 K$				
ASTORIA	4	MAR 3	APR 13	M	0.0 K$				
ASTORIA	5	MAR 31	MAY 19	M	0.0 K$				
EAST RV	5	MAY 5	JUN 15	M	0.0 K$				
EAST RV	6	APR 14	MAY 25	M	0.0 K$				
EAST RV	7	NOV 19	DEC 31	M	0.0 K$				
RAVENS	1	FEB 17	MAR 30	M	0.0 K$				
RAVENS	2	JAN 6	FEB 16	M	0.0 K$				
INDIAN	2	MAY 1	JUN 25	M	0.0 K$				
WATERSD	1	FEB 1	MAR 14	M	0.0 K$				
59TH ST	1	NOV 1	NOV 21	M	0.0 K$				
74TH ST	1	OCT 1	NOV 11	M	0.0 K$				
HUDSON	1	OCT 1	NOV 11	M	0.0 K$				
BARRETT	1	AUG 30	SEP 21	M	0.0 K$				
BARRETT	2	SEP 22	OCT 5	M	0.0 K$				
GLENWOOD	4	NOV 25	DEC 16	M	0.0 K$				
GLENWOOD	5	APR 30	MAY 16	M	0.0 K$				
PT JEFF	1	MAR 1	MAR 16	M	0.0 K$				
PT JEFF	2	MAR 22	APR 13	M	0.0 K$				
N PORT	1	JAN 1	JAN 26	M	0.0 K$				
N PORT	2	JAN 27	FEB 23	M	0.0 K$				
N PORT	3	FEB 24	MAR 23	M	0.0 K$				
N PORT	4	MAR 24	APR 20	M	0.0 K$				
GOUDEY	7	JAN 1	DEC 31	F	4.4 MW	JAN 1	DEC 31	G	4.4 MW
		AUG 4	AUG 31	M	0.0 K$				
GOUDEY	8	JAN 1	DEC 31	F	8.4 MW	JAN 1	DEC 31	G	8.4 MW
		OCT 13	NOV 9	M	0.0 K$				
GRENIDGE	1	JAN 1	DEC 31	F	2.2 MW	JAN 1	DEC 31	G	2.2 MW
		FEB 24	MAR 23	M	0.0 K$				
GRENIDGE	2	JAN 1	DEC 31	F	2.3 MW	JAN 1	DEC 31	G	2.3 MW
		MAY 26	JUN 22	M	0.0 K$				
GRENIDGE	3	JAN 1	DEC 31	F	5.5 MW	JAN 1	DEC 31	G	5.5 MW
		JUN 30	JUL 27	M	0.0 K$				
GRENIDGE	4	JAN 1	DEC 31	F	10.4 MW	JAN 1	DEC 31	G	10.4 MW
		JUN 2	JUN 29	M	0.0 K$				
HICKLING	1	JAN 1	DEC 31	F	3.7 MW	JAN 1	DEC 31	G	3.7 MW

MAINTENANCE DATES SUMMARY FOR 1990

UNIT	START DATE	END DATE	TYPE	COST(K$) OR MW DERATION	START DATE	END DATE	TYPE	COST(K$) OR MW DERATION
	SEP 29	OCT 26	M	0.0 K$				
HICKLING 2	JAN 1	DEC 31	F	5.0 MW	JAN 1	DEC 31	G	5.0 MW
	AUG 18	SEP 14	M	0.0 K$				
JENNISON 1	JAN 1	DEC 31	F	3.5 MW	JAN 1	DEC 31	G	3.5 MW
	OCT 13	NOV 9	M	0.0 K$				
JENNISON 2	JAN 1	DEC 31	F	4.1 MW	JAN 1	DEC 31	G	4.1 MW
	JUL 7	AUG 3	M	0.0 K$				
MILLIKEN 1	JAN 1	DEC 31	F	14.3 MW	JAN 1	DEC 31	G	14.3 MW
	APR 28	MAY 25	M	0.0 K$				
MILLIKEN 2	JAN 1	DEC 31	F	14.7 MW	JAN 1	DEC 31	G	14.7 MW
	MAR 17	APR 13	M	0.0 K$				
HOMERCTY 1	JAN 1	DEC 31	F	30.9 MW	JAN 1	DEC 31	G	30.9 MW
	JUL 7	AUG 17	M	0.0 K$				
HOMERCTY 2	JAN 1	DEC 31	F	30.9 MW	JAN 1	DEC 31	G	30.9 MW
	MAY 26	JUL 6	M	0.0 K$				
HOMERCTY 3	JAN 1	DEC 31	F	32.5 MW	JAN 1	DEC 31	G	32.5 MW
	SEP 1	OCT 12	M	0.0 K$				
9-MILE 1	FEB 22	MAY 30	M	0.0 K$				
DUNKIRK 1	JUL 1	AUG 25	M	0.0 K$				
DUNKIRK 2	SEP 30	OCT 27	M	0.0 K$				
DUNKIRK 3	SEP 2	SEP 29	M	0.0 K$				
DUNKIRK 4	SEP 30	OCT 27	M	0.0 K$				
HUNTLEY 63	MAR 18	APR 14	M	0.0 K$				
HUNTLEY 64	SEP 30	OCT 27	M	0.0 K$				
HUNTLEY 65	APR 15	MAY 12	M	0.0 K$				
HUNTLEY 66	JUL 29	SEP 22	M	0.0 K$				
HUNTLEY 67	OCT 28	NOV 24	M	0.0 K$				
HUNTLEY 68	MAY 13	JUN 9	M	0.0 K$				
OSWEGO 3	MAY 27	JUN 30	M	0.0 K$				
OSWEGO 4	MAR 24	APR 20	M	0.0 K$				
OSWEGO 5	SEP 23	NOV 17	M	0.0 K$				
OSWEGO 6	FEB 24	MAR 23	M	0.0 K$				
ALBANY 1	JAN 1	JAN 14	M	0.0 K$				
ALBANY 2	JAN 15	FEB 4	M	0.0 K$				
ALBANY 3	FEB 5	FEB 25	M	0.0 K$				
ALBANY 4	FEB 26	MAR 17	M	0.0 K$				
BOWLINE 1	MAY 10	JUN 20	M	0.0 K$				
BOWLINE 2	SEP 13	OCT 3	M	0.0 K$				
HILLBR T 1	APR 12	APR 25	M	0.0 K$				
SHOEMK T 1	MAR 22	APR 4	M	0.0 K$				
RUSSELL 1	OCT 1	OCT 28	M	0.0 K$				
RUSSELL 2	JAN 1	DEC 31	F	10.0 MW	SEP 3	SEP 30	M	0.0 K$
RUSSELL 3	JAN 1	DEC 31	F	10.0 MW	OCT 29	NOV 25	M	0.0 K$
RUSSELL 4	OCT 1	OCT 28	M	0.0 K$				
BEEBEE 12	JUN 4	JUL 1	M	0.0 K$				

MAINTENANCE DATES SUMMARY FOR 1990

UNIT		START DATE	END DATE	TYPE	COST(K$) OR MW DERATION	START DATE	END DATE	TYPE	COST(K$) OR MW DERATION
GINNA	1	MAR 26	MAY 13	R	0.0 K$				
FITZPAT	1	SEP 4	OCT 29	M	0.0 K$				
INDIAN	3	NOV 6	DEC 31	M	0.0 K$				
ASTORIA	6	APR 17	MAY 28	M	0.0 K$				
DANSKAMC	3	OCT 20	NOV 19	M	0.0 K$				
DANSKAMC	4	NOV 1	DEC 1	M	0.0 K$				
A KILL	12	APR 1	APR 27	M	0.0 K$				
A KILL	13	FEB 1	MAR 21	M	0.0 K$				
RAVENS	13	SEP 15	OCT 27	M	0.0 K$				
PT JEFF	13	APR 26	MAY 18	M	0.0 K$				
PT JEFF	14	MAY 19	JUN 8	M	0.0 K$				
LOVETT	13	JAN 11	FEB 7	M	0.0 K$				
LOVETT	14	SEP 6	DEC 5	M	0.0 K$				
LOVETT	15	FEB 15	MAR 14	M	0.0 K$				
SHOREHAM	1	SEP 29	NOV 22	M	0.0 K$				
SOMERSET	1	APR 14	MAY 25	M	0.0 K$				

MAINTENANCE DATES SUMMARY FOR 1991

UNIT		START DATE	END DATE	TYPE	COST(K$) OR MW DERATION	START DATE	END DATE	TYPE	COST(K$) OR MW DERATION
OH-FIRM	0	JAN 1	DEC 31	M	0.0 K$				
ROSETON	1	MAY 3	JUN 2	M	0.0 K$				
ROSETON	2	AUG 30	SEP 29	M	0.0 K$				
DANSKMR	1	MAR 29	OCT 31	M	0.0 K$				
DANSKMR	2	JAN 4	MAR 3	M	0.0 K$	APR 1	OCT 31	M	0.0 K$
DANSKANG	1	JAN 1	APR 21	M	0.0 K$	NOV 1	DEC 31	M	0.0 K$
DANSKANG	2	JAN 1	MAR 31	M	0.0 K$	NOV 1	DEC 31	M	0.0 K$
ASTORIA	1	APR 5	MAY 23	M	0.0 K$				
ASTORIA	2	MAY 1	JUN 30	M	0.0 K$				
ASTORIA	3	OCT 6	NOV 16	M	0.0 K$				
ASTORIA	4	MAR 3	APR 13	M	0.0 K$				
ASTORIA	5	MAR 31	MAY 19	M	0.0 K$				
EAST RV	5	MAY 5	JUN 15	M	0.0 K$				
EAST RV	6	APR 14	MAY 25	M	0.0 K$				
EAST RV	7	NOV 19	DEC 31	M	0.0 K$				
RAVENS	1	FEB 17	MAR 30	M	0.0 K$				
RAVENS	2	JAN 6	FEB 16	M	0.0 K$				
INDIAN	2	MAY 1	JUN 25	M	0.0 K$				
WATERSD	1	FEB 1	MAR 14	M	0.0 K$				
59TH ST	1	NOV 1	NOV 21	M	0.0 K$				
74TH ST	1	OCT 1	NOV 11	M	0.0 K$				
HUDSON	1	OCT 1	NOV 11	M	0.0 K$				
BARRETT	1	AUG 30	SEP 21	M	0.0 K$				
BARRETT	2	SEP 22	OCT 5	M	0.0 K$				
GLENWOOD	4	NOV 25	DEC 16	M	0.0 K$				
GLENWOOD	5	APR 30	MAY 16	M	0.0 K$				
PT JEFF	1	MAR 1	MAR 16	M	0.0 K$				
PT JEFF	2	MAR 22	APR 13	M	0.0 K$				
N PORT	1	JAN 1	JAN 26	M	0.0 K$				
N PORT	2	JAN 27	FEB 23	M	0.0 K$				
N PORT	3	FEB 24	MAR 23	M	0.0 K$				
N PORT	4	MAR 24	APR 20	M	0.0 K$				
GOUDEY	7	JAN 1	DEC 31	F	4.4 MW	JAN 1	DEC 31	G	4.4 MW
		AUG 4	AUG 31	M	0.0 K$				
GOUDEY	8	JAN 1	DEC 31	F	8.4 MW	JAN 1	DEC 31	G	8.4 MW
		OCT 13	NOV 9	M	0.0 K$				
GRENIDGE	1	JAN 1	DEC 31	F	2.2 MW	JAN 1	DEC 31	G	2.2 MW
		FEB 24	MAR 23	M	0.0 K$				
GRENIDGE	2	JAN 1	DEC 31	F	2.3 MW	JAN 1	DEC 31	G	2.3 MW
		MAY 26	JUN 22	M	0.0 K$				
GRENIDGE	3	JAN 1	DEC 31	F	5.5 MW	JAN 1	DEC 31	G	5.5 MW
		JUN 30	JUL 27	M	0.0 K$				
GRENIDGE	4	JAN 1	DEC 31	F	10.4 MW	JAN 1	DEC 31	G	10.4 MW
		JUN 2	JUN 29	M	0.0 K$				
HICKLING	1	JAN 1	DEC 31	F	3.7 MW	JAN 1	DEC 31	G	3.7 MW

MAINTENANCE DATES SUMMARY FOR 1991

UNIT	START DATE	END DATE	TYPE	COST(K$) OR MW DERATION	START DATE	END DATE	TYPE	COST(K$) OR MW DERATION
	SEP 29	OCT 26	M	0.0 K$				
HICKLING 2	JAN 1	DEC 31	F	5.0 MW	JAN 1	DEC 31	G	5.0 MW
	AUG 18	SEP 14	M	0.0 K$				
JENNISON 1	JAN 1	DEC 31	F	3.5 MW	JAN 1	DEC 31	G	3.5 MW
	OCT 13	NOV 9	M	0.0 K$				
JENNISON 2	JAN 1	DEC 31	F	4.1 MW	JAN 1	DEC 31	G	4.1 MW
	JUL 7	AUG 3	M	0.0 K$				
MILLIKEN 1	JAN 1	DEC 31	F	14.3 MW	JAN 1	DEC 31	G	14.3 MW
	APR 28	MAY 25	M	0.0 K$				
MILLIKEN 2	JAN 1	DEC 31	F	14.7 MW	JAN 1	DEC 31	G	14.7 MW
	MAR 17	APR 13	M	0.0 K$				
HOMERCTY 1	JAN 1	DEC 31	F	30.9 MW	JAN 1	DEC 31	G	30.9 MW
	JUL 7	AUG 17	M	0.0 K$				
HOMERCTY 2	JAN 1	DEC 31	F	30.9 MW	JAN 1	DEC 31	G	30.9 MW
	MAY 26	JUL 6	M	0.0 K$				
HOMERCTY 3	JAN 1	DEC 31	F	32.5 MW	JAN 1	DEC 31	G	32.5 MW
	SEP 1	OCT 12	M	0.0 K$				
DUNKIRK 1	JUL 1	AUG 25	M	0.0 K$				
DUNKIRK 2	SEP 30	OCT 27	M	0.0 K$				
DUNKIRK 3	SEP 2	SEP 29	M	0.0 K$				
DUNKIRK 4	SEP 30	OCT 27	M	0.0 K$				
HUNTLEY 63	MAR 18	APR 14	M	0.0 K$				
HUNTLEY 64	SEP 30	OCT 27	M	0.0 K$				
HUNTLEY 65	APR 15	MAY 12	M	0.0 K$				
HUNTLEY 66	JUL 29	SEP 22	M	0.0 K$				
HUNTLEY 67	OCT 28	NOV 24	M	0.0 K$				
HUNTLEY 68	MAY 13	JUN 9	M	0.0 K$				
OSWEGO 3	MAY 27	JUN 30	M	0.0 K$				
OSWEGO 4	MAR 24	APR 20	M	0.0 K$				
OSWEGO 5	SEP 23	NOV 17	M	0.0 K$				
OSWEGO 6	FEB 24	MAR 23	M	0.0 K$				
ALBANY 1	JAN 1	JAN 14	M	0.0 K$				
ALBANY 2	JAN 15	FEB 4	M	0.0 K$				
ALBANY 3	FEB 5	FEB 25	M	0.0 K$				
ALBANY 4	FEB 26	MAR 17	M	0.0 K$				
BOWLINE 1	MAY 10	JUN 20	M	0.0 K$				
BOWLINE 2	SEP 13	OCT 3	M	0.0 K$				
HILLBN T 1	APR 12	APR 25	M	0.0 K$				
SHOEMK T 1	MAR 22	APR 4	M	0.0 K$				
RUSSELL 1	AUG 26	OCT 27	M	0.0 K$				
RUSSELL 2	JAN 1	DEC 31	F	10.0 MW	SEP 2	SEP 29	M	0.0 K$
RUSSELL 3	JAN 1	DEC 31	F	10.0 MW	SEP 30	DEC 1	M	0.0 K$
RUSSELL 4	SEP 30	OCT 27	M	0.0 K$				
BEEBEE 12	MAY 20	JUN 16	M	0.0 K$				
GINNA 1	APR 1	MAY 19	R	0.0 K$				

MAINTENANCE DATES SUMMARY FOR 1991

UNIT	START DATE	END DATE	TYPE	COST(K$) OR MW DERATION	START DATE	END DATE	TYPE	COST(K$) OR MW DERATION
FITZPAT 1	SEP 4	OCT 29	M	0.0 K$				
INDIAN 3	NOV 6	DEC 31	M	0.0 K$				
ASTORIA 6	APR 17	MAY 28	M	0.0 K$				
DANSKAMC 3	OCT 20	NOV 19	M	0.0 K$				
DANSKAMC 4	NOV 1	DEC 1	M	0.0 K$				
A KILL 12	APR 1	APR 27	M	0.0 K$				
A KILL 13	FEB 1	MAR 21	M	0.0 K$				
RAVENS 13	SEP 15	OCT 27	M	0.0 K$				
PT JEFF 13	APR 26	MAY 18	M	0.0 K$				
PT JEFF 14	MAY 19	JUN 8	M	0.0 K$				
LOVETT 13	JAN 11	FEB 7	M	0.0 K$				
LOVETT 14	SEP 6	DEC 5	M	0.0 K$				
LOVETT 15	FEB 15	MAR 14	M	0.0 K$				
SHOREHAM 1	SEP 29	NOV 22	M	0.0 K$				
SOMERSET 1	APR 14	MAY 25	M	0.0 K$				
9-MILE 2	FEB 22	MAY 30	M	0.0 K$				