REGULATORY INFORMATION DISTRIBUTION SYSTEM (RIDS)

ACCESSION NBR:8302250412 DOC.DATE: 83/02/18 NOTARIZED: NO DOCKET #
FACIL:50-410 Nine Mile Point Nuclear Station, Unit 2, Niagara Moha 05000410
AUTH.NAME AUTHOR AFFILIATION
MANGAN,C.V. Niagara Mohawk Power Corp.
RECIP.NAME RECIPIENT AFFILIATION
SCHWENCER,A. Licensing Branch 2

SUBJECT: Forwards responses to NRC 830127 ltr re const of revetment ditch sys at facility.One oversize figure encl.Apertune card is available in PDR.

DISTRIBUTION CODE: B001S COPIES RECEIVED:LTR 1 ENCL 1 SIZE: 7
TITLE: Licensing Submittal: PSAR/FSAR Amdts & Related Correspondence

NOTES:

	RECIPIENT ID CODE/NAME	COPIES LTTR	COPIES ENCL	RECIPIENT ID CODE/NAME	COPIES LTTR	COPIES ENCL
	NRR/DL/ADL	1	0	NRR LB2 BC	1	0
	NRR LB2 LA	1	0	HAUGHEY,M 01	1	1
INTERNAL:	ELD/HDS3	1	0	IE FILE	1	1
	IE/DEP EPDS 35	1	1	IE/DEP/EPLB 36	3	3
	NRR/DE/AEAB	1	0	NRR/DE/CEB 11	1	1
	NRR/DE/EQB 13	2	2	NRR/DE/GB 28	2	2
	NRR/DE/HGEB 30	1	1	NRR/DE/MEB 18	1	1
	NRR/DE/MTEB 17	1	1	NRR/DE/QAB 21	1	1
	NRR/DE/SAB 24	1	1	NRR/DE/SEB 25	1	1
	NRR/DHFS/HFEB40	1	1	NRR/DHFS/LQB 32	1	1
	NRR/DL/SSPB	1	0	NRR/DSI/AEB 26	1	1
	NRR/DSI/ASB	1	1	NRR/DSI/CPB 10	1	1
	NRR/DSI/CSB 09	1	1	NRR/DSI/ICSB 16	1	1
	NRR/DSI/METB 12	1	1	NRR/DSI/PSB 19	1	1
	NRR/DSI/RAB 22	1	1	NRR/DSI/RSB 23	1	1
	REG FILE 04	1	1	RGN1	3	3
	RM/DDAMI/MIB	1	0			
EXTERNAL:	ACRS 41	6	6	BNL(AMDTS ONLY)	1	1
	DMB/DSS (AMDTS)	1	1	FEMA-REP DIV 39	1	1
	LPDR 03	1	1	NRC PDR 02	1	1
	NSIC 05	1	1	NTIS	1	1

TOTAL NUMBER OF COPIES REQUIRED: LTTR 52 ENCL 45

NIAGARA MOHAWK

NIAGARA MOHAWK POWER CORPORATION/300 ERIE BOULEVARD WEST, SYRACUSE, N.Y. 13202/TELEPHONE (315) 474-1511

February 18, 1983

Mr. A. Schwencer, Chief
Licensing Branch No. 2
Division of Licensing
U.S. Nuclear Regulatory Commission
Washington DC 20555

Dear Mr. Schwencer:

Re: Nine Mile Point Unit 2
Docket No. 50-410

In a letter dated January 27, 1983 from Mr. Schwencer to G. Rhode, two questions were provided regarding the construction of the revetment ditch system at Nine Mile Point Unit 2. The questions and responses are enclosed.

Sincerely,

C. V. Mangan,
Vice President
Nuclear Engineering & Licensing

CVM/NLR:ja
Enclosure

B001

Question 1

As certain items cited in references 2 and 3 are no longer applicable to the final revetment ditch design, provide a detailed drawing of the revetment ditch system which indicates the following details:

A. Gradation specifications thickness and slopes of the various quarry stones under and filter layers comprising the revetment ditch system.

B. Gradation of the insitu soil.

C. Type, weight and dimension of the primary concrete armor units, as well as the basis for, and details of, the revetment reinforcement for the armor units.

Response 1

A. The gradation thicknesses and slopes of the quarry stone layers in the revetment ditch system are shown in Figure 1. The gradation requirements of the two zone granular filter medium are illustrated in Figure 2.

B. A typical gradation curve of the insitu soil for which the granular filter medium were designed is shown on figure 3.

C. Details regarding type, weight and dimensions of the 4900 pound dolosse are shown in Figures 4 and 5. Each dolos unit contains approximately 4% of epoxy coated reinforcing steel by weight. The reinforcing steel arrangement is shown on Figure 6. The basis for reinforcement of the armor units is to obtain the desired weight and maintain the integrity of the units.

Question 2

Provide detailed information on the descriptions and properties of the overburdened soil proposed to be left in place below the slopes of the ditch. Describe how the stability of this material was investigated. Provide details and results of your stability investigations.

Response 2

As shown on Figure 1, all existing materials (insitu) below the slopes of the ditch shall be excavated and replaced with quarry stone materials. Therefore, no stability analysis on a natural soil zone below the ditch was performed.

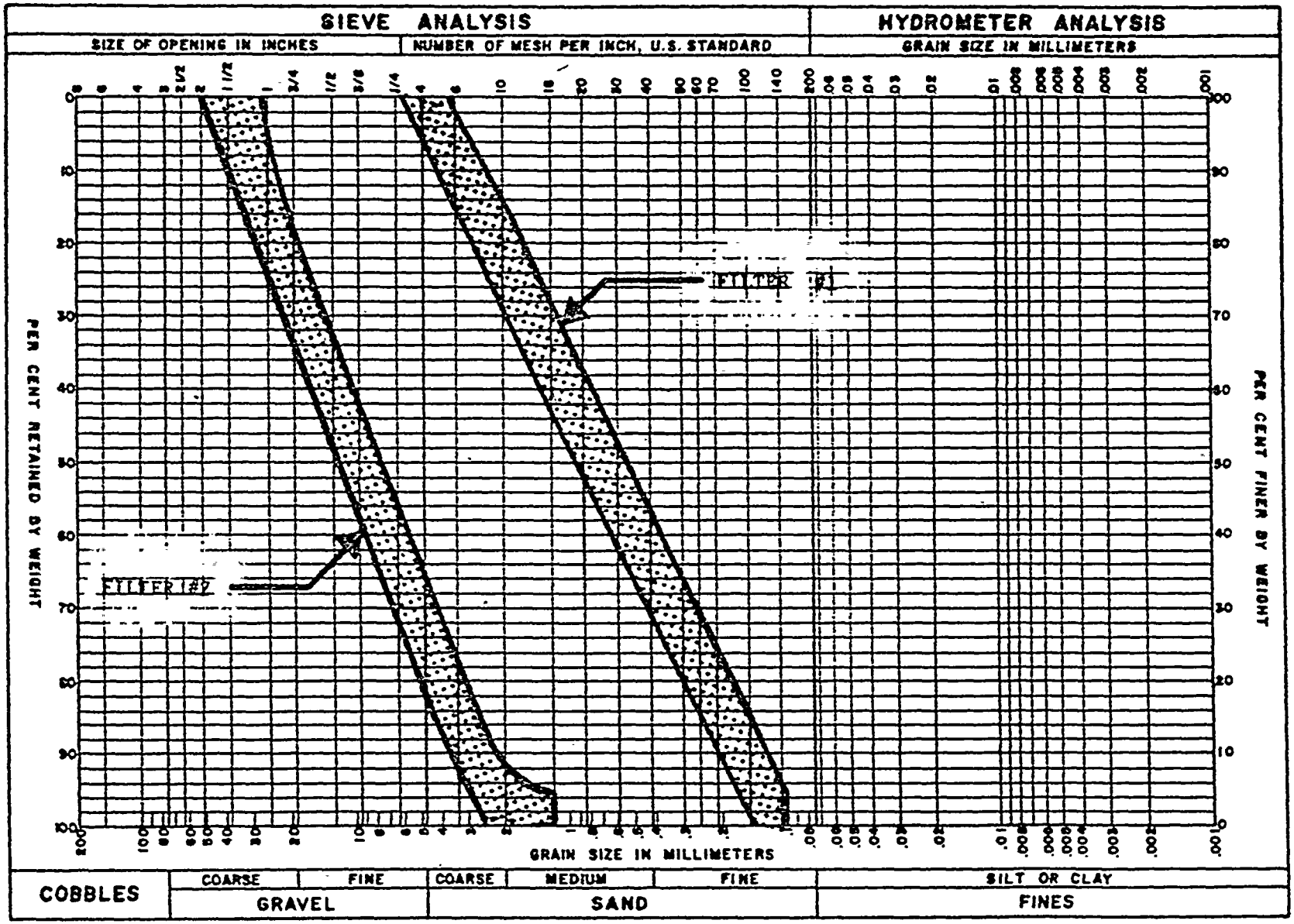

POWER INDUSTRY GROUP

CHECKED

CORRECT

APPROVED

REVISIONS 2 3 4 5

TITLE: Granular Filter Gradation Requirements

SCALE:

DATE:

Figure 7

ONE & WEBSTER ENGINEERING CORPORATION

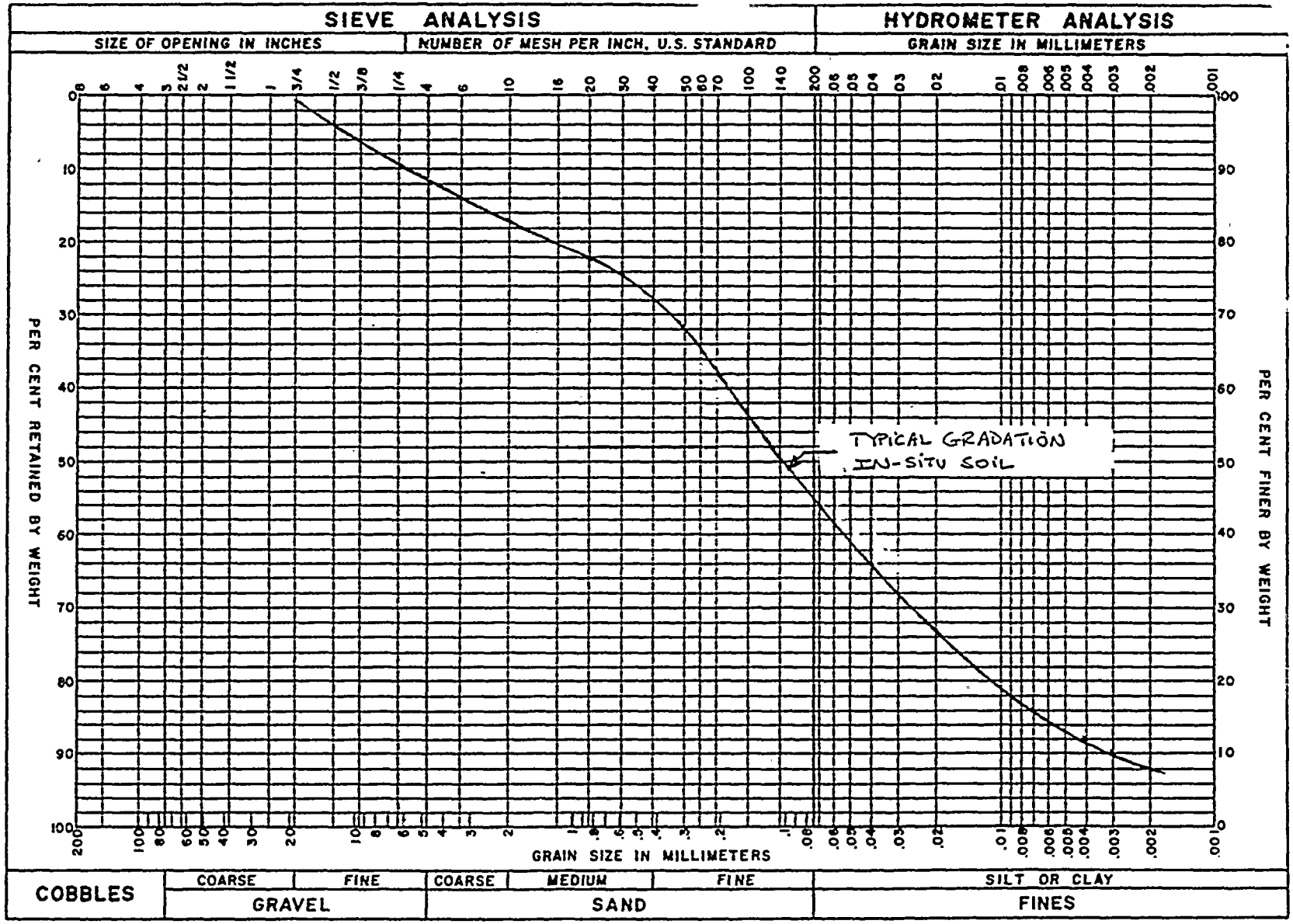

STONE & WEBSTER ENGINEERING CORPORATION

POWER INDUSTRY GROUP

CHECKED

CORRECT

APPROVED

REVISIONS 2 3 4 5

TITLE TYPICAL GRADATION CURVE FOR THE IN-SITU SOILS

SCALE:

DATE:

FIGURE 3

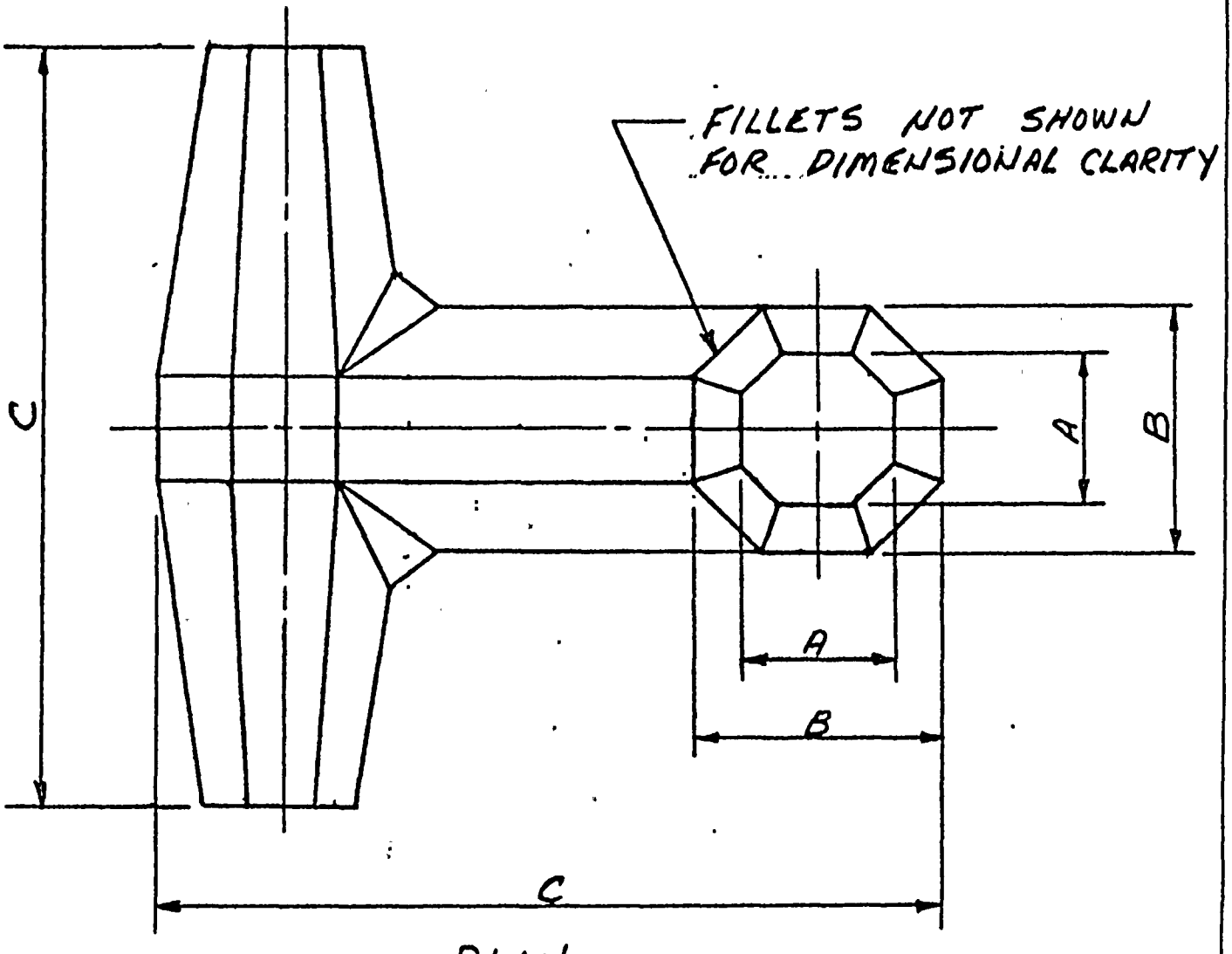

PLAN

DIMENSION	TOLERANCE
A = 1'-2 3/8"	+1/4" -0"
B = 1'-11"	+1/4" -0"
C = 6'-0"	+1/2" -0"

NOTE:
SLOPE ≃ 1 TO 2

RML

POWER INDUSTRY GROUP	TITLE DOLOS ARMOR UNIT DIMENSIONS & TOLERANCES NINE MILE POINT NUCLEAR STATION-UNIT 2	SCALE: 3/4" = 1'-0"	
CHECKED		DATE: 1/27/83	
CORRECT			
APPROVED			
REVISIONS ②	③	④	⑤

FIGURE 4

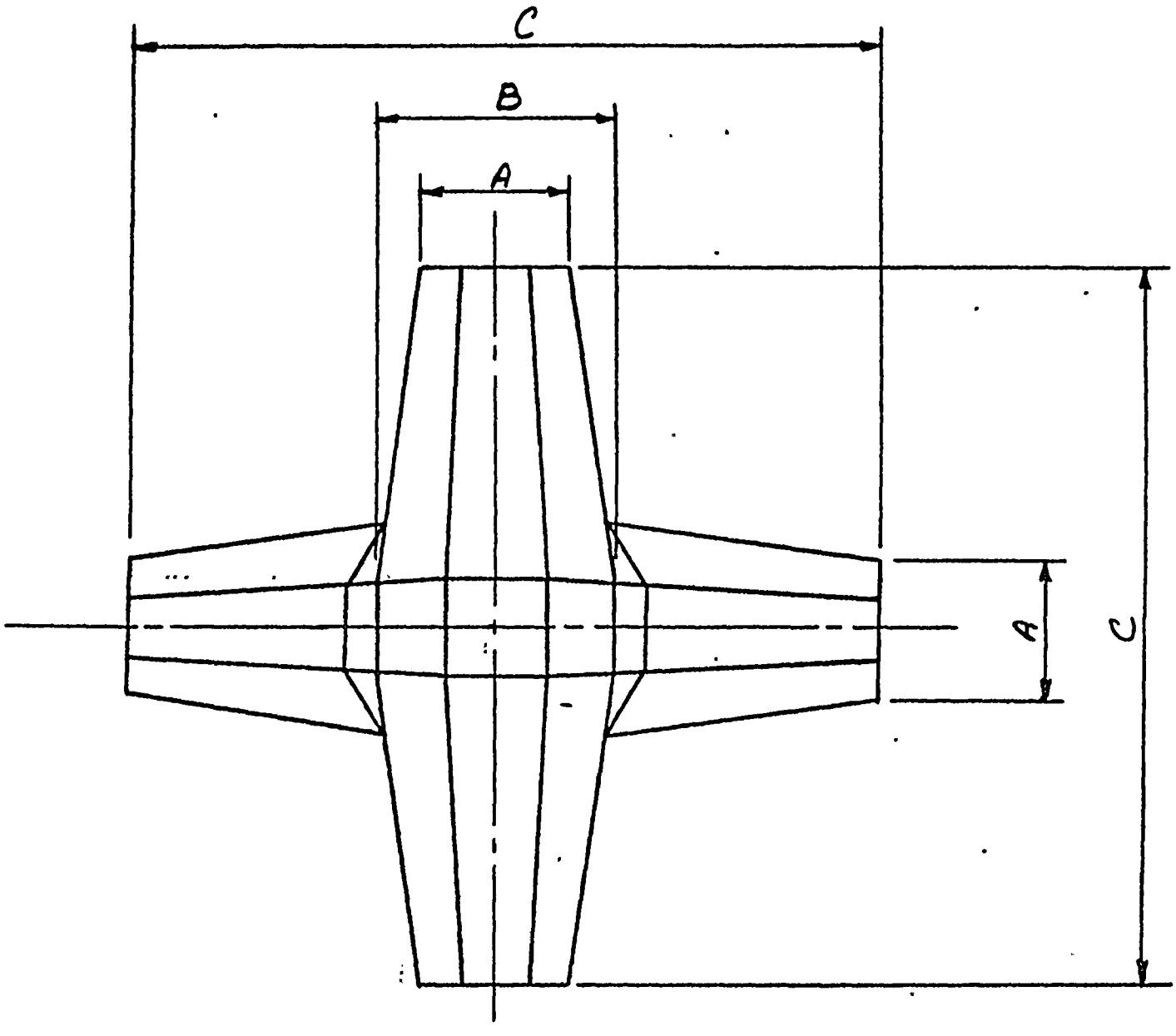

ELEVATION

SEE FIGURE 4 FOR DIMENSIONS

RML

POWER INDUSTRY GROUP	TITLE DOLOS ARMOR UNIT DIMENSIONS - Elevation NINE MILE POINT NUCLEAR STATION-UNIT 2	SCALE: 3/4" = 1'-0"	
CHECKED		DATE: 1/27/83	
CORRECT			
APPROVED			
REVISIONS ② ③ ④ ⑤		FIGURE 5	

STONE & WEBSTER ENGINEERING CORPORATION

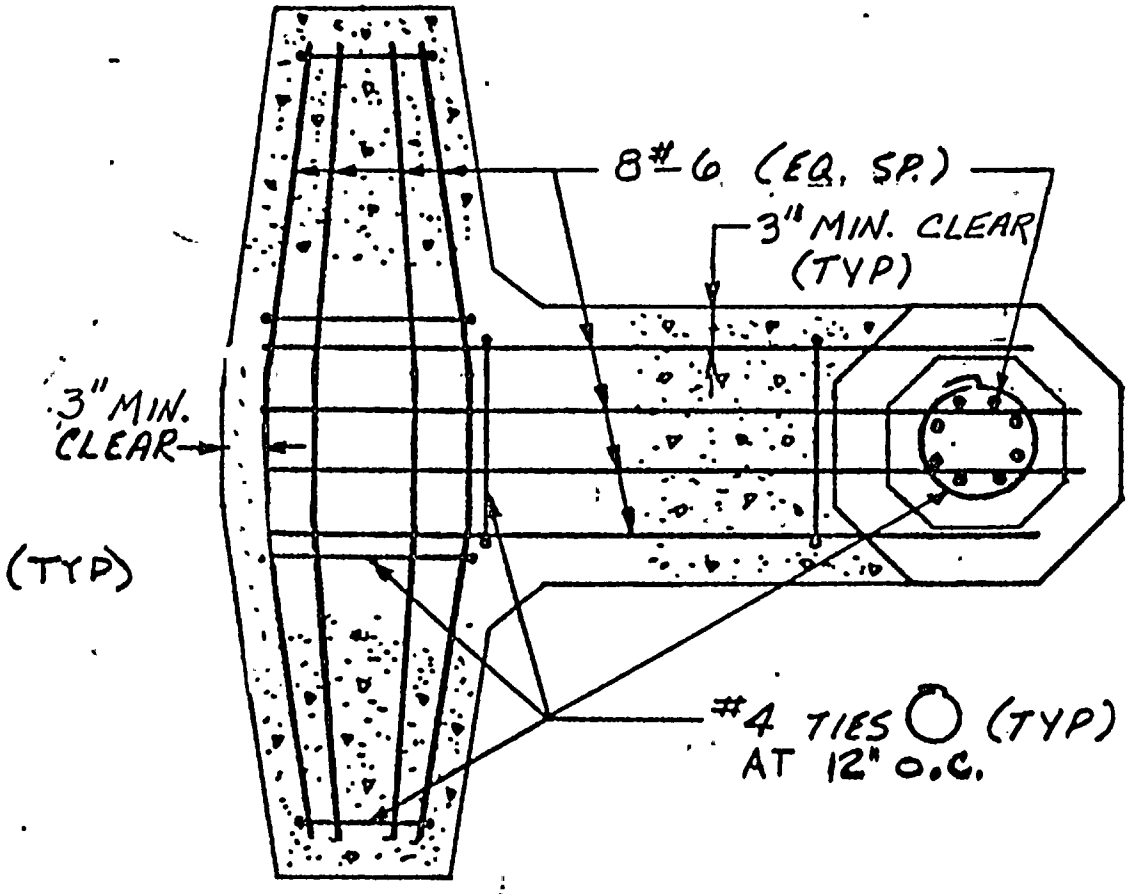

REINF. PLAN

NOTES:
1. REINFORCING SHOWN IS FOR 4900 LB DOLOS
2. CORNERS BETWEEN FLUKES AND SHANK TO HAVE FILLETS.
3. CENTRAL FILLETS TO HAVE A RADIUS OF 3" (±1/2") AND SIDE FILLETS TO HAVE A RADIUS OF 4" (±1/2")

RML

POWER INDUSTRY GROUP	TITLE DOLOS ARMOR UNIT REINFORCEMENT NINE MILE POINT NUCLEAR STATION-UNIT 2	SCALE: 3/4"=1'-0"	
CHECKED		DATE: 1/27/83	
CORRECT			
APPROVED		FIGURE 6	
REVISIONS (2) (3) (4) (5)			

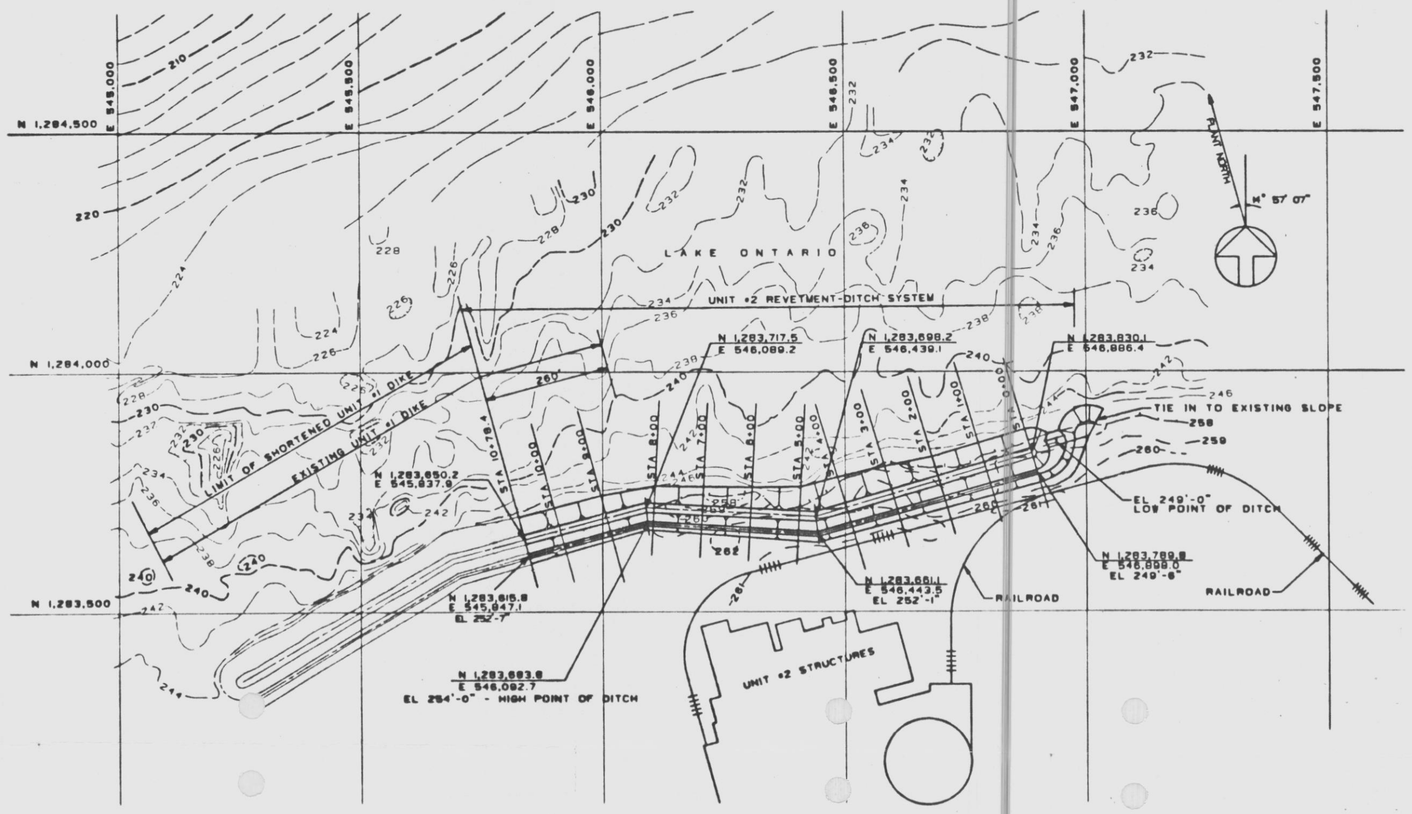

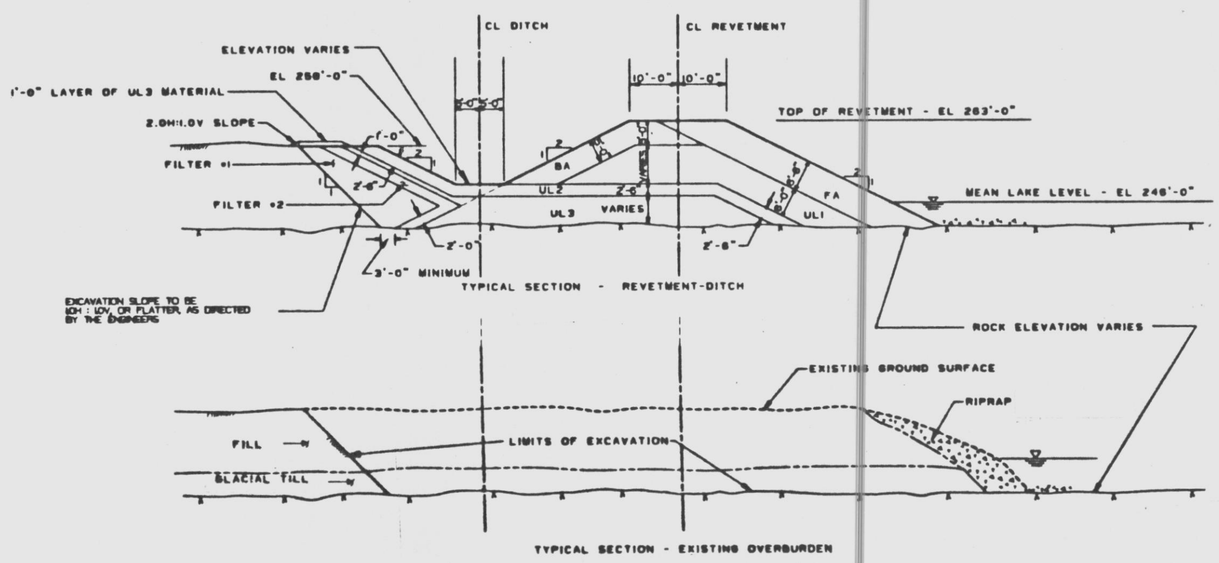

LEGEND

- APPROXIMATE CREST OF EXISTING LAKE SHORE SLOPE
- LAKE BOTTOM CONTOURS
- APPROXIMATE GROUND CONTOURS
- ESTIMATED TOP OF ROCK
- ESTIMATED BOUNDARY BETWEEN GLACIAL TILL, FILL, AND RIP-RAP
- LAKE WATER LEVEL
- EXISTING RIP-RAP
- FA — FRONT ARMOR; DOUBLE LAYER OF 4900 LB DOLOS UNITS
- UL1 — 1ST UNDERLAYER; 2000 TO 4000 LB STONE UNITS (75% ± 3000 LBS)
- UL2 — 2ND UNDERLAYER; 75 TO 225 LB STONE UNITS (75% ± 150 LBS)
- UL3 — 3RD UNDERLAYER; 2.3 TO 12.8 LB STONE UNITS (75% ± 7.5 LBS)
- BA — BACK ARMOR; SINGLE LAYER OF 10,000 TO 14,000 LB STONE ARMOR UNITS (75% ± 12,000 LBS)

NOTES:

1. ELEVATION OF LAKE BASED UPON U.S. LAKE SURVEY - 1935 DATUM (USLS)
2. 500' GRID SYSTEM BASED ON NY STATE COORDINATE SYSTEM
3. ALL STATIONS MEASURED ALONG CENTERLINE OF REVETMENT
4. THIS DRAWING DOES NOT INCLUDE ALL PLANT STRUCTURES
5. EXISTING MATERIALS WITHIN THE CROSS-SECTION OF THE REVETMENT-DITCH ARE TO BE EXCAVATED
6. MINIMUM OF 80 DOLOS UNITS REQUIRED PER 1000 SQ FT OF REVETMENT AREA
7. DESCRIP[illegible] OF EXISTING OVERBUR[illegible] MATERIALS:
   - A. "RIP-RAP" CONSISTS OF DUMPED STONE, RUBBLE AND BOULDERS
   - B. "FILL" CONSISTS OF SILTY SAND AND GRAVEL, WITH VARYING CONTE[illegible] OF COBBLES AND BOULD[illegible] - SIMILIAR TO TILL REGARD[illegible] GRADATION AND DENSITY, EXCEPT FOR THE IMMEDIATE SURFACE VENEER THROUGHOUT THE AREA AND THE FILLED VALLEY AROUND STATION 4+00, WHICH CONTAIN CRUSHED STONE, RUBBLE, AND SOIL.
   - C. "GLACIAL TILL" CONSISTS OF SILTY SAND AND GRAVEL, WITH OCCASIONAL BOULDERS AND COBBLES

FIGURE 1

REVETMENT DITCH
PLAN AND TYPICAL SECTIONS

NIAGARA MOHAWK POWER CORPORATION
NINE MILE POINT-UNIT 2