REGULATORY INFORMATION DISTRIBUTION SYSTEM (RIDS)

ACCESSION NBR: 8605140057 DOC. DATE: 86/05/09 NOTARIZED: NO DOCKET #
FACIL: 50-410 Nine Mile Point Nuclear Station, Unit 2, Niagara Moha 05000410
AUTH. NAME AUTHOR AFFILIATION
MANGAN, C. V. Niagara Mohawk Power Corp.
RECIP. NAME RECIPIENT AFFILIATION
ADENSAM, E. G. BWR Project Directorate 3

SEE REVISE DRAWINGS

SUBJECT: Forwards addl clarifications to fire protection program. Revised pages will be included in Amend 26 to FSAR. W/31 oversize encls.

DISTRIBUTION CODE: B002D COPIES RECEIVED: LTR 1 ENCL 6 SIZE: 76
TITLE: Licensing Submittal: Fire Protection

NOTES:

	RECIPIENT ID CODE/NAME		COPIES LTTR	COPIES ENCL	RECIPIENT ID CODE/NAME		COPIES LTTR	COPIES ENCL
	BWR ADTS		1	1	BWR PD3 PD		1	1
	HAUGHEY, M	01	1	1				
INTERNAL:	ACRS	10	6	6	ADM/LFMB		1	0
	ELD/HDS3		1	0	NRR STANG, J		3	3
	REG FILE	04	1	1	RGN1		1	1
EXTERNAL:	24X		1	1	LPDR	03	1	1
	NRC PDR	02	1	1	NSIC	05	1	1

Limited Dist Per. PM

TOTAL NUMBER OF COPIES REQUIRED: LTTR 20 ENCL 18

NIAGARA MOHAWK

NIAGARA MOHAWK POWER CORPORATION/300 ERIE BOULEVARD WEST, SYRACUSE, N.Y. 13202/TELEPHONE (315) 474-1511

May 9, 1986
(NMP2L 0709)

Ms. Elinor G. Adensam, Director
BWR Project Directorate No. 3
U.S. Nuclear Regulatory Commission
7920 Norfolk Avenue
Washington, DC 20555

Dear Ms. Adensam:

Re: Nine Mile Point Unit 2
Docket No. 50-410

Enclosed are additional clarifications to the Nine Mile Point Unit 2 Fire Protection Program. The Final Safety Analysis Report updated pages are attached. Changes are indicated by a line in the right-hand margin.

The revised pages will be included in Amendment 26 of the Final Safety Analysis Report.

Very truly yours,

C. V. Mangan
Senior Vice President

NLR:ja
1598G

Enclosures

xc: R. A. Gramm, NRC Resident Inspector
Project File (2)

B002
1/6
Rec'ted
Dist Per: PR

UNITED STATES OF AMERICA
NUCLEAR REGULATORY COMMISSION

In the Matter of	)	
Niagara Mohawk Power Corporation	)	Docket No. 50-410
(Nine Mile Point Unit 2)	)	

AFFIDAVIT

C. V. Mangan, being duly sworn, states that he is Senior Vice President of Niagara Mohawk Power Corporation; that he is authorized on the part of said Corporation to sign and file with the Nuclear Regulatory Commission the documents attached hereto; and that all such documents are true and correct to the best of his knowledge, information and belief.

C V Mangan

Subscribed and sworn to before me, a Notary Public in and for the State of New York and County of Onondaga, this 9th day of May, 1986.

Christine Austin
Notary Public in and for
Onondaga County, New York

My Commission expires:
CHRISTINE AUSTIN
Notary Public in the State of New York
Qualified in Onondaga Co. No. 4787687
My Commission Expires March 30, 1987

Combustible	Calorific Values (Btu/lb)
Electrical cables	9,500-12,000
Motor insulation	10,000
Lube oil	19,000
General combustibles	8,000
Hydrogen	65,000
Clothing	8,000
26 Hydraulic fluid	18,000
Resin	18,000
26 Fiberglass	18,000
Charcoal	14,100
Styrene	18,000
Wood	8,000
Paper	8,000
Diesel fuel	19,000
Asphalt	18,000
Plastic	18,000

The construction materials used for roofing were not included in the fire load. Metal deck roofs are Factory Mutual Class 1 and considered noncombustible for the purposes of this analysis.

Each fire area was investigated for fire loading. Further delineation of the hazards analysis into fire zones provides a closer estimation of fire loads within the fire area. The total Btu content of each area or zone is the sum of all combustibles in that zone.

$$\text{Average Fire Load} = \frac{\text{Total Btu content (Btu)}}{\text{Area of Zone (ft}^2\text{)} \times 80{,}000 \text{ Btu/ft}^2\text{ hr}}$$

$$= \text{Hours of fire load}$$

9A.3.1.2.4 Summary of Conclusions

Calculated fire loadings for major plant areas are as follows (see Tables 9A.3-1 through 9A.3-11 for a complete listing).

Area	Average Fire Loading	
Reactor building	34 min	26
Reactor building auxiliary bays	28 min	26
Standby gas treatment building	8 min	26
Control building, except cable chases	43 min	26
Cable chases	3 hr	26
Electrical tunnels	1 hr, 52 min	26
Turbine building	26 min	26
Switchgear rooms	2 hr, 30 min	26
Oil storage rooms	18 hr, 6 min	
Diesel generator building	1 hr, 22 min	26
Oil day tank room	10 hr, 21 min	26
Screenwell building	19 min	26
Service water pump room "A"	27 min	26
Service water pump room "B"	24 min	
Diesel fire pump room	52 min	
Radwaste building	1 hr, 36 min	26
Normal switchgear building	1 hr, 26 min	26
Auxiliary boiler building	1 hr, 18 min	26
Condensate storage tank building	1 hr, 12 min	26
Steam tunnel	7 min	26

The oil day tank rooms have high fire loadings because total volume burning has been assumed. This calculation also takes no credit for fixed extinguishing systems provided for all oil hazards. Also, a free influx of air is assumed. If the fire barrier remains intact, a significantly reduced fire exposure can be expected. 26 26

The next highest fire loadings are heavy cable tray concentrations in the control building and electrical tunnels. Calculations for these areas are also conservative. All trays are considered to be loaded to the

THIS PAGE INTENTIONALLY BLANK

maximum allowable. In any case, cable tray water sprinkler systems are provided for these areas.

26 The next highest fire loadings are in the radwaste building. The calculation for this area is also conservative.

In calculating fire loading for the diesel generator room, a fuel oil pipe rupture has been assumed with the entire contents of the fuel oil day tank spilled on the floor. It was also considered that all of the lube oil contained in the crankcase of the engine would leak out. These
26 assumptions resulted in a fire loading of 1 hr 22 min, which is still less than the 3-hr walls that have been provided. Automatic pre-action water sprinkler systems have been provided for the diesel generator building.

The normal switchgear building also has a high fire loading, but it is less than the 3-hr fire walls that have been provided. Automatic total-flooding CO_2 systems have been used in this building and in other switchgear rooms.

Fire loading for all other areas is approximately 2 hr or less. In spite of the low fire loading, 3-hr fire walls have been provided wherever separation is required or desirable.

9A.3.1.2.5 Detailed Fire Hazards Analysis by Building

The following sections provide the detailed fire hazards analysis and a summary of the effects of fires in fire zones. This summary shows that the fire protection system will provide adequate ability to detect, prevent, and suppress postulated fire outbreaks in and around the plant.

9A.3.1.2.5.1 Standby Gas Treatment Building

Introduction

The standby gas treatment (SGT) building is adjacent to the reactor building. It houses the SGTS units, reactor building ventilation supply unit, and railroad access bay, all of which are separated from each other by 3-hr fire walls and floors. Construction of the SGT building is detailed in Section 3.8.4.1.9.

Safety-Related Systems

The SGTS units are the only safety-related equipment in this building.

THIS PAGE INTENTIONALLY BLANK

9A.3.5.1.3 Penetration Openings for Ventilation Systems

Openings through fire barriers for ventilation systems are protected by UL-labeled fire dampers with a rating equivalent to that required of the barrier. Flexible air duct coupling in ventilation and filter system is non-
26 | combustible.

9A.3.5.1.4 Door Openings

With the exception of special doors such as pressuretight,
26 | watertight, radiation shield, tornado, and railroad access, the doors installed in the fire-rated assemblies are UL-labeled fire doors. Table 9A.3-16 lists pressuretight,
26 | watertight, radiation shielded, tornado, and railroad access doors to be installed in fire barriers and the corresponding fire loading on either side of each door. Figures 9A.3-14
26 | through 9A.3-17 show typical sections and details and demonstrate by engineering analysis that the door panels and hardware, when subjected to heat (up to 2000°F) for 3 hr on one side, will be free to expand in all directions and maintain the doors in the closed position. No significant deformation or warping of door panels which could allow fire propagation is excepted. Table 9A.3-17 provides a comparison between UL-labeled Class A rated fire doors and Unit 2 nonlabeled doors. Fire door position will be monitored and verified to be maintained in accordance with BTP CMEB 9.5-1 Section C.5.a(5). Installation of fire doors is in accordance with NFPA-80 and applicable UL requirements.

9A.3.5.1.5 Personnel Access and Escape Routes

Two means of egress are provided from each fire area.

Stairways required for egress are enclosed and ventilated to minimize smoke infiltration and to provide a safe means of egress in the event of a fire. Exit routes are clearly marked. The enclosures are designed for a 2-hr fire rating and equipped with UL-listed, self-closing Class B fire doors. Elevator enclosures and chutes are similarly designed.

9A.3.5.1.6 Sharing of Cable Spreading Rooms

Unit 2 does not share a cable spreading room with Unit 1.

TABLE 9A.3-16

AVERAGE FIRE LOADING ON EITHER SIDE OF NON-UL LABELLED DOORS

Door No.	Average Fire Loading On Either Side of Door	
SA175-3	0 min/17 min	
SA175-4	17 min/21 min	
NA175-2	17 min/17 min	
R175-4	1 min/42 min	26
R175-5	1 min/42 min	
R175-7	2 min/50 min	
T277-20	4 min/9 min	26
T277-21	4 min/9 min	
T277-22	4 min/9 min	
ET214-2	0 min/1.1 hr*	
ET237-1	0 min/0 min	
SW261-14	17 min/13 min	
DG272-4	0 min/6.9 hr*	26
C288-1	0 min/0 min	
C306-1	1 min/0 min	
C261-1	2.8 hr*/1.6 hr	
R240-7	48 min/(Ltr)	
AB261-3	26 min/0 min	
NA240-1	0 min/0 min	
NA240-2	0 min/0 min	
R240-3	48 min/1.1 hr	
SA240-1	1.1 hr/0 min	26
RR261-2	49 min*/0 min	
C239-1	0 min/0 min	
SW280-1	31 min/4 min	

*Automatic suppression provided on this side of door.

CALCULATIO[illegible]OF THE EXPANSION OF 3 PSI TORNAD[illegible]OORS DUE TO FIRE EXPOSURE

DOOR NUMBERS: ET214-2, ET237-1, SW261-14, DG272-4
C288-1, C306-1, C261-1, R240-7*, AB 261-3,
NA240-1, R240-2, R240-3, SA240-1, SW280-1**

(*NOTE: DOOR NO. R240-7 IS A PRESSURE TIGHT DOOR WHICH HAS EXPANSION CHARACTERISTICS SIMILAR TO THAT OF THE TORNADO DOORS DESCRIBED HEREIN)

DOOR DESCRIPTION	OVERALL DOOR DIMENSIONS	TOTAL DOOR/FRAME GAP		
		HORI-ZONTAL	VER-TICAL	DIAG.
TORNADO & PRESSURE-TIGHT SINGLE LEAF	35-3/4"X83-1/4"	.50	1.13	1.24
UTILITY, SINGLE LEAF	35-3/8"X59-7/16"	.50	1.13	1.24
TORNADO, DOUBLE LEAF	71-1/2"X83-1/4"	.88	1.13	1.24

THE FOLLOWING CALCULATIONS VERIFY THAT THERE WOULD BE NO APPRECIABLE INTERFERENCE (CONTACT FORCE) BETWEEN THE DOOR AND FRAME DURING A FIRE WHERE A TEMPERATURE RISE OF 1930°F (2000 °F — 70°F = 1930°F) IS EXPERIENCED BY THE DOOR.

THE METHOD OF CALCULATING EXPANSION IS BASED ON THE SIZE OF THE DOOR TIMES THE TEMPERATURE RISE TIMES THE COEFFICIENT OF STEEL EXPANSION (0.0000065)

HORIZONTAL EXPANSION (TORNADO/PRESSURETIGHT, SINGLE LEAF AND UTILITY, SINGLE LEAF)
35.75-IN. X 1930° F X 6.50 X 10^{-6}°F^{-1} = .44-IN.

HORIZONTAL EXPANSION (TORNADO,DOUBLE LEAF)
71.5-IN. X 1930° F X 6.50 X 10^{-6} °F^{-1} = .87-IN.

VERTICAL EXPANSION (TORNADO,DOUBLE LEAF)
83.25-IN. X 1930° F X 6.50 X 10^{-6}°F^{-1} = 1.02-IN.

VERTICAL EXPANSION (UTILITY, SINGLE LEAF)
59.44-IN. X 1930° F X 6.50 X 10^{-6}°F^{-1} = .73-IN.

DIAGONAL EXPANSION (TORNADO/PRESSURETIGHT, SINGLE & DOUBLE LEAF, UTILITY, SINGLE LEAF)
90.6-IN. X 1930° F X 6.50 X 10^{-6}°F^{-1} = 1.11-IN.

**DOOR NO. SW280-1 HAS HORIZONTAL AND VERTICAL DOOR/FRAME GAP OF .32 AND .63 WHICH IS SUFFICIENT TO PERMIT EXPANSION FOR FIRE INVOLVING THE PRESENT FIRE LOAD.

FIGURE 9A.3-16

TORNADO AND PRESSURETIGHT DOORS
PAGE 2 OF 2

NIAGARA MOHAWK POWER CORPORATION
NINE MILE POINT-UNIT 2
FINAL SAFETY ANALYSIS REPORT

CALCULATION OF THE EXPANSION OF WATERTIGHT DOORS DUE TO FIRE EXPOSURE

DOOR NUMBERS: SA 175-3; SA 175-4; NA 175-2; R 175-4; R 175-5; R 175-7 AND C 239-1

OVERALL DOOR DIMENSIONS	TOTAL DOOR/FRAME GAP	
	HORIZONTAL	VERTICAL
34-5/8" X 85"	0.875	1.250
*38" X 87-7/8"	0.875	1.250

THE FOLLOWING CALCULATIONS VERIFY THAT THERE WOULD BE NO INTERFERENCE (CONTACT FORCE) BETWEEN THE DOOR AND FRAME DURING A FIRE WHERE A TEMPERATURE RISE OF 1930°F (2000°F — 70°F = 1930°F) IS EXPERIENCED BY THE DOOR.

THE METHOD OF CALCULATING EXPANSION IS BASED ON THE LARGEST SIZE OF THE DOOR TIMES THE TEMPERATURE RISE TIMES THE COEFFICIENT OF STEEL EXPANSION (0.0000065)

WIDTH OF DOOR = 38" — TOTAL CLEARANCE = 0.875"
(CLEARANCE ON ONE SIDE OF DOOR)

EXPANSION IN WIDTH = 38 X 1930 X 0.0000065 = 0.48
NOTE: 0.48" IS LESS THAN 0.875"

HEIGHT OF DOOR =87.875" — TOTAL CLEARANCE = 1.250"
(CLEARANCE ON TOP AND BOTTOM OF DOOR)

EXPANSION IN HEIGHT = 87.875 X 1930 X 0.0000065 = 1.1"
NOTE: 1.1" IS LESS THAN 1.250"

*DOOR C-239-1 ONLY

FIGURE 9A.3-14

WATERTIGHT DOORS
PAGE 2 OF 2

NIAGARA MOHAWK POWER CORPORATION
NINE MILE POINT-UNIT 2
FINAL SAFETY ANALYSIS REPORT

CALCULATION OF THE EXPANSION OF RAILROAD ACCESS DOOR RR 261-2 DUE TO FIRE EXPOSURE.

THE ABOVE MENTIONED RAILROAD ACCESS DOOR IS ARRANGED SUCH THAT THE DOOR PANELS OVERLAP THE DOOR OPENING. THIS ARRANGEMENT ALLOWS DOOR TO EXPAND IN ALL DIRECTIONS WHEN SUBJECTED TO HEAT ON ONE SIDE, HOWEVER THE FREE MOVEMENT WILL BE LOCALLY RESTRAINED AT HINGE AND LATCH LOCATIONS, BUT CAUSING NO SIGNIFICANT DEFORMATION OR WARPING OF DOOR WHICH COULD ALLOW FIRE PROPAGATION.

FIGURE 9A.3-17

RAILROAD ACCESS DOOR
PAGE 2 OF 2

NIAGARA MOHAWK POWER CORPORATION
NINE MILE POINT-UNIT 2
FINAL SAFETY ANALYSIS REPORT

Drains are discussed in Section 9A.3.5.1.12. Smoke removal is provided by normal ventilation and portable smoke removal units.

9A.3.1.2.5.10 Reactor Building

Introduction

Due to the presence of floor openings, the entire reactor building is considered a single fire area. Each floor elevation is considered a separate fire zone and each half of the building is considered as a fire subarea. The analysis of the contained hazards indicates that the average fire loading for each zone, with the exception of the HPCS room and 600-V switchgear room, is less than 1 hr. A 20-ft-wide zone is provided between the north and south halves on the 0- to 180-deg line.

The 20-ft zone consists of two adjacent 10-ft zones with detection and automatic suppression systems. 26

To reduce the potential for the vertical spread of fire along cable tray risers, penetration seals are provided for cable tray risers. Refer to Figures 9A.3-2 through 9A.3-8 for the actual configuration of the fire stops.

Elevation 353 ft 10 in is a nonrated barrier which separates fire subareas FSA 34 and FSA 35. There is no fire loading or safe shutdown equipment located on elevation 353 ft 10 in; therefore, safe shutdown capability is not affected.

The reactor building has a ventilation system utilizing 100 percent outside air for normal operation. This system will remove smoke in the event of a fire, as long as radiation levels remain below acceptable levels.

The primary containment is also considered one fire area. However, due to the low fire loading, primary containment inerting, and lack of continuity of combustibles, a fire that would spread from one hazard to another is not postulated.

Safety-Related and Reactor-Associated Systems

The following table includes both safety-related and reactor-associated systems and gives their locations in the reactor building.

System		Division I (el)	Division II (el)
RDS*	Control rod drive hydraulic control units	261'(N)	261'(S)
RDS	Control rod drive pumps	-	-
CSH*	High-pressure core spray	-	-
SFC*	Fuel pool cooling pumps	289'(S)	289'(S)
	Heat exchangers	215'(N)	215'(S)
SLS*	Standby liquid cooling	289'(N)	289'(N)
CCP	Reactor plant component cooling water	-	-
HVR*	Reactor building ventilation recirculation fans	289'(N)	289'(N)
	Unit coolers	Multiple (N)	Multiple (S)
WCS	Reactor water cleanup	-	-
ICS*	Reactor core isolation cooling	175'(N)	-
HCS*	Hydrogen recombiner	240'(N)	240'(S)
RCS	Reactor recirculation pumps	-	-
RDS*	Control rod drive hydraulic control units	-	-
RDS	Control rod drive pumps	-	215'(N)
CSH*	High-pressure core spray	175'(S)	-

6

Redundant fire pumps are provided. One pump is electric driven and the other is diesel driven.

9A.3.1.3.3 Seismic Design Basis

Standpipes and hose connections for manual firefighting are seismically supported in safety-related areas and in areas containing safety-related equipment. The design bases do not contemplate simultaneous earthquake and fire conditions; additionally, Unit 2 is not in an area of high seismic activity, therefore these requirements were not incorporated into the design.

9A.3.1.3.4 Design Basis Analysis

GDC-3 requires that firefighting systems be designed to ensure that rupture or inadvertent operation does not significantly impair the safety capability of structures, systems, and components important to safety. Redundant trains of components required for safe shutdown that are susceptible to damage from water spray are physically
26 separated so that manual fire suppression activities will not adversely affect the operability of components not involved in the postulated fire. Where necessary, appropriate protection is provided to prevent impingement of water spray on components required for safe shutdown. Section 3C.4 provides further details regarding the effects of spraying on safe shutdown components. Automatic suppression systems have been designed and located so that operation of the systems, either intentionally or inadvertently, will not cause damage to redundant trains of components required for safe shutdown.

26 The fire hazards analysis that is included as part of the FSAR defines the effects of postulated fire outbreaks. Details for the effects and analyses for wind and tornado loading, water level (flood), and missile protection are described in Sections 3.3, 3.4, and 3.5.

9A.3.1.3.5 Moderate Energy Line Break Analysis

The consequences of a crack in a moderate energy line in the fire suppression system are included in the energy pipe break analysis for Unit 2 (refer to FSAR Section 3.6A).

9A.3.1.4 Alternative or Dedicated Shutdown

Refer to FSAR Appendix 9B.

9A.3.6.4 Halon 1301 Suppression Systems (NFPA Standard 12A)

Fixed Halon 1301 suppression systems have been installed in the PGCC floor modules in the control room (in accordance with GE NEDO 10466-A, Rev. 2, dated February 1979), Radwaste Control Room, Relay Room, and Computer Room. Halon systems comply with NFPA Standard 12A, and the requirements of BTP CMEB 9.5-1 Section C.6.d. Disarming of Halon suppression systems will comply with the requirements of BTP CMEB 9.5-1 Section C.2.j.

9A.3.6.5 CO_2 Suppression Systems (NFPA Standard 12)

CO_2 systems are used in all switchgear rooms, the alternator exciter enclosure, turbine bearings, and the lube oil reservoir. CO_2 systems comply with NFPA Standard 12, and the requirements of BTP CMEB 9.5-1 Section C.6.e. Disarming of CO_2 suppression systems will comply with the requirements of BTP CMEB 9.5-1 Section C.2.j.

9A.3.6.6 Portable Extinguishers

Unit 2 portable extinguishers are in compliance with the requirements of NFPA Standard 10. Adverse effects of portable extinguishing agents have been considered in the placement of extinguishers. Portable fire extinguishers applicable to the hazard and the guidelines of NFPA Standard 10 will be provided in all areas of the plant. An inspection and maintenance program will be written; performance of same will be fulfilled by the onsite fire department.

9A.3.7 Guidelines for Specific Plant Areas

9A.3.7.1 Primary Containment and Reactor Building

9A.3.7.1.1 Normal Operation 26

General area coverage smoke detectors have been provided in the reactor building, to alarm and annunciate in the control room and to alarm locally. The primary fire hazard in the reactor building is cable trays. Automatic sprinkler systems are provided for single cable tray stacks containing

five trays or more (vertically) and for multiple tray stacks containing more than three trays. Motor control centers in areas where water spray protection is provided are NEMA Type 3R (raintight).

9A.3.7.1.1.1 Operation of Fire Protection Systems

The operation of fire protection systems will not compromise safety-related equipment due to the separation, barriers, and protection provided for redundant trains of safety-related equipment.

9A.3.7.1.1.2 Primary Containment Fire Protection

The Unit 2 containment is inerted during normal operation;
26 therefore, this requirement does not apply.

9A.3.7.1.1.3 Primary Containment Fire Detection

The Unit 2 containment is inerted during normal operation.
26 General area smoke detectors will be provided in the primary containment only during refueling and major maintenance periods.

9A.3.7.1.1.4 Primary Containment Standpipe and Hose Stations

Continuous flow hose reels with 1-inch hose reels with spray nozzles are provided in the primary containment for use during refueling and major maintenance.

9A.3.7.1.1.5 Oil Collection System for Recirculation Pumps

Refer to Section 9A.3.7.1.1.2.

9A.3.7.1.1.6 Reactor Building Fire Protection

Fire detection and suppression is provided for fire hazards in the reactor building as identified by the fire hazards analysis. Refer to Section 9A.3.6 for details.

9A.3.7.1.2 Refueling and Maintenance

26 The primary containment general area coverage detection system mentioned previously will be in operation during refueling and major maintenance. Portable fire
26 extinguishers will be strategically located within the primary containment when the containment is open. Hose reel

TABLE 9A.3-15

SUPERVISION OF FIRE PROTECTION SYSTEM VALVES

FSAR Figure No.	Valve No.	Supervision Electric	Supervision Administrative	
9.5-1a	2FPW-V2		X	
	2FPW-V3		X	
	2FPW-V4		X	
	2FPW-V18	X		
	2FPW-V19	X		
	2FPW-V20	X		26
	2FPW-V21		X	
	2FPW-V22		X	
	2FPW-V25		X	
	2FPW-V26		X	
	2FPW-V28	X		26
	2FPW-V29	X		
	2FPW-V31		X	
	2FPW-V35		X	
	2FPW-V36		X	
	2FPW-V41		X	
	2FPW-V48		X	
	2FPW-V49		X	
	2FPW-V50	X		
	2FPW-V53		X	
	2FPW-V57		X	
	2FPW-V355		X	
	2FPW-V554	X		
	2FPW-V555	X		
9.5-1b	2FPW-V103		X	
	2FPW-V104		X	
	2FPW-V105		X	
	2FPW-V106		X	
	2FPW-V107		X	
	2FPW-V108		X	
	2FPW-V109		X	
	2FPW-V110		X	
	2FPW-V111		X	
	2FPW-V112		X	
	2FPW-V113		X	
	2FPW-V114		X	
	2FPW-V118		X	
	2FPW-V119		X	
	2FPW-V120		X	
	2FPV-V121		X	
	2FPW-V122		X	
	2FPW-V123		X	

TABLE 9A.3-15 (Cont)

FSAR Figure No.	Valve No.	Supervision Electric	Supervision Administrative
	2FPW-V177		X
	2FPW-V178		X
	2FPW-V179		X
	2FPW-V180		X
	2FPW-V181		X
	2FPW-V182		X
	2FPW-V183		X
	2FPW-V184		X
	2FPW-V438		X
	2FPW-V439		X
	2FPW-V499		X
	2FPW-V548		X
	2FPW-V571		X
	2FPW-V572		X
	2FPW-V581		X
	2FPW-V582		X
9.5-1c	2FPW-V185	X	
	2FPW-V186	X	
	2FPW-V187	X	
	2FPW-V188	X	
	2FPW-V189	X	
	2FPW-V190	X	
	2FPW-V191		X
	2FPW-V195	X	
	2FPW-V196	X	
	2FPW-V197	X	
	2FPW-V199	X	
	2FPW-V200	X	
	2FPW-V201	X	
	2FPW-V202		X
	2FPW-V207	X	
	2FPW-V208	X	
	2FPW-V210	X	
	2FPW-V211	X	
	2FPW-V779	X	
	2FPW-V780	X	
9.5-1d	2FPW-V32		X
	2FPW-V34		X
	2FPW-V213	X	
	2FPW-V214	X	
	2FPW-V215	X	
	2FPW-V216	X	
	2FPW-V217	X	
	2FPW-V218	X	

26

TABLE 9A.3-15 (Cont)

FSAR Figure No.	Valve No.	Supervision Electric	Supervision Administrative	
	2FPW-V220		X	
	2FPW-V225		X	
	2FPW-V231		X	
	2FPW-V235		X	
	2FPW-V239	X		
	2FPW-V251	X		
	2FPW-V253	X		
	2FPW-V255	X		
	2FPW-V442	X		
	2FPW-V445		X	
	2FPW-V448		X	
	2FPW-V500		X	
	2FPW-V502		X	
	2FPW-V504		X	
	2FPW-V620		X	
9.5-1e	2FPW-V257		X	
	2FPW-V260		X	
	2FPW-V262		X	
	2FPW-V264	X		
	2FPW-V265	X		
	2FPW-V266	X		26
	2FPW-V268	X		
	2FPW-V269	X		
	2FPW-V270	X		
	2FPW-V271	X		
	2FPW-V272	X		
	2FPW-V276		X	
	2FPW-V280	X		
	2FPW-V281	X		
	2FPW-V282	X		
	2FPW-V283	X		
	2FPW-V284		X	
	2FPW-V287	X		
	2FPW-V288	X		
	2FPW-V289		X	
	2FPW-V297	X		26
	2FPW-V303	X		
	2FPW-V304	X		
	2FPW-V305	X		
	2FPW-V306	X		

TABLE 9A.3-15 (Cont)

FSAR Figure No.	Valve No.	Supervision Electric	Supervision Administrative	
	2FPW-V307		X	
	2FPW-V453		X	
	2FPW-V455		X	
	2FPW-V460		X	
	2FPW-V462		X	26
	2FPW-V486	X		
	2FPW-V487	X		
	2FPW-V492	X		
	2FPW-V493	X		
	2FPW-V495	X		
	2FPW-V496	X		
	2FPW-V506		X	
	2FPW-V579		X	
	2FPW-V623		X	
	2FPW-V775	X		26
9.5-1f	2FPW-V301		X	
	2FPW-V302		X	
	2FPW-V314	X		
	2FPW-V316	X		
	2FPW-V317	X		
	2FPW-V318	X		
	2FPW-V352		X	
	2FPW-V353		X	
	2FPW-V354	X		
	2FPW-V356		X	
	2FPW-V357	X		
	2FPW-V358		X	
	2FPW-V382	X		26
	2FPW-V390	X		
	2FPW-V395		X	
	2FPW-V400		X	
	2FPW-V401		X	
	2FPW-V402		X	
	2FPW-V403		X	
	2FPW-V404		X	
	2FPW-V405		X	
	2FPW-V406		X	
	2FPW-V407		X	
	2FPW-V408		X	
	2FPW-V410		X	
	2FPW-V469		X	
	2FPW-V583		X	
	2FPW-V608		X	
	2FPW-V773	X		26
	2FPW-V811	X		

TABLE 9A.3-15 (Cont)

FSAR Figure No.	Valve No.	Supervision Electric	Supervision Administrative	
9.5-1g	2FPW-V206		X	26
	2FPW-V421	X		
	2FPW-V422	X		
	2FPW-V423	X		
	2FPW-V424	X		
	2FPW-V427	X		
	2FPW-V428	X		
	2FPW-V429	X		
	2FPW-V430		X	
	2FPW-V431		X	
	2FPW-V474		X	
	2FPW-V475		X	
	2FPW-V476		X	
	2FPW-V477		X	
	2FPW-V529	X		
	2FPW-V530		X	
	2FPW-V531		X	
	2FPW-V532		X	
	2FPW-V553	X		26
	2FPW-V596		X	
	2FPW-V597		X	
	2FPW-V629		X	
	2FPW-V662	X		
	2FPW-879	X		
	2FPW-888	X		
9.5-1h	2FPW-V691	X		26
	2FPW-V692	X		
	2FPW-V693	X		
	2FPW-V695	X		
	2FPW-V696	X		
	2FPW-V697	X		
	2FPW-V716	X		
	2FPW-V717	X		
	2FPW-V718	X		
	2FPW-V719	X		
	2FPW-V720		X	
	2FPW-V721	X		
	2FPW-V770	X		

System		Division III (el)	Nondivisional (el)
SFC*	Fuel pool cooling Pumps Heat exchangers	-	-
SLS*	Standby liquid cooling	-	-
CCP	Reactor plant component cooling water	-	328'(N)(S)
HVR*	Reactor building ventilation	-	-
	Recirculation fans Unit coolers	175'(S)	-
WCS	Reactor water cleanup	-	215'(N)
ICS*	Reactor core isolation cooling		-
HCS*	Hydrogen recombiner	-	-
RCS	Reactor recirculation pumps	-	Containment

*Category I equipment

Post Fire Analysis

The preceding table shows that, with the following exceptions, Division I equipment is located in the north half of the reactor building and Division II equipment is located in the south half. Wiring for the following pumps, unit coolers, and valves is run in conduit and buried in the concrete floor slab, except at the connection point to the piece of equipment:

1. Both fuel pool cooling pumps are located in the south half; however, they are separated from each other and from the remainder of the plant by 3-hr fire walls and protected by fire detectors.

2. Both standby liquid control pumps are located in the north half. This system is functionally

redundant to the control rod drive (CRD) system. Cable trays in the area are protected by a sprinkler system and fire detectors.

3. Both reactor building ventilation emergency recirculation unit coolers are located in the north half at el 289 ft 0 in. The unit coolers are separated from each other by a concrete fire stop. Cable trays in the area are protected with a sprinkler system and fire detectors.

4. There are approximately 12 safety-related, motor-operated isolation valves in the reactor building that must be located out of their division. The analysis of FSAR Appendix 9B shows that sufficient equipment remains free of damage from a single fire to achieve safe shutdown of the plant.

26

The Division III pump (HPCS) is located in the south half of the reactor building; however, it is completely isolated by 3-hr rated fire walls. The Division III cables are provided from a separate buried duct bank outside the reactor building.

With the fire protection systems out of service, the low fire load, lack of continuity of combustibles, and the 20-ft fire break along the 0- to 180-deg line in the reactor building support the implausibility of fire spreading from the north half to the south half.

With the fire protection systems in service, it is unlikely that the fire would spread beyond the point of origin.

Radioactive Release Analysis

The reactor building ventilation consists of a normal ventilation system and an emergency recirculation air system.

The normal ventilation exhaust from the reactor building is monitored for radiation by radiation monitors located in the exhaust duct. These monitors stop the normal ventilation system and activate the standby gas treatment system (SGTS) and the emergency recirculation system unit coolers.

Redundant trains are provided for the SGTS and emergency recirculation unit coolers. Standby gas treatment units are separated from each other by 3-hr rated fire walls, and recirculation unit coolers are separated from each other by

sprinkler heads operating and 300 gpm hose stream discharge, the buildup would be contained by the curbs provided at the doorways.

The maximum firefighting water flow for the diesel generator building exceeds the maximum firefighting water flow (and subsequent buildup due to compartment size) for all other safety-related areas.

Based on an evaluation of this water flow and the results of the analysis described in Section 3C.5, Compartment Flooding as a Result of Breaks or Cracks, firefighting water flow and subsequent buildup will be removed by floor drains and not cause the loss of redundant trains of equipment required for safe shutdown for all other safety-related areas.

In areas containing combustible liquid storage and piping, traps are provided in the floor drains and curbs. Dikes are provided and sized to contain the largest spill, in addition to the expected firefighting water flow, for a duration of 10 minutes.

Floor drains in areas protected by total flooding gaseous suppression systems incorporate a liquid seal or the suppression system is sized to include agent loss through the drains.

9A.3.5.2 Safe Shutdown Capability

9A.3.5.2.1 Safe Shutdown Fire Protection Features

Fire protection features, including separation, rated barriers, and suppression and detection systems, are provided for structures, systems, and components important to safe shutdown. Refer to Section 9A.3.6 for details on fire suppression and detection equipment.

Appendix 9B describes the methodology used to assemble, analyze, and document the ability of Unit 2 to conduct a safe shutdown following a fire.

9A.3.5.3 Alternative or Dedicated Shutdown Capability

26 | Refer to Appendix 9B.

detect, prevent, and suppress postulated fire outbreaks in and around the plant.

9A.3.1.2.2 Organization of Fire Hazards Analysis

In order to develop data meaningful to the analysis, the plant has been divided into numerous fire areas, and these areas are further subdivided into fire zones. The fire areas and zones are shown on Figures 9A.3-1 through 9A.3-8, 9A.3-12, and 9A.3-13. Fire areas are those areas separated from adjacent areas by rated fire barriers. A comparison between Unit 2 fire barriers and tested fire barriers is provided in Section 9A.3.5.1.1.

Calculation of fire loading for each fire zone is included in Tables 9A.3-1 through 9A.3-11. The basis of calculation is shown below.

9A.3.1.2.3 Basis of Calculation

In Tables 9A.3-1 through 9A.3-11, all known combustibles are identified for each fire zone. The calorific content of the combustibles and the Btu/sq ft loading for each fire area have been calculated. In order to determine the fire loading, it was necessary to make some assumptions concerning the amount of combustibles in such equipment as motors and control cabinets. The following assumptions, which are based on engineering judgment, were utilized to estimate the weight of combustibles: 26

Equipment	Weight of Combustible
Motor-operated valves, motors, starters, and electrical equipment	1% of overall weight
Electric panels and control cabinets	2% of overall weight
Cable	17% to 32% of overall weight

The following calorific values are used for combustibles. These values are based on vendor data or the NFPA Fire Protection Handbook, 14th edition:

Construction of the diesel generator building is discussed in Section 3.8.4.1.3.

Safety-Related Systems

The diesel generator building contains the Division I and II and HPCS (Division III) diesel generators. These three generators provide power to essential equipment if both normal and preferred station service power are lost.

Post Fire Analysis

The fire loading for the diesel generator room in the diesel generator building is 2 hr 24 min. This is based on a postulated fuel oil line rupture and the spilling of the entire contents of the fuel oil day tank into the diesel generator room.

Fire wall separation of diesel generators and fuel oil day tanks precludes a fire in one section from disabling other systems. Therefore, safe shutdown capability is assured.

If fire protection systems were in service, a fire would be extinguished.

Radioactive Release Analysis

There is no source of radioactivity in this building.

Fire Detection and Suppression

All diesel generators are protected with preaction sprinkler systems. The deluge valves for these systems open automatically on a signal from photoelectric detectors in the respective diesel generator rooms. Division I and II diesel generators as well as the HPCS (Division III) diesel generator have been modified to allow water spray without damaging the engine or generator. 26 26

The backup systems for the diesel generators are manual water and CO_2 hose reels and portable extinguishers.

The diesel generator day tank room has a fire loading of 6 hr 54 min. Raised thresholds are provided so that the entire contents of the tank would be contained in the event of a tank rupture. As was discussed previously, if the entire contents of the fuel oil day tank were spilled in the diesel generator room, the fire loading would be 2 hr 24 min and a fire would be contained within that area. The floor

drainage system is designed to drain oil to the oil separator outside the building.

Radioactive Release Analysis

The auxiliary bays are served by the reactor building ventilation system. Further details are provided in Section 9A.3.1.2.5.10.

Fire Detection and Suppression

All areas of the auxiliary bays are protected by a zoned, early warning detection system arranged to alarm locally and in the control room.

Cable trays in the auxiliary bays are protected by the two automatic closed-head cable tray sprinkler systems that serve the reactor building.

Water hose reels are provided at each elevation in both the north and south auxiliary bays. Piping is designed so that cable tray systems and hose reels can be fed from separate connections to the yard main.

CO_2 hose reels are provided at el 240 ft 0 in to protect 13.8-kV switchgear and motor control centers.

Portable extinguishers are provided throughout the building.

Drains are discussed in Section 9A.3.5.1.12.

9A.3.1.3 Fire Suppression System Design Basis

9A.3.1.3.1 Backup

Total reliance is not placed on any single fire suppression system.

Water fire hose stations and portable extinguishers are provided throughout the plant as a backup to fixed suppression systems. In areas where hazards are switchgear or electrical cabinets, CO_2 hose reels and extinguishers are also provided.

9A.3.1.3.2 Single-Failure Criteria

All buildings housing safety-related equipment, except the diesel generator building, have a double connection to the fire loop. Piping is arranged so that a single pipe break would not impair both the fixed suppression system and the hose reels. In the event of a pipe break and subsequent fire in the diesel generator building, manual firefighting tactics using yard hydrants would be employed. The yard 26 26

main is a loop with isolation valves located so that a single break in the loop does not impair fire protection systems in any building housing safety-related systems.

THIS PAGE INTENTIONALLY BLANK

THIS PAGE INTENTIONALLY BLANK

available throughout the plant. Portable extinguishers provide additional backup protection.

9A.3.5.5.4 Electric Cable Construction

Electrical cable construction is in accordance with Regulatory Guide 1.32 and the IEEE-383-1974 flame test.

9A.3.5.5.5 Cable Trays and Raceways

Cable trays, raceways, and conduit are used only for cables. Buried cable is in conduit/duct systems in trenches used only for this purpose. Safety-related cable is not exposed to flammable or combustible liquids or gases or other combustible storage. Refer to section 9A.3.2 for administrative controls.

9A.3.5.6 Ventilation

9A.3.5.6.1 Products of Combustion

All safety-related areas use the installed once-through ventilation to remove products of combustion. The electrical tunnels, the control building, and the normal switchgear building have separate smoke exhaust fans, isolation dampers, and controls dedicated to smoke removal. Portions of the normal ventilation system components are used in certain areas for smoke removal. Fire dampers are provided where ventilation ductwork penetrates fire barriers. For large (high-heat) fires, the fire dampers would close. These dampers can be manually reopened by plant personnel for smoke removal. Location and operation of smoke removal dampers will be shown on individual preplan procedures for each area of the plant. Monitors are provided in the reactor building, turbine building, and radwaste building exhaust ductwork to determine if the release is within the permissible limits of radioactivity to prevent an unacceptable release to the atmosphere. Additional heat removal capability is supplied by roof-mounted heat vents installed in the turbine building, electrical bay, heater bays, service building, screenwell
26 building, auxiliary service building, clean access area, demineralizer storage tank building, standby gas treatment building, chilled water building, and intake and discharge shafts building. Portable fans would be used to further aid in the removal of smoke.

9A.3.5.6.2 Smoke or Corrosive Gases

The inadvertent operation or single failures of ventilation systems designed to exhaust smoke and/or corrosive gases

extinguishers, wrenches, adapters, axes, hand-held lights, bolt cutters, etc.

9A.3.6.2.8 Reliable Water Supplies

The source of water supply to the fire pumps is Lake Ontario. Each pump takes suction from the seismically designed service water intake tunnel. Nine Mile Point Unit 1 fire pumps (rated at 2,500 gpm at net discharge pressure of 125 psig) also take suction from Lake Ontario through a separate and remote intake tunnel. The fire main loops for Nine Mile Point Units 1 and 2 are interconnected in two places with normally closed valves, one remotely operable from the Unit 1 control room.

9A.3.6.2.9 Fire Water Supply

The fire water supply (Lake Ontario) is a fresh water supply and is essentially unlimited. The flow rate with one pump out of service is a nominal 2,500 gpm at net discharge pressure of 125 psig; this is ample for the largest deluge system plus 500 gpm for manual hose stream. The largest design demand would result from the simultaneous operation of the two largest deluge systems (water/foam systems F-1 and F-2) and the turbine generator bearing water spray system (W-25), which are located in the turbine building. The design demand for water/foam system F-1 (zone 734 SF) is 1,048 gpm, for water/foam system F-2 (zone 735 SF) is 655 gpm, and for turbine generator bearing water spray system W-25 is 590 gpm. All design demand pressures are below 100 psi at elevation 261 ft-0 in. The total flow rate, including 500 gpm for hose streams, is 2,800 gpm. This demand can be met with either fire pump out of service. This exceeds the demand in any safety-related area. | 26 | 26

9A.3.6.2.10 Lakes of Freshwater Ponds

See Section 9A.3.6.2.8 concerning two intakes. The intake tunnel from Lake Ontario also feeds the service water system. Sufficient water is available for both systems, and a failure of the fire protection system does not affect the service water system.

9A.3.6.3 Water Sprinkler and Hose Standpipe Systems

9A.3.6.3.1 Automatic Sprinkler System

Sprinkler systems and manual hose station standpipes are connected to the underground yard main and arranged so that a single failure will not impair both the automatic fire

protection system and the hose reels that provide backup protection. Fire mains are provided in the turbine building, control building, and reactor building, which are fed from the yard main at both ends. This is considered to be an extension of the yard main. Automatic sprinkler flow alarms are provided.

TABLE 9B.8-1 (Cont)

Fire Area	Fire Zone	Required Equipment	Train	Remarks
		2ISC*LT9A	1,3	
		2ISC*LT9C	1,3	
		2ISC*PT15D	1,3	
		2ISC*PT17A	1,3	
		2ISC*PT17C	1,3	
		2ISC*PT2A	1,3	
		2ISC*PT2B	1,3	
		2ISC*PT4C	1,3	
		2ISC*PT4D	1,3	
		2ISC*PT5A	1,3	
		2ISC*PT5D	1,3	
		2ICS*PT6A	1,3	
		2RHS*PDT24A	1,3	
		2RSS*LT114	1,3	
		2RSS*PT102	1,3	
	252SW	2*JB0064	1,3	
		2*JB0067	1,3	
		2*JB0121	1,3	
		2*JB0122	1,3	
		2*JB0123	1,3	
		2*JB0340	1,3	
		2*JB0346	1,3	
		2*JB0814	1,3	
		2CSL*MOV104	3	
		2HVR*AOD1A	1,3	
		2HVR*AOD204	1,3	
		2HVR*AOD34A	1,3	
		2HVR*AOD6A	1,3	
		2HVR*AOD9A	1,3	
		2HVR*SOV1A	1,3	
		2HVR*SOV204	1,3	
		2HVR*SOV34A	1,3	
		2HVR*SOV6A	1,3	
		2HVR*SOV9A	1,3	
		2HVR*TIS31A	1,3	
		2HVR*UC413A	1,3	
		2ICS*AOV156	1	
		2ICS-LT221	1	
		2RHS*MOV24A	1,3	
		2RHS*V143	2,4	NOTE 6
		2RHS*V70	1,3	
		2SWP*AOV97A	1,3	
		2SWP*SOV97A	1,3	
		2HVR*UC413B		NOTE 15
	261NZ	2*JB0600	1,3	
		2SFC*V227A	1,3	

26

TABLE 9B.8-1 (Cont)

LEGEND OF NOTES

NOTE 9

This equipment is failsafe design; therefore, safe shutdown capability exists.

NOTE 10

The junction box feeds failsafe design equipment; therefore, safe shutdown capability exists.

NOTE 11

The equipment is not required for safe shutdown in case of a fire in this fire area. It is required only during operation from the remote shutdown room. Therefore, safe shutdown capability exists.

NOTE 12

In case of a fire in this fire subarea, this equipment will be operated manually through proper administrative procedure.

NOTE 13

In case of a fire in this area, pool cooling will be initiated through proper administrative procedure.

NOTE 14

In case of loss of these outboard isolation valves, inboard isolation valves are available to close the main steam lines.

NOTE 15

The unmitigated fire load in fire zone 252SW is <1 min. A concrete radiant energy shield is provided between 2HVR*UC413A and 2HVR*UC413B, which meets the intent of Appendix R. 26

locally and in the main control room. Additional details are included in Appendix 9A.

9.5.1.2.7 Preaction Sprinkler Systems

Preaction sprinkler systems comply with NFPA Standards 13 and 15, as applicable. Preaction systems with closed-fusible link operated heads and deluge valves are provided in the diesel generator rooms, turbine building (el 277 ft 6 in and 250 ft, general area, and cable tray protection), radwaste building (dry compacted waste storage and gear lube oil areas), and reactor building (cable tray protection). Operation of preaction sprinkler systems is signaled locally and in the main control room. Additional details are included in Appendix 9A.

9.5.1.2.8 Water Deluge Systems

Water deluge systems comply with NFPA Standards 13 and 15 as applicable. Water deluge systems are hydraulically designed, utilizing open directional solid cone spray nozzles and are actuated automatically or manually. These systems are provided as follows:

1. Automatically actuated, open nozzle water deluge systems are provided to protect yard transformers, reactor feed pumps, RCIC room in the reactor building, hydrogen seal oil unit, turbine building truck aisle, and radwaste extruder.

2. Manually actuated, open nozzle water deluge systems are provided to protect charcoal filters in the control building, and standby gas treatment building and turbine generator oil piping and bearings in the turbine building.

Operation of each water deluge system is signaled locally and in the main control room. Additional details are included in Appendix 9A.

9.5.1.2.9 Carbon Dioxide Systems

Carbon dioxide systems comply with NFPA Standard 12. The low pressure carbon dioxide system consists of two 13-ton storage tanks (300 psig, 0°F), refrigeration unit, valves, and piping that conveys CO_2 to fixed nozzles at individual hazards. Total flooding carbon dioxide systems are automatically actuated by cross-zoned smoke detectors (unless otherwise stated). Total flooding systems are provided for: 26

1. Switchgear rooms located in the normal switchgear and turbine buildings.

2. Standby switchgear rooms A and B, and HPCS switchgear room in the control building.

3. 600-V switchgear room in the reactor building.

4. Radwaste switchgear room in the decontamination building. 26

5. Lube oil reservoir in the turbine building (manually actuated system used for inerting the vapor space in 2LOS-TK1). 26

6. Alternator-exciter enclosure in the turbine building (extended discharge system, automatically actuated by thermal detectors in conjunction with the local application system for turbine generator bearing No. 11 and 12).

Manually actuated local application systems are provided to protect turbine generator bearings and oil piping in the turbine building.

Carbon dioxide hose stations are provided in the turbine, control, reactor, normal switchgear, and diesel generator buildings. Operation of each carbon dioxide system is signaled locally and in the main control room. Initiation of a total flooding system also energizes an alarm at the hazard. Additional details are included in Appendix 9A.

9.5.1.2.10 Halon 1301 Systems

Halon 1301 systems conform to the requirement of NFPA Standard No. 12A. These systems are provided to protect against cable fires in the floor sections of the power generation control complex (PGCC) and the computer room, beneath the raised floor sections of the computer room, and radwaste control room. Halon 1301 discharge is actuated either automatically by thermal detectors or manually from the main control room or at local fire panels. Operation of each Halon system is signaled locally and in the main control room. Additional data are included in Appendix 9A and NEDO-10466-A[1].

9.5.1.2.11 Portable Extinguishers

Portable extinguishers conform to the requirements of NFPA Standard 10. Type, size, and placement of extinguishers are determined after evaluation of the combustible present in each area. Additional details of portable extinguishers are included in Appendix 9A.

9.5.1.2.12 Breathing Apparatus

Self-contained breathing apparatus is provided in accordance with the National Institute for Occupational Safety and Health (NIOSH) guidelines. An onsite compressor is available to replenish exhausted air bottles.

9.5.1.2.13 Fire Detection Systems

Fire detection systems conform to the requirements of NFPA Code Standards 72D and 72E.

THIS PAGE INTENTIONALLY BLANK

During normal operation, the opening of one heat vent does not result in a release of radioactivity because the exhaust fan maintains the turbine building at a negative pressure. In the event of a fire with multiple operation of the heat vents, the design objectives of 10CFR100 would not be exceeded.

Fire Detection and Suppression Systems

Each area of the turbine building is protected by a zoned, early warning smoke detection system arranged to alarm locally and in the control room.

Automatic wet-pipe sprinkler systems are provided for protection of general areas at el 250 ft 0 in and 277 ft 6 in.

A system of six automatically operated foam water sprinkler systems (foam injection is manually controlled) covers the area under the turbine generator below el 306 ft 0 in. These systems would lay a blanket of foam on the floor under the turbine generator at el 277 ft 6 in to cover any accumulation of burning or unburned oil being discharged from a leak on the machine and to flow down the sides of the machine and lay a blanket of foam in the condenser pit, at el 239 ft 4 in.

The foam water sprinkler systems utilize open foam water sprinkler heads spaced to achieve area coverage, and the water phase is actuated automatically by heat detectors. The water supply to the systems is controlled by automatic flow control valves. The foam concentrate pump is manually started. Two equal capacity foam pumps are provided for the foam water sprinkler systems. One is on automatic standby. Two foam concentrate tanks are provided for foam water sprinker systems and foam hose reels.

To assist manual firefighting around the turbine generator, the water hose stations in the vicinity of the unit are provided with piped foam concentrate so that either water or foam streams are available at these stations. CO_2 hose reels are also provided.

Carbon dioxide total-flooding systems are provided for switchgear rooms, the alternator exciter enclosure, and the lube oil reservoir (manual system for inerting vapor space). 26

Manual local application CO_2 systems are provided for turbine bearings and turbine lube oil piping. Manual water

spray systems are also provided for these hazards as a backup to the local application CO_2 systems.

Water deluge systems are provided for the reactor feed pumps.

Cable tray water sprinkler systems are provided for turbine building cable trays except those in switchgear rooms and those that are protected by general area sprinkler systems.

The clean and dirty oil storage room and the lube oil reservoir have fire loadings of 16 hr 24 min and 14 hr 42 min, respectively. (The oil storage rooms have high fire loadings due to the fact that total volume burning has been assumed. With fire barriers intact, the influx of combustion air would be restricted, which would limit the amount of oil actually burned.) The doorways are elevated to contain the oil in the event of a tank rupture. Because of the high fire loading, sprinkler systems have been provided for these areas. Backup protection is provided by manual water hose reels and portable extinguishers. Drains are described in Section 9A.3.5.1.12.

The hotwell pit has ample ponding capability to hold lube oil line break and expected water from firefighting.

9A.3.1.2.5.5 Diesel Generator Building

Introduction

The diesel generator building is a single-floor, concrete structure. It contains the two standby diesel generators and the HPCS diesel generator that provide power if both normal and preferred station service power are lost.

Diesel generators are separated from each other by 3-hr fire walls. Diesel generator day tanks are also located in separate rooms surrounded by 3-hr walls. Doorways to day tank rooms have raised thresholds sized to contain the entire contents of the tank and water discharged for fire fighting purposes in the event of a leak and subsequent fire.

A common ventilation exhaust chase is located on elevation 272 ft 0 in of the north end of the building. Discharge grills from each diesel generator room exhaust into the chase. 24

QUESTION F280.10

Identify those areas of the plant that will not meet the guidelines of Section C.5.b of BTP CMEB 9.5-1 and, thus alternative shutdown will be provided. Additionally provide a statement that all other areas of the plant will be in compliance with Section C.5.b of BTP CMEB 9.5-1.

For each of those fire areas of the plant requiring an alternative shutdown system(s) provide a complete set of responses to the following requests for each fire area:

(1) List the system(s) or portions thereof used to provide the shutdown capability with the loss of offsite power.

(2) For those systems identified in (1) for which alternative or dedicated shutdown capability must be provided, list the equipment and components of the normal shutdown system in the fire area and identify the functions of the circuits of the normal shutdown system in the fire area (power to what equipment, control of what components and instrumentation). Describe the system(s) or portions thereof used to provide the alternative shutdown capability for the fire area and provide a table that lists the equipment and components of the alternative shutdown system for the fire area. For each alternative system, identify the function of the new circuits being provided. Identify the location (fire zone) of the alternative shutdown equipment and/or circuits that bypass the fire area and verify that the alternative shutdown equipment and/or circuits are separated from the fire area in accordance with Section III.G.2.

(3) Provide drawings of the alternative shutdown system(s) that highlight any connections to the normal shutdown systems (P&IDs for piping and components, elementary wiring diagrams of electrical cabling). Show the electrical location of all breakers for power cables, and isolation devices for control and instrumentation circuits for the alternative shutdown systems for that fire area.

(4) Verify that procedures have been or will be developed that describe tasks to be performed to effect the shutdown method. Provide a summary of these procedures outlining operator actions.

(5) Verify that the manpower required to perform the shutdown functions using the procedures of (4) as well as provide fire brigade members to fight the fire is available as required by the fire brigade technical specifications.

(6) Provide a commitment to perform adequate acceptance tests of the alternative shutdown capability. These tests should verify that: equipment operates from the local control station when the transfer or isolation switch is placed in the "local" position and that the equipment cannot be operated from the control room; and that equipment operates from the control but cannot be operated at the local control station when the transfer isolation switch is in the "remote" position.

(7) Verify that repair procedures for cold shutdown systems are developed and material for repairs is maintained onsite. Provide a summary of these procedures and a list of the material needed for repairs.

RESPONSE

(1) This information is provided in revised Appendix 9B.

(2) This information is provided in revised Appendix 9B.

26 (3) Alternate shutdown equipment is described in Appendix 9B, Section 9B.9. Drawings for this equipment were reviewed onsite by the NRC during the Appendix R audit.

(4) Procedures are developed to describe operator actions to affect shutdown after a fire.

(5) Unit 2 will have an independent fire department, separate from the minimum number of shift operators, to shut down the reactor.

(6) The tests for alternate shutdown capability are described in Table 14.2-104.

(7) Repair procedures are not required.

Associated Circuits Cables (safety-related, nonsafety-related, Class 1E, and non-Class 1E) that have a physical separation less than that required by Section III.G.2 of Appendix R, and one of the following:

1. A common power source with the shutdown equipment (redundant or alternative) and the power source is not electrically protected from the circuit of concern by coordinated breakers, fuses, or similar devices.

2. A connection to circuits of equipment whose spurious operation would adversely affect the shutdown capability.

3. A common enclosure with the shutdown cables that is not protected by circuit breakers, fuses or similar devices, or that will allow propagation of the fire into the common enclosure.

Automatic Self-acting, operating by its own mechanism when actuated by some impersonal influence such as a change in current, pressure, temperature, or mechanical configuration.

Combustible Material Material that does not meet the definition of noncombustible.

Control Room Complex The zone served by the control room emergency ventilation system (see SRP Section 6.4, Habitability Systems).

Exposure Fire An exposure fire is a fire in a given area that involves either in situ or transient combustibles and is external to any structures, systems, or components located in or adjacent to that same area. The effects of such fire (e.g., smoke, heat, or ignition) can adversely affect those structures, systems, or components important to safety. Thus, a fire involving one train of safe shutdown equipment may constitute an exposure fire for the redundant train located in the same area, and a fire involving combustibles other than either redundant train may constitute an exposure fire to both redundant trains located in the same area.

Fire Area Areas within the plant that are totally enclosed by 3-hr fire barriers. Structural steel forming a part or supporting such fire barriers to be protected to provide fire resistance equivalent to that required of the barrier. Exterior walls, unless shown on FSAR Figures 9A.3-2 through 9A.3-8, are not fire rated. 26

9A.3.5.1.8 Roof Construction

Metal deck roof construction, where used, is designed as a Factory Mutual Class 1 roofing system.

9A.3.5.1.9 Suspended Ceiling

Any suspended ceilings in safety-related areas are of noncombustible construction. Concealed spaces are void of combustibles except for electrical cable, which is in metallic conduit.

9A.3.5.1.10 Transformers

Transformers located within safety-related areas are of the dry type.

9A.3.5.1.11 Oil-Filled Transformers

The plant has an open transformer yard, which contains all the oil-filled transformers applicable to BTP CMEB 9.5-1 Section C.5.a(13). The west wall of the control building is located within 50 ft, has one protected HVAC air intake opening, and is constructed in excess of the 3-hr fire-resistive requirements. Protection consists of a fire damper (located 6 ft upstream of the opening) and fire barrier wrap for the exposed duct. Additional unprotected openings exist that are in excess of 50 ft from the transformers. 26

9A.3.5.1.12 Floor Drains

Floor drains are conservatively sized in accordance with the National Plumbing Code. Floor drains in safety-related and nonsafety-related areas are approximately spaced at one drain per 575 sq ft, each with a capacity of approximately 70 gpm. Actual drainage capability would depend on drain spacing, location, and area involved.

Firefighting water flow depends on the type of suppression system provided, system design density, and area of involvement. Unit 2 fixed water suppression systems incorporate the use of closed-heads and closed-water spray nozzles which limit the amount of water discharged to the area of involvement during a fire.

An evaluation to determine the degree of buildup and its effect was conducted for the diesel generator rooms (the most conservative case). The result showed that with all

constructed of a minimum of 8-in thick reinforced concrete. Concrete, in addition to its capability to support various loads, also possesses insulating and fire-resistive properties.

Nationally known and recognized Uniform Building Code (1982 edition) (herein called UBC) lists the required minimum thicknesses of various insulating materials for fire-resistive periods of 1 hr through 4 hr listed in Tables 9A.3-1 through 9A.3-3. Based on these tables, it can be concluded that all fire barriers provide a minimum of 3 hr of fire resistance rating as specified for certain plant areas. The reinforcing steel with a minimum of 1 in of concrete cover also provides 3 hr of fire resistance rating.

American Concrete Institute (ACI) codes and quality assurance requirements of ANSI N45.2.5, as invoked by NRC Regulatory Guides 1.55 and 1.94, respectively, are used in the design, procurement, and construction of these barriers. Penetration seals are discusseed in Section 9A.3.5.1.2. Comparisons are performed for:

1. Typical floor system versus corresponding UL-rated sections

2. Typical steel beam versus corresponding UL-rated beam

3. Typical wall section versus corresponding UL-rated sections

The details of UL-rated sections are obtained from the Fire Resistance Directory, published by the Underwriters Laboratories, dated January 1983. Tables 9A.3-12, 9A.3-13, and 9A.3-14 provide the comparison.

Therefore, while fire testing is not done, the required 3-hr fire resistance is provided.

9A.3.5.1.2 Penetration Seals

Openings through fire barriers for pipe, conduit, and cable trays, which separate fire areas, are sealed to provide a fire rating equal to the rating of the barrier itself. Openings inside conduits penetrating fire barriers are sealed at the barrier or at the first opening on both sides of the barrier regardless of the conduit size or distance to the first opening. The seal materials are ASTM E-119 23

ANI/MAERP tested, provide three hour rating, and demonstrate the following:

- No significant smoke or hot gas preparation
- No large areas of heat rise greater than 325°F above ambient on the cold side. (In most cases, maximum cold side temperature did not exceed 325°F).
- No hot spots that could ignite nearby cable on the code side.
- Capability to withstand the design differential pressure which is not concurrent with fire.

The following materials may be used:

- Dow Corning 3-6548 silicone RTV foam.
- Dow Corning 170 products A and B, Elastomer.

To facilitate installation, a fire rated damming material is used when required. Installation of the conduit internal seals is performed by ANI-approved installers based on procedures consistent with the tests conducted. Threaded unused conduits are capped or plugged on both sides of the fire barrier with a 1/8 in vent hole provided on one side. Cable trays are supported in a manner similar to the UL test. Unit 2 penetration seal designs are either the same as Unit 1 designs, which were tested and qualified by Underwriters Laboratories for a 3-hr rating, or are UL-listed, 3-hr rated penetration seals (such as link-seals). This is verified in accordance with the quality assurance requirements. Cable trays are supported in a manner similar to the UL test. Unit 2 penetration seal designs are either the same as Unit 1 designs, which were tested and qualified by Underwriters Laboratories for a 3-hr rating, or are UL-listed, 3-hr rated penetration seals (such as link-seals). This is verified in accordance with the quality assurance requirements.

TABLE 9A.3-17

COMPARISON BETWEEN UL-LABELED CLASS A DOORS AND UNIT 2 NONLABELED SPECIAL PURPOSE DOORS

Item	UL-Labeled 3-Hr Door RGF No. R3658 (Class A Hollow Metal)	Special Purpose Doors (Watertight and Radiation Shielded)	Special Purpose Doors (Tornado and Pressuretight)	Special Purpose Door (Railroad Access)
Door construction	Composite construction - 1 3/4" thick 16 gauge cover sheets with 1 5/8" thick mineral wool insulation and 20 gauge Reinforcing ZEES (6" O.C.)	1 1/4" solid steel plate	Composite construction 1 7/8" thick 2-3/16" cover sheets of A36 with 1 1/2" thick fiberglass insulation and 1 1/2" x 9/16 x 3/16" bar channels all around the periphery of the doors	Composite construction - 6 1/4" thick, 11 gauge cover sheets with 6" thick fiberglass insulation and C6 x 8.2 A36 steel channels in the skeleton and around the periphery of the door.
Lock bolts	Mortised lock or latch sets with one single point spring-actuated bolt, (5/8" x 1"), notched for nylon inserts (5/8" or 3/4" throw)	Six 1 1/4" square CF1018 steel bolts with a 2 1/2" throw; two at each jamb and one each at head and sill. Bolt housings of 3"x4 3/4"x2" A36 steel stock	Two 1" lock bolts, ASTM A1219 UNSG1215 steel - min. tenible 76 ksi, 1" throw. Latch strike made of super oilite at operating temperature of up to 200°F. Bushings on the lock are bronze in excess of 50 ksi	Two 1 1/2" diameter locking pins, AISI CF1018 steel, with four 1/2" diameter ASTM A490 hex bolts on mounting brackets, one each at head and sill.
Hinges	1 1/2 or 2 pairs of 4 1/2"x4 1/2"x0.180" ball bearing butt hinges - with 1/4" or 5/16" pins with bolts	2 hinges with 1" diameter pin and thrust bearing, welded to structural steel angle frame	Two heavy duty hinge asemblies, welded to the door frame and secured to the doors	Six hinges with 2" diameter steel pin and thrust bearing welded to the structural steel angle frame.
Frame	14 gauge pressed steel frame with adjustable anchors.	A36 steel angles for sill, head, and jambs welded together and stiffened with gusset plates, as required.	A36 steel channels three sides with bar stops weld to the channels to prevent flame propagation.	A36 steel angles and plates for jambs welded to the embedded plates in the
Field installation	Pressed steel frame anchored to wall with 14 gauge adjustable jamb anchors at 24 in O.C.	A-36 steel angle frame continuously fillet welded to existing embedded frame.	Channel frame intermittent welded to the existing embedded frame.	A36 steel frame intermittent fillet welded to existing embedded frame.

8605140057-01

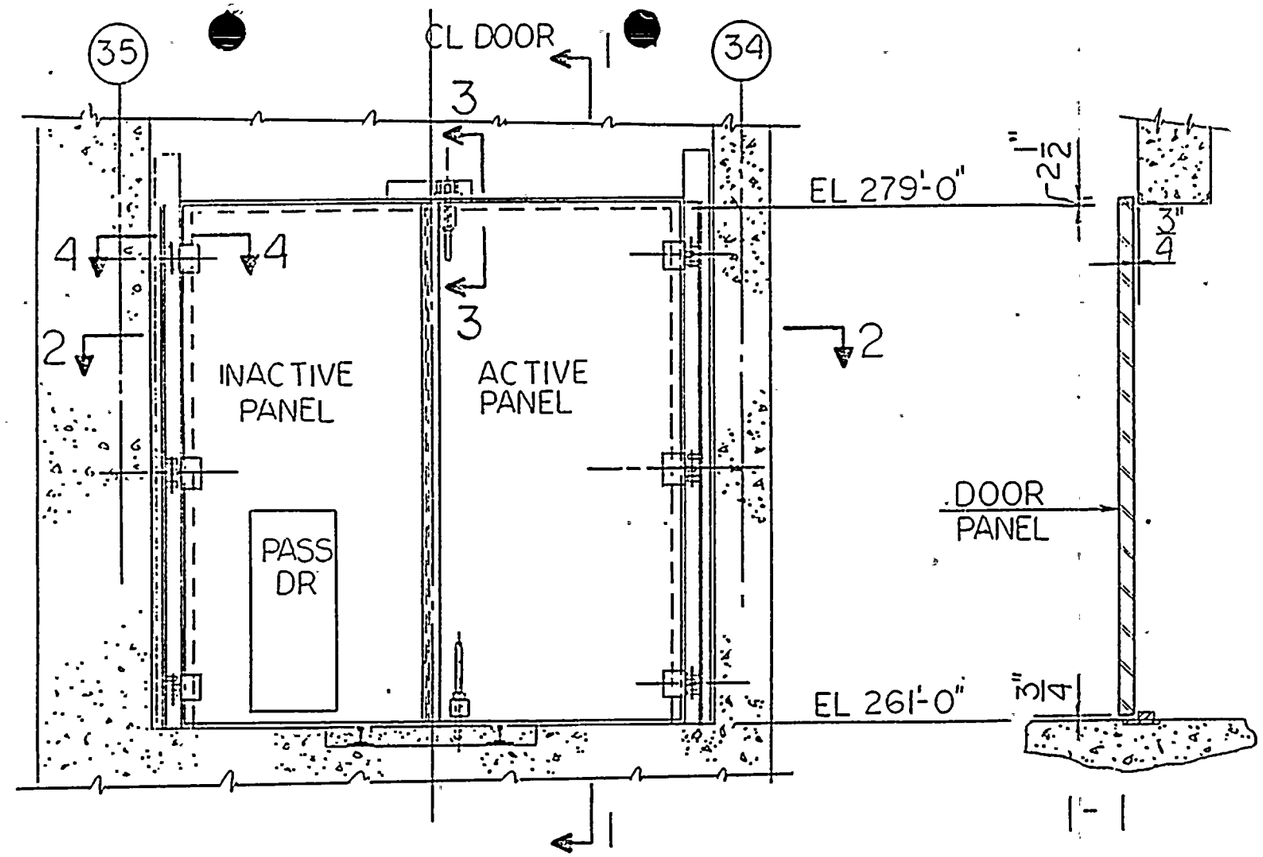

ELEVATION
DOOR (RR 261-2)

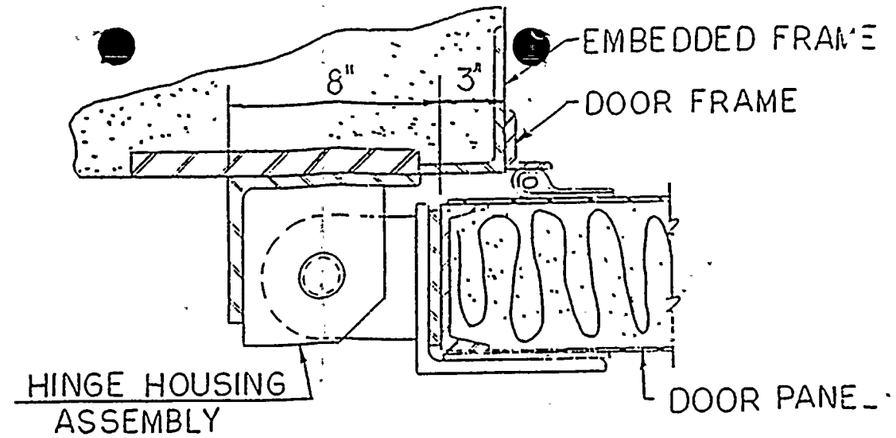

4 - 4

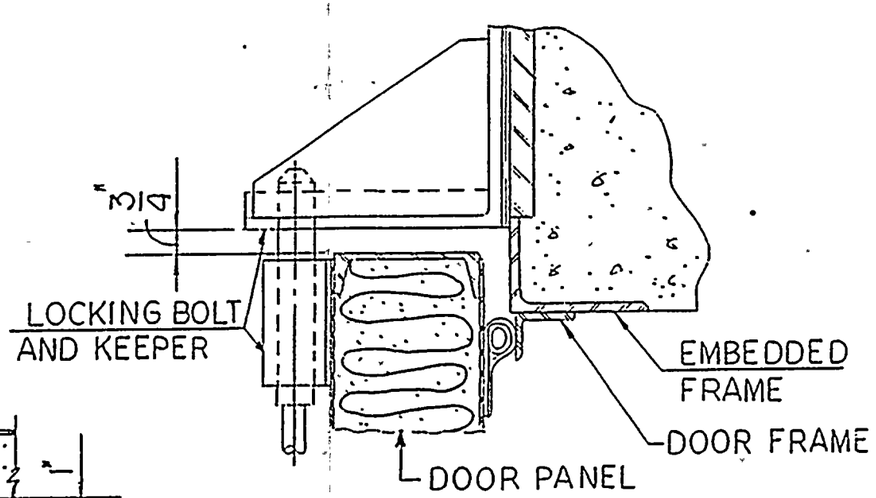

3 - 3

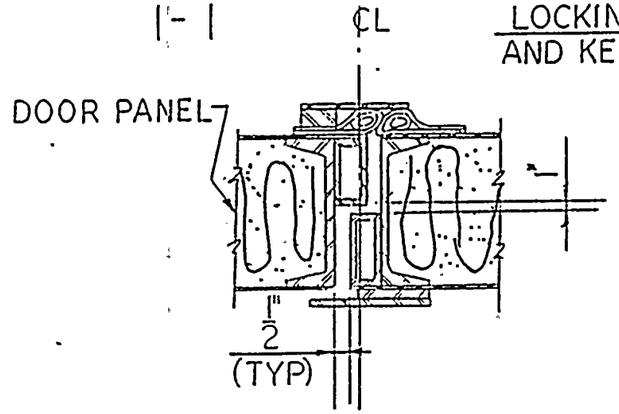

DETAIL-A

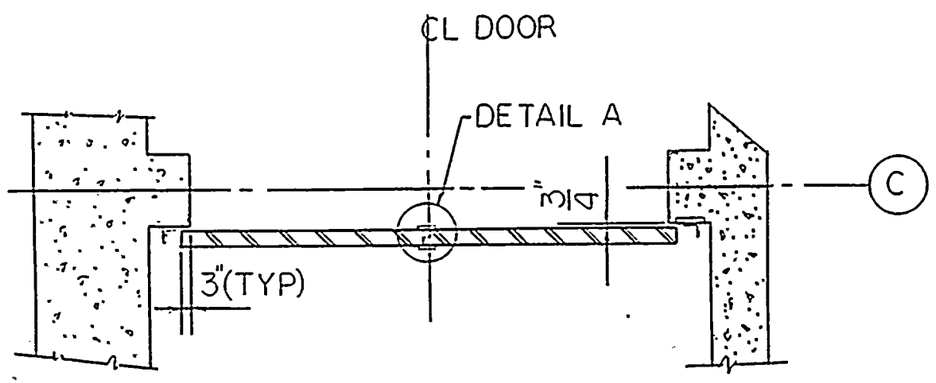

2-2

TI APERTURE CARD

Also Available On Aperture Card

8605140057-02

FIGURE 9A.3-17

RAILROAD ACCESS DOOR
PAGE 1 OF 2

NIAGARA MOHAWK POWER CORPORATION
NINE MILE POINT-UNIT 2
FINAL SAFETY ANALYSIS REPORT

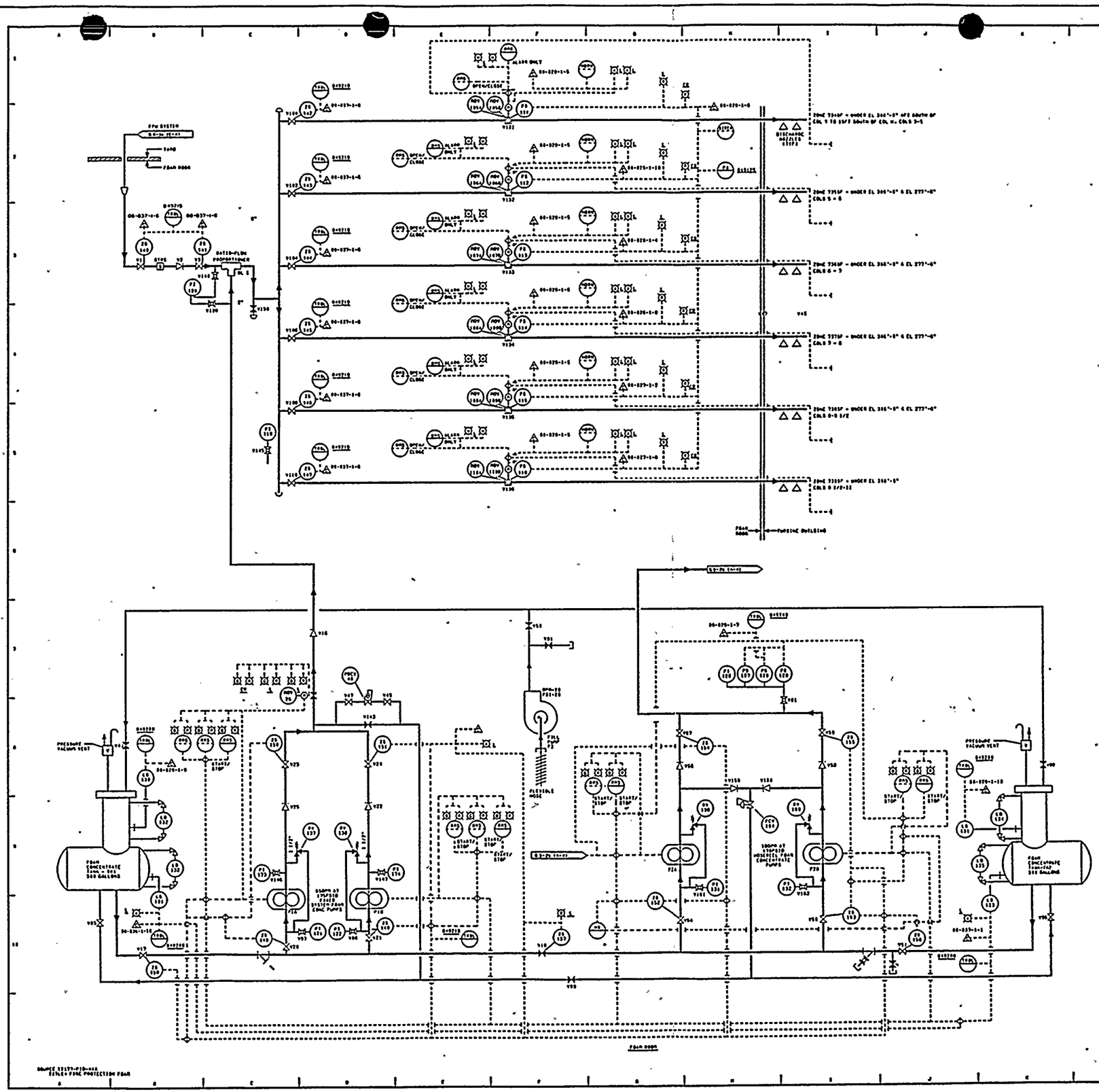

TI
APERTURE
CARD

Also Available On
Aperture Card

8605140057-03

FIGURE 9.5-2a

FIRE PROTECTION
FOAM

NINE MILE POINT
NUCLEAR STATION-UNIT 2
FINAL SAFETY ANALYSIS REPORT

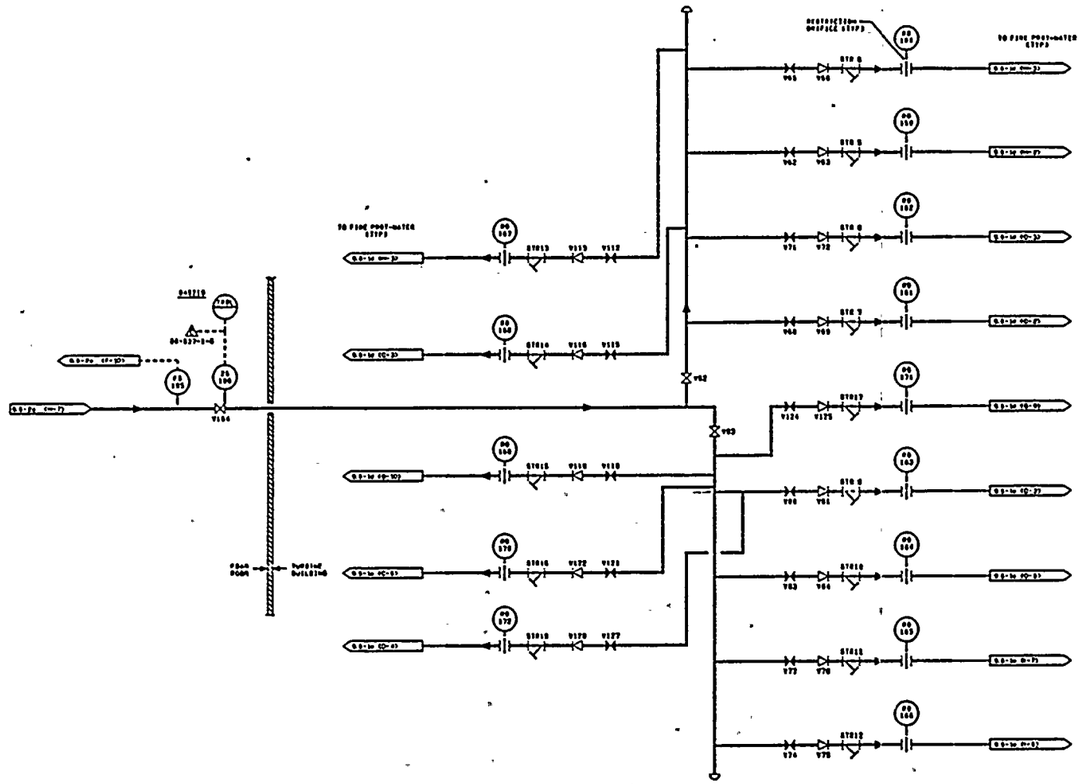

TI
APERTURE
CARD

Also Available On
Aperture Card

8605140057-04

FIGURE 9.5-2b

FIRE PROTECTION
FOAM

NINE MILE POINT
NUCLEAR STATION-UNIT2
FINAL SAFETY ANALYSIS REPORT

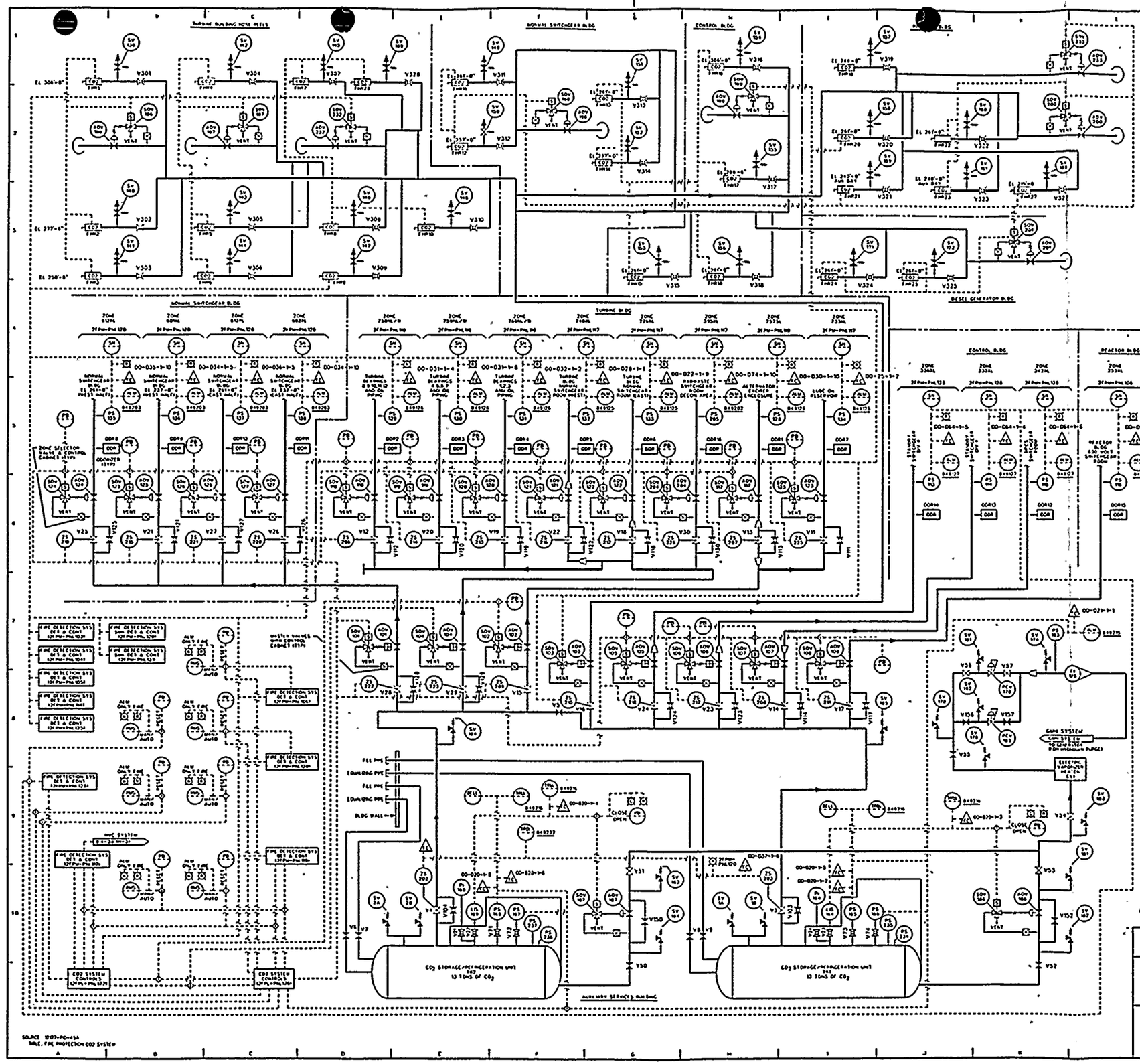

TI APERTURE CARD

Also Available On Aperture Card

8605140057-05

FIGURE 9.5-3a

FIRE PROTECTION CO2 SYSTEM

NINE MILE POINT NUCLEAR STATION UNIT-2

FINAL SAFETY ANALYSIS REPORT

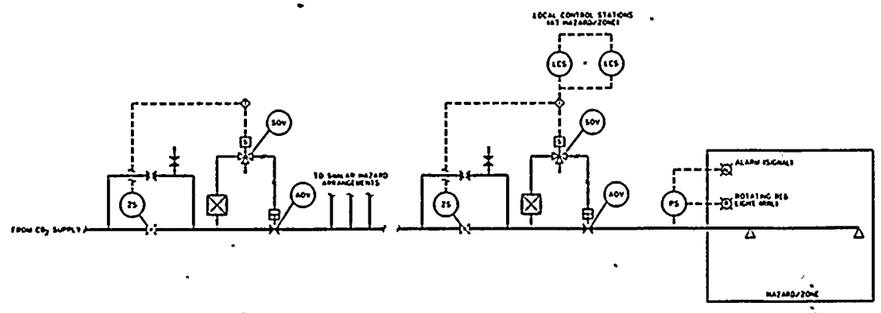

TYPICAL CO_2 HAZARD/ZONE ARRANGEMENT

ELECTRICAL EQUIPMENT MARK NO'S
ASSOCIATED WITH CO_2 HAZARD/ZONES

ZONE NO	RPL NO	AL NO	LCS NO
333HL	2FPL=RPL001	2FPL=AL001	2FPL=LCS037
333HL	2FPL=RPL505	2FPL=AL505	2FPL=LCS537
			2FPL=LCS537
334HL	2FPL=RPL504	2FPL=AL504	2FPL=LCS531
			2FPL=LCS534
347HL	2FPL=RPL506	2FPL=AL506	2FPL=LCS532
			2FPL=LCS542
305HL	2FPL=RPL880	2FPL=AL800	2FPL=LCS800
604HL	2FPL=RPL501	2FPL=AL501	2FPL=LCS529
607HL	2FPL=RPL500	2FPL=AL500	2FPL=LCS527
812HL	2FPL=RPL503	2FPL=AL503	2FPL=LCS536
813HL	2FPL=RPL502	2FPL=AL502	2FPL=LCS539
726HL	2FPL=RPL705	2FPL=AL701	2FPL=LCS762
733HL	2FPL=RPL704		2FPL=LCS761
			2FPL=LCS787
740HL	2FPL=RPL706	2FPL=AL702	2FPL=LCS761
757HL	2FPL=RPL700	2FPL=AL703	2FPL=LCS787
750HL/R	2FPL=RPL701	2FPL=AL703	2FPL=LCS790
750HL/R	2FPL=RPL702	2FPL=AL703	2FPL=LCS789
760HL/R	2FPL=RPL703	2FPL=AL703	2FPL=LCS788

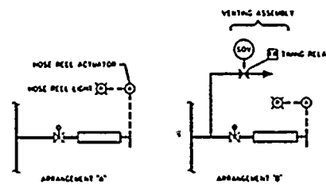

TYPICAL CO_2 FIRE HOSE REEL (FHR) ARRANGEMENTS

NOTE: VENTING ASSEMBLY MARK NO "B" IS ATTACHED TO ONE FHR IN EACH GROUP. REMAINING FHRS IN EACH GROUP ACTIVATE THE ASSEMBLY

ELECTRICAL EQUIPMENT FOR CO_2 FIRE HOSE REELS

FHR NO	SOV NO	TR NO	FHR NO	SOV NO	TR NO
2FPL=FHR1	2FPL=SOV186	2FPL=TR700	2FPL=FHR16	2FPL=SOV189	2FPL=TR500
2FPL=FHR2			2FPL=FHR17		
2FPL=FHR3			2FPL=FHR18		
2FPL=FHR4	2FPL=SOV187	2FPL=TR701	2FPL=FHR19	2FPL=SOV232	2FPL=TR002
2FPL=FHR5			2FPL=FHR22	2FPL=SOV202	2FPL=TR004
2FPL=FHR6			2FPL=FHR23	2FPL=SOV200	2FPL=TR001
2FPL=FHR7	2FPL=SOV232	2FPL=TR702	2FPL=FHR24	2FPL=SOV201	2FPL=TR501
2FPL=FHR8			2FPL=FHR25	2FPL=SOV200	2FPL=TR504
2FPL=FHR10			2FPL=FHR9	NO VENTING	NO VENTING
2FPL=FHR11			2FPL=FHR13	ASSEMBLY	ASSEMBLY
2FPL=FHR12	2FPL=SOV188	2FPL=TR562	2FPL=FHR15		
2FPL=FHR14			2FPL=FHR20		
			2FPL=FHR21		
			2FPL=FHR27		

CO_2 SYSTEM VALVES AND ASSOCIATED POSITION SWITCH MARK NO

VALVE NO	POSITION SWITCH	VALVE NO	POSITION SWITCH
2FPL=V2	2FPL=25203	2FPL=V20	2FPL=25214
2FPL=V4	2FPL=25202	2FPL=V21	2FPL=25215
2FPL=V8	2FPL=25203	2FPL=V22	2FPL=25216
2FPL=V12	2FPL=25206	2FPL=V23	2FPL=25217
2FPL=V13	2FPL=25207	2FPL=V24	2FPL=25218
2FPL=V14	2FPL=25208	2FPL=V25	2FPL=25219
2FPL=V15	2FPL=25209	2FPL=V26	2FPL=25220
2FPL=V16	2FPL=25210	2FPL=V27	2FPL=25221
2FPL=V17	2FPL=25211	2FPL=V28	2FPL=25222
2FPL=V18	2FPL=25212	2FPL=V29	2FPL=25223
2FPL=V19	2FPL=25213	2FPL=V30	2FPL=25226

THIS DRAWING CREATED ELECTRONICALLY

8605140057-06

FIGURE 9.5-3b

FIRE PROTECTION CO2 SYSTEM

NINE MILE POINT
NUCLEAR STATION UNIT-2
FINAL SAFETY ANALYSIS REPORT

SOURCE: 12177-PD-450
TITLE: FIRE PROTECTION CO2 SYSTEM

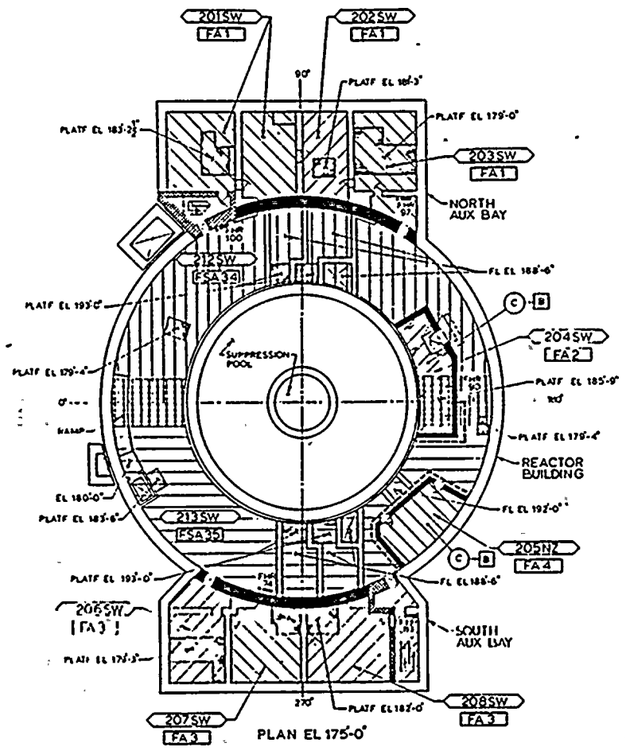

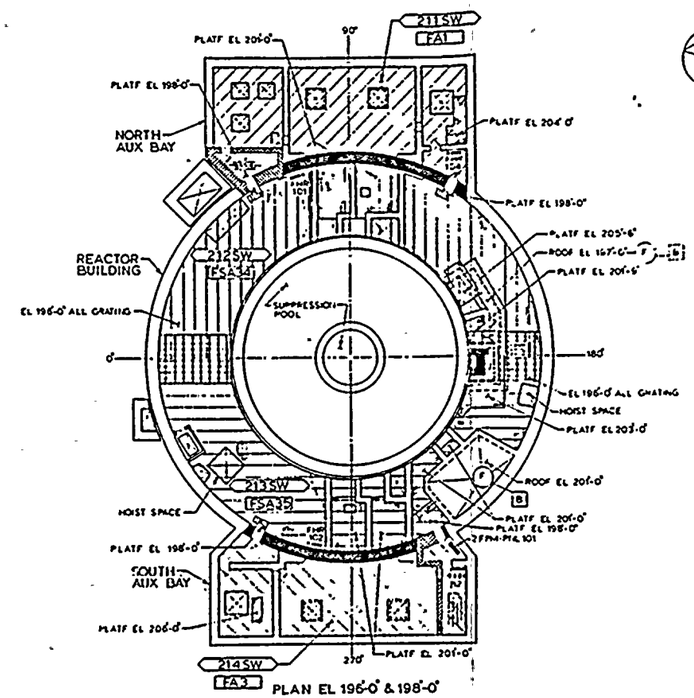

FIRE ZONE LEGEND

200	REACTOR BLDG & MAIN STEAM TUNNEL
300	ELECTRICAL TUNNELS, CONTROL BLDG, PIPE TUNNELS
400	DIESEL GENERATOR BLDG
500	TRANSFORMER YARD
600	NORMAL SWITCHGEAR BLDG
700	TURBINE BLDG
800	SCREENWELL BLDG
900	RADWASTE BLDG & CONDENSATE STORAGE TANK BLDG

ZONE SUFFIX LEGEND

XXXNW	WATER SUPPRESSION/NO ACTUATION
XXXSW	WATER SUPPRESSION/ACTUATION
XXXSG	HALON SUPPRESSION/SINGLE ZONE ACTUATION
XXXHS	HALON SUPPRESSION/CROSS ZONE ACTUATION
XXXSL	CO_2 SUPPRESSION/SINGLE ZONE ACTUATION
XXXXL	CO_2 SUPPRESSION/CROSS ZONE ACTUATION
XXXDZ	DETECTION ONLY (NO SUPPRESSION)

LEGEND

	3 HR FIRE RATED WALL OR FLOOR
	2 HR FIRE RATED WALL OR FLOOR
	NON FIRE RATED WALL OR FLOOR
FHR	FIRE HOSE REEL
CO_2 FHR	LOW PRESSURE CO_2 FIRE HOSE REEL
FPNL	FIRE PROTECTION PANEL
F/W FHR	FOAM/WATER FIRE HOSE REEL
123 AA	FIRE ZONE NUMBER
FA 123	FIRE AREA NUMBER
FSA 123	FIRE SUB AREA NUMBER
	ALARM CHECK VALVE
	DELUGE VALVE
	ISOLATION VALVE
S	STRAINER
C	3 HOUR FIRE RATED CEILING (REQUIRES 3 HOUR RATED PENETRATION SEAL) UNLESS NOTED OTHERWISE
T	3 HOUR FIRE RATED FLOOR (REQUIRES 3 HOUR RATED PENETRATION SEAL)
	3 HOUR FIRE RATED CEILING & FLOOR (REQUIRES 3 HOUR RATED PENETRATION SEALS) FIRE STOP BOUNDARY AROUND CABLE TRAY RISERS & FLOOR OPENINGS (SEE NOTE 2)
A-123	FIRE HEADER NUMBER
	20' NO COMBUSTIBLES/NO STORAGE ZONE (BOUNDARIES SHOWN ARE PRELIMINARY)

REFERENCES

YARD WATER & FIRE PROTECTION PPG	EB-2 SERIES
YARD FIRE PROTECTION ARRANGEMENT	EB-3A
BLDG SERVICE-DIESEL FIRE PUMPHOUSE	EB-6 SERIES
FIRE PROTECTION-REACTOR BLDG	EB-13 SERIES
FIRE PROTECTION-TURBINE BLDG	EB-23 SERIES
FIRE PROTECTION-TRANSFORMER YARD	EB-23G
FIRE PROTECTION-SERVICE BLDG & FOAM ROOM	EB-33A
FIRE PROTECTION-SCREENWELL BUILDING	EB-44 SERIES
FIRE PROTECTION-RADWASTE & DECON BLDGS	EB-53 SERIES
BLDG SERVICE-NORMAL SWITCHGEAR BUILDING	EB-72A,B,C,D,U
BLDG SERVICE-AUX SERVICE BLDG-SOUTH	EB-72J
BLDG SERVICE-COND STORAGE TANK BLDG	EB-72AC
BLDG SERVICE-STANDBY GAS TREAT BUILDING	EB-77H
BLDG SERVICE-AUX BOILER BUILDING	EB-78A
FIRE PROTECTION-CONTROL BUILDING	EB-83 SERIES
ELECTRICAL CONDUIT ARRANGEMENTS	EE-420 SERIES

LEGEND (CONT.)

OR A	DEVIATION TO REQUIREMENTS OF BTP 9.5-1 REV 2
OR B	COMPLIES TO REQUIREMENTS OF BTP 9.5-1 REV 2

GENERAL NOTES

1. SCALE: NOT TO SCALE
2. FIRE STOPS ARE REQUIRED IN ALL CABLE TRAY RISER OPENINGS AND ALL PENETRATIONS, ELECTRICAL AND MECHANICAL THROUGH NON-RATED FLOORS AND CEILINGS WITHIN 5FT PROXIMITY THEREOF, EXCEPT WHERE INDICATED-SEE LEGEND
3. THE MAIN STACK AND SCREENHOUSE STRUCTURES ARE NOT SHOWN ON THESE DRAWINGS. WALLS, FLOORS, & CEILINGS WITHIN THESE STRUCTURES DO NOT REQUIRE FIRE RATINGS
4. FOR DIMENSIONED LOCATIONS OF FIRE PROTECTION PANELS SEE EC-420 SERIES DRAWINGS
5. ALL EGRESS STAIRWELLS 2HR RATED PER REQUIREMENTS OF BTP 9.5-1 REV 2

8605140057-07

FIGURE 9A.3-2

FIRE PROTECTION ARRANGEMENT
STATION BUILDINGS
PLAN EL 175'-0", 196'-0" & 198'-0"

NIAGARA MOHAWK POWER CORPORATION
NINE MILE POINT-UNIT 2
FINAL SAFETY ANALYSIS REPORT

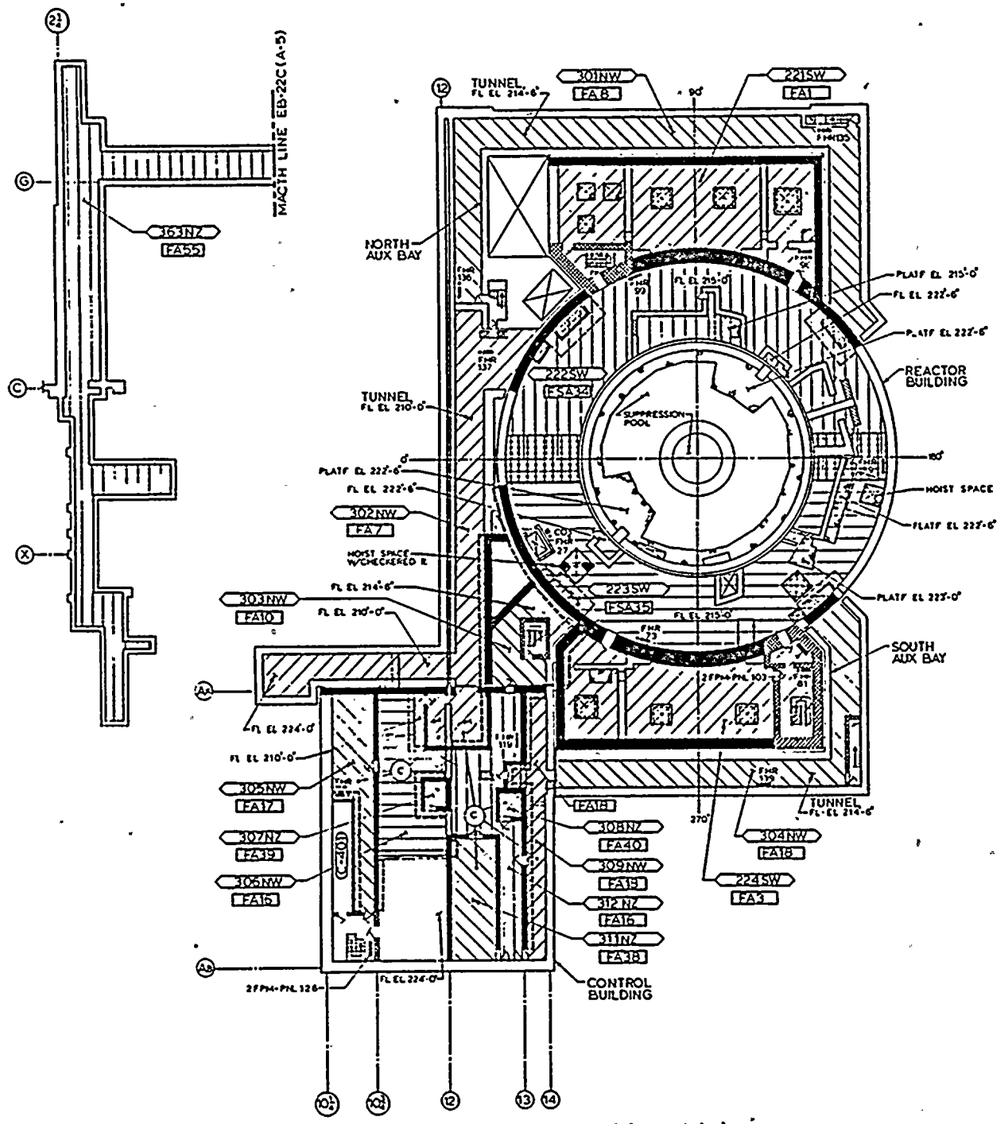

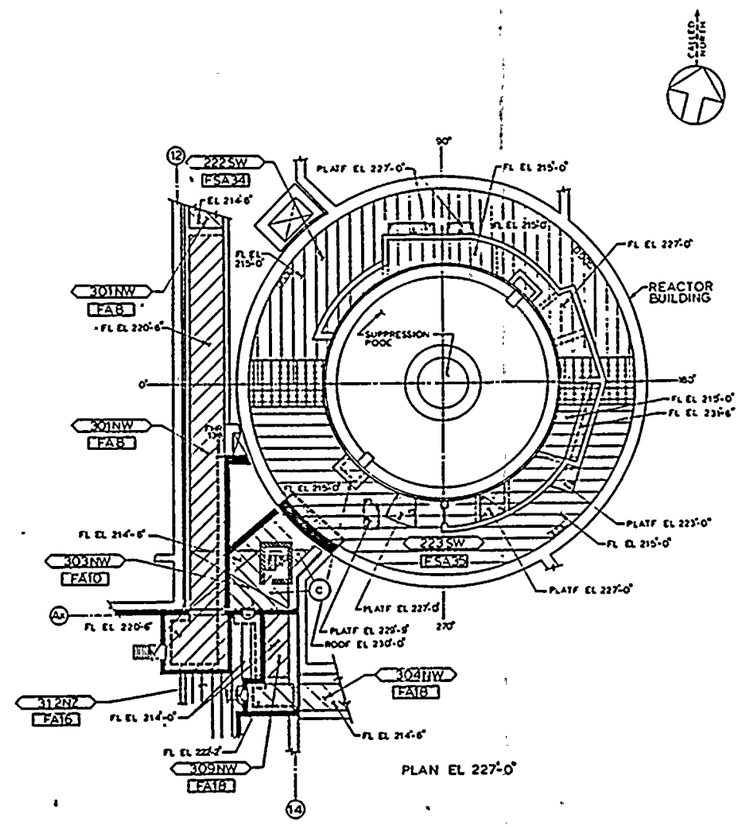

TI APERTURE CARD

Also Available On Aperture Card

NOTES:
1. SCALE: NOT TO SCALE
2. FOR GENERAL NOTES LEGEND & REFERENCES DWG EB-22A

8605140057-08

FIGURE 9A.3-3

FIRE PROTECTION ARRANGEMENT
UNIT NO.2 STATION BUILDINGS
PLAN EL 214'-0" & 215'-0"

NIAGARA MOHAWK POWER CORPORATION
NINE MILE POINT-UNIT 2
FINAL SAFETY ANALYSIS REPORT

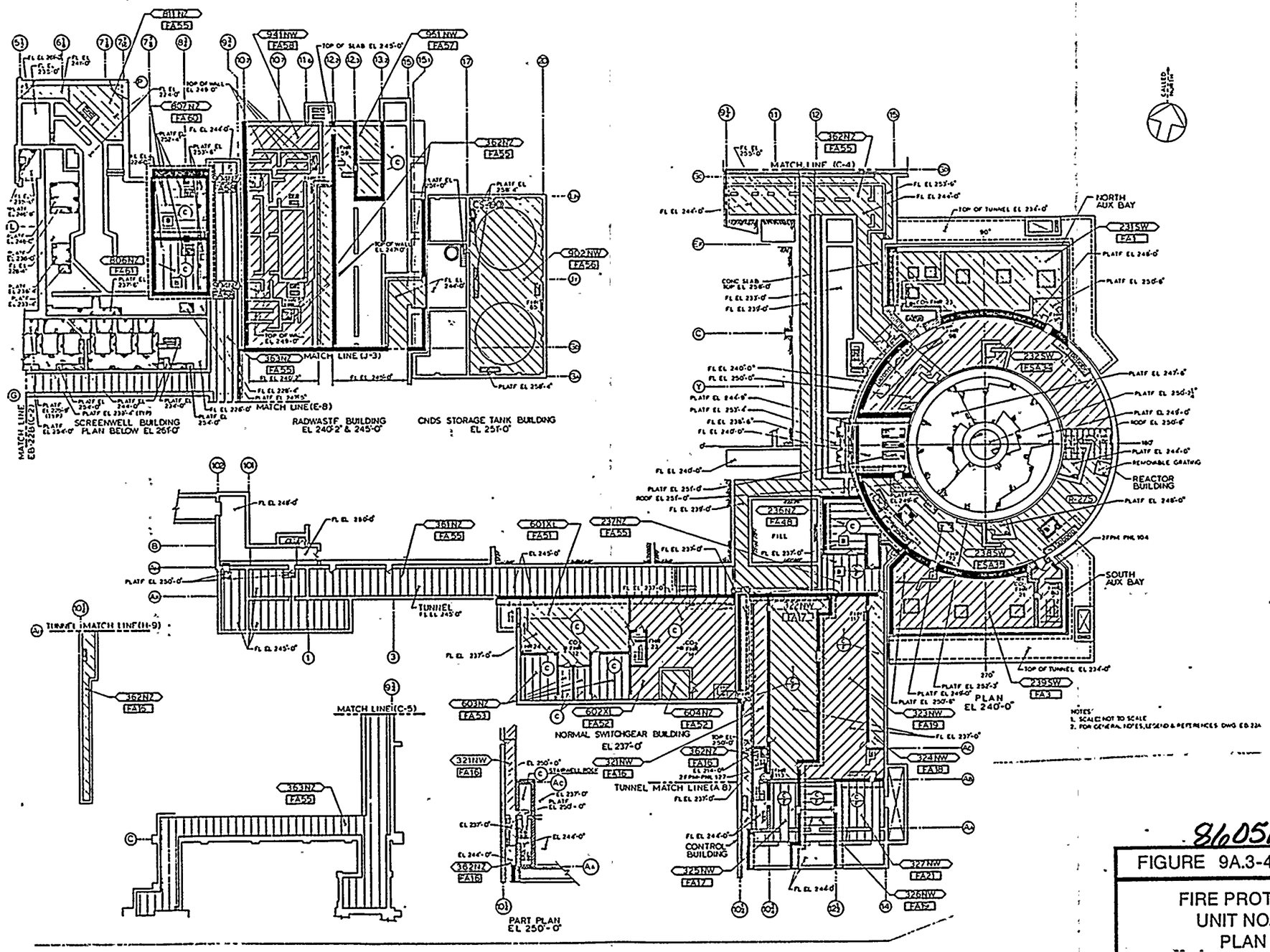

TI APERTURE CARD

Also Available On Aperture Card

8605140057-09

FIGURE 9A.3-4

FIRE PROTECTION ARRANGEMENT
UNIT NO. 2 STATION BUILDINGS
PLAN EL 237'-0" & 240'-0"

NIAGARA MOHAWK POWER CORPORATION
NINE MILE POINT-UNIT 2
FINAL SAFETY ANALYSIS REPORT

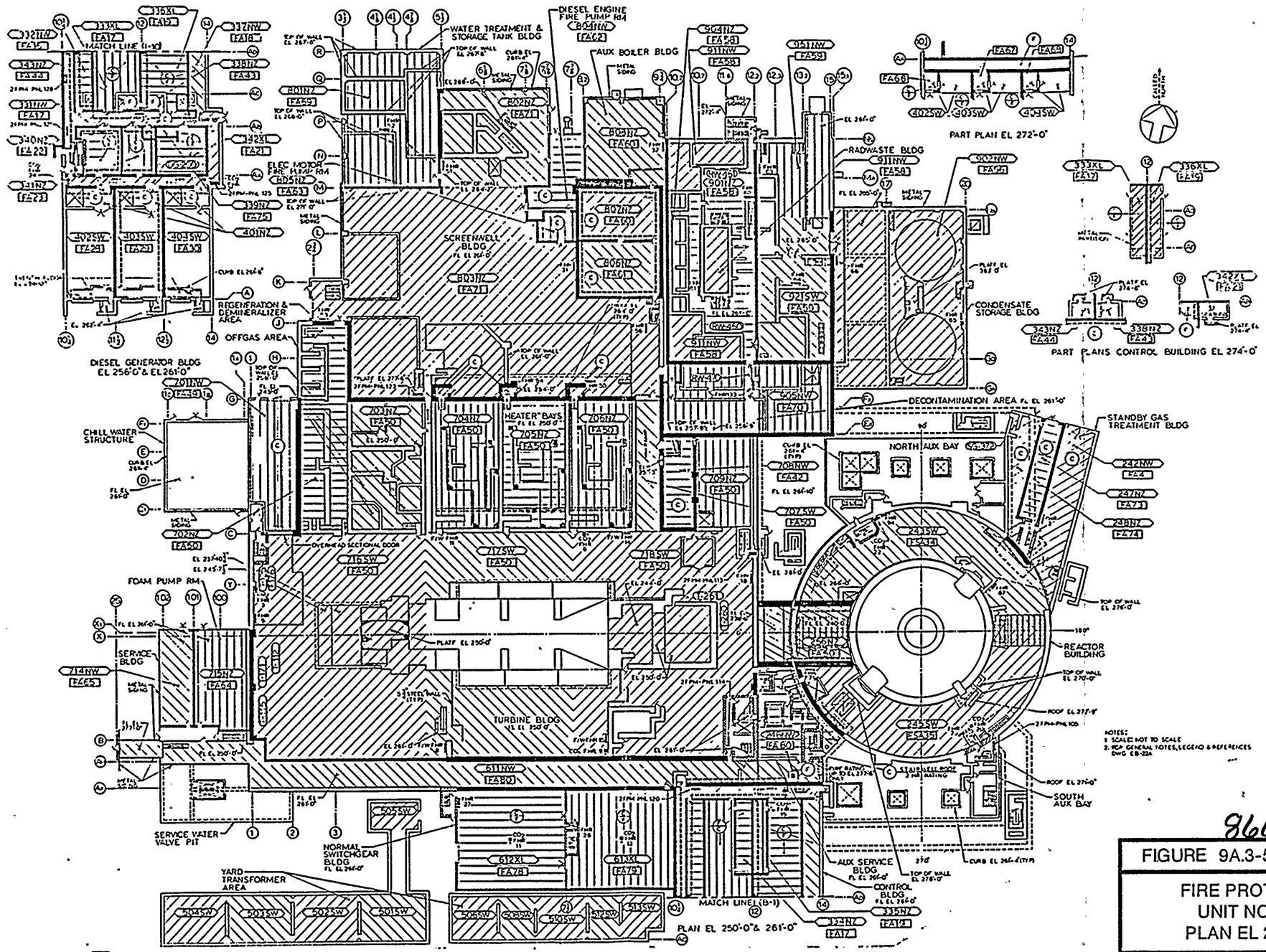

TI APERTURE CARD

Also Available On Aperture Card

8605140057-10

FIGURE 9A.3-5

FIRE PROTECTION ARRANGEMENT
UNIT NO. 2 STATION BUILDINGS
PLAN EL 250'-0", 261'-0" & 274'-0"

NIAGARA MOHAWK POWER CORPORATION
NINE MILE POINT-UNIT 2
FINAL SAFETY ANALYSIS REPORT

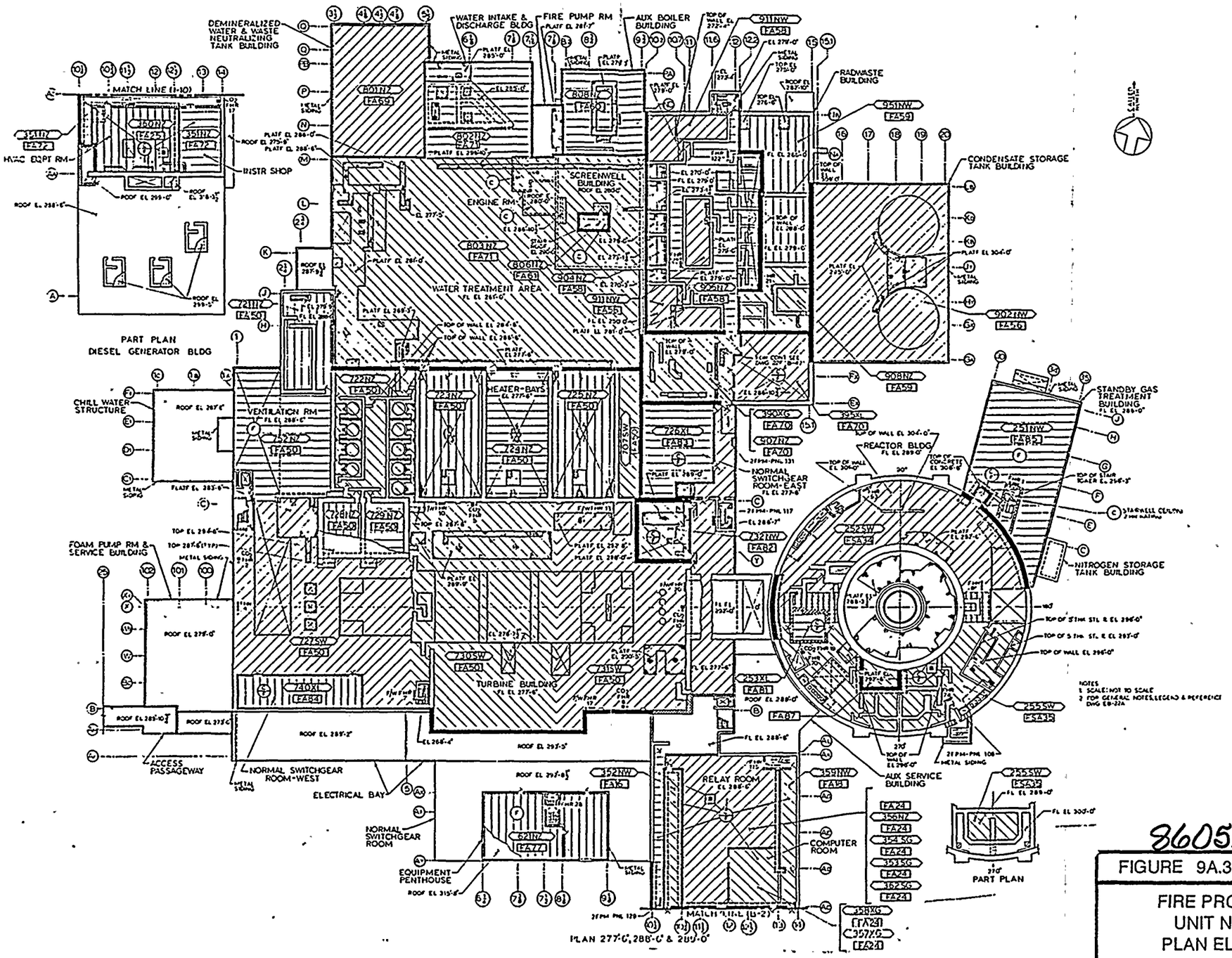

TI APERTURE CARD

Also Available On Aperture Card

8605140057-11

FIGURE 9A.3-6

FIRE PROTECTION ARRANGEMENT
UNIT NO.2 STATION BUILDINGS
PLAN EL 277'-6", 288'-6" & 289'-0"

NIAGARA MOHAWK POWER CORPORATION
NINE MILE POINT-UNIT 2
FINAL SAFETY ANALYSIS REPORT

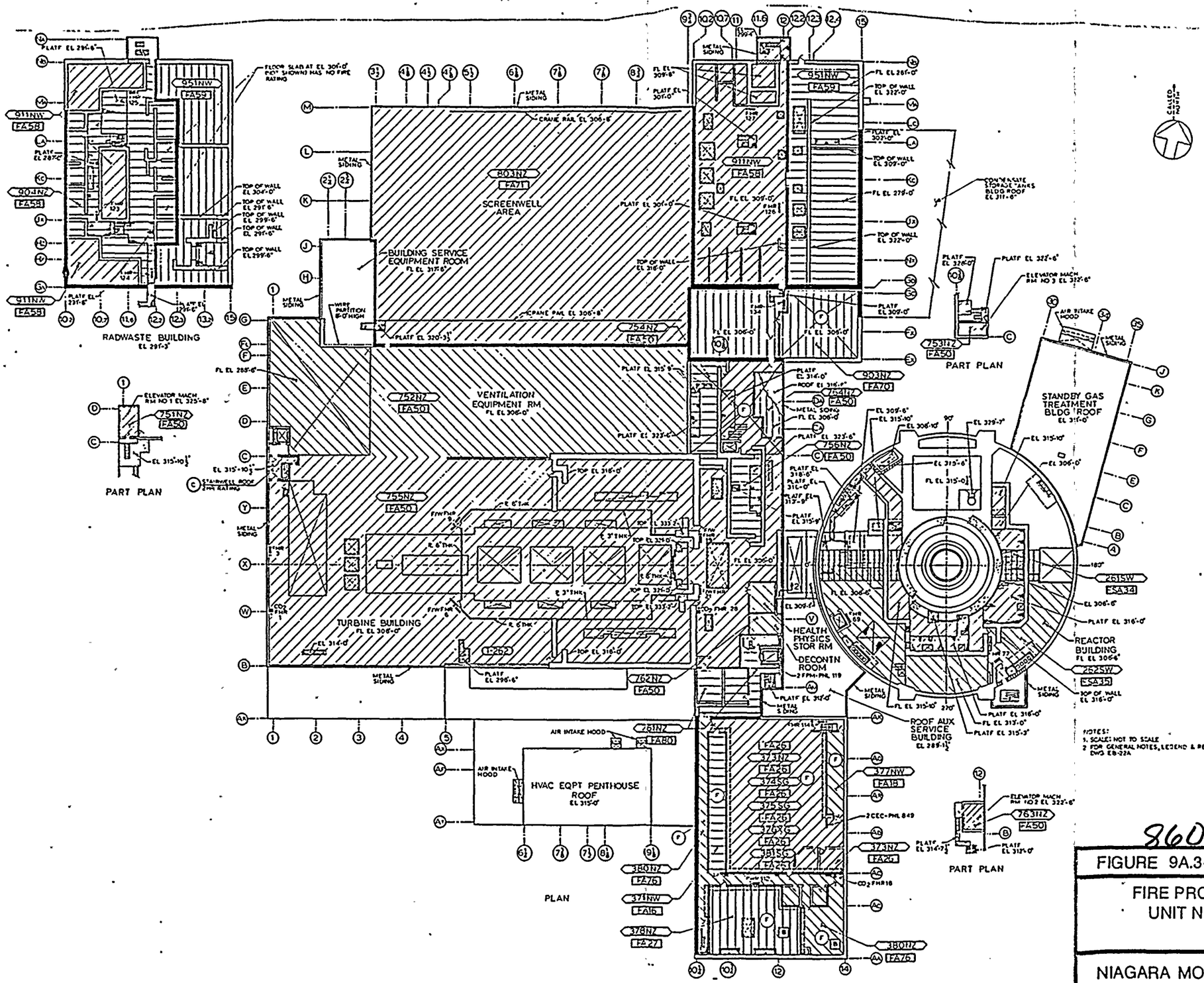

TI APERTURE CARD

Also Available On Aperture Card

8605140057-12

FIGURE 9A.3-7

FIRE PROTECTION ARRANGEMENT
UNIT NO. 2 STATION BUILDINGS
PLAN EL 306'-0"

NIAGARA MOHAWK POWER CORPORATION
NINE MILE POINT-UNIT 2
FINAL SAFETY ANALYSIS REPORT

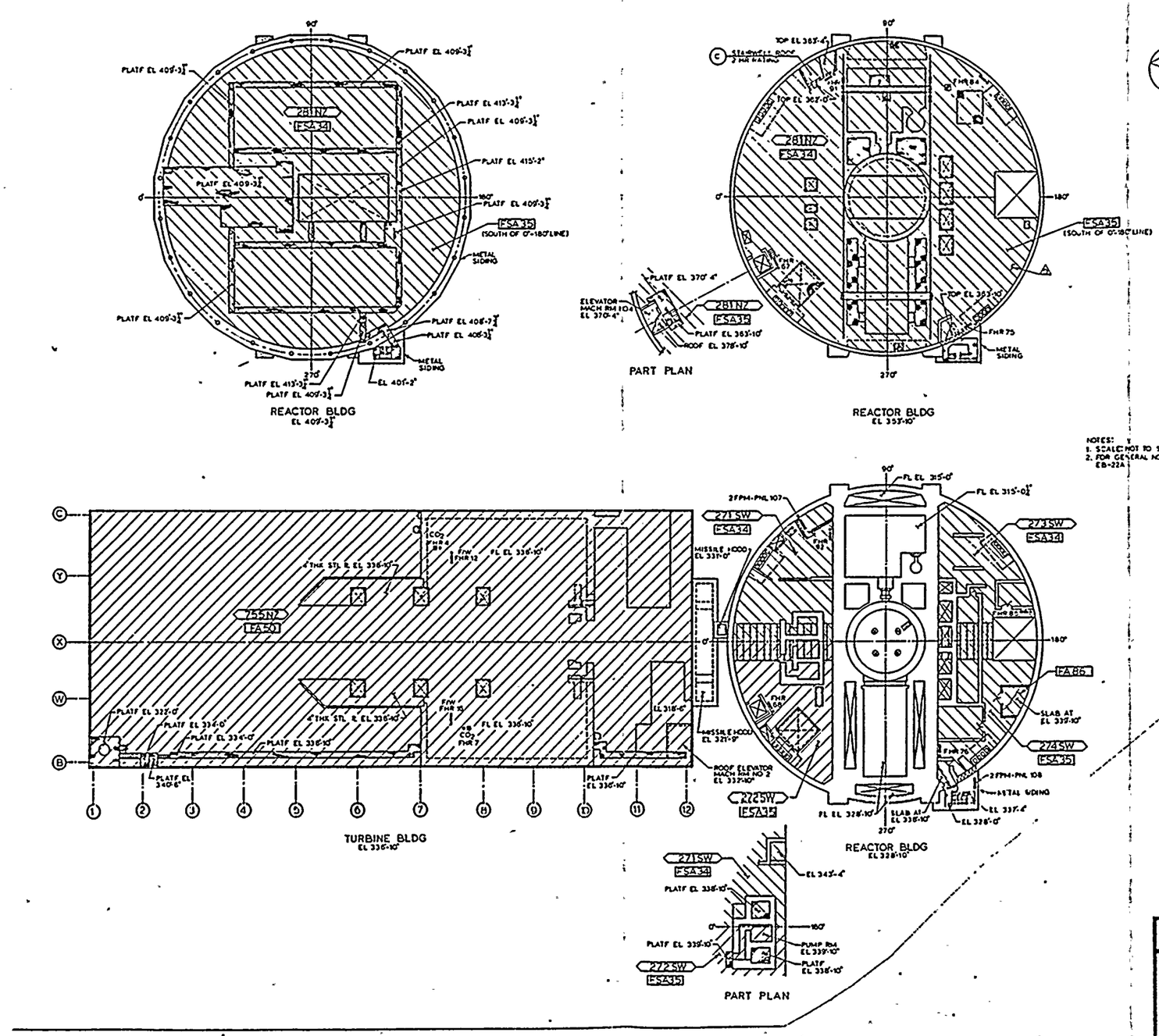

TI APERTURE CARD

Also Available On Aperture Card

8605140057-13

FIGURE 9A.3-8

FIRE PROTECTION ARRANGEMENT
UNIT NO. 2 STATION BUILDINGS
PLAN EL. 328'-10" TO 409'-3¼"

NIAGARA MOHAWK POWER CORPORATION
NINE MILE POINT-UNIT 2
FINAL SAFETY ANALYSIS REPORT

TABLE 9A.3-1 (Cont)

Figure No.	Fire Area (FA) or Fire Sub-Area (FSAR)	Fire Zone Number	Fire Zone Name	Fire Zone Area (ft²)	Safety-Related Equipment in Area	Fire Hazard Name	Combustible	Quantity Lb	Quantity Gal	Btu/ft²	Total Btu (thousands)	Fire Loading (Btu/ft²)	Fire Resistive Rating (min)	Detection System	Extinguishing System	
9A.3-6	FSA 34	252 SW	El 289'-0" North general area	7,762	Standby liquid control system Unit coolers Inst. air components Division I cable trays	Motors Misc equip Cable trays	Insul. Insul. Insul.	65 399 48,825		10,000 12,000 12,000	650 4,[illegible] 585,900 591,2[illegible]	76,1[illegible]	57 min	Smoke & heat detection	Cable tray water spray	[illegible]
9A.3-8	FSA 34	271 SW	El 328'-10" Northwest general area	3,075	Spent fuel pool filters Division I cable trays	Motors Cable trays Misc equip	Insul. Insul. Insul.	50 10,393 15		10,000 12,000 12,000	500 124,716 180 125,396	40,779	31 min	Smoke detection	Cable tray water spray	[illegible]
9A.3-8	FSA 34	273 SW	El 328'-10" Northeast general area	2,776	Division I cable trays	Motors Cable trays Misc equip	Insul. Insul. Insul.	3 6,432 48		10,000 12,000 12,000	30 77,184 576 77,790	28,020	21 min	Smoke detection	Cable tray water spray	[illegible]
9A.3-8	FSA 34 (North of 0-180° line) FSA 35 (South of 0-180° line)	281 NZ	El 353'-10"	20,992	None	Motors	Insul.	4		10,000	40			Smoke detection		[illegible]
9A.3-1	FSA 35	213 SW	El 175' South general area	5,930	None	Motors Misc equip	Insul. Insul.	9 200		10,000 12,000	90 2,640 2,730	460	1 min	Smoke & heat detection		[illegible]
9A.3-2	FA 4	205 NZ	El 175'-0" HPCS room	650	HPCS pump Unit cooler	Motors Oil	Insul. Oil	253 318	42	10,000 15,000	2,530 6,0[illegible] 8,570	13,188	10 min	Smoke detection		[illegible]
9A.3-2	FSA 35	213 SW	El 196'-0" South general area	6,125	Division II cable trays Unit coolers	Motors Cable trays	Insul. Insul.	20 30,872		10,000 12,000	200 370,468 370,668	60,517	45 min	Smoke detection	Cable trays water spray	[illegible]
9A.3-3	FSA 35	223 SW	El 215'-0" South general area	6,775	Spent fuel pool heat exchanger 1 Division II cable trays Unit coolers	Misc equip Cable trays Cables Boxes	Insul. Insul. Fiber Insul.	771 44,355 773 3		12,000 12,000 [illegible] 10,000	9,252 532,260 13,914 30 555,457	81,986	1 hr	Smoke detection	Cable tray water spray	[illegible]

TABLE 9A.3-1 (Cont)

Figure No.	Fire Area (FA) or Fire Sub Area (FSAR)	Fire Zone Number	Fire Zone Name	Fire Zone Area (ft²)	Safety-Related Equipment in Area(1)	Fire Hazard Name	Combustible	Quantity Lb	Quantity Gal	Btu/Lb	Total Btu (thousands)	Fire Loading (Btu/ft²)	Fire Barrier Required (hr/min)	Detection System	Extinguishing System	
9A.3-4	FSA 35	238 SW	El 240'-0" South general area	6,071	Hydrogen recombiner train B Division II cable trays Unit coolers	Misc equip Cable trays Motors	Insul. Insul. Insul.	67 45,257 4		12,000 12,000 10,000	804 543,084 40 543,928	89,594	1.1 hr	Smoke & heat detection	Cable tray water spray	26
9A.3-5	FSA 35	245 SW	El 261'-0" South general area	6,593	Control rod drive hyraulic units Division II cable trays Unit cooler	Hydro fluid Misc equip Cable trays Motor control center Motors	Oil Insul. Insul. Fiber Insul.	1,140 453 38,895 429 5	120	7,700 12,000 12,000 18,000 10,000	8,778 5,436 466,740 7,722 50 488,726	74,128	56 min	Smoke & heat detection	Cable tray water spray	26 26
9A.3-6	FSA 35	255 SW	El 289'-0" South general area	7,322	Spent fuel pool circulating pumps Division II cable trays	Motors Misc equip Cable trays	Insul. Insul. Insul.	81 370 24,248		10,000 12,000 12,000	810 4,440 290,976 296,226	40,457	30 min	Smoke & heat detection	Cable tray water spray	26
9A.3-6	FA 81	253 XL	El 289'-0" South 600-V switchgear room	440	None	Misc equip Cable trays	Insul. Insul.	330 2,395		12,000 12,000	3,960 28,740 32,700	74,318	56 min	Smoke detection	Total flooding Carbon dioxide	26
9A.3-7	FSA 35	262 SW	El 306'-6" South general area	5,977	Reactor water cleanup heat exchanger	Cable trays Misc equip Motors	Insul. Insul. Insul.	25,658 212 40		12,000 12,000 12,000	307,896 2,544 400 310,840	52,006	39 min	Smoke detection	Cable tray water spray	26
9A.3-8	FA 86	274 SW	El 328'-10" Resin storage area	192	None	Resin	Resin	450		18,000	8,100	42,188	32 min	Smoke detection	-	26
9A.3-8	FSA 35	272 SW	El 328'-10" Southwest general area including transient storage area	3,075	Spent fuel pool cooling deminer-alizer	Motors Cable trays Misc equip Charcoal filter	Insul. Insul. Insul. Charcoal	31 9,518 72 510		10,000 12,000 12,000 14,100	310 114,216 864 7,191 115,390	37,525	28 min	Smoke detection	Cable tray water spray	26

TABLE 9A.3-1 (Cont)

Figure No.	Fire Area (FA) or Fire Sub Area (FSA)	Fire Zone Number	Fire Zone Name	Fire Zone Area (ft²)	Safety-Related Equipment in Area(1)	Fire Hazard Name	Combustible	Quantity Lb	Quantity Gal	Btu/Lb	Total Btu (thousands)	Fire Loading (Btu/ft²)	Fire Barrier Required (hr/min)	Detection System	Extinguishing System	
9A.3-8	FSA 35	274 SW	El 328'-10" Southeast general area	2,776	Division II cable trays	Cable trays	Insul.	9,451		12,000	113,412	41,210	31 min	Smoke detection	Cable tray water spray	26
						Motors	Insul.	5		10,000	50					
						Misc equip	Insul.	78		12,000	936					
											114,398					
9A.3-7	FSA 34	261 SW	El 306'-6" North general area	3,645		No combustible	-	-		-	-	-	-	Smoke and heat detection	Cable tray water spray	26

TABLE 9A.3-2

REACTOR BUILDING (AUXILIARY BAYS)

Figure No.	Fire Area (FA) or Fire Sub Area (FSA)	Fire Zone Number	Fire Zone Name	Fire Zone Area (ft²)	Safety-Related Equipment in Area(1)	Fire Hazard Name	Combustible	Quantity Lb	Quantity Gal	Btu/Lb	Total Btu (thousands)	Fire Loading (Btu/ft²)	Fire Barrier Required (hr/min)	Detection System	Extinguishing System	
			North Auxiliary Bay													
9A.3-2	FA 1	201 SW	El 175'-0" north Reactor plant component cooling heat exchange room	1,280	None	Motors	Insul.	1		10,000	10	8	-	-	-	26
9A.3-2	FA 1	201 SW	El 175'-0" north Low-pressure core spray room	864	LPCS Division I cable trays Unit cooler	Motors Oil Cable trays	Insul. Oil Insul.	85 212 1,345	 28 	10,000 19,000 12,000	850 4,028 16,140 21,018	24,326	18 min	Smoke detection	Cable tray water spray	26
9A.3-2	FA 1	202 SW	Residual heat removal pump A	720	Unit coolers Residual heat removal pump A Division I cable trays	Motors Oil Cable trays	Insul. Oil Insul.	73 106 1543	 14 	10,000 19,000 12,000	730 2,014 18,516 21,260	29,528	22 min	Smoke detection	Cable tray water spray	26
9A.3-2	FA 1	203 SW	Residual heat removal heat exchanger A	1,068	Residual heat removal heat exchanger A	Cable trays Motors	Insul. Insul.	831 1		12,000 10,000	9,972 10 9,982	9,346	7 min	Smoke detection	Cable tray water spray	26
9A.3-2	FA 5	211 SW	El 198'-0" north	4,065	Unit cooler Division I cable trays	Cable trays Motors	Insul. Insul.	4230 1		12,000 10,000	50,760 10 50,770	12,490	10 min	Smoke detection	Cable tray water spray	26
9A.3-3	FA 1	221 SW	El 215'-0" north Access area A	1,250	None	No combustibles	-		-	-	-	-	-	Smoke detection	-	26
9A.3-3	FA 1	221 SW	El 215'-0" north Access area B	1,980	Division I cable trays	Cable trays	Insul.	17,226	-	12,000	206,712	104,400	1.3 hr	Smoke detection	Cable tray water spray	
9A.3-3	FA 1	221 SW	El 215'-0" north Access area C	835		No combustibles	-	-	-	-	-	-	-	-	-	26

TABLE 9A.3-2 (Cont)

Figure No.	Fire Area (FA) or Fire Sub Area (FSA)	Fire Zone Number	Fire Zone Name	Fire Zone Area (ft²)	Safety-Related Equipment in Area(1)	Fire Hazard Name	Combustible	Quantity Lb	Quantity Gal	Btu/Lb	Total Btu (thousands)	Fire Loading (Btu/ft²)	Fire Barrier Required (hr/min)	Detection System	Extinguishing System	
9A.3-4	FA 1	231 SW	El 240'-0" north Motor control center	3,626	Emergency switchgear Division 1 cable trays Unit coolers	Misc. Equip.	Insul.	1,185		12,000	14,220	122,678	1.5 hr	Smoke detection	Cable tray water spray	26
						Motor	Insul.	2		10,000	20					
						Motor control center	Fiber	1,167		18,000	21,006					
						Cable trays	Insul.	34,132		12,000	409,584					
											444,830					
9A.3-4	FA 1	231 SW	El 240'-0" north Access area	748		No combustibles	-	-	-	-	-	-	-	Smoke detection	-	26
			South Auxiliary Bay													
9A.3-2	FA 3	206 SW	El 175'-0" Residual heat removal heat exchanger room B	950	RHS heat exchanger B Division II cable trays	Cable trays	Insul.	990		12,000	11,880	12,516	10 min	Smoke detection	Cable tray water spray	26
						Motors	Insul.	1		12,000	10					
											11,890					
9A.3-2	FA 3	207 SW	El 175'-0" Residual heat removal pump room B	960	Unit coolers Residual heat removal pump B Division II cable trays	Motor	Insul.	77		10,000	770	27,125	21 min	Smoke detection	Cable tray water spray	
						Lube Oil	Oil	106	14	19,000	2,014					
						Cable trays	Insul.	1,938		12,000	23,256					
											26,040					
9A.3-2	FA 3	208 SW	El 175'-0" Residual heat removal pump room C	1,698	Unit coolers Residual heat removal pump C Division II cable trays	Motor	Insul.	74		10,000	740	12,802	7 min	Smoke detection	Cable tray water spray	26
						Lube oil	Oil	106	14	19,000	2,014					
						Cable trays	Insul.	1,582		12,000	18,984					
											21,738					
9A.3-2	FA 3	214 SW	El 198'-0"	3,552	Division II cable trays Unit cooler	Cable trays	Insul.	4,229		12,000	50,748	14,331	11 min	Smoke detection	Cable tray water-spray	26
						Motors	Insul.	1		10,000	10					
						Misc. Equip.	Insul.	12		12,000	144					
											50,902					
9A.3-3	FA 3	224 SW	El 215'-0" Access area A	896	None	No combustibles	-	-	-	-	-	-	-	Smoke detection	-	26

TABLE 9A.3-2 (Cont)

Figure No.	Fire Area (FA) or Fire Sub Area (FSA)	Fire Zone Number	Fire Zone Name	Fire Zone Area (ft²)	Safety-Related Equipment in Area(1)	Fire Hazard Name	Combustible	Quantity Lb	Quantity Gal	Btu/Lb	Total Btu (thousands)	Fire Loading (Btu/ft²)	Fire Barrier Required (hr/min)	Detection System	Extinguishing System	
9A.3-3	FA 3	224 SW	El 215'-0" Access area B	2,176	Division II cable trays	Cable trays	Insul.	18,168	-	12,000	218,016	100,191	1.3 hr	Smoke detection	Cable tray water spray	26
9A.3-4	FA 3	239 SW	El 240'-0" Motor control centers	4,059	Unit coolers Emergency switchgear Division II cable trays	Motor Motor control ctr Cable trays Misc. Equip.	Insul. Fiber Insul. Insul.	5 3,565 16,336 2,844	-	10,000 18,000 12,000 12,000	50 64,170 196,032 34,128 294,380	72,525	55 min	Smoke detection	Cable tray water spray	26

TABLE 9A.3-3

STANDBY GAS TREATMENT BUILDING

Figure No.	Fire Area (FA) or Fire Sub Area (FSA)	Fire Zone Number	Fire Zone Name	Fire Zone Area (ft²)	Safety-Related Equipment in Area(1)	Fire Hazard Name	Combustible	Quantity Lb	Quantity Gal	Btu/Lb	Total Btu (thousands)	Fire Loading (Btu/ft²)	Fire Barrier Required (hr/min)	Detection System	Extinguishing System	
9A.3-6	FA 85	251 NW	El 286'-0" HVAC equipment room	5,560	None	Motors Cable trays Misc. equip.	Insul. Insul. Insul.	72 4,716 72		10,000 12,000 12,000	720 56,592 864 58,176	10,463	8 min	Smoke detection	Dry pipe system	26
9A.3-5	FA 73	247 NZ	El 261'-0" Standby gas treatment room A	792	SGTS train A	Motors Charcoal filter	Insul. Charcoal	5 1,260		10,000 14,100	50 17,766 17,816	22,495	17 min	Smoke detection	Water spray for charcoal filters	26
9A.3-5	FA 74	248 NZ	El 261'-0" Standby gas treatment room B	961	SGTS train B	Motors Charcoal filters	Insul. Charcoal	5 1,260		10,000 14,100	50 17,766 17,816	18,539	14 min	Smoke detection	Water spray for charcoal filters	26
9A.3-5	FA 4	242 NW	El 261'-0" Reactor building railroad access area	2,125	None	Motors	Insul.	1		10,000	10	5	Negligible	Smoke detection	Dry pipe system	26

TABLE 9A.3-4

CONTROL BUILDING

Figure No.	Fire Area (FA) or Fire Sub Area (FSA)	Fire Zone Number	Fire Zone Name	Fire Zone Area (ft²)	Safety-Related Equipment in Area(1)	Fire Hazard Name	Combustible	Quantity Lb	Quantity Gal	Btu/Lb	Total Btu (thousands)	Fire Loading (Btu/ft²)	Fire Barrier Required (hr/min)	Detection System	Extinguishing System	
			El 214'-0"													
9A.3-3	FA 18	309 NW	Cable chase east	920	Division II cable trays	Cable trays	Insul.	9,783		12,000	117,396	127,607	1.6 hr	Smoke detection	Cable tray water spray	26
9A.3-3	FA 17	305 NW	Cable chase west	1,202	None	Cable trays	Insul.	10,489		12,000	125,870	104,717	1.3 hr	Smoke detection	Cable tray water spray and ceiling sprinkler	26 26
9A.3-3	FA 16	306 NW	General area	1,678	Division I (closed trays) cable trays	Misc Equip Cable trays	Insul. Insul.	296 6,615		12,000 12,000	3,552 79,380 82,932	49,423	37 min	Smoke detection	Cable tray water spray	26
9A.3-3	FA 39	307 NZ	24/48-V Battery room west	100	None	Batteries Cable trays	Styrene Insul.	105 122		18,000 12,000	1,890 1,464 3,354	33,540	25 min	Smoke detection	-	26
9A.3-3	FA 40	308 NZ	24/48-V Battery room east	100	None	Batteries Cable trays	Styrene Insul.	105 122		18,000 12,000	1,890 1,464 3,354	33,540	25 min	Smoke detection	-	26
9A.3-3	FA 38	311 NZ	Computer battery room	1,040	None	Batteries Cable trays	Styrene Insul.	1,900 1,027		18,000 12,000	34,200 12,324 46,524	44,735	34 min	Smoke detection	-	26
9A.3-3	FA 16	312 NZ	Division II cable area	1,914	Division II cable trays	Cable trays Misc Equip	Insul. Insul.	1,600 260		12,000 12,000	19,200 3,120 22,320	11,661	9 min	Smoke	-	26

TABLE 9A.3-4 (Cont)

Figure No.	Fire Area (FA) or Fire Sub Area (FSA)	Fire Zone Number	Fire Zone Name	Fire Zone Area (ft²)	Safety-Related Equipment in Area(1)	Fire Hazard Name	Combustible	Quantity Lb	Quantity Gal	Btu/Lb	Total Btus (thousands)	Fire Loading (Btu/ft²)	Fire Barrier Required (hr/min)	Detection System	Extinguishing System	
			El 237' and 244'													
9A.3-4	FA 16	321 NW	El 237'-0" Cable chase west	1,649	Division I cable trays	Cable trays	Insul.	20,456		12,000	245,472	148,861	1.9 hr	Smoke detection	Cable tray water spray & ceiling sprinklers	26
9A.3-4	FA 18	324 NW	El 237'-0" Cable chase east	1,000	Division II cable trays	Cable trays	Insul.	19,600		12,000	235,200	235,200	2.9 hr	Smoke detection	Cable tray water spray & ceiling sprinklers	26
9A.3-4	FA 22	325 NW	El 244'-0" Division I cable routing area	762	Division I cable trays	Cable trays	Insul.	6,615		12,000	79,380	104,173	1.3 hr	Smoke detection	Cable tray water spray	26
9A.3-4	FA 17	322 NW	El 237'-0" Division I cable routing area	3,494	Division I cable trays Unit cooler Switchgear	Cable trays	Insul.	34,910		12,000	418,920	119,897	1.5 hr	Smoke detection	Cable tray water spray	26
9A.3-4	FA 23	326 NW	El 244'-0" Division II cable routing area	798	Division II cable trays	Cable trays	Insul.	6,601		12,000	79,212	99,263	1.3 hr	Smoke detection	Cable tray water spray	26
9A.3-4	FA 19	323 NW	El 237'-0" Division II cable routing area	3,864	Division II cable trays Unit cooler	Cable trays	Insul.	39,740		12,000	476,880	123,416	1.6 hr	Smoke detection	Cable tray water spray	26
9A.3-4	FA 21	327 NW	El 244'-0" HPCS cable routing area	1,178	HPCS cable trays	Cable trays	Insul.	10,371		12,000	124,452	105,647	1.3 hr	Smoke detection	Cable tray water spray	26

TABLE 9A.3-4 (Cont)

Figure No.	Fire Area (FA) or Fire Sub Area (FSA)	Fire Zone Number	Fire Zone Name	Fire Zone Area (ft²)	Safety-Related Equipment in Area(1)	Fire Hazard Name	Combustible	Quantity Lb	Quantity Gal	Btu/Lb	Total Btus (thousands)	Fire Loading (Btu/ft²)	Fire Barrier Required (hr/min)	Detection System	Extinguishing System	
			El 261'-0"													
9A.3-5	FA 17	331 NW	Corridor	3,646	None	Cable trays Misc equip	Insul. Insul.	53,005 246		12,000 12,000	636,060 2,952 639,012	175,264	2.2 hr	Smoke detection	Cable tray water spray	26
9A.3-5	FA 16	332 NW	Cable chase west	1,133	Division I cable trays	Cable trays	Insul.	47,240		12,000	566,880	500,335	6.3 hr	Smoke detection	Cable tray water spray	26
9A.3-5	FA 18	337 NW	Cable chase east	1,133	Division II cable trays	Cable trays Misc equip	Insul. Insul.	38,943 72		12,000 12,000	467,316 864 468,180	413,221	5.2 hr	Smoke detection	Cable tray water spray	26
9A.3-5	FA 17	333 XL	Division I standby switch-gear room	2,440	Division I cable trays Division I standby switchgear	Misc equip Motor control centers Cable trays	Insul. Fiber. Insul.	8,523 1,769 8,722		12,000 18,000 12,000	102,276 31,842 104,664 238,782	97,861	1.2 hr	Smoke detection	Total flooding CO_2	26 26
9A.3-5	FA 19	336 XL	Division II standby switch-gear room	2,470	Division II cable trays Division II standby switchgear	Misc equip Motor control centers Cable trays	Insul. Fiber. Insul.	8,529 1,769 12,018		12,000 18,000 12,000	102,348 31,842 144,216 278,408	112,715	1.4 hr	Smoke detection	Total flooding CO_2	26 26
9A.3-5	FA 17	334 NZ	Division I battery room	500	Division I batteries	Batteries Cable trays	Styrene Insul.	1,020 527		18,000 12,000	18,360 6,324 24,684	49,368	37 min	Smoke detection	-	26
9A.3-5	FA 19	335 NZ	Division II battery room	400	Division II batteries	Batteries Cable trays	Styrene Insul.	1,020		18,000 12,000	18,360 6,324 24,684	61,710	46 min	Smoke detection	-	26
9A.3-5	FA 44	343 NZ	Remote shutdown room "A"	150	Remote shutdown panel	Misc equip	Insul.	648		12,000	7,776	51,840	39 min	Smoke detection	-	26
9A.3-5	FA 43	338 NZ	Remote shutdown room "B"	150	Remote shutdown panel	Misc equip	Insul.	480		12,000	5,760	38,400	29 min	Smoke detection	-	26
9A.3-5	FA 75	339 NZ	Division III (HPCS) battery room	112	Division II batteries	Batteries	Styrene	203		18,000	3,654	32,625	25 min	Smoke detection	-	26

TABLE 9A.3-4 (Cont)

Figure No.	Fire Area (FA) or Fire Sub Area (FSA)	Fire Zone Number	Fire Zone Name	Fire Zone Area (ft²)	Safety-Related Equipment in Area(1)	Fire Hazard Name	Combustible	Quantity Lb	Quantity Gal	Btu/Lb	Total Btus (thousands)	Fire Loading (Btu/ft²)	Fire Barrier Required (hr/min)	Detection System	Extinguishing System	
9A.3-5	FA 21	342 XL	Division III (HPCS) standby switchgear room	908	Division III cable trays Division III standby switchgear Transformer	Misc equip Motor control centers Cable trays Motors	Insul. Fiber. Insul. Insul.	680 150 719 1		12,000 18,000 12,000 10,000	8,160 2,700 8,628 10 19,498	12,473	16 min -	Smoke detection	Total flooding CO_2	26 26
9A.3-5	FA 22	340 NZ	Division I chiller room	746	Division I HVAC equipment	Motors	Insul.	23		10,000	230	308	1 min	Smoke detection	-	26
9A.3-5	FA 23	341 NZ	Division II chiller room	560	Division II HVAC equipment	Motors	Insul.	22		10,000	220	393	1 min	Smoke detection	-	26
			El 274'-0"													
9A.3-5	FA 17	334 NZ	Division I ventilation room	460	Division I HVAC equipment	Motors	Insul.	3		10,000	30	65	-	Smoke detection	-	26
9A.3-5	FA 19	335 NZ	Division II ventilation room	460	Division II HVAC equipment	Motors	Insul.	3		10,000	30	65	-	Smoke detection	-	26
9A.3-5	FA 44	343 NZ	Remote shutdown ventilation room A	192	Division I HVAC equipment	Motors	Insul	1		10,000	10	52	-	Smoke detection	-	26
9A.3-5	FA 43	338 NZ	Remote shutdown ventilation room B	192	Division II HVAC equipment	Motors	Insul	1		10,000	10	52	-	Smoke detection	-	26
9A.3-5	FA 21	342 XL	High pressure core spray ventilation room	200	Unit cooler	Motors	Insul.	1		10,000	10	50	-	Smoke detection	-	26

TABLE 9A.3-4 (Cont)

Figure No.	Fire Area (FA) or Fire Sub Area (FSA)	Fire Zone Number	Fire Zone Name	Fire Zone Area (ft²)	Safety-Related Equipment in Area(1)	Fire Hazard Name	Combustible	Quantity Lb	Quantity Gal	Btu/Lb	Total Btus (thousands)	Fire Loading (Btu/ft²)	Fire Barrier Required (hr/min)	Detection System	Extinguishing System	
			El 288'-6"													
9A.3-6	FA 72	351 NZ	Corridor	1,392	None	Misc equip	Insul.	51		12,000	612	440	1 min	Smoke detection	-	26
9A.3-6	FA 16	352 NW	Cable chase west	920	Division I cable trays	Cable trays Misc equip	Insul. Insul.	24,371 102		12,000 12,000	292,452 1,224 293,676	319,213	4.0 hr	Smoke detection	Sprinkler system & cable tray water spray	26
9A.3-6	FA 18	359 NW	Cable chase east	920	Division II cable trays	Cable trays Misc equip	Insul. Insul.	13,623 102		12,000 12,000	163,480 1,224 164,704	179,026	2.2 hr	Smoke detection	Sprinkler system & cable tray water spray	26
9A.3-6	FA 24	358 XG 357 XG	Computer room	1,320	None	Misc equip	Insul.	883		12,000	10,596	8,027	6 min	Smoke detection	Total flooding Halon	26 26
9A.3-6	FA 24	356 NZ 355 NZ 354 SG 353 SG 362 SG	Power generation control complex (PGCC) relay room	5,204	PGCC panels	Misc equip	Insul.	4,070		12,000	48,840	9,385	7 min	Smoke detection & heat detectors	Total flooding Halon in floor modules and raised floor section	26 26
9A.3-6	FA 25	360 NZ	Division I HVAC room	2,451	Division I HVAC equipment	Motors Charcoal filters	Insul. Charcoal	20 1,980		10,000 14,100	200 27,918 28,118	11,472	9 min	Smoke detection	Water spray for two charcoal filters	26 26
9A.3-6	FA 72	351 NZ	Instrument shop	1,247	None	No combustibles		-		-	-	-	-	Smoke detection	-	26
			El 306'-0"													
9A.3-7	FA 76	380 NZ	Corridor	1,403	None	Misc equip	Insul.	36		12,000	432	308	1 min	Smoke detection	-	26

TABLE 9A.3-4 (Cont)

Figure No.	Fire Area (FA) or Fire Sub Area (FSA)	Fire Zone Number	Fire Zone Name	Fire Zone Area (ft²)	Safety-Related Equipment in Area(1)	Fire Hazard Name	Combustible	Quantity Lb	Quantity Gal	Btu/Lb	Total Btus (thousands)	Fire Loading (Btu/ft²)	Fire Barrier Required (hr/min)	Detection System	Extinguishing System	
9A.3-7	FA 16	371 NW	Cable chase west	920	Division I cable trays	Cable trays Misc equip	Insul. Insul.	19,570 450		12,000 12,000	234,840 5,400 240,240	261,130	3.3 hr	Smoke detection	Sprinkler system & cable tray water spray	26
9A.3-7	FA 18	377 NW	Cable chase east	540	Division II cable trays	Cable trays Misc equip	Insul. Insul.	9,414 360		12,000 12,000	112,970 4,320 117,290	217,203	2.7 hr	Smoke detection	Sprinkler system & cable tray water spray	26
9A.3-7	FA 26	373 NZ 372 NZ 374 SG 375 SG 376 XG 381 SG	Control room	6,365	PGCC panels	Misc equip	Insul.	4,951		12,000	59,412	9,334	7 min	Smoke detection & heat detectors	Total flooding Halon in floor modules and raised floor sections	26 26
9A.3-7	FA 27	378 NZ	Division II HVAC room	2,396	Division II HVAC equipment	Motors Charcoal filter	Insul. Charcoal	17 1,980		10,000 14,100	170 27,918 28,088	11,723	9 min	Smoke detection	Water spray for charcoal filters	26 26
9A.3-7	FA 76	380 NZ	Instrument shop	1,388	None	No combustibles	-	-		-	-	-	-	Smoke detection	-	26
9A.3-7	FA 26	373 NZ	Supervisor office, training room, toilet, and kitchen	487	None	No combustibles	-	-		-	-	-	-	Smoke detection	-	26

TABLE 9A.3-5

ELECTRICAL TUNNELS

Figure No.	Fire Area (FA) or Fire Sub Area (FSA)	Fire Zone Number	Fire Zone Name	Fire Zone Area (ft²)	Safety-Related Equipment in Area(1)	Fire Hazard Name	Combustible	Quantity lb	Quantity Gal	Btu/lb	Total Btu (thousands)	Fire Loading (Btu/ft²)	Fire Barrier Required (hr/min)	Detection System	Extinguishing System	
9A.3-3	FA 8	301 NW	Tunnel 140 deg	6,386	Division I cables	Cable trays	Insul.	100,325		12,000	1,203,900	188,521	2.4 hr	Smoke detection	Cable tray water spray	26
9A.3-3	FA 18	304 NW	Tunnel 230 deg	2,360	Division II cables	Cable trays	Insul.	43,609		12,000	523,308	221,740	2.8 hr	Smoke detection	Cable tray water spray	26
9A.3-3	FA 10	303 NW	Tunnel 315 deg	969	None	Cable trays	Insul.	9,859		12,000	118,308	122,093	1.5 hr	Smoke detection	Cable tray water spray	26
9A.3-3	FA 7	302 NW	Tunnel 35 deg	4,273	None	Cable trays	Insul.	46,950		12,000	563,400	131,851	1.7 hr	Smoke detection	Cable tray water spray	26
9A.3-4	FA 48	236 NZ	El 237'-0" Division I HVAC room	1,124	HVAC for electrical tunnels	Motors	Insul.	2		10,000	20	12	Negligible	Smoke detection	-	26
9A.3-4	FA 55	237 NZ	El 237'-0" Division II HVAC room	957	HVAC for electrical tunnels	Motors	Insul.	1		10,000	10	10	Negligible	Smoke detection	-	26

TABLE 9A.3-6

TURBINE BUILDING

Figure No.	Fire Area (FA) or Fire Sub Area (FSA)	Fire Zone Number	Fire Zone Name	Area (ft²)	Safety-Related Equipment in Area	Fire Hazard Name	Combustible	Quantity Lb	Quantity Gal	Btu/Lb	Total Btu (thousands)	Fire Loading (Btu/ft²)	Fire Barrier Required (hr/min)	Detection System	Extinguishing System	
9A.3-6	FA 84	740 XL	El 277'-6" Turbine building normal switchgear room west	1,848	None	Misc equip Cable trays	Insul. Insul.	706 25,346		12,000 12,000	8,472 304,152 312,624	169,169	2.1 hr	Smoke detection cross-zoned	Total flooding CO_2 system	26
9A.3-6	FA 83	726 XL	El 277'-6" Turbine building normal switchgear room east	2,664	None	Misc equip Motor control centers Cable trays	Insul. Fiber. Insul.	979 402 48,010		12,000 18,000 12,000	11,748 7,236 576,120 595,104	223,387	2.8 hr	Smoke detection cross-zoned	Total flooding CO_2 system	26
9A.3-6	FA 50	752 NZ	El 288'-6" Ventilation room	4,856	None	Misc equip Motors Cable trays	Insul. Insul. Insul.	156 36 10,457		12,000 10,000 12,000	1,872 360 125,484 127,716	26,300	20 min	Smoke detection	-	26
9A.3-6	FA 50	722 NZ	El 277'-6" Condensate demineralizer	4,675	None	Motors Cable trays	Insul. Insul.	72 6,372		10,000 12,000	720 76,464 77,184	16,510	12 min	Smoke detection	-	26
9A.3-6	FA 50	721 NZ	El 288'-6" Off-gas room	2,244	None	Motors Misc equip Cable trays	Insul. Insul. Insul.	3 208 5,062		10,000 12,000 12,000	30 2,496 60,744 63,270	28,195	21 min	Smoke detection	-	26
9A.3-6	FA 50	723NZ(A) 724NZ(B) 725NZ(C)	El 277'-6" Heater bay A room (similar for heater bays B and C)	3,570 3,570 3,570	None	Motors Cable trays	Insul. Insul.	1 4,152		10,000 12,000	10 49,824 49,834	13,959	11 min	Smoke detection		26

TABLE 9A.3-6 (Cont)

Figure No.	Fire Area (FA) or Fire Sub Area (FSA)	Fire Zone Number	Fire Zone Name	Area (ft²)	Safety-Related Equipment in Area	Fire Hazard Name	Combustible	Quantity Lb	Quantity Gal	Btu/Lb	Total Btu (thousands)	Fire Loading (Btu/ft²)	Fire Barrier Required (hr/min)	Detection System	Extinguishing System	
9A.3-6	FA 82	732 NW	El 277'-6" Lube oil storage room	1,320	None	Turbine lube oil reservoir	Oil	83,562	10,995	19,000	1,587,678	1,282,697	16.0 hr	Smoke detection	Sprinkler system & CO_2 system (for inerting vapor space on 2LOS-TR1)	26
						Cables	Insul.	8,776		12,000	105,312					
						Motors	Insul.	17		12,000	170					
											1,693,160					
9A.3-6	FA 50	728NZ(A) 729NZ(B)	El 277'-6" Air ejector room A (typical for room B)	875 875	None	No combustibles	-	-		-	-	-	-	Smoke detection	-	26
9A.3-6	FA 50	727 SW 730 SW 731 SW	El 277'-6" Turbine building general area	44,093	None	Misc equip	Insul.	489		12,000	5,868	65,211	49 min	Smoke detection & heat detectors	Six foam water deluge systems manual operation	26
						Turbine generator lube oil	Oil	83,562	10,995	19,000	1,587,678					
						Motors	Insul.	24		10,000	240					
						Cable trays	Insul	106,799		12,000	1,281,588					
											2,875,374					
9A.3-5	FA 80	611 NW	El 261'-0" Turbine building electrical bay and personnel accessway	7,674	None	Cable trays	Insul.	81,666		12,000	979,992	127,702	1.6 hr	Smoke detection	Cable tray water spray systems	26
9A.3-5	FA 80	246 NW	El 250'-0" Turbine building locker room	2,056	None	Clothing	Cloth	100		8,000	800	41,811	32 min	Smoke detection	-	26
						Cable trays	Insul.	7,082		12,000	84,984					
						Misc equip	Insul.	15			180					
											85,964					
9A.3-5	FA 65	714 NW	El 261'-0" Turbine building service room	1,450	None	Motors	Insul.	3		10,000	30	25	Negligible	Smoke detection	-	26
9A.3-5	FA 50	701 NW	El 261'-0" Turbine building railroad access	2,500	None	Motors	Insul.	4		10,000	40	15	Negligible	Dry pipe sprinkler system	-	26
9A.3-5	FA 50	702 NZ	El 261'-0" Off-gas area	4,352	None	Motors	Insul.	7		10,000	70	24,192	18 min	Smoke detection	-	26
						Misc equip	Insul.	68		12,000	816					
						Cable trays	Insul.	8,700		12,000	104,400					
											105,286					

TABLE 9A.3-6 (Cont)

Figure No.	Fire Area (FA) or Fire Sub Area (FSA)	Fire Zone Number	Fire Zone Name	Area (ft²)	Safety-Related Equipment in Area	Fire Hazard Name	Combustible	Quantity Lb	Quantity Gal	Btu/Lb	Total Btu (thousands)	Fire Loading (Btu/ft²)	Fire Barrier Required (hr/min)	Detection System	Extinguishing System	
9A.3-5	FA 50	703 NZ	El 250'-0" Regeneration, demineralizer area, and control room	3,956	None	Motors Cable trays Misc equip	Insul. Insul. Insul.	18 12,830 622		10,000 12,000 12,000	180 153,960 7,464 161,604	40,850	31 min	Smoke detection	-	26
9A.3-5	FA 50	704NZ(A) 705NZ(B) 706NZ(C)	El 250'-0" Heater bay A (typical for heater bays B and C)	3,700 3,700 3,700	None	Motors Cable trays	Insul. Insul.	298 11,538		10,000 12,000	2,980 138,456 141,436	12,742	10 min	Smoke detection	-	26
9A.3-5	FA 50	707 SW	El 250'-0" Truck aisle	1,350	None	Cable trays	Insul.	15,122		12,000	181,464	134,418	1.7 hr	Smoke detection & heat detection	Automatic deluge system	26
9A.3-5	FA 42	708 NW	El 251'-0" Clean and dirty oil storage room	1,200	None	Oil storage	Oil	102,975	13,500	19,000	1,956,525	1,630,437	20.4 hr	Smoke detection	Automatic sprinkler system	26
9A.3-5	FA 50	709 NZ	El 250'-0" Instrument air room	2,180	None	Motors	Insul.	70		10,000	700	321	1 min	Smoke detection	-	26

TABLE 9A.3-6 (Cont)

Figure No.	Fire Area (FA) or Fire Sub Area (FSA)	Fire Zone Number	Fire Zone Name	Area (ft²)	Safety-Related Equipment in Area	Fire Hazard Name	Combustible	Quantity Lb	Quantity Gal	Btu/Lb	Total Btu (thousands)	Fire Loading (Btu/ft²)	Fire Barrier Required (hr/min)	Detection System	Extinguishing System	
9A.3-5	FA 50	716 SW 717 SW 718 SW	El 250'-0" General area	39,412	None	Motors Misc. equip. Cable trays Motor Control Ctr Pumps	Insul. Insul. Insul. Fiberglass Oil	3,509 1,743 174,696 1,407 9,500		10,000 12,000 12,000 18,000 19,000	35,090 20,916 2,096,352 25,326 180,500 2,358,184	59,834	45 min	Smoke detection & heat detection	Automatic sprinkler systems Deluge systems for reactor feed pumps & H_2 seal oil unit	| 26 | 26
9A.3-5	FA 64	715 NZ	El 261'-0" Turbine building foam room	2,405	None	Motors	Insul.	6		10,000	60	25	Negligible	Smoke detection	-	| 26
9A.3-7	FA 50	752 NZ	El 306'-0" Ventilation room	20,800	None	Motors Misc equip Cables Motor Control Ctr	Insul. Insul. Insul. Fiberglass	54 816 33,117 67		10,000 12,000 12,000 18,000	540 9,792 397,404 408,942	19,660	15 min	Smoke detection	-	| 26
9A.3-7	FA 80	761 NZ	El 306'-0" Clean access area	816	None	No combustibles	-	-		-	-	-	-	Smoke detection	-	| 26
9A.3-7	FA 50	754 NZ	El 306'-0" Clean steam Reboiler room A	1,170	None	Motors	Insul.	2		10,000	20	17	Negligible	Smoke detection	-	| 26
9A.3-7	FA 50	756 NZ	El 306'-0" Clean steam reboiler room B	1,000	None	Motors	Insul.	1		10,000	10	10	Negligible	Smoke detection	-	| 26

TABLE 9A.3-6 (Cont)

Figure No.	Fire Area (FA) or Fire Sub Area (FSA)	Fire Zone Number	Fire Zone Name	Area (ft²)	Safety-Related Equipment in Area	Fire Hazard Name	Combustible	Quantity Lb	Quantity Gal	Btu/Lb	Total Btu (thousands)	Fire Loading (Btu/ft²)	Fire Barrier Required (hr/min)	Detection System	Extinguishing System	
9A.3-7	FA 50	755 NZ	El 306'-0" and 336'-10" General area	44,270	None	Turbine generator	Insul.	2,000		10,000	20,000	472	1 min	Smoke and heat detection on bearings & exciter enclosure	Fixed water spray and local application CO_2 systems provided for turbine & generator bearings & alternator exciter enclosure	26
						Turbine generator hydrogen	Hydrogen	1		65,000	65					
						Motors	Insul.	21		10,000	210					
						Misc equip	Insul.	50		12,000	600					
											20,875					
9A.3-7	FA 50	762 NZ	El 306'-0" Decontamination & health physics storage rooms	740	None	No combustibles	-	-		-	-	-	-	Smoke detection	-	
9A.3-7	FA 50	764 NZ	El. 306'-0" Contaminated instrument room	792	None	No combustibles	-	-		-	-	-	-	Smoke detection	-	
9A.3-7	FA 50	751 NZ	El. 325'-8" Elevator Machine Room No. 1	240	None	Motors	Insul.	4		10,000	40	167	Negligible	Smoke detection	-	26
9A.3-7	FA 50	753 NZ	El. 322'-6" Elevator Machine Room No. 2	252	None	Motors	Insul.	3		10,000	30	119	Negligible	Smoke detection	-	
9A.3-7	FA 50	763 NZ	El. 322'-6" Elevator Machine Room No. 3	190	None	Motors	Insul.	4		10,000	40	210	Negligible	Smoke detection	-	

TABLE 9A.3-7

DIESEL GENERATOR BUILDING

Figure No.	Fire Area (FA) or Fire Sub Area (FSA)	Fire Zone Number	Fire Zone Name El 261'-0"	Fire Zone Area (ft2)	Safety Related Equipment in Area(1)	Fire Hazard Name	Combustible	Quantity lb	Quantity Gal	Btu/Lb	Total Btu (thousands)	Fire Loading (Btu/ft2)	Fire Barrier Required(3) (hr/min)	Detection System(4)	Extinguishing System(5)	
9A.3-5	FA 28	402 SW	Division I diesel generator room	2,200	Division I diesel generator	Motors Diesel generator Day tank	Insul. Oil Diesel fuel	556 11,628 5,228	- 1,530 660	10,000 19,000 19,000	5,560 220,932 99,332 352,824	160,374	2.0 hr	Smoke detection	Automatic preaction sprinkler system	26
9A.3-5	FA 66	402 SW	Division I fuel oil day tank room	120	Division I fuel oil day tank	Oil tank	Diesel fuel	5,228	660	19,000	99,332	827,767	19.3 hr	Smoke detection	Automatic preaction sprinkler system	26
9A.3-5	FA 28	401 NZ	Division I diesel generator control room	416	Division I diesel generator controls	Misc. Equip. Motors	Insul. Insul.	1,023 9		12,000 10,000	12,276 90 12,366	29,726	23 min	Smoke detection	-	26
9A.3-5	FA 29	403 SW	Div II diesel generator room	2,200	Division II diesel generator	Motors Diesel generator Day tank	Insul Oil Diesel fuel	553 11,628 5,228	1,530 660	10,000 19,000 19,000	5,530 220,932 99,332 325,794	148,088	1.9 hr	Smoke detection	Automatic preaction sprinkler system	26
9A.3-5	FA 67	403 SW	Division II fuel oil day tank room	120	Division II fuel oil day tank	Oil tank	Diesel fuel	5,228	660	19,000	99,332	827,767	10.3 hr	Smoke detection	Automatic preaction sprinkler system	26
9A.3-5	FA 29	401 NZ	Div II diesel generator control room	416	Division II diesel generator controls	Misc. Equip. Motors	Insul. Insul.	1,023 9		12,000 10,000	12,276 90 12,366	29,726	23 min	Smoke detection	Automatic preaction sprinkler system	26
9A.3-5	FA 30	404 SW	High-press core spray (HPCS) Division III diesel-generator room	2,200	HPCS diesel generator	Motors Diesel generator Day tank	Insul. Oil Diesel fuel	303 2,271 5,228	358 660	10,000 19,000 19,000	3,030 43,149 99,332 145,511	66,141	50 min	Smoke detection	Automatic preaction sprinkler system	26

TABLE 9A.3-7 (Cont)

Figure No.	Fire Area (FA) or Fire Sub Area (FSA)	Fire Zone Number	Fire Zone Name El 261'-0"	Fire Zone Area (ft2)	Safety Related Equipment in Area(1)	Fire Hazard Name	Combustible	Quantity Lb	Quantity Gal	Btu/Lb	Total Btu (thousands)	Fire Loading (Btu/ft2)	Fire Barrier Required(3) (hr/min)	Detection System(4)	Extinguishing System(5)	
9A.3-5	FA 68	404 SW	HPCS Division III oil tank room	120	HPCS diesel generator fuel oil day tank	Oil tank	Diesel fuel	5,228	660	19,000	99,332	827,767	10.3 hr	Smoke detection	Automatic preaction sprinkler system	26
9A.3-5	FA 30	401 NZ	HPCS Division III diesel generator control room	416	HPCS diesel generator controls	Misc. Equip. Motors	Insul. Insul.	600 9		12,000 10,000	7,200 90 7,290	17,524	13 min	Smoke detection	-	26

TABLE 9A.3-8

SCREENWELL BUILDING

Figure No.	Fire Area (FA) or Fire Sub Area (FSA)	Fire Zone Number	Fire Zone Name	Fire Zone Area (ft²)	Safety-Related Equipment in Area(1)	Fire Hazard Name	Combustible	Quantity Lb	Quantity Gal	Btu/Lb	Total Btu (thousands)	Fire Loading (Btu/ft²)	Fire Barrier Required (hr/min)	Detection System	Extinguishing System	
9A.3-5	FA 71	803 NZ	El 215'-0" Circulating water pump pit A	1,600	None	Motors	Insul.	572		10,000	5,720	6,342	5 min	Smoke detection	-	26
						Lube oil	Oil	228	30	19,000	4,332					
						Misc. equip.	Insul.	8		12,000	96					
											10,148					
9A.3-5	FA 71	803 NZ	El 215'-0" Circulating water pump pit B	2,935	None	Motors	Insul.	572		10,000	5,720	3,596	3 min	Smoke detection	-	26
						Lube oil	Oil	228	30	19,000	4,332					
						Misc. equip.	Insul.	41		12,000	492					
											10,554					
9A.3-4 9A.3-5	FA 61	806 NZ	El 224'-0" Service water pump room A	1,980	Service water pumps A, C, and E	Motors	Insul.	152		10,000	1,520	36,296	27 min	Smoke detection	-	26
						Lube oil	Oil	162	21	19,000	3,040					
						Motor cont cntrs	Fiber insul.	399		18,000	7,182					
						Cable trays	Insul.	4,735		12,000	56,820					
						Misc. equip.	Insul.	277		12,000	3,324					
											71,886					
9A.3-4 9A.3-5	FA 60	807 NZ	El 224'-0" Service water pump room B	1,870	Service water pumps B, D, and F	Motors	Insul.	152		10,000	1,520	32,073	24 min	Smoke detection	-	26
						Lube oil	Oil	160	21	19,000	3,040					
						Motor cont cntrs	Fiber insul.	352		18,000	6,336					
						Cable trays	Insul	3,853		12,000	46,236					
						Misc. equip.	Insul.	237		12,000	2,844					
											59,976					
9A.3-4	FA 55	811 NZ	El 241'-0" screenwell pit area	-	No combustibles	-	-	-	-	-	-	-	-	Smoke detection	-	

TABLE 9A.3-8 (Cont)

Figure No.	Fire Area (FA) or Fire Sub Area (FSA)	Fire Zone Number	Fire Zone Name	Fire Zone Area (ft²)	Safety-Related Equipment in Area(1)	Fire Hazard Name	Combustible	Quantity Lb	Quantity Gal	Btu/Lb	Total Btu (thousands)	Fire Loading (Btu/ft²)	Fire Barrier Required (hr/min)	Detection System	Extinguishing System	
9A.3-5	FA 62	804 NW	El 261'-0" Diesel fire pump room	1,377	None	Diesel fire pump	Oil	43	5.6	19,000	817	68,965	52 min	Smoke detection	Sprinkler system	26
						Diesel fire pump fuel oil tank	Diesel fuel	4,940	660	19,000	93,860					
						Misc. equip.	Insul.	24		12,000	288					
											94,965					
9A.3-5	FA 63	805 NZ	El 261'-0" Electric fire pump room	500	None	Motor	Insul.	34		10,000	340	680	1 min	Smoke detection	-	26
																26
9A.3-5	FA 71	803 NZ	El 261'-0" Screenwell building general area including water treatment area	24,777	None	Misc. equip.	Insul.	522		12,000	6,264	43,813	33 min	Smoke detection	-	26
						Motors	Insul.	114		10,000	1,140					
						Motor control ctr	Fiber.	268		18,000	4,824					
						Cable trays	Insul.	89,443		12,000	1,073,316					
											1,085,544					26
9A.3-5	FA 71	803 NZ	El 280'-0" General area	29,400	None	Cable trays	Insul.	33,888		12,000	406,655	13,832	11 min	Smoke detection	-	26
																26

TABLE 9A.3-9

RADWASTE BUILDING

Figure No.	Fire Area (FA) or Fire Sub Area (FSAR)	Fire Zone Number	Fire Zone Name	Fire Zone Area (ft²)	Safety-Related Equipment in Area(1)	Fire Hazard Name	Combustible	Quantity Lb	Quantity Gal	Btu/Lb	Total Btus (thousands)	Fire Loading (Btu/ft²)	Fire Barrier Required (hr/min)	Detection System	Extinguishing System	
9A.3-4	FA 58	941 NW	El 240'-2" LWS general area	6,812	None	Motors Misc equip Cables Fiberglass, liquid Radwaste stg tanks	Insul. Insul. Insul. Fiberglass	71 61 5462 26530	- - - -	10,000 12,000 12,000 18,000	710 732 65544 477540 544526	79,936	1.0 hr	Smoke detection	Automatic sprinkler system	26
9A.3-4	FA 57	961 NW	El 245'-0" Asphalt storage tanks & pump rooms	1,156	None	Motors Asph stg tank Asph fill pipe	Insul. Asphalt Asphalt	1 94651 570	- - -	10,000 18,000 18,000	10 1703718 10260 1713988	1,482,689	18.5 hr	Smoke detection	Automatic sprinkler system	26
9A.3-5	FA 58	911 NW	El 261'0" LWS tanks	2,869	None	Motors Fiberglass, liquid Radwaste stg tanks	Insul. Fiberglass	2 66000	- -	10,000 18,000	20 1188000 1188020	414,088	5.2 hr	Smoke detection	Automatic sprinkler system	26
9A.3-5	FA 58	904 NZ	El 261'-0" LWS evaporators	936	None	Motors	Insul.	1	-	10,000	10	11	Negligible	Smoke detection	-	26
9A.3-5	FA 58	901 NZ	El 261'-0" LWS general area	4,253	None	Motors Misc equip Cables	Insul. Insul. Insul.	27 255 23577	- - -	10,000 12,000 12,000	270 3060 282924 286254	67,306	51 min -	Smoke detection	-	26
9A.3-5	FA 59	921 SW	El 265'-0" WSS compactor area	4,512	None	LSA Boxes Clothing Trash Bags	Wood Clothing Paper	4800 1000 1000	- - -	8000 8000 8000	38400 8000 8000 54400	12,057	9 min	Smoke detection	Automatic sprinkler system	26
9A.3-5	FA 59	951 NW	El 265'-0" Truck loading & WSS storage	2,081	None	Motors	Insul.	50	-	10,000	500	240	1 min	Smoke detection	Automatic sprinkler system	26
9A.3-6	FA 59	951 NW	El 279'-0" Truck loading & WSS storage	3,270	None	Motors WSS liners	Insul. Asphalt	3 280000	- -	10,000 18,000	30 5040000 5040030	1,541,294	19.3 hr	Smoke detection	Automatic sprinkler system	26
9A.3-6	FA 59	908 NZ	El 279'-0" WSS general area	2,175	None	Motors WSS liners	Insul. Asphalt	1 28000	- -	10,000 18,000	10 504000 504010	231,728	2.9 hr	Smoke detection	-	26

TABLE 9A.3-9 (Cont)

Figure No.	Fire Area (FA) or Fire Sub Area (FSAR)	Fire Zone Number	Fire Zone Name	Fire Zone Area (ft²)	Safety-Related Equipment in Area(1)	Fire Hazard Name	Combustible	Quantity Lb	Quantity Gal	Btu/Lb	Total Btus (thousands)	Fire Loading (Btu/ft²)	Fire Barrier Required (hr/min)	Detection System	Extinguishing System	
9A.3-6	FA 58	906 NZ	El 279'-0" LWS general area	5,796	None	Motors Misc equip	Insul. Insul.	4 335	- -	10,000 12,000	40 4020 4060	700	1 min	Smoke detection	-	26
9A.3-6	FA 58	911 NW	El 279'-0" LWS tanks	3,154	None	Motors	Insul.	2	-	10,000	20	7	Negligible	Smoke detection	Automatic sprinkler system	26
9A.3-6	FA 58	904 NZ	El 279'-0" LWS evaporators	1,040	None	No combustibles	-	-	-	-	-	-	-	Smoke detection	-	26
9A.3-7	FA 58	911 NW	El 291'-6" LWS tanks	3,010	None	No combustibles	-	-	-	-	-	-	-	Smoke detection	Automatic sprinkler system	26
9A.3-7	FA 59	951 NW	El 291'-0" WSS general area	5,646	None	WSS extruder liner WSS piping WSS extruder Oil, WSS piping Oil, WSS extruder	Asphalt Asphalt Asphalt Lube oil Lube oil	4008 1489 325 - -	- - - 170 37	18,000 18,000 18,000 19,000 19,000	72000 26802 5850 3230 703 108585	19,232	15 min	Smoke detection	Automatic sprinkler system	26
9A.3-7	FA 58	904 NZ	El 291'-6" LWS evaporators	6,722	None	Resin stg tanks Filter	Resin Plastic	19800 50	-	18,000 18,000	356400 900 357300	53,154	40 min	Smoke detection	-	26
9A.3-7	FA 58	911 NW	El 309'-0" LWS general area	8,940	None	Motors Misc equip Cables Used resin stg tk	Insul. Insul. Insul. Resin	69 12 8576 22600	- - - -	10,000 12,000 12,000 18,000	690 144 102912 406800 510546	57,108	43 min	Smoke detection	Automatic sprinkler system	26

TABLE 9A.3-9 (Cont)

Figure No.	Fire Area (FA) or Fire Sub Area (FSAR)	Fire Zone Number	Fire Zone Name	Fire Zone Area (ft²)	Safety-Related Equipment in Area(1)	Fire Hazard Name	Combustible	Quantity Lb	Quantity Gal	Btu/Lb	Total Btus (thousands)	Fire Loading (Btu/ft²)	Fire Barrier Required (hr/min)	Detection System	Extinguishing System	
9A.3-7	FA 59	951 NW	El 309'-0" Truck loading & WSS storage	6,624	None	Motors	Insul.	10	-	10,000	100	15	Negligible	Smoke detection	Automatic sprinkler system	26
9A.3-5	FA 70	905 NW	El 261'-0" Decon area & dirty workshop	5,060	None	Motors	Insul.	2	-	10,000	20	4	Negligible	Smoke detection	Automatic sprinkler system	26
9A.3-6	FA 70	395 XL	El 279'-0" Radwaste switch-gear room	2,160	None	Cables	Insul.	8436	-	12,000	101232	46,867	36 min	Smoke detection	Total flooding CO_2	26
9A.3-6	FA 70	390 XG	El 279'-0" Radwaste control room	2,770	None	Cables	Insul.	10350	-	12,000	124200	44,838	34 min	Smoke detection	Total flooding Halon	26
9A.3-7	FA 70	903 NZ	El 306'-0" Decon bldg HVAC equipment room	4,350	None	Misc equip	Insul.	21	-	10,000	210	49	Negligible	Smoke detection	-	26

TABLE 9A.3-10

NORMAL SWITCHGEAR BUILDING

Figure No.	Fire Area (FA) or Fire Sub Area (FSA)	Fire Zone Number	Fire Zone Name	Fire Zone Area (ft²)	Safety-Related Equipment in Area	Fire Hazard Name	Combustible	Quantity Lb	Quantity Gal	Btu/Lb	Total Btu (thousands)	Fire Loading (Btu/ft²)	Fire Barrier Required (hr/min)	Detection System	Extinguishing System	
9A.3-4	FA 51	601 XL	El 237'-0" General area west	2,735	None	Misc. equip. Cable trays	Insul. Insul.	797 24,281		12,000 12,000	9,564 291,372 300,936	110,842	1.4 hr	Smoke detection cross-zoned	Total flooding CO_2	26
9A.3-4	FA 52	602 XL	El 237'-0" General area east	3,990	None	Cable trays Misc. equip. Motors	Insul. Insul. Insul.	37,249 341 7		12,000 12,000 12,000	446,988 4,092 70 451,150	113,070	1.4 hr	Smoke detection cross-zoned	Total flooding CO_2	26 26
9A.3-4	FA 53	603 NZ	El 237'-0" 1A battery room	780	None	Batteries Cable trays	Styrene Insul.	1,964 4,773		18,000 12,000	35,352 57,276 92,628	118,754	1.5 hr	Smoke detection	-	26
9A.3-4	FA 53	603-NZ	El 237'-0" 1B battery room	780	None	Batteries Cable trays	Styrene Insul.	1,964 5,867		18,000 12,000	35,352 70,404 105,756	135,585	1.7 hr	Smoke detection	-	26
9A.3-4	FA 53	603 NZ	El 237'-0" Room 4A	220	None	Cable trays	Insul.	1,736		12,000	20,832	94,695	1.2 hr	Smoke detection	-	
9A.3-4	FA 53	603 NZ	El 237'-0" Room 4B	220	None	Cable trays	Insul.	1,736		12,000	20,832	94,695	1.2 hr	Smoke detection	-	
9A.3-5	FA 78	612 XL	El 261'-0" General area west	4,820	None	Misc. equip. Cable trays Motor control centers	Insul. Insul. Fiber.	6,522 58,870 233		12,000 12,000 18,000	782,264 706,440 4,194 788,898	163,675	2.1 hr	Smoke detection cross-zoned	Total flooding CO_2	
9A.3-5	FA 79	613 XL	El 261'-0" General area east	4,590	None	Misc. equip. Motor control centers Cable trays	Insul. Fiber. Insul.	4,315 297 58,053		12,000 18,000 12,000	51,780 5,346 696,636 753,762	164,220	2.1 hr	Smoke detection cross-zoned	Total flooding CO_2	
9A.3-4	FA 52	604 NZ	El 237'-0" Security storage room	440	None	No combustibles	-	-		-	-	-	-	-	-	26

TABLE 9A.3-10 (Cont)

Figure No.	Fire Area (FA) or Fire Sub Area (FSA)	Fire Zone Number	Fire Zone Name	Fire Zone Area (ft²)	Safety-Related Equipment in Area	Fire Hazard Name	Combustible	Quantity Lb	Quantity Gal	Btu/Lb	Total Btu (thousands)	Fire Loading (Btu/ft²)	Fire Barrier Required (hr/min)	Detection System	Extinguishing System	
9A.3-6	FA 77	621 NZ	El 293'-0" Ventilation equipment penthouse	2,189	None	Motors	Insul.	15		10,000	150	69	Negligible	Smoke detection	-	26
9A.3-6	FA 77	621 NZ	El 293'-0" MG set penthouse	1,290	None	Motors Misc. equip.	Insul. Insul.	70 597		10,000 12,000	700 7,164 7,864	6,096	5 min	Smoke detection	-	26

TABLE 9A.3-11

MISCELLANEOUS BUILDINGS

Figure No.	Fire Area (FA) or Fire Sub Area (FSA)	Fire Zone Number	Fire Zone Name	Fire Zone Area (ft²)	Safety-Related Equipment in Area(1)	Fire Hazard Name	Combustible	Quantity Lb	Quantity Gal	Btu/Lb	Total Btus (thousands)	Fire Loading (Btu/ft²)	Fire Barrier Required (hr/min)	Detection System	Extinguishing System	
9A.3-5	FA 71	802 NZ	El 261'-0" Intake and discharge shafts area	4,680	Valves	Motor	Insul.	4		10,000	40	1,378	1 min	Smoke detection	-	26
						Misc. equip.	Insul.	165		12,000	1,980					
						MCC	Fiberglass	246		18,000	4,428					26
											6,448					
9A.3-5	FA 60	808 NZ	Auxiliary boiler building	3,080	None	Motors	Insul.	39		10,000	390	102,119	1.3 hr	Smoke detection	-	26
						Misc. equip.	Insul.	336		12,000	4,032					
						Cable trays	Insul.	25,842		12,000	310,104					
											314,526					
9A.3-5 & 9A.3-6	FA 56	902 NW	El 265'-0" & 295'-0" condensate storage tank building	10,620	None	Storage tanks	Fiberglass	56,600		18,000	1,018,800	95,932	1.2 hr	Smoke detection	Automatic sprinkler system	26
9A.3-4 9A.3-5 9A.3-6	FA 69	801 NZ	Demin. water storage tank building	5,850	None	Motors	Insul.	9		10,000	90	19,851	15 min	Smoke detection	-	26
						Misc. equip.	Insul.	45		12,000	540					
						Cable trays	Insul.	8,575		12,000	102,900					
						PVC piping	PVC	700		18,000	12,600					
											116,130					

TABLE 9A.3-12

PIPING TUNNELS AND STEAM TUNNEL

Figure No.	Fire Area (FA) or Fire Sub Area (FSA)	Fire Zone			Safety-Related Equipment in Area(1)	Fire Hazard					Fire Loading (Btu/ft²)	Fire Barrier Required (hr/min)	Detection System	Extinguishing System
		Number	Name	Area (ft²)		Name	Combustible	Quantity Lb	Quantity Gal	Btu/Lb	Total Btu (thousands)			
9A.3-4	FA55	362 NZ	Piping tunnel	-	-	No combustibles	-	-	-	-	-	-	-	Smoke detection	-
9A.3-4 9A.3-3	FA55	361 NZ	Piping tunnel	-	-	No combustibles	-	-	-	-	-	-	-	Smoke detection	-
9A.3-4	FA55	363 NZ	Piping tunnel	-	-	No combustibles	-	-	-	-	-	-	-	Smoke detection	-
9A.3-5	FA50	256 NZ	Steam tunnel	1980	Main steam isolation valves hydraulic units	Hydraulic fluid	Oil	950	100	18,000	17,100	8,641	6.5 min	Heat detection	-
						Motors	Insul.	1		10,000	10				
											17,110				

26

26