REGULATORY INFORMATION DISTRIBUTION SYSTEM (RIDS)

ACCESSION NBR: 8602030111 DOC. DATE: 86/01/29 NOTARIZED: NO DOCKET #
FACIL: 50-410 Nine Mile Point Nuclear Station, Unit 2, Niagara Moha 05000410
AUTH. NAME AUTHOR AFFILIATION
MANGAN, C. W. Niagara Mohawk Power Corp.
RECIP. NAME RECIPIENT AFFILIATION
ADENSAM, E. G. BWR Project Directorate 3

SEE ENCLS

SUBJECT: Forwards updated seismic master list responses to SER open items & responses to generic open items, in response to Seismic Review Team & Pump & Valve Operability Review Team audit open items.

DISTRIBUTION CODE: B001D COPIES RECEIVED: LTR 1 ENCL 5 SIZE: 400 ON SAME
TITLE: Licensing Submittal: PSAR/FSAR Amdts & Related Correspondence

NOTES:

	RECIPIENT ID CODE/NAME		COPIES LTTR	COPIES ENCL	RECIPIENT ID CODE/NAME		COPIES LTTR	COPIES ENCL
	BWR ADTS		1	1	BWR PD3 PD		1	1
	BWR EB		1	1	BWR EICSB		1	1
	BWR FOB		1	1	BWR PD3 LA		1	1
	HAUGHEY, M	01	2	2	BWR PSB		1	1
	BWR RSB		1	1				
INTERNAL:	ACRS	41	6	6	ADM/LFMB		1	0
	ELD/HDS3		1	0	IE FILE		1	1
	IE/DEPER/EPB	36	1	1	IE/DQAVT/QAB	21	1	1
	NRR BWR ADTS		1	0	NRR PWR-A ADTS		1	0
	NRR PWR-B ADTS		1	0	NRR ROE, M. L		1	1
	NRR/DHFT/HFIB		1	1	NRR/DHFT/MTB		1	1
	NRR/DSRO DIR		1	0	NRR/DSRO/RRAB		1	1
	REG FILE	04	1	1	RGN1		3	3
	RM/DDAMI/MIB		1	0				
EXTERNAL:	24X		1	1	BNL(AMDTS ONLY)		1	1
	DMB/DSS (AMDTS)		1	1	LPDR	03	1	1
	NRC PDR	02	1	1	NSIC	05	1	1
	PNL GRUEL, R		1	1				

Encl To: Reg Files
LPDR
NRC PDR
NSIC
24X

Per PM

TOTAL NUMBER OF COPIES REQUIRED: LTTR 41 ENCL 34

"REGULATORY INFORMATION DISTRIBUTION SYSTEM (RIDS)"

ACCESSION NBR:8602020011 DOC DATE: 86/01/29 NOTARIZED: NO DOCKET #
FACIL:50-410 Nine Mile Point Nuclear Station, Unit 2, Niagara Mohe 05000410
AUTH NAME AUTHOR AFFILIATION
MANGAN,C.U Niagara Mohawk Power Corp
RECIP.NAME RECIPIENT AFFILIATION
ADENSAM,E.G NRR Project Directorate 3

SUBJECT: Forwards updated seismic monitor list responses to SER open items & responses to geotric open items,in response to Seismic Review Team & Pump & Valve Operability Review Team audit open items

DISTRIBUTION CODE: B001D COPIES RECEIVED:LTR 1 ENCL 3 SIZE: 100
TITLE: Licensing Submittal: PSAR/FSAR Amdts & Related Correspondence

NOTES:

	RECIPIENT ID CODE/NAME		COPIES LTTR	COPIES ENCL	RECIPIENT ID CODE/NAME		COPIES LTTR	COPIES ENCL
	BWR ADTS		1	1	BWR PD3 PD		1	1
	BWR EB		1	1	BWR EICSB		1	1
	BWR FOB		1	1	BWR PD3 LA		1	1
	HAUGHEY,M	01	2	2	BWR PSB		1	1
	BWR RSB		1	1				
INTERNAL:	ACRS	41	6	6	ADM/LFMB		1	0
	ELD/HDS3		1	0	IE FILE		1	1
	IE/DEPER/EPB	36	1	1	IE/DGAVT/GAB	21	1	1
	NRR BWR ADTS		1	0	NRR PWR-A ADTS		1	0
	NRR PWR-B ADTS		1	0	NRR ROE,M.L		1	1
	NRR/DHFT/HFEB		1	1	NRR/DHFT/MTB		1	1
	NRR/DSRO DIR		1	0	NRR/DSRO/RRAB		1	1
	REG FILE	04	1	1	RGN1		3	3
	RM/DDAMI/MIB		1	0				
EXTERNAL:	24X		1	1	BNL(AMDTS ONLY)		1	0
	DMB/DSS (AMDTS)		1	1	LPDR	03	1	1
	NRC PDR	02	1	1	NSIC	05	1	1
	PNL GRUEL,R		1	1				

Encl To: Reg Files
LPDR
NRC PDR
NSIC
24X

Ltr PM

TOTAL NUMBER OF COPIES REQUIRED: LTTR 41 ENCL 34

NIAGARA MOHAWK

NIAGARA MOHAWK POWER CORPORATION/300 ERIE BOULEVARD WEST, SYRACUSE, N.Y. 13202/TELEPHONE (315) 474-1511

January 29, 1986
(NMP2L 0596)

Ms. Elinor G. Adensam, Director
BWR Project Directorate No. 3
U.S. Nuclear Regulatory Commission
7920 Norfolk Avenue
Washington, DC 20555

Dear Ms. Adensam:

Re: Nine Mile Point Unit 2
Docket No. 50-410

Enclosed for your information are certain responses to the Seismic Review Team and Pump and Valve Operability Review Team Audit open items for Nine Mile Point Unit 2. Ten copies of the following information are provided:

1. Updated Seismic Master List

2. Responses to Specific Audit Open Items:

	NRC No.	Mark No.
a.	NSSS 2	(C51J003)
b.	NSSS 5	(2 EHS*MCC201)
c.	NSSS 6	(2 ENS*SWG102)
d.	BOP 1	(2 CMS*PNL66A)
e.	BOP 2	(2 CES*PNL405)
f.	BOP 3	(2 CES*P828)
g.	BOP 4	(2 EJS*PNL100A)
h.	BOP 5	(2 EGS*E61)
i.	BOP 10	(2 HVAC ACU3A)
j.	BOP 11	(2 HUVY*UC2)
k.	Not numbered	(2 MSS*HYV6A)
l.	Not numbered	(2 SWP*MOV1A)
m.	Not numbered	(2 CCP*AOV37B)
n.	Not numbered	(2 SWP*AOV22B)
o.	Not numbered	(2 RHS*RVV36A)

The other specific responses were previously provided in our letters dated September 30, 1985 and November 1, 1985.

3. Responses to Generic Open Items

Encls To: Reg File
LPDR
NRC PDR
NSIC
24 X

B001
1/5

Per PM

Further, we are in the process of performing the Compliance and Verification review of the Seismic Qualification Program. The conclusion of that detailed review will result in a letter certifying that all required equipment is qualified and installed. This will be forwarded to the Nuclear Regulatory Commission by the fuel load date.

Very truly yours,

C. V. Mangan
Senior Vice President

NLR:ja
Enclosures
1252G

xc: R. A. Gramm, NRC Resident Inspector
Project File (2)

SER OPEN ITEM

TABLE 3.1 SQRT IDENTIFICATION NUMBER NSSS-2

FINDING

C51-J003 - 1) Equipment was not installed.

2) Pressure controlling and monitoring system was not included in the penetration assembly.

3) Periodic and post earthquake pressure monitoring procedures were not clearly defined in light of finding 2 above.

RESPONSE

1) Refer to response to CONFIRMATORY ISSUE 3.10.1.3(1).

2 and 3) A response will be provided by February 20, 1986.

8602030111

SER OPEN ITEM

SER OPEN ITEM

SQRT IDENTIFICATION NUMBER NSS-2

SQRT IDENTIFICATION NUMBER NS

not installed.

[illegible] gage [illegible] s [illegible]ews were loose (E22-S004

[illegible]ing and [illegible]ng system was not included i[illegible]

[illegible] also [illegible]y.

[illegible] SU[illegible]

and post [illegible] pressure-[illegible]toring procedures were [illegible]y defined i[illegible] light of finding 2 above.

[illegible]MATORY ISSUE 3.10.1.3(1).

[illegible]y [illegible]ebruary 20, 1986.

TABLE 3.1 · SQRT IDENTIFICATION NUMBER NSSS-5

FINDING

2EHS*MCC201 - Rear enclosure panel screws were loose (E22-S004).

RESPONSE

Refer to response to CONFIRMATORY ISSUE 3.10.1.3(1).

SECTION 3

REPORT IDENTIFICATION NUMBER NSSS-6

g mounting holes. The tested [illegible] stay
[illegible] resulting up both holes with
[illegible] of a [illegible] problems.

[illegible] one [illegible] ration between the anomalies and
production errors on the switchboards.
[illegible] were [illegible] ing the tests. GE letters dated
[illegible] upset with cover.

[illegible] test results obtained by removing [illegible] the
[illegible] switch tripping would not occur

[illegible] ing test.
[illegible] the anomaly to a weld stud and mentions that the
[illegible] Rept. 43639-1, p. 15) resulting in a break.

SER OPEN ITEM

TABLE 3.1 SQRT IDENTIFICATION NUMBER NSSS-6

FINDING

The seventh test run (ref. Wyle Rpt. 43639-1, p. 15) results in a breaker tripping. The report relates the anomaly to a weld stud and mentions that the cover was removed for the remaining tests.

The applicant must demonstrate that similar tripping would not occur.

The applicant must establish that test results obtained by removal of the cover are applicable to the switchgear with cover.

A number of other anomalies were observed during the test. GE letters dated 11/17/77 and 2/8/78 mention some modifications performed on the switchgear. The applicant must provide one-to-one correlation between the anomalies and the modifications made to preclude recurrence of similar problems.

The applicant must demonstrate the effectiveness of filling up bolt holes with field plug welds in lieu of using mounting bolts. The tested mounting configuration utilized bolts.

RESPONSE

A response will be provided by February 20, 1986.

SER OPEN ITEM

TABLE 3.1 SQRT IDENTIFICATION NUMBER BOP-1

FINDING

The applicant must confirm that the method of mounting the subassemblies and electrical devices to the installed panel are equivalent to those mounting methods used in the seismic tests.

RESPONSE

A response will be provided by February 20, 1986.

SER OPEN ITEM

SQRT IDENTIFICATION NUMBER SCP-2

[illegible] metal structure was presented, but [illegible]
[illegible] devices housed by the structure was not
[illegible] the qualification of the devices housed [illegible]

[illegible] issue for SCP-2 (devices within SWSC Water
Trials). The device qualification report has
found in SWSC File No. STRS 37 SCO-SCIOE.

SER OPEN ITEM

TABLE 3.1 SQRT IDENTIFICATION NUMBER BOP-2

FINDING

The qualification document for the panel structure was presented, but qualification documentation for the devices housed by the structure was not available. The applicant must confirm the qualification of the devices housed in the panel.

RESPONSE

The outstanding device qualification issue for BOP-2 (devices within SWEC Mark No. 2CES*PNL405) have now been completed. The device qualification report has been approved by SWEC and may be found in SWEC File No. STRS 07.500-5010E.

SER OPEN ITEM

TABLE 3.1 SQRT IDENTIFICATION NUMBER BOP-3

FINDING

The cabinet was qualified with a 50-ft-lb torque on mounting bolts. The applicant must demonstrate how this torque value will be maintained on regular mounting bolts during the entire life of the plant, given possibility of relaxation and creep.

RESPONSE

A response will be provided by February 20, 1986.

SER OPEN ITEM

TABLE 3.1 SQRT IDENTIFICATION NUMBER BOP-5

No justification was provided for acceptability of the anomalies observed during testing of various devices. The nozzle loads assumed for analysis of the engine mounted system were not confirmed.

RESPONSE

A letter from the vendor dated 8/13/85 addresses the subject anomalies, including loosening of the differential pressure gauge mounting arrangement, a requirement for periodic surveillance has been transmitted to NMPC via Equipment Qualification Maintenance Program Data Sheet - EQMPDS E031AAA and E031AAB. These EQMPDS are transmitted to the Maintenance Department in accordance with procedures and incorporated into appropriate preventative or corrective departmental procedures.

For nozzle loads, SWEC was supposed to get us a new answer or say will be provided by February 20, 1986.

SER OPEN ITEM

TABLE 3.1 SQRT IDENTIFICATION NUMBER BOP-10

FINDING

2HVC*ACU3A - The nozzle loads assumed for qualification were not confirmed. The applicant must confirm nozzle loads used.

RESPONSE

Refer to response to CONFIRMATORY ISSUE 3.10.1.3(3).

SER OPEN ITEM

TABLE 3.1 SQRT IDENTIFICATION NUMBER BOP-11

FINDING

It appears that in the analysis some nodes were assumed anchored, although they are not really anchored in the field (ref. AAF Rpt. NESE-714, p. 25). This might lead to unconservative results. The applicant must confirm actual field mounting is reflected in qualification analysis.

RESPONSE

A response will be provided by February 20, 1986.

SER OPEN ITEM

TABLE 3.2 PVORT IDENTIFICATION NUMBER 2MSS*HYV6A

FINDING

Verify qualification of actuator.

RESPONSE

A response will be provided by February 20, 1986.

SER OPEN ITEM

TABLE 3.2 PVORT IDENTIFICATION NUMBER 2SWP*MOV1A

FINDING

Due to specification violation regarding maximum torque output, retrofit of actuator (gear ratios) and valve stem (shaft materials) was required. To be evaluated are:

Stress allowables exceeded elsewhere in the assembly (e.g., interface between shaft and ball).

Applicant must determine if the test/analysis used in qualification is still valid as a result of the retrofit.

Applicant must identify the schedule and action being taken to address this operability problem.

RESPONSE

Contromatics calculation dated October 7, 1985 establishes adequacy of the stem and ball interface (Calculation Misc. 5.340-5001A.

The interface between the shaft and the ball is determined by Operability Report 16985-82N, which is verified by Contromatics letter dated July 9, 1985, and operator torque is verified by Limitorque letter dated September 23, 1985, and this is summarized in E&DCR P41156. Further, a review of other parts will be addressed by February 20, 1986.

Parts are available and completion of field work will be tracked as N&D 12,915.

SER OPEN ITEM

TABLE 3.2 PVORT IDENTIFICATION NUMBER 2CCP*AOV37B and 2SWP*AOV22B

Actuator still to be qualified

RESPONSE

The outstanding qualification issues for PVORT item no. 12 (SWEC Mark No. 2CCP*AOV37B) and PVORT surprise item no. 1 (SWEC Mark No. SWP*AOV22B) have now been completed. This qualification report has been approved by SWEC and may be found in SWEC file no. IEEE 5.340-5006A and IEEE 5.340-5008A.

SER OPEN ITEM

TABLE 3.2 PVORT IDENTIFICATION NUMBER (2RHS*RVV36A)

See Confirmatory Issue 3.10.2.3.4.

CONFIRMATORY ISSUE 3.10.1.3(1)

The master list of equipment provided by the applicant in preparation for the audit did not fully agree with the qualification and installation status observed during the audit. Since this list is used by the staff to assess the status of the qualification program, the master list should be revised so that it provides the correct status. The applicant must confirm before fuel load that the master list is accurate and up to date.

RESPONSE 3.10.1.3(1)

The seismic/hydrodynamic qualification master list contains the qualification and installation status of equipment. The master lists for both GE-NSSS and balance-of-plant equipment are enclosed. These documents have been updated to indicate recent status.

The qualification program contains the review and approval of vendor qualification documents necessary to establish qualification of equipment in accordance with equipment procurement specification requirements.

The program also includes the review of changes to identify and reconcile potential effects on the qualification of the equipment as qualified by the vendor.

All equipment is expected to be fully qualified prior to fuel load based on our current plan and schedule.

Prior to system turnover, all systems undergo a multidiscipline walkdown. Deficiencies are corrected or added to the system punchlist for completion.

The installation of equipment and the restoration of equipment modified for preoperational testing is controlled in accordance with Startup Administrative Procedures.

After the preoperational testing, Maintenance Operations and Instrument and Control Department Procedures contain direction to verify restoration of equipment after testing or maintenance has been performed.

Further, we are in the process of performing the Compliance and Verification review of the Seismic Qualification Program. The conclusion of that detailed review will result in a letter certifying that all required equipment is qualified and installed. This will be forwarded to the Nuclear Regulatory Commission by fuel load.

CONFIRMATORY ISSUE 3.10.1.3(2)

Upon completion of the seismic and dynamic qualification program, the applicant must confirm that all safety-related equipment is qualified and properly installed.

RESPONSE 3.10.1.3(2)

Refer to CONFIRMATORY ISSUE 3.10.1.3(1).

CONFIRMATORY ISSUE 3.10.1.3(3)

The nozzle loads and g values assumed for qualification of equipment should be verified and confirmed after the completion of the as-built piping analysis.

RESPONSE 3.10.1.3(3)

The program for the ASME III Code N-5 Data Report certification includes a certificate of compliance specifying that the piping system conforms to the rules of construction of the ASME Code Section III. A prerequisite of this certification, in accordance with Procedure PG 92 and PP 93, is the completion of as-built piping analysis. The as-built piping analysis includes confirmation that allowable nozzle loads and the g values (hydrodynamic and LOCA and other loads as described in the FSAR) used to qualify the equipment have not been exceeded by the as-built analysis.

CONFIRMATORY ISSUE 3.10.1.3(4)

It was observed during the site inspection that for some equipment, the installation was either incomplete or faulty (e.g., loose screws, missing panels, etc.). In each case, a reject tag was attached to the equipment with the incomplete or faulty installation. The applicant must confirm before fuel load that all equipment is completely installed in accordance with the qualification documents and that equipment modified for preoperational testing has been returned to the qualification status.

RESPONSE 3.10.1.3(4)

Refer to CONFIRMATORY ISSUE 3.10.1.3(1).

CONFIRMATORY ISSUE 3.10.1.3(5)

It was observed that the floor spectra for the control and diesel generator building were recently revised exhibiting a frequency shift (refer for example to E&DCR P02502, dated January 12, 1985). The applicant must confirm before fuel load that all equipment in these buildings is qualified to the revised spectra.

RESPONSE 3.10.1.3(5)

Refer to Response 3.10.1.3(1).

CONFIRMATORY ISSUE 3.10.1.3(6)

A recent study by the applicant indicates that the vertical floor response spectra in the control building may be exceeded by as much as 50-60% at certain frequencies if the floor flexibility is accounted for in the model used for dyanmic analysis of building structures (refer to applicant's letter, dated October 25, 1984): The applicant must confirm before fuel load that all equipment in the control building has been verified against this possible exceedance of vertical response spectra.

RESPONSE 3.10.1.3(6)

Refer to Response 3.10.1.3(1).

CONFIRMATORY ISSUE 3.10.2.3(1)

The applicant shall confirm that all pumps and valves important to safety have had their required preoperational tests completed before fuel load.

RESPONSE 3.10.2.3(1)

The safety-related pumps and valves at NMP2 are scheduled to have their preoperational tests completed to support fuel load. This testing is conducted in accordance with procedures.

CONFIRMATORY ISSUE 3.10.2.3(2)

The applicant shall confirm that all pumps and valves important to safety are qualified and operational for normal, accident, and post-accident operating conditions before fuel load.

RESPONSE 3.10.2.3(2)

Refer to response to CONFIRMATORY ISSUE 3.10.1.3(1).

CONFIRMATORY ISSUE 3.10.2.3(3)

The applicant shall confirm that new loads resulting from loss of coolant accident (LOCA) or analysis of as-built conditions applicable to pump and valves important to safety do not exceed those loads originally used to qualify equipment.

RESPONSE 3.10.2.3(3)

Refer to response to CONFIRMATORY ISSUE 3.10.1.3(3).

CONFIRMATORY ISSUE 3.10.2.3(4)

In addition to 2RHS*RVV36A, the applicant shall identify any other safety related pumps and valves that have been qualified by analysis only, and if others are identified, provide the basis for this qualification.

RESPONSE 3.10.2.3(4)

A response will be provided by February 20, 1986.

NIAGARA MOHAWK POWER CORPORATION

NINE MILE POINT - UNIT 2

SEISMIC/HYDRODYNAMIC QUALIFICATION

MASTER LIST

Introduction

The master listing of seismic and dynamic qualification summary and status of safety-related equipment includes all QA Category I equipment for which seismic qualification documentation must be provided.

Excluded from this listing are the following:

1. Rupture disk assemblies, RTD thermowells, flexible metal hoses, manual valves, and expansion joints.

2. Equipment supports - piping, tubing, and instrumentation supports, and pipe rupture restraints.

3. Electrical cable.

4. Spare items.

Equipment ID

In general, the equipment ID consists of Unit No. (2 for Nine Mile Point - Unit 2), system code (three-character system code followed by an asterisk (*), and equipment code (one- to four-character equipment code, followed by a numeric ID). See SWEC Corporate Standards Nos. C1 and C3 for definitions.

Equipment

Description: Description of equipment or its service

Manufacturer: Name of prime vendor

Spec. No.: Specification Number (last five characters only; NMP2- portion is dropped)

Location

Bldg: Building in which item is located (see attachment for building codes)

Elev: Elevation

Mtg: Mounting Condition

CF - for concrete floor mounting
DW - for concrete wall mounting
DM - for direct mounting
HM - for hanger mounting
RM - for rack mounting
CM - for cabinet mounting
EM - for equipment mounting
LM - for line mounting

Loads

Seis: Indicate if seismic loads are applicable.

Y - Yes
NA - Not Applicable

Hydr: Indicate if hydrodynamic loads are applicable.

Y - Yes
NA - Not Applicable

Qual Meth (Qualification Method)

Anlys: Analysis

S - Static
D - Dynamic
NA - Not Applicable

Test: SF - Single Frequency
MF - Multiple Frequency
NA - Not Applicable
SO - Static Operability

Nat Freq Lowest: Lowest Natural Frequency

Status: Indicate status of qualification and installation.

Qual: Qualification status

Code A: The qualification and associated documentation are complete.

Code B: The qualification test/analysis is completed, but associated documentation is not yet approved or is still in review.

Code C: The qualification plan/procedure is documented, but testing has not yet begun.

Code D: Equipment to be qualified (new equipment added).

Inst: Installation status

Code Y: Physical installation is complete. (see attachment)

RRS Ref: Reference to required response spectra (RRS) number applicable for the respective equipment.

Installation

The equipment is considered installed if:

1. It is put in place and anchored in accordance with the installation drawings.

2. Connections with piping and/or duct as applicable are completed.

3. External electrical connections are completed, i.e., cables from conduit and/or cable trays are terminated at the equipment.

   NOTE: Equipment need not be in a condition to be energized.

4. All the subassemblies are in place and are interconnected in accordance with the manufacturer drawing.

NINE MILE POINT NUCLEAR STATION - UNIT 2

Building	Building Code
Auxiliary Boiler Building	ABB
Auxiliary Bay - North	ABN
Auxiliary Bay - South	ABS
Auxiliary Service Building	ASB
Control Building	CB
Condensate Storage Tank Building	CS
Demineralizer Water and Neutron Tank Building	DA
Diesel Generator Building	DG
Electrical Bay	EB
Electrical Tunnel - North	ETN
Electrical Tunnel - South	ETS
Heater Bay	HB
Intake Discharge Shaft Building	ITK
Main Steam Tunnel	MST
Normal Switchgear Building	NS
Pipe Tunnel	PT
Primary Containment	PC
RPV Shell	PC
Drywell Floor	PC
Basemat	PC
Biological Shield Wall	PC
Pedestal	PC
Reactor Building (Secondary Containment)	RB
Radwaste Building	RW
Screenwell Building	SA
Service Building	SB
Standby Gas Treatment Building	SG
Turbine Building	TB
Turbine Supports	TS

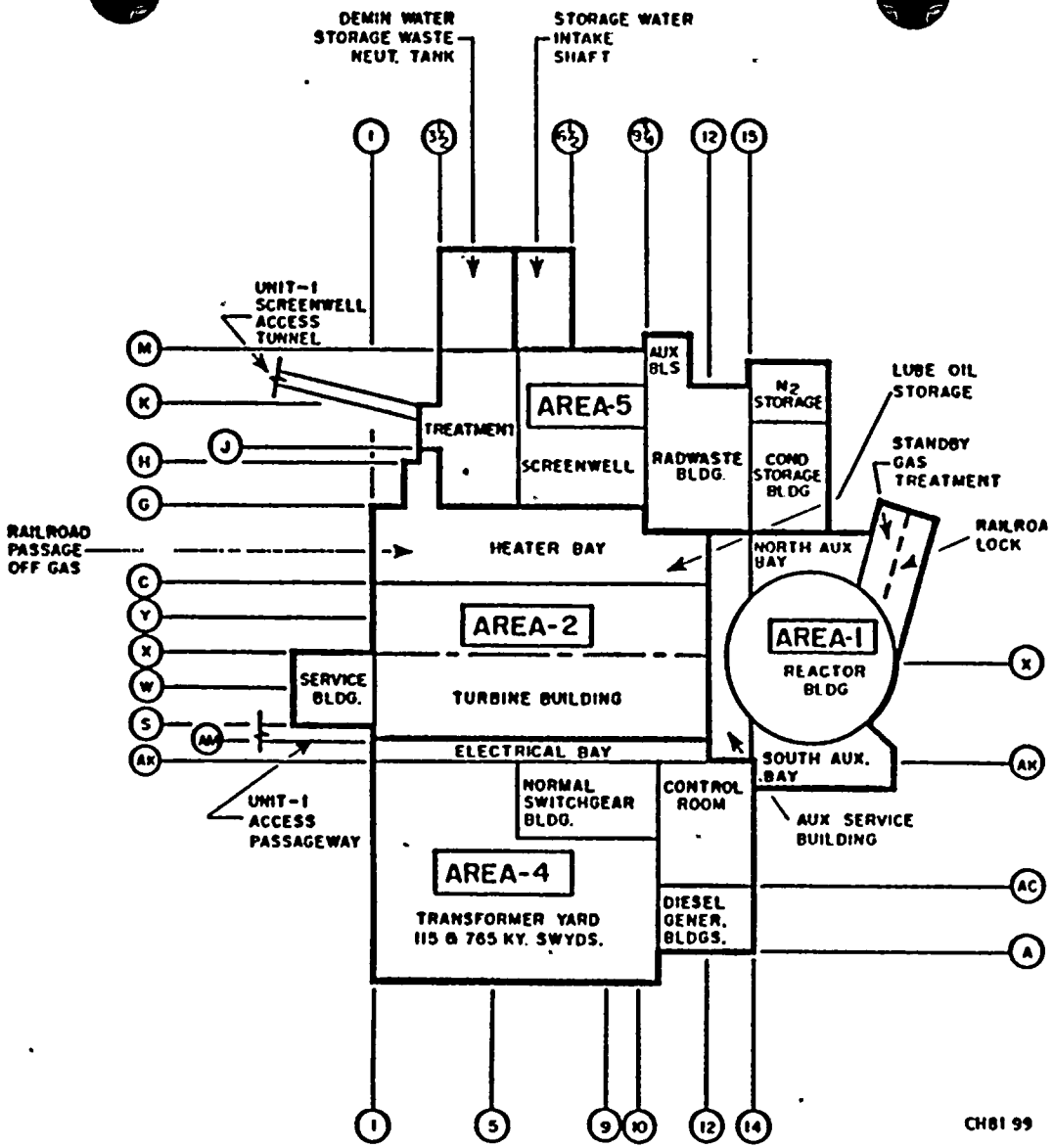

KEY PLAN

CONSTRUCTION MANAGEMENT AREA DESIGNATION

N.T.S.

STANDARD C1
POWER PLANT SYSTEM CODES

1. PURPOSE - The 3-letter code identifies Power Plant Systems.

2. SCOPE - The codes are applicable to Power Industries Group projects.

3. APPLICATION - Power Plant System Codes are used in all project documents. Code applicability to project types is coded as follows:

   B - BWR

   P - PWR

   H - HTGR

   O - FOSSIL, OIL

   G - FOSSIL, GAS

   C - FOSSIL, COAL

   S - SWITCHYARD

   W - HYDRO

   Applicability shown is typical and may change from plant to plant. Structural codes are not keyed to plant types at this time.

   The codes are mnemonic where possible. The first two letters define a generic system. The third letter subdivides this system into smaller parts.

SYSTEM CODE	PLANT TYPES	SYSTEM DESCRIPTION
AAS	B P	AIR,ASPIRATING - SYSTEM
ABA	B P H O G C W	AUXILIARY BOILER - COMBUSTION AIR
ABB	B P H O G C W	AUXILIARY BOILER - BURNER CONTROL
ABD	B P H O G C W	AUXILIARY BOILER-BLOWDOWN
ABF	B P H O G C W	AUXILIARY BOILER - FEEDWATER AND CONDENSATE
ABH	B P H O G C W	AUXILIARY BOILER-CHEMICAL FEED
ABM	B P H O G C W	AUXILIARY BOILER- STEAM
ABS	B P H O G C W	AUXILIARY BOILER - SYSTEM
ACS	B P H O G C	AIR COOLED CONDENSER-SYSTEM
ADS	B	AUTOMATIC DEPRESSURIZATION - SYSTEM
AHB	C	ASH HANDLING - BOTTOM ASH DISPOSAL
AHC	O C	ASH HANDLING - CHEMICAL FEED
AHF	O C	ASH HANDLING - FLY ASH DISPOSAL AND OR REINJECTION
AHP	C	ASH HANDLING - PYRITES SYS.
AHW	O C	ASH HANDLING - SLUICING WATER
AMS	P	AMBIENT TEMP MONITORING - SYSTEM
ANN	B P H O G C S W	ANNUNCIATOR-SYS
ARA	B P H O G C	AIR REMOVAL - AUXILIARY CONDENSER
ARC	B P H O G C	AIR REMOVAL - MAIN CONDENSER
ASF	O G C	AUXILIARY STEAM - FOSSIL - SYS
ASR	B	AUXILIARY STEAM-RADWASTE
ASS	B P H	AUXILIARY STEAM - NUCLEAR - SYSTEM
ATX	B P H O G C S W	TRANS,AUX PWR INCLUDING AUX (COOLERS,LTC,ETC)
BAT	B P H O G C S W	BATTERY
BCC	B P H O G C	BEARING COOLING-CHEMICAL FEED

SYSTEM CODE	PLANT TYPES	SYSTEM DESCRIPTION
BCP	B P H O G C S W	BEARING COOLING - PURIFICATION SYSTEM
BCS	B P H O G C	BEARING COOLING - SYSTEM
BDC	B	BLOWDOWN - COOLING TOWER
BDG	P H	BLOWDOWN - STEAM GENERATOR (NUCLEAR)
BEV	O G C	AIR PREHEATER & STACK WASHING
BPS	P	BOP ENG.SAFETY FEATURES ACTUAT.-SYSTEM
BRS	P	BORON RECOVERY - SYSTEM
BVS	B P H O G C W	BATTERY - 125/250V - STATION
BWS	B P H O G C W	BATTERY - 24V - STATION
BWY	S	BATTERY - 24V - YARD
BXS	B P H O G C W	BATTERY - 48V - STATION
BXY	S	BATTERY - 48V - YARD
BYS	B P H O G C W	BATTERY - 125V - STATION
BYY	S	BATTERY - 125V - YARD
BZS	B P H O G C W	BATTERY - 250V - STATION
BZY	S	BATTERY - 250V - YARD
CAC	H	CHEMICAL FEED - CORE AUX COOLING
CAS	H	CONTAINMENT CLEANING-SYS
CBS	B P H O G C S W	CONDUCTOR COOLING - SYSTEM
CCC	P	COMPONENT COOLING-COMMON
CCD	P	COMPONENT COOLING-CNDS DEMIN-LIQUID WASTE
CCE	P	COMPONENT COOLING - CHARGING PP.SEAL
CCF	B P	COMPONENT COOLING WATER - ESF AREA
CCH	B P H O G C	COMPONENT COOLING-CHEMICAL FEED
CCI	P	COMPONENT COOLING- SAFETY INJECTION PP. SEAL
CCL	O G C	COMPONENT COOLING - WATER (FOSSIL)

SYSTEM CODE	PLANT TYPES							SYSTEM DESCRIPTION
CCN	B	P						COOLING WATER - REACTOR PLANT
CCP	B	P	H					COMPONENT COOLING-PRI OR REACTOR
CCR		P						COMPONENT COOLING - CONT. ROD DRIVE (B&W ONLY)
CCS	B	P	H					COMPONENT COOLING-TURBINE PLANT (NUCLEAR)
CCW	B	P	H	O	G	C		COMPONENT COOLING-CHILLED
CDS	B	P	H	O	G	C		CHILLED WATER - SYSTEM
CEC	B	P	H	O	G	C	W	COMMON ELECT EQUIP-CONTROL RM COMPLEX
CES	B	P	H	O	G	C	W	COMMON ELECTRICAL-SYSTEM (CONTROL BDS,ETC)
CFS		P						CORE FLOODING-SYSTEM (B&W)
CGS				O	G	C		VACUUM CLEANING-SYSTEM
CHS		P						CHEMICAL & VOLUME CONTROL SYSTEM
CKC			H					CORE COOLING-STANDBY
CLB				O	G	C		CHEMICAL CLEANING-BOILER
CLG		P	H					CHEMICAL CLEANING-STEAM GENERATOR (NUCLEAR)
CLM	B	P	H					CHEMICAL CLEANING-MAIN STEAM & FEEDWATER (NUCLEAR)
CLP	B	P	H	O	G	C		CHEMICAL CLEANING-PREBOILER & HEATER SHELL
CLS	B	P	H	O	G	C		CHEMICAL CLEANING-SYSTEM
CMP	B	P						CONTAINMENT PRESS MONIT. SYS
CMS	B	P	H					CONTAINMENT ATMOSPHERE MONITORING-SYSTEM
CNA	B	P	H	O	G	C		CONDENSATE - AUXILIARY CONDENSATE
CNC	B	P	H	O	G	C		CONDENSATE - CHEMICAL TREATMENT
CND	B	P	H	O	G	C		CONDENSATE - DEMINERALIZER
CNE	B	P	H	O	G	C		CONDENSATE,DRAINS-AIR COOLED CONDENSER
CNM	B	P	H	O	G	C		CONDENSATE - MAIN CONDENSATE
CNO	B	P	H	O	G	C		CONDENSATE PUMP LUBE OIL - SYSTEM

SYSTEM CODE	PLANT TYPES	SYSTEM DESCRIPTION
CNS	B P H O G C	CONDENSATE - MAKEUP,DRAWOFF
COC	B P H O G C S W	COMMUNICATION - CARRIER
COJ	B P H O G C S W	COMMUNICATION - MAINTENANCE
COL	B P H O G C S W	COMMUNICATION - TELEPHONE (LEASED LINE)
COM	B P H O G C S W	COMMUNICATION - MICROWAVE
COP	B P H O G C S W	COMMUNICATION - PAGING (PUBLIC ADDRESS)
COR	B P H O G C S W	COMMUNICATION - RADIO
COS	B P H O G C S W	COMMUNICATION - SOUND POWER
COT	B P H O G C S W	COMMUNICATION - TELEPHONE (INTR-PLANT)
CPD	B	CONTAINMENT ATMOSPHERIC DILUTION
CPM	B	CONTAINMENT HYDROGEN MIXING
CPP	B	CONTAINMENT PURGE
CPS	B	REACTOR CONTAINMENT. (INERTING & PURGE) BWR
CPX	B P H O G C	CONDENSATE POLISHING DEMINERALIZER
CRS	B P H O G C	COLD REHEAT - SYSTEM
CSH	B	CORE SPRAY - HIGH PRESSURE
CSL	B	CORE SPRAY - LOW PRESSURE
CSS	P	CONTAINMENT SPRAY-SYSTEM
CTS	B P H	REACTOR CORE TEMPERATURE-SYSTEM
CVS	P	CONTAINMENT VACUUM - SYSTEM
CWA	B P H O G C	CIRCULATING WATER - CONDENSER TUBE CLEANING
CWS	B P H O G C	CIRCULATING WATER - SYSTEM
CXC	O G C	COMBUSTION AIR HEATER-CONDENSATE
CXF	O G C	COMBUSTION AIR HEATER-HOT AIR
CXG	O G C	COMBUSTION AIR HEATER-GLYCOL
CXW	O G C	COMBUSTION AIR HEATER-WATER

SYSTEM CODE	PLANT TYPES	SYSTEM DESCRIPTION
CXZ	O G C	COMBUSTION AIR HEATER-STEAM
CYC	C	COAL HANDLING - DUST COLLECTION
CYH	C	COAL HANDLING YARD (TRIP,TRIP CNVR & BUNKER LEVEL)
CYS	C	COAL HANDLING - SUPPRESSION
DAS	P H	DRAINS (AERATED) REACTOR PLANT - SYSTEM
DCS	P H	DECONTAMINATION - SYSTEM
DEC	B P H O G C W	DRAINS-CONT AREA/BLDG FLOOR AND EQUIPMENT
DED	B	DRAINS-RADWASTE BLDG
DER	B	DRAINS - REACTOR BLDG EQUIP
DET	B	DRAINS - TURBINE BLDG EQUIP
DEW	B P H O G C W	DRAINS-WATER TREAT AREA/BLDG FLOOR AND EQUIPMENT
DFA	B	DRAINS, FLOOR - FUEL & AUX BLDG
DFB	O G C	DRAINS, FLOOR - BOILER PLANT
DFD	B P H O G C W	DRAINS, FLOOR - DIESEL GEN BLDG
DFE	B P H O G C	DRAINS, FLOOR - SERVICE AREA
DFF	B	DRAINS - FUEL & AUX BLDG EQUIP
DFM	B P H O G C W	DRAINS,FLOOR - MISC BLDGS
DFN	B	DRAINS,FLOOR TURBINE & REACTOR BLDG
DFR	B P H	DRAINS FLOOR - REACTOR PLANT
DFT	B P H O G C W	DRAINS, FLOOR - TURBINE PLANT
DFV	P	DRAINS, FLOOR - SOLIDWASTE BLDG
DFW	B P H	DRAINS,FLOOR-RADWASTE BLDG
DGS	B P H	DRAINS (HYDROGENATED) REACTOR PLANT - SYSTEM
DGV	B P	DRAINS, VALVE STEM
DHS	P	DECAY HEAT REMOVAL-SYSTEM (B&W)

SYSTEM CODE	PLANT TYPES	SYSTEM DESCRIPTION
DMS	B P H O G C	MOTOR CONTROL CENTER DC-SYSTEM
DPS	W	DRAINS - POWERHOUSE
DRF	B	DRYWELL FLOOR SEAL-SYSTEM
DRS	B	DRYWELL COOLING-SYSTEM
DSM	B P	DRAINS - MOISTURE SEPARATOR (NUCLEAR)
DSR	B P	DRAINS - MOISTURE SEPARATOR REHEATER
DTF	H	DRAINS - FLASH TANK
DTM	P H W	DRAINS - TURBINE PLANT MISCELLANEOUS
DUH	W	STATION SUMP DRAINAGE & UNWATERING SYS.
DWS	B P H O G C S W	DOMESTIC WATER - SYSTEM
DWT	B P H O G C W	DOMESTIC WATER TREATING
DXA	B P H O G C	DEWATERING SYSTEM - SUBSURFACE
DXF	W	DEWATERING - FISHWAY
DXR	W	DEWATERING - TAILRACE TUNNEL
DXT	W	DEWATERING - TURBINE
EBS	P	EMERGENCY BORATION - SYSTEM
ECS	B P H O G C	ENVIRONMENTAL MONITORING - SYSTEM
EDA	P	ESSENTIAL BUS - AC SUPPLY
EDB	P	ESSENTIAL BUS - DC SUPPLY
EDS	P	ESSENTIAL BUS - SYSTEM
EGA	B P H O G C W	GENERATOR,STANDBY-AIR COMPR-DIESEL STARTING AIR
EGD	B P H O G C W	GENERATOR,STANDBY-COMBUSTION AIR DAMPER CONTROL
EGE	B P H O G C W	GENERATOR,STANDBY-EXCITATION
EGF	B P H O G C W	GENERATOR,STANDBY-FUEL SYSTEM
EGO	B P H O G C W	GENERATOR,STANDBY-LUBE OIL SYSTEM

SYSTEM CODE	PLANT TYPES		SYSTEM DESCRIPTION
EGP	B P H O G C	W	GENERATOR,STANDBY-PROTECTION (INCLUDE ACB & INST)
EGS	B P H O G C	W	GENERATOR,STANDBY-SYSTEM
EGT	B P H O G C	W	GENERATOR,STANDBY-TEMPERATURE
EHS	B P H O G C		MOTOR CONTROL CENTER-STANDBY-SYSTEM
EJA	B P H O G C		UNIT SUBSTATION-STANDBY-AC CONT & HTR SUPPLY
EJB	B P H O G C		UNIT SUBSTATION-STANDBY-DC CONT SUPPLY
EJS	B P H O G C		UNIT SUBSTATION-STANDBY-SYSTEM
ELA	B P H O G C		SWGR,STANDBY,2400V-AC CONT & HTR SUPPLY
ELB	B P H O G C		SWGR,STANDBY,2400V-DC CONTROL SUPPLY
ELS	B P H O G C		SWGR,STANDBY,2400V-SYSTEM
ENA	B P H O G C		SWGR,STANDBY,4160V-AC CONT & HTR SUPPLY
ENB	B P H O G C		SWGR,STANDBY,4160V-DC CONTROL SUPPLY
ENS	B P H O G C		SWGR,STANDBY,4160V-SYSTEM
EOA	B P H O G C		SWGR,STANDBY,6900V-AC CONT & HTR SUPPLY
EOB	B P H O G C		SWGR,STANDBY,6900V-DC CONTROL SUPPLY
EOS	B P H O G C		SWGR,STANDBY,6900V-SSYTEM
EPA	B P H O G C		SWGR,STANDBY,13.8KV-AC CONT & HTR SUPPLY
EPB	B P H O G C		SWGR,STANDBY,13.8KV-DC CONTROL SUPPLY
EPS	B P H O G C		SWGR,STANDBY,13.8KV-SYSTEM
ERS	B P H		EARTHQUAKE RECORDING SYSTEM
ESS	B P H O G C		EXTRACTION - SYSTEM
EXA	B P H O G C	W	EXCITATION-MAIN GEN-AC CONT & HTR SUPPLY
EXB	B P H O G C	W	EXCITATION - MAIN GENERATOR - DC CONTROL SUPPLY
EXC	B P H O G C	W	EXCITATION - MAIN GENERATOR - COOLING

SYSTEM CODE	PLANT TYPES	SYSTEM DESCRIPTION
EXG	B P H O G C W	EXCITATION - MAIN GENERATOR - GROUND DETECTOR SYS
EXP	B P H O G C W	EXCITATION - MAIN GENERATOR - PROTECTION
EXS	B P H O G C W	EXCITATION - MAIN GENERATOR - SYSTEM (POWER CKT'S)
EXV	B P H O G C W	EXCITATION - MAIN GENERATOR - VOLTAGE REGULATOR
FCS	C	FUEL-COAL STA. (RAPPERS,FEEDERS,PULV'S, GATES,ETC)
FGS	G	FUEL-GAS - SYSTEM
FHS	B P H O G C W	FISHWAY - SYSTEM
FNR	B P H	FUEL-NUCLEAR - REFUELING
FNS	B P H	FUEL,NUCLEAR-FUEL STORAGE
FNT	B P H	FUEL-NUCLEAR - TRANSFER
FOA	B P H O G C W	FUEL-OIL - AUXILIARY BOILER (SUPPLY TO)
FOC	O	FUEL-OIL - ADDITIVE SYSTEM
FOF	B P H O G C W	FUEL-OIL - ENGINE DRIVEN FIRE PUMP
FOH	O C	FUEL-OIL - HEATERS
FOM	O	FUEL-OIL - MAIN BOILER (SUPPLY TO)
FOY	O	FUEL-OIL - YARD FACILITIES
FPA	B P H O G C W	FIRE DETECTION - ALARM SYSTEM
FPC	B P H O G C W	FIRE PROTECTION - DRY CHEMICAL
FPF	B P H O G C S W	FIRE PROTECTION - FOAM SYSTEM
FPG	B P H O G C W	FIRE PROTECTION - HALON
FPH	B P H O G C W	FIRE PROTECTION - HIGH PRESSURE CO2
FPL	B P H O G C W	FIRE PROTECTION - LOW PRESSURE CO2
FPM	B P H O G C W	FIRE PROTECTION - SUPERVISION SYSTEM
FPP	B P H O G C W	FIRE PROTECTION-FIRE PUMP (MAKEUP PUMP, DIESEL,ETC.)

SYSTEM CODE	PLANT TYPES	SYSTEM DESCRIPTION
FPS	B P H O G C S W	FIRE PROTECTION-SYS
FPW	B P H O G C S W	FIRE PROTECTION - WATER
FWA	B P H O G C	FEEDWATER-AUXILIARY FEEDWATER
FWD	H	STEAM-WATER DUMP-SYS
FWF	B P H O G	FEEDWATER-PUMP FLUID DRIVE
FWK	B P H O G C	FEEDWATER - MOTOR DRIVEN FEEDWATER PUMP COUPLING
FWL	B P H O G C	FEEDWATER-PUMP & DRIVER OIL SYSTEMS
FWP	B P H O G C	FEEDWATER & CONDENSATE PUMP-SEALS & LEAKOFF
FWR	B P H O G C	FEEDWATER - RECIRCULATION & BALANCE DRUM LEAKOFF
FWS	B P H O G C	FEEDWATER - SYSTEM
FWT	B P H O G C	FEEDWATER - HIGH PRESSURE
GDT	W	GATE - DRAFT TUBE
GMC	B P H O G C W	GENERATOR,MAIN-STATOR COOLING
GMH	B P H O G C	GENERATOR,MAIN-HYDROGEN & CO2
GML	B P H O G C W	GENERATOR,MAIN-LEADS
GMO	B P H O G C	GENERATOR,MAIN-SEAL OIL
GMS	B P H O G C W	GENERATOR,MAIN-SYSTEM
GSF	H	GAS-HELIUM - FUEL HANDLING & PURGE
GSH	P H	GAS-HYDROGEN - SYSTEM (NUCLEAR)
GSL	H	GAS-HELIUM - SYSTEM
GSN	B P H	GAS-NITROGEN - SYSTEM (NUCLEAR)
GSO	B P H	GAS - OXYGEN - SYSTEM (NUCLEAR)
GSP	H	GAS-HELIUM - PCRV SEAL & PURGE
GSR	H	GAS-HELIUM - RECOVERY
GTS	B	GAS TREATMENT,STANDBY-SYSTEM

SYSTEM CODE	PLANT TYPES		SYSTEM DESCRIPTION
GWS	P H		GASEOUS WASTE (RADIOACTIVE) -SYSTEM
HAG		W	HYDRAULIC POWER - GOVERNOR
HAS	H	W	HYDRAULIC POWER - SYSTEM
HAV		W	HYDRAULIC POWER - GATES/VALVES
HBS	B P H O G C		HEAT BALANCE - SYSTEM
HCS	B P H		HYDROGEN RECOMBINER SYSTEM (POST DBA)
HDH	B P H O G C		HEATER DRAINS - HIGH PRESSURE
HDL	B P H O G C		HEATER DRAINS- LOW PRESSURE
HEP	H		HELIUM PURIFICATION
HPS	P		HIGH PRESS INJECTION - SYSTEM(B&W)
HRS	B P H O G C		HOT REHEAT - SYSTEM
HTS	B P H O G C	W	HEAT TRACING - SYSTEM
HVA	B P H O G C		CHILLED WATER - OFFICE
HVB	O G C		VENTILATION - BOILER PLANT
HVC	B P H O G C	W	AIR COND. - CONTROL BLDG OR AREA
HVD	B P H O G C	W	GAS HEATING-DIRECT FIRED - SYSTEM
HVE	B P H O G C		VENTILATION - SERVICE BLDG
HVF	B P		VENTILATION - FUEL BLDG
HVG	B P H O G C	W	GLYCOL HEATING - SYSTEM
HVH	B P H O G C	W	HOT WATER HEATING - SYSTEM
HVI	B P H O G C		VENTILATION - AUX BLOILER ROOM
HVJ	B P H O G C	W	VENTILATION - WTR TREAT BLDG
HVK	B P H O G C	W	CHILLED WATER - CONTROL BLDG OR AREA
HVL	B P H O G C		AIR CONDITIONING - SERVICE BLDG
HVM	B P H O G C	W	STEAM HEATING - SYSTEM
HVN	B P H O G C	W	CHILLED WATER - VENTILATION

SYSTEM CODE	PLANT TYPES	SYSTEM DESCRIPTION
HVO	B P H O G C W	AIR CONDITIONING - OFFICE BLDG
HVP	B P H O G C W	VENTILATION - DIESEL GEN BLDG
HVQ	P	VENTILATION - ENGINEERED SAFETY FEATURES BLDG
HVR	B P H	VENTILATION - REACTOR PLANT
HVS	B P H O G C S W	HTG,VENTILATING,AIR COND. - SYSTEM
HVT	B P H O G C W	VENTILATION - TURBINE PLANT
HVU	B	VENTILATION - CONTAINMENT STRUCTURE
HVV	B P H	VENTILATION - MAIN STM VALVE BLDG
HVW	B	VENTILATION - RADWASTE BLDG
HVX	B P H O G C W	REFRIGERATION - SYSTEM
HVY	B P H O G C W	VENTILATION - YARD STRUCTURES
HVZ	B P H O G C	HTG,VENTILATING,AIR COND CONDENSING WATER - SYSTEM
HWA	B	VENTILATION - AUXILIARY BLDG
HWE	B P H O G C W	VENTILATION AND COOLING - SWGR BLDG
HWH	B P H O G C W	VENTILATION AND COOLING - WAREHOUSE
HWN	B P H O G C W	VENTILATION - SERVICE WATER BLDG
HWO	B P H O G C W	HEATING,HOT WATER - ADMIN.BLDG
HWP	O G C	VENTILATION - PRECIPITATOR BLDG
HWS	B P H O G C W	VENTILATION AND COOLING - SECURITY BLDG
HWT	B P H O G C W	VENTILATION AND COOLING - WASTE TREATM BLDG
HWW	B P H O G C W	VENTILATION - SERVICE WATER
HWY	B P H	VENTILATION AND COOLING - HEALTH PHYSICS BLDG
IAC		INSTRUMENT AIR - CONTAINMENT
IAS	B P H O G C W	INSTRUMENT AIR SYSTEM

SYSTEM CODE	PLANT TYPES	SYSTEM DESCRIPTION
ICS	B	REACTOR CORE ISOLATION COOLING - SYSTEM
IGS	O G C	IGNITION GAS - SYSTEM
IHA	B P H O G C W	INFORMATION HANDLING-ANNUNCIATOR
IHC	B P H O G C W	INFORMATION HANDLING-COMPUTER
IHO	B P H O G C W	INFORMATION HANDLING-OSCILLOGRAPH
IHS	B P H O G C W	INFORMATION HANDLING-SYSTEM
IIS	B P H	INCORE INSTRUMENTATION SYSTEM
IOS	O C	IGNITION OIL - SYSTEM
ISC	B P H	ISOLATION - CONTAINMENT
ISD	B	ISOLATION - DRYWELL
ISM	B	ISOLATION - MAIN STEAM
ISR	B P H	ISOLATION-REACTOR VESSEL
JAA		ADM. BLDG. - SUBSTRUCTURE ALL
JAB		ADM. BLDG. - SUPERSTRUCTURE ALL
JBA		BOILER RM. - SUBSTRUCTURE FOSSIL
JBB		BOILER RM. - SUBSTRUCTURE FOSSIL
JCA		CONTROL RM. - SUBSTRUCTURE ALL
JCB		CONTROL RM. - SUPERSTRUCTURE
JDA		DIESEL GEN. RM. - SUBSTRUCTURE
JDB		DIESEL GEN. RM. - SUPERSTRUCTURE
JEA		OUTDOOR CRANEWAY NO. 1 - SUBSTRUCTURE
JEB		OUTDOOR CRANEWAY NO. 1 - SUPERSTRUCTURE
JFA		FUEL STORAGE HOUSE - SUBSTRUCTURE
JFB		FUEL STORAGE HOUSE - SUPERSTRUCTURE
JGA		SPILLWAY GATE CONTROL HOUSE - SUBSTRUCTURE
JGB		SPILLWAY GATE CONTROL HOUSE - SUPERSTRUCTURE

SYSTEM CODE	PLANT TYPES	SYSTEM DESCRIPTION
JHA		COOLING TOWER - SUBSTRUCTURE
JHB		COOLING TOWER - SUPERSTRUCTURE
JHC		COOLING TOWER,CIRC.WTR - SUBSTRUCTURE
JHD		COOLING TOWER,CIRC.WTR - SUPERSTRUCTURE
JHE		COOLING TOWER,SERV.WTR - SUBSTRUCTURE
JHF		COOLING TOWER,SERV.WTR - SUPERSTRUCTURE
JIA		INFORMATION BLDG. - SUBSTRUCTURE
JIB		INFORMATION BLDG. - SUPERSTRUCTURE
JJA		WASTE DISPOSAL BLDG.- SUBSTRUCTURE
JJB		WASTE DISPOSAL BLDG.- SUPERSTRUCTURE
JKA		MISCELLANEOUS BLDG. - SUBSTRUCTURE
JKB		MISCELLANEOUS BLDG. - SUPERSTRUCTURE
JLA		TANK AREA STRUCTURES - SUBTRUCTURE
JLB		TANK AREA STRUCTURES - SUPERSTRUCTURE
JLC		REACTOR PLANT TANK AREA STRUCT.- SUBSTRUCTURE
JLD		REACTOR PLANT TANK AREA STRUCT.- SUPERSTRUCTURE
JMA		WATER TREATMENT BLDG. - SUBSTRUCTURE
JMB		WATER TREATMENT BLDG - SUPERSTRUCTURE
JNA		RADWASTE BLDG - SUBSTRUCTURE
JNB		RADWASTE BLDG - SUPERSTRUCTURE
JOA		OFFICE BLDG. - SUBSTRUCTURE
JOB		OFFICE BLDG. - SUPERSTRUCTURE
JPA		PRIMARY AUXILIARY BLDG. - SUBSTRUCTURE
JPB		PRIMARY AUXILIARY BLDG. - SUPERSTRUCTURE
JQA		DECONTAM. BLDG. - SUBSTRUCTURE

SYSTEM CODE	PLANT TYPES	SYSTEM DESCRIPTION
JQB		DECONTAM. BLDG. - SUPERSTRUCTURE
JRA		REACTOR BLDG. - SUBSTRUCTURE
JRB		REACTOR BLDG. - SUPERSTRUCTURE
JSA		GAR. STOR. BLDG. - SUBSTRUCTURE
JSB		GAR. STOR. BLDG. - SUPERSTRUCTURE
JTA		TURBINE RM. - SUBSTRUCTURE
JTB		TURBINE RM. - SUPERSTRUCTURE
JUA		VACUUM PRIMING BLDG. - SUBSTRUCTURE
JUB		VACUUM PRIMING BLDG. - SUPERSTRUCTURE
JVA		EL EQUIP AREAS - SWGR - SUBSTRUCTURE
JVB		EL EQUIP AREAS - SWGR - SUPERSTRUCTURE
JVC		EL EQUIP AREAS - XFMR - SUBSTRUCTURE
JVD		EL EQUIP AREAS - XFMR - SUPERSTRUCTURE
JWA		SCREENWELL AND PUMP HOUSE - SUBSTRUCTURE
JWB		SCREENWELL AND PUMP HOUSE - SUPERSTRUCTURE
JXA		AUX. BOILER RM. - SUBSTRUCTURE
JXB		AUX. BOILER RM. - SUPERSTRUCTURE
JYA		SWYD. CONTROL HSE. - SUBSTRUCTURE
JYB		SWYD. CONTROL HSE. - SUPERSTRUCTURE
JZA		SERVICE BLDG. - SUBSTRUCTURE
JZB		SERVICE BLDG. - SUPERSTRUCTURE
KAA		AUXILIARY GEN. HSE. - SUBSTRUCTURE
KAB		AUXILIARY GEN. HSE. - SUPERSTRUCTURE
KBA		BORON EVAP. PUMP HSE. - SUBSTRUCTURE
KBB		BORON EVAP. PUMP HSE. - SUPERSTRUCTURE
KCA		CHLORINE BLDG. - SUBSTRUCTURE

SYSTEM CODE	PLANT TYPES	SYSTEM DESCRIPTION
KCB		CHLORINE BLDG. - SUPERSTRUCTURE
KDA		DISCHARGE VACUUM PRIMARY PUMP HSE. - SUBSTRUCTURE
KDB		DISCHARGE VACUUM PRIMARY PUMP HSE. - SUPERSTRUCTURE
KFA		FUEL OIL PUMP HSE. - SUBSTRUCTURE
KFB		FUEL OIL PUMP HSE. - SUPERSTRUCTURE
KGA		GATE HSE. - SUBSTRUCTURE
KGB		GATE HSE. - SUPERSTRUCTURE
KHA		HYD. STOR. BLDG. - SUBSTRUCTURE
KHB		HYD. STOR. BLDG. - SUPERSTRUCTURE
KIA		INTAKE STRUCT. - SUBSTRUCTURE
KIB		INTAKE STRUCT. - SUPERSTRUCTURE
KJA		CONTAINMENT AUX. STRUCT. - SUBSTRUCTURE
KJB		CONTAINMENT AUX. STRUCT. - SUPERSTRUCTURE
KKA		CONTAINMENT SPRAY PUMP AREA STOR. - SUBSTRUCTURE
KKB		CONTAINMENT SPRAY PUMP AREA STOR. - SUPERSTRUCTURE
KMA		MAIN STEAM SHOP - SUBSTRUCTURE
KMB		MAIN STEAM SHOP - SUPERSTRUCTURE
KNA		FIRE PUMP HSE. - SUBSTRUCTURE
KNB		FIRE PUMP HSE. - SUPERSTRUCTURE
KPA		PURGE AIR EQUIP. BLDG. - SUBSTRUCTURE
KPB		PURGE AIR EQUIP. BLDG. - SUPERSTRUCTURE
KRB		RADIATION CONT. AREA STOR. BLDG. - SUPERSTRUCTURE
KSA		STACK. - SUBSTRUCTURE
KSB		STACK. - SUPERSTRUCTURE

SYSTEM CODE	PLANT TYPES	SYSTEM DESCRIPTION
KTA		WEATHER TOWER - SUBSTRUCTURE
KTB		WEATHER TOWER - SUPERSTRUCTURE
KWA		WAREHOUSE - SUBSTRUCTURE
KWB		WAREHOUSE - SUPERSTRUCTURE
LAA	B P H O G C W	LIGHTING,AC-ADMINISTRATION BLDG
LAB	O G C	LIGHTING,AC-BOILER AREA
LAC	B P H O G C W	LIGHTING,AC-CONTROL ROOM (MAIN)
LAD	B P H O G C W	LIGHTING,AC-DIESEL GENERATOR ROOM
LAE	B P H O G C	LIGHTING,AC-SETTLING POND
LAF	B P H O G C	LIGHTING,AC-FUEL STORAGE AREA
LAG	B P H O G C W	LIGHTING,AC-SPILLWAY GATE CONT HSE
LAH	B P H O G C	LIGHTING,AC-COOLING TOWER & POND AREA
LAI	B P H O G C W	LIGHTING,AC-INFORMATION AREA
LAJ	B P H O G C	LIGHTING,AC-WASTE DISPOSAL BLDG
LAK	B P H O G C W	LIGHTING,AC-MISC BLDGS
LAL	W	LIGHTING,AC-GALLERY AREA
LAM	B P H O G C	LIGHTING,AC-WATER TREATMENT BLDG
LAN	B	LIGHTING,AC-RADWASTE BLDG
LAO	B P H O G C W	LIGHTING,AC-OUTDOOR
LAP	B P H O G C	LIGHTING,AC-PRIMARY AUXILIARY BLDG
LAQ	B P H	LIGHTING,AC-DECONTAMINATION BLDG
LAR	B P H	LIGHTING,AC-REACTOR BLDG
LAS	B P H O G C W	LIGHTING,AC-SYSTEM (SUPPLY)
LAT	B P H O G C W	LIGHTING,AC-TURBINE AREA
LAU	B P H O G C	LIGHTING,AC-VACUUM PRIMING BLDG
LAV	B P H O G C S W	LIGHTING,AC-WARNING

SYSTEM CODE	PLANT TYPES	SYSTEM DESCRIPTION
LAW	B P H O G C	LIGHTING,AC-SCREENWELL AND PUMPHOUSE
LAX	B P H O G C W	LIGHTING,AC-AUXILIARY BOILER ROOM
LAY	S	LIGHTING,AC-SWYD OR SUBSTA (INCLUDING CONT HSE)
LAZ	B P H O G C	LIGHTING,AC-SERVICE BLDG
LBA	B P H O G C W	LIGHTING,DC-ADMINISTRATION BLDG
LBB	O G C	LIGHTING,DC-BOILER AREA
LBC	B P H O G C W	LIGHTING,DC-CONTROL ROOM (MAIN)
LBK	B P H O G C W	LIGHTING,DC-MISC. AREAS
LBP	B P H O G C	LIGHTING,DC-PRIMARY AUXILIARY BLDG
LBR	B P H	LIGHTING,DC-REACTOR BLDG
LBS	B P H O G C W	LIGHTING,DC-SYSTEM (SUPPLY)
LBT	B P H O G C W	LIGHTING,DC-TURBINE AREA
LBV	B P H O G C S W	LIGHTING,DC-WARNING
LBZ	B P H O G C	LIGHTING,DC-SERVICE BLDG
LCS	H	SUPPLEMENTARY LEAK COLLECTION - SYS
LFC	B P H O G C W	LOAD FREQUENCY CONTROL-SYSTEM
LLR	B P H O G C S W	LAND AND LAND RIGHTS
LMS	B P H	LEAKAGE MONITORING SYSTEM
LOS	B P H O G C W	LUBE OIL (TREATMENT AND STORAGE ONLY) - SYSTEM
LPM	P	LOOSE PARTS MONITORING - SYS.
LSV	B	LEAKAGE CONTROL,PENETRATION VALVE
LTG	B P H O G C S W	LIGHTING
LUS	W	LUBRICATION - SYSTEM
LWC	B P H	LIQUID WASTE - CONDENSATE DEMIN. SYSTEM
LWS	B P H	LIQUID WASTE (RADIOACTIVE) - SYSTEM

SYSTEM CODE	PLANT TYPES		SYSTEM DESCRIPTION
MBA	O G C		BOILER,MAIN-SECONDARY AIR & FLUE GAS
MBB	O G C		BOILER,MAIN-BURNER CONTROL
MBD	O G C		BOILER,MAIN-DRAINS TO BOILER BLOWOFF TANK
MBE	O G C		BOILER,MAIN-SEAL AIR
MBG	O G C		BOILER,MAIN-IGNITION AIR
MBH	O G C		BOILER,MAIN-CHEMICAL FEED
MBI	O G C		BOILER,MAIN-CIRCULATION SEAL INJECTION
MBK	O G C		BOILER,MAIN-SO2 REMOVAL
MBL	O G C		BOILER,MAIN-CONTINUOUS BLOWDOWN,HDR VENTS & DRAINS
MBM	O G C		BOILER,MAIN-MONITORING
MBO	O G C		BOILER,MAIN-ONCE THROUGH STARTUP-SYSTEM
MBP	O G C		BOILER,MAIN-PROTECTION (BOILER TRIP)
MBR	O G C		BOILER,MAIN-STARTUP DRUM SYSTEM
MBS	O G C		BOILER,MAIN-SYSTEM
MBW	O G C		BOILER,MAIN-PRIMARY AIR
MBX	O G C		BOILER,MAIN-SCANNER AND TELEVISION COOLING AIR
MBZ	O G C		BOILER,MAIN-SOOT BLOWING
MCB	B P H O G C	W	MAIN CONTROL BOARD
MCC	B P H O G C	W	MOTOR CONTROL CENTER
MDS	B P H O G C	W	MOTOR OPERATED DOORS - SYSTEM
MHB	O G C		MAT HANDLING(CRANES,HOISTS,ETC)-BOILER AREA
MHF	B P H O G C		MAT HANDLING(CRANES,HOISTS,ETC)-FUEL STORAGE AREA
MHG	B P H O G C	W	MAT HANDLING(CRANES,HOISTS,ETC)-SPLLWY GATE&PP HSE

SYSTEM CODE	PLANT TYPES		SYSTEM DESCRIPTION
MHH	B P H O G C		MAT HANDLING (CRANES, HOISTS, ETC) -CHLORINE STRG AREA
MHI	B P H O G C	W	MAT HANDLING (CRANES, HOISTS, ETC) - INTAKE STRUCT
MHJ	B P H O G C		MAT HANDLING-CRANES, HOISTS, ETC-WASTE DISPOSAL BLDG
MHK	B P H O G C	W	MAT HANDLING (CRANES, HOISTS, ETC) -MISC BLDGS
MHN	B P H		MATERIAL HANDLING-RADWASTE BLDG
MHP	B P H O G C		MAT HANDLING (CRANES, HOISTS, ETC) -PRI AUX BLDG
MHR	B P H		MAT HANDLING (CRANES, HOISTS, ETC) -REAC BLDG (CONTNMT)
MHS	B P H O G C	W	MAT HANDLING (CRANES, HOISTS, ETC) -SYSTEM
MHT	B P H O G C	W	MAT HANDLING (CRANES, HOISTS, ETC) - TURBINE AREA
MHW	B P H O G C		MAT HANDLING (CRANES, HOISTS, ETC) - SCREENWELL& PP HSE
MHZ	B P H O G C		MAT HANDLING (CRANES, HOISTS, ETC) - SERVICE BLDG
MMS	B P H O G C	W	METEOROLOGICAL MONITORING SYSTEM
MSE	B P H O G C		MN TURB EXH STM TO AIR COOLED CONDENSER
MSI	B		MN STM ISOLATION VALVE SEALS
MSR	P		MN STM-REHEAT (MOIST SEP&REHEAT-NUCL)
MSS	B P H O G C		MAIN STEAM SYSTEM (FOSSIL AND NUCLEAR)
MTX	B P H O G C	W	MN TRANS INCL AUXILIARIES (COOLERS, LTC, ALARMS, ETC)
MUS	P		MAKEUP & PURIFICATION-SYSTEM (B&W)
MWS	B P H O G C	W	MAKEUP WATER- SYSTEM (RAW WATER)
NBS	O G C		NITROGEN BLANKETING - SYSTEM (FOSSIL)
NHS	B P H O G C	W	MOTOR CONTROL CENTER, NORMAL-SYSTEM
NJA	B P H O G C	W	UNIT SUBSTATION-AC CONT & HTR SUPPLY

SYSTEM CODE	PLANT TYPES	SYSTEM DESCRIPTION
NJB	B P H O G C W	UNIT SUBSTATION-DC CONTROL SUPPLY
NJS	B P H O G C W	UNIT SUBSTATION-SYSTEM
NLA	B P H O G C W	SWGR,NORMAL,2400V-AC CONT & HTR SUPPLY
NLB	B P H O G C W	SWGR,NORMAL,2400V-DC CONTROL SUPPLY
NLS	B P H O G C W	SWGR,NORMAL,2400V-SYSTEM
NME	B P H	NEUTRON MONITORING-SYS
NMI	B P H	NEUTRON MONITORING - INTERMEDIATE RANGE
NMP	B P H	NEUTRON MONITORING - POWER RANGE
NMS	B P H	NEUTRON MONITORING - SOURCE RANGE
NMT	B P H	NEUTRON MONITORING - TRAVERSE INCORE PROBES
NNA	B P H O G C W	SWGR,NORMAL,4160V-AC CONT & HTR SUPPLY
NNB	B P H O G C W	SWGR,NORMAL,4160V-DC CONTROL SUPPLY
NNS	B P H O G C W	SWGR,NORMAL,4160V-SYSTEM
NOA	B P H O G C W	SWGR,NORMAL,6900V-AC CONT & HTR SUPPLY
NOB	B P H O G C W	SWGR,NORMAL,6900V-DC CONTROL SUPPLY
NOS	B P H O G C W	SWGR,NORMAL,6900V-SYSTEM
NPA	B P H O G C W	SWGR,NORMAL,13.8KV-AC CONT & HTR SUPPLY
NPB	B P H O G C W	SWGR,NORMAL,13.8KV-DC CONTROL SUPPLY
NPS	B P H O G C W	SWGR,NORMAL,13.8KV-SYSTEM
NSS	P	NEUTRON SHIELD TANK AND COOLING - SYSTEM
NXS	B	PIPE DISPLACEMENT MONITORING - SYSTEM
OFC	B P H O G C W	OFFICE & COMMISSARY EQUIPMENT
OFG	B	OFF GAS
OWS	B P H O G C S W	OIL-WATER SEPARATION SYSTEM
PBS	B P H O G C S W	SANITARY SEWERAGE FACILITIES - SYSTEM
PCS	B P H O G C W	PROTECTION,CATHODIC - SYSTEM

SYSTEM CODE	PLANT TYPES	SYSTEM DESCRIPTION
PES	B P H	PRESSURIZATION,EMER - SYSTEM
PGS	P	PRIMARY GRADE WATER - SYSTEM
PHS	B P H	PERSONNEL ACCESS DOOR-SYS
POC	B P H O G C S W	POWER OUTLET-OUTLETS FOR CONTROLLING DEVICES
POG	B P H O G C S W	POWER OUTLET-GENERAL PURPOSE,SINGLE PHASE
POI	B P H O G C S W	POWER OUTLET-INDICATING AND RECORDING DEVICES
POP	B P H O G C S W	POWER OUTLET-GENERAL PURPOSE,THREE PHASE
QSS	P	QUENCH SPRAY SYSTEM (CONTAINMENT)
RAD	B P H	RADIATION MONITORING - AUXILIARY BOILER ROOM
RBC	O G C	REBOILER - CONDENSATE RETURN (FOSSIL)
RBD	B	REBOILER DRAINS AUX STEAM - SYS
RBF	O G C	REBOILER - FEEDWATER (FOSSIL)
RBH	B P H O G C	REBOILER,CHEMICAL FEED
RBM	O G C	REBOILER - STEAM (FOSSIL)
RCA	H	REACTOR COOLANT-AUXILIARY SERVICE
RCM	H	REACTOR COOLANT-MAIN CIRCULATOR SERVICE
RCR	H	PCRV PRESSURE RELIEF-SYS
RCS	B P H	REACTOR COOLANT (PRI LOOP) - SYSTEM
RDC	B P H	REACTOR ROD DRIVE - CONTROL
RDI	B P H	REACTOR ROD DRIVE - INSTRUMENTATION
RDS	B P H	REACTOR ROD DRIVE - SYSTEM
RDT	P	REACTOR ROD DRIVE,TEST
RHS	B P H	RESIDUAL HEAT REMOVAL-SYSTEM
RMA	B P H	RADIATION MONITORING - ADMINISTRATION BLDG
RMC	B P H	RADIATION MONITORING - CONTROL ROOM

SYSTEM CODE	PLANT TYPES	SYSTEM DESCRIPTION
RMD	B P H	RADIATION MONITORING - DIESEL GENERATOR ROOM
RMF	B P H	RADIATION MONITORING - FUEL STORAGE AREA
RMI	B P H	RADIATION MONITORING - INFORMATION CENTER
RMJ	B P H	RADIATION MONITORING - WASTE DISPOSAL BLDG
RMK	B P H	RADIATION MONITORING - MISC BLDGS
RMN	B P H	RADIATION MONITORING - RADWASTE BLDG
RMP	B P H	RADIATION MONITORING - PRI AUXILIARY BLDG
RMR	B P H	RADIATION MONITORING - REACTOR BLDG
RMS	B P H	RADIATION MONITORING - SYSTEM
RMT	B P H	RADIATION MONITORING - TURBINE BLDG
RMW	B P H	RADIATION MONITORING - SCREENWELL AND PUMP HOUSE
RMZ	B P H	RADIATION MONITORING - SERVICE BLDG
RPM	B P H	REACTOR PROTECTION SYSTEM - M-G SET
RPS	B P H	REACTOR PROTECTION - SYSTEM
RRC	B	REACTOR WTR RECIRCULATION -M-G SET COUPLING
RRG	B	REAC WTR RECIRC -M-G SET GENERATOR& EXCITATION
RRL	B	REAC WTR RECIRC -LUBE OIL SYSTEM
RRM	B	REAC WTR RECIRC -M-G SET MOTOR
RRP	B	REAC WTR RECIRC -PROTECTION - (ELECTRIAL)
RSS	P	CONTAINMENT RECIRCULATION SPRAY - SYSTEM
RTX	B P H O G C W	RES STA SERV TRANS INCL AUXILIARIES (CLRS,ALM,ETC)
RVS	B P H	REACTOR VESSEL-SYSTEM
SAH	W	SERVICE AIR - HIGH PRESSURE
SAS	B P H O G C W	SERVICE AIR - SYSTEM

SYSTEM CODE	PLANT TYPES							SYSTEM DESCRIPTION
SAT							W	SERVICE AIR - TAILWATER DEPRESSION
SBA				O	G	C		SOOT BLOWING AIR-SYSTEM
SCA	B	P	H	O	G	C	W	STA CONT BUS (NONVITAL) -AC SUPLY INCL TFMR&TRANS SW
SCB	B	P	H	O	G	C	W	STATION CONTROL BUS (NONVITAL) - DC SUPPLY
SCC	B	P	H					STATION CONTROL - BYPASS/INOP STATUS INDIC.
SCI	B	P	H	O	G	C	W	STA CONT BUS (NONVITAL) -INDICATION (BKRS,VALVES,ETC)
SCM	B	P	H	O	G	C		STATION CONTROL MONITORING (VITAL) - INDICATION
SCV	B	P	H	O	G	C		STA CONT BUS (VITAL) -AC SUPPLY INCL TFMR&TRANS SW
SDS				O	G	C		STEAM DRAINS - SYSTEM (FOSSIL)
SER	B	P	H	O	G	C		SUPPRESSION-RESERVOIR EVAPORATION
SES	B	P	H					NUCLEAR SERVICING EQUIP - SYS (OTHER THAN REFUEL)
SFC	B	P						SPENT FUEL-FUEL POOL CLG & CLEANUP (INC. POOL&AUX)
SFT	B							FUEL TRANSFER - SYS
SGC		P						STEAM GEN WATER CLEANUP
SGF		P	H					STEAM GENERATOR-CHEMICAL FEED
SGL		P						STEAM GEN WET LAY-UP - SYSTEM
SGR		P						STEAM GENERATOR RECIRC
SHS			H					RESERVE SHUTDOWN ACTUATION-SYS
SIH		P						SAFETY INJECTION - HIGH PRESSURE
SIL		P						SAFETY INJECTION - LOW PRESSURE
SIS		P	H					SAFETY INJECTION - SYSTEM
SLS	B							STANDBY LIQUID CONTROL (POISONING) - SYSTEM

SYSTEM CODE	PLANT TYPES	SYSTEM DESCRIPTION
SNS	B P H	NEUTRON SHIELDING-SYSTEM
SPB	B P H O G C W	STATION PROTECTION - DC CONTROL SUPPLY
SPF	B P H O G C W	STATION PROTECTION RESERVE STA SERVICE LINE
SPG	B P H O G C W	STATION PROTECTION - GENERATOR
SPI	B P H O G C W	STATION PROTECTION - GEN,MN TFMR,STA SER BUS
SPL	B P H O G C W	STATION PROTECTION - GENERATOR LINE
SPM	B P H O G C W	STATION PROTECTION - MAIN TRANSFORMER
SPR	B P H O G C W	STATION PROTECTION - RES STA SERV TRANS
SPS	B P H O G C W	STATION PROTECTION - STA SERV TRANS
SPU	B P H O G C W	STATION PROTECTION - UNIT
SPX	B P H O G C W	STATION PROTECTION-AUX PWR TRANS
SPY	S	STATION PROTECTION YARD DC CONTROL SUPPLY
SRR	B P H O G C W	STORM SEWER - ROOF DRAINAGE
SRS	B P H O G C W	STORM SEWER-SYSTEM
SRW	B P H O G C W	STORM SEWER - STORM & WASTE WATER
SSA	B	SAMPLING SYSTEM-FUEL & AUX BLDG
SSC	B	SAMPLING SYSTEM - CONTAINMENT
SSF	B	SAMPLING SYSTEM - FAILED FUEL DETECTION
SSR	P H	SAMPLING SYSTEM-REACTOR PLANT
SSS	O G C W	SAMPLING SYSTEM - PLANT
SST	B P H	SAMPLING SYSTEM - TURBINE PLANT (NUCLEAR)
SSW	B	SAMPLING SYSTEM-RADWASTE BLDG
STX	B P H O G C W	STA SERV TRANS NORMAL INCL AUXS (CLRS,ALARMS,ETC)
SUM	B P H O G C S W	SUPERVISORY CONTROL - MULTIPLEX

SYSTEM CODE	PLANT TYPES	SYSTEM DESCRIPTION
SVH	B P H O G C	STEAM VENTS-FEEDWATER HEATER RELIEF VENT & DRAINS
SVS	B P H O G C	STEAM VENTS - SYSTEM
SVV	B P H O G C	STEAM VENTS-SAFETY VALVES
SWC	B P H O G C	SERVICE WATER-CHILLED WATER
SWG	B P H O G C W	SWITCHGEAR
SWH	B P H O G C W	SERVICE WATER
SWM	P	SERVICE WATER - TURBINE PLANT
SWP	B P H	SERVICE WATER-SYSTEM (NUCLEAR)
SWS	O G C W	SERVICE WATER - SYSTEM
SWT	B P H O G C	SERVICE WATER - TRAVELING SCREENS-WASH & DISPOSAL
SWV	W	SERVICE WATER - SPHERICAL VALVE SEAL
SXS	B P H W	STARTUP TEST INSTRUMENTATION - SYS
SYD	B P H O G C	SYNCHRONIZING - DIESEL GENERATOR
SYG	B P H O G C W	SYNCHRONIZING - MAIN GENERATOR
SYL	B P H O G C S W	SYNCHRONIZING - LINE
SYR	B P H O G C W	SYNCHRONIZING - RESERVE SYSTEM
SYS	B P H O G C W	SYNCHRONIZING - STATION SERVICE
TFA	B P H O G C	TURBINE,FEED PUMP-ALARMS AND TRIPS
TFC	B P H O G C	TURBINE,FEED PUMP-CONTROL
TFD	B P H O G C	TURBINE,FEED PUMP-DISCONNECT COUPLING
TFE	B P H O G C	TURBINE,FEED PUMP-GLAND SEAL
TFG	B P H O G C	TURBINE,FEED PUMP-TURNING GEAR
TFI	B P H O G C	TURBINE,FEED PUMP-SUPERVISORY INSTRUMENTATION
TFL	B P H O G C	TURBINE,FEED PUMP-LUBE OIL
TFM	B P H O G C	TURBINE,FEED PUMP-STEAM AND EXHAUST

SYSTEM CODE	PLANT TYPES	SYSTEM DESCRIPTION
TMA	B P H O G C W	TURBINE,MAIN-ALARMS AND TRIPS
TMB	B P H O G C	TURBINE,MAIN-CONTROL (EHC)
TME	B P H O G C	TURBINE,MAIN-GLAND SEAL & EXHAUST STEAM
TMG	B P H O G C	TURBINE,MAIN-TURNING GEAR
TMH	B P H O G C W	TURBINE,MAIN-HYDRAULIC GEAR
TMI	B P H O G C W	TURBINE,MAIN-SUPERVISORY INSTRUMENTATION
TMJ	B P H O G C	TURBINE,MAIN-JACKING OIL
TML	B P H O G C W	TURBINE,MAIN-LUBE OIL
TMR	B P H O G C	TURBINE,MAIN-UNIT RUN BACK
TMS	B P H O G C W	TURBINE,MAIN-SYSTEM
TSW	B P H O G C S W	SANITARY WASTE TREATMENT SYSTEM
USS	B P H O G C W	UNIT SUBSTATION
VAS	P H	VENTS (AERATED) - SYSTEM (NUCLEAR)
VBA	B P H O G C	VITAL BUS - AC SUPPLY (TO BUS)
VBB	B P H O G C	VITAL BUS - DC SUPPLY (TO INVERTER)
VBN	B P H O G C W	VITAL BUS, NORMAL
VBS	B P H O G C	VITAL BUS-SYSTEM (INCOMING SUPPLY FROM INVERTER)
VNT	B	VENTS - TURBINE & REACTOR BLDG
VPS	B P H O G C	VACUUM PRIMING (WATER SIDE) - SYSTEM
VRS	P	VENTS GASEOUS REACTOR PLANT - SYSTEM
VRW	B	VENTS-RADWASTE BLDG EQUIP
VTP	B	VENTS,TURBINE PLANT EQPT
WCS	B	REACTOR WATER CLEANUP-SYSTEM
WDD	B P H O G C	DEMINERALIZED WATER
WLT	H	LIQUID WASTE-TRITIATED
WOS	B P H O G C W	WASTE OIL DISPOSAL-SYSTEM

SYSTEM CODE	PLANT TYPES								SYSTEM DESCRIPTION
WPS	B	P	H	O	G	C		W	WELDING POWER-SYSTEM
WSC	B	P	H						SOLID WASTE - CONDENSATE DEMIN. SYSTEM
WSS	B	P	H						SOLID WASTE (RADIOACTIVE) -SYSTEM
WTA	B	P	H	O	G	C			CHEMICAL FEED - ACID
WTC	B	P	H	O	G	C			WATER TREATING - CHLORINATION
WTF	B								WATER TREATING-UPFLOW FILTER
WTH	B	P	H	O	G	C		W	WATER TREATING-HYPOCHLORITE
WTL	B	P	H	O	G	C			WATER TREATING-CLARIFIER
WTP	B	P	H	O	G	C			WASTE TREATMENT-CONDS POLISHING
WTS	B	P	H	O	G	C		W	WATER TREATING-SYSTEM
WTU				O	G	C			WATER TREATMENT-FOSSIL STATION
WTW	B	P	H	O	G	C		W	WATER TREATING-CHEMICAL WASTE
WUS				O		C			WARM UP OIL - SYSTEM
WV								W	SERVICE WATER - SPHERICAL VALVE SEAL
YDK							S		YARDWORK
YPB							S		13.8KV SWYD/SUBSTA-BUS DIFF/PT'S/MET/ OSCILLOGRAPH
YPC							S		13.8KV SWYD/SUBSTA-PCB CONT/AUX/BKR FAIL/ MOD SW
YPF							S		13.8KV SWYD/SUBSTA COMMON BRKR FAILURE
YPL							S		13.8KV SWYD/SUBSTA-LINE REL/MET/MOD SW/ OSC GRD SW
YPS							S		13.8KV SWYD/SUBSTA-SYNCHRONIZING
YPT							S		13.8KV SWYD/SUBSTA-TRANS AUX/TAP CHANGER
YPU							S		13.8KV SWYD/SUBSTA - YARDWORK
YPV							S		13.8KV SWYD/SUBSTA - SUBSTRUCTURE
YPW							S		13.8KV SWYD/SUBSTA - SUPERSTRUCTURE

SYSTEM CODE	PLANT TYPES	SYSTEM DESCRIPTION
YQB	S	22KV SWYD/SUBSTA-BUS DIFF/PT'S/MET/ OSCILLOGRAPH
YQC	S	22KV SWYD/SUBSTA-PCB CONT/AUX/BKR FAIL/ MOD SW
YQF	S	22KV SWYD/SUBSTA COMMON BRKR FAILURE
YQL	S	22KV SWYD/SUBSTA-LINE REL/MET/MOD SW/ OSC GRD SW
YQS	S	22KV SWYD/SUBSTA-SYNCHRONIZING
YQT	S	22KV SWYD/SUBSTA-TRANS AUX TAP CHANGER
YQU	S	22KV SWYD/SUBSTA - YARDWORK
YQV	S	22KV SWYD/SUBSTA - SUBSTRUCTURE
YQW	S	22KV SWYD/SUBSTA - SUPERSTRUCTURE
YRB	S	34KV SWYD/SUBSTA-BUS DIFF/PT'S/MET OSCILLOGHRAPH
YRC	S	34KV SWYD/SUBSTA-PCB CONT/AUX BRK FAIL/ MOD SW
YRF	S	34KV SWYD/SUBSTA COMMON BRKR FAILURE
YRL	S	34KV SWYD/SUBSTA-LINE REL/MET/MOD SW/ OSC GRD SW
YRS	S	34KV SWYD/SUBSTA-SYNCHRONIZING
YRT	S	34KV SWYD/SUBSTA-TRANS AUX/TAP CHANGER
YRU	S	34KV SWYD/SUBSTA - YARDWORK
YRV	S	34KV SWYD/SUBSTA - SUBSTRUCTURE
YRW	S	34KV SWYD/SUBSTA - SUPERSTRUCTURE
YSB	S	46KV SWYD/SUBSTA-BUS DIFF/PT'S/MET OSCILLOGRAPH
YSC	S	46KV SWYD/SUBSTA-PCB CONT/AUX/BRK FAIL/ MOD SW
YSF	S	46KV SWYD/SUBSTA COMMON BRKR FAILURE
YSL	S	46KV SWYD/SUBSTA-LINE REL/MET/MOC SW/ OSC GRD SW

SYSTEM CODE	PLANT TYPES	SYSTEM DESCRIPTION
YSS	S	46KV SWYD/SUBSTA-SYNCHRONIZING
YST	S	46KV SWYD/SUBSTA-TRANS AUX/TAP CHANGER
YSU	S	46KV SWYD/SUBSTA - YARDWORK
YSV	S	46KV SWYD/SUBSTA - SUBSTRUCTURE
YSW	S	46KV SWYD/SUBSTA - SUPERSTRUCTURE
YTB	S	69KV SWYD/SUBSTA-BUS DIFF/PT'S/MET OSCILLOGRAPH
YTC	S	69KV SWYD/SUBSTA-PCBCONT/AUX BRK FAIL/ MOD SW
YTF	S	69KV SWYD/SUBSTA COMMON BRKR FAILURE
YTL	S	69KV SWYD/SUBSTA-LINE REL/MET/MOD SW/ OSC GRD SW
YTS	S	69KV SWYD/SUBSTA-SYNCHRONIZING
YTT	S	69KV SWYD/SUBSTA-TRANS AUX/TAP CHANGER
YTU	S	69KV SWYD/SUBSTA - YARDWORK
YTV	S	69KV SWYD/SUBSTA - SUBSTRUCTURE
YTW	S	69KV SWYD/SUBSTA - SUPERSTUCTURE
YUB	S	115KV SWYD/SUBSTA-BUS DIFF/PT'S/MET OSCILLOGRAPH
YUC	S	115KV SWYD/SUBSTA-PCB CONT/AUX/BRK FAIL/ MOD SW
YUF	S	115KV SWYD/SUBSTA COMMON BRKR FAILURE
YUL	S	115KV SWYD/SUBSTA-LINE REL/MET/MOD SW/OSC GRD SW
YUS	S	115KV SWYD/SUBSTA-SYNCHRONIZING
YUT	S	115KV SWYD/SUBSTA-TRANS AUX/TAP CHANGER
YUU	S	115KV SWYD/SUBSTA - YARDWORK
YUV	S	115KV SWYD/SUBSTA - SUBSTRUCTURE
YUW	S	115KV SWYD/SUBSTA - SUPERSTRUCTURE

SYSTEM CODE	PLANT TYPES	SYSTEM DESCRIPTION
YVB	S	138KV SWYD/SUBSTA-BUS DIFF/PT'S/MET/ OSCILLOGRAPH
YVC	S	138KV SWYD/SUBSTA-PCB CONT/AUX/BRK FAIL/ MOD SW
YVF	S	138KV SWYD/SUBSTA COMMON BRKR FAILURE
YVL	S	138KV SWYD/SUBSTA-LINE REL/MET/MOD SW/OSC GRD SW
YVS	S	138KV SWYD/SUBSTA-SYNCHRONIZING
YVT	S	138KV SWYD/SUBSTA-TRANS AUX/TAP CHANGER
YVU	S	138KV SWYD/SUBSTA - YARDWORK
YVV	S	138KV SWYD/SUBSTA - SUBSTRUCTURE
YVW	S	138KV SWYD/SUBSTA - SUPERSTRUCTURE
YWB	S	230KV SWYD/SUBSTA-BUS DIFF/PT'S/MET OSCILLOGRAPH
YWC	S	230KV SWYD/SUBSTA-PCB CONT/AUX ./BRK FAIL/ MOD SW
YWF	S	230KV SWYD/SUBSTA COMMON BRKR FAILURE
YWL	S	230KV SWYD/SUBSTA-LINE REL/MET/MOD SW/OSC GRD SW
YWS	S	230KV SWYD/SUBSTA-SYNCHRONIZING
YWT	S	230KV SWYD/SUBSTA-TRANS AUX/TAP CHANGER
YWU	S	230KV SWYD/SUBSTA - YARDWORK
YWV	S	230KV SWYD/SUBSTA - SUBSTRUCTURE
YWW	S	230KV SWYD/SUBSTA - SUPERSTRUCTURE
YXA	S	345KV SWYD/A-C POWER SYSTEM
YXB	S	345KV SWYD/SUBSTA-BUS DIFF/PT'S/MET/ OSCILLOGRAPH
YXC	S	345KV SWYD/SUBSTA-PCB CONT/AUX/BRK FAIL/ MOD SW
YXD	S	345KV SWYD/D-C POWER SYSTEM

SYSTEM CODE	PLANT TYPES	SYSTEM DESCRIPTION
YXF	S	345KV SWYD/SUBSTA COMMON BRKR FAILURE
YXL	S	345KV SWYD/SUBSTA-LINE REL/MET/MOD/SW/OSC GRD SW
YXS	S	345KV SWYD/SUBSTA-SYNCHRONIZING
YXT	S	345KV SWYD/SUBSTA-TRANS AUX/TAP CHANGER
YXU	S	345KV SWYD/SUBSTA - YARDWORK
YXV	S	345KV SWYD/SUBSTA - SUBSTRUCTURE
YXW	S	345KV SWYD/SUBSTA - SUPERSTRUCTURE
YYB	S	500KV SWYD/SUBSTA-BUS DIFF/PT'S/MET/ OSCILLOGRAPH
YYC	S	500KV SWYD/SUBSTA-PCB CONT/AUX/BRK FAIL/ MOD SW
YYF	S	500KV SWYD/SUBSTA-COMMON BRKR FAILURE
YYL	S	500KV SWYD/SUBSTA-LINE REL/MET/MOD SW/OSC GRD SW
YYS	S	500KV SWYD/SUBSTA-SYNCHRONIZING
YYT	S	500KV SWYD/SUBSTA-TRANS AUX/TAP CHANGER
YYU	S	500KV SWYD/SUBSTA - YARDWORK
YYV	S	500KV SWYD/SUBSTA - SUBSTRUCTURE
YYW	S	500KV SWYD/SUBSTA - SUPERSTRUCTURE
YZB	S	750KV SWYD/SUBSTA-BUS DIFF/PT'S/MET OSCILLOGRAPH
YZC	S	750KV SWYD/SUBSTA-PCB CONT/AUX/BRK FAIL/ MOD SW
YZF	S	750KV SWYD/SUBSTA-COMMON BRKR FAILURE
YZL	S	750KV SWYD/SUBSTA-LINE REL/MET/MOD SW/OSC GRD SW
YZS	S	750KV SWYD/SUBSTA-SYNCHRONIZING
YZT	S	750KV SWYD/SUBSTA-TRANS AUX/TAP CHANGER
YZU	S	750KV SWYD/SUBSTA - YARDWORK

SYSTEM CODE	PLANT TYPES	SYSTEM DESCRIPTION
YZV	S	750KV SWYD/SUBSTA - SUBSTRUCTURE
YZW	S	750KV SWYD/SUBSTA - SUPERSTRUCTURE

STANDARD C3

EQUIPMENT IDENTIFICATION CODES

1. PURPOSE - The one (1) to four (4) letter code identifies power plant equipment.

2. SCOPE - The codes are applicable to Power Industries Group projects.

3. APPLICATION - The codes are used in all project documents.

4. CUSTODIAN - The Control Systems Division, Stone & Webster Engineering Corporation, Boston, is responsible for code maintenance.

5. DISTRIBUTION - The Computer Department, Stone & Webster Engineering Corporation, Boston, maintains the code in computer files.

FORMAT AND APPLICATION OF EQUIPMENT IDENTIFICATION NUMBERS

A. GENERAL - Equipment must be identifiable by a simple yet meaningful method in order to allow control during all phases of plant design and construction.

This document, in conjunction with the Corporate Standard for Power Plant System Codes (C-1), provides the basis for the application of Stone & Webster Equipment Identification Numbers (EI Nos).

B. PROCEDURE - Equipment Identification Numbers must be used in all project documents such as specifications, drawings, computer files. The EI No is formatted as follows:

1 2 3 4 5 6 7 8 9 10 11 12 CHARACTERS MAX

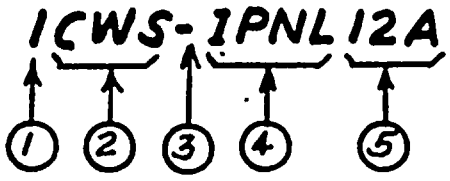

1. Unit Number - The first character is always the unit number. If the number of units exceeds nine (9), a unique system can be developed dependent on station configuration. Equipment that is common to more than one unit, such as switchyards, is identified with a zero (0).

2. System Code - The system code is selected from C-1.

3. Divider - The fifth character divides the EI No for easier reading. Nuclear safety related equipment is divided by an asterisk (*), all other equipment by a dash (-).

4. Equipment Code - The equipment code is selected from this standard, and may consist of one, two, three or four letters. The code is intended to be generic and no attempt should be made to define different species of generic equipment.

   Codes may not be combined to create new codes in the same EI No.

5. Equipment Identifier - This part of the EI No uniquely identifies similar items within a system. The first character must be a numeral. The remaining characters may be numbers or letters. Letters should be used to convey information pertaining to two or more pieces of equipment performing the same function.

   As a minimum, one numeral may appear as an equipment identifier. A maximum of six characters is possible in cases where the equipment code consists of only one letter.

EQUIPMENT EXCEPT INSTRUMENTS

ACB	CIRCUIT BREAKER,AIR
ACD	AIR CONTROL DEVICE
ACH	CHAMBER,AIR
ACT	ACTUATOR
ACU	AIR CONDITIONING UNIT
ACUS	AIR CONDITIONING UNIT, SELF CONTAINED
AD	ANODE
ADS	ADSORBER
AF	ARRESTOR, FLAME
AHU	AIR HANDLING UNIT
AMPL	AMPLIFIER
ANT	ANTENNA
AOD	DAMPER,AIR OPERATED
AOL	LOUVER,AIR OPERATED
AP	PANEL,ACCESS
APH	PREHEATER,AIR
ARV	AIR RELEASE VALVE
ASP	SEPARATOR, AIR
B	BOILER
BAT	BATTERY
BD	BUS DUCT
BKR	BREAKER
BL	BLENDER
BO	SOIL BORING
BPD	POTENTIAL DEVICE, BUSHING
BTC	TEST CABINET, BREAKER
BUS	BUS
C	COMPRESSOR
CAB	CABINET
CABP	CABINET, PENETRATION
CAP	CAPACITOR (ELECTRICAL)
CB	CATCH BASIN
CBV	VALVE,CONTINUOUS.BLOWDOWN
CCT	TEST,CONCRETE COMPRESSION
CH	COIL,HEATER
CHGR	CHARGER,BATTERY
CHL	CHILLER,LIQUID
CHUT	CHUTE
CIV	COMBINED INTERMEDIATE VALVE
CLC	COIL,COOLING
CLR	CLARIFIER
CND	CONDENSER (MECHANICAL)
CNDT	CONDITIONER
CNSL	CONSOLE
CNV	CONVEYOR
CO	CLEANOUT
COLL	COLLECTOR
COOL	COOLER
CP	COMPUTER
CPD	POTENTIAL DEVICE, COUPLING TYPE
CRH	CRUSHER
CRN	CRANE OR HOIST
CSK	CASK

CUB	CUBICLE,ELECTRICAL
CUR	CONDENSING UNIT, REFRIGERANT
CVV	CONVEYANCE VEHICLE (DOLLY,HANDTRUCK,ETC)
CWS	SEAL, WATER CAVITY
CYL	CYLINDER
D	DRUM
DA	DEAERATOR
DCL	COOLER,DRAIN
DEH	DEHUMIDIFIER
DEMN	DEMINERALIZER
DESH	DESUPERHEATER
DIFF	DIFFUSER
DMP	DAMPER
DMPF	DAMPER,FIRE
DMST	DEMISTER
DNF	DRAIN,FLOOR
DNR	DRAIN,ROOF
DO	DOOR
DRA	DOOR,ACCESS
DRY	DRYER
DTH	TEST HOLE, DUCT
DWC	COOLER,DRINKING WATER
E	EXCHANGER,HEAT
ED	DRAIN,EQUIPMENT
EDU	EDUCTOR
EFV	VALVE,EXCESS FLOW
EG	ENGINE GENERATOR
EJ	JOINT, EXPANSION
EL	ELEVATOR
ENC	ENCAPSULATION
ENG	ENGINE
EV	EVAPORATOR
EXC	EXCITER
FCD	CLEANOUT,FLOOR
FDR	FEEDER
FHR	REEL,FIRE HOSE
FHY	HYDRANT,FIRE
FL	FLANGE
FLI	FLANGE,INSULATING
FLS	FLANGE,SPECTACLE
FLT	FILTER
FLTM	FILTER,MOTOR OPERATED
FLTT	FILTER, AIR, TEMPORARY
FLU	FILTER TRAIN
FN	FAN
FO	ORIFICE,FLOW
FP	CONNECTION,FLOW
FPV	FIRE PROTECTION VALVE
FSU	SPLITTER UNIT, FLOW
FTG	FITTING,PIPE OR SHT. MTL. DUCT
FUN	FUNNEL
FUR	FURNACE
FX	VANES,STRAIGHTENING

G	GENERATOR
GA	EQUIPMENT,GARAGE
GATE	GATE
GCR	GAS RECYCLE UNIT, CRYOGENIC
GDR	GRINDER
GEAR	GEAR,DRIVE
GL	GENERATOR LEADS
GLC	COOLER,GENERATOR LEADS
GRL	GRILLE
GRU	GAS REMOVAL UNIT
H	HEATER
HD	HOOD
HDS	SWITCH,DISCONNECT,HAND OPERATED
HDST	HAND OR HEADSET
HH	HANDHOLE
HOSE	HOSE, ALL TYPES
HR	RACK, HOSE
H/A	SWITCH,CONTROL,HAND AUTOMATIC
HS	SWITCH,HAND
HSS	SWITCH,HAND SELECTOR
HUM	HUMIDIFIER
HVU	UNIT,HEATING & VENTILATING
IB	INLET BASIN
ICV	CONNECTION,VACUUM CLEANING
IND	INDUCTOR
INV	INVERTER
IOE	EXCHANGER,ION
IPB	BUS,ISOLATED PHASE
IPNL	PANEL,INSTRUMENT
J	EJECTOR
JB	BOX,JUNCTION
JIS	JET IMPINGEMENT SHIELD
JK	JACK, JACK PANEL
KIE	EQUIPMENT,KITCHEN
KYBD	KEYBOARD
LAV	LAVATORY
LDC	LOAD CENTER
LFT	LIFTING EQUIPMENT
LNR	LINER
LTA	ARRESTOR,LIGHTNING
LTR	ROD,LIGHTNING
LTRY	ROD,LIGHTNING,SWITCHYARD
LTU	TUNER,LINE
LVR	LOUVER,NONPOWERED
LVRE	LOUVER ELECTRICAL
M	MOTOR,ELECTRIC
MCB	MAIN CONTROL BOARD
MCC	MOTOR CONTROL CENTER
MCS	MOTOR CONTROL CENTER, SPECIAL
MCV	MAIN CONTROL VALVE, TURBINE
MDS	SWITCH,DISCONNECT,MOTOR OPERATED
MFD	MANIFOLD
MG	MOTOR GENERATOR

MH	MAN HOLE
MIKE	MICROPHONE
MIX	MIXER
MIXB	BOX,MIXING
MIXP	MIXER,FORWARDING
MOD	DAMPER,MOTOR OPERATED
MOL	LOUVER,MOTOR OPERATED
MOV	VALVE,MOTOR OPERATED
MSP	MOISTURE SEPARATOR
MST	STARTER,MAGNETIC
MSV	MAIN STOP VALVE, TURBINE
NOZ	NOZZLE
NRV	VALVE,NON-RETURN
NSA	ASSEMBLY, NEUTRON SOURCE
OCB	CIRCUIT BREAKER,OIL
ODR	ODORIZER
OSC	OSCILLOGRAPH
OV	SIGHT OVERFLOW
OWR	OXYGEN & WATER REMOVAL UNIT
P	PUMP
PB	STARTER,MANUAL (PUSH BUTTON W OR W/O IND LTS)
PH	PIPE HANGER
PHD	POTHEAD
PIL	PILINGS FOUNDATION
PLAT	PLATFORM
PLC	POLE, COMMUNICATIONS
PLP	POLE, POWER
PNL	PANEL
PP	PIPING
PRE	PRESSURIZER
PREC	PRECIPITATOR
PRR	PIPE RUPTURE RESTRAINT (SNUBBERS)
PSA	PIPE SUPPORT ANCHOR
PSG	PIPE SUPPORT GUIDE
PSR	PIPE SUPPORT RESTRAINT
PSRH	PIPE SUPPORT ROD
PSS	PIPE SUPPORT SLIDING
PSSH	PIPE SUPPORT SPRING
PSSP	PIPE SUPPORT SUPPRESSOR
PSST	PIPE SUPPORT STRUT
PULV	PULVERIZER (COAL)
PUR	PURIFIER
PWRS	POWER SUPPLY
R	REGISTER
RAK	RACK OR STORAGE STAND
RBNR	RECOMBINER
RBRS	RADIAL SHEAR BAR ASSEMBLIES
RBW	WELD REINFORCING BAR
RCP	REACTOR CONTAINMENT PENETRATION
RCPT	POWER RECEPTACLE
RDMA	ROD DRIVE MECHANISM, PART LENGTH
RDMF	ROD DRIVE MECHANISM, FULL LENGTH
RECT	RECTIFIER

REF	REFRIGERATION UNIT
REG	REGULATOR
REN	REGENERATOR
RES	RESISTOR
REV	REACTOR VESSEL
RFV	VENTILATOR,ROOF,GRAVITY
RHE	RHEOSTAT
RIV	REHEAT INTERCEPT VALVE, TURBINE
RLY	RELAY
RODA	REACTOR ROD, PART LENGTH
RODF	REACTOR ROD, FULL LENGTH
RODP	REACTOR ROD, POISONING
RSV	REHEAT STOP VALVE, TURBINE
RTB	RESTRICTING TUBE
SAS	SINK,SAMPLE
SCA	SCALE,WEIGHING
SCAC	SELF CLEANING AIR CLEANER
SCB	BASKET,COLLECTION,TRASH,SCREENWELL
SCL	COOLER,SAMPLE
SER	RESERVOIR,EVAPORATION SUPPRESSION
SEW	SAFETY EYE WASH
SG	STEAM GENERATOR
SH	SUPERHEATER,ELECTRIC OR OIL FIRED
SHLD	SHIELDING
SHRD	ROD DRIVE MECHANISM, AIR COOLING SHROUD
SIL	SILENCER (INLET OR EXHAUST)
SILO	SILO
SIRN	SIREN
SKD	SKID
SKIM	SKIMMER
SL	SLING
SLU	LIFT UNIT, SEWERAGE
SMPT	SAMPLE POINT
SO	SCREENED OPENING
SOT	TEST,SOIL COMPACTION
SP	SEPARATOR
SPKR	LOUD SPEAKER
SRK	RAKES,SCREENWELL
SSC	SCREEN,TRAVELING
SSH	SHOWER
SSK	SINK,SERVICE
SSP	SURGE SUPPRESSOR, VOLUME CHAMBER
SSR	RACK,SCREENWELL
STAK	STACK OR CHIMNEY
STR	STRAINER,PERMANENT
STRF	STRAINER,SYSTEM FLUSH
STRT	STRAINER,TEMPORARY
STU	TREATMENT UNIT, SEWERAGE
SUMP	SUMP
SUP	SUPPORT,EQUIPMENT
SW	SWITCH
SWC	SWITCH,INDICATION AND CONTROL
SWG	SWITCHGEAR

SWS	SWITCH,SAFETY
T	TURBINE
TB	BOX,TERMINAL
TBK	BLOCK,TERMINAL
TBL	LUGS,TERMINAL
TD	TEMPERATURE DAMPER
TEL	TELEPHONE
TFT	TUBE,FUEL TRANSFER
TG	TURBINE, GAS
TH	THERMOSTAT
TK	TANK
TL	TOOL
TP	TEMPERATURE POINT
TRP	TRAP
TRS	SWITCH,TRANSFER
TVC	TELEVISION CAMERA
TVM	TELEVISION MONITOR
TW	THERMOWELL
TWR	TOWER
TX	POWER CONTROLLER, MODULATING
UC	COOLER,UNIT
UH	HEATER,UNIT
UHE	HEATER,UNIT,ELECTRIC
URN	URINAL
US	UNIT SUBSTATION
UV	UNIT VENTILATOR
V	VALVES (NON POWERED)
VAR	REACTIVE POWER
VEX	VALVE,EXPLOSIVE
WB	BALER (SOLID WASTE)
WC	WATER CLOSET
WCH	CEMENT HOPPER (SOLID WASTE)
WDR	DRUM ROLLER (SOLID WASTE)
WDW	WINDOW
WF	WASH FOUNTAIN
WH	WHISTLE
WVT	WAVE TRAP , ELECTRICAL
WW	WIREWAY (RACEWAY)
X	TRANSFORMER
XA	TRANSFORMER AUXILIARIES
XC	TRANSFORMER CURRENT
XCA	TRANSFORMER CURRENT AUXILARY
XD	TRANSFORMER DRISTRIBUTION
XG	TRANSFORMER GROUNDING
XL	TRANSFORMER LIGHTING
XM	TRANSFORMER MAIN
XNS	TRANSFORMER NORMAL STATION SERVICE
XP	TRANSFORMER POTENTIAL
XRC	TRANSFORMER REGULATING CONTROL
XS	TRANSFORMER STATION SERVICE
XSR	TRANSFORMER STATION RESERVE
Z	PENETRATION

INSTRUMENTS ONLY

A	ANALYZER	INST
AA	ALARM,ANALYZER	INST
AC	CONTROLLER,ANALYZER	INST
ACV	VALVE,CONTROL,ANALYZER,SELF ACTUATED	INST
AE	ANALYZER ELEMENT	INST
AI	INDICATOR,ANALYZER	INST
AIC	CONTROLLER,INDICATING,ANALYZER	INST
AIT	TRANSMITTER,INDICATING,ANALYZER	INST
AL	ALARM,AUDIBLE	INST
A/M	AUTOMATIC-MANUAL STATION	INST
ANN	ANNUNCIATOR	INST
AOV	VALVE,AIR OPERATED	INST
AR	RECORDER,ANALYZER	INST
ARC	CONTROLLER,RECORDING,ANALYZER	INST
AS	SWITCH,ANALYZER	INST
AT	TRANSMITTER,ANALYZER	INST
ATV	VALVE,TRIP,AIR OPERATED	INST
AV	VALVE,ANALYZER	INST
BE	DETECTOR ELEMENT, BURNER FLAME	INST
BI	INDICATOR,BURNER FLAME	INST
BS	SWITCH,BURNER	INST
CC	CONTROLLER,CONDUCTIVITY	INST
CE	CONDUCTIVITY ELEMENT	INST
CI	INDICATOR,CONDUCTIVITY	INST
CIC	CONTROLLER,INDICATING,CONDUCTIVITY	INST
CR	RECORDER,CONDUCTIVITY	INST
CRC	CONTROLLER,CONDUCTIVITY RECORDER	INST
CRS	SWITCH,CONDUCTIVITY RECORDER	INST
CS	SWITCH,CONDUCTIVITY	INST
CT	TRANSMITTER,CONDUCTIVITY	INST
CTV	VALVE,CONTAINMENT,TRIP	INST
CV	VALVE,CONDUCTIVITY	INST
DC	CONTROLLER,DENSITY	INST
DCV	VALVE,CONTROL,DENSITY	INST
DE	DENSITY ELEMENT	INST
DI	INDICATOR,DENSITY	INST
DIC	CONTROLLER,INDICATING,DENSITY	INST
DIT	TRANSMITTER,INDICATING,DENSITY	INST
DL	DELAY COIL	INST
DR	RECORDER,DENSITY	INST
DRC	CONTROLLER,RECORDING,DENSITY	INST
DS	SWITCH,DENSITY	INST
DSH	SWITCH,DENSITY,HIGH	INST
DSL	SWITCH,DENSITY,LOW	INST
DSPL	DISPLAY, CRT	INST
DT	TRANSMITTER,DENSITY	INST
DV	VALVE,DENSITY	INST
DX	SOURCE,DENSITY	INST
EI	INDICATOR,VOLTAGE	INST
ER	RECORDER,VOLTAGE	INST
ET	TRANSMITTER,VOLTAGE	INST
E/E	REPEATER	INST
E/H	CONVERTER,VOLTAGE TO HYDRAULIC	INST

E/I	CONVERTER,VOLTAGE TO CURRENT	INST
E/P	CONVERTER,VOLTAGE TO PNEUMATIC	INST
ES	SWITCH,VOLTAGE (COMPARATOR)	INST
ESH	SWITCH,VOLTAGE,HIGH	INST
ESL	SWITCH,VOLTAGE,LOW	INST
FA	ALARM,FLOW	INST
FC	CONTROLLER,FLOW	INST
FCV	VALVE,CONTROL,FLOW,SELF ACTUATED	INST
FD	DETECTOR,FIRE OR HEAT	INST
FE	FLOW ELEMENT	INST
FG	GLASS,FLOW	INST
FI	INDICATOR,FLOW	INST
FIC	CONTROLLER,INDICATING,FLOW	INST
FIS	SWITCH,INDICATING,FLOW	INST
FIT	TRANSMITTER,INDICATING,FLOW	INST
FQI	INDICATOR,QUANTITY,FLOW	INST
FR	RECORDER,FLOW	INST
FRC	CONTROLLER,RECORDING,FLOW	INST
FRIC	CONTROLLER,INDICATING,RECORDING,FLOW	INST
FS	SWITCH,FLOW	INST
FSH	SWITCH,FLOW,HIGH	INST
FSL	SWITCH,FLOW,LOW	INST
FT	TRANSMITTER,FLOW	INST
FV	VALVE,FLOW	INST
FY	RELAY,COMPUTING,SELECTING OR BOOSTER	INST
GC	CONTROLLER,GAGING	INST
GCY	RELAY,GAGING CONTROL	INST
GE	GAGING ELEMENT	INST
GI	INDICATOR,GAGING	INST
GIC	CONTROLLER,INDICATING,GAGING	INST
GNDS	SWITCH,GROUND	INST
GR	RECORDER,GAGING	INST
GRC	CONTROLLER,RECORDING,GAGING	INST
GS	SWITCH,GAGING	INST
GSH	SWITCH,GAGING,HIGH	INST
GSL	SWITCH,GAGING,LOW	INST
GT	TRANSMITTER,GAGING	INST
GV	VALVE,GAGING	INST
GX	SOURCE,GAGING	INST
HC	CONTROLLER,HAND	INST
HCV	VALVE,CONTROL,HAND	INST
HIC	CONTROLLER,INDICATING,HAND	INST
HICV	VALVE,CONTROL,INDICATING,HAND	INST
HOV	VALVE,HAND OPERATED	INST
HSV	VALVE,SELECTOR, HAND	INST
HV	VALVE,HAND	INST
HYV	VALVE, HYDRAULICALLY OPERATED	INST
IC	CONTROLLER,CURRENT	INST
IE	CURRENT ELEMENT	INST
II	INDICATOR,CURRENT	INST
IIC	CONTROLLER,INDICATING,CURRENT	INST
IL	INDICATOR LIGHT	INST
IR	RECORDER,CURRENT	INST

IRC	CONTROLLER,RECORDING,CURRENT	INST
I/H	CONVERTER,CURRENT TO HYDRAULIC	INST
I/E	CONVERTER, CURRENT TO VOLTAGE	INST
I/I	REPEATER, CURRENT	INST
I/P	CONVERTER,CURRENT TO PNEUMATIC	INST
IS	SWITCH,CURRENT	INST
ISH	SWITCH,CURRENT,HIGH	INST
ISL	SWITCH,CURRENT,LOW	INST
IT	TRANSMITTER,CURRENT	INST
JFI	INDICATOR,POWER FACTOR	INST
JFR	RECORDER,POWER FACTOR	INST
JI	INDICATOR,POWER	INST
JR	RECORDER,POWER	INST
JT	TRANSMITTER,POWER	INST
KC	CONTROLLER,TIME SCHEDULE	INST
KCS	PROGRAMMER (STEPPING SWITCH)	INST
KI	INDICATOR,TIME	INST
KS	SWITCH,TIME	INST
KSI	TIMER,INTERVAL	INST
KT	TRANSMITTER,TIME	INST
LA	ALARM,LEVEL	INST
LC	CONTROLLER,LEVEL	INST
LCV	VALVE,CONTROL,LEVEL,SELF ACTUATED	INST
LE	LEVEL ELEMENT	INST
LG	GLASS,LEVEL	INST
LGA	ALARM,LEVEL GLASS	INST
LI	INDICATOR,LEVEL	INST
LIC	CONTROLLER,LEVEL,INDICATING	INST
LIS	LEVEL INDICATING SWITCH	INST
LIT	TRANSMITTER,INDICATING,LEVEL	INST
LMTS	SWITCH,LIMIT	INST
LR	RECORDER,LEVEL	INST
LRC	CONTROLLER,RECORDING,LEVEL	INST
LS	SWITCH,LEVEL	INST
LSH	SWITCH,LEVEL,HIGH	INST
LSL	SWITCH,LEVEL,LOW	INST
LT	TRANSMITTER,LEVEL	INST
LTC	CONTROLLER,TRANSMITTING,LEVEL	INST
LV	VALVE,LEVEL	INST
LX	SOURCE,LEVEL	INST
LY	RELAY,LEVEL,COMPUTING,SELECTING OR BOOSTER	INST
LZ	DRIVE,LEVEL	INST
MC	CONTROLLER,MOISTURE	INST
ME	MOISTURE ELEMENT	INST
MI	INDICATOR,MOISTURE	INST
MIC	CONTROLLER,INDICATOR,MOISTURE	INST
MR	RECORDER,MOISTURE	INST
MRC	CONTROLLER,RECORDER,MOISTURE	INST
MS	SWITCH,MOISTURE	INST
MSH	SWITCH,MOISTURE,HIGH	INST
MSL	SWITCH,MOISTURE,LOW	INST
MT	TRANSMITTER,MOISTURE	INST
MV	VALVE,MOISTURE	INST

NBA	ALARM,VIBRATION	INST
NBE	VIBRATION ELEMENT	INST
NBI	INDICATOR,VIBRATION	INST
NBR	RECORDER,VIBRATION	INST
NBS	SWITCH,VIBRATION	INST
NBT	TRANSMITTER,VIBRATION	INST
NNA	ALARM,ECCENTRICITY	INST
NNE	ECCENTRICITY ELEMENT	INST
NNI	INDICATOR,ECCENTRICITY	INST
NNR	RECORDER,ECCENTRICITY	INST
NNS	SWITCH,ECCENTRICITY	INST
NNT	TRANSMITTER,ECCENTRICITY	INST
NXA	ALARM,EXPANSION	INST
NXE	EXPANSION ELEMENT	INST
NXI	INDICATOR,EXPANSION	INST
NXR	RECORDER,EXPANSION	INST
NXS	SWITCH,EXPANSION	INST
NXT	TRANSMITTER,EXPANSION	INST
PA	ALARM,PRESSURE	INST
PC	CONTROLLER,PRESSURE	INST
PCV	VALVE,CONTROL,PRESSURE,SELF ACTUATED	INST
PDCV	VALVE,CONTROL,PRESSURE DIFFERENTIAL,SELF. ACT	INST
PDI	INDICATOR,PRESSURE DIFFERENTIAL	INST
PDIC	CONTROLLER,INDICATING,PRESSURE DIFFERENTIAL	INST
PDIS	SWITCH,INDICATING,PRESSURE DIFFERENTIAL	INST
PDIT	TRANSMITTER,INDICATING,PRESSURE DIFFERENTIAL	INST
PDR	RECORDER,PRESSURE DIFFERENTIAL	INST
PDRC	CONTROLLER,RECORDING,PRESSURE DIFFERENTIAL	INST
PDRS	SWITCH,RECORDING,PRESSURE DIFFERENTIAL	INST
PDS	SWITCH,PRESSURE DIFFERENTIAL	INST
PDT	TRANSMITTER,PRESSURE DIFFERENTIAL	INST
PE	PRESSURE ELEMENT	INST
PI	INDICATOR,PRESSURE	INST
PIC	CONTROLLER,INDICATING,PRESSURE	INST
PIS	SWITCH,INDICATING,PRESSURE	INST
PISH	SWITCH,INDICATING,PRESSURE,HIGH	INST
PISL	SWITCH,INDICATING,PRESSURE,LOW	INST
PIT	TRANSMITTER,INDICATING,PRESSURE	INST
PR	RECORDER,PRESSURE	INST
PRC	CONTROLLER,RECORDING,PRESSURE	INST
P/I	CONVERTER,PNEUMATIC TO CURRENT	INST
PS	SWITCH,PRESSURE	INST
PSE	RUPTURE DISC	INST
PSH	SWITCH,PRESSURE,HIGH	INST
PSL	SWITCH,PRESSURE,LOW	INST
PSV	VALVE,PRESSURE,POWERED	INST
PT	TRANSMITTER,PRESSURE	INST
PTR	PRINTER	INST
PV	VALVE,PRESSURE	INST
PY	RELAY,COMPUTING,SELECTING OR BOOSTER,LEVEL	INST
QE	SOURCE,EVENT	INST
QQI	INDICATOR,COUNTING	INST
QQR	RECORDER,COUNTER	INST

QQS	SWITCH,COUNTER (IMPULSE COUNTER)	INST
QS	SWITCH,QUANTITY OR EVENT	INST
QX	SOURCE,QUANTITY	INST
RC	CONTROLLER,RADIOACTIVITY	INST
RE	RADIOACTIVITY ELEMENT, PRIMARY	INST
RI	INDICATOR,RADIOACTIVITY	INST
RIC	CONTROLLER,INDICATING,RADIOACTIVITY	INST
RO	ORIFICE,RESTRICTION	INST
RQ	RADIOACTIVITY ELEMENT	INST
RR	RECORDER,RADIOACTIVITY	INST
RRC	CONTROLLER,RECORDING,RADIOACTIVITY	INST
RS	SWITCH,RADIOACTIVITY	INST
RSH	SWITCH,RADIOACTIVITY,HIGH	INST
RSL	SWITCH,RADIOACTIVITY,LOW	INST
RT	TRANSMITTER,RADIOACTIVITY	INST
RTD	RESISTANCE TEMPERATURE DETECTOR	INST
RV	VALVE,RELIEF	INST
SC	CONTROLLER,SPEED	INST
SD	DETECTOR, SMOKE	INST
SI	INDICATOR,SPEED	INST
SIC	CONTROLLER,INDICATING,SPEED	INST
SOV	VALVE,SOLENOID	INST
SR	RECORDER,SPEED	INST
SRC	CONTROLLER,RECORDING,SPEED	INST
ST	TRANSMITTER,SPEED	INST
STV	VALVE,TRIP SOLENOID	INST
SV	VALVE,SAFETY	INST
TA	ALARM,TEMPERATURE	INST
TC	CONTROLLER,TEMPERATURE	INST
TCV	VALVE,CONTROL,TEMPERATURE,SELF ACTUATED	INST
TDI	INDICATOR,TEMPERATURE DIFFERENTIAL	INST
TDR	RECORDER,TEMPERATURE DIFFERENTIAL	INST
TDT	TRANSMITTER,TEMPERATURE DIFFERENTIAL	INST
TE	TEMPERATURE ELEMENT, PRIMARY	INST
TI	INDICATOR,TEMPERATURE	INST
TIC	CONTROLLER,INDICATING,TEMPERATURE	INST
TIS	SWITCH,INDICATING,TEMPERATURE	INST
TISH	SWITCH,INDICATING,TEMPERATURE,HIGH	INST
TISL	SWITCH,INDICATING,TEMPERATURE,LOW	INST
TIT	TRANSMITTER,INDICATING,TEMPERATURE	INST
TJI	INDICATOR,TEMPERATOR SCAN	INST
TJR	RECORDER,TEMPERATURE SCAN	INST
TQS	SWITCH,TORQUE	INST
TR	RECORDER,TEMPERATURE	INST
TRC	CONTROLLER,RECORDING,TEMPERATURE	INST
T/C	THERMOCOUPLE	INST
TS	SWITCH,TEMPERATURE	INST
TSH	SWITCH,TEMPERATURE,HIGH	INST
TSL	SWITCH,TEMPERATURE,LOW	INST
TT	TRANSMITTER,TEMPERATURE	INST
TV	VALVE,TEMPERATURE	INST
TY	RELAY,COMPUTING,SELECTING OR BOOSTER,TEMPERATURE	INST
UA	ALARM,UNIT	INST

UI	INDICATOR,UNIT	INST
UR	RECORDER,UNIT	INST
VC	CONTROLLER,VISCOSITY	INST
VE	VISCOSITY ELEMENT	INST
VI	INDICATOR,VISCOSITY	INST
VIC	CONTROLLER,INDICATING,VISCOSITY	INST
VM	VOLTMETER	INST
VR	RECORDER,VISCOSITY	INST
VRC	CONTROLLER,RECORDING,VISCOSITY	INST
S	SWITCH,VISCOSITY	INST
VSH	SWITCH,VISCOSITY,HIGH	INST
VSL	SWITCH,VISCOSITY,LOW	INST
VSR	RELAY,VOLTAGE-SENSITIVE	INST
VT	TRANSMITTER,VISCOSITY	INST
VV	VALVE,VISCOSITY	INST
WCT	CONTROLLER,WEIGHT	INST
WCV	VALVE,CONTROL,WEIGHT,SELF ACTUATED	INST
WDE	WEIGHT DIFFERENTIAL ELECTRICAL	INST
WDP	WEIGHT DIFFERENTIAL PNEUMATIC	INST
WI	INDICATOR,WEIGHT	INST
WIC	CONTROLLER,INDICATING,WEIGHT	INST
WIT	TRANSMITTER,INDICATING,WEIGHT	INST
WM	WATTMETER	INST
WMI	INDICATOR,WATT	INST
WMR	RECORDER,WATT	INST
WMS	SWITCH,WATT	INST
WMX	COUNTER,WATT	INST
WR	RECORDER,WEIGHT	INST
WRC	CONTROLLER,RECORDING,WEIGHT	INST
WS	SWITCH,WEIGHT	INST
WSH	SWITCH,WEIGHT,HIGH	INST
WSL	SWITCH,WEIGHT,LOW	INST
WT	TRANSMITTER,WEIGHT	INST
WV	VALVE,WEIGHT	INST
XR	RECORDER	INST
ZC	CONTROLLER,POSITION	INST
ZDE	POSITION ELEMENT, DIFFERENTIAL (DIFF EXPANSION)	INST
ZDI	INDICATOR,POSITION DIFFERENTIAL	INST
ZDR	RECORDER,POSITION DIFFERENTIAL	INST
ZDT	TRANSMITTER,POSITION DIFFERENTIAL	INST
ZE	POSITION ELEMENT,PRIMARY	INST
ZI	INDICATOR,POSITION	INST
ZIC	CONTROLLER,INDICATING,POSITION	INST
ZR	RECORDER,POSITION	INST
ZRC	CONTROLLER,RECORDING,POSITION	INST
ZS	SWITCH,POSITION	INST
ZSH	SWITCH,POSITION,HIGH	INST
ZSL	SWITCH,POSITION,LOW	INST
ZT	TRANSMITTER,POSITION	INST
ZU	DRIVE,CONTROL	INST
ZUM	DRIVE,CONTROL,MOTOR DRIVEN	INST
ZUP	DRIVE CONTROL,PNEUMATIC	INST

JOB NAME NMP - UNIT 2
UTILITY NIAGARA MOHAWK

SEISMIC AND DYNAMIC QUALIFICATION SUMMARY AND STATUS REPORT
MASTER LIST OF SAFETY RELATED EQUIPMENT

ENGINEER: STONE & WEBSTER
NSSS SUPPLIER: GENERAL ELECTRIC

EQUIP. ID / SHEC ID	EQUIPMENT DESCRIPTION / MANUFACTURER	PPD NO.	LOCATION BLDG	LOCATION ELEV	LOCATION HTG	LOADS SEIS	LOADS HYDR	QUAL ANLYS	METH TEST	NAT FREQ LOWEST	RRS REF STATUS QUAL	RRS REF STATUS INST
B22-D002	CONDENSING CHAMBER	204B7269	PC	343	LH	Y	Y	S	N	NA	N	
2ISC*R0113	GE										A	N
B22-D004A	CONDENSING CHAMBER	204B7269	PC	318	LH	Y	Y	S	N	NA	NA	
2ISC*D004A	GE										A	Y
B22-D004B	CONDENSING CHAMBER	204B7269	PC	318	LH	Y	Y	S	N	NA	NA	
2ISC*D004B	GE										A	Y
B22-D004C	CONDENSING CHAMBER	204B7269	PC	318	LH	Y	Y	S	N	NA	NA	
2ISC*D004C	GE										A	Y
B22-D004D	CONDENSING CHAMBER	204B7269	PC	318	LH	Y	Y	S	N	NA	NA	
2ISC*D004D	GE										A	Y
B22-D006A	CONDENSING CHAMBER	204B7269	PC	283	LH	Y	Y	S	N	NA	NA	
2HSS*D006A	GE										A	Y
B22-D006B	CONDENSING CHAMBER	204B7269	PC	283	LH	Y	Y	S	N	NA	NA	
2HSS*D006B	GE										A	Y
B22-D006C	CONDENSING CHAMBER	204B7269	PC	283	LH	Y	Y	S	N	NA	NA	
2HSS*D006C	GE										A	Y
B22-D006D	CONDENSING CHAMBER	204B7269	PC	283	LH	Y	Y	S	N	NA	NA	
2HSS*D006D	GE										A	Y
B22-D007A	CONDENSING CHAMBER	204B7269	PC	318	LH	Y	Y	S	N	NA	N	
2HSS*D007A	GE										A	Y
B22-D007B	CONDENSING CHAMBER	204B7269	PC	283	LH	Y	Y	S	N	NA	NA	
2HSS*D007B	GE										A	Y
B22-D007C	CONDENSING CHAMBER	204B7269	PC	283	LH	Y	Y	Y	N	NA	NA	
2HSS*D007C	GE										A	Y
B22-D007D	CONDENSING CHAMBER	204B7269	PC	283	LH	Y	Y	S	N	NA	NA	
2HSS*D007D	GE										A	Y
B22-D008A	CONDENSING CHAMBER	204B7269	PC	283	LH	Y	Y	Y	N	NA	NA	
2HSS*D008A	GE										A	Y

JOB NAME NMP - UNIT 2
UTILITY NIAGARA MOHAWK

SEISMIC AND DYNAMIC QUALIFICATION SUMMARY AND STATUS REPORT
MASTER LIST OF SAFETY RELATED EQUIPMENT

ENGINEER: STONE & WEBSTER
NSSS SUPPLIER: GENERAL ELECTRIC

EQUIP. ID / SNEC ID	EQUIPMENT DESCRIPTION / MANUFACTURER	PPD NO.	LOCATION BLDG	ELEV	HTG	LOADS SEIS	HYDR	QUAL ANLYS	METH- TEST	NAT FREQ- LOWEST	RRS REF STATUS QUAL	INST
B22-D008B 2NSS*D008B	CONDENSING CHAMBER GE	204B7269	PC	283	LH	Y	Y	S	N	NA	NA A	Y
B22-D008C 2NSS*D008C	CONDENSING CHAMBER GE	204B7269	PC	283	LH	Y	Y	S	N	NA	NA A	Y
B22-D008D 2NSS*D008D	CONDENSING CHAMBER GE	204B7269	PC	283	LH	Y	Y	S	N	NA	NA A	Y
B22-D009B 2NSS*D009B	CONDENSING CHAMBER GE	204B7269	PC	283	LH	Y	Y	S	N	NA	NA A	Y
B22-D009C 2NSS*D009C	CONDENSING CHAMBER GE	204B7269	PC	283	LH	Y	Y	S	N	NA	NA A	Y
B22-D009D 2NSS*D009D	CONDENSING CHAMBER GE	204B7269	PC	283	LH	Y	Y	S	N	NA	NA A	Y
B22-F013A 2NSS*PSV133	MSL SAFETY/RELIEF VALVE DIKKERS	768E995	PC	297	LH	Y	Y	N	HF	60.5	A	Y
B22-F013B 2NSS*PSV128	MSL SAFETY/RELIEF VALVE DIKKERS	768E995	PC	297	LH	Y	Y	N	HF	60.5	A	Y
B22-F013C 2NSS*PSV137	MSL SAFETY RELIEF VALVE DIKKERS	768E995	PC	296	LH	Y	Y	N	HF	60.5	A	Y
B22-F013D 2NSS*PSV123	MSL SAFETY/RELIEF VALVE DIKKERS	768E995	PC	296	LH	Y	Y	N	HF	60.5	A	Y
B22-F013E 2NSS*PSV136	MSL SAFETY RELIEF VALVE DIKKERS	768E995	PC	296	LH	Y	Y	N	HF	60.5	A	Y
B22-F013F 2NSS*PSV122	MSL SAFETY RELIEF VALVE DIKKERS	768E995	PC	296	LH	Y	Y	N	HF	60.5	A	Y
B22-F013G 2NSS*PSV132	MSL SAFETY RELIEF VALVE DIKKERS	768E995	PC	297	LH	Y	Y	N	HF	60.5	A	Y

JOB NAME NMP - UNIT 2
UTILITY NIAGARA MOHAWK

SEISMIC AND DYNAMIC QUALIFICATION SUMMARY AND STATUS REPORT
MASTER LIST OF SAFETY RELATED EQUIPMENT

ENGINEER: STONE & WEBSTER
NSSS SUPPLIER: GENERAL ELECTRIC

EQUIP. ID / SHEC ID	EQUIPMENT DESCRIPTION / MANUFACTURER	PPD NO.	LOCATION BLDG	LOCATION ELEV	LOCATION HTG	LOADS SEIS	LOADS HYDR	QUAL ANLYS	METH TEST	NAT FREQ LOWEST	RRS REF STATUS QUAL	RRS REF STATUS INST
B22-F013H 2MSS*PSV127	MSL SAFETY RELIEF VALVE DIKKERS	768E995	PC	297	LH	Y	Y	N	MF	60.5	A	Y
B22-F013J 2MSS*PSV131	MSL SAFETY RELIEF VALVE DIKKERS	768E995	PC	297	LH	Y	Y	N	MF	60.5	A	Y
B22-F013K 2MSS*PSV126	MSL SAFETY RELIEF VALVE DIKKERS	768E995	PC	297	LH	Y	Y	N	MF	60.5	A	Y
B22-F013L 2MSS*PSV135	MSL SAFETY RELIEF VALVE DIKKERS	768E995	PC	296	LH	Y	Y	N	MF	60.5	A	Y
B22-F013M 2MSS*PSV121	MSL SAFETY RELIEF VALVE DIKKERS	768E995	PC	296	LH	Y	Y	N	MF	60.5	A	Y
B22-F013N 2MSS*PSV134	MSL SAFETY RELIEF VALVE DIKKERS	768E995	PC	297	LH	Y	Y	N	MF	60.5	A	Y
B22-F013P 2MSS*PSV120	MSL SAFETY RELIEF VALVE DIKKERS	768E995	PC	297	LH	Y	Y	N	MF	60.5	A	Y
B22-F013R 2MSS*PSV130	MSL SAFETY RELIEF VALVE DIKKERS	768E995	PC	297	LH	Y	Y	N	MF	60.5	A	Y
B22-F013S 2MSS*PSV125	MSL SAFETY RELIEF VALVE DIKKERS	768E995	PC	297	LH	Y	Y	N	MF	60.5	A	Y
B22-F013U 2MSS*PSV129	MSL SAFETY RELIEF VALVE DIKKERS	768E995	PC	297	LH	Y	Y	N	MF	60.5	A	Y
B22-F013V 2MSS*PSV124	MSL SAFETY RELIEF VALVE DIKKERS	768E995	PC	297	LH	Y	Y	N	MF	60.5	A	Y
B22-F0139	MSL SAFETY RELIEF VALVE DIKKERS	768E995	PC	297	LH	Y	Y	N	MF	60.5	A	N
B22-N004A	TEMPERATURE ELEMENT PYCO	13309679	PC		LH	Y	Y					
B22-N004B	TEMPERATURE ELEMENT PYCO	13309679	PC		LH	Y	Y					

JOB NAME NMP - UNIT 2
UTILITY NIAGARA MOHAWK

SEISMIC AND DYNAMIC QUALIFICATION SUMMARY AND STATUS REPORT
MASTER LIST OF SAFETY RELATED EQUIPMENT

ENGINEER: STONE & WEBSTER
NSSS SUPPLIER: GENERAL ELECTRIC

EQUIP. ID / SHEC ID	EQUIPMENT DESCRIPTION / MANUFACTURER	PPD NO.	LOCATION BLDG	LOCATION ELEV	LOCATION HTG	LOADS SEIS	LOADS HYDR	QUAL METH ANLYS	QUAL METH TEST	NAT FREQ LOWEST	RRS REF STATUS QUAL	RRS REF STATUS INST
B22-N004C	TEMPERATURE ELEMENT PYCO	133D9679	PC		LH	Y	Y					
B22-N004D	TEMPERATURE ELEMENT PYCO	133D9679	PC		LH	Y	Y					
B22-N004E	TEMPERATURE ELEMENT PYCO	133D9679	PC		LH	Y	Y					
B22-N004F	TEMPERATURE ELEMENT PYCO	133D9679	PC		LH	Y	Y					
B22-N004G	TEMPERATURE ELEMENT PYCO	133D9679	PC		LH	Y	Y					
B22-N004H	TEMPERATURE ELEMENT PYCO	133D9679	PC		LH	Y	Y					
B22-N004J	TEMPERATURE ELEMENT PYCO	133D9679	PC		LH	Y	Y					
B22-N004K	TEMPERATURE ELEMENT PYCO	133D9679	PC		LH	Y	Y					
B22-N004L	TEMPERATURE ELEMENT PYCO	133D9679	PC		LH	Y	Y					
B22-N004M	TEMPERATURE ELEMENT PYCO	133D9679	PC		LH	Y	Y					
B22-N004N	TEMPERATURE ELEMENT PYCO	133D9679										
B22-N004P	TEMPERATURE ELEMENT PYCO	133D9679	PC		LH	Y	Y					
B22-N004Q	TEMPERATURE ELEMENT PYCO	133D9679	PC		LH	Y	Y					

JOB NAME NMP - UNIT 2
UTILITY NIAGARA MOHAWK

SEISMIC AND DYNAMIC QUALIFICATION SUMMARY AND STATUS REPORT
MASTER LIST OF SAFETY RELATED EQUIPMENT

ENGINEER: STONE & WEBSTER
NSSS SUPPLIER: GENERAL ELECTRIC

EQUIP. ID / SHEC ID	EQUIPMENT DESCRIPTION / MANUFACTURER	PPD NO.	LOCATION BLDG	LOCATION ELEV	LOCATION HTG	LOADS SEIS	LOADS HYDR	QUAL ANLYS	METH. TEST	NAT FREQ. LOWEST	RRS REF STATUS QUAL	RRS REF STATUS INST
B22-N004R	TEMPERTURE ELEMENT PYCO	133D9679	PC		LH	Y	Y					
B22-N004S	TEMPERATURE ELEMENT PYCO	133D9679	PC		LH	Y	Y					
B22-N004T	TEMPERATURE ELEMENT PYCO	133D9679	PC		LH	Y	Y					
B22-N004U	TEMPERATURE ELEMENT PYCO	133D9679	PC		LH	Y	Y					
B22-N004V	TEMPERATURE ELEMENT PYCO	133D9679	PC		LH	Y	Y					
B22-N004W	TEMPERATURE ELEMENT PYCO	133D9679	PC		LH	Y	Y					
B22-N005A 2MSS*FE11A	FLOW ELEMENT GE	105D4945	PC	278	LH	Y	Y	Y	N	100+	NA B	Y
B22-N005B 2MSS*FE11B	FLOW ELEMENT GE	105D4945	PC	278	LH	Y	Y	Y	N	100+	NA B	Y
B22-N005C 2MSS*FE11C	FLOW ELEMENT GE	105D4945	PC	278	LH	Y	Y	Y	N	100+	NA B	Y
B22-N005D 2MSS*FE11D	FLOW ELEMENT GE	105D4945	PC	278	LH	Y	Y	Y	N	100+	NA B	Y
B22-N059	TEMPERATURE ELEMENT CALOY/PYCO	117C3485						S	NA	100+	NA	
B22-N060	TEMPERATURE ELEMENT CALOY/PYCO	117C3458						S	NA	100+	NA	
B22-N075A 2CNM*PT46A	PRESSURE TRANSMITTER ROSEMOUNT	188C7360	TB	306	RH	Y	NA	N	HF	20	7 A	Y
B22-N075B 2CNM*PT46B	PRESSURE TRANSMITTER ROSEMOUNT	188C7360	TB	306	RH	Y	NA	N	HF	20	7 A	Y

JOB NAME NMP - UNIT 2
UTILITY NIAGARA MOHAWK

SEISMIC AND DYNAMIC QUALIFICATION SUMMARY AND STATUS REPORT
MASTER LIST OF SAFETY RELATED EQUIPMENT

ENGINEER: STONE & WEBSTER
NSSS SUPPLIER: GENERAL ELECTRIC

EQUIP. ID / SHEC ID	EQUIPMENT DESCRIPTION / MANUFACTURER	PPD NO.	LOCATION BLDG	LOCATION ELEV	LOCATION HTG	LOADS SEIS	LOADS HYDR	QUAL ANLYS	METH TEST	NAT FREQ LOWEST	RRS REF STATUS QUAL	RRS REF STATUS INST
B22-N075C 2CNM*PT46C	PRESSURE TRANSMITTER ROSEMOUNT	188C7360	TB	306	RH	Y	NA	N	HF	20	7 A	Y
B22-N075D 2CNM*PT46D	PRESSURE TRANSMITTER ROSEMOUNT	188C7360	TB	306	RH	Y	NA	N	HF	20	7 A	Y
B22-N076A 2MSS*PT20A	PRESSURE TRANSMITTER ROSEMOUNT	188C7360	TB	278	RH	Y	NA	N	HF	20	12 A	Y
B22-N076B 2MSS*PT20B	PRESSURE TRANSMITTER ROSEMOUNT	188C7360	TB	278	RH	Y	NA	N	HF	20	12 A	Y
B22-N076C 2MSS*PT20C	PRESSURE TRANSMITTER ROSEMOUNT	188C7360	TB	278	RH	Y	NA	N	HF	20	12 A	Y
B22-N076D 2MSS*PT20D	PRESSURE TRANSMITTER ROSEMOUNT	188C7360	TB	278	RH	Y	NA	N	HF	20	12 A	Y
B35-C001A 2RCS*P1A	RECIRC PUMP/MOTOR BINGHAM/GE	731E724	PC	253	MH	Y	Y	Y	N	NA	70 C	Y
B35-C001B 2RCS*P1B	RECIRC PUMP/MOTOR BINGHAM/GE	731E724	PC	253	MH	Y	Y	Y	N	NA	70 C	Y
B35-F023A 2RCS*MOV10A	RECIRC LOOP SUCTION V DARLING	21A8717AM	PC	249	LH	Y	Y	D	NA	29.7	70 B	Y
B35-F023B 2RCS*MOV10B	RECIRC LOOP SUCTION V DARLING	21A8717AM	PC	249	LH	Y	Y	D	NA	29.7	70 B	Y
B35-F060A 2RCS*HYV17A	RECIRC LOOP CONTROL V FISHER	769E487	PC	253	LH	Y	Y	D	NA	60+	70 B	Y
B35-F060B 2RCS*HYV17B	RECIRC LOOP CONTROL V FISHER	769E487	PC	253	LH	Y	Y	S	NA	60+	70 B	Y
B35-F067A 2RCS*MOV18A	RECIRC LOOP DISCH BLOCK DARLING	21A8717AM	PC	253	LH	Y	Y	D	NA	12.0	70 B	Y

JOB NAME NMP - UNIT 2
UTILITY NIAGARA MOHAWK

SEISMIC AND DYNAMIC QUALIFICATION SUMMARY AND STATUS REPORT
MASTER LIST OF SAFETY RELATED EQUIPMENT

ENGINEER: STONE & WEBSTER
NSSS SUPPLIER: GENERAL ELECTRIC

EQUIP. ID / SHEC ID	EQUIPMENT DESCRIPTION / MANUFACTURER	PPD NO.	LOCATION BLDG	ELEV	HTG	LOADS SEIS	HYDR	QUAL ANLYS	METH TEST	NAT FREQ LOWEST	RRS REF	STATUS QUAL	STATUS INST
B35-F067B 2RCS*MOV18B	RECIRC LOOP DISCH BLOCK DARLING	21A8717AM	PC	253	LH	Y	Y	D	NA	12.0		B	Y
B35-N022 2RCS*TM106	TEMPERATURE ELEMENT CALOY/PYCO	117C3485	PC	261	LH	Y	Y	N	MF	NA	131	A	Y
B35-N023A 2RCS-TE13A	TEMPERATURE ELEMENT	159C4520	PC	240		Y	Y	N	MF	NA	71	A	Y
B35-N023B 2RCS-TE13B	TEMPERATURE ELEMENT	159C4520	PC	240		Y	Y	N	MF	NA	71	A	Y
B35-N024D 2RCS*FT9B	FLOW TRANSMITTER ROSEMOUNT	163C1561	RB	215	RM	Y	NA	NA	Y	50	96	B	Y
B35-N028A 2RCS-TE12A	TEMPERATURE ELEMENT	159C4520	PC	240		Y	NA	N	MF	NA	71	A	Y
B35-N028B 2RCS-TE12B	TEMPERATURE ELEMENT	159C4520	PC	240		Y	Y	N	MF	NA	71	A	Y
B35-N029 2MSS-TE115	TEMPERATURE ELEMENT	159C4520	MST	252		Y	NA	N	MF	NA	5	A	N
B35-N030 2MSS-TE116	TEMPERATURE ELEMENT	159C4520	MST	252		Y	NA	N	MF	NA	5	A	N
C12-D001 2RDS*	HYDRAULIC CONTROL UNIT GE	761E500	RB	261	CF	Y	NA	D	MF	17	94	A	Y
C12-F009 2RDS*SOVX154	CRD SCRAM AIR VLV VALCOR ENGRG	21A9317AV	RB	261	RM	Y	NA	N	MF	100+	94	A	N
C12-F010 2RDS*AOV124	DISCH HDR VENT V FISHER CONTROL	21A1997	RB	261	LH	Y	NA	N	MF	10.6	94	A	Y
C12-F011 2RDS*AOV123	DISCH HDR DRAIN V FISHER CONTROL	21A1997	RB	240	LH	Y	NA	N	MF	18.5	95	A	Y
C12-F110A 2RDS*SOV138	BACKUP SCRAM SOL VALCOR ENGRG	21A9317AU	RB	261	RM	Y	NA	N	MF	60+	94	A	Y

JOB NAME NMP - UNIT 2
UTILITY NIAGARA MOHAWK

SEISMIC AND DYNAMIC QUALIFICATION SUMMARY AND STATUS REPORT
MASTER LIST OF SAFETY RELATED EQUIPMENT

ENGINEER: STONE & WEBSTER
NSSS SUPPLIER: GENERAL ELECTRIC

EQUIP. ID / SHEC ID	EQUIPMENT DESCRIPTION / MANUFACTURER	PPD NO.	LOCATION BLDG	ELEV	HTG	LOADS SEIS	HYDR	QUAL ANLYS	METH TEST	NAT FREQ LOWEST	RRS REF STATUS QUAL	INST
C12-F110B 2RDS*SOV137	BACKUP SCRAM SOL VALCOR ENGRG	21A9317AU	RB	261	RH	Y	NA	N	HF	60+	94 A	Y
C12-F160A 2RDS*SOV162	ARI VALVE VALCOR ENGRG	21A9317AU	RB	261	RH	Y	NA	N	HF	60+	94 A	Y
C12-F160B 2RDS*SOV163	ARI VALVE VALCOR ENGRG	21A9317AU	RB	261	RH	Y	NA	N	HF	60+	94 A	Y
C12-F162A 2RDS*SOV156	ARI VALVE VALCOR ENGRG	21A9317AH	RB	261	RH	Y	NA	N	HF	60+	94 A	Y
C12-F162B 2RDS*SOV157	ARI VALVE VALCOR ENGRG	21A9317AH	RB	261	RH	Y	NA	N	HF	60+	94 A	Y
C12-F162C 2RDS*SOV158	ARI VALVE VALCOR ENGRG	21A9317AH	RB	261	RH	Y	NA	N	HF	60+	94 A	Y
C12-F162D 2RDS*SOV159	ARI VALVE VALCOR ENGRG	21A9317AH	RB	261	RH	Y	NA	N	HF	60+	94 A	Y
C12-F163A 2RDS*SOV160	ARI VALVE VALCOR ENGRG	21A9317AH	RB	261	RH	Y	NA	N	HF	60+	94 A	Y
C12-F163B 2RDS*SOV161	ARI VALVE VALCOR ENGRG	21A9317AH	RB	261	RH	Y	NA	N	HF	60+	94 A	Y
C12-F180 2RDS*AOV132	DISCH HDR VENT V HANNEL DAHL	22A6924AA	RB	261	LH	Y	NA	N	HF	20.0	NA A	N
C12-F181 2RDS*AOV130	DISCH HDR DRAIN V HANNEL DAHL	22A6924AB	RB	240	LH	Y	NA	N	HF	32.0	NA A	Y
C12-F182 2RDS*SOVX155	CRD SCRAM AIR V VALCOR ENGRG	21A9317AV	RB	265	RB	Y	NA	N	HF	100+	94 A	N
C12-N012A 2RDS*LTY12B	LEVEL TRANSMITTER GOULD INC	184C4775	RB	261		Y	NA	N	HF	100+	94 B	Y

JOB NAME NMP - UNIT 2
UTILITY NIAGARA MOHAWK

SEISMIC AND DYNAMIC QUALIFICATION SUMMARY AND STATUS REPORT
MASTER LIST OF SAFETY RELATED EQUIPMENT

ENGINEER: STONE & WEBSTER
NSSS SUPPLIER: GENERAL ELECTRIC

EQUIP. ID / SHEC ID	EQUIPMENT DESCRIPTION / MANUFACTURER	PPD NO.	LOCATION BLDG	LOCATION ELEV	LOCATION HTG	LOADS SEIS	LOADS HYDR	QUAL ANLYS	METH TEST	NAT FREQ LOWEST	RRS REF STATUS QUAL	RRS REF STATUS INST
C12-N012B 2RDS*LTX12B	LEVEL TRANSMITTER GOULD INC	184C4775	RB	261		Y	NA	N	HF	100+	94 B	Y
C12-N012C 2RDS*LTY12A	LEVEL TRANSMITTER GOULD INC	184C4775	RB	261		Y	NA	N	HF	100+	94 B	Y
C12-N012D 2RDS*LTX12A	LEVEL TRANSMITTER GOULD INC	184C4775	RB	261		Y	NA	N	HF	100+	94 B	Y
C12-N013A 2RDS*LSY11A	LEVEL SWITCH MAGNETROL	184C4776	RB	261		Y	NA	N	HF	100+	94 B	Y
C12-N013B 2RDS*LSX11A	LEVEL SWITCH MAGNETROL	184C4776	RB	261		Y	NA	N	HF	100+	94 B	Y
C12-N013C 2RDS*LSY11B	LEVEL SWITCH MAGNETROL	184C4776	RB	261		Y	NA	N	HF	100+	94 B	Y
C12-N013D 2RDS*LSX11B	LEVEL SWITCH MAGNETROL	184C4776	RB	261		Y	NA	N	HF	100+	94 B	Y
C12-N013E	LEVEL SWITCH MAGNETROL	159C4361	RB	261	261	Y	NA					
C12-N013F	LEVEL SWITCH MAGNETROL	159C4361	RB	261		Y	NA					
C12-N013G	LEVEL SWITCH MAGNETROL	184E4776	RB	261		Y	NA	NA	HF	100+		
C12-N013H	LEVEL SWITCH MAGNETROL	184E4776	RB	261		Y	NA	NA	HF	100+		
C22-P001 2CEC*P001	RRCS PANEL	945E355	CB	306	CF	Y	NA	N	Y	12.5	18 B	Y
C22-P002 2CEC*P002	RRCS PANEL	945E355	CB	306	CF	Y	NA	N	Y	12.5	18 B	Y
C41-A001 2SLS*TK1	SLC TANK BOEING	796E437	RB	289	CF	Y	NA	S	N	NA	93 A	Y

JOB NAME NMP - UNIT 2
UTILITY NIAGARA MOHAWK

SEISMIC AND DYNAMIC QUALIFICATION SUMMARY AND STATUS REPORT
MASTER LIST OF SAFETY RELATED EQUIPMENT

ENGINEER: STONE & WEBSTER
NSSS SUPPLIER: GENERAL ELECTRIC

EQUIP. ID / SWEC ID	EQUIPMENT DESCRIPTION / MANUFACTURER	PPD NO.	LOCATION BLDG	ELEV	HTG	LOADS SEIS	HYDR	QUAL ANLYS	METH TEST	NAT FREQ LOWEST	RRS REF STATUS QUAL	INST
C41-C001A 2SLS*P1A	SLC PUMP/MOTOR UNION PUMP/GE	21A1921AD	RB	289	CF	Y	NA	S	HF	100+/57	93 A	Y
C41-C001B 2SLS*P1B	SLC PUMP/MOTOR UNION PUMP/GE	21A1921AD	RB	289	CF	Y	NA	S	HF	100+/57	93 A	Y
C41-D002 2SLS-CH2	SLC OPOERATING HTR GE	166B7321	RB	289	EH	Y	NA				93	Y
C41-F004A 2SLS*VEX3A	SLC EXPLOSIVE VALVE CONAX CORP	21A9370AB	RB	296	LH	Y	NA	N	HF	100+	NA A	Y
C41-F004B 2SLS*VEX3B	SLC EXPLOSIVE VALVE CONAX CORP	21A9370AB	RB	296	LH	Y	NA	N	HF	100+	NA A	Y
C41-N003 2SLS*TS102	TEMPERATURE SWITCH NEED	157C4629	RB	289		Y	NA	Y	N	NA	93 A	Y
C41-N004A 2SLS*PT4A	PRESSURE TRANSMITTER ROSEMOUNT	188C7360	RB	289	RH	Y	NA	N	HF		93 A	Y
C41-N004B 2SLS*PT4B	PRESSURE TRANSMITTER ROSEMOUNT	188C7360	RB	289	RH	Y	NA	N	HF		93 A	Y
C41-N006	TEMPERATURE ELEMENT		RB	289	EH	Y	NA	S	NA			
C41-N007 2SLS*FT113	FLOW TRANSMITTER ROSEMOUNT	188C7360	RB	289	RH	Y	NA		HF		93 A	N
C41-N010A 2SLS*LT6A	LEVEL TRANSMITTER GOULD INC	184C4775	RB	289	RH	Y	NA	N	HF		93 B	N
C41-N010B 2SLS*LT6B	LEVEL TRANSMITTER GOULD INC	184C4775	RB	289	RH	Y	NA	N	HF		93 B	N
C41-N010C 2SLS*LT6C	LEVEL TRANSMITTER GOULD INC	184C4775	RB	289	RH	Y	NA	N	HF		93 B	N

JOB NAME NMP - UNIT 2
UTILITY NIAGARA MOHAWK

SEISMIC AND DYNAMIC QUALIFICATION SUMMARY AND STATUS REPORT
MASTER LIST OF SAFETY RELATED EQUIPMENT

ENGINEER: STONE & WEBSTER
NSSS SUPPLIER: GENERAL ELECTRIC

EQUIP. ID / SHEC ID	EQUIPMENT DESCRIPTION / MANUFACTURER	PPD NO.	LOCATION BLDG	ELEV	HTG	LOADS SEIS	HYDR	QUAL ANLYS	METH TEST	NAT FREQ LOWEST	RRS REF STATUS QUAL	INST
C41-N010D 2SLS*LT6D	LEVEL TRANSMITTER GOULD INC	184C4775	RB	289	RH	Y	NA	N	HF	100+	93 B	N
C41-R003 2SLS*PI107	PRESSURE INDICATOR ROBERTSHAW	163C1184	RB	289	RH	Y	NA	NA	Y	15	93 A	Y
C51-J003 2NMS*	DRYWELL PENETRATION FLANGE GE	198B6193	RB	254	LH	Y	Y	Y	N	100+	NA A	Y
C51-J004A 2NMS*	VALVE ASSEMBLY GE	136B1302	RB	240		Y		N	Y	0.5	95 A	N
C51-J004B 2NMS*	VALVE ASSEMBLY GE	136B1302	RB	240		Y		N	Y	0.5	95 A	N
C51-J004C 2NMS*	VALVE ASSEMBLY GE	136B1302	RB	240		Y		N	Y	0.5	95 A	N
C51-J004D 2NMS*	VALVE ASSEMBLY GE	136B1302	RB	240		Y		N	Y	0.5	95 A	N
C51-J004E 2NMS*	VALVE ASSEMBLY GE	136B1302	RB	240		Y		N	Y	0.5	95 A	N
C51-N002A 2NMS*	INTERM RG DETECTOR GE	112C3144	PC	261		Y	Y	N	Y	33+	131 A	Y
C51-N002B 2NMS*	INTERM RG DETECTOR GE	112C3144	PC	261		Y	Y	N	Y	33+	131 A	N
C51-N002C 2NMS*	INTERM RG DETECTOR GE	112C3144	PC	261		Y	Y	N	Y	33+	131 A	Y
C51-N002D 2NMS*	INTERM RG DETECTOR GE	112C3144	PC	261		Y	Y	N	Y	33+	131 A	Y
C51-N002E 2NMS*	INTERM RG DETECTOR GE	112C3144	PC	261		Y	Y	N	Y	33+	131 A	N
C51-N002F 2NMS*	INTERM RG DETECTOR GE	112C3144	PC	261		Y	Y	N	Y	33+	131 A	Y

JOB NAME NMP - UNIT 2
UTILITY NIAGARA MOHAWK

SEISMIC AND DYNAMIC QUALIFICATION SUMMARY AND STATUS REPORT
MASTER LIST OF SAFETY RELATED EQUIPMENT

ENGINEER: STONE & WEBSTER
NSSS SUPPLIER: GENERAL ELECTRIC

EQUIP. ID / SHEC ID	EQUIPMENT DESCRIPTION / MANUFACTURER	PPD NO.	LOCATION BLDG	LOCATION ELEV	LOCATION HTG	LOADS SEIS	LOADS HYDR	QUAL ANLYS	METH TEST	NAT FREQ LOWEST	RRS REF STATUS QUAL	RRS REF STATUS INST
C51-N002G 2NMS*	INTERM RG DETECTOR GE	112C3144	PC	261		Y	Y	N	Y	33+	131 A	Y
C51-N002H 2NMS*	INTERM RG DETECTOR GE	112C3144	PC	261		Y	Y	N	Y	33+	131 A	H
C72-N052A 2MSS*PT16A	PRESSURE TRANSMITTER ROSEMOUNT	188C7360	TB	278	RH	Y	NA	NA	Y	20	6 A	Y
C72-N052B 2MSS*PT16B	PRESSURE TRANSMITTER ROSEMOUNT	188C7360	TB	278	RH	Y	NA	N	HF	20	6 A	Y
C72-N052C 2MSS*PT16C	PRESSURE TRANSMITTER ROSEMOUNT	188C7360	TB	278	RH	Y	NA	N	HF	20	12 A	Y
C72-N052D 2MSS*PT16D	PRESSURE TRANSMITTER ROSEMOUNT	188C7360	TB	278	RH	Y	NA	N	HF	20	12 A	Y
C72-S003 2RPS*	CONTROL SWITCH	21A3120				Y	Y	N	Y	54.5		Y
C72-S003A	ELECTRICAL PROTECTON ASSY GE	21A3120				Y	Y	D	Y	54.5	A	Y
C72-S003B 2RPS*	ELECTRICAL PROTECTION ASSY GE	21A3120				Y	Y	D	SF	54.5	A	Y
C72-S003E 2RPS*	ELECTRICAL PROTECTION ASSY GE	21A3120				Y	Y	D	SF	54.5	A	Y
C72-S003F 2RPS*	ELECTRICAL PROTECTION ASSY GE	21A3120				Y	Y	D	SF	54.5	A	Y
C72-S003G 2RPS*	ELECTRICAL PROTECTION ASSY GE	21A3120				Y	Y	D	SF	54.5	A	Y
C72-S003H 2RPS*	ELECTRICAL PROTECTION ASSY GE	21A3120				Y	Y	D	SF	54.5	A	Y

JOB NAME NMP - UNIT 2
UTILITY NIAGARA MOHAWK

SEISMIC AND DYNAMIC QUALIFICATION SUMMARY AND STATUS REPORT
MASTER LIST OF SAFETY RELATED EQUIPMENT

ENGINEER: STONE & WEBSTER
NSSS SUPPLIER: GENERAL ELECTRIC

EQUIP. ID / SHEC ID	EQUIPMENT DESCRIPTION / MANUFACTURER	PPD NO.	LOCATION BLDG	LOCATION ELEV	LOCATION HTG	LOADS SEIS	LOADS HYDR	QUAL ANLYS	METH-TEST	NAT FREQ-LOWEST	RRS REF STATUS QUAL	RRS REF STATUS INST
C72-5003C 2RPS*	ELECTRICAL PROTECTION ASSY GE	21A3120				Y	Y	D	SF	54.5	A	Y
C72-5003D 2RPS*	ELECTRICAL PROTECTION ASSY GE	21A3120				Y	Y	D	SF	54.5	A	Y
D13-N003A 2HSS*RE46A	INSULATED DETECTOR GE	237X731	HST	289		Y	NA	Y	Y	NA	13 A	N
D13-N003B 2HSS*RE46B	INSULATED DETECTOR GE	237X731	HST	289		Y	NA	Y	Y	NA	13 A	N
D13-N003C 2HSS*RE46C	INSULATED DETECTOR GE	237X731	HST	289		Y	NA	Y	Y	NA	13 A	N
D13-N003D 2HSS*RE46D	INSULATED DETECTOR GE	237X731	HST	253		Y	NA	Y	Y	NA	5 A	N
E12-B001A 2RHS*E1A	RESIDUAL HT HEAT EXCH ATLAS INDUSTRIAL MFG	21A9425AK	ABN	196	DH	Y	NA	D	N	17.0	NA A	Y
E12-B001B 2RHS*E1B	RESIDUAL HT HEAT EXCH ATLAS INDUSTRIAL MFG	21A9425AK	ABS	196	DH	Y	NA	D	N	17.0	NA A	Y
E12-C002A 2RHS*P1A	RHR PUMP/MOTOR BYRON JACKSON/GE	21A1913AD	ABN	175	CF	Y	NA	D/S	SF	18	NA A	Y
E12-C002B 2RHS*P1B	RHR PUMP/MOTOR BYRON JACKSON/GE	21A1913AD	ABS	175	CF	Y	NA	D/S	SF	18	NA A	Y
E12-C002C 2RHS*P1C	RHS PUMP/MOTOR BRYON JACKSON/GE	21A1913AD	ABS	175	CF	Y	NA	D/S	SF	18	NA A	Y
E12-N001A 2RHS*CE11A	CONDUCTIVITY ELEMENT	163C1594	ABN	191	RH	Y	NA	S	N	NA	NA	Y
E12-N001B 2RHS*CE11B	CONDUCTIVITY ELEMENT	163C1594	ABS	193	RH	Y	NA	S	N	NA	NA	Y
E12-N004A 2RHS*TE10A	TEMPERATURE ELEMENT CALOY/PYCO	117C3485	ABN	196	LH	Y	NA	N	HF	NA	NA A	Y

JOB NAME NMP - UNIT 2
UTILITY NIAGARA MOHAWK

SEISMIC AND DYNAMIC QUALIFICATION SUMMARY AND STATUS REPORT
MASTER LIST OF SAFETY RELATED EQUIPMENT

ENGINEER: STONE & WEBSTER
NSSS SUPPLIER: GENERAL ELECTRIC

EQUIP. ID / SHEC ID	EQUIPMENT DESCRIPTION / MANUFACTURER	PPD NO.	LOCATION BLDG	LOCATION ELEV	LOCATION HTG	LOADS SEIS	LOADS HYDR	QUAL ANLYS	METH TEST	NAT FREQ LOWEST	RRS REF STATUS QUAL	RRS REF STATUS INST
E12-N004B 2RHS*TE10B	TEMPERATURE ELEMENT CALOY/PYCO	117C3485	ABS	196	LH	Y	NA	N	HF	NA	NA A	Y
E12-N005A 2SHP*TE12A	TEMPERATURE ELEMENT CALOY/PYCO	117C3485	ABN	175	LH	Y	NA	N	HF	NA	NA A	Y
E12-N005B 2SHP*TE12B	TEMPERATURE ELEMENT CALOY/PYCO	117C3485	ABS	175	LH	Y	NA	N	H	NA	NA A	Y
E12-N006A 2SHP*FE13A	SHP TO HT EXCH FLOW ORIF PEERLESS	21A9505CZ	ABN	233	LH	Y	NA	Y	N	NA	NA A	N
E12-N006B 2SHP*FE13B	SHP TO HT EXCH FLOW ORIF PEERLESS	21A9505CZ	RB	188	LH	Y	NA	Y	N	NA	NA A	Y
E12-N008A 2RHS*LT28A	LEVEL TRANSMITTER BARTON	145C3156	ABN	175	RH	Y	NA	N	SF	50+	NA A	Y
E12-N008B 2RHS*LT28B	LEVEL TRANSMITTER BARTON	145C3156	ABN	175	RH	Y	NA	N	SF	50+	NA A	Y
E12-N012 2RHS*FE105	RHR ORIFICE PEERLESS	21A9505CK	RB	292	LH	N	Y	Y	NA	NA	NA A	Y
E12-N013 2RHS*FT105	FLOW TRANSMITTER ROSEMOUNT	163C1560	RB	261	RH	Y	NA	N	HF	50	94 A	N
E12-N014A 2RHS*FE14A	RHR ORIFICE PEERLESS	21A9505CL	ABN	187	LH	N	Y	Y	N	NA	NA A	N
E12-N014B 2RHS*FE14B	RHR ORIFICE PEERLESS	21A9505CL	ABS	190	LH	N	Y	Y	N	NA	NA A	N
E12-N014C 2RHS*FE14C	RHR ORIFICE PEERLESS	21A9505CL	ABS	192	LH	N	Y	Y	N	NA	NA A	N
E12-N027A 2RHS*TE13A	TEMPERATURE ELEMENT CALOY/PYCO	117C3485	ABN	175	LH	Y	NA	N	HF	NA	NA A	N

JOB NAME NMP - UNIT 2
UTILITY NIAGARA MOHAWK

SEISMIC AND DYNAMIC QUALIFICATION SUMMARY AND STATUS REPORT
MASTER LIST OF SAFETY RELATED EQUIPMENT

ENGINEER: STONE & WEBSTER
NSSS SUPPLIER: GENERAL ELECTRIC

EQUIP. ID / SHEC ID	EQUIPMENT DESCRIPTION / MANUFACTURER	PPD NO.	LOCATION BLDG	ELEV	HTG	LOADS SEIS	HYDR	QUAL ANLYS	METH TEST	NAT FREQ LOWEST	RRS REF STATUS QUAL	INST
E12-N027B 2RHS*TE13B	TEMPERATURE ELEMENT CALOY/PYCO	117C3405	ABS	175	LH	Y	NA	N	HF	NA	NA A	N
E12-N062B	PRESSURE TRANSMITTER	188C7360	RB	175	RM	Y	NA	N	HF	20	98	N
E12-N063A 2RHS*PT3A	PRESSURE TRANSMITTER	188C7360	RB	175	RM	Y	NA	N	HF	20	98	Y
E12-N063B 2RHS*PT3B	PRESSURE TRANSMITTER	188C7360	RB	175	RM	Y	NA	N	HF	20	98	Y
E12-N063C 2RHS*PT3C	PRESSURE TRANSMITTER	188C7360	RB	175	RM	Y	NA	N	HF	20	98	Y
E21-C001 2CSL*P1	LOW PRESS CORE SPRAY PUMP BYRON JACKSON/GE	21A1913AC	ABN	175	CF	Y	NA	D/S	SF	18	NA A	Y
E21-N056 2CSL*PT129	PRESSURE TRANSMITTER ROSEMOUNT	188C7360	RB	175	RM	Y	NA	N	HF	20	98 A	N
E21-N057 2CSL*PT130	PRESSURE TRANSMITTER ROSEMOUNT	188C7360	RB	175	RM	Y	NA	N	HF	20	98 A	N
E22-C001 2CSH*P1	HI PRESS CORE SPRAY PUMP BYRON JACKSON/GE	21A1913AB	RB	175	CF	Y	Y	D/S	SF	18	98 A	Y
E22-F001 2CSH*MOV101	HPCS VALVE ANCHOR/DARLING	21A9457	RB	177	LH	Y	NA	N	HF	48.0	NA C	Y
E22-F004 2CSH*MOV107	HPCS VALVE ANCHOR/DARLING	21A9457	RB	292	LH	Y	Y	N	HF	33.0+	NA C	Y
E22-F010 2CSH*MOV110	HPCS VALVE ANCHOR/DARLING	21A9457	RB	198	LH	Y	NA	N	HF	33.0+	NA C	Y
E22-F011 2CSH*MOV112	HPCS VALVE ANCHOR/DARLING	21A9457	RB	218	LH	Y	NA	N	HF	33.0+	NA C	Y
E22-F012 2CSH*MOV105	HPCS VALVE ANCHOR/DARLING	21A9457	RB	218	LH	Y	NA	N	HF	100+	NA C	Y

JOB NAME NMP - UNIT 2
UTILITY NIAGARA MOHAWK

SEISMIC AND DYNAMIC QUALIFICATION SUMMARY AND STATUS REPORT
MASTER LIST OF SAFETY RELATED EQUIPMENT

ENGINEER: STONE & WEBSTER
NSSS SUPPLIER: GENERAL ELECTRIC

EQUIP. ID / SHEC ID	EQUIPMENT DESCRIPTION / MANUFACTURER	PPD NO.	LOCATION BLDG	ELEV	HTG	LOADS SEIS	HYDR	QUAL ANLYS	METH TEST	NAT FREQ LOWEST	RRS REF STATUS QUAL	INST
E22-F015 / 2CSH*MOV118	HPCS VALVE / ANCHOR/DARLING	21A9457	RB	195	LH	Y	Y	N	HF	33.0+	NA / C	Y
E22-F023 / 2CSH*MOV111	HPCS VALVE / ANCHOR/DARLING	21A9457	RB	215	LH	Y	NA	N	HF	69.0	NA / C	Y
E22-N059C / 2CSH*LT3A	LEVEL TRANSMITTER / ROSEMOUNT	188C7360	PT	298	RH	Y	NA	N	HF	20	NA / A	Y
E22-N059G / 2CSH*LT3B	LEVEL TRANSMITTER / ROSEMOUNT	188C7360	PT	298	RH	Y	NA	N	HF	20	NA / A	Y
E22-N055C / 2CSH*LT124	LEVEL TRANSMITTER / GOULD INC	184C4775	RB	175	RH	Y	NA	N	HF	100	98 / B	Y
E22-N055G / 2CSH*LT123	LEVEL TRANSMITTER / GOULD INC	184C4775	RB	175	RH	Y	NA	N	HF	100	98 / B	Y
E22-S001 / 2EGS*EG2	HPCS DSL GENERATOR	21A9236CB	DG	261	CF	Y	NA	Y	Y	NA	16 / C	Y
E22-S002 / 2EHS*MCC201	HPCS MCC / GE	21A9301AZ	DG	261	CF	Y	NA	Y	Y	4.5	16 / A	Y
E22-S003 / 2EJS*X2	HPCS TRANSFORMER / ELMA ENGRG	21A2057	DG	261	CF	Y	NA	N	Y	NA	16 / A	Y
E22-S004 / 2ENS*SWG102	HPCS SWITCHGEAR / GE	21A9300AS	DG	261	CF	Y	NA	N	Y	4.5	16 / A	Y
E31-N001A / 2HCS*TE35A	TEMPERATURE ELEMENT / PYCO	145C3224	RB	215		Y		N	HF	NA	NA / A	N
E31-N001B / 2HCS*TE35B	TEMPERTURE ELEMENT / PYCO	145C3224	RB	215		Y		N	HF	NA	NA / A	N
E31-N001C / 2HCS*TE35C	TEMPERATURE ELEMENT / PYCO	145C3224	RB	215		Y		N	HF	NA	NA / A	N

JOB NAME NMP - UNIT 2
UTILITY NIAGARA MOHAWK

SEISMIC AND DYNAMIC QUALIFICATION SUMMARY AND STATUS REPORT
MASTER LIST OF SAFETY RELATED EQUIPMENT

ENGINEER: STONE & WEBSTER
NSSS SUPPLIER: GENERAL ELECTRIC

EQUIP. ID / SHEC ID	EQUIPMENT: DESCRIPTION / MANUFACTURER	PPD NO.	LOCATION: BLDG	LOCATION: ELEV HTG	LOADS: SEIS	LOADS: HYDR	QUAL ANLYS	METH- TEST	NAT FREQ- LOWEST	RRS REF STATUS: QUAL	RRS REF STATUS: INST
E31-N001D 2HCS*TE35D	TEMPERATURE ELEMENT PYCO	145C3224	RB	215	Y		N	HF	NA	NA A	N
E31-N001E 2HCS*TE35E	TEMPERATURE ELEMENT PYCO	145C3224	RB	306	Y		N	HF	NA	NA A	N
E31-N001F 2HCS*TE35F	TEMPERATURE ELEMENT PYCO	145C3224	RB	306	Y		N	HF	NA	NA A	N
E31-N002A 2HCS*TE34A	TEMPERATURE ELEMENT PYCO	145C3224	RB	215	Y		N	HF	NA	NA A	N
E31-N002B 2HCS*TE34B	TEMPERATURE ELEMENT PYCO	145C3224	RB	215	Y		N	HF	NA	NA A	N
E31-N002C 2HCS*TE34C	TEMPERATURE ELEMENT PYCO	145C3224	RB	215	Y		N	HF	NA	NA A	N
E31-N002D 2HCS*TE34D	TEMPERATURE ELEMENT PYCO	145C3224	RB	215	Y		N	HF	NA	NA A	N
E31-N002E 2HCS*TE34E	TEMPERATURE ELEMENT PYCO	145C3224	RB	306	Y		N	HF	NA	NA A	N
E31-N002F 2HCS*TE34F	TEMPERATURE ELEMENT PYCO	145C3224	RB	306	Y		N	HF	NA	NA A	N
E31-N003A 2HCS*TE33A	TEMPERATURE ELEMENT PYCO	145C3224	RB	215	Y		N	HF	NA	NA A	N
E31-N003B 2HCS*TE33B	TEMPERATURE ELEMENT PYCO	145C3224	RB	215	Y		N	HF	NA	NA A	N
E31-N003C 2HCS*TE33C	TEMPERATURE ELEMENT PYCO	145C3224	RB	215	Y		N	HF	NA	NA A	N
E31-N003D 2HCS*TE33D	TEMPERATURE ELEMENT PYCO	145C3224	RB	215	Y		N	HF	NA	NA A	N
E31-N003E 2HCS*TE33E	TEMPERATURE ELEMENT PYCO	145C3224	RB	306	Y		N	HF	NA	NA A	N

JOB NAME NMP - UNIT 2
UTILITY NIAGARA MOHAWK

SEISMIC AND DYNAMIC QUALIFICATION SUMMARY AND STATUS REPORT
MASTER LIST OF SAFETY RELATED EQUIPMENT

ENGINEER: STONE & WEBSTER
NSSS SUPPLIER: GENERAL ELECTRIC

EQUIP. ID / SHEC ID	EQUIPMENT: DESCRIPTION / MANUFACTURER	PPD NO.	LOCATION: BLDG	LOCATION: ELEV HTG	LOADS: SEIS	LOADS: HYDR	QUAL ANLYS	METH-TEST	NAT FREQ-LOWEST	RRS REF STATUS: QUAL	RRS REF STATUS: INST
E31-N003F 2MCS*TE33F	TEMPERATURE ELEMENT PYCO	145C3224	RB	306	Y		N	HF	NA	NA A	N
E31-N004A 2ICS*TE16A	TEMPERATURE ELEMENT PYCO	145C3224	RB	175	Y		N	HF	NA	NA A	N
E31-N004B 2ICS*TE16B	TEMPERATURE ELEMENT PYCO	145C3224	RB	175	Y		N	HF	NA	NA A	N
E31-N005A 2ICS*TE15A	TEMPERATURE ELEMENT PYCO	145C3224	RB	175	Y		N	HF	NA	NA A	N
E31-N005B 2ICS*TE15B	TEMPERATURE ELEMENT PYCO	145C3224	RB	175	Y		N	HF	NA	NA A	N
E31-N006A 2ICS*TE14A	TEMPERATURE ELEMENT PYCO	145C3224	RB	175	Y		N	HF	NA	NA A	N
E31-N006B 2ICS*TE14B	TEMPERATURE ELEMENT PYCO	145C3224	RB	175	Y		N	HF	NA	NA A	N
E31-N017A 2ISC*TE27A	TEMPERATURE ELEMENT PYCO	145C3224	PC	289	Y	Y	N	HF	NA	NA A	Y
E31-N017B 2ISC*TE27B	TEMPERATURE ELEMENT PYCO	145C3224	PC	289	Y	Y	N	HF	NA	NA A	Y
E31-N017C 2ISC*TE27C	TEMPERATURE ELEMENT PYCO	145C3224	PC	261	Y	Y	N	HF	NA	NA A	N
E31-N017D 2ISC*TE27D	TEMPERATURE ELEMENT PYCO	145C3224	PC	261	Y	Y	N	HF	NA	NA A	N
E31-N018A 2RHS*TE49A	TEMPERATURE ELEMENT PYCO	145C3224	ABN	175	Y	NA	N	HF	NA	NA A	N
E31-N018B 2RHS*TE49B	TEMPERATURE ELEMENT PYCO	145C3224	ABN	175	Y	NA	N	HF	NA	NA A	N

JOB NAME NMP - UNIT 2
UTILITY NIAGARA MOHAWK

SEISMIC AND DYNAMIC QUALIFICATION SUMMARY AND STATUS REPORT
MASTER LIST OF SAFETY RELATED EQUIPMENT

ENGINEER: STONE & WEBSTER
NSSS SUPPLIER: GENERAL ELECTRIC

EQUIP. ID / SHEC ID	EQUIPMENT DESCRIPTION / MANUFACTURER	PPD NO.	LOCATION BLDG	LOCATION ELEV MTG	LOADS SEIS	LOADS HYDR	QUAL ANLYS	METH TEST	NAT FREQ LOWEST	RRS REF STATUS QUAL	RRS REF STATUS INST
E31-N018C 2RHS*TE49C	TEMPERATURE ELEMENT PYCO	145C3224	ABS	175	Y	NA	N	HF	NA	NA A	N
E31-N018D 2RHS*TE49D	TEMPERATURE ELEMENT PYCO	145C3224	ABS	175	Y	NA	N	HF	NA	NA A	N
E31-N024A 2ICS*TE10A	TEMPERATURE ELEMENT PYCO	145C3224	RB	196	Y		N	HF	NA	NA A	N
E31-N024B 2ICS*TE10B	TEMPERATURE ELEMENT PYCO	145C3224	RB	196	Y		N	HF	NA	NA A	N
E31-N025A 2ICS*TE11A	TEMPERATURE ELEMENT PYCO	145C3224	RB	196	Y		N	HF	NA	NA A	N
E31-N025B 2ICS*TE11B	TEMPERATURE ELEMENT PYCO	145C3224	RB	196	Y		N	HF	NA	NA A	N
E31-N026A 2ICS*TE12A	TEMPERATURE ELEMENT PYCO	145C3224	RB	196	Y		N	HF	NA	NA A	N
E31-N026B 2ICS*TE12B	TEMPERATURE ELEMENT PYCO	145C3224	RB	196	Y		N	HF	NA	NA A	N
E31-N027A 2RHS*TE47A	TEMPERATURE ELEMENT PYCO	145C3224	ABN	175	Y	NA	NA	HF	NA	NA A	N
E31-N027B 2RHS*TE47B	TEMPERATURE ELEMENT PYCO	145C3224	ABN	175	Y	NA	N	HF	NA	NA A	N
E31-N027C 2RHS*TE47C	TEMPERATURE ELEMENT PYCO	145C3224	ABS	175	Y	NA	N	HF	NA	NA A	N
E31-N027D 2RHS*TE47D	TEMPERATURE ELEMENT PYCO	145C3224	ABS	175	Y	NA	N	HF	NA	NA A	N
E31-N028A 2RHS*TE48A	TEMPERATURE ELEMENT PYCO	145C3224	ABN	175	Y	NA	N	HF	NA	NA A	N
E31-N028B 2RHS*TE48B	TEMPERATURE ELEMENT PYCO	145C3224	ABN	175	Y	NA	N	HF	NA	NA A	N

JOB NAME NMP - UNIT 2
UTILITY NIAGARA MOHAWK

SEISMIC AND DYNAMIC QUALIFICATION SUMMARY AND STATUS REPORT
MASTER LIST OF SAFETY RELATED EQUIPMENT

ENGINEER: STONE & WEBSTER
NSSS SUPPLIER: GENERAL ELECTRIC

EQUIP. ID / SHEC ID	EQUIPMENT: DESCRIPTION / MANUFACTURER	PPD NO.	LOCATION: BLDG	ELEV HTG	LOADS: SEIS	HYDR	QUAL ANLYS	METH- TEST	NAT FREQ- LOWEST	RRS REF STATUS: QUAL	INST
E31-N028C 2RHS*TE48C	TEMPERATURE ELEMENT PYCO	145C3224	ABS	175	Y	NA	N	HF	NA	NA A	N
E31-N028D 2RHS*TE48D	TEMPERATURE ELEMENT PYCO	145C3224	ABS	175	Y	NA	N	HF	NA	NA A	N
E31-N029A 2HSS*TE48A	TEMPERATURE ELEMENT PYCO	145C3224	RB	240	Y		N	HF	NA	NA A	N
E31-N029B 2HSS*TE48B	TEMPERATURE ELEMENT PYCO	145C3224	RB	240	Y		N	HF	NA	NA A	N
E31-N029C 2HSS*TE48C	TEMPERATURE ELEMENT PYCO	145C3224	RB	240	Y		N	HF	NA	NA A	N
E31-N029D 2HSS*TE48D	TEMPERATURE ELEMENT PYCO	145C3224	RB	240	Y		N	HF	NA	NA A	N
E31-N030A 2HSS*TE49A	TEMPERATURE ELEMENT PYCO	145C3224	RB	240	Y		N	HF	NA	NA A	N
E31-N030B 2HSS*TE49B	TEMPERATURE ELEMENT PYCO	145C3224	RB	240	Y		N	HF	NA	NA A	N
E31-N030C 2HSS*TE49C	TEMPERATURE ELEMENT PYCO	145C3224	RB	240	Y		N	HF	NA	NA A	N
E31-N030D 2HSS*TE49D	TEMPERATURE ELEMENT PYCO	145C3224	RB	240	Y		N	HF	NA	NA A	N
E31-N031A 2HSS*TE50A	TEMPERATURE ELEMENT PYCO	145C3224	RB	240	Y		N	HF	NA	NA A	N
E31-N031B 2HSS*TE50B	TEMPERATURE ELEMENT PYCO	145C3224	RB	240	Y		N	HF	NA	NA A	N
E31-N031C 2HSS*TE50C	TEMPERATURE ELEMENT PYCO	145C3224	RB	240	Y		N	HF	NA	NA A	N

JOB NAME NMP - UNIT 2
UTILITY NIAGARA MOHAWK

SEISMIC AND DYNAMIC QUALIFICATION SUMMARY AND STATUS REPORT
MASTER LIST OF SAFETY RELATED EQUIPMENT

ENGINEER: STONE & WEBSTER
NSSS SUPPLIER: GENERAL ELECTRIC

EQUIP. ID / SHEC ID	EQUIPMENT DESCRIPTION / MANUFACTURER	PPD NO.	LOCATION BLDG	LOCATION ELEV HTG	LOADS SEIS	LOADS HYDR	QUAL ANLYS	METH TEST	NAT FREQ LOWEST	RRS REF STATUS QUAL	RRS REF STATUS INST
E31-N031D 2HSS*TE50D	TEMPERATURE ELEMENT PYCO	145C3224	RB	240	Y		N	HF	NA	NA A	N
E31-N040A 2HSS*TE69A	TEMPERATURE ELEMENT PYCO	145C3224	HST	247	Y	NA	N	HF	NA	NA A	N
E31-N040B 2HSS*TE69B	TEMPERATURE ELEMENT PYCO	145C3224	HST	247	Y	NA	N	HF	NA	NA A	N
E31-N040C 2HSS*TE69C	TEMPERATURE ELEMENT PYCO	145C3224	HST	247	Y	NA	N	HF	NA	NA A	N
E31-N040D 2HSS*TE69D	TEMPERATURE ELEMENT PYCO	145C3224	HST	247	Y	NA	NA	HF	NA	NA A	N
E31-N041A 2HSS*TE70A	TEMPERATURE ELEMENT PYCO	145C3224	HST	247	Y	NA	N	HF	NA	NA A	Y
E31-N041B 2HSS*TE70B	TEMPERATURE ELEMENT PYCO	145C3224	HST	247	Y	NA	N	HF	NA	NA A	Y
E31-N041C 2HSS*TE70C	TEMPERATURE ELEMENT PYCO	145C3224	HST	247	Y	NA	N	HF	NA	NA A	Y
E31-N041D 2HSS*TE70D	TEMPERATURE ELEMENT PYCO	145C3224	HST	247	Y	NA	N	HF	NA	NA A	Y
E31-N042A 2HSS*TE71A	TEMPERATURE ELEMENT PYCO	145C3224	HST	247	Y	NA	N	HF	NA	NA A	Y
E31-N042B 2HSS*TE71B	TEMPERATURE ELEMENT PYCO	145C3224	HST	268	Y	NA	N	HF	NA	NA A	Y
E31-N042C 2HSS*TE71C	TEMPERATURE ELEMENT PYCO	145C3224	HST	268	Y	NA	N	HF	NA	NA A	Y
E31-N042D 2HSS*TE71D	TEMPERATURE ELEMENT PYCO	145C3224	HST	268	Y	NA	N	HF	NA	NA A	Y
E31-N043A 2HSS*TE72A	TEMPERATURE ELEMENT PYCO	145C3224	HST	268	Y	NA	N	HF	NA	NA A	N

JOB NAME NMP - UNIT 2
UTILITY NIAGARA MOHAWK

SEISMIC AND DYNAMIC QUALIFICATION SUMMARY AND STATUS REPORT
MASTER LIST OF SAFETY RELATED EQUIPMENT

ENGINEER: STONE & WEBSTER
NSSS SUPPLIER: GENERAL ELECTRIC

EQUIP. ID / SHEC ID	EQUIPMENT DESCRIPTION / MANUFACTURER	PPD NO.	LOCATION BLDG	LOCATION ELEV	LOCATION MTG	LOADS SEIS	LOADS HYDR	QUAL ANLYS	METH TEST	NAT FREQ LOWEST	RRS REF STATUS QUAL	RRS REF STATUS INST
E31-N043B 2MSS*TE72B	TEMPERATURE ELEMENT PYCO	145C3224	MST	278		Y	NA	N	HF	NA	NA A	N
E31-N043C 2MSS*TE72C	TEMPERATURE ELEMENT PYCO	145C3224	MST	278		Y	NA	N	HF	NA	NA A	N
E31-N043D 2MSS*TE72D	TEMPERATURE ELEMENT PYCO	145C3224	MST	278		Y	NA	N	HF	NA	NA A	N
E31-N044A 2MSS*TE73A	TEMPERATURE ELEMENT PYCO	145C3224	MST	288		Y	NA	N	HF	NA	NA A	N
E31-N044B 2MSS*TE73B	TEMPERATURE ELEMENT PYCO	145C3224	MST	288		Y	NA	N	HF	NA	NA A	N
E31-N044C 2MSS*TE73C	TEMPERATURE ELEMENT PYCO	145C3224	MST	268		Y	NA	N	HF	NA	NA A	N
E31-N044D 2MSS*TE73D	TEMPERATURE ELEMENT PYCO	145C3224	MST	268		Y	NA	N	HF	NA	NA A	N
E31-N045A 2MSS*TE74A	TEMPERATURE ELEMENT PYCO	145C3224	MST	298		Y	NA	N	HF	NA	NA A	N
E31-N045B 2MSS*TE74B	TEMPERATURE ELEMENT PYCO	145C3224	MST	298		Y	NA	N	HF	NA	NA A	N
E31-N045C 2MSS*TE74C	TEMPERATURE ELEMENT PYCO	145C3224	MST	298		Y	NA	N	HF	NA	NA A	N
E31-N045D 2MSS*TE74D	TEMPERATURE ELEMENT PYCO	145C3224	MST	268		Y	NA	N	HF	NA	NA A	N
E31-N046A 2MSS*TE75A	TEMPERATURE ELEMENT PYCO	145C3224	MST	268		Y	NA	N	HF	NA	NA A	N
E31-N046B 2MSS*TE75B	TEMPERATURE ELEMENT PYCO	145C3224	MST	298		Y	NA	N	HF	NA	NA A	N

JOB NAME NMP - UNIT 2
UTILITY NIAGARA MOHAWK

SEISMIC AND DYNAMIC QUALIFICATION SUMMARY AND STATUS REPORT
MASTER LIST OF SAFETY RELATED EQUIPMENT

ENGINEER: STONE & WEBSTER
NSSS SUPPLIER: GENERAL ELECTRIC

EQUIP. ID / SWEC ID	EQUIPMENT DESCRIPTION / MANUFACTURER	PPD NO.	LOCATION BLDG	LOCATION ELEV	LOCATION HTG	LOADS SEIS	LOADS HYDR	QUAL ANLYS	METH TEST	NAT FREQ LOWEST	RRS REF STATUS QUAL	RRS REF STATUS INST
E31-N046C 2MSS*TE75C	TEMPERATURE ELEMENT PYCO	145C3224	MST	298		Y	NA	N	MF	NA	NA A	N
E31-N046D 2MSS*TE75D	TEMPERATURE ELEMENT PYCO	145C3224	MST	298		Y	NA	N	MF	NA	NA A	N
E31-N047A 2MSS*TE76A	TEMPERATURE ELEMENT PYCO	145C3224	MST	298		Y	NA	N	MF	NA	NA A	N
E31-N047B 2MSS*TE76B	TEMPERATURE ELEMENT PYCO	145C3224	MST	298		Y	NA	N	MF	NA	NA A	N
E31-N047C 2MSS*TE76C	TEMPERATURE ELEMENT PYCO	145C3224	MST	298		Y	NA	N	MF	NA	NA A	N
E31-N047D 2MSS*TE76D	TEMPERATURE ELEMENT PYCO	145C3224	MST	298		Y	NA	N	MF	NA	NA A	N
E31-N048A 2MSS*TE77A	TEMPERATURE ELEMENT PYCO	145C3224	MST	298		Y	NA	N	MF	NA	NA A	N
E31-N048B 2MSS*TE77B	TEMPERATURE ELEMENT PYCO	145C3224	MST	300		Y	NA	N	MF	NA	NA A	N
E31-N048C 2MSS*TE77C	TEMPERATURE ELEMENT PYCO	145C3224	MST	298		Y	NA	N	MF	NA	NA A	N
E31-N048D 2MSS*TE77D	TEMPERATURE ELEMENT PYCO	145C3224	MST	298		Y	NA	N	MF	NA	NA A	N
E51-C001 2ICS*P1	RCIC PUMP BINGHAM WILLAMETTE	21A9443AD	RB	175	CF	Y	NA	S	N	38	98 A	Y
E51-C002 2ICS*T1	RCIC TURBINE TERRY	21A9526AL	RB	175	CF	Y	NA	N	MF	16.0	98 A	Y
E51-N001 2ICS*FE101	RCIC FLOW ORIFICE PEERLESS	21A9505CR	RB	186	LH	Y	NA	Y	N	NA	NA A	Y
E51-N010 2ICS*LS132	LEVEL SWITCH MAGNETROL	184C4776	RB	175		Y	NA	N	MF	100+	NA B	Y

JOB NAME NMP - UNIT 2
UTILITY NIAGARA MOHAWK

SEISMIC AND DYNAMIC QUALIFICATION SUMMARY AND STATUS REPORT
MASTER LIST OF SAFETY RELATED EQUIPMENT

ENGINEER: STONE & WEBSTER
NSSS SUPPLIER: GENERAL ELECTRIC

EQUIP. ID / SHEC ID	EQUIPMENT DESCRIPTION / MANUFACTURER	PPD NO.	LOCATION BLDG	ELEV	HTG	LOADS SEIS	HYDR	QUAL ANLYS	METH TEST	NAT FREQ LOWEST	RRS REF STATUS QUAL	INST
E51-N035A 2ICS*LT3A	LEVEL TRANSMITTER ROSEMOUNT	188C7360	PT	246	RH	Y	NA	N	HF	20	NA A	Y
E51-N035E 2ICS*LT3C	LEVEL TRANSMITTER ROSEMOUNT	188C7360	PT	246	RH	Y	NA	N	HF	20	NA A	Y
E51-N037 2ICS*LS206	LEVEL SWITCH MAGNETROL	189C9776	RB	175		Y	NA	N	HF	100+	NA B	Y
E51-R005	TEMPERATURE INDICATOR WEED	169C8974	RB	289		Y	NA	S	NA	247	A	
F11-E001 2FNR-TL2	FUEL PREP MACHINE GE	729E716	RB	359	CF	Y	NA	Y	N	NA	91 C	Y
F11-E011 2FNR-TL1	GENERAL PURPOSE GRAPPLE GE	148E478	RB	NA	NA	NA	NA	Y	N	NA	NA A	Y
F14-E002	CONTROL ROD GRAPPLE GE	767E593	RB	NA	NA	NA	NA	Y	N	NA	NA A	
F15-E003 2FNR-CRN1	REFUEL PLATFORM PROGRAM & REMOTE SYS	795E416	RB	359	DM	Y	Y	Y	N	10.7	91 C	Y
F16-E006	IN-VESSEL RACK	796E968										
F16-E009	DEF FUEL STOR CONTAINER GE	117C2072	RB	315	CM	Y	Y	Y	N	60+	92 A	Y
F16-E012	FUEL STORAGE VAULT GE	283X786	RB	337	DM	Y	Y	Y	N	17.5	NA A	Y
F41-E003	REACTOR VIB. INST.	369X192										
G33-N007 2HCS-TE122	TEMPERATURE ELEMENT WEED	136B3207	RB	306		Y	NA				NA	N

JOB NAME NMP - UNIT 2
UTILITY NIAGARA MOHAWK

SEISMIC AND DYNAMIC QUALIFICATION SUMMARY AND STATUS REPORT
MASTER LIST OF SAFETY RELATED EQUIPMENT

ENGINEER: STONE & WEBSTER
NSSS SUPPLIER: GENERAL ELECTRIC

EQUIP. ID / SHEC ID	EQUIPMENT: DESCRIPTION / MANUFACTURER	PPD NO.	LOCATION: BLDG	ELEV	HTG	LOADS: SEIS	HYDR	QUAL ANLYS	METH- TEST	NAT FREQ- LOWEST	RRS REF STATUS: QUAL	INST
G33-N008	TEMPERATURE ELEMENT / FENWAL	136B3207	RB	261		Y	NA					Y
G33-N011 / 2MCS*FE126	RMCU FLOW ORIFICE / VICKERY SIMMS	145C3227	RB	314	LM	NA	NA	Y	N	NA	NA A	N
G33-N035 / 2MCS*FE115	RMCU FLOW ORIFICE / VICKERY SIMMS	145C3227	PC	245	LM	NA	Y	Y	N	NA	NA A	Y
G33-N040 / 2MCS*FE119	RMCU FLOW ORIFICE / VICKERY SIMMS	145C3227	RB	277	LM	Y	NA	Y	N	NA	NA A	N
H13-P601 / 2CEC*PNL601	CONTROL ROOM PANEL	793E701	CB	306	CF	Y	NA	N	Y	19	18 A	Y
H13-P602 / 2CEC*PNL602	CONTROL ROOM PANEL	793E702	CB	306	CF	Y	NA	N	Y	14	18 A	Y
H13-P603 / 2CEC*PNL603	CONTROL ROOM PANEL	793E703	CB	306	CF	Y	NA	N	Y	14	18 A	Y
H13-P606 / 2CEC*PNL606	CONTROL ROOM PANEL	137D8169	CB	306	CF	Y	NA	N	Y	20.5	18 A	Y
H13-P608 / 2CEC*PNL608	CONTROL ROOM PANEL	791E507	CB	306	CF	Y	NA	N	Y	8	18 A	Y
H13-P609 / 2CEC*PNL609	CONTROL ROOM PANEL	793E709	CB	306	CF	Y	NA	N	Y	22	18 A	Y
H13-P611 / 2CEC*PNL611	CONTROL ROOM PANEL	793E711	CB	306	CF	Y	NA	N	Y	22	18 A	Y
H13-P612 / 2CEC*PNL612	CONTROL ROOM PANEL	793E712	CB	306	CF	Y	NA	N	Y	NA	18 A	Y
H13-P613 / 2CEC*PNL613	CONTROL ROOM PANEL	793E713	CB	306	CF	Y	NA	N	Y	NA	18 A	Y
H13-P618 / 2CEC*PNL618	CONTROL ROOM PANEL	793E718	CB	306	CF	Y	NA	N	Y	19	18 A	Y

JOB NAME NMP - UNIT 2
UTILITY NIAGARA MOHAWK

SEISMIC AND DYNAMIC QUALIFICATION SUMMARY AND STATUS REPORT
MASTER LIST OF SAFETY RELATED EQUIPMENT

ENGINEER: STONE & WEBSTER
NSSS SUPPLIER: GENERAL ELECTRIC

EQUIP. ID / SWEC ID	EQUIPMENT DESCRIPTION / MANUFACTURER	PPD NO.	LOCATION BLDG	ELEV	HTG	LOADS SEIS	HYDR	QUAL ANLYS	METH TEST	NAT FREQ LOWEST	RRS REF STATUS QUAL	INST
H13-P621 / 2CEC*PNL621	CONTROL ROOM PANEL	793E721	CB	306	CF	Y	NA	N	Y	14	18 A	Y
H13-P622 / 2CEC*PNL622	CONTROL ROOM PANEL	793E722	CB	306	CF	Y	NA	N	Y	14	18 A	Y
H13-P623 / 2CEC*PNL623	CONTROL ROOM PANEL	793E723	CB	306	CF	Y	NA	N	Y	14	18 A	Y
H13-P625 / 2CEC*PNL625	CONTROL ROOM PANEL	793E725	CB	306	CF	Y	NA	N	Y	20.5	18 A	Y
H13-P628 / 2CEC*PNL628	CONTROL ROOM PANEL	793E728	CB	306	CF	Y	NA	N	Y	17.8	18 A	Y
H13-P629 / 2CEC*PNL629	CONTROL ROOM PANEL	793E729	CB	306	CF	Y	NA	N	Y	17.8	18 A	Y
H13-P630 / 2CEC-PNL630	RELAY ROOM PANEL	169C5894	CB	288	CF	Y	NA	N	Y	NA	18 A	Y
H13-P631 / 2CEC*PNL631	CONTROL ROOM PANEL	793E731	CB	306	CF	Y	NA	N	Y	14	18 A	Y
H13-P632 / 2CEC*PNL632	CONTROL ROOM PANEL	793E732	CB	306	CF	Y	NA	N	Y	19	18 A	Y
H13-P633 / 2CEC*PNL633	CONTROL ROOM PANEL	137D8170	CB	306	CF	Y	NA	N	Y	20.5	18 A	Y
H13-P642 / 2CEC*PNL642	CONTROL ROOM PANEL	793E742	CB	306	CF	Y	NA	N	Y	14	18 A	Y
H13-P700 / 2CEC*PNL700	TERMINATION CABINET	147D7825	CB	306	CF	Y	NA	N	Y	20	18 A	Y
H13-P701 / 2CEC*PNL701	TERMINATION CABINET	147D7826	CB	306	CF	Y	NA	N	Y	20	18 A	Y

JOB NAME NMP - UNIT 2
UTILITY NIAGARA MOHAWK

SEISMIC AND DYNAMIC QUALIFICATION SUMMARY AND STATUS REPORT
MASTER LIST OF SAFETY RELATED EQUIPMENT

ENGINEER: STONE & WEBSTER
NSSS SUPPLIER: GENERAL ELECTRIC

EQUIP. ID / SHEC ID	EQUIPMENT DESCRIPTION / MANUFACTURER	PPD NO.	LOCATION BLDG	LOCATION ELEV	LOCATION HTG	LOADS SEIS	LOADS HYDR	QUAL ANLYS	METH-TEST	NAT FREQ-LOWEST	RRS REF STATUS QUAL	RRS REF STATUS INST
H13-P702 / 2CEC*PNL702	TERMINATION CABINET	147D7827	CB	306	CF	Y	NA	N	Y	20	18 / A	Y
H13-P703 / 2CEC-PNL703	TERMINATION CABINET	147D7828	CB	306	CF	Y	NA	N	Y	20	18 / A	Y
H13-P704 / 2CEC*PNL704	TERMINATION CABINET	147D7829	CB	306	CF	Y	NA	N	Y	20	18 / A	Y
H13-P705 / 2CEC*PNL705	TERMINATION CABINET	147D7830	CB	306	CF	Y	NA	N	Y	20	18 / A	Y
H13-P706 / 2CEC*PNL706	TERMINATION CABINET	147D7831	CB	306	CF	Y	NA	N	Y	20	18 / A	Y
H13-P707 / 2CEC*PNL707	TERMINATION CABINET	147D7832	CB	306	CF	Y	NA	N	Y	20	18 / A	Y
H13-P708 / 2CEC*PNL708	TERMINATION CABINET	147D7833	CB	306	CF	Y	NA	N	Y	20	18 / A	Y
H13-P709 / 2CEC*PNL709	TERMINATION CABINET	147D7834	CB	306	CF	Y	NA				18 / A	Y
H13-P730	TERMINATION CABINET P730 / GE	147D7835	CB		CF	Y	NA	NA	HF	20		Y
H13-P731	TERMINATION CABINET P731 / GE	147D7836	CB		CF	Y	NA	NA	HF	20		Y
H13-P732 / 2CEC-PNL732	TERMINATION CABINET	147D7837	CB	288	CF	Y	NA	N	Y	20	17 / A	Y
H13-P733 / 2CEC-PNL733	TERMINATION CABINET	147D7838	CB	288	CF	Y	NA	N	Y	20	17 / A	Y
H13-P734	TERMINATION CABINET P734 / GE	147D7839	CB		CF	Y	NA	NA	HF	20		Y
H13-P736	TERMINATION CABINET P736 / GE	147D7841	CB		CF	Y	NA	NA	HF	20		Y

JOB NAME NMP - UNIT 2
UTILITY NIAGARA MOHAWK

SEISMIC AND DYNAMIC QUALIFICATION SUMMARY AND STATUS REPORT
MASTER LIST OF SAFETY RELATED EQUIPMENT

ENGINEER: STONE & WEBSTER
NSSS SUPPLIER: GENERAL ELECTRIC

EQUIP. ID / SHEC ID	EQUIPMENT DESCRIPTION / MANUFACTURER	PPD NO.	LOCATION BLDG	LOCATION ELEV	LOCATION HTG	LOADS SEIS	LOADS HYDR	QUAL ANLYS	METH-TEST	NAT FREQ LOWEST	RRS REF STATUS QUAL	RRS REF STATUS INST
H13-P737	TERMINATION CABINET P737 GE	147D7842	CB		CF	Y	NA	NA	HF	20		Y
H13-P740 2CEC-PNL740	TERMINATION CABINET	147D7845	CB	288	CF	Y	NA	N	Y	20	17	Y
H13-P741	TERMINATION CABINET P741 GE	147D7846	CB		CF	Y	NA	NA	HF	20		Y
H13-P742	TERMINATION CABINET P742 GE	147D7847	CB		CF	Y	NA	NA	HF	20		Y
H13-P745	TERMINATION CABINET P745 GE	147D7850	CB		CF	Y	NA	NA	HF	20		Y
H13-P748	TERMINATION CABINET P748 GE	147D7852	CB		CF	Y	NA	NA	HF	20		Y
H13-P752	TERMINATION CABINET P752 GE	147D7856	CB		CF	Y	NA	NA	HF	20		Y
H13-P753	TERMINATION CABINET P753 GE	147D7857	CB		CF	Y	NA	NA	HF	20		Y
H13-P754	TERMINATION CABINET P754 GE	147D7858	CB		CF	Y	NA	NA	HF	20		Y
H13-P837	BOP ISOL PNL DIV 1 1R GE	793E837	CB									
H13-P838	BOP ISOL PNL DIV 2 IR GE	793E838	CB									
H13-P851	TRB-GEN CONT STH/HTR BB GE	793E851	CB									
H13-P852 2CEC*PNL852	CONTROL ROOM PANEL	793E852	CB	306	CF	Y	NA	N	Y	19	18 A	Y

JOB NAME NMP - UNIT 2
UTILITY NIAGARA MOHAWK

SEISMIC AND DYNAMIC QUALIFICATION SUMMARY AND STATUS REPORT
MASTER LIST OF SAFETY RELATED EQUIPMENT

ENGINEER: STONE & WEBSTER
NSSS SUPPLIER: GENERAL ELECTRIC

EQUIP. ID / SHEC ID	EQUIPMENT DESCRIPTION / MANUFACTURER	PPD NO.	LOCATION BLDG	LOCATION ELEV	LOCATION HTG	LOADS SEIS	LOADS HYDR	QUAL ANLYS	METH- TEST	NAT FREQ- LOWEST	RRS REF STATUS QUAL	RRS REF STATUS INST
H13-P859	RELAY ROOM PANEL	793E859	CB	288	CF	Y	NA	N	Y	NA	17	
2CEC*PNL859											A	Y
H13-P861	RELAY ROOM PANEL	793E861	CB	288	CF	Y	NA	N	Y	25.6	17	
2CEC*PNL861											A	Y
H13-P870	CONTROL ROOM PANEL	793E870	CB	306	CF	Y	NA				18	
2CEC*PNL870											A	Y
H13-P871	CONTROL ROOM PANEL	793E871	CB	306	CF	Y	NA				18	
2CEC*PNL871											A	Y
H13-P873	CONTROL ROOM PANEL	793E873	CB	306	CF	Y	NA				18	
2CEC*PNL873											A	Y
H13-P874	BOP ISOL DIV 3 IR GE	793E874	CB									
H13-P875	CONT PURGE B VB GE	793E875	CB									
H13-P899	ERF ISOLATOR PANEL GE	949E765	CB									
H13-U700	PANEL MODULE U700 GE	793E700	CB									
H13-U701	PANEL MODULE U701 GE	793E750	CB									
H13-U702	PANEL MODULE U702 GE	793E751	CB									
H13-U703	PANEL MODULE U703 GE	793E755	CB									
H13-U704	PANEL MODULE U704 GE	793E756	CB									
H13-U705	PANEL MODULE U705 GE	793E757	CB									

JOB NAME NMP - UNIT 2
UTILITY NIAGARA MOHAWK

SEISMIC AND DYNAMIC QUALIFICATION SUMMARY AND STATUS REPORT
MASTER LIST OF SAFETY RELATED EQUIPMENT

ENGINEER: STONE & WEBSTER
NSSS SUPPLIER: GENERAL ELECTRIC

EQUIP. ID / SHEC ID	EQUIPMENT: DESCRIPTION / MANUFACTURER	PPD NO.	LOCATION: BLDG	ELEV	MTG	LOADS: SEIS	HYDR	QUAL METH: ANLYS	TEST	NAT FREQ: LOWEST	RRS REF STATUS: QUAL	INST
H13-U706	PANEL MODULE U706 GE	793E758	CB									
H13-U707	PANEL MODULE U707 GE	793E759	CB									
H13-U708	PANEL MODULE U708 GE	793E760	CB									
H13-U709	PANEL MODULE U709 GE	793E761	CB									
H13-U710	PANEL MODULE U710 GE	793E762	CB									
H13-U730	PANEL MODULE U730 GE	793E730	CB									
H13-U731	PANEL MODULE U731 GE	793E726	CB									
H13-U732	PANEL MODULE U732 GE	793E727	CB									
H13-U733	PANEL MODULE U733 GE	793E733	CB									
H13-U734	PANEL MODULE U734 GE	793E734	CB									
H13-U735	PANEL MODULE U735 GE	793E735	CB									
H13-U736	PANEL MODULE U736 GE	793E736	CB									
H13-U737	PANEL MODULE U737 GE	793E737	CB									

JOB NAME NMP - UNIT 2
UTILITY NIAGARA MOHAWK

SEISMIC AND DYNAMIC QUALIFICATION SUMMARY AND STATUS REPORT
MASTER LIST OF SAFETY RELATED EQUIPMENT

ENGINEER: STONE & WEBSTER
NSSS SUPPLIER: GENERAL ELECTRIC

EQUIP. ID / SHEC ID	EQUIPMENT DESCRIPTION / MANUFACTURER	PPD NO.	LOCATION BLDG	LOCATION ELEV	LOCATION HTG	LOADS SEIS	LOADS HYDR	QUAL ANLYS	QUAL TEST	NAT FREQ LOWEST	RRS REF STATUS QUAL	RRS REF STATUS INST
H13-U741	PANEL MODULE U741 GE	793E741	CB									
H13-U742	PANEL MODULE U742 GE	793E749	CB									
H13-U743	PANEL MODULE U743 GE	793E743	CB									
H13-U745	PANEL MODULE U745 GE	793E745	CB									
H13-U748	PANEL MODULE U748 GE	793E748	CB									
H13-U752	PANEL MODULE U752 GE	793E752	CB									
H13-U753	PANEL MODULE U753 GE	793E753	CB									
H13-U754	PANEL MODULE U754 GE	793E754	CB									
H13-Z601	MISC FLOOR SEC INDEX GE				CF							
H22-P001 2CES*RAH001	INSTRUMENT RACK	184C4600	RB	175	CF	Y	NA	Y	Y	14	98 A	Y
H22-P002 2CES*RAH002	INSTRUMENT RACK	147D8016	RB	289	CF	Y	NA	Y	Y	15	93 A	Y
H22-P004 2CES*RAH004	INSTRUMENT RACK	147D8017	RB	261	CF	Y	NA	Y	Y	15	94 A	Y
H22-P005 2CES*RAH005	INSTRUMENT RACK	147D8018	RB	261	CF	Y	NA	Y	Y	15	94 A	Y
H22-P006 2CES*RAH006	INSTRUMENT RACK	147D8020	RB	215	CF	Y	NA	Y	Y	14	96 A	Y

JOB NAME NMP - UNIT 2
UTILITY NIAGARA MOHAWK

SEISMIC AND DYNAMIC QUALIFICATION SUMMARY AND STATUS REPORT
MASTER LIST OF SAFETY RELATED EQUIPMENT

ENGINEER: STONE & WEBSTER
NSSS SUPPLIER: GENERAL ELECTRIC

EQUIP. ID / SHEC ID	EQUIPMENT: DESCRIPTION / MANUFACTURER	PPD NO.	LOCATION: BLDG	ELEV	HTG	LOADS: SEIS	HYDR	QUAL ANLYS	METH-TEST	NAT FREQ-LOWEST	RRS REF STATUS: QUAL	INST
H22-P009 / 2CES*RAK009	INSTRUMENT RACK	147D8005	RB	215	CF	Y	NA	Y	Y	15	96 A	Y
H22-P010 / 2CES*RAK010	INSTRUMENT RACK	147D8004	RB	215	CF	Y	NA	Y	Y	14	96 A	Y
H22-P011 / 2CES*RAK011	INSTRUMENT RACK	184C4602	RB	289	CF	Y	NA	Y	Y	14	93 A	Y
H22-P015 / 2CES*RAK015	INSTRUMENT RACK	147D8006	RB	215	CF	Y	NA	Y	Y	14	96 A	Y
H22-P017 / 2CES*RAK017	INSTRUMENT RACK	147D8023	RB	175	CF	Y	NA	Y	Y	15	98 A	Y
H22-P018 / 2CES*RAK018	INSTRUMENT RACK	147D8024	RB	175	CF	Y	NA	Y	Y	15	98 A	Y
H22-P021 / 2CES*RAK021	INSTRUMENT RACK	147D8008	RB	175	CF	Y	NA	Y	Y	15	98 A	Y
H22-P022 / 2CES*RAK022	INSTRUMENT RACK	147D8009	RB	215	CF	Y	NA	Y	Y	15	98 A	Y
H22-P024 / 2CES*RAK024	INSTRUMENT RACK	184C4606	RB	175	CF	Y	NA	Y	Y	14	98 A	Y
H22-P025 / 2CES*RAK025	INSTRUMENT RACK	147D8012	RB	215	CF	Y	NA	Y	Y	14	98 A	Y
H22-P026 / 2CES*RAK026	INSTRUMENT RACK	147D8026	RB	261	CF	Y	NA	Y	Y	14	94 A	Y
H22-P027 / 2CES*RAK027	INSTRUMENT RACK	147D8028	RB	261	CF	Y	NA	Y	Y	15	94 A	Y
H22-P028 / 2CES*RAK028	INSTRUMENT RACK	147D8031	DG	261	CF	Y	NA	Y	Y	14	94 A	Y

JOB NAME NMP - UNIT 2
UTILITY NIAGARA MOHAWK

SEISMIC AND DYNAMIC QUALIFICATION SUMMARY AND STATUS REPORT
MASTER LIST OF SAFETY RELATED EQUIPMENT

ENGINEER: STONE & WEBSTER
NSSS SUPPLIER: GENERAL ELECTRIC

EQUIP. ID / SWEC ID	EQUIPMENT DESCRIPTION / MANUFACTURER	PPD NO.	LOCATION BLDG	LOCATION ELEV	LOCATION HTG	LOADS SEIS	LOADS HYDR	QUAL ANLYS	METH TEST	NAT FREQ LOWEST	RRS REF STATUS QUAL	RRS REF STATUS INST
H22-P029 / 2CES*RAK029	INSTRUMENT RACK	184C4612	RB	175	CF	Y	NA	NA	Y	14	98 A	Y
H22-P030 / 2CES*RAK030	INSTRUMENT RACK	195B9940	RB	240	DH	Y	NA	NA	Y	4	95 A	Y
H22-P031 / 2CES*RAK031	INSTRUMENT RACK	195B9940	RB	240	DH	Y	NA	NA	Y	4	95 A	Y
H22-P032 / 2CES*RAK032	INSTRUMENT RACK	195B9940	RB	240	DH	Y	NA	NA	Y	4	95 A	Y
H22-P033 / 2CES*RAK033	INSTRUMENT RACK	195B9940	RB	240	DH	Y	NA	NA	Y	4	95 A	Y
H22-P041 / 2CES*RAK041	INSTRUMENT RACK	184C4604	RB	215	CF	Y	NA	Y	Y	14	98 A	Y

JOB NAME NMP - UNIT 2
UTILITY NIAGARA MOHAWK

SEISMIC AND DYNAMIC QUALIFICATION SUMMARY AND STATUS REPORT
MASTER LIST OF SAFETY RELATED EQUIPMENT

ENGINEER: STONE & WEBSTER
NSSS SUPPLIER: GENERAL ELECTRIC

EQUIP. ID / SNEC ID	EQUIPMENT DESCRIPTION / MANUFACTURER	PPD NO.	LOCATION BLDG	LOCATION ELEV	LOCATION HTG	LOADS SEIS	LOADS HYDR	QUAL ANLYS	METH TEST	NAT FREQ LOWEST	RRS REF STATUS QUAL	RRS REF STATUS INST
2CMS*AE6A	REMOTE PNL ANALYZER CELL CONSIP	C001C	ABN	240	CH	Y	NA	NA	HF	NA	61 A	Y
2CMS*AE6B	REMOTE PNL ANALYZER CONSIP	C001C	ABS	240	CH	Y	NA	NA	HF	NA	61 A	Y
2CMS*AE71A	REMOTE PNL ANALYZER CELL CONSIP	C001C	ABN	240	CH	Y	NA	NA	HF	NA	61 A	Y
2CMS*AE71B	REMOTE PNL ANALYZER CELL CONSIP	C001C	ABS	240	CH	Y	NA	NA	HF	NA	61 A	Y
2CMS*AIT6A	LOCAL PNL TRANSMITTER CONSIP	C001C	ABN	240	CH	Y	NA	NA	HF	NA	61 A	Y
2CMS*AIT6B	LOCAL PNL TRANSMITTER CONSIP	C001C	ABS	240	CH	Y	NA	NA	HF	NA	61 A	Y
2CMS*AIT71A	LOCAL PNL TRANSMITTER CONSIP	C001C	ABN	240	CH	Y	NA	NA	HF	NA	61 A	Y
2CMS*AIT71B	LOCAL PNL TRANSMITTER CONSIP	C001C	ABS	240	CH	Y	NA	NA	HF	NA	61 A	Y
2CMS*PNL66A	H2 ANALYZER REMOTE PNL CONSIP	C001C	ABN	240	DH	Y	NA	S	HF	19	61 A	Y
2CMS*PNL66B	H2 ANALYZER REMOTE PNL CONSIP	C001C	ABS	240	DH	Y	NA	S	HF	19	61 A	Y
2CMS*PNL73A	H2/O2 ANALYZER LOCAL PNL CONSIP	C001C	ABN	240	DH	Y	NA	S	HF	29	61 A	Y
2CMS*PNL73B	H2/O2 ANALYZER LOCAL PNL CONSIP	C001C	ABS	240	DH	Y	NA	S	HF	29	61 A	Y
2CMS*P2A	REMOTE PNL MOTOR CONSIP	C001C	ABN	240	CH	Y	NA	NA	HF	NA	61 A	Y

JOB NAME NMP - UNIT 2
UTILITY NIAGARA MOHAWK

SEISMIC AND DYNAMIC QUALIFICATION SUMMARY AND STATUS REPORT
MASTER LIST OF SAFETY RELATED EQUIPMENT

ENGINEER: STONE & WEBSTER
NSSS SUPPLIER: GENERAL ELECTRIC

EQUIP. ID / SWEC ID	EQUIPMENT DESCRIPTION / MANUFACTURER	PPD NO.	LOCATION BLDG	LOCATION ELEV	LOCATION HTG	LOADS SEIS	LOADS HYDR	QUAL ANLYS	METH TEST	NAT FREQ LOWEST	RRS REF STATUS QUAL	RRS REF STATUS INST
2CHS*P2B	REMOTE PNL MOTOR CONSIP	C001C	ABS	240	CH	Y	NA	NA	HF	NA	61 A	Y

JOB NAME NMP - UNIT 2
UTILITY NIAGARA MOHAWK

SEISMIC AND DYNAMIC QUALIFICATION SUMMARY AND STATUS REPORT
MASTER LIST OF SAFETY RELATED EQUIPMENT

ENGINEER: STONE & WEBSTER
NSSS SUPPLIER: GENERAL ELECTRIC

EQUIP. ID / SHEC ID	EQUIPMENT: DESCRIPTION / MANUFACTURER	PPD NO.	LOCATION: BLDG	ELEV	HTG	LOADS: SEIS	HYDR	QUAL ANLYS	METH- TEST	NAT FREQ- LOWEST	RRS REF STATUS: QUAL	INST
2DFN*LS136	LEVEL SWITCH MAGNETROL	C021L	SB	228	DH	Y	NA	NA	HF	27	5 A	Y
2DFN*LS137	LEVEL SWITCH MAGNETROL	C021L	SB	228	DH	Y	NA	NA	HF	27	5 A	Y
2DFR*LS143	LEVEL SWITCH MAGNETROL	C021L	ABS	176	DH	Y	NA	NA	HF	27	64 A	Y
2DFR*LS144	LEVEL SWITCH MAGNETROL	C021L	ABS	175	DH	Y	NA	NA	HF	27	64 A	Y
2DFR*LS145	LEVEL SWITCH MAGNETROL	C021L	RB	175	DH	Y	NA	NA	HF	27	64 A	Y
2DFR*LS146	LEVEL SWITCH MAGNETROL	C021L	RB	175	DH	Y	NA	NA	HF	27	64 A	Y
2DFR*LS147	LEVEL SWITCH MAGNETROL	C021L	ABN	176	DH	Y	NA	NA	HF	27	64 A	Y
2DFR*LS148	LEVEL SWITCH MAGNETROL	C021L	ABN	176	DH	Y	NA	NA	HF	27	64 A	Y
2DFR*LS150	LEVEL SWITCH MAGNETROL	C021L	RB	175	DH	Y	NA	NA	HF	27	64 A	Y
2DFR*LS152	LEVEL SWITCH MAGNETROL	C021L	RB	175	DH	Y	NA	NA	HF	27	64 A	Y
2DFR*LS3A	LEVEL SWITCH MAGNETROL	C021L	ABN	176	EH	Y	NA	NA	HF	27	64 A	Y
2DFR*LS3B	LEVEL SWITCH MAGNETROL	C021L	ABS	176	EH	Y	NA	NA	HF	27	64 A	Y
2EGF*LS103	LEVEL SWITCH MAGNETROL	C021L	DG	262	EH	Y	NA	NA	HF	>40	76 A	Y

JOB NAME NMP - UNIT 2
UTILITY NIAGARA MOHAWK

SEISMIC AND DYNAMIC QUALIFICATION SUMMARY AND STATUS REPORT
MASTER LIST OF SAFETY RELATED EQUIPMENT

ENGINEER: STONE & WEBSTER
NSSS SUPPLIER: GENERAL ELECTRIC

EQUIP. ID / SHEC ID	EQUIPMENT DESCRIPTION / MANUFACTURER	PPD NO.	LOCATION BLDG	LOCATION ELEV	LOCATION MTG	LOADS SEIS	LOADS HYDR	QUAL ANLYS	METH TEST	NAT FREQ LOWEST	RRS REF STATUS QUAL	RRS REF STATUS INST
2EGF*LS106	LEVEL SWITCH MAGNETROL	C021L	DG	278	EH	Y	NA	NA	MF	>40	17 A	Y
2EGF*LS108	LEVEL SWITCH MAGNETROL	C021L	DG	278	EH	Y	NA	NA	MF	>40	17 A	Y
2EGF*LS109	LEVEL SWITCH MAGNETROL	C021L	DG	278	EH	Y	NA	NA	MF	>40	17 A	Y
2EGF*LS12A	LEVEL SWITCH MAGNETROL	C021L	DG	262	EH	Y	NA	NA	MF	>40	16 A	Y
2EGF*LS12B	LEVEL SWITCH MAGNETROL	C021L	DG	262	EH	Y	NA	NA	MF	>40	16 A	Y
2EGF*LS5A	LEVEL SWITCH MAGNETROL	C021L	DG	278	EH	Y	NA	NA	MF	>40	17 A	Y
2EGF*LS5B	LEVEL SWITCH MAGNETROL	C021L	DG	278	EH	Y	NA	NA	MF	>40	17 A	Y
2EGF*LS7A	LEVEL SWITCH MAGNETROL	C021L	DG	278	EH	Y	NA	NA	MF	>40	17 A	Y
2EGF*LS7B	LEVEL SWITCH MAGNETROL	C021L	DG	278	EH	Y	NA	NA	MF	>40	17 A	Y
2EGF*LS8A	LEVEL SWITCH MAGNETROL	C021L	DG	278	EH	Y	NA	NA	MF	>40	17 A	Y
2EGF*LS8B	LEVEL SWITCH MAGNETROL	C021L	DG	278	EH	Y	NA	NA	MF	>40	17 A	Y
2HVK*LS16A	LEVEL SWITCH MAGNETROL	C021L	CB	277	EH	Y	NA	NA	MF	>40	17 A	Y
2HVK*LS16B	LEVEL SWITCH MAGNETROL	C021L	CB	261	EH	Y	NA	NA	MF	>40	16 A	Y

JOB NAME NMP - UNIT 2
UTILITY NIAGARA MOHAWK

SEISMIC AND DYNAMIC QUALIFICATION SUMMARY AND STATUS REPORT
MASTER LIST OF SAFETY RELATED EQUIPMENT

ENGINEER: STONE & WEBSTER
NSSS SUPPLIER: GENERAL ELECTRIC

EQUIP. ID / SHEC ID	EQUIPMENT: DESCRIPTION / MANUFACTURER	PPD NO.	LOCATION: BLDG	ELEV	HTG	LOADS: SEIS	HYDR	QUAL ANLYS	METH- TEST	NAT FREQ- LOWEST	RRS REF STATUS: QUAL	INST
2HVK*LS41A	LEVEL SWITCH MAGNETROL	C021L	CB	277	LH	Y	NA	NA	MF	>40	NA A	Y
2HVK*LS41B	LEVEL SWITCH MAGNETROL	C021L	CB	278	LH	Y	NA	NA	MF	>40	NA A	Y
2SFC*LS33A	LEVEL SWITCH MAGNETROL	C021L	RB	353	EH	Y	NA	NA	MF	>40	57 A	Y
2SFC*LS33B	LEVEL SWITCH MAGNETROL	C021L	RB	353	EH	Y	NA	NA	MF	>40	57 A	Y
2SFC*LS33C	LEVEL SWITCH MAGNETROL	C021L	RB	215	EH	Y	NA	NA	MF	>40	62 A	Y
2SFC*LS33D	LEVEL SWITCH MAGNETROL	C021L	RB	329	EH	Y	NA	NA	MF	>40	58 A	Y
2SFC*LS34A	LEVEL SWITCH MAGNETROL	C021L	RB	328	EH	Y	NA	NA	MF	>40	58 A	Y
2SFC*LS34B	LEVEL SWITCH MAGNETROL	C021L	RB	329	EH	Y	NA	NA	MF	>40	58 A	Y
2SFC*LS55A	LEVEL SWITCH MAGNETROL	C021L	RB	353	EH	Y	NA	NA	MF	>40	57 A	Y
2SFC*LS55B	LEVEL SWITCH MAGNETROL	C021L	RB	353	EH	Y	NA	NA	MF	>40	57 A	Y
2SHP*LS30A	LEVEL SWITCH MAGNETROL	C021L	SB	288	CF	Y	NA	NA	MF	>40	7 A	Y
2SHP*LS30B	LEVEL SWITCH MAGNETROL	C021L	SB	228	CF	Y	NA	NA	MF	>40	5 A	Y
2SHP*LS73A	LEVEL SWITCH MAGNETROL	C021L	SB	228	CF	Y	NA	NA	MF	>40	5 A	Y

JOB NAME NMP - UNIT 2
UTILITY NIAGARA MOHAWK

SEISMIC AND DYNAMIC QUALIFICATION SUMMARY AND STATUS REPORT
MASTER LIST OF SAFETY RELATED EQUIPMENT

ENGINEER: STONE & WEBSTER
NSSS SUPPLIER: GENERAL ELECTRIC

EQUIP. ID / SWEC ID	EQUIPMENT DESCRIPTION / MANUFACTURER	PPD NO.	LOCATION BLDG	LOCATION ELEV	LOCATION MTG	LOADS SEIS	LOADS HYDR	QUAL ANLYS	METH TEST	NAT FREQ LOWEST	RRS REF STATUS QUAL	RRS REF STATUS INST
2SHP*LS73B	LEVEL SWITCH MAGNETROL	C021L	SB	228	CF	Y	NA	NA	MF	>40	5 A	Y

JOB NAME NMP - UNIT 2
UTILITY NIAGARA MOHAWK

SEISMIC AND DYNAMIC QUALIFICATION SUMMARY AND STATUS REPORT
MASTER LIST OF SAFETY RELATED EQUIPMENT

ENGINEER: STONE & WEBSTER
NSSS SUPPLIER: GENERAL ELECTRIC

EQUIP. ID / SWEC ID	EQUIPMENT: DESCRIPTION / MANUFACTURER	PPD NO.	LOCATION: BLDG	ELEV	MTG	LOADS: SEIS	HYDR	QUAL ANLYS	METH- TEST	NAT FREQ- LOWEST	RRS REF STATUS: QUAL	INST
2CMS*TE101	RTD PYCO	C041D	PC	314	DH	Y	Y	NA	HF	NA	32 A	Y
2CMS*TE102	RTD PYCO	C041D	PC	302	DH	Y	Y	NA	HF	NA	33 A	N
2CMS*TE103	RTD PYCO	C041D	PC	284	DH	Y	Y	NA	HF	NA	34 A	Y
2CMS*TE104	RTD PYCO	C041D	PC	276	DH	Y	Y	NA	HF	NA	34 A	Y
2CMS*TE105	RTD PYCO	C041D	PC	256	DH	Y	Y	NA	HF	NA	36 A	Y
2CMS*TE106	RTD PYCO	C041D	PC	248	DH	Y	Y	NA	HF	NA	36 A	Y
2CMS*TE107	RTD PYCO	C041D	PC	232	DH	Y	Y	NA	HF	NA	37 A	Y
2CMS*TE108	RTD PYCO	C041D	PC	232	DH	Y	Y	NA	HF	NA	37 A	Y
2CMS*TE109	RTD PYCO	C041D	PC	232	DH	Y	Y	NA	HF	NA	37 A	Y
2CMS*TE116	RTD PYCO	C041D	PC	314	DH	Y	Y	NA	HF	NA	32 A	N
2CMS*TE117	RTD PYCO	C041D	PC	302	DH	Y	Y	NA	HF	NA	33 A	Y
2CMS*TE118	RTD PYCO	C041D	PC	284	DH	Y	Y	NA	HF	NA	34 A	Y
2CMS*TE119	RTD PYCO	C041D	PC	278	DH	Y	Y	NA	HF	NA	34 A	Y

JOB NAME NMP - UNIT 2
UTILITY NIAGARA MOHAWK

SEISMIC AND DYNAMIC QUALIFICATION SUMMARY AND STATUS REPORT
MASTER LIST OF SAFETY RELATED EQUIPMENT

ENGINEER: STONE & WEBSTER
NSSS SUPPLIER: GENERAL ELECTRIC

EQUIP. ID / SHEC ID	EQUIPMENT DESCRIPTION / MANUFACTURER	PPD NO.	LOCATION BLDG	LOCATION ELEV	LOCATION MTG	LOADS SEIS	LOADS HYDR	QUAL ANLYS	METH TEST	NAT FREQ LOWEST	RRS REF STATUS QUAL	RRS REF STATUS INST
2CMS*TE120	RTD PYCO	C041D	PC	258	DH	Y	Y	NA	HF	NA	36 A	Y
2CMS*TE121	RTD PYCO	C041D	PC	248	DH	Y	Y	NA	HF	NA	36 A	Y
2CMS*TE122	RTD PYCO	C041D	PC	232	DH	YH	Y	NA	HF	NA	37 A	Y
2CMS*TE123	RTD PYCO	C041D	PC	232	DH	Y	Y	NA	HF	NA	37 A	Y
2CMS*TE124	RTD PYCO	C041D	PC	232	DH	Y	Y	NA	HF	NA	37 A	Y
2CMS*TE50A	RTD PYCO	C041D	FC	199	DH	Y	Y	NA	HF	NA	39 A	Y
2CMS*TE50B	RTD PYCO	C041D	PC	199	DH	Y	Y	NA	HF	NA	39 A	Y
2CMS*TE50C	RTD PYCO	C041D	PC	199	DH	Y	Y	NA	HF	NA	39 A	Y
2CMS*TE50D	RTD PYCO	C041D	PC	199	DH	Y	Y	NA	HF	NA	39 A	Y
2CMS*TE51A	RTD PYCO	C041D	PC	199	DH	Y	Y	NA	HF	NA	39 A	Y
2CMS*TE51B	RTD PYCO	C041D	PC	199	DH	Y	Y	NA	HF	NA	39 A	Y
2CMS*TE51C	RTD PYCO	C041D	PC	199	DH	Y	Y	NA	HF	NA	39 A	Y
2CMS*TE51D	RTD PYCO	C041D	PC	199	DH	Y	Y	NA	HF	NA	39 A	Y

JOB NAME NMP - UNIT 2
UTILITY NIAGARA MOHAWK

SEISMIC AND DYNAMIC QUALIFICATION SUMMARY AND STATUS REPORT
MASTER LIST OF SAFETY RELATED EQUIPMENT

ENGINEER: STONE & WEBSTER
NSSS SUPPLIER: GENERAL ELECTRIC

EQUIP. ID / SHEC ID	EQUIPMENT DESCRIPTION / MANUFACTURER	PPD NO.	LOCATION BLDG	LOCATION ELEV	LOCATION HTG	LOADS SEIS	LOADS HYDR	QUAL ANLYS	METH TEST	NAT FREQ LOWEST	RRS REF STATUS QUAL	RRS REF STATUS INST
2CHS*TE52A	RTD PYCO	C041D	PC	199	DH	Y	Y	NA	HF	NA	39 A	Y
2CHS*TE52B	RTD PYCO	C041D	PC	199	DH	Y	Y	NA	HF	NA	39 A	Y
2CHS*TE52C	RTD PYCO	C041D	PC	199	DH	Y	Y	NA	HF	NA	39 A	Y
2CHS*TE52D	RTD PYCO	C041D	PC	199	DH	Y	Y	NA	HF	NA	39 A	Y
2CHS*TE53A	RTD PYCO	C041D	PC	199	DH	Y	Y	NA	HF	NA	39 A	Y
2CHS*TE53B	RTD PYCO	C041D	PC	199	DH	Y	Y	NA	HF	NA	39 A	Y
2CHS*TE53C	RTD PYCO	C041D	PC	199	DH	Y	Y	NA	HF	NA	39 A	Y
2CHS*TE53D	RTD PYCO	C041D	PC	199	DH	Y	Y	NA	HF	NA	39 A	Y
2CHS*TE54A	RTD PYCO	C041D	PC	199	DH	Y	Y	NA	HF	NA	39 A	Y
2CHS*TE54B	RTD PYCO	C041D	PC	199	DH	Y	Y	NA	HF	NA	39 A	Y
2CHS*TE54C	RTD PYCO	C041D	PC	199	DH	Y	Y	NA	HF	NA	39 A	Y
2CHS*TE54D	RTD PYCO	C041D	PC	199	DH	Y	Y	NA	HF	NA	39 A	Y
2CHS*TE55A	RTD PYCO	C041D	PC	199	DH	Y	Y	NA	HF	NA	39 A	Y

JOB NAME NMP - UNIT 2
UTILITY NIAGARA MOHAWK

SEISMIC AND DYNAMIC QUALIFICATION SUMMARY AND STATUS REPORT
MASTER LIST OF SAFETY RELATED EQUIPMENT

ENGINEER: STONE & WEBSTER
NSSS SUPPLIER: GENERAL ELECTRIC

EQUIP. ID / SHEC ID	EQUIPMENT: DESCRIPTION / MANUFACTURER	PPD NO.	LOCATION: BLDG	ELEV	HTG	LOADS: SEIS	HYDR	QUAL ANLYS	METH-TEST	NAT FREQ-LOWEST	RRS REF STATUS: QUAL	INST
2CHS*TE55B	RTD PYCO	C041D	PC	199	DH	Y	Y	NA	HF	NA	39 A	Y
2CHS*TE55C	RTD PYCO	C041D	PC	199	DH	Y	Y	NA	HF	NA	39 A	Y
2CHS*TE55D	RTD PYCO	C041D	PC	199	DH	Y	Y	NA	HF	NA	39 A	Y
2CHS*TE56A	RTD PYCO	C041D	PC	199	DH	Y	Y	NA	HF	NA	39 A	Y
2CHS*TE56B	RTD PYCO	C041D	PC	199	DH	Y	Y	NA	HF	NA	39 A	Y
2CHS*TE56C	RTD PYCO	C041D	PC	199	DH	Y	Y	NA	HF	NA	39 A	Y
2CHS*TE56D	RTD PYCO	C041D	PC	199	DH	Y	Y	NA	HF	NA	39 A	Y
2CHS*TE57A	RTD PYCO	C041D	PC	199	DH	Y	Y	NA	HF	NA	39 A	Y
2CHS*TE57B	RTD PYCO	C041D	PC	199	DH	Y	Y	NA	HF	NA	39 A	Y
2CHS*TE57C	RTD PYCO	C041D	PC	199	DH	Y	Y	NA	HF	NA	39 A	Y
2CHS*TE57D	RTD PYCO	C041D	PC	199	DH	Y	Y	NA	HF	NA	39 A	Y
2CHS*TE58A	RTD PYCO	C041D	PC	199	DH	Y	Y	NA	HF	NA	39 A	Y
2CHS*TE58B	RTD PYCO	C041D	PC	199	DH	Y	Y	NA	HF	NA	39 A	Y

JOB NAME NMP - UNIT 2
UTILITY NIAGARA MOHAWK

SEISMIC AND DYNAMIC QUALIFICATION SUMMARY AND STATUS REPORT
MASTER LIST OF SAFETY RELATED EQUIPMENT

ENGINEER: STONE & WEBSTER
NSSS SUPPLIER: GENERAL ELECTRIC

EQUIP. ID / SHEC ID	EQUIPMENT DESCRIPTION / MANUFACTURER	PPD NO.	LOCATION BLDG	ELEV	HTG	LOADS SEIS	HYDR	QUAL ANLYS	METH TEST	NAT FREQ LOWEST	RRS REF STATUS QUAL	INST
2CHS*TE58C	RTD PYCO	C041D	PC	199	DH	Y	Y	NA	HF	NA	39 A	Y
2CHS*TE58D	RTD PYCO	C041D	PC	199	DH	Y	Y	NA	HF	NA	39 A	Y
2CHS*TE59A	RTD PYCO	C041D	PC	199	DH	Y	Y	NA	HF	NA	39 A	Y
2CHS*TE59B	RTD PYCO	C041D	PC	199	DH	Y	Y	NA	HF	NA	39 A	Y
2CHS*TE59C	RTD PYCO	C041D	PC	199	DH	Y	Y	NA	HF	NA	39 A	Y
2CHS*TE59D	RTD PYCO	C041D	PC	199	DH	Y	Y	NA	HF	NA	39 A	Y
2CHS*TE67A	RTD PYCO	C041D	PC	197	DH	Y	Y	NA	HF	NA	39 A	Y
2CHS*TE67B	RTD PYCO	C041D	PC	197	DH	Y	Y	NA	HF	NA	39 A	Y
2CHS*TE68A	RTD PYCO	C041D	PC	197	DH	Y	Y	NA	HF	NA	39 A	Y
2CHS*TE68B	RTD PYCO	C041D	PC	199	DH	Y	Y	NA	HF	NA	39 A	Y
2CHS*TE69A	RTD PYCO	C041D	PC	197	DH	Y	Y	NA	HF	NA	39 A	Y
2CHS*TE69B	RTD PYCO	C041D	PC	197	DH	Y	Y	NA	HF	NA	39 A	Y
2CHS*TE70A	RTD PYCO	C041D	PC	197	DH	Y	Y	NA	HF	NA	39 A	Y

JOB NAME NMP - UNIT 2
UTILITY NIAGARA MOHAWK

SEISMIC AND DYNAMIC QUALIFICATION SUMMARY AND STATUS REPORT
MASTER LIST OF SAFETY RELATED EQUIPMENT

ENGINEER: STONE & WEBSTER
NSSS SUPPLIER: GENERAL ELECTRIC

EQUIP. ID / SWEC ID	EQUIPMENT: DESCRIPTION / MANUFACTURER	PPD NO.	LOCATION: BLDG	ELEV	MTG	LOADS: SEIS	HYDR	QUAL ANLYS	METH- TEST	NAT FREQ- LOWEST	RRS REF STATUS: QUAL	INST
2CHS*TE70B	RTD PYCO	C041D	PC	197	DH	Y	Y	NA	HF	NA	39 A	Y
2CHS*T357A	RTD PYCO	C041D	PC	199	DH	Y	Y	NA	HF	NA	39 A	Y
2SFC*TE31A	RTD PYCO	C041D	RB	328	LH	Y	NA	NA	HF	NA	NA A	Y
2SFC*TE31B	RTD PYCO	C041D	RB	328	LH	Y	NA	NA	HF	NA	NA A	Y
2SFC*TE8A	RTD PYCO	C041D	RB	215	LH	Y	Y	NA	HF	NA	NA A	Y
2SFC*TE8B	RTD PYCO	C041D	RB	215	LH	Y	NA	NA	HF	NA	NA A	Y
2SWP*TE145A	RTD PYCO	C041D	SB	245	LH	Y	NA	NA	HF	NA	NA A	Y
2SWP*TE145B	RTD PYCO	C041D	SB	245	LH	Y	NA	NA	HF	NA	NA A	Y
2SWP*TE31A	RTD PYCO	C041D	SB	261	LH	Y	NA	NA	HF	NA	NA A	Y
2SWP*TE31B	RTD PYCO	C041D	SB	261	DH	Y	NA	NA	HF	NA	NA A	Y
2SWP*TE35A	RTD PYCO	C041D	CB	261	LH	Y	NA	NA	HF	NA	NA A	Y
2SWP*TE35B	RTD PYCO	C041D	CB	261	LH	Y	NA	NA	HF	NA	NA A	Y
2SWP*TE69A	RTD PYCO	C041D	ITK	260	DH	Y	NA	NA	HF	NA	11 A	A

JOB NAME NMP - UNIT 2
UTILITY NIAGARA MOHAWK

SEISMIC AND DYNAMIC QUALIFICATION SUMMARY AND STATUS REPORT
MASTER LIST OF SAFETY RELATED EQUIPMENT

ENGINEER: STONE & WEBSTER
NSSS SUPPLIER: GENERAL ELECTRIC

EQUIP. ID / SNEC ID	EQUIPMENT: DESCRIPTION / MANUFACTURER	PPD NO.	LOCATION: BLDG	ELEV	HTG	LOADS: SEIS	HYDR	QUAL ANLYS	METH- TEST	NAT FREQ- LOWEST	RRS REF STATUS: QUAL	INST
2SWP*TE64B	RTD PYCO	C041D	ITK	260	DH	Y	NA	NA	HF	NA	11 A	Y
2SWP*TE65A	RTD PYCO	C041D	ITK	260	DH	Y	NA	NA	HF	NA	11 A	Y
2SWP*TE65B	RTD PYCO	C041D	ITK	260	DH	Y	NA	NA	HF	NA	11 A	Y
2SWP*TE91A	RTD PYCO	C041D	CB	261	LH	Y	NA	NA	HF	NA	NA A	Y
2SWP*TE91B	RTD PYCO	C041D	CB	261	LH	Y	NA	NA	HF	NA	NA A	Y

JOB NAME NMP - UNIT 2
UTILITY NIAGARA MOHAWK

SEISMIC AND DYNAMIC QUALIFICATION SUMMARY AND STATUS REPORT
MASTER LIST OF SAFETY RELATED EQUIPMENT

ENGINEER: STONE & WEBSTER
NSSS SUPPLIER: GENERAL ELECTRIC

EQUIP. ID / SWEC ID	EQUIPMENT DESCRIPTION / MANUFACTURER	PPD NO.	LOCATION BLDG	LOCATION ELEV	LOCATION MTG	LOADS SEIS	LOADS HYDR	QUAL ANLYS	METH TEST	NAT FREQ LOWEST	RRS REF STATUS QUAL	RRS REF STATUS INST
2CCP*RV170	RELIEF VALVE CROSBY	C051A	RB	262	LH	Y	Y	S	SO	>33	NA3 A	Y
2CCP*RV171	RELIEF VALVE CROSBY	C051A	RB	262	LH	Y	Y	S	SO	>33	NA A	Y
2CCP*RV60A	RELIEF VALVE CROSBY	C051A	ABN	182	LH	Y	NA	S	SO	>33	NA A	Y
2CCP*RV60B	RELIEF VALVE CROSBY	C051A	ABS	177	LH	Y	NA	S	SO	>33	NA A	Y
2CCP*RV60C	RELIEF VALVE CROSBY	C051A	ABS	177	LH	Y	NA	S	SO	>33	NA A	Y
2CCP*RV69A	RELIEF VALVE CROSBY	C051A	RB	227	LH	Y	NA	S	SO	>33	NA A	Y
2CCP*RV69B	RELIEF VALVE CROSBY	C051A	RB	218	LH	Y	NA	S	SO	>33	NA A	Y
2CCP*RV82A	RELIEF VALVE CROSBY	C051A	PC	261	LH	Y	Y	S	SO	>33	NA A	Y
2CCP*RV82B	RELIEF VALVE CROSBY	C051A	PC	261	LH	Y	Y	S	SO	>33	NA A	Y
2CCP*RV82C	RELIEF VALVE CROSBY	C051A	PC	261	LH	Y	Y	S	SO	>33	NA A	Y
2CCP*RV82D	RELIEF VALVE CROSBY	C051A	PC	261	LH	Y	Y	S	SO	>33	NA A	Y
2CCP*RV83A	RELIEF VALVE CROSBY	C051A	PC	261	LH	Y	Y	S	SO	>33	NA A	Y
2CCP*RV83B	RELIEF VALVE CROSBY	C051A	PC	261	LH	Y	Y	S	SO	>33	NA A	Y

JOB NAME NMP - UNIT 2
UTILITY NIAGARA MOHAWK

SEISMIC AND DYNAMIC QUALIFICATION SUMMARY AND STATUS REPORT
MASTER LIST OF SAFETY RELATED EQUIPMENT

ENGINEER: STONE & WEBSTER
NSSS SUPPLIER: GENERAL ELECTRIC

EQUIP. ID / SHEC ID	EQUIPMENT DESCRIPTION / MANUFACTURER	PPD NO.	LOCATION BLDG	ELEV	HTG	LOADS SEIS	HYDR	QUAL ANLYS	METH TEST	NAT FREQ LOWEST	RRS REF STATUS QUAL	INST
2CCP*RV84A	RELIEF VALVE CROSBY	C051A	PC	261	LH	Y	Y	S	SO	>33	NA A	Y
2CCP*RV84B	RELIEF VALVE CROSBY	C051A	PC	261	LH	Y	Y	S	SO	>33	NA A	Y
2CCP*RV85A	RELIEF VALVE CROSBY	C051A	PC	261	LH	Y	Y	S	SO	>33	NA A	Y
2CCP*RV85B	RELIEF VALVE CROSBY	C051A	PC	248	LH	Y	Y	S	SO	>33	NA A	Y
2CSH*RV113	RELIEF VALVE CROSBY	C051A	RB	180	LH	Y	Y	S	SO	>33	NA A	N
2CSH*RV114	RELIEF VALVE CROSBY	C051A	RB	185	LH	Y	NA	S	SO	>33	NA A	N
2CSH*RV160	RELIEF VALVE CROSBY	C051A	RB	175	LH	Y	NA	S	SO	>33	NA A	Y
2CSL*RV105	RELIEF VALVE CROSBY	C051A	RB	296	LH	Y	NA	S	SO	>33	NA A	N
2CSL*RV123	RELIEF VALVE CROSBY	C051A	RB	210	LH	Y	NA	S	SO	>33	NA A	N
2CSL*RV134	RELIEF VALVE CROSBY	C051A	ABN	180	LH	Y	NA	S	SO	>33	NA A	Y
2GSN*RV32A	RELIEF VALVE CROSBY	C051A	RB	289	LH	Y	NA	S	SO	>33	NA A	A
2GSN*RV32B	RELIEF VALVE CROSBY	C051A	RB	289	LH	Y	NA	S	SO	>33	NA A	A
2GSN*RV34A	RELIEF VALVE CROSBY	C051A	YD	261	LH	Y	NA	S	SO	>33	NA A	Y

JOB NAME NMP - UNIT 2
UTILITY NIAGARA MOHAWK

SEISMIC AND DYNAMIC QUALIFICATION SUMMARY AND STATUS REPORT
MASTER LIST OF SAFETY RELATED EQUIPMENT

ENGINEER: STONE & WEBSTER
NSSS SUPPLIER: GENERAL ELECTRIC

EQUIP. ID / SWEC ID	EQUIPMENT DESCRIPTION / MANUFACTURER	PPD NO.	LOCATION BLDG	LOCATION ELEV	LOCATION HTG	LOADS SEIS	LOADS HYDR	QUAL ANLYS	METH TEST	NAT FREQ LOWEST	RRS REF STATUS QUAL	RRS REF STATUS INST
2GSN*RV34B	RELIEF VALVE CROSBY	C051A	YD	261	LH	Y	NA	S	SO	>33	NA A	Y
2HVK*RV14A	RELIEF VALVE CROSBY	C051A	CB	273	LH	Y	NA	S	SO	>33	NA A	Y
2HVK*RV14B	RELIEF VALVE CROSBY	C051A	CB	284	LH	Y	NA	S	SO	>33	NA A	Y
2HVK*RV35A	RELIEF VALVE CROSBY	C051A	CB	289	LH	Y	NA	S	SO	>33	NA A	Y
2HVK*RV35B	RELIEF VALVE CROSBY	C051A	CB	306	LH	Y	NA	S	SO	>33	NA A	Y
2HVK*RV37A	RELIEF VALVE CROSBY	C051A	CB	261	LH	Y	NA	S	SO	>33	NA A	Y
2HVK*RV37B	RELIEF VALVE CROSBY	C051A	CB	261	LH	Y	NA	S	SO	>33	NA A	Y
2HVK*RV43A	RELIEF VALVE CROSBY	C051A	CB	289	LH	Y	NA	S	SO	>33	NA A	Y
2HVK*RV43B	RELIEF VALVE CROSBY	C051A	RB	306	LH	Y	NA	S	SO	>33	NA A	Y
2IAS*SV19A	RELIEF VALVE CROSBY	C051A	RB	289	LH	Y	NA	S	SO	>33	NA A	Y
2IAS*SV19B	RELIEF VALVE CROSBY	C051A	RB	289	LH	Y	NA	S	SO	>33	NA A	Y
2IAS*SV20A	RELIEF VALVE CROSBY	C051A	RB	289	LH	Y	NA	S	SO	>33	NA A	Y
2IAS*SV20B	RELIEF VALVE CROSBY	C051A	RB	289	LH	Y	NA	S	SO	>33	NA A	Y

JOB NAME NMP - UNIT 2
UTILITY NIAGARA MOHAWK

SEISMIC AND DYNAMIC QUALIFICATION SUMMARY AND STATUS REPORT
MASTER LIST OF SAFETY RELATED EQUIPMENT

ENGINEER: STONE & WEBSTER
NSSS SUPPLIER: GENERAL ELECTRIC

EQUIP. ID / SHEC ID	EQUIPMENT: DESCRIPTION / MANUFACTURER	PPD NO.	LOCATION: BLDG	ELEV	MTG	LOADS: SEIS	HYDR	QUAL ANLYS	METH- TEST	NAT FREQ- LOWEST	RRS REF STATUS: QUAL	INST
2ICS*RV112	RELIEF VALVE CROSBY	C051A	RB	181	LH	Y	NA	S	SO	>33	NA A	N
2ICS*RV114	RELIEF VALVE CROSBY	C051A	RB	188	LH	Y	NA	S	SO	>33	NA A	Y
2RHS*RV108	RELIEF VALVE CROSBY	C051A	RB	225	LH	Y	NA	S	SO	>33	NA A	Y
2RHS*RV110	RELIEF VALVE CROSBY	C051A	RB	210	LH	Y	NA	S	SO	>33	NA A	Y
2RHS*RV117	RELIEF VALVE CROSBY	C051A	ABS	175	LH	Y	NA	S	SO	>33	NA A	N
2RHS*RV139	RELIEF VALVE CROSBY	C051A	RB	210	LH	Y	NA	S	SO	>33	NA A	Y
2RHS*RV152	RELIEF VALVE CROSBY	C051A	PC	258	LH	Y	Y	S	SO	>33	NA A	Y
2PHS*RV20A	RELIEF VALVE CROSBY	C051A	RB	205	LH	Y	NA	S	SO	>33	NA A	Y
2RHS*RV20B	RELIEF VALVE CROSBY	C051A	RB	208	LH	Y	NA	S	SO	>33	NA A	Y
2RHS*RV20C	RELIEF VALVE CROSBY	C051A	RB	234	LH	Y	NA	S	SO	>33	NA A	Y
2RHS*RV61A	RELIEF VALVE CROSBY	C051A	RB	204	LH	Y	NA	S	SO	>33	NA A	Y
2RHS*RV61B	RELIEF VALVE CROSBY	C051A	RB	205	LH	Y	NA	S	SO	>33	NA A	Y
2RHS*RV61C	RELIEF VALVE CROSBY	C051A	RB	203	LH	Y	NA	S	SO	>33	NA A	N

JOB NAME NMP - UNIT 2
UTILITY NIAGARA MOHAWK

SEISMIC AND DYNAMIC QUALIFICATION SUMMARY AND STATUS REPORT
MASTER LIST OF SAFETY RELATED EQUIPMENT

ENGINEER: STONE & WEBSTER
NSSS SUPPLIER: GENERAL ELECTRIC

EQUIP. ID / SNEC ID	EQUIPMENT: DESCRIPTION / MANUFACTURER	PPD NO.	LOCATION: BLDG	ELEV	MTG	LOADS: SEIS	HYDR	QUAL ANLYS	METH- TEST	NAT FREQ- LOWEST	RRS REF STATUS: QUAL	INST
2RHS*SV34A	RELIEF VALVE CROSBY	C051A	ABS	209	LH	Y	NA	S	SO	>33	NA A	N
2RHS*SV34B	RELIEF VALVE CROSBY	C051A	ABS	209	LH	Y	NA	S	SO	>33	NA A	Y
2RHS*SV62A	RELIEF VALVE CROSBY	C051A	ABN	209	LH	Y	NA	S	SO	>33	NA A	Y
2RHS*SV62B	RELIEF VALVE CROSBY	C051A	ABS	209	LH	Y	NA	S	SO	>33	NA A	Y
2SLS*RV2A	RELIEF VALVE CROSBY	C051A	RB	292	LH	Y	NA	S	SO	>33	NA A	Y
2SLS*RV2B	RELIEF VALVE CROSBY	C051A	RB	292	LH	Y	NA	S	SO	>33	NA A	Y
2SHP*RVX157A	RELIEF VALVE CROSBY	C051A	SA	233	LH	Y	NA	S	SO	>33	NA A	Y
2SHP*RVX157B	RELIEF VALVE CROSBY	C051A	SA	233	LH	Y	NA	S	SO	>33	NA A	Y
2SHP*RVX46A	RELIEF VALVE CROSBY	C051A	RB	293	LH	Y	NA	S	SO	>33	NA A	Y
2SHP*RVX46B	RELIEF VALVE CROSBY	C051A	RB	293	LH	Y	NA	S	SO	>33	NA A	Y
2SHP*RVY157A	RELIEF VALVE CROSBY	C051A	SA	233	LH	Y	NA	S	SO	>33	NA A	Y
2SHP*RVY157B	RELIEF VALVE CROSBY	C051A	SA	233	LH	Y	NA	S	SO	>33	NA A	Y
2SHP*RVY46A	RELIEF VALVE CROSBY	C051A	RB	296	LH	Y	NA	S	SO	>33	NA A	Y

JOB NAME NMP - UNIT 2
UTILITY NIAGARA MOHAWK

SEISMIC AND DYNAMIC QUALIFICATION SUMMARY AND STATUS REPORT
MASTER LIST OF SAFETY RELATED EQUIPMENT

ENGINEER: STONE & WEBSTER
NSSS SUPPLIER: GENERAL ELECTRIC

EQUIP. ID / SWEC ID	EQUIPMENT DESCRIPTION / MANUFACTURER	PPD NO.	LOCATION BLDG	ELEV	HTG	LOADS SEIS	HYDR	QUAL ANLYS	METH TEST	NAT FREQ LOWEST	RRS REF STATUS QUAL	INST
2SWP*RVY46B	RELIEF VALVE CROSBY	C051A	RB	296	LH	Y	NA	S	SO	>33	NA A	Y
2SWP*RV10A	RELIEF VALVE CROSBY	C051A	ABN	192	LH	Y	NA	S	SO	>33	NA A	Y
2SWP*RV10B	RELIEF VALVE CROSBY	C051A	ABN	185	LH	Y	NA	S	SO	>33	NA A	Y
2SWP*RV11A	RELIEF VALVE CROSBY	C051A	ABS	254	LH	Y	NA	S	SO	>33	NA A	Y
2SWP*RV11B	RELIEF VALVE CROSBY	C051A	ABS	254	LH	Y	NA	S	SO	>33	NA A	Y
2SWP*RV155A	RELIEF VALVE CROSBY	C051A	RB	187	LH	Y	NA	S	SO	>33	NA A	Y
2SWP*RV155B	RELIEF VALVE CROSBY	C051A	RB	178	LH	Y	NA	S	NA	>33	NA A	Y
2SWP*RV202A	RELIEF VALVE CROSBY	C051A	DG	284	LH	Y	NA	S	NA	>33	NA A	Y
2SWP*RV202B	RELIEF VALVE CROSBY	C051A	DG	284	LH	Y	NA	S	NA	>33	NA A	Y
2SWP*RV203	RELIEF VALVE CROSBY	C051A	DG	284	LH	Y	NA	S	NA	>33	NA A	Y
2SWP*RV27A	RELIEF VALVE CROSBY	C051A	DG	272	LH	Y	NA	S	SO	>33	NA A	Y
2SWP*RV27B	RELIEF VALVE CROSBY	C051A	DG	272	LH	Y	NA	S	SO	>33	NA A	Y
2SWP*RV34A	RELIEF VALVE CROSBY	C051A	ABN	175	LH	Y	NA	S	SO	>33	NA A	Y

JOB NAME NMP - UNIT 2
UTILITY NIAGARA MOHAWK

SEISMIC AND DYNAMIC QUALIFICATION SUMMARY AND STATUS REPORT
MASTER LIST OF SAFETY RELATED EQUIPMENT

ENGINEER: STONE & WEBSTER
NSSS SUPPLIER: GENERAL ELECTRIC

EQUIP. ID / SWEC ID	EQUIPMENT DESCRIPTION / MANUFACTURER	PPD NO.	LOCATION BLDG	LOCATION ELEV	LOCATION HTG	LOADS SEIS	LOADS HYDR	QUAL ANLYS	METH- TEST	NAT FREQ- LOWEST	RRS REF STATUS QUAL	RRS REF STATUS INST
2SWP*RV34B	RELIEF VALVE CROSBY	C051A	ABS	175	LH	Y	NA	S	SO	>33	NA A	Y
2SWP*RV515	RELIEF VALVE CROSBY	C051A	CB	283	LH	Y	NA	S	NA	>33	NA A	Y
2SWP*RV518	RELIEF VALVE CROSBY	C051A	DG	273	LH	Y	NA	S	NA	>33	NA A	Y
2SWP*RV53A	RELIEF VALVE CROSBY	C051A	CB	288	LH	Y	NA	S	SO	>33	NA A	Y
2SWP*RV53B	RELIEF VALVE CROSBY	C051A	CB	281	LH	Y	NA	S	SO	>33	NA A	Y
2SWP*RV556	RELIEF VALVE CROSBY	C051A	ABN	209	LH	Y	NA	S	NA	>33	NA A	Y
2SWP*RV558	RELIEF VALVE CROSBY	C051A	ABS	209	LH	Y	NA	S	NA	>33	NA A	Y
2SWP*RV564	RELIEF VALVE CROSBY	C051A	ASB	239	LH	Y	NA	S	NA	>33	NA A	Y
2SWP*RV566	RELIEF VALVE CROSBY	C051A	ASB	239	LH	Y	NA	S	SO	>33	NA A	Y
2SWP*RV575	RELIEF VALVE CROSBY	C051A	CB	240	LH	Y	NA	S	SO	>33	NA A	Y
2SWP*RV576	RELIEF VALVE CROSBY	C051A	CB	240	LH	Y	NA	S	SO	>33	NA A	Y
2SWP*RV58A	RELIEF VALVE CROSBY	C051A	CBO	270	LH	Y	NA	S	SO	>33	NA A	Y
2SWP*RV58B	RELIEF VALVE CROSBY	C051A	CB	279	LH	Y	NA	SA	SO	>33	NA A	Y

JOB NAME NMP - UNIT 2
UTILITY NIAGARA MOHAWK

SEISMIC AND DYNAMIC QUALIFICATION SUMMARY AND STATUS REPORT
MASTER LIST OF SAFETY RELATED EQUIPMENT

ENGINEER: STONE & WEBSTER
NSSS SUPPLIER: GENERAL ELECTRIC

EQUIP. ID / SWEC ID	EQUIPMENT DESCRIPTION / MANUFACTURER	PPD NO.	LOCATION BLDG	LOCATION ELEV	LOCATION MTG	LOADS SEIS	LOADS HYDR	QUAL ANLYS	METH TEST	NAT FREQ LOWEST	RRS REF STATUS QUAL	RRS REF STATUS INST
2SWP*RV68A	RELIEF VALVE CROSBY	C051A	RB	273	LH	Y	NA	S	SO	>33	NA A	Y
2SWP*RV68B	RELIEF VALVE CROSBY	C051A	RB	285	LH	Y	NA	S	SO	>33	NA A	Y
2SWP*RV72A	RELIEF VALVE CROSBY	C051A	SG	283	LH	Y	NA	S	SO	>33	NA A	Y
2SWP*RV72B	RELIEF VALVE CROSBY	C051A	SG	283	LH	Y	NA	S	SO	>33	NA A	Y
2SWP*RV80A	RELIEF VALVE CROSBY	C051A	ABN	192	LH	Y	NA	S	SO	>33	NA A	Y
2SWP*RV80B	RELIEF VALVE CROSBY	C051A	ABS	184	LH	Y	NA	S	NA	>33	NA A	Y
2SWP*RV80C	RELIEF VALVE CROSBY	C051A	ABS	184	LH	Y	NA	S	NA	>33	NA A	Y
2SWP*RV80D	RELIEF VALVE CROSBY	C051A	ABN	192	LH	Y	NA	S	NA	>33	NA A	Y
2SWP*RV80E	RELIEF VALVE CROSBY	C051A	ABS	178	LH	Y	NA	S	NA	>33	NA A	Y
2SWP*RV80F	RELIEF VALVE CROSBY	C051A	ABS	175	LH	Y	NA	S	NA	>33	NA A	Y
2SWP*RV81A	RELIEF VALVE CROSBY	C051A	RB	180	LH	Y	NA	S	NA	>33	NA A	Y
2SWP*RV81B	RELIEF VALVE CROSBY	C051A	RB	206	LH	Y	NA	S	NA	>33	NA A	Y
2SWP*RV82A	RELIEF VALVE CROSBY	C051A	RB	196	LH	Y	NA	S	NA	>33	NA A	Y

JOB NAME NMP - UNIT 2
UTILITY NIAGARA MOHAWK

SEISMIC AND DYNAMIC QUALIFICATION SUMMARY AND STATUS REPORT
MASTER LIST OF SAFETY RELATED EQUIPMENT

ENGINEER: STONE & WEBSTER
NSSS SUPPLIER: GENERAL ELECTRIC

EQUIP. ID / SWEC ID	EQUIPMENT DESCRIPTION / MANUFACTURER	PPD NO.	LOCATION BLDG	ELEV	HTG	LOADS SEIS	HYDR	QUAL ANLYS	METH TEST	NAT FREQ LOWEST	RRS REF STATUS QUAL	INST
2SWP*RV82B	RELIEF VALVE CROSBY	C051A	RB	196	LH	Y	NA	S	NA	>33	NA A	Y
2SWP*RV82C	RELIEF VALVE CROSBY	C051A	RB	196	LH	Y	NA	S	NA	>33	NA A	Y
2SWP*RV82D	RELIEF VALVE CROSBY	C051A	RB	200	LH	Y	NA	S	NA	>33	NA A	Y
2SWP*RV83A	RELIEF VALVE CROSBY	C051A	RB	223	LH	Y	NA	S	NA	>33	NA A	Y
2SWP*RV83B	RELIEF VALVE CROSBY	C051A	RB	218	LH	Y	NA	S	SO	>33	NA A	Y
2SWP*RV83C	RELIEF VALVE CROSBY	C051A	RB	209	LH	Y	NA	S	SO	>33	NA A	Y
2SWP*RV83D	RELIEF VALVE CROSBY	C051A	RB	233	LH	Y	NA	S	SO	>33	NA A	Y
2SWP*RV83E	RELIEF VALVE CROSBY	C051A	RB	224	LH	Y	NA	S	SO	>33	NA A	Y
2SWP*RV84A	RELIEF VALVE CROSBY	C051A	RB	243	LH	Y	NA	S	SO	>33	NA A	Y
2SWP*RV84B	RELIEF VALVE CROSBY	C051A	RB	254	LH	Y	NA	S	SO	>33	NA A	Y
2SWP*RV84C	RELIEF VALVE CROSBY	C051A	RB	175	LH	Y	NA	S	SO	>33	NA A	Y
2SWP*RV85A	RELIEF VALVE CROSBY	C051A	RB	260	LH	Y	NA	S	SO	>33	NA A	Y
2SWP*RV85B	RELIEF VALVE CROSBY	C051A	RB	282	LH	Y	NA	S	SO	>33	NA A	Y

JOB NAME NMP - UNIT 2
UTILITY NIAGARA MOHAWK

SEISMIC AND DYNAMIC QUALIFICATION SUMMARY AND STATUS REPORT
MASTER LIST OF SAFETY RELATED EQUIPMENT

ENGINEER: STONE & WEBSTER
NSSS SUPPLIER: GENERAL ELECTRIC

EQUIP. ID / SWEC ID	EQUIPMENT DESCRIPTION / MANUFACTURER	PFD NO.	LOCATION BLDG	LOCATION ELEV	LOCATION HTG	LOADS SEIS	LOADS HYDR	QUAL ANLYS	METH TEST	NAT FREQ LOWEST	RRS REF STATUS QUAL	RRS REF STATUS INST
2SWP*RV85C	RELIEF VALVE CROSBY	C051A	RB	285	LH	Y	NA	S	SO	>33	NA A	Y
2SWP*RV87A	RELIEF VALVE CROSBY	C051A	CB	281	LH	Y	NA	S	SO	>33	NA A	Y
2SWP*RV87B	RELIEF VALVE CROSBY	C051A	CB	281	LH	Y	NA	S	SO	>33	NA A	Y
2SWP*RV89A	RELIEF VALVE CROSBY	C051A	CB	274	LH	Y	NA	S	NA	>33	NA A	Y
2SWP*RV89B	RELIEF VALVE CROSBY	C051A	CB	286	LH	Y	NA	S	NA	>33	NA A	Y
2SWP*RV9A	RELIEF VALVE CROSBY	C051A	ABN	255	LH	Y	NA	S	SO	>33	NA A	Y
2SWP*RV9B	RELIEF VALVE CROSBY	C051A	ABS	255	LH	Y	NA	S	SO	>33	NA A	Y

JOB NAME NMP - UNIT 2
UTILITY NIAGARA MOHAWK

SEISMIC AND DYNAMIC QUALIFICATION SUMMARY AND STATUS REPORT
MASTER LIST OF SAFETY RELATED EQUIPMENT

ENGINEER: STONE & WEBSTER
NSSS SUPPLIER: GENERAL ELECTRIC

EQUIP. ID / SNEC ID	EQUIPMENT DESCRIPTION / MANUFACTURER	PPD NO.	LOCATION BLDG	ELEV	MTG	LOADS SEIS	HYDR	QUAL ANLYS	METH TEST	NAT FREQ LOWEST	RRS REF STATUS QUAL	INST
2CSL*FV114	10"-300# GLOBE W/ SMB-00-5 CV	C051H	RB	203	LM	Y	NA	S	SF	37	NA A	Y
2HVK*PNL21A	REMOTE CNTRL TO 2HVK*TV21A	C051H	CB	289	LM	Y	NA	NA	MF	NA	19 A	Y
2HVK*PNL21B	REMOTE CNTRL TO 2HVK*TV21B	C051H	CB	306	LM	Y	NA	NA	MF	NA	19 A	Y
2HVK*PNL22A	REMOTE CNTRL TO 2HVK*TV22A	C051H	CB	289	LM	Y	NA	NA	MF	NA	19 A	Y
2HVK*PNL22B	REMOTE CNTRL TO 2HVK*TV22B	C051H	CB	306	LM	Y	NA	NA	MF	NA	19 A	Y
2HVK*TV21A	4"-150# 3 WAY W/BW #85830 CV	C051H	CB	291	LM	Y	NA	S	SF	85	NA A	Y
2HVK*TV21B	4"-150# 3WAY W/BW #85830 CV	C051H	CB	306	LM	Y	NA	S	SF	85	NA A	Y
2HVK*TV22A	4"-150# 3WAY W/BW #85830 CV	C051H	CB	289	LM	Y	NA	S	SF	85	NA A	Y
2HVK*TV22B	4"-150# 3 WAY W/BW #85830 CV	C051H	CB	306	LM	Y	NA	S	SF	85	NA A	Y
2ICS*AOV109	2"-150# W/SPRING ACTUATOR CV	C051H	RB	175	LM	Y	NA	S	SF	73	NA A	Y
2ICS*AOV110	2"-150# W/SPRING ACTUATOR CV	C051H	RB	175	LM	Y	NA	S	SF	73	NA A	Y
2ICS*AOV130	2"-900# W/SPRING ACTUATOR CV	C051H	RB	187	LM	Y	NA	S	SF	73	NA A	Y
2ICS*AOV131	2"-900# W/SPRING ACTUATOR CV	C051H	RB	187	LM	Y	NA	S	SF	73	NA A	Y

JOB NAME NMP - UNIT 2
UTILITY NIAGARA MOHAWK

SEISMIC AND DYNAMIC QUALIFICATION SUMMARY AND STATUS REPORT
MASTER LIST OF SAFETY RELATED EQUIPMENT

ENGINEER: STONE & WEBSTER
NSSS SUPPLIER: GENERAL ELECTRIC

EQUIP. ID / SHEC ID	EQUIPMENT DESCRIPTION / MANUFACTURER	PPD NO.	LOCATION BLDG	LOCATION ELEV	LOCATION HTG	LOADS SEIS	LOADS HYDR	QUAL ANLYS	METH TEST	NAT FREQ LOWEST	RRS REF STATUS QUAL	RRS REF STATUS INST
2ICS*FV108	3"-900# GLOBE W/SMB-00-5 COPES VULCAN (CV)	C051H	RB	188	LH	Y	NA	S	SF	46	NA A	Y
2ICS*PCV115	2"-900# GLOBE W/BH #85960 CV	C051H	RB	186	LH	Y	NA	S	SF	85	NA A	N
2ICS*PNL115	REMOTE CNTRL TO 2ICS*PCV115	C051H	ABN	240	LH	Y	NA	NA	NF	NA	19 A	N
2RHS*FV38A	14"-300# GLOBE W/SMB-00-5 CV	C051H	RB	206	LH	Y	NA	S	SF	37	NA A	Y
2RHS*FV38B	14"-300# GLOBE W/SMB-00-5 CV	C051H	RB	218	LH	Y	NA	S	SF	37	NA A	Y
2RHS*FV38C	14"-300# GLOBE W/SMB-00-5 CV	C051H	RB	218	LH	Y	NA	S	SF	37	NA A	Y
2RHS*LV17A	3"-300# W/SPRING ACTUDTOR CV	C051H	ABN	181	LH	Y	NA	S	SF	85	NA A	Y
2RHS*LV17B	3"-300# W/SPRING ACTUDTOR CV	C051H	RB	177	LH	Y	NA	S	SF	86	NA A	Y
2RHS*PV21A	8"-900# W/SPRING ACTUATOR CV	C051H	RB	190	LH	Y	NA	S	SF	86	NA A	Y
2RHS*PV21B	8-900# W/SPRING ACTUATOR COPER-VULCAN (CV)	C051H	RB	190	LH	Y	NA	S	SF	86	NA A	Y
2SLS*HCV116	3/4"-900# GLOBE W/SPRING ACT.	C051H	RB	293	LH	Y	NA	S	SF	73	NA A	Y
2SHP*PNL35A	REMOTE CNTRL TO 2SHP*TV35A	C051H	CB	261	LH	Y	NA	NA	NF	NA	19 A	Y
2SHP*PNL35B	REMOTE CNTRL TO 2SHP*TV35B	C051H	CB	261	LH	Y	NA	NA	NF	NA	19 A	Y

JOB NAME NMP - UNIT 2
UTILITY NIAGARA MOHAWK

SEISMIC AND DYNAMIC QUALIFICATION SUMMARY AND STATUS REPORT
MASTER LIST OF SAFETY RELATED EQUIPMENT

ENGINEER: STONE & WEBSTER
NSSS SUPPLIER: GENERAL ELECTRIC

EQUIP. ID / SHEC ID	EQUIPMENT DESCRIPTION / MANUFACTURER	PPD NO.	LOCATION BLDG	LOCATION ELEV	LOCATION HTG	LOADS SEIS	LOADS HYDR	QUAL ANLYS	METH TEST	NAT FREQ LOWEST	RRS REF STATUS QUAL	RRS REF STATUS INST
2SWP*TV35A	4"-150# 3WAY W/BW #86080 CV	C051M	CB	261	LH	Y	NA	S	SF	85	NA A	Y
2SWP*TV35B	4"-150# 3WAY W/BW #86080 CV	C051M	CB	261	LH	Y	NA	S	SF	85	NA A	Y

JOB NAME NMP - UNIT 2
UTILITY NIAGARA MOHAWK

SEISMIC AND DYNAMIC QUALIFICATION SUMMARY AND STATUS REPORT
MASTER LIST OF SAFETY RELATED EQUIPMENT

ENGINEER: STONE & WEBSTER
NSSS SUPPLIER: GENERAL ELECTRIC

EQUIP. ID / SWEC ID	EQUIPMENT DESCRIPTION / MANUFACTURER	PPD NO.	LOCATION BLDG	ELEV	HTG	LOADS SEIS	HYDR	QUAL ANLYS	METH TEST	NAT FREQ LOWEST	RRS REF STATUS QUAL	INST
2CEC*PNL898	POST ACC MON PANEL ELECTRO-MECH	C061G	CB	306	CF	Y	NA	S	NA	28	18 A	Y
2CES*PNL405	REMOTE SHUTDOWN CONT PANEL ELECTRO-MECH	C061G	CB	261	CF	Y	NA	S	NA	37	16 B	Y
2CES*PNL415	CONT ROOM FIRE DISC-DIVI ELECTRO-MECH	C061G	CB	306	DH	Y	NA	S	NA	>33	A	Y
2CES*PNL416	CONT ROOM FIRE DISC-DIVII ELECTRO-MECH	C061G	CB	306	DH	Y	NA	S	NA	>33	A	Y
2CES*PNL504	SERVICE WATER STRAINER ELECTRO-MECH	C061G	SB	261	DH	Y	NA	S	NA	50	6 A	Y
2CES*PNL505	SERVICE WATER STRAINER ELECTRO-MECH	C061G	SB	261	DH	Y	NA	S	NA	50	6 A	Y
2CES*PNL517	TRANSIENT ANAL. PANEL ELECTRO-MECH	C061G	CB	261	CF	Y	NA	S	NA	48	16 A	Y
2CES*PNL519	TRANSIENT ANAL PANEL ELECTRO-MECH	C061G	CB	261	CF	Y	NA	S	NA	48	16 A	Y
2CES*PNL520	TRANSIENT ANAL PANEL ELECTRO-MECH	C061G	CB	261	CF	Y	NA	S	NA	48	16 A	Y
2CES*PNL554	POST ACCIDENT SAMPLING ELECTRO-MECH	C061G	CB	240	DH	Y	NA	S	NA	>33	A	Y
2CHS*AR6B	ARALYZER RECORDER ELECTRO MECH	C061G	CB	306	CH	Y	NA	NA	HF	19	18 A	Y
2CHS*AR71B	ARALYZER RECORDER ELECTRO-MECH	C061G	CB	306	CH	Y	NA	NA	HF	19	18 A	Y
2CHS*LR9B	LEVEL RECORDER ELECTRO-MECH	C061G	CB	306	CH	Y	NA	NA	HF	19	18 A	Y

JOB NAME NMP - UNIT 2
UTILITY NIAGARA MOHAWK

SEISMIC AND DYNAMIC QUALIFICATION SUMMARY AND STATUS REPORT
MASTER LIST OF SAFETY RELATED EQUIPMENT

ENGINEER: STONE & WEBSTER
NSSS SUPPLIER: GENERAL ELECTRIC

EQUIP. ID / SWEC ID	EQUIPMENT DESCRIPTION / MANUFACTURER	PPD NO.	LOCATION BLDG	LOCATION ELEV	LOCATION HTG	LOADS SEIS	LOADS HYDR	QUAL ANLYS	METH TEST	NAT FREQ LOWEST	RRS REF STATUS QUAL	RRS REF STATUS INST
2CHS*PR1B	PRESSURE RECORDER ELECTRO-MECH	C061G	CB	306	CH	Y	NA	NA	MF	19	18 A	Y
2CHS*PR2B	PRESSURE RECORDER ELECTRO-MECH	C061G	CB	306	CH	Y	NA	NA	MF	19	18 A	Y
2CHS*PR7B	PRESSURE RECORDER ELECTRO-MECH	C061G	CB	306	CH	Y	NA	NA	MF	19	18 A	Y
2CHS*TRH170	RECORDER ELECTRO-MECH	C061G	CB	306	CH	Y	NA	NA	MF	19	18 A	Y
2CHS*TRX170	SUPP POOL TEMP RECORDER ELECTRO-MECH	C061G	CB	306	CH	Y	NA	NA	MF	19	18 A	Y
2CHS*TRY170	SUPP POOL HTR TEMP ELECTRO-MECH	C061G	CB	360	CH	Y	NA	NA	MF	19	18 A	Y
2CHS*TRZ170	SUPP POOL HTR TEMP ELECTRO-MECH	C061G	CB	306	CH	Y	NA	NA	MF	19	18 A	Y
2CHS*TR67B	TEMPERATURE RECORDER ELECTRO-MECH	C061G	CB	306	CH	Y	NA	NA	MF	19	18 A	Y
2CHS*TR68B	SUPP POOL RECORDER ELECTRO-MECH	C061G	CB	306	CH	Y	NA	NA	MF	19	18 A	Y
2CHS*TR69B	SUPPP POOL TEMP RECORDER ELECTRO-MECH	C061G	CB	306	CH	Y	NA	NA	MF	19	18 A	Y
2CHS*TR70B	SUPP POOL TEMP RECORDER ELECTRO-MECH	C061G	CB	306	CH	Y	NA	NA	MF	19	18 A	Y
2EGF*IPNL112	FUEL OIL PANEL ELECTRO-MECH	C061G	DG	261	DH	Y	NA	S	NA	>49	16 A	Y
2RHS*FI60A	FLOW INDICATOR ELECTRO-MECH	C061G	CB	261	CH	Y	NA	NA	MF	NA	16 A	Y

JOB NAME NMP - UNIT 2
UTILITY NIAGARA MOHAWK

SEISMIC AND DYNAMIC QUALIFICATION SUMMARY AND STATUS REPORT
MASTER LIST OF SAFETY RELATED EQUIPMENT

ENGINEER: STONE & WEBSTER
NSSS SUPPLIER: GENERAL ELECTRIC

EQUIP. ID / SMEC ID	EQUIPMENT DESCRIPTION / MANUFACTURER	PPD NO.	LOCATION BLDG	LOCATION ELEV	LOCATION MTG	LOADS SEIS	LOADS HYDR	QUAL ANLYS	METH TEST	NAT FREQ LOWEST	RRS REF STATUS QUAL	RRS REF STATUS INST
2RHS*FI60B	RHSHX DISCHARGE FLOW ELECTRO-MECH	C061G	CB	261	CH	Y	NA	NA	MF	NA	16 A	Y
2RHS*FY60A	RHSHX DISCHARGE FLOW ELECTRO-MECH	C061G	CB	261	CH	Y	NA	NA	MF	NA	16 A	Y
2RHS*FY60B	RHSHX DISCHARGE FLOW ELECTRO-MECH	C061G	CB	261	CH	Y	NA	NA	MF	NA	16 A	Y
2RHS*PNL100	STEAM LINE DRAIN ELECTRO-MECH	C061G	RB	218	DH	Y	NA	S	NA	51.14	A	Y
2RHS*PNRS60A	RHSHX DISCHARGE FLOW ELECTRO-MECH	C061G	CB	261	CH	Y	NA	NA	MF	NA	16 A	Y
2RHS*PNRS60B	RHSHX DISCHARGE FLOW ELECTRO-MECH	C061G	CB	261	CH	Y	NA	NA	MF	NA	16 A	Y
2RSS*E/I106	RCIC PMP DISCH FLOW ELECTRO-MECH	C061G	CB	261	CH	Y	NA	NA	MF	NA	16 A	Y
2RSS*FIC106	RCIC PMP DISCH FLOW ELECTRO-MECH	C061G	CB	261	CH	Y	NA	NA	MF	NA	16 A	Y
2RSS*FY106	RCIC PMP DISCH FLOW ELECTRO-MECH	C061G	CB	261	CH	Y	NA	NA	MF	NA	16 A	Y
2RSS*LI101	REACTOR VESSEL LEVEL ELECTRO-MECH	C061G	CB	261	CH	Y	NA	NA	MF	NA	16 A	Y
2RSS*LI105	REACTOR VESSEL LEVEL ELECTRO-MECH	C061G	CB	261	CH	Y	NA	NA	MF	NA	16 A	Y
2RSS*LI115	REACTOR VESSEL LEVEL ELECTRO-MECH	C061G	CB	261	CH	Y	NA	NA	MF	NA	16 A	Y
2RSS*PI102	REACTOR VESSEL LEVEL ELECTRO-MECH	C061G	CB	261	CH	Y	NA	NA	MF	NA	16 A	Y

JOB NAME NMP - UNIT 2
UTILITY NIAGARA MOHAWK

SEISMIC AND DYNAMIC QUALIFICATION SUMMARY AND STATUS REPORT
MASTER LIST OF SAFETY RELATED EQUIPMENT

ENGINEER: STONE & WEBSTER
NSSS SUPPLIER: GENERAL ELECTRIC

EQUIP. ID / SWEC ID	EQUIPMENT DESCRIPTION / MANUFACTURER	PPD NO.	LOCATION BLDG	LOCATION ELEV	LOCATION HTG	LOADS SEIS	LOADS HYDR	QUAL ANLYS	METH TEST	NAT FREQ LOWEST	RRS REF	STATUS QUAL	STATUS INST
2RSS*PHRS101	REACTOR VESSEL LEVEL ELECTRO-MECH	C061G	CB	261	CH	Y	NA	NA	HF	NA	16	A	Y
2RSS*PHRS102	REACTOR VESSEL LEVEL ELECTRO-MECH	C061G	CB	261	CH	Y	NA	NA	HF	NA	16	A	Y
2RSS*PHRS105	REACTOR VESSEL LEVEL ELECTRO-MECH	C061G	CB	261	CH	Y	NA	NA	HF	NA	16	A	Y
2RSS*PHRS106	REACTOR VESSEL LEVEL ELECTRO-MECH	C061G	CB	261	CH	Y	NA	NA	HF	NA	16	A	Y
2RSS*PHRS115	REACTOR VESSEL LEVEL ELECTRO-MECH	C061G	CB	261	CH	Y	NA	NA	HF	NA	16	A	Y
2RSS*SI107	RCIC TURBINE SPEED ELECTRO-MECH	C061G	CB	261	CH	Y	NA	NA	HF	NA	16	A	Y
2RSS*TI103	SUPPR POOL HTR TEMP ELECTRO-MECH	C061G	CB	261	CH	Y	NA	NA	HF	NA	16	A	Y
2RSS*TI104	SUPPER POOL HTR TEMP ELECTRO-MECH	C061G	CB	261	CH	Y	NA	NA	HF	NA	16	A	Y
2SHP*FI200A	SHP DISCH FLOW ELECTRO-MECH	C061G	CB	261	CH	Y	NA	NA	HF	NA	16	A	Y
2SHP*FI200B	SHP PUMP DISCH FLOW ELECTRO-MECH	C061G	CB	261	CH	Y	NA	NA	HF	NA	16	A	Y
2SHP*FI201A	SHP HTR FLOW TO RHS HX ELECTRO-MECH	C061G	CB	261	CH	Y	NA	NA	HF	NA	16	A	Y
2SHP*FI201B	SHP HTR FLOW TO RHS HX ELECTRO-MECH	C061G	CB	261	CH	Y	NA	NA	HF	NA	16	A	Y
2SHP*FY200A	SHP PUMP DISCH FLOW ELECTRO-MECH	C061G	CB	261	CH	Y	NA	NA	HF	NA	16	A	Y

JOB NAME NMP - UNIT 2
UTILITY NIAGARA MOHAWK

SEISMIC AND DYNAMIC QUALIFICATION SUMMARY AND STATUS REPORT
MASTER LIST OF SAFETY RELATED EQUIPMENT

ENGINEER: STONE & WEBSTER
NSSS SUPPLIER: GENERAL ELECTRIC

EQUIP. ID / SHEC ID	EQUIPMENT DESCRIPTION / MANUFACTURER	PPD NO.	LOCATION BLDG	LOCATION ELEV	LOCATION MTG	LOADS SEIS	LOADS HYDR	QUAL ANLYS	METH TEST	NAT FREQ LOWEST	RRS REF STATUS QUAL	RRS REF STATUS INST
2SHP*FY200B	SWP PUMP DISCH FLOW ELECTRO-MECH	C061G	CB	261	CH	Y	NA	NA	HF	NA	16 A	Y
2SHP*FY200C	SWP PUMP DISCH FLOW ELECTRO-MECH	C061G	CB	261	CH	Y	NA	NA	HF	NA	16 A	Y
2SHP*FY200D	SWP PUMP DISCH FLOW ELECTRO-MECH	C061G	CB	261	CH	Y	NA	NA	HF	NA	16 A	Y
2SHP*FY200E	SWP PUMP DISCH FLOW ELECTRO-MECH	C061G	CB	261	CH	Y	NA	NA	HF	NA	16 A	Y
2SHP*FY200F	SWP PUMP DISCH FLOW ELECTRO-MECH	C061G	CB	261	CH	Y	NA	NA	HF	NA	16 A	Y
2SHP*FY201A	SWPHTR FLOW TO RHS HX ELECTRO-MECH	C061G	CB	261	CH	Y	NA	NA	HF	NA	16 A	Y
2SHP*FY201B	SWP HTR FLOW TO RHS HX ELECTRO-MECH	C061G	CB	261	CH	Y	NA	NA	HF	NA	16 A	Y
2SHP*PDI1A	DIFF PRESS ELECTRO-MECH	C061G	SH	261	CH	Y	NA	N/A	HF	N/A	22 A	Y
2SHP*PDI1B	DIFF PRESS ELECTRO-MECH	C061G	SH	261	CH	Y	NA	NA	HF	NA	22 A	Y
2SHP*PDI1C	DIFF PRESS ELECTRO-MECH	C061G	SH	261	CH	Y	NA	NA	HF	NA	22 A	Y
2SHP*PDI1D	DIFF PRESS ELECTRO MECH	C061G	SH	261	CH	Y	NA	NA	HF	NA	22 A	Y
2SHP*PDI1E	DIFF PRESSURE ELECTRO-MECH	C061G	SH	261	CH	Y	NA	N/A	HF	N/A	22 A	Y
2SHP*PDI1F	DIFF PRESSURE ELECTRO-MECH	C061G	SH	261	CH	Y	NA	NA	HF	NA	22 A	Y

JOB NAME NMP - UNIT 2
UTILITY NIAGARA MOHAWK

SEISMIC AND DYNAMIC QUALIFICATION SUMMARY AND STATUS REPORT
MASTER LIST OF SAFETY RELATED EQUIPMENT

ENGINEER: STONE & WEBSTER
NSSS SUPPLIER: GENERAL ELECTRIC

EQUIP. ID / SWEC ID	EQUIPMENT DESCRIPTION / MANUFACTURER	PPD NO.	LOCATION BLDG	LOCATION ELEV	LOCATION HTG	LOADS SEIS	LOADS HYDR	QUAL ANLYS	METH TEST	NAT FREQ LOWEST	RRS REF STATUS QUAL	RRS REF STATUS INST
2SHP*PHRS20B	SHP PUMP DISCH FLOW ELECTRO-MECH	C061G	CB	261	CH	Y	NA	NA	HF	NA	16 A	N
2SHP*PHRS200A	SHP PUMP DISCH FLOW ELECTRO-MECH	C061G	CB	261	CH	Y	NA	NA	HF	NA	16 A	Y
2SHP*PHRS200B	SHP PUMP DISCH FLOW ELECTRO-MECH	C061G	CB	261	CH	Y	NA	NA	HF	NA	16 A	Y
2SHP*PHRS200C	SHP PUMP DISCH FLOW ELETRO-MECH	C061G	CB	261	CH	Y	NA	NA	HF	NA	16 A	Y
2SHP*PHRS200D	SHP PUMP DISCH FLOW ELECRO-MECH	C061G	CB	261	CH	Y	NA	NA	HF	NA	16 A	Y
2SHP*PHRS200E	SHP PUMP DISCH FLOW ELECTRO-MECH	C061G	CB	261	CH	Y	NA	NA	HF	NA	16 A	Y
2SHP*PHRS200F	SHP PUMP DISCH FLOW ELECTRO-MECH	C061G	CB	261	CH	Y	NA	NA	HF	NA	16 A	Y
2SHP*PHRS201A	SHP HTR FLOW TO RHS HX ELECTRO-MECH	C061G	CB	261	CH	Y	NA	NA	HF	NA	16 A	Y
2SHP*PHRS201B	SHP HTR FLOW TO RHS HX ELECTRO-MECH	C061G	CB	261	CH	Y	NA	NA	HF	NA	16 A	Y

JOB NAME NMP - UNIT 2
UTILITY NIAGARA MOHAWK

SEISMIC AND DYNAMIC QUALIFICATION SUMMARY AND STATUS REPORT
MASTER LIST OF SAFETY RELATED EQUIPMENT

ENGINEER: STONE & WEBSTER
NSSS SUPPLIER: GENERAL ELECTRIC

EQUIP. ID / SWEC ID	EQUIPMENT DESCRIPTION / MANUFACTURER	PPD NO.	LOCATION BLDG	LOCATION ELEV	LOCATION MTG	LOADS SEIS	LOADS HYDR	QUAL ANLYS	METH TEST	NAT FREQ LOWEST	RRS REF STATUS QUAL	RRS REF STATUS INST
2CES*RAK105	INSTRUMENT RACK MERCURY CO	C061P	RB	261	CF	Y	NA	S	NA	44	60 A	Y
2CES*RAK106	INSTRUMENT RACK MERCURY CO	C061P	RB	261	CF	Y	NA	S	NA	44	60 A	Y
2CES*RAK107	INSTRUMENT RACK MERCURY CO	C061P	RB	261	CF	Y	NA	S	NA	44	60 A	Y
2CES*RAK108	INSTRUMENT RACK MERCURY CO	C061P	RB	289	CF	Y	NA	S	NA	44	59 A	Y
2CES*RAK109	INSTRUMENT RACK MERCURY CO	C061P	RB	289	CF	Y	NA	S	NA	44	59 A	Y
2CES*RAK231	INSTRUMENT RACK MERCURY CO	C061P	TB	278	CF	Y	NA	S	NA	44	6 A	Y
2CES*RAK232	INSTRUMENT RACK MERCURY CO	C061P	TB	278	CF	Y	NA	S	NA	44	6 A	Y

JOB NAME NMP - UNIT 2
UTILITY NIAGARA MOHAWK

SEISMIC AND DYNAMIC QUALIFICATION SUMMARY AND STATUS REPORT
MASTER LIST OF SAFETY RELATED EQUIPMENT

ENGINEER: STONE & WEBSTER
NSSS SUPPLIER: GENERAL ELECTRIC

EQUIP. ID / SHEC ID	EQUIPMENT DESCRIPTION / MANUFACTURER	PPD NO.	LOCATION BLDG	LOCATION ELEV	LOCATION HTG	LOADS SEIS	LOADS HYDR	QUAL ANLYS	METH TEST	NAT FREQ LOWEST	RRS REF STATUS QUAL	RRS REF STATUS INST
2GTS*TIS29A	TEMP. SWITCH MCC POWER	C071A	SB	278	DH	Y						
2GTS*TIS29B	TEMP. SWITCH MCC POWER	C071A	SB	278	DH	Y						
2HVC*FS13A	FLOW ACTUATED SWITCHES MCC POWERS	C071A	CB	288	DH	Y	NA	NA	HF	>32	17 A	Y
2HVC*FS13B	FLOW ACTUATED SWITCHES MCC POWERS	C071A	CB	306	DH	Y	NA	NA	HF	>32	18 A	Y
2HVC*FS151	FLOW ACTUATED SWITCHES MCC POWERS	C071A	ASB	292	DH	Y	NA	NA	HF	>32	5 A	Y
2HVC*FS16A	FLOW ACTUATED SWITCHES MCC POWERS	C071A	CB	306	DH	Y	NA	NA	HF	>32	18 A	Y
2HVC*FS16B	FLOW ACTUATED SWITCHES MCC POWERS	C071A	CB	306	DH	Y	NA	NA	HF	>32	18 A	Y
2HVC*FS161	FLOW ACTUATED SWITCHES MCC POWERS	C071A	ASB	290	DH	Y	NA	NA	HF	>32	5 A	Y
2HVC*FS172	FLOW ACTUATED SWITCHES MCC POWERS	C071A	CB	237	DH	Y	NA	NA	HF	>32	15 A	Y
2HVC*FS196	FLOW ACTUATED SWITCHES MCC POWERS	C071A	CB	237	DH	Y	NA	NA	HF	>32	15 A	Y
2HVC*FS23A	FLOW ACTUATED SWITCHES MCC POWERS	C071A	CB	288	DH	Y	NA	NA	HF	>32	17 A	Y
2HVC*FS23B	FLOW ACTUATED SWITCHES MCC POWERS	C071A	CB	306	DH	Y	NA	NA	HF	>32	18 A	Y
2HVC*FS24A	FLOW ACTUATED SWITCHES MCC POWERS	C071A	CB	283	DH	Y	NA	NA	HF	>32	17 A	Y

JOB NAME NMP - UNIT 2
UTILITY NIAGARA MOHAWK

SEISMIC AND DYNAMIC QUALIFICATION SUMMARY AND STATUS REPORT
MASTER LIST OF SAFETY RELATED EQUIPMENT

ENGINEER: STONE & WEBSTER
NSSS SUPPLIER: GENERAL ELECTRIC

EQUIP. ID / SHEC ID	EQUIPMENT DESCRIPTION / MANUFACTURER	PPD NO.	LOCATION BLDG	ELEV	HTG	LOADS SEIS	HYDR	QUAL ANLYS	METH TEST	NAT FREQ LOWEST	RRS REF STATUS QUAL	INST
2HVC*FS24B	FLOW ACTUATED SWITCHES MCC POWERS	C071A	CB	306	DH	Y	NA	NA	HF	>32	18 A	Y
2HVC*FS26A	FLOW ACTUATED SWITCHES MCC POWER	C071A	CB	288	DH	Y	NA	NA	HF	>32	17 A	Y
2HVC*FS26B	FLOW ACTUATED SWITCHES MCC POWERS	C071A	CB	306	DH	Y	NA	NA	HF	>32	18 A	Y
2HVC*FS51A	FLOW ACTUATED SWITCHES MCC POWERS	C071A	CB	288	DH	Y	NA	NA	HF	>32	17 A	Y
2HVC*FS51B	FLOW ACTUATED SWITCHES MCC POWERS	C071A	CB	306	DH	Y	NA	NA	HF	>32	18 A	Y
2HVC*FS53A	FLOW ACTUATED SWITCHES MCC POWER	C071A	CB	209	DH	Y	NA	NA	HF	>32	17 A	Y
2HVC*FS53B	FLOW ACTUATED SWITCHES MCC POWERS	C071A	CB	289	DH	Y	NA	NA	HF	>32	18 A	Y
2HVC*FS56A	FLOW ACTUATED SWITCHES MCC POWERS	C071A	CB	261	DH	Y	NA	NA	HF	>32	17 A	Y
2HVC*FS56B	FLOW ACTUATED SWITCHES MCC POWERS	C071A	CB	261	DH	Y	NA	NA	HF	>32	17 A	Y
2HVC*FS56C	FLOW ACTUATED SWITCHES MCC POWERS	C071A	CB	261	DH	Y	NA	NA	HF	>32	17 A	Y
2HVC*FS56D	FLOW ACTUATED SWITCHES MCC POWERS	C071A	CB	261	DH	Y	NA	NA	HF	>32	16 A	Y
2HVC*FS9A	FLOW ACTUATED SWITCHES MCC POWERS	C071A	CB	288	DH	Y	NA	NA	HF	>32	17 A	Y
2HVC*FS9B	FLOW ACTUATED SWITCHES MCC POWERS	C071A	CB	294	DH	Y	NA	NA	HF	>32	18 A	Y

JOB NAME NMP - UNIT 2
UTILITY NIAGARA MOHAWK

SEISMIC AND DYNAMIC QUALIFICATION SUMMARY AND STATUS REPORT
MASTER LIST OF SAFETY RELATED EQUIPMENT

ENGINEER: STONE & WEBSTER
NSSS SUPPLIER: GENERAL ELECTRIC

EQUIP. ID / SWEC ID	EQUIPMENT DESCRIPTION / MANUFACTURER	PPD NO.	LOCATION BLDG	ELEV	HTG	LOADS SEIS	HYDR	QUAL ANLYS	METH TEST	NAT FREQ LOWEST	RRS REF STATUS QUAL	INST
2HVC*TE111	TEMPERATURE ELEMENT MCC POWERS	C071A	CB	306	DH	Y	NA	NA	HF	>40	18 A	Y
2HVC*TE155	TEMPERATURE ELEMENT MCC POWERS	C071A	ASB	241	DH	Y	NA	NA	HF	>40	5 A	Y
2HVC*TE165	TEMPERATURE ELEMENT MCC POWERS	C071A	ETS	250	DH	Y	NA	NA	HF	>40	21 A	Y
2HVC*TE174	TEMPERATURE ELEMENT MCC POWERS	C071A	CB	237	DH	Y	NA	NA	HF	>40	15 A	N
2HVC*TE198	TEMPERATURE ELEMENT MCC POWERS	C071A	CB	237	DH	Y	NA	NA	HF	>40	15 A	N
2HVC*TE21A	TEMPERATURE ELEMENT MCC POWERS	C071A	CB	310	DH	Y	NA	NA	HF	>40	19 A	Y
2HVC*TE21B	TEMPERATURE ELEMENT MCC POWERS	C071A	CB	310	DH	Y	NA	NA	HF	>40	19 A	Y
2HVC*TE32A	TEMPERATURE ELEMENT MCC POWERS	C071A	CB	311	DH	Y	NA	NA	HF	>40	19 A	Y
2HVC*TE32B	TEMPERATURE ELEMENT MCC POWERS	C071A	CB	311	DH	Y	NA	NA	HF	>40	19 A	Y
2HVC*TE33A	TEMPERATURE ELEMENT MCC POWERS	C071A	CB	289	DH	Y	NA	NA	HF	>40	19 A	Y
2HVC*TE33B	TEMPERATURE ELEMENT MCC POWERS	C071A	CB	293	DH	Y	NA	NA	HF	>40	18 A	Y
2HVC*TE34A	TEMPERATURE ELEMENT MCC POWERS	C071A	CB	306	DH	Y	NA	NA	HF	>40	18 A	Y
2HVC*TE34B	TEMPERATURE ELEMENT MCC POWERS	C071A	CB	306	DH	Y	NA	NA	HF	>40	18 A	Y

JOB NAME NMP - UNIT 2
UTILITY NIAGARA MOHAWK

SEISMIC AND DYNAMIC QUALIFICATION SUMMARY AND STATUS REPORT
MASTER LIST OF SAFETY RELATED EQUIPMENT

ENGINEER: STONE & WEBSTER
NSSS SUPPLIER: GENERAL ELECTRIC

EQUIP. ID / SHEC ID	EQUIPMENT DESCRIPTION / MANUFACTURER	PPD NO.	LOCATION BLDG	LOCATION ELEV	LOCATION MTG	LOADS SEIS	LOADS HYDR	QUAL ANLYS	METH TEST	NAT FREQ LOWEST	RRS REF STATUS QUAL	RRS REF STATUS INST
2HVC*TE37A	TEMPERATURE ELEMENT MCC POWERS	C071A	CB	288	DM	Y	NA	NA	MF	>40	17 A	Y
2HVC*TE37B	TEMPERATURE ELEMENT MCC POWERS	C071A	CB	288	DM	Y	NA	NA	MF	>40	17 A	Y
2HVC*TE38A	TEMPERATURE ELEMENT MCC POWERS	C071A	CB	261	DM	Y	NA	NA	MF	>40	16 A	Y
2HVC*TE38B	TEMPERATURE ELEMENT MCC POWERS	C071A	CB	261	DM	Y	NA	NA	MF	>40	16 A	Y
2HVC*TE49A	TEMPERATURE ELEMENT MCC POWERS	C071A	CB	288	DM	Y	NA	NA	MF	>40	17 A	Y
2HVC*TE49B	TEMPERATURE ELEMENT MCC POWERS	C071A	CB	306	DM	Y	NA	NA	MF	>40	18 A	Y
2HVC*TE8A	TEMPERATURE ELEMENT MCC POWERS	C071A	CB	288	DM	Y	NA	NA	MF	>40	17 A	Y
2HVC*TE8B	TEMPERATURE ELEMENT MCC POWERS	C071A	CB	288	DM	Y	NA	NA	MF	>40	17 A	Y
2HVC*TIS22A	TEMPERATURE SWITCH MCC POWERS	C071A	CB	306	DM	Y	NA	NA	MF	>40	17 A	Y
2HVC*TIS22B	TEMPERATURE SWITCH MCC POWERS	C071A	CB	306	DM	Y	NA	NA	MF	>40	17 A	Y
2HVC*TIS29A	TEMPERATURE SWITCH MCC POWERS	C071A	CB	274	DM	Y	NA	NA	MF	>40	17 A	Y
2HVC*TIS29B	TEMPERATURE SWITCH MCC POWERS	C071A	CB	280	DM	Y	NA	NA	MF	>40	17 A	Y
2HVP*FS8A	FLOW ACTUATED SWITCHES MCC POWERS	C071A	DG	272	DM	Y	NA	NA	MF	>32	17 A	Y

JOB NAME NMP - UNIT 2
UTILITY NIAGARA MOHAWK

SEISMIC AND DYNAMIC QUALIFICATION SUMMARY AND STATUS REPORT
MASTER LIST OF SAFETY RELATED EQUIPMENT

ENGINEER: STONE & WEBSTER
NSSS SUPPLIER: GENERAL ELECTRIC

EQUIP. ID / SWEC ID	EQUIPMENT: DESCRIPTION / MANUFACTURER	PPD NO.	LOCATION: BLDG	ELEV	HTG	LOADS: SEIS	HYDR	QUAL ANLYS	METH- TEST	NAT FREQ- LOWEST	RRS REF STATUS: QUAL	INST
2HVP*FS8B	FLOW ACTUATED SWITCHES MCC POWERS	C071A	DG	272	DH	Y	NA	NA	HF	>32	17 A	Y
2HVP*FS8C	FLOW ACTUATED SWITCHES MCC POWERS	C071A	DG	272	DH	Y	NA	NA	HF	>32	17 A	Y
2HVP*FS8D	FLOW TEMPERATURE MCC POWERS	C071A	DG	272	DH	Y	NA	NA	HF	>32	17 A	Y
2HVP*FS9A	FLOW ACTUATED SWITCHES MCC POWERS	C071A	DG	272	DH	Y	NA	NA	HF	>32	17 A	Y
2HVP*FS9B	FLOW ACTUATED SWITCHES MCC POWERS	C071A	DG	272	DH	Y	NA	NA	HF	>32	17 A	Y
2HVP*TE10A	TEMPERATURE ELEMENT MCC POWERS	C071A	DG	261	DH	Y	NA	NA	HF	>40	17 A	Y
2HVP*TE10B	TEMPERATURE ELEMENT MCC POWERS	C071A	DG	261	DH	Y	NA	NA	HF	>40	17 A	Y
2HVP*TE103	TEMPERATURE ELEMENT MCC POWERS	C071A	DG	261	DH	Y	NA	NA	HF	>40	17 A	Y
2HVP*TE107	TEMPERATURE ELEMENT MCC POWERS	C071A	DG	261	DH	Y	NA	NA	HF	>40	17 A	Y
2HVP*TE11A	TEMPERATURE ELEMENT MCC POWERS	C071A	DG	261	DH	Y	NA	NA	HF	>40	17 A	Y
2HVP*TE11B	TEMPERATURE ELEMENTS MCC POWERS	C071A	DG	261	DH	Y	NA	NA	HF	>40	17 A	Y
2HVP*TIS120	TEMPERATURE SWITCHES MCC POWERS	C071A	DG	261	DH	Y	NA	NA	HF	>40	16 A	Y
2HVP*TIS13A	TEMPERATURE SWITCHES MCC POWERS	C071A	DG	261	DH	Y	NA	NA	HF	>32	17 A	Y

JOB NAME NMP - UNIT 2
UTILITY NIAGARA MOHAWK

SEISMIC AND DYNAMIC QUALIFICATION SUMMARY AND STATUS REPORT
MASTER LIST OF SAFETY RELATED EQUIPMENT

ENGINEER: STONE & WEBSTER
NSSS SUPPLIER: GENERAL ELECTRIC

EQUIP. ID / SHEC ID	EQUIPMENT DESCRIPTION / MANUFACTURER	PPD NO.	LOCATION BLDG	LOCATION ELEV	LOCATION HTG	LOADS SEIS	LOADS HYDR	QUAL ANLYS	METH TEST	NAT FREQ LOWEST	RRS REF STATUS QUAL	RRS REF STATUS INST
2HVP*TIS13B	TEMPERATURE SWITCHES MCC POWERS	C071A	DG	261	DH	Y	NA	NA	NF	>32	17 A	Y
2HVR*FE18A	FLOW ELEMENT MCC POWERS	C071A	RB	289	DH	Y	NA	NA	NF	>32	59 A	N
2HVR*FE18B	FLOW ELEMENT MCC POWERS	C071A	RB	289	DH	Y	NA	NA	NF	>32	59 A	N
2HVR*FE18C	FLOW ELEMENT MCC POWERS	C071A	RB	289	DH	Y	NA	NA	NF	>32	59 A	Y
2HVR*FE18D	FLOW ELEMENT MCC POWERS	C071A	RB	289	DH	Y	NA	NA	NF	>32	59 A	Y
2HVR*FE36A	FLOW ELEMENT MCC POWERS	C071A	RB	353	DH	Y	NA	NA	NF	>32	57 A	N
2HVR*FE36B	FLOW ELEMENT MCC POWERS	C071A	RB	353	DH	Y	NA	NA	NF	>32	57 A	N
2HVR*FE37A	FLOW ELEMENT MCC POWERS	C071A	RB	289	DH	Y	NA	NA	NF	>32	59 A	N
2HVR*FE37B	FLOW ELEMENT MCC POWERS	C071A	RB	289	DH	Y	NA	NA	NF	>32	59 A	N
2HVR*FS18A	FLOW ACTUATED SWITCH MCC POWERS	C071A	RB	289	DH	Y	NA	NA	NF	>32	59 A	N
2HVR*FS18B	FLOW ACTUATED SWITCH MCC POWER	C071A	RB	289	DH	Y	NA	NA	NF	>32	59 A	N
2HVR*FS18C	FLOW ACTUATED SWITCH MCC POWER	C071A	RB	289	DH	Y	NA	NA	NF	>32	59 A	N
2HVR*FS18D	FLOW ACTUATED SWITCH MCC POWER	C071A	RB	289	DH	Y	NA	NA	NF	>32	59 A	N

JOB NAME NMP - UNIT 2
UTILITY NIAGARA MOHAWK

SEISMIC AND DYNAMIC QUALIFICATION SUMMARY AND STATUS REPORT
MASTER LIST OF SAFETY RELATED EQUIPMENT

ENGINEER: STONE & WEBSTER
NSSS SUPPLIER: GENERAL ELECTRIC

EQUIP. ID / SWEC ID	EQUIPMENT DESCRIPTION / MANUFACTURER	PPD NO.	LOCATION BLDG	LOCATION ELEV	LOCATION MTG	LOADS SEIS	LOADS HYDR	QUAL ANLYS	METH TEST	NAT FREQ LOWEST	RRS REF STATUS QUAL	RRS REF STATUS INST
2HVR*FS36A	FLOW ACTUATED SWITCH MCC POWER	C071A	ETN	353	DH	Y	NA	NA	MF	>32	57 A	N
2HVR*FS36B	FLOW ACTUATED SWITCH MCC POWER	C071A	ETS	353	DH	Y	NA	NA	MF	>32	59 A	N
2HVR*FS37A	FLOW ACTUATED SWITCH MCC POWER	C071A	ETN	289	DH	Y	NA	NA	MF	>32	57 A	N
2HVR*FS37B	FLOW ACTUATED SWITCH MCC POWERS	C071A	ETS	289	DH	Y	NA	NA	MF	>32	57 A	N
2HVR*TIS115	TEMPERATURE SWITCH MCC POWERS	C071A	ABS	196	DH	Y	NA	NA	MF	>40	63 A	Y
2HVR*TIS116	TEMPERATURE SWITCH MCC POWERS	C071A	ABN	196	DH	Y	NA	NA	MF	>40	63 A	Y
2HVR*TIS16A	TEMPERATURE SWITCH MCC POWERS	C071A	ABS	240	DH	Y	NA	NA	MF	>40	61 A	Y
2HVR*TIS16B	TEMPERATURE SWITCH MCC POWERS	C071A	ABS	240	DH	Y	NA	NA	MF	>40	61 A	Y
2HVR*TIS19A	TEMPERATURE SWITCH MCC POWERS	C071A	ABN	240	DH	Y	NA	NA	MF	>40	61 A	Y
2HVR*TIS19B	TEMPERATURE SWITCH MCC POWERS	C071A	ABN	240	DH	Y	NA	NA	MF	>40	61 A	Y
2HVR*TIS22A	TEMPERATURE SWITCH MCC POWERS	C071A	ABN	175	DH	Y	NA	NA	MF	>40	64 A	Y
2HVR*TIS22B	TEMPERATURE SWITCH MCC POWERS	C071A	ABN	175	DH	Y	NA	NA	MF	>40	64 A	Y
2HVR*TIS23A	TEMPERATURE SWITCH MCC POWERS	C071A	ABN	175	DH	Y	NA	NA	MF	>40	64 A	Y

JOB NAME NMP - UNIT 2
UTILITY NIAGARA MOHAWK

SEISMIC AND DYNAMIC QUALIFICATION SUMMARY AND STATUS REPORT
MASTER LIST OF SAFETY RELATED EQUIPMENT

ENGINEER: STONE & WEBSTER
NSSS SUPPLIER: GENERAL ELECTRIC

EQUIP. ID / SWEC ID	EQUIPMENT DESCRIPTION / MANUFACTURER	PPD NO.	LOCATION BLDG	LOCATION ELEV	LOCATION HTG	LOADS SEIS	LOADS HYDR	QUAL ANLYS	METH TEST	NAT FREQ LOWEST	RRS REF STATUS QUAL	RRS REF STATUS INST
2HVR*TIS23B	TEMPERATURE SWITCH MCC POWERS	C071A	ABS	175	DH	Y	NA	NA	HF	>40	64 A	Y
2HVR*TIS23D	TEMPERATURE SWITCH MCC POWERS	C071A	ABN	175	DH	Y	NA	NA	HF	>40	64 A	Y
2HVR*TIS23E	TEMPERATURE SWITCH MCC POWERS	C071A	ABS	175	DH	Y	NA	NA	HF	>40	64 A	Y
2HVR*TIS23F	TEMPERATURE SWITCH MCC POWERS	C071A	ABS	175	DH	Y	NA	NA	HF	>40	64 A	Y
2HVR*TIS24A	TEMPERATURE SWITCH MCC POWERS	C071A	RB	175	DH	Y	NA	NA	HF	>40	64 A	Y
2HVR*TIS24B	TEMPERATURE SWITCH MCC POWERS	C071A	RB	175	DH	Y	NA	NA	HF	>40	64 A	Y
2HVR*TIS25A	TEMPERATURE SWITCH MCC POWERS	C071A	RB	175	DH	Y	NA	NA	HF	>40	64 A	Y
2HVR*TIS25B	TEMPERATURE SWITCH MCC POWERS	C071A	RB	175	DH	Y	NA	NA	HF	>40	64 A	Y
2HVR*TIS25C	TEMPERATURE SWITCH MCC POWERS	C071A	RB	175	DH	Y	NA	NA	HF	>40	64 A	Y
2HVR*TIS25D	TEMPERATURE SWITCH MCC POWERS	C071A	RB	175	DH	Y	NA	NA	HF	>40	64 A	Y
2HVR*TIS26A	TEMPERATURE SWITCH MCC POWERS	C071A	RB	215	DH	Y	NA	NA	HF	>40	62 A	Y
2HVR*TIS26B	TEMPERATURE SWITCH MCC POWERS	C071A	RB	215	DH	Y	NA	NA	HF	>40	62 A	Y
2HVR*TIS26C	TEMPERATURE SWITCH MCC POWERS	C071A	RB	215	DH	Y	NA	NA	HF	>40	62 A	Y

JOB NAME NMP - UNIT 2
UTILITY NIAGARA MOHAWK

SEISMIC AND DYNAMIC QUALIFICATION SUMMARY AND STATUS REPORT
MASTER LIST OF SAFETY RELATED EQUIPMENT

ENGINEER: STONE & WEBSTER
NSSS SUPPLIER: GENERAL ELECTRIC

EQUIP. ID / SNEC ID	EQUIPMENT DESCRIPTION / MANUFACTURER	PPD NO.	LOCATION BLDG	ELEV	HTG	LOADS SEIS	HYDR	QUAL ANLYS	METH- TEST	NAT FREQ- LOWEST	RRS REF STATUS QUAL	INST
2HVR*TIS26D	TEMPERATURE SWITCH MCC POWERS	C071A	RB	215	DH	Y	NA	NA	HF	>40	62 A	Y
2HVR*TIS26E	TEMPERATURE SWITCH MCC POWERS	C071A	RB	215	DH	Y	NA	NA	HF	>40	62 A	Y
2HVR*TIS27A	TEMPERATURE SWITCH MCC POWERS	C071A	RB	240	DH	Y	NA	NA	HF	>40	61 A	Y
2HVR*TIS27B	TEMPERATURE SWITCH MCC POWERS	C071A	RB	240	DH	Y	NA	NA	HF	>40	61 A	Y
2HVR*TIS27C	TEMPERATURE SWITCH MCC POWERS	C071A	RB	240	DH	Y	NA	NA	HF	>40	61 A	Y
2HVR*TIS28A	TEMPERATURE SWITCH MCC POWERS	C071A	RB	261	DH	Y	NA	NA	HF	>40	60 A	Y
2HVR*TIS28B	TEMPERATURE SWITCH MCC POWERS	C071A	RB	261	DH	Y	NA	NA	HF	>40	60 A	Y
2HVR*TIS28C	TEMPERATURE SWITCH MCC POWERS	C071A	RB	261	DH	Y	NA	NA	HF	>40	60 A	Y
2HVR*TIS30A	TEMPERATURE SWITCH MCC POWERS	C071A	RB	175	DH	Y	NA	NA	HF	>40	64 A	Y
2HVR*TIS30B	TEMPERATURE SWITCH MCC POWERS	C071A	RB	175	DH	Y	NA	NA	HF	>40	64 A	Y
2HVR*TIS31A	TEMPERATURE SWITCH MCC POWERS	C071A	RB	289	DH	Y	NA	NA	HF	>40	59 A	N
2HVR*TIS31B	TEMPERATURE SWITCH MCC POWERS	C071A	RB	289	DH	Y	NA	NA	HF	>40	59 A	N
2HVR*TIS35A	TEMPERATURE SWITCH MCC POWERS	C071A	RB	261	DH	Y	NA	NA	HF	>40	60 A	Y

JOB NAME NMP - UNIT 2
UTILITY NIAGARA MOHAWK

SEISMIC AND DYNAMIC QUALIFICATION SUMMARY AND STATUS REPORT
MASTER LIST OF SAFETY RELATED EQUIPMENT

ENGINEER: STONE & WEBSTER
NSSS SUPPLIER: GENERAL ELECTRIC

EQUIP. ID / SWEC ID	EQUIPMENT DESCRIPTION / MANUFACTURER	PPD NO.	LOCATION BLDG	LOCATION ELEV	LOCATION HTG	LOADS SEIS	LOADS HYDR	QUAL ANLYS	METH TEST	NAT FREQ LOWEST	RRS REF STATUS QUAL	RRS REF STATUS INST
2HVR*TIS35B	TEMPERATURE SWITCH MCC POWERS	C071A	RB	261	DH	Y	NA	NA	HF	>40	60 A	Y
2HVR*TIS38A	TEMPERATURE SWITCH MCC POWERS	C071A	SG	261	DH	Y	NA	NA	HF	>40	3 A	Y
2HVR*TIS38B	TEMPERATURE SWITCH MCC POWERS	C071A	SG	261	DH	Y	NA	NA	HF	>40	3 A	Y
2HVY*TIS33A	TEMPERATURE SWITCH MCC POWERS	C071A	SB	224	DH	Y	NA	NA	HF	>40	5 A	Y
2HVY*TIS33B	TEMPERATURE SWITCH MCC POWERS	C071A	SB	224	DH	Y	NA	NA	HF	>40	5 A	Y
2HVY*TIS33C	TEMPERATURE SWITCH MCC POWERS	C071A	SB	224	DH	Y	N/A	N/A	HF	>240	5 A	Y
2HVY*TIS33D	TEMPERATURE SWITCH MCC POWERS	C071A	SB	224	DH	Y	N/A	N/A	HF	>40	5 A	Y

JOB NAME NMP - UNIT 2
UTILITY NIAGARA MOHAWK

SEISMIC AND DYNAMIC QUALIFICATION SUMMARY AND STATUS REPORT
MASTER LIST OF SAFETY RELATED EQUIPMENT

ENGINEER: STONE & WEBSTER
NSSS SUPPLIER: GENERAL ELECTRIC

EQUIP. ID / SWEC ID	EQUIPMENT DESCRIPTION / MANUFACTURER	PPD NO.	LOCATION BLDG	ELEV	MTG	LOADS SEIS	HYDR	QUAL ANLYS	METH- TEST	NAT FREQ- LOWEST	RRS REF STATUS QUAL	INST
2BYS*E/E1A	E/E CONVERTER FOXBORO	C071L	CB	288	RH	Y	NA	NA	HF	NA	17 A	N
2BYS*E/E1B	E/E CONVERTER FOXBORO	C071L	CB	288	RH	Y	NA	NA	HF	NA	17 A	Y
2BYS*E/E101	E/E CONVERTER FOXBORO	C071L	CB	288	RH	Y	NA	NA	HF	NA	17 A	Y
2CCP*PSLX90A	RELAY FOXBORO	C071L	CB	288	RH	Y	NA	NA	HF	NA	17 A	Y
2CCP*PSLX90B	RELAY FOXBORO	C071L	CB	288	RH	Y	NA	NA	HF	NA	17 A	Y
2CCP*PSL90A	E/I CONVERTER FOXBORO	C071L	CB	288	RH	Y	NA	NA	HF	NA	17 A	Y
2CCP*PSL90B	E/I CONVERTER FOXBORO	C071L	CB	288	RH	Y	NA	NA	HF	NA	17 A	Y
2CCP*PHRS90A	LOOP POWER SUPPLY FOXBORO	C071L	CB	288	RH	Y	NA	NA	HF	NA	17 A	Y
2CCP*PHRS90B	LOOP POWER SUPPLY FOXBORO	C071L	CB	288	RH	Y	NA	NA	HF	NA	17 A	Y
2CEC*JX828A	NEST POWER DISTRIB MODULE FOXBORO	C071L	CB	288	RH	Y	NA	NA	HF	NA	17 A	Y
2CEC*JX828B	NEST POWER DISTRIB MODULE FOXBORO	C071L	CB	288	RH	Y	NA	NA	HF	NA	17 A	Y
2CEC*JX828C	NEST POWER DISTRIB MODULE FOXBORO	C071L	CB	288	RH	Y	NA	NA	HF	NA	17 A	Y
2CEC*JX828D	NEST POWER DISTRIB MODULE FOXBORO	C071L	CB	288	RH	Y	NA	NA	HF	NA	17 A	Y

JOB NAME NMP - UNIT 2
UTILITY NIAGARA MOHAWK

SEISMIC AND DYNAMIC QUALIFICATION SUMMARY AND STATUS REPORT
MASTER LIST OF SAFETY RELATED EQUIPMENT

ENGINEER: STONE & WEBSTER
NSSS SUPPLIER: GENERAL ELECTRIC

EQUIP. ID / SHEC ID	EQUIPMENT DESCRIPTION / MANUFACTURER	PPD NO.	LOCATION BLDG	LOCATION ELEV	LOCATION NTG	LOADS SEIS	LOADS HYDR	QUAL ANLYS	HETH- TEST	NAT FREQ- LOWEST	RRS REF STATUS QUAL	RRS REF STATUS INST
2CEC*JX828E	NEST POWER DISTRIB MODULE FOXBORO	C071L	CB	288	RH	Y	NA	NA	HF	NA	17 A	Y
2CEC*JX828F	NEST POWER DISTRIB MODULE FOXBORO	C071L	CB	288	RH	Y	NA	NA	HF	NA	17 A	Y
2CEC*JX829A	NEST POWER DISTRIB MODULE FOXBORO	C071L	CB	288	RH	Y	NA	NA	HF	NA	17 A	Y
2CEC*JX829B	NEST POWER DISTRIB MODULE FOXBORO	C071L	CB	288	RH	Y	NA	NA	HF	NA	17 A	Y
2CEC*JX829C	NEST POWER DISTRIB MODULE FOXBORO	C071L	CB	288	RH	Y	NA	NA	HF	NA	17 A	Y
2CEC*JX829D	NEST POWER DISTRIB MODULE FOXBORO	C071L	CB	288	RH	Y	NA	NA	HF	NA	17 A	Y
2CEC*JX829E	NEST POWER DISTRIB MODULE FOXBORO	C071L	CB	288	RH	Y	NA	NA	HF	NA	17 A	Y
2CEC*JX830A	NEST POWER DISTRIB MODULE FOXBORO	C071L	CB	288	RH	Y	NA	NA	HF	NA	17 A	Y
2CEC*JX830B	NEST POWER DISTRIB MODULE FOXBORO	C071L	CB	288	RH	Y	NA	NA	HF	NA	17 A	Y
2CEC*JX830C	NEST POWER DISTRIB MODULE FOXBORO	C071L	CB	288	RH	Y	NA	NA	HF	NA	17 A	Y
2CEC*JX830D	NEST POWER DISTRIB MODULE FOXBORO	C071L	CB	288	RH	Y	NA	NA	HF	NA	17 A	Y
2CEC*JX830E	NEST POWER DISTRIB MODULE FOXBORO	C071L	CB	288	RH	Y	NA	NA	HF	NA	17 A	Y
2CEC*JX831A	NEST POWER DISTRIB MODULE FOXBORO	C071L	CB	288	RH	Y	NA	NA	HF	NA	17 A	Y

JOB NAME NMP - UNIT 2
UTILITY NIAGARA MOHAWK

SEISMIC AND DYNAMIC QUALIFICATION SUMMARY AND STATUS REPORT
MASTER LIST OF SAFETY RELATED EQUIPMENT

ENGINEER: STONE & WEBSTER
NSSS SUPPLIER: GENERAL ELECTRIC

EQUIP. ID / SHEC ID	EQUIPMENT DESCRIPTION / MANUFACTURER	PPD NO.	LOCATION BLDG	ELEV	MTG	LOADS SEIS	HYDR	QUAL ANLYS	METH- TEST	NAT FREQ- LOWEST	RRS REF STATUS QUAL	INST
2CEC*JX831B	NEST POWER DISTRIB MODULE FOXBORO	C071L	CB	288	RH	Y	NA	NA	HF	NA	17 A	Y
2CEC*JX831C	NEST POWER DISTRIB MODULE FOXBORO	C071L	CB	288	RH	Y	NA	NA	HF	NA	17 A	Y
2CEC*JX831D	NEST POWER DISTRIB MODULE FOXBORO	C071L	CB	288	RH	Y	NA	NA	NA	NA	17 A	Y
2CEC*JX831E	NEST POWER DISTRIB MODULE FOXBORO	C071L	CB	288	RH	Y	NA	NA	HF	NA	17 A	Y
2CEC*JX831F	NEST POWER DISTRIB MODULE FOXBORO	C071L	CB	288	RH	Y	NA	NA	HF	NA	17 A	Y
2CEC*JX883A	NEST POWER DISTRIB MODULE FOXBORO	C071L	CB	288	RH	Y	NA	NA	HF	NA	17 A	Y
2CEC*JX883B	NEST POWER DISTRIB MODULE FOXBORO	C071L	CB	288	RH	Y	NA	NA	HF	NA	17 A	Y
2CEC*JX890A	NEST POWER DISTRIB MODULE FOXBORO	C071L	CB	288	RH	Y	NA	NA	HF	NA	17 A	Y
2CEC*JX890B	NEST POWER DISTRIB MODULE FOXBORO	C071L	CB	288	RH	Y	NA	NA	HF	NA	17 A	Y
2CEC*JX890C	NEST POWER DISTRIB MODULE FOXBORO	C071L	CB	288	RH	Y	NA	NA	HF	NA	17 A	Y
2CEC*JX890D	NEST POWER DISTRIB MODULE FOXBORO	C071L	CB	288	RH	Y	NA	NA	HF	NA	17 A	Y
2CEC*JX890E	NEST POWER DISTRIB MODULE FOXBORO	C071L	CB	288	RH	Y	NA	NA	HF	NA	17 A	Y
2CEC*JX890F	NEST POWER DISTRIB MODULE FOXBORO	C071L	CB	288	RH	Y	NA	NA	HF	NA	17 A	Y

JOB NAME NMP - UNIT 2
UTILITY NIAGARA MOHAWK

SEISMIC AND DYNAMIC QUALIFICATION SUMMARY AND STATUS REPORT
MASTER LIST OF SAFETY RELATED EQUIPMENT

ENGINEER: STONE & WEBSTER
NSSS SUPPLIER: GENERAL ELECTRIC

EQUIP. ID / SHEC ID	EQUIPMENT DESCRIPTION / MANUFACTURER	PPD NO.	LOCATION BLDG	LOCATION ELEV	LOCATION HTG	LOADS SEIS	LOADS HYDR	QUAL ANLYS	METH TEST	NAT FREQ LOWEST	RRS REF STATUS QUAL	RRS REF STATUS INST
2CEC*JX891A	NEST POWER DISTRIB MODULE FOXBORO	C071L	CB	288	RH	Y	NA	NA	HF	NA	17 A	Y
2CEC*JX891B	NEST POWER DISTRIB MODULE FOXBORO	C071L	CB	288	RH	Y	NA	NA	HF	NA	17 A	Y
2CEC*JX891C	NEST POWER DISTRIB MODULE FOXBORO	C071L	CB	288	RH	Y	NA	NA	HF	NA	17 A	Y
2CEC*JX891D	NEST POWER DISTRIB MODULE FOXBORO	C071L	CB	288	RH	Y	NA	NA	HF	NA	17 A	Y
2CEC*JX891E	NEST POWER DISTRIB MODULE FOXBORO	C071L	CB	288	RH	Y	NA	NA	HF	NA	17 A	Y
2CEC*JX891F	NEST POWER DISTRIB MODULE FOXBORO	C071L	CB	288	RH	Y	NA	NA	HF	NA	17 A	Y
2CEC*JX894A	NEST POWER DISTRIB MODULE FOXBORO	C071L	CB	288	RH	Y	NA	NA	HF	NA	17 A	Y
2CEC*JX894B	NEST POWER DISTRIB MODULE FOXBORO	C071L	CB	288	RH	Y	NA	NA	HF	NA	17 A	Y
2CEC*JX894C	NEST POWER DISTRIB MODULE FOXBORO	C071L	CB	288	RH	Y	NA	NA	HF	NA	17 A	Y
2CEC*JX895A	NEST POWER DISTRIB MODULE FOXBORO	C071L	CB	288	RH	Y	NA	NA	HF	NA	17 A	Y
2CEC*JX895B	NEST POWER DISTRIB MODULE FOXBORO	C071L	CB	288	RH	Y	NA	NA	HF	NA	17 A	Y
2CEC*JX895C	NEST POWER DISTRIB MODULE FOXBORO	C071L	CB	288	RH	Y	NA	NA	HF	NA	17 A	Y
2CEC*JX896A	NEST POWER DISTRIB MODULE FOXBORO	C071L	CB	288	RH	Y	NA	NA	HF	NA	17 A	Y

JOB NAME NMP - UNIT 2
UTILITY NIAGARA MOHAWK

SEISMIC AND DYNAMIC QUALIFICATION SUMMARY AND STATUS REPORT
MASTER LIST OF SAFETY RELATED EQUIPMENT

ENGINEER: STONE & WEBSTER
NSSS SUPPLIER: GENERAL ELECTRIC

EQUIP. ID / SHEC ID	EQUIPMENT DESCRIPTION / MANUFACTURER	PPD NO.	LOCATION BLDG	ELEV	HTG	LOADS SEIS	HYDR	QUAL ANLYS	METH TEST	NAT FREQ LOWEST	RRS REF STATUS QUAL	INST
2CEC*JX896B	NEST POWER DISTRIB MODULE FOXBORO	C071L	CB	288	RH	Y	NA	NA	HF	NA	17 A	Y
2CEC*JX896C	NEST POWER DISTRIB MODULE FOXBORO	C071L	CB	288	RH	Y	NA	NA	HF	NA	17 A	Y
2CEC*JX896D	NEST POWER DISTRIB MODULE FOXBORO	C071L	CB	288	RH	Y	NA	NA	HF	NA	17 A	Y
2CEC*JX896E	NEST POWER DISTRIB MODULE FOXBORO	C071L	CB	288	RH	Y	NA	NA	HF	NA	17 A	Y
2CEC*JX897A	NEST POWER DISTRIB MODULE FOXBORO	C071L	CB	288	RH	Y	NA	NA	HF	NA	17 A	Y
2CEC*JX897B	NEST POWER DISTRIB MODULE FOXBORO	C071L	CB	288	RH	Y	NA	NA	HF	NA	17 A	Y
2CEC*JX897C	NEST POWER DISTRIB MODULE FOXBORO	C071L	CB	288	RH	Y	NA	NA	HF	NA	17 A	Y
2CEC*JX897D	NEST POWER DISTRIB MODULE FOXBORO	C071L	CB	288	RH	Y	NA	NA	HF	NA	17 A	Y
2CEC*JX897E	NEST POWER DISTRIB MODULE FOXBORO	C071L	CB	288	RH	Y	NA	NA	HF	NA	17 A	Y
2CEC*PNL828	RACK FOXBORO	C071L	CB	288	CF	Y	NA	NA	HF	NA	17 A	Y
2CEC*PNL829	RACK FOXBORO	C071L	CB	288	CF	Y	NA	NA	HF	NA	17 A	Y
2CEC*PNL830	RACK FOXBORO	C071L	CB	288	CF	Y	NA	NA	HF	NA	17 A	Y
2CEC*PNL831	RACK FOXBORO	C071L	CB	288	CF	Y	NA	NA	HF	NA	17 A	Y

JOB NAME NMP - UNIT 2
UTILITY NIAGARA MOHAWK

SEISMIC AND DYNAMIC QUALIFICATION SUMMARY AND STATUS REPORT
MASTER LIST OF SAFETY RELATED EQUIPMENT

ENGINEER: STONE & WEBSTER
NSSS SUPPLIER: GENERAL ELECTRIC

EQUIP. ID / SHEC ID	EQUIPMENT DESCRIPTION / MANUFACTURER	PPD NO.	LOCATION BLDG	LOCATION ELEV	LOCATION HTG	LOADS SEIS	LOADS HYDR	QUAL ANLYS	METH TEST	NAT FREQ LOWEST	RRS REF STATUS QUAL	RRS REF STATUS INST
2CEC*PNL883	RACK FOXBORO	C071L	CB	288	CF	Y	NA	NA	HF	NA	17 A	Y
2CEC*PNL890	RACK FOXBORO	C071L	CB	288	CF	Y	NA	NA	HF	NA	17 A	Y
2CEC*PNL891	RACK FOXBORO	C071L	CB	288	CF	Y	NA	NA	HF	NA	17 A	Y
2CEC*PNL894	RACKORO FOXBORO	C071L	CB	288	CF	Y	NA	NA	HF	NA	17 A	Y
2CEC*PNL895	RACK FOXBORO	C071L	CB	288	CF	Y	NA	NA	HF	NA	17 A	Y
2CEC*PNL896	RACK FOXBORO	C071L	CB	288	CF	Y	NA	NA	HF	NA	17 A	Y
2CEC*PNL897	RACK FOXBORO	C071L	CB	288	CF	Y	NA	NA	HF	NA	17 A	Y
2CEC*PHRS828	POWER SUPPLY FOXBORO	C071L	CB	288	RH	Y	NA	NA	HF	NA	17 A	Y
2CEC*PHRS829	POWER SUPPLY FOXBORO	C071L	CB	288	RH	Y	NA	NA	HF	NA	17 A	Y
2CEC*PHRS830	POWER SUPPLY FOXBORO	C071L	CB	288	RH	Y	NA	NA	HF	NA	17 A	Y
2CEC*PHRS831	POWER SUPPLY FOXBORO	C071L	CB	288	RH	Y	NA	NA	HF	NA	17 A	Y
2CEC*PHRS883	POWER SUPPLY FOXBORO	C071L	CB	288	RH	Y	NA	NA	HF	NA	17 A	Y
2CEC*PHRS890	POWER SUPPLY FOXBORO	C071L	CB	288	RH	Y	NA	NA	HF	NA	17 A	Y

JOB NAME NMP - UNIT 2
UTILITY NIAGARA MOHAWK

SEISMIC AND DYNAMIC QUALIFICATION SUMMARY AND STATUS REPORT
MASTER LIST OF SAFETY RELATED EQUIPMENT

ENGINEER: STONE & WEBSTER
NSSS SUPPLIER: GENERAL ELECTRIC

EQUIP. ID / SWEC ID	EQUIPMENT DESCRIPTION / MANUFACTURER	PPD NO.	LOCATION BLDG	ELEV	MTG	LOADS SEIS	HYDR	QUAL ANLYS	METH TEST	NAT FREQ LOWEST	RRS REF STATUS QUAL	INST
2CEC*PWRS891	POWER SUPPLY FOXBORO	C071L	CB	288	RH	Y	NA	NA	HF	NA	17 A	Y
2CEC*PWRS894	POWER SUPPLY FOXBORO	C071L	CB	288	RH	Y	NA	NA	HF	NA	17 A	Y
2CEC*PWRS895	POWER SUPPLY FOXBORO	C071L	CB	288	RH	Y	NA	NA	HF	NA	17 A	Y
2CEC*PWRS896	POWER SUPPLY FOXBORO	C071L	CB	288	RH	Y	NA	NA	HF	NA	17 A	Y
2CEC*PWRS897	POWER SUPPLY FOXBORO	C071L	CB	288	RH	Y	NA	NA	HF	NA	17 A	Y
2CEC*PWRS900	POWER SUPPLY FOXBORO	C071L	CB	288	RH	Y	NA	NA	HF	NA	17 A	Y
2CEC*PWRS901	POWER SUPPLY FOXBORO	C071L	CB	288	RH	Y	NA	NA	HF	NA	17 A	Y
2CEC*PWRS906	POWER SUPPLY FOXBORO	C071L	CB	288	RH	Y	NA	NA	HF	NA	17 A	Y
2CEC*PWRS907	POWER SUPPLY FOXBORO	C071L	CB	288	RH	Y	NA	NA	HF	NA	17 A	Y
2CEC*PWRS908	POWER SUPPLY FOXBORO	C071L	CB	288	RH	Y	NA	NA	HF	NA	17 A	Y
2CEC*PWRS909	POWER SUPPLY FOXBORO	C071L	CB	288	RH	Y	NA	NA	HF	NA	17 A	Y
2CEC*PWRS910	POWER SUPPLY FOXBORO	C071L	CB	288	RH	Y	NA	NA	HF	NA	17 A	Y
2CHS*ASHX6A	RELAY FOXBORO	C071L	CB	288	RH	Y	NA	NA	HF	NA	17 A	Y

JOB NAME NMP - UNIT 2
UTILITY NIAGARA MOHAWK

SEISMIC AND DYNAMIC QUALIFICATION SUMMARY AND STATUS REPORT
MASTER LIST OF SAFETY RELATED EQUIPMENT

ENGINEER: STONE & WEBSTER
NSSS SUPPLIER: GENERAL ELECTRIC

EQUIP. ID / SHEC ID	EQUIPMENT: DESCRIPTION / MANUFACTURER	PPD NO.	LOCATION: BLDG	ELEV	MTG	LOADS: SEIS	HYDR	QUAL ANLYS	METH-TEST	NAT FREQ-LOWEST	RRS REF STATUS: QUAL	INST
2CMS*ASHX6B	RELAY FOXBORO	C071L	CB	288	RH	Y	NA	NA	MF	NA	17 A	Y
2CMS*ASHX71A	RELAY FOXBORO	C071L	CB	288	RH	Y	NA	NA	MF	NA	17 A	Y
2CMS*ASHX71B	RELAY FOXBORO	C071L	CB	288	RH	Y	NA	NA	MF	NA	17 A	Y
2CMS*ASH6A	A/D CONVERTER FOXBORO	C071L	CB	288	RH	Y	NA	NA	MF	NA	17 A	Y
2CMS*ASH6B	A/D CONVERTER FOXBORO	C071L	CB	288	RH	Y	NA	NA	MF	NA	17 A	Y
2CMS*ASH71A	A/D CONVERTER FOXBORO	C071L	CB	288	RH	Y	NA	NA	MF	NA	17 A	Y
2CMS*ASH71B	A/D CONVERTER FOXBORO	C071L	CB	288	RH	Y	NA	NA	MF	NA	17 A	Y
2CMS*I/E6A	I/E CONVERTER FOXBORO	C071L	CB	288	RH	Y	NA	NA	MF	NA	17 A	Y
2CMS*I/E6B	I/E CONVERTER FOXBORO	C071L	CB	288	RH	Y	NA	NA	MF	NA	17 A	Y
2CMS*I/E71A	I/E CONVERTER FOXBORO	C071L	CB	288	RH	Y	NA	NA	MF	NA	17 A	Y
2CMS*I/E71B	I/E CONVERTER FOXBORO	C071L	CB	288	RH	Y	NA	NA	MF	NA	17 A	Y
2CMS*PSHX1A	RELAY FOXBORO	C071L	CB	288	RH	Y	NA	NA	MF	NA	17 A	Y
2CMS*PSHX1B	RELAY FOXBORO	C071L	CB	288	RH	Y	NA	NA	MF	NA	17 A	Y

JOB NAME NMP - UNIT 2
UTILITY NIAGARA MOHAWK

SEISMIC AND DYNAMIC QUALIFICATION SUMMARY AND STATUS REPORT
MASTER LIST OF SAFETY RELATED EQUIPMENT

ENGINEER: STONE & WEBSTER
NSSS SUPPLIER: GENERAL ELECTRIC

EQUIP. ID / SWEC ID	EQUIPMENT DESCRIPTION / MANUFACTURER	PPD NO.	LOCATION BLDG	LOCATION ELEV	LOCATION HTG	LOADS SEIS	LOADS HYDR	QUAL ANLYS	METH TEST	NAT FREQ LOWEST	RRS REF STATUS QUAL	RRS REF STATUS INST
2CHS*PSH1A	E/I CONVERTER FOXBORO	C071L	CB	288	RH	Y	NA	NA	HF	NA	17 A	Y
2CHS*PSH1B	E/I CONVERTER FOXBORO	C071L	CB	288	RH	Y	NA	NA	HF	NA	17 A	Y
2CHS*PHRS1A	LOOP POWER SUPPLY FOXBORO	C071L	CB	288	RH	Y	NA	NA	HF	NA	17 A	Y
2CHS*PHRS1B	LOOP POWER SUPPLY FOXBORO	C071L	CB	288	RH	Y	NA	NA	HF	NA	17 A	Y
2CHS*PHRS11A	LOOP POWER SUPPLY FOXBORO	C071L	CB	288	RH	Y	NA	NA	HF	NA	17 A	Y
2CHS*PHRS11B	LOOP POWER SUPPLY FOXBORO	C071L	CB	288	RH	Y	NA	NA	HF	NA	17 A	Y
2CHS*PHRS2A	LOOP POWER SUPPLY FOXBORO	C071L	CB	288	RH	Y	NA	NA	HF	NA	17 A	Y
2CHS*PHRS2B	LOOP POWER SUPPLY FOXBORO	C071L	CB	288	RH	Y	NA	NA	HF	NA	17 A	Y
2CHS*PHRS7A	LOOP POWER SUPPLY FOXBORO	C071L	CB	298	RH	Y	NA	NA	HF	NA	17 A	Y
2CHS*PHRS7B	LOOP POWER SUPPLY FOXBORO	C071L	CB	288	RH	Y	NA	NA	HF	NA	17 A	Y
2CHS*PHRS9A	LOOP POWER SUPPLY FOXBORO	C071L	CB	288	RH	Y	NA	NA	HF	NA	17 A	Y
2CHS*PHRS9B	LOOP POWER SUPPLY FOXBORO	C071L	CB	288	RH	Y	NA	NA	HF	NA	17 A	Y
2CHS*TSHX135	A/D CONVERTER FOXBORO	C071L	CB	288	RH	Y	NA	NA	HF	NA	17 A	Y

JOB NAME NMP - UNIT 2
UTILITY NIAGARA MOHAWK

SEISMIC AND DYNAMIC QUALIFICATION SUMMARY AND STATUS REPORT
MASTER LIST OF SAFETY RELATED EQUIPMENT

ENGINEER: STONE & WEBSTER
NSSS SUPPLIER: GENERAL ELECTRIC

EQUIP. ID / SHEC ID	EQUIPMENT: DESCRIPTION / MANUFACTURER	PPD NO.	LOCATION: BLDG	ELEV	HTG	LOADS: SEIS	HYDR	QUAL ANLYS	METH- TEST	NAT FREQ- LOWEST	RRS REF STATUS: QUAL	INST
2CHS*TSHX145	A/D CONVERTER FOXBORO	C071L	CB	288	RH	Y	NA	NA	HF	NA	17 A	Y
2CHS*TSHX151	A/D CONVERTER FOXBORO	C071L	CB	288	RH	Y	NA	NA	HF	NA	17 A	Y
2CHS*TSHX153	A/D CONVERTER FOXBORO	C071L	CB	288	RH	Y	NA	NA	HF	NA	17 A	Y
2CHS*TSHX50A	RELAY FOXBORO	C071L	CB	288	RH	Y	NA	NA	HF	NA	17 A	Y
2CHS*TSHX50B	RELAY FOXBORO	C071L	CB	288	RH	Y	NA	NA	HF	NA	17 A	Y
2CHS*TSHX51A	RELAY FOXBORO	C071L	CB	288	RH	Y	NA	NA	HF	NA	17 A	Y
2CHS*TSHX51B	RELAY FOXBORO	C071L	CB	288	RH	Y	NA	NA	HF	NA	17 A	Y
2CHS*TSHX52A	RELAY FOXBORO	C071L	CB	288	RH	Y	NA	NA	HF	NA	17 A	Y
2CHS*TSHX52B	RELAY FOXBORO	C071L	CB	288	RH	Y	NA	NA	HF	NA	17 A	Y
2CHS*TSHX53A	RELAY FOXBORO	C071L	CB	288	RH	Y	NA	NA	HF	NA	17 A	Y
2CHS*TSHX53B	RELAY FOXBORO	C071L	CB	288	RH	Y	NA	NA	HF	NA	17 A	Y
2CHS*TSHX59A	RELAY FOXBORO	C071L	CB	288	RH	Y	NA	NA	HF	NA	17 A	Y
2CHS*TSHX59B	RELAY FOXBORO	C071L	CB	288	RH	Y	NA	NA	HF	NA	17 A	Y

JOB NAME NMP - UNIT 2
UTILITY NIAGARA MOHAWK

SEISMIC AND DYNAMIC QUALIFICATION SUMMARY AND STATUS REPORT
MASTER LIST OF SAFETY RELATED EQUIPMENT

ENGINEER: STONE & WEBSTER
NSSS SUPPLIER: GENERAL ELECTRIC

EQUIP. ID / SHEC ID	EQUIPMENT: DESCRIPTION / MANUFACTURER	PPD NO.	LOCATION: BLDG	ELEV	HTG	LOADS: SEIS	HYDR	QUAL ANLYS	METH- TEST	NAT FREQ- LOWEST	RRS REF STATUS: QUAL	INST
2CMS*TSHX55A	RELAY FOXBORO	C071L	CB	288	RM	Y	NA	NA	MF	NA	17 A	Y
2CMS*TSHX55B	RELAY FOXBORO	C071L	CB	288	RM	Y	NA	NA	MF	NA	17 A	Y
2CMS*TSHX56A	RELAYRO FOXBORO	C071L	CB	288	RM	Y	NA	NA	MF	NA	17 A	Y
2CMS*TSHX56B	RELAY FOXBORO	C071L	CB	288	RM	Y	NA	NA	MF	NA	17 A	Y
2CMS*TSHX57A	RELAY FOXBORO	C071L	CB	288	RM	Y	NA	NA	MF	NA	17 A	Y
2CMS*TSHX57B	RELAY FOXBORO	C071L	CB	288	RM	Y	NA	NA	MF	NA	17 A	Y
2CMS*TSHX58A	RELAY FOXBORO	C071L	CB	288	RM	Y	NA	NA	MF	NA	17 A	Y
2CMS*TSHX58B	RELAY FOXBORO	C071L	CB	288	RM	Y	NA	NA	MF	NA	17 A	Y
2CMS*TSHX59A	RELAY FOXBORO	C071L	CB	288	RM	Y	NA	NA	MF	NA	17 A	Y
2CMS*TSHX59B	RELAY FOXBORO	C071L	CB	288	RM	Y	NA	NA	MF	NA	17 A	Y
2CMS*TSHX59C	RELAY FOXBORO	C071L	CB	288	RM	Y	NA	NA	MF	NA	17 A	Y
2CMS*TSHX59D	RELAY FOXBORO	C071L	CB	288	RM	Y	NA	NA	MF	NA	17 A	Y
2CMS*TSHZ135	RELAY FOXBORO	C071L	CB	288	RM	Y	NA	NA	MF	NA	17 A	Y

JOB NAME NMP - UNIT 2
UTILITY NIAGARA MOHAWK

SEISMIC AND DYNAMIC QUALIFICATION SUMMARY AND STATUS REPORT
MASTER LIST OF SAFETY RELATED EQUIPMENT

ENGINEER: STONE & WEBSTER
NSSS SUPPLIER: GENERAL ELECTRIC

EQUIP. ID / SWEC ID	EQUIPMENT DESCRIPTION / MANUFACTURER	PPD NO.	LOCATION BLDG	ELEV	MTG	LOADS SEIS	HYDR	QUAL ANLYS	METH TEST	NAT FREQ LOWEST	RRS REF STATUS QUAL	INST
2CMS*TSHZ145	RELAY FOXBORO	C071L	CB	288	RH	Y	NA	NA	HF	NA	17 A	Y
2CMS*TSHZ151	RELAY FOXBORO	C071L	CB	288	RH	Y	NA	NA	HF	NA	17 A	Y
2CMS*TSHZ153	RELAY FOXBORO	C071L	CB	288	RH	Y	NA	NA	HF	NA	17 A	Y
2CMS*TSH50A	A/D CONVERTER FOXBORO	C071L	CB	288	RH	Y	NA	NA	HF	NA	17 A	Y
2CMS*TSH50B	A/D CONVERTER FOXBORO	C071L	CB	288	RH	Y	NA	NA	HF	NA	17 A	Y
2CMS*TSH51A	A/D CONVERTER FOXBORO	C071L	CB	288	RH	Y	NA	NA	HF	NA	17 A	Y
2CMS*TSH51B	A/D CONVERTER FOXBORO	C071L	CB	288	RH	Y	NA	NA	HF	NA	17 A	Y
2CMS*TSH52A	A/D CONVERTER FOXBORO	C071L	CB	288	RH	Y	NA	NA	HF	NA	17 A	Y
2CMS*TSH52B	A/D CONVERTER FOXBORO	C071L	CB	288	RH	Y	NA	NA	HF	NA	17 A	Y
2CMS*TSH53A	A/D CONVERTER FOXBORO	C071L	CB	288	RH	Y	NA	NA	HF	NA	17 A	Y
2CMS*TSH53B	A/D CONVERTER FOXBORO	C071L	CB	288	RH	Y	NA	NA	HF	NA	17 A	Y
2CMS*TSH54A	A/D CONVERTER FOXBORO	C071L	CB	288	RH	Y	NA	NA	HF	NA	17 A	Y
2CMS*TSH54B	A/D CONVERTER FOXBORO	C071L	CB	288	RH	Y	NA	NA	HF	NA	17 A	Y

JOB NAME NMP - UNIT 2
UTILITY NIAGARA MOHAWK

SEISMIC AND DYNAMIC QUALIFICATION SUMMARY AND STATUS REPORT
MASTER LIST OF SAFETY RELATED EQUIPMENT

ENGINEER: STONE & WEBSTER
NSSS SUPPLIER: GENERAL ELECTRIC

EQUIP. ID / SWEC ID	EQUIPMENT DESCRIPTION / MANUFACTURER	PPD NO.	LOCATION BLDG	ELEV	HTG	LOADS SEIS	HYDR	QUAL ANLYS	METH TEST	NAT FREQ LOWEST	RRS REF STATUS QUAL	INST
2CHS*TSH55A	A/D CONVERTER FOXBORO	C071L	CB	288	RH	Y	NA	NA	HF	NA	17 A	Y
2CHS*TSH55B	A/D CONVERTER FOXBORO	C071L	CB	288	RH	Y	NA	NA	HF	NA	17 A	Y
2CHS*TSH56A	A/D CONVERTER FOXBORO	C071L	CB	288	RH	Y	NA	NA	HF	NA	17 A	Y
2CHS*TSH56B	A/D CONVERTER FOXBORO	C071L	CB	288	RH	Y	NA	NA	HF	NA	17 A	Y
2CHS*TSH57A	A/D CONVERTER FOXBORO	C071L	CB	288	RH	Y	NA	NA	HF	NA	17 A	Y
2CHS*TSH57B	A/D CONVERTER FOXBORO	C071L	CB	288	RH	Y	NA	NA	HF	NA	17 A	Y
2CHS*TSH58A	A/D CONVERTER FOXBORO	C071L	CB	288	RH	Y	NA	NA	HF	NA	17 A	Y
2CHS*TSH58B	A/D CONVERTER FOXBORO	C071L	CB	288	RH	Y	NA	NA	HF	NA	17 A	Y
2CHS*TSH59A	A D CONVERTER FOXBORO	C071L	CB	288	RH	Y	NA	NA	HF	NA	17 A	Y
2CHS*TSH59B	A/D CONVERTER FOXBORO	C071L	CB	288	RH	Y	NA	NA	HF	NA	17 A	Y
2CHS*TTX101	RTD CONVERTER FOXBORO	C071L	CB	288	RH	Y	NA	NA	HF	NA	17 A	Y
2CHS*TTX102	RTD CONVERTER FOXBORO	C071L	CB	288	RH	Y	NA	NA	HF	NA	17 A	Y
2CHS*TTX103	RTD CONVERTER FOXBORO	C071L	CB8	288	RH	Y	NA	NA	HF	NA	17 A	Y

JOB NAME NMP - UNIT 2
UTILITY NIAGARA MOHAWK

SEISMIC AND DYNAMIC QUALIFICATION SUMMARY AND STATUS REPORT
MASTER LIST OF SAFETY RELATED EQUIPMENT

ENGINEER: STONE & WEBSTER
NSSS SUPPLIER: GENERAL ELECTRIC

EQUIP. ID / SHEC ID	EQUIPMENT DESCRIPTION / MANUFACTURER	PPD NO.	LOCATION BLDG	ELEV	MTG	LOADS SEIS	HYDR	QUAL ANLYS	METH TEST	NAT FREQ LOWEST	RRS REF STATUS QUAL	INST
2CHS*TTX104	RTD CONVERTER FOXBORO	C071L	CB	288	RH	Y	NA	NA	HF	NA	17 A	Y
2CHS*TTX105	RTD CONVERTER FOXBORO	C071L	CB	288	RH	Y	NA	NA	HF	NA	17 A	Y
2CHS*TTX106	RTD CONVERTER FOXBORO	C071L	CB	288	RH	Y	NA	NA	HF	NA	17 A	Y
2CHS*TTX107	RTD CONVERTER FOXBORO	C071L	CB	288	RH	Y	NA	NA	HF	NA	17 A	Y
2CHS*TTX108	RTD CONVERTER FOXBORO	C071L	CB	288	RH	Y	NA	NA	HF	NA	17 A	Y
2CHS*TTX109	RTD CONVERTER FOXBORO	C071L	CB	288	RH	Y	NA	NA	HF	NA	17 A	Y
2CHS*TTX116	RTD CONVERTER FOXBORO	C071L	CB	288	RH	Y	NA	NA	HF	NA	17 A	Y
2CHS*TTX117	RTD CONVERTER FOXBORO	C071L	CB	288	RH	Y	NA	NA	HF	NA	17 A	Y
2CHS*TTX118	RTD CONVERTER FOXBORO	C071L	CB	288	RH	Y	NA	NA	HF	NA	17 A	Y
2CHS*TTX119	RTD CONVERTER FOXBORO	C071L	CB	288	RH	Y	NA	NA	HF	NA	17 A	Y
2CHS*TTX120	RTD CONVERTER FOXBORO	C071L	CB	288	RH	Y	NA	NA	HF	NA	17 A	Y
2CHS*TTX121	RTD CONVERTER FOXBORO	C071L	CB	288	RH	Y	NA	NA	HF	NA	17 A	Y
2CHS*TTX122	RTD CONVERTER FOXBORO	C071L	CB	288	RH	Y	NA	NA	HF	NA	17 A	Y

JOB NAME NMP - UNIT 2
UTILITY NIAGARA MOHAWK

SEISMIC AND DYNAMIC QUALIFICATION SUMMARY AND STATUS REPORT
MASTER LIST OF SAFETY RELATED EQUIPMENT

ENGINEER: STONE & WEBSTER
NSSS SUPPLIER: GENERAL ELECTRIC

EQUIP. ID / SHEC ID	EQUIPMENT: DESCRIPTION / MANUFACTURER	PPD NO.	LOCATION: BLDG	ELEV	MTG	LOADS: SEIS	HYDR	QUAL ANLYS	METH- TEST	NAT FREQ- LOWEST	RRS REF	STATUS: QUAL	INST
2CHS*TTX123	RTD CONVERTER FOXBORO	C071L	CB	288	RH	Y	NA	NA	HF	NA	17	A	Y
2CHS*TTX124	RTD CONVERTER FOXBORO	C071L	CB	288	RH	Y	NA	NA	HF	NA	17	A	Y
2CHS*TTX50A	RTD CONVERTER FOXBORO	C071L	CB	288	RH	Y	NA	NA	HF	NA	17	A	Y
2CHS*TTX50B	RTD CONVERTER FOXBORO	C071L	CB	288	RH	Y	NA	NA	HF	NA	17	A	Y
2CHS*TTX50C	RTD CONVERTER FOXBORO	C071L	CB	288	RH	Y	NA	NA	HF	NA	17	A	Y
2CHS*TTX50D	RTD CONVERTER FOXBORO	C071L	CB	288	RH	Y	NA	NA	HF	NA	17	A	Y
2CHS*TTX51A	RTD CONVERTER FOXBORO	C071L	CB	288	RH	Y	NA	NA	HF	NA	17	A	Y
2CHS*TTX51B	RTD CONVERTER FOXBORO	C071L	CB	288	RH	Y	NA	NA	HF	NA	17	A	Y
2CHS*TTX51C	RTD CONVERTER FOXBORO	C071L	CB	288	RH	Y	NA	NA	HF	NA	17	A	Y
2CHS*TTX51D	RTD CONVERTER FOXBORO	C071L	CB	288	RH	Y	NA	NA	HF	NA	17	A	Y
2CHS*TTX52A	RTD CONVERTER FOXBORO	C071L	CB	288	RH	Y	NA	NA	HF	NA	17	A	Y
2CHS*TTX52B	RTD CONVERTER FOXBORO	C071L	CB	288	RH	Y	NA	NA	HF	NA	17	A	Y
2CHS*TTX52C	RTD CONVERTER FOXBORO	C071L	CB	288	RH	Y	NA	NA	HF	NA	17	A	Y

JOB NAME NMP - UNIT 2
UTILITY NIAGARA MOHAWK

SEISMIC AND DYNAMIC QUALIFICATION SUMMARY AND STATUS REPORT
MASTER LIST OF SAFETY RELATED EQUIPMENT

ENGINEER: STONE & WEBSTER
NSSS SUPPLIER: GENERAL ELECTRIC

EQUIP. ID / SHEC ID	EQUIPMENT DESCRIPTION / MANUFACTURER	PPD NO.	LOCATION BLDG	ELEV	HTG	LOADS SEIS	HYDR	QUAL ANLYS	METH TEST	NAT FREQ LOWEST	RRS REF STATUS QUAL	INST
2CHS*TTX52D	RTD CONVERTER FOXBORO	C071L	CB	288	RH	Y	NA	NA	HF	NA	17 A	Y
2CHS*TTX53A	RTD CONVERTER FOXBORO	C071L	CB	288	RH	Y	NA	NA	HF	NA	17 A	Y
2CHS*TTX53B	RTD CONVERTER FOXBORO	C071L	CB	288	RH	Y	NA	NA	HF	NA	17 A	Y
2CHS*TTX53C	RTD CONVERTER FOXBORO	C071L	CB	288	RH	Y	NA	NA	HF	NA	17 A	Y
2CHS*TTX53D	RTD CONVERTER FOXBORO	C071L	CB	288	RH	Y	NA	NA	HF	NA	17 A	Y
2CHS*TTX54A	RTD CONVERTER FOXBORO	C071L	CB	288	RH	Y	NA	NA	HF	NA	17 A	Y
2CHS*TTX54B	RTD CONVERTER FOXBORO	C071L	CB	288	RH	Y	NA	NA	HF	NA	17 A	Y
2CHS*TTX54C	RTD CONVERTER FOXBORO	C071L	CB	288	RH	Y	NA	NA	HF	NA	17 A	Y
2CHS*TTX54D	RTD CONVERTER FOXBORO	C071L	CB	288	RH	Y	NA	NA	HF	NA	17 A	Y
2CHS*TTX55A	RTD CONVERTER FOXBORO	C071L	CB	288	RH	Y	NA	NA	HF	NA	17 A	Y
2CHS*TTX55B	RTD CONVERTER FOXBORO	C071L	CB	288	RH	Y	NA	NA	HF	NA	17 A	Y
2CHS*TTX55C	RTD CONVERTER FOXBORO	C071L	CB	288	RH	Y	NA	NA	HF	NA	17 A	Y
2CHS*TTX55D	RTD CONVERTER FOXBORO	C071L	CB	288	RH	Y	NA	NA	HF	NA	17 A	Y

JOB NAME NMP - UNIT 2
UTILITY NIAGARA MOHAWK

SEISMIC AND DYNAMIC QUALIFICATION SUMMARY AND STATUS REPORT
MASTER LIST OF SAFETY RELATED EQUIPMENT

ENGINEER: STONE & WEBSTER
NSSS SUPPLIER: GENERAL ELECTRIC

EQUIP. ID / SHEC ID	EQUIPMENT: DESCRIPTION / MANUFACTURER	PPD NO.	LOCATION: BLDG	ELEV	MTG	LOADS: SEIS	HYDR	QUAL ANLYS	METH- TEST	NAT FREQ- LOWEST	RRS REF STATUS: QUAL	INST
2CMS*TTX56A	RTD CONVERTER FOXBORO	C071L	CB	288	RM	Y	NA	NA	MF	NA	17 A	Y
2CMS*TTX56B	RTD CONVERTER FOXBORO	C071L	CB	288	RM	Y	NA	NA	MF	NA	17 A	Y
2CMS*TTX56C	RTD CONVERTER FOXBORO	C071L	CB	288	RM	Y	NA	NA	MF	NA	17 A	Y
2CMS*TTX56D	RTD CONVERTER FOXBORO	C071L	CB	288	RM	Y	NA	NA	MF	NA	17 A	Y
2CMS*TTX57A	RTD CONVERTER FOXBORO	C071L	CB	288	RM	Y	NA	NA	MF	NA	17 A	Y
2CMS*TTX57B	RTD CONVERTER FOXBORO	C071L	CB	288	RM	Y	NA	NA	MF	NA	17 A	Y
2CMS*TTX57C	RTD CONVERTER FOXBORO	C071L	CB	288	RM	Y	NA	NA	MF	NA	17 A	Y
2CMS*TTX57D	RTD CONVERTER FOXBORO	C071L	CB	288	RM	Y	NA	NA	MF	NA	17 A	Y
2CMS*TTX58A	RTD CONVERTER FOXBORO	C071L	CB	288	RM	Y	NA	NA	MF	NA	17 A	Y
2CMS*TTX58B	RTD CONVERTER FOXBORO	C071L	CB	288	RM	Y	NA	NA	MF	NA	17 A	Y
2CMS*TTX58C	RTD CONVERTER FOXBORO	C071L	CB	288	RM	Y	NA	NA	MF	NA	17 A	Y
2CMS*TTX58D	RTD CONVERTER FOXBORO	C071L	CB	288	RM	Y	NA	NA	MF	NA	17 A	Y
2CMS*TTX59A	RTD CONVERTER FOXBORO	C071L	CB	288	RM	Y	NA	NA	MF	NA	17 A	Y

JOB NAME NMP - UNIT 2
UTILITY NIAGARA MOHAWK

SEISMIC AND DYNAMIC QUALIFICATION SUMMARY AND STATUS REPORT
MASTER LIST OF SAFETY RELATED EQUIPMENT

ENGINEER: STONE & WEBSTER
NSSS SUPPLIER: GENERAL ELECTRIC

EQUIP. ID / SWEC ID	EQUIPMENT DESCRIPTION / MANUFACTURER	PPD NO.	LOCATION BLDG	ELEV	HTG	LOADS SEIS	HYDR	QUAL ANLYS	METH TEST	NAT FREQ LOWEST	RRS REF STATUS QUAL	INST
2CHS*TTX59B	RTD CONVERTER FOXBORO	C071L	CB	288	RH	Y	NA	NA	HF	NA	17 A	Y
2CHS*TTX59C	RTD CONVERTER FOXBORO	C071L	CB	288	RH	Y	NA	NA	HF	NA	17 A	Y
2CHS*TTX59D	RTD CONVERTER FOXBORO	C071L	CB	288	RH	Y	NA	NA	HF	NA	17 A	Y
2CHS*TTY101	RTD CONVERTER FOXBORO	C071L	CB	288	RH	Y	NA	NA	HF	NA	17 A	Y
2CHS*TTY102	RTD CONVERTER FOXBORO	C071L	CB	288	RH	Y	NA	NA	HF	NA	17 A	Y
2CHS*TTY103	RTD CONVERTER FOXBORO	C071L	CB	288	RH	Y	NA	NA	HF	NA	17 A	Y
2CHS*TTY104	RTD CONVERTER FOXBORO	C071L	CB	288	RH	Y	NA	NA	HF	NA	17 A	Y
2CHS*TTY105	RTD CONVERTER FOXBORO	C071L	CB	288	RH	Y	NA	NA	HF	NA	17 A	Y
2CHS*TTY106	RTD CONVERTER FOXBORO	C071L	CB	288	RH	Y	NA	NA	HF	NA	17 A	Y
2CHS*TTY107	RTD CONVERTER FOXBORO	C071L	CB	288	RH	Y	NA	NA	HF	NA	17 A	Y
2CHS*TTY108	RTD CONVERTER FOXBORO	C071L	CB	288	RH	Y	NA	NA	HF	NA	17 A	Y
2CHS*TTY109	RTD CONVERTER FOXBORO	C071L	CB	288	RH	Y	NA	NA	HF	NA	17 A	Y
2CHS*TTY116	RTD CONVERTER FOXBORO	C071L	CB	288	RH	Y	NA	NA	HF	NA	17 A	Y

JOB NAME NMP - UNIT 2
UTILITY NIAGARA MOHAWK

SEISMIC AND DYNAMIC QUALIFICATION SUMMARY AND STATUS REPORT
MASTER LIST OF SAFETY RELATED EQUIPMENT

ENGINEER: STONE & WEBSTER
NSSS SUPPLIER: GENERAL ELECTRIC

EQUIP. ID / SWEC ID	EQUIPMENT DESCRIPTION / MANUFACTURER	PPD NO.	LOCATION BLDG	ELEV	HTG	LOADS SEIS	HYDR	QUAL ANLYS	METH- TEST	NAT FREQ- LOWEST	RRS REF STATUS QUAL	INST
2CHS*TTY117	RTD CONVERTER FOXBORO	C071L	CB	288	RH	Y	NA	NA	HF	NA	17 A	Y
2CHS*TTY118	RTD CONVERTER FOXBORO	C071L	CB	288	RH	Y	NA	NA	HF	NA	17 A	Y
2CHS*TTY119	RTD CONVERTER FOXBORO	C071L	CB	288	RH	Y	NA	NA	HF	NA	17 A	Y
2CHS*TTY120	RTD CONVERTER FOXBORO	C071L	CB	288	RH	Y	NA	NA	HF	NA	17 A	Y
2CHS*TTY121	RTD CONVERTER FOXBORO	C071L	CB	288	RH	Y	NA	NA	HF	NA	17 A	Y
2CHS*TTY122	RTD CONVERTED FOXBORO	C071L	CB	288	RH	Y	NA	NA	HF	NA	17 A	Y
2CHS*TTY123	RTD CONVERTER FOXBORO	C071L	CB	288	RH	Y	NA	NA	HF	NA	17 A	Y
2CHS*TTY124	RTD CONVERTER FOXBORO	C071L	CB	288	RH	Y	NA	NA	HF	NA	17 A	Y
2CHS*TT67A	RTD CONVERTER FOXBORO	C071L	CB	288	RH	Y	NA	NA	HF	NA	17 A	Y
2CHS*TT67B	RTD CONVERTER FOXBORO	C071L	CB	288	RH	Y	NA	NA	HF	NA	17 A	Y
2CHS*TT68A	RTD CONVERTER FOXBORO	C071L	CB	288	RH	Y	NA	NA	HF	NA	17 A	Y
2CHS*TT68B	RTD CONVERTER FOXBORO	C071L	CB	288	RH	Y	NA	NA	HF	NA	17 A	Y
2CHS*TT69A	RTD CONVERTER FOXBORO	C071L	CB	288	RH	Y	NA	NA	HF	NA	17 A	Y

JOB NAME NMP - UNIT 2
UTILITY NIAGARA MOHAWK

SEISMIC AND DYNAMIC QUALIFICATION SUMMARY AND STATUS REPORT
MASTER LIST OF SAFETY RELATED EQUIPMENT

ENGINEER: STONE & WEBSTER
NSSS SUPPLIER: GENERAL ELECTRIC

EQUIP. ID / SHEC ID	EQUIPMENT DESCRIPTION / MANUFACTURER	PPD NO.	LOCATION BLDG	LOCATION ELEV	LOCATION HTG	LOADS SEIS	LOADS HYDR	QUAL ANLYS	METH TEST	NAT FREQ LOWEST	RRS REF	STATUS QUAL	STATUS INST
2CHS*TT69B	RTD CONVERTER FOXBORO	C071L	CB	288	RH	Y	NA	NA	HF	NA	17	A	Y
2CHS*TT70A	RTD CONVERTER FOXBORO	C071L	CB	288	RH	Y	NA	NA	HF	NA	17	A	Y
2CHS*TT70B	RTD CONVERTER FOXBORO	C071L	CB	288	RH	Y	NA	NA	HF	NA	17	A	Y
2CHS*TY131	SIGNAL SELECTOR FOXBORO	C071L	CB	288	RH	Y	NA	NA	HF	NA	17	A	Y
2CHS*TY132	SIGNAL SELECTOR FOXBORO	C071L	CB	288	RH	Y	NA	NA	HF	NA	17	A	Y
2CHS*TY133	SIGNAL SELECTOR FOXBORO	C071L	CB	288	RH	Y	NA	NA	HF	NA	17	A	Y
2CHS*TY134	SIGNAL SELECTOR FOXBORO	C071L	CB	288	RH	Y	NA	NA	HF	NA	17	A	Y
2CHS*TY135	SIGNAL SELECTOR FOXBORO	C071L	CB	288	RH	Y	NA	NA	HF	NA	17	A	Y
2CHS*TY136	SIGNAL SELECTOR FOXBORO	C071L	CB	288	RH	Y	NA	NA	HF	NA	17	A	Y
2CHS*TY141	SIGNAL SELECTOR FOXBORO	C071L	CB	288	RH	Y	NA	NA	HF	NA	17	A	Y
2CHS*TY142	SIGNAL SELECTOR FOXBORO	C071L	CB	288	RH	Y	NA	NA	HF	NA	17	A	Y
2CHS*TY143	SIGNAL SELECTOR FOXBORO	C071L	CB	288	RH	Y	NA	NA	HF	NA	17	A	Y
2CHS*TY144	SIGNAL SELECTOR FOXBORO	C071L	CB	288	RH	Y	NA	NA	HF	NA	17	A	Y

JOB NAME NMP - UNIT 2
UTILITY NIAGARA MOHAWK

SEISMIC AND DYNAMIC QUALIFICATION SUMMARY AND STATUS REPORT
MASTER LIST OF SAFETY RELATED EQUIPMENT

ENGINEER: STONE & WEBSTER
NSSS SUPPLIER: GENERAL ELECTRIC

EQUIP. ID / SHEC ID	EQUIPMENT: DESCRIPTION / MANUFACTURER	PPD NO.	LOCATION: BLDG	ELEV	MTG	LOADS: SEIS	HYDR	QUAL ANLYS	METH- TEST	NAT FREQ- LOWEST	RRS REF STATUS: QUAL	INST
2CHS*TY145	SIGNAL SELECTOR FOXBORO	C071L	CB	288	RH	Y	NA	NA	HF	NA	17 A	Y
2CHS*TY146	SIGNAL SELECTOR FOXBORO	C071L	CB	288	RH	Y	NA	NA	HF	NA	17 A	Y
2CHS*TY151	SIGNAL SELECTOR FOXBORO	C071L	CB	288	RH	Y	NA	NA	HF	NA	17 A	Y
2CHS*TY152	SIGNAL SELECTOR FOXBORO	C071L	CB	288	RH	Y	NA	NA	HF	NA	17 A	Y
2CHS*TY153	SIGNAL SELECTOR FOXBORO	C071L	CB	288	RH	Y	NA	NA	HF	NA	17 A	Y
2CHS*TY154	SIGNAL SELECTOR FOXBORO	C071L	CB	288	RH	Y	NA	NA	HF	NA	17 A	Y
2GTS*E/I5A	INPUT/OUTPUT CONVERTER FOXBORO	C071L	CB	288	RH	Y	NA	NA	HF	NA	17 A	Y
2GTS*E/I5B	INPUT/OUTPUT CONVERTER FOXBORO	C071L	CB	288	RH	Y	NA	NA	HF	NA	17 A	Y
2GTS*FSLX10A	RELAY FOXBORO	C071L	CB	288	RH	Y	NA	NA	HF	NA	17 A	Y
2GTS*FSLX10B	RELAY FOXBORO	C071L	CB	288	RH	Y	NA	NA	HF	NA	17 A	Y
2GTS*FSL10A	A/D CONVERTER FOXBORO	C071L	CB	288	RH	Y	NA	NA	HF	NA	17 A	Y
2GTS*FSL10B	A/D CONVERTER FOXBORO	C071L	CB	288	RH	Y	NA	NA	HF	NA	17 A	Y
2GTS*FYX10A	SQUARE ROOT EXTRACTOR FOXBORO	C071L	CB	288	RH	Y	NA	NA	HF	NA	17 A	Y

JOB NAME NMP - UNIT 2
UTILITY NIAGARA MOHAWK

SEISMIC AND DYNAMIC QUALIFICATION SUMMARY AND STATUS REPORT
MASTER LIST OF SAFETY RELATED EQUIPMENT

ENGINEER: STONE & WEBSTER
NSSS SUPPLIER: GENERAL ELECTRIC

EQUIP. ID / SWEC ID	EQUIPMENT DESCRIPTION / MANUFACTURER	PPD NO.	LOCATION BLDG	ELEV	HTG	LOADS SEIS	HYDR	QUAL ANLYS	METH TEST	NAT FREQ LOWEST	RRS REF STATUS QUAL	INST
2GTS*FYX10B	SQUARE ROOT EXTRACTOR FOXBORO	C071L	CB	288	RH	Y	NA	NA	HF	NA	17 A	Y
2GTS*PDC5A	CONTROLLER FOXBORO	C071L	CB	288	RH	Y	NA	NA	HF	NA	17 A	Y
2GTS*PDC5B	CONTROLLER FOXBORO	C071L	CB	288	RH	Y	NA	NA	HF	NA	17 A	Y
2GTS*PDIK5A	CONTROL STATION FOXBORO	C071L	CB	306	CH	Y	NA	NA	HF	NA	18 A	Y
2GTS*PDIK5B	CONTROL STATION FOXBORO	C071L	CB	306	CH	Y	NA	NA	HF	NA	18 A	Y
2GTS*PDSHX5A	RELAY FOXBORO	C071L	CB	288	RH	Y	NA	NA	HF	NA	17 A	Y
2GTS*PDSHX5B	RELAY FOXBORO	C071L	CB	288	RH	Y	NA	NA	HF	NA	17 A	Y
2GTS*PDSH21A	A/D CONVERTER FOXBORO	C071L	CB	288	RH	Y	NA	NA	HF	NA	17 A	Y
2GTS*PDSH21B	A/D CONVERTER FOXBORO	C071L	CB	288	RH	Y	NA	NA	HF	NA	17 A	Y
2GTS*PDSH5A	A/D CONVERTER FOXBORO	C071L	CB	288	RH	Y	NA	NA	HF	NA	17 A	Y
2GTS*PDSH5B	A/D CONVERTER FOXBORO	C071L	CB	288	RH	Y	NA	NA	HF	NA	17 A	Y
2GTS*PDSLX5A	RELAY FOXBORO	C071L	CB	288	RH	Y	NA	NA	HF	NA	17 A	Y
2GTS*PDSLX5B	RELAY FOXBORO	C071L	CB	288	RH	Y	NA	NA	HF	NA	17 A	Y

JOB NAME NMP - UNIT 2
UTILITY NIAGARA MOHAWK

SEISMIC AND DYNAMIC QUALIFICATION SUMMARY AND STATUS REPORT
MASTER LIST OF SAFETY RELATED EQUIPMENT

ENGINEER: STONE & WEBSTER
NSSS SUPPLIER: GENERAL ELECTRIC

EQUIP. ID / SHEC ID	EQUIPMENT DESCRIPTION / MANUFACTURER	PPD NO.	LOCATION BLDG	LOCATION ELEV	LOCATION MTG	LOADS SEIS	LOADS HYDR	QUAL ANLYS	METH TEST	NAT FREQ LOWEST	RRS REF STATUS QUAL	RRS REF STATUS INST
2GTS*PDSL5A	RELAY FOXBORO	C071L	CB	288	RH	Y	NA	NA	HF	NA	17 A	Y
2GTS*PDSL5B	RELAY FOXBORO	C071L	CB	288	RH	Y	NA	NA	HF	NA	17 A	Y
2GTS*PDSX21A	RELAY FOXBORO	C071L	CB	288	RH	Y	NA	NA	HF	NA	17 A	Y
2GTS*PDSX21B	RELAY FOXBORO	C071L	CB	288	RH	Y	NA	NA	HF	NA	17 A	Y
2GTS*PHRS10A	LOOP POWER SUPPLY FOXBORO	C071L	CB	288	RH	Y	NA	NA	HF	NA	17 A	Y
2GTS*PHRS10B	LOOP POWER SUPPLY FOXBORO	C071L	CB	288	RH	Y	NA	NA	HF	NA	17 A	Y
2GTS*PHRS21A	LOOP POWER SUPPLY FOXBORO	C071L	CB	288	RH	Y	NA	NA	HF	NA	17 A	Y
2GTS*PHRS21B	LOOP POWER SUPPLY FOXBORO	C071L	CB	288	RH	Y	NA	NA	HF	NA	17 A	Y
2GTS*PHRS5A	INPUT/OUTPUT CONVERTER FOXBORO	C071L	CB	288	RH	Y	NA	NA	HF	NA	17 A	Y
2GTS*PHRS5B	INPUT/OUTPUT CONVERTER FOXBORO	C071L	CB	288	RH	Y	NA	NA	HF	NA	17 A	Y
2GTS*TDSL17A	A/D CONVERTER FOXBORO	C071L	CB	288	RH	Y	NA	NA	HF	NA	17 A	Y
2GTS*TDSL17B	A/D CONVERTER FOXBORO	C071L	CB	288	RH	Y	NA	NA	HF	NA	17 A	Y
2GTS*TDSX17A	RELAY FOXBORO	C071L	CB	288	RH	Y	NA	NA	HF	NA	17 A	Y

JOB NAME NMP - UNIT 2
UTILITY NIAGARA MOHAWK

SEISMIC AND DYNAMIC QUALIFICATION SUMMARY AND STATUS REPORT
MASTER LIST OF SAFETY RELATED EQUIPMENT

ENGINEER: STONE & WEBSTER
NSSS SUPPLIER: GENERAL ELECTRIC

EQUIP. ID / SHEC ID	EQUIPMENT DESCRIPTION / MANUFACTURER	PPD NO.	LOCATION BLDG	ELEV	MTG	LOADS SEIS	HYDR	QUAL ANLYS	METH- TEST	NAT FREQ- LOWEST	RRS REF STATUS QUAL	INST
2GTS*TDSX17B	RELAY FOXBORO	C071L	CB	288	RH	Y	NA	NA	HF	NA	17 A	Y
2GTS*TTX26A	RTD CONVERTER FOXBORO	C071L	CB	288	RH	Y	NA	NA	HF	NA	17 A	Y
2GTS*TTX26B	RTD CONVERTER FOXBORO	C071L	CB	288	RH	Y	NA	NA	HF	NA	17 A	Y
2GTS*TTY26A	RTD CONVERTER FOXBORO	C071L	CB	288	RH	Y	NA	NA	HF	NA	17 A	Y
2GTS*TTY26B	RTD CONVERTER FOXBORO	C071L	CB	288	RH	Y	NA	NA	HF	NA	17 A	Y
2HCS*E/I20A	E/I CONVERTER FOXBORO	C071L	CB	288	RH	Y	NA	NA	HF	NA	17 A	Y
2HCS*E/I20B	E/I CONVERTER FOXBORO	C071L	CB	288	RH	Y	NA	NA	HF	NA	17 A	Y
2HCS*FSLX21A	RELAY FOXBORO	C071L	CB	288	RH	Y	NA	NA	HF	NA	17 A	Y
2HCS*FSLX21B	RELAY FOXBORO	C071L	CB	288	RH	Y	NA	NA	HF	NA	17 A	Y
2HCS*FSL21A	A/D CONVERTER FOXBORO	C071L	CB	288	RH	Y	NA	NA	HF	NA	17 A	Y
2HCS*FSL21B	A/D CONVERTER FOXBORO	C071L	CB	288	RH	Y	NA	NA	HF	NA	17 A	Y
2HCS*FYY21A	SQUARE ROOT EXTRACTOR FOXBORO	C071L	CB	288	RH	Y	NA	NA	HF	NA	17 A	Y
2HCS*FYY21B	SQUARE ROOT EXTRACTOR FOXBORO	C071L	CB	288	RH	Y	NA	NA	HF	NA	17 A	Y

JOB NAME NMP - UNIT 2
UTILITY NIAGARA MOHAWK

SEISMIC AND DYNAMIC QUALIFICATION SUMMARY AND STATUS REPORT
MASTER LIST OF SAFETY RELATED EQUIPMENT

ENGINEER: STONE & WEBSTER
NSSS SUPPLIER: GENERAL ELECTRIC

EQUIP. ID / SHEC ID	EQUIPMENT: DESCRIPTION / MANUFACTURER	PPD NO.	LOCATION: BLDG	ELEV	HTG	LOADS: SEIS	HYDR	QUAL ANLYS	METH- TEST	NAT FREQ- LOWEST	RRS REF STATUS: QUAL	INST
2HCS*PSHX19A	RELAY FOXBORO	C071L	CB	288	RH	Y	NA	NA	HF	NA	17 A	Y
2HCS*PSHX19B	RELAY FOXBORO	C071L	CB	288	RH	Y	NA	NA	HF	NA	17 A	Y
2HCS*PSH19A	A/D CONVERTER FOXBORO	C071L	CB	288	RH	Y	NA	NA	HF	NA	17 A	Y
2HCS*PSH19B	A/D CONVERTER FOXBORO	C071L	CB	288	RH	Y	NA	NA	HF	NA	17 A	Y
2HCS*PHRS19A	LOOP POWER SUPPLY FOXBORO	C071L	CB	288	RH	Y	NA	NA	HF	NA	17 A	Y
2HCS*PHRS19B	LOOP POWER SUPPLY FOXBORO	C071L	CB	288	RH	Y	NA	NA	HF	NA	17 A	Y
2HCS*PHRS21A	LOOP POWER SUPPLY FOXBORO	C071L	CB	288	RH	Y	NA	NA	HF	NA	17 A	Y
2HCS*PHRS21B	LOOP POWER SUPPLY FOXBORO	C071L	CB	288	RH	Y	NA	NA	HF	NA	17 A	Y
2HCS*TC20A	CONTROLLER FOXBORO	C071L	CB	288	RH	Y	NA	NA	HF	NA	17 A	Y
2HCS*TC20B	CONTROLLER FOXBORO	C071L	CB	288	RH	Y	NA	NA	HF	NA	17 A	Y
2HCS*TIK20A	CONTROL STATION FOXBORO	C071L	CB	306	CH	Y	NA	NA	HF	NA	18 A	Y
2HCS*TIK20B	CONTROL STATION FOXBORO	C071L	CB	306	CH	Y	NA	NA	HF	NA	18 A	N
2HCS*TSHH16A	A/D CONVERTER FOXBORO	C071L	C[illegible]	288	RH	Y	NA	NA	HF	NA	17 A	Y

JOB NAME NMP - UNIT 2
UTILITY NIAGARA MOHAWK

SEISMIC AND DYNAMIC QUALIFICATION SUMMARY AND STATUS REPORT
MASTER LIST OF SAFETY RELATED EQUIPMENT

ENGINEER: STONE & WEBSTER
NSSS SUPPLIER: GENERAL ELECTRIC

EQUIP. ID / SHEC ID	EQUIPMENT DESCRIPTION / MANUFACTURER	PPD NO.	LOCATION BLDG	LOCATION ELEV	LOCATION HTG	LOADS SEIS	LOADS HYDR	QUAL ANLYS	METH TEST	NAT FREQ LOWEST	RRS REF STATUS QUAL	RRS REF STATUS INST
2HCS*TSHH16B	A/D CONVERTER FOXBORO	C071L	CB	288	RH	Y	NA	NA	HF	NA	17 A	Y
2HCS*TSHH17A	A/D CONVERTER FOXBORO	C071L	CB	298	RH	Y	NA	NA	HF	NA	17 A	Y
2HCS*TSHH17B	A/D CONVERTER FOXBORO	C071L	CB	288	RH	Y	NA	NA	HF	NA	17 A	Y
2HCS*TSHX13A	RELAY FOXBORO	C071L	CB	288	RH	Y	NA	NA	HF	NA	17 A	Y
2HCS*TSHX13B	RELAY FOXBORO	C071L	CB	288	RH	Y	NA	NA	HF	NA	17 A	Y
2HCS*TSHX14A	RELAY FOXBORO	C071L	CB	288	RH	Y	NA	NA	HF	NA	17 A	Y
2HCS*TSHX14B	RELAY FOXBORO	C071L	CB	288	RH	Y	NA	NA	HF	NA	17 A	Y
2HCS*TSHX15A	RELAY FOXBORO	C071L	CB	288	RH	Y	NA	NA	HF	NA	17 A	Y
2HCS*TSHX15B	RELAY FOXBORO	C071L	CB	288	RH	Y	NA	NA	HF	NA	17 A	Y
2HCS*TSHX16A	RELAY FOXBORO	C071L	CB	288	RH	Y	NA	NA	HF	NA	17 A	Y
2HCS*TSHX16B	RELAY FOXBORO	C071L	CB	288	RH	Y	NA	NA	HF	NA	17 A	Y
2HCS*TSHX17A	RELAY FOXBORO	C071L	CB	288	RH	Y	NA	NA	HF	NA	17 A	Y
2HCS*TSHX17B	RELAY FOXBORO	C071L	CB	288	RH	Y	NA	NA	HF	NA	17 A	Y

JOB NAME NMP - UNIT 2
UTILITY NIAGARA MOHAWK

SEISMIC AND DYNAMIC QUALIFICATION SUMMARY AND STATUS REPORT
MASTER LIST OF SAFETY RELATED EQUIPMENT

ENGINEER: STONE & WEBSTER
NSSS SUPPLIER: GENERAL ELECTRIC

EQUIP. ID / SWEC ID	EQUIPMENT DESCRIPTION / MANUFACTURER	PPD NO.	LOCATION BLDG	LOCATION ELEV	LOCATION HTG	LOADS SEIS	LOADS HYDR	QUAL ANLYS	METH TEST	NAT FREQ LOWEST	RRS REF STATUS QUAL	RRS REF STATUS INST
2HCS*TSHX18A	RELAY FOXBORO	C071L	CB	288	RH	Y	NA	NA	HF	NA	17 A	Y
2HCS*TSHX18B	RELAY FOXBORO	C071L	CB	288	RH	Y	NA	NA	HF	NA	17 A	Y
2HCS*TSHX20A	RELAY FOXBORO	C071L	CB	288	RH	Y	NA	NA	HF	NA	17 A	Y
2HCS*TSHX20B	RELAY FOXBORO	C071L	CB	288	RH	Y	NA	NA	HF	NA	17 A	Y
2HCS*TSHY16A	RELAY FOXBORO	C071L	CB	288	RH	Y	NA	NA	HF	NA	17 A	Y
2HCS*TSHY16B	RELAY FOXBORO	C071L	CB	288	RH	Y	NA	NA	HF	NA	17 A	Y
2HCS*TSHY17A	RELAY FOXBORO	C071L	CB	288	RH	Y	NA	NA	HF	NA	17 A	Y
2HCS*TSHY17B	RELAY FOXBORO	C071L	CB	288	RH	Y	NA	NA	HF	NA	17 A	Y
2HCS*TSH13A	A/D CONVERTER FOXBORO	C071L	CB	288	RH	Y	NA	NA	HF	NA	17 A	Y
2HCS*TSH13B	A/D CONVERTER FOXBORO	C071L	CB	288	RH	Y	NA	NA	HF	NA	17 A	Y
2HCS*TSH14A	A/D CONVERTER FOXBORO	C071L	CB	288	RH	Y	NA	NA	HF	NA	17 A	Y
2HCS*TSH14B	A/D CONVERTER FOXBORO	C071L	CB	288	RH	Y	NA	NA	HF	NA	17 A	Y
2HCS*TSH15A	A/D CONVERTER FOXBORO	C071L	CB	288	RH	Y	NA	NA	HF	NA	17 A	Y

JOB NAME NMP - UNIT 2
UTILITY NIAGARA MOHAWK

SEISMIC AND DYNAMIC QUALIFICATION SUMMARY AND STATUS REPORT
MASTER LIST OF SAFETY RELATED EQUIPMENT

ENGINEER: STONE & HEBSTER
NSSS SUPPLIER: GENERAL ELECTRIC

EQUIP. ID / SHEC ID	EQUIPMENT: DESCRIPTION / MANUFACTURER	PPD NO.	LOCATION: BLDG	ELEV	HTG	LOADS: SEIS	HYDR	QUAL ANLYS	METH- TEST	NAT FREQ- LOWEST	RRS REF STATUS: QUAL	INST
2HCS*TSH15B	A/D CONVERTER FOXBORO	C071L	CB	288	RH	Y	NA	NA	HF	NA	17 A	Y
2HCS*TSH16A	A/D CONVERTER FOXBORO	C071L	CB	288	RH	Y	NA	NA	HF	NA	17 A	Y
2HCS*TSH16B	A/D CONVERTER FOXBORO	C071L	CB	288	RH	Y	NA	NA	HF	NA	17 A	Y
2HCS*TSH17A	A/D CONVERTER FOXBORO	C071L	CB	288	RH	Y	NA	NA	HF	NA	17 A	Y
2HCS*TSH17B	A/D COVERTER FOXBORO	C071L	CB	288	RH	Y	NA	NA	HF	NA	17 A	Y
2HCS*TSH18A	A/D CONVERTER FOXBORO	C071L	CB	288	RH	Y	NA	NA	HF	NA	17 A	Y
2HCS*TSH18B	A/D CONVERTER FOXBORO	C071L	CB	288	RH	Y	NA	NA	HF	NA	17 A	Y
2HCS*TSH20A	A/D CONVERTER FOXBORO	C071L	CB	288	RH	Y	NA	NA	HF	NA	17 A	Y
2HCS*TSH20B	A/D CONVERTER FOXBORO	C071L	CB	288	RH	Y	NA	NA	HF	NA	17 A	Y
2HCS*TSLX20A	RELAY FOXBORO	C071L	CB	288	RH	Y	NA	NA	HF	NA	17 A	Y
2HCS*TSLX20B	RELAY FOXBORO	C071L	CB	288	RH	Y	NA	NA	HF	NA	17 A	Y
2HCS*TSL20A	A/D CONVERTER FOXBORO	C071L	CB	288	RH	Y	N	N	HF	NA	17 A	Y
2HCS*TSL20B	A/D CONVERTER FOXBORO	C071L	CB	288	RH	Y	N	N	HF	NA	17 A	Y

JOB NAME NMP - UNIT 2
UTILITY NIAGARA MOHAWK

SEISMIC AND DYNAMIC QUALIFICATION SUMMARY AND STATUS REPORT
MASTER LIST OF SAFETY RELATED EQUIPMENT

ENGINEER: STONE & WEBSTER
NSSS SUPPLIER: GENERAL ELECTRIC

EQUIP. ID / SHEC ID	EQUIPMENT DESCRIPTION / MANUFACTURER	PPD NO.	LOCATION BLDG	ELEV	HTG	LOADS SEIS	HYDR	QUAL ANLYS	METH TEST	NAT FREQ LOWEST	RRS REF STATUS QUAL	INST
2HCS*TT12A	HV CONVERTER FOXBORO	C071L	CB	288	RH	Y	NA	NA	HF	NA	17 A	Y
2HCS*TT12B	HV CONVERTER FOXBORO	C071L	CB	288	RH	Y	NA	NA	HF	NA	17 A	Y
2HCS*TT13A	HV CONVERTER FOXBORO	C071L	CB	288	RH	Y	NA	NA	HF	NA	17 A	Y
2HCS*TT13B	HV CONVERTER FOXBORO	C071L	CB	288	RH	Y	NA	NA	HF	NA	17 A	Y
2HCS*TT14A	HV CONVERTER FOXBORO	C071L	CB	288	RH	Y	NA	NA	HF	NA	17 A	Y
2HCS*TT14B	HV CONVERTER FOXBORO	C071L	CB	288	RH	Y	NA	NA	HF	NA	17 A	Y
2HCS*TT15A	HV CONVERTER FOXBORO	C071L	CB	288	RH	Y	NA	NA	HF	NA	17 A	Y
2HCS*TT15B	HV CONVERTER FOXBORO	C071L	CB	288	RH	Y	NA	NA	HF	NA	17 A	Y
2HCS*TT16A	HV CONVERTER FOXBORO	C071L	CB	288	RH	Y	NA	NA	HF	NA	17 A	Y
2HCS*TT16B	HV CONVERTER FOXBORO	C071L	CB	288	RH	Y	NA	NA	HF	NA	17 A	Y
2HCS*TT17A	HV CONVERTER FOXBORO	C071L	CB	288	RH	Y	NA	NA	HF	NA	17 A	Y
2HCS*TT17B	HV CONVERTER FOXBORO	C071L	CB	288	RH	Y	NA	NA	HF	NA	17 A	Y
2HCS*TT18A	HV CONVERTER FOXBORO	C071L	CB	288	RH	Y	NA	NA	HF	NA	17 A	Y

JOB NAME NMP - UNIT 2
UTILITY NIAGARA MOHAWK

SEISMIC AND DYNAMIC QUALIFICATION SUMMARY AND STATUS REPORT
MASTER LIST OF SAFETY RELATED EQUIPMENT

ENGINEER: STONE & WEBSTER
NSSS SUPPLIER: GENERAL ELECTRIC

EQUIP. ID / SHEC ID	EQUIPMENT DESCRIPTION / MANUFACTURER	PPD NO.	LOCATION BLDG	ELEV	HTG	LOADS SEIS	HYDR	QUAL ANLYS	METH TEST	NAT FREQ LOWEST	RRS REF STATUS QUAL	INST
2HCS*TT18B	HV CONVERTER FOXBORO	C071L	CB	288	RH	Y	NA	NA	HF	NA	17 A	Y
2HCS*TT20A	HV CONVERTER FOXBORO	C071L	CB	288	RH	Y	NA	NA	HF	NA	17 A	Y
2HCS*TT20B	HV CONVERTER FOXBORO	C071L	CB	288	RH	Y	NA	NA	HF	NA	17 A	Y
2HVC*E/I21A	E/I CONVERTER FOXBORO	C071L	CB	288	RH	Y	NA	NA	HF	NA	17 A	Y
2HVC*E/I21B	E/I CONVERTER FOXBORO	C071L	CB	288	RH	Y	NA	NA	HF	NA	17 A	Y
2HVC*E/I32A	E/I CONVERTER FOXBORO	C071L	CB	288	RH	Y	NA	NA	HF	NA	17 A	Y
2HVC*E/I32B	E/I CONVERTER FOXBORO	C071L	CB	288	RH	Y	NA	NA	HF	NA	17 A	Y
2HVC*E/I33A	E/I CONVERTER FOXBORO	C071L	CB	288	RH	Y	NA	NA	HF	NA	17 A	Y
2HVC*E/I33B	E/I CONVERTER FOXBORO	C071L	CB	288	RH	Y	NA	NA	HF	NA	17 A	Y
2HVC*E/I8A	E/I CONVERTER FOXBORO	C071L	CB	288	RH	Y	NA	NA	HF	NA	17 A	Y
2HVC*E/I8B	E/I CONVERTER FOXBORO	C071L	CB	288	RH	Y	NA	NA	HF	NA	17 A	Y
2HVC*FY10A	SQUARE ROOT CONVERTER FOXBORO	C071L	CB	288	RH	Y	NA	NA	HF	NA	17 A	N
2HVC*FY10B	SQUARE ROOT CONVERTER FOXBORO	C071L	CB	288	RH	Y	NA	N	HF	NA	17 A	N

JOB NAME NMP - UNIT 2
UTILITY NIAGARA MOHAWK

SEISMIC AND DYNAMIC QUALIFICATION SUMMARY AND STATUS REPORT
MASTER LIST OF SAFETY RELATED EQUIPMENT

ENGINEER: STONE & WEBSTER
NSSS SUPPLIER: GENERAL ELECTRIC

EQUIP. ID / SWEC ID	EQUIPMENT DESCRIPTION / MANUFACTURER	PPD NO.	LOCATION BLDG	LOCATION ELEV	LOCATION HTG	LOADS SEIS	LOADS HYDR	QUAL ANLYS	METH TEST	NAT FREQ LOWEST	RRS REF STATUS QUAL	RRS REF STATUS INST
2HVC*HC21A	CONTROLLER FOXBORO	C071L	CB	288	RH	Y	NA	NA	HF	NA	17 A	Y
2HVC*HC21B	CONTROLLER FOXBORO	C071L	CB	288	RH	Y	NA	NA	HF	NA	17 A	Y
2HVC*HC8A	CONTROLLER FOXBORO	C071L	CB	288	RH	Y	NA	NA	HF	NA	17 A	Y
2HVC*HC8B	CONTRROLLER FOXBORO	C071L	CB	288	RH	Y	NA	NA	HF	NA	17 A	Y
2HVC*PDSH50A	A/D CONVERTER FOXBORO	C071L	CB	288	RH	Y	NA	NA	HF	NA	17 A	Y
2HVC*PDSH50B	A/D CONVERTER FOXBORO	C071L	CB	288	RH	Y	NA	NA	HF	NA	17 A	Y
2HVC*PDSX50A	RELAY FOXBORO	C071L	CB	288	RH	Y	NA	NA	HF	NA	17 A	Y
2HVC*PDSX50B	RELAY FOXBORO	C071L	CB	288	RH	Y	NA	NA	HF	NA	17 A	Y
2HVC*PHRS10A	LOOP POWER SUPPLY FOXBORO	C071L	CB	288	RH	Y	NA	NA	HF	NA	17 A	Y
2HVC*PHRS10B	LOOP POWER SUPPLY FOXBORO	C071L	CB	288	RH	Y	NA	NA	HF	NA	17 A	Y
2HVC*PHRS50A	LOOP POWER SUPPLY FOXBORO	C071L	CB	288	RH	Y	NA	NA	HF	NA	17 A	Y
2HVC*PHRS50B	LOOP POWER SUPPLY FOXBORO	C071L	CB	288	RH	Y	NA	NA	HF	NA	17 A	Y
2HVC*TC21A	CONTROLLER FOXBORO	C071L	CB	288	RH	Y	NA	NA	HF	NA	17 A	Y

JOB NAME NMP - UNIT 2
UTILITY NIAGARA MOHAWK

SEISMIC AND DYNAMIC QUALIFICATION SUMMARY AND STATUS REPORT
MASTER LIST OF SAFETY RELATED EQUIPMENT

ENGINEER: STONE & WEBSTER
NSSS SUPPLIER: GENERAL ELECTRIC

EQUIP. ID / SWEC ID	EQUIPMENT DESCRIPTION / MANUFACTURER	PPD NO.	LOCATION BLDG	ELEV	HTG	LOADS SEIS	HYDR	QUAL ANLYS	METH TEST	NAT FREQ LOWEST	RRS REF STATUS QUAL	INST
2HVC*TC21B	CONTROLLER FOXBORO	C071L	CB	288	RH	Y	NA	NA	HF	NA	17 A	Y
2HVC*TC32A	CONTROLLER FOXBORO	C071L	CB	288	RH	Y	NA	NA	HF	NA	17 A	Y
2HVC*TC32B	CONTROLLER FOXBORO	C071L	CB	288	RH	Y	NA	NA	HF	NA	17 A	Y
2HVC*TC33A	CONTROLLER FOXBORO	C071L	CB	288	RH	Y	NA	NA	HF	NA	17 A	Y
2HVC*TC33B	CONTROLLER FOXBORO	C071L	CB	288	RH	Y	NA	NA	HF	NA	17 A	Y
2HVC*TC8A	CONTROLLER FOXBORO	C071L	CB	288	RH	Y	NA	NA	HF	NA	17 A	Y
2HVC*TC8B	CONTROLLER FOXBORO	C071L	CB	288	RH	Y	NA	NA	HF	NA	17 A	Y
2HVC*TDSH49A	A/D CONVERTER FOXBORO	C071L	CB	288	RH	Y	NA	NA	HF	NA	17 A	Y
2HVC*TDSH49B	A/D CONVERTER FOXBORO	C071L	CB	288	RH	Y	NA	NA	HF	NA	17 A	Y
2HVC*TDSL41A	A/D CONVERTER FOXBORO	C071L	CB	288	RH	Y	NA	NA	HF	NA	17 A	Y
2HVC*TDSL41B	A/D CONVERTER FOXBORO	C071L	CB	288	RH	Y	NA	NA	HF	NA	17 A	Y
2HVC*TDSX41A	RELAY FOXBORO	C071L	CB	288	RH	Y	NA	NA	HF	NA	17 A	Y
2HVC*TDSX41B	RELAY FOXBORO	C071L	CB	288	RH	Y	NA	NA	HF	NA	17 A	Y

JOB NAME NMP - UNIT 2
UTILITY NIAGARA MOHAWK

SEISMIC AND DYNAMIC QUALIFICATION SUMMARY AND STATUS REPORT
MASTER LIST OF SAFETY RELATED EQUIPMENT

ENGINEER: STONE & WEBSTER
NSSS SUPPLIER: GENERAL ELECTRIC

EQUIP. ID / SHEC ID	EQUIPMENT DESCRIPTION / MANUFACTURER	PPD NO.	LOCATION BLDG	ELEV	HTG	LOADS SEIS	HYDR	QUAL ANLYS	METH TEST	NAT FREQ LOWEST	RRS REF STATUS QUAL	INST
2HVC*TDSX49A	RELAY FOXBORO	C071L	CB	288	RH	Y	NA	NA	HF	NA	17 A	Y
2HVC*TDSX49B	RELAY FOXBORO	C071L	CB	288	RH	Y	NA	NA	HF	NA	17 A	Y
2HVC*TSHH111	A/D CONVERTER FOXBORO	C071L	CB	288	RH	Y	NA	NA	HF	NA	17 A	Y
2HVC*TSHH155	A/D CONVERTER FOXBORO	C071L	CB	288	RH	Y	NA	NA	HF	NA	17 A	Y
2HVC*TSHH165	A/D CONVERTER FOXBORO	C071L	CB	288	RH	Y	NA	NA	HF	NA	17 A	Y
2HVC*TSHH174	A/D CONVERTER FOXBORO	C071L	CB	288	RH	Y	NA	NA	HF	NA	17 A	Y
2HVC*TSHH198	A/D CONVERTER FOXBORO	C071L	CB	288	RH	Y	NA	NA	HF	NA	17 A	Y
2HVC*TSHH38A	A/D CONVERTER FOXBORO	C071L	CB	288	RH	Y	NA	NA	HF	NA	17 A	Y
2HVC*TSHH38B	A/D CONVERTER FOXBORO	C071L	CB	288	RH	Y	NA	NA	HF	NA	17 A	Y
2HVC*TSHH39A	RELAY FOXBORO	C071L	CB	288	RH	Y	NA	NA	HF	NA	17 A	Y
2HVC*TSHH39B	RELAY FOXBORO	C071L	CB	288	RH	Y	NA	NA	HF	NA	17 A	Y
2HVC*TSHH37A	RELAY FOXBORO	C071L	CB	288	RH	Y	NA	NA	HF	NA	17 A	Y
2HVC*TSHH37B	RELAY FOXBORO	C071L	CB	288	RH	Y	NA	NA	HF	NA	17 A	Y

JOB NAME NMP - UNIT 2
UTILITY NIAGARA MOHAWK

SEISMIC AND DYNAMIC QUALIFICATION SUMMARY AND STATUS REPORT
MASTER LIST OF SAFETY RELATED EQUIPMENT

ENGINEER: STONE & WEBSTER
NSSS SUPPLIER: GENERAL ELECTRIC

EQUIP. ID / SHEC ID	EQUIPMENT DESCRIPTION / MANUFACTURER	PPD NO.	LOCATION BLDG	ELEV	MTG	LOADS SEIS	HYDR	QUAL ANLYS	METH- TEST	NAT FREQ- LOWEST	RRS REF STATUS QUAL	INST
2HVC*TSHX111	RELAY FOXBORO	C071L	CB	288	RH	Y	NA	NA	HF	NA	17 A	Y
2HVC*TSHX155	RELAY FOXBORO	C071L	CB	288	RH	Y	NA	NA	HF	NA	17 A	Y
2HVC*TSHX165	RELAY FOXBORO	C071L	CB	288	RH	Y	NA	NA	HF	NA	17 A	Y
2HVC*TSHX174	RELAY FOXBORO	C071L	CB	288	RH	Y	NA	NA	HF	NA	17 A	Y
2HVC*TSHX198	RELAY FOXBORO	C071L	CB	288	RH	Y	NA	NA	HF	NA	17 A	Y
2HVC*TSHX34A	A/D CONVERTER FOXBORO	C071L	CB	288	RH	Y	NA	NA	HF	NA	17 A	Y
2HVC*TSHX34B	A/D CONVERTER FOXBORO	C071L	CB	288	RH	Y	NA	NA	HF	NA	17 A	Y
2HVC*TSHX37A	A/D CONVERTER FOXBORO	C071L	CB	288	RH	Y	NA	NA	HF	NA	17 A	Y
2HVC*TSHX37B	A/D CONVERTER FOXBORO	C071L	CB	288	RH	Y	NA	NA	HF	NA	17 A	Y
2HVC*TSHX38A	RELAY FOXBORO	C071L	CB	288	RH	Y	NA	NA	HF	NA	17 A	Y
2HVC*TSHX38B	RELAY FOXBORO	C071L	CB	288	RH	Y	NA	NA	HF	NA	17 A	Y
2HVC*TSHY111	RELAY FOXBORO	C071L	CB	288	RH	Y	NA	NA	HF	NA	17 A	Y
2HVC*TSHY155	RELAY FOXBORO	C071L	CB	288	RH	Y	NA	NA	HF	NA	17 A	Y

JOB NAME NMP - UNIT 2
UTILITY NIAGARA MOHAWK

SEISMIC AND DYNAMIC QUALIFICATION SUMMARY AND STATUS REPORT
MASTER LIST OF SAFETY RELATED EQUIPMENT

ENGINEER: STONE & WEBSTER
NSSS SUPPLIER: GENERAL ELECTRIC

EQUIP. ID / SHEC ID	EQUIPMENT: DESCRIPTION / MANUFACTURER	PPD NO.	LOCATION: BLDG	ELEV	HTG	LOADS: SEIS	HYDR	QUAL ANLYS	METH- TEST	NAT FREQ- LOWEST	RRS REF STATUS: QUAL	INST
2HVC*TSHY165	RELAY FOXBORO	C071L	CB	288	RH	Y	NA	NA	HF	NA	17 A	Y
2HVC*TSHY174	RELAY FOXBORO	C071L	CB	288	RH	Y	NA	NA	HF	NA	17 A	Y
2HVC*TSHY198	RELAY FOXBORO	C071L	CB	288	RH	Y	NA	NA	HF	NA	17 A	Y
2HVC*TSHY34A	A/D CONVERTER FOXBORO	C071L	CB	288	RH	Y	NA	NA	HF	NA	17 A	Y
2HVC*TSHY34B	A/D CONVERTER FOXBORO	C071L	CB	288	RH	Y	NA	NA	HF	NA	17 A	Y
2HVC*TSHY37A	A/D CONVERTER FOXBORO	C071L	CB	288	RH	Y	NA	NA	HF	NA	17 A	Y
2HVC*TSHY37B	A/D CONVERTER FOXBORO	C071L	CB	288	RH	Y	NA	NA	HF	NA	17 A	Y
2HVC*TSHY38A	RELAY FOXBORO	C071L	CB	288	RH	Y	NA	NA	HF	NA	17 A	Y
2HVC*TSHY38B	RELAY FOXBORO	C071L	CB	288	RH	Y	NA	NA	HF	NA	17 A	Y
2HVC*TSHZ34A	RELAY FOXBORO	C071L	CB	288	RH	Y	NA	NA	HF	NA	17 A	Y
2HVC*TSHZ34B	RELAY FOXBORO	C071L	CB	288	RH	Y	NA	NA	HF	NA	17 A	Y
2HVC*TSHZ37A	RELAY FOXBORO	C071L	CB	288	RH	Y	NA	NA	HF	NA	17 A	Y
2HVC*TSHZ37B	RELAY FOXBORO	C071L	CB	288	RH	Y	NA	NA	HF	NA	17 A	Y

JOB NAME NMP - UNIT 2
UTILITY NIAGARA MOHAWK

SEISMIC AND DYNAMIC QUALIFICATION SUMMARY AND STATUS REPORT
MASTER LIST OF SAFETY RELATED EQUIPMENT

ENGINEER: STONE & WEBSTER
NSSS SUPPLIER: GENERAL ELECTRIC

EQUIP. ID / SHEC ID	EQUIPMENT DESCRIPTION / MANUFACTURER	PPD NO.	LOCATION BLDG	LOCATION ELEV	LOCATION HTG	LOADS SEIS	LOADS HYDR	QUAL ANLYS	HETH- TEST	NAT FREQ- LOWEST	RRS REF STATUS QUAL	RRS REF STATUS INST
2HVC*TSH111	A/D CONVERTER FOXBORO	C071L	CB	288	RH	Y	NA	NA	HF	NA	17 A	Y
2HVC*TSH155	A/D CONVERTER FOXBORO	C071L	CB	288	RH	Y	NA	NA	HF	NA	17 A	Y
2HVC*TSH165	A/D CONVERTER FOXBORO	C071L	CB	288	RH	Y	NA	NA	HF	NA	17 A	Y
2HVC*TSH174	A/D CONVERTER FOXBORO	C071L	CB	288	RH	Y	NA	NA	HF	NA	17 A	Y
2HVC*TSH198	A/D CONVERTER FOXBORO	C071L	CB	288	RH	Y	NA	NA	HF	NA	17 A	Y
2HVC*TSH38A	A/D CONVERTER FOXBORO	C071L	CB	288	RH	Y	NA	NA	HF	NA	17 A	Y
2HVC*TSH38B	A/D CONVERTER FOXBORO	C071L	CB	288	RH	Y	NA	NA	HF	NA	17 A	Y
2HVC*TSLX111	RELAY FOXBORO	C071L	CB	288	RH	Y	NA	NA	HF	NA	17 A	Y
2HVC*TSLX155	RELAY FOXBORO	C071L	CB	288	RH	Y	NA	NA	HF	NA	17 A	Y
2HVC*TSLX165	RELAY FOXBORO	C071L	CB	288	RH	Y	NA	NA	HF	NA	17 A	Y
2HVC*TSLX174	RELAY FOXBORO	C071L	CB	288	RH	Y	NA	NA	HF	NA	17 A	Y
2HVC*TSLX198	RELAY FOXBORO	C071L	CB	288	RH	Y	NA	NA	HF	NA	17 A	Y
2HVC*TSLX38A	RELAY FOXBORO	C071L	CB	288	RH	Y	NA	NA	HF	NA	17 A	Y

JOB NAME NMP - UNIT 2
UTILITY NIAGARA MOHAWK

SEISMIC AND DYNAMIC QUALIFICATION SUMMARY AND STATUS REPORT
MASTER LIST OF SAFETY RELATED EQUIPMENT

ENGINEER: STONE & WEBSTER
NSSS SUPPLIER: GENERAL ELECTRIC

EQUIP. ID / SHEC ID	EQUIPMENT DESCRIPTION / MANUFACTURER	PPD NO.	LOCATION BLDG	ELEV	HTG	LOADS SEIS	HYDR	QUAL ANLYS	METH- TEST	NAT FREQ- LOWEST	RRS REF STATUS QUAL	INST
2HVC*TSLX38B	RELAY FOXBORO	C071L	CB	288	RH	Y	NA	NA	HF	NA	17 A	Y
2HVC*TSL111	A/D CONVERTER FOXBORO	C071L	CB	288	RH	Y	NA	NA	HF	NA	17 A	Y
2HVC*TSL155	A/D CONVERTER FOXBORO	C071L	CB	288	RH	Y	NA	NA	HF	NA	17 A	Y
2HVC*TSL165	A/D CONVERTER FOXBORO	C071L	CB	288	RH	Y	NA	NA	HF	NA	17 A	Y
2HVC*TSL174	A/D CONVERTER FOXBORO	C071L	CB	288	RH	Y	NA	NA	HF	NA	17 A	Y
2HVC*TSL198	A/D CONVERTER FOXBORO	C071L	CB	288	RH	Y	NA	NA	HF	NA	17 A	Y
2HVC*TSX34A	RELAY FOXBORO	C071L	CB	288	RH	Y	NA	NA	HF	NA	17 A	Y
2HVC*TSX34B	RELAY FOXBORO	C071L	CB	288	RH	Y	NA	NA	HF	NA	17 A	Y
2HVC*TSX37A	RELAY FOXBORO	C071L	CB	288	RH	Y	NA	NA	HF	NA	17 A	Y
2HVC*TSX37B	RELAY FOXBORO	C071L	CB	288	RH	Y	NA	NA	HF	NA	17 A	Y
2HVC*TS34A	A/D CONVERTER FOXBORO	C071L	CB	288	RH	Y	NA	NA	HF	NA	17 A	Y
2HVC*TS34B	A/D CONVERTER FOXBORO	C071L	CB	288	RH	Y	NA	NA	HF	NA	17 A	Y
2HVC*TS37A	A/D CONVERTER FOXBORO	C071L	CB	288	RH	Y	NA	NA	HF	NA	17 A	Y

JOB NAME NMP - UNIT 2
UTILITY NIAGARA MOHAWK

SEISMIC AND DYNAMIC QUALIFICATION SUMMARY AND STATUS REPORT
MASTER LIST OF SAFETY RELATED EQUIPMENT

ENGINEER: STONE & WEBSTER
NSSS SUPPLIER: GENERAL ELECTRIC

EQUIP. ID / SHEC ID	EQUIPMENT DESCRIPTION / MANUFACTURER	PPD NO.	LOCATION BLDG	ELEV	HTG	LOADS SEIS	HYDR	QUAL METH ANLYS	TEST	NAT FREQ LOWEST	RRS REF STATUS QUAL	INST
2HVC*TS37B	A/D CONVERTER FOXBORO	C071L	CB	288	RH	Y	NA	NA	HF	NA	17 A	Y
2HVC*TT111	RTD CONVERTER FOXBORO	C071L	CB	288	RH	Y	NA	NA	HF	NA	17 A	Y
2HVC*TT155	RTD CONVERTER FOXBORO	C071L	CB	288	RH	Y	NA	NA	HF	NA	17 A	Y
2HVC*TT165	RTD CONVERTER FOXBORO	C071L	CB	288	RH	Y	NA	NA	HF	NA	17 A	Y
2HVC*TT174	RTD CONVERTER FOXBORO	C071L	CB	288	RH	Y	NA	NA	HF	NA	17 A	Y
2HVC*TT198	RTD CONVERTER FOXBORO	C071L	CB	288	RH	Y	NA	NA	HF	NA	17 A	Y
2HVC*TT21A	RTD CONVERTER FOXBORO	C071L	CB	288	RH	Y	NA	NA	HF	NA	17 A	Y
2HVC*TT21B	RTD CONVERTER FOXBORO	C071L	CB	288	RH	Y	NA	NA	HF	NA	17 A	Y
2HVC*TT32A	RTD CONVERTER FOXBORO	C071L	CB	288	RH	Y	NA	NA	HF	NA	17 A	Y
2HVC*TT32B	RTD CONVERTER FOXBORO	C071L	CB	288	RH	Y	NA	NA	HF	NA	17 A	Y
2HVC*TT33A	RTD CONVERTER FOXBORO	C071L	CB	288	RH	Y	NA	NA	HF	NA	17 A	Y
2HVC*TT33B	RTD CONVERTER FOXBORO	C071L	CB	288	RH	Y	NA	NA	HF	NA	17 A	Y
2HVC*TT34A	RTD CONVERTER FOXBORO	C071L	CB	288	RH	Y	NA	NA	HF	NA	17 A	Y

JOB NAME NMP - UNIT 2
UTILITY NIAGARA MOHAWK

SEISMIC AND DYNAMIC QUALIFICATION SUMMARY AND STATUS REPORT
MASTER LIST OF SAFETY RELATED EQUIPMENT

ENGINEER: STONE & WEBSTER
NSSS SUPPLIER: GENERAL ELECTRIC

EQUIP. ID / SHEC ID	EQUIPMENT DESCRIPTION / MANUFACTURER	PPD NO.	LOCATION BLDG	ELEV	HTG	LOADS SEIS	HYDR	QUAL ANLYS	METH TEST	NAT FREQ LONEST	RRS REF STATUS QUAL	INST
2HVC*TT34B	RTD CONVERTER FOXBORO	C071L	CB	288	RH	Y	NA	NA	HF	NA	17 A	Y
2HVC*TT37A	RTD CONVERTER FOXBORO	C071L	CB	288	RH	Y	NA	NA	HF	NA	17 A	Y
2HVC*TT37B	RTD CONVERTER FOXBORO	C071L	CB	288	RH	Y	NA	NA	HF	NA	17 A	Y
2HVC*TT38A	RTD CONVERTER FOXBORO	C071L	CB	288	RH	Y	NA	NA	HF	NA	17 A	Y
2HVC*TT38B	RTD CONVERTER FOXBORO	C071L	CB	288	RH	Y	NA	NA	HF	NA	17 A	Y
2HVC*TT41A	RTD CONVERTER FOXBORO	C071L	CB	288	RH	Y	NA	NA	HF	NA	17 A	Y
2HVC*TT41B	RTD CONVERTER FOXBORO	C071L	CB	288	RH	Y	NA	NA	HF	NA	17 A	Y
2HVC*TT42A	RTD CONVERTER FOXBORO	C071L	CB	288	RH	Y	NA	NA	HF	NA	17 A	Y
2HVC*TT42B	RTD CONVERTER FOXBORO	C071L	CB	288	RH	Y	NA	NA	HF	NA	17 A	Y
2HVC*TT49A	RTD CONVERTER FOXBORO	C071L	CB	288	RH	Y	NA	NA	HF	NA	17 A	Y
2HVC*TT49B	RTD CONVERTER FOXBORO	C071L	CB	288	RH	Y	NA	NA	HF	NA	17 A	Y
2HVC*TT8A	RTD CONVERTER FOXBORO	C071L	CB	288	RH	Y	NA	NA	HF	NA	17 A	Y
2HVC*TT8B	RTD CONVERTER FOXBORO	C071L	CB	288	RH	Y	NA	NA	HF	NA	17 A	Y

JOB NAME NMP - UNIT 2
UTILITY NIAGARA MOHAWK

SEISMIC AND DYNAMIC QUALIFICATION SUMMARY AND STATUS REPORT
MASTER LIST OF SAFETY RELATED EQUIPMENT

ENGINEER: STONE & WEBSTER
NSSS SUPPLIER: GENERAL ELECTRIC

EQUIP. ID / SWEC ID	EQUIPMENT DESCRIPTION / MANUFACTURER	PPD NO.	LOCATION BLDG	ELEV	HTG	LOADS SEIS	HYDR	QUAL ANLYS	METH TEST	NAT FREQ LOWEST	RRS REF STATUS QUAL	INST
2HVC*TYY21A	SIGNAL SELECTOR FOXBORO	C071L	CB	288	RH	Y	NA	NA	HF	NA	17 A	Y
2HVC*TYY21B	SIGNAL SELECTOR FOXOBORO	C071L	CB	288	RH	Y	NA	NA	HF	NA	17 A	Y
2HVC*TYY8A	SIGNAL SELECTOR FOXBORO	C071L	CB	288	RH	Y	NA	NA	HF	NA	17 A	Y
2HVC*TYY8B	SIGNAL SELECTOR FOXBORO	C071L	CB	288	RH	Y	NA	NA	HF	NA	17 A	Y
2HVK*FSLX15A	RELAY FOXBORO	C071L	CB	288	RH	Y	NA	NA	HF	NA	17 A	Y
2HVK*FSLX15B	RELAY FOXBORO	C071L	CB	288	RH	Y	NA	NA	HF	NA	17 A	Y
2HVK*FSL15A	A/D CONVERTER FOXBORO	C071L	CB	288	RH	Y	NA	NA	HF	NA	17 A	Y
2HVK*FSL15B	A/D CONVERTER FOXBORO	C071L	CB	288	RH	Y	NA	NA	HF	NA	17 A	Y
2HVK*FY15A	SQUARE ROOT EXTRACTOR FOXBORO	C071L	CB	288	RH	Y	NA	NA	HF	NA	17 A	Y
2HVK*FY15B	SQUARE ROOT EXTRACTOR FOXBORO	C071L	CB	288	RH	Y	NA	NA	HF	NA	17 A	Y
2HVK*PHRS15A	LOOP POWER SUPPLY FOXBORO	C071L	CB	288	RH	Y	NA	NA	HF	NA	17 A	Y
2HVK*PHRS15B	LOOP POWER SUPPLY FOXBORO	C071L	CB	288	RH	Y	NA	NA	HF	NA	17 A	Y
2HVP*E/I1A	E/I CONVERTER FOXBORO	C071L	CB	280	RH	Y	NA	NA	HF	NA	17 A	Y

JOB NAME NMP - UNIT 2
UTILITY NIAGARA MOHAWK

SEISMIC AND DYNAMIC QUALIFICATION SUMMARY AND STATUS REPORT
MASTER LIST OF SAFETY RELATED EQUIPMENT

ENGINEER: STONE & WEBSTER
NSSS SUPPLIER: GENERAL ELECTRIC

EQUIP. ID / SHEC ID	EQUIPMENT DESCRIPTION / MANUFACTURER	PPD NO.	LOCATION BLDG	LOCATION ELEV	LOCATION MTG	LOADS SEIS	LOADS HYDR	QUAL ANLYS	METH TEST	NAT FREQ LOWEST	RRS REF STATUS QUAL	RRS REF STATUS INST
2HVP*E/I1B	E/I CONVERTER FOXBORO	C071L	CB	288	RH	Y	NA	NA	HF	NA	17 A	Y
2HVP*E/I1C	E/I CONVERTER FOXBORO	C071L	CB	288	RH	Y	NA	NA	HF	NA	17 A	Y
2HVP*E/I1D	E/I CONVERTER FOXBORO	C071L	CB	288	RH	Y	NA	NA	HF	NA	17 A	Y
2HVP*E/I2A	E/I CONVERTER FOXBORO	C071L	CB	288	RH	Y	NA	NA	HF	NA	17 A	Y
2HVP*E/I2B	E/I CONVERTER FOXBORO	C071L	CB	288	RH	Y	NA	NA	HF	NA	17 A	Y
2HVP*E/I6A	E/I CONVERTER FOXBORO	C071L	CB	288	RH	Y	NA	NA	HF	NA	17 A	Y
2HVP*E/I6B	E/I CONVERTER FOXBORO	C071L	CB	288	RH	Y	NA	NA	HF	NA	17 A	Y
2HVP*E/I6C	E/I CONVERTER FOXBORO	C071L	CB	288	RH	Y	NA	NA	HF	NA	17 A	Y
2HVP*E/I6D	E/I CONVERTER FOXBORO	C071L	CB	288	RH	Y	NA	NA	HF	NA	17 A	Y
2HVP*E/I7A	E/I CONVERTER FOXBORO	C071L	CB	288	RH	Y	NA	NA	HF	NA	17 A	Y
2HVP*E/I7B	E/I CONVERTER FOXBORO	C071L	CB	288	RH	Y	NA	NA	HF	NA	17 A	Y
2HVP*HC103	DUAL VOLTAGE SOURCE FOXBORO	C071L	CB	288	RH	Y	NA	NA	HF	NA	17 A	Y
2HVP*HC11A	DUAL VOLTAGE SOURCE FOXBORO	C071L	CB	288	RH	Y	NA	NA	HF	NA	17 A	Y

JOB NAME NMP - UNIT 2
UTILITY NIAGARA MOHAWK

SEISMIC AND DYNAMIC QUALIFICATION SUMMARY AND STATUS REPORT
MASTER LIST OF SAFETY RELATED EQUIPMENT

ENGINEER: STONE & WEBSTER
NSSS SUPPLIER: GENERAL ELECTRIC

EQUIP. ID / SHEC ID	EQUIPMENT DESCRIPTION / MANUFACTURER	PPD NO.	LOCATION BLDG	ELEV	HTG	LOADS SEIS	HYDR	QUAL ANLYS	METH TEST	NAT FREQ LOWEST	RRS REF STATUS QUAL	INST
2HVP*HC11B	DUAL VOLTAGE SOURCE FOXBORO	C071L	CB	288	RH	Y	NA	NA	HF	NA	17 A	Y
2HVP*TC103	CONTROLLER FOXBORO	C071L	CB	288	RH	Y	NA	NA	HF	NA	17 A	Y
2HVP*TC11A	CONTROLLER FOXBORO	C071L	CB	288	RH	Y	NA	NA	HF	NA	17 A	Y
2HVP*TC11B	CONTROLLER FOXBORO	C071L	CB	288	RH	Y	NA	NA	HF	NA	17 A	Y
2HVP*TSHX10A	RELAY FOXBORO	C071L	CB	288	RH	Y	NA	NA	HF	NA	17 A	Y
2HVP*TSHX10B	RELAY FOXBORO	C071L	CB	288	RH	Y	NA	NA	HF	NA	17 A	Y
2HVP*TSHX107	RELAY FOXBORO	C071L	CB	288	RH	Y	NA	NA	HF	NA	17 A	Y
2HVP*TSH10A	A/D CONVERTER FOXBORO	C071L	CB	288	RH	Y	N	N	HF	NA	17 A	Y
2HVP*TSH10B	A/D CONVERTER FOXBORO	C071L	CB	288	RH	Y	N	N	HF	NA	17 A	Y
2HVP*TSH107	A/D CONVERTER FOXBORO	C071L	CB	288	RH	Y	N	N	HF	NA	17 A	Y
2HVP*TSLX10A	RELAY FOXBORO	C071L	CB	288	RH	Y	NA	NA	HF	NA	17 A	Y
2HVP*TSLX10B	RELAY FOXBORO	C071L	CB	288	RH	Y	NA	NA	HF	NA	17 A	Y
2HVP*TSLX107	RELAY FOXBORO	C071L	CB	288	RH	Y	NA	NA	HF	NA	17 A	Y

JOB NAME NMP - UNIT 2
UTILITY NIAGARA MOHAWK

SEISMIC AND DYNAMIC QUALIFICATION SUMMARY AND STATUS REPORT
MASTER LIST OF SAFETY RELATED EQUIPMENT

ENGINEER: STONE & WEBSTER
NSSS SUPPLIER: GENERAL ELECTRIC

EQUIP. ID / SHEC ID	EQUIPMENT DESCRIPTION / MANUFACTURER	PPD NO.	LOCATION BLDG	ELEV	HTG	LOADS SEIS	HYDR	QUAL ANLYS	METH TEST	NAT FREQ LOWEST	RRS REF STATUS QUAL	INST
2HVP*TSL10A	A/D CONVERTER FOXBORO	C071L	CB	288	RH	Y	NA	NA	HF	NA	17 A	Y
2HVP*TSL10B	A/D CONVERTER FOXBORO	C071L	CB	288	RH	Y	NA	NA	NA	NA	17 A	Y
2HVP*TSL107	A/D CONVERTER FOXBORO	C071L	CB	288	RH	Y	NA	NA	HF	NA	17 A	Y
2HVP*TT10A	RTD CONVERTER FOXBORO	C071L	CB	288	RH	Y	NA	NA	HF	NA	17 A	Y
2HVP*TT10B	RTD CONVERTER FOXBORO	C071L	CB	288	RH	Y	NA	NA	HF	NA	17 A	Y
2HVP*TT103	RTD CONVERTER FOXBORO	C071L	CB	288	RH	Y	NA	NA	HF	NA	17 A	Y
2HVP*TT107	RTD CONVERTER FOXBORO	C071L	CB	288	RH	Y	NA	NA	HF	NA	17 A	Y
2HVP*TT11A	RTD CONVERTER FOXBORO	C071L	CB	288	RH	Y	NA	NA	HF	NA	17 A	Y
2HVP*TT11B	RTD CONVERTER FOXBORO	C071L	CB	288	RH	Y	NA	NA	HF	NA	17 A	Y
2HVP*TYV103	LOGIC TO RELAY CONVERTER FOXBORO	C071L	CB	288	RH	Y	NA	NA	HF	NA	17 A	Y
2HVP*TYV11A	LOGIC TO RELAY CONVERTER FOXBORO	C071L	CB	288	RH	Y	NA	NA	HF	NA	17 A	Y
2HVP*TYV11B	LOGIC TO RELAY CONVERTER FOXBORO	C071L	CB	288	RH	Y	NA	NA	HF	NA	17 A	Y
2HVP*TYH103	LOGIC TO RELAY CONVERTER FOXBORO	C071L	CB	288	RH	Y	NA	NA	HF	NA	17 A	Y

JOB NAME NMP - UNIT 2
UTILITY NIAGARA MOHAWK

SEISMIC AND DYNAMIC QUALIFICATION SUMMARY AND STATUS REPORT
MASTER LIST OF SAFETY RELATED EQUIPMENT

ENGINEER: STONE & WEBSTER
NSSS SUPPLIER: GENERAL ELECTRIC

EQUIP. ID / SHEC ID	EQUIPMENT DESCRIPTION / MANUFACTURER	PPD NO.	LOCATION BLDG	ELEV	MTG	LOADS SEIS	HYDR	QUAL ANLYS	METH TEST	NAT FREQ LOWEST	RRS REF STATUS QUAL	INST
2HVP*TYH11A	LOGIC TO RELAY CONVERTER FOXBORO	C071L	CB	288	RH	Y	NA	NA	HF	NA	17 A	Y
2HVP*TYH11B	LOGIC TO RELAY CONVERTER FOXBORO	C071L	CB	288	RH	Y	NA	NA	HF	NA	17 A	Y
2HVP*TYX103	CONTACT INPUT ISOLATOR FOXBORO	C071L	CB	288	RH	Y	NA	NA	HF	NA	17 A	Y
2HVP*TYX11A	CONTACT INPUT ISOLATOR FOXBORO	C071L	CB	288	RH	Y	NA	NA	HF	NA	17 A	Y
2HVP*TYX11B	CONTACT INPUT ISOLATOR FOXBORO	C071L	CB	288	RH	Y	NA	NA	HF	NA	17 A	Y
2HVP*TYY103	CONTACT INPUT ISOLATOR FOXBORO	C071L	CB	288	RH	Y	NA	NA	HF	NA	17 A	Y
2HVP*TYY11A	CONTACT INPUT ISOLATOR FOXBORO	C071L	CB	288	RH	Y	NA	NA	HF	NA	17 A	Y
2HVP*TYY11B	CONTACT INPUT ISOLATOR FOXBORO	C071L	CB	288	RH	Y	NA	NA	HF	NA	17 A	Y
2IAS*PSHX101	RELAY FOXBORO	C071L	CB	288	RH	Y	NA	NA	HF	NA	17 A	Y
2IAS*PSHX106	RELAY FOXBORO	C071L	CB	288	RH	Y	NA	NA	HF	NA	17 A	Y
2IAS*PSH101	A/D CONVERTER FOXBORO	C071L	CB	288	RH	Y	NA	NA	HF	NA	17 A	Y
2IAS*PSH106	A/D CONVERTER FOXBORO	C071L	CB	288	RH	Y	NA	NA	HF	NA	17 A	Y
2IAS*PSLL101	A/D CONVERTER FOXBORO	C071L	CB	288	RH	Y	NA	NA	HF	NA	17 A	Y

JOB NAME NMP - UNIT 2
UTILITY NIAGARA MOHAWK

SEISMIC AND DYNAMIC QUALIFICATION SUMMARY AND STATUS REPORT
MASTER LIST OF SAFETY RELATED EQUIPMENT

ENGINEER: STONE & WEBSTER
NSSS SUPPLIER: GENERAL ELECTRIC

EQUIP. ID / SHEC ID	EQUIPMENT DESCRIPTION / MANUFACTURER	PPD NO.	LOCATION BLDG	LOCATION ELEV	LOCATION HTG	LOADS SEIS	LOADS HYDR	QUAL ANLYS	METH TEST	NAT FREQ LOWEST	RRS REF STATUS QUAL	RRS REF STATUS INST
2IAS*PSLL186	A/D CONVERTER FOXBORO	C071L	CB	288	RH	Y	NA	NA	HF	NA	17 A	Y
2IAS*PSLX181	RELAY FOXBORO	C071L	CB	288	RH	Y	NA	NA	HF	NA	17 A	Y
2IAS*PSLX186	RELAY FOXBORO	C071L	CB	288	RH	Y	NA	NA	HF	NA	17 A	Y
2IAS*PSLX230	RELAY FOXBORO	C071L	CB	288	RH	Y	NA	NA	HF	NA	17 A	Y
2IAS*PSLX231	RELAY FOXBORO	C071L	CB	288	RH	Y	NA	NA	HF	NA	17 A	Y
2IAS*PSLX232	RELAY FOXBORO	C071L	CB	288	RH	Y	NA	NA	HF	NA	17 A	Y
2IAS*PSLX233	RELAY FOXBORO	C071L	CB	288	RH	Y	NA	NA	HF	NA	17 A	Y
2IAS*PSLX234	RELAY FOXBORO	C071L	CB	288	RH	Y	NA	NA	HF	NA	17 A	Y
2IAS*PSLX235	RELAY FOXBORO	C071L	CB	288	RH	Y	NA	NA	HF	NA	17 A	Y
2IAS*PSLX236	RELAY FOXBORO	C071L	CB	288	RH	Y	NA	NA	HF	NA	17 A	Y
2IAS*PSLY181	RELAY FOXBORO	C071L	CB	288	RH	Y	NA	NA	HF	NA	17 A	Y
2IAS*PSLY186	RELAY FOXBORO	C071L	CB	288	RH	Y	NA	NA	HF	NA	17 A	Y
2IAS*PSL181	A/D CONVERTER FOXBORO	C071L	CB	288	RH	Y	NA	NA	HF	NA	17 A	Y

JOB NAME NMP - UNIT 2
UTILITY NIAGARA MOHAWK

SEISMIC AND DYNAMIC QUALIFICATION SUMMARY AND STATUS REPORT
MASTER LIST OF SAFETY RELATED EQUIPMENT

ENGINEER: STONE & WEBSTER
NSSS SUPPLIER: GENERAL ELECTRIC

EQUIP. ID / SWEC ID	EQUIPMENT DESCRIPTION / MANUFACTURER	PPD NO.	LOCATION BLDG	LOCATION ELEV	LOCATION MTG	LOADS SEIS	LOADS HYDR	QUAL ANLYS	METH TEST	NAT FREQ LOWEST	RRS REF STATUS QUAL	RRS REF STATUS INST
2IAS*PSL186	A/D CONVERTER FOXBORO	C071L	CB	288	RH	Y	NA	NA	HF	NA	17 A	Y
2IAS*PSL230	A/D CONVERTER FOXBORO	C071L	CB	288	RH	Y	NA	NA	HF	NA	17 A	Y
2IAS*PSL231	A/D CONVERTER FOXBORO	C071L	CB	288	RH	Y	NA	NA	HF	NA	17 A	Y
2IAS*PSL232	A/D CONVERTER FOXBORO	C071L	CB	288	RH	Y	NA	NA	HF	NA	17 A	Y
2IAS*PSL233	A/D CONVERTER FOXBORO	C071L	CB	288	RH	Y	NA	NA	HF	NA	17 A	Y
2IAS*PSL234	A/D CONVERTER FOXBORO	C071L	CB	288	RH	Y	NA	NA	HF	NA	17 A	Y
2IAS*PSL235	A/D CONVERTER FOXBORO	C071L	CB	288	RH	Y	NA	NA	HF	NA	17 A	Y
2IAS*PSL236	A/D CONVERTER FOXBORO	C071L	CB	288	RH	Y	NA	NA	HF	NA	17 A	Y
2IAS*PSNH181	A/D CONVERTER FOXBORO	C071L	CB	288	RH	Y	NA	NA	HF	NA	17 A	Y
2IAS*PSNH186	A/D CONVERTER FOXBORO	C071L	CB	288	RH	Y	NA	NA	HF	NA	17 A	Y
2IAS*PSNL181	A/D CONVERTER FOXBORO	C071L	CB	288	RH	Y	NA	NA	HF	NA	17 A	Y
2IAS*PSNL186	A/D CONVERTER FOXBORO	C071L	CB	288	RH	Y	NA	NA	HF	NA	17 A	Y
2IAS*PSNX181	RELAY FOXBORO	C071L	CB	288	RH	Y	NA	NA	HF	NA	17 A	Y

JOB NAME NMP - UNIT 2
UTILITY NIAGARA MOHAWK

SEISMIC AND DYNAMIC QUALIFICATION SUMMARY AND STATUS REPORT
MASTER LIST OF SAFETY RELATED EQUIPMENT

ENGINEER: STONE & WEBSTER
NSSS SUPPLIER: GENERAL ELECTRIC

EQUIP. ID / SHEC ID	EQUIPMENT DESCRIPTION / MANUFACTURER	PPD NO.	LOCATION BLDG	ELEV	HTG	LOADS SEIS	HYDR	QUAL ANLYS	METH TEST	NAT FREQ LOWEST	RRS REF	STATUS QUAL	STATUS INST
2IAS*PSNX186	RELAY FOXBORO	C071L	CB	288	RH	Y	NA	NA	HF	NA	17	A	Y
2IAS*PSNY181	RELAY FOXBORO	C071L	CB	288	RH	Y	NA	NA	HF	NA	17	A	Y
2IAS*PSNY186	RELAY FOXBORO	C071L	CB	288	RH	Y	NA	NA	HF	NA	17	A	Y
2IAS*PHRS181	LOOP POWER SUPPLY FOXBORO	C071L	CB	288	RH	Y	NA	NA	HF	NA	17	A	Y
2IAS*PHRS186	LOOP POWER SUPPLY FOXBORO	C071L	CB	288	RH	Y	NA	NA	HF	NA	17	A	Y
2IAS*PHRS230	LOOP POWER SUPPLY FOXBORO	C071L	CB	288	RH	Y	NA	NA	HF	NA	17	A	Y
2IAS*PHRS231	LOOP POWER SUPPLY FOXBORO	C071L	CB	288	RH	Y	NA	NA	HF	NA	17	A	Y
2IAS*PHRS232	LOOP POWER SUPPLY FOXBORO	C071L	CB	288	RH	Y	NA	NA	HF	NA	17	A	Y
2IAS*PHRS233	LOOP POWER SUPPLY FOXBORO	C071L	CB	288	RH	Y	NA	NA	HF	NA	17	A	Y
2IAS*PHRS234	LOOP POWER SUPPLY FOXBORO	C071L	CB	288	RH	Y	NA	NA	HF	NA	17	A	Y
2IAS*PHRS235	LOOP POWER SUPPLY FOXBORO	C071L	CB	288	RH	Y	NA	NA	HF	NA	17	A	Y
2IAS*PHRS236	LOOP POWER SUPPLY FOXBORO	C071L	CB	288	RH	Y	NA	NA	HF	NA	17	A	Y
2ICS*E/I115	INPUT/OUTPUT CONVERTER FOXBORO	C071L	CB	288	RH	Y	NA	NA	HF	NA	17	A	

JOB NAME NMP - UNIT 2
UTILITY NIAGARA MOHAWK

SEISMIC AND DYNAMIC QUALIFICATION SUMMARY AND STATUS REPORT
MASTER LIST OF SAFETY RELATED EQUIPMENT

ENGINEER: STONE & WEBSTER
NSSS SUPPLIER: GENERAL ELECTRIC

EQUIP. ID / SWEC ID	EQUIPMENT DESCRIPTION / MANUFACTURER	PPD NO.	LOCATION BLDG	LOCATION ELEV	LOCATION HTG	LOADS SEIS	LOADS HYDR	QUAL ANLYS	METH TEST	NAT FREQ LOWEST	RRS REF STATUS QUAL	RRS REF STATUS INST
2ICS*PC115	CONTROLLER FOXBORO	C071L	CB	288	RH	Y	N	N	NF	NA	17 A	
2ICS*PNRS115	INPUT/OUTPUT CONVERTER FOXBORO	C071L	CB	288	RH	Y	N	N	NF	NA	17 A	
2RHS*FYX36A	SQUARE ROOT CONVERTER FOXBORO	C071L	CB	288	RH	Y	N	N	NF	NA	17 A	
2RHS*FYX36B	SQUARE ROOT CONVERTER FOXBORO	C071L	CB	288	RH	Y	N	N	NF	NA	17 A	
2RHS*FYX64A	SQUARE ROOT CONVERTER FOXBORO	C071L	CB	288	RH	Y	N	N	NF	NA	17 A	
2RHS*FYX64B	SQUARE ROOT CONVERTER FOXBORO	C071L	CB	288	RH	Y	N	N	NF	NA	17 A	
2RHS*PNRS63A	POWER SUPPLY FOXBORO	C071L	CB	288	RH	Y	N	N	NF	NA	17 A	
2RHS*PNRS63B	POWER SUPPLY FOXBORO	C071L	CB	288	RH	Y	N	N	NF	NA	17 A	
2RHS*PNRS64A	POWER SUPPLY FOXBORO	C071L	CB	288	RH	Y	N	N	NF	NA	17 A	
2RHS*PNRS64B	POWER SUPPLY FOXBORO	C071L	CB	288	RH	Y	N	N	NF	NA	17 A	
2SFC*FSLL58A	A/D CONVERTER FOXBORO	C071L	CB	288	RH	Y	NA	NA	NF	NA	17 A	Y
2SFC*FSLL58B	A/D CONVERTER FOXBORO	C071L	CB	288	RH	Y	NA	NA	NF	NA	17 A	Y
2SFC*FSLX36A	RELAY FOXBORO	C071L	CB	288	RH	Y	NA	NA	NF	NA	17 A	Y

JOB NAME NMP - UNIT 2
UTILITY NIAGARA MOHAWK

SEISMIC AND DYNAMIC QUALIFICATION SUMMARY AND STATUS REPORT
MASTER LIST OF SAFETY RELATED EQUIPMENT

ENGINEER: STONE & WEBSTER
NSSS SUPPLIER: GENERAL ELECTRIC

EQUIP. ID / SHEC ID	EQUIPMENT: DESCRIPTION / MANUFACTURER	PPD NO.	LOCATION: BLDG	ELEV	MTG	LOADS: SEIS	HYDR	QUAL ANLYS	HETH- TEST	NAT FREQ- LOWEST	RRS REF STATUS: QUAL	INST
2SFC*FSLX36B	RELAY FOXBORO	C071L	CB	288	RH	Y	NA	NA	HF	NA	17 A	Y
2SFC*FSLX58A	RELAY FOXBORO	C071L	CB	288	RH	Y	NA	NA	HF	NA	17 A	Y
2SFC*FSLX58B	RELAY FOXBORO	C071L	CB	288	RH	Y	NA	NA	HF	NA	17 A	Y
2SFC*FSLY58A	RELAY FOXBORO	C071L	CB	288	RH	Y	NA	NA	HF	NA	17 A	Y
2SFC*FSLY58B	RELAY FOXBORO	C071L	CB	288	RH	Y	NA	NA	HF	NA	17 A	Y
2SFC*FSL36A	A/D CONVERTER FOXBORO	C071L	CB	288	RH	Y	NA	NA	HF	NA	17 A	Y
2SFC*FSL36B	A/D CONVERTER FOXBORO	C071L	CB	288	RH	Y	NA	NA	HF	NA	17 A	Y
2SFC*FSL58A	A/D CONVERTER FOXBORO	C071L	CB	288	RH	Y	NA	NA	HF	NA	17 A	Y
2SFC*FSL58B	A/D CONVERTER FOXBORO	C071L	CB	288	RH	Y	NA	NA	HF	NA	17 A	Y
2SFC*FYX36A	SQUARE ROOT EXTRACTOR FOXBORO	C071L	CB	288	RH	Y	NA	NA	HF	NA	17 A	Y
2SFC*FYX36B	SQUARE ROOT EXTRACTOR FOXBORO	C071L	CB	288	RH	Y	NA	NA	HF	NA	17 A	Y
2SFC*FYX58A	SQUARE ROOT EXTRACTOR FOXBORO	C071L	CB	288	RH	Y	NA	NA	HF	NA	17 A	Y
2SFC*FYX58B	SQUARE ROOT EXTRACTOR FOXBORO	C071L	CB	288	RH	Y	NA	NA	HF	NA	17 A	Y

JOB NAME NMP - UNIT 2
UTILITY NIAGARA MOHAWK

SEISMIC AND DYNAMIC QUALIFICATION SUMMARY AND STATUS REPORT
MASTER LIST OF SAFETY RELATED EQUIPMENT

ENGINEER: STONE & WEBSTER
NSSS SUPPLIER: GENERAL ELECTRIC

EQUIP. ID / SHEC ID	EQUIPMENT DESCRIPTION / MANUFACTURER	PPD NO.	LOCATION BLDG	LOCATION ELEV	LOCATION HTG	LOADS SEIS	LOADS HYDR	QUAL ANLYS	METH TEST	NAT FREQ LOWEST	RRS REF STATUS QUAL	RRS REF STATUS INST
2SFC*LSHX32A	RELAY FOXBORO	C071L	CB	288	RH	Y	NA	NA	HF	NA	17 A	Y
2SFC*LSHX32B	RELAY FOXBORO	C071L	CB	288	RH	Y	NA	NA	HF	NA	17 A	Y
2SFC*LSH32A	A/D CONVERTER FOXBORO	C071L	CB	288	RH	Y	NA	NA	HF	NA	17 A	Y
2SFC*LSH32B	A/D CONVERTER FOXBORO	C071L	CB	288	RH	Y	NA	NA	HF	NA	17 A	Y
2SFC*LSLX32A	RELAY FOXBORO	C071L	CB	288	RH	Y	NA	NA	HF	NA	17 A	Y
2SFC*LSLX32B	RELAY FOXBORO	C071L	CB	288	RH	Y	NA	NA	HF	NA	17 A	Y
2SFC*LSL32A	A/D CONVERTER FOXBORO	C071L	CB	288	RH	Y	NA	NA	HF	NA	17 A	Y
2SFC*LSL32B	A/D CONVERTER FOXBORO	C071L	CB	288	RH	Y	NA	NA	HF	NA	17 A	Y
2SFC*PSLX3A	RELAY FOXBORO	C071L	CB	288	RH	Y	NA	NA	HF	NA	17 A	Y
2SFC*PSLX3B	RELAY FOXBORO	C071L	CB	288	RH	Y	NA	NA	HF	NA	17 A	Y
2SFC*PSLX30A	RELAY FOXBORO	C071L	CB	288	RH	Y	NA	NA	HF	NA	17 A	Y
2SFC*PSLX30B	RELAY FOXBORO	C071L	CB	288	RH	Y	NA	NA	HF	NA	17 A	Y
2SFC*PSL3A	A/D CONVERTER FOXBORO	C071L	CB	288	RH	Y	NA	NA	HF	NA	17 A	Y

JOB NAME NMP - UNIT 2
UTILITY NIAGARA MOHAWK

SEISMIC AND DYNAMIC QUALIFICATION SUMMARY AND STATUS REPORT
MASTER LIST OF SAFETY RELATED EQUIPMENT

ENGINEER: STONE & WEBSTER
NSSS SUPPLIER: GENERAL ELECTRIC

EQUIP. ID / SHEC ID	EQUIPMENT DESCRIPTION / MANUFACTURER	PPD NO.	LOCATION BLDG	LOCATION ELEV	LOCATION MTG	LOADS SEIS	LOADS HYDR	QUAL ANLYS	METH TEST	NAT FREQ LOWEST	RRS REF	STATUS QUAL	STATUS INST
2SFC*PSL3B	A/D CONVERTER FOXBORO	C071L	CB	288	RH	Y	NA	NA	HF	NA	17	A	Y
2SFC*PSL30A	A/D CONVERTER FOXBORO	C071L	CB	288	RH	Y	NA	NA	HF	NA	17	A	Y
2SFC*PSL30B	A/D CONVERTER FOXBORO	C071L	CB	288	RH	Y	NA	NA	HF	NA	17	A	Y
2SFC*PHRS3A	LOOP POWER SUPPLY FOXBORO	C071L	CB	288	RH	Y	NA	NA	HF	NA	17	A	Y
2SFC*PHRS3B	LOOP POWER SUPPLY FOXBORO	C071L	CB	288	RH	Y	NA	NA	HF	NA	17	A	Y
2SFC*PHRS30A	LOOP POWER SUPPLY FOXBORO	C071L	CB	288	RH	Y	NA	NA	HF	NA	17	A	Y
2SFC*PHRS30B	LOOP POWER SUPPLY FOXBORO	C071L	CB	288	RH	Y	NA	NA	HF	NA	17	A	Y
2SFC*PHRS32A	LOOP POWER SUPPLY FOXBORO	C071L	CB	288	RH	Y	NA	NA	HF	NA	17	A	Y
2SFC*PHRS32B	LOOP POWER SUPPLY FOXBORO	C071L	CB	288	RH	Y	NA	NA	HF	NA	17	A	Y
2SFC*PHRS36A	LOOP POWER SUPPLY FOXBORO	C071L	CB	288	RH	Y	NA	NA	HF	NA	17	A	Y
2SFC*PHRS36B	LOOP POWER SUPPLY FOXBORO	C071L	CB	288	RH	Y	NA	NA	HF	NA	17	A	Y
2SFC*PHRS58A	LOOP POWER SUPPLY FOXBORO	C071L	CB	288	RH	Y	NA	NA	HF	NA	17	A	Y
2SFC*PHRS58B	LOOP POWER SUPPLY FOXBORO	C071L	CB	288	RH	Y	NA	NA	HF	NA	17	A	Y

JOB NAME NMP - UNIT 2
UTILITY NIAGARA MOHAWK

SEISMIC AND DYNAMIC QUALIFICATION SUMMARY AND STATUS REPORT
MASTER LIST OF SAFETY RELATED EQUIPMENT

ENGINEER: STONE & WEBSTER
NSSS SUPPLIER: GENERAL ELECTRIC

EQUIP. ID / SHEC ID	EQUIPMENT DESCRIPTION / MANUFACTURER	PPD NO.	LOCATION BLDG	ELEV	HTG	LOADS SEIS	HYDR	QUAL ANLYS	METH TEST	NAT FREQ LOWEST	RRS REF STATUS QUAL	INST
2SFC*TSHX31A	RELAY FOXBORO	C071L	CB	288	RH	Y	NA	NA	HF	NA	17 A	Y
2SFC*TSHX31B	RELAY FOXBORO	C071L	CB	288	RH	Y	NA	NA	HF	NA	17 A	Y
2SFC*TSHX8A	RELAY FOXBORO	C071L	CB	288	RH	Y	NA	NA	HF	NA	17 A	Y
2SFC*TSHX8B	RELAY FOXBORO	C071L	CB	288	RH	Y	NA	NA	HF	NA	17 A	Y
2SFC*TSH31A	A/D CONVERTER FOXBORO	C071L	CB	288	RH	Y	NA	NA	HF	NA	17 A	Y
2SFC*TSH31B	A/D CONVERTER FOXBORO	C071L	CB	288	RH	Y	NA	NA	HF	NA	17 A	Y
2SFC*TSH8A	A/D CONVERTER FOXBORO	C071L	CB	288	RH	Y	NA	NA	HF	NA	17 A	Y
2SFC*TSH8B	A/D CONVERTER FOXBORO	C071L	CB	288	RH	Y	NA	NA	HF	NA	17 A	Y
2SFC*TT31A	RTD CONVERTER FOXBORO	C071L	CB	288	RH	Y	N	N	HF	NA	17 A	Y
2SFC*TT31B	RTD CONVERTER FOXBORO	C071L	CB	288	RH	Y	N	N	HF	NA	17 A	Y
2SFC*TT8A	RTD CONVERTER FOXBORO	C071L	CB	288	RH	Y	NA	NA	HF	NA	17 A	Y
2SFC*TT8B	RTD CONVERTER FOXBORO	C071L	CB	288	RH	Y	NA	NA	HF	NA	17 A	Y
2SHP*E/I35A	E/I CONVERTER FOXBORO	C071L	CB	288	RH	Y	NA	NA	HF	NA	17 A	Y

JOB NAME NMP - UNIT 2
UTILITY NIAGARA MOHAWK

SEISMIC AND DYNAMIC QUALIFICATION SUMMARY AND STATUS REPORT
MASTER LIST OF SAFETY RELATED EQUIPMENT

ENGINEER: STONE & WEBSTER
NSSS SUPPLIER: GENERAL ELECTRIC

EQUIP. ID / SWEC ID	EQUIPMENT DESCRIPTION / MANUFACTURER	PPD NO.	LOCATION BLDG	ELEV	HTG	LOADS SEIS	HYDR	QUAL ANLYS	METH TEST	NAT FREQ LOWEST	RRS REF STATUS QUAL	INST
2SHP*E/I35B	E/I CONVERTER FOXBORO	C071L	CB	288	RH	Y	NA	NA	HF	NA	17 A	Y
2SHP*E/I54A	INPUT/OUTPUT CONVERTER FOXBORO	C071L	CB	288	RH	Y	NA	NA	HF	NA	17 A	Y
2SHP*E/I54B	INPUT/OUTPUT CONVERTER FOXBORO	C071L	CB	288	RH	Y	NA	NA	HF	NA	17 A	Y
2SHP*FSLX29A	RELAY FOXBORO	C071L	CB	288	RH	Y	NA	NA	HF	NA	17 A	Y
2SHP*FSLX29B	RELAY FOXBORO	C071L	CB	288	RH	Y	NA	NA	HF	NA	17 A	Y
2SHP*FSLX523	RELAY FOXBORO	C071L	CB	288	RH	Y	NA	NA	HF	NA	17 A	Y
2SHP*FSLX534	RELAY FOXBORO	C071L	CB	288	RH	Y	NA	NA	HF	NA	17 A	Y
2SHP*FSLX535	RELAY FOXBORO	C071L	CB	288	RH	Y	NA	NA	HF	NA	17 A	Y
2SHP*FSLX76A	RELAY FOXBORO	C071L	CB	288	RH	Y	NA	NA	HF	NA	17 A	Y
2SHP*FSLX76B	RELAY FOXBORO	C071L	CB	288	RH	Y	NA	NA	HF	NA	17 A	Y
2SHP*FSLX96A	RELAY FOXBORO	C071L	CB	288	RH	Y	NA	NA	HF	NA	17 A	Y
2SHP*FSLX96B	RELAY FOXBORO	C071L	CB	288	RH	Y	NA	NA	HF	NA	17 A	Y
2SHP*FSLX96C	RELAY FOXBORO	C071L	CB	288	RH	Y	NA	NA	HF	NA	17 A	Y

JOB NAME NMP - UNIT 2
UTILITY NIAGARA MOHAWK

SEISMIC AND DYNAMIC QUALIFICATION SUMMARY AND STATUS REPORT
MASTER LIST OF SAFETY RELATED EQUIPMENT

ENGINEER: STONE & WEBSTER
NSSS SUPPLIER: GENERAL ELECTRIC

EQUIP. ID / SHEC ID	EQUIPMENT: DESCRIPTION / MANUFACTURER	PFD NO.	LOCATION: BLDG	ELEV	HTG	LOADS: SEIS	HYDR	QUAL ANLYS	METH- TEST	NAT FREQ- LOWEST	RRS REF STATUS: QUAL	INST
2SHP*FSLX96D	RELAY FOXBORO	C071L	CB	288	RH	Y	NA	NA	HF	NA	17 A	Y
2SHP*FSLX96E	RELAY FOXBORO	C071L	CB	288	RH	Y	NA	NA	HF	NA	17 A	Y
2SHP*FSLX96F	RELAY FOXBORO	C071L	CB	288	RH	Y	NA	NA	HF	NA	17 A	Y
2SHP*FSL29A	A/D CONVERTER FOXBORO	C071L	CB	288	RH	Y	NA	NA	HF	NA	17 A	Y
2SHP*FSL29B	A/D CONVERTER FOXBORO	C071L	CB	288	RH	Y	NA	NA	HF	NA	17 A	Y
2SHP*FSL523	A/D CONVERTER FOXBORO	C071L	CB	288	RH	Y	NA	NA	HF	NA	17 A	Y
2SHP*FSL534	A/D CONVERTER FOXBORO	C071L	CB	298	RH	Y	NA	NA	HF	NA	17 A	Y
2SHP*FSL535	A/D CONVERTER FOXBORO	C071L	CB	288	RH	Y	NA	NA	HF	NA	17 A	Y
2SHP*FSL76A	A/D CONVERTER FOXBORO	C071L	CB	288	RH	Y	NA	NA	NA	NA	17 A	Y
2SHP*FSL76B	A/D CNVERTER FOXBORO	C071L	CB	288	RH	Y	NA	NA	HF	NA	17 A	Y
2SHP*FSL96A	A/D CONVERTER FOXBORO	C071L	CB	288	RH	Y	NA	NA	HF	NA	17 A	Y
2SHP*FSL96B	A/D CONVERTER FOXBORO	C071L	CB	288	RH	Y	NA	NA	HF	NA	17 A	Y
2SHP*FSL96C	A/D CONVERTER FOXBORO	C071L	CB	288	RH	Y	NA	NA	HF	NA	17 A	Y

JOB NAME NMP - UNIT 2
UTILITY NIAGARA MOHAWK

SEISMIC AND DYNAMIC QUALIFICATION SUMMARY AND STATUS REPORT
MASTER LIST OF SAFETY RELATED EQUIPMENT

ENGINEER: STONE & WEBSTER
NSSS SUPPLIER: GENERAL ELECTRIC

EQUIP. ID / SWEC ID	EQUIPMENT DESCRIPTION / MANUFACTURER	PPD NO.	LOCATION BLDG	ELEV	HTG	LOADS SEIS	HYDR	QUAL ANLYS	METH TEST	NAT FREQ LOWEST	RRS REF STATUS QUAL	INST
2SHP*FSL96D	A/D CONVERTER FOXBORO	C071L	CB	288	RH	Y	NA	NA	HF	NA	17 A	Y
2SHP*FSL96E	A/D CONVERTER FOXBORO	C071L	CB	288	RH	Y	NA	NA	HF	NA	17 A	Y
2SHP*FSL96F	A/D CONVERTER FOXBORO	C071L	CB	288	RH	Y	NA	NA	HF	NA	17 A	Y
2SHP*FYH523	SIGNAL DISTRIBUTION FOXBORO	C071L	CB	288	RH	Y	NA	NA	HF	NA	17 A	Y
2SHP*FYH534	A/D CONVERTER FOXBORO	C071L	CB	288	RH	Y	NA	NA	HF	NA	17 A	Y
2SHP*FYX29A	SQUARE ROOT EXTRACTOR FOXBORO	C071L	CB	288	RH	Y	NA	NA	HF	NA	17 A	Y
2SHP*FYX29B	SQUARE ROOT EXTRACTOR FOXBORO	C071L	CB	288	RH	Y	NA	NA	HF	NA	17 A	Y
2SHP*FYX523	SQUARE ROOT EXTRACTOR FOXBORO	C071L	CB	288	RH	Y	NA	NA	HF	NA	17 A	Y
2SHP*FYX533	SQUARE ROOT EXTRACTOR FOXBORO	C071L	CB	288	RH	Y	NA	NA	HF	NA	17 A	Y
2SHP*FYX534	SQUARE ROOT EXTRACTOR FOXBORO	C071L	CB	288	RH	Y	NA	NA	HF	NA	17 A	Y
2SHP*FYX535	SQUARE ROOT EXTRACTOR FOXBORO	C071L	CB	288	RH	Y	NA	NA	HF	NA	17 A	Y
2SHP*FYX54A	SQUARE ROOT CONVERTER FOXBORO	C071L	CB	288	RH	Y	NA	NA	HF	NA	17 A	Y
2SHP*FYX54B	SQUARE ROOT CONVERTER FOXBORO	C071L	CB	288	RH	Y	NA	NA	HF	NA	17 A	Y

JOB NAME NMP - UNIT 2
UTILITY NIAGARA MOHAWK

SEISMIC AND DYNAMIC QUALIFICATION SUMMARY AND STATUS REPORT
MASTER LIST OF SAFETY RELATED EQUIPMENT

ENGINEER: STONE & WEBSTER
NSSS SUPPLIER: GENERAL ELECTRIC

EQUIP. ID / SHEC ID	EQUIPMENT: DESCRIPTION / MANUFACTURER	PPD NO.	LOCATION: BLDG	ELEV	MTG	LOADS: SEIS	HYDR	QUAL ANLYS	METH- TEST	NAT FREQ- LOWEST	RRS REF STATUS: QUAL	INST
2SHP*FYX567	SQUARE ROOT EXTRACTOR FOXBORO	C071L	CB	288	RH	Y	NA	NA	HF	NA	17 A	Y
2SHP*FYX76A	SQUARE ROOT EXTRACTOR FOXBORO	C071L	CB	288	RH	Y	NA	NA	HF	NA	17 A	Y
2SHP*FYX76B	SQUARE ROOT EXTRACTOR FOXBORO	C071L	CB	288	RH	Y	NA	NA	HF	NA	17 A	Y
2SHP*FYX96A	SQUARE ROOT EXTRACTOR FOXBORO	C071L	CB	288	RH	Y	NA	NA	HF	NA	17 A	Y
2SHP*FYX96B	SQUARE ROOT EXTRACTOR FOXBORO	C071L	CB	288	RH	Y	NA	NA	HF	NA	17 A	Y
2SHP*FYX96C	SQUARE ROOT EXTRACTOR FOXBORO	C071L	CB	288	RH	Y	NA	NA	HF	NA	17 A	Y
2SHP*FYX96D	SQUARE ROOT EXTRACTOR FOXBORO	C071L	CB	288	RH	Y	NA	NA	HF	NA	17 A	Y
2SHP*FYX96E	SQUARE ROOT EXTRACTOR FOXBORO	C071L	CB	288	RH	Y	NA	NA	HF	NA	17 A	Y
2SHP*FYX96F	SQUARE ROOT EXTRACTOR FOXBORO	C071L	CB	288	RH	Y	NA	NA	HF	NA	17 A	Y
2SHP*FYY523	SUMMER FOXBORO	C071L	CB	288	RH	Y	NA	NA	HF	NA	17 A	Y
2SHP*FYY534	SUMMER FOXBORO	C071L	CB	288	RH	Y	NA	NA	HF	NA	17 A	Y
2SHP*FYY54A	SQUARE ROOT CONVERTER FOXBORO	C071L	CB	288	RH	Y	NA	NA	HF	NA	17 A	Y
2SHP*FYY54B	SQUARE ROOT CONVERTER FOXBORO	C071L	CB	288	RH	Y	NA	NA	HF	NA	17 A	Y

JOB NAME NMP - UNIT 2
UTILITY NIAGARA MOHAWK

SEISMIC AND DYNAMIC QUALIFICATION SUMMARY AND STATUS REPORT
MASTER LIST OF SAFETY RELATED EQUIPMENT

ENGINEER: STONE & WEBSTER
NSSS SUPPLIER: GENERAL ELECTRIC

EQUIP. ID / SWEC ID	EQUIPMENT DESCRIPTION / MANUFACTURER	PPD NO.	LOCATION BLDG	ELEV	HTG	LOADS SEIS	HYDR	QUAL ANLYS	METH TEST	NAT FREQ LOWEST	RRS REF STATUS QUAL	INST
2SHP*FYZ54A	INPUT ISOLATOR FOXBORO	C071L	CB	288	RH	Y	NA	NA	HF	NA	17 A	N
2SHP*FYZ54B	INPUT ISOLATOR FOXBORO	C071L	CB	288	RH	Y	NA	NA	HF	NA	17 A	N
2SHP*HIC523	CONTROL STATION FOXBORO	C071L	CB	288	RH	Y	N	N	HF	NA	17 A	
2SHP*HIC534	CONTROL STATION FOXBORO	C071L	CB	288	RH	Y	N	N	HF	NA	17 A	
2SHP*HIC54A	CONTROL STATION FOXBORO	C071L	CB	306	CH	Y	NA	NA	HF	NA	18 A	Y
2SHP*HIC54B	CONTROL STATION FOXBORO	C071L	CB	306	CH	Y	NA	NA	HF	NA	18 A	Y
2SHP*PDSHHX1A	RELAY FOXBORO	C071L	CB	288	RH	Y	NA	NA	HF	NA	17 A	Y
2SHP*PDSHHX1B	RELAY FOXBORO	C071L	CB	288	RH	Y	NA	NA	HF	NA	17 A	Y
2SHP*PDSHHX1C	RELAY FOXBORO	C071L	CB	288	RH	Y	NA	NA	HF	NA	17 A	Y
2SHP*PDSHHX1D	RELAY FOXBORO	C071L	CB	288	RH	Y	NA	NA	HF	NA	17 A	Y
2SHP*PDSHHX1E	RELAY FOXBORO	C071L	CB	288	RH	Y	NA	NA	HF	NA	17 A	Y
2SHP*PDSHHX1F	RELAY FOXBORO	C071L	CB	288	RH	Y	NA	NA	HF	NA	17 A	Y
2SHP*PDSHH1A	A/D CONVERTER FOXBORO	C071L	CB	288	RH	Y	NA	NA	HF	NA	17 A	Y

JOB NAME NMP - UNIT 2
UTILITY NIAGARA MOHAWK

SEISMIC AND DYNAMIC QUALIFICATION SUMMARY AND STATUS REPORT
MASTER LIST OF SAFETY RELATED EQUIPMENT

ENGINEER: STONE & WEBSTER
NSSS SUPPLIER: GENERAL ELECTRIC

EQUIP. ID / SHEC ID	EQUIPMENT DESCRIPTION / MANUFACTURER	PPD NO.	LOCATION BLDG	LOCATION ELEV	LOCATION HTG	LOADS SEIS	LOADS HYDR	QUAL ANLYS	METH TEST	NAT FREQ LOWEST	RRS REF	STATUS QUAL	STATUS INST
2SHP*PDSHH1B	A/D CONVERTER FOXBORO	C071L	CB	288	RH	Y	NA	NA	HF	NA	17	A	Y
2SHP*PDSHH1C	A/D CONVERTER FOXBORO	C071L	CB	288	RH	Y	NA	NA	HF	NA	17	A	Y
2SHP*PDSHH1D	A/D CONVERTER FOXBORO	C071L	CB	288	RH	Y	NA	NA	HF	NA	17	A	Y
2SHP*PDSHH1E	A/D CONVERTER FOXBORO	C071L	CB	288	RH	Y	NA	NA	HF	NA	17	A	Y
2SHP*PDSHH1F	A/D CONVERTER FOXBORO	C071L	CB	288	RH	Y	NA	NA	HF	NA	17	A	Y
2SHP*PDSHX1A	RELAY FOXBORO	C071L	CB	288	RH	Y	NA	NA	HF	NA	17	A	Y
2SHP*PDSHX1B	RELAY FOXBORO	C071L	CB	288	RH	Y	NA	NA	HF	NA	17	A	Y
2SHP*PDSHX1C	RELAY FOXBORO	C071L	CB	288	RH	Y	NA	NA	HF	NA	17	A	Y
2SHP*PDSHX1D	RELAY FOXBORO	C071L	CB	288	RH	Y	NA	NA	HF	NA	17	A	Y
2SHP*PDSHX1E	RELAY FOXBORO	C071L	CB	288	RH	Y	NA	NA	HF	NA	17	A	Y
2SHP*PDSHX1F	RELAY FOXBORO	C071L	CB	288	RH	Y	NA	NA	HF	NA	17	A	Y
2SHP*PDSH1A	A/D CONVERTER FOXBORO	C071L	CB	288	RH	Y	NA	NA	HF	NA	17	A	Y
2SHP*PDSH1B	A/D CONVERTER FOXBORO	C071L	CB	288	RH	Y	NA	NA	HF	NA	17	A	Y

JOB NAME NMP - UNIT 2
UTILITY NIAGARA MOHAWK

SEISMIC AND DYNAMIC QUALIFICATION SUMMARY AND STATUS REPORT
MASTER LIST OF SAFETY RELATED EQUIPMENT

ENGINEER: STONE & WEBSTER
NSSS SUPPLIER: GENERAL ELECTRIC

EQUIP. ID / SHEC ID	EQUIPMENT DESCRIPTION / MANUFACTURER	PPD NO.	LOCATION BLDG	ELEV	MTG	LOADS SEIS	HYDR	QUAL ANLYS	METH TEST	NAT FREQ LOWEST	RRS REF STATUS QUAL	INST
2SWP*PDSH1C	A/D CONVERTER FOXBORO	C071L	CB	288	RH	Y	NA	NA	HF	NA	17 A	Y
2SWP*PDSH1D	A/D CONVERTER FOXBORO	C071L	CB	288	RH	Y	NA	NA	HF	NA	17 A	Y
2SWP*PDSH1E	A/D CONVERTER FOXBORO	C071L	CB	288	RH	Y	NA	NA	HF	NA	17 A	Y
2SWP*PDSH1F	A/D CONVERTER FOXBORO	C071L	CB	288	RH	Y	NA	NA	HF	NA	17 A	Y
2SWP*PSLX139A	RELAY FOXBORO	C071L	CB	288	RH	Y	NA	NA	HF	NA	17 A	Y
2SWP*PSLX139B	RELAY FOXBORO	C071L	CB	288	RH	Y	NA	NA	HF	NA	17 A	Y
2SWP*PSLX140A	RELAY FOXBORO	C071L	CB	288	RH	Y	NA	NA	HF	NA	17 A	Y
2SWP*PSLX140B	RELAY FOXBORO	C071L	CB	288	RH	Y	NA	NA	HF	NA	17 A	Y
2SWP*PSLX142A	RELAY FOXBORO	C071L	CB	288	RH	Y	NA	NA	HF	NA	17 A	Y
2SWP*PSLX142B	RELAY FOXBORO	C071L	CB	288	RH	Y	NA	NA	HF	NA	17 A	Y
2SWP*PSLX2A	RELAY FOXBORO	C071L	CB	288	RH	Y	NA	NA	HF	NA	17 A	Y
2SWP*PSLX2B	RELAY FOXBORO	C071L	CB	288	RH	Y	NA	NA	HF	NA	17 A	Y
2SWP*PSLX9A	RELAY FOXBORO	C071L	CB	288	RH	Y	NA	NA	HF	NA	17 A	Y

JOB NAME NMP - UNIT 2
UTILITY NIAGARA MOHAWK

SEISMIC AND DYNAMIC QUALIFICATION SUMMARY AND STATUS REPORT
MASTER LIST OF SAFETY RELATED EQUIPMENT

ENGINEER: STONE & WEBSTER
NSSS SUPPLIER: GENERAL ELECTRIC

EQUIP. ID / SHEC ID	EQUIPMENT DESCRIPTION / MANUFACTURER	PPD NO.	LOCATION BLDG	ELEV	MTG	LOADS SEIS	HYDR	QUAL ANLYS	METH TEST	NAT FREQ LOWEST	RRS REF STATUS QUAL	INST
2SHP*PSLX4B	RELAY FOXBORO	C071L	CB	288	RH	Y	NA	NA	HF	NA	17 A	Y
2SHP*PSLX4C	RELAY FOXBORO	C071L	CB	288	RH	Y	NA	NA	HF	NA	17 A	Y
2SHP*PSLX4D	RELAY FOXBORO	C071L	CB	288	RH	Y	NA	NA	HF	NA	17 A	Y
2SHP*PSLX4E	RELAY FOXBORO	C071L	CB	288	RH	Y	NA	NA	HF	NA	17 A	Y
2SHP*PSLX4F	RELAY FOXBORO	C071L	CB	288	RH	Y	NA	NA	HF	NA	17 A	Y
2SHP*PSLX66A	RELAY FOXBORO	C071L	CB	288	RH	Y	NA	NA	HF	NA	17 A	Y
2SHP*PSLX66B	RELAY FOXBORO	C071L	CB	288	RH	Y	NA	NA	HF	NA	17 A	Y
2SHP*PSLX79A	RELAY FOXBORO	C071L	CB	288	RH	Y	NA	NA	HF	NA	17 A	Y
2SHP*PSLX79B	RELAY FOXBORO	C071L	CB	288	RH	Y	NA	NA	HF	NA	17 A	Y
2SHP*PSLX95A	RELAY FOXBORO	C071L	CB	288	RH	Y	NA	NA	HF	NA	17 A	Y
2SHP*PSLX95B	RELAY FOXBORO	C071L	CB	288	RH	Y	NA	NA	HF	NA	17 A	Y
2SHP*PSL139A	A/D CONVERTER FOXBORO	C071L	CB	288	RH	Y	NA	NA	HF	NA	17 A	Y
2SHP*PSL139B	A/D CONVERTER FOXBORO	C071L	CB	288	RH	Y	NA	NA	HF	NA	17 A	Y

JOB NAME NMP - UNIT 2
UTILITY NIAGARA MOHAWK

SEISMIC AND DYNAMIC QUALIFICATION SUMMARY AND STATUS REPORT
MASTER LIST OF SAFETY RELATED EQUIPMENT

ENGINEER: STONE & WEBSTER
NSSS SUPPLIER: GENERAL ELECTRIC

EQUIP. ID / SWEC ID	EQUIPMENT DESCRIPTION / MANUFACTURER	PPD NO.	LOCATION BLDG	ELEV	HTG	LOADS SEIS	HYDR	QUAL ANLYS	METH TEST	NAT FREQ LOWEST	RRS REF STATUS QUAL	INST
2SWP*PSL140A	A/D CONVERTER FOXBORO	C071L	CB	288	RH	Y	NA	NA	HF	NA	17 A	Y
2SWP*PSL140B	A/D CONVERTER FOXBORO	C071L	CB	288	RH	Y	NA	NA	HF	NA	17 A	Y
2SWP*PSL142A	A/D CONVERTER FOXBORO	C071L	CB	288	RH	Y	NA	NA	HF	NA	17 A	Y
2SWP*PSL142B	A/D CONVERTER FOXBORO	C071L	CB	288	RH	Y	NA	NA	HF	NA	17 A	Y
2SWP*PSL2A	A/D CONVERTER FOXBORO	C071L	CB	288	RH	Y	NA	NA	HF	NA	17 A	Y
2SWP*PSL2B	A/D CONVERTER FOXBORO	C071L	CB	288	RH	Y	NA	NA	HF	NA	17 A	Y
2SWP*PSL4A	A/D CONVERTER FOXBORO	C071L	CB	288	RH	Y	NA	NA	HF	NA	17 A	Y
2SWP*PSL4B	A/D CONVERTER FOXBORO	C071L	CB	288	RH	Y	NA	NA	HF	NA	17 A	Y
2SWP*PSL4C	A/D CONVERTER FOXBORO	C071L	CB	288	RH	Y	NA	NA	HF	NA	17 A	Y
2SWP*PSL4D	A/D CONVERTER FOXBORO	C071L	CB	288	RH	Y	NA	NA	HF	NA	17 A	Y
2SWP*PSL4E	A/D CONVERTER FOXBORO	C071L	CB	288	RH	Y	NA	NA	HF	NA	17 A	Y
2SWP*PSL4F	A/D CONVERTER FOXBORO	C071L	CB	288	RH	Y	NA	NA	HF	NA	17 A	Y
2SWP*PSL66A	A/D CONVERTER FOXBORO	C071L	CB	288	RH	Y	NA	NA	HF	NA	17 A	Y

JOB NAME NMP - UNIT 2
UTILITY NIAGARA MOHAWK

SEISMIC AND DYNAMIC QUALIFICATION SUMMARY AND STATUS REPORT
MASTER LIST OF SAFETY RELATED EQUIPMENT

ENGINEER: STONE & WEBSTER
NSSS SUPPLIER: GENERAL ELECTRIC

EQUIP. ID / SWEC ID	EQUIPMENT DESCRIPTION / MANUFACTURER	PPD NO.	LOCATION BLDG	LOCATION ELEV	LOCATION HTG	LOADS SEIS	LOADS HYDR	QUAL ANLYS	METH TEST	NAT FREQ LOWEST	RRS REF	STATUS QUAL	STATUS INST
2SHP*PSL66B	A/D CONVERTER FOXBORO	C071L	CB	288	RH	Y	NA	NA	HF	NA	17	A	Y
2SHP*PSL79A	A/D CONVERTER FOXBORO	C071L	CB	288	RH	Y	NA	NA	HF	NA	17	A	Y
2SHP*PSL79B	A/D CONVERTER FOXBORO	C071L	CB	288	RH	Y	NA	NA	HF	NA	17	A	Y
2SHP*PSL95A	A/D CONVERTER FOXBORO	C071L	CB	288	RH	Y	NA	NA	HF	NA	17	A	Y
2SHP*PSL95B	A/D CONVERTER FOXBORO	C071L	CB	288	RH	Y	NA	NA	HF	NA	17	A	Y
2SHP*PHRS1A	LOOP POWER SUPPLY FOXBORO	C071L	CB	288	RH	Y	NA	NA	HF	NA	17	A	Y
2SHP*PHRS1B	LOOP POWER SUPPLY FOXBORO	C071L	CB	288	RH	Y	NA	NA	HF	NA	17	A	Y
2SHP*PHRS1C	LOOP POWER SUPPLY FOXBORO	C071L	CB	288	RH	Y	NA	NA	HF	NA	17	A	Y
2SHP*PHRS1D	LOOP POWER SUPPLY FOXBORO	C071L	CB	288	RH	Y	NA	NA	HF	NA	17	A	Y
2SHP*PHRS1E	LOOP POWER SUPPLY FOXBORO	C071L	CB	288	RH	Y	NA	NA	HF	NA	17	A	Y
2SHP*PHRS1F	LOOP POWER SUPPLY FOXBORO	C071L	CB	288	RH	Y	NA	NA	HF	NA	17	A	Y
2SHP*PHRS139A	LOOP POWER SUPPLY FOXBORO	C071L	CB	288	RH	Y	NA	NA	HF	NA	17	A	Y
2SHP*PHRS139B	LOOP POWER SUPPLY FOXBORO	C071L	CB	288	RH	Y	NA	NA	HF	NA	17	A	Y

JOB NAME NMP - UNIT 2
UTILITY NIAGARA MOHAWK

SEISMIC AND DYNAMIC QUALIFICATION SUMMARY AND STATUS REPORT
MASTER LIST OF SAFETY RELATED EQUIPMENT

ENGINEER: STONE & WEBSTER
NSSS SUPPLIER: GENERAL ELECTRIC

EQUIP. ID / SWEC ID	EQUIPMENT DESCRIPTION / MANUFACTURER	PPD NO.	LOCATION BLDG	LOCATION ELEV	LOCATION MTG	LOADS SEIS	LOADS HYDR	QUAL ANLYS	METH TEST	NAT FREQ LOWEST	RRS REF	STATUS QUAL	STATUS INST
2SWP*PWRS140A	LOOP POWER SUPPLY FOXBORO	C071L	CB	288	RH	Y	NA	NA	MF	NA	17	A	Y
2SWP*PWRS140B	LOOP POWER SUPPLY FOXBORO	C071L	CB	288	RH	Y	NA	NA	MF	NA	17	A	Y
2SWP*PWRS142A	LOOP POWER SUPPLY FOXBORO	C071L	CB	288	RH	Y	NA	NA	MF	NA	17	A	Y
2SWP*PWRS142B	LOOP POWER SUPPLY FOXBORO	C071L	CB	288	RH	Y	NA	NA	MF	NA	17	A	Y
2SWP*PWRS2A	LOOP POWER SUPPLY FOXBORO	C071L	CB	288	RH	Y	NA	NA	MF	NA	17	A	Y
2SWP*PWRS2B	LOOP POWER SUPPLY FOXBORO	C071L	CB	288	RH	Y	NA	NA	MF	NA	17	A	Y
2SWP*PWRS267A	LOOP POWER SUPPLY FOXBORO	C071L	CB	288	RH	Y	NA	NA	MF	NA	17	A	Y
2SWP*PWRS267B	LOOP POWER SUPPLY FOXBORO	C071L	CB	288	RH	Y	NA	NA	MF	NA	17	A	Y
2SWP*PWRS29A	LOOP POWER SUPPLY FOXBORO	C071L	CB	288	RH	Y	NA	NA	MF	NA	17	A	Y
2SWP*PWRS29B	LOOP POWER SUPPLY FOXBORO	C071L	CB	288	RH	Y	NA	NA	MF	NA	17	A	Y
2SWP*PWRS9A	LOOP POWER SUPPLY FOXBORO	C071L	CB	288	RH	Y	NA	NA	MF	NA	17	A	Y
2SWP*PWRS9B	LOOP POWER SUPPLY FOXBORO	C071L	CB	288	RH	Y	NA	NA	MF	NA	17	A	Y
2SWP*PWRS9C	LOOP POWER SUPPLY FOXBORO	C071L	CB	288	RH	Y	NA	NA	MF	NA	17	A	Y

JOB NAME NMP - UNIT 2
UTILITY NIAGARA MOHAWK

SEISMIC AND DYNAMIC QUALIFICATION SUMMARY AND STATUS REPORT
MASTER LIST OF SAFETY RELATED EQUIPMENT

ENGINEER: STONE & WEBSTER
NSSS SUPPLIER: GENERAL ELECTRIC

EQUIP. ID / SWEC ID	EQUIPMENT DESCRIPTION / MANUFACTURER	PPD NO.	LOCATION BLDG	LOCATION ELEV	LOCATION HTG	LOADS SEIS	LOADS HYDR	QUAL ANLYS	METH TEST	NAT FREQ LOWEST	RRS REF STATUS QUAL	RRS REF STATUS INST
2SHP*PHRS9D	LOOP POWER SUPPLY FOXBORO	C071L	CB	288	RH	Y	NA	NA	HF	NA	17 A	Y
2SHP*PHRS9E	LOOP POWER SUPPLY FOXBORO	C071L	CB	288	RH	Y	NA	NA	HF	NA	17 A	Y
2SHP*PHRS9F	LOOP POWER SUPPLY FOXBORO	C071L	CB	288	RH	Y	NA	NA	HF	NA	17 A	Y
2SHP*PHRS523	LOOP POWER SUPPLY FOXBORO	C071L	CB	288	RH	Y	NA	NA	HF	NA	17 A	Y
2SHP*PHRS533	LOOP POWER SUPPLY FOXBORO	C071L	CB	288	RH	Y	NA	NA	HF	NA	17 A	Y
2SHP*PHRS534	LOOP POWER SUPPLY FOXBORO	C071L	CB	288	RH	Y	NA	NA	HF	NA	17 A	Y
2SHP*PHRS535	LOOP POWER SUPPLY FOXBORO	C071L	CB	288	RH	Y	NA	NA	HF	NA	17 A	Y
2SHP*PHRS567	LOOP POWER SUPPLY FOXBORO	C071L	CB	288	RH	Y	NA	NA	HF	NA	17 A	Y
2SHP*PHRS6A	LOOP POWER SUPPLY FOXBORO	C071L	CB	288	RH	Y	NA	NA	HF	NA	17 A	Y
2SHP*PHRS6B	LOOP POWER SUPPLY FOXBORO	C071L	CB	288	RH	Y	NA	NA	HF	NA	17 A	Y
2SHP*PHRS6C	LOOP POWER SUPPLY FOXBORO	C071L	CB	288	RH	Y	NA	NA	HF	NA	17 A	Y
2SHP*PHRS6D	LOOP POWER SUPPLY FOXBORO	C071L	CB	288	RH	Y	NA	NA	HF	NA	17 A	Y
2SHP*PHRS6E	LOOP POWER SUPPLY FOXBORO	C071L	CB	288	RH	Y	NA	NA	HF	NA	17 A	Y

JOB NAME NMP - UNIT 2
UTILITY NIAGARA MOHAWK

SEISMIC AND DYNAMIC QUALIFICATION SUMMARY AND STATUS REPORT
MASTER LIST OF SAFETY RELATED EQUIPMENT

ENGINEER: STONE & WEBSTER
NSSS SUPPLIER: GENERAL ELECTRIC

EQUIP. ID / SWEC ID	EQUIPMENT DESCRIPTION / MANUFACTURER	PPD NO.	LOCATION BLDG	ELEV	HTG	LOADS SEIS	HYDR	QUAL ANLYS	METH TEST	NAT FREQ LOWEST	RRS REF	STATUS QUAL	STATUS INST
2SWP*PWRS6F	LOOP POWER SUPPLY FOXBORO	C071L	CB	288	RH	Y	NA	NA	HF	NA	17	A	Y
2SWP*PWRS66A	LOOP POWER SUPPLY FOXBORO	C071L	CB	288	RH	Y	NA	NA	HF	NA	17	A	Y
2SWP*PWRS66B	LOOP POWER SUPPLY FOXBORO	C071L	CB	288	RH	Y	NA	NA	HF	NA	17	A	Y
2SWP*PWRS76A	LOOP POWER SUPPLY FOXBORO	C071L	CB	288	RH	Y	NA	NA	HF	NA	17	A	Y
2SWP*PWRS76B	LOOP POWER SUPPLY FOXBORO	C071L	CB	288	RH	Y	NA	NA	HF	NA	17	A	Y
2SWP*PWRS79A	LOOP POWER SUPPLY FOXBORO	C071L	CB	288	RH	Y	NA	NA	HF	NA	17	A	Y
2SWP*PWRS79B	LOOP POWER SUPPLY FOXBORO	C071L	CB	288	RH	Y	NA	NA	HF	NA	17	A	Y
2SWP*PWRS95A	LOOP POWER SUPPLY FOXBORO	C071L	CB	288	RH	Y	NA	NA	HF	NA	17	A	Y
2SWP*PWRS95B	LOOP POWER SUPPLY FOXBORO	C071L	CB	288	RH	Y	NA	NA	HF	NA	17	A	Y
2SWP*PWRS96A	LOOP POWER SUPPLY FOXBORO	C071L	CB	288	RH	Y	NA	NA	HF	NA	17	A	Y
2SWP*PWRS96B	LOOP POWER SUPPLY FOXBORO	C071L	CB	288	RH	Y	NA	NA	HF	NA	17	A	Y
2SWP*PWRS96C	LOOP POWER SUPPLY FOXBORO	C071L	CB	288	RH	Y	NA	NA	HF	NA	17	A	Y
2SWP*PWRS96D	LOOP POWER SUPPLY FOXBORO	C071L	CB	288	RH	Y	NA	NA	HF	NA	17	A	Y

JOB NAME NMP - UNIT 2
UTILITY NIAGARA MOHAWK

SEISMIC AND DYNAMIC QUALIFICATION SUMMARY AND STATUS REPORT
MASTER LIST OF SAFETY RELATED EQUIPMENT

ENGINEER: STONE & WEBSTER
NSSS SUPPLIER: GENERAL ELECTRIC

EQUIP. ID / SWEC ID	EQUIPMENT DESCRIPTION / MANUFACTURER	PPD NO.	LOCATION BLDG	LOCATION ELEV	LOCATION HTG	LOADS SEIS	LOADS HYDR	QUAL ANLYS	METH TEST	NAT FREQ LOWEST	RRS REF STATUS QUAL	RRS REF STATUS INST
2SWP*PWRS96E	LOOP POWER SUPPLY FOXBORO	C071L	CB	288	RH	Y	NA	NA	HF	NA	17 A	Y
2SWP*PWRS96F	LOOP POWER SUPPLY FOXBORO	C071L	CB	288	RH	Y	NA	NA	HF	NA	17 A	Y
2SWP*TC35A	CONTROLLER FOXBORO	C071L	CB	288	RH	Y	NA	NA	HF	NA	17 A	Y
2SWP*TC35B	CONTROLLER FOXBORO	C071L	CB	288	RH	Y	NA	NA	HF	NA	17 A	Y
2SWP*TIK35A	CONTROL STATION FOXBORO	C071L	CB	306	CH	Y	NA	NA	HF	NA	18 A	Y
2SWP*TIK35B	CONTROL STATION FOXBORO	C071L	CB	306	CH	Y	NA	NA	HF	NA	18 A	Y
2SWP*TSLX64A	RELAY FOXBORO	C071L	CB	288	RH	Y	NA	NA	HF	NA	17 A	Y
2SWP*TSLX64B	RELAY FOXBORO	C071L	CB	288	RH	Y	NA	NA	HF	NA	17 A	Y
2SWP*TSLX65A	RELAY FOXBORO	C071L	CB	288	RH	Y	NA	NA	HF	NA	17 A	Y
2SWP*TSLX65B	RELAY FOXBORO	C071L	CB	288	RH	Y	NA	NA	HF	NA	17 A	Y
2SWP*TSLX91A	RELAY FOXBORO	C071L	CB	288	RH	Y	NA	NA	HF	NA	17 A	Y
2SWP*TSLX91B	RELAY FOXBORO	C071L	CB	288	RH	Y	NA	NA	HF	NA	17 A	Y
2SWP*TSL64A	A/D CONVERTER FOXBORO	C071L	CB	288	RH	Y	NA	NA	HF	NA	17 A	Y

JOB NAME NMP - UNIT 2
UTILITY NIAGARA MOHAWK

SEISMIC AND DYNAMIC QUALIFICATION SUMMARY AND STATUS REPORT
MASTER LIST OF SAFETY RELATED EQUIPMENT

ENGINEER: STONE & WEBSTER
NSSS SUPPLIER: GENERAL ELECTRIC

EQUIP. ID / SHEC ID	EQUIPMENT DESCRIPTION / MANUFACTURER	PPD NO.	LOCATION BLDG	ELEV	HTG	LOADS SEIS	HYDR	QUAL ANLYS	METH TEST	NAT FREQ LOWEST	RRS REF STATUS QUAL	INST
2SHP*TSL64B	A/D CONVERTER FOXBORO	C071L	CB	288	RH	Y	NA	NA	HF	NA	17 A	Y
2SHP*TSL65A	A/D CONVERTER FOXBORO	C071L	CB	288	RH	Y	NA	NA	HF	NA	17 A	Y
2SHP*TSL65B	A/D CONVERTER FOXBORO	C071L	CB	288	RH	Y	NA	NA	HF	NA	17 A	Y
2SHP*TSL91A	A/D CONVERTER FOXBORO	C071L	CB	288	RH	Y	NA	NA	HF	NA	17 A	Y
2SHP*TSL91B	A/D CONVERTER FOXBORO	C071L	CB	288	RH	Y	NA	NA	HF	NA	17 A	Y
2SHP*TT31A	RTD CONVERTER FOXBORO	C071L	CB	288	RH	Y	NA	NA	HF	NA	17 A	Y
2SHP*TT31B	RTD CONVERTER FOXBORO	C071L	CB	238	RH	Y	NA	NA	HF	NA	17 A	Y
2SHP*TT35A	RTD CONVERTER FOXBORO	C071L	CB	288	RH	Y	NA	NA	HF	NA	17 A	Y
2SHP*TT35B	RTD CONVERTER FOXBORO	C071L	CB	288	RH	Y	NA	NA	HF	NA	17 A	Y
2SHP*TT64A	RTD CONVERTER FOXBORO	C071L	CB	288	RH	Y	NA	NA	HF	NA	17 A	Y
2SHP*TT64B	RTD CONVERTER FOXBORO	C071L	CB	288	RH	Y	NA	NA	HF	NA	17 A	Y
2SHP*TT65A	RTD CONVERTER FOXBORO	C071L	CB	288	RH	Y	NA	NA	HF	NA	17 A	Y
2SHP*TT65B	RTD CONVERTER FOXBORO	C071L	CB	288	RH	Y	NA	NA	HF	NA	17 A	Y

JOB NAME NMP - UNIT 2
UTILITY NIAGARA MOHAWK

SEISMIC AND DYNAMIC QUALIFICATION SUMMARY AND STATUS REPORT
MASTER LIST OF SAFETY RELATED EQUIPMENT

ENGINEER: STONE & WEBSTER
NSSS SUPPLIER: GENERAL ELECTRIC

EQUIP. ID / SHEC ID	EQUIPMENT DESCRIPTION / MANUFACTURER	PPD NO.	LOCATION BLDG	ELEV	HTG	LOADS SEIS	HYDR	QUAL ANLYS	METH TEST	NAT FREQ LOWEST	RRS REF STATUS QUAL	INST
2SHP*TT91A	RTD CONVERTER FOXBORO	C071L	CB	288	RH	Y	NA	NA	HF	NA	17 A	Y
2SHP*TT91B	RTD CONVERTER FOXBORO	C071L	CB	288	RH	Y	NA	NA	HF	NA	17 A	Y

JOB NAME NMP - UNIT 2
UTILITY NIAGARA MOHAWK

SEISMIC AND DYNAMIC QUALIFICATION SUMMARY AND STATUS REPORT
MASTER LIST OF SAFETY RELATED EQUIPMENT

ENGINEER: STONE & WEBSTER
NSSS SUPPLIER: GENERAL ELECTRIC

EQUIP. ID / SHEC ID	EQUIPMENT DESCRIPTION / MANUFACTURER	PPD NO.	LOCATION BLDG	LOCATION ELEV	LOCATION HTG	LOADS SEIS	LOADS HYDR	QUAL ANLYS	METH TEST	NAT FREQ LOWEST	RRS REF STATUS QUAL	RRS REF STATUS INST
2CCP*PT90A	PRESS IND ROSEMOUNT	C071H	RB	261	RB	Y	NA	NA	HF	21	60 A	Y
2CCP*PT90B	PRESS IND ROSEMOUNT	C071H	RB	240	RH	Y	NA	NA	HF	21	61 A	N
2CHS*LT11A	SUPP POOL LEVEL ROSEMOUNT	C071H	RB	175	RH	Y	NA	NA	HF	21	64 A	Y
2CHS*LT11B	SUPP POOL LEVEL ROUSEMOUNT	C071H	RB	188	RH	Y	NA	NA	HF	21	63 A	Y
2CHS*LT9A	SUPP POOL LEVEL ROSEMOUNT	C071H	RB	175	RH	Y	NA	NA	HF	21	64 A	Y
2CHS*LT9B	SUPP POOL LEVEL ROSEMOUNT	C071H	RB	179	RH	Y	NA	NA	HF	21	63 A	Y
2CHS*PT1A	CONT. DRYWELL PRESS. ROSEMOUNT	C071H	RB	289	RH	Y	NA	NA	HF	21	59 A	Y
2CHS*PT1B	CONT. DRYWELL PRESS. ROSEMOUNT	C071H	RB	289	RH	Y	NA	NA	HF	21	59 A	Y
2CHS*PT2A	CONT. DRYWELL PRESS. ROSEMOUNT	C071H	RB	264	RH	Y	NA	NA	HF	21	59 A	N
2CHS*PT2B	CONT. DRYWELL PRESS. ROSEMOUNT	C071H	RB	261	RH	Y	NA	NA	HF	21	60 A	Y
2CHS*PT7A	SUPPRESSION CHAMB PRESS. ROSEMOUNT	C071H	RB	255	RH	Y	NA	NA	HF	21	60 A	Y
2CHS*PT7B	SUPPRESSION CHAMB PRESS. ROSEMOUNT	C071H	RB	261	RH	Y	NA	NA	HF	21	60 A	Y
2GTS*FT10A	2GTS*FN1A DISCH FLOW ROSEMOUNT	C071H	SG	261	RH	Y	NA	NA	HF	21	3 A	Y

JOB NAME NMP - UNIT 2
UTILITY NIAGARA MOHAWK

SEISMIC AND DYNAMIC QUALIFICATION SUMMARY AND STATUS REPORT
MASTER LIST OF SAFETY RELATED EQUIPMENT

ENGINEER: STONE & WEBSTER
NSSS SUPPLIER: GENERAL ELECTRIC

EQUIP. ID / SHEC ID	EQUIPMENT DESCRIPTION / MANUFACTURER	PPD NO.	LOCATION BLDG	ELEV	HTG	LOADS SEIS	HYDR	QUAL ANLYS	METH- TEST	NAT FREQ- LOWEST	RRS REF STATUS QUAL	INST
2GTS*FT10B	2GTS*FN1A DISCH FLOW ROSEMOUNT	C071M	SG	261	RM	Y	NA	NA	MF	21	3 A	Y
2GTS*PDT5A	RX BLDG IN/OUT DIFF PRESS ROSEMOUNT	C071M	SG	265	RM	Y	NA	NA	MF	21	3 A	Y
2GTS*PDT5B	RX BLDG IN/OUT DIFF PRESS ROSEMOUNT	C071M	SG	265	RM	Y	NA	NA	MF	21	3 A	Y
2HVK*FT15A	2HVK*CHL1B DISCH FLOW ROSEMOUNT	C071M	CB	266	RM	Y	NA	NA	MF	21	17 A	Y
2HVK*FT15B	2HVK*CHL1B DISCH FLOW ROSEMOUNT	C071M	CB	266	RM	Y	NA	NA	MF	21	17 A	Y
2IAS*PT181	ADS HEADER PRESSURE ROSEMOUNT	C071M	RB	295	RM	Y	NA	NA	MF	21	58 A	N
2IAS*PT186	ADS HEADER PRESSURE ROSEMOUNT	C071M	RB	294	RM	Y	NA	NA	MF	21	58 A	N
2IAS*PT230	ADS ACCUMULATOR TANK ROSEMOUNT	C071M	RB	293	RM	Y	NA	NA	MF	21	58 A	Y
2IAS*PT231	ADS ACCUMULATOR TANK ROSEMOUNT	C071M	RB	293	RM	Y	NA	NA	MF	21	58 A	Y
2IAS*PT232	ADS ACCUMULATOR TANK ROUSEMOUNT	C071M	RB	293	RM	Y	NA	NA	MF	21	58 A	Y
2IAS*PT233	ADS ACCUMULATOR TANK ROSEMOUNT	C071M	RB	306	RM	Y	NA	NA	MF	21	58 A	Y
2IAS*PT234	ADS ACCUMULATOR TANK ROSEMOUNT	C071M	RB	306	RM	Y	NA	NA	MF	21	58 A	Y
2IAS*PT235	ADS ACCUMULATOR TANK ROSEMOUNT	C071M	RB	306	RM	Y	NA	NA	MF	21	58 A	Y

JOB NAME NMP - UNIT 2
UTILITY NIAGARA MOHAWK

SEISMIC AND DYNAMIC QUALIFICATION SUMMARY AND STATUS REPORT
MASTER LIST OF SAFETY RELATED EQUIPMENT

ENGINEER: STONE & WEBSTER
NSSS SUPPLIER: GENERAL ELECTRIC

EQUIP. ID / SWEC ID	EQUIPMENT DESCRIPTION / MANUFACTURER	PPD NO.	LOCATION BLDG	LOCATION ELEV	LOCATION HTG	LOADS SEIS	LOADS HYDR	QUAL ANLYS	METH TEST	NAT FREQ LOWEST	RRS REF STATUS QUAL	RRS REF STATUS INST
2IAS*PT236	ADS ACCUMULATOR TANK ROSEMOUNT	C071H	RB	306	RH	Y	NA	NA	HF	21	58 A	Y
2ICS*PT115	PRESSURE MONITOR ROSEMOUNT	C071H	RB	175	RH	Y	NA	NA	HF	21	64 A	Y
2RHS*FT60A	RHS HX DISCH FLOW ROSEMOUNT	C071H	RB	180	RH	Y	NA	NA	HF	21	63 A	Y
2RHS*FT60B	RHS HX DISCH FLOW ROSEMOUNT	C071H	RB	180	RH	Y	NA	NA	HF	21	63 A	Y
2RHS*FT63A	FLOW TRANSMITTER ROSEMOUNT	C071H	RB	261	RH	Y	NA	NA	HF	21	60 A	Y
2RHS*FT63B	FLOW TRANSMITTER ROSEMOUNT	C071H	RB	261	RH	Y	NA	NA	HF	21	60 A	N
2RHS*FT69A	FLOW TRANSMITTER ROSEMOUNT	C071H	RB	215	RH	Y	NA	NA	HF	21	62 A	Y
2RHS*FT69B	FLOW TRANSMITTER ROSEMOUNT	C071H	RB	215	RH	Y	NA	NA	HF	21	62 A	Y
2RSS*FT106	RCIC PUMP DISCH FLOW ROSEMOUNT	C071H	RB	179	RH	Y	NA	NA	HF	21	63 A	Y
2RSS*LT101	REACTOR VESSEL LEVEL ROSEMOUNT	C071H	RB	261	RH	Y	NA	NA	HF	NA	60 A	Y
2RSS*LT105	SUPPR POOL WTR TEMP ROSEMOUNT	C071H	RB	179	RH	Y	NA	NA	HF	NA	63 A	Y
2RSS*LT112	REACTOR VESSEL LEVEL ROSEMOUNT	C071H	RB	261	RH	Y	NA	NA	HF	21	60 A	Y
2RSS*LT114	SUPP POOL WATER LEVEL ROSEMOUNT	C071H	RB	175	RH	Y	NA	NA	HF	21	64 A	N

JOB NAME NMP - UNIT 2
UTILITY NIAGARA MOHAWK

SEISMIC AND DYNAMIC QUALIFICATION SUMMARY AND STATUS REPORT
MASTER LIST OF SAFETY RELATED EQUIPMENT

ENGINEER: STONE & WEBSTER
NSSS SUPPLIER: GENERAL ELECTRIC

EQUIP. ID / SHEC ID	EQUIPMENT DESCRIPTION / MANUFACTURER	PPD NO.	LOCATION BLDG	LOCATION ELEV	LOCATION MTG	LOADS SEIS	LOADS HYDR	QUAL ANLYS	METH TEST	NAT FREQ LOWEST	RRS REF STATUS QUAL	RRS REF STATUS INST
2RSS*LT115	REACTOR VESSEL LEVEL ROSEMOUNT	C071H	RB	266	RH	Y	NA	NA	HF	NA	59 A	Y
2RSS*LT116	REACTOR VESSEL LEVEL ROSEMOUNT	C071H	RB	261	RH	Y	NA	NA	HF	21	60 A	N
2RSS*PT102	REACTOR VESSEL LEVEL ROSEMOUNT	C071H	RB	261	RH	Y	NA	NA	HF	NA	60 A	Y
2RSS*PT113	REACTOR VESSEL LEVEL ROSEMOUNT	C071H	RB	261	RH	Y	NA	NA	HF	21	60 A	Y
2SFC*FT36A	SF POOL CLG SYS FLOW ROSEMOUNT	C071H	RB	220	RH	Y	NA	NA	HF	21	61 A	Y
2SFC*FT36B	SF POOL CLG SYS FLOW ROSEMOUNT	C071H	RB	220	RH	Y	NA	NA	HF	21	61 A	Y
2SFC*FT58A	SFC PUMP DISCH FLOW ROSEMOUNT	C071H	RB	289	RH	Y	NA	NA	HF	21	59 A	Y
2SFC*FT58B	SFC PUMP DISCH FLOW ROSEMOUNT	C071H	RB	289	RH	Y	NA	NA	HF	21	59 A	Y
2SFC*LT32A	SF POOL SURGE TANK WTR LEVEL ROSEMOUNT	C071H	RB	330	RH	Y	NA	NA	HF	21	57 A	Y
2SFC*LT32B	SF POOL SURGE TANK WTR LEVEL ROSEMOUNT	C071H	RB	328	RH	Y	NA	NA	HF	21	58 A	Y
2SFC*PT3A	SF POOL SURGE TANK WTR LEVEL ROSEMOUNT	C071H	RB	261	RH	Y	NA	NA	HF	21	60 A	Y
2SFC*PT3B	SF POOL CIRC PUMP PRESS ROSEMOUNT	C071H	RB	266	RH	Y	NA	NA	HF	21	59 A	Y
2SFC*PT30A	SF POOL CIRC PUMP D PRESS ROSEMOUNT	C071H	RH	261	RH	YH	NA	NA	HF	21	59 A	Y

JOB NAME NMP - UNIT 2
UTILITY NIAGARA MOHAWK

SEISMIC AND DYNAMIC QUALIFICATION SUMMARY AND STATUS REPORT
MASTER LIST OF SAFETY RELATED EQUIPMENT

ENGINEER: STONE & WEBSTER
NSSS SUPPLIER: GENERAL ELECTRIC

EQUIP. ID / SWEC ID	EQUIPMENT DESCRIPTION / MANUFACTURER	PPD NO.	LOCATION BLDG	ELEV	HTG	LOADS SEIS	HYDR	QUAL ANLYS	METH- TEST	NAT FREQ- LOWEST	RRS REF STATUS QUAL	INST
2SFC*PT30B	SF POOL CIRC PUMP D PRESS ROSEMOUNT	C071M	RB	266	RM	Y	NA	NA	MF	21	59 A	Y
2SHP*FT200A	SHP HTR PUMP DISCH FLOW ROSEMOUNT	C071M	SB	240	RM	Y	NA	NA	MF	21	5 A	Y
2SHP*FT200B	SHP HTR PUMP DISCH FLOW ROSEMOUNT	C071M	SB	240	RM	Y	NA	NA	MF	21	5 A	Y
2SHP*FT200C	SHP HTR PUMP DISCH FLOW ROSEMOUNT	C071M	SB	240	RM	Y	NA	NA	MF	21	5 A	Y
2SHP*FT200D	SHP HTR PUMP DISCH FLOW ROSEMOUNT	C071M	SB	240	RM	Y	NA	NA	MF	21	5 A	Y
2SHP*FT200E	SHP HTR PUMP DISCH FLOW ROSEMOUNT	C071M	SB	240	RM	Y	NA	NA	MF	21	5 A	Y
2SHP*FT201A	SHP HTR FLOW TO RHS HX ROSEMOUNT	C071M	ABN	215	RM	Y	NA	NA	MF	21	62 A	Y
2SHP*FT201B	SHP HTR FLOW TO RHS HX ROSEMOUNT	C071M	RB	187	RM	Y	NA	NA	MF	21	62 A	Y
2SHP*FT29A	SHP FR 2HVK*CHL1A FLOW ROSEMOUNT	C071M	CB	265	RM	Y	NA	NA	MF	21	17 A	Y
2SHP*FT29B	SHP FR 2HVK*CHL1A FLOW ROSEMOUNT	C071M	CB	266	RM	Y	NA	NA	MF	21	17 A	Y
2SHP*FT523	SHP LOOP B HDR FL TO LAKE ROSEMOUNT	C071M	SB	250	RM	Y	NA	NA	MF	21	5 A	Y
2SHP*FT533	SHP LOOP B HDR FL TO LAKE ROSEMOUNT	C071M	SB	250	RM	Y	NA	NA	MF	21	5 A	Y
2SHP*FT535	COOLING WATER FLOW ROSEMOUNT	C071M	DG	265	RM	Y	NA	NA	MF	21	17 A	Y

JOB NAME NMP - UNIT 2
UTILITY NIAGARA MOHAWK

SEISMIC AND DYNAMIC QUALIFICATION SUMMARY AND STATUS REPORT
MASTER LIST OF SAFETY RELATED EQUIPMENT

ENGINEER: STONE & WEBSTER
NSSS SUPPLIER: GENERAL ELECTRIC

EQUIP. ID / SHEC ID	EQUIPMENT DESCRIPTION / MANUFACTURER	PPD NO.	LOCATION BLDG	ELEV	HTG	LOADS SEIS	HYDR	QUAL ANLYS	METH TEST	NAT FREQ LOWEST	RRS REF STATUS QUAL	INST
2SHP*FT567	SHP LOOP A HDR FL TO LAKE ROSEMOUNT	C071H	DG	266	RH	Y	NA	NA	HF	21	17 A	Y
2SHP*FT76A	2EGS*EG1 COOL. HTR. FLOW ROSEMOUNT	C071H	DG	266	RH	Y	NA	NA	HF	21	17 A	Y
2SHP*FT76B	2EGS*EG3 COOL. HTR. FLOW ROSEMOUNT	C071H	DG	266	RH	Y	NA	NA	HF	21	17 A	Y
2SHP*FT96A	SHP PUMP DISCH FLOW ROSEMOUNT	C071H	SB	240	RH	Y	NA	NA	HF	21	5 A	Y
2SHP*FT96B	SHP PUMP DISCH FLOW ROSEMOUNT	C071H	SB	240	RH	Y	NA	NA	HF	21	5 A	Y
2SHP*FT96C	SHP PUMP DISCH FLOW ROSEMOUNT	C071H	SB	240	RH	Y	NA	NA	HF	21	5 A	Y
2SHP*FT96D	SHP PUMP DISCH FLOW ROSEMOUNT	C071H	SB	240	RH	Y	NA	NA	HF	21	5 A	Y
2SHP*FT96E	SHP PUMP DISCH FLOW ROSEMOUNT	C071H	SB	240	RH	Y	NA	NA	HF	21	5 A	Y
2SHP*FT96F	SHP PUMP DISCH FLOW ROSEMOUNT	C071H	SB	240	RH	Y	NA	NA	HF	21	5 A	Y
2SHP*PDT1A	2SHP*STR4A DIFF PRESS ROSEMOUNT	C071H	SB	257	RH	Y	NA	NA	HF	21	6 A	Y
2SHP*PDT1B	2SHP*STR4A DIFF PRESS ROSEMOUNT	C071H	SB	257	RH	Y	NA	NA	HF	21	6 A	Y
2SHP*PDT1C	2SHP*STR4A DIFF PRESS ROSEMOUNT	C071H	SB	257	RH	Y	NA	NA	HF	21	6 A	Y
2SHP*PDT1D	2SHP*STR4A DIFF PRESS ROSEMOUNT	C071H	SB	257	RH	Y	NA	NA	HF	21	6 A	Y

JOB NAME NIP - UNIT 2
UTILITY NIAGARA MOHAWK

SEISMIC AND DYNAMIC QUALIFICATION SUMMARY AND STATUS REPORT
MASTER LIST OF SAFETY RELATED EQUIPMENT

ENGINEER: STONE & WEBSTER
NSSS SUPPLIER: GENERAL ELECTRIC

EQUIP. ID / SHEC ID	EQUIPMENT DESCRIPTION / MANUFACTURER	PPD NO.	LOCATION BLDG	LOCATION ELEV	LOCATION HTG	LOADS SEIS	LOADS HYDR	QUAL ANLYS	METH- TEST	NAT FREQ- LOWEST	RRS REF STATUS QUAL	RRS REF STATUS INST
2SHP*PDT1E	2SHP*STR4A DIFF PRESS ROSEMOUNT	C071H	SB	257	RH	Y	NA	NA	HF	21	6 A	Y
2SHP*PDT1F	2SHP*STR4A DIFF PRESS ROSEMOUNT	C071H	SB	257	RH	Y	NA	NA	HF	21	6 A	Y
2SHP*PT139A	SERVICE HTR TO TBCLCH ROSEMOUNT	C071H	SB	261	RH	Y	NA	NA	NA	21	6 A	Y
2SHP*PT139B	SERVICE HTR TO TBCLCH ROSEMOUNT	C071H	SB	261	RH	Y	NA	NA	HF	21	6 A	Y
2SHP*PT140A	SHP TO CCP HT EXCHS PR ROSEMOUNT	C071H	ABN	202	RH	Y	NA	NA	HF	21	62 A	Y
2SHP*PT140B	SHP TO CCP HT EXCHS PR ROSEMOUNT	C071H	ABN	202	RH	Y	NA	NA	HF	21	62 A	Y
2SHP*PT142A	TO CIRC HTR PUMP PRESS ROSEMOUNT	C071H	SB	250	RH	Y	NA	NA	HF	21	5 A	Y
2SHP*PT142B	TO CIRC HTR PUMP PRESS ROSEMOUNT	C071H	SB	250	RH	Y	NA	NA	HF	21	5 A	Y
2SHP*PT2A	SHP PUMP DISCH HDR PRESS ROSEMOUNT	C071H	SB	266	RH	Y	NA	NA	HF	21	6 A	Y
2SHP*PT2B	SHP PUMP DISCH HDR PRESS ROSEMOUNT	C071H	SB	266	RH	Y	NA	NA	HF	21	6 A	Y
2SHP*PT267A	SHP HEADER PRESS ROSEMOUNT	C071H	SB	250	RH	Y	NA	NA	HF	21	5 A	Y
2SHP*PT267B	SHP HEADER PRESS ROSEMOUNT	C071H	SB	228	RH	Y	NA	NA	HF	21	5 A	Y
2SHP*PT4A	SHP PUMP SUCT. PRESS ROSEMOUNT	C071H	SB	228	RH	Y	NA	NA	HF	21	5 A	Y

JOB NAME NMP - UNIT 2
UTILITY NIAGARA MOHAWK

SEISMIC AND DYNAMIC QUALIFICATION SUMMARY AND STATUS REPORT
MASTER LIST OF SAFETY RELATED EQUIPMENT

ENGINEER: STONE & WEBSTER
NSSS SUPPLIER: GENERAL ELECTRIC

EQUIP. ID / SWEC ID	EQUIPMENT DESCRIPTION / MANUFACTURER	PPD NO.	LOCATION BLDG	LOCATION ELEV	LOCATION HTG	LOADS SEIS	LOADS HYDR	QUAL ANLYS	HETH TEST	NAT FREQ LOWEST	RRS REF STATUS QUAL	RRS REF STATUS INST
2SHP*PT4B	SHP PUMP SUCT. PRESS ROSEMOUNT	C071M	SB	228	RM	Y	NA	NA	MF	21	5 A	Y
2SHP*PT4C	SHP PUMP SUCT. PRESS ROSEMOUNT	C071M	SB	228	RM	Y	NA	NA	MF	21	5 A	Y
2SHP*PT4D	SHP PUMP SUCT. PRESS ROSEMOUNT	C071M	SB	228	RM	Y	NA	NA	MF	21	5 A	Y
2SHP*PT4E	SHP PUMP SUCT. PRESS ROSEMOUNT	C071M	SB	228	RM	Y	NA	NA	MF	21	5 A	Y
2SHP*PT4F	SHP PUMP SUCT PRESS ROSEMOUNT	C071M	SB	228	RM	Y	NA	NA	MF	21	5 A	Y
2SHP*PT6A	SHP PUMP DISCH PRESS ROSEMOUNT	C071M	SB	228	RM	Y	NA	NA	MF	21	5 A	Y
2SHP*PT6B	SHP PUMP DISCH PRESS ROSEMOUNT	C071M	SB	228	RM	Y	NA	NA	MF	21	5 A	Y
2SHP*PT6C	SHP PUMP DISCH PRESS ROSEMOUNT	C071M	MB	228	RM	Y	NA	NA	MF	21	5 A	Y
2SHP*PT6D	SHP PUMP DISCH PRESS ROSEMOUNT	C071M	SB	228	RM	Y	NA	NA	MF	21	5 A	Y
2SHP*PT6E	SHP PUMP DISCH PRESS ROSEMOUNT	C071M	SB	228	RM	Y	NA	NA	MF	21	5 A	Y
2SHP*PT6F	SHP PUMP DISCH PRESS ROSEMOUNT	C071M	SB	228	RM	Y	NA	NA	MF	21	5 A	Y
2SHP*PT66A	SHP TO CLR 2EGS*EG ROSEMOUNT	C071M	DG	266	RM	Y	NA	NA	MF	21	17 A	Y
2SHP*PT66B	SHP TO CLR 2EGS*EG ROSEMOUNT	C071M	DG	266	RM	Y	NA	NA	MF	21	17 A	Y

JOB NAME NMP - UNIT 2
UTILITY NIAGARA MOHAWK

SEISMIC AND DYNAMIC QUALIFICATION SUMMARY AND STATUS REPORT
MASTER LIST OF SAFETY RELATED EQUIPMENT

ENGINEER: STONE & WEBSTER
NSSS SUPPLIER: GENERAL ELECTRIC

EQUIP. ID / SHEC ID	EQUIPMENT DESCRIPTION / MANUFACTURER	PPD NO.	LOCATION BLDG	ELEV	HTG	LOADS SEIS	HYDR	QUAL ANLYS	METH TEST	NAT FREQ LOWEST	RRS REF STATUS QUAL	INST
2SWP*PT79A	TO PUMP 2SWP*P2A ROSEMOUNT	C071H	CB	267	RH	Y	NA	NA	HF	21	17 A	Y
2SWP*PT79B	TO PUMP 2SWP*P2B ROSEMOUNT	C071H	CB	266	RH	Y	NA	NA	HF	21	17 A	Y
2SWP*PT95A	SVCE HTR TO CLR 2EGS*EG2 ROSEMOUNT	C071H	DG	266	RH	Y	NA	NA	HF	21	7 A	Y
2SWP*PT95B	SVCE HTR TO CLR 2EGS*EG2 ROSEMOUNT	C071H	DG	266	RH	Y	NA	NA	HF	21	17 A	Y

JOB NAME NMP - UNIT 2
UTILITY NIAGARA MOHAWK

SEISMIC AND DYNAMIC QUALIFICATION SUMMARY AND STATUS REPORT
MASTER LIST OF SAFETY RELATED EQUIPMENT

ENGINEER: STONE & WEBSTER
NSSS SUPPLIER: GENERAL ELECTRIC

EQUIP. ID / SWEC ID	EQUIPMENT DESCRIPTION / MANUFACTURER	PPD NO.	LOCATION BLDG	ELEV	HTG	LOADS SEIS	HYDR	QUAL ANLYS	METH- TEST	NAT FREQ- LOWEST	RRS REF STATUS QUAL	INST
2SVV*IPNL140	RELIEF VALVE POS. MON. PNL. TEC	C071H	CB	228	CF	Y	NA	NA	HF	37	17 A	Y
2SVV*NBE220	SENSOR TEC	C071H	PC	297	LH	Y	Y	NA	HF	>1000	NA A	N
2SVV*NBE221	SENSOR TEC	C071H	PC	297	LH	Y	Y	NA	HF	>1000	NA A	N
2SVV*NBE222	SENSOR TEC	C071H	PC	297	LH	Y	Y	NA	HF	>1000	NA A	N
2SVV*NBE223	SENSOR TEC	C071H	PC	297	LH	Y	Y	NA	HF	>1000	NA A	N
2SVV*NBE224	SENSOR TEC	C071H	PC	297	LH	Y	Y	NA	HF	>1000	NA A	N
2SVV*NBE225	SENSOR TEC	C071H	PC	297	LH	Y	Y	NA	HF	>1000	NA A	N
2SVV*NBE226	SENSOR TEC	C071H	RB	297	LH	Y	Y	NA	HF	>1000	NA A	N
2SVV*NBE227	SENSOR TEC	C071H	RB	297	LH	Y	Y	NA	HF	>1000	NA A	N
2SVV*NBE228	SENSOR TEC	C071H	RB	297	LH	Y	Y	NA	HF	>1000	NA A	N
2SVV*NBE229	SENSOR TEC	C071H	RB	297	LH	Y	Y	NA	HF	>1000	NA A	N
2SVV*NBE230	SENSOR TEC	C071H	RB	297	LH	Y	Y	NA	HF	>1000	NA A	N
2SVV*NBE231	SENSOR TEC	C071H	RB	297	LH	Y	Y	NA	HF	>1000	NA A	N

JOB NAME NMP - UNIT 2
UTILITY NIAGARA MOHAWK

SEISMIC AND DYNAMIC QUALIFICATION SUMMARY AND STATUS REPORT
MASTER LIST OF SAFETY RELATED EQUIPMENT

ENGINEER: STONE & WEBSTER
NSSS SUPPLIER: GENERAL ELECTRIC

EQUIP. ID / SHEC ID	EQUIPMENT DESCRIPTION / MANUFACTURER	PFD NO.	LOCATION BLDG	ELEV	HTG	LOADS SEIS	HYDR	QUAL ANLYS	METH TEST	NAT FREQ LOWEST	RRS REF STATUS QUAL	INST
2SVV*NBE232	SENSOR TEC	C071H	RB	297	LH	Y	Y	NA	HF	>1000	NA A	N
2SVV*NBE233	SENSOR TEC	C071H	RB	297	LH	Y	Y	NA	HF	>1000	NA A	N
2SVV*NBE235	SENSOR TEC	C071H	RB	297	LH	Y	Y	NA	HF	>1000	NA A	N
2SVV*NBE236	SENSOR TEC	C071H	RB	297	LH	Y	Y	NA	HF	>1000	NA A	N
2SVV*NBE237	SENSOR TEC	C071H	RB	297	LH	Y	Y	NA	HF	>1000	NA A	N
2SVV*NBI220	MONITOR TEC	C071H	CB	288	CH	Y	NA	NA	HF	NA	17 A	N
2SVV*NBI221	MONITOR TEC	C071H	CB	288	CH	Y	NA	NA	HF	NA	17 A	Y
2SVV*NBI222	MONITOR TEC	C071H	CB	288	CH	Y	NA	NA	HF	NA	17 A	Y
2SVV*NBI223	MONITOR TEC	C071H	RB	288	CH	Y	NA	NA	HF	NA	17 A	Y
2SVV*NBI224	MONITOR TEC	C071H	CB	288	CH	Y	NA	NA	HF	NA	17 A	Y
2SVV*NBI225	MONITOR TEC	C071H	CB	288	CH	Y	NA	NA	HF	NA	17 A	Y
2SVV*NBI226	MONITOR TEC	C071H	CB	228	CH	Y	NA	NA	HF	NA	17 A	Y
2SVV*NBI227	MONITOR TEC	C071H	CB	288	CH	Y	NA	NA	HF	NA	17 A	Y

JOB NAME NMP - UNIT 2
UTILITY NIAGARA MOHAWK

SEISMIC AND DYNAMIC QUALIFICATION SUMMARY AND STATUS REPORT
MASTER LIST OF SAFETY RELATED EQUIPMENT

ENGINEER: STONE & WEBSTER
NSSS SUPPLIER: GENERAL ELECTRIC

EQUIP. ID / SHEC ID	EQUIPMENT DESCRIPTION / MANUFACTURER	PPD NO.	LOCATION BLDG	ELEV	HTG	LOADS SEIS	HYDR	QUAL ANLYS	METH TEST	NAT FREQ LOWEST	RRS REF STATUS QUAL	INST
2SVV*NBI228	MONITOR TEC	C071H	CB	288	CH	Y	NA	NA	HF	NA	17 A	Y
2SVV*NBI229	MONITOR TEC	C071H	CB	288	CH	Y	NA	NA	HF	NA	17 A	Y
2SVV*NBI230	MONITOR TEC	C071H	CB	288	CH	Y	NA	NA	HF	NA	17 A	Y
2SVV*NBI231	MONITOR TEC	C071H	CB	288	CH	Y	NA	NA	HF	NA	17 A	Y
2SVV*NBI232	MONITOR TEC	C071H	CAB	288	CH	Y	NA	NA	HF	NA	17 A	Y
2SVV*NBI233	MONITOR TEC	C071H	CB	288	CH	Y	NA	NA	HF	NA	17 A	Y
2SVV*NBI234	MONITOR TEC	C071H	CB	288	CH	Y	NA	NA	HF	NA	17 A	Y
2SVV*NBI235	MONITOR TEC	C071H	CB	288	CH	Y	NA	NA	HF	NA	17 A	Y
2SVV*NBI236	MONITOR TEC	C071H	CB	288	CH	Y	NA	NA	HF	NA	17 A	Y
2SVV*NBI237	MONITOR TEC	C071H	CB	288	CH	Y	NA	NA	HF	NA	17 A	Y
2SVV*NBY220	PRE-AMPLIFIER TEC	C071H	RB	240	DH	Y	Y	S	HF	NA	61 A	Y
2SVV*NBY221	PRE-AMPLIFIER TEC	C071H	RB	240	DH	Y	Y	S	HF	NA	61 A	Y
2SVV*NBY222	PRE-AMPLIFIER TEC	C071H	RB	240	DH	Y	Y	S	HF	NA	61 A	Y

JOB NAME NMP - UNIT 2
UTILITY NIAGARA MOHAWK

SEISMIC AND DYNAMIC QUALIFICATION SUMMARY AND STATUS REPORT
MASTER LIST OF SAFETY RELATED EQUIPMENT

ENGINEER: STONE & WEBSTER
NSSS SUPPLIER: GENERAL ELECTRIC

EQUIP. ID / SHEC ID	EQUIPMENT: DESCRIPTION / MANUFACTURER	PPD NO.	LOCATION: BLDG	ELEV	HTG	LOADS: SEIS	HYDR	QUAL ANLYS	METH- TEST	NAT FREQ- LOWEST	RRS REF STATUS: QUAL	INST
2SVV*NBY223	PRE-AMPLIFIER TEC	C071H	RB	240	DH	Y	Y	S	HF	NA	61 A	Y
2SVV*NBY224	PRE-AMPLIFIER TEC	C071H	RB	240	DH	Y	Y	S	HF	NA	61 A	Y
2SVV*NBY225	PRE-AMPLIFIER TEC	C071H	RB	240	DH	Y	Y	S	HF	NA	61 A	Y
2SVV*NBY226	PRE-AMPLIFIER TEC	C071H	RB	240	DH	Y	Y	S	HF	NA	61 A	Y
2SVV*NBY227	PRE-AMPLIFIER TEC	C071H	RB	240	DH	Y	Y	S	HF	NA	61 A	Y
2SVV*NBY228	PRE-AMPLIFIER TEC	C071H	RB	240	DH	Y	Y	S	HF	NA	61 A	Y
2SVV*NBY229	PRE-AMPLIFIER TEC	C071H	RB	240	DH	Y	Y	S	HF	NA	61 A	Y
2SVV*NBY230	PRE-AMPLIFIER TEC	C071H	RB	240	DH	Y	Y	S	HF	NA	61 A	Y
2SVV*NBY231	PRE-AMPLIFIER TEC	C071H	RB	240	DH	Y	Y	S	HF	NA	61 A	Y
2SVV*NBY232	PRE-AMPLIFIER TEC	C071H	RB	240	DH	Y	Y	S	HF	NA	61 A	Y
2SVV*NBY233	PRE-AMPLIFIER TEC	C071H	RB	240	DH	Y	Y	S	HF	NA	61 A	Y
2SVV*NBY234	PRE-AMPLIFIER TEC	C071H	RB	240	DH	Y	Y	S	HF	NA	61 A	Y
2SVV*NBY235	PRE-AMPLIFIER TEC	C071H	RB	240	DH	Y	Y	S	HF	NA	61 A	Y

JOB NAME NMP - UNIT 2
UTILITY NIAGARA MOHAWK

SEISMIC AND DYNAMIC QUALIFICATION SUMMARY AND STATUS REPORT
MASTER LIST OF SAFETY RELATED EQUIPMENT

ENGINEER: STONE & WEBSTER
NSSS SUPPLIER: GENERAL ELECTRIC

EQUIP. ID / SWEC ID	EQUIPMENT DESCRIPTION / MANUFACTURER	PPD NO.	LOCATION BLDG	ELEV	MTG	LOADS SEIS	HYDR	QUAL ANLYS	METH TEST	NAT FREQ LOWEST	RRS REF STATUS QUAL	INST
2SVV*NBY236	PRE-AMPLIFIER TEC	C071H	RB	240	DH	Y	Y	S	HF	NA	61 A	Y
2SVV*NBY237	PRE-AMPLIFIER TEC	C071H	RB	240	DH	Y	Y	S	HF	NA	61 A	Y

JOB NAME NMP - UNIT 2
UTILITY NIAGARA MOHAWK

SEISMIC AND DYNAMIC QUALIFICATION SUMMARY AND STATUS REPORT
MASTER LIST OF SAFETY RELATED EQUIPMENT

ENGINEER: STONE & WEBSTER
NSSS SUPPLIER: GENERAL ELECTRIC

EQUIP. ID / SHEC ID	EQUIPMENT DESCRIPTION / MANUFACTURER	PPD NO.	LOCATION BLDG	LOCATION ELEV	LOCATION HTG	LOADS SEIS	LOADS HYDR	QUAL ANLYS	METH TEST	NAT FREQ LOWEST	RRS REF STATUS QUAL	RRS REF STATUS INST
2CHS*EFV1A	EXCESS FLOW CHECK VALVES 3/4" DRAGON VALVES	C151C	RB	274	LH	Y	NA	NA	SF	>33	NA A	Y
2CHS*EFV1B	EXCESS FLOW CHECK VALVES 3/4" DRAGON VALVES	C151C	RB	275	LH	Y	NA	NA	SF	>33	NA A	Y
2CHS*EFV10	EXCESS FLOW CHECK VALVES 3/4" DRAGON VALVES	C151C	RB	274	LH	Y	NA	NA	SF	>33	NA A	Y
2CHS*EFV3A	EXCESS FLOW CHECK VALVES 3/4" DRAGON VALVES	C151C	RB	254	LH	Y	NA	NA	SF	>33	NA A	Y
2CHS*EFV3B	EXCESS FLOW CHECK VALVES 3/4" DRAGON VALVES	C151C	RB	255	LH	Y	NA	NA	SF	>33	NA A	Y
2CHS*EFV5A	EXCESS FLOW CHECK VALVES 3/4" DRAGON VALVES	C151C	RB	255	LH	Y	NA	NA	SF	>33	NA A	Y
2CHS*EFV5B	EXCESS FLOW CHECK VALVES 3/4" DRAGON VALVES	C151C	RB	255	LH	Y	NA	NA	SF	>33	NA A	Y
2CHS*EFV6	EXCESS FLOW CHECK VALVES 3/4" DRAGON VALVES	C151C	RB	255	LH	Y	NA	NA	SF	>33	NA A	Y
2CHS*EFV8A	EXCESS FLOW CHECK VALVES 3/4" DRAGON VALVES	C151C	RB	255	LH	Y	NA	NA	SF	>33	NA A	Y
2CHS*EFV8B	EXCESS FLOW CHECK VALVES 3/4" DRAGON VALVES	C151C	RB	255	LH	Y	NA	NA	SF	>33	NA A	Y
2CHS*EFV9A	EXCESS FLOW CHECK VALVES 3/4" DRAGON VALVES	C151C	RB	192	LH	Y	NA	NA	SF	>33	NA A	Y
2CHS*EFV9B	EXCESS FLOW CHECK VALVES 3/4" DRAGON VALVES	C151C	RB	192	LH	Y	NA	NA	SF	>33	NA A	Y
2CSH*EFV1	EXCESS FLOW CHECK VALVES 2" DRAGON VALVES	C151C	RB	215	LH	Y	NA	NA	SF	>33	NA A	Y

JOB NAME NMP - UNIT 2
UTILITY NIAGARA MOHAWK

SEISMIC AND DYNAMIC QUALIFICATION SUMMARY AND STATUS REPORT
MASTER LIST OF SAFETY RELATED EQUIPMENT

ENGINEER: STONE & WEBSTER
NSSS SUPPLIER: GENERAL ELECTRIC

EQUIP. ID / SWEC ID	EQUIPMENT DESCRIPTION / MANUFACTURER	PPD NO.	LOCATION BLDG	LOCATION ELEV	LOCATION HTG	LOADS SEIS	LOADS HYDR	QUAL ANLYS	METH TEST	NAT FREQ LOWEST	RRS REF STATUS QUAL	RRS REF STATUS INST
2CSH*EFV2	EXCESS FLOW CHECK VALVES 2" DRAGON VALVES	C151C	RB	175	LH	Y	NA	NA	SF	>33	NA A	Y
2CSH*EFV3	EXCESS FLOW CHECK VALVES 3/4" DRAGON VALVES	C151C	RB	240	LH	Y	NA	NA	SF	>33	NA A	Y
2CSL*EFV1	EXCESS FLOW CHECK VALVES 3/4" DRAGON VALVES	C151C	RB	250	LH	Y	NA	NA	SF	>33	NA A	Y
2DER*EFV31	EXCESS FLOW CHECK VALVES 3/4" DRAGON VALVES	C151C	RB	240	LH	Y	NA	NA	SF	>33	NA A	Y
2IAS*EFV200	3/4" EXCESS FLOW CHECK VALVE DRAGON VALVES, INC.	C151C	RB	271	LH	Y	NA	NA	SF	>33	NA A	Y
2IAS*EFV201	3/4" EXCESS FLOW CHECK VALVE DRAGON VALVES, INC.	C151C	RB	271	LH	Y	NA	NA	SF	>33	NA A	Y
2IAS*EFV202	3/4" EXCESS FLOW CHECK VALVE DRAGON VALVES, INC.	C151C	RB	271	LH	Y	NA	NA	SF	>33	NA A	Y
2IAS*EFV203	3/4" EXCESS FLOW CHECK VALVE DRAGON VALVES, INC.	C151C	RB	271	LH	Y	NA	NA	SF	>33	NA A	Y
2IAS*EFV204	3/4" EXCESS FLOW CHECK VALVE DRAGON VALVES, INC.	C151C	RB	271	LH	Y	NA	NA	SF	>33	NA A	Y
2IAS*EFV205	3/4" EXCESS FLOW CHECK VALVE DRAGON VALVES, INC.	C151C	RB	271	LH	Y	NA	NA	SF	>33	NA A	Y
2IAS*EFV206	3/4" EXCESS FLOW CHECK VALVE DRAGON VALVES, INC.	C151C	RB	271	LH	Y	NA	NA	SF	>33	NA A	Y
2IAS*EFV6	EXCESS FLOW CHECK VALVES 3/4" DRAGON VALVES	C151C	RB	308	LH	Y	NA	NA	SF	>33	NA A	Y
2ICS*EFV1	EXCESS FLOW CHECK VALVES 3/4" DRAGON VALVES	C151C	RB	249	LH	Y	NA	NA	SF	>33	NA A	Y

JOB NAME NMP - UNIT 2
UTILITY NIAGARA MOHAWK

SEISMIC AND DYNAMIC QUALIFICATION SUMMARY AND STATUS REPORT
MASTER LIST OF SAFETY RELATED EQUIPMENT

ENGINEER: STONE & WEBSTER
NSSS SUPPLIER: GENERAL ELECTRIC

EQUIP. ID / SHEC ID	EQUIPMENT DESCRIPTION / MANUFACTURER	PPD NO.	LOCATION BLDG	LOCATION ELEV	LOCATION HTG	LOADS SEIS	LOADS HYDR	QUAL ANLYS	METH TEST	NAT FREQ LOWEST	RRS REF STATUS QUAL	RRS REF STATUS INST
2ICS*EFV2	EXCESS FLOW CHECK VALVES 3/4" DRAGON VALVES	C151C	RB	249	LH	Y	NA	NA	SF	>33	NA A	Y
2ICS*EFV3	EXCESS FLOW CHECK VALVES 3/4" DRAGON VALVES	C151C	RB	246	LH	Y	NA	NA	SF	>33	NA A	Y
2ICS*EFV4	EXCESS FLOW CHECK VALVES 3/4" DRAGON VALVES	C151C	RB	296	LH	Y	NA	NA	SF	>33	NA A	Y
2ISC*EFV1	EXCESS FLOW CHECK VALVES 3/4" DRAGON VALVES	C151C	RB	311	LH	Y	NA	NA	SF	>33	NA A	Y
2ISC*EFV10	EXCESS FLOW CHECK VALVES 3/4" DRAGON VALVES	C151C	RB	291	LH	Y	NA	NA	SF	>33	NA A	Y
2ISC*EFV11	EXCESS FLOW CHECK VALVES 3/4" DRAGON VALVES	C151C	RB	268	LH	Y	NA	NA	SF	>33	NA A	Y
2ISC*EFV12	EXCESS FLOW CHECK VALVES 3/4" DRAGON VALVES	C151C	RB	256	LH	Y	NA	NA	SF	>33	NA A	Y
2ISC*EFV13	EXCESS FLOW CHECK VALVES 3/4" DRAGON VALVES	C151C	RB	270	LH	Y	NA	NA	SF	>33	NA A	Y
2ISC*EFV14	EXCESS FLOW CHECK VALVES 3/4" DRAGON VALVES	C151C	RB	243	LH	Y	NA	NA	SF	>33	NA A	Y
2ISC*EFV15	EXCESS FLOW CHECK VALVES 3/4" DRAGON VALVES	C151C	RB	291	LH	Y	NA	NA	SF	>33	NA A	Y
2ISC*EFV16	EXCESS FLOW CHECK VALVES 3/4" DRAGON VALVES	C151C	RB	251	LH	Y	NA	NA	SF	>33	NA A	Y
2ISC*EFV17	EXCESS FLOW CHECK VALVES 3/4" DRAGON VALVES	C151C	RB	290	LH	Y	NA	NA	SF	>33	NA A	Y
2ISC*EFV18	EXCESS FLOW CHECK VALVES 3/4" DRAGON VALVES	C151C	RB	270	LH	Y	NA	NA	SF	>33	NA A	Y

JOB NAME NMP - UNIT 2
UTILITY NIAGARA MOHAWK

SEISMIC AND DYNAMIC QUALIFICATION SUMMARY AND STATUS REPORT
MASTER LIST OF SAFETY RELATED EQUIPMENT

ENGINEER: STONE & WEBSTER
NSSS SUPPLIER: GENERAL ELECTRIC

EQUIP. ID / SHEC ID	EQUIPMENT DESCRIPTION / MANUFACTURER	PPD NO.	LOCATION BLDG	ELEV	MTG	LOADS SEIS	HYDR	QUAL ANLYS	METH TEST	NAT FREQ LOWEST	RRS REF STATUS QUAL	INST
2ISC*EFV19	EXCESS FLOW CHECK VALVES 3/4" DRAGON VALVES	C151C	RB	255	LH	Y	NA	NA	SF	>33	NA A	Y
2ISC*EFV2	EXCESS FLOW CHECK VALVES 3/4" DRAGON VALVES	C151C	RB	311	LH	Y	NA	NA	SF	>33	NA A	Y
2ISC*EFV20	EXCESS FLOW CHECK VALVES 3/4" DRAGON VALVES	C151C	RB	270	LH	Y	NA	NA	SF	>33	NA A	Y
2ISC*EFV21	EXCESS FLOW CHECK VALVES 3/4" DRAGON VALVES	C151C	RB	242	LH	Y	NA	NA	SF	>33	NA A	Y
2ISC*EFV22	EXCESS FLOW CHECK VALVES 3/4" DRAGON VALVES	C151C	RB	243	LH	Y	NA	NA	SF	>33	NA A	Y
2ISC*EFV23	EXCESS FLOW CHECK VALVES 3/4" DRAGON VALVES	C151C	RB	270	LH	Y	NA	NA	SF	>33	NA A	Y
2ISC*EFV24	EXCESS FLOW CHECK VALVES 3/4" DRAGON VALVES	C151C	RB	271	LH	Y	NA	NA	SF	33	NA A	Y
2ISC*EFV25	EXCESS FLOW CHECK VALVES 3/4" DRAGON VALVES	C151C	RB	271	LH	Y	NA	NA	SF	>33	NA A	Y
2ISC*EFV26	EXCESS FLOW CHECK VALVES 3/4" DRAGON VALVES	C151C	RB	271	LH	Y	NA	NA	SF	>33	NA A	Y
2ISC*EFV27	EXCESS FLOW CHECK VALVES 3/4" DRAGON VALVES	C151C	RB	270	LH	Y	NA	NA	SF	>33	NA A	Y
2ISC*EFV28	EXCESS FLOW CHECK VALVES 3/4" DRAGON VALVES	C151C	RB	271	LH	Y	NA	NA	SF	>33	NA A	Y
2ISC*EFV29	EXCESS FLOW CHECK VALVES 3/4" DRAGON VALVES	C151C	RB	271	LH	Y	NA	NA	SF	>33	NA A	Y
2ISC*EFV3	EXCESS FLOW CHECK VALVES 3/4" DRAGON VALVES	C151C	RB	311	LH	Y	NA	NA	SF	>33	NA A	Y

JOB NAME NIP - UNIT 2
UTILITY NIAGARA MOHAWK

SEISMIC AND DYNAMIC QUALIFICATION SUMMARY AND STATUS REPORT
MASTER LIST OF SAFETY RELATED EQUIPMENT

ENGINEER: STONE & WEBSTER
NSSS SUPPLIER: GENERAL ELECTRIC

EQUIP. ID / SHEC ID	EQUIPMENT DESCRIPTION / MANUFACTURER	PPD NO.	LOCATION BLDG	LOCATION ELEV	LOCATION HTG	LOADS SEIS	LOADS HYDR	QUAL ANLYS	METH TEST	NAT FREQ LOWEST	RRS REF STATUS QUAL	RRS REF STATUS INST
2ISC*EFV30	EXCESS FLOW CHECK VALVES 3/4" DRAGON VALVES	C151C	RB	271	LH	Y	NA	NA	SF	>33	NA A	Y
2ISC*EFV31	EXCESS FLOW CHECK VALVES 3/4" DRAGON VALVES	C151C	RB	270	LH	Y	NA	NA	SF	>33	NA A	Y
2ISC*EFV32	EXCESS FLOW VALVES 3/4" DRAGON VALVES	C151C	RB	270	LH	Y	NA	NA	SF	>33	NA A	Y
2ISC*EFV33	EXCESS FLOW CHECK VALVES 3/4" DRAGON VALVES	C151C	RB	271	LH	Y	NA	NA	SF	>33	NA A	Y
2ISC*EFV34	EXCESS FLOW CHECK VALVES 3/4" DRAGON VALVES	C151C	RB	271	LH	Y	NA	NA	SF	>33	NA A	Y
2ISC*EFV35	EXCESS FLOW CHECK VALVES 3/4" DRAGON VALVES	C151C	RB	270	LH	Y	NA	NA	SF	>33	NA A	Y
2ISC*EFV36	EXCESS FLOW CHECK VALVES 3/4" DRAGON VALVES	C151C	RB	269	LH	Y	NA	NA	SF	>33	NA A	Y
2ISC*EFV37	EXCESS FLOW CHECK VALVES 3/4" DRAGON VALVES	C151C	RB	270	LH	Y	NA	NA	SF	>33	NA A	Y
2ISC*EFV38	EXCESS FLOW CHECK VALVES 3/4" DRAGON VALVES	C151C	RB	269	LH	Y	NA	NA	SF	>33	NA A	Y
2ISC*EFV39	EXCESS FLOW CHECK VALVES 3/4" DRAGON VALVES	C151C	RB	268	LH	Y	NA	NA	SF	>33	NA A	Y
2ISC*EFV4	EXCESS FLOW CHECK VALVES 3/4" DRAGON VALVES	C151C	RB	300	LH	Y	NA	NA	SF	>33	NA A	Y
2ISC*EFV40	EXCESS FLOW CHECK VALVES 3/4" DRAGON VALVES	C151C	RB	271	LH	Y	NA	NA	SF	>33	NA A	Y
2ISC*EFV41	EXCESS FLOW CHECK VALVES 3/4" DRAGON VALVES	C151C	RB	268	LH	Y	NA	NA	SF	>33	NA A	Y

JOB NAME NMP - UNIT 2
UTILITY NIAGARA MOHAWK

SEISMIC AND DYNAMIC QUALIFICATION SUMMARY AND STATUS REPORT
MASTER LIST OF SAFETY RELATED EQUIPMENT

ENGINEER: STONE & WEBSTER
NSSS SUPPLIER: GENERAL ELECTRIC

EQUIP. ID / SHEC ID	EQUIPMENT DESCRIPTION / MANUFACTURER	PPD NO.	LOCATION BLDG	ELEV	HTG	LOADS SEIS	HYDR	QUAL ANLYS	METH TEST	NAT FREQ LOWEST	RRS REF STATUS QUAL	INST
2ISC*EFV42	EXCESS FLOW CHECK VALVES 3/4" DRAGON VALVES	C151C	RB	268	LH	Y	NA	NA	SF	>33	NA A	Y
2ISC*EFV5	EXCESS FLOW CHECK VALVES 3/4" DRAGON VALVES	C151C	RB	311	LH	Y	NA	NA	SF	>33	NA A	N
2ISC*EFV7	EXCESS FLOW CHECK VALVES 3/4" DRAGON VALVES	C151C	RB	300	LH	Y	NA	NA	SF	>33	NA A	Y
2ISC*EFV8	EXCESS FLOW CHECK VALVES 3/4" DRAGON VALVES	C151C	RB	291	LH	Y	NA	NA	SF	>33	NA A	Y
2ISC*EFV9	EXCESS FLOW CHECK VALVES 3/4" DRAGON VALVES	C151C	RB	254	LH	Y	NA	NA	SF	>33	NA A	N
2HSS*EFV1A	EXCESS FLOW CHECK VALVES 3/4" DRAGON VALVES	C151C	RB	240	LH	Y	NA	NA	SF	>33	NA A	Y
2HSS*EFV1B	EXCESS FLOW CHECK VALVES 3/4" DRAGON VALVES	C151C	RB	240	LH	Y	NA	NA	SF	>33	NA A	Y
2HSS*EFV1C	EXCESS FLOW CHECK VALVES 3/4" DRAGON VALVES	C151C	RB	240	LH	Y	NA	NA	SF	>33	NA A	Y
2HSS*EFV1D	EXCESS FLOW CHECK VALVES 3/4" DRAGON VALVES	C151C	RB	240	LH	Y	NA	NA	SF	>33	NA A	Y
2HSS*EFV2A	EXCESS FLOW CHECK VALVES 3/4" DRAGON VALVES	C151C	RB	240	LH	Y	NA	NA	SF	>33	NA A	Y
2HSS*EFV2B	EXCESS FLOW CHECK VALVES 3/4" DRAGON VALVES	C151C	RB	240	LH	Y	NA	NA	SF	>33	NA A	Y
2HSS*EFV2C	EXCESS FLOW CHECK VALVES 3/4" DRAGON VALVES	C151C	RB	240	LH	Y	NA	NA	SF	>33	NA A	Y
2HSS*EFV2D	EXCESS FLOW CHECK VALVES 3/4" DRAGON VALVES	C151C	RB	240	LH	Y	NA	NA	SF	>33	NA A	Y

JOB NAME NMP - UNIT 2
UTILITY NIAGARA MOHAWK

SEISMIC AND DYNAMIC QUALIFICATION SUMMARY AND STATUS REPORT
MASTER LIST OF SAFETY RELATED EQUIPMENT

ENGINEER: STONE & WEBSTER
NSSS SUPPLIER: GENERAL ELECTRIC

EQUIP. ID / SWEC ID	EQUIPMENT DESCRIPTION / MANUFACTURER	PPD NO.	LOCATION BLDG	LOCATION ELEV	LOCATION HTG	LOADS SEIS	LOADS HYDR	QUAL ANLYS	METH TEST	NAT FREQ LOWEST	RRS REF STATUS QUAL	RRS REF STATUS INST
2MSS*EFV3A	EXCESS FLOW CHECK VALVES 3/4" DRAGON VALVES	C151C	RB	240	LH	Y	NA	NA	SF	>33	NA A	Y
2MSS*EFV3B	EXCESS FLOW CHECK VALVES 3/4" DRAGON VALVES	C151C	RB	240	LH	Y	NA	NA	SF	>33	NA A	Y
2MSS*EFV3C	EXCESS FLOW CHECK VALVES 3/4" DRAGON VALVES	C151C	RB	240	LH	Y	NA	NA	SF	>33	NA A	Y
2MSS*EFV3D	EXCESS FLOW CHECK VALVES 3/4" DRAGON VALVES	C151C	RB	240	LH	Y	NA	NA	SF	>33	NA A	Y
2MSS*EFV4A	EXCESS FLOW CHECK VALVES 3/4" DRAGON VALVES	C151C	RB	240	LH	Y	NA	NA	SF	>33	NA A	Y
2MSS*EFV4B	EXCESS FLOW CHECK VALVES 3/4" DRAGON VALVES	C151C	RB	240	LH	Y	NA	NA	SF	>33	NA A	Y
2MSS*EFV4C	EXCESS FLOW CHECK VALVES 3/4" DRAGON VALVES	C151C	RB	240	LH	Y	NA	NA	SF	>33	NA A	Y
2MSS*EFV4D	EXCESS FLOW CHECK VALVES 3/4" DRAGON VALVES	C151C	RB	240	LH	Y	NA	NA	SF	>33	NA A	Y
2RCS*EFV44A	EXCESS FLOW CHECK VALVES 3/4" DRAGON VALVES	C151C	RB	252	LH	Y	NA	NA	SF	>33	NA A	Y
2RCS*EFV44B	EXCESS FLOW CHECK VALVES 3/4" DRAGON VALVES	C151C	RB	250	LH	Y	NA	NA	SF	33	NA A	Y
2RCS*EFV45A	EXCESS FLOW CHECK VALVES 3/4" DRAGON VALVES	C151C	RB	244	LH	Y	NA	NA	SF	>33	NA A	Y
2RCS*EFV45B	EXCESS FLOW CHECK VALVES 3/4" DRAGON VALVES	C151C	RB	243	LH	Y	NA	NA	SF	>33	NA A	Y
2RCS*EFV46A	EXCESS FLOW CHECK VALVES 3/4" DRAGON VALVES	C151C	RB	244	LH	Y	NA	NA	SF	>33	NA A	Y

JOB NAME NMP - UNIT 2
UTILITY NIAGARA MOHAWK

SEISMIC AND DYNAMIC QUALIFICATION SUMMARY AND STATUS REPORT
MASTER LIST OF SAFETY RELATED EQUIPMENT

ENGINEER: STONE & WEBSTER
NSSS SUPPLIER: GENERAL ELECTRIC

EQUIP. ID / SHEC ID	EQUIPMENT DESCRIPTION / MANUFACTURER	PPD NO.	LOCATION BLDG	ELEV	HTG	LOADS SEIS	HYDR	QUAL ANLYS	METH TEST	NAT FREQ LOWEST	RRS REF STATUS QUAL	INST
2RCS*EFV46B	EXCESS FLOW CHECK VALVES 3/4" DRAGON VALVES	C151C	RB	243	LH	Y	NA	NA	SF	>33	NA A	Y
2RCS*EFV47A	EXCESS FLOW CHECK VALVES 3/4" DRAGON VALVES	C151C	RB	243	LH	Y	NA	NA	SF	>33	NA A	Y
2RCS*EFV47B	EXCESS FLOW CHECK VALVES 3/4" DRAGON VALVES	C151C	RB	245	LH	Y	NA	NA	SF	>33	NA A	Y
2RCS*EFV48A	EXCESS FLOW CHECK VALVES 3/4" DRAGON VALVES	C151C	RB	243	LH	Y	NA	NA	SF	>33	NA A	Y
2RCS*EFV48B	EXCESS FLOW CHECK VALVES 3/4" DRAGON VALVES	C151C	RB	245	LH	Y	NA	NA	SF	>33	NA A	Y
2RCS*EFV52A	EXCESS FLOW CHECK VALVES 3/4" DRAGON VALVES	C151C	RB	245	LH	Y	NA	NA	SF	>33	NA A	Y
2RCS*EFV52B	EXCESS FLOW CHECK VALVES 3/4" DRAGON VALVES	C151C	RB	243	LH	Y	NA	NA	SF	>33	NA A	Y
2RCS*EFV53A	EXCESS FLOW CHECK VALVES 3/4" DRAGON VALVES	C151C	RB	245	LH	Y	NA	NA	SF	>33	NA A	Y
2RCS*EFV53B	EXCESS FLOW CHECK VALVES 3/4" DRAGON VALVES	C151C	RB	245	LH	Y	NA	NA	SF	>33	NA A	Y
2RCS*EFV62A	EXCESS FLOW CHECK VALVES 3/4" DRAGON VALVES	C151C	RB	245	LH	Y	NA	NA	SF	>33	NA A	Y
2RCS*EFV62B	EXCESS FLOW CHECK VALVES 3/4" DRAGON VALVES	C151C	RB	245	LH	Y	NA	NA	SF	>33	NA A	Y
2RCS*EFV63A	EXCESS FLOW CHECK VALVES 3/4" DRAGON VALVES	C151C	RB	243	LH	Y	NA	NA	SF	>33	NA A	Y
2RCS*EFV63B	EXCESS FLOW CHECK VALVES 3/4" DRAGON VALVES	C151C	RB	243	LH	Y	NA	NA	SF	>33	NA A	Y

JOB NAME NMP - UNIT 2
UTILITY NIAGARA MOHAWK

SEISMIC AND DYNAMIC QUALIFICATION SUMMARY AND STATUS REPORT
MASTER LIST OF SAFFTY RELATED EQUIPMENT

ENGINEER: STONE & WEBSTER
NSSS SUPPLIER: GENERAL ELECTRIC

EQUIP. ID / SWEC ID	EQUIPMENT DESCRIPTION / MANUFACTURER	PPD NO.	LOCATION BLDG	ELEV	HTG	LOADS SEIS	HYDR	QUAL ANLYS	METH TEST	NAT FREQ LOWEST	RRS REF STATUS QUAL	INST
2RHS*EFV5	EXCESS FLOW CHECK VALVES 3/4" DRAGON VALVES	C151C	RB	243	LH	Y	NA	NA	SF	>33	NA A	Y
2RHS*EFV6	EXCESS FLOW CHECK VALVES 3/4" DRAGON VALVES	C151C	RB	243	LH	Y	NA	NA	SF	>33	NA A	Y
2RHS*EFV7	EXCESS FLOW CHECK VALVES 3/4" DRAGON VALVES	C151C	RB	245	LH	Y	NA	NA	SF	>33	NA A	Y
2SHP*EFV34A	EXCESS FLOW CHECK VALVES 1" DRAGON VALVES	C151C	SB	248	LH	Y	NA	NA	SF	>33	NA A	Y
2SHP*EFV34B	EXCESS FLOW CHECK VALVES 1" DRAGON VALVES	C151C	SB	254	LH	Y	NA	NA	SF	>33	NA A	Y
2HCS*EFV221	EXCESS FLOW CHECK VALVES 3/4" DRAGON VALVES	C151C	RB	245	LH	Y	NA	NA	SF	>33	NA A	Y
2HCS*EFV222	EXCESS FLOW CHECK VALVES 3/4" DRAGON VALVES	C151C	RB	245	LH	Y	NA	NA	SF	>33	NA A	Y
2HCS*EFV223	EXCESS FLOW CHECK VALVES 3/4" DRAGON VALVES	C151C	RB	244	LH	Y	NA	NA	SF	>33	NA A	Y
2HCS*EFV224	EXCESS FLOW CHECK VALVES 3/4" DRAGON VALVES	C151C	RB	244	LH	Y	NA	NA	SF	>33	NA A	Y
2HCS*EFV300	EXCESS FLOW CHECK VALVES 3/4" DRAGON VALVES	C151C	RB	244	LH	Y	NA	NA	SF	>33	NA A	N

JOB NAME NMP - UNIT 2
UTILITY NIAGARA MOHAWK

SEISMIC AND DYNAMIC QUALIFICATION SUMMARY AND STATUS REPORT
MASTER LIST OF SAFETY RELATED EQUIPMENT

ENGINEER: STONE & WEBSTER
NSSS SUPPLIER: GENERAL ELECTRIC

EQUIP. ID / SHEC ID	EQUIPMENT DESCRIPTION / MANUFACTURER	PPD NO.	LOCATION BLDG	LOCATION ELEV	LOCATION HTG	LOADS SEIS	LOADS HYDR	QUAL ANLYS	METH TEST	NAT FREQ LOWEST	RRS REF STATUS QUAL	RRS REF STATUS INST
2CEC*PNL880A	CONTROL ROOM PANEL KAMAN	P281F	CB	306	CF	Y	NA	D	NA	27	18 A	Y
2CEC*PNL880B	CONTROL ROOM PANEL KAMAN	P281F	CB	306	CF	Y	NA	D	NA	27	28 A	Y
2CEC*PNL880C	CONTROL ROOM PANEL KAMAN	P281F	CB	306	CF	Y	NA	D	NA	27	18 A	Y
2CEC*PNL880D	CONTROL ROOM PANEL KAMAN	P281F	CB	306	CF	Y	NA	D	NA	27	18 A	Y
2CHS*CAB10A	PARTC/GAS MONITOR KAMAN	P281F	RB	289	CF	Y	NA	NA	HF	13	59 B	Y
2CHS*CAB10B	PARTIC/GAS MONITOR KAMAN	P281F	RB	289	CF	Y	NA	NA	HF	13	59 B	Y
2CHS*REX10A	RADN ELEMENT CONTMT KAMAN	P281F	RB	289	EH	Y	NA	NA	HF	NA	59 A	Y
2CHS*REX10B	RADN ELEMENT CNTMT KAMAN	P281F	RB	289	EH	Y	NA	NA	HF	NA	59 A	Y
2CHS*REY10A	RADN ELEMENT CNTMT KAMAN	P281F	RB	289	EH	Y	NA	NA	HF	NA	59 A	Y
2CHS*REY10B	RADN ELEMENT CNTMT KAMAN	P281F	RB	289	EH	Y	NA	NA	HF	NA	59 A	Y
2CHS*RIC10A	LOCAL INDICATOR PANEL KAMAN	P281F	ETN	215	RH	Y	NA	NA	HF	NA	1 A	Y
2CHS*RIC10B	LOCAL INDICATOR PANEL KAMAN	P281F	ETS	215	RH	Y	NA	NA	HF	NA	20 A	Y
2CHS*RUH10A	LOCAL MICROCOMPUTER KAMAN	P281F	ETN	215	RH	Y	NA	NA	HF	19	1 B	Y

JOB NAME NMP - UNIT 2
UTILITY NIAGARA MOHAWK

SEISMIC AND DYNAMIC QUALIFICATION SUMMARY AND STATUS REPORT
MASTER LIST OF SAFETY RELATED EQUIPMENT

ENGINEER: STONE & WEBSTER
NSSS SUPPLIER: GENERAL ELECTRIC

EQUIP. ID / SWEC ID	EQUIPMENT DESCRIPTION / MANUFACTURER	PPD NO.	LOCATION BLDG	LOCATION ELEV	LOCATION HTG	LOADS SEIS	LOADS HYDR	QUAL ANLYS	METH TEST	NAT FREQ LOWEST	RRS REF	STATUS QUAL	STATUS INST
2CMS*RUM10B	LOCAL MICROCOMPUTER KAMAN	P281F	ETS	215	RM	Y	NA	NA	MF	19	20	B	Y
2CMS*RUZ10A	CONTROL RM MICROPROCESSOR KAMAN	P281F	CB	306	EM	Y	NA	NA	MF	>100	18	A	Y
2CMS*RUZ10B	CONTROL ROM MICROPROCESSOR KAMAN	P281F	CB	306	EM	Y	NA	NA	MF	>100	18	A	Y
2HVC*CAB18A	GAS MONITOR KAMAN	P281F	CB	306	CF	Y	NA	S	MF	13	18	B	Y
2HVC*CAB18B	GAS MONITOR KAMAN	P281F	CB	306	CF	Y	NA	S	MF	13	18	B	Y
2HVC*CAB18C	GAS MONITOR KAMAN	P281F	CB	306	CF	Y	NA	S	MF	13	18	B	Y
2HVC*CAB18D	GAS MONITOR KAMAN	P281F	CB	306	CF	Y	NA	S	MF	13	18	B	Y
2HVC*RE18A	RADM ELEMENT CONT RM KAMAN	P281F	CB	306	EM	Y	NA	NA	MF	NA	18	A	Y
2HVC*RE18B	RADM ELEMENT CONT RM KAMAN	P281F	CB	306	EM	Y	NA	NA	MF	NA	18	A	Y
2HVC*RE18C	RADM ELEMENT CONT RM KAMAN	P281F	CB	306	EM	Y	NA	NA	MF	NA	18	A	Y
2HVC*RE18D	RADM ELEMENT CONT RM KAMAN	P281F	CB	306	EM	Y	NA	NA	MF	NA	18	A	Y
2HVC*RR18A	RADM RECORDER PEN CONT. RM KAMAN	P281F	CB	306	EM	Y	NA	NA	MF	NA	18	A	Y
2HVC*RR18B	RADM RECORDER PEN CONT. RM KAMAN	P281F	CB	306	EM	Y	NA	NA	MF	NA	18	A	Y

JOB NAME NMP - UNIT 2
UTILITY NIAGARA MOHAWK

SEISMIC AND DYNAMIC QUALIFICATION SUMMARY AND STATUS REPORT
MASTER LIST OF SAFETY RELATED EQUIPMENT

ENGINEER: STONE & WEBSTER
NSSS SUPPLIER: GENERAL ELECTRIC

EQUIP. ID / SHEC ID	EQUIPMENT DESCRIPTION / MANUFACTURER	PPD NO.	LOCATION BLDG	ELEV	MTG	LOADS SEIS	HYDR	QUAL ANLYS	METH TEST	NAT FREQ LOWEST	RRS REF STATUS QUAL	INST
2HVC*RR18C	RADN RECORDER PEN. CONT. RM KAMAN	P281F	CB	306	EM	Y	NA	NA	HF	NA	18 A	Y
2HVC*RR18D	RADN RECORDER PEN. CONT. RM KAMAN	P281F	CB	306	EM	Y	NA	N	HF	NA	18 A	Y
2HVC*RUM18A	LOCAL MICROCOMPUTER KAMAN	P281F	CB	306	EM	Y	NA	NA	HF	19	18 B	Y
2HVC*RUM18B	LOCAL MICROCOMPUTER KAMAN	P281F	CB	306	EM	Y	NA	NA	HF	19	18 B	Y
2HVC*RUM18C	LOCAL MICROCOMPUTER KAMAN	P281F	CB	306	EM	Y	NA	NA	HF	19	18 B	Y
2HVC*RUM18D	LOCAL MICROCOMPUTER KAMAN	P281F	CB	306	EM	Y	NA	NA	HF	19	18 B	Y
2HVC*RUZ18A	CONTROL RM MICROPROCESSOR KAMAN	P281F	CB	306	EM	Y	NA	NA	HF	>100	18 A	Y
2HVC*RUZ18B	CONTROL RM MICROPROCESSOR KAMAN	P281F	CB	306	EM	Y	NA	NA	HF	>100	18 A	Y
2HVC*RUZ18C	CONTROL RM MICROPROCESSOR KAMAN	P281F	CB	306	EM	Y	NA	NA	HF	>100	18 A	Y
2HVC*RUZ18D	CONTROL RM MICROPROCESSOR KAMAN	P281F	CB	306	EM	Y	NA	NA	HF	>100	18 A	Y
2HVC*SMPT18A	ISO-KINETIC NOZZLE KAMAN	P281F	CB	299	LM	Y	NA	S	NA	592	18 A	N
2HVC*SMPT18B	ISO-KINETIC NOZZLE KAMAN	P281F	CB	299	LM	Y	NA	S	NA	592	18 A	N
2HVC*SMPT18C	ISO-KINETIC NOZZLE KAMAN	P281F	CB	299	LM	Y	NA	S	NA	469	18 A	N

JOB NAME NMP - UNIT 2
UTILITY NIAGARA MOHAWK

SEISMIC AND DYNAMIC QUALIFICATION SUMMARY AND STATUS REPORT
MASTER LIST OF SAFETY RELATED EQUIPMENT

ENGINEER: STONE & WEBSTER
NSSS SUPPLIER: GENERAL ELECTRIC

EQUIP. ID / SHEC ID	EQUIPMENT DESCRIPTION / MANUFACTURER	PPD NO.	LOCATION BLDG	ELEV	HTG	LOADS SEIS	HYDR	QUAL ANLYS	METH TEST	NAT FREQ LOWEST	RRS REF STATUS QUAL	INST
2HVC*SHPT18D	ISO-KINETIC NOZZLE KAMAN	P281F	CB	299	LH	Y	NA	S	NA	592	18 A	N
2HVR*CAB19A	PARTIC./GAS MONITOR KAMAN	P281F	RB	329	CF	Y	NA	S	HF	13	58 B	Y
2HVR*CAB19B	PARTIC./GAS MONITOR KAMAN	P281F	RB	329	CF	Y	NA	S	HF	13	58 B	Y
2HVR*CAB32A	PARTIC./GAS MONITOR KAMAN	P281F	RB	289	CF	Y	NA	S	HF	13	59 B	Y
2HVR*CAB32B	PARTIC./GAS MONITOR KAMAN	P281F	RB	289	CF	Y	NA	S	HF	13	59 B	Y
2HVR*REX19A	RADN ELEMENT-ABV REFUEL KAMAN	P281F	RB	328	EH	Y	NA	NA	HF	NA	58 A	Y
2HVR*REX19B	RADN ELEMENT-ABV REFUEL KAMAN	P281F	RB	328	EH	Y	NA	NA	HF	NA	58 A	Y
2HVR*REX32A	RADN ELEMENT-BLW REFUEL KAMAN	P281F	RB	289	EH	Y	NA	NA	HF	NA	59 A	Y
2HVR*REX32B	RADN ELEMENT-B/W REFUEL KAMAN	P281F	RB	289	EH	Y	NA	NA	HF	NA	59 A	Y
2HVR*REY19A	RADN ELEMENT-ABV REFUEL KAMAN	P281F	RB	328	EH	Y	NA	NA	HF	NA	58 A	Y
2HVR*REY32A	RADN ELEMENT-BELOW REFUEL KAMAN	P281F	RB	289	EH	Y	NA	NA	HF	NA	58 A	Y
2HVR*RIC19A	LOCAL INDICATOR PANEL KAMAN	P281F	ETN	215	RH	Y	NA	NA	HF	NA	1 A	Y
2HVR*RIC19B	LOCAL INDICATOR PANEL KAMAN	P281F	ETS	215	RH	Y	NA	NA	HF	NA	20 A	Y

JOB NAME NMP - UNIT 2
UTILITY NIAGARA MOHAWK

SEISMIC AND DYNAMIC QUALIFICATION SUMMARY AND STATUS REPORT
MASTER LIST OF SAFETY RELATED EQUIPMENT

ENGINEER: STONE & WEBSTER
NSSS SUPPLIER: GENERAL ELECTRIC

EQUIP. ID / SHEC ID	EQUIPMENT DESCRIPTION / MANUFACTURER	PPD NO.	LOCATION BLDG	ELEV	MTG	LOADS SEIS	HYDR	QUAL ANLYS	METH TEST	NAT FREQ LOWEST	RRS REF STATUS QUAL	INST
2HVR*RIC32A	LOCAL INDICATOR PANEL KAMAN	P281F	ETN	215	RH	Y	NA	NA	HF	NA	1 A	Y
2HVR*RIC32B	LOCAL INDICATOR PANEL KAMAN	P281F	ETS	215	RH	Y	NA	NA	HF	NA	20 A	Y
2HVR*RRX14A	RADN RECORDER PEN-ABV REFUEL KAMAN	P281F	RB	306	EH	Y	NA	NA	HF	NA	18 A	Y
2HVR*RRX14B	RADN RECORDER PEN-ABV REFUEL KAMAN	P281F	CB	306	EH	Y	NA	NA	HF	NA	18 A	N
2HVR*RRX32A	RADN RECORDER PEN-BLW REFUEL KAMAN	P281F	CB	306	EH	Y	NA	NA	HF	NA	18 A	Y
2HVR*RRX32B	RADN RECORDER PEN-BLW REFUEL KAMAN	P281F	CB	306	EH	Y	NA	NA	HF	NA	18 A	Y
2HVR*RRY14A	RADN RECORDER PEN KAMAN	P281F	CB	306	EH	Y	NA	NA	HF	NA	18 A	Y
2HVR*RRY32A	RADN RECORDER PEN KAMAN	P281F	CB	306	EH	Y	NA	NA	HF	NA	18 A	Y
2HVR*RUH14A	LOCAL MICROCOMPUTER KAMAN	P281F	ETN	215	RH	Y	NA	NA	HF	19	1 B	Y
2HVR*RUH14B	LOCAL MICROCOMPUTER KAMAN	P281F	ETS	215	RH	Y	NA	NA	HF	19	20 B	Y
2HVR*RUH32A	LOCAL MICROCOMPUTER KAMAN	P281F	ETN	215	RH	Y	NA	NA	HF	19	1 B	Y
2HVR*RUH32B	LOCAL MICROCOMPUTER KAMAN	P281F	ETS	215	RH	Y	NA	NA	HF	19	20 B	Y
2HVR*RUZ14A	CONTROL RH MICROPROCESSOR KAMAN	P281F	CB	306	EH	Y	NA	NA	HF	>100	18 A	Y

JOB NAME NMP - UNIT 2
UTILITY NIAGARA MOHAWK

SEISMIC AND DYNAMIC QUALIFICATION SUMMARY AND STATUS REPORT
MASTER LIST OF SAFETY RELATED EQUIPMENT

ENGINEER: STONE & WEBSTER
NSSS SUPPLIER: GENERAL ELECTRIC

EQUIP. ID / SHEC ID	EQUIPMENT DESCRIPTION / MANUFACTURER	PPD NO.	LOCATION BLDG	ELEV	HTG	LOADS SEIS	HYDR	QUAL ANLYS	METH TEST	NAT FREQ LOWEST	RRS REF STATUS QUAL	INST
2HVR*RUZ14B	CONTROL RH MICROPROCESSOR KAMAN	P281F	CB	306	EH	Y	NA	NA	MF	>100	18 A	Y
2HVR*RUZ32A	CONTROL ROOM MICROPROCESSOR KAMAN	P281F	CB	306	EH	Y	NA	NA	MF	>100	18 A	Y
2HVR*RUZ32B	CONTROL RH MICROPROCESSOR KAMAN	P281F	CB	306	EH	Y	NA	NA	MF	>100	18 A	Y
2HVR*SHPT14A	ISO-KINETIC NOZZLE KAMAN	P281F	RB	328	LH	Y	NA	S	NA	103	58 A	N
2HVR*SHPT14B	ISO-KINETIC NOZZLE KAMAN	P281F	RB	328	LH	Y	NA	S	NA	103	58 A	N
2HVR*SHPT32A	ISO-KINETIC NOZZLE KAMAN	P281F	RB	289	LH	Y	NA	S	NA	49	59 A	N
2HVR*SHPT32B	ISO-KINETIC NOZZLE KAMAN	P281F	RB	289	LH	Y	NA	S	NA	49	59 A	N
2RHS*RAH1A	REMOTE INDICATOR KAMAN	P281F	ETN	215	RH	Y	NA	NA	MF	NA	1 A	Y
2RHS*RAH1B	REMOTE INDICATOR KAMAN	P281F	ETS	215	RH	Y	NA	NA	MF	NA	20 A	Y
2RHS*RAH1C	REMOTE INDICATOR KAMAN	P281F	ETN	215	RH	Y	NA	NA	MF	NA	1 A	Y
2RHS*RAH1D	REMOTE INDICATOR KAMAN	P281F	ETS	215	RH	Y	NA	NA	MF	NA	20 A	Y
2RHS*RE1A	RADN ELEMENT-DH HATCH KAMAN	P281F	PC	261	RH	Y	Y	NA	MF	105	35,36 A	N
2RHS*RE1B	RADN ELEMENT-DH HATCH KAMAN	P281F	PC	261	RH	Y	Y	NA	MF	105	35,36 A	N

JOB NAME NMP - UNIT 2
UTILITY NIAGARA MOHAWK

SEISMIC AND DYNAMIC QUALIFICATION SUMMARY AND STATUS REPORT
MASTER LIST OF SAFETY RELATED EQUIPMENT

ENGINEER: STONE & WEBSTER
NSSS SUPPLIER: GENERAL ELECTRIC

EQUIP. ID / SHEC ID	EQUIPMENT DESCRIPTION / MANUFACTURER	PPD NO.	LOCATION BLDG	ELEV	HTG	LOADS SEIS	HYDR	QUAL ANLYS	METH TEST	NAT FREQ LOWEST	RRS REF STATUS QUAL	INST
2RMS*RE1C	10N CHAMBER DETECTOR KAMAN	P281F	PC	261	RH	Y	Y	NA	HF	105	35 A	N
2RMS*RE1D	10N CHAMBER DETECTOR KAMAN	P281F	PC	261	RH	Y	Y	NA	HF	105	35 A	N
2RMS*RR1A	RAD RECORDER PEN-DH HATCH KAMAN	P281F	CB	306	EH	Y	NA	NA	HF	NA	16 A	Y
2RMS*RR1B	RADN RECORDER PEN-DH HATCH KAMAN	P281F	CB	306	EH	Y	NA	NA	HF	NA	16 A	Y
2RMS*RUH1A	LOCAL MICROCOMPUTER KAMAN	P281F	ETN	215	RH	Y	NA	NA	HF	19	1 B	Y
2RMS*RUH1B	LOCAL MICROCOMPUTER KAMAN	P281F	ETS	215	RH	Y	NA	NA	HF	19	20 B	Y
2RMS*RUH1C	MICROCOMPUTER KAMAN	P281F	ETN	261	RH	Y	Y	NA	HF	19	1 B	Y
2RMS*RUH1D	MICROCOMPUTER KAMAN	P281F	ETS	215	RH	Y	Y	NA	HF	19	20 B	Y
2RMS*RUZ1A	CONTROL ROOM MICROPROCESSOR KAMAN	P281F	CB	306	EH	Y	NA	NA	HF	>100	16 A	Y
2RMS*RUZ1B	CONTROL RM MICROPROCESSOR KAMAN	P281F	CB	306	EH	Y	NA	NA	HF	>100	16 A	Y
2RMS*RUZ1C	CONTROL RM MICROPROCESSOR KAMAN	P281F	CB	306	EH	Y	NA	NA	HF	>100	16 A	Y
2RMS*RUZ1D	CONTROL RM MICROPROCESSOR KAMAN	P281F	CB	306	EH	Y	NA	NA	HF	>100	16 A	Y
2SHP*CAB196A	LIQUID MONITOR KAMAN	P281F	SB	250	CF	Y	NA	NA	HF	34	5 B	Y

JOB NAME NMP - UNIT 2
UTILITY NIAGARA MOHAWK

SEISMIC AND DYNAMIC QUALIFICATION SUMMARY AND STATUS REPORT
MASTER LIST OF SAFETY RELATED EQUIPMENT

ENGINEER: STONE & WEBSTER
NSSS SUPPLIER: GENERAL ELECTRIC

EQUIP. ID / SHEC ID	EQUIPMENT DESCRIPTION / MANUFACTURER	PPD NO.	LOCATION BLDG	ELEV	HTG	LOADS SEIS	HYDR	QUAL ANLYS	METH- TEST	NAT FREQ- LOWEST	RRS REF STATUS QUAL	INST
2SHP*CAB146B	LIQUID MONITOR KAMAN	P281F	SB	250	CF	Y	NA	NA	HF	34	5 B	Y
2SHP*CAB23A	LIQUID MONITOR KAMAN	P281F	ETN	215	CF	Y	NA	NA	HF	34	1 B	Y
2SHP*CAB23B	LIQUID MONITOR KAMAN	P281F	ETS	215	CF	Y	NA	NA	HF	34	20 B	Y
2SHP*RE146B	RAD ELEMENT-TO LAKE KAMAN	P281F	SB	245	EH	Y	NA	NA	HF	NA	5 A	Y
2SHP*RE23A	RAD ELEMENT-RHR HT EXCH KAMAN	P281F	ETN	215	EH	Y	NA	NA	HF	NA	1 A	Y
2SHP*RE23B	RAD ELEMENT-RHR HT EXCH KAMAN	P281F	ETS	215	EH	Y	NA	NA	HF	NA	20 A	Y
2SHP*RR146A	RADM RECORDER PEN KAMAN	P281F	CB	306	EH	Y	NA	NA	HF	NA	18 A	Y
2SHP*RR146B	RADM RECORDER PEN KAMAN	P281F	CB	306	EH	Y	NA	NA	HF	NA	18 A	Y
2SHP*RR23A	RADM RECORDER PEN KAMAN	P281F	CB	306	EH	Y	NA	NA	HF	NA	18 A	Y
2SHP*RR23B	RADM RECORDER PEN KAMAN	P281F	CB	306	EH	Y	NA	NA	HF	NA	18 A	Y
2SHP*RUM146A	LOCAL MICROCOMPUTER KAMAN	P281F	SB	245	EH	Y	NA	NA	HF	19	5 B	Y
2SHP*RUM146B	LOCAL MICROCOMPUTER KAMAN	P281F	SB	245	EH	Y	NA	NA	HF	19	5 B	Y
2SHP*RUM23A	LOCAL MICROCOMPUTER KAMAN	P281F	ETN	215	EH	Y	NA	NA	HF	19	1 B	Y

JOB NAME NMP - UNIT 2
UTILITY NIAGARA MOHAWK

SEISMIC AND DYNAMIC QUALIFICATION SUMMARY AND STATUS REPORT
MASTER LIST OF SAFETY RELATED EQUIPMENT

ENGINEER: STONE & WEBSTER
NSSS SUPPLIER: GENERAL ELECTRIC

EQUIP. ID / SWEC ID	EQUIPMENT DESCRIPTION / MANUFACTURER	PPD NO.	LOCATION BLDG	LOCATION ELEV	LOCATION HTG	LOADS SEIS	LOADS HYDR	QUAL ANLYS	METH TEST	NAT FREQ LOWEST	RRS REF STATUS QUAL	RRS REF STATUS INST
2SWP*RUW23B	LOCAL MICROCOMPUTER KAMAN	P281F	ETS	215	EM	Y	NA	NA	MF	19	20 B	Y
2SWP*RUZ146A	CONTROL ROOM MICROPROCESSOR KAMAN	P281F	CB	306	EM	Y	NA	NA	MF	>100	18 A	Y
2SWP*RUZ146B	CONTROL ROOM MICROPROCESSOR KAMAN	P281F	CB	306	EM	Y	NA	NA	MF	>100	18 A	Y
2SWP*RUZ23A	CONTROL ROOM MICROPROCESSOR KAMAN	P281F	CB	306	EM	Y	NA	NA	MF	>100	18 A	Y
2SWP*RUZ23B	CONTROL ROOM MICROPROCESSOR KAMAN	P281F	CB	306	EM	Y	NA	NA	MF	>100	18 A	Y

JOB NAME NMP - UNIT 2
UTILITY NIAGARA MOHAWK

SEISMIC AND DYNAMIC QUALIFICATION SUMMARY AND STATUS REPORT
MASTER LIST OF SAFETY RELATED EQUIPMENT

ENGINEER: STONE & WEBSTER
NSSS SUPPLIER: GENERAL ELECTRIC

EQUIP. ID / SNEC ID	EQUIPMENT DESCRIPTION / MANUFACTURER	PPD NO.	LOCATION BLDG	LOCATION ELEV	LOCATION HTG	LOADS SEIS	LOADS HYDR	QUAL ANLYS	METH- TEST	NAT FREQ- LOWEST	RRS REF	STATUS QUAL	STATUS INST
2EJA*XD100A	30 KVA TRANSFORMER SQUARE D COMPANY	E011T	ABN	240	DH	Y	NA	NA	HF	7	61	A	Y
2EJA*XD101A	25 KVA TRANSFORMER SQUARE D COMPANY	E011T	CB	261	DH	Y	NA	NA	HF	7	16	A	Y
2HTS*XD001	25 KVA TRANSFORMER SQUARE D COMPANY	E011T	ABN	279	DH	Y	NA	NA	HF	7	23	A	Y
2HTS*XD003	25 KVA TRANSFORMER SQUARE D COMPANY	E011T	ABS	279	DH	Y	NA	NA	HF	7	23	A	Y
2LAC*XLE01	30 KVA TRANSFORMER SQUARE D COMPANY	E011T	CB	261	DH	Y	NA	NA	HF	7	16	A	Y
2LAC*XLE02	30 KVA TRANSFORMER SQUARE D COMPANY	E011T	CB	261	DH	Y	NA	NA	HF	7	16	A	Y
2LAC*XLE03	30 KVA TRANSFORMER SQUARE D COMPANY	E011T	CB	261	DH	Y	NA	NA	HF	7	16	A	Y
2LAC*XLE04	30 KVA TRANSFORMER SQUARE D COMPANY	E011T	CB	261	DH	Y	NA	NA	HF	7	16	A	Y
2LAC*XLE05	30 KVA TRANSFORMER SQUARE D COMPANY	E011T	CB	261	DH	Y	NA	NA	HF	7	16	A	Y
2LAC*XLE06	30 KVA TRANSFORMER SQUARE D COMPANY	E011T	CB	261	DH	Y	NA	NA	HF	7	16	A	Y
2LAC*XLE07	30 KVA TRANSFORMER SQUARE D COMPANY	E011T	CB	288	DH	Y	NA	NA	HF	7	17	A	Y
2SCH*XD101A	30 KVA TRANSFORMER SQUARE D COMPANY	E011T	CB	288	DH	Y	NA	NA	HF	7	17	A	Y
2SCH*XD102A	30 KVA TRANSFORMER SQUARE D COMPANY	E011T	CB	288	DH	Y	NA	NA	HF	7	17	A	Y

JOB NAME NMP - UNIT 2
UTILITY NIAGARA MOHAWK

SEISMIC AND DYNAMIC QUALIFICATION SUMMARY AND STATUS REPORT
MASTER LIST OF SAFETY RELATED EQUIPMENT

ENGINEER: STONE & WEBSTER
NSSS SUPPLIER: GENERAL ELECTRIC

EQUIP. ID / SHEC ID	EQUIPMENT DESCRIPTION / MANUFACTURER	PPD NO.	LOCATION BLDG	LOCATION ELEV	LOCATION HTG	LOADS SEIS	LOADS HYDR	QUAL ANLYS	QUAL METH TEST	NAT FREQ LOWEST	RRS REF	STATUS QUAL	STATUS INST
2SCM*XD103A	30 KVA TRANSFORMER SQUARE D COMPANY	E011T	CB	288	DM	Y	NA	NA	MF	7	17	A	Y
2SCM*XD104A	30 KVA TRANSFORMER SQUARE D COMPANY	E011T	CB	288	DM	Y	NA	NA	MF	7	17	A	Y
2SCM*XD105A	30 KVA TRANSFORMER SQUARE D COMPANY	E011T	CB	288	DM	Y	NA	NA	MF	7	17	A	Y
2SCM*XD301B	30 KVA TRANSFORMER SQUARE D COMPANY	E011T	CB	288	DM	Y	NA	NA	MF	7	17	A	Y
2SCM*XD302B	30 KVA TRANSFORMER SQUARE D COMPANY	E011T	CB	288	DM	Y	NA	NA	MF	7	17	A	Y
2SCM*XD303B	30 KVA TRANSFORMER SQUARE D COMPANY	E011T	CB	288	DM	Y	NA	NA	MF	7	17	A	Y
2SCM*XD304B	30 KVA TRANSFORMER SQUARE D COMPANY	E011T	CB	288	DM	Y	NA	NA	MF	7	17	A	Y
2SCM*XD305B	30 KVA TRANSFORMER SQUARE D COMPANY	E011T	CB	288	DM	Y	NA	NA	MF	7	17	A	Y
2SCV*XD101A	30 KVA TRANSFORMER SQUARE D COMPANY	E011T	ABN	240	DM	Y	NA	NA	MF	7	61	A	Y
2SCV*XD200P	30 KVA TRANSFORMER SQUARE D COMPANY	E011T	CB	261	DM	Y	NA	NA	MF	7	16	A	Y
2SCV*XD301B	30 KVA TRANSFORMER SQUARE D COMPANY	E011T	ABS	240	DM	Y	NA	NA	MF	7	61	A	Y

JOB NAME NMP - UNIT 2
UTILITY NIAGARA MOHAWK

SEISMIC AND DYNAMIC QUALIFICATION SUMMARY AND STATUS REPORT
MASTER LIST OF SAFETY RELATED EQUIPMENT

ENGINEER: STONE & WEBSTER
NSSS SUPPLIER: GENERAL ELECTRIC

EQUIP. ID / SHEC ID	EQUIPMENT DESCRIPTION / MANUFACTURER	PPD NO.	LOCATION BLDG	ELEV	HTG	LOADS SEIS	HYDR	QUAL ANLYS	METH TEST	NAT FREQ LOWEST	RRS REF STATUS QUAL	INST
2BYS*PNL201A	PANEL 125V DC BROWN BOVERI ELEC	E014T	CB	288	DH	Y	NA	NA	HF		17 A	Y
2BYS*PNL201B	PANEL 125V DC BROWN BOVERI ELEC	E014T	CB	288	DH	Y	NA	NA	HF		17 A	Y
2BYS*PNL202A	PANEL 125V DC BROWN BOVERI ELEC	E014T	CB	288	DH	Y	NA	NA	HF		17 A	Y
2BYS*PNL202B	PANEL 125V DC BROWN BOVERI ELEC	E014T	CB	288	DH	Y	NA	NA	HF		17 A	Y
2BYS*PNL204A	PANEL 125V DC BROWN BOVERI ELEC	E014T	DG	261	DH	Y	NA	NA	HF		16 A	Y
2BYS*PNL204B	PANEL 125V DC BROWN BOVERI ELEC	E014T	DG	261	DH	Y	NA	NA	HF		16 A	Y
2EJA*PNL100A	HEATER PANEL 120V BROWN BOVERI ELEC	E014T	ABN	240	DH	Y	NA	NA	HF		5 A	Y
2EJA*PNL101A	HEATER PANEL 120V BROWN BOVERI ELEC	E014T	CB	261	DH	Y	NA	NA	HF		16 A	Y
2EJA*PNL300B	HEATER PANEL 120V BROWN BOVERI ELEC	E014T	ABS	240	DH	Y	NA	NA	HF		5 A	Y
2EJA*PNL301B	HEATER PANEL 120V BROWN BOVERI ELEC	E014T	CB	261	DH	Y	NA	NA	HF		16 A	Y
2EJS*PNL100A	EMERGENCY PANEL 600V BROWN BOVER ELEC	E014T	CB	261	DH	Y	NA	NA	HF		16 A	Y
2EJS*PNL101A	EMERGENCY PANEL 600V BROWN BOVERI ELEC	E014T	ABN	261	DH	Y	NA	NA	HF		5 A	Y
2EJS*PNL102A	EMERGENCY PANEL 600V BROWN BOVER ELEC	E014T	CB	261	DH	Y	NA	NA	HF		16 A	Y

JOB NAME NMP - UNIT 2
UTILITY NIAGARA MOHAWK

SEISMIC AND DYNAMIC QUALIFICATION SUMMARY AND STATUS REPORT
MASTER LIST OF SAFETY RELATED EQUIPMENT

ENGINEER: STONE & WEBSTER
NSSS SUPPLIER: GENERAL ELECTRIC

EQUIP. ID / SHEC ID	EQUIPMENT DESCRIPTION / MANUFACTURER	PPD NO.	LOCATION BLDG.	ELEV	HTG	LOADS SEIS	HYDR	QUAL ANLYS	METH- TEST	NAT FREQ- LOWEST	RRS REF STATUS QUAL	INST
2EJS*PNL103A	EMERGENCY PANEL 600V BROWN BOVERI ELEC	E014T	ABN	240	DH	Y	NA	NA	HF		5 A	Y
2EJS*PNL104A	EMERGENCY PANEL 600V BROWN BOVERI ELEC	E014T	ABN	240	DH	Y	NA	NA	HF		5 A	Y
2EJS*PNL300B	EMERGENCY PANEL 600V BROWN BOVERI ELEC	E014T	CB	261	DH	Y	NA	NA	HF		16 A	Y
2EJS*PNL301B	EMERGENCY PANEL 600V BROWN BOVERI ELEC	E014T	CB	261	DH	Y	NA	NA	HF		16 A	Y
2EJS*PNL302B	EMERGENCY PANEL 600V BROWN BOVERI ELEC	E014T	ABS	240	DH	Y	NA	NA	HF		5 A	Y
2EJS*PNL303B	EMERGENCY PANEL 600V BROWN BOVERI ELEC	E014T	ABS	240	DH	Y	NA	NA	HF		5 A	Y
2EJS*PNL304B	EMERGENCY PANEL 600V BROWN BOVER ELEC	E014T	ABS	240	DH	Y	NA	NA	HF		5 A	Y
2HVY*LCS256	LOCAL CONTROL STATION BROWN BOVERI ELEC	E014T	TVA	261	DH	Y	NA	NA	HF		6 A	
2HVY*LCS257	LOCAL CONTROL STATION BROWN BOVERI ELEC	E014T	TVA	261	DH	Y	NA	NA	HF		6 A	
2LAC*PNLE01	LIGHTING PANEL BROWN BOVERI ELEC	E014T	CB	261	DH	Y	NA	NA	HF		16 A	Y
2LAC*PNLE02	LIGHTING PANEL BROWN BOVERI ELEC	E014T	CB	261	DH	Y	NA	NA	HF		16 A	Y
2LAC*PNLE03	LIGHTING PANEL BROWN BOVERI ELEC	E014T	CB	261	DH	Y	NA	NA	HF		16 A	Y
2LAC*PNLE04	LIGHTING PANEL BROWN BOVERI ELEC	E014T	CB	288	DH	Y	NA	NA	HF		17 A	Y

JOB NAME NMP - UNIT 2
UTILITY NIAGARA MOHAWK

SEISMIC AND DYNAMIC QUALIFICATION SUMMARY AND STATUS REPORT
MASTER LIST OF SAFETY RELATED EQUIPMENT

ENGINEER: STONE & WEBSTER
NSSS SUPPLIER: GENERAL ELECTRIC

EQUIP. ID / SHEC ID	EQUIPMENT DESCRIPTION / MANUFACTURER	PPD NO.	LOCATION BLDG	LOCATION ELEV	LOCATION HTG	LOADS SEIS	LOADS HYDR	QUAL ANLYS	METH TEST	NAT FREQ LOWEST	RRS REF STATUS QUAL	RRS REF STATUS INST
2LAC*PNLE05	LIGHTING PANEL BROWN BOVERI ELEC	E014T	CB	288	DH	Y	NA	NA	HF		17 A	Y
2LAC*PNLE06	LIGHTING PANEL BROWN BOVERI ELEC	E014T	CB	306	DH	Y	NA	NA	HF		18 A	Y
2LAC*PNLE07	LIGHTING PANEL BROWN BOVERI ELEC	E014T	CB	306	DH	Y	NA	NA	HF		18 A	Y
2LAC*PNL100A	EMERGENCY LIGHTING PANEL BROWN BOVERI ELEC	E014T	CB	261	DH	Y	NA	NA	HF		16 A	Y
2LAC*PNL300B	EMERGENCY LIGHTING PANEL BROWN BOVERI ELEC	E014T	CB	261	DH	Y	NA	NA	HF		16 A	Y
2RPH*PNLA100	PANEL 120V BROWN BOVERI ELEC	E014T	CB	237	DH	Y	NA	NA	HF		15 A	Y
2RPH*PNLB100	PANEL 120V BROWN BOVERI ELEC	E014T	CB	237	DH	Y	NA	NA	HF		15 A	Y
2SCH*PNL101A	PANEL 120V BROWN BOVERI ELEC	E014T	CB	288	DH	Y	NA	NA	HF		17 A	Y
2SCH*PNL102A	PANEL 120V BROWN BOVERI ELEC	E014T	CB	288	DH	Y	NA	NA	HF		17 A	Y
2SCH*PNL103A	PANEL 120V BROWN BOVERI ELEC	E014T	CB	288	DH	Y	NA	NA	HF		17 A	Y
2SCH*PNL104A	PANEL 120V BROWN BOVERI ELEC	E014T	CB	288	DH	Y	NA	NA	HF		17 A	Y
2SCH*PNL105A	PANEL 120V BROWN BOVERI ELEC	E014T	CB	288	DH	Y	NA	NA	HF		17 A	Y
2SCH*PNL200P	PANEL 120V BROWN BOVERI ELEC	E014T	CB	261	DH	Y	NA	NA	HF		16 A	N

JOB NAME NMP - UNIT 2
UTILITY NIAGARA MOHAWK

SEISMIC AND DYNAMIC QUALIFICATION SUMMARY AND STATUS REPORT
MASTER LIST OF SAFETY RELATED EQUIPMENT

ENGINEER: STONE & WEBSTER
NSSS SUPPLIER: GENERAL ELECTRIC

EQUIP. ID / SWEC ID	EQUIPMENT DESCRIPTION / MANUFACTURER	PPD NO.	LOCATION BLDG	ELEV	HTG	LOADS SEIS	HYDR	QUAL ANLYS	METH TEST	NAT FREQ LOWEST	RRS REF STATUS QUAL	INST
2SCH*PNL301B	PANEL 120V BROWN BOVERI ELEC	E014T	CB	288	DH	Y	NA	NA	HF		17 A	Y
2SCH*PNL302B	PANEL 120V BROWN BOVERI ELEC	E014T	CB	288	DH	Y	NA	NA	HF		17 A	Y
2SCH*PNL303B	PANEL 120V BROWN BOVERI ELEC	E014T	CB	288	DH	Y	NA	NA	HF		17 A	Y
2SCH*PNL304B	PANEL 120V BROWN BOVERI ELEC	E014T	CB	288	DH	Y	NA	NA	HF		17 A	Y
2SCH*PNL305B	PANEL 120V BROWN BOVERI ELEC	E014T	CB	288	DH	Y	NA	NA	HF		17 A	Y
2SCV*PNL101A	PANEL 120V BROWN BOVERI ELEC	E014T	ABN	240	DH	Y	NA	NA	HF		5 A	Y
2SCV*PNL200P	PANEL 120V BROWN BOVERI ELEC	E014T	CB	261	DH	Y	NA	NA	HF		16 A	Y
2SCV*PNL301B	PANEL 120V BROWN BOVERI ELEC	E014T	ABS	240	DH	Y	NA	NA	HF		5 A	Y
2VBS*PNLA101	PANEL 120V BROWN BOVERI ELEC	E014T	CB	237	DH	Y	NA	NA	HF		15 A	Y
2VBS*PNLA103	PANEL RPS & NS4D BROWN BOVERI ELEC	E014T	CB	306	DH	Y	NA	NA	HF		18 A	Y
2VBS*PNLA104	PANEL RPS & NS4D BROWN BOVERI ELEC	E014T	CB	306	DH	Y	NA	NA	HF		18 A	Y
2VBS*PNLA105	PANEL MSLIV DIST. BROWN BOVERI ELEC	E014T	ABN	240	DH	Y	NA	NA	HF		5 A	Y
2VBS*PNLA106	PANEL MSLIV DIST. BROWN BOVERI ELEC	E014T	ABS	240	DH	Y	NA	NA	HF		5 A	Y

JOB NAME NMP - UNIT 2
UTILITY NIAGARA MOHAWK

SEISMIC AND DYNAMIC QUALIFICATION SUMMARY AND STATUS REPORT
MASTER LIST OF SAFETY RELATED EQUIPMENT

ENGINEER: STONE & WEBSTER
NSSS SUPPLIER: GENERAL ELECTRIC

EQUIP. ID / SHEC ID	EQUIPMENT DESCRIPTION / MANUFACTURER	PPD NO.	LOCATION BLDG	LOCATION ELEV	LOCATION HTG	LOADS SEIS	LOADS HYDR	QUAL ANLYS	METH TEST	NAT FREQ LOWEST	RRS REF STATUS QUAL	RRS REF STATUS INST
2VBS*PNLA110	PANEL BROWN BOVERI ELEC	E014T	CB	237	DH	Y	NA	NA	HF		15 A	Y
2VBS*PNLB101	PANEL BREAKER BROWN BOVERI ELEC	E014T	CB	237	DH	Y	NA	NA	HF		15 A	Y
2VBS*PNLB103	PANEL BROWN BOVERI ELEC	E014T	CB	306	DH	Y	NA	NA	HF		18 A	Y
2VBS*PNLB104	PANEL BROWN BOVERI ELEC	E014T	CB	306	DH	Y	NA	NA	HF		18 A	Y
2VBS*PNLB105	PANEL MSLIV DIST. BROWN BOVERI ELEC	E014T	ABN	240	DH	Y	NA	NA	HF		5 A	Y
2VBS*PNLB106	PANEL MSLIV DIST. BROWN BOVERI ELEC	E014T	ABS	240	DH	Y	NA	NA	HF		5 A	Y
2VBS*PNLB110	PANEL BROWN BOVERI ELEC	E014T	CB	237	DH	Y	NA	NA	HF		15 A	Y
2VBS*PNL101A	PANEL 120V BROWN BOVERI ELEC	E014T	CB	288	DH	Y	NA	NA	HF		17 A	Y
2VBS*PNL102A	PANEL 120V BROWN BOVERI ELEC	E014T	CB	288	DH	Y	NA	NA	HF		17 A	Y
2VBS*PNL301B	PANEL 120V BROWN BOVERI ELEC	E014T	CB	288	DH	Y	NA	NA	HF		17 A	Y
2VBS*PNL302B	PANEL 120V BROWN BOVERI ELEC	E014T	CB	280	DH	Y	NA	NA	HF		17 A	Y

JOB NAME NMP - UNIT 2
UTILITY NIAGARA MOHAWK

SEISMIC AND DYNAMIC QUALIFICATION SUMMARY AND STATUS REPORT
MASTER LIST OF SAFETY RELATED EQUIPMENT

ENGINEER: STONE & WEBSTER
NSSS SUPPLIER: GENERAL ELECTRIC

EQUIP. ID / SHEC ID	EQUIPMENT DESCRIPTION / MANUFACTURER	PPD NO.	LOCATION BLDG	LOCATION ELEV	LOCATION HTG	LOADS SEIS	LOADS HYDR	QUAL ANLYS	METH TEST	NAT FREQ LOWEST	RRS REF STATUS QUAL	RRS REF STATUS INST
2ENS*SHG101	4160V EMER SWITCHGEAR GENERAL ELECTRIC	E015F	CB	261	CF	Y	NA	NA	HF	NA	16 B	Y
2ENS*SHG103	4160V EMERG. SWITCHGEAR GENERAL ELECTRIC	E015F	CB	261	CF	Y	NA	NA	HF	NA	16 B	Y

JOB NAME NMP - UNIT 2
UTILITY NIAGARA MOHAWK

SEISMIC AND DYNAMIC QUALIFICATION SUMMARY AND STATUS REPORT
MASTER LIST OF SAFETY RELATED EQUIPMENT

ENGINEER: STONE & WEBSTER
NSSS SUPPLIER: GENERAL ELECTRIC

EQUIP. ID / SWEC ID	EQUIPMENT DESCRIPTION / MANUFACTURER	PPD NO.	LOCATION BLDG	LOCATION ELEV	LOCATION HTG	LOADS SEIS	LOADS HYDR	QUAL ANLYS	METH TEST	NAT FREQ LOWEST	RRS REF STATUS QUAL	RRS REF STATUS INST
2BYS*SWG002A	125V DC SWITCHGEAR BROWN BOVERI ELEC	E015N	CB	261	CF	Y	NA	NA	HF	NA	16 A	Y
2BYS*SWG002B	125V DC SWITCHGEAR BROWN BOVERI ELEC	E015N	CB	261	CF	Y	NA	NA	HF	NA	16 A	Y
2EJS*US1	600V EMER. SWITCHGEAR BROWN BOVERI ELEC	E015N	CB	261	CF	Y	NA	NA	HF	9	16 A	Y
2EJS*US3	600V EMER. SWITCHGEAR BROWN BOVER ELEC	E015N	CB	261	CF	Y	NA	NA	HF	9	16 A	Y
2EPS*SWG001	13.8 KV EMERG. SWITCHGEAR BROWN-BOVERI ELEC	E015N	ABN	240	CF	Y	NA	NA	HF	NA	61 A	Y
2EPS*SWG002	13.8 KV EMER. SWITCHGEAR BROWN BOVERI ELEC	E015N	ABN	240	CF	Y	NA	NA	HF	NA	61 A	Y
2EPS*SWG003	13.8 KV EMERG. SWITCHGEAR BROWN BOVERI ELEC	E015N	ABS	240	CF	Y	NA	NA	HF	NA	61 A	Y
2EPS*SWG004	13.8 KV EMER. SWITCHGEAR BROWN BOVERI ELEC	E015N	ABS	240	CF	Y	NA	NA	HF	NA	61 A	Y

JOB NAME NMP - UNIT 2
UTILITY NIAGARA MOHAWK

SEISMIC AND DYNAMIC QUALIFICATION SUMMARY AND STATUS REPORT
MASTER LIST OF SAFETY RELATED EQUIPMENT

ENGINEER: STONE & WEBSTER
NSSS SUPPLIER: GENERAL ELECTRIC

EQUIP. ID / SHEC ID	EQUIPMENT DESCRIPTION / MANUFACTURER	PPD NO.	LOCATION BLDG	ELEV	HTG	LOADS SEIS	HYDR	QUAL ANLYS	METH TEST	NAT FREQ LOWEST	RRS REF STATUS QUAL	INST
20HS*HCCA1	125V DC MCC GOULD	E015Q	ABN	240	CF	Y	NA	NA	HF	7	61 A	Y
20HS*HCCB1	125V DC MCC GOULD	E015Q	ABS	240	CF	Y	NA	NA	HF	7	61 A	Y
2EHS*MCC101	STANDBY MCC GOULD	E015Q	SB	261	CF	Y	NA	NA	HF	7	6 A	Y
2EHS*MCC102	STANDBY MCC GOULD	E015Q	ABN	240	CF	Y	NA	NA	HF	7	61 A	Y
2EHS*MCC103	STANDBY MCC GOULD	E015Q	CB	261	CF	Y	NA	NA	HF	7	16 A	Y
2EHS*MCC301	EMERGENCY MCC GOULD	E015Q	SB	261	CF	Y	NA	NA	HF	7	6 A	Y
2EHS*MCC302	EMERGENCY MCC GOULD	E015Q	ABS	240	CF	Y	NA	NA	HF	7	61 A	Y
2EHS*MCC303	EMERGENCY MCC GOULD	E015Q	CB	261	CF	Y	NA	NA	HF	7	16 A	Y

JOB NAME NMP - UNIT 2
UTILITY NIAGARA MOHAWK

SEISMIC AND DYNAMIC QUALIFICATION SUMMARY AND STATUS REPORT
MASTER LIST OF SAFETY RELATED EQUIPMENT

ENGINEER: STONE & WEBSTER
NSSS SUPPLIER: GENERAL ELECTRIC

EQUIP. ID / SHEC ID	EQUIPMENT DESCRIPTION / MANUFACTURER	PPD NO.	LOCATION BLDG	ELEV	HTG	LOADS SEIS	HYDR	QUAL ANLYS	METH TEST	NAT FREQ LOWEST	RRS REF STATUS QUAL	INST
2CES*Z01E	ELECTRIC PENETRATION CONAX	E021P	PC	250	DH	Y	Y	S	HF	89	36,37 A	Y
2CES*Z02E	ELECTRIC PENETRATION CONAX	E021P	PC	244	DH	Y	Y	S	HF	89	36,37 A	Y
2CES*Z05E	ELECTRIC PENETRATION CONAX	E021P	PC	250	DH	Y	Y	S	HF	89	36,37 A	Y
2CES*Z06E	ELECTRIC PENETRATION CONAX	E021P	PC	244	DH	Y	Y	S	HF	89	36,37 A	Y
2CES*Z07E	ELECTRIC PENETRATION CONAX	E021P	PC	250	DH	Y	Y	S	HF	89	36,37 A	Y
2CES*Z08E	ELECTRIC PENETRATION CONAX	E021P	PC	244	DH	Y	Y	S	HF	89	36,37 A	Y
2CES*Z09E	ELECTRIC PENETRATION CONAX	E021P	PC	250	DH	Y	Y	S	HF	89	36,37 A	Y
2CES*Z10E	ELECTRIC PENETRATION CONAX	E021P	PC	244	DH	Y	Y	S	HF	89	36,37 A	Y
2CES*Z11E	ELECTRIC PENETRATION CONAX	E021P	PC	250	DH	Y	Y	S	HF	89	36,37 A	Y
2CES*Z12E	ELECTRIC PENETRATION CONAX	E021P	PC	244	DH	Y	Y	S	HF	89	36,37 A	Y
2CES*Z17E	ELECTRIC PENETRATION CONAX	E021P	PC	250	DH	Y	Y	S	HF	89	36,37 A	Y
2CES*Z18E	ELECTRIC PENETRATION CONAX	E021P	PC	244	DH	Y	Y	S	HF	89	36,37 A	Y
2CES*Z19E	ELECTRIC PENETRATION CONAX	E021P	PC	250	DH	Y	Y	S	HF	89	36,37 A	Y

JOB NAME NMP - UNIT 2
UTILITY NIAGARA MOHAWK

SEISMIC AND DYNAMIC QUALIFICATION SUMMARY AND STATUS REPORT
MASTER LIST OF SAFETY RELATED EQUIPMENT

ENGINEER: STONE & WEBSTER
NSSS SUPPLIER: GENERAL ELECTRIC

EQUIP. ID / SHEC ID	EQUIPMENT DESCRIPTION / MANUFACTURER	PPD NO.	LOCATION BLDG	ELEV	HTG	LOADS SEIS	HYDR	QUAL ANLYS	METH TEST	NAT FREQ LOWEST	RRS REF STATUS QUAL	INST
2CES*Z20E	ELECTRIC PENETRATION CONAX	E021P	PC	244	DH	Y	Y	S	HF	89	36,37 A	A
2CES*Z21E	ELECTRIC PENETRATION CONAX	E021P	PC	250	DH	Y	Y	S	HF	89	36,37 A	Y
2CES*Z22E	ELECTRIC PENETRATION CONAX	E021P	PC	244	DH	Y	Y	S	HF	89	36,37 A	Y
2CES*Z23E	ELECTRIC PENETRATION CONAX	E021P	PC	250	DH	Y	Y	S	HF	89	36,37 A	Y
2CES*Z24E	ELECTRIC PENETRATION CONAX	E021P	PC	244	DH	Y	Y	S	HF	89	36,37 A	Y
2CES*Z25E	ELECTRIC PENETRATION CONAX	E021P	PC	250	DH	Y	Y	S	HF	89	36,37 A	Y
2CES*Z26E	ELECTRIC PENETRATION CONAX	E021P	PC	244	DH	Y	Y	S	HF	89	36,37 A	Y
2CES*Z29E	ELECTRIC PENETRATION CONAX	E021P	PC	250	DH	Y	Y	S	HF	89	36,37 A	Y
2CES*Z30E	ELECTRIC PENETRATION CONAX	E021P	PC	244	DH	Y	Y	S	HF	89	36,37 A	Y
2CES*Z51E	ELECTRIC PENETRATION CONAX	E021P	PC	244	DH	Y	Y	S	HF	89	36,37 A	Y
2CES*Z52E	ELECTRIC PENETRATION CONAX	E021P	PC	250	DH	Y	Y	S	HF	89	36,37 A	Y
2CES*Z53E	ELECTRIC PENETRATION CONAX	E021P	PC	271	DH	Y	Y	S	HF	89	35 A	Y
2CES*Z54E	ELECTRIC PENETRATION CONAX	E021P	PC	253	DH	Y	Y	S	HF	89	36,37 A	Y

JOB NAME NMP - UNIT 2
UTILITY NIAGARA MOHAWK

SEISMIC AND DYNAMIC QUALIFICATION SUMMARY AND STATUS REPORT
MASTER LIST OF SAFETY RELATED EQUIPMENT

ENGINEER: STONE & WEBSTER
NSSS SUPPLIER: GENERAL ELECTRIC

EQUIP. ID / SHEC ID	EQUIPMENT DESCRIPTION / MANUFACTURER	PPD NO.	LOCATION BLDG	LOCATION ELEV	LOCATION HTG	LOADS SEIS	LOADS HYDR	QUAL ANLYS	METH TEST	NAT FREQ LOWEST	RRS REF STATUS QUAL	RRS REF STATUS INST
2CES*Z57E	ELECTRIC PENETRATION CONAX	E021P	PC	220	DH	Y	Y	S	HF	89	38 A	Y
2CES*Z58E	ELECTRIC PENETRATION CONAX	E021P	PC	220	DH	Y	Y	S	HF	89	38 A	Y
2CES*Z59E	ELECTRIC PENETRATION CONAX	E021P	PC	220	DH	Y	Y	S	HF	89	38 A	Y

JOB NAME NMP - UNIT 2
UTILITY NIAGARA MOHAWK

SEISMIC AND DYNAMIC QUALIFICATION SUMMARY AND STATUS REPORT
MASTER LIST OF SAFETY RELATED EQUIPMENT

ENGINEER: STONE & WEBSTER
NSSS SUPPLIER: GENERAL ELECTRIC

EQUIP. ID / SHEC ID	EQUIPMENT DESCRIPTION / MANUFACTURER	PPD NO.	LOCATION BLDG	ELEV	HTG	LOADS SEIS	HYDR	QUAL ANLYS	METH TEST	NAT FREQ LOWEST	RRS REF	STATUS QUAL	STATUS INST
2CES*IPNL406	DG-1 CONTROL PANEL COOPER	E031A	DG	261	CF	Y	NA	NA	HF	NA	16	A	Y
2CES*IPNL407	DG-1 CONTROL PANEL COOPER	E031A	DG	261	CF	Y	NA	NA	HF	NA	16	A	Y
2CES*IPNL408	DG-3 CONTROL PANEL TRANE	E031A	DG	261	CF	Y	NA	NA	HF	NA	16	A	Y
2CES*IPNL412	DG-3 CONTROL PANEL TRANE	E031A	DG	261	CF	Y	NA	NA	HF	NA	16	A	Y
2EGA*M1A	DG-1 AIR COMP MOTOR COOPER	E031A	DG	261	CF	Y	NA	S	NA	>33	16	A	Y
2EGA*M1B	DG-3 AIR COMP. MOTOR COOPER	E031A	DG	261	CF	Y	NA	S	NA	>33	16	A	Y
2EGA*M2A	DG-1 AIR COMP. MOTOR COOPER	E031A	DG	261	CF	Y	NA	S	NA	>33	16	A	Y
2EGA*M2B	DG-3 AIR COMP. MOTOR COOPER	E031A	DG	261	CF	Y	NA	S	NA	>33	16	A	Y
2EGS*EG1	DIESEL GENERATOR 1 COOPER	E031A	DG	272	CF	Y	NA	S	HF	>33	17	A	Y
2EGS*EG3	DIESEL GENERATOR 2 COOPER	E031A	DG	272	CF	Y	NA	S	HF	>33	17	A	Y
2EGS*PNL11	HV GEN CONTROL COOPER	E031A	DG	261	CF	Y	NA	NA	HF	NA	16	A	Y
2EGS*PNL31	HV GEN. CONTROL COOPER	E031A	DG	261	CF	Y	NA	NA	HF	NA	16	A	Y

JOB NAME NMP - UNIT 2
UTILITY NIAGARA MOHAWK

SEISMIC AND DYNAMIC QUALIFICATION SUMMARY AND STATUS REPORT
MASTER LIST OF SAFETY RELATED EQUIPMENT

ENGINEER: STONE & WEBSTER
NSSS SUPPLIER: GENERAL ELECTRIC

EQUIP. ID / SHEC ID	EQUIPMENT: DESCRIPTION / MANUFACTURER	PPD NO.	LOCATION: BLDG	ELEV	HTG	LOADS: SEIS	HYDR	QUAL ANLYS	METH- TEST	NAT FREQ- LOWEST	RRS REF STATUS: QUAL	INST
2BYS*BAT2A	125V STORAGE BATTERY GOULD	E033A	CB	261	CF	Y	NA	S	HF	>33	16 A	Y
2BYS*BAT2B	125V STORAGE BATTERY GOULD	E033A	CB	261	CF	Y	NA	S	HF	>33	16 A	Y

JOB NAME NMP - UNIT 2
UTILITY NIAGARA MOHAWK

SEISMIC AND DYNAMIC QUALIFICATION SUMMARY AND STATUS REPORT
MASTER LIST OF SAFETY RELATED EQUIPMENT

ENGINEER: STONE & WEBSTER
NSSS SUPPLIER: GENERAL ELECTRIC

EQUIP. ID / SHEC ID	EQUIPMENT DESCRIPTION / MANUFACTURER	PPD NO.	LOCATION BLDG	LOCATION ELEV	LOCATION HTG	LOADS SEIS	LOADS HYDR	QUAL ANLYS	METH TEST	NAT FREQ LOWEST	RRS REF STATUS QUAL	RRS REF STATUS INST
2BYS*CHGR2A1	BATTERY CHARGER POWER CONV PROD	E039A	CB	261	CF	Y	NA	NA	HF	16	16 A	Y
2BYS*CHGR2A2	BATTERY CHARGER PWR CONVERSION PROD.	E039A	CB	261	CF	Y	NA	NA	HF	16	16 A	Y
2BYS*CHRG2B1	BATTERY CHARGER PWR CONVERSION PROD.	E039A	CB	261	CF	Y	NA	NA	HF	16	16 A	Y
2BYS*CHRG2B2	BATTERY CHARGER PWR CONVERSION PROD.	E039A	CB	261	CF	Y	NA	NA	HF	16	16 A	Y
2BYS*CHRG2C1	BATTERY CHARGER PWR CONVERSION PROD.	E039A	CB	261	CF	Y	NA	NA	HF	12	16 A	Y
2BYS*CHRG2C2	BATTERY CHARGER PWR CONVERSION PROD.	E039A	CB	261	CF	Y	NA	NA	HF	16	16 A	Y

JOB NAME NMP - UNIT 2
UTILITY NIAGARA MOHAWK

SEISMIC AND DYNAMIC QUALIFICATION SUMMARY AND STATUS REPORT
MASTER LIST OF SAFETY RELATED EQUIPMENT

ENGINEER: STONE & WEBSTER
NSSS SUPPLIER: GENERAL ELECTRIC

EQUIP. ID / SHEC ID	EQUIPMENT DESCRIPTION / MANUFACTURER	PPD NO.	LOCATION BLDG	LOCATION ELEV	LOCATION HTG	LOADS SEIS	LOADS HYDR	QUAL ANLYS	METH TEST	NAT FREQ LOWEST	RRS REF STATUS QUAL	RRS REF STATUS INST
2VBA*UPS2A	UNINTERRUPTIBLE POWER SUPPLY EXIDE POWER	E035A	CB	261	CF	Y	NA	NA	HF	7	16 A	Y
2VBA*UPS2B	UNINTERRUPTIBLE POWER SUPPLY EXIDE POWER	E035A	CB	261	CF	Y	NA	NA	HF	7	16 A	Y
2VBB*UPS3A	UNINTERRUPTIBLE POWER SUPPLY EXIDE POWER	E035A	NS	237	CF	Y	NA	NA	HF	7	5 A	Y
2VBB*UPS3B	UNINTERRUPTIBLE POWER SUPPLY EXIDE POWER	E035A	NS	237	CF	Y	NA	NA	HF	7	5 A	Y

JOB NAME NMP - UNIT 2
UTILITY NIAGARA MOHAWK

SEISMIC AND DYNAMIC QUALIFICATION SUMMARY AND STATUS REPORT
MASTER LIST OF SAFETY RELATED EQUIPMENT

ENGINEER: STONE & WEBSTER
NSSS SUPPLIER: GENERAL ELECTRIC

EQUIP. ID / SHEC ID	EQUIPMENT: DESCRIPTION / MANUFACTURER	PPD NO.	LOCATION: BLDG	ELEV	HTG	LOADS: SEIS	HYDR	QUAL ANLYS	METH- TEST	NAT FREQ- LOWEST	RRS REF STATUS: QUAL	INST
2HTS*PNL001	HEAT TRACING CONT. PANEL THERMON MFG. CO.	E092B	ABN	240	CF	Y	NA	NA	HF	7.5	61 A	Y
2HTS*PNL003	HEAT TRACING CONT. PANEL THERMON MFG. CO.	E092B	ABS	240	CF	Y	NA	NA	HF	7.5	61 A	Y

JOB NAME NMP - UNIT 2
UTILITY NIAGARA MOHAWK

SEISMIC AND DYNAMIC QUALIFICATION SUMMARY AND STATUS REPORT
MASTER LIST OF SAFETY RELATED EQUIPMENT

ENGINEER: STONE & WEBSTER
NSSS SUPPLIER: GENERAL ELECTRIC

EQUIP. ID / SHEC ID	EQUIPMENT DESCRIPTION / MANUFACTURER	PPD NO.	LOCATION BLDG	LOCATION ELEV	LOCATION HTG	LOADS SEIS	LOADS HYDR	QUAL ANLYS	METH- TEST	NAT FREQ- LOWEST	RRS REF STATUS QUAL	RRS REF STATUS INST
2SHP*H1	BAR RACK HEATER CHROMALOX/EMERSON	H110B	ITK	234	DH	Y	NA	S	NA	10	5 A	Y

JOB NAME NMP - UNIT 2
UTILITY NIAGARA MOHAWK

SEISMIC AND DYNAMIC QUALIFICATION SUMMARY AND STATUS REPORT
MASTER LIST OF SAFETY RELATED EQUIPMENT

ENGINEER: STONE & WEBSTER
NSSS SUPPLIER: GENERAL ELECTRIC

EQUIP. ID / SHEC ID	EQUIPMENT DESCRIPTION / MANUFACTURER	PPD NO.	LOCATION BLDG	LOCATION ELEV	LOCATION HTG	LOADS SEIS	LOADS HYDR	QUAL ANLYS	METH TEST	NAT FREQ LOWEST	RRS REF STATUS QUAL	RRS REF STATUS INST
2SHP*MOV30A	MOTOR OPERATED ROT. GATES HENRY PRATT CO.	P121A	ITK	285	DH	Y	NA	S	SF	>33	7 A	Y
2SHP*MOV30B	MOTOR OPERATED ROT. GATES HENRY PRATT CO.	P121A	ITK	285	DH	Y	NA	S	SF	>33	7 A	Y
2SHP*MOV77A	MOTOR OPERATED ROT. GATES HENRY PRATT CO.	P121A	ITK	285	DH	Y	NA	S	SF	>33	7 A	Y
2SHP*MOV77B	MOTOR OPERATED ROT. GATES HENRY PRATT CO.	P121A	ITK	285	DH	Y	NA	S	SF	>33	7 A	Y

JOB NAME NMP - UNIT 2
UTILITY NIAGARA MOHAWK

SEISMIC AND DYNAMIC QUALIFICATION SUMMARY AND STATUS REPORT
MASTER LIST OF SAFETY RELATED EQUIPMENT

ENGINEER: STONE & WEBSTER
NSSS SUPPLIER: GENERAL ELECTRIC

EQUIP. ID / SWEC ID	EQUIPMENT DESCRIPTION / MANUFACTURER	PPD NO.	LOCATION BLDG	LOCATION ELEV	LOCATION HTG	LOADS SEIS	LOADS HYDR	QUAL METH ANLYS	QUAL METH TEST	NAT FREQ LOWEST	RRS REF STATUS QUAL	RRS REF STATUS INST
2SFC*E1A	SPENT FUEL POOL HT EXCHGR AMERICAN STD	P221X	RB	221	CF	Y	NA	S	NA	34	61 A	Y
2SFC*E1B	SPENT FUEL POOL HT EXCHGR AMERICAN STD	P221X	RB	221	CF	Y	NA	S	NA	34	61 A	Y

JOB NAME NMP - UNIT 2
UTILITY NIAGARA MOHAWK

SEISMIC AND DYNAMIC QUALIFICATION SUMMARY AND STATUS REPORT
MASTER LIST OF SAFETY RELATED EQUIPMENT

ENGINEER: STONE & WEBSTER
NSSS SUPPLIER: GENERAL ELECTRIC

EQUIP. ID / SHEC ID	EQUIPMENT DESCRIPTION / MANUFACTURER	PPD NO.	LOCATION BLDG	LOCATION ELEV	LOCATION HTG	LOADS SEIS	LOADS HYDR	QUAL ANLYS	METH TEST	NAT FREQ LOWEST	RRS REF STATUS QUAL	RRS REF STATUS INST
2CSH*M2	CSH PRESS PUMP MOTOR GOULD	P222X	RB	175	CF	Y	NA	S	NA	151	64 A	Y
2CSH*P2	CHS PRESSURE PUMP GOULD	P222X	RB	176	CF	Y	NA	S	NA	49	64 A	Y
2CSL*M2	CSL PRESS PUMP MOTOR GOULD	P222X	ABN	175	CF	Y	NA	S	NA	151	64 A	Y
2CSL*P2	CSL PRESSURE PUMP GOULD	P222X	ABN	175	CF	Y	NA	S	NA	49	64 A	Y
2HVK*M1A	CHILLED WTR PUMP MOTOR GOULD	P222X	CB	261	CF	Y	NA	S	NA	140	16 A	Y
2HVK*M1B	CHILLED WTR PUMP MOTOR GOULD	P222X	CB	261	CF	Y	NA	S	NA	140	16 A	Y
2HVK*P1A	CHILLED WTR PUMP GOULD	P222X	CB	261	CF	Y	NA	S	NA	59	16 A	Y
2HVK*P1B	CHILLED WTR PUMP GOULD	P222X	CB	261	CF	Y	NA	S	NA	59	16 A	Y
2ICS*M2	ICS PRESS. PUMP MOTOR GOULD	P222X	RB	175	CF	Y	NA	S	NA	151	64 A	Y
2ICS*P2	ICS PRESSURE PUMP GOULD	P222X	RB	175	CF	Y	NA	S	NA	49	64 A	Y
2RHS*M2	RHS PRESS. PUMP MOTOR GOULD	P222X	ABS	175	CF	Y	NA	S	NA	151	64 A	Y
2RHS*P2	RHS PRESSURE PUMP GOULD	P222X	ABS	175	CF	Y	NA	S	NA	49	64 A	Y
2SFC*M1A	FUEL POOL CHC PUMP MOTOR GOULD	P222X	RB	290	CF	Y	NA	S	NA	67	59 A	Y

JOB NAME NMP - UNIT 2
UTILITY NIAGARA MOHAWK

SEISMIC AND DYNAMIC QUALIFICATION SUMMARY AND STATUS REPORT
MASTER LIST OF SAFETY RELATED EQUIPMENT

ENGINEER: STONE & WEBSTER
NSSS SUPPLIER: GENERAL ELECTRIC

EQUIP. ID / SHEC ID	EQUIPMENT DESCRIPTION / MANUFACTURER	PPD NO.	LOCATION BLDG	ELEV	HTG	LOADS SEIS	HYDR	QUAL ANLYS	METH TEST	NAT FREQ LOWEST	RRS REF STATUS QUAL	INST
2SFC*M1B	FUEL POOL CMC PUMP MOTOR GOULD	P222X	RB	290	CF	Y	NA	S	NA	67	59 A	Y
2SFC*P1A	FUEL POOL CMC PUMP GOULD	P222X	RB	290	CF	Y	NA	S	NA	45	59 A	Y
2SFC*P1B	FUEL POOL CMC PUMP GOULD	P222X	RB	290	CF	Y	NA	S	NA	45	59 A	Y
2SWP*M1A	SERVICE WATER PUMP MOTOR GOULD	P222X	SW	225	CF	Y	NA	S	NA	55	5 A	Y
2SWP*M1B	SERVICE WATER PUMP MOTOR GOULD	P222X	SW	225	CF	Y	NA	S	NA	55	5 A	Y
2SWP*M1C	SERVICE WATER PUMP MOTOR GOULD	P222X	SW	225	CF	Y	NA	S	NA	55	5 A	Y
2SWP*M1D	SERVICE WATER PUMP MOTOR GOULD	P222X	SW	225	CF	Y	NA	S	NA	55	5 A	Y
2SWP*M1E	SERVICE WATER PUMP MOTOR GOULD	P222X	SW	225	CF	Y	NA	S	NA	55	5 A	Y
2SWP*M1F	SERVICE WATER PUMP MOTOR GOULD	P222X	SW	225	CF	Y	NA	S	NA	55	5 A	Y
2SWP*M2A	CONDENSATE WTR PUMP MOTOR GOULD	P222X	CB	261	CF	Y	NA	S	NA	140	16 A	Y
2SWP*M2B	CONDENSING WTR PUMP MOTOR GOULD	P222X	CB	261	CF	Y	NA	S	NA	140	16 A	Y
2SWP*P1A	SERVICE WATER PUMP GOULD	P222X	SW	224	CF	Y	NA	S	NA	34	5 A	Y
2SWP*P1B	SERVICE WATER PUMP GOULD	P222X	SW	224	CF	Y	NA	S	NA	34	A A	Y

JOB NAME NMP - UNIT 2
UTILITY NIAGARA MOHAWK

SEISMIC AND DYNAMIC QUALIFICATION SUMMARY AND STATUS REPORT
MASTER LIST OF SAFETY RELATED EQUIPMENT

ENGINEER: STONE & WEBSTER
NSSS SUPPLIER: GENERAL ELECTRIC

EQUIP. ID / SWEC ID	EQUIPMENT DESCRIPTION / MANUFACTURER	PPD NO.	LOCATION BLDG	LOCATION ELEV	LOCATION HTG	LOADS SEIS	LOADS HYDR	QUAL ANLYS	METH TEST	NAT FREQ LOWEST	RRS REF STATUS QUAL	RRS REF STATUS INST
2SWP*P1C	SERVICE WATER PUMP GOULD	P222X	SW	224	CF	Y	NA	S	NA	34	5 A	Y
2SWP*P1D	SERVICE WATER PUMP GOULD	P222X	SW	224	CF	Y	NA	S	NA	34	5 A	Y
2SWP*P1E	SERVICE WATER PUMP GOULD	P222X	SW	224	CF	Y	NA	S	NA	34	5 A	Y
2SWP*P1F	SERVICE WATER PUMP GOULD	P222X	SW	224	CF	Y	NA	S	NA	34	5 A	Y
2SWP*P2A	CHILLED WTR PUMP MOTOR GOULD	P222X	CB	261	CF	Y	NA	S	NA	48	16 A	Y
2SWP*P2B	CHILLED WTR PUMP MOTOR GOULD	P222X	CB	261	CF	Y	NA	S	NA	48	16 A	Y

JOB NAME NMP - UNIT 2
UTILITY NIAGARA MOHAWK

SEISMIC AND DYNAMIC QUALIFICATION SUMMARY AND STATUS REPORT
MASTER LIST OF SAFETY RELATED EQUIPMENT

ENGINEER: STONE & WEBSTER
NSSS SUPPLIER: GENERAL ELECTRIC

EQUIP. ID / SWEC ID	EQUIPMENT DESCRIPTION / MANUFACTURER	PPD NO.	LOCATION BLDG	LOCATION ELEV	LOCATION HTG	LOADS SEIS	LOADS HYDR	QUAL ANLYS	QUAL METH TEST	NAT FREQ LOWEST	RRS REF STATUS QUAL	RRS REF STATUS INST
2EGF*P1A	FUEL OIL TRANSFER PUMP CRANE DEMING	P225E	DG	261	CF	Y	NA	S	NA	6	16 A	Y
2EGF*P1B	FUEL OIL TRANSFER PUMP CRANE DEMING	P225E	DG	261	CF	Y	NA	S	NA	6	16 A	Y
2EGF*P1C	FUEL OIL TRANSFER PUMP CRANE DEMING	P225E	DG	261	CF	Y	NA	S	NA	6	16 A	Y
2EGF*P1D	FUEL OIL TRANSFER PUMP CRANE DEMING	P225E	DG	261	CF	Y	NA	S	NA	6	16 A	Y
2EGF*P2A	FUEL OIL TRANSFER PUMP CRANE DEMING	P225E	DG	261	CF	Y	NA	S	NA	6	16 A	Y
2EGF*P2B	FUEL OIL TRANSFER PUMP CRANE DEMING	P225E	DG	261	CF	Y	NA	S	NA	6	16 A	Y

JOB NAME NMP - UNIT 2
UTILITY NIAGARA MOHAWK

SEISMIC AND DYNAMIC QUALIFICATION SUMMARY AND STATUS REPORT
MASTER LIST OF SAFETY RELATED EQUIPMENT

ENGINEER: STONE & WEBSTER
NSSS SUPPLIER: GENERAL ELECTRIC

EQUIP. ID / SHEC ID	EQUIPMENT DESCRIPTION / MANUFACTURER	PPD NO.	LOCATION BLDG	LOCATION ELEV	LOCATION HTG	LOADS SEIS	LOADS HYDR	QUAL ANLYS	METH TEST	NAT FREQ LOWEST	RRS REF STATUS QUAL	RRS REF STATUS INST
2GTS*CH1A	FILTER TRANE A HEATER MINE SAFETY APPL.	P243U	SG	261	EH	Y	NA	S	HF	>33	3 A	N
2GTS*CH1B	FILTER TRANE B HEATER MINE SAFETY APPL.	P243U	SG	261	EH	Y	NA	S	HF	>33	3 A	N
2GTS*FLT1A	STDBY GAS TREAT FLT TRAIN MINE SAFETY APPL	P243U	SG	261	CF	Y	NA	S	NA	NA	3 A	Y
2GTS*FLT1B	STDBY GAS TREAT FLT TRAIN MINE SAFETY APPL	P243U	SG	261	CF	Y	NA	S	NA	NA	3 A	Y
2GTS*FS25A	HEATER MSA	P243U	SG	261	EH	Y	NA	NA	HF	NA	3 A	N
2GTS*FS25B	HEATER MSA	P243U	SG	261	EH	Y	NA	NA	HF	NA	3 A	N
2GTS*PDI21A	DIFF. PRESS. INDICATOR MINE SAFETY APPL	P243U	SG	261	EH	Y	NA	N	HF	NA	3 A	Y
2GTS*PDI21B	DIFF. PRESS. INDICATOR MINE SAFETY APPL	P243U	SG	261	EH	Y	NA	NA	HF	NA	3 A	Y
2GTS*PNL30A	HEATER PANEL MSA	P243U	SG	267	DH	Y	NA	S	HF	>33	3 A	N
2GTS*PNL30B	HEATER PANEL MSA	P243U	SG	267	DH	Y	NA	S	HF	>33	3 A	N
2GTS*TEX26A	RTD (INLET) MINE SAFETY APPL.	P243U	SG	261	EH	Y	NA	NA	SF	24	3 A	Y
2GTS*TEX26B	RTD (INLET) MINE SAFETY APPL.	P243U	SG	261	EH	Y	NA	NA	SF	24	3 A	Y
2GTS*TEY26A	RTD (OUTLET) MINE SAFETY APPL.	P243U	SG	261	EH	Y	NA	NA	SF	24	3 A	Y

JOB NAME NMP - UNIT 2
UTILITY NIAGARA MOHAWK

SEISMIC AND DYNAMIC QUALIFICATION SUMMARY AND STATUS REPORT
MASTER LIST OF SAFETY RELATED EQUIPMENT

ENGINEER: STONE & WEBSTER
NSSS SUPPLIER: GENERAL ELECTRIC

EQUIP. ID / SHEC ID	EQUIPMENT DESCRIPTION / MANUFACTURER	PPD NO.	LOCATION BLDG	ELEV	HTG	LOADS SEIS	HYDR	QUAL ANLYS	METH TEST	NAT FREQ LOWEST	RRS REF STATUS QUAL	INST
2GTS*TEY26B	RTD (OUTLET) MINE SAFETY APPL	P243U	SG	261	EH	Y	NA	NA	SF	24	3 A	Y
2GTS*TIS23A	TEMP. IND. SWITCH MINE SAFETY APPL	P243U	SG	265	CH	Y	NA	NA	HF	NA	3 A	Y
2GTS*TIS23B	TEMP. IND. SWITCH MINE SAFETY APPL	P243U	SG	265	CH	Y	NA	NA	HF	NA	3 A	Y
2GTS*TS24A	HEATER MSA	P243U	SG	261	EH	Y	NA	NA	HF	NA	3 A	N
2GTS*TS24B	HEATER MSA	P243U	SG	261	EH	Y	NA	NA	HF	NA	3 A	N
2GTS*XD1A	TRANSFORMER MSA	P243U	SG	261	EH	Y	NA	NA	HF	7	3 A	Y
2GTS*XD1B	TRANSFORMER MSA	P243U	SG	261	EH	Y	NA	NA	HF	7	3 A	Y
2HVC*CH7A	HEATER MSA	P243U	CB	288	EH	Y	NA	S	HF	>33	17 A	Y
2HVC*CH7B	HEATER MSA	P243U	CB	306	EH	Y	NA	S	HF	>33	18 A	Y
2HVC*FLT1A	ODOR REMOVAL FILTER MSA	P243U	CB	288	CF	Y	NA	S	NA	22	17 A	Y
2HVC*FLT1B	ODOR REMOVAL FILTER MSA	P243U	CB	306	CF	Y	NA	S	NA	22	18 A	Y
2HVC*FLT2A	CONT. RM EMER FILTER MSA	P243U	CB	292	CF	Y	NA	S	NA	27	18 A	Y
2HVC*FLT2B	CONT. RM EMER. FILTER MSA	P243U	CB	310	CF	Y	NA	S	NA	27	19 A	Y

JOB NAME NMP - UNIT 2
UTILITY NIAGARA MOHAWK

SEISMIC AND DYNAMIC QUALIFICATION SUMMARY AND STATUS REPORT
MASTER LIST OF SAFETY RELATED EQUIPMENT

ENGINEER: STONE & WEBSTER
NSSS SUPPLIER: GENERAL ELECTRIC

EQUIP. ID / SHEC ID	EQUIPMENT DESCRIPTION / MANUFACTURER	PPD NO.	LOCATION BLDG	ELEV	MTG	LOADS SEIS	HYDR	QUAL ANLYS	METH TEST	NAT FREQ LOWEST	RRS REF STATUS QUAL	INST
2HVC*FLT3A	CONT. BLDG VENT. / MSA	P243U	CB	279	CF	Y	NA	S	NA	39	17 A	Y
2HVC*FLT3B	CONT. BLDG VENT. / MSA	P243U	CB	279	CF	Y	NA	S	NA	39	17 A	Y
2HVC*FS15A	FLOW SWITCH / MSA	P243U	CB	288	EM	Y	NA	NA	MF	NA	17 A	N
2HVC*FS15B	FLOW SWITCH / MSA	P243U	CB	306	EM	Y	NA	NA	MF	NA	18 A	N
2HVC*PDT50A	PRESS. DIFF. TRANSMITTER / MINE SAFETY APPL	P243U	CB	277	EM	Y	NA	NA	MF	20	17 A	Y
2HVC*PDT50B	PRESS. DIFF. TRANSMITTER / MINE SAFETY APPL	P243U	CB	306	EM	Y	NA	NA	MF	20	18 A	Y
2HVC*TE41A	RTD / MSA	P243U	CB	289	EM	Y	NA	NA	MF	24	17 A	Y
2HVC*TE41B	RTD / MSA	P243U	CB	306	EM	Y	NA	NA	MF	24	18 A	Y
2HVC*TE42A	RTD / MSA	P243U	CB	289	EM	Y	NA	NA	MF	24	17 A	Y
2HVC*TE42B	RTD / MSA	P243U	CB	306	EM	Y	NA	NA	MF	24	18 A	Y
2HVC*TIS20A	TEMP. IND. SWITCH / MSA	P243U	CB	277	EM	Y	NA	NA	MF	NA	17 A	Y
2HVC*TIS20B	TEMP. IND. SWITCH / MSA	P243U	CB	288	EM	Y	NA	NA	MF	NA	17 A	Y
2HVC*TIS64A	TEMP. IND. SWITCH / MSA	P243U	CB	305	EM	Y	NA	NA	MF	NA	18 A	Y

JOB NAME NMP - UNIT 2
UTILITY NIAGARA MOHAWK

SEISMIC AND DYNAMIC QUALIFICATION SUMMARY AND STATUS REPORT
MASTER LIST OF SAFETY RELATED EQUIPMENT

ENGINEER: STONE & WEBSTER
NSSS SUPPLIER: GENERAL ELECTRIC

EQUIP. ID / SWEC ID	EQUIPMENT DESCRIPTION / MANUFACTURER	PPD NO.	LOCATION BLDG	LOCATION ELEV	LOCATION HTG	LOADS SEIS	LOADS HYDR	QUAL ANLYS	METH- TEST	NAT FREQ- LOWEST	RRS REF STATUS QUAL	RRS REF STATUS INST
2HVC*TIS64B	TEMP. IND. SWITCH NSA	P243U	CB	305	EH	Y	NA	NA	HF	NA	18 A	Y
2HVC*TS43A	TEMP. SWITCH NSA	P243U	CB	288	EH	Y	NA	NA	HF	NA	17 A	N
2HVC*TS43B	TEMP. SWITCH NSA	P243U	CB	306	EH	Y	NA	NA	HF	NA	18 A	N
2HVC*XD2A	TRANSFORMER NSA	P243U	CB	288	CF	Y	NA	NA	HF	7	17 A	Y
2HVC*XD2B	TRANSFORMER NSA	P243U	CB	306	CF	Y	NA	NA	HF	7	18 A	Y

JOB NAME NMP - UNIT 2
UTILITY NIAGARA MOHAWK

SEISMIC AND DYNAMIC QUALIFICATION SUMMARY AND STATUS REPORT
MASTER LIST OF SAFETY RELATED EQUIPMENT

ENGINEER: STONE & WEBSTER
NSSS SUPPLIER: GENERAL ELECTRIC

EQUIP. ID / SHEC ID	EQUIPMENT: DESCRIPTION / MANUFACTURER	PPD NO.	LOCATION: BLDG	ELEV	HTG	LOADS: SEIS	HYDR	QUAL ANLYS	METH- TEST	NAT FREQ- LOWEST	RRS REF STATUS: QUAL	INST
21MHR*CRN1	POLAR CRANE WHITTING CORP.	P251P	RB	353	DH	Y	NA	D	NA	1.4	57 A	Y

JOB NAME NMP - UNIT 2
UTILITY NIAGARA MOHAWK

SEISMIC AND DYNAMIC QUALIFICATION SUMMARY AND STATUS REPORT
MASTER LIST OF SAFETY RELATED EQUIPMENT

ENGINEER: STONE & WEBSTER
NSSS SUPPLIER: GENERAL ELECTRIC

EQUIP. ID / SWEC ID	EQUIPMENT DESCRIPTION / MANUFACTURER	PPD NO.	LOCATION BLDG	LOCATION ELEV	LOCATION HTG	LOADS SEIS	LOADS HYDR	QUAL ANLYS	METH TEST	NAT FREQ LOWEST	RRS REF STATUS QUAL	RRS REF STATUS INST
2HCS*IPNL22A	H2 RECOMB PNR CAB ROCKWELL	P282K	RB	240	CF	Y	NA	NA	HF		61 B	N
2HCS*IPNL22B	H2 RECOMB PNR CAB ROCKWELL	P282K	RB	240	CF	Y	NA	NA	HF		61 B	N
2HCS*RBNR1A	HYDROGEN RECOMB 1A ROCKWELL	P282K	RB	240	CF	Y	NA	S	HF		61 B	Y
2HCS*RBR1B	HYDROGEN RECOMB 1B ROCKWELL	P282K	RB	240	CF	Y	NA	S	HF		61 B	Y

JOB NAME NMP - UNIT 2
UTILITY NIAGARA MOHAWK

SEISMIC AND DYNAMIC QUALIFICATION SUMMARY AND STATUS REPORT
MASTER LIST OF SAFETY RELATED EQUIPMENT

ENGINEER: STONE & WEBSTER
NSSS SUPPLIER: GENERAL ELECTRIC

EQUIP. ID / SWEC ID	EQUIPMENT DESCRIPTION / MANUFACTURER	PPD NO.	LOCATION BLDG	ELEV	HTG	LOADS SEIS	HYDR	QUAL ANLYS	METH TEST	NAT FREQ LOWEST	RRS REF STATUS QUAL	INST
2HSS*HYV6A	24" 900# BALL VALVE FLUID SYSTEMS	P303D	PC	252	LH	Y	Y	S	HF	52	NA B	Y
2HSS*HYV6B	24" 900# BALL VALVE FLUID SYSTEMS	P303D	PC	252	LH	Y	Y	S	HF	52	NA B	Y
2HSS*HYV6C	24" 900# BALL VALVE FLUID SYSTEMS	P303D	PC	252	LH	Y	Y	S	HF	52	NA B	Y
2HSS*HYV6D	24" 900# BALL VALVE FLUID SYSTEMS	P303D	PC	252	LH	Y	Y	S	HF	52	NA B	Y
2HSS*HYV7A	24" 900# BALL VALVE FLUID SYSTEMS	P303D	HST	251	LH	Y	Y	S	HF	52	NA B	Y
2HSS*HYV7B	24" 900# BALL VALVE FLUID SYSTEMS	P303D	HST	251	LH	Y	Y	S	HF	52	NA B	Y
2HSS*HYV7C	24" 900# BALL VALVE FLUID SYSTEMS	P303D	HST	251	LH	Y	Y	S	HF	52	NA B	Y
2HSS*HYV7D	24" 900# BALL VALVE FLUID SYSTEMS	P303D	HST	251	LH	Y	Y	S	HF	52	NA B	Y
2HSS*IPNL90A	RELAY LOGIC CABINET FLUID SYSTEMS	P303D	ABS	240	CF	Y	Y	NA	HF	52	61 A	Y
2HSS*IPNL90B	RELAY LOGIC CABINET FLUID SYSTEMS	P303D	ABS	240	CF	Y	Y	NA	HF	NA	61 A	Y
2HSS*IPNL90C	RELAY LOGIC CABINET FLUID SYSTEMS	P303D	ABS	240	CF	Y	Y	NA	HF	NA	61 A	Y
2HSS*IPNL90D	RELAY LOGIC CABINET FLUID SYSTEMS	P303D	ABS	240	CF	Y	Y	NA	HF	NA	61 A	Y
2HSS*IPNL91A	RELAY LOGIC CABINET FLUID SYSTEMS	P303D	ABS	240	CF	Y	NA	NA	HF	NA	61 A	Y

JOB NAME NMP - UNIT 2
UTILITY NIAGARA MOHAWK

SEISMIC AND DYNAMIC QUALIFICATION SUMMARY AND STATUS REPORT
MASTER LIST OF SAFETY RELATED EQUIPMENT

ENGINEER: STONE & WEBSTER
NSSS SUPPLIER: GENERAL ELECTRIC

EQUIP. ID / SWEC ID	EQUIPMENT DESCRIPTION / MANUFACTURER	PPD NO.	LOCATION BLDG	LOCATION ELEV	LOCATION MTG	LOADS SEIS	LOADS HYDR	QUAL ANLYS	METH TEST	NAT FREQ LOWEST	RRS REF STATUS QUAL	RRS REF STATUS INST
2MSS*IPNL91B	RELAY LOGIC CABINET FLUID SYSTEMS	P303D	ABS	240	CF	Y	NA	NA	MF	NA	61 A	Y
2MSS*IPNL91C	RELAY LOGIC CABINET FLUID SYSTEMS	P303D	ABN	240	CF	Y	NA	NA	MF	NA	61 A	Y
2MSS*IPNL91D	RELAY LOGIC CABINET FLUID SYSTEMS	P303D	ABN	240	CF	Y	NA	NA	MF	NA	61 A	Y

JOB NAME NMP - UNIT 2
UTILITY NIAGARA MOHAWK

SEISMIC AND DYNAMIC QUALIFICATION SUMMARY AND STATUS REPORT
MASTER LIST OF SAFETY RELATED EQUIPMENT

ENGINEER: STONE & WEBSTER
NSSS SUPPLIER: GENERAL ELECTRIC

EQUIP. ID / SHEC ID	EQUIPMENT DESCRIPTION / MANUFACTURER	PPD NO.	LOCATION BLDG	LOCATION ELEV	LOCATION HTG	LOADS SEIS	LOADS HYDR	QUAL ANLYS	METH TEST	NAT FREQ LOWEST	RRS REF STATUS QUAL	RRS REF STATUS INST
2ISC*RV33A	VACUUM RELIEF VALVE GPE CONTROLS	P303R	PC	240	LH	Y	Y	S	NA	>1000	37,48 A	Y
2ISC*RV33B	VACUUM RELIEF VALVE GEP CONTROLS	P303R	PC	240	LH	Y	Y	S	NA	>1000	37,48 A	Y
2ISC*RV34A	VACUUM RELIEF VALVE GPE CONTROLS	P303R	PC	240	LH	Y	Y	S	NA	>1000	37,48 A	Y
2ISC*RV34B	VACUUM RELIEF VALVE GPE CONTROLS	P303R	PC	240	LH	Y	Y	S	NA	>1000	37,48 A	Y
2ISC*RV35A	VACUUM RELIEF VALVE GPE CONTROLS	P303R	PC	240	LH	Y	Y	S	NA	>1000	37,48 A	Y
2ISC*RV35B	VACUUM RELIEF VALVE GPE CONTROLS	P303R	PC	240	LH	Y	Y	S	NA	>1000	37,48 A	Y
2ISC*RV36A	VACUUM RELIEF VALVE GPE CONTROLS	P303R	PC	240	LH	Y	Y	S	NA	>1000	37,48 A	Y
2ISC*RV36B	VACUUM RELIEF VALVE GPE CONTROLS	P303R	PC	240	LH	Y	Y	S	NA	>1000	37,48 A	Y

JOB NAME NMP - UNIT 2
UTILITY NIAGARA MOHAWK

SEISMIC AND DYNAMIC QUALIFICATION SUMMARY AND STATUS REPORT
MASTER LIST OF SAFETY RELATED EQUIPMENT

ENGINEER: STONE & WEBSTER
NSSS SUPPLIER: GENERAL ELECTRIC

EQUIP. ID / SHEC ID	EQUIPMENT DESCRIPTION / MANUFACTURER	PPD NO.	LOCATION BLDG	LOCATION ELEV	LOCATION HTG	LOADS SEIS	LOADS HYDR	QUAL ANLYS	METH TEST	NAT FREQ LOWEST	RRS REF STATUS QUAL	RRS REF STATUS INST
2HSS*AOV92A	16"-900# GATE VALVE ANCHOR DARLING	P303V	TB	290	LH	Y	NA	S	NA	63	NA A	Y
2HSS*AOV92B	16"-900# GATE VALVE ANCHOR DARLING	P303V	TB	296	LH	Y	NA	S	NA	63	NA A	Y
2THE*AOV121	4"-900# GATE VALVE ANCHOR DARLING	P303V	TB	294	LH	Y	NA	S	NA	83	NA A	N

JOB NAME NMP - UNIT 2
UTILITY NIAGARA MOHAWK

SEISMIC AND DYNAMIC QUALIFICATION SUMMARY AND STATUS REPORT
MASTER LIST OF SAFETY RELATED EQUIPMENT

ENGINEER: STONE & WEBSTER
NSSS SUPPLIER: GENERAL ELECTRIC

EQUIP. ID / SHEC ID	EQUIPMENT DESCRIPTION / MANUFACTURER	PPD NO.	LOCATION BLDG	LOCATION ELEV	LOCATION HTG	LOADS SEIS	LOADS HYDR	QUAL ANLYS	METH TEST	NAT FREQ LOWEST	RRS REF STATUS QUAL	RRS REF STATUS INST
2CSH*AOV108	12"-900# CHECK VALVE ANCHOR-DARLING	P303H	PC	308	LH	Y	Y	S	SF	46	NA A	Y
2CSL*AOV101	12"-900# CHECK VALVE ANCHOR-DARLING	P303H	PC	308	LH	Y	Y	S	SF	46	NA A	Y
2FHS*AOV23A	24"-900# CHECK VALVE ANCHOR-DARLING	P303H	RB	261	LH	Y	Y	S	SF	36	NA A	Y
2FHS*AOV23B	24"-900# CHECK VALVE ANCHOR-DARLING	P303H	HST	257	LH	Y	Y	S	SF	36	NA A	Y
2ICS*AOV156	6"-900# CHECK VALVE ANCHOR-DARLING	P303H	RB	292	LH	Y	Y	S	SF	36	NA A	Y
2ICS*AOV157	6"-900# CHECK VALVE ANCHOR-DARLING	P303H	PC	343	LH	Y	Y	S	SF	36	NA A	N
2RHS*AOV150	16"-300# CHECK VALVE ANCHOR-DARLING	P303H	ABS	181	LH	Y	NA	S	SF	36	NA A	Y
2RHS*AOV16A	12"-900# CHECK VALVE ANCHOR-DARLING	P303H	PC	316	LH	Y	Y	S	SF	46	NA A	Y
2RHS*AOV16B	12"-900# CHECK VALVE ANCHOR-DARLING	P303H	PC	293	LH	Y	Y	S	SF	46	NA A	Y
2RHS*AOV16C	12"-900# CHECK VALVE ANCHOR-DARLING	P303H	PC	316	LH	Y	Y	S	SF	46	NA A	Y
2RHS*AOV39A	12"-900# CHECK VALVE ANCHOR-DARLING	P303H	PC	255	LH	Y	Y	S	SF	46	NA A	Y
2RHS*AOV39B	12"-900# CHECK VALVE ANCHOR-DARLING	P303H	PC	255	LH	Y	Y	S	SF	46	NA A	Y

JOB NAME NMP - UNIT 2
UTILITY NIAGARA MOHAWK

SEISMIC AND DYNAMIC QUALIFICATION SUMMARY AND STATUS REPORT
MASTER LIST OF SAFETY RELATED EQUIPMENT

ENGINEER: STONE & WEBSTER
NSSS SUPPLIER: GENERAL ELECTRIC

EQUIP. ID / SWEC ID	EQUIPMENT DESCRIPTION / MANUFACTURER	PPD NO.	LOCATION BLDG	LOCATION ELEV	LOCATION HTG	LOADS SEIS	LOADS HYDR	QUAL ANLYS	METH-TEST	NAT FREQ-LOWEST	RRS REF STATUS QUAL	RRS REF STATUS INST
2SWP*MOV1A	4"-150# BALL VALVE CONTROMATICS	P309A	SB	269	LM	Y	NA	S	MF	>33	NA A	Y
2SWP*MOV1B	4"-150# BALL VALVE CONTROMATICS	P309A	SB	269	LM	Y	NA	S	MF	>33	NA A	Y
2SWP*MOV1C	4"-150# BALL VALVE CONTROMATICS	P309A	SB	269	LM	Y	NA	S	MF	>33	NA A	Y
2SWP*MOV1D	4"-150# BALL VALVE CONTROMATICS	P309A	SB	269	LM	Y	NA	S	MF	>33	NA A	Y
2SWP*MOV1E	4"-150# BALL VALVE CONTROMATICS	P309A	SB	257	LM	Y	NA	S	MF	>33	NA A	Y
2SWP*MOV1F	4"-150# BALL VALVE CONTROMATICS	P309A	SB	257	LM	Y	NA	S	MF	>33	NA A	Y

JOB NAME NMP - UNIT 2
UTILITY NIAGARA MOHAWK

SEISMIC AND DYNAMIC QUALIFICATION SUMMARY AND STATUS REPORT
MASTER LIST OF SAFETY RELATED EQUIPMENT

ENGINEER: STONE & WEBSTER
NSSS SUPPLIER: GENERAL ELECTRIC

EQUIP. ID / SWEC ID	EQUIPMENT DESCRIPTION / MANUFACTURER	PPD NO.	LOCATION BLDG	ELEV	MTG	LOADS SEIS	HYDR	QUAL ANLYS	METH TEST	NAT FREQ LOWEST	RRS REF STATUS QUAL	INST
2CPS*AOV104	14"-150# POSI SEAL	P304D	RB	294	LH	Y	Y	S	SF	85	NA C	Y
2CPS*AOV105	12"-150# POSI SEAL	P304D	RB	220	LH	Y	Y	S	SF	78	NA C	Y
2CPS*AOV106	14"-150# POSI SEAL	P304D	PC	294	LH	Y	Y	S	SF	85	NA C	Y
2CPS*AOV107	12"-150# POSI SEAL	P304D	PC	220	LH	Y	Y	S	SF	62	NA C	Y
2CPS*AOV108	14"-150# POSI SEAL	P304D	PC	300	LH	Y	Y	S	SF	85	NA C	Y
2CPS*AOV109	12"-150# POSI SEAL	P304D	PC	281	LH	Y	Y	S	SF	62	NA C	Y
2CPS*AOV110	14"-150# POSI SEAL	P304D	RB	294	LH	Y	Y	S	SF	85	NA C	Y
2CPS*AOV111	12"-150# POSI SEAL	P304D	RB	221	LH	Y	Y	S	SF	78	NA C	Y
2GTS*AOV101	20"-150# POSI SEAL	P304D	RB	319	LH	Y	NA	S	SF	56	NA A	Y
2HVC*MOV1A	18"-150# W/SMB-000-2/M1BC POSI SEAL	P304D	CB	298	LH	Y	NA	S	SF	68	NA A	Y
2HVC*MOV1B	18"-150# W/SMB-000-2/M1BC POSI SEAL	P304D	CB	298	LH	Y	NA	S	SF	68	NA A	Y
2RHS*MOV12A	18"-300# W/SMB-00-10/M3BC POSI SEAL	P304D	ABN	181	LH	Y	NA	S	SF	58	NA A	Y
2RHS*MOV12B	18"-300# W/SMB-00-10/M3BC POSI SEAL	P304D	ABS	177	LH	Y	NA	S	SF	58	NA A	Y

JOB NAME NMP - UNIT 2
UTILITY NIAGARA MOHAWK

SEISMIC AND DYNAMIC QUALIFICATION SUMMARY AND STATUS REPORT
MASTER LIST OF SAFETY RELATED EQUIPMENT

ENGINEER: STONE & WEBSTER
NSSS SUPPLIER: GENERAL ELECTRIC

EQUIP. ID / SWEC ID	EQUIPMENT DESCRIPTION / MANUFACTURER	PPD NO.	LOCATION BLDG	LOCATION ELEV	LOCATION HTG	LOADS SEIS	LOADS HYDR	QUAL ANLYS	METH- TEST	NAT FREQ- LOWEST	RRS REF STATUS QUAL	RRS REF STATUS INST
2RHS*MOV9A	18"-300# M/SMB-00-10/M3BC POSI SEAL	P304D	ABN	201	LM	Y	NA	S	SF	58	NA A	Y
2RHS*MOV9B	18"-300# M/SMB-00-10/M3BC POSI SEAL	P304D	ABS	201	LM	Y	NA	S	SF	58	NA A	Y
2SFC*AOV153	8"-300# POSI SEAL	P304D	RB	298	LM	Y	NA	S	SF	59	NA A	Y
2SFC*AOV154	8"-300# POSI SEAL	P304D	RB	298	LM	Y	NA	S	SF	59	NA A	Y
2SFC*AOV19A	8"-300# POSI SEAL	P304D	RB	336	LM	Y	NA	S	SF	59	NA A	Y
2SFC*AOV19B	8"-300# POSI SEAL	P304D	RB	310	LM	Y	NA	S	SF	59	NA A	Y
2SFC*AOV33A	4"-150# POSI SEAL	P304D	RB	351	LM	Y	NA	S	SF	44	NA A	Y
2SFC*AOV33B	4"-150# POSI SEAL	P304D	RB	351	LM	Y	NA	S	SF	44	NA A	Y
2SFC*HV115	4"-150# POSI SEAL	P304D	RB	345	LM	Y	NA	S	SF	44	NA A	Y
2SFC*HV116	4"-150# POSI SEAL	P304D	RB	350	LM	Y	NA	S	SF	44	NA A	Y
2SFC*HV121	4"-150# POSI SEAL	P304D	RB	352	LM	Y	NA	S	SF	44	NA A	Y
2SFC*HV17A	8"-300# POSI SEAL	P304D	RB	300	LM	Y	NA	S	SF	59	NA A	Y
2SFC*HV17B	8"-300# POSI SEAL	P304D	RB	298	LM	Y	NA	S	SF	59	NA A	Y

JOB NAME NMP - UNIT 2
UTILITY NIAGARA MOHAWK

SEISMIC AND DYNAMIC QUALIFICATION SUMMARY AND STATUS REPORT
MASTER LIST OF SAFETY RELATED EQUIPMENT

ENGINEER: STONE & WEBSTER
NSSS SUPPLIER: GENERAL ELECTRIC

EQUIP. ID / SWEC ID	EQUIPMENT DESCRIPTION / MANUFACTURER	PPD NO.	LOCATION BLDG	LOCATION ELEV	LOCATION HTG	LOADS SEIS	LOADS HYDR	QUAL ANLYS	METH TEST	NAT FREQ LOWEST	RRS REF STATUS QUAL	RRS REF STATUS INST
2SFC*HV18A	8"-300# POSI SEAL	P304D	RB	298	LH	Y	NA	S	SF	59	NA A	Y
2SFC*HV18B	8"-300# POSI SEAL	P304D	RB	298	LH	Y	NA	S	SF	59	NA A	Y
2SFC*HV35A	10"-150# POSI SEAL	P304D	RB	345	LH	Y	NA	S	SF	66	NA A	Y
2SFC*HV35B	10"-150# POSI SEAL	P304D	RB	345	LH	Y	NA	S	SF	66	NA A	Y
2SFC*HV37A	8"-300# POSI SEAL	P304D	RB	232	LH	Y	NA	S	SF	59	NA A	Y
2SFC*HV37B	8"-300# POSI SEAL	P304D	RB	232	LH	Y	NA	S	SF	59	NA A	Y
2SFC*HV54A	10"-150# POSI SEAL	P304D	RB	330	LH	Y	NA	S	SF	66	NA A	Y
2SFC*HV54B	10"-150# POSI SEAL	P304D	RB	331	LH	Y	NA	S	SF	66	NA A	Y
2SFC*HV6A	10"-150# POSI SEAL	P304D	RB	300	LH	Y	NA	S	SF	39	NA A	Y
2SFC*HV6B	10"-150# POSI SEAL	P304D	RB	300	LH	Y	NA	S	SF	39	NA A	Y

JOB NAME NMP - UNIT 2
UTILITY NIAGARA MOHAWK

SEISMIC AND DYNAMIC QUALIFICATION SUMMARY AND STATUS REPORT
MASTER LIST OF SAFETY RELATED EQUIPMENT

ENGINEER: STONE & WEBSTER
NSSS SUPPLIER: GENERAL ELECTRIC

EQUIP. ID / SWEC ID	EQUIPMENT DESCRIPTION / MANUFACTURER	PPD NO.	LOCATION BLDG	LOCATION ELEV	LOCATION HTG	LOADS SEIS	LOADS HYDR	QUAL ANLYS	METH TEST	NAT FREQ LOWEST	RRS REF STATUS QUAL	RRS REF STATUS INST
2CCP*AOV37A	1 1/2"-150# PLUG VALVE XOMOX	P304K	ABN	183	LH	Y	NA	S	HF	32	NA A	Y
2CCP*AOV37B	2"-150# PLUG VALVE XOMOS	P304K	ABS	177	LH	Y	NA	S	HF	32	NA A	Y
2CCP*AOV38A	1 1/2"-150# PLUG VALVE XOMOX	P304K	ABN	183	LH	Y	NA	S	HF	32	NA A	Y
2CCP*AOV38B	2"-150# PLUG VALVE XOMOS	P304K	ABS	177	LH	Y	NA	S	HF	32	NA A	Y
2SFC*HV114	2 1/2"-150# PLUG VALVE XOMOX	P304K	RB	321	LH	Y	NA	S	HF	27	NA A	Y
2SFC*HV148	2 1/2"-150# PLUG VALVE XOMOX	P304K	RB	320	LH	Y	NA	S	HF	27	NA A	Y
2SFC*HV149	2 1/2"-150# PLUG VALVE XOMOX	P304K	RB	320	LH	Y	NA	S	HF	27	NA A	Y
2SWP*AOV154A	1 1/2"-150# PLUG VALVE XOMOX	P304K	CB	277	LH	Y	NA	S	HF	32	NA A	Y
2SWP*AOV154B	1 1/2"-150# PLUG VALVE XOMOX	P304K	CB	277	LH	Y	NA	S	HF	32	NA A	Y
2SWP*AOV20A	1 1/2"-150# PLUG VALVE XOMOX	P304K	ABN	183	LH	Y	NA	S	HF	32	NA A	Y
2SWP*AOV20B	2"-150# PLUG VALVE XOMOX	P304K	ABS	179	LH	Y	NA	S	HF	32	NA A	Y
2SWP*AOV22A	1 1/2"-150# PLUG VALVE XOMOX	P304K	ABN	186	LH	Y	NA	S	HF	32	NA A	Y
2SWP*AOV22B	2"-150# PLUG VALVE XOMOX	P304K	ABS	179	LH	Y	NA	S	HF	32	NA A	Y

JOB NAME NMP - UNIT 2
UTILITY NIAGARA MOHAWK

SEISMIC AND DYNAMIC QUALIFICATION SUMMARY AND STATUS REPORT
MASTER LIST OF SAFETY RELATED EQUIPMENT

ENGINEER: STONE & WEBSTER
NSSS SUPPLIER: GENERAL ELECTRIC

EQUIP. ID / SHEC ID	EQUIPMENT DESCRIPTION / MANUFACTURER	PPD NO.	LOCATION BLDG	LOCATION ELEV	LOCATION HTG	LOADS SEIS	LOADS HYDR	QUAL ANLYS	METH TEST	NAT FREQ LOWEST	RRS REF	STATUS QUAL	STATUS INST
2SWP*AOV571	1 1/2"-150# PLUG VALVE XOMOX	P304K	ASB	238	LM	Y	NA	S	MF	32	NA	A	Y
2SWP*AOV572	2 1/2"-150# PLUG VALVE XOMOX	P304K	ASB	238	LM	Y	NA	S	MF	27	NA	A	Y
2SWP*AOV573	2"-150# PLUG VALVE XOMOX	P304K	CB	238	LM	Y	NA	S	MF	32	NA	A	Y
2SWP*AOV574	2"-150# PLUG VALVE XOMOX	P304K	CB	238	LM	Y	NA	S	MF	32	NA	A	Y
2SWP*AOV581	1 1/2"-150# PLUG VALVE XOMOS	P304K	CB	275	LM	Y	NA	S	MF	32	NA	A	Y
2SWP*AOV78A	2"-150# PLUG VALVE XOMOX	P304K	CB	277	LM	Y	NA	S	MF	32	NA	A	Y
2SWP*AOV78B	2"-150# PLUG VALVE XOMOX	P304K	CB	277	LM	Y	NA	S	MF	32	NA	A	Y
2SWP*AOV97A	6"-150# PLUG VALVE XOMOX	P304K	RB	292	LM	Y	NA	S	MF	21	NA	A	Y
2SWP*AOV97B	6"-150# PLUG VALVE XOMOX	P304K	RB	291	LM	Y	NA	S	MF	21	NA	A	Y

JOB NAME NMP - UNIT 2
UTILITY NIAGARA MOHAWK

SEISMIC AND DYNAMIC QUALIFICATION SUMMARY AND STATUS REPORT
MASTER LIST OF SAFETY RELATED EQUIPMENT

ENGINEER: STONE & WEBSTER
NSSS SUPPLIER: GENERAL ELECTRIC

EQUIP. ID / SHEC ID	EQUIPMENT DESCRIPTION / MANUFACTURER	PPD NO.	LOCATION BLDG	LOCATION ELEV	LOCATION HTG	LOADS SEIS	LOADS HYDR	QUAL ANLYS	METH TEST	NAT FREQ LOWEST	RRS REF STATUS QUAL	RRS REF STATUS INST
2CCP*MOV122	8"-150# GATE VALVE VELAN	P304R	PC	243	LM	Y	Y	S	SF	85	NA A	-Y
2CCP*MOV124	8"-150# GATE VAVE VELAN	P304R	RB	243	LM	Y	Y	S	SF	85	NA A	Y
2CCP*MOV14A	12"-150# GATE VALVE VELAN	P304R	RB	217	LM	Y	NA	S	SF	97	NA A	Y
2CCP*MOV14B	12"-150# GATE VALVE VELAN	P304R	RB	217	LM	Y	NA	S	SF	97	NA A	Y
2CCP*MOV15A	12"-150# GATE VALVE VELAN	P304R	RB	263	LM	Y	Y	S	SF	82	NA A	Y
2CCP*MOV15B	12"-150# GATE VALVE VELAN	P304R	RB	262	LM	Y	Y	S	SF	82	NA A	Y
2CCP*MOV16A	12"-150# GATE VALVE VELAN	P304R	PC	263	LM	Y	Y	S	SF	82	NA A	Y
2CCP*MOV16B	12"-150# GATE VALVE VELAN	P304R	PC	262	LM	Y	Y	S	SF	82	NA A	Y
2CCP*MOV17A	12"-150# GAVE VALVE VELAN	P304R	RB	263	LM	Y	Y	S	SF	82	NA A	Y
2CCP*MOV17B	12"-150# GATE VALVE VELAN	P304R	RB	262	LM	Y	Y	S	SF	82	NA A	Y
2CCP*MOV18A	12"-150# GATE VALVE VELAN	P304R	RB	217	LM	Y	NA	S	SF	97	NA A	Y
2CCP*MOV18B	12"-150# GATE VAVE VELAN	P304R	RB	217	LM	Y	NA	S	SF	97	NA A	Y
2CCP*MOV22A	6"-150# GATE VALVE VELAN	P304R	RB	263	LM	Y	Y	S	SF	79	NA A	Y

JOB NAME NMP - UNIT 2
UTILITY NIAGARA MOHAWK

SEISMIC AND DYNAMIC QUALIFICATION SUMMARY AND STATUS REPORT
MASTER LIST OF SAFETY RELATED EQUIPMENT

ENGINEER: STONE & WEBSTER
NSSS SUPPLIER: GENERAL ELECTRIC

EQUIP. ID / SWEC ID	EQUIPMENT DESCRIPTION / MANUFACTURER	PPD NO.	LOCATION BLDG	ELEV	HTG	LOADS SEIS	HYDR	QUAL ANLYS	METH- TEST	NAT FREQ- LOWEST	RRS REF STATUS QUAL	INST
2CCP*MOV22B	6"-150# GATE VALVE VELAN	P304R	RB	262	LH	Y	Y	S	SF	79	NA A	Y
2CCP*MOV265	8"-150# GATE VALVE VELAN	P304R	RB	253	LH	Y	Y	S	SF	80	NA A	Y
2CCP*MOV273	8"-150# GATE VALVE VELAN	P304R	PC	253	LH	Y	Y	S	SF	83	NA A	Y
2CCP*MOV93A	6"-150# GATE VALVE VELAN	P304R	RB	263	LH	Y	Y	S	SF	79	NA A	Y
2CCP*MOV93B	6"-150# GATE VALVE VELAN	P304R	RB	263	LH	Y	Y	S	SF	79	NA A	Y
2CCP*MOV94A	4"-150# GATE VALVE VELAN	P304R	PC	263	LH	Y	Y	S	SF	82	NA A	Y
2CCP*MOV94B	4"-150# GATE VALVE VELAN	P304R	PC	262	LH	Y	Y	S	SF	82	NA A	Y
2CSL*MOV104	12"-600# GATE VALVE VELAN	P304R	RB	295	LH	Y	Y	S	SF	61	NA A	Y
2CSL*MOV107	4"-300# GATE VALVE VELAN	P304R	ABN	178	LH	Y	NA	S	SF	71	NA A	Y
2DER*MOV128	2"-1500 GLOBE VALVE VELAN	P304R	PC	242	LH	Y	Y	S	SF	93	NA A	Y
2DER*MOV129	2"-150# GLOVE VALVE VELAN	P304R	PC	242	LH	Y	Y	S	SF	93	NA A	Y
2FHS*MOV21A	24"-900# GATE VALVE VELAN	P304R	RB	257	LH	Y	Y	S	SF	59	NA A	Y
2FHS*MOV21B	24"-900# GATE VALVE VELAN	P304R	RB	257	LH	Y	Y	S	SF	59	NA A	Y

JOB NAME NMP - UNIT 2
UTILITY NIAGARA MOHAWK

SEISMIC AND DYNAMIC QUALIFICATION SUMMARY AND STATUS REPORT
MASTER LIST OF SAFETY RELATED EQUIPMENT

ENGINEER: STONE & WEBSTER
NSSS SUPPLIER: GENERAL ELECTRIC

EQUIP. ID / SWEC ID	EQUIPMENT DESCRIPTION / MANUFACTURER	PPD NO.	LOCATION BLDG	ELEV	HTG	LOADS SEIS	HYDR	QUAL ANLYS	METH TEST	NAT FREQ LOWEST	RRS REF STATUS QUAL	INST
2GTS*MOV9A	8"-150# GATE VALVE VELAN	P309R	SG	266	LH	Y	NA	S	SF	89	NA A	Y
2GTS*MOV9B	8"-150# GATE VALVE VELAN	P309R	SG	266	LH	Y	NA	S	SF	89	NA A	Y
2ICS*MOV116	2"-1500# GLOBE VALVE VELAN	P309R	RB	188	LH	Y	NA	S	SF	60	NA A	Y
2ICS*MOV120	4"-900# GLOBE VALVE VELAN	P309R	RB	188	LH	Y	NA	S	SF	55	NA A	Y
2ICS*MOV121	10"-900# GATE VALVE VELAN	P309R	RB	263	LH	Y	Y	S	SF	53	NA A	Y
2ICS*MOV122	12"-150# GATE VALVE VELAN	P309R	RB	203	LH	Y	Y	S	SF	85	NA A	Y
2ICS*MOV124	4"-900# GATE VALVE VELAN	P309R	RB	188	LH	Y	NA	S	SF	53	NA A	Y
2ICS*MOV126	6"-900# GATE VALVE VELAN	P309R	RB	292	LH	Y	Y	S	SF	57	NA A	Y
2ICS*MOV128	10"-900# GATE VALVE VELAN	P309R	PC	264	LH	Y	Y	S	SF	54	NA A	Y
2ICS*MOV129	6"-150# GATE VALVE VELAN	P309R	ABN	241	LH	Y	NA	S	SF	102	NA A	Y
2ICS*MOV136	6"-150# GATE VALVE VELAN	P309R	RB	199	LH	Y	Y	S	SF	79	NA A	Y
2ICS*MOV143	2"-1500# GLOBE VALVE VELAN	P309R	RB	207	LH	Y	Y	S	SF	60	NA A	Y
2ICS*MOV159	GLOBE VALVE VELAN	P309R	RB	188	LH	Y	Y	S	SF	50	NA A	N

JOB NAME NMP - UNIT 2
UTILITY NIAGARA MOHAWK

SEISMIC AND DYNAMIC QUALIFICATION SUMMARY AND STATUS REPORT
MASTER LIST OF SAFETY RELATED EQUIPMENT

ENGINEER: STONE & WEBSTER
NSSS SUPPLIER: GENERAL ELECTRIC

EQUIP. ID / SHEC ID	EQUIPMENT DESCRIPTION / MANUFACTURER	PPD NO.	LOCATION BLDG	LOCATION ELEV	LOCATION HTG	LOADS SEIS	LOADS HYDR	QUAL ANLYS	METH TEST	NAT FREQ LOWEST	RRS REF STATUS QUAL	RRS REF STATUS INST
2ICS*MOV170	1"-1500# GLOBE VALVE VELAN	P304R	PC	263	LH	Y	Y	S	SF	50	NA A	N
2MSS*MOV108	2"-1500# GLOBE VALVE VELAN	P304R	PC	318	LH	Y	Y	S	SF	93	NA A	Y
2MSS*MOV111	6"-600# GLOBE VALVE VELAN	P304R	PC	249	LH	Y	Y	S	SF	49	NA A	Y
2MSS*MOV112	6"-600# GLOBE VALVE VELAN	P304R	MST	240	LH	Y	NA	S	SF	49	NA A	Y
2MSS*MOV118	2"-1500# GLOBE VALVE VELAN	P304R	PC	315	LH	Y	Y	S	SF	93	NA A	Y
2MSS*MOV119	2"-1500# GLOBE VALVE VELAN	P304R	PC	315	LH	Y	Y	S	SF	93	NA A	Y
2MSS*MOV189	2"-1500# GLOBE VALVE VELAN	P304R	PC	264	LH	Y	Y	S	SF	93	NA A	Y
2MSS*MOV207	6"-600# GLOBE VALVE VELAN	P304R	PC	249	LH	Y	Y	S	SF	48	NA A	Y
2MSS*MOV208	2"-1500# GLOBE VALVE VELAN	P304R	MST	246	LH	Y	NA	S	SF	93	NA A	Y
2RHS*MOV104	6"-900# GLOBE VALVE VELAN	P304R	RB	292	LH	Y	Y	S	SF	61	NA A	Y
2RHS*MOV112	20"-900# GATE VALVE VELAN	P304R	PC	256	LH	Y	Y	S	SF	56	NA A	Y
2RHS*MOV113	20"-900# GATE VALVE VELAN	P304R	RB	247	LH	Y	Y	S	SF	56	NA A	Y
2RHS*MOV115	16"-300# GATE VALVE VELAN	P304R	ABS	181	LH	Y	NA	S	SF	65	NA A	Y

JOB NAME NMP - UNIT 2
UTILITY NIAGARA MOHAWK

SEISMIC AND DYNAMIC QUALIFICATION SUMMARY AND STATUS REPORT
MASTER LIST OF SAFETY RELATED EQUIPMENT

ENGINEER: STONE & WEBSTER
NSSS SUPPLIER: GENERAL ELECTRIC

EQUIP. ID / SWEC ID	EQUIPMENT DESCRIPTION / MANUFACTURER	PPD NO.	LOCATION BLDG	ELEV	HTG	LOADS SEIS	HYDR	QUAL ANLYS	METH TEST	NAT FREQ LOWEST	RRS REF STATUS QUAL	INST
2RHS*MOV116	16"-150# GATE VALVE VELAN	P304R	ABS	181	LH	Y	NA	S	SF	65	NA A	Y
2RHS*MOV142	3"-300# GLOBE VALVE VELAN	P304R	ABS	177	LH	Y	NA	S	SF	62	NA A	Y
2RHS*MOV149	3"-300# GLOBE VALVE VELAN	P304R	ABS	177	LH	Y	NA	S	SF	62	NA A	Y
2RHS*MOV15A	16"-300# GATE VALVE VELAN	P304R	RB	294	LH	Y	Y	S	SF	59	NA A	Y
2RHS*MOV15B	16"-300# GATE VALVE VELAN	P304R	RB	292	LH	Y	Y	S	SF	59	NA A	Y
2RHS*MOV22A	8"-900# GLOBE VALVE VELAN	P304R	RB	234	LH	Y	Y	S	SF	97	NA A	Y
2RHS*MOV22B	8"-900# GLOBE VALVE VELAN	P304R	RB	234	LH	Y	Y	S	SF	97	NA A	Y
2RHS*MOV23A	8"-900# GLOBE VALVE VELAN	P304R	RB	190	LH	Y	NA	S	SF	112	NA A	Y
2RHS*MOV23B	8"-900# GLOBE VALVE VELAN	P304R	RB	190	LH	Y	NA	S	SF	112	NA A	Y
2RHS*MOV24A	12"-900" GATE VALVE VELAN	P304R	RB	295	LH	Y	Y	S	SF	46	NA A	Y
2RHS*MOV24B	19"-900# GATE VALVE VELAN	P304R	RB	292	LH	Y	Y	S	SF	46	NA A	Y
2RHS*MOV24C	12"-900# GATE VALVE VELAN	P304R	RB	295	LH	Y	Y	S	SF	46	NA A	Y
2RHS*MOV25A	16"-300# GATE VALVE VELAN	P304R	RB	294	LH	Y	Y	S	SF	59	NA A	Y

JOB NAME NMP - UNIT 2
UTILITY NIAGARA MOHAWK

SEISMIC AND DYNAMIC QUALIFICATION SUMMARY AND STATUS REPORT
MASTER LIST OF SAFETY RELATED EQUIPMENT

ENGINEER: STONE & WEBSTER
NSSS SUPPLIER: GENERAL ELECTRIC

EQUIP. ID / SWEC ID	EQUIPMENT DESCRIPTION / MANUFACTURER	PPD NO.	LOCATION BLDG	LOCATION ELEV	LOCATION HTG	LOADS SEIS	LOADS HYDR	QUAL ANLYS	METH TEST	NAT FREQ LOWEST	RRS REF STATUS QUAL	RRS REF STATUS INST
2RHS*MOV25B	16"-300# GATE VALVE VELAN	P304R	RB	292	LH	Y	Y	S	SF	59	NA A	Y
2RHS*MOV26A	1"-1500# GLOBE VALVE VELAN	P304R	ABN	210	LH	Y	NA	S	SF	50	NA A	Y
2RHS*MOV26B	1"-1500# GLOBE VALVE VELAN	P304R	ABS	210	LH	Y	NA	S	SF	50	NA A	Y
2RHS*MOV27A	1"-1500# GLOBE VALVE VELAN	P304R	ABN	210	LH	Y	NA	S	SF	50	NA A	Y
2RHS*MOV27B	1"-1500# GLOBE VALVE VELAN	P304R	ABS	210	LH	Y	NA	S	SF	50	NA A	Y
2RHS*MOV32A	4"-300# GATE VALVE VELAN	P304R	ABN	181	LH	Y	NA	S	SF	71	NA A	Y
2RHS*MOV32B	4"-300# GATE VALVE VELAN	P304R	ABS	177	LH	Y	NA	S	SF	71	NA A	Y
2RHS*MOV33A	4"-300# GLOBE VALVE VELAN	P304R	RB	229	LH	Y	Y	S	SF	90	NA A	Y
2RHS*MOV33B	4"-300# GLOBE VALVE VELAN	P304R	RB	229	LH	Y	Y	S	SF	90	NA A	Y
2RHS*MOV37A	4"-300# GLOBE VALVE VELAN	P304R	ABN	181	LH	Y	NA	S	SF	86	NA A	Y
2RHS*MOV37B	4"-300# GLOBE VALVE VELAN	P304R	ABS	177	LH	Y	NA	S	SF	86	NA A	Y
2RHS*MOV4A	6"-300# GATE VALVE VELAN	P304R	RB	203	LH	Y	NA	S	SF	102	NA A	Y
2RHS*MOV4B	6"-300# GATE VALVE VELAN	P304R	ABS	184	LH	Y	NA	S	SF	102	NA A	Y

JOB NAME NMP - UNIT 2
UTILITY NIAGARA MOHAWK

SEISMIC AND DYNAMIC QUALIFICATION SUMMARY AND STATUS REPORT
MASTER LIST OF SAFETY RELATED EQUIPMENT

ENGINEER: STONE & WEBSTER
NSSS SUPPLIER: GENERAL ELECTRIC

EQUIP. ID / SWEC ID	EQUIPMENT DESCRIPTION / MANUFACTURER	PPD NO.	LOCATION BLDG	LOCATION ELEV	LOCATION HTG	LOADS SEIS	LOADS HYDR	QUAL ANLYS	METH-TEST	NAT FREQ-LOWEST	RRS REF STATUS QUAL	RRS REF STATUS INST
2RHS*MOV4C	6"-300" GATE VALVE VELAN	P304R	ABS	184	LH	Y	NA	S	SF	102	NA A	Y
2RHS*MOV40A	12"-900# GLOBE VALVE VELAN	P304R	RB	250	LH	Y	Y	S	SF	71	NA A	Y
2RHS*MOV40B	12"-900# GLOBE VALVE VELAN	P304R	RB	249	LH	Y	Y	S	SF	71	NA A	Y
2RHS*MOV67A	2"-1500# GLOBE VALVE VELAN	P304R	PC	255	LH	Y	Y	S	SF	93	NA A	Y
2RHS*MOV67B	2"-1500# GLOBE VALVE VELAN	P304R	PC	255	LH	Y	Y	S	SF	93	NA A	Y
2RHS*MOV80A	1"-1500# GLOBE VALVE VELAN	P304R	RB	234	LH	Y	Y	S	SF	49	NA A	Y
2RHS*MOV80B	1"-1500# GLOBE VALVE VELAN	P304R	RB	234	LH	Y	Y	S	SF	49	NA A	Y
2SWP*MOV15A	2 1/2"-150# GATE VALVE VELAN	P304R	RB	197	LH	Y	NA	S	SF	72	NA A	Y
2SWP*MOV15B	2 1/2"-150# GATE VALVE VELAN	P304R	RB	197	LH	Y	NA	S	SF	72	NA A	Y
2SWP*MOV17A	12"-150# GATE VALVE VELAN	P304R	RB	206	LH	Y	NA	S	SF	97	NA A	Y
2SWP*MOV17B	12"-150# GATE VALVE VELAN	P304R	RB	183	LH	Y	NA	S	SF	97	NA A	Y
2SWP*MOV18A	12"-150# GATE VALVE VELAN	P304R	RB	204	LH	Y	NA	S	SF	97	NA A	Y
2SWP*MOV18B	12"-150# GATE VALVE VELAN	P304R	RB	205	LH	Y	NA	S	SF	97	NA A	Y

JOB NAME NMP - UNIT 2
UTILITY NIAGARA MOHAWK

SEISMIC AND DYNAMIC QUALIFICATION SUMMARY AND STATUS REPORT
MASTER LIST OF SAFETY RELATED EQUIPMENT

ENGINEER: STONE & WEBSTER
NSSS SUPPLIER: GENERAL ELECTRIC

EQUIP. ID / SHEC ID	EQUIPMENT DESCRIPTION / MANUFACTURER	PPD NO.	LOCATION BLDG	ELEV	HTG	LOADS SEIS	HYDR	QUAL ANLYS	METH TEST	NAT FREQ LOWEST	RRS REF STATUS QUAL	INST
2SHP*MOV21A	3"-150# GATE VALVE VELAN	P304R	RB	344	LH	Y	NA	S	SF	62	NA A	Y
2SHP*MOV21B	3"-150# GATE VALVE VELAN	P304R	RB	330	LH	Y	NA	S	SF	62	NA A	Y
2SHP*MOV38A	6"-150# GATE VALVE VELAN	P304R	RB	263	LH	Y	Y	S	SF	79	NA A	Y
2SHP*MOV38B	6"-150# GATE VALVE VELAN	P304R	RB	264	LH	Y	Y	S	SF	79	NA A	Y
2SHP*MOV39A	6"-150# GATE VALVE VELAN	P304R	RB	263	LH	Y	Y	S	SF	79	NA A	Y
2SHP*MOV39B	6"-150# GATE VALVE VELAN	P304R	RB	264	LH	Y	Y	S	SF	79	NA A	Y
2SHP*MOV66A	8"-150# GATE VALVE VELAN	P304R	DG	269	LH	Y	NA	S	SF	89	NA A	Y
2SHP*MOV66B	8"-150# GATE VALVE VELAN	P304R	DG	269	LH	Y	NA	S	SF	89	NA A	Y
2SHP*MOV67A	4"-150# GATE VALVE VELAN	P304R	CB	266	LH	Y	NA	S	SF	93	NA A	Y
2SHP*MOV67B	4"-150# GATE VALVE VELAN	P304R	CB	266	LH	Y	NA	S	SF	93	NA A	Y
2SHP*MOV94A	8"-150# GATE VALVE VELAN	P304R	DG	268	LH	Y	NA	S	SF	89	NA A	Y
2SHP*MOV94B	8"-150# GATE VALVE VELAN	P304R	DG	629	LH	Y	NA	S	SF	89	NA A	Y
2SHP*MOV95A	8"-150# GATE VALVE VELAN	P304R	DG	263	LH	Y	NA	S	SF	89	NA A	Y

JOB NAME NMP - UNIT 2
UTILITY NIAGARA MOHAWK

SEISMIC AND DYNAMIC QUALIFICATION SUMMARY AND STATUS REPORT
MASTER LIST OF SAFETY RELATED EQUIPMENT

ENGINEER: STONE & WEBSTER
NSSS SUPPLIER: GENERAL ELECTRIC

EQUIP. ID / SNEC ID	EQUIPMENT DESCRIPTION / MANUFACTURER	PPD NO.	LOCATION BLDG	ELEV	HTG	LOADS SEIS	HYDR	QUAL ANLYS	METH TEST	NAT FREQ LOWEST	RRS REF STATUS QUAL	INST
2SWP*MOV95B	8"-150# GATE VALVE VELAN	P304R	DG	263	LH	Y	NA	S	SF	89	NA A	Y
2HCS*MOV101	4"-600# GATE VALVE VELAN	P304R	PC	263	LH	Y	Y	S	SF	69	NA A	Y
2HCS*MOV102	8"-600# GLOBE VALVE VELAN	P304R	PC	245	LH	Y	Y	S	SF	77	NA A	Y
2HCS*MOV103	8"-600# GLOBE VALVE VELAN	P304R	PC	245	LH	Y	Y	S	SF	36	NA A	Y
2HCS*MOV104	4"-600# GATE VALVE VELAN	P304R	PC	244	LH	Y	Y	S	SF	69	NA A	Y
2HCS*MOV105	4"-600# GATE VALVE VELAN	P304R	PC	243	LH	Y	Y	S	SF	69	NA A	Y
2HCS*MOV112	8"-600# GLOBE VALVE VELAN	P304R	RB	245	LH	Y	Y	S	SF	77	NA A	Y
2HCS*MOV200	8"-900# GLOBE VALVE VELAN	P304R	MST	263	LH	Y	Y	S	SF	97	NA A	Y
2HCS-MOV106	6"-900# GLOBE VALVE VELAN	P304R	RB	316	LH	Y	NA	S	SF	76	NA A	N
2HCS-MOV107	6"-900# GATE VALVE VELAN	P304R	RB	314	LH	Y	NA	S	SF	76	NA A	Y
2HCS-MOV108	4"-900# GLOBE VALVE VELAN	P304R	RB	318	LH	Y	NA	S	SF	47	NA A	Y
2HCS-MOV109	8"-900# GLOBE VALVE VELAN	P304R	RB	319	LH	Y	NA	S	SF	112	NA A	Y
2HCS-MOV110	8"-900# GLOBE VALVE VELAN	P304R	RB	309	LH	Y	NA	S	SF	112	NA A	Y

JOB NAME NMP - UNIT 2
UTILITY NIAGARA MOHAWK

SEISMIC AND DYNAMIC QUALIFICATION SUMMARY AND STATUS REPORT
MASTER LIST OF SAFETY RELATED EQUIPMENT

ENGINEER: STONE & WEBSTER
NSSS SUPPLIER: GENERAL ELECTRIC

EQUIP. ID / SWEC ID	EQUIPMENT DESCRIPTION / MANUFACTURER	PPD NO.	LOCATION BLDG	LOCATION ELEV	LOCATION NTG	LOADS SEIS	LOADS HYDR	QUAL METH ANLYS	QUAL METH TEST	NAT FREQ LOWEST	RRS REF STATUS QUAL	RRS REF STATUS INST
2HCS-MOV111	8"-900# GLOBE VALVE VELAN	P309R	RB	319	LH	Y	NA	S	SF	112	NA A	Y

JOB NAME NMP - UNIT 2
UTILITY NIAGARA MOHAWK

SEISMIC AND DYNAMIC QUALIFICATION SUMMARY AND STATUS REPORT
MASTER LIST OF SAFETY RELATED EQUIPMENT

ENGINEER: STONE & WEBSTER
NSSS SUPPLIER: GENERAL ELECTRIC

EQUIP. ID / SWEC ID	EQUIPMENT DESCRIPTION / MANUFACTURER	PPD NO.	LOCATION BLDG	ELEV	HTG	LOADS SEIS	HYDR	QUAL ANLYS	METH TEST	NAT FREQ LOWEST	RRS REF STATUS QUAL	INST
2DER*MOV119	4"-150# GATE VELAN	P304S	PC	217	LH	Y	Y	S	SF	83	NA A	Y
2DER*MOV120	4"-150# GATE VELAN	P304S	RB	217	LH	Y	Y	S	SF	83	NA A	Y
2DER*MOV130	2"-1500# GLOBE VELAN	P304S	PC	243	LH	Y	Y	S	SF	85	NA B	Y
2DER*MOV131	2"-1500# GLOBE VELAN	P304S	RB	243	LH	Y	Y	S	SF	85	NA B	Y
2DFR*MOV120	6"-150# GATE VELAN	P304S	RB	218	LH	Y	Y	S	SF	100	NA B	Y
2DFR*MOV121	6"-150# GATE VELAN	P304S	PC	218	LH	Y	Y	S	SF	100	NA B	Y
2DFR*MOV139	3"-150# GATE VELAN	P304S	RB	241	LH	Y	Y	S	SF	59	NA A	Y
2DFR*MOV140	3"-150# GATE VELAN	P304S	PC	257	LH	Y	Y	S	SF	59	NA A	Y
2HCS*MOV1A	3"-150# GATE VELAN	P304S	RB	218	LH	Y	Y	S	SF	55	NA B	Y
2HCS*MOV1B	3"-150# GLOBE VELAN	P304S	RB	221	LH	Y	Y	S	SF	55	NA B	Y
2HCS*MOV2A	3"-150# GLOBE VELAN	P304S	RB	229	LH	Y	Y	S	SF	55	NA B	Y
2HCS*MOV2B	3"-150# GLOBE VELAN	P304S	RB	221	LH	Y	Y	S	SF	55	NA B	Y
2HCS*MOV3A	3"-150# GLOBE VALVE VELAN	P304S	RB	256	LH	Y	Y	S	SF	55	NA B	Y

JOB NAME NMP - UNIT 2
UTILITY NIAGARA MOHAWK

SEISMIC AND DYNAMIC QUALIFICATION SUMMARY AND STATUS REPORT
MASTER LIST OF SAFETY RELATED EQUIPMENT

ENGINEER: STONE & WEBSTER
NSSS SUPPLIER: GENERAL ELECTRIC

EQUIP. ID / SWEC ID	EQUIPMENT DESCRIPTION / MANUFACTURER	PPD NO.	LOCATION BLDG	ELEV	HTG	LOADS SEIS	HYDR	QUAL ANLYS	METH TEST	NAT FREQ LOWEST	RRS REF STATUS QUAL	INST
2HCS*MOV3B	3"-150# GLOBE VALVE VELAN	P304S	RB	256	LH	Y	Y	S	SF	55	NA B	Y
2HCS*MOV4A	3"-150# GLOBE VALVE VELAN	P304S	PC	218	LH	Y	Y	S	SF	55	NA B	Y
2HCS*MOV4B	3"-150# GLOBE VALVE VELAN	P304S	PC	221	LH	Y	Y	S	SF	55	NA B	Y
2HCS*MOV5A	3"-150# GLOBE VALVE VELAN	P304S	PC	229	LH	Y	Y	S	SF	55	NA B	Y
2HCS*MOV5B	3"-150# GLOBE VALVE VELAN	P304S	PC	221	LH	Y	Y	S	SF	55	NA B	Y
2HCS*MOV6A	3"-150# GLOBE VALVE VELAN	P304S	PC	256	LH	Y	Y	S	SF	55	NA B	Y
2HCS*MOV6B	3"-150# GLOBE VALVE VELAN	P304S	PC	256	LH	Y	Y	S	SF	55	NA B	Y
2ICS*MOV148	1 1/2"-1500# GLOBE VALVE VELAN	P304S	RB	205	LH	Y	N	S	SF	80	NA A	N
2ICS*MOV164	1 1/2"-1500# GLOBE VALVE VELAN	P304S	RB	205	LH	Y	N	S	SF	80	NA A	N
2SLS*MOV1A	3"-150# GLOBE VALVE VELAN	P304S	RB	290	LH	Y	N	S	SF	42	NA C	Y
2SLS*MOV1B	3"-150# GLOBE VALVE VELAN	P304S	RB	290	LH	Y	N	S	SF	42	NA C	Y
2SLS*MOV5A	3"-1500# STOP CHECK VELAN	P304S	RB	295	LH	Y	N	S	SF	65	NA B	Y
2SLS*MOV5B	3"-1500# STOP CHECK VELAN	P304S	RB	295	LH	Y	N	S	SF	65	NA B	Y

JOB NAME NMP - UNIT 2
UTILITY NIAGARA MOHAWK

SEISMIC AND DYNAMIC QUALIFICATION SUMMARY AND STATUS REPORT
MASTER LIST OF SAFETY RELATED EQUIPMENT

ENGINEER: STONE & WEBSTER
NSSS SUPPLIER: GENERAL ELECTRIC

EQUIP. ID / SHEC ID	EQUIPMENT DESCRIPTION / MANUFACTURER	PPD NO.	LOCATION BLDG	LOCATION ELEV	LOCATION HTG	LOADS SEIS	LOADS HYDR	QUAL ANLYS	QUAL METH TEST	NAT FREQ LOWEST	RRS REF STATUS QUAL	RRS REF STATUS INST
2CHS*SOV23A	3/4"-1500# GLOBE VALVE TARGET ROCK	P304X	PC	294	LH	Y	Y	S	HF	73	NA A	Y
2CHS*SOV23B	3/4"-1500# GLOBE VALVE TARGET ROCK	P304X	PC	298	LH	Y	Y	S	HF	73	NA A	Y
2CHS*SOV23C	3/4"-1500# GLOBE VALVE TARGET ROCK	P304X	PC	294	LH	Y	Y	S	HF	73	NA A	Y
2CHS*SOV23D	3/4"-1500# GLOBE VALVE TARGET ROCK	P304X	PC	298	LH	Y	Y	S	HF	73	NA A	Y
2CHS*SOV23E	3/4"-1500# GLOBE VALVE TARGET ROCK	P304X	PC	294	LH	Y	Y	S	HF	73	NA A	Y
2CHS*SOV23F	3/4"-1500# GLOBE VALVE TARGET ROCK	P304X	PC	298	LH	Y	Y	S	HF	73	NA A	Y
2CHS*SOV24A	3/4"-1500# GLOBE VALVE TARGE ROCK	P304X	PC	295	LH	Y	Y	S	HF	73	NA A	Y
2CHS*SOV24B	3/4"-1500# GLOBE VALVE TARGET ROCK	P304X	PC	298	LH	Y	Y	S	HF	73	NA A	Y
2CHS*SOV24C	3/4"-1500# GLOBE VALVE TARGET ROCK	P304X	RB	295	LH	Y	Y	S	HF	73	NA A	Y
2CHS*SOV24D	3/4"-1500# GLOBE VALVE TARGET ROCK	P304X	RB	298	LH	Y	Y	S	HF	73	NA A	Y
2CHS*SOV25A	3/4"-1500# GLOBE VALVE TARGET ROCK	P304X	PC	219	LH	Y	Y	S	HF	73	NA A	Y
2CHS*SOV25B	3/4"-1500# GLOBE VALVE TARGET ROCK	P304X	PC	220	LH	Y	Y	S	HF	73	NA A	Y
2CHS*SOV25C	3/4"-1500# GLOBE VALVE TARGET ROCK	P304X	PC	218	LH	Y	Y	S	HF	73	NA A	Y

JOB NAME NMP - UNIT 2
UTILITY NIAGARA MOHAWK

SEISMIC AND DYNAMIC QUALIFICATION SUMMARY AND STATUS REPORT
MASTER LIST OF SAFETY RELATED EQUIPMENT

ENGINEER: STONE & WEBSTER
NSSS SUPPLIER: GENERAL ELECTRIC

EQUIP. ID / SHEC ID	EQUIPMENT DESCRIPTION / MANUFACTURER	PPD NO.	LOCATION BLDG	ELEV	HTG	LOADS SEIS	HYDR	QUAL ANLYS	METH TEST	NAT FREQ LOWEST	RRS REF STATUS QUAL	INST
2CHS*SOV25D	3/4"-1500# GLOBE VALVE TARGET ROCK	P304X	PC	219	LH	Y	Y	S	HF	73	NA A	Y
2CHS*SOV26A	3/4"-1500# GLOBE VALVE TARGET ROCK	P304X	PC	218	LH	Y	Y	S	HF	73	NA A	Y
2CHS*SOV26B	3/4"-1500# GLOBE VALVE TARGET ROCK	P304X	PC	226	LH	Y	Y	S	HF	73	NA A	Y
2CHS*SOV26C	3/4"-1500# GLOBE VALVE TARGET ROCK	P304X	PC	226	LH	Y	Y	S	HF	73	NA A	Y
2CHS*SOV26D	3/4"-1500# GLOBE VALVE TARGET ROCK	P304X	RB	226	LH	Y	Y	S	HF	73	NA A	Y
2CHS*SOV32A	3/4"-1500# GLOBE VALVE TARGET ROCK	P304X	RB	265	LH	Y	Y	S	HF	73	NA A	Y
2CHS*SOV32B	3/4"-1500# GLOBE VALVE TARGET ROCK	P304X	RB	295	LH	Y	Y	S	HF	73	NA A	Y
2CHS*SOV33A	3/4"-1500# GLOBE VALVE TARGET ROCK	P304X	PC	295	LH	Y	Y	S	HF	73	NA A	Y
2CHS*SOV33B	3/4"-1500# GLOBE VALVE TARGET ROCK	P304X	PC	265	LH	Y	Y	S	HF	73	NA A	Y
2CHS*SOV34A	3/4"-1500# GLOBE VALVE TARGET ROCK	P304X	PC	218	LH	Y	Y	S	HF	73	NA A	Y
2CHS*SOV34B	3/4"-1500# GLOBE VALVE TARGET ROCK	P304X	PC	228	LH	Y	Y	S	HF	73	NA A	Y
2CHS*SOV35A	3/4"-1500# GLOBE VALVE TARGET ROCK	P304X	RB	218	LH	Y	Y	S	HF	73	NA A	Y
2CHS*SOV35B	3/4"-1500# GLOBE VALVE TARGET ROCK	P304X	RB	228	LH	Y	Y	S	HF	73	NA A	Y

JOB NAME NMP - UNIT 2
UTILITY NIAGARA MOHAWK

SEISMIC AND DYNAMIC QUALIFICATION SUMMARY AND STATUS REPORT
MASTER LIST OF SAFETY RELATED EQUIPMENT

ENGINEER: STONE & WEBSTER
NSSS SUPPLIER: GENERAL ELECTRIC

EQUIP. ID / SHEC ID	EQUIPMENT DESCRIPTION / MANUFACTURER	PPD NO.	LOCATION BLDG	LOCATION ELEV	LOCATION HTG	LOADS SEIS	LOADS HYDR	QUAL ANLYS	METH TEST	NAT FREQ LOWEST	RRS REF STATUS QUAL	RRS REF STATUS INST
2CHS*SOV60A	3/4"-1500# GLOBE VALVE TARGET ROCK	P304X	RB	308	LH	Y	Y	S	HF	73	NA A	Y
2CHS*SOV60B	3/4"-1500# GLOBE VALVE TARGET ROCK	P304X	RB	306	LH	Y	Y	S	HF	73	NA A	Y
2CHS*SOV61A	3/4"-1500# GLOBE VALVE TARGET ROCK	P304X	PC	308	LH	Y	Y	S	HF	73	NA A	Y
2CHS*SOV61B	3/4"-1500# GLOBE VALVE TARGET ROCK	P304X	PC	308	LH	Y	Y	S	HF	73	NA A	Y
2CHS*SOV62A	3/4"-1500# GLOBE VALVE TARGET ROCK	P304X	RB	289	LH	Y	Y	S	HF	73	NA A	Y
2CHS*SOV62B	3/4"-1500# GLOBE VALVE TARGET ROCK	P304X	RB	282	LH	Y	Y	S	HF	73	NA A	Y
2CHS*SOV63A	3/4"-1500# GLOBE VALVE TARGET ROCK	P304X	PC	282	LH	Y	Y	S	HF	73	NA A	Y
2CHS*SOV63B	3/4"-1500# GLOBE VALVE TARGET ROCK	P304X	PC	282	LH	Y	Y	S	HF	73	NA A	Y
2CHS*SOV64A	3/4"-1500# GLOBE VALVE TARGET ROCK	P304X	ABN	249	LH	Y	NA	S	HF	73	NA A	Y
2CHS*SOV64B	3/4"-1500# GLOBE VALVE TARGET ROCK	P304X	ABS	249	LH	Y	NA	S	HF	73	NA A	Y
2CHS*SOV65A	3/4"-1500# GLOBE VALVE TARGET ROCK	P304X	ABN	249	LH	Y	NA	S	HF	73	NA A	Y
2CHS*SOV65B	3/4"-1500# GLOBE VALVE TARGET ROCK	P304X	ABS	249	LH	Y	NA	S	HF	73	NA A	Y
2CHS*SOV74A	3/4"-1500# GLOBE VALVE TARGET ROCK	P304X	RB	256	LH	Y	NA	S	HF	73	NA A	Y

JOB NAME NMP - UNIT 2
UTILITY NIAGARA MOHAWK

SEISMIC AND DYNAMIC QUALIFICATION SUMMARY AND STATUS REPORT
MASTER LIST OF SAFETY RELATED EQUIPMENT

ENGINEER: STONE & WEBSTER
NSSS SUPPLIER: GENERAL ELECTRIC

EQUIP. ID / SHEC ID	EQUIPMENT DESCRIPTION / MANUFACTURER	PPD NO.	LOCATION BLDG	LOCATION ELEV	LOCATION HTG	LOADS SEIS	LOADS HYDR	QUAL ANLYS	METH-TEST	NAT FREQ-LOWEST	RRS REF STATUS QUAL	RRS REF STATUS INST
2CHS*SOV74B	3/4"-1500# GLOBE VALVE TARGET ROCK	P304X	RB	255	LH	Y	NA	S	HF	73	NA A	Y
2CHS*SOV75A	3/4"-1500# GLOBE VALVE TARGET ROCK	P304X	RB	256	LH	Y	NA	S	HF	73	NA A	Y
2CHS*SOV75B	3/4"-1500# GLOBE VALVE TARGET ROCK	P304X	RB	256	LH	Y	NA	S	HF	73	NA A	Y
2CHS*SOV76A	1500# GLOBE VALVE TARGET ROCK	P304X	RB	256	LH	Y	NA	S	HF	73	71 A	Y
2CHS*SOV76B	1500# GLOBE VALVE TARGET ROCK	P304X	RB	255	LH	Y	NA	S	HF	73	NA A	Y
2CHS*SOV77A	1500# GLOBE VALVE TARGET ROCK	P304X	RB	256	LH	Y	NA	S	HF	73	NA A	Y
2CHS*SOV77B	1500# GLOBE VALVE TARGET ROCK	P304X	RB	255	LH	Y	NA	S	HF	73	NA A	Y
2CPS*SOV119	2"-1500# BUTTERFLY VALVE TARGET ROCK	P304X	RB	218	LH	Y	Y	S	HF	91	NA A	Y
2CPS*SOV120	2"-1500# BUTTERFLY VALVE TARGET ROCK	P304X	RB	296	LH	Y	Y	S	HF	91	NA A	Y
2CPS*SOV121	2"-1500# BUTTERFLY VALVE TARGET ROCK	P304X	PC	218	LH	Y	Y	S	HF	91	NA A	Y
2CPS*SOV122	2"-1500# BUTTERFLY VALVE TARGET ROCK	P304X	PC	296	LH	Y	Y	S	HF	91	NA A	Y
2CPS*SOV132	2"-1500# BUTTERFLY VALVE TARGET ROCK	P304X			LH	Y	Y	S	HF		NA A	Y
2CPS*SOV133	2"-1500#BUTTERFLY VALVE TARGET ROCK	P304X			LH	Y	Y	S	HF		NA A	Y

JOB NAME NMP - UNIT 2
UTILITY NIAGARA MOHAWK

SEISMIC AND DYNAMIC QUALIFICATION SUMMARY AND STATUS REPORT
MASTER LIST OF SAFETY RELATED EQUIPMENT

ENGINEER: STONE & WEBSTER
NSSS SUPPLIER: GENERAL ELECTRIC

EQUIP. ID / SHEC ID	EQUIPMENT: DESCRIPTION / MANUFACTURER	PPD NO.	LOCATION: BLDG	ELEV	HTG	LOADS: SEIS	HYDR	QUAL ANLYS	METH- TEST	NAT FREQ- LOWEST	RRS REF STATUS: QUAL	INST
2FPH*SOV218	2"-1500# GLOBE VALVE TARGET ROCK	P304X	RB	250	LH	Y	Y	S	HF	48	NA A	Y
2FPH*SOV219	2"-1500# GLOBE VALVE TARGET ROCK	P304X	PC	251	LH	Y	Y	S	HF	48	NA A	Y
2FPH*SOV220	2"-1500# GLOBE VALVE TARGET ROCK	P304X	RB	251	LH	Y	Y	S	HF	48	NA A	Y
2FPH*SOV221	2"-1500# GLOBE VALVE TARGET ROCK	P304X	PC	250	LH	Y	Y	S	HF	48	NA A	Y
2GTS*SOV102	2"-1500# GLOBE VALVE TARGET ROCK	P304X	RB	219	LH	Y	Y	S	HF	91	NA A	Y
2HCS*SOV10A	1"-1500# GLOBE VALVE TARGET ROCK	P304X	RB	242	LH	Y	NA	S	HF	73	NA A	Y
2HCS*SOV10B	1"-1500# GLOBE VALVE TARGET ROCK	P304X	RB	242	LH	Y	NA	S	HF	73	NA A	Y
2HCS*SOV11A	1"-1500# GLOBE VALVE TARGET ROCK	P304X	RB	242	LH	Y	NA	S	HF	73	NA A	Y
2HCS*SOV11B	1"-1500# GLOBE VALVE TARGET ROCK	P304X	RB	242	LH	Y	NA	S	HF	73	NA A	Y
2HVK*SOV36A	3"-1500# GLOBE VALVE TARGET ROCK	P304X	CB	290	LH	Y	NA	S	HF	100	NA A	Y
2HVK*SOV36B	3"-1500# GLOBE VALVE TARGET ROCK	P304X	CB	291	LH	Y	NA	S	HF	100	NA A	Y
2HVR*SOV236	3/4"-1500# GLOBE VALVE TARGET ROCK	P304X	RB	314	LH	Y	NA	S	HF	73	NA A	Y
2IAS*SOVX181	1 1/2"-400# GLOBE VALVE TARGET ROCK	P304X	RB	294	LH	Y	Y	S	HF	73	NA A	Y

JOB NAME NMP - UNIT 2
UTILITY NIAGARA MOHAWK

SEISMIC AND DYNAMIC QUALIFICATION SUMMARY AND STATUS REPORT
MASTER LIST OF SAFETY RELATED EQUIPMENT

ENGINEER: STONE & WEBSTER
NSSS SUPPLIER: GENERAL ELECTRIC

EQUIP. ID / SHEC ID	EQUIPMENT DESCRIPTION / MANUFACTURER	PPD NO.	LOCATION BLDG	LOCATION ELEV	LOCATION HTG	LOADS SEIS	LOADS HYDR	QUAL ANLYS	METH-TEST	NAT FREQ-LOWEST	RRS REF STATUS QUAL	RRS REF STATUS INST
2IAS*SOVX186	1 1/2"-400# GLOBE VALVE TARGET ROCK	P304X	RB	296	LH	Y	Y	S	HF	73	NA A	Y
2IAS*SOVY181	3/4"-400# GLOBE VALVE TARGET ROCK	P304X	RB	294	LH	Y	Y	S	HF	73	NA A	Y
2IAS*SOVY186	3/4"-400# GLOBE VALVE TARGET ROCK	P304X	RB	296	LH	Y	Y	S	HF	73	NA A	Y
2IAS*SOV164	1 1/2"-1500# GLOBE VALVE TARGET ROCK	P304X	RB	294	LH	Y	Y	S	HF	91	NA A	Y
2IAS*SOV165	1 1/2"-1500# GLOBE VALVE TARGET ROCK	P304X	RB	294	LH	Y	Y	S	HF	91	NA A	Y
2IAS*SOV166	1 1/2"-1500# GLOBE VALVE TARGET ROCK	P304X	RB	294	LH	Y	Y	S	HF	91	NA A	Y
2IAS*SOV167	1 1/2"-1500# GLOBE VALVE TARGET ROCK	P304X	RB	243	LH	Y	Y	S	HF	91	NA A	Y
2IAS*SOV168	1 1/2"-1500# GLOBE VALVE TARGET ROCK	P304X	RB	294	LH	Y	Y	S	HF	91	NA A	Y
2IAS*SOV180	1 1/2"-1500# GLOBE VALVE TARGET ROCK	P304X	PC	294	LH	Y	Y	S	HF	91	NA A	Y
2IAS*SOV184	1 1/2"-1500# GLOBE VALVE TARGET ROCK	P304X	PC	294	LH	Y	Y	S	HF	91	NA A	Y
2IAS*SOV185	1 1/2"-1500# GLOBE VALVE TARGET ROCK	P304X	PC	243	LH	Y	Y	S	HF	91	NA A	Y
2ISC*SOV119	1/2"-1500# GLOBE VALVE TARGET ROCK	P304X	RB	240	LH	Y	NA	S	HF	73	NA A	Y
2ISC*SOV120	1/2"-1500# GLOBE VALVE TARGET ROCK	P304X	RB	215	LH	Y	NA	S	HF	73	NA A	N

JOB NAME NMP - UNIT 2
UTILITY NIAGARA MOHAWK

SEISMIC AND DYNAMIC QUALIFICATION SUMMARY AND STATUS REPORT
MASTER LIST OF SAFETY RELATED EQUIPMENT

ENGINEER: STONE & WEBSTER
NSSS SUPPLIER: GENERAL ELECTRIC

EQUIP. ID / SHEC ID	EQUIPMENT DESCRIPTION / MANUFACTURER	FPD NO.	LOCATION BLDG	LOCATION ELEV	LOCATION HTG	LOADS SEIS	LOADS HYDR	QUAL ANLYS	METH- TEST	NAT FREQ- LOWEST	RRS REF	STATUS QUAL	STATUS INST
2ISC*SOV123	1/2"-1500# GLOBE VALVE TARGET ROCK	P304X	RB	240	LH	Y	NA	S	HF	73	NA	A	Y
2ISC*SOV124	1/2"-1500# GLOBE VALVE TARGET ROCK	P304X	RB	215	LH	Y	NA	S	HF	73	NA	A	N
2LHS*SOV152	3/4"-1500# GLOBE VALVE TARGET ROCK	P304X	PC	299	LH	Y	Y	S	HF	73	NA	A	Y
2LHS*SOV153	3/4"-1500# GLOBE VALVE TARGET ROCK	P304X	RB	299	LH	Y	Y	S	HF	73	NA	A	N
2LHS*SOV156	3/4"-1500# GLOBE VALVE TARGET ROCK	P304X	PC	221	LH	Y	Y	S	HF	73	NA	A	N
2LHS*SOV157	3/4"-1500# GLOBE VALVE TARGET ROCK	P304X	RB	221	LH	Y	Y	S	HF	73	NA	A	N
2HSS*SOV97A	3/4"-1500# GLOBE VALVE TARGET ROCK	P304X	HST	247	LH	Y	Y	S	HF	73	71	A	Y
2HSS*SOV97B	3/4"-1500# GLOBE VALVE TARGET ROCK	P304X	HST	247	LH	Y	Y	S	HF	73	71	A	Y
2HSS*SOV97C	3/4"-1500# GLOBE VALVE TARGET ROCK	P304X	HST	246	LH	Y	Y	S	HF	73	71	A	Y
2HSS*SOV97D	3/4"-1500# GLOBE VALVE TARGET ROCK	P304X	HST	246	LH	Y	Y	S	HF	73	NA	A	Y
2RCS*SOV104	3/4"-1500# GLOBE VALVE TARGET ROCK	P304X	PC	262	LH	Y	Y	S	HF	73	NA	A	Y
2RCS*SOV105	3/4"-1500# GLOBE VALVE TARGET ROCK	P304X	RB	261	LH	Y	Y	S	HF	73	71	A	N
2RCS*SOV65A	2"-1500# GLOBE VALVE TARGET ROCK	P304X	RB	269	LH	Y	Y	S	HF	91	NA	A	Y

JOB NAME NMP - UNIT 2
UTILITY NIAGARA MOHAWK

SEISMIC AND DYNAMIC QUALIFICATION SUMMARY AND STATUS REPORT
MASTER LIST OF SAFETY RELATED EQUIPMENT

ENGINEER: STONE & WEBSTER
NSSS SUPPLIER: GENERAL ELECTRIC

EQUIP. ID / SHEC ID	EQUIPMENT DESCRIPTION / MANUFACTURER	PPD NO.	LOCATION BLDG	ELEV	HTG	LOADS SEIS	HYDR	QUAL ANLYS	HETH- TEST	NAT FREQ- LOWEST	RRS REF STATUS QUAL	INST
2RCS*SOV65B	2"-1500# GLOBE VALVE TARGET ROCK	P304X	RB	269	LH	Y	Y	S	HF	91	NA A	Y
2RCS*SOV66A	1"-1500# GLOBE VALVE TARGET ROCK	P304X	RB	269	LH	Y	Y	S	HF	73	NA A	Y
2RCS*SOV66B	1"-1500# GLOBE VALVE TARGET ROCK	P304X	RB	269	LH	Y	Y	S	HF	73	NA A	Y
2RCS*SOV67A	2"-1500# GLOBE VALVE TARGET ROCK	P304X	RB	269	LH	Y	Y	S	HF	91	NA A	Y
2RCS*SOV67B	2"-1500# GLOBE VALVE TARGET ROCK	P304X	RB	269	LH	Y	Y	S	HF	91	NA A	Y
2RCS*SOV68A	1"-1500# GLOBE VALVE TARGET ROCK	P304X	RB	269	LH	Y	Y	S	HF	73	NA A	Y
2RCS*SOV68B	1"-1500# GLOBE VALVE TARGET ROCK	P304X	RB	269	LH	Y	Y	S	HF	73	NA A	Y
2RCS*SOV79A	1"-1500# GLOBE VALVE TARGET ROCK	P304X	PC	269	LH	Y	Y	S	HF	91	91 A	Y
2RCS*SOV79B	1"-1500# GLOBE VALVE TARGET ROCK	P304X	PC	269	LH	Y	Y	S	HF	91	91 A	Y
2RCS*SOV80A	1"-2500# GLOBE VALVE TARGET ROCK	P304X	PC	269	LH	Y	Y	S	HF	73	71 A	Y
2RCS*SOV80B	1"-2500# GLOBE VALVE TARGET ROCK	P304X	PC	269	LH	Y	Y	S	HF	73	71 A	Y
2RCS*SOV81A	2"-1500# GLOBE VALVE TARGET ROCK	P304X	PC	269	LH	Y	Y	S	HF	91	NA A	Y
2RCS*SOV81B	2"-1500# GLOBE VALVE TARGET ROCK	P304X	PC	269	LH	Y	Y	S	HF	91	NA A	Y

JOB NAME NMP - UNIT 2
UTILITY NIAGARA MOHAWK

SEISMIC AND DYNAMIC QUALIFICATION SUMMARY AND STATUS REPORT
MASTER LIST OF SAFETY RELATED EQUIPMENT

ENGINEER: STONE & WEBSTER
NSSS SUPPLIER: GENERAL ELECTRIC

EQUIP. ID / SHEC ID	EQUIPMENT DESCRIPTION / MANUFACTURER	PPD NO.	LOCATION BLDG	ELEV	HTG	LOADS SEIS	HYDR	QUAL ANLYS	METH TEST	NAT FREQ LOWEST	RRS REF STATUS QUAL	INST
2RCS*SOV82A	3/4"-2500# GLOBE VALVE TARGET ROCK	P304X	PC	269	LH	Y	Y	S	HF	73	NA A	Y
2RCS*SOV82B	3/4"-2500# GLOBE VALVE TARGET ROCK	P304X	PC	269	LH	Y	Y	S	HF	73	NA A	Y
2RHS*SOV120	3/4"-1500# GLOBE VALVE TARGET ROCK	P304X	RB	209	LH	Y	NA	S	HF	73	NA A	Y
2RHS*SOV121	1500# GLOBE VALVE TARGET ROCK	P304X	RB	209	LH	Y	NA	S	HF	73	NA A	Y
2RHS*SOV126	3/4"-1500# GLOBE VALVE TARGET ROCK	P304X	ABS	181	LH	Y	NA	S	HF	73	NA A	Y
2RHS*SOV35A	3/4"-1500# GLOBE VALVE TARGET ROCK	P304X	ABN	184	LH	Y	NA	S	HF	73	NA A	Y
2RHS*SOV35B	3/4"-1500# GLOBE VALVE TARGET ROCK	P304X	ABS	180	LH	Y	NA	S	HF	73	NA A	Y
2RHS*SOV36A	3/4"-1500# GLOBE VALVE TARGET ROCK	P304X	ABN	177	LH	Y	NA	S	HF	73	NA A	Y
2RHS*SOV36B	3/4"-1500# GLOBE VALVE TARGET ROCK	P304X	ABS	180	LH	Y	NA	S	HF	73	NA A	Y
2RHS*SOV70A	1"-1500# GLOBE VALVE TARGET ROCK	P304X	RB	189	LH	Y	NA	S	HF	73	NA A	Y
2RHS*SOV70B	1"-1500# GLOBE VALVE TARGET ROCK	P304X	RB	189	LH	Y	NA	S	HF	73	NA A	Y
2RHS*SOV71A	1"-1500# GLOBE VALVE TARGET ROCK	P304X	RB	189	LH	Y	NA	S	HF	73	NA A	Y
2RHS*SOV71B	1"-1500# GLOBE VALVE TARGET ROCK	P304X	RB	189	LH	Y	NA	S	HF	73	NA A	Y

JOB NAME NMP - UNIT 2
UTILITY NIAGARA MOHAWK

SEISMIC AND DYNAMIC QUALIFICATION SUMMARY AND STATUS REPORT
MASTER LIST OF SAFETY RELATED EQUIPMENT

ENGINEER: STONE & WEBSTER
NSSS SUPPLIER: GENERAL ELECTRIC

EQUIP. ID / SHEC ID	EQUIPMENT DESCRIPTION / MANUFACTURER	PPD NO.	LOCATION BLDG	LOCATION ELEV	LOCATION MTG	LOADS SEIS	LOADS HYDR	QUAL ANLYS	METH TEST	NAT FREQ LOWEST	RRS REF STATUS QUAL	RRS REF STATUS INST
2RHS*SOV72A	1"-1500# GLOBE VALVE TARGET ROCK	P304X	RB	175	LH	Y	NA	S	HF	73	NA A	Y
2RHS*SOV72B	1"-1500# GLOBE VALVE TARGET ROCK	P304X	RB	175	LH	Y	NA	S	HF	73	NA A	Y
2RHS*SOV73A	1"-1500# GLOBE VALVE TARGET ROCK	P304X	RB	175	LH	Y	NA	S	HF	73	NA A	Y
2RHS*SOV73B	1"-1500# GLOBE VALVE TARGET ROCK	P304X	RB	175	LH	Y	NA	S	HF	73	NA A	Y

JOB NAME NMP - UNIT 2
UTILITY NIAGARA MOHAWK

SEISMIC AND DYNAMIC QUALIFICATION SUMMARY AND STATUS REPORT
MASTER LIST OF SAFETY RELATED EQUIPMENT

ENGINEER: STONE & WEBSTER
NSSS SUPPLIER: GENERAL ELECTRIC

EQUIP. ID / SWEC ID	EQUIPMENT DESCRIPTION / MANUFACTURER	PPD NO.	LOCATION BLDG	LOCATION ELEV	LOCATION HTG	LOADS SEIS	LOADS HYDR	QUAL ANLYS	METH TEST	NAT FREQ LOWEST	RRS REF STATUS QUAL	RRS REF STATUS INST
2CSL*MOV112	20"-150# STOP VALVE CLOW CORP	P304Y	RB	195	LH	Y	Y	S	NA	59	NA A	Y
2GTS*MOV1A	20"-150# STOP VALVE CLOW CORP	P304Y	RB	319	LH	Y	NA	S	MF	35	NA A	Y
2GTS*MOV1B	20"-150# STOP VALVE CLOW CORP	P304Y	RB	319	LH	Y	NA	S	MF	35	NA A	Y
2GTS*MOV2A	20"-150# STOP VALVE CLOW CORP	P304Y	SG	266	LH	Y	NA	S	MF	49	NA B	Y
2GTS*MOV2B	20"-150# STOP VALVE CLOW CORP	P304Y	SG	266	LH	Y	NA	S	MF	49	NA B	Y
2GTS*MOV28A	8"-150# STOP VALVE CLOW CORP	P304Y	SG	261	LH	Y	NA	S	MF	59	NA C	Y
2GTS*MOV28B	8"-150# STOP VALVE CLOW CORP	P304Y	SG	261	LH	Y	NA	S	MF	59	NA C	Y
2GTS*MOV3A	20"-150# STOP VALVE CLOW CORP	P304Y	SG	277	LH	Y	NA	S	MF	49	NA B	Y
2GTS*MOV3B	20"-150# STOP VALVE CLOW CORP	P304Y	SG	277	LH	Y	NA	S	MF	49	NA B	Y
2GTS*PNL5A	PANEL CLOW CORP	P304Y	ET	215	DH	Y	NA	NA	MF		NA A	
2GTS*PNL5B	PANEL CLOW CORP	P304Y	ET	215	DH	Y	NA	NA	MF		NA A	
2GTS*PV5A	14"-150# STOP VALVE CLOW CORP	P304Y	SG	275	LH	Y	NA	S	NA	80	NA C	Y
2GTS*PV5B	14"-150# STOP VALVE CLOW CORP	P304Y	SG	275	LH	Y	NA	S	NA	80	NA C	Y

JOB NAME NMP - UNIT 2
UTILITY NIAGARA MOHAWK

SEISMIC AND DYNAMIC QUALIFICATION SUMMARY AND STATUS REPORT
MASTER LIST OF SAFETY RELATED EQUIPMENT

ENGINEER: STONE & WEBSTER
NSSS SUPPLIER: GENERAL ELECTRIC

EQUIP. ID / SHEC ID	EQUIPMENT DESCRIPTION / MANUFACTURER	PPD NO.	LOCATION BLDG	LOCATION ELEV	LOCATION HTG	LOADS SEIS	LOADS HYDR	QUAL ANLYS	METH TEST	NAT FREQ LOWEST	RRS REF STATUS QUAL	RRS REF STATUS INST
2RHS*MOV1A	24"-300# STOP VALVE CLOW CORP	P304Y	RB	195	LH	Y	Y	S	NA	63.9	NA B	Y
2RHS*MOV1B	24"-300# STOP VALVE CLOW CORP	P304Y	RB	193	LH	Y	Y	S	HF	63.9	NA B	Y
2RHS*MOV1C	24"-300# STOP VALVE CLOW CORP	P304Y	RB	195	LH	Y	Y	S	HF	50	NA B	Y
2RHS*MOV2A	18"-300# STOP VALVE CLOW CORP	P304Y	ABN	183	LH	Y	Y	S	HF	80.5	NA B	Y
2RHS*MOV2B	18"-300# STOP VALVE CLOW CORP	P304Y	RB	197	LH	Y	Y	S	HF	80.5	NA B	Y
2RHS*MOV30A	18"-150# STOP VALVE CLOW CORP	P304Y	RB	206	LH	Y	Y	S	HF	126	NA A	Y
2RHS*MOV30B	18"-150# STOP VALVE CLOW CORP	P304Y	RB	206	LH	Y	Y	S	HF	126	NA A	Y
2RHS*MOV8A	18"-300# STOP VALVE CLOW CORP	P304Y	ABN	181	LH	Y	NA	S	HF	38	NA A	Y
2RHS*MOV8B	18"-300# STOP VALVE CLOW CORP	P304Y	ABS	184	LH	Y	NA	S	HF	38	NA A	Y
2SWP*FV47A	CLOW CORP	P304Y	SB	247	LH	Y	NA	S	NA	34	NA C	Y
2SWP*FV47B	CLOW CORP	P304Y	SB	247	LH	Y	NA	S	NA	34	NA C	N
2SWP*FV54A	30"-150# STOP VALVE CLOW CORP	P304Y	SB	248	LH	Y	NA	S	HF	35	NA C	Y
2SWP*FV54B	30"-150# STOP VALVE CLOW CORP	P304Y	SB	248	LH	Y	NA	S	NF	35	NA C	N

JOB NAME NMP - UNIT 2
UTILITY NIAGARA MOHAWK

SEISMIC AND DYNAMIC QUALIFICATION SUMMARY AND STATUS REPORT
MASTER LIST OF SAFETY RELATED EQUIPMENT

ENGINEER: STONE & WEBSTER
NSSS SUPPLIER: GENERAL ELECTRIC

EQUIP. ID / SHEC ID	EQUIPMENT DESCRIPTION / MANUFACTURER	PPD NO.	LOCATION BLDG	LOCATION ELEV	LOCATION HTG	LOADS SEIS	LOADS HYDR	QUAL ANLYS	METH-TEST	NAT FREQ-LOWEST	RRS REF STATUS QUAL	RRS REF STATUS INST
2SHP*MOV19A	20"-150# STOP VALVE CLOW CORP	P304Y	ABN	219	LH	Y	NA	S	HF	35	NA A	Y
2SHP*MOV19B	20"-150# STOP VALVE CLOW CORP	P304Y	ABN	219	LH	Y	NA	S	HF	35	NA A	Y
2SHP*MOV3A	30"-150# STOP VALVE CLOW CORP	P304Y	SB	264	LH	Y	NA	S	HF	35	NA B	Y
2SHP*MOV3B	30"-150# STOP VALVE CLOW CORP	P304Y	SB	264	LH	Y	NA	S	HF	35	NA B	Y
2SHP*MOV33A	18"-150# CHECK VALVE CLOW CORP	P304Y	ABN	181	LH	Y	NA	S	HF	49	NA A	Y
2SHP*MOV33B	18"-150# CHECK VALVE CLOW CORP	P304Y	ABS	181	LH	Y	NA	S	HF	49	NA A	Y
2SHP*MOV50A	36"-150# STOP VALVE	P304Y	SB	264	LH	Y	NA	S	HF	33.2	NA A	Y
2SHP*MOV50B	36"-150# STOP VALVE	P304Y	SB	264	LH	Y	NA	S	HF	33.2	NA A	Y
2SHP*MOV599	30"-150# STOP VALVE CLOW CORP	P304Y	SB	255	LH	Y	NA	S	HF	35	NA A	Y
2SHP*MOV74A	18"-150# STOP VALVE CLOW CORP	P304Y	SB	264	LH	Y	NA	S	HF	51	NA A	Y
2SHP*MOV74B	18"-150# STOP VALVE CLOW CORP	P304Y	SB	264	LH	Y	NA	S	HF	51	NA A	Y
2SHP*MOV74C	18"-150# STOP VALVE CLOW CORP	P304Y	SB	264	LH	Y	NA	S	HF	51	NA A	Y
2SHP*MOV74D	18"-150# STOP VALVE CLOW CORP	P304Y	SB	264	LH	Y	NA	S	HF	51	NA A	Y

JOB NAME NMP - UNIT 2
UTILITY NIAGARA MOHAWK

SEISMIC AND DYNAMIC QUALIFICATION SUMMARY AND STATUS REPORT
MASTER LIST OF SAFETY RELATED EQUIPMENT

ENGINEER: STONE & WEBSTER
NSSS SUPPLIER: GENERAL ELECTRIC

EQUIP. ID / SHEC ID	EQUIPMENT DESCRIPTION / MANUFACTURER	PPD NO.	LOCATION BLDG	LOCATION ELEV	LOCATION HTG	LOADS SEIS	LOADS HYDR	QUAL ANLYS	METH TEST	NAT FREQ LOWEST	RRS REF STATUS QUAL	RRS REF STATUS INST
2SHP*MOV74E	18"-150# STOP VALVE CLOW CORP	P304Y	SB	264	LH	Y	NA	S	HF	51	NA A	Y
2SHP*MOV74F	18"-150# STOP VALVE CLOW CORP	P304Y	SB	264	LH	Y	NA	S	HF	51	NA A	Y
2SHP*MOV90A	18"-150# STOP VALVE CLOW CORP	P304Y	ABN	184	LH	Y	NA	S	HF	49	NA A	Y
2SHP*MOV90B	18"-150# STOP VALVE CLOW CORP	P304Y	ABS	181	LH	Y	NA	S	HF	49	NA A	Y
2SHP*MOV93A	24"-150# STOP VALVE CLOW CORP	P304Y	SB	247	LH	Y	NA	S	HF	66	NA B	Y
2SHP*MOV93B	24"-150# STOP VALVE CLOW CORP	P304Y	SB	247	LH	Y	NA	S	HF	66	NA B	Y
2SHP*V1A	18"-150# CHECK VALVE CLOW CORP	P304Y	SH	226	LH	Y	NA	S	NA	54	NA A	Y
2SHP*V1B	18"-150# CHECK VALVE CLOW CORP	P304Y	SH	226	LH	Y	NA	S	NA	54	NA A	Y
2SHP*V1C	18"-150# CHECK VALVE CLOW CORP	P304Y	SH	226	LH	Y	NA	S	NA	54	NA A	Y
2SHP*V1D	18"-150# CHECK VALVE CLOW CORP	P304Y	SH		LH	Y	NA	S	NA	54	NA A	Y
2SHP*V1E	18"-150# CHECK VALVE CLOW CORP	P304Y	SH		LH	Y	NA	S	NA	54	NA A	Y
2SHP*V1F	18"-150# CHECK VALVE CLOW CORP	P304Y	SH		LH	Y	NA	S	NA	54	NA A	Y
2SHP*V1027	30"-150# CHECK VALVE CLOW CORP	P304Y	PT	246	LH	Y	NA	S	NA	37.8	NA A	Y

JOB NAME NMP - UNIT 2-
UTILITY NIAGARA MOHAWK

SEISMIC AND DYNAMIC QUALIFICATION SUMMARY AND STATUS REPORT
MASTER LIST OF SAFETY RELATED EQUIPMENT

ENGINEER: STONE & WEBSTER
NSSS SUPPLIER: GENERAL ELECTRIC

EQUIP. ID / SWEC ID	EQUIPMENT DESCRIPTION / MANUFACTURER	PPD NO.	LOCATION BLDG	LOCATION ELEV	LOCATION HTG	LOADS SEIS	LOADS HYDR	QUAL ANLYS	METH- TEST	NAT FREQ- LOWEST	RRS REF STATUS QUAL	RRS REF STATUS INST
2SWP*V1028	30"-150# CHECK VALVE CLOW CORP	P304Y	PT	246	LH	Y	NA	S	NA	37.8	NA A	Y
2SWP*V1029	30"-150# CHECK VALVE CLOW CORP	P304Y	PT	246	LH	Y	NA	S	NA	37.8	NA A	Y
2SWP*V202A	30"-150# CHECK VALVE CLOW CORP	P304Y	SB	247	LH	Y	NA	S	NA	34	NA A	Y
2SWP*V202B	30"-150# CHECK VALVE CLOW CORP	P304Y	SB	247	LH	Y	NA	S	NA	34	NA A	Y

JOB NAME NMP - UNIT 2
UTILITY NIAGARA MOHAWK

SEISMIC AND DYNAMIC QUALIFICATION SUMMARY AND STATUS REPORT
MASTER LIST OF SAFETY RELATED EQUIPMENT

ENGINEER: STONE & WEBSTER
NSSS SUPPLIER: GENERAL ELECTRIC

EQUIP. ID / SHEC ID	EQUIPMENT DESCRIPTION / MANUFACTURER	PPD NO.	LOCATION BLDG	ELEV	HTG	LOADS SEIS	HYDR	QUAL ANLYS	METH TEST	NAT FREQ LOWEST	RRS REF STATUS QUAL	INST
2HSS*RVV190	REACTOR HEAD VENT CONTROL GPE CONTROLS	P305B	PC	238	LH	Y	Y	S	NA	224	NA A	N
2RHS*RVV35A	10" DOUBLE VAC REL. VALVE GPE CONTROLS	P305B	RB	205	LH	Y	Y	S	NA	402	NA A	Y
2RHS*RVV35B	10" DOUBLE VAC REL. VALVE GPE CONTROLS	P305B	RB	205	LH	Y	Y	S	NA	402	NA A	Y
2RHS*RVV36A	10" DOUBLE VAC REL VALVE GPE CONTROLS	P305B	RB	205	LH	Y	Y	S	NA	402	NA A	Y
2RHS*RVV36B	10" DOUBLE VAC REL. VALVE GPE CONTROLS	P305B	RB	205	LH	Y	Y	S	NA	402	NA A	Y
2SVV*RVV101	10"-600# CHECK VALVE GPE CONTROLS	P305B	PC	254	LH	Y	Y	S	NA	>1000	NA A	Y
2SVV*RVV102	10"-600# CHECK VALVE GPE CONTROLS	P305B	PC	254	LH	Y	Y	S	NA	>1000	NA A	N
2SVV*RVV103	10"-600# CHECK VALVE GPE CONTROLS	P305B	PC	254	LH	Y	Y	S	NA	>1000	NA A	Y
2SVV*RVV104	10"-600# CHECK VALVE GPE CONTROLS	P305B	PC	254	LH	Y	Y	S	NA	>1000	NA A	Y
2SVV*RVV105	10"-600# CHECK VALVE GPE CONTROLS	P305B	PC	254	LH	Y	Y	S	NA	>1000	NA A	Y
2SVV*RVV106	10"-600# CHECK VALVE GPE CONTROLS	P305B	PC	254	LH	Y	Y	S	NA	>1000	NA A	Y
2SVV*RVV107	10"-600# CHECK VALVE GPE CONTROLS	P305B	PC	254	LH	Y	Y	S	NA	>1000	NA A	Y
2SVV*RVV108	10"-600# CHECK VALVE GPE CONTROLS	P305B	PC	254	LH	Y	Y	S	NA	>1000	NA A	Y

JOB NAME NMP - UNIT 2
UTILITY NIAGARA MOHAWK

SEISMIC AND DYNAMIC QUALIFICATION SUMMARY AND STATUS REPORT
MASTER LIST OF SAFETY RELATED EQUIPMENT

ENGINEER: STONE & WEBSTER
NSSS SUPPLIER: GENERAL ELECTRIC

EQUIP. ID / SHEC ID	EQUIPMENT: DESCRIPTION / MANUFACTURER	PPD NO.	LOCATION: BLDG	ELEV	MTG	LOADS: SEIS	HYDR	QUAL ANLYS	METH- TEST	NAT FREQ- LOWEST	RRS REF STATUS: QUAL	INST
2SVV*RVV109	10"-600# CHECK VALVE GPE CONTROLS	P305B	PC	254	LH	Y	Y	S	NA	>1000	NA A	Y
2SVV*RVV110	10"-600E CHECK VALVE GPE CONTROLS	P305B	PC	254	LH	Y	Y	S	NA	>1000	NA A	Y
2SVV*RVV111	10"-600# CHECK VALVE GPE CONTROLS	P305B	PC	254	LH	Y	Y	S	NA	>1000	NA A	Y
2SVV*RVV112	10"-600# CHECK VALVE GPE COTROLS	P305B	PC	254	LH	Y	Y	S	NA	>1000	NA A	Y
2SVV*RVV113	10"-600# CHECK VALVE GPE CONTROLS	P305B	PC	254	LH	Y	Y	S	NA	>1000	NA A	Y
2SVV*RVV114	10"-600# CHECK VALVE GPE CONTROLS	P305B	PC	254	LH	Y	Y	S	NA	>1000	NA A	Y
2SVV*RVV115	10"-600# CHECK VALVE GPE CONTROLS	P305B	PC	254	LH	Y	Y	S	NA	>1000	NA A	Y
2SVV*RVV116	10"-600# CHECK VALVE GPE CONTROLS	P305B	PC	254	LH	Y	Y	S	NA	>1000	NA A	Y
2SVV*RVV117	10"-600# CHECK VALVE GPE CONTROLS	P305B	PC	254	LH	Y	Y	S	NA	>1000	NA A	Y
2SVV*RVV118	10"-600# CHECK VALVE GPE CONTROLS	P305B	PC	254	LH	Y	Y	S	NA	>1000	NA A	Y
2SVV*RVV201	10"-600# CHECK VALVE GPE CONTROLS	P305B	PC	251	LH	Y	Y	S	NA	>1000	NA A	Y
2SVV*RVV202	10"-600# CHECK VALVE GPE CONTROLS	P305B	PC	251	LH	Y	Y	S	NA	>1000	NA A	Y
2SVV*RVV203	10"-600# CHECK VALVE GPE CONTROLS	P305B	PC	251	LH	Y	Y	S	NA	>1000	NA A	Y

JOB NAME NMP - UNIT 2
UTILITY NIAGARA MOHAWK

SEISMIC AND DYNAMIC QUALIFICATION SUMMARY AND STATUS REPORT
MASTER LIST OF SAFETY RELATED EQUIPMENT

ENGINEER: STONE & WEBSTER
NSSS SUPPLIER: GENERAL ELECTRIC

EQUIP. ID / SHEC ID	EQUIPMENT DESCRIPTION / MANUFACTURER	PPD NO.	LOCATION BLDG	LOCATION ELEV	LOCATION HTG	LOADS SEIS	LOADS HYDR	QUAL ANLYS	METH TEST	NAT FREQ LOWEST	RRS REF STATUS QUAL	RRS REF STATUS INST
2SVV*RVV204	10"-600# CHECK VALVE GPE CONTROLS	P305B	PC	251	LH	Y	Y	S	NA	>1000	NA A	Y
2SVV*RVV205	10"-600# CHECK VALVE GPE CONTROLS	P305B	PC	251	LH	Y	Y	S	NA	>1000	NA A	Y
2SVV*RVV206	10"-600# CHECK VALVE GPE CONTROL	P305B	PC	251	LH	Y	Y	S	NA	>1000	NA A	Y
2SVV*RVV207	10"-600# CHECK VALVE GPE CONTROL	P305B	PC	251	LH	Y	Y	S	NA	>1000	NA A	Y
2SVV*RVV208	10"-600# CHECK VALVE GPE CONTROL	P305B	PC	251	LH	Y	Y	S	NA	>1000	NA A	Y
2SVV*RVV209	10"-600# CHECK VALVE GPE CONTROL	P305B	PC	251	LH	Y	Y	S	NA	>1000	NA A	Y
2SVV*RVV210	10"-600# CHECK VALVE GPE CONTROL	P305B	PC	251	LH	Y	Y	S	NA	>1000	NA A	Y
2SVV*RVV211	10"-600# CHECK VALVE GPE CONTROL	P305B	PC	251	LH	Y	Y	S	NA	>1000	NA A	Y
2SVV*RVV212	10"-600# CHECK VALVE GPE CONTROL	P305B	PC	251	LH	Y	Y	S	NA	>1000	NA A	Y
2SVV*RVV213	10"-600# CHECK VALVE GPE CONTROL	P305B	PC	251	LH	Y	Y	S	NA	>1000	NA A	Y
2SVV*RVV214	10"-600# CHECK VALVE GPE CONTROL	P305B	PC	251	LH	Y	Y	S	NA	>1000	NA A	Y
2SVV*RVV215	10"-600# CHECK VALVE GPE CONTROL	P305B	PC	251	LH	Y	Y	S	NA	>1000	NA A	Y
2SVV*RVV216	10"-600# CHECK VALVE GPE CONTROL	P305B	PC	251	LH	Y	Y	S	NA	>1000	NA A	Y

JOB NAME NMP - UNIT 2
UTILITY NIAGARA MOHAWK

SEISMIC AND DYNAMIC QUALIFICATION SUMMARY AND STATUS REPORT
MASTER LIST OF SAFETY RELATED EQUIPMENT

ENGINEER: STONE & WEBSTER
NSSS SUPPLIER: GENERAL ELECTRIC

EQUIP. ID / SHEC ID	EQUIPMENT DESCRIPTION / MANUFACTURER	PPD NO.	LOCATION BLDG	ELEV	HTG	LOADS SEIS	HYDR	QUAL ANLYS	METH TEST	NAT FREQ LOWEST	RRS REF STATUS QUAL	INST
2SVV*RVV217	10"-600# CHECK VALVE GPE CONTROL	P305B	PC	251	LH	Y	Y	S	NA	>1000	NA A	Y
2SVV*RVV218	10"-600# CHECK VALVE GPE CONTROLS	P305B	PC	251	LH	Y	Y	S	NA	>1000	NA A	Y
2SVV*RVV301	2 1/2"-150# CHECK VALVE GPE CONTROLS	P305B	PC	265	LH	Y	Y	S	NA	279	NA A	Y
2SVV*RVV302	2 1/2"-150# CHECK VALVE GPE CONTROLS	P305B	PC	265	LH	Y	Y	S	NA	279	NA A	Y
2SVV*RVV303	2 1/2"-150# CHECK VALVE GPE CONTROLS	P305B	PC	265	LH	Y	Y	S	NA	279	NA A	Y
2SVV*RVV304	2 1/2"-150# CHECK VALVE GPE CONTROL	P305B	PC	265	LH	Y	Y	YS	NA	279	NA A	Y
2SVV*RVV305	2 1/2"-150# CHECK VALVE GPE CONTROLS	P305B	PC	265	LH	Y	Y	S	NA	279	NA A	Y
2SVV*RVV306	2 1/2"-150# CHECK VALVE GPE CONTROLS	P305B	PC	265	LH	Y	Y	S	NA	279	NA A	Y
2SVV*RVV307	2 1/2"-150# CHECK VALVE GPE CONTROLS	P305B	PC	265	LH	Y	Y	S	NA	279	NA A	Y
2SVV*RVV308	2 1/2"-150# CHECK VALV GPE CONTROLS	P305B	PC	265	LH	Y	Y	S	NA	279	NA A	Y
2SVV*RVV309	2 1/2"-150# CHECK VALVE GPE CONTROLS	P305B	PC	265	LH	Y	Y	S	NA	279	NA A	Y
2SVV*RVV310	2 1/2"-150# CHECK VALVE GEP CONTROLS	P305B	PC	265	LH	Y	Y	S	NA	279	NA A	Y
2SVV*RVV311	2 1/2"-150# CHECK VALVE GPE CONTROLS	P305B	PC	265	LH	Y	Y	S	NA	279	NA A	Y

JOB NAME NMP - UNIT 2
UTILITY NIAGARA MOHAWK

SEISMIC AND DYNAMIC QUALIFICATION SUMMARY AND STATUS REPORT
MASTER LIST OF SAFETY RELATED EQUIPMENT

ENGINEER: STONE & WEBSTER
NSSS SUPPLIER: GENERAL ELECTRIC

EQUIP. ID / SWEC ID	EQUIPMENT DESCRIPTION / MANUFACTURER	PPD NO.	LOCATION BLDG	LOCATION ELEV	LOCATION HTG	LOADS SEIS	LOADS HYDR	QUAL ANLYS	QUAL METH- TEST	NAT FREQ- LOWEST	RRS REF STATUS QUAL	RRS REF STATUS INST
2SVV*RVV312	2 1/2"-150# CHECK VALVE GPE CONTROLS	P305B	PC	265	LH	Y	Y	S	NA	279	NA A	Y
2SVV*RVV313	2 1/2"-150# CHECK VALVE GPE CONTROLS	P305B	PC	265	LH	Y	Y	S	NA	279	NA A	Y
2SVV*RVV314	2 1/2"-150# CHECK VALVE GPE CONTROLS	P305B	PC	265	LH	Y	Y	S	NA	279	NA A	Y
2SVV*RVV315	2 1/2"-150# CHECK VALVE GPE CONTROLS	P305B	PC	265	LH	Y	Y	S	NA	279	NA A	Y
2SVV*RVV316	2 1/2"-150# CHECK VALVE GPE CONTROLS	P305B	PC	265	LH	Y	Y	S	NA	279	NA A	Y
2SVV*RVV317	2 1/2"-150# CHECK VALVE GPE CONTROLS	P305B	PC	265	LH	Y	Y	S	NA	279	NA A	Y
2SVV*RVV318	2 1/2"-150# CHECK VALVE GPE CONTROLS	P305B	PC	265	LH	Y	Y	S	NA	279	NA A	Y

JOB NAME NMP - UNIT 2
UTILITY NIAGARA MOHAWK

SEISMIC AND DYNAMIC QUALIFICATION SUMMARY AND STATUS REPORT
MASTER LIST OF SAFETY RELATED EQUIPMENT

ENGINEER: STONE & WEBSTER
NSSS SUPPLIER: GENERAL ELECTRIC

EQUIP. ID / SHEC ID	EQUIPMENT DESCRIPTION / MANUFACTURER	PPD NO.	LOCATION BLDG	LOCATION ELEV	LOCATION HTG	LOADS SEIS	LOADS HYDR	QUAL ANLYS	METH TEST	NAT FREQ LOWEST	RRS REF STATUS QUAL	RRS REF STATUS INST
2EGA*RV125	EXHAUST RELIEF VALVE GPE CONTROLS	P305E	DG	287	LH	Y	NA	S	NA	77	17 A	Y
2EGA*RV126	EXHAUST RELIEF VALVE GPE CONTROLS	P305E	DG	287	LH	Y	NA	S	NA	77	17 A	Y
2EGA*RV127	EXHAUST RELIEF VALVE GPE CONTROLS	P305E	DG	290	LH	Y	NA	S	NA	79	18 A	Y

JOB NAME NMP - UNIT 2
UTILITY NIAGARA MOHAWK

SEISMIC AND DYNAMIC QUALIFICATION SUMMARY AND STATUS REPORT
MASTER LIST OF SAFETY RELATED EQUIPMENT

ENGINEER: STONE & WEBSTER
NSSS SUPPLIER: GENERAL ELECTRIC

EQUIP. ID / SHEC ID	EQUIPMENT DESCRIPTION / MANUFACTURER	PPD NO.	LOCATION BLDG	LOCATION ELEV	LOCATION HTG	LOADS SEIS	LOADS HYDR	QUAL ANLYS	METH-TEST	NAT FREQ-LOWEST	RRS REF STATUS QUAL	RRS REF STATUS INST
2CSH*STR1	SUPP. POOL STRAINER ZURN INDUSTRIES	P311A	PC	195	LH	Y	Y	S	NA	385	NA A	Y
2CSL*STR1	SUPP. POOL STRAINER ZURN INDUSTRIES	P311A	PC	188	LH	Y	Y	S	NA	385	NA A	Y
2EGF*STR1A	SIMPLEX STRAINER ZURN INDUSTRIES	P311A	DG	262	LH	Y	NA	S	NA	NA	NA A	Y
2EGF*STR1B	SIMPLEX STRAINER ZURN INDUSTRIES	P311A	DG	262	LH	Y	NA	S	NA	NA	NA A	Y
2EGF*STR1C	SIMPLEX STRINER ZURN INDUSTRIES	P311A	DG	262	LH	Y	NA	S	NA	NA	NA A	Y
2EGF*STR1D	SIMPLEX STRAINER ZURN INDUSTRIES	P311A	DG	262	LH	Y	NA	S	NA	NA	NA A	Y
2EGF*STR2A	SIMPLEX STRAINER ZURN INDUSTRIES	P311A	DG	262	LH	Y	NA	S	NA	NA	NA A	Y
2EGF*STR2B	SIMPLEX STRAINER ZURN INDUSTRIES	P311A	DG	262	LH	Y	NA	S	NA	NA	NA A	Y
2ICS*STR1	SUPP. POOL STRAINER ZURN INDUSTRIES	P311A	PC	191	LH	Y	Y	S	NA	385	NA A	Y
2RHS*STR1A	SUPP. POOL STRAINER ZURN INDUSTRIES	P311A	PC	195	LH	Y	Y	S	NA	385	NA A	Y
2RHS*STR1B	SUPP. POOL STRAINER ZURN INDUSTRIES	P311A	PC	195	LH	Y	Y	S	NA	385	NA A	Y
2RHS*STR1C	SUPP. POOL STRAINER ZURN INDUSTRIES	P311A	PC	195	LH	Y	Y	S	NA	385	NA A	Y
2SHP*STR9A	SELF-CLEAN. STRAINER ZURN INDUSTRIES	P311A	SB	261	LH	Y	NA	S	NF	>35	NA A	Y

JOB NAME NMP - UNIT 2
UTILITY NIAGARA MOHAWK

SEISMIC AND DYNAMIC QUALIFICATION SUMMARY AND STATUS REPORT
MASTER LIST OF SAFETY RELATED EQUIPMENT

ENGINEER: STONE & WEBSTER
NSSS SUPPLIER: GENERAL ELECTRIC

EQUIP. ID / SHEC ID	EQUIPMENT DESCRIPTION / MANUFACTURER	PPD NO.	LOCATION BLDG	LOCATION ELEV	LOCATION HTG	LOADS SEIS	LOADS HYDR	QUAL ANLYS	METH TEST	NAT FREQ LOWEST	RRS REF STATUS QUAL	RRS REF STATUS INST
2SHP*STR4B	SELF-CLEAN. STRAINER ZURN INDUSTRIES	P311A	SB	261	LH	Y	NA	S	HF	>35	NA A	Y
2SHP*STR4C	SELF-CLEAN. STRAINER ZURN INDUSTRIES	F311A	SB	261	LH	Y	NA	S	HF	>35	NA A	Y
2SHP*STR4D	SELF-CLEAN. STRAINER ZURN INDUSTRIES	P311A	SB	261	LH	Y	NA	S	HF	>35	NA A	Y
2SHP*STR4E	SELF-CLEAN. STRAINER ZURN INDUSTRIES	P311A	SB	261	LH	Y	NA	S	HF	>35	NA A	Y
2SHP*STR4F	SELF-CLEAN. STRAINER ZURN INDUSTRIES	P311A	SB	261	LH	Y	NA	S	HF	>35	NA A	Y

JOB NAME NMP - UNIT 2
UTILITY NIAGARA MOHAWK

SEISMIC AND DYNAMIC QUALIFICATION SUMMARY AND STATUS REPORT
MASTER LIST OF SAFETY RELATED EQUIPMENT

ENGINEER: STONE & WEBSTER
NSSS SUPPLIER: GENERAL ELECTRIC

EQUIP. ID / SHEC ID	EQUIPMENT DESCRIPTION / MANUFACTURER	PPD NO.	LOCATION BLDG	LOCATION ELEV	LOCATION HTG	LOADS SEIS	LOADS HYDR	QUAL ANLYS	METH- TEST	NAT FREQ- LOWEST	RRS REF STATUS QUAL	RRS REF STATUS INST
2HVC*ACU3A	AIR CONDITIONING UNIT AMERICAN AIR FILTER	P412H/H	CB	275	CF	Y	NA	S	HF	18	17 A	Y
2HVC*ACU3B	AIR CONDITIONING UNIT AMERICAN AIR FILTER	P412H/H	CB	275	CF	Y	NA	S	HF	18	17 A	Y
2HVC*UC101A	UNIT SPACE COOLER AMERICAN AIR FILTER	P412H/H	CB	275	CF	Y	NA	S	HF	32	17 A	Y
2HVC*UC101B	UNIT SPACE COOLER AMERICAN AIR FILTER	P412H/H	CB	275	CF	Y	NA	S	HF	32	17 A	Y
2HVC*UC102	UNIT SPACE COOLER AMERICAN AIR FILTER	P412H/H	CB	275	CF	Y	NA	S	HF	38	17 A	Y
2HVC*UC103A	UNIT SPACE COOLER AMERICAN AIR FILTER	P412H/H	CB	270	CF	Y	NA	S	HF	39	17 A	Y
2HVC*UC103B	UNIT SPACE COOLER AMERICAN AIR FILTER	P412H/H	CB	279	CF	Y	NA	S	HF	39	17 A	Y
2HVC*UC104	UNIT SPACE COOLER AMERICAN AIR FILTER	P412H/H	RB	240	CF	Y	NA	S	HF	32	61 A	Y
2HVC*UC105	UNIT SPACE COOLER AMERICAN AIR FILTER	P412H/H	RB	240	CF	Y	NA	S	HF	43	61 A	Y
2HVC*UC106	UNIT SPACE COOLER AMERICAN AIR FILTER	P412H/H	CB	238	CF	Y	NA	S	HF	>33	16 A	Y
2HVC*UC107	UNIT SPACE COOLER AMERICAN AIR FILTER	P412H/H	CB	238	CF	Y	NA	S	HF	>33	16 A	Y
2HVC*UC108A	UNIT COOLER AMERICAN AIR FILTER	P412H/H	CB	275	CF	Y	NA	S	HF	>33	17 A	Y
2HVC*UC108B	UNIT COOLER AMERICAN AIR FILTER	P412H/H	CB	275	CF	Y	NA	S	HF	>33	17 A	Y

JOB NAME NMP - UNIT 2
UTILITY NIAGARA MOHAWK

SEISMIC AND DYNAMIC QUALIFICATION SUMMARY AND STATUS REPORT
MASTER LIST OF SAFETY RELATED EQUIPMENT

ENGINEER: STONE & WEBSTER
NSSS SUPPLIER: GENERAL ELECTRIC

EQUIP. ID / SHEC ID	EQUIPMENT DESCRIPTION / MANUFACTURER	PPD NO.	LOCATION BLDG	LOCATION ELEV	LOCATION HTG	LOADS SEIS	LOADS HYDR	QUAL ANLYS	METH-TEST	NAT FREQ-LOWEST	RRS REF STATUS QUAL	RRS REF STATUS INST
2HVP*UC1A	UNIT COOLER AMERICAN AIR FILTER	P412M/M	DG	280	CF	Y	NA	S	MF	>33	17 A	Y
2HVP*UC1B	UNIT COOLER AMERICAN AIR FILTER	P412M/M	DG	280	CF	Y	NA	S	MF	>33	17 A	Y
2HVP*UC2	UNIT COOLER AMERICAN AIR FILTER	P412M/M	DG	280	CF	Y	NA	S	MF	>33	17 A	Y
2HVR*UC401A	UNIT COOLER AMERICAN AIR FILTER	P412M/M	ABN	176	CF	Y	NA	S	MF	32	63 A	Y
2HVR*UC401B	UNIT COOLER AMERICAN AIR FILTER	P412M/M	ABS	183	CF	Y	NA	S	MF	32	63 A	Y
2HVR*UC401C	UNIT COOLER AMERICAN AIR FILTER	P412M/M	ABS	183	CF	Y	NA	S	MF	32	63 A	Y
2HVR*UC401D	UNIT COOLER AMERICAN AIR FILTER	P412M/M	ABN	176	CF	Y	NA	S	MF	32	63 A	Y
2HVR*UC401E	UNIT COOLER AMERICAN AIR FILTER	P412M/M	ABS	177	CF	Y	NA	S	MF	32	63 A	Y
2HVR*UC401F	UNIT COOLER AMERICAN AIR FILTER	P412M/M	ABS	183	CF	Y	NA	S	MF	32	63 A	Y
2HVR*UC402A	UNIT SPACE COOLERS AMERICAN AIR FILTER	P412M/M	ABN	176	CF	Y	NA	S	MF	20	63 A	Y
2HVR*UC402B	UNIT SPACE COOLERS AMERICAN AIR FILTER	P412M/M	ABN	177	CF	Y	NA	S	MF	20	63 A	Y
2HVR*UC403A	UNIT SPACE COOLERS AMERICAN AIR FILTER	P412M/M	RB	176	CF	Y	NA	S	MF	12	63 A	N
2HVR*UC403B	UNIT SPACE COOLERS AMERICAN AIR FILTER	P412M/M	RB	203	CF	Y	NA	S	MF	12	62 A	Y

JOB NAME NMP - UNIT 2
UTILITY NIAGARA MOHAWK

SEISMIC AND DYNAMIC QUALIFICATION SUMMARY AND STATUS REPORT
MASTER LIST OF SAFETY RELATED EQUIPMENT

ENGINEER: STONE & WEBSTER
NSSS SUPPLIER: GENERAL ELECTRIC

EQUIP. ID / SHEC ID	EQUIPMENT DESCRIPTION / MANUFACTURER	PPD NO.	LOCATION BLDG	ELEV	HTG	LOADS SEIS	HYDR	QUAL ANLYS	METH TEST	NAT FREQ LOWEST	RRS REF STATUS QUAL	INST
2HVR*UC404A	UNIT SPACE COOLERS AMERICAN AIR FILTER	P412M/M	RB	196	CF	Y	NA	S	MF	33	63 A	Y
2HVR*UC404B	UNIT SPACE COOLERS AMERICAN AIR FILTER	P412M/M	RB	176	CF	Y	NA	S	MF	33	63 A	Y
2HVR*UC404C	UNIT SPACE COOLERS AMERICAN AIR FILTER	P412M/M	RB	196	CF	Y	NA	S	MF	33	63 A	Y
2HVR*UC404D	UNIT SPACE COOLERS AMERICAN AIR FILTER	P412M/M	RB	206	CF	Y	NA	S	MF	33	62 A	Y
2HVR*UC405	UNIT SPACE COOLERS AMERICAN AIR FILTER	P412M/M	ABN	206	CF	Y	NA	S	MF	43	62 A	Y
2HVR*UC406	UNIT SPACE COOLERS AMERICAN AIR FILTER	P412M/M	ABS	206	CF	Y	NA	S	MF	43	62 A	Y
2HVR*UC407A	UNIT SPACE COOLERS AMERICAN AIR FILTER	P412M/M	RB	216	CF	Y	NA	S	MF	37	61 A	Y
2HVR*UC407B	UNIT SPACE COOLERS AMERICAN AIR FILTER	P412M/M	RB	216	CF	Y	NA	S	MF	37	61 A	Y
2HVR*UC407C	UNIT COOLER AMERICAN AIR FILTER	P412M/M	RB	216	CF	Y	NA	S	MF	37	61 A	Y
2HVR*UC407D	UNIT COOLER AMERICAN AIR FILTER	P412M/M	RB	229	CF	Y	NA	S	MF	37	61 A	Y
2HVR*UC407E	UNIT COOLER AMERICAN AIR FILTER	P412M/M	ABS	250	CF	Y	NA	S	MF	32	60 A	Y
2HVR*UC408A	UNIT COOLER AMERICAN AIR FILTER	P412M/M	ABN	250	CF	Y	NA	S	MF	16	60 A	Y
2HVR*UC408B	UNIT COOLER AMERICAN AIR FILTER	P412M/M	ABN	250	CF	Y	NA	S	MF	16	60 A	Y

JOB NAME NMP - UNIT 2
UTILITY NIAGARA MOHAWK

SEISMIC AND DYNAMIC QUALIFICATION SUMMARY AND STATUS REPORT
MASTER LIST OF SAFETY RELATED EQUIPMENT

ENGINEER: STONE & WEBSTER
NSSS SUPPLIER: GENERAL ELECTRIC

EQUIP. ID / SWEC ID	EQUIPMENT DESCRIPTION / MANUFACTURER	PPD NO.	LOCATION BLDG	LOCATION ELEV	LOCATION HTG	LOADS SEIS	LOADS HYDR	QUAL ANLYS	METH-TEST	NAT FREQ-LOWEST	RRS REF STATUS QUAL	RRS REF STATUS INST
2HVR*UC409A	UNIT COOLER AMERICAN AIR FILTER	P412M/H	ABS	250	CF	Y	NA	S	HF	32	60 A	Y
2HVR*UC409B	UNIT COOLER AMERICAN AIR FILTER	P412M/H	ABS	250	CF	Y	NA	S	HF	32	60 A	Y
2HVR*UC410A	UNIT COOLER AMERICAN AIR FILTER	P412M/H	RB	241	CF	Y	NA	S	HF	37	60 A	Y
2HVR*UC410B	UNIT COOLER AMERICAN AIR FILTER	P412M/H	RB	249	CF	Y	NA	S	HF	37	60 A	Y
2HVR*UC410C	UNIT COOLER AMERICAN AIR FILTER	P412M/H	RB	241	CF	Y	NA	S	HF	37	60 A	Y
2HVR*UC411A	UNIT SPACE COOLER AMERICAN AIR FILTER	P412M/H	RB	273	CF	Y	NA	S	HF	33	59 A	Y
2HVR*UC411B	UNIT SPACE COOLER AMERICAN AIR FILTER	P412M/H	RB	273	CF	Y	NA	S	HF	33	59 A	Y
2HVR*UC411C	UNIT SPACE COOLER AMERICAN AIR FILTER	P412M/H	RB	278	CF	Y	NA	S	HF	33	59 A	Y
2HVR*UC412A	UNIT SPACE COOLER AMERICAN AIR FILTER	P412M/H	RB	186	CF	Y	NA	S	HF	33	63 A	Y
2HVR*UC412B	UNIT SPACE COOLER AMERICAN AIR FILTER	P412M/H	RB	176	CF	Y	NA	S	HF	33	63 A	Y
2HVR*UC413A	UNIT SPACE COOLER AMERICAN AIR FILTER	P412M/H	RB	290	CF	Y	NA	S	HF	8	58 A	Y
2HVR*UC413B	UNIT SPACE COOLER AMERICAN AIR FILTER	P412M/H	RB	290	CF	Y	NA	S	HF	8	58 A	Y
2HVR*UC414A	UNIT SPACE COOLER AMERICAN AIR FILTER	P412M/H	RB	268	CF	Y	NA	S	HF	>33	59 A	Y

JOB NAME NMP - UNIT 2
UTILITY NIAGARA MOHAWK

SEISMIC AND DYNAMIC QUALIFICATION SUMMARY AND STATUS REPORT
MASTER LIST OF SAFETY RELATED EQUIPMENT

ENGINEER: STONE & HEBSTER
NSSS SUPPLIER: GENERAL ELECTRIC

EQUIP. ID / SHEC ID	EQUIPMENT DESCRIPTION / MANUFACTURER	PPD NO.	LOCATION BLDG	LOCATION ELEV	LOCATION MTG	LOADS SEIS	LOADS HYDR	QUAL ANLYS	METH TEST	NAT FREQ LOWEST	RRS REF STATUS QUAL	RRS REF STATUS INST
2HVR*UC414B	UNIT SPACE COOLER AMERICAN AIR FILTER	P412M/M	RB	279	CF	Y	NA	S	HF	>33	59 A	Y
2HVR*UC415A	UNIT SPACE COOLER AMERICAN AIR FILTER	P412M/M	SG	277	CF	Y	NA	S	HF	37	59 A	Y
2HVR*UC415B	UNIT SPACE COOLER AMERICAN AIR FILTER	P412M/M	SG	277	CF	Y	NA	S	HF	37	59 A	Y
2HVY*UC2A	UNIT SPACE COOLER AMERICAN AIR FILTER	P412M/M	SB	232	CF	Y	NA	S	HF	>33	5 A	Y
2HVY*UC2B	UNIT SPACE COOLER AMERICAN AIR FILTER	P412M/M	SB	232	CF	Y	NA	S	HF	>33	5 A	Y
2HVY*UC2C	UNIT SPACE COOLER AMERICAN AIR FILTER	P412M/M	SB	232	CF	Y	NA	S	HF	>33	5 A	Y
2HVY*UC2D	UNIT SPACE COOLER AMERICAN AIR FILTER	P412M/M	SB	232	CF	Y	NA	S	HF	>33	5 A	Y

JOB NAME NMP - UNIT 2
UTILITY NIAGARA MOHAWK

SEISMIC AND DYNAMIC QUALIFICATION SUMMARY AND STATUS REPORT
MASTER LIST OF SAFETY RELATED EQUIPMENT

ENGINEER: STONE & WEBSTER
NSSS SUPPLIER: GENERAL ELECTRIC

EQUIP. ID / SHEC ID	EQUIPMENT: DESCRIPTION / MANUFACTURER	PPD NO.	LOCATION: BLDG	ELEV	MTG	LOADS: SEIS	HYDR	QUAL METH: ANLYS	TEST	NAT FREQ: LOWEST	RRS REF	STATUS: QUAL	INST
2HVC*ACU1A	CR AIR COND. UNIT CARRIER A.C.	P913E/V	CB	289	CF	Y	NA	S	NA	12	17	A	Y
2HVC*ACU1B	CR AIR COND. UNIT CARRIER A.C.	P913E/V	CB	306	CF	Y	NA	S	NA	12	18	A	Y
2HVC*ACU2A	RR AIR COND. UNIT CARRIER A.C.	P913E/V	CB	289	CF	Y	NA	S	NA	12	17	A	Y
2HVC*ACU2B	RR AIR COND. UNIT CARRIER A.C.	P913E/V	CB	306	CF	Y	NA	S	NA	12	18	A	Y

JOB NAME NMP - UNIT 2
UTILITY NIAGARA MOHAWK

SEISMIC AND DYNAMIC QUALIFICATION SUMMARY AND STATUS REPORT
MASTER LIST OF SAFETY RELATED EQUIPMENT

ENGINEER: STONE & WEBSTER
NSSS SUPPLIER: GENERAL ELECTRIC

EQUIP. ID / SHEC ID	EQUIPMENT DESCRIPTION / MANUFACTURER	PPD NO.	LOCATION BLDG	LOCATION ELEV	LOCATION MTG	LOADS SEIS	LOADS HYDR	QUAL ANLYS	METH TEST	NAT FREQ LOWEST	RRS REF STATUS QUAL	RRS REF STATUS INST
2HVK*CHL1A	CONTROL BLDG. CHILLER YORK DIV,BORG WARNER	P413H	CB	261	CF	Y	NA	D	HF	10	16 A	Y
2HVK*CHL1B	CONTROL BLDG CHILLER YORK DIV,BORG WARNER	P413H	CB	261	CF	Y	NA	D	HF	10	16 A	Y

JOB NAME NMP - UNIT 2
UTILITY NIAGARA MOHAWK

SEISMIC AND DYNAMIC QUALIFICATION SUMMARY AND STATUS REPORT
MASTER LIST OF SAFETY RELATED EQUIPMENT

ENGINEER: STONE & WEBSTER
NSSS SUPPLIER: GENERAL ELECTRIC

EQUIP. ID / SHEC ID	EQUIPMENT DESCRIPTION / MANUFACTURER	PPD NO.	LOCATION BLDG	LOCATION ELEV	LOCATION HTG	LOADS SEIS	LOADS HYDR	QUAL ANLYS	METH TEST	NAT FREQ LOWEST	RRS REF STATUS QUAL	RRS REF STATUS INST
2HVC*CH11A	EQ. ROOM HEATER SCHNEIDER INC	P413L	CB	318	DH	Y	NA	S	HF	30	19 A	Y
2HVC*CH11B	EQ. ROOM HEATER SCHNEIDER INC	P413L	CB	319	DH	Y	NA	S	HF	40	19 A	Y
2HVC*CH12A	EQ. ROOM HEATER SCHNEIDER INC.	P413L	CB	299	DH	Y	NA	S	HF	40	18 A	Y
2HVC*CH12B	EQ. ROOM HEATER SCHNEIDER INC.	P413L	CB	300	DH	Y	NA	S	HF	40	18 A	Y
2HVC*DHPV1	BALANCING DAMPER SCHNEIDER INC.	P413L	CB	315	HH	Y	NA	S	NA	40	19 A	Y
2HVC*DHPV10	BALANCING DAMPER SCHENDIER INC.	P413L	CB	318	HH	Y	NA	S	NA	40	19 A	Y
2HVC*DHPV100	BALANCING DAMPER SCHNEIDER INC.	P413L	ETN	247	HH	Y	NA	S	NA	40	1 A	Y
2HVC*DHPV11	BALANCING DAMPER SCHNEIDER INC.	P413L	CB	319	HH	Y	NA	S	NA	40	19 A	Y
2HVC*DHPV111	BALANCING DAMPER SCHNEIDER INC.	P413L	CB	298	HH	Y	NA	S	NA	33	18 A	Y
2HVC*DHPV12	BALANCING DAMPER SCHNEIDER INC.	P413L	CB	318	HH	Y	NA	S	NA	40	19 A	Y
2HVC*DHPV13	BALANCING DAMPER SCHNEIDER INC.	P413L	CB	315	HH	Y	NA	S	NA	33	19 A	Y
2HVC*DHPV14	BALANCING DAMPER SCHNEIDER INC.	P413L	CB	315	HH	Y	NA	S	NA	40	19 A	Y
2HVC*DHPV16	BALANCING DAMPER SCHNEIDER INC.	P413L	CB	318	HH	Y	NA	S	NA	40	19 A	Y

JOB NAME NMP - UNIT 2
UTILITY NIAGARA MOHAWK

SEISMIC AND DYNAMIC QUALIFICATION SUMMARY AND STATUS REPORT
MASTER LIST OF SAFETY RELATED EQUIPMENT

ENGINEER: STONE & WEBSTER
NSSS SUPPLIER: GENERAL ELECTRIC

EQUIP. ID / SHEC ID	EQUIPMENT DESCRIPTION / MANUFACTURER	PPD NO.	LOCATION BLDG	LOCATION ELEV	LOCATION HTG	LOADS SEIS	LOADS HYDR	QUAL ANLYS	METH TEST	NAT FREQ LOWEST	RRS REF STATUS QUAL	RRS REF STATUS INST
2HVC*DMPV17	BALANCING DAMPER SCHNEIDER INC.	P413L	CB	318	HM	Y	NA	S	NA	40	19 A	Y
2HVC*DMPV2	BALANCING DAMPER SCHNEIDER INC.	P413L	CB	318	HM	Y	NA	S	NA	40	19 A	Y
2HVC*DMPV20	BALANCING DAMPER SCHNEIDER INC.	P413L	CB	318	HM	Y	NA	S	NA	40	19 A	Y
2HVC*DMPV21	BALANCING DAMPER SCHNEIDER INC.	P413L	CB	318	HM	Y	NA	S	NA	40	19 A	Y
2HVC*DMPV22	BALANCING DAMPER SCHNEIDER INC.	P413L	CB	318	HM	Y	NA	S	NA	40	19 A	Y
2HVC*DMPV23	BALANCING DAMPER SCHNEIDER INC.	P413L	CB	318	HM	Y	NA	S	NA	40	19 A	Y
2HVC*DMPV24	BALANCING DAMPER SCHNEIDER INC.	P413L	CB	318	HM	Y	NA	S	NA	40	19 A	Y
2HVC*DMPV25	BALANCING DAMPER SCHENIDER INC.	P413L	CB	318	HM	Y	NA	S	NA	40	19 A	Y
2HVC*DMPV27	BALANCING DAMPER SCHNEIDER INC.	P413L	CB	318	HM	Y	NA	S	NA	40	19 A	Y
2HVC*DMPV29	BALANCING DAMPER SCHNEIDER INC.	P413L	CB	318	HM	Y	NA	S	NA	33	19 A	Y
2HVC*DMPV30	BALANCING DAMPER SCHNEIDER INC.	P413L	CB	319	HM	Y	NA	S	NA	33	19 A	Y
2HVC*DMPV31	BALANCING DAMPER SCHNEIDER INC.	P413L	CB	316	HM	Y	NA	S	NA	33	19 A	Y
2HVC*DMPV32	BALANCING DAMPER SCHNEIDER INC.	P413L	CB	319	HM	Y	NA	S	NA	33	19 A	Y

JOB NAME NMP - UNIT 2
UTILITY NIAGARA MOHAWK

SEISMIC AND DYNAMIC QUALIFICATION SUMMARY AND STATUS REPORT
MASTER LIST OF SAFETY RELATED EQUIPMENT

ENGINEER: STONE & WEBSTER
NSSS SUPPLIER: GENERAL ELECTRIC

EQUIP. ID / SHEC ID	EQUIPMENT DESCRIPTION / MANUFACTURER	PPD NO.	LOCATION BLDG	LOCATION ELEV	LOCATION HTG	LOADS SEIS	LOADS HYDR	QUAL ANLYS	METH TEST	NAT FREQ LOWEST	RRS REF STATUS QUAL	RRS REF STATUS INST
2HVC*DMPV33	BALANCING DAMPER SCHNEIDER INC.	P413L	CB	318	MM	Y	NA	S	NA	33	19 A	Y
2HVC*DMPV34	BALANCING DAMPER SCHNEIDER INC.	P413L	CB	320	MM	Y	NA	S	NA	33	19 A	Y
2HVC*DMPV35	BALANCING DAMPER SCHNEIDER INC.	P413L	CB	318	MM	Y	NA	S	NA	33	19 A	Y
2HVC*DMPV36	BALANCING DAMPER SCHNEIDER INC.	P413L	CB	318	MM	Y	NA	S	NA	33	19 A	Y
2HVC*DMPV37	BALANCING DAMPER SCHNEIDER INC.	P413L	CB	319	MM	Y	NA	S	NA	33	19 A	Y
2HVC*DMPV38	BALANCING DAMPER SCHNEIDER NC.	P413L	CB	316	MM	Y	NA	S	NA	40	19 A	Y
2HVC*DMPV39	BALANCING DAMPER SCHNEIDER INC.	P413L	CB	316	MM	Y	NA	S	NA	40	19 A	Y
2HVC*DMPV4	BALANCING DAMPER SCHNEIDER INC.	P413L	CB	318	MM	Y	NA	S	NA	40	19 A	Y
2HVC*DMPV40	BALANCING DAMPER SCHNEIDER INC.	P413L	CB	316	MM	Y	NA	S	NA	40	19 A	Y
2HVC*DMPV41	BALANCING DAMPER SCHNEIDER INC.	P413L	CB	300	MM	Y	NA	S	NA	33	18 A	Y
2HVC*DMPV42	BALANCING DAMPER SCHNEIDER INC.	P413L	CB	297	MM	Y	NA	S	NA	33	18 A	Y
2HVC*DMPV43	BALANCING DAMPER SCHNEIDER INC.	P413L	CB	297	MM	Y	NA	S	NA	40	18 A	Y
2HVC*DMPV47	BALANCING DAMPER SCHNEIDER INC.	P413L	CB	290	MM	Y	NA	S	NA	40	18 A	Y

JOB NAME NMP - UNIT 2
UTILITY NIAGARA MOHAWK

SEISMIC AND DYNAMIC QUALIFICATION SUMMARY AND STATUS REPORT
MASTER LIST OF SAFETY RELATED EQUIPMENT

ENGINEER: STONE & WEBSTER
NSSS SUPPLIER: GENERAL ELECTRIC

EQUIP. ID / SHEC ID	EQUIPMENT DESCRIPTION / MANUFACTURER	PPD NO.	LOCATION BLDG	LOCATION ELEV	LOCATION MTG	LOADS SEIS	LOADS HYDR	QUAL ANLYS	METH TEST	NAT FREQ LOWEST	RRS REF STATUS QUAL	RRS REF STATUS INST
2HVC*DMPV48	BALANCING DAMPER SCHNEIDER INC.	P413L	CB	297	HH	Y	NA	S	NA	33	18 A	Y
2HVC*DMPV49	BALANCING DAMPER SCHNEIDER INC.	P413L	CB	300	HH	Y	NA	S	NA	33	18 A	Y
2HVC*DMPV5	BALANCING DAMPER SCHNEIDER INC.	P413L	CB	318	HH	Y	NA	S	NA	40	19 A	Y
2HVC*DMPV50	BALANCING DAMPER SCHNEIDER INC.	P413L	CB	300	HH	Y	NA	S	NA	40	18 A	Y
2HVC*DMPV500	BALANCING DAMPER SCHNEIDER INC.	P413L	CB	277	HH	Y	NA	S	NA	40	17 A	Y
2HVC*DMPV501	BALANCING DAMPER SCHNEIDER INC.	P413L	CB	277	HH	Y	NA	S	NA	40	17 A	Y
2HVC*DMPV502	BALANCING DAMPER SCHNEIDER INC.	P413L	CB	279	HH	Y	NA	S	NA	40	17 A	Y
2HVC*DMPV503	BALANCING DAMPER SCHNEIDER INC.	P413L	CB	278	HH	Y	NA	S	NA	40	17 A	Y
2HVC*DMPV52	BALANCING DAMPER SCHNEIDER INC.	P413L	CB	300	HH	Y	NA	S	NA	33	18 A	Y
2HVC*DMPV53	BALANCING DAMPER SCHNEIDER INC.	P413L	CB	298	HH	Y	NA	S	NA	33	18 A	Y
2HVC*DMPV54	BALANCING DAMPER SCHNEIDER INC.	P413L	CB	296	HH	Y	NA	S	NA	33	18 A	Y
2HVC*DMPV55	BALANCING DAMPER SCHNEIDER INC.	P413L	CB	299	HH	Y	NA	S	NA	33	18 A	Y
2HVC*DMPV56	BALANCING DAMPER SCHNEIDER INC.	P413L	CB	299	HH	Y	NA	S	NA	40	18 A	Y

JOB NAME NMP - UNIT 2
UTILITY NIAGARA MOHAWK

SEISMIC AND DYNAMIC QUALIFICATION SUMMARY AND STATUS REPORT
MASTER LIST OF SAFETY RELATED EQUIPMENT

ENGINEER: STONE & WEBSTER
NSSS SUPPLIER: GENERAL ELECTRIC

EQUIP. ID / SWEC ID	EQUIPMENT DESCRIPTION / MANUFACTURER	PPD NO.	LOCATION BLDG	LOCATION ELEV	LOCATION HTG	LOADS SEIS	LOADS HYDR	QUAL ANLYS	METH TEST	NAT FREQ LOWEST	RRS REF STATUS QUAL	RRS REF STATUS INST
2HVC*DMPV57	BALANCING DAMPER SCHNEIDER INC.	P413L	CB	301	MM	Y	NA	S	NA	40	18 A	Y
2HVC*DMPV58	BALANCING DAMPER SCHNEIDER INC.	P413L	CB	302	MM	Y	NA	S	NA	33	18 A	Y
2HVC*DMPV59	BALANCING DAMPER SCHNEIDER INC.	P413L	CB	299	MM	Y	NA	S	NA	33	18 A	Y
2HVC*DMPV6	BALANCING DAMPER SCHNEIDER INC.	P413L	CB	318	MM	Y	NA	S	NA	40	19 A	Y
2HVC*DMPV60	BALANCING DAMPER SCHNEIDER INC.	P413L	CB	298	MM	Y	NA	S	NA	33	18 A	Y
2HVC*DMPV61	BALANCING DAMPER SCHNEIDER INC.	P413L	CB	298	MM	Y	NA	S	NA	40	18 A	Y
2HVC*DMPV62	BALANCING DAMPER SCHNEIDER INC.	P413L	CB	297	MM	Y	NA	S	NA	33	18 A	Y
2HVC*DMPV63	BALANCING DAMPER SCHNEIDER INC.	P413L	CB	269	MM	Y	NA	S	NA	40	17 A	Y
2HVC*DMPV64	BALANCING DAMPER SCHNEIDER INC.	P413L	CB	269	MM	Y	NA	S	NA	40	17 A	Y
2HVC*DMPV65	BALANCING DAMPER SCHNEIDER INC.	P413L	CB	271	MM	Y	NA	S	NA	40	17 A	Y
2HVC*DMPV69	BALANCING DAMPER SCHNEIDER INC.	P413L	CB	256	MM	Y	NA	S	NA	40	16 A	Y
2HVC*DMPV7	BALANCING DAMPER SCHNEIDER INC.	P413L	CB	318	MM	Y	NA	S	NA	40	19 A	Y
2HVC*DMPV70	BALANCING DAMPER SCHNEIDER INC.	P413L	CB	256	MM	Y	NA	S	NA	40	16 A	Y

JOB NAME NMP - UNIT 2
UTILITY NIAGARA MOHAWK

SEISMIC AND DYNAMIC QUALIFICATION SUMMARY AND STATUS REPORT
MASTER LIST OF SAFETY RELATED EQUIPMENT

ENGINEER: STONE & WEBSTER
NSSS SUPPLIER: GENERAL ELECTRIC

EQUIP. ID / SHEC ID	EQUIPMENT DESCRIPTION / MANUFACTURER	PPD NO.	LOCATION BLDG	LOCATION ELEV	LOCATION HTG	LOADS SEIS	LOADS HYDR	QUAL ANLYS	METH TEST	NAT FREQ LOWEST	RRS REF STATUS QUAL	RRS REF STATUS INST
2HVC*DMPV71	BALANCING DAMPER SCHNEIDER INC.	P413L	CB	256	HH	Y	NA	S	NA	33	16 A	Y
2HVC*DMPV72	BALANCING DAMPER SCHNEIDER INC.	P413L	CB	256	HH	Y	NA	S	NA	40	16 A	Y
2HVC*DMPV73	BALANCING DAMPER SCHNEIDER INC.	P413L	CB	257	HH	Y	NA	S	NA	40	16 A	Y
2HVC*DMPV75	BALANCING DAMPER SCHNEIDER INC.	P413L	CB	230	Y	Y	NA	S	NA	33	15 A	Y
2HVC*DMPV76	BALANCING DAMPER SCHNEIDER INC.	P413L	CB	228	HH	Y	NA	S	NA	33	15 A	Y
2HVC*DMPV77	BALANCING DAMPER SCHNEIDER INC.	P413L	CB	225	HH	Y	NA	S	NA	33	15 A	Y
2HVC*DMPV8	BALANCING DAMPER SCHNEIDER INC.	P413L	CB	318	HH	Y	NA	S	NA	40	19 A	Y
2HVC*DMPV80	BALANCING DAMPER SCHNEIDER INC.	P413L	CB	315	HH	Y	NA	S	NA	40	19 A	Y
2HVC*DMPV81	BALANCING DAMPER SCHNEIDER INC	P413L	CB	319	HH	Y	NA	S	NA	33	19 A	Y
2HVC*DMPV82	BALANCING DAMPER SCHNEIDER INC.	P413L	CBR	277	HH	Y	NA	S	NA	40	17 A	Y
2HVC*DMPV83	BALANCING DAMPER SCHNEIDER INC.	P413L	CB	316	HH	Y	NA	S	NA	40	19 A	Y
2HVC*DMPV84	BALANCING DAMPER SCHNEIDER INC.	P413L	CB	298	HH	Y	NA	S	NA	33	18 A	Y
2HVC*DMPV85	BALANCING DAMPER SCHNEIDER INC.	P413L	ASB	240	HH	Y	NA	S	NA	33	5 A	Y

JOB NAME NMP - UNIT 2
UTILITY NIAGARA MOHAWK

SEISMIC AND DYNAMIC QUALIFICATION SUMMARY AND STATUS REPORT
MASTER LIST OF SAFETY RELATED EQUIPMENT

ENGINEER: STONE & WEBSTER
NSSS SUPPLIER: GENERAL ELECTRIC

EQUIP. ID / SHEC ID	EQUIPMENT DESCRIPTION / MANUFACTURER	PPD NO.	LOCATION BLDG	LOCATION ELEV	LOCATION HTG	LOADS SEIS	LOADS HYDR	QUAL ANLYS	METH TEST	NAT FREQ LOWEST	RRS REF STATUS QUAL	RRS REF STATUS INST
2HVC*DMPV86	BALANCING DAMPER SCHNEIDER INC.	P413L	ASB	242	HH	Y	NA	S	NA	40	5 A	Y
2HVC*DMPV87	BALANCING DAMPER SCHNEIDER INC.	P413L	ASB	247	HH	Y	NA	S	NA	40	5 A	Y
2HVC*DMPV88	BALANCING DAMPER SCHNEIDER INC.	P413L	ASB	252	HH	Y	NA	S	NA	33	6 A	Y
2HVC*DMPV9	BALANCING DAMPER SCHENDIER INC.	P413L	CB	318	HH	Y	NA	S	NA	40	19 A	Y
2HVC*DMPV90	BALANCING DAMPER SCHNEIDER INC.	P413L	ASB	242	HH	Y	NA	S	NA	40	5 A	Y
2HVC*DMPV91	BALANCING DAMPER SCHNEIDER INC.	P413L	ASB	247	HH	Y	NA	S	NA	40	5 A	Y
2HVC*DMPV92	BALANCING DAMPER SCHNEIDER INC.	P413L	ETN	219	HH	Y	NA	S	NA	33	1 A	Y
2HVC*DMPV93	BALANCING DAMPER SCHNEIDER INC.	P413L	ETN	219	HH	Y	NA	S	NA	33	1 A	Y
2HVC*DMPV94	BALANCING DAMPER SCHNEIDER INC.	P413L	ETN	219	HH	Y	NA	S	NA	40	1 A	Y
2HVC*DMPV95	BALANCING DAMPER SCHNEIDER INC.	P413L	ETN	230	HH	Y	NA	S	NA	33	1 A	Y
2HVC*DMPV96	BALANCING DAMPER SCHNEIDER INC.	P413L	ETN	230	HH	Y	NA	S	NA	40	1 A	Y
2HVC*DMPV97	BALANCING DAMPER SCHNEIDER INC.	P413L	ETN	219	HH	Y	NA	S	NA	40	1 A	Y
2HVC*DMPV98	BALANCING DAMPER SCHNEIDER INC.	P413L	ETN	219	HH	Y	NA	S	NA	40	1 A	Y

JOB NAME NMP - UNIT 2
UTILITY NIAGARA MOHAWK

SEISMIC AND DYNAMIC QUALIFICATION SUMMARY AND STATUS REPORT
MASTER LIST OF SAFETY RELATED EQUIPMENT

ENGINEER: STONE & WEBSTER
NSSS SUPPLIER: GENERAL ELECTRIC

EQUIP. ID / SHEC ID	EQUIPMENT DESCRIPTION / MANUFACTURER	PPD NO.	LOCATION BLDG	LOCATION ELEV	LOCATION MTG	LOADS SEIS	LOADS HYDR	QUAL ANLYS	METH TEST	NAT FREQ LOWEST	RRS REF	STATUS QUAL	STATUS INST
2HVC*DMPV99	BALANCING DAMPER SCHNEIDER INC.	P413L	ETN	219	HH	Y	NA	S	NA	40	1	A	Y
2HVC*DMP100	TORNADO DAMPER SCHNEIDER INC.	P413L	ET	247	HH	Y	NA	S	NA	40	19	A	Y
2HVC*FE10A	FLOW ELEMENT SCHNEIDER INC.	P413L	CB	295	HH	Y	NA	S	NA	25	18	A	Y
2HVC*FE10B	FLOW ELEMENT SCHNEIDER INC.	P413L	CB	309	HH	Y	NA	S	NA	25	19	A	Y
2HVC*FE110	FLOW ELEMENT SCHNEIDER INC.	P413L	CB	277	HH	Y	NA	S	NA	25	17	A	Y
2HVC*FE132	FLOW ELEMENT SCHNEIDER INC.	P413L	CB	277	HH	Y	NA	S	NA	25	17	A	Y
2HVC*FE135	FLOW ELEMENT SCHNEIDER INC.	P413L	CB	306	HH	Y	NA	S	NA	25	18	A	Y
2HVC*FE141	FLOW ELEMENT SCHNEIDER INC.	P413L	CB	277	HH	Y	NA	S	NA	25	17	A	Y
2HVC*FE221	FLOW ELEMENT SCHNEIDER INC.	P413L	CB	277	HH	Y	NA	S	NA	25	17	A	Y
2HVC*PNLCH11A	CHILLER CONTROL PANEL SCHNEIDER INC.	P413L	CB	306	DH	Y	NA	S	HF	39	18	A	Y
2HVC*PNLCH11B	CHILLER CONTROL PANEL SCHNEIDER INC.	P413L	CB	306	DH	Y	NA	S	HF	39	18	A	Y
2HVC*PNLCH12A	CHILLER CONTROL PANEL SCHNEIDER INC.	P413L	CB	286	DH	Y	NA	S	HF	39	17	A	Y
2HVC*PNLCH12B	CHILLER CONTROL PANEL SCHNEIDER INC.	P413L	CB	286	DH	Y	NA	S	HF	39	17	A	Y

JOB NAME NMP - UNIT 2
UTILITY NIAGARA MOHAWK

SEISMIC AND DYNAMIC QUALIFICATION SUMMARY AND STATUS REPORT
MASTER LIST OF SAFETY RELATED EQUIPMENT

ENGINEER: STONE & WEBSTER
NSSS SUPPLIER: GENERAL ELECTRIC

EQUIP. ID / SWEC ID	EQUIPMENT DESCRIPTION / MANUFACTURER	PPD NO.	LOCATION BLDG	LOCATION ELEV	LOCATION HTG	LOADS SEIS	LOADS HYDR	QUAL ANLYS	METH TEST	NAT FREQ LOWEST	RRS REF STATUS QUAL	RRS REF STATUS INST
2HVR*DMPV1	VOLUME DAMPER SCHNEIDER, INC.	P413L	RB	189	MM	Y	NA	S	NA	40	63 A	Y
2HVR*DMPV10	VOLUME DAMPER SCHNEIDER, INC.	P413L	RB	255	MM	Y	NA	S	NA	40	60 A	Y
2HVR*DMPV11	VOLUME DAMPER SCHNEIDER, INC.	P413L	RB	302	MM	Y	NA	S	NA	40	58 A	Y
2HVR*DMPV14	VOLUME DAMPER SCHNEIDER, INC.	P413L	RB	323	MM	Y	NA	S	NA	33	58 A	Y
2HVR*DMPV15	VOLUME DAMPER SCHNEIDER, INC.	P413L	RB	348	MM	Y	NA	S	NA	40	57 A	Y
2HVR*DMPV16	VOLUME DAMPER SCHNEIDER, INC.	P413L	RB	348	MM	Y	NA	S	NA	33	57 A	Y
2HVR*DMPV17	VOLUME DAMPER SCHNEIDER, INC.	P413L	RB	348	MM	Y	NA	S	NA	40	57 A	Y
2HVR*DMPV18	VOLUME DAMPER SCHNEIDER, INC.	P413L	RB	348	MM	Y	NA	S	NA	40	57 A	Y
2HVR*DMPV19	VOLUME DAMPER SCHNEIDER, INC.	P413L	RB	348	MM	Y	NA	S	NA	40	57 A	Y
2HVR*DMPV2	VOLUME DAMPER SCHNEIDER, INC.	P413L	RB	235	MM	Y	NA	S	NA	33	61 A	Y
2HVR*DMPV20	VOLUME DAMPER SCHNEIDER, INC.	P413L	RB	189	MM	Y	NA	S	NA	33	63 A	Y
2HVR*DMPV21	VOLUME DAMPER SCHNEIDER, INC.	P413L	RB	302	MM	Y	NA	S	NA	33	58 A	Y
2HVR*DMPV22	VOLUME DAMPER SCHNEIDER, INC.	P413L	RB	302	MM	Y	NA	S	NA	33	58 A	Y

JOB NAME NMP - UNIT 2
UTILITY NIAGARA MOHAWK

SEISMIC AND DYNAMIC QUALIFICATION SUMMARY AND STATUS REPORT
MASTER LIST OF SAFETY RELATED EQUIPMENT

ENGINEER: STONE & WEBSTER
NSSS SUPPLIER: GENERAL ELECTRIC

EQUIP. ID / SNEC ID	EQUIPMENT DESCRIPTION / MANUFACTURER	PPD NO.	LOCATION BLDG	LOCATION ELEV	LOCATION HTG	LOADS SEIS	LOADS HYDR	QUAL ANLYS	METH TEST	NAT FREQ LOWEST	RRS REF	STATUS QUAL	STATUS INST
2HVR*DMPV23	VOLUME DAMPER SCHNEIDER, INC.	P413L	RB	313	MM	Y	NA	S	NA	40	58	A	Y
2HVR*DMPV24	VOLUME DAMPER SCHNEIDER, INC.	P413L	RB	322	MM	Y	NA	S	NA	33	58	A	Y
2HVR*DMPV25	VOLUME DAMPER SCHNEIDER, INC.	P413L	RB	322	MM	Y	NA	S	NA	33	58	A	Y
2HVR*DMPV26	VOLUME DAMPER SCHNEIDER, INC.	P413L	RB	308	MM	Y	NA	S	NA	33	58	A	Y
2HVR*DMPV3	VOLUME DAMPER SCHNEIDER, INC.	P413L	RB	235	MM	Y	NA	S	NA	40	61	A	Y
2HVR*DMPV4	VOLUME DAMPER SCHNEIDER, INC.	P413L	RB	233	MM	Y	NA	S	NA	33	61	A	Y
2HVR*DMPV5	VOLUME DAMPER SCHNEIDER, INC.	P413L	RB	228	MM	Y	NA	S	NA	40	61	A	Y
2HVR*DMPV6	VOLUME DAMPER SCHNEIDER, INC.	P413L	RB	235	MM	Y	NA	S	NA	40	61	A	Y
2HVR*DMPV7	VOLUME DAMPER SCHNEIDER, INC.	P413L	RB	235	MM	Y	NA	S	NA	40	61	A	Y
2HVR*DMPV8	VOLUME DAMPER SCHNEIDER, INC.	P413L	RB	245	MM	Y	NA	S	NA	40	60	A	Y
2HVR*DMPV9	VOLUME DAMPER SCHNEIDER, INC.	P413L	RB	321	MM	Y	NA	S	NA	33	61	A	Y
2HVR*FE210	FLOW ELEMENT SCHNEIDER INC.	P413L	RB	289	MM	Y	NA	S	NA	25	59	A	Y

JOB NAME NMP - UNIT 2
UTILITY NIAGARA MOHAWK

SEISMIC AND DYNAMIC QUALIFICATION SUMMARY AND STATUS REPORT
MASTER LIST OF SAFETY RELATED EQUIPMENT

ENGINEER: STONE & WEBSTER
NSSS SUPPLIER: GENERAL ELECTRIC

EQUIP. ID / SHEC ID	EQUIPMENT DESCRIPTION / MANUFACTURER	PPD NO.	LOCATION BLDG	LOCATION ELEV	LOCATION HTG	LOADS SEIS	LOADS HYDR	QUAL ANLYS	METH TEST	NAT FREQ LOWEST	RRS REF	STATUS QUAL	STATUS INST
2HVC*FN11A	SAFETY RELATED AXIAL FAN JOY MFG. CO.	P413R	CB	279	CF	Y	NA	S	NA	86	17	A	Y
2HVC*FN11B	SAFETY RELATED AXIAL FAN JOY MFG. CO.	P413R	CB	279	CF	Y	NA	S	NA	86	17	A	Y
2HVC*FN9A	SAFETY RELATED AXIAL FAN JOY MFG. CO.	P413R	CB	298	CF	Y	NA	S	NA	101	18	A	Y
2HVC*FN9B	SAFETY RELATED AXIAL FAN JOY MFG. CO.	P413R	CB	316	DH	Y	NA	S	NA	101	19	A	Y
2HVP*FN1A	SAFETY RELATED AXIAL FAN JOY MFG. CO.	P413R	DG	275	CF	Y	NA	S	NA	48	17	A	Y
2HVP*FN1B	SAFETY RELATED AXIAL FAN JOY MFG. CO.	P413R	DG	275	CF	Y	NA	S	NA	48	17	A	Y
2HVP*FN1C	SAFETY RELATED AXIAL FAN JOY MFG. CO.	P413R	DG	275	CF	Y	NA	S	NA	48	17	A	Y
2HVP*FN1D	SAFETY RELATED AXIAL FAN JOY MFG. CO.	P413R	DG	275	CF	Y	NA	S	NA	48	17	A	Y
2HVP*FN1E	SAFETY RELATED AXIAL FAN JOY MFG. CO.	P413R	DG	261	CF	Y	NA	S	NA	48	16	A	N
2HVP*FN2A	SAFETY RELATED AXIAL FAN JOY MFG. CO.	P413R	DG	275	CF	Y	NA	S	NA	48	17	A	Y
2HVP*FN2B	SAFETY RELATED AXIAL FAN JOY MFG. CO.	P413R	DG	275	CF	Y	NA	S	NA	48	17	A	Y
2HVY*FN1A	SAFTEY RELATED AXIAL FAN JOY MFG. CO.	P413R	SA	261	DH	Y	NA	S	NA	57	11	A	N
2HVY*FN1B	SAFETY RELATED AXIAL FAN JOY MFG. CO.	P413R	SA	261	DH	Y	NA	S	NA	57	11	A	N

JOB NAME NMP - UNIT 2
UTILITY NIAGARA MOHAWK

SEISMIC AND DYNAMIC QUALIFICATION SUMMARY AND STATUS REPORT
MASTER LIST OF SAFETY RELATED EQUIPMENT

ENGINEER: STONE & WEBSTER
NSSS SUPPLIER: GENERAL ELECTRIC

EQUIP. ID / SWEC ID	EQUIPMENT DESCRIPTION / MANUFACTURER	PPD NO.	LOCATION BLDG	LOCATION ELEV	LOCATION HTG	LOADS SEIS	LOADS HYDR	QUAL ANLYS	METH TEST	NAT FREQ LOWEST	RRS REF	STATUS QUAL	STATUS INST
2HVY*FN1C	SAFETY RELATED AXIAL FAN JOY MFG. CO.	P413R	SA	261	DH	Y	NA	S	NA	57	11	A	N
2HVY*FN1D	SAFETY RELATED AXIAL FAN JOY MFG. CO.	P413R	SA	261	DH	Y	NA	S	NA	57	11	A	N

JOB NAME NMP - UNIT 2
UTILITY NIAGARA MOHAWK

SEISMIC AND DYNAMIC QUALIFICATION SUMMARY AND STATUS REPORT
MASTER LIST OF SAFETY RELATED EQUIPMENT

ENGINEER: STONE & WEBSTER
NSSS SUPPLIER: GENERAL ELECTRIC

EQUIP. ID / SWEC ID	EQUIPMENT DESCRIPTION / MANUFACTURER	PPD NO.	LOCATION BLDG	LOCATION ELEV	LOCATION HTG	LOADS SEIS	LOADS HYDR	QUAL ANLYS	METH TEST	NAT FREQ LOWEST	RRS REF	STATUS QUAL	STATUS INST
2GTS*FN1A	FILTER DISCHARGE FAN BUFFALO FORGE	P413S	SG	261	CF	Y	NA	S	NA	28	3	A	Y
2GTS*FN1B	FILTER DISCHARGE FAN BUFFALO FORGE	P413S	SG	261	CF	Y	NA	S	NA	28	3	A	Y
2HVC*FN2A	CONT. RH A/C FAN BUFFALO FORGE	P413S	CB	288	CF	Y	NA	S	NA	17	18	A	Y
2HVC*FN2B	CONT. RH A/C FAN BUFFALO FORGE	P413S	CB	306	CF	Y	NA	S	NA	17	18	A	Y

JOB NAME NMP - UNIT 2
UTILITY NIAGARA MOHAWK

SEISMIC AND DYNAMIC QUALIFICATION SUMMARY AND STATUS REPORT
MASTER LIST OF SAFETY RELATED EQUIPMENT

ENGINEER: STONE & WEBSTER
NSSS SUPPLIER: GENERAL ELECTRIC

EQUIP. ID / SHEC ID	EQUIPMENT DESCRIPTION / MANUFACTURER	PPD NO.	LOCATION BLDG	LOCATION ELEV	LOCATION MTG	LOADS SEIS	LOADS HYDR	QUAL ANLYS	METH TEST	NAT FREQ LOWEST	RRS REF STATUS QUAL	RRS REF STATUS INST
2GTS*DMP1A	TORNADO DAMPER PACIFIC AIR PRODUCTS	P413T	SG	277	HM	Y	NA	S	SF	26	3 A	Y
2GTS*DMP1B	TORNADO DAMPER PACIFIC AIR PRODUCTS	P413T	SG	277	HM	Y	NA	S	SF	26	3 A	Y
2GTS*DMP2A	TORNADO DAMPER PACIFIC AIR PRODUCTS	P413T	SG	277	HM	Y	NA	S	SF	26	3 A	Y
2GTS*DMP2B	TORNADO DAMPER PACIFIC AIR PRODUCTS	P413T	SG	277	HM	Y	NA	S	SF	26	3 A	Y
2HVC*AOD117	FAN DISCH. DAMPER PACIFIC AIR PRODUCTS	P413T	CB	308	HM	Y	NA	S	HF	53	19 A	Y
2HVC*AOD12A	ACU DISCH. DAMPER PACIFIC AIR PRODUCTS	P413T	CB	294	HM	Y	NA	S	HF	53	18 A	Y
2HVC*AOD12B	ACU DISCH. DAMPER PACIFIC AIR PRODUCTS	P413T	CB	311	HM	Y	NA	S	HF	53	19 A	Y
2HVC*AOD120	FAN DISCH. DAMPER PACIFIC AIR PRODUCTS	P413T	CB	308	HM	Y	NA	S	HF	53	19 A	Y
2HVC*AOD142	SHK REM INLET DAMPER PACIFIC AIR	P413T	CB	324	HM	Y	NA	S	HF	53	19 A	Y
2HVC*AOD145	SHK REM INLET DAMPER PACIFIC AIR	P413T	CB	318	HM	Y	NA	S	HF	53	19 A	Y
2HVC*AOD148	SHK REM INLET DAMPER PACIFIC AIR	P413T	CB	300	HM	Y	NA	S	HF	53	18 A	Y
2HVC*AOD169	MAKEUP AIR DAMPER PACIFIC AIR	P413T	CB	279	HM	Y	NA	S	HF	53	17 A	Y
2HVC*AOD170	UC DISCH. DAMPER PACIFIC AIR	P413T	CB	239	HM	Y	NA	S	HF	53	16 A	Y

JOB NAME NMP - UNIT 2
UTILITY NIAGARA MOHAWK

SEISMIC AND DYNAMIC QUALIFICATION SUMMARY AND STATUS REPORT
MASTER LIST OF SAFETY RELATED EQUIPMENT

ENGINEER: STONE & WEBSTER
NSSS SUPPLIER: GENERAL ELECTRIC

EQUIP. ID / SWEC ID	EQUIPMENT DESCRIPTION / MANUFACTURER	PPD NO.	LOCATION BLDG	ELEV	MTG	LOADS SEIS	HYDR	QUAL ANLYS	METH TEST	NAT FREQ LOWEST	RRS REF STATUS QUAL	INST
2HVC*AOD171	SMK REM SUCT. DAMPER PACIFIC AIR	P413T	CB	247	MM	Y	NA	S	MF	53	16 A	Y
2HVC*AOD177	SMK REM SUCT. DAMPER PACIFIC AIR	P413T	CB	261	MM	Y	NA	S	MF	53	16 A	Y
2HVC*AOD178	SMK REM SUCT. DAMPER PACIFIC AIR	P413T	CB	239	MM	Y	NA	S	MF	53	16 A	Y
2HVC*AOD179	SMK REM SUCT. DAMPER PACIFIC AIR	P413T	CB	245	MM	Y	NA	S	MF	53	16 A	Y
2HVC*AOD182	SMK REM SUCT. DAMPER PACIFIC AIR	P413T	ASB	242	MM	Y	NA	S	MF	53	16 A	Y
2HVC*AOD183	UC DISCH DAMPER PACIFIC AIR PRODUCTS	P413T	ASB	247	MM	Y	NA	S	MF	53	5 A	Y
2HVC*AOD192	FAN SUCT. DAMPER PACIFIC AIR PRODUCTS	P413T	ASB	241	MM	Y	NA	S	MF	53	5 A	Y
2HVC*AOD193	UC DISCH. DAMPER PACIFIC AIR	P413T	ASB	239	MM	Y	NA	S	MF	53	5 A	Y
2HVC*AOD212	SMK REM. DAMPER PACIFIC AIR	P413T	CB	249	MM	Y	NA	S	MF	53	16 A	Y
2HVC*AOD213	SMOKE REM. DAMPER PACIFIC AIR	P413T	CB	253	MM	Y	NA	S	MF	53	16 A	Y
2HVC*AOD214	SMOKE REM. DAMPER PACIFIC AIR	P413T	CB	249	MM	Y	NA	S	MF	53	16 A	Y
2HVC*AOD215	SMOKE REM. DAMPER PACIFIC AIR	P413T	CB	253	MM	Y	NA	S	MF	53	16 A	Y
2HVC*AOD54A	SUCTION DAMPER FOR FAN PACIFIC AIR PRODUCTS	P413T	CB	282	MM	Y	NA	S	MF	53	17 A	Y

JOB NAME NMP - UNIT 2
UTILITY NIAGARA MOHAWK

SEISMIC AND DYNAMIC QUALIFICATION SUMMARY AND STATUS REPORT
MASTER LIST OF SAFETY RELATED EQUIPMENT

ENGINEER: STONE & WEBSTER
NSSS SUPPLIER: GENERAL ELECTRIC

EQUIP. ID / SWEC ID	EQUIPMENT DESCRIPTION / MANUFACTURER	PPD NO.	LOCATION BLDG	LOCATION ELEV	LOCATION HTG	LOADS SEIS	LOADS HYDR	QUAL ANLYS	METH TEST	NAT FREQ LOWEST	RRS REF STATUS QUAL	RRS REF STATUS INST
2HVC*AOD54B	SUCTION DAMPER FOR FAN PACIFIC AIR PRODUCTS	P413T	CB	282	HH	Y	NA	S	NF	53	17 A	Y
2HVC*AOD6A	ACU DISCH. DAMPER PACIFIC AIR PRODUCTS	P413T	CB	300	HH	Y	NA	S	NF	53	18 A	Y
2HVC*AOD6B	ACU DISCH. DAMPER PACIFIC AIR PRODUCTS	P413T	CB	317	CB	Y	NA	S	NF	53	19 A	Y
2HVC*AOD61A	CB AIR ISOLATION DAMPER PACIFIC AIR PRODUCTS	P413T	CB	316	HH	Y	NA	S	NF	53	19 A	Y
2HVC*AOD61B	CB AIR ISOLATION DAMPER PACIFIC AIR PRODUCTS	P413T	CB	298	HH	Y	NA	S	NF	53	18 A	Y
2HVC*DMPF1	FIRE DAMPER PACIFIC AIR	P413T	ASB	237	HH	Y	NA	S	NA	17	5 A	Y
2HVC*DMPF10	FIRE DAMPER PACIFIC AIR	P413T	CB	256	HH	Y	NA	S	NA	17	16 A	Y
2HVC*DMPF11	FIRE DAMPER PACIFIC AIR	P413T	CB	256	HH	Y	NA	S	NA	17	6 A	Y
2HVC*DMPF110	FIRE DAMPER PACIFIC AIR	P413T	CB	288	HH	Y	NA	S	NA	17	18 A	Y
2HVC*DMPF112	FIRE DAMPER PACIFIC AIR	P413T	CB	261	HH	Y	NA	S	NA	17	16 A	Y
2HVC*DMPF113	FIRE DAMPER PACIFIC AIR	P413T	CB	274	HH	Y	NA	S	NA	17	17 A	Y
2HVC*DMPF115	FIRE DAMPER PACIFIC AIR	P413T	CB	262	HH	Y	NA	S	NA	17	17 A	Y
2HVC*DMPF117	FIRE DAMPER PACIFIC AIR	P413T	CB	262	HH	Y	NA	S	NA	17	17 A	Y

JOB NAME NMP - UNIT 2
UTILITY NIAGARA MOHAWK

SEISMIC AND DYNAMIC QUALIFICATION SUMMARY AND STATUS REPORT
MASTER LIST OF SAFETY RELATED EQUIPMENT

ENGINEER: STONE & WEBSTER
NSSS SUPPLIER: GENERAL ELECTRIC

EQUIP. ID / SWEC ID	EQUIPMENT DESCRIPTION / MANUFACTURER	PPD NO.	LOCATION BLDG	LOCATION ELEV	LOCATION HTG	LOADS SEIS	LOADS HYDR	QUAL ANLYS	METH TEST	NAT FREQ LOWEST	RRS REF	STATUS QUAL	STATUS INST
2HVC*DMPF12	FIRE DAMPER PACIFIC AIR	P413T	CB	237	MM	Y	NA	S	NA	17	15	A	Y
2HVC*DMPF120	FIRE DAMPER PACIFIC AIR	P413T	CB	262	MM	Y	NA	S	NA	17	17	A	Y
2HVC*DMPF13	FIRE DAMPER PACIFIC AIR	P413T	CB	237	MM	Y	NA	S	NA	17	15	A	Y
2HVC*DMPF132	FIRE DAMPER PACIFIC AIR	P413T	CB	298	MM	Y	NA	S	NA	17	18	A	Y
2HVC*DMPF135	FIRE DAMPER PACIFIC AIR	P413T	CB	224	MM	Y	NA	S	NA	17	15	A	Y
2HVC*DMPF137	FIRE DAMPER PACIFIC AIR	P413T	CB	222	MM	Y	NA	S	NA	17	15	A	Y
2HVC*DMPF139	FIRE DAMPER PACIFIC AIR	P413T	CB	275	MM	Y	NA	S	NA	17	17	A	Y
2HVC*DMPF140	FIRE DAMPER PACIFIC AIR	P413T	CB	224	MM	Y	NA	S	NA	17	15	A	Y
2HVC*DMPF141	FIRE DAMPER PACIFIC AIR	P413T	CB	275	MM	Y	NA	S	NA	17	17	A	Y
2HVC*DMPF15	FIRE DAMPER PACIFIC AIR	P413T	CB	228	MM	Y	NA	S	NA	17	15	A	Y
2HVC*DMPF16	FIRE DAMPER PACIFIC AIR	P413T	CB	228	MM	Y	NA	S	NA	17	15	A	Y
2HVC*DMPF167	FIRE DAMPER PACIFIC AIR	P413T	ET	230	MM	Y	NA	S	NA	17	1,20	A	Y
2HVC*DMPF169	FIRE DAMPER PACIFIC AIR	P413T	CB	270	MM	Y	NA	S	NA	17	17	A	Y

JOB NAME NMP - UNIT 2
UTILITY NIAGARA MOHAWK

SEISMIC AND DYNAMIC QUALIFICATION SUMMARY AND STATUS REPORT
MASTER LIST OF SAFETY RELATED EQUIPMENT

ENGINEER: STONE & WEBSTER
NSSS SUPPLIER: GENERAL ELECTRIC

EQUIP. ID / SHEC ID	EQUIPMENT: DESCRIPTION / MANUFACTURER	PPD NO.	LOCATION: BLDG	ELEV	HTG	LOADS: SEIS	HYDR	QUAL ANLYS	METH- TEST	NAT FREQ- LOWEST	RRS REF STATUS: QUAL	INST
2HVC*DMPF17	FIRE DAMPER PACIFIC AIR	P413T	CB	228	HH	Y	NA	S	NA	17	15 A	Y
2HVC*DMPF170	FIRE DAMPER PACIFIC AIR	P413T	CB	283	HH	Y	NA	S	NA	17	17 A	Y
2HVC*DMPF171	FIRE DAMPER PACIFIC AIR	P413T	CB	288	HH	Y	NA	S	NA	17	18 A	Y
2HVC*DMPF172	FIRE DAMPER PACIFIC AIR	P413T	CB	283	HH	Y	NA	S	NA	17	17 A	Y
2HVC*DMPF179	FIRE DAMPER PACIFIC AIR	P413T	CB	288	HH	Y	NA	S	NA	17	18 A	Y
2HVC*DMPF18	FIRE DAMPER PACIFIC AIR	P413T	CB	256	HH	Y	NA	S	NA	17	16 A	Y
2HVC*DMPF190	FIRE DAMPER PACIFIC AIR	P413T	CB	262	HH	Y	NA	S	NA	17	17 A	Y
2HVC*DMPF191	FIRE DAMPER PACIFIC AIR	P413T	CB	262	HH	Y	NA	S	NA	17	17 A	Y
2HVC*DMPF197	FIRE DAMPER PACIFIC AIR	P413T	CB	237	HH	Y	NA	S	NA	17	15 A	Y
2HVC*DMPF198	FIRE DAMPER PACIFIC AIR	P413T	CB	237	HH	Y	NA	S	NA	17	15 A	Y
2HVC*DMPF2	FIRE DAMPER PACIFIC AIR	P413T	ASB	237	HH	Y	NA	S	NA	17	5 A	Y
2HVC*DMPF200	FIRE DAMPER PACIFIC AIR	P413T	CB	228	HH	Y	NA	S	NA	17	15 A	Y
2HVC*DMPF201	FIRE DAMPER PACIFIC AIR	P413T	CB	275	HH	Y	NA	S	NA	17	17 A	Y

JOB NAME NMP - UNIT 2
UTILITY NIAGARA MOHAWK

SEISMIC AND DYNAMIC QUALIFICATION SUMMARY AND STATUS REPORT
MASTER LIST OF SAFETY RELATED EQUIPMENT

ENGINEER: STONE & WEBSTER
NSSS SUPPLIER: GENERAL ELECTRIC

EQUIP. ID / SHEC ID	EQUIPMENT: DESCRIPTION / MANUFACTURER	FPD NO.	LOCATION: BLDG	ELEV	HTG	LOADS: SEIS	HYDR	QUAL ANLYS	HETH- TEST	NAT FREQ- LOWEST	RRS REF / STATUS: QUAL	INST
2HVC*DMPF202	FIRE DAMPER PACIFIC AIR	P413T	CB	275	MM	Y	NA	S	NA	17	17 A	Y
2HVC*DMPF211	FIRE DAMPER PACIFIC AIR	P413T	CB	306	MM	Y	NA	S	NA	17	18 A	Y
2HVC*DMPF212	FIRE DAMPER PACIFIC AIR	P413T	CB	306	MM	Y	NA	S	NA	17	18 A	Y
2HVC*DMPF213	FIRE DAMPER PACIFIC AIR	P413T	ET	221	MM	Y	NA	S	NA	17	1,20 A	Y
2HVC*DMPF214	FIRE DAMPER PACIFIC AIR	P413T	ASB	237	MM	Y	NA	S	NA	17	5 A	Y
2HVC*DMPF215	FIRE DAMPER PACIFIC AIR	P413T	ASB	232	MM	Y	NA	S	NA	17	5 A	Y
2HVC*DMPF22	FIRE DAMPER PACIFIC AIR	P413T	CB	256	MM	Y	NA	S	NA	17	16 A	Y
2HVC*DMPF220	FIRE DAMPER PACIFIC AIR	P413T	CB	269	MM	Y	NA	S	NA	17	17 A	Y
2HVC*DMPF225	FIRE DAMPER PACIFIC AIR	P413T	ASB	237	MM	Y	NA	S	NA	17	5 A	Y
2HVC*DMPF226	FIRE DAMPER PACIFIC AIR	P413T	ET	237	MM	Y	NA	S	NA	17	1,20 A	Y
2HVC*DMPF23	FIRE DAMPER PACIFIC AIR	P413T	CB	256	MM	Y	NA	S	NA	17	16 A	Y
2HVC*DMPF230	FIRE DAMPER PACIFIC AIR	P413T	CB	297	MM	Y	NA	S	NA	17	18 A	Y
2HVC*DMPF231	FIRE DAMPER PACIFIC AIR	P413T	CB	214	MM	Y	NA	S	NA	17	14 A	Y

JOB NAME NMP - UNIT 2
UTILITY NIAGARA MOHAWK

SEISMIC AND DYNAMIC QUALIFICATION SUMMARY AND STATUS REPORT
MASTER LIST OF SAFETY RELATED EQUIPMENT

ENGINEER: STONE & WEBSTER
NSSS SUPPLIER: GENERAL ELECTRIC

EQUIP. ID / SWEC ID	EQUIPMENT: DESCRIPTION / MANUFACTURER	PPD NO.	LOCATION: BLDG	ELEV	HTG	LOADS: SEIS	HYDR	QUAL ANLYS	HETH- TEST	NAT FREQ- LOWEST	RRS REF STATUS: QUAL	INST
2HVC*DMPF232	FIRE DAMPER PACIFIC AIR	P413T	ET	237	MM	Y	NA	S	NA	17	1,20 A	Y
2HVC*DMPF233	FIRE DAMPER PACIFIC AIR	P413T	CB	280	MM	Y	NA	S	NA	17	17 A	Y
2HVC*DMPF24	FIRE DAMPER PACIFIC AIR	P413T	CB	238	MM	Y	NA	S	NA	17	16 A	Y
2HVC*DMPF25	FIRE DAMPER PACIFIC AIR	P413T	CB	257	MM	Y	NA	S	NA	17	16 A	Y
2HVC*DMPF26	FIRE DAMPER PACIFIC AIR	P413T	CB	237	MM	Y	NA	S	NA	17	19 A	Y
2HVC*DMPF27	FIRE DAMPER PACIFIC AIR	P413T	CB	224	MM	Y	NA	S	NA	17	15 A	Y
2HVC*DMPF29	FIRE DAMPER PACIFIC AIR	P413T	CB	228	MM	Y	NA	S	NA	17	15 A	Y
2HVC*DMPF3	FIRE DAMPER PACIFIC AIR	P413T	ASB	250	MM	Y	NA	S	NA	17	5 A	Y
2HVC*DMPF30	FIRE DAMPER PACIFIC AIR	P413T	CB	256	MM	Y	NA	S	NA	17	16 A	Y
2HVC*DMPF32	FIRE DAMPER PACIFIC AIR	P413T	CB	318	MM	Y	NA	S	NA	17	19 A	Y
2HVC*DMPF33	FIRE DAMPER PACIFIC AIR	P413T	CB	317	MM	Y	NA	S	NA	17	19 A	Y
2HVC*DMPF37	FIRE DAMPER PACIFIC AIR	P413T	CB	316	MM	Y	NA	S	NA	17	19 A	Y
2HVC*DMPF39	FIRE DAMPER PACIFIC AIR	P413T	CB	316	MM	Y	NA	S	NA	17	19 A	Y

JOB NAME NMP - UNIT 2
UTILITY NIAGARA MOHAWK

SEISMIC AND DYNAMIC QUALIFICATION SUMMARY AND STATUS REPORT
MASTER LIST OF SAFETY RELATED EQUIPMENT

ENGINEER: STONE & WEBSTER
NSSS SUPPLIER: GENERAL ELECTRIC

EQUIP. ID / SWEC ID	EQUIPMENT: DESCRIPTION / MANUFACTURER	PPD NO.	LOCATION: BLDG	ELEV	HTG	LOADS: SEIS	HYDR	QUAL METH: ANLYS	TEST	NAT FREQ: LOWEST	RRS REF STATUS: QUAL	INST
2HVC*DMPF4	FIRE DAMPER PACIFIC AIR	P413T	ASB	237	HH	Y	NA	S	NA	17	5 A	Y
2HVC*DMPF40	FIRE DAMPER PACIFIC AIR	P413T	CB	318	HH	Y	NA	S	NA	17	19 A	Y
2HVC*DMPF42	FIRE DAMPER PACIFIC AIR	P413T	CB	319	HH	Y	NA	S	NA	17	19 A	Y
2HVC*DMPF43	FIRE DAMPER PACIFIC AIR	P413T	CB	319	HH	Y	NA	S	NA	17	19 A	Y
2HVC*DMPF44	FIRE DAMPER PACIFIC AIR	P413T	CB	238	HH	Y	NA	S	NA	17	16 A	Y
2HVC*DMPF47	FIRE DAMPER PACIFIC AIR	P413T	CB	318	HH	Y	NA	S	NA	17	19 A	Y
2HVC*DMPF48	FIRE DAMPER PACIFIC AIR	P413T	CB	320	HH	Y	NA	S	NA	17	19 A	Y
2HVC*DMPF49	FIRE DAMPER PACIFIC AIR	P413T	CB	311	HH	Y	NA	S	NA	17	19 A	Y
2HVC*DMPF52	FIRE DAMPER PACIFIC AIR	P413T	CB	306	HH	Y	NA	S	NA	17	18 A	Y
2HVC*DMPF53	FIRE DAMPER PACIFIC AIR	P413T	CB	311	HH	Y	NA	S	NA	17	19 A	Y
2HVC*DMPF54	FIRE DAMPER PACIFIC AIR	P413T	CB	315	HH	Y	NA	S	NA	17	19 A	Y
2HVC*DMPF55	FIRE DAMPER PACIFIC AIR	P413T	CB	306	HH	Y	NA	S	NA	17	18 A	Y
2HVC*DMPF63	FIRE DAMPER PACIFIC AIR	P413T	CB	315	HH	Y	NA	S	NA	17	19 A	Y

JOB NAME NMP - UNIT 2
UTILITY NIAGARA MOHAWK

SEISMIC AND DYNAMIC QUALIFICATION SUMMARY AND STATUS REPORT
MASTER LIST OF SAFETY RELATED EQUIPMENT

ENGINEER: STONE & WEBSTER
NSSS SUPPLIER: GENERAL ELECTRIC

EQUIP. ID / SHEC ID	EQUIPMENT: DESCRIPTION / MANUFACTURER	PPD NO.	LOCATION: BLDG	ELEV	MTG	LOADS: SEIS	HYDR	QUAL METH: ANLYS	TEST	NAT FREQ: LOWEST	RRS REF STATUS: QUAL	INST
2HVC*DMPF66	FIRE DAMPER PACIFIC AIR	P413T	CB	317	HH	Y	NA	S	NA	17	19 A	Y
2HVC*DMPF7	FIRE DAMPER PACIFIC AIR	P413T	CB	256	HH	Y	NA	S	NA	17	16 A	Y
2HVC*DMPF73	FIRE DAMPER PACIFIC AIR	P413T	CB	300	HH	Y	NA	S	NA	17	18 A	Y
2HVC*DMPF74	FIRE DAMPER PACIFIC AIR	P413T	CB	298	HH	Y	NA	S	NA	17	18 A	Y
2HVC*DMPF8	FIRE DAMPER PACIFIC AIR	P413T	ASB	255	HH	Y	NA	S	NA	17	6 A	Y
2HVC*DMPF80	FIRE DAMPER PACIFIC AIR	P413T	CB	300	HH	Y	NA	S	NA	17	18 A	Y
2HVC*DMPF81	FIRE DAMPER PACIFIC AIR	P413T	CB	289	HH	Y	NA	S	NA	17	18 A	Y
2HVC*DMPF82	FIRE DAMPER PACIFIC AIR	P413T	CB	238	HH	Y	NA	S	NA	17	16 A	Y
2HVC*DMPF86	FIRE DAMPER PACIFIC AIR	P413T	CB	299	HH	Y	NA	S	NA	17	18 A	Y
2HVC*DMPF88	FIRE DAMPER PACIFIC AIR	P413T	CB	299	HH	Y	NA	S	NA	17	18 A	Y
2HVC*DMPF89	FIRE DAMPER PACIFIC AIR	P413T	CB	292	HH	Y	NA	S	NA	17	18 A	Y
2HVC*DMPF9	FIRE DAMPER PACIFIC AIR	P413T	ASB	256	HH	Y	NA	S	NA	17	6 A	Y
2HVC*DMPF90	FIRE DAMPER PACIFIC AIR	P413T	CB	306	HH	Y	NA	S	NA	17	18 A	Y

JOB NAME NMP - UNIT 2
UTILITY NIAGARA MOHAWK

SEISMIC AND DYNAMIC QUALIFICATION SUMMARY AND STATUS REPORT
MASTER LIST OF SAFETY RELATED EQUIPMENT

ENGINEER: STONE & WEBSTER
NSSS SUPPLIER: GENERAL ELECTRIC

EQUIP. ID / SHEC ID	EQUIPMENT DESCRIPTION / MANUFACTURER	PPD NO.	LOCATION BLDG	LOCATION ELEV	LOCATION HTG	LOADS SEIS	LOADS HYDR	QUAL ANLYS	METH- TEST	NAT FREQ- LOWEST	RRS REF	STATUS QUAL	STATUS INST
2HVC*DMPF92	FIRE DAMPER PACIFIC AIR	P413T	CB	292	MM	Y	NA	S	NA	17	18	A	Y
2HVC*DMPF94	FIRE DAMPER PACIFIC AIR	P413T	CB	301	MM	Y	NA	S	NA	17	18	A	Y
2HVC*DMPF95	FIRE DAMPER PACIFIC AIR	P413T	CB	268	MM	Y	NA	S	NA	17	18	A	Y
2HVC*DMPF96	FIRE DAMPER PACIFIC AIR	P413T	CB	297	MM	Y	NA	S	NA	17	18	A	Y
2HVC*DMPF97	FIRE DAMPER PACIFIC AIR	P413T	CB	299	MM	Y	NA	S	NA	17	18	A	Y
2HVC*DMP1A	BACKDRAFT DAMPER PACIFIC AIR	P413T	CB	193	MM	Y	NA	S	NA	33	14	A	N
2HVC*DMP1B	BACKDRAFT DAMPER PACIFIC AIR	P413T	CB	193	MM	Y	NA	S	NA	33	14	A	Y
2HVC*DMP101	BACKDRAFT DAMPER PACIFIC AIR	P413T	CB	306	MM	Y	NA	S	SF	26	18	A	Y
2HVC*DMP12A	BACKDRAFT DAMPER PACIFIC AIR	P413T	CB	298	MM	Y	NA	S	NA	33	18	A	Y
2HVC*DMP12B	BACKDRAFT DAMPER PACIFIC AIR	P413T	CB	298	MM	Y	NA	S	NA	33	18	A	Y
2HVC*DMP13A	BACKDRAFT DAMPER PACIFIC AIR	P413T	CB	298	MM	Y	NA	S	NA	33	18	A	Y
2HVC*DMP13B	BACKDRAFT DAMPER PACIFIC AIR	P413T	CB	298	MM	Y	NA	S	NA	33	18	A	Y
2HVC*DMP2A	BACKDRAFT DAMPER PACIFIC AIR	P413T	CB	293	MM	Y	NA	S	NA	33	18	A	Y

JOB NAME NMP - UNIT 2
UTILITY NIAGARA MOHAWK

SEISMIC AND DYNAMIC QUALIFICATION SUMMARY AND STATUS REPORT
MASTER LIST OF SAFETY RELATED EQUIPMENT

ENGINEER: STONE & WEBSTER
NSSS SUPPLIER: GENERAL ELECTRIC

EQUIP. ID / SHEC ID	EQUIPMENT DESCRIPTION / MANUFACTURER	PPD NO.	LOCATION BLDG	LOCATION ELEV	LOCATION HTG	LOADS SEIS	LOADS HYDR	QUAL ANLYS	METH TEST	NAT FREQ LOWEST	RRS REF	STATUS QUAL	STATUS INST
2HVC*DMP2B	BACKDRAFT DAMPER PACIFIC AIR	P413T	CB	311	MM	Y	NA	S	NA	33	19	A	Y
2HVC*DMP22	TORNADO DAMPER PACIFIC AIR	P413T	CB	294	MM	Y	NA	S	SF	26	18	A	Y
2HVC*DMP23	TORNADO DAMPER PACIFIC AIR	P413T	ASB	247	MM	Y	NA	S	SF	26	6	A	Y
2HVC*DMP24	TORNADO DAMPER PACIFIC AIR	P413T	ASB	247	MM	Y	NA	S	SF	26	6	A	Y
2HVC*DMP25	TORNADO DAMPER PACIFIC AIR	P413T	CB	279	MM	Y	NA	S	SF	26	17	A	Y
2HVC*DMP26	TORNADO DAMPER PACIFIC AIR	P413T	CB	283	MM	Y	NA	S	SF	26	17	A	Y
2HVC*DMP3A	BACKDRAFT DAMPER PACIFIC AIR	P413T	CB	219	MM	Y	NA	S	NA	33	15	A	Y
2HVC*DMP3B	BACKDRAFT DAMPER PACIFIC AIR	P413T	CB	219	MM	Y	NA	S	NA	33	15	A	Y
2HVC*DMP4	TORNADO DAMPER PACIFIC AIR	P413T	CB	316	MM	Y	NA	S	SF	26	19	A	Y
2HVC*DMP5	MANUAL DAMPER PACIFIC AIR	P413T	CB	314	MM	Y	NA	S	SF	31	19	A	Y
2HVC*DMP51A	BACKDRAFT DAMPER PACIFIC AIR	P413T	CB	261	MM	Y	NA	S	NA	33	16	A	Y
2HVC*DMP51B	BACKDRAFT DAMPER PACIFIC AIR	P413T	CB	261	MM	Y	NA	S	NA	33	16	A	Y
2HVC*DMP6A	MANUAL DAMPER PACIFIC AIR	P413T	CB	292	MM	Y	NA	S	SF	53	18	A	Y

JOB NAME NMP - UNIT 2
UTILITY NIAGARA MOHAWK

SEISMIC AND DYNAMIC QUALIFICATION SUMMARY AND STATUS REPORT
MASTER LIST OF SAFETY RELATED EQUIPMENT

ENGINEER: STONE & HEBSTER
NSSS SUPPLIER: GENERAL ELECTRIC

EQUIP. ID / SHEC ID	EQUIPMENT DESCRIPTION / MANUFACTURER	PPD NO.	LOCATION BLDG	LOCATION ELEV	LOCATION HTG	LOADS SEIS	LOADS HYDR	QUAL ANLYS	METH TEST	NAT FREQ LOWEST	RRS REF	STATUS QUAL	STATUS INST
2HVC*DMP6B	MANUAL DAMPER PACIFIC AIR	P413T	CB	292	HH	Y	NA	S	SF	53	18	A	Y
2HVC*DMP63	BACKDRAFT DAMPER PACIFIC AIR	P413T	CB	315	HH	Y	NA	S	NA	33	19	A	Y
2HVC*DMP71	BACKDRAFT DAMPER PACIFIC AIR	P413T	CB	319	HH	Y	NA	S	NA	33	19	A	Y
2HVC*DMP72	BACKDRAFT DAMPER PACIFIC AIR	P413T	CB	318	HH	Y	NA	S	NA	33	19	A	Y
2HVC*DMP73	BACKDRAFT DAMPER PACIFIC AIR	P413T	CB	320	HH	Y	NA	S	NA	33	19	A	Y
2HVC*DMP75	BACKDRAFT DAMPER PACIFIC AIR	P413T	CB	300	HH	Y	NA	S	NA	33	18	A	Y
2HVC*DMP76A	MANUAL DAMPER PACIFIC AIR	P413T	CB	261	HH	Y	NA	S	NA	53	16	A	Y
2HVC*DMP76B	MANUAL DAMPER PACIFIC AIR	P413T	CB	261	HH	Y	NA	S	NA	53	16	A	Y
2HVC*DMP8A	BACKDRAFT DAMPER PACIFIC AIR	P413T	CB	279	HH	Y	NA	S	NA	33	17	A	Y
2HVC*DMP8B	BACKDRAFT DAMPER PACIFIC AIR	P413T	CB	279	HH	Y	NA	S	NA	33	17	A	Y
2HVC*DMP80	BACKDRAFT DAMPER PACIFIC AIR	P413T	CB	317	HH	Y	NA	S	NA	33	19	A	Y
2HVC*DMP81	BACKDRAFT DAMPER PACIFIC AIR	P413T	CB	315	HH	Y	NA	S	NA	33	19	A	Y
2HVC*DMP82	BACKDRAFT DAMPER PACIFIC AIR	P413T	CB	299	HH	Y	NA	S	NA	33	18	A	Y

JOB NAME NMP - UNIT 2
UTILITY NIAGARA MOHAWK

SEISMIC AND DYNAMIC QUALIFICATION SUMMARY AND STATUS REPORT
MASTER LIST OF SAFETY RELATED EQUIPMENT

ENGINEER: STONE & WEBSTER
NSSS SUPPLIER: GENERAL ELECTRIC

EQUIP. ID / SHEC ID	EQUIPMENT DESCRIPTION / MANUFACTURER	PPD NO.	LOCATION BLDG	ELEV	MTG	LOADS SEIS	HYDR	QUAL ANLYS	METH TEST	NAT FREQ LOWEST	RRS REF	STATUS QUAL	STATUS INST
2HVC*DMP83	BACKDRAFT DAMPER PACIFIC AIR	P413T	CB	297	HH	Y	NA	S	NA	33	18	A	Y
2HVC*DMP88	MANUAL DAMPER PACIFIC AIR	P413T	CB	283	HH	Y	NA	S	SF	53	17	A	Y
2HVC*DMP9	TORNADO DAMPER PACIFIC AIR	P413T	CB	301	HH	Y	NA	S	SF	26	18	A	Y
2HVC*DMP90	BACKDRAFT DAMPER PACIFIC AIR	P413T	CB	262	HH	Y	NA	S	NA	33	17	A	Y
2HVC*DMP91	BACKDRAFT DAMPER PACIFIC AIR	P413T	CB	262	HH	Y	NA	S	NA	33	17	A	Y
2HVC*DMP93	BACKDRAFT DAMPER PACIFIC AIR	P413T	CB	288	HH	Y	NA	S	NA	33	18	A	Y
2HVC*DMP94	BACKDRAFT DAMPER PACIFIC AIR	P413T	CB	301	HH	Y	NA	S	NA	33	18	A	Y
2HVC*DMP98	BACKDRAFT DAMPER PACIFIC AIR	P413T	CB	306	HH	Y	NA	S	SF	26	18	A	Y
2HVC*DMP99	BACKDRAFT DAMPER PACIFIC AIR	P413T	CB	288	HH	Y	NA	S	SF	26	18	A	Y
2HVP*AOD4A	ENGINE RM INLET DAMPER PACIFIC AIR	P413T	DG	284	HH	Y	NA	S	HF	53	17	A	Y
2HVP*AOD4B	ENGINE RM INLET DAMPER PACIFIC AIR	P413T	DG	284	HH	Y	NA	S	NA	53	17	A	Y
2HVP*AOD4C	ENGINGE RM INLET DAMPER PACIFIC AIR	P413T	DG	284	HH	Y	NA	S	HF	53	17	A	Y
2HVP*AOD4D	ENGINE RM INLET DAMPER PACIFIC AIR	P413T	DG	284	HH	Y	NA	S	HF	53	17	A	Y

JOB NAME NMP - UNIT 2
UTILITY NIAGARA MOHAWK

SEISMIC AND DYNAMIC QUALIFICATION SUMMARY AND STATUS REPORT
MASTER LIST OF SAFETY RELATED EQUIPMENT

ENGINEER: STONE & WEBSTER
NSSS SUPPLIER: GENERAL ELECTRIC

EQUIP. ID / SHEC ID	EQUIPMENT DESCRIPTION / MANUFACTURER	PPD NO.	LOCATION BLDG	LOCATION ELEV	LOCATION HTG	LOADS SEIS	LOADS HYDR	QUAL ANLYS	HETH TEST	NAT FREQ LOWEST	RRS REF	STATUS QUAL	STATUS INST
2HVP*AOD5A	ENGINE RH INLET DAMPER PACIFIC AIR	P413T	DG	284	HH	Y	NA	S	HF	53	17	A	Y
2HVP*AOD5B	ENGINE RH INLET DAMPER PACIFIC AIR	P413T	DG	284	HH	Y	NA	S	HF	53	17	A	Y
2HVP*DMP13	TORNADO DAMPER PACIFIC AIR	P413T	DG	277	HH	Y	NA	S	SF	26	17	A	Y
2HVP*DMP15A	TORNADO DAMPER PACIFIC AIR	P413T	DG	279	HH	Y	NA	S	SF	26	17	A	Y
2HVP*DMP15B	TORNADO DAMPER PACIFIC AIR	P413T	DG	279	HH	Y	NA	S	SF	26	17	A	Y
2HVP*DMP15C	TORNADO DAMPER PACIFIC AIR	P413T	DG	279	HH	Y	NA	S	SF	26	17	A	Y
2HVP*DMP15D	TORNADO DAMPER PACIFIC AIR	P413T	DG	279	HH	Y	NA	S	SF	26	17	A	Y
2HVP*DMP16A	TORNADO DAMPER PACIFIC AIR	P413T	DG	279	HH	Y	NA	S	SF	26	17	A	Y
2HVP*DMP16B	TORNADO DAMPER PACIFIC AIR	P413T	DG	279	HH	Y	NA	S	SF	26	17	A	Y
2HVP*DMP17A	TORNADO DAMPER PACIFIC AIR	P413T	DG	282	HH	Y	NA	S	SF	26	17	A	Y
2HVP*DMP17B	TORNADO DAMPER PACIFIC AIR	P413T	DG	282	HH	Y	NA	S	SF	26	17	A	Y
2HVP*DMP18	TORNADO DAMPER PACIFIC AIR	P413T	DG	282	HH	Y	NA	S	SF	26	17	A	Y
2HVP*DMP19A	TORNADO DAMPER PACIFIC	P413T	DG	284	HH	Y	NA	S	SF	26	17	A	Y

JOB NAME NMP - UNIT 2
UTILITY NIAGARA MOHAWK

SEISMIC AND DYNAMIC QUALIFICATION SUMMARY AND STATUS REPORT
MASTER LIST OF SAFETY RELATED EQUIPMENT

ENGINEER: STONE & WEBSTER
NSSS SUPPLIER: GENERAL ELECTRIC

EQUIP. ID / SHEC ID	EQUIPMENT: DESCRIPTION / MANUFACTURER	PPD NO.	LOCATION: BLDG	ELEV	HTG	LOADS: SEIS	HYDR	QUAL ANLYS	METH- TEST	NAT FREQ- LOWEST	RRS REF STATUS: QUAL	INST
2HVP*DMP19B	TORNADO DAMPER PACIFIC AIR	P413T	DG	284	MM	Y	NA	S	SF	26	17 A	Y
2HVP*DMP19C	TORNADO DAMPER PACIFIC AIR	P413T	DG	284	MM	Y	NA	S	SF	26	17 A	Y
2HVP*DMP19D	TORNADO DAMPER PACIFIC AIR	P413T	DG	284	MM	Y	NA	S	SF	26	17 A	Y
2HVP*DMP20A	TORNADO DAMPER PACIFIC AIR	P413T	DG	284	MM	Y	NA	S	SF	26	17 A	Y
2HVP*DMP20B	TORNADO DAMPER PACIFIC AIR	P413T	DG	284	MM	Y	NA	S	SF	26	17 A	Y
2HVP*DMP21	TORNADO DAMPER PACIFIC AIR	P413T	DG	261	MM	Y	NA	S	SF	26	16 A	Y
2HVP*MOD1A	DIESEL GEN. RM EXHAUST PACIFIC AIR	P413T	DG	279	MM	Y	NA	S	MF	53	17 A	Y
2HVP*MOD1B	DIESEL GEN. RM EXHAUST PACIFIC AIR	P413T	DG	279	MM	Y	NA	S	MF	53	17 A	Y
2HVP*MOD1C	DIESEL GEN. RM EXHAUST PACIFIC AIR	P413T	DG	279	MM	Y	NA	S	MF	53	17 A	Y
2HVP*MOD1D	DIESEL GEN. RM EXHAUST PACIFIC AIR	P413T	DG	279	MM	Y	NA	S	MF	53	17 A	Y
2HVP*MOD2A	DIESEL GEN. RM EXHAUST PACIFIC AIR	P413T	DG	279	MM	Y	NA	S	MF	53	17 A	Y
2HVP*MOD2B	DIESEL GEN. RM EXHAUST PACIFIC AIR	P413T	DG	279	MM	Y	NA	S	MF	53	17 A	Y
2HVP*MOD6A	DIESEL GEN. RM RECIRC PACIFIC AIR	P413T	DG	280	MM	Y	NA	S	MF	53	17 A	Y

JOB NAME NMP - UNIT 2
UTILITY NIAGARA MOHAWK

SEISMIC AND DYNAMIC QUALIFICATION SUMMARY AND STATUS REPORT
MASTER LIST OF SAFETY RELATED EQUIPMENT

ENGINEER: STONE & WEBSTER
NSSS SUPPLIER: GENERAL ELECTRIC

EQUIP. ID / SHEC ID	EQUIPMENT DESCRIPTION / MANUFACTURER	PPD NO.	LOCATION BLDG	LOCATION ELEV	LOCATION HTG	LOADS SEIS	LOADS HYDR	QUAL ANLYS	METH TEST	NAT FREQ LOWEST	RRS REF	STATUS QUAL	STATUS INST
2HVP*MOD6B	DIESEL GEN. RM. RECIRC. PACIFIC AIR	P413T	DG	280	HH	Y	NA	S	HF	53	17	A	Y
2HVP*MOD6C	DIESEL GEN. RM. RECIRC. PACIFIC AIR	P413T	DG	280	HH	Y	NA	S	HF	53	17	A	Y
2HVP*MOD6D	DIESEL GEN. RM. RECIRC. PACIFIC AIR	P413T	DG	280	HH	Y	NA	S	HF	53	17	A	Y
2HVP*MOD7A	DIESEL GEN. RM. RECIRC. PACIFIC AIR	P413T	DG	280	HH	Y	NA	S	HF	53	17	A	Y
2HVP*MOD7B	DIESEL GEN. RM. RECIRC. PACIFIC AIR	P413T	DG	280	HH	Y	NA	S	HF	53	17	A	Y
2HVR*AOD1A	SUPPLY AIR ISOL. DAMPER PACIFIC AIR	P413T	RB	301	HH	Y	NA	S	HF	41	58	A	Y
2HVR*AOD1B	SUPPLY AIR ISOL. DAMPER PACIFIC AIR	P413T	RB	301	HH	Y	NA	S	HF	41	58	A	Y
2HVR*AOD10A	EXH. AIR ISOL. DAMPER PACIFIC AIR	P413T	RB	416	HH	Y	NA	S	HF	41	55	A	Y
2HVR*AOD10B	EXH AIR ISOL. DAMPER PACIFIC AIR	P413T	RB	416	HH	Y	NA	S	HF	41	55	A	Y
2HVR*AOD114	FILTER DISCH. DAMPER PACIFIC AIR	P413T	RB	309	HH	Y	NA	S	HF	53	58	A	Y
2HVR*AOD204	EVAC FLT3 DISCH DAMPER PACIFIC AIR	P413T	RB	309	HH	Y	NA	S	HF	33	58	A	Y
2HVR*AOD34A	U.C. TEST DAMPER PACIFIC AIR	P413T	RB	296	HH	Y	NA	S	HF	53	58	A	Y
2HVR*AOD34B	U.C. TEST DAMPER PACIFIC AIR	P413T	RB	296	HH	Y	NA	S	HF	53	58	A	Y

JOB NAME NMP - UNIT 2
UTILITY NIAGARA MOHAWK

SEISMIC AND DYNAMIC QUALIFICATION SUMMARY AND STATUS REPORT
MASTER LIST OF SAFETY RELATED EQUIPMENT

ENGINEER: STONE & WEBSTER
NSSS SUPPLIER: GENERAL ELECTRIC

EQUIP. ID / SWEC ID	EQUIPMENT DESCRIPTION / MANUFACTURER	PPD NO.	LOCATION BLDG	LOCATION ELEV	LOCATION HTG	LOADS SEIS	LOADS HYDR	QUAL ANLYS	METH- TEST	NAT FREQ- LOWEST	RRS REF STATUS QUAL	RRS REF STATUS INST
2HVR*AOD6A	U.C. INLET DAMPER PACIFIC AIR	P413T	RB	296	HH	Y	NA	S	HF	53	58 A	Y
2HVR*AOD6B	U.C. INLET DAMPER PACIFIC AIR	P413T	RB	296	HH	Y	NA	S	HF	53	58 A	Y
2HVR*AOD9A	EXH AIR ISOL. DAMPER PACIFIC AIR	P413T	RB	320	HH	Y	NA	S	HF	41	58 A	Y
2HVR*AOD9B	EXH AIR ISOL. DAMPER PACIFIC AIR	P413T	RB	320	HH	Y	NA	S	HF	41	58 A	Y
2HVR*DMPF12	FIRE DAMPER PACIFIC AIR	P413T	RB	199	HH	Y	NA	S	NA	17	62 A	Y
2HVR*DMPF13	FIRE DAMPER PACIFIC AIR	P413T	RB	201	HH	Y	NA	S	NA	17	62 A	Y
2HVR*DMPF4	FIRE DAMPER PACIFIC AIR	P413T	RB	261	HH	Y	NA	S	NA	17	60 A	Y
2HVR*DMPF5	FIRE DAMPER PACIFIC AIR	P413T	RB	250	HH	Y	NA	S	NA	17	60 A	Y
2HVR*DMPF6	FIRE DAMPER PACIFIC AIR	P413T	RB	240	HH	Y	NA	S	NA	17	61 A	Y
2HVR*DMP12	BACKDRAFT DAMPER PACIFIC AIR	P413T	RB	305	HH	Y	NA	S	NA	33	58 A	Y
2HVR*DMP18	BACKDRAFT DAMPER PACIFIC AIR	P413T	RB	297	HH	Y	NA	S	NA	33	58 A	Y
2HVR*DMP19	BACKDRAFT DAMPER PACIFIC AIR	P413T	RB	297	HH	Y	NA	S	NA	33	58 A	Y
2HVR*DMP20	BACKDRAFT DAMPER PACIFIC AIR	P413T	RB	316	HH	Y	NA	S	NA	33	58 A	Y

JOB NAME NMP - UNIT 2
UTILITY NIAGARA MOHAWK

SEISMIC AND DYNAMIC QUALIFICATION SUMMARY AND STATUS REPORT
MASTER LIST OF SAFETY RELATED EQUIPMENT

ENGINEER: STONE & WEBSTER
NSSS SUPPLIER: GENERAL ELECTRIC

EQUIP. ID / SHEC ID	EQUIPMENT DESCRIPTION / MANUFACTURER	PPD NO.	LOCATION BLDG	LOCATION ELEV	LOCATION HTG	LOADS SEIS	LOADS HYDR	QUAL ANLYS	METH. TEST	NAT FREQ. LOWEST	RRS REF STATUS QUAL	RRS REF STATUS INST
2HVR*DMP21	BACKDRAFT DAMPER PACIFIC AIR	P413T	RB	320	HH	Y	NA	S	NA	33	58 A	Y
2HVR*DMP8A	BACKDRAFT DAMPER PACIFIC AIR	P413T	ABN	253	HH	Y	NA	S	NA	33	60 A	Y
2HVR*DMP8B	BACKDRAFT DAMPER PACIFIC AIR	P413T	ABN	253	HH	Y	NA	S	NA	33	60 A	Y
2HVR*DMP9A	BACKDRAFT DAMPER PACIFIC AIR	P413T	ABS	253	HH	Y	NA	S	NA	33	60 A	Y
2HVR*DMP9B	BACKDRAFT DAMPER PACIFIC AIR	P413T	ABS	253	HH	Y	NA	S	NA	33	60 A	Y
2HVY*AOD34A	SMOKE REM. DAMPER PACIFIC AIR	P413T	SB	275	HH	Y	NA	S	HF	53	6 A	Y
2HVY*AOD34B	SMOKE REM. DAMPER PACIFIC AIR	P413T	SB	275	HH	Y	NA	S	HF	53	6 A	Y

JOB NAME NMP - UNIT 2
UTILITY NIAGARA MOHAWK

SEISMIC AND DYNAMIC QUALIFICATION SUMMARY AND STATUS REPORT
MASTER LIST OF SAFETY RELATED EQUIPMENT

ENGINEER: STONE & WEBSTER
NSSS SUPPLIER: GENERAL ELECTRIC

EQUIP. ID / SHEC ID	EQUIPMENT DESCRIPTION / MANUFACTURER	PPD NO.	LOCATION BLDG	LOCATION ELEV	LOCATION HTG	LOADS SEIS	LOADS HYDR	QUAL ANLYS	METH TEST	NAT FREQ LOWEST	RRS REF	STATUS QUAL	STATUS INST
2HVC*DMPF234	FIRE DAMPERS PACIFIC AIR	P413U	CB	302	DH	Y	NA	NA	HF	>15	18	A	Y
2HVC*DMPF235	FIRE DAMPERS PACIFIC AIR	P413U	CB	318	DH	Y	NA	NA	HF	>15	19	A	Y
2HVC*DMPF236	FIRE DAMPERS PACIFIC AIR	P413U	CB	318	DH	Y	NA	NA	HF	>15	19	A	Y
2HVC*DMPF237	FIRE DAMPERS PACIFIC AIR	P413U	CB	318	DH	Y	NA	NA	HF	>15	19	A	Y
2HVC*DMPF238	FIRE DAMPERS PACIFIC AIR	P413U	CB	318	DH	Y	NA	NA	HF	>15	19	A	Y
2HVC*DMPF239	FIRE DAMPERS PACIFIC AIR	P413U	CB	307	DH	Y	NA	NA	HF	>15	18	A	Y
2HVC*DMPF240	FIRE DAMPERS PACIFIC AIR	P413U	CB	298	DH	Y	NA	NA	HF	>15	18	A	Y
2HVC*DMPF241	FIRE DAMPERS PACIFIC AIR	P413U	CB	296	DH	Y	NA	NA	HF	>15	18	A	Y
2HVC*DMPF242	FIRE DAMPERS PACIFIC AIR	P413U	CB	299	DH	Y	NA	NA	HF	>15	18	A	Y
2HVC*DMPF243	FIRE DAMPERS PACIFIC AIR	P413U	CB	299	DH	Y	NA	NA	HF	>15	18	A	Y
2HVC*DMPF244	FIRE DAMPERS PACIFIC AIR	P413U	CB	299	DH	Y	NA	NA	HF	>15	18	A	Y
2HVC*DMPF245	FIRE DAMPERS PACIFIC AIR	P413U	CB	291	DH	Y	NA	NA	HF	>15	18	A	Y
2HVC*DMPF246	FIRE DAMPERS PACIFIC AIR	P413U	CB	269	DH	Y	NA	NA	HF	>15	17	A	Y

[illegible]	[illegible]	[illegible]	[illegible]	[illegible]	[illegible]	[illegible]	[illegible]	[illegible]
[illegible]	[illegible]	[illegible]	[illegible]	[illegible]	[illegible]	[illegible]	[illegible]	[illegible]

JOB NAME NMP - UNIT 2
UTILITY NIAGARA MOHAWK

SEISMIC AND DYNAMIC QUALIFICATION SUMMARY AND STATUS REPORT
MASTER LIST OF SAFETY RELATED EQUIPMENT

ENGINEER: STONE & WEBSTER
NSSS SUPPLIER: GENERAL ELECTRIC

EQUIP. ID / SHEC ID	EQUIPMENT DESCRIPTION / MANUFACTURER	PPD NO.	LOCATION BLDG	LOCATION ELEV	LOCATION HTG	LOADS SEIS	LOADS HYDR	QUAL ANLYS	METH TEST	NAT FREQ LOWEST	RRS REF STATUS QUAL	RRS REF STATUS INST
2HVC*DMPF247	FIRE DAMPERS PACIFIC AIR	P413U	CB	270	DH	Y	NA	NA	HF	>15	17 A	Y
2HVC*DMPF248	FIRE DAMPERS PACIFIC AIR	P413U	CB	269	DH	Y	NA	NA	HF	>15	17 A	Y
2HVC*DMPF249	FIRE DAMPERS PACIFIC AIR	P413U	CB	296	DH	Y	NA	NA	HF	>15	18 A	Y
2HVC*DMPF250	FIRE DAMPERS PACIFIC AIR	P413U	ASB	247	DH	Y	NA	NA	HF	>15	5 A	Y
2HVR*DMPF34	FIRE DAMPERS PACIFIC AIR	P413U	RB	201	DH	Y	NA	NA	HF	>15	63 A	Y