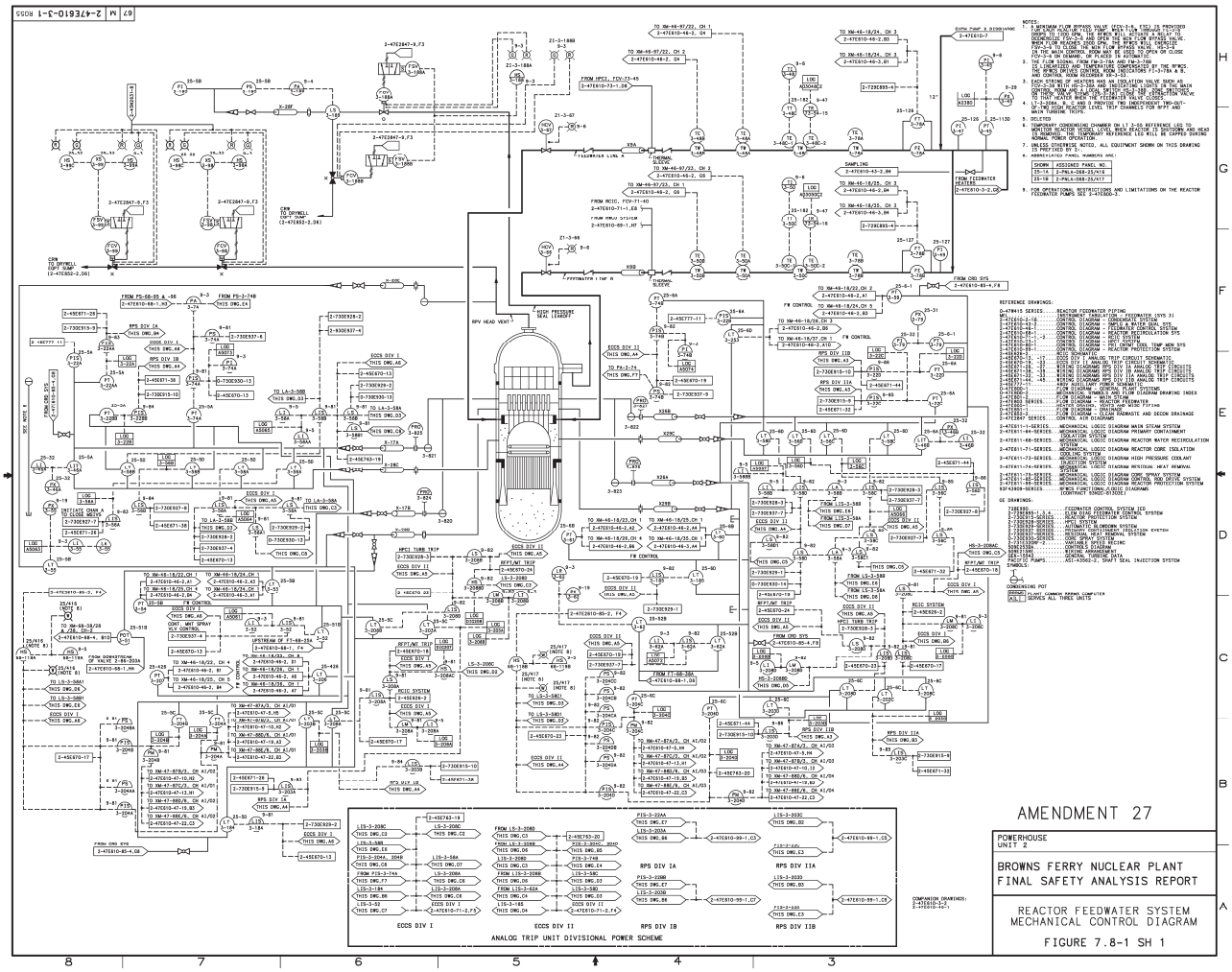
AMENDMENT 27
POWERHOUSE
UNIT 2
BROWNS FERRY NUCLEAR PLANT
FINAL SAFETY ANALYSIS REPORT
REACTOR FEEDWATER SYSTEM
MECHANICAL CONTROL DIAGRAM
FIGURE 7.8-1 SH 1
ANALOG TRIP UNIT DIVISIONAL POWER SCHEME
ECCS DIV I
ECCS DIV II
RPS DIV IA
RPS DIV IB
RPS DIV IIA
RPS DIV IIB
RPV HEAD VENT
HIGH PRESSURE SEAL LEAKOFF
FW CONTROL
SAMPLING
NOTES:
REFERENCE DRAWINGS:
GE DRAWINGS:
SYMBOLS:
COMPANION DRAWINGS:
2-47E610-3-1
M27

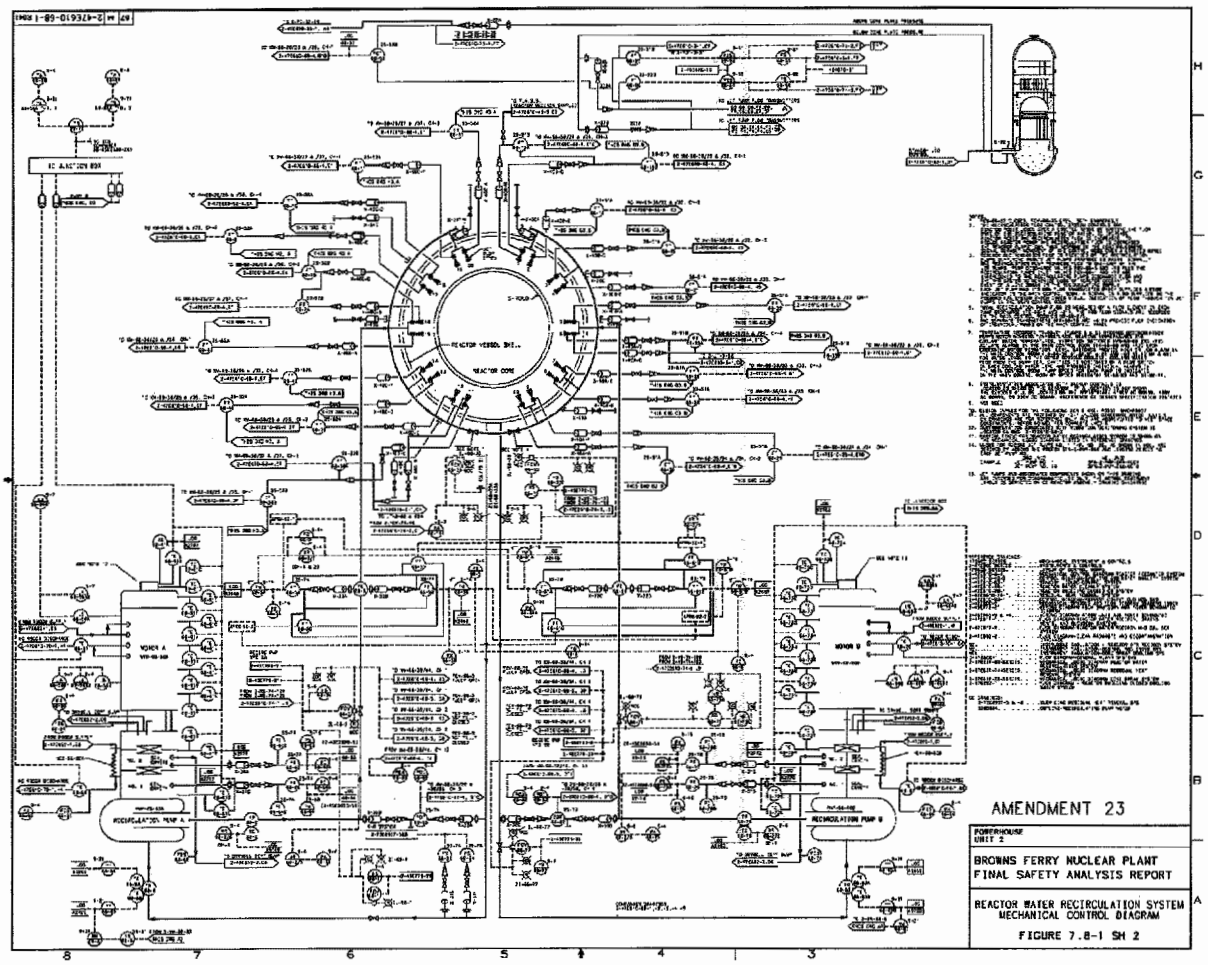
AMENDMENT 23
POWERHOUSE
UNIT 2
BROWNS FERRY NUCLEAR PLANT
FINAL SAFETY ANALYSIS REPORT
REACTOR WATER RECIRCULATION SYSTEM
MECHANICAL CONTROL DIAGRAM
FIGURE 7.8-1 SH 2

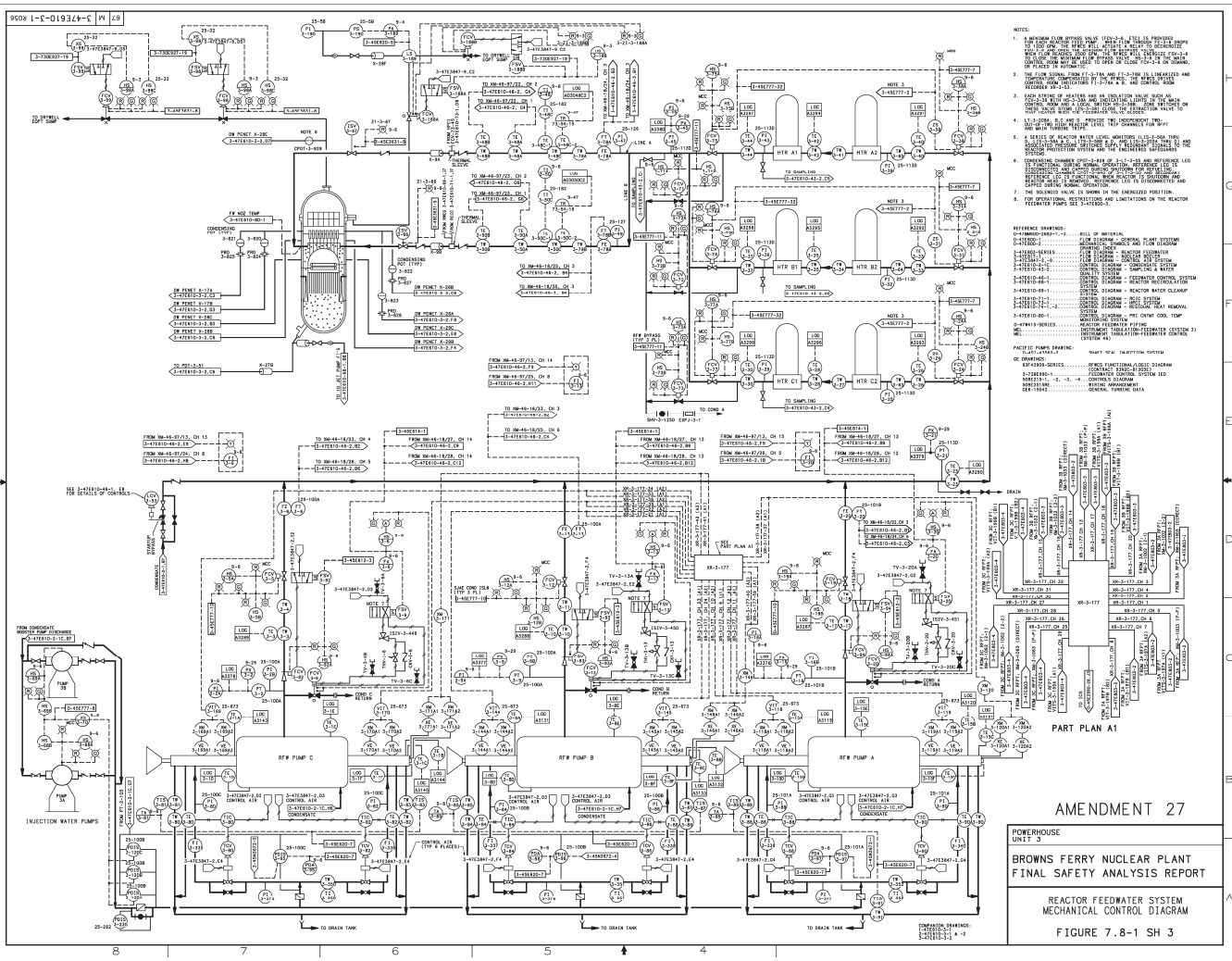
PART PLAN A1
INJECTION WATER PUMPS
RFW PUMP C
RFW PUMP B
RFW PUMP A
HTR A1
HTR A2
HTR B1
HTR B2
HTR C1
HTR C2
TO DRAIN TANK
TO DRAIN TANK
TO DRAIN TANK
DRAIN
AMENDMENT 27
POWERHOUSE
UNIT 3
BROWNS FERRY NUCLEAR PLANT
FINAL SAFETY ANALYSIS REPORT
REACTOR FEEDWATER SYSTEM
MECHANICAL CONTROL DIAGRAM
FIGURE 7.8-1 SH 3

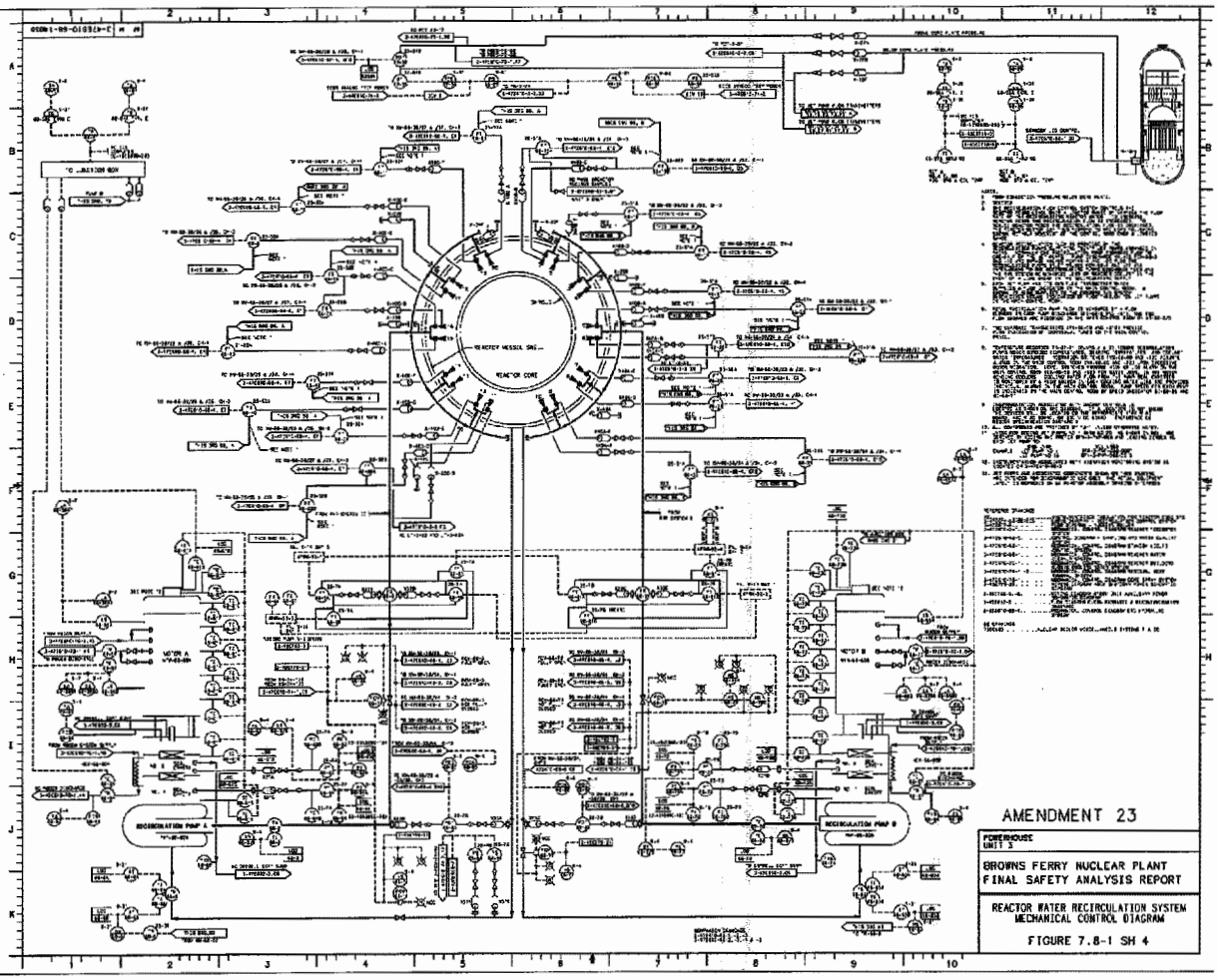

AMENDMENT 23

FOREHOUSE
UNIT 2

BROWNS FERRY NUCLEAR PLANT
FINAL SAFETY ANALYSIS REPORT

REACTOR WATER RECIRCULATION SYSTEM
MECHANICAL CONTROL DIAGRAM

FIGURE 7.8-1 SH 4

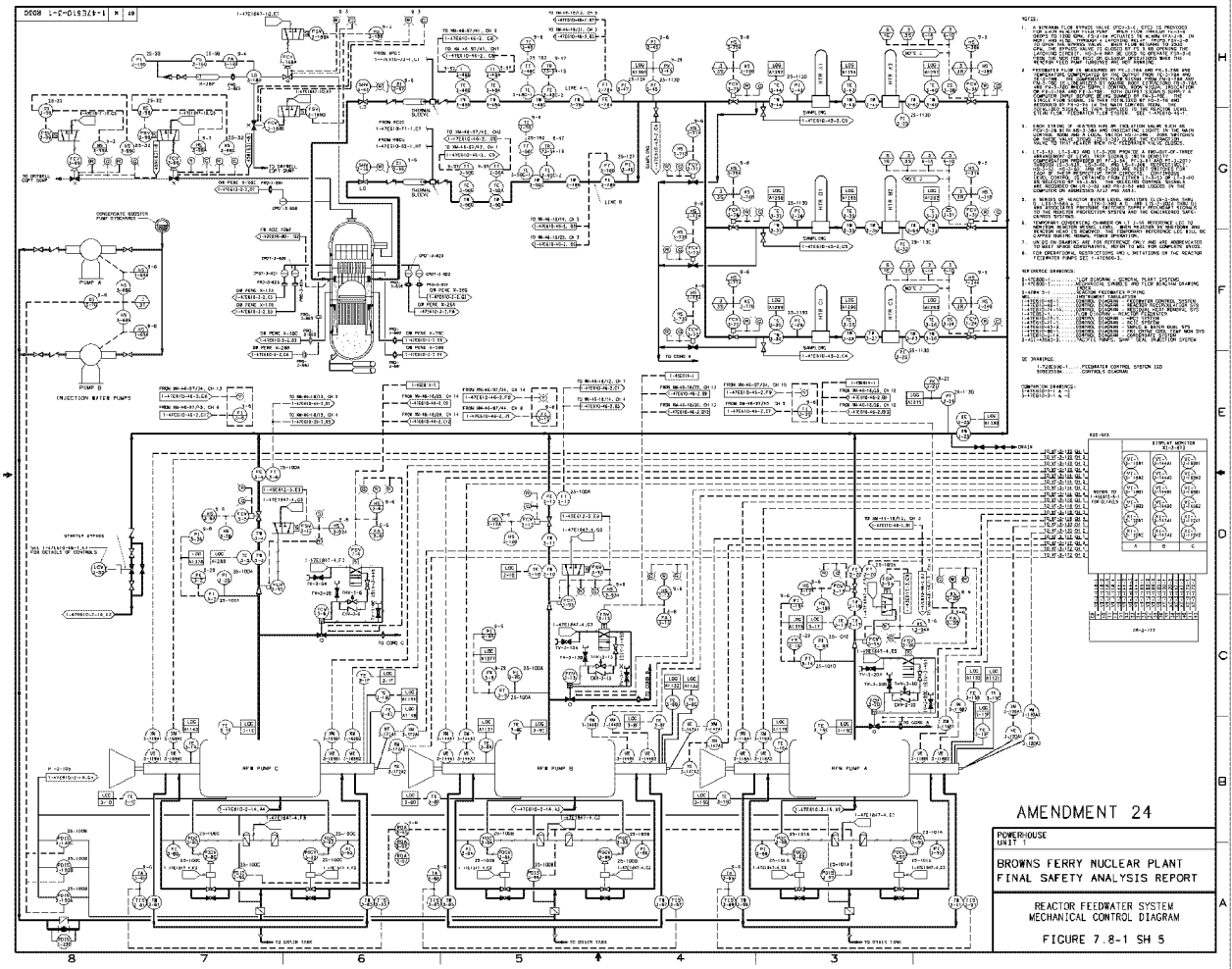

AMENDMENT 24

POWER-HOUSE
UNIT 1

BROWNS FERRY NUCLEAR PLANT
FINAL SAFETY ANALYSIS REPORT

REACTOR FEEDWATER SYSTEM
MECHANICAL CONTROL DIAGRAM

FIGURE 7.8-1 SH 5

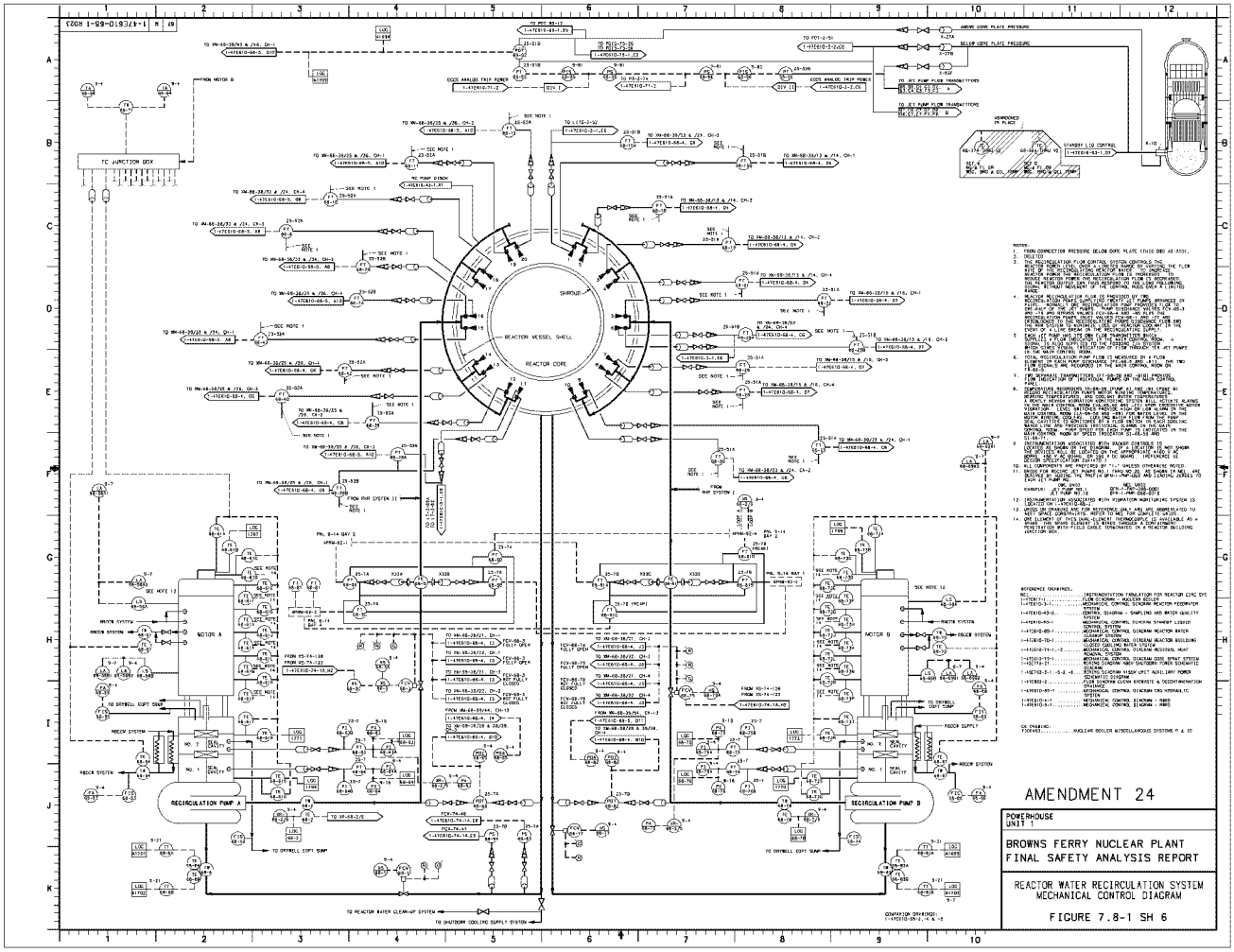
REACTOR VESSEL SHELL
REACTOR CORE
SHROUD
TC JUNCTION BOX
RECIRCULATION PUMP A
RECIRCULATION PUMP B
MOTOR A
MOTOR B
AMENDMENT 24
POWERHOUSE UNIT 1
BROWNS FERRY NUCLEAR PLANT
FINAL SAFETY ANALYSIS REPORT
REACTOR WATER RECIRCULATION SYSTEM
MECHANICAL CONTROL DIAGRAM
FIGURE 7.8-1 SH 6

Figure 7.8-2

(Deleted by Amendment 17)

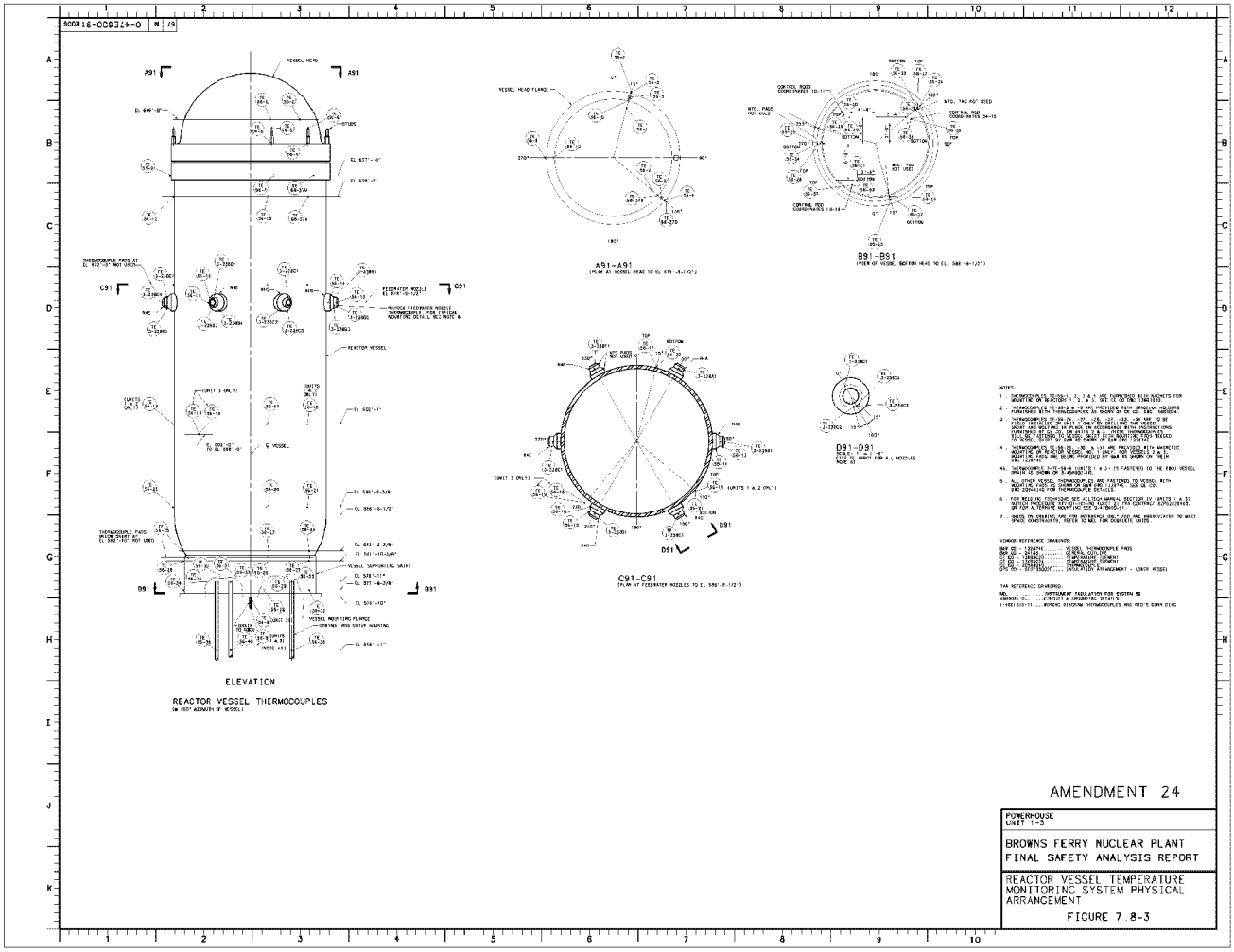

AMENDMENT 24

POWERHOUSE
UNIT 1-3

BROWNS FERRY NUCLEAR PLANT
FINAL SAFETY ANALYSIS REPORT

REACTOR VESSEL TEMPERATURE MONITORING SYSTEM PHYSICAL ARRANGEMENT

FIGURE 7.8-3