NRC FORM 195 (2-76)

U.S. NUCLEAR REGULATORY COMMISSION

NRC DISTRIBUTION FOR PART 50 DOCKET MATERIAL

DOCKET NUMBER: 50-220

FILE NUMBER: INCIDENT REPORT

TO: J. P. O'Reilly

FROM: Niagara Mohawk Power Corp
Syracuse, N.Y. 13202
R.R. Schneider

DATE OF DOCUMENT: 3-14-77

DATE RECEIVED: 3-23-77

☑ LETTER ☒ ORIGINAL ☐ COPY

☐ NOTORIZED ☒ UNCLASSIFIED

PROP

INPUT FORM

NUMBER OF COPIES RECEIVED: 1 signed

DESCRIPTION: Ltr trans the following: 1P

DO NOT REMOVE

ENCLOSURE: Lic Event Report 76-43 occurring on 10-25-76 regarding failure of No. 11 & 12 feedwater pump.....1P

Lic Event Report 76-44 occurring on 11-16-76 involving one emergency vent loop ~~due~~ out of service due to observation door found bent... (1P)

(1 cy ea encl rec'd)

PLANT NAME: Nine Mile Pt Unit 1

DHL ACKNOWLEDGED

NOTE: IF PERSONNEL EXPOSURE IS INVOLVED SEND DIRECTLY TO KREGER/J. COLLINS

FOR ACTION/INFORMATION

BRANCH CHIEF:	Lear
W/3 CYS FOR ACTION	
LIC. ASST.:	Parrish
W/ 1 CYS	
ACRS 16 CYS ~~HOLDING~~/SENT	As cat B

INTERNAL DISTRIBUTION

REG FILE	
NRC PDR	
I & E (2)	
MIPC	
SCHROEDER/IPPOLITO	
HOUSTON	
NOVAK/CHECK	
GRIMES	
CASE	
BUTLER	
HANAUER	
TEDESCO/MACCARY	
EISENHUT	
BAER	
SHAO	
VOLLMER/BUNCH	
KREGER/J. COLLINS	

EXTERNAL DISTRIBUTION

LPDR: Oswego, NY	
TIC:	
NSIC:	

CONTROL NUMBER: 770820104

~~770320048~~

NRC FORM 195 (2-76)

NIAGARA MOHAWK POWER CORPORATION

NIAGARA MOHAWK

300 ERIE BOULEVARD, WEST
SYRACUSE, N. Y. 13202

March 14, 1977

Mr. James P. O'Reilly
Director
United States Nuclear Regulatory Commission
Region I
631 Park Avenue
King of Prussia, PA. 19406

RE: Docket No. 50-220

Dear Mr. O'Reilly:

Licensee Event Reports, 76-43 and 76-44, are hereby submitted in the format designated in the Booklet 00E-SS-001 as revised December 8, 1975. These reports were not submitted within 30 days of the event, since the occurrence was not recognized as reportable at that time.

Very truly yours,

R.R. Schneider
Vice President -
Electric Production

MAS/mtm

Attachments

CERTIFIED - RETURN RECEIPT REQUEST

7708270104

LICENSEE EVENT REPORT

CONTROL BLOCK: [ ] (1–6) [PLEASE PRINT ALL REQUIRED INFORMATION]

	LICENSEE NAME	LICENSE NUMBER	LICENSE TYPE	EVENT TYPE
01	NYNMP1	— —	4111	03
7–8	9–14	15–25	26–30	31–32

	CATEGORY	REPORT TYPE	REPORT SOURCE	DOCKET NUMBER	EVENT DATE	REPORT DATE
01 CON'T	- -	L	L	05 0—02 20	11 16 76	03 14 77
7–8	57–58	59	60	61–68	69–74	75–80

EVENT DESCRIPTION

02 One emergency vent loop out of service to repair observation doors. Surveillance
03 performed on redundant vent system to demonstrate operability.
04
05
06 LER 76-44

	SYSTEM CODE	CAUSE CODE	COMPONENT CODE	PRME COMPONENT SUPPLIER	COMPONENT MANUFACTURER	VOLATION
07	SC	F	ZZZZZZ	Z	Z999	N
7–8	9–10	11	12–17	43	44–47	48

CAUSE DESCRIPTION

08 Observation door found bent during routine inspection, made repairs while unit was
09 on load.
10

	FACILITY STATUS	% POWER	OTHER STATUS	METHOD OF DISCOVERY	DISCOVERY DESCRIPTION
11	E	074	NA	B	NA
7–8	9	10–12	13–44	45	46–80

	FORM OF ACTIVITY RELEASED	CONTENT OF RELEASE	AMOUNT OF ACTIVITY	LOCATION OF RELEASE
12	Z	Z	NA	NA
7–8	9	10	11–44	45–80

PERSONNEL EXPOSURES

	NUMBER	TYPE	DESCRIPTION
13	000	Z	NA
7–8	9–11	12	13–80

PERSONNEL INJURIES

	NUMBER	DESCRIPTION
14	000	NA
7–8	9–11	12–80

~~XXXXXX~~CONSEQUENCES PROBABLE

15 NA

LOSS OR DAMAGE TO FACILITY

	TYPE	DESCRIPTION
16	Z	NA
7–8	9	10–80

PUBLICITY

17 NA

ADDITIONAL FACTORS

18 Timely report not made since event was not recognized as reportable at the time.

19

NRC FORM 195 (2-76)

U.S. NUCLEAR REGULATORY COMMISSION

NRC DISTRIBUTION FOR PART 50 DOCKET MATERIAL

DOCKET NUMBER: 50-220

FILE NUMBER: INCIDENT REPORT

TO: Mr. James P. O'Reilly

FROM: Niagara Mohawk Power Corp.
Syracuse, New York
R. R. Schneider

DATE OF DOCUMENT: 2/11/77

DATE RECEIVED: 2/22/77

☒ LETTER ☐ NOTORIZED
☒ ORIGINAL ☒ UNCLASSIFIED
☐ COPY

PROP

INPUT FORM

NUMBER OF COPIES RECEIVED: One signed

DESCRIPTION

Ltr. trans the following:

PLANT NAME:
Nine Mile Point Unit No. 1 (1-P)

ENCLOSURE

Licensee Event Report (RO 50-220/77-02) on 1/14/77 concerning one main steam line high flow sensor not being set to actuate as required by tech specs.....

ACKNOWLEDGED
DO NOT REMOVE

(1-P)

NOTE: IF PERSONNEL EXPOSURE IS INVOLVED SEND DIRECTLY TO KREGER/J. COLLINS

FOR ACTION/INFORMATION 2/23/77 RJL

☒	BRANCH CHIEF:	Lear
	W/3 CYS FOR ACTION	
☒	LIC. ASST.:	Parrish
	W/ CYS	
☒	ACRS 16 CYS ~~HOLDING~~/SENT:	(M.B. (2/23/77)

INTERNAL DISTRIBUTION

☒	REG FILE						
☒	NRC PDR						
☒	I & E (2)						
☒	MIPC						
☒	SCHROEDER/IPPOLITO						
☒	HOUSTON						
☒	NOVAK/CHECK						
☒	GRIMES						
☒	CASE						
☒	BUTLER						
☒	HANAUER						
☒	TEDESCO/MACCARY						
☒	EISENHUT						
☒	BAER						
☒	SHAO						
☒	VOLLMER/BUNCH						
☒	KREGER/J. COLLINS						

EXTERNAL DISTRIBUTION

☒	LPDR: Oswego, N.Y.				
☒	TIC:				
☒	NSIC:				

CONTROL NUMBER: 1812

NRC FORM 195 (2-76)

NIAGARA MOHAWK POWER CORPORATION

NIAGARA MOHAWK

300 ERIE BOULEVARD, WEST
SYRACUSE, N.Y. 13202

February 11, 1977

Mr. James P. O'Reilly
Director
United States Nuclear Regulatory Commission
Region 1
631 Park Avenue
King of Prussia, PA. 19406

RE: Docket No. 50-220

Dear Mr. O'Reilly:

In accordance with Nine Mile Point Nuclear Station Unit #1 Technical Specification, we hereby submit Licensee Event Report LER 77-02.

This report was completed in the format designated in the Licensee Event Report Instruction Booklet 00E-SS-001, dated October 1974, revised December 8, 1975.

Very truly yours,

R.R. Schneider
Vice President -
Electric Production

MAS/mtm

Enc.

1812

LICENSEE EVENT REPORT

CONTROL BLOCK: [ ] (1–6) [PLEASE PRINT ALL REQUIRED INFORMATION]

	LICENSEE NAME	LICENSE NUMBER	LICENSE TYPE	EVENT TYPE
01	NYNMP1	– –	4111	03
7–8	9–14	15–25	26–30	31–32

	CATEGORY	REPORT TYPE	REPORT SOURCE	DOCKET NUMBER	EVENT DATE	REPORT DATE
01 CON'T	- -		L	05 0–02 20	011477	021177
7–8	57–58	59	60	61–68	69–74	75–80

EVENT DESCRIPTION

02 During routine surveillance, it was found that one main steam line high flow sensor
03 was not set to actuate within the tolerance band of 105 psid ± 1 psid. Setting found
04 at 95 psid. Set point was corrected to actuate at 105 psid as required by Technical
05 Specifications. Found setting was in conservative direction.
06 LER 77-02

	SYSTEM CODE	CAUSE CODE	COMPONENT CODE	PRIME COMPONENT SUPPLIER	COMPONENT MANUFACTURER	VIOLATION
07	CD	E	INSTRU	N	B080	N
7–8	9–10	11	12–17	43	44–47	48

CAUSE DESCRIPTION

08 Apparent set point drift in conservative direction.
09
10

	FACILITY STATUS	% POWER	OTHER STATUS	METHOD OF DISCOVERY	DISCOVERY DESCRIPTION
11	E	099	N/A	B	Report by technician
7–8	9	10–12	13–44	45	46–80

	FORM OF ACTIVITY RELEASED	CONTENT OF RELEASE	AMOUNT OF ACTIVITY	LOCATION OF RELEASE
12	Z	Z	N/A	N/A
7–8	9	10	11–44	45–80

PERSONNEL EXPOSURES

	NUMBER	TYPE	DESCRIPTION
13	000	Z	N/A
7–8	9–11	12	13–80

PERSONNEL INJURIES

	NUMBER	DESCRIPTION
14	000	N/A
7–8	9–11	12–80

~~OFFSITE~~ CONSEQUENCES Probable

15 N/A

LOSS OR DAMAGE TO FACILITY

	TYPE	DESCRIPTION
16	Z	N/A
7–8	9	10–80

PUBLICITY

17 None

ADDITIONAL FACTORS

18 None

19

USNRC-REG. 1-

16 FEB 77 12: 27

NRC FORM 195 (2-76)

U.S. NUCLEAR REGULATORY COMMISSION

DOCKET NUMBER 50-220

NRC DISTRIBUTION FOR PART 50 DOCKET MATERIAL

FILE NUMBER INCIDENT REPORT

TO: J.P.O'REILLY

FROM: NIAGARA MOHAWK PWR CORP.
SYRACUSE, N.Y.
R.R. SCHNEIDER

DATE OF DOCUMENT 1/19/77

DATE RECEIVED 1/28/77

☐ LETTER ☐ NOTORIZED
☒ ORIGINAL ☒ UNCLASSIFIED
☐ COPY

PROP

INPUT FORM

NUMBER OF COPIES RECEIVED 1

DESCRIPTION

LTR. TRANS THE FOLLOWING.....

ACKNOWLEDGED

DO NOT REMOVE

PLANT NAME: NINE MILE PT # 1

ENCLOSURE

LICENSEE EVENT REPORT FOR R.O.# 76-42, ON 12/2/76 CONCERNING REACTOR BUILDING INTEGRITY DISRUPTENG WHEN BOTH AIRKLOCK DOORS WERE OPENED TOGETHER.....
LICENSEE EVENT REPORT FOR R.O.# 77-01, ON 1/6/77 CONCERNING CHANGED ROD WORTH MINIMIZER OPERABILITY BEING FROM 10% TO 20% POWER LEVEL

(1 SIGNED CY. RECEIVED)
(3 PAGES)

NOTE: IF PERSONNEL EXPOSURE IS INVOLVED SEND DIRECTLY TO KREGER/J. COLLINS

FOR ACTION/INFORMATION

SAB 2/1/77

✓	BRANCH CHIEF:	LEAR
	W/3 CYS FOR ACTION	
✓	LIC. ASST.:	PARRISH
	W/ CYS	
✓	ACRS 16 CYS ~~HOLDING~~ SENT	

CATEGORY-B DOCUMENT
F/INFO ACRS

INTERNAL DISTRIBUTION

✓	REG FILE					
✓	NRC PDR					
✓	I & E (2)					
✓	MIPC					
✓	SCHROEDER/IPPOLITO					
✓	HOUSTON					
✓	NOVAK/CHECK					
✓	GRIMES					
✓	CASE					
✓	BUTLER					
✓	HANAUER					
✓	TEDESCO/MACCARY					
✓	EISENHUT					
✓	BAER					
✓	SHAO					
✓	VOLLMER/BUNCH					
✓	KREGER/J. COLLINS					

EXTERNAL DISTRIBUTION

✓	LPDR: OSWEGO, N.Y.				
✓	TIC:				
✓	NSIC:				

CONTROL NUMBER

1004

NRC FORM 195 (2-76)

Regulatory File Cy

NIAGARA MOHAWK POWER CORPORATION

NIAGARA MOHAWK

300 ERIE BOULEVARD, WEST
SYRACUSE, N. Y. 13202

DOCKETED USNRC JAN 28 1977 Mail Section Docket Clerk

January 19, 1977

RECEIVED JAN 28 1977 U.S. NUCLEAR REGULATORY COMMISSION

Mr. James P. O'Reilly
Director
United States Nuclear Regulatory Commission
Region I
631 Park Avenue
King of Prussia, PA. 19406

RE: Docket No. 50-220

Dear Mr. O'Reilly:

In accordance with Nine Mile Point Nuclear Station Unit #1 Technical Specification 6.9, we hereby submit Licensee Event Reports 76-42 and 77-01.

These reports were completed within the intent of the Licensee Event Report Instruction Booklet 00E-SS-001, dated October 1974, revised December 24, 1974.

Sincerely yours,

R.R. Schneider
Vice President -
Electric Production

mtm

Enc.

1004

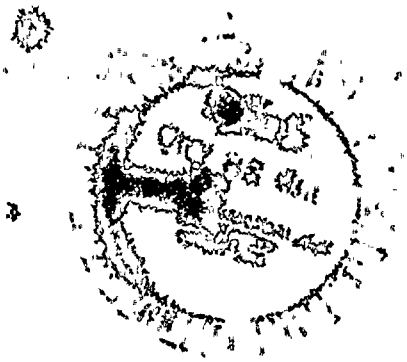

LICENSEE EVENT REPORT

CONTROL BLOCK: [ ] (1–6) [PLEASE PRINT ALL REQUIRED INFORMATION]

	LICENSEE NAME	LICENSE NUMBER	LICENSE TYPE	EVENT TYPE
01	NYNMP1	– –	4111	03
7–8	9–14	15–25	26–30	31–32

01 CON'T	CATEGORY	REPORT TYPE	REPORT SOURCE	DOCKET NUMBER	EVENT DATE	REPORT DATE
	MI	L	L	050–0220	122276	011877
7–8	57–58	59	60	61–68	69–74	75–80

EVENT DESCRIPTION

02 Reactor Building Integrity disrupted momentarily when both air lock doors were
03 opened together. There was no significant effect since a negative pressure
04 existed in the building, preventing any release of radioactive gases to the
05 atmosphere.
06 LER 76-42

	SYSTEM CODE	CAUSE CODE	COMPONENT CODE	PRME COMPONENT SUPPLIER	COMPONENT MANUFACTURER	VIOLATION
07	ZZ	D	ZZZZZZ	Z	Z999	N
7–8	9–10	11	12–17	43	44–47	48

CAUSE DESCRIPTION

08 Two doors were opened simultaneously in the Reactor Building Extension air lock
09 Standing Order NMPSO #12 was issued specifying control procedures to follow in
10 opening doors.

	FACILITY STATUS	% POWER	OTHER STATUS	METHOD OF DISCOVERY	DISCOVERY DESCRIPTION
11	E	098		A	Reported by on the job operator
7–8	9	10–12	13–44	45	46–80

	FORM OF ACTIVITY RELEASED	CONTENT OF RELEASE	AMOUNT OF ACTIVITY	LOCATION OF RELEASE
12	Z	Z	N/A	N/A
7–8	9	10	11–44	45–80

PERSONNEL EXPOSURES

	NUMBER	TYPE	DESCRIPTION
13	000	Z	N/A
7–8	9–11	12	13–80

PERSONNEL INJURIES

	NUMBER	DESCRIPTION
14	000	N/A
7–8	9–11	12–80

~~DESCRIPTION~~ CONSEQUENCES Probable

15 No effect to public or personnel on job or plant operation.

LOSS OR DAMAGE TO FACILITY

	TYPE	DESCRIPTION
16	Z	N/A
7–8	9	10–80

PUBLICITY

17 None

ADDITIONAL FACTORS

18 Interlock lights were being installed at the time of the event. These will replace
a tagging procedure then in use.
19

LICENSEE EVENT REPORT

CONTROL BLOCK: [ ] (1–6) [PLEASE PRINT ALL REQUIRED INFORMATION]

	LICENSEE NAME (9–14)	LICENSE NUMBER (15–25)	LICENSE TYPE (26–30)	EVENT TYPE (31–32)
01	NYNMP1	— —	4111	01

	CATEGORY (57–58)	REPORT TYPE (59)	REPORT SOURCE (60)	DOCKET NUMBER (61–68)	EVENT DATE (69–74)	REPORT DATE (75–80)
01 CON'T	MI	L	L	050—022 0	010677	011877

EVENT DESCRIPTION

02 Changed Rod worth minimizer operability from 10% to 20% power level. This report
03 is due to General Electric information previously supplied referencing the RWM
04 Operability was incorrect. This involved a set point change to 20%.
05 LER 77-01
06

	SYSTEM CODE (10)	CAUSE CODE (11)	COMPONENT CODE (12–17)	PRME COMPONENT SUPPLIER (43)	COMPONENT MANUFACTURER (44–47)	VIOLATION (48)
07	ZZ	D	ZZZZZZ	Z	Z999	N

CAUSE DESCRIPTION

08 Supplement 3 to NEDO-20360 specifies different RWM operability periods than in
09 affect. Operating Procedure OP-37 Rev. 4 and Technical Specification changes have
10 been prepared. No safety implications.

	FACILITY STATUS (9)	% POWER (10–12)	OTHER STATUS (13–44)	METHOD OF DISCOVERY (45)	DISCOVERY DESCRIPTION (46–80)
11	E	098		D	G.E. Notification

	FORM OF ACTIVITY RELEASED (9)	CONTENT OF RELEASE (10)	AMOUNT OF ACTIVITY (11–44)	LOCATION OF RELEASE (45–80)
12	Z	Z	N/A	N/A

PERSONNEL EXPOSURES

	NUMBER (9–11)	TYPE (12)	DESCRIPTION (13–80)
13	000	Z	N/A

PERSONNEL INJURIES

	NUMBER (9–11)	DESCRIPTION (12–80)
14	000	N/A

~~XXXXXX~~ CONSEQUENCES PROBABLE

15 None

LOSS OR DAMAGE TO FACILITY

	TYPE (9)	DESCRIPTION (10–80)
16	Z	N/A

PUBLICITY

17 N/A

ADDITIONAL FACTORS

18 None

19

USNRC-REG. 1-

24 JAN·77 2: 36

Central Files

NIAGARA MOHAWK POWER CORPORATION

NIAGARA MOHAWK

DATE: January 7, 1977

UBJECT: Reportable Occurrence No. 50- 220 77- 01/IP
(24 Hour Notification)

The enclosed prompt Reportable Occurrence is being submitted in accordance with Technical Specification Section 6.

O: James P. O'Reilly
Directorate of Regulatory Operations
Region I
631 Park Avenue
King of Prussia, PA. 19406

ROM: Niagara Mohawk Power Corporation
Nine Mile Point - J.A. FitzPatrick Site

P.O. Box #32
Lycoming, New York 15093

TO J.P. O'Reilly (R.
FROM T.E. Lempges

Docket No. 50- 220

TO R.A. Schwencke
FROM T.E. Lempges

EFERENCE: License DPR- 63

TO
FROM

Report No.: 50- 220 77- 01/IP

Report Date: January 7, 1977

Occurrence Date: January 6, 1977

Facility: Nine Mile Point #1

Identification of Occurrence:

During a management review (SORC) of recently received information from the NSSS supplier, it was revealed that the RWM operability limits should be equal to or greater than 20% rather than the current Technical Specification value of 10% of rated.

77-02/10

Conditions Prior to Occurrence:

X	Steady State Power		Routine Shutdown
	Hot Standby		
	Cold Shutdown		Load Changes
	Refueling Shutdown		
	Routine Startup		Other

Description of the Occurrence:

SEE ATTACHMENT

Apparent Cause of the Occurrence:

	Design		Procedure
	Manufacture		Unusual Service Condi
	Installation/ Const.		
	Operator		Component Failure
		X	Other (Specify)
			Re-analysis

Analysis of Occurrence:

No threat ever existed to the general public due to the conservative operation at the plant. The set point for RBM operability has been set much higher than the required 10%. Additionally, an extra operator is on duty during startup thru approximately 30% of rated power level who would be available for monitoring the rod withdrawal sequence.

Corrective Action:

As has been indicated, the OP's have been changed, reviewed and approved. The Technical Specification change is in the process of being submitted for NRC review, approval and issuance.

Failure Data:

N/A

ATTACHMENT to 50-220/77-01/1P

Description of the Occurrence:

The General Electric Company notified the off-site fuel engineering group that the reload core analysis indicated that the RBM operability setpoint should be 20% to allow for the drop rod accident. NRC Licensing was notified and a Technical Specification change discussed. The plant was notified on the 29th of December, 1976 and immediate changes were made to Operating Procedures. It was during the review of these changes at Site Operations Review Committee Meeting that the question of reporting requirements was raised and the committee prudently directed an immediate call to Region I to inform them of the event and the discussion held with NRC Licensing (Washington).

NRC FORM 195 (2-76)

U.S. NUCLEAR REGULATORY COMMISSION

NRC DISTRIBUTION FOR PART 50 DOCKET MATERIAL

DOCKET NUMBER 50-220

FILE NUMBER INCIDENT REPORT

TO: Mr OReilly

FROM: Niagara Mohawk Pwr Corp
Syracuse, NY
R R Schneider

DATE OF DOCUMENT 1-5-77

DATE RECEIVED 1-14-77

☒ LETTER ☒ ORIGINAL ☐ COPY ☐ NOTORIZED ☒ UNCLASSIFIED

PROP

INPUT FORM

NUMBER OF COPIES RECEIVED one signed

DESCRIPTION

Ltr trans the following:

ACKNOWLEDGED

DO NOT REMOVE

PLANT NAME: Nine Mile Pt #1

ENCLOSURE

Licensee Event Report (RO#76-40) on 12-10-76 concerning failure of reactor water level sensors to actuate within tech spec limits....

Licensee Event Report (RO#76-41) on 12-10-76 concerning actuation of drywell pressure sensors sooner than required by tech specs....

NOTE: IF PERSONNEL EXPOSURE IS INVOLVED SEND DIRECTLY TO KREGER/J. COLLINS

FOR ACTION/INFORMATION 1-14-77 ehf

BRANCH CHIEF:	[redacted] Lear	
W/3 CYS FOR ACTION		
LIC. ASST.:	[redacted]	Parrish
W/ 1 CYS		
ACRS 16 CYS ~~HOLDING~~/SENT	AS CAT	B 1-18-77

INTERNAL DISTRIBUTION

REG FILE						
NRC PDR						
I & E (2)						
MIPC						
SCHROEDER/IPPOLITO						
HOUSTON						
NOVAK/CHECK						
GRIMES						
CASE						
BUTLER						
HANAUER						
TEDESCO/MACCARY						
EISENHUT						
BAER						
SHAO						
VOLLMER/BUNCH						
KREGER/J. COLLINS						

EXTERNAL DISTRIBUTION

LPDR: Oswego, NY				
TIC:				
NSIC:				

CONTROL NUMBER

467

22 A.O.

NRC FORM 195 (2-76)

NIAGARA MOHAWK POWER CORPORATION

NIAGARA MOHAWK

300 ERIE BOULEVARD, WEST
SYRACUSE, N. Y. 13202

Regulatory Docket File

January 5, 1977

Mr. James P. O'Reilly
Director of Regulatory Operations
United States Nuclear Regulatory Commission
Region I
631 Park Avenue
King of Prussia, PA. 19406

RE: Docket No. 50-220

Dear Mr. O'Reilly:

In accordance with Nine Mile Point Nuclear Station Unit #1 Technical Specification 6.9, we hereby submit Licensee Event Reports 76-40 and 76-41.

These reports were completed within the intent of the Licensee Event Report Instruction Booklet 00E-SS-001, dated October 1974, revised December 24, 1974. Due to the minimal significance category of these reports, no supplemental reports are included.

Very truly yours,

R.R. Schneider
Vice President
Electric Production

TJD/mtm

Enc.

LICENSEE EVENT REPORT

CONTROL BLOCK: [ ] (1–6) [PLEASE PRINT ALL REQUIRED INFORMATION]

	LICENSEE NAME	LICENSE NUMBER	LICENSE TYPE	EVENT TYPE
01	NYNMP1	– –	4111	03
7–8	9–14	15–25	26–30	31–32

	CATEGORY	REPORT TYPE	REPORT SOURCE	DOCKET NUMBER	EVENT DATE	REPORT DATE
01 CON'T	- -	L	L	050–022 0	121076	010477
7–8	57–58	59	60	61–68	69–74	75–80

EVENT DESCRIPTION

01 During routine surveillance, it was discovered that lo-lo-lo reactor water level
02 sensors RE-18A,B, & C did not actuate within the tolerance set point band of
03 <127.1 ± 2.6". A was 121.5", B was 122.0" and C was 120.0". All were in the con-
04 servative direction.
05 LER 76-40

	SYSTEM CODE	CAUSE CODE	COMPONENT CODE	PRIME COMPONENT SUPPLIER	COMPONENT MANUFACTURER	VIOLATION
07	IB	E	INSTRU	N	B080	-
7–8	9–10	11	12–17	43	44–47	48

CAUSE DESCRIPTION

01 Apparent set point drift:
02 Barton Model #288
03 Serial Number 3468, 3470, and 3471

	FACILITY STATUS	% POWER	OTHER STATUS	METHOD OF DISCOVERY	DISCOVERY DESCRIPTION
11	E	091		b	
7–8	9	10–12	13–44	45	46–80

	FORM OF ACTIVITY RELEASED	CONTENT OF RELEASE	AMOUNT OF ACTIVITY	LOCATION OF RELEASE
12	Z	Z	N/A	N/A
7–8	9	10	11–44	45–80

PERSONNEL EXPOSURES

	NUMBER	TYPE	DESCRIPTION
13	000	Z	N/A
7–8	9–11	12	13–80

PERSONNEL INJURIES

	NUMBER	DESCRIPTION
14	000	N/A
7–8	9–11	12–80

~~XXXXXX~~ CONSEQUENCES PROBABLE

15 None

LOSS OR DAMAGE TO FACILITY

	TYPE	DESCRIPTION
16	Z	N/A
7–8	9	10–80

PUBLICITY

17 None

ADDITIONAL FACTORS

18 None

19

LICENSEE EVENT REPORT

CONTROL BLOCK: [ ] (1–6) [PLEASE PRINT ALL REQUIRED INFORMATION]

	LICENSEE NAME	LICENSE NUMBER	LICENSE TYPE	EVENT TYPE
01	NYNMP1	— —	4111	03
7–8	9–14	15–25	26–30	31–32

	CATEGORY	REPORT TYPE	REPORT SOURCE	DOCKET NUMBER	EVENT DATE	REPORT DATE
01 CON'T	- -	L	L	05 0—02 20	12 07 76	01 04 77
7–8	57–58	59	60	61–68	69–74	75–80

EVENT DESCRIPTION

02 During routine surveillance testing on high drywell pressure, all four sensors actuated
03 sooner than the required 3.5 ± .053 psi set point. RE-04A was 3.4 psi, B was 3.3 psi,
04 C was 3.4 psi and D was 3.4 psi. All were in the conservative direction.
05
06 LER 76-41

	SYSTEM CODE	CAUSE CODE	COMPONENT CODE	PRIME COMPONENT SUPPLIER	COMPONENT MANUFACTURER	VIOLATION
07	IB	E	INSTRU	N	B080	-
7–8	9–10	11	12–17	43	44–47	48

CAUSE DESCRIPTION

08 Apparent set point drift
09 Barton Model #289
10 Serial # 794, 795, 793, and 796

	FACILITY STATUS	% POWER	OTHER STATUS	METHOD OF DISCOVERY	DISCOVERY DESCRIPTION
11	E	090		b	
7–8	9	10–12	13–44	45	46–80

	FORM OF ACTIVITY RELEASED	CONTENT OF RELEASE	AMOUNT OF ACTIVITY	LOCATION OF RELEASE
12	Z	Z	N/A	N/A
7–8	9	10	11–44	45–80

PERSONNEL EXPOSURES

	NUMBER	TYPE	DESCRIPTION
13	000	Z	N/A
7–8	9–11	12	13–80

PERSONNEL INJURIES

	NUMBER	DESCRIPTION
14	000	N/A
7–8	9–11	12–80

~~XXXXXX~~ CONSEQUENCES PROBABLE

15 None

LOSS OR DAMAGE TO FACILITY

	TYPE	DESCRIPTION
16	Z	N/A
7–8	9	10–80

PUBLICITY

17 None

ADDITIONAL FACTORS

18 None

19

USNRC-REG. 1-

11 JAN 77 12: 00

NRC FORM 195
(2-76)

U.S. NUCLEAR REGULATORY COMMISSION

NRC DISTRIBUTION FOR PART 50 DOCKET MATERIAL

DOCKET NUMBER: 50-220

FILE NUMBER: INCIDENT REPORT

TO: James P. O'Reilly

FROM: Niagara Mohawk Power Corp.
Syracuse, N.Y. 13202
R.R. Schneider

DATE OF DOCUMENT: 11-20-76

DATE RECEIVED: 12-3-76

X LETTER
X ORIGINAL
☐ COPY
☐ NOTORIZED
X UNCLASSIFIED

PROP

INPUT FORM

NUMBER OF COPIES RECEIVED: 1 signed org.

DESCRIPTION: Ltr,Trans the Following:

DO NOT REMOVE

ACKNOWLEDGED

PLANT NAME: NINE MILE PT. UNIT #1

ENCLOSURE: Licensee Event Report LER-76-39 occuring on 11-16-76 Reporting of concentrations in milk samples greater than 19 pCi/l. due to Chinese Weapons Testing With Attachment...

(1 encl rec'd)

NOTE: IF PERSONNEL EXPOSURE IS INVOLVED SEND DIRECTLY TO KREGER/J. COLLINS

FOR ACTION/INFORMATION JCM 12-6-76

X	BRANCH CHIEF:	Lear
	W/3 CYS FOR ACTION	
X	LIC. ASST.:	Parrish
	W/ 1 CYS	
X	ACRS 16 CYS ~~HOLDING~~/SENT	Cat-B on 12-6-76

INTERNAL DISTRIBUTION

X	REG FILE
X	NRC PDR
X	I & E (2)
X	MIPC
X	SCHROEDER/IPPOLITO
X	HOUSTON
X	NOVAK/CHECK
X	GRIMES
X	CASE
X	BUTLER
X	HANAUER
X	TEDESCO/MACCARY
X	EISENHUT
X	BAER
X	SHAO
X	VOLLMER/BUNCH
X	KREGER/J. COLLINS

EXTERNAL DISTRIBUTION

X	LPDR: Oswego, N.Y.
X	TIC:
X	NSIC:

CONTROL NUMBER

T 12247
NO 4

NIAGARA MOHAWK POWER CORPORATION

NIAGARA MOHAWK

300 ERIE BOULEVARD, WEST
SYRACUSE, N. Y. 13202

Regulatory Docket File

November 20, 1976

Mr. James P. O'Reilly
Director
United States Nuclear Regulatory Commission
Region I
631 Park Avenue
King of Prussia, PA. 19406

RE: Docket No. 50-220

Dear Mr. O'Reilly:

In accordance with Nine Mile Point Nuclear Station Unit #1 Environmental Technical Specifications 5.6.3.1, we hereby submit Licensee Event Report 76-39.

This report was completed within the intent of the Licensee Event Report Instruction Booklet 00E-SS-001, dated October 1974, revised December 24, 1974.

Very truly yours,

R.R. Schneider
Vice President -
Electric Production

MH/mtm

Enc.

12247

LICENSEE EVENT REPORT

CONTROL BLOCK: [ ] (1–6)

(PLEASE PRINT ALL REQUIRED INFORMATION)

	LICENSEE NAME	LICENSE NUMBER	LICENSE TYPE	EVENT TYPE
01	NYNMP1	— —	4 1 1 1 1	0 4
7–8	9–14	15–25	26–30	31–32

		CATEGORY	REPORT TYPE	REPORT SOURCE	DOCKET NUMBER	EVENT DATE	REPORT DATE
01	CON'T	- -	T	L	0 5 0 — 0 2 2 0	1 1 1 6 7 6	1 1 2 0 7 6
7–8		57–58	59	60	61–68	69–74	75–80

EVENT DESCRIPTION

02 Informed by contractor that a milk sample contained a concentration of I-131 in
03 excess of 19 pCi/1. The sample contained concentration of 19.9 ± 0.4. Section 5.6
04 Paragraph 5.6.3.1(b) of Appendix B requires reporting of concentrations in
05 individual milk samples greater than 19 pCi/1. Sample collected on 11/1/76.
06 LER 76-39

	SYSTEM CODE	CAUSE CODE	COMPONENT CODE	PRIME COMPONENT SUPPLIER	COMPONENT MANUFACTURER	VIOLATION
07	Z Z	C	Z Z Z Z Z Z	Z	Z 9 9 9	-
7–8	9–10	11	12–17	43	44–47	48

CAUSE DESCRIPTION

08 Concentrations are due to Chinese Weapons Testing that occurred prior to sampling.
09 (See attachment for substantiating information).
10

	FACILITY STATUS	% POWER	OTHER STATUS	METHOD OF DISCOVERY	DISCOVERY DESCRIPTION
11	F	0 9 7		a	
7–8	9	10–12	13–44	45	46–80

	FORM OF ACTIVITY RELEASED	CONTENT OF RELEASE	AMOUNT OF ACTIVITY	LOCATION OF RELEASE
12	Z	Z	N/A	N/A
7–8	9	10	11–44	45–80

PERSONNEL EXPOSURES

	NUMBER	TYPE	DESCRIPTION
13	0 0 0	Z	N/A
7–8	9–11	12	13–80

PERSONNEL INJURIES

	NUMBER	DESCRIPTION
14	0 0 0	N/A
7–8	9–11	12–80

~~MAJOR~~ CONSEQUENCES PROBABLE

15 None

LOSS OR DAMAGE TO FACILITY

	TYPE	DESCRIPTION
16	Z	N/A
7–8	9	10–80

PUBLICITY

17 None

ADDITIONAL FACTORS

18 None

19

NAME: M. Hedrick PHONE: (315) 343-2110 Ext. 1310

ATTACHMENT TO LER 76-39

I. RELEASE DATA

TOTAL SITE HALOGEN AND PARTICULATE AIRBORNE ACTIVITY RELEASE DATA - Ci/sec

DATE	Q NMP-1	DATE	Q JAF	Q JAF
9/7/76	4.62 E-9	9/7/76	5.27 E-9	6.12 E-10
9/14/76	4.66 E-9	9/14/76	4.30 E-10	1.17 E-10
9/20/76	6.11 E-9	9/21/76	7.94 E-10	4.86 E-10
9/28/76	1.81 E-8	9/28/76	1.45 E-10	5.24 E-10
9/29/76	6.60 E-9	9/29/76	4.61 E-10	1.75 E-10
10/4/76	4.72 E-9	10/5/76	3.70 E-10	3.75 E-10
10/12/76	5.89 E-9	10/12/76	7.89 E-10	1.43 E-9
10/18/76	6.39 E-9	10/19/76	4.33 E-9	4.88 E-9
10/25/76	1.42 E-8	10/26/76	7.23 E-9	1.31 E-9
10/27/76	7.57 E-9	11/2/76	4.32 E-9	4.25 E-9
10/28/76	8.37 E-9			
11/1/76	1.10 E-8			

LICENSEE EVENT REPORT

CONTROL BLOCK: [ ] (1–6) [PLEASE PRINT ALL REQUIRED INFORMATION]

	LICENSEE NAME	LICENSE NUMBER	LICENSE TYPE	EVENT TYPE
01	NYNMP1	— —	4111	03
7–8	9–14	15–25	26–30	31–32

	CATEGORY	REPORT TYPE	REPORT SOURCE	DOCKET NUMBER	EVENT DATE	REPORT DATE
01 CON'T	- -	L	L	050—022 0	102576	031477
7–8	57–58	59	60	61–68	69–74	75–80

EVENT DESCRIPTION

02 No. 12 Feedwater Pump, one of two redundant pumps for the HPCI System, was taken out
03 of service for repair of sealwater strainer and small gear box leaks. No. 11
04 Feedwater Pump, the redundant pump, was operable and operating during maintenance
05 on No. 12 pump.
06 LER 76-43

	SYSTEM CODE	CAUSE CODE	COMPONENT CODE	PRIME COMPONENT SUPPLIER	COMPONENT MANUFACTURER	VIOLATION
07	CH	F	ZZZZZZ	Z	Z999	N
7–8	9–10	11	12–17	43	44–47	48

CAUSE DESCRIPTION

08 One of a redundant component was taken out of service to perform maintenance while
09 unit was on load.
10

	FACILITY STATUS	% POWER	OTHER STATUS	METHOD OF DISCOVERY	DISCOVERY DESCRIPTION
11	E	078	NA	C	NA
7–8	9	10–12	13–44	45	46–80

	FORM OF ACTIVITY RELEASED	CONTENT OF RELEASE	AMOUNT OF ACTIVITY	LOCATION OF RELEASE
12	Z	Z	NA	NA
7–8	9	10	11–44	45–80

PERSONNEL EXPOSURES

	NUMBER	TYPE	DESCRIPTION
13	000	Z	NA
7–8	9–11	12	13–80

PERSONNEL INJURIES

	NUMBER	DESCRIPTION
14	000	NA
7–8	9–11	12–80

~~XXXXXXX~~ CONSEQUENCES PROBABLE

15 NA

LOSS OR DAMAGE TO FACILITY

	TYPE	DESCRIPTION
16	Z	NA
7–8	9	10–80

PUBLICITY

17 NA

ADDITIONAL FACTORS

18 Timely report not made since event was not recognized as reportable occurrence at the
19 time.

NRC FORM 195 (2-76)

U.S. NUCLEAR REGULATORY COMMISSION

NRC DISTRIBUTION FOR PART 50 DOCKET MATERIAL

DOCKET NUMBER: 50-220

FILE NUMBER: INCIDENT REPORT

TO: Mr. James P. O'Reilly

FROM: Niagara Mohawk Power Corp. Syracuse, New York R. R. Schneider

DATE OF DOCUMENT: 11/5/76

DATE RECEIVED: 11/16/76

☒ LETTER ☐ ORIGINAL ☒ COPY

☐ NOTORIZED ☒ UNCLASSIFIED

PROP

INPUT FORM

NUMBER OF COPIES RECEIVED: No signed copy

DESCRIPTION

Ltr. trans the following:

ACKNOWLEDGED

DO NOT REMOVE

(1-P)

ENCLOSURE

Licensee Event Report (RO 50-220/76-36) on 10/15/76 concerning one Lo-Lo-Lo Reactor Water Level Switch (RE 18A) failing to provide a trip at the required 124, +2, -2.6 indicated inches.

(1-P)

PLANT NAME: Nine Mile Point Unit #1

NOTE: IF PERSONNEL EXPOSURE IS INVOLVED SEND DIRECTLY TO KREGER/J. COLLINS

FOR ACTION/INFORMATION 11/16/76 RJL

X	BRANCH CHIEF:	Lear
	W/3 CYS FOR ACTION	
X	LIC. ASST.:	Parrish
	W/ CYS	
X	ACRS 16 CYS ~~HOLDING~~/SENT TO ~~LR~~	CAT. B. (11/16/76)

INTERNAL DISTRIBUTION

X	REG FILE						
X	NRC PDR						
X	I & E (2)						
X	MIPC						
X	SCHROEDER/IPPOLITO						
X	HOUSTON						
X	NOVAK/CHECK						
X	GRIMES						
X	CASE						
X	BUTLER						
X	HANAUER						
X	TEDESCO/MACCARY						
X	EISENHUT						
X	BAER						
X	SHAO						
X	VOLLMER/BUNCH						
X	KREGER/J. COLLINS						

EXTERNAL DISTRIBUTION

X	LPDR: Oswego, N. Y.				
X	TIC:				
X	NSIC:				

CONTROL NUMBER: 11663

004

NRC FORM 195 (2-76)

28

NIAGARA MOHAWK POWER CORPORATION

NIAGARA MOHAWK

300 ERIE BOULEVARD, WEST
SYRACUSE, N. Y. 13202

November 5, 1976

Mr. James P. O'Reilly
Directorate of Regulatory Operations
United States Nuclear Regulatory Commission
Region I
631 Park Avenue
King of Prussia, PA. 19406

RE: Docket No. 50-220

Dear Mr. O'Reilly:

In accordance with Nine Mile Point Nuclear Station Unit #1 Technical Specifications 6.9, we hereby submit Licensee Event Report 76-36.

This report was completed within the intent of the Licensee Event Report Instruction Booklet 00E-SS-001, dated October 1974, revised December 24, 1974.

Very truly yours,

ORIGINAL SIGNED BY R.R. SCHNEIDER

R.R. Schneider
Vice President -
Electric Production

TJD/mtm

Enc.

LICENSEE EVENT REPORT

CONTROL BLOCK: [ ] (1–6) [PLEASE PRINT ALL REQUIRED INFORMATION]

	LICENSEE NAME	LICENSE NUMBER	LICENSE TYPE	EVENT TYPE
01	NYNMP1	— —	41111	03
7–8	9–14	15–25	26–30	31–32

	CATEGORY	REPORT TYPE	REPORT SOURCE	DOCKET NUMBER	EVENT DATE	REPORT DATE
01 CON'T	- -	L	L	05 0—02 20	101576	110576
7–8	57–58	59	60	61–68	69–74	75–80

EVENT DESCRIPTION

02 During routine surveillance testing, one Lo-Lo-Lo Reactor Water Level Switch (RE-18A)
03 failed to provide a trip at the required 124, +2, -2.6 indicated inches. It was
04 found to trip at 118" and was reset at 126 inches. All redundant components
05 were operable.
06 LER 76-36

	SYSTEM CODE	CAUSE CODE	COMPONENT CODE	PRME COMPONENT SUPPLIER	COMPONENT MANUFACTURER	VIOLATION
07	IB	E	INSTRU	N	B080	-
7–8	9–10	11	12–17	43	44–47	48

CAUSE DESCRIPTION

08 Apparent set point drift. The device was inspected and recalibrated
09
10

	FACILITY STATUS	% POWER	OTHER STATUS	METHOD OF DISCOVERY	DISCOVERY DESCRIPTION
11	E	095		b	
7–8	9	10–12	13–44	45	46–80

	FORM OF ACTIVITY RELEASED	CONTENT OF RELEASE	AMOUNT OF ACTIVITY	LOCATION OF RELEASE
12	Z	Z	N/A	N/A
7–8	9	10	11–44	45–80

PERSONNEL EXPOSURES

	NUMBER	TYPE	DESCRIPTION
13	000	Z	N/A
7–8	9–11	12	13–80

PERSONNEL INJURIES

	NUMBER	DESCRIPTION
14	000	N/A
7–8	9–11	12–80

~~OFFSITE~~ CONSEQUENCES PROBABLE

15 None - had the signal been required, redundant sensors would provide the desired action

LOSS OR DAMAGE TO FACILITY

	TYPE	DESCRIPTION
16	Z	N/A
7–8	9	10–80

PUBLICITY

17 None

ADDITIONAL FACTORS

18 None

19

NRC FORM 195 (2-70)

U.S. NUCLEAR REGULATORY COMMISSION

NRC DISTRIBUTION FOR PART 50 DOCKET MATERIAL

DOCKET NUMBER: 50-220

FILE NUMBER: INCIDENT REPORT

TO: Mr. James P. O'Reilly

FROM: Niagara Mohawk Power Corp.
Syracuse, New York
R. R. Schneider

DATE OF DOCUMENT: 10/25/76

DATE RECEIVED: 11/2/76

☒ LETTER ☒ ORIGINAL ☐ COPY ☐ NOTORIZED ☒ UNCLASSIFIED

PROP

INPUT FORM

NUMBER OF COPIES RECEIVED: One signed

DESCRIPTION

Ltr. trans the following:

DO NOT REMOVE

ACKNOWLEDGED

(1-P)

PLANT NAME:

Nine Mile Point Unit 1

ENCLOSURE

Licensee Event Report (RO 50-220/76-37) on 10/19/76 concerning the July 1976 Monthly Chemical Proportional Composite being inadvertantly discarded prior to performing chemical liquid waste analyses.

(1-P)

NOTE: IF PERSONNEL EXPOSURE IS INVOLVED SEND DIRECTLY TO KREGER/J. COLLINS

FOR ACTION/INFORMATION 11/2/76 RJL

☒	BRANCH CHIEF:	Lear
	W/3 CYS FOR ACTION	
☒	LIC. ASST.:	Parrish
	W/ 1 CYS	
☒	ACRS 16 CYS HOLDING/SENT TO CAT. B. (11/2/76)	

INTERNAL DISTRIBUTION

☒	REG FILE	
☒	NRC PDR	
☒	I & E (2)	
☒	MIPC	
☒	SCHROEDER/IPPOLITO	
☒	HOUSTON	
☒	NOVAK/CHECK	
☒	GRIMES	
☒	CASE	
☒	BUTLER	
☒	HANAUER	
☒	TEDESCO/MACCARY	
☒	EISENHUT	
☒	BAER	
☒	SHAO	
☒	VOLLMER/BUNCH	
☒	KREGER/J. COLLINS	

EXTERNAL DISTRIBUTION

☒	LPDR: Oswego, N.Y.	
☒	TIC:	
☒	NSIC:	

CONTROL NUMBER: 11109

NRC FORM 195 (2-70)

NIAGARA MOHAWK POWER CORPORATION

NIAGARA MOHAWK

300 ERIE BOULEVARD, WEST
SYRACUSE, N. Y. 13202

October 25, 1976

Mr. James P. O'Reilly
Director
United States Nuclear Regulatory Commission
Region I
631 Park Avenue
King of Prussia, PA. 19406

RE: Docket No. 50-220

Dear Mr. O'Reilly:

In accordance with Nine Mile Point Nuclear Station Unit #1 Technical Specification 6.9, we hereby submit Licensee Event Report 76-37.

This report was completed within the intent of the Licensee Event Report Instruction Booklet 00E-SS-001, dated October 1974, revised December 24, 1974. Due to the minimal significance category of this report, no supplemental report is included.

Very truly yours,

R.R. Schneider
Vice President -
Electric Production

TJD/mtm

Enc.

1109

LICENSEE EVENT REPORT

CONTROL BLOCK: [ ] (1–8) [PLEASE PRINT ALL REQUIRED INFORMATION]

LICENSEE NAME	LICENSE NUMBER	LICENSE TYPE	EVENT TYPE
01 NYNMP1 (7–8, 9–14)	— — (15–25)	4111 1 (26–30)	04 (31–32)

CATEGORY	REPORT TYPE	REPORT SOURCE	DOCKET NUMBER	EVENT DATE	REPORT DATE
01 CON'T (7–8) - - (57–58)	T (59)	L (60)	050-0220 (61–68)	101976 (69–74)	102576 (75–80)

EVENT DESCRIPTION

02 July 1976 Monthly Chemical Proportional Composite was inadvertantly discarded
03 prior to performing chemical liquid waste analyses, which are required per
04 Appendix B, Table 2.3-2. The composite sample was discarded because it was not
05 promptly labelled after preparation.
06 LER 76-37

SYSTEM CODE	CAUSE CODE	COMPONENT CODE	PRIME COMPONENT SUPPLIER	COMPONENT MANUFACTURER	VIOLATION
07 ZZ (9–10)	(11)	ZZZZZZ (12–17)	-- (43)	Z999 (44–47)	-- (48)

CAUSE DESCRIPTION

08 Technician did not label composite sample prior to being called away on another
09 job, and it was poured out during routine lab clean-up. Commenced procedural
10 review to clarify requirements for compositing.

FACILITY STATUS	% POWER	OTHER STATUS	METHOD OF DISCOVERY	DISCOVERY DESCRIPTION
11 E (9)	ZZZ (10–12)	N/A (13–44)	Z (45)	Management review of analyses (46–80)

FORM OF ACTIVITY RELEASED	CONTENT OF RELEASE	AMOUNT OF ACTIVITY	LOCATION OF RELEASE
12 Z (9)	Z (10)	N/A (11–44)	N/A (45–80)

PERSONNEL EXPOSURES

NUMBER	TYPE	DESCRIPTION
13 000 (7–8, 9–11)	Z (12)	N/A (13–80)

PERSONNEL INJURIES

NUMBER	DESCRIPTION
14 000 (7–8, 9–11)	N/A (12–80)

~~OFFSITE~~ CONSEQUENCES PROBABLE

15 None

LOSS OR DAMAGE TO FACILITY

TYPE	DESCRIPTION
16 Z (7–8, 9)	N/A (10–80)

PUBLICITY

17 N/A

ADDITIONAL FACTORS

18 Reviewed requirements for compositing with technician responsible including
19 procedural requirement for promptly reporting problems encountered.

NAME: R.W. Leach PHONE: 315-343-2110 (1303)

NRC FORM 195 (2-76)

U.S. NUCLEAR REGULATORY COMMISSION

NRC DISTRIBUTION FOR PART 50 DOCKET MATERIAL

DOCKET NUMBER: 50-220

FILE NUMBER: INCIDENT REPORT

TO: Mr. James P. O'Reilly

FROM: Niagara Mohawk Power Corp., Syracuse, New York, R. R. Schneider

DATE OF DOCUMENT: 10/15/76

DATE RECEIVED: 11/3/76

☒ LETTER ☒ ORIGINAL ☐ COPY ☐ NOTORIZED ☒ UNCLASSIFIED

PROP

INPUT FORM

NUMBER OF COPIES RECEIVED: One signed

DESCRIPTION

Ltr. trans the following:

ACKNOWLEDGED

DO NOT REMOVE

(1-P)

PLANT NAME:
Nine Mile Point Unit #1

ENCLOSURE

Licensee Event Report (RO 50-220/76-34) on 10/12/76 concerning milk samples collected not being counted within time required by tech specs.
(RO 50-220/76-35) on 10/12/76 concerning Benthos collections not being made within the time required by tech specs.

(2-P)

NOTE: IF PERSONNEL EXPOSURE IS INVOLVED SEND DIRECTLY TO KREGER/J. COLLINS

FOR ACTION/INFORMATION 11/4/76 RJL

☒	BRANCH CHIEF:	Lear
	W/3 CYS FOR ACTION	
☒	LIC. ASST.:	Parrish
	W/ CYS	
☒	ACRS 16 CYS ~~HOLDING~~/SENT TO ~~EA~~ Cat. B. (11/4/76)	

INTERNAL DISTRIBUTION

☒	REG FILE						
☒	NRC PDR						
☒	I & E (2)						
☒	MIPC						
☒	SCHROEDER/IPPOLITO						
☒	HOUSTON						
☒	NOVAK/CHECK						
☒	GRIMES						
☒	CASE						
☒	BUTLER						
☒	HANAUER						
☒	TEDESCO/MACCARY						
☒	EISENHUT						
☒	BAER						
☒	SHAO						
☒	VOLLMER/BUNCH						
☒	KREGER/J. COLLINS						

EXTERNAL DISTRIBUTION

☒	LPDR: Oswego, New York				
☒	TIC:				
☒	NSIC:				

CONTROL NUMBER: 11146

NRC FORM 195 (2-76)

NIAGARA MOHAWK POWER CORPORATION

NIAGARA MOHAWK

300 ERIE BOULEVARD, WEST
SYRACUSE, N. Y. 13202

October 15, 1976

Mr. James P. O'Reilly
Directorate of Regulatory Operations
United States Nuclear Regulatory Commission
Region I
631 Park Avenue
King of Prussia, PA. 19406

RE: Docket No. 50-220

Dear Mr. O'Reilly:

In accordance with Nine Mile Point Nuclear Station Unit #1 Technical Specification 6,9, we hereby submit Licensee Event Reports 76-34 and 76-35.

These reports were completed within the intent of the Licensee Event Report Instruction Booklet 00E-SS-001, dated October 1974, revised December 24, 1974.

Very truly yours,

R.R. Schneider
Vice President -
Electric Production

MH/mtm

Enc.

LICENSEE EVENT REPORT

CONTROL BLOCK: [ ] (1–6)

[PLEASE PRINT ALL REQUIRED INFORMATION]

	LICENSEE NAME	LICENSE NUMBER	LICENSE TYPE	EVENT TYPE
01	NYNMP1	– –	41111	04
7–8	9–14	15–25	26–30	31–32

	CON'T	CATEGORY	REPORT TYPE	REPORT SOURCE	DOCKET NUMBER	EVENT DATE	REPORT DATE
01		- -	T	L	05 0–0220	101276	101576
7–8		57–58	59	60	61–68	69–74	75–80

EVENT DESCRIPTION

02 During management review of contractor data, it was found that milk samples collected
03 on 9/20/76 were not counted until 9/28-30/1976. Samples were received on 9/28/76.
04 Counting was started upon receipt, however, all samples could not be counted on this
05 date. Samples were therefore counted on the ninth day. ETS Sect. 3.2.c requires
06 counting within 8 days of collection. LER 76-34

	SYSTEM CODE	CAUSE CODE	COMPONENT CODE	PRIME COMPONENT SUPPLIER	COMPONENT MANUFACTURER	VIOLATION
07	ZZ	F	ZZZZZZ	Z	2999	-
7–8	9–10	11	12–17	43	44–47	48

CAUSE DESCRIPTION

08 Samples were shipped on 9/21/76 via air freight (alternate carrier during UPS strike)
09 but were not received by contractor until 9/28/76. Milk samples were 7 days in
10 shipment.

	FACILITY STATUS	% POWER	OTHER STATUS	METHOD OF DISCOVERY	DISCOVERY DESCRIPTION
11	Z	Z.ZZ	N/A	a	
7–8	9	10–12	13–44	45	46–80

	FORM OF ACTIVITY RELEASED	CONTENT OF RELEASE	AMOUNT OF ACTIVITY	LOCATION OF RELEASE
12	Z	Z	N/A	N/A
7–8	9	10	11–44	45–80

PERSONNEL EXPOSURES

	NUMBER	TYPE	DESCRIPTION
13	000	Z	N/A
7–8	9–11	12	13–80

PERSONNEL INJURIES

	NUMBER	DESCRIPTION
14	000	N/A
7–8	9–11	12–80

~~OFFSITE~~ CONSEQUENCES Probable.

15 None.

LOSS OR DAMAGE TO FACILITY

	TYPE	DESCRIPTION
16	Z	N/A
7–8	9	10–80

PUBLICITY

17 N/A

ADDITIONAL FACTORS

18 Milk samples are collected by Lawler, Matusky & Skelly Eng., Oswego, New York and
19 shipped to Eberline Instrument Corp., Chicago, for analysis.

NAME: M. Hedrick PHONE: 315-343-2110 X1310

LICENSEE EVENT REPORT

CONTROL BLOCK: [ ] (1–6)

[PLEASE PRINT ALL REQUIRED INFORMATION]

	LICENSEE NAME	LICENSE NUMBER	LICENSE TYPE	EVENT TYPE
01	NYNMP1	— —	41111	04
7–8	9–14	15–25	26–30	31–32

	CATEGORY	REPORT TYPE	REPORT SOURCE	DOCKET NUMBER	EVENT DATE	REPORT DATE
01 CON'T	- -	T	L	050—0220	101276	101576
7–8	57–58	59	60	61–68	69–74	75–80

EVENT DESCRIPTION

02 Lake Surveillance Program. Benthos collections are required bimonthly. The August
03 1976 samples were not collected until 9/4/76. This is in excess of the +25% time
04 variation allowed in Sect. 1.16 of the Safety Technical Specifications. LER 76-35
05
06

	SYSTEM CODE	CAUSE CODE	COMPONENT CODE	PRME COMPONENT SUPPLIER	COMPONENT MANUFACTURER	VIOLATION
07	ZZ	F	ZZZZZZ	Z	Z999	-
7–8	9–10	11	12–17	43	44–47	48

CAUSE DESCRIPTION

08 Contractor divers could not be used for the August collections due to recent OSHA
09 regulations imposed on professional divers. Availability of a certified diver was
10 such that collection was delayed until September 4, 1976.

	FACILITY STATUS	% POWER	OTHER STATUS	METHOD OF DISCOVERY	DISCOVERY DESCRIPTION
11	Z	ZZZ	N/A	a	
7–8	9	10–12	13–44	45	46–80

	FORM OF ACTIVITY RELEASED	CONTENT OF RELEASE	AMOUNT OF ACTIVITY	LOCATION OF RELEASE
12	Z	Z	N/A	N/A
7–8	9	10	11–44	45–80

PERSONNEL EXPOSURES

	NUMBER	TYPE	DESCRIPTION
13	000	Z	N/A
7–8	9–11	12	13–80

PERSONNEL INJURIES

	NUMBER	DESCRIPTION
14	000	N/A
7–8	9–11	12–80

~~OFFSITE~~ CONSEQUENCES probable.

15 None

LOSS OR DAMAGE TO FACILITY

	TYPE	DESCRIPTION
16	Z	N/A
7–8	9	10–80

PUBLICITY

17 N/A

ADDITIONAL FACTORS

18 Contractor is Lawler, Matusky, and Skelly Eng., Oswego, New York.

19

NAME: M. Hedrick PHONE: 315-343-2110 X1310

LICENSEE EVENT REPORT

CONTROL BLOCK: [ ] (1–6)

[PLEASE PRINT ALL REQUIRED INFORMATION]

	LICENSEE NAME	LICENSE NUMBER	LICENSE TYPE	EVENT TYPE
01	NYNMP1	– –	4 1 1 1 1	0 3
7–8	9–14	15–25	26–30	31–32

	CATEGORY	REPORT TYPE	REPORT SOURCE	DOCKET NUMBER	EVENT DATE	REPORT DATE
01 CON'T	- -	L	L	0 5 0 – 0 2 2 0	0 9 2 0 7 6	1 0 1 4 7 6
7–8	57–58	59	60	61–68	69–74	75–80

EVENT DESCRIPTION

02 SEE ATTACHED

03

04

05

06 LER 76-28

	SYSTEM CODE	CAUSE CODE	COMPONENT CODE	PRME COMPONENT SUPPLIER	COMPONENT MANUFACTURER	VIOLATION
07	S B	B	C K T B R K	N	G 0 8 0	-
7–8	9–10	11	12–17	43	44–47	48

CAUSE DESCRIPTION

08 No real cause can be attributed.to this item. With the degree of redundancy

09 inherent in the system, no hazard was or is presented to the general public.

10

	FACILITY STATUS	% POWER	OTHER STATUS	METHOD OF DISCOVERY	DISCOVERY DESCRIPTION
11	Z	- - -		Z	Management Design Review
7–8	9	10–12	13–44	45	46–80

	FORM OF ACTIVITY RELEASED	CONTENT OF RELEASE	AMOUNT OF ACTIVITY	LOCATION OF RELEASE
12	Z	Z	N/A	N/A
7–8	9	10	11–44	45–80

PERSONNEL EXPOSURES

	NUMBER	TYPE	DESCRIPTION
13	0 0 0	Z	N/A
7–8	9–11	12	13–80

PERSONNEL INJURIES

	NUMBER	DESCRIPTION
14	0 0 0	N/A
7–8	9–11	12–80

~~OBSERVED~~ CONSEQUENCES PROBABLE

15 None

LOSS OR DAMAGE TO FACILITY

	TYPE	DESCRIPTION
16	Z	N/A
7–8	9	10–80

PUBLICITY

17 None

ADDITIONAL FACTORS

18 None

19

NRC FORM 195 (2-76)

U.S. NUCLEAR REGULATORY COMMISSION

NRC DISTRIBUTION FOR PART 50 DOCKET MATERIAL

DOCKET NUMBER: 50-220

FILE NUMBER: INCIDENT REPORT

TO: Mr. James P. O'Reilly

FROM: Niagara Mohawk Power Corp.
Syracuse, New York
R. R. Schneider

DATE OF DOCUMENT: 10/14/76

DATE RECEIVED: 11/3/76

☒ LETTER ☒ ORIGINAL ☐ COPY ☐ NOTORIZED ☒ UNCLASSIFIED

PROP

INPUT FORM

NUMBER OF COPIES RECEIVED: One signed

DESCRIPTION

Ltr. trans the following:

ACKNOWLEDGED (1-P),

DO NOT REMOVE

PLANT NAME:
Nine Mile Point Unit #1

ENCLOSURE

Licensee Event Report (RO 50-220/76-28) on 9/20/76 concerning the discovery that if the control switch for the containment spray pump were placed in lockout, the sister pump was enabled from automatic starting.

(2-P).

NOTE: IF PERSONNEL EXPOSURE IS INVOLVED SEND DIRECTLY TO KREGER/J. COLLINS

FOR ACTION/INFORMATION 11/4/76 RJL

☒	BRANCH CHIEF:	Lear
	W/3 CYS FOR ACTION	
☒	LIC. ASST.:	Parrish
	W/ CYS	
☒	ACRS 16 CYS ~~HOLDING~~/SENT TO ~~EA~~ Cat. B. (11/4/76)	

INTERNAL DISTRIBUTION

☒	REG FILE						
☒	NRC PDR						
☒	I & E (2)						
☒	MIPC						
☒	SCHROEDER/IPPOLITO						
☒	HOUSTON						
☒	NOVAK/CHECK						
☒	GRIMES						
☒	CASE						
☒	BUTLER						
☒	HANAUER						
☒	TEDESCO/MACCARY						
☒	EISENHUT						
☒	BAER						
☒	SHAO						
☒	VOLLMER/BUNCH						
☒	KREGER/J. COLLINS						

EXTERNAL DISTRIBUTION

☒	LPDR: Oswego, New York				
☒	TIC:				
☒	NSIC:				

CONTROL NUMBER: 11147

NRC FORM 195 (2-76)

NIAGARA MOHAWK POWER CORPORATION

NIAGARA MOHAWK

300 ERIE BOULEVARD, WEST
SYRACUSE, N. Y. 13202

October 14, 1976

Mr. James P. O'Reilly
Directorate of Regulatory Operations
United States Nuclear Regulatory Commission
Region I
631 Park Avenue
King of Prussia, PA. 19406

RE: Docket No. 50-220

Dear Mr. O'Reilly:

In accordance with Nine Mile Point Nuclear Station Unit #1 Technical Specification 6.9, we hereby submit Licensee Event Report 76-28.

This report was completed within the intent of the Licensee Event Report Instruction Booklet 00E-SS-001, dated October 1974, revised December 24, 1974. Due to the minimal significance category of this report, no supplemental report is included.

Very truly yours,

R.R. Schneider
Vice President -
Electric Production

TJD/mtm

Enc.

ATTACHMENT TO LER 76-28

EVENT DESCRIPTION

During a management review of existing plant design, it was discovered that if the control switch for the containment spray pump were placed in lockout, the sister pump was enabled from automatic starting. The containment spray system is 400% redundant with 4 pumps. The emergency power supply for the effected sister pumps is the same EDG. This precluded start of a sister pump with one in lockout is only effected by an automatic start signal. The pump could be started manually from the Control Room. An electrical change is being considered to eliminate this situation and in the interum, a change has been made to Operating Procedure OP-19 stating that the pumps will never be placed in the lockout position when operability is required.

NRC FORM 195 (2-76)

U.S. NUCLEAR REGULATORY COMMISSION

NRC DISTRIBUTION FOR PART 50 DOCKET MATERIAL

DOCKET NUMBER: 50-220

FILE NUMBER: INCIDENT REPORT

TO: J.P.O'REILLY

FROM: NIAGARA MOHAWK POWER CORP.
SYRACUSE, N.Y.
R.R. SCHNEIDER

DATE OF DOCUMENT: 9-24-76

DATE RECEIVED: 10-4-76

☒ LETTER ☐ NOTORIZED
☒ ORIGINAL ☒ UNCLASSIFIED
☐ COPY

PROP

INPUT FORM

NUMBER OF COPIES RECEIVED: 30

DESCRIPTION

LTR. TRANS THE FOLLOWING.....

DO NOT REMOVE
ACKNOWLEDGED

PLANT NAME: NINE MILE PT. # 1

ENCLOSURE

LICENSEE EVENT REPORT # 76-32, ON 8-27-76, CONCERNING MAIN STEAM LINE BREAK INSTRUMENTATION RE-22A TRIPPING.....
LICENSEE EVENT REPORT # 76-33, ON 9-8-76, CONCERNING SURVEILLANCE THAT WAS REQUIRED BY BY TECH. SPEC. BEING PERFORMED.....

(1 NONE SIGNED CY. RECEIVED)
(3 PAGES)

NOTE: IF PERSONNEL EXPOSURE IS INVOLVED SEND DIRECTLY TO KREGER/J..COLLINS

FOR ACTION/INFORMATION

SAB 10-5-76

BRANCH CHIEF:	LEAR	
W/3 CYS FOR ACTION		
LIC. ASST.:	PARRISH	
W/ CYS		
ACRS 16 CYS ~~XXXXXXX~~/SENT TO LA		

INTERNAL DISTRIBUTION

REG FILE					
NRC PDR					
I & E (2)					
MIPC					
SCHROEDER/IPPOLITO					
HOUSTON					
NOVAK/CHECK					
GRIMES					
CASE					
BUTLER					
HANAUER					
TEDESCO/MACCARY					
EISENHUT					
BAER					
SHAO					
VOLLMER/BUNCH					
KREGER/J.COLLINS					

EXTERNAL DISTRIBUTION

LPDR: OSWEGO, N.Y.				
TIC:				
NSIC:				

CONTROL NUMBER: 10074

NRC FORM 195 (2-76)

Regulatory File Cy.

NIAGARA MOHAWK POWER CORPORATION

NIAGARA MOHAWK

300 ERIE BOULEVARD, WEST
SYRACUSE, N. Y. 13202

September 24, 1976

Mr. James P. O'Reilly
Directorate of Regulatory Operations
United States Nuclear Regulatory Commission
Region I
631 Park Avenue
King of Prussia, Pa. 19406

RE: Docket No. 50-220

Dear Mr. O'Reilly:

In accordance with Nine Mile Point Nuclear Station Unit #1 Technical Specification 6.9, we hereby submit Licensee Event Reports 76-32 and 76-33.

These reports were completed within the intent of the Licensee Event Report Instruction Booklet 00E-SS-001, dated October, 1974, revised December 24, 1974. Due to the minimal significance category of these reports, no supplemental report is included.

Very truly yours,

Original Signed by R.R. Schneider

R.R. Schneider
Vice President -
Electric Production

TJD/mtm

Enc.

10074

LICENSEE EVENT REPORT

CONTROL BLOCK: [ ] (1–6)

[PLEASE PRINT ALL REQUIRED INFORMATION]

	LICENSEE NAME	LICENSE NUMBER	LICENSE TYPE	EVENT TYPE
01	NYNMP1	– –	41111	03
7–8	9–14	15–25	26–30	31–32

	CATEGORY	REPORT TYPE	REPORT SOURCE	DOCKET NUMBER	EVENT DATE	REPORT DATE
01 CON'T	- -	L	L	050–0220	082776	092376
7–8	57–58	59	60	61–68	69–74	75–80

EVENT DESCRIPTION

02 During surveillance testing (RE-22), Main Steam Line Break Instrumentation, it was
03 found that RE-22A tripped at 108psig rather than the required value of 105±1 psig.
04 All redundant instruments preformed properly, thus no hazard was presented to
05 the general public.
06 LER 76-32

	SYSTEM CODE	CAUSE CODE	COMPONENT CODE	PRIME COMPONENT SUPPLIER	COMPONENT MANUFACTURER	VIOLATION
07	IB	E	INSTRU	A	B080	-
7–8	9–10	11	12–17	43	44–47	48

CAUSE DESCRIPTION

08 "The Barton Model 278, Serial Number 759, was inspected for mechanical defects
09 and friction. No reason other than set point drift could be found. RE-22A
10 was recalibrated and returned to service.

	FACILITY STATUS	% POWER	OTHER STATUS	METHOD OF DISCOVERY	DISCOVERY DESCRIPTION
11	E	094		b	N/A
7–8	9	10–12	13–44	45	46–80

	FORM OF ACTIVITY RELEASED	CONTENT OF RELEASE	AMOUNT OF ACTIVITY	LOCATION OF RELEASE
12	Z	Z	N/A	N/A
7–8	9	10	11–44	45–80

PERSONNEL EXPOSURES

	NUMBER	TYPE	DESCRIPTION
13	000	Z	N/A
7–8	9–11	12	13–80

PERSONNEL INJURIES

	NUMBER	DESCRIPTION
14	000	N/A
7–8	9–11	12–80

~~DESIRE~~ CONSEQUENCES PROBABLE

15 None

LOSS OR DAMAGE TO FACILITY

	TYPE	DESCRIPTION
16	Z	N/A
7–8	9	10–80

PUBLICITY

17 None

ADDITIONAL FACTORS

18 None

19

NAME: _____ PHONE: _____

LICENSEE EVENT REPORT

CONTROL BLOCK: [ ] (1–6) [PLEASE PRINT ALL REQUIRED INFORMATION]

LICENSEE NAME	LICENSE NUMBER	LICENSE TYPE	EVENT TYPE
01 NYNMP1 (7–8, 9–14)	— — (15–25)	4 1 1 1 1 (26–30)	0 3 (31–32)

CON'T	CATEGORY	REPORT TYPE	REPORT SOURCE	DOCKET NUMBER	EVENT DATE	REPORT DATE
01 (7–8)	- - (57–58)	L (59)	L (60)	0 5 0 — 0 2 2 0 (61–68)	0 9 0 8 7 6 (69–74)	0 9 2 3 7 6 (75–80)

EVENT DESCRIPTION

02 During a management review, it was revealed that surveillance required by
03 Technical Specifications 4.3.6(a) on vacuum breaker exercising following
04 relief valve discharge to Torus had not been performed following scrams on
05 8-6-76 and 8-23-76.
06 LER 76-33

SYSTEM CODE	CAUSE CODE	COMPONENT CODE	PRIME COMPONENT SUPPLIER	COMPONENT MANUFACTURER	VIOLATION
07 Z Z (10)	D (11)	Z Z Z Z Z Z (12–17)	- (43)	Z 9 9 9 (44–47)	- (48)

CAUSE DESCRIPTION

08 The surveillance requirements were never posted on the Startup Check-off Sheets.
09 This has been changed in OP-43 and also on Startup Form ST-M3.
10

FACILITY STATUS	% POWER	OTHER STATUS	METHOD OF DISCOVERY	DISCOVERY DESCRIPTION
11 E (9)	0 9 5 (10–12)	N/A (13–44)	(45)	During a review (46–80)

FORM OF ACTIVITY RELEASED	CONTENT OF RELEASE	AMOUNT OF ACTIVITY	LOCATION OF RELEASE
12 Z (9)	Z (10)	N/A (11–44)	N/A (45–80)

PERSONNEL EXPOSURES

NUMBER	TYPE	DESCRIPTION
13 0 0 0 (9–11)	Z (12)	N/A (13–80)

PERSONNEL INJURIES

NUMBER	DESCRIPTION
14 0 0 0 (9–11)	N/A (12–80)

~~POTENTIAL~~ CONSEQUENCES PROBABLE

15 NONE

LOSS OR DAMAGE TO FACILITY

TYPE	DESCRIPTION
16 Z (9)	N/A (10–80)

PUBLICITY

17 None

ADDITIONAL FACTORS

18 None

19

NAME: _____ PHONE: _____

NRC FORM 195 (2-76)

U.S. NUCLEAR REGULATORY COMMISSION

NRC DISTRIBUTION FOR PART 50 DOCKET MATERIAL

DOCKET NUMBER: 50-220

FILE NUMBER: INCIDENT REPORT

TO: MR J P O'REILLY

FROM: NIAGARA MOHAWK POWER CORP
SYRACUSE, NY
R R SCHNEIDER

DATE OF DOCUMENT: 9-3-76

DATE RECEIVED: 9-15-76

☑ LETTER ☐ NOTORIZED
☐ ORIGINAL ☑ UNCLASSIFIED
☑ COPY

PROP

INPUT FORM

NUMBER OF COPIES RECEIVED: None SIGNED

DESCRIPTION

LTR TRANS THE FOLLOWING.....

PLANT NAME: Nine Mile Point

ENCLOSURE

LICESNEEE EVENT REPORT 50-220/76-31 ON 8/9/76 REF DURING A ROUTINE REACTOR STARTUP #11 FEEDWATER PUMP FAILED TO START WHEN MANUALLY INITIATED.....

ACKNOWLEDGED

DO NOT REMOVE

NOTE: IF PERSONNEL EXPOSURE IS INVOLVED SEND DIRECTLY TO KREGER/J..COLLINS

9-17-76 RKB

FOR ACTION/INFORMATION

✓	BRANCH CHIEF:	LEAR	
	W/3 CYS FOR ACTION		
✓	LIC. ASST.:	K. PARRISH	
	W/ CYS		
	ACRS 17 CYS HOLDING	SENT TO LA	

INTERNAL DISTRIBUTION

✓	REG FILE						
✓	NRC PDR						
✓	I & E (2)						
✓	MIPC						
✓	SCHROEDER/IPPOLITO						
✓	HOUSTON						
✓	NOVAK/CHECK						
✓	GRIMES						
✓	CASE						
✓	BUTLER						
✓	HANAUER						
✓	TEDESCO/MACCARY						
✓	EISENHUT						
✓	BAER						
✓	SHAO						
✓	VOLLMER/BUNCH						
✓	KREGER/J.COLLINS						

EXTERNAL DISTRIBUTION

✓	LPDR: OSWEGO, NY				
✓	TIC:				
✓	NSIC:				

CONTROL NUMBER: 9411

Regulatory File Cy.

NIAGARA MOHAWK POWER CORPORATION

NIAGARA MOHAWK

300 ERIE BOULEVARD, WEST
SYRACUSE, N.Y. 13202

September 3, 1976

Mr. James P. O'Reilly
Directorate of Regulatory Operations
United States Nuclear Regulatory Commission
Region I
631 Park Avenue
King of Prussia, Pa. 19406

RE: Docket No. 50-220

Dear Mr. O'Reilly:

In accordance with Nine Mile Point Nuclear Station Unit #1 Technical Specification 6.9, we hereby submit Licensee Event Report LER 76-31.

This report was completed within the intent of the Licensee Event Report Instruction Booklet 00E-SS-001, dated October, 1974, revised December 24, 1974. Due to the minimal significance category of the report, no supplemental report is included.

Very truly yours,

ORIGINAL SIGNED BY R.R. SCHNEIDER

R.R. Schneider
Vice President -
Electric Production

TJD/mtm

Enc.

9411

LICENSEE EVENT REP[illegible]

CONTROL BLOCK: [ ] (1–6)

(PLEASE PRINT ALL REQUIRED INFORMATION)

	LICENSEE NAME	LICENSE NUMBER	LICENSE TYPE	EVENT TYPE
01	NYNMP1	— —	41111	01
7 8	9–14	15–25	26–30	31 32

	CATEGORY	REPORT TYPE	REPORT SOURCE	DOCKET NUMBER	EVENT DATE	REPORT DATE
01 CON'T	MI	L	L	05 0—02 20	08 09 76	09 01 76
7 8	57 58	59	60	61–68	69–74	75–80

EVENT DESCRIPTION

02 During a routine reactor startup, #11 Feedwater pump failed to start when manually
03 initiated. #11 FW pump is one of two pumps required for HPCI. #12 FW pump,
04 the redundant component, was started successfully, therefore no hazard
05 was presented to the general public.
06 LER 76-31

	SYSTEM CODE	CAUSE CODE	COMPONENT CODE	PRIME COMPONENT SUPPLIER	COMPONENT MANUFACTURER	VOLATION
07	IB	E	INSTRU	N	A109	-
7 8	9 10	11	12–17	43	44–47	48

CAUSE DESCRIPTION

08 An Agastat time delay relay model #2462 PD Serial #2683521, 120 V DC failed to
09 function thus not allowing operation of the pump.
10

	FACILITY STATUS	% POWER	OTHER STATUS	METHOD OF DISCOVERY	DISCOVERY DESCRIPTION
11	C	077		a	during plant startup
7 8	9	10–12	13–44	45	46–80

	FORM OF ACTIVITY RELEASED	CONTENT OF RELEASE	AMOUNT OF ACTIVITY	LOCATION OF RELEASE
12	Z	Z	N/A	
7 8	9	10	11–44	45–80

PERSONNEL EXPOSURES

	NUMBER	TYPE	DESCRIPTION
13	000	Z	N/A
7 8	9–11	12	13–80

PERSONNEL INJURIES

	NUMBER	DESCRIPTION
14	000	N/A
7 8	9–11	12–80

~~DESIRE~~ CONSEQUENCES PROBABLE

15 None

LOSS OR DAMAGE TO FACILITY

	TYPE	DESCRIPTION
16	Z	N/A
7 8	9	10–80

PUBLICITY

17 None

ADDITIONAL FACTORS

18 None

19

NRC FORM 195 (2-76)

U.S. NUCLEAR REGULATORY COMMISSION

NRC DISTRIBUTION FOR PART 50 DOCKET MATERIAL

DOCKET NUMBER: 50-220

FILE NUMBER: INCIDENT REPORT

TO: MR. J. P. O'REILLY

FROM: NIAGARA MOHAWK POWER CORP.
SYRACUSE N.Y.
R.R. SCHNEIDER

DATE OF DOCUMENT: 7-6-76

DATE RECEIVED: 7-27-76

☒ LETTER ☒ ORIGINAL ☐ COPY

☐ NOTORIZED ☒ UNCLASSIFIED

PROP

INPUT FORM

NUMBER OF COPIES RECEIVED: 1 signed

DESCRIPTION: LTR. TRANS. THE FOLLOWING.....

ACKNOWLEDGED

DO NOT REMOVE

PLANT NAME: Nine Mile Pt. #1

ENCLOSURE: LICENSEE EVENT REPORT (RO 76-23) on 6-25-76 concerning REACTOR RECIRCULATION PUMP.....
LICENSEE EVENT REPORT (RO 76-24) on 6-13-76 concerning APRM'S 17 & 18 which failed to produce a scram signal .....
LICENSEE EVENT REPORT (RO 76-25) on 6-27-76 concerning #11 & #15 APRM'S which failed to produce a scram signal .....
(1 signed cy recieved)
(7 pgs.)

NOTE: IF PERSONNEL EXPOSURE IS INVOLVED SEND DIRECTLY TO KREGER/J. COLLINS

CRG 7-27-76

SAFETY	FOR ACTION/INFORMATION	ENVIRO
X BRANCH CHIEF:	Lear	
W/3 CYS FOR ACTION		
X LIC. ASST.:	Parrish	
W/ CYS		
ACRS 16 CYS ~~HOLDING~~ SENT TO LA		

INTERNAL DISTRIBUTION

X	REG FILE						
X	NRC PDR						
X	I & E (2)						
X	MIPC						
X	SCHROEDER/IPPOLITO						
X	HOUSTON						
X	NOVAK/CHECK						
X	GRIMES						
X	CASE						
X	BUTLER						
X	HANAUER						
X	TEDESCO/MACCARY						
X	EISENHUT						
X	BAER						
X	SHAO						
X	VOLLMER/BUNCH						
X	KREGER/J. COLLINS						

EXTERNAL DISTRIBUTION

X	LPDR: OSWEGO, N.Y.				
X	TIC:				
X	NSIC:				

CONTROL NUMBER: 8569

Regulatory File Cy

NIAGARA MOHAWK POWER CORPORATION

NIAGARA MOHAWK
300 ERIE BOULEVARD WEST
SYRACUSE, N.Y. 13202

JUL 27 1976
Docket Clerk

RECEIVED
JUL 27 1976
Mail Section

July 6, 1976

Mr. James P. O'Reilly
Directorate of Regulatory Operations
United States Nuclear Regulatory Commission
Region I
631 Park Avenue
King of Prussia, Pa. 29406

RE: Docket No. 50-220

In accordance with Nine Mile Point Nuclear Station Unit #1 Environmental Technical Specification 5.6.3.1, we hereby submit Licensee Event Reports 76-23, 76-24, and 76-25.

This report was completed within the intent of the Licensee Event Report Instruction Booklet 00E-SS-001, dated October 1974, revised December 24, 1974. Due to the minimal significance category of the report, no supplemental report is included.

Very truly yours,

R. R. Schneider
Vice President -
Electric Operations

TJD/aih
Enc.

7569

LICENSEE EVENT REPORT

CONTROL BLOCK: [ ] (1–6)

[PLEASE PRINT ALL REQUIRED INFORMATION]

	LICENSEE NAME	LICENSE NUMBER	LICENSE TYPE	EVENT TYPE
01	NYNMP1	— —	4 1 1 1 1	0 1
7–8	9–14	15–25	26–30	31–32

	CATEGORY	REPORT TYPE	REPORT SOURCE	DOCKET NUMBER	EVENT DATE	REPORT DATE
01 CON'T	M I	L	L	0 5 0 — 0 2 2 0	0 6 2 5 7 6	0 7 0 1 7 6
7–8	57–58	59	60	61–68	69–74	75–80

EVENT DESCRIPTION

02 Operator noted smoke from relay 4-112 B/40, Reactor Recirculation Pump - Lo Lo Level.

03 Trip (#12HFA51A49F). Relay assumed the tripped condition thus no hazard was presented

04 to plant or general public.

05 RO 76-23

06

	SYSTEM CODE	CAUSE CODE	COMPONENT CODE	PRME COMPONENT SUPPLIER	COMPONENT MANUFACTURER	VIOLATION
07	I B	E	I N S T R U	N	G 0 8 0	-
7–8	9–10	11	12–17	43	44–47	48

CAUSE DESCRIPTION

08 Coil apparently shorted causing smoking and blown fuse. Relay replaced with similar

09 device.

10

	FACILITY STATUS	% POWER	OTHER STATUS	METHOD OF DISCOVERY	DISCOVERY DESCRIPTION
11	C	0 8 1		a	
7–8	9	10–12	13–44	45	46–80

	FORM OF ACTIVITY RELEASED	CONTENT OF RELEASE	AMOUNT OF ACTIVITY	LOCATION OF RELEASE
12	Z	Z	N/A	
7–8	9	10	11–44	45–80

PERSONNEL EXPOSURES

	NUMBER	TYPE	DESCRIPTION
13	0 0 0	Z	N/A
7–8	9–11	12	13–80

PERSONNEL INJURIES

	NUMBER	DESCRIPTION
14	0 0 0	N/A
7–8	9–11	12–80

~~OFFSITE~~ CONSEQUENCES probable

15 NONE

LOSS OR DAMAGE TO FACILITY

	TYPE	DESCRIPTION
16	Z	NONE
7–8	9	10–80

PUBLICITY

17 NONE

ADDITIONAL FACTORS

18

19

Name: T. Dente Phone: 315 343-2110

LICENSEE EVENT REPORT

CONTROL BLOCK: [ ] (1–6) [PLEASE PRINT ALL REQUIRED INFORMATION]

01	LICENSEE NAME	LICENSE NUMBER	LICENSE TYPE	EVENT TYPE
7 8	NYNMPL (9–14)	— — (15–25)	4 1 1 1 1 (26–30)	0 1 (31–32)

01 CON'T	CATEGORY	REPORT TYPE	REPORT SOURCE	DOCKET NUMBER	EVENT DATE	REPORT DATE
7 8	M 1 (57–58)	L (59)	L (60)	0 5 0 — 0 2 2 0 (61–68)	0 6 1 3 7 6 (69–74)	0 7 0 1 7 6 (75–80)

EVENT DESCRIPTION

02 During weekly surveillance testing of the APRM System, APRM's 17 & 18 failed to produce
03 a scram signal at the required flow bias set point. 20% flow test tripped higher than
04 required by approximately 1%. All redundant (6) APRM's operable.
05 RO 76-24
06

07	SYSTEM CODE	CAUSE CODE	COMPONENT CODE	PRME COMPONENT SUPPLIER	COMPONENT MANUFACTURER	VIOLATION
7 8	(9–10)	F (11)	I N S T R U (12–17)	N (43)	6 0 8 0 (44–47)	- (48)

CAUSE DESCRIPTION

08 Set point drift. Instrument recalibrated to required specifications.
09
10

11	FACILITY STATUS	% POWER	OTHER STATUS	METHOD OF DISCOVERY	DISCOVERY DESCRIPTION
7 8	E (9)	0 9 8 (10–12)	(13–44)	b (45)	(46–80)

12	FORM OF ACTIVITY RELEASED	CONTENT OF RELEASE	AMOUNT OF ACTIVITY	LOCATION OF RELEASE
7 8	Z (9)	Z (10)	N/A (11–44)	(45–80)

PERSONNEL EXPOSURES

13	NUMBER	TYPE	DESCRIPTION
7 8	0 0 0 (9–11)	Z (12)	N/A (13–80)

PERSONNEL INJURIES

14	NUMBER	DESCRIPTION
7 8	0 0 0 (9–11)	N/A (12–80)

XXXXXX OFFSITE CONSEQUENCES probable

15 NONE

LOSS OR DAMAGE TO FACILITY

16	TYPE	DESCRIPTION
7 8	Z (9)	N/A (10–80)

PUBLICITY

17 NONE

ADDITIONAL FACTORS

18
19

NAME: T. Dente PHONE: 315 343-2110

LICENSEE EVENT REPORT

CONTROL BLOCK: [ ] (1–6) (PLEASE PRINT ALL REQUIRED INFORMATION)

	LICENSEE NAME	LICENSE NUMBER	LICENSE TYPE	EVENT TYPE
01	NYNMP1	0 — —	4 1 1 1 1	0 1
7 8 9	9–14	15–25	26–30	31 32

	CATEGORY	REPORT TYPE	REPORT SOURCE	DOCKET NUMBER	EVENT DATE	REPORT DATE
01 CON'T	M I	L	L	0 5 0 — 0 2 2 0	0 6 2 7 7 6	0 7 0 1 7 6
7 8	57 58	59	60	61–68	69–74	75–80

EVENT DESCRIPTION

02 During weekly surveillance testing of the APRM's, #11 & #15 APRM's failed to produce
03 a scram signal at the required flow bias set point. 20% flow test tripped higher
04 than required by less than 1%. All redundant (6) APRM's operable.
05
06 RO 76-25

	SYSTEM CODE	CAUSE CODE	COMPONENT CODE	PRIME COMPONENT SUPPLIER	COMPONENT MANUFACTURER	VIOLATION
07	R B	F	I N S T R U	N	G 0 8 0	-
7 8 9	10	11	12–17	43	44–47	48

CAUSE DESCRIPTION

08 Set point drift. Instruments calibrated to required specifications.
09
10

	FACILITY STATUS	% POWER	OTHER STATUS	METHOD OF DISCOVERY	DISCOVERY DESCRIPTION
11	E	0 9 8		b	
7 8	9	10–12	13–44	45	46–80

	FORM OF ACTIVITY RELEASED	CONTENT OF RELEASE	AMOUNT OF ACTIVITY	LOCATION OF RELEASE
12	Z	Z	N/A	
7 8	9	10	11–44	45–80

PERSONNEL EXPOSURES

	NUMBER	TYPE	DESCRIPTION
13	0 0 0	Z	N/A
7 8 9	11	12	13–80

PERSONNEL INJURIES

	NUMBER	DESCRIPTION
14	0 0 0	N/A
7 8 9	11–12	13–80

~~OFFSITE~~ CONSEQUENCES probable

15 NONE

LOSS OR DAMAGE TO FACILITY

	TYPE	DESCRIPTION
16	Z	N/A
7 8 9	10	11–80

PUBLICITY

17 NONE

ADDITIONAL FACTORS

18

19

NRC FORM 196
(2-76)

U.S. NUCLEAR REGULATORY COMMISSION

NRC DISTRIBUTION FOR PART 50 DOCKET MATERIAL

DOCKET NUMBER: 50-220

FILE NUMBER: INCIDENT REPORT

TO: MR. JAMES P. O'REILLY

FROM: NIAGARA MOHAWK POWER CORP.
SYRACUSE, NEW YORK
R. R. SCHNEIDER

DATE OF DOCUMENT: 5/28/76

DATE RECEIVED: 6/7/76

X LETTER ☐ NOTORIZED
☐ ORIGINAL X UNCLASSIFIED
X COPY

PROP.

INPUT FORM

NUMBER OF COPIES RECEIVED: NONE SIGNED

DESCRIPTION

LTR. TRANS THE FOLLOWING:

(1-P)

ENCLOSURE

LICENSEE EVENT RPT. (RO 50-220/76-22) ON 5/27/76 CONCERNING THE NUMBER OF FISH BEING IMPINGED EXCEEDING THE ETS LIMIT.

ACKNOWLEDGED
DO NOT REMOVE

(2-P)

PLANT NAME:

NINE MILE POINT #1

NOTE: IF PERSONNEL EXPOSURE IS INVOLVED SEND DIRECTLY TO KREGER/J. COLLINS

SAFETY — FOR ACTION/INFORMATION — ENVIRO 6/9/76 RJL

X	BRANCH CHIEF:	LEAR
	W/3 CYS FOR ACTION	
X	LIC. ASST:	PARRISH
	W/1 CYS	
	ACRS 16 CYS HOLDING/SENT TO LA	

INTERNAL DISTRIBUTION

X	REG FILE						
X	NRC PDR						
X	I & E (2)						
X	MIPC (3)						
X	SCHROEDER/IPPOLITO						
X	HOUSTON						
X	NOVAK/CHECK						
X	GRIMES/SCHWENCER (1) EA						
X	CASE						
	~~E. WILLIAMS~~						
X	HANAUER						
X	TEDESCO/MACCARY						
X	EISENHUT						
X	BAER						
X	SHAO						
X	VOLLMER/BUNCH						
X	KREGER/J. COLLINS						

EXTERNAL DISTRIBUTION

X	LPDR: OSWEGO, N. Y.						
X	TIC						
X	NSIC						

CONTROL NUMBER: 5662

NIAGARA MOHAWK POWER CORPORATION

NIAGARA MOHAWK

300 ERIE BOULEVARD, WEST
SYRACUSE, N. Y. 13202

May 28, 1976

Mr. James P. O'Reilly
Directorate of Regulatory Operations
United States Nuclear Regulatory Commission
Region I
631 Park Avenue
King of Prussia, Pa. 29406

RE: Docket No. 50-220

In accordance with Nine Mile Point Nuclear Station Unit #1 Environmental Technical Specification 5.6.3.1, we hereby submit Licensee Event Report 76-22.

This report was completed within the intent of the Licensee Event Report Instruction Booklet 00E-SS-001, dated October 1974, revised December 24, 1974. Due to the minimal significance category of the report, no supplemental report is included.

Very truly yours,

Original Signed by R.R. Schneider

R. R. Schneider
Vice President -
Electric Operations

MCH/aih

Enc. 2 copies

cc: (20 copies) Director, Office of Inspection and Enforcement

(2 copies) Director, Office of Management Information and Program Control

5662

LICENSEE EVENT REPORT

CONTROL BLOCK: [ ] (1–6) [PLEASE PRINT ALL REQUIRED INFORMATION]

LICENSEE NAME	LICENSE NUMBER	LICENSE TYPE	EVENT TYPE
01 NYNMP1 (7–8, 9–14)	— — (15–25)	4 1 1 1 1 (26–30) END	0 4 (31–32)

CON'T	CATEGORY	REPORT TYPE	REPORT SOURCE	DOCKET NUMBER	EVENT DATE	REPORT DATE
01 (7–8)	M I (57–58)	T (59)	L (60)	0 5 0 — 0 2 2 0 (61–69)	0 5 2 7 7 6 (69–74)	0 5 2 8 7 6 (75–80)

EVENT DESCRIPTION

02 During routine impingement sampling by contractor personnel on 05/19-20/76 it was
03 determined the numbers of fish being impinged had exceeded the ETS limit of
04 20,000/24 hr. (Sect. 3.1.2.a2). This condition continued until 5/27/76.
05
06 (see attachment for numbers) RO 76-22

SYSTEM CODE	CAUSE CODE	COMPONENT CODE	PRIME COMPONENT SUPPLIER	COMPONENT MANUFACTURER	VIOLATION
07 HF (10)	F (11)	ZZZZZZ (12–17)	Z (43)	Z999 (44–47)	- (48)

CAUSE DESCRIPTION

08 There was no apparent cause for this occurrence related directly to station
09 operation. The principle species involved, alewives, rainbow smelt, and
10 three spine stickleback, migrate inshore annually at this time of year. (Con't.)

FACILITY STATUS	% POWER	OTHER STATUS	METHOD OF DISCOVERY	DISCOVERY DESCRIPTION
11 E (9)	091 (10–12)	(13–44)	a (45)	(46–80)

FORM OF ACTIVITY RELEASED	CONTENT OF RELEASE	AMOUNT OF ACTIVITY	LOCATION OF RELEASE
12 Z (9)	Z (10)	N/A (11–44)	(45–80)

PERSONNEL EXPOSURES

NUMBER	TYPE	DESCRIPTION
13 000 (9–11)	Z (12)	N/A (13–80)

PERSONNEL INJURIES

NUMBER	DESCRIPTION
14 000 (9–11)	N/A (12–80)

OFFSITE CONSEQUENCES probable

15 NONE

LOSS OR DAMAGE TO FACILITY

TYPE	DESCRIPTION
16 Z (9)	N/A (10–80)

PUBLICITY

17 N/A

ADDITIONAL FACTORS

18 Continuous sampling by contractor personnel continued until numbers fell
19 below 20,000/24 hr. as per ETS. (Sect. 5.6.3.1).

Con't.

There appears to be a correlation between wind speed and direction and the impingement numbers. The higher impingement numbers occurred when wind directions were north westerly and northerly with correspondingly high wind speeds, creating extreme wave activity on the lake. Conversely, as wind speeds dropped and/or direction changed to southerly, the numbers of fish impinged would decrease accordingly.

IMPINGEMENT NUMBERS

05/19-20/76	123,015
05/20-21/76	123,597
05/21-22/76	171,326
05/22-23/76	130,011
05/23-24/76	175,931
05/24-25/76	80,705
05/25-26/76	24,891
05/26-27/76	12,688

NRC FORM 195 (2-76)

U.S. NUCLEAR REGULATORY C[redacted]ION

NRC DISTRIBUTION FOR PART 50 DOCKET MATERIAL

DOCKET NUMBER: 50-220

FILE NUMBER: INCIDENT REPORT

TO: MR J P O'REILLY

FROM: NIAGARA MOHAWK POWER CORP
SYRACUSE, NY
R R SCHNEIDER

DATE OF DOCUMENT: 5-25-76

DATE RECEIVED: 5-29-76

X LETTER
X ORIGINAL
☐ COPY
☐ NOTORIZED
X UNCLASSIFIED

PROP

INPUT FORM

NUMBER OF COPIES RECEIVED: (1) SIGNED

DESCRIPTION

LTR TRANS THE FOLLOWING.....

ENCLOSURE

(A) LER 50-220 (RO 76-19) ON 4-23-76 RE SWITCH USED FOR TURBINE WAS FOUND TO ACTUATE AT 364 PSIG RATHER THAN THE REQUIRED 355.....

(b) LER 50-220 (RO 76-20) ON 4-23-76 RE 1B05C SWITCH TO ACTUATE AT 20.4 RATHER THAN 19 PSID.....

(C) LER 50-220 5-15-76 (RO 76-21) RE REACTOR SHUTDOWN COOLING SYSTEM D.C. FAILED TO FUNCTION.....

1 PG
3 ENCL

ACKNOWLEDGED
DO NOT REMOVE

PLANT NAME: Nine Mile Pt. #1

NOTE: IF PERSONNEL EXPOSURE IS INVOLVED SEND DIRECTLY TO KREGER/J. COLLINS

SAFETY — FOR ACTION/INFORMATION — ENVIRO 6-3-76 RKB

✓	BRANCH CHIEF:	LEAR	
	W/3 CYS FOR ACTION		
✓	LIC. ASST:	PARRISH	
	W/ CYS		
	ACRS CYS 17 HOLDING/SENT TO LA		

INTERNAL DISTRIBUTION

✓	REG FILE		
✓	NRC PDR		
✓	I & E (2)		
✓	MIPC (3)		
✓	SCHROEDER/IPPOLITO		
✓	HOUSTON		
✓	NOVAK/CHECK		
✓	GRIMES/SCHWENCER	1 EACH	
✓	CASE		
✓	HANAUER		
✓	TEDESCO/MACCARY		
✓	EISENHUT		
✓	BAER		
✓	SHAO		
✓	VOLLMER/BUNCH		
✓	KREGER/J. COLLINS		

EXTERNAL DISTRIBUTION

✓	LPDR: OSWEGO, NY		
✓	TIC		
✓	NSIC		

CONTROL NUMBER: 5419

LICENSEE EVENT REPORT

CONTROL BLOCK: [ ] (1–6)

(PLEASE PRINT ALL REQUIRED INFORMATION)

	LICENSEE NAME	LICENSE NUMBER	LICENSE TYPE	EVENT TYPE
01	NYNMP1	— —	4 1 1 1 1	0 3
7–8	9–14	15–25	26–30	31–32

	CATEGORY	REPORT TYPE	REPORT SOURCE	DOCKET NUMBER	EVENT DATE	REPORT DATE
01 CON'T	M 1	L	L	0 5 0 — 0 2 2 0	0 4 2 3 7 6	0 5 2 1 7 6
7–8	57–58	59	60	61–68	69–74	75–80

EVENT DESCRIPTION

02 During surveillance testing 02-13B a switch used for turbine auticipatory trip bypass
03 reactor scram was found to actuate at 364 psig rather than the required 355 ± 5 psig.
04 Plant was operating above point thus required action would occur if required.
05
06 RO 76-19

	SYSTEM CODE	CAUSE CODE	COMPONENT CODE	PRIME COMPONENT SUPPLIER	COMPONENT MANUFACTURER	VIOLATION
07	I A	E	I N S T R U	N	B 0 7 0	-
7–8	9–10	11	12–17	43	44–47	48

CAUSE DESCRIPTION

08 Setpoint drift switch was recalibrated and placed back in service.
09
10

	FACILITY STATUS	% POWER	OTHER STATUS	METHOD OF DISCOVERY	DISCOVERY DESCRIPTION
11	C	0 6 0		b	
7–8	9	10–12	13–44	45	46–80

	FORM OF ACTIVITY RELEASED	CONTENT OF RELEASE	AMOUNT OF ACTIVITY	LOCATION OF RELEASE
12	Z	Z	N/A	
7–8	9	10	11–44	45–80

PERSONNEL EXPOSURES

	NUMBER	TYPE	DESCRIPTION
13	0 0 0	Z	N/A
7–8	9–11	12	13–80

PERSONNEL INJURIES

	NUMBER	DESCRIPTION
14	0 0 0	N/A
7–8	9–11	12–80

OFFSITE CONSEQUENCES probable

15 NONE

LOSS OR DAMAGE TO FACILITY

	TYPE	DESCRIPTION
16	Z	N/A
7–8	9	10–80

PUBLICITY

17 NONE

ADDITIONAL FACTORS

18 No hazard to plant or general public.

19

NIAGARA MOHAWK POWER CORPORATION

NIAGARA MOHAWK

300 ERIE BOULEVARD, WEST
SYRACUSE, N. Y. 13202

May 25, 1976

Mr. James P. O'Reilly
Directorate of Regulatory Operations
United States Nuclear Regulatory Commission
Region I
631 Park Avenue
King of Prussia, Pa.. 29406

RE: Docket No. 50-220

Dear Mr. O'Reilly:

Enclosed please find LER Reports (76-19, 76-20, & 76-21) for Nine Mile Point Unit 1. These reports are in the acceptable format as required and as a point of clarification and due to the previously submitted type T reports on fish impingement, the numbering does not follow in chronological order. This system is being changed to prevent this problem in the future.

Very truly yours,

Original Signed by R.R. Schneider

R.R. Schneider
Vice President
Electric Operations

TJD/aih

Enc. 3 copies

CC: K.R. Goller (30 copies)

5419

LICENSEE EVENT REPORT

CONTROL BLOCK: [ ] (1–6)

[PLEASE PRINT ALL REQUIRED INFORMATION]

	LICENSEE NAME	LICENSE NUMBER	LICENSE TYPE	EVENT TYPE
01	NYNMP1	— —	41111	03
7–8	9–14	15–25	26–30	31–32

	CATEGORY	REPORT TYPE	REPORT SOURCE	DOCKET NUMBER	EVENT DATE	REPORT DATE
01 CON'T	M1	L	L	050—0220	051576	052476
7–8	57–58	59	60	61–68	69–74	75–80

EVENT DESCRIPTION

02 During reactor shutdown one shutdown cooling system D.C. operated I.V. (38-02)
03 failed to function (open). Valve was manually opened to allow operation of the
04 system. System is fully operable.
05 RO 76-21
06

	SYSTEM CODE	CAUSE CODE	COMPONENT CODE	PRIME COMPONENT SUPPLIER	COMPONENT MANUFACTURER	VIOLATION
07	CF	E	VALVOP	A	L200	-
7–8	9–10	11	12–17	43	44–47	48

CAUSE DESCRIPTION

08 Motor found with an "open in" the windings. Motor will be rewound.
09
10

	FACILITY STATUS	% POWER	OTHER STATUS	METHOD OF DISCOVERY	DISCOVERY DESCRIPTION
11	D	000		a	
7–8	9	10–12	13–44	45	46–80

	FORM OF ACTIVITY RELEASED	CONTENT OF RELEASE	AMOUNT OF ACTIVITY	LOCATION OF RELEASE
12	Z	Z	N/A	
7–8	9	10	11–44	45–80

PERSONNEL EXPOSURES

	NUMBER	TYPE	DESCRIPTION
13	000	Z	N/A
7–8	9–11	12	13–80

PERSONNEL INJURIES

	NUMBER	DESCRIPTION
14	000	N/A
7–8	9–11	12–80

OFFSITE CONSEQUENCES probable

15 NONE

LOSS OR DAMAGE TO FACILITY

	TYPE	DESCRIPTION
16	Z	N/A
7–8	9	10–80

PUBLICITY

17 NONE

ADDITIONAL FACTORS

18 NONE

19

T. Donte 315 343-2110

LICENSEE EVENT REPORT

CONTROL BLOCK: [ ] (1–6) [PLEASE PRINT ALL REQUIRED INFORMATION]

	LICENSEE NAME	LICENSE NUMBER	LICENSE TYPE	EVENT TYPE
01	NYNMP1	— —	4 1 1 1 1	0 3
7–8	9–14	15–25	26–30	31–32

	CATEGORY	REPORT TYPE	REPORT SOURCE	DOCKET NUMBER	EVENT DATE	REPORT DATE
01 CON'T	M 1	L	L	0 5 0 — 0 2 2 0	0 4 2 3 7 6	0 5 2 1 7 6
7–8	57–58	59	60	61–68	69–74	75–80

EVENT DESCRIPTION

02 During surveillance testing found 1B05C to actuate at 20.4 psid rather than required
03 19 psid. Switch is used to indicate emergency cooling high flow and isolate the
04 system. Redundant components operable that no hazard presented to plant or offsite
05 personnel.
06 RO 76-20

	SYSTEM CODE	CAUSE CODE	COMPONENT CODE	PRIME COMPONENT SUPPLIER	COMPONENT MANUFACTURER	VIOLATION
07		E	I N S T R U	a	B 0 8 0	–
7–8	9–10	11	12–17	43	44–47	48

CAUSE DESCRIPTION

08 Setpoint drift which is within the expected range.
09
10

	FACILITY STATUS	% POWER	OTHER STATUS	METHOD OF DISCOVERY	DISCOVERY DESCRIPTION
11	c	0 6 0		b	
7–8	9	10–12	13–44	45	46–80

	FORM OF ACTIVITY RELEASED	CONTENT OF RELEASE	AMOUNT OF ACTIVITY	LOCATION OF RELEASE
12	z	z	N/A	
7–8	9	10	11–44	45–80

PERSONNEL EXPOSURES

	NUMBER	TYPE	DESCRIPTION
13	0 0 0	z	N/A
7–8	9–11	12	13–80

PERSONNEL INJURIES

	NUMBER	DESCRIPTION
14	0 0 0	N/A
7–8	9–11	12–80

OFFSITE CONSEQUENCES probable

15 NONE

LOSS OR DAMAGE TO FACILITY

	TYPE	DESCRIPTION
16	z	N/A
7–8	9	10–80

PUBLICITY

17 NONE

ADDITIONAL FACTORS

18 NONE

19

NAME: T. Dente PHONE: 315 343-2110

NRC FORM 195 (2-76)

U.S. NUCLEAR REGULATORY COMMISSION

NRC DISTRIBUTION FOR PART 50 DOCKET MATERIAL

DOCKET NUMBER: 50-220

FILE NUMBER: INCIDENT REPORT

TO: MR. JAMES P. O'REILLY

FROM: NIAGARA MOHAWK POWER CORP.
SYRACUSE, NEW YORK
R. R. SCHNEIDER

DATE OF DOCUMENT: 5/12/76

DATE RECEIVED: 5/18/76

☒ LETTER ☐ NOTORIZED
☐ ORIGINAL ☒ UNCLASSIFIED
☒ COPY

PROP.

INPUT FORM

NUMBER OF COPIES RECEIVED: NONE SIGNED

DESCRIPTION

LTR. TRANS THE FOLLOWING:

ENCLOSURE

LICENSEE EVENT RPT. (RO 50-220/76-18) ON 5/8/76 CONCERNING FISH IMPINGEMENT ON TRAVELING SCREENS EXCEEDING ETS LIMITS.

ACKNOWLEDGED
DO NOT REMOVE

PLANT NAME:

NINE MILE POINT #1

NOTE: IF PERSONNEL EXPOSURE IS INVOLVED SEND DIRECTLY TO KREGER/J. COLLINS

SAFETY — FOR ACTION/INFORMATION — ENVIRO 5/19/76 RJL

X	BRANCH CHIEF:	LEAR		
	W/3 CYS FOR ACTION			
X	LIC. ASST:	PARRISH		
	W/ / CYS			
	ACRS /6 CYS HOLDING/SENT TO LA			

INTERNAL DISTRIBUTION

X	REG FILE					
X	NRC PDR					
X	I & E (2)					
X	MIPC (3)					
X	SCHROEDER/IPPOLITO					
X	HOUSTON					
X	NOVAK/CHECK					
X	GRIMES/SCHWENCER (1) EA.					
X	CASE					
	~~E. WILLIAMS~~					
X	HANAUER					
X	TEDESCO/MACCARY					
X	EISENHUT					
X	BAER					
X	SHAO					
X	VOLLMER/BUNCH					
X	KREGER/J. COLLINS					

EXTERNAL DISTRIBUTION

X	LPDR: OSWEGO, N.Y.					
X	TIC					
X	NSIC					

CONTROL NUMBER: 5045

NIAGARA MOHAWK POWER CORPORATION

NIAGARA MOHAWK

300 ERIE BOULEVARD, WEST
SYRACUSE, N. Y. 13202

May 12, 1976

DOCKETED USNRC MAY 18 1976 U.S. NUCLEAR REGULATORY COMMISSION Mail Section

RECEIVED MAY 18 1976 U.S. NUCLEAR REGULATORY COMMISSION Mail Section

Regulatory Docket File

Mr. James P. O'Reilly
Directorate of Regulatory Operations
United States Nuclear Regulatory Commission
Region I
631 Park Avenue
King of Prussia, Pa. 29406

RE: Docket No. 50-220

Dear Mr. O'Reilly:

In accordance with Nine Mile Point Nuclear Station Unit #1 Environmental Technical Specification 5.6.3.1, we hereby submit Licensee Event Report 76-18.

This report was completed within the intent of the Licensee Event Report Instruction Booklet OOE-SS-001, dated October 1974, revised December 24, 1974. Due to the minimal significance category of the report, no supplemental report is included.

Very truly yours,

Original Signed by R.R. Schneider

R. R. Schneider
Vice President -
Electric Operations

MCH/aih

Enc. 2 copies

cc: (20 copies) Director, Office of Inspection and Enforcement.

(2 copies) Director, Office of Management Information and Program Control

5045

NRC FORM 195 (2-76)

U.S. NUCLEAR REGULATORY COMMISSION

NRC DISTRIBUTION FOR PART 50 DOCKET MATERIAL

DOCKET NUMBER: 50-220

FILE NUMBER: INCIDENT REPORT

TO: MR. JAMES P. O'REILLY

FROM: NIAGARA MOHAWK POWER CORP.
SYRACUSE, NEW YORK
R. R. SCHNEIDER

DATE OF DOCUMENT: 5/7/76

DATE RECEIVED: 5/19/76

[X] LETTER [ ] ORIGINAL [X] COPY

[ ] NOTORIZED [X] UNCLASSIFIED

PROP

INPUT FORM

NUMBER OF COPIES RECEIVED: NONE SIGNED

DESCRIPTION

LTR. TRANS THE FOLLOWING:

ENCLOSURE

LICENSEE EVENT RPT. (RO 50-220/76-17) ON 4/28/76 CONCERNING FISH BEING IMPINGED ON TRAVELING SCREENS EXCEEDING ETS LIMIT.

ACKNOWLEDGED
DO NOT REMOVE

PLANT NAME:

NINE MILE POINT #1

NOTE: IF PERSONNEL EXPOSURE IS INVOLVED SEND DIRECTLY TO KREGER/J. COLLINS

SAFETY — FOR ACTION/INFORMATION — ENVIRO 5/20/76 RJL

X	BRANCH CHIEF:	LEAR	
	W/3 CYS FOR ACTION		
X	LIC. ASST:	PARRISH	
	W/ 1 CYS		
	ACRS 16 CYS HOLDING/SENT TO LA		

INTERNAL DISTRIBUTION

X	REG FILE						
X	NRC PDR						
X	I & E (2)						
X	MIPC (3)						
X	SCHROEDER/IPPOLITO						
X	HOUSTON						
X	NOVAK/CHECK						
X	GRIMES/SCHWENCER (1) EA						
X	CASE						
	~~E. WILLIAMS~~						
X	HANAUER						
X	TEDESCO/MACCARY						
X	EISENHUT						
X	BAER						
X	SHAO						
X	VOLLMER/BUNCH						
X	KREGER/J. COLLINS						

EXTERNAL DISTRIBUTION

X	LPDR: OSWEGO, N.Y.				
X	TIC				
X	NSIC				

CONTROL NUMBER: 5064

NRC FORM 195 (2-76)

NIAGARA MOHAWK POWER CORPORATION

NIAGARA MOHAWK

300 ERIE BOULEVARD, WEST
SYRACUSE, N. Y. 13202

May 7, 1976

Mr. James P. O'Reilly
Directorate of Regulatory Operations
United States Nuclear Regulatory Commission
Region I
631 Park Avenue
King of Prussia, Pa. 29406

RE: Docket No. 50-220

Dear Mr. O'Reilly:

In accordance with Nine Mile Point Nuclear Station Unit #1 Environmental Technical Specification 5.6.3.1, we hereby submit Licensee Event Report 76-17.

This report was completed within the intent of the Licensee Event Report Instruction Booklet 00E-SS-001, dated October 1974, revised December 24, 1974. Due to the minimal significance category of the report, no supplemental report is included.

Very truly yours,

Original Signed by R.R. Schneider

R.R. Schneider
Vice President
Electric Operations

MCH/aih

Enc. 2 copies

cc: (20 copies) Director, Office of Inspection and Enforcement

(2 copies) Director, Office of Management Information and Program Control

5064

LICENSEE EVENT REPORT

CONTROL BLOCK: [ ] (1–6) [PLEASE PRINT ALL REQUIRED INFORMATION]

	LICENSEE NAME	LICENSE NUMBER	LICENSE TYPE	EVENT TYPE
01	NYNMP1	— —	4111 1	04
7–8	9–14	15–25	26–30	31–32

	CATEGORY	REPORT TYPE	REPORT SOURCE	DOCKET NUMBER	EVENT DATE	REPORT DATE
01 CON'T	MI	T	L	05 0—022 0	042876	050476
7–8	57–58	59	60	61–68	69–74	75–80

EVENT DESCRIPTION

During routine impingement sampling by contractor personnel (4/28-29/76) it was found that the numbers of fish being impinged on the traveling screens exceeded the ETS limit of 20,000/24 hr. period as per Sect. 3.1.2.a2

(See Attachment)

RO 76-17

	SYSTEM CODE	CAUSE CODE	COMPONENT CODE	PRME COMPONENT SUPPLIER	COMPONENT MANUFACTURER	VOLATION
07	HF	F	ZZZZZZ	Z	Z999	-
7–8	9–10	11	12–17	43	44–47	48

CAUSE DESCRIPTION

There was no apparent cause for this occurrence that could be directly related to changes in plant operations. The principal species impinged, alewives, rainbow smelt migrate inshore annually at this time of year.

	FACILITY STATUS	% POWER	OTHER STATUS	METHOD OF DISCOVERY	DISCOVERY DESCRIPTION
11	F	087	N/A	a	
7–8	9	10–12	13–44	45	46–80

	FORM OF ACTIVITY RELEASED	CONTENT OF RELEASE	AMOUNT OF ACTIVITY	LOCATION OF RELEASE
12	Z	Z	N/A	N/A
7–8	9	10	11–44	45–80

PERSONNEL EXPOSURES

	NUMBER	TYPE	DESCRIPTION
13	000	Z	N/A
7–8	9–11	12	13–80

PERSONNEL INJURIES

	NUMBER	DESCRIPTION
14	000	N/A
7–8	9–11	12–80

OFFSITE CONSEQUENCES probable

NONE

LOSS OR DAMAGE TO FACILITY

	TYPE	DESCRIPTION
16	Z	N/A
7–8	9	10–80

PUBLICITY

N/A

ADDITIONAL FACTORS

Contractor personnel remained on Site until numbers fell below 20,000/24 hr. as per ETS. This occurred on 5/01/76.

IMPINGEMENT NUMBERS

4/28-29/76	105,750	
4/29-30/76	52,497	
4/30-5/1/76	41,998	
5/1-2/76	17,949	below ETS limit of 20,000/24 hr.

NRC FORM 195 (2-76)

U.S. NUCLEAR REGULATORY COMMISSION

NRC DISTRIBUTION FOR PART 50 DOCKET MATERIAL

DOCKET NUMBER: 50-220

FILE NUMBER: INCIDENT REPORT

DATE OF DOCUMENT: 4/28/76

DATE RECEIVED: 5/4/76

TO: MR. JAMES P. O'REILLY

FROM: NIAGARA MOHAWK POWER CORP. SYRACUSE, N. Y. R. R. SCHNEIDER

☒ LETTER ☐ ORIGINAL ☒ COPY

☐ NOTORIZED ☒ UNCLASSIFIED

PROP

INPUT FORM

NUMBER OF COPIES RECEIVED: NONE SIGNED

DESCRIPTION

LTR. TRANS THE FOLLOWING:

ENCLOSURE

LICENSEE EVENT RPT. (RO 50-220/76-14)ON 4/19-20/76 AND 4/20-21/76) CONCERNING FISH BEING IMPINGED ON TRAVELING SCREENS EXCEEDING ETS LIMITS.
76-15 ON 4/23/76=IMPINGEMENT NUMBERS WERE INCREASING & WOULD EXCEED ETS LIMIT.
76-16 ON 4/26/76 & 4/27/76=NUMBER OF FISH BEING IMPINGED ON TRAVELING SCREENS EXCEEDING ETS LIMIT.

ACKNOWLEDGED
DO NOT REMOVE

PLANT NAME: NINE MILE PT. #1

NOTE: IF PERSONNEL EXPOSURE IS INVOLVED SEND DIRECTLY TO KREGER/J. COLLINS

SAFETY — FOR ACTION/INFORMATION — ENVIRO 5/6/76 RJL

☒	BRANCH CHIEF:	LEAR
	W/3 CYS FOR ACTION	
☒	LIC. ASST:	PARRISH
	W/ / CYS	
	ACRS /6 CYS HOLDING/SENT TO LA	

INTERNAL DISTRIBUTION

☒	REG FILE						
☒	NRC PDR						
☒	I & E (2)						
☒	MIPC (3)						
☒	SCHROEDER/IPPOLITO						
☒	HOUSTON						
☒	NOVAK/CHECK						
☒	GRIMES/SCHWENCER						
☒	CASE						
☒	E. WILLIAMS						
☒	HANAUER						
☒	TEDESCO/MACCARY						
☒	EISENHUT						
☒	BAER						
☒	SHAO						
☒	VOLLMER/BUNCH						
☒	KREGER/J. COLLINS						

EXTERNAL DISTRIBUTION

☒	LPDR: OSWEGO, N.Y.				
☒	TIC				
☒	NSIC				

CONTROL NUMBER: 4450

LICENSEE EVENT REPORT

CONTROL BLOCK: [ ] (1–6) [PLEASE PRINT ALL REQUIRED INFORMATION]

	LICENSEE NAME	LICENSE NUMBER	LICENSE TYPE	EVENT TYPE
01	NYNMP1	— —	41111	04
7 8	9–14	15–25	26–30	31 32

	CATEGORY	REPORT TYPE	REPORT SOURCE	DOCKET NUMBER	EVENT DATE	REPORT DATE
01 CON'T	MI	T	L	050—0220	042076	042076
7 8	57 58	59	60	61–68	69–74	75–80

EVENT DESCRIPTION

02 During routine impingement sampling by contractor personnel on 4/19-20/76 and 4/20-21/76
03 it was determined that the numbers of fish being impinged on the traveling screens
04 exceeded the ETS limits of 20,000/24 hr. period on per Sect. 3.1.2.a 2.
05 04/20/76-23,118 (90% alewives) - 04/21/76 - 40,614 (93% alewives)
06 RO-76-14

	SYSTEM CODE	CAUSE CODE	COMPONENT CODE	PRIME COMPONENT SUPPLIER	COMPONENT MANUFACTURER	VIOLATION
07	HF	F	ZZZZZZ	Z	Z999	-
7 8 9	10	11	12–17	43	44–47	48

CAUSE DESCRIPTION

08 There was no apparent cause for this occurrence related to changes inplant operation.
09 The principal species impinged, alewives, rainbow smelt migrate for spawning annual
10 at this time of year.

	FACILITY STATUS	% POWER	OTHER STATUS	METHOD OF DISCOVERY	DISCOVERY DESCRIPTION
11	F	060		a	
7 8	9	10–12	13–44	45	46–80

	FORM OF ACTIVITY RELEASED	CONTENT OF RELEASE	AMOUNT OF ACTIVITY	LOCATION OF RELEASE
12	Z	Z	N/A	N/A
7 8	9	10	11–44	45–80

PERSONNEL EXPOSURES

	NUMBER	TYPE	DESCRIPTION
13	000	Z	N/A
7 8	9–11	12	13–80

PERSONNEL INJURIES

	NUMBER	DESCRIPTION
14	000	N/A
7 8	9–11	12–80

OBVIOUS CONSEQUENCES probable

15 NONE

LOSS OR DAMAGE TO FACILITY

	TYPE	DESCRIPTION
16	Z	N/A
7 8	9	10–80

PUBLICITY

17 N/A

ADDITIONAL FACTORS

18 Additional contractor personnel were dispatched to continue monitoring until numbers
19 fell below 20,000/24 hr. as per ETS.

NAME: M. Hedrick PHONE: 315-343-2110

NIAGARA MOHAWK POWER CORPORATION

NIAGARA MOHAWK

300 ERIE BOULEVARD, WEST
SYRACUSE, N. Y. 13202

April 28, 1976

Mr. James P. O'Reilly
Directorate of Regulatory Operations
United States Nuclear Regulatory Commission
Region I
631 Park Avenue
King of Prussia, Pa. 19406

RE: Docket No. 50-220

Dear Mr. O'Reilly:

In accordance with Nine Mile Point Nuclear Station Unit #1 Environmental Technical Specification 5.6.3.1, we hereby submit Licensee Event Reports 76-14, 76-15, and 76-16.

These reports were completed within the intent of the Licensee Event Report Instruction Booklet 00E-SS-002, dated October 1974, revised December 24, 1974. Due to the minimal significance category of the report, no supplemental report is included.

Very truly yours,

Original Signed by R. R. Schneider

R.R. Schneider
Vice President -
Electric Operations

MCH/aih

Enc. 2 copies

CC: (20 copies) Director, Office of Inspection & Enforcement
(2 copies) Director, Office of Management Information and Program Control

4450

LICENSEE EVENT REPORT

CONTROL BLOCK: [ ] (1–6) [PLEASE PRINT ALL REQUIRED INFORMATION]

	LICENSEE NAME	LICENSE NUMBER	LICENSE TYPE	EVENT TYPE
01	NYNMP1	— —	4 1 1 1 1	0 4
7–8	9–14	15–25	26–30	31–32

	CATEGORY	REPORT TYPE	REPORT SOURCE	DOCKET NUMBER	EVENT DATE	REPORT DATE
01 CON'T	M I	T	L	0 5 0 — 0 2 2 0	0 4 2 4 7 6	0 4 2 6 7 6
7–8	57–58	59	60	61–68	69–74	75–80

EVENT DESCRIPTION

02 During routine surveillance of fish impingment by offsite contractor personnel on
03 4/23/76 it was found that impingement numbers were increasing and would exceed ETS
04 limit of 20,000/hr. period. This limit was exceeded on 4/24-25/76. (ETS-Sect. 3.1.2.a2)
05 04/24/76 - 80,156 (96% alewives) - 04/25/76 - 67,328 (97% alewives) RO 76-15
06

	SYSTEM CODE	CAUSE CODE	COMPONENT CODE	PRME COMPONENT SUPPLIER	COMPONENT MANUFACTURER	VIOLATION
07	H F	F	Z Z Z Z Z Z	Z	Z 9 9 9	-
7–8	9–10	11	12–17	43	44–47	48

CAUSE DESCRIPTION

08 There was no apparent cause for this occurrence related to changes in plant
09 operation. The principle species impinged, alewives and smelt migrate inshore
10 for spawning annually at this time of year.

	FACILITY STATUS	% POWER	OTHER STATUS	METHOD OF DISCOVERY	DISCOVERY DESCRIPTION
11	F	0 6 9	N/A	a	N/A
7–8	9	10–12	13–44	45	46–80

	FORM OF ACTIVITY RELEASED	CONTENT OF RELEASE	AMOUNT OF ACTIVITY	LOCATION OF RELEASE
12	Z	Z	N/A	N/A
7–8	9	10	11–44	45–80

PERSONNEL EXPOSURES

	NUMBER	TYPE	DESCRIPTION
13	0 0 0	Z	N/A
7–8	9–11	12	13–80

PERSONNEL INJURIES

	NUMBER	DESCRIPTION
14	0 0 0	N/A
7–8	9–11	12–80

~~RESTRICTED~~ CONSEQUENCES Probable

15 NONE

LOSS OR DAMAGE TO FACILITY

	TYPE	DESCRIPTION
15	Z	N/A
7–8	9	10–80

PUBLICITY

17 N/A

ADDITIONAL FACTORS

18 Contractor personnel remained on site to monitor impingement until numbers fell
19 below 20,000/24 hr. as per ETS.

Michael Hedrick 315 343-2110

LICENSEE EVENT REPORT

CONTROL BLOCK: [ ] (1–6) [PLEASE PRINT ALL REQUIRED INFORMATION]

	LICENSEE NAME	LICENSE NUMBER	LICENSE TYPE	EVENT TYPE
01	NYNMP1	— —	4 1 1 1 1	0 4
7 8	9–14	15–25	26–30	31 32

	CATEGORY	REPORT TYPE	REPORT SOURCE	DOCKET NUMBER	EVENT DATE	REPORT DATE
01 CON'T	M I	T	L	0 5 0 — 0 2 2 0	0 4 2 7 7 6	0 4 2 8 7 6
7 8	57 58	59	60	61–68	69–74	75–80

EVENT DESCRIPTION

02 During routine impingement sampling by contractor personnel on 04/26/76 - 04/27/76
03 the numbers of fish being impinged on the traveling screens exceeded ETS limit of
04 20,000/24 hr. (Sect. 3.1.2 a 2).
05 04/26-27/76 - 27,922 (94% alewives)
06 RO 76-16

	SYSTEM CODE	CAUSE CODE	COMPONENT CODE	PRME COMPONENT SUPPLIER	COMPONENT MANUFACTURER	VOLATION
07	H F	F	Z Z Z Z Z Z	Z	Z 9 9 9	-
7 8 9	10	11	12–17	43	44–47	48

CAUSE DESCRIPTION

08 There was no apparent cause for this occurrence related to changes in plant operation.
09 The principle species impinged alewives and rainbow smelt migrate inshore for spawn-
10 ing at this time of year.

	FACILITY STATUS	% POWER	OTHER STATUS	METHOD OF DISCOVERY	DISCOVERY DESCRIPTION
11	F	0 7 8	N/A	a	
7 8	9	10–12	13–44	45	46–80

	FORM OF ACTIVITY RELEASED	CONTENT OF RELEASE	AMOUNT OF ACTIVITY	LOCATION OF RELEASE
12	Z	Z	N/A	N/A
7 8	9	10	11–44	45–80

PERSONNEL EXPOSURES

	NUMBER	TYPE	DESCRIPTION
13	0 0 0	Z	N/A
7 8	9–11	12	13–80

PERSONNEL INJURIES

	NUMBER	DESCRIPTION
14	0 0 0	N/A
7 8	9–11	12–80

~~OFFSITE~~ CONSEQUENCES probable

15 NONE

LOSS OR DAMAGE TO FACILITY

	TYPE	DESCRIPTION
16	Z	N/A
7 8	9	10–80

PUBLICITY

17 N/A

ADDITIONAL FACTORS

18 Contractor personnel remained onsite to monitor impingement until numbers fell below
19 20,000/24 hr. as per ETS.

NAME: M. Hedrick PHONE: 315-343-2110 Ext. 1310

NRC FORM 195 (2-76)

U.S. NUCLEAR REGULATORY COMMISSION

NRC DISTRIBUTION FOR PART 50 DOCKET MATERIAL

DOCKET NUMBER: 50-220

FILE NUMBER: INCIDENT REPORT

TO: NRC

FROM: NIAGARA MOHAWK POWER CORP
SYRACUSE, NY
R R SCHNEIDER

DATE OF DOCUMENT: 3-3-76

DATE RECEIVED: 3-12-76

☒ LETTER ☐ NOTORIZED
☐ ORIGINAL ☒ UNCLASSIFIED
☒ COPY

PROP

INPUT FORM

NUMBER OF COPIES RECEIVED

DESCRIPTION

LTR TRANS THE FOLLOWING.....

ACKNOWLEDGED
DO NOT REMOVE

PLANT NAME: NINE MILE PT.

ENCLOSURE

LICENSEE EVENT REPORTS:
A
50-220/76-02 ON 2-4-76 RE INTERPOLATION FROM TECH SPEC CURVES WITHOUT GRID OR BREAKPOINTS..
50-220/76-03 ON 2-7-76 RE SET POINT DRIFT....
50-220-76-04 ON 2-7-76 RE SET POINT DRIFT....
50-220/76-05 ON 2-10-76 RE DETECTOR HAD FAILED.....
50-220/76-05 ON 2-15-76 RE LINKAGE ARM ON MERCOID WAS DISCONNECTED FOR NO APPARENT REASON..... .....

NOTE: IF PERSONNEL EXPOSURE IS INVOLVED SEND DIRECTLY TO KREGER/J. COLLINS

SAFETY — FOR ACTION/INFORMATION — ENVIRO 3-17-76 RJS

✓	BRANCH CHIEF:	LEAR
	W/3 CYS FOR ACTION	
✓	LIC. ASST:	PARRISH
	W/ CYS	
	ACRS CYS HOLDING/SENT TO LA	

INTERNAL DISTRIBUTION

✓	REG FILE
✓	NRC PDR
✓	I & E (2)
✓	MIPC (3)
✓	SCHROEDER/IPPOLITO
✓	HOUSTON
✓	NOVAK/CHECK
✓	GRIMES/SCHWENCER
✓	CASE
✓	F. WILLIAMS
✓	HANAUER
✓	TEDESCO/MACCARY
✓	EISENHUT
✓	BAER
✓	SHAO
✓	VOLLMER/BUNCH
✓	KREGER/J. COLLINS

EXTERNAL DISTRIBUTION

✓	LPDR: OSWEGO, NY
✓	TIC
✓	NSIC

CONTROL NUMBER: 02549

NIAGARA MOHAWK POWER CORPORATION

NIAGARA MOHAWK

300 ERIE BOULEVARD, WEST
SYRACUSE, N. Y. 13202

March 3, 1976

Mr. James P. O'Reilly
Directorate of Regulatory Operations
United States Nuclear Regulatory Commission
Region I
631 Park Avenue
King of Prussia, Pa. 29406

RE: Docket No. 50-220

Dear Mr. O'Reilly:

In accordance with Nine Mile Point Nuclear Station Unit #1 Technical Specification 6.9, we hereby submit Licensee Event Report 76-02 through 76-06 which documents the Reportable Occurrences for February 1976.

This report conforms to the requirements of Regulatory Guide 1.16, Revision 2 and was completed within the intent of the Licensee Event Report Instruction Booklet 00E-SS-001, dated October 2974, revised December 24, 1974. Due to the minimal significance category of the report, no supplemental report is included.

Very truly yours,

Original signed by R.R. Schneider

R.R. Schneider
Vice President -
Electric Operations

TJD/mm

Enc. 3 copies

cc: K.R. Goller (30 copies)

2549

LICENSEE EVENT REPORT

CONTROL BLOCK: [ ] (1–6)

(PLEASE PRINT ALL REQUIRED INFORMATION)

	LICENSEE NAME	LICENSE NUMBER	LICENSE TYPE	EVENT TYPE
01	NYNMP1	— —	4 1 1 1 1	0 1
7–8	9–14	15–25	26–30	31–32

	CATEGORY	REPORT TYPE	REPORT SOURCE	DOCKET NUMBER	EVENT DATE	REPORT DATE
01 CON'T	M 1	L	L	05 0 — 0 2 2 0	0 2 0 4 7 6	0 3 0 3 7 6
7–8	57–58	59	60	61–68	69–74	75–80

EVENT DESCRIPTION

02 Following a review it was discovered that the KW/FT vs Exposure curve points for

03 MAPHLGR placed in the process computer for Type 5 Fuel (8x8) were in error by no

04 more than .1 KW/FT nominal MAPHLGR limit 8.52 KW/FT

05 RO 76-02

06

	SYSTEM CODE	CAUSE CODE	COMPONENT CODE	PRIME COMPONENT SUPPLIER	COMPONENT MANUFACTURER	VIOLATION
07	Z Z	A	Z Z Z Z Z Z	N	Z 9 9 9	N
7–8	9–10	11	12–17	43	44–47	48

CAUSE DESCRIPTION

08 Interpolation from Technical Specification curves without grid or breakpoints.

09

10 RO 76-02

	FACILITY STATUS	% POWER	OTHER STATUS	METHOD OF DISCOVERY	DISCOVERY DESCRIPTION
11	E	0 9 4		Z	Routine Review
7–8	9	10–12	13–44	45	46–80

	FORM OF ACTIVITY RELEASED	CONTENT OF RELEASE	AMOUNT OF ACTIVITY	LOCATION OF RELEASE
12	Z	Z	N/A	N/A
7–8	9	10	11–44	45–80

PERSONNEL EXPOSURES

	NUMBER	TYPE	DESCRIPTION
13	0 0 0	Z	N/A
7–8	9–11	12	13–80

PERSONNEL INJURIES

	NUMBER	DESCRIPTION
14	0 0 0	N/A
7–8	9–11	12–80

OFFSITE CONSEQUENCES

15 Probable NONE

LOSS OR DAMAGE TO FACILITY

	TYPE	DESCRIPTION
16	Z	NONE
7–8	9	10–80

PUBLICITY

17 NONE

ADDITIONAL FACTORS

18 Due to the small error and the degree of conservatism present no hazard was presented

19 to the General Public.

NAME: T. Dente PHONE: 315-343-2110

LICENSEE EVENT REPORT

CONTROL BLOCK: [ ] (1–6)

(PLEASE PRINT ALL REQUIRED INFORMATION)

	LICENSEE NAME	LICENSE NUMBER	LICENSE TYPE	EVENT TYPE
01	NYNMP1	— —	4111 1	01
7–8	9–14	15–25	26–30	31–32

	CATEGORY	REPORT TYPE	REPORT SOURCE	DOCKET NUMBER	EVENT DATE	REPORT DATE
01 CON'T	M1	L	L	050—0220	020776	030376
7–8	57–58	59	60	61–68	69–74	75–80

EVENT DESCRIPTION

02 During routine surveillance testing RE-04A, high drywell pressure indicator (1 of 4)

03 tripped at 3.35 psig rather than 3.5 ± .053 psig.

04

05

06 RO 76-03

	SYSTEM CODE	CAUSE CODE	COMPONENT CODE	PRIME COMPONENT SUPPLIER	COMPONENT MANUFACTURER	VIOLATION
07	IA	E	INSTRU	N	B080	N
7–8	9–10	11	12–17	43	44–47	48

CAUSE DESCRIPTION

08 Set point drift. Redundant sensors operable therefore no hazard to general public.

09

10

	FACILITY STATUS	% POWER	OTHER STATUS	METHOD OF DISCOVERY	DISCOVERY DESCRIPTION
11	E	090		b	
7–8	9	10–12	13–44	45	46–80

	FORM OF ACTIVITY RELEASED	CONTENT OF RELEASE	AMOUNT OF ACTIVITY	LOCATION OF RELEASE
12	Z	Z	N/A	N/A
7–8	9	10	11–44	45–80

PERSONNEL EXPOSURES

	NUMBER	TYPE	DESCRIPTION
13	000	Z	N/A
7–8	9–11	12	13–80

PERSONNEL INJURIES

	NUMBER	DESCRIPTION
14	000	N/A
7–8	9–11	12–80

~~OFFSITE~~ CONSEQUENCES probable

15 NONE

LOSS OR DAMAGE TO FACILITY

	TYPE	DESCRIPTION
16	Z	N/A
7–8	9	10–80

PUBLICITY

17 NONE

ADDITIONAL FACTORS

18 NONE

19

NAME: T. Dente PHONE: 315-343-2110

GPO 801-667

LICENSEE EVENT REPORT

CONTROL BLOCK: [ ] (1–6)

(PLEASE PRINT ALL REQUIRED INFORMATION)

	LICENSEE NAME	LICENSE NUMBER	LICENSE TYPE	EVENT TYPE
01	NYNMP.1	— —	4111	01
7–8	9–14	15–25	26–30	31–32

	CATEGORY	REPORT TYPE	REPORT SOURCE	DOCKET NUMBER	EVENT DATE	REPORT DATE
01 CON'T	MI	L	L	05 0—022 0	02 07 76	03 03 76
7–8	57–58	59	60	61–68	69–74	75–80

EVENT DESCRIPTION

02 During surveillance testing found AE-18C, Reactor Lo-Lo-Lo level indicator,
03 actuated at 131" rather than 129.7" max.
04
05
06 R076-04

	SYSTEM CODE	CAUSE CODE	COMPONENT CODE	PRIME COMPONENT SUPPLIER	COMPONENT MANUFACTURER	VIOLATION
07	IB	D	INSTRU	N	B080	N
7–8	9–10	11	12–17	43	44–47	48

CAUSE DESCRIPTION

08 Set point drift. Redundant components operable. No hazard presented to general
09 public.
10

	FACILITY STATUS	% POWER	OTHER STATUS	METHOD OF DISCOVERY	DISCOVERY DESCRIPTION
11	E	090		b	
7–8	9	10–12	13–44	45	46–80

	FORM OF ACTIVITY RELEASED	CONTENT OF RELEASE	AMOUNT OF ACTIVITY	LOCATION OF RELEASE
12	Z	Z	N/A	
7–8	9	10	11–44	45–80

PERSONNEL EXPOSURES

	NUMBER	TYPE	DESCRIPTION
13	000	Z	N/A
7–8	9–11	12	13–80

PERSONNEL INJURIES

	NUMBER	DESCRIPTION
14	000	N/A
7–8	9–11	12–80

OFFSITE CONSEQUENCES Probable

15 NONE

LOSS OR DAMAGE TO FACILITY

	TYPE	DESCRIPTION
16	Z	N/A
7–8	9	10–80

PUBLICITY

17 NONE

ADDITIONAL FACTORS

18 NONE

19

NAME: T. Dente PHONE: 315-343-2110

LICENSEE EVENT REPORT

CONTROL BLOCK: [ ] (1–6)

[PLEASE PRINT ALL REQUIRED INFORMATION]

	LICENSEE NAME	LICENSE NUMBER	LICENSE TYPE	EVENT TYPE
01	NYNMP1	— —	4111 1	01
7–8	9–14	15–25	26–30	31–32

	CATEGORY	REPORT TYPE	REPORT SOURCE	DOCKET NUMBER	EVENT DATE	REPORT DATE
01 CON'T	MI	L	L	05 0—02 20	021076	030376
7–8	57–58	59	60	61–68	69–74	75–80

EVENT DESCRIPTION

02 During Routine Surveillance, R015C, a refuel platform high range monitor/calibration
03 calibration indicated a responce of 350 mr/hr rather than 800 mr/hr. No irrudiated
04 fuel movement or cast handling was taking place. Therefore, no hazard was presented
05 to the General Public.
06 RO 76-05

	SYSTEM CODE	CAUSE CODE	COMPONENT CODE	PRIME COMPONENT SUPPLIER	COMPONENT MANUFACTURER	VIOLATION
07	BA	D	INSTRU	W	G080	N
7–8	9–10	11	12–17	43	44–47	48

CAUSE DESCRIPTION

08 Detector has failed and has been replaced.
09 Part Number - 5481718
10

	FACILITY STATUS	% POWER	OTHER STATUS	METHOD OF DISCOVERY	DISCOVERY DESCRIPTION
11	E	090		b	
7–8	9	10–12	13–44	45	46–80

	FORM OF ACTIVITY RELEASED	CONTENT OF RELEASE	AMOUNT OF ACTIVITY	LOCATION OF RELEASE
12	Z	Z	N/A	
7–8	9	10	11–44	45–80

PERSONNEL EXPOSURES

	NUMBER	TYPE	DESCRIPTION
13	000	Z	N/A
7–8	9–11	12	13–80

PERSONNEL INJURIES

	NUMBER	DESCRIPTION
14	000	N/A
7–8	9–11	12–80

~~OFFSITE~~ CONSEQUENCES Probable

15 NONE

LOSS OR DAMAGE TO FACILITY

	TYPE	DESCRIPTION
16	Z	N/A
7–8	9	10–80

PUBLICITY

17 NONE

ADDITIONAL FACTORS

18 NONE

19

NAME: T. Dente PHONE: 315-343-2110

LICENSEE EVENT REPORT

CONTROL BLOCK: [ ] (1–6) [PLEASE PRINT ALL REQUIRED INFORMATION]

	LICENSEE NAME	LICENSE NUMBER	LICENSE TYPE	EVENT TYPE
01	NYNMP1	— —	4111 1	01
7–8	9–14	15–25	26–30	31–32

	CATEGORY	REPORT TYPE	REPORT SOURCE	DOCKET NUMBER	EVENT DATE	REPORT DATE
01 CON'T	MI	L	L	05 0 — 0 2 2 0	021576	030376
7–8	57–58	59	60	61–68	69–74	75–80

EVENT DESCRIPTION

02 Loss of HPCI Component due to apparent failure of a pump suction pressure switch.

03 Component is F12 F.W. pump, one of two HPCI used pumps.

04

05

06 R076-06

	SYSTEM CODE	CAUSE CODE	COMPONENT CODE	PRIME COMPONENT SUPPLIER	COMPONENT MANUFACTURER	VIOLATION
07	IB	A	2999 9	-	Z999	N
7–8	9–10	11	12–17	43	44–47	48

CAUSE DESCRIPTION

08 Linkage arm on mercoid was disconnected for no apparent reason. Reconnected arm,

09 switch tested properly. Redundent component operable.

10

	FACILITY STATUS	% POWER	OTHER STATUS	METHOD OF DISCOVERY	DISCOVERY DESCRIPTION
11	E	090		a	
7–8	9	10–12	13–44	45	46–80

	FORM OF ACTIVITY RELEASED	CONTENT OF RELEASE	AMOUNT OF ACTIVITY	LOCATION OF RELEASE
12	Z	Z	N/A	N/A
7–8	9	10	11–44	45–80

PERSONNEL EXPOSURES

	NUMBER	TYPE	DESCRIPTION
13	000	Z	N/A
7–8	9–11	12	13–80

PERSONNEL INJURIES

	NUMBER	DESCRIPTION
14	000	N/A
7–8	9–11	12–80

OFFSITE CONSEQUENCES

15 Probable None

LOSS OR DAMAGE TO FACILITY

	TYPE	DESCRIPTION
16	Z	N/A
7–8	9	10–80

PUBLICITY

17 NONE

ADDITIONAL FACTORS

18 NONE

19

NAME: T. Dente PHONE: 315-343-2110

NRC DISTRIBUTION FOR PART 50 DOCKET MATERIAL
(TEMPORARY FORM)

CONTROL NO: 1289

FILE: INCIDENT FILE

FROM:	DATE OF DOC	DATE REC'D	LTR	TWX	RPT	OTHER
Niagara Mohawk Power Corp. Syracuse, N.Y. R.R. Schneider	2-3-76	2-9-76	XXX			

TO:	ORIG	CC	OTHER	
J.P.O'Reilly	None	30		SENT NRC PDR XXX SENT LOCAL PDR XXX

CLASS	UNCLASS	PROP INFO	INPUT	NO CYS REC'D	DOCKET NO:
	XXX			30	50-220

DESCRIPTION:
Letter trans the following.....

ENCLOSURES:
Reportable Occurrence # 76-01, on 1-17-76, Concerning Setpoint drift in the conservative direction.....

(1 Copy Received) ACKNOWLEDGED

DO NOT REMOVE

PLANT NAME: Nine Mile Pt # 1

FOR ACTION/INFORMATION SAB 2-10-76

BRANCH CHIEF Lear W/3

LIC. ASST. K. Parrish W/16 cys ACRS

INTERNAL DISTRIBUTION

REG FILE
NRC PDR
I&E (2)
MIPC (3)
SCHROEDER/IPPOLITO
HOUSTON
NOVAK/CHECK
GRIMES/SCHWENCER
CASE
F. WILLIAMS
HANAUER
TEDESCO/MACCARY
EISENHUT
BAER
SHAO
VOLLMER/BUNCH
KREGER/J. COLLINS

NOTE: IF PERSONEL EXPOSURE IS INVOLVED SEND DIRECTLY TO KREGER/J. COLLINS

EXTERNAL DISTRIBUTION

LOCAL PDR Oswego, N.Y.
TIC
NSIC

DISTRIBUTION REVISED 1-19-76 by D. CRUTCHFIELD, TECH REVIEW COORDINATOR

LICENSEE EVENT REPORT

CONTROL BLOCK: [ ] (1–6) [PLEASE PRINT ALL REQUIRED INFORMATION]

	LICENSEE NAME	LICENSE NUMBER	LICENSE TYPE	EVENT TYPE
01	NYNMP1	— —	4 1 1 1 1	0 4
7–8	9–14	15–25	26–30	31–32

	CATEGORY	REPORT TYPE	REPORT SOURCE	DOCKET NUMBER	EVENT DATE	REPORT DATE
01 CON'T	M I	T	L	0 5 0 — 0 2 2 0	0 5 0 8 7 6	0 5 1 1 7 6
7–8	57–58	59	60	61–68	69–74	75–80

EVENT DESCRIPTION

02 Fish impingement on traveling screens was determined to be in excess of 20,000/24 hr.

03 on 05/03-04/76. This situation continued until 05/07-08/76. The numbers on these

04 dates exceeded ETS limits. (Sect. 3.1.2.a2)

05 See attachment. RO 76-18

06

	SYSTEM CODE	CAUSE CODE	COMPONENT CODE	PRIME COMPONENT SUPPLIER	COMPONENT MANUFACTURER	VIOLATION
07	H F	F	Z Z Z Z Z Z	Z	Z 9 9 9	-
7–8	9–10	11	12–17	43	44–47	48

CAUSE DESCRIPTION

08 There was no apparent cause for this occurrence related to changes in plant operation.

09 The influx of the principle species (alewives, rainbow smelt) occurs annually at this

10 time of year.

	FACILITY STATUS	% POWER	OTHER STATUS	METHOD OF DISCOVERY	DISCOVERY DESCRIPTION
11	F	0 8 9	N/A	a	
7–8	9	10–12	13–44	45	46–80

	FORM OF ACTIVITY RELEASED	CONTENT OF RELEASE	AMOUNT OF ACTIVITY	LOCATION OF RELEASE
12	Z	Z	N/A	N/A
7–8	9	10	11–44	45–80

PERSONNEL EXPOSURES

	NUMBER	TYPE	DESCRIPTION
13	0 0 0	Z	N/A
7–8	9–11	12	13–80

PERSONNEL INJURIES

	NUMBER	DESCRIPTION
14	0 0 0	N/A
7–8	9–11	12–80

~~OFFSITE~~ CONSEQUENCES probable

15 NONE

LOSS OR DAMAGE TO FACILITY

	TYPE	DESCRIPTION
16	Z	N/A
7–8	9	10–80

PUBLICITY

17 N/A

ADDITIONAL FACTORS

18 Contractor personnel continued sampling until numbers fell below 20,000/24 hr. as per

19 ETS.

NAME: M. Hedrick PHONE: 315-343-2110 Ext. 1310

IMPINGEMENT NUMBERS

5/3-4/76	1000-1000	298,079
5/4-5/76	1000-1000	97,617
5/5-6/76	1000-1000	91,156
5/6-7/76	1000-1000	28,311
5/7-8/76	1000-1000	11,637

NIAGARA MOHAWK POWER CORPORATION

NIAGARA MOHAWK

300 ERIE BOULEVARD, WEST
SYRACUSE, N. Y. 13202

February 3, 1976

Regulatory File Cy.

Mr. James P. O'Reilly
Directorate of Regulatory Operations
United States Nuclear Regulatory Commission
Region I
631 Park Avenue
King of Prussia, Pa. 19406

RE: Docket No. 50-220

Dear Mr. O'Reilly:

In accordance with Nine Mile Point Nuclear Station Unit #1 Technical Specification 6.9, we hereby submit Licensee Event Report 76-01 which documents the Reportable Occurrences for January 1976.

This report conforms to the requirements of Regulatory Guide 1.16, Revision 2 and was completed within the intent of the Licensee Event Report Instruction Booklet 00E-SS-001, dated October 1974, revised December 24, 1974. Due to the minimal significance category of the report, no supplemental report is included.

Very truly yours,

R.R. Schneider
Vice President -
Electric Operations

TJD/mm

Enc. 3 copies

cc: K.R. Goller (30 copies)

LICENSEE EVENT REPORT

CONTROL BLOCK: [ ] (1–6) **(PLEASE PRINT ALL REQUIRED INFORMATION)**

	LICENSEE NAME	LICENSE NUMBER	LICENSE TYPE	EVENT TYPE
01	NYNMP1	— —	4111 1	01
7–8	9–14	15–25	26–30	31–32

	CATEGORY	REPORT TYPE	REPORT SOURCE	DOCKET NUMBER	EVENT DATE	REPORT DATE
01 CON'T	MI	L	L	050—0220	011776	020376
7–8	57–58	59	60	61–68	69–74	75–80

EVENT DESCRIPTION

02 During routine surveillance testing, RV-30 A&B Core Spray ΔP Instrumentation
03 indicated out of the normal range at 2.8 psid and 3.5 psid respectively 5±1 psid
04 required. This instrument is alarm only and serves no automatic initiation. Drift
05 was in conservative direction and safety and health of general public was not in
06 jeopardy. RO 76-1

	SYSTEM CODE	CAUSE CODE	COMPONENT CODE	PRME COMPONENT SUPPLIER	COMPONENT MANUFACTURER	VIOLATION
07	IB	E	INSTRU	N	B080	N
7–8	9–10	11	12–17	43	44–47	48

CAUSE DESCRIPTION

08 Set point drift in the conservative direction. Normal surveillance appears able
09 to detect at the established frequency of surveillance.
10

	FACILITY STATUS	% POWER	OTHER STATUS	METHOD OF DISCOVERY	DISCOVERY DESCRIPTION
11	E	094		b	
7–8	9	10–12	13–44	45	46–80

	FORM OF ACTIVITY RELEASED	CONTENT OF RELEASE	AMOUNT OF ACTIVITY	LOCATION OF RELEASE
12	Z	Z	N/A	
7–8	9	10	11–44	45–80

PERSONNEL EXPOSURES

	NUMBER	TYPE	DESCRIPTION
13	000	Z	N/A
7–8	9–11	12	13–80

PERSONNEL INJURIES

	NUMBER	DESCRIPTION
14	000	N/A
7–8	9–11	12–80

~~OFFSITE~~ CONSEQUENCES Probable

15 None

LOSS OR DAMAGE TO FACILITY

	TYPE	DESCRIPTION
16	Z	N/A
7–8	9	10–80

PUBLICITY

17 N/A

ADDITIONAL FACTORS

18 N/A

19

NAME: T.J. Dente PHONE: 315 343-2110

NRC DISTRIBUTION FOR PART 50 DOCKET MATERIAL
(TEMPORARY FORM)

CONTROL NO: 242
FILE: INCIDENT REPORT FI

FROM:	DATE OF DOC	DATE REC'D	LTR	TWX	RPT	OTHER
Niagara Mohawk Power Corp. Syracuse, N.Y. R.R. Schneider	1-8-76	1-12-76	XXX			

TO:	ORIG	CC	OTHER	
J.P.O"Reilly	None	30		SENT AEC PDR XXX SENT LOCAL PDR XXX

CLASS	UNCLASS	PROP INFO	INPUT	NO CYS REC'D	DOCKET NO:
	XXX			30	50-220

DESCRIPTION:
Letter trans the following.....

ENCLOSURES:
Abnormal Occurrence # 75-38, on 12-12-76, Concerning #11 IRM 's failure to respond...
Abnormal Occurrence # 75-38, on 12-12-76, Concerning RE-04C tripping.....

(30 Cys. Received)

PLANT NAME: Nine Mile Pt. # 1

FOR ACTION/INFORMATION SAB 1-13-76

BUTLER (L) W/ Copies
CLARK (L) W/ Copies
PARR (L) W/ Copies
KNIEL (L) W/ Copies
SCHWENCER (L) W/ Copies
STOLZ (L) W/ Copies
VASSALLO (L) W/ Copies
PURPLE (L) W/ Copies
ZIEMANN (L) W/ Copies
DICKER (E) W/ Copies
KNIGHTON (E) W/ Copies
YOUNGBLOOD (E) W/ Copies
REGAN (E) W/ Copies
LEAR (L) W/ 3 Copies
SPELS W/ Copies
REID W/ Copies

DO NOT REMOVE ACKNOWLEDGED.

INTERNAL DISTRIBUTION

REG FILE
NRC PDR
OGC, ROOM P-506A
GOSSICK/STAFF
CASE
BOYD
MOORE (L)
DEYOUNG (L)
SKOVHOLT (L)
GOLLER (L) (Ltr)
P. COLLINS
DENISE
REG OPR
FILE & REGION (2)
MIPC/PE (3)
STEELE

TECH REVIEW
SCHROEDER
MACCARY
KNIGHT
PAWLICKI
SHAO
** STELLO
** HOUSTON
** NOVAK
ROSS
IPPOLITO
TEDESCO
J. COLLINS
LAINAS
BENAROYA
VOLLMER

DENTON
** GRIMES
GAMMILL
KASTNER
BALLARD
SPANGLER

ENVIRO
MULLER
DICKER
KNIGHTON
YOUNGBLOOD
REGAN
PROJECT LDR

HARLESS

LIC ASST
R. DIGGS (L)
H. GEARIN (L)
E. GOULBOURNE (L)
P. KREUTZER (E)
J. LEE (L)
M. RUSHBROOK (L)
S. REED (E)
M. SERVICE (L)
S. SHEPPARD (L)
M. SLATER (E)
H. SMITH (L)
S. TEETS (L)
G. WILLIAMS (E)
V. WILSON (L)
R. INGRAM (L)
M. DUNCAN (E)

A/T IND
BRAITMAN
SALTZMAN
MELTZ

PLANS
MCDONALD
CHAPMAN
DUBE (Ltr)
E. COUPE
PETERSON
HARTFIELD (2)
KLECKER
EISENHUT
WIGGINTON
F. WILLIAMS
HANAUER

EXTERNAL DISTRIBUTION

1 – LOCAL PDR Oswego, N.Y.
1 – TIC (ABERNATHY)
1 – NSIC (BUCHANAN)
1 – ASLB
1 – Newton Anderson
16 – ACRS SENT TO LIC ASST S. Teets
** SEND ONLY TEN DAY REPORTS

(1)(2)(10) – NATIONAL LABS
1 – W. PENNINGTON, Rm E-201 GT
1 – CONSULTANTS NEWMARK/BLUME/AGBABIAN

1 – PDR-SAN/LA/NY
1 – BROOKHAVEN NAT LAB
1 – G. ULRIKSON, ORNL
1 – AGMED (RUTH GUSSMAN) Rm B-127 GT
1 – J. D. RUNKLES, Rm E-201 GT

Regulatory File Cy

NIAGARA MOHAWK POWER CORPORATION

NIAGARA MOHAWK

300 Erie Boulevard, West
Syracuse, New York 13202

January 12, 1976

DOCKETED USNRC JAN 12 1976 Mail Section Docket Clerk

RECEIVED JAN 12 1976 U.S. NUCLEAR REGULATORY COMMISSION Mail Section

Mr. James P. O'Reilly
Directorate of Regulatory Operations
United States Nuclear Regulatory Commission
Region I
631 Park Avenue
King of Prussia, Pa. 19406

RE: Docket No. 50-220

Dear Mr. O'Reilly:

In accordance with Nine Mile Point Nuclear Station Unit #1 Technical Specification 6.9, we hereby submit Licensee Event Reports 75-37 and 75-38 which document the Abnormal Occurrences for the month of December 1975.

These reports conform to the requirements of Regulatory Guide 1.16, Rev. 2 and were completed within the intent of the Licensee Event Report Instruction Booklet 00E-SS-001, dated October 1974 and revised December 24, 1974.

Very truly yours,

R.R. Schneider
Vice President - Electric Operations

TJD/mm

Enc. (3 copies

cc: K.R. Goller (30 copies)

LICENSEE EVENT REPORT

CONTROL BLOCK: [ ] (1–6)

(PLEASE PRINT ALL REQUIRED INFORMATION)

	LICENSEE NAME (9–14)	LICENSE NUMBER (15–25)	LICENSE TYPE (26–30)	EVENT TYPE (31–32)
01	NYNMP1	— —	41111	01

	CATEGORY (57–58)	REPORT TYPE (59)	REPORT SOURCE (60)	DOCKET NUMBER (61–68)	EVENT DATE (69–74)	REPORT DATE (75–80)
01 CON'T	MI	L	L	050—0220	120375	010776

EVENT DESCRIPTION

02 During plant startup, #11 IRM failed to respond. Remaining channels of IRM
03 were determined to be operable, therefore, startup continued.
04
05
06 AOR 75-37

	SYSTEM CODE (10–11)	CAUSE CODE (12)	COMPONENT CODE (13–17)	PRIME COMPONENT SUPPLIER (44)	COMPONENT MANUFACTURER (45–48)	VIOLATION (49)
07	IE	E	INSTRU	N	G080	N

CAUSE DESCRIPTION

08 Subsequent checks of the detector showed low resistance. Further investigation
09 will be performed next drywell entry.
10

	FACILITY STATUS (9)	% POWER (10–12)	OTHER STATUS (13–44)	METHOD OF DISCOVERY (45)	DISCOVERY DESCRIPTION (46–80)
11	H	000		b	

	FORM OF ACTIVITY RELEASED (9)	CONTENT OF RELEASE (10)	AMOUNT OF ACTIVITY (11–44)	LOCATION OF RELEASE (45–80)
12	Z	Z		

PERSONNEL EXPOSURES

	NUMBER (9–11)	TYPE (12)	DESCRIPTION (13–80)
13	000		N/A

PERSONNEL INJURIES

	NUMBER (9–11)	DESCRIPTION (12–80)
14	000	N/A

~~OFFSITE~~ VARIOUS CONSEQUENCES Probable

15 None

LOSS OR DAMAGE TO FACILITY

	TYPE (9)	DESCRIPTION (10–80)
16	Z	N/A

PUBLICITY

17 None

ADDITIONAL FACTORS

18 None

19

NAME: T.J. Dente PHONE: (315) 343-2110

GPO 881-667

LICENSEE EVENT REPORT

CONTROL BLOCK: [ ] (1–6)

[PLEASE PRINT ALL REQUIRED INFORMATION]

	LICENSEE NAME	LICENSE NUMBER	LICENSE TYPE	EVENT TYPE
01	NYNMP1	– –	4111	01
7–8	9–14	15–25	26–30	31–32

	CATEGORY	REPORT TYPE	REPORT SOURCE	DOCKET NUMBER	EVENT DATE	REPORT DATE
01 CON'T	MI	L	L	050–022 0	121275	010775
7–8	57–58	59	60	61–68	69–74	75–80

EVENT DESCRIPTION

02 During routine surveillance testing, RE-04C indicated a trip at 3.25 psig rather

03 than 3.5 ± .053 psig.

04

05

06 AOR 75-38

	SYSTEM CODE	CAUSE CODE	COMPONENT CODE	PRIME COMPONENT SUPPLIER	COMPONENT MANUFACTURER	VIOLATION
07	IA	E	INSTRU	N	B080	N
7–8	9–10	11	12–17	43	44–47	48

CAUSE DESCRIPTION

08 Could find no apparent reason for the drift, however, routine surveillance is

09 sufficient to locate these problems.

10

	FACILITY STATUS	% POWER	OTHER STATUS	METHOD OF DISCOVERY	DISCOVERY DESCRIPTION
11	E	050		b	
7–8	9	10–12	13–44	45	46–80

	FORM OF ACTIVITY RELEASED	CONTENT OF RELEASE	AMOUNT OF ACTIVITY	LOCATION OF RELEASE
12	Z	Z		
7–8	9	10	11–44	45–80

PERSONNEL EXPOSURES

	NUMBER	TYPE	DESCRIPTION
13	000	Z	
7–8	9–11	12	13–80

PERSONNEL INJURIES

	NUMBER	DESCRIPTION
14	000	
7–8	9–11	12–80

OFFSITE CONSEQUENCES Probable

15 None

LOSS OR DAMAGE TO FACILITY

	TYPE	DESCRIPTION
16	Z	
7–8	9	10–80

PUBLICITY

17 None

ADDITIONAL FACTORS

18 None

19

NAME: T.J. Dente PHONE: (315) 343-2110

GPO 881-667

REPORT OF ABNORMAL OCCURRENCE AND/OR INCIDENT

NRC D[redacted]UTION FOR PART 50 DOCKET[redacted]RIAL
(TEMPORARY FORM)

CONTROL NO: 14351

FILE: INCIDENT REPORT FILE

FROM:	DATE OF DOC	DATE REC'D	LTR	TWX	RPT	OTHER
Niagara Mohawk Pwr Corp Syracuse, NY R R Schneider	12-17-75	12-31-75	XXX			

TO:	ORIG	CC	OTHER	
Mr O'Reilly	one signed			SENT AEC PDR XX SENT LOCAL PDR XX

CLASS	UNCLASS	PROP INFO	INPUT	NO CYS REC'D	DOCKET NO:
	XXXXX			1	50-220

DESCRIPTION:

Ltr trans the following:

ACKNOWLEDGED

PLANT NAME: Nine Mile Point

ENCLOSURES:

Licensee Event Rpt 75-33A on 11-21-75 concerningn tripping of the high drywell pressure sensor.....

FOR ACTION/INFORMATION 1-6-76 eht

BUTLER (L) W/ Copies	SCHWENCER (L) W/ Copies	ZIEMANN (L) W/ Copies	REGAN (E) W/ Copies
CLARK (L) W/ Copies	STOLZ (L) W/ Copies	DICKER (E) W/ Copies	LEAR (L) W/ Copies
PARR (L) W/ Copies	VASSALLO (L) W/ Copies	KNIGHTON (E) W/ Copies	SPELS W/ Copies
KNIEL (L) W/ Copies	PURPLE (L) W/ Copies	YOUNGBLOOD (E) W/ Copies	REID W/ Copies

INTERNAL DISTRIBUTION

REG FILE	TECH REVIEW	DENTON	LIC ASST	A/T IND
NRC PDR	SCHROEDER	**GRIMES	R. DIGGS (L)	BRAITMAN
OGC, ROOM P-506A	MACCARY	GAMMILL	H. GEARIN (L)	SALTZMAN
GOSSICK/STAFF	KNIGHT	KASTNER	E. GOULBOURNE (L)	MELTZ
CASE	PAWLICKI	BALLARD	P. KREUTZER (E)	
	SHAO	SPANGLER	J. LEE (L)	PLANS
BOYD	** STELLO		M. RUSHBROOK (L)	MCDONALD
MOORE (L)	** HOUSTON	ENVIRO	S. REED (E)	CHAPMAN
DEYOUNG (L)	** NOVAK	MULLER	M. SERVICE (L)	DUBE (Ltr)
SKOVHOLT (L)	ROSS	DICKER	S. SHEPPARD (L)	E. COUPE
GOLLER (L) (Ltr)	IPPOLITO	KNIGHTON	M. SLATER (E)	PETERSON
P. COLLINS	TEDESCO	YOUNGBLOOD	H. SMITH (L)	HARTFIELD (2)
DENISE	J. COLLINS	REGAN	S. TEETS (L)	KLECKER
REG OPR	LAINAS	PROJECT LDR	G. WILLIAMS (E)	EISENHUT
FILE & REGION (2)	BENAROYA		V. WILSON (L)	WIGGINTON
MIPC/PE (3)	VOLLMER	HARLESS	R. INGRAM (L)	F. WILLIAMS
STEELE			M. DUNCAN (E)	HANAUER

EXTERNAL DISTRIBUTION K. PARRISH (L)

1 – LOCAL PDR Oswego, NY	(1)(2)(10) – NATIONAL LABS	1 – PDR-SAN/LA/NY
1 – TIC (ABERNATHY)	1 – W. PENNINGTON, Rm E-201 GT	1 – BROOKHAVEN NAT LAB
1 – NSIC (BUCHANAN)	1 – CONSULTANTS	1 – G. ULRIKSON, ORNL
1 – ASLB	NEWMARK/BLUME/AGBABIAN	1 – AGMED (RUTH GUSSMAN) Rm B-127 GT
1 – Newton Anderson		1 – J. D. RUNKLES, Rm E-201 GT
16 – ACRS SENT TO LIC ASST Teets		

** SEND ONLY TEN DAY REPORTS

NIAGARA MOHAWK POWER CORPORATION

NIAGARA MOHAWK

300 ERIE BOULEVARD, WEST
SYRACUSE, N. Y. 13202

December 17, 1975

Mr. James P. O'Reilly
Directorate of Regulatory Operations
Region I
United States Nuclear Regulatory Commission
631 Park Avenue
King of Prussia, Pa. 19406

RE: Docket No. 50-220

Dear Mr. O'Reilly:

In accordance with Nine Mile Point Nuclear Station Unit #1 Technical Specification 6.9, we hereby submit Licensee Event Report 75-33A.

This report conforms to the requirements of Regulatory Guide 1.16, Revision 2 and was completed within the intent of the Licensee Event Report instruction book 00E-SS-001, dated October, 1974, revised December 24, 1974. Due to the minimal significance category of the report, no supplemental report is included.

Very truly yours,

R.R. Schneider
Vice President
Electric Operations

TJD/mm

Enc. 3 copies

cc: 30 copies to Mr. K.R. Goller

14351

LICENSEE EVENT REPORT

CONTROL BLOCK: [ ] (1–6)

(PLEASE PRINT ALL REQUIRED INFORMATION)

	LICENSEE NAME	LICENSE NUMBER	LICENSE TYPE	EVENT TYPE
01	NYNMP1	— —	4111	01
7 8	9–14	15–25	26–30	31 32

	CATEGORY	REPORT TYPE	REPORT SOURCE	DOCKET NUMBER	EVENT DATE	REPORT DATE
01 CON'T	MI	L	L	050—0220	112175	121775
7 8	57 58	59	60	61–68	69–74	75–80

EVENT DESCRIPTION

02 During routine surveillance testing, RE-04D, high drywell pressure sensor (1 of 4)

03 was found to trip at 3.4 psi rather than 3.5 ± .053 psi. The device is a Barton

04 Model #289.

05

06 AOR 75-33A

	SYSTEM CODE	CAUSE CODE	COMPONENT CODE	PRIME COMPONENT SUPPLIER	COMPONENT MANUFACTURER	VIOLATION
07	IA	E	INSTRU	N	B080	N
7 8	9 10	11	12–17	43	44–47	48

CAUSE DESCRIPTION

08 Could find no apparent reason for the .047 psi drift, however, routine surveillance

09 is sufficient to locate these drifting problems.

10

	FACILITY STATUS	% POWER	OTHER STATUS	METHOD OF DISCOVERY	DISCOVERY DESCRIPTION
11	H	000		b	
7 8	9	10–12	13–44	45	46–80

	FORM OF ACTIVITY RELEASED	CONTENT OF RELEASE	AMOUNT OF ACTIVITY	LOCATION OF RELEASE
12	Z	Z	N/A	
7 8	9	10	11–44	45–80

PERSONNEL EXPOSURES

	NUMBER	TYPE	DESCRIPTION
13	000	Z	N/A
7 8	9–11	12	13–80

PERSONNEL INJURIES

	NUMBER	DESCRIPTION
14	000	N/A
7 8	9–11	12–80

~~XXXXXX~~ CONSEQUENCES Probable

15 None - Drift in more conservative direction

LOSS OR DAMAGE TO FACILITY

	TYPE	DESCRIPTION
16	Z	N/A
7 8	9	10–80

PUBLICITY

17 None

ADDITIONAL FACTORS

18 None

19

NAME: T.J. Dente PHONE: 315 - 343-2110

GPO 881-667

NRC DISTRIBUTION FOR PART 50 DOCKET MATERIAL
(TEMPORARY FORM)

CONTROL NO: 14076

FILE: INCIDENT REPORT FI

FROM:	DATE OF DOC	DATE REC'D	LTR	TWX	RPT	OTHER
Niagara Mohawk Power Corp. Syracuse, N.Y. R.R. Schneider	12-17-75	12-24-75	XXX			

TO:	ORIG	CC	OTHER	
J.P, O'REilly	None	30		SENT AEC PDR XXX SENT LOCAL PDR XXX

CLASS	UNCLASS	PROP INFO	INPUT	NO CYS REC'D	DOCKET NO:
	XXX			30	50-220

DESCRIPTION:
Letter trans the following.....

ENCLOSURES:
Licensee Event Report #. 75-33 A, on 11-21-75, Concerning the high drywell pressure sensor tripping .....

(30 Cys. Received)

PLANT NAME: Nine Mile Pt. # 1

FOR ACTION/INFORMATION SAB 12-29-75

BUTLER (L) W/ Copies
CLARK (L) W/ Copies
PARR (L) W/ Copies
KNIEL (L) W/ Copies
SCHWENCER (L) W/ Copies
STOLZ (L) W/ Copies
VASSALLO (L) W/ Copies
PURPLE (L) W/ Copies
ZIEMANN (L) W/ Copies
DICKER (E) W/ Copies
KNIGHTON (E) W/ Copies
YOUNGBLOOD (E) W/ Copies
REGAN (E) W/ Copies
LEAR (L) W/3 Copies
SPELS W/ Copies
REID W/ Copies

DO NOT REMOVE

ACKNOWLEDGED

INTERNAL DISTRIBUTION

REG FILE
NRC PDR
OGC, ROOM P-506A
GOSSICK/STAFF
CASE
BOYD
MOORE (L)
DEYOUNG (L)
SKOVHOLT (L)
GOLLER (L) (Ltr)
P. COLLINS
DENISE
REG OPR
FILE & REGION (2)
MIPC/PE (3)
STEELE

TECH REVIEW
SCHROEDER
MACCARY
KNIGHT
PAWLICKI
SHAO
** STELLO
** HOUSTON
** NOVAK
ROSS
IPPOLITO
TEDESCO
J. COLLINS
LAINAS
BENAROYA
VOLLMER

DENTON
** GRIMES
GAMMILL
KASTNER
BALLARD
SPANGLER

ENVIRO
MULLER
DICKER
KNIGHTON
YOUNGBLOOD
REGAN
PROJECT LDR

HARLESS

LIC ASST
R. DIGGS (L)
H. GEARIN (L)
E. GOULBOURNE (L)
P. KREUTZER (E)
J. LEE (L)
M. RUSHBROOK (L)
S. REED (E)
M. SERVICE (L)
S. SHEPPARD (L)
M. SLATER (E)
H. SMITH (L)
S. TEETS (L)
G. WILLIAMS (E)
V. WILSON (L)
R. INGRAM (L)
M. DUNCAN (E)

A/T IND.
BRAITMAN
SALTZMAN
MELTZ

PLANS
MCDONALD
CHAPMAN
DUBE (Ltr)
E. COUPE
PETERSON
HARTFIELD (2)
KLECKER
EISENHUT
WIGGINTON
F. WILLIAMS
HANAUER

EXTERNAL DISTRIBUTION

1 – LOCAL PDR Oswego, N.Y.
1 – TIC (ABERNATHY)
1 – NSIC (BUCHANAN)
1 – ASLB
1 – Newton Anderson
16 ACRS SENT TO LIC ASST
** SEND ONLY TEN DAY REPORTS

(1)(2)(10) – NATIONAL LABS
1 – W. PENNINGTON, Rm E-201 GT
1 – CONSULTANTS
NEWMARK/BLUME/AGBABIAN
S. Teets

1 – PDR-SAN/LA/NY
1 – BROOKHAVEN NAT LAB
1 – G. ULRIKSON, ORNL
1 – AGMED (RUTH GUSSMAN) Rm B-127 GT
1 – J. D. RUNKLES, Rm E-201 GT

NIAGARA MOHAWK POWER CORPORATION

NIAGARA MOHAWK

300 ERIE BOULEVARD, WEST
SYRACUSE, N.Y. 13202

Regulatory File Cy

December 17, 1975

Mr. James P. O'Reilly
Directorate of Regulatory Operations
Region I
United States Nuclear Regulatory Commission
631 Park Avenue
King of Prussia, Pa. 19406

RE: Docket No. 50-220

Dear Mr. O'Reilly:

In accordance with Nine Mile Point Nuclear Station Unit #1 Technical Specification 6.9, we hereby submit Licensee Event Report 75-33A.

This report conforms to the requirements of Regulatory Guide 1.16, Revision 2 and was completed within the intent of the Licensee Event Report instruction book 00E-SS-001, dated October, 1974, revised December 24, 1974. Due to the minimal significance category of the report, no supplemental report is included.

Very truly yours,

ORIGINAL SIGNED BY R.R. SCHNEIDER

R.R. Schneider
Vice President
Electric Operations

TJD/mm

Enc. 3 copies

cc: 30 copies to Mr. K.R. Goller

14076

LICENSEE EVENT REPORT

CONTROL BLOCK: [ ] (1–6)

[PLEASE PRINT ALL REQUIRED INFORMATION]

	LICENSEE NAME	LICENSE NUMBER	LICENSE TYPE	EVENT TYPE
01	NYNMP1	— —	4111	01
7–8	9–14	15–25	26–30	31–32

	CATEGORY	REPORT TYPE	REPORT SOURCE	DOCKET NUMBER	EVENT DATE	REPORT DATE
01 CON'T	MI	L	L	050—0220	112175	121775
7–8	57–58	59	60	61–68	69–74	75–80

EVENT DESCRIPTION

02 During routine surveillance testing, RE-04D, high drywell pressure sensor (1 of 4)

03 was found to trip at 3.4 psi rather than 3.5 ± .053 psi. The device is a Barton

04 Model #289.

05

06 AOR 75-33A

	SYSTEM CODE	CAUSE CODE	COMPONENT CODE	PRIME COMPONENT SUPPLIER	COMPONENT MANUFACTURER	VIOLATION
07	IA	E	INSTRU	N	B080	N
7–8	9–10	11	12–17	43	44–47	48

CAUSE DESCRIPTION

08 Could find no apparent reason for the .047 psi drift, however, routine surveillance

09 is sufficient to locate these drifting problems.

10

	FACILITY STATUS	% POWER	OTHER STATUS	METHOD OF DISCOVERY	DISCOVERY DESCRIPTION
11	H	000		b	
7–8	9	10–12	13–44	45	46–80

	FORM OF ACTIVITY RELEASED	CONTENT OF RELEASE	AMOUNT OF ACTIVITY	LOCATION OF RELEASE
12	Z	Z	N/A	
7–8	9	10	11–44	45–80

PERSONNEL EXPOSURES

	NUMBER	TYPE	DESCRIPTION
13	000	Z	N/A
7–8	9–11	12	13–80

PERSONNEL INJURIES

	NUMBER	DESCRIPTION
14	000	N/A
7–8	9–11	12–80

~~XXXXXX~~ CONSEQUENCES Probable

15 None - Drift in more conservative direction

LOSS OR DAMAGE TO FACILITY

	TYPE	DESCRIPTION
16	Z	N/A
7–8	9	10–80

PUBLICITY

17 None

ADDITIONAL FACTORS

18 None

19

NAME: T.J. Dente PHONE: 315 - 343-2110

NRC DISTRIBUTION FOR PART 50 DOCKET MATERIAL
(TEMPORARY FORM)

CONTROL NO: 13949
FILE: INCIDENT REPORT FI

FROM:	DATE OF DOC	DATE REC'D	LTR	TWX	RPT	OTHER
NIAGARA MOHAWK POWER CORP. Syracuse, N.Y. R.R. Schneider	12-5-75	12-16-75	XXX			

TO:	ORIG	CC	OTHER	
H.P. O'Reilly	None	30		SENT AEC PDR XXX SENT LOCAL PDR XXX

CLASS	UNCLASS	PROP INFO	INPUT	NO CYS REC'D	DOCKET NO:
	XXX			30	50-220

DESCRIPTION:
Letter trans the following.....

PLANT NAME: Nine Mile Pt # 1

ENCLOSURES:
A/O # 75-31, on 11-14-75, Concerning mis-adjustment on both Emergency Vent Radiation m monitors
A/O # 75-32, on 11-17-75, Concerning water being inadvertantly discharged to the lake...
A/O # 75-33, on 11-21-75, Concerning # 13 SRM Failed to signal...
A/O # 75-34, on 11-22-75, Concerning 68-12A Torus Vacuum Relief Valve operating beyond normal setpoint deviation...

FOR ACTION/INFORMATION SAB 12-17-7

BUTLER (L) W/ Copies	SCHWENCER (L) W/ Copies	ZIEMANN (L) W/ Copies	REGAN (E) W/ Copies
CLARK (L) W/ Copies	STOLZ (L) W/ Copies	DICKER (E) W/ Copies	LEAR (L) W/3 Copies
PARR (L) W/ Copies	VASSALLO (L) W/ Copies	KNIGHTON (E) W/ Copies	SPELS W/ Copies
KNIEL (L) W/ Copies	PURPLE (L) W/ Copies	YOUNGBLOOD (E) W/ Copies	REID W/ Copies

INTERNAL DISTRIBUTION

REG FILE	TECH REVIEW	DENTON	LIC ASST	A/T IND
NRC PDR	SCHROEDER	**GRIMES	R. DIGGS (L)	BRAITMAN
OGC, ROOM P-506A	MACCARY	GAMMILL	H. GEARIN (L)	SALTZMAN
GOSSICK/STAFF	KNIGHT	KASTNER	E. GOULBOURNE (L)	MELTZ
CASE	PAWLICKI	BALLARD	P. KREUTZER (E)	
	SHAO	SPANGLER	J. LEE (L)	PLANS
BOYD	** STELLO		M. RUSHBROOK (L)	MCDONALD
MOORE (L)	** HOUSTON	ENVIRO	S. REED (E)	CHAPMAN
DEYOUNG (L)	** NOVAK	MULLER	M. SERVICE (L)	DUBE (Ltr)
SKOVHOLT (L)	ROSS	DICKER	S. SHEPPARD (L)	E. COUPE
GOLLER (L) (Ltr)	IPPOLITO	KNIGHTON	M. SLATER (E)	PETERSON
P. COLLINS	TEDESCO	YOUNGBLOOD	H. SMITH (L)	HARTFIELD (2)
DENISE	J. COLLINS	REGAN	S. TEETS (L)	KLECKER
REG OPR	LAINAS	PROJECT LDR	G. WILLIAMS (E)	EISENHUT
FILE & REGION (2)	BENAROYA		V. WILSON (L)	WIGGINTON
MIPC/PE (3)	VOLLMER	HARLESS	R. INGRAM (L)	F. WILLIAMS
STEELE			M. DUNCAN (E)	HANAUER

EXTERNAL DISTRIBUTION

1 – LOCAL PDR Oswego, N.Y.
1 – TIC (ABERNATHY)
1 – NSIC (BUCHANAN)
1 – ASLB
1 – Newton Anderson
16 ACRS SENT TO LIC ASST S. Teets
** SEND ONLY TEN DAY REPORTS

(1)(2)(10) – NATIONAL LABS
1 – W. PENNINGTON, Rm E-201 GT
1 – CONSULTANTS NEWMARK/BLUME/AGBABIAN

1 – PDR-SAN/LA/NY
1 – BROOKHAVEN NAT LAB
1 – G. ULRIKSON, ORNL
1 – AGMED (RUTH GUSSMAN) Rm B-127 GT
1 – J. D. RUNKLES, Rm E-201 GT

A/O 75-35, on 11-29-75, Concerning the chlorides increasing.....
A/O 75-36, on 11-29-75, Concerning Leakage of water, around the Clean-Up System area.....

(30 Cys. Received)

NIAGARA MOHAWK POWER CORPORATION

NIAGARA MOHAWK

300 ERIE BOULEVARD, WEST
SYRACUSE, N. Y. 13202

Regulatory File Cy.

December 5, 1975

Mr. James P. O'Reilly
Directorate of Regulatory Operations
United States Nuclear Regulatory Commission
Region 1
631 Park Avenue
King of Prussia, Pa. 19406

RE: Docket No. 50-220

Dear Mr. O'Reilly:

In accordance with Nine Mile Point Nuclear Station Unit #1 Technical Specification 6.9, we hereby submit Licensee Event Reports 75-31 through 75-36 which document the Abnormal Occurrences for the month of November 1975.

These reports conform to the requirements of Regulatory Guide 1.16, Revision 2 and were completed within the intent of the Licensee Event Report Instruction Booklet 00E-SS-001, dated October 1974, and revised December 24, 1974.

Very truly yours,

R.R. Schneider
Vice President
Electric Operations

TJD/mm

Enc. 3 copies

cc: Mr. K.R. Goller (30 copies)

13949

LICENSEE EVENT REPORT

CONTROL BLOCK: [ ] (1–6)

(PLEASE PRINT ALL REQUIRED INFORMATION)

	LICENSEE NAME	LICENSE NUMBER	LICENSE TYPE	EVENT TYPE
01	NYNMP1	— —	4111	01
7–8	9–14	15–25	26–30	31–32

	CATEGORY	REPORT TYPE	REPORT SOURCE	DOCKET NUMBER	EVENT DATE	REPORT DATE
01 CON'T	DI	T	L	050—0220	111475	111775
7–8	57–58	59	60	61–68	69–74	75–80

EVENT DESCRIPTION

02 Upscale trip points on both Emergency Vent Radiation monitors found to trip at
03 20 and 30 mr/hr rather than 5 mr/hr + 100% - 50%.
04
05
06 AOR 75-31

	SYSTEM CODE	CAUSE CODE	COMPONENT CODE	PRIME COMPONENT SUPPLIER	COMPONENT MANUFACTURER	VIOLATION
07	IB	E	INSTRU	N	G080	N
7–8	9–10	11	12–17	43	44–47	48

CAUSE DESCRIPTION

08 The investigation revealed no reason for the mis-adjustment. These instruments
09 will be carefully monitored during subsequent checks.
10

	FACILITY STATUS	% POWER	OTHER STATUS	METHOD OF DISCOVERY	DISCOVERY DESCRIPTION
11	H	000	N/A		
7–8	9	10–12	13–44	45	46–80

	FORM OF ACTIVITY RELEASED	CONTENT OF RELEASE	AMOUNT OF ACTIVITY	LOCATION OF RELEASE
12	Z	Z	N/A	
7–8	9	10	11–44	45–80

PERSONNEL EXPOSURES

	NUMBER	TYPE	DESCRIPTION
13	000	Z	N/A
7–8	9–11	12	13–80

PERSONNEL INJURIES

	NUMBER	DESCRIPTION
14	000	N/A
7–8	9–11	12–80

~~OFFSITE~~ CONSEQUENCES Probable

15 None

LOSS OR DAMAGE TO FACILITY

	TYPE	DESCRIPTION
16	Z	N/A
7–8	9	10–80

PUBLICITY

17 None

ADDITIONAL FACTORS

18 None

19

NAME: T.J. Dente PHONE: (315)343-2110

GPO 881-667

LICENSEE EVENT REPORT

CONTROL BLOCK: [ ] (1–6)

(PLEASE PRINT ALL REQUIRED INFORMATION)

	LICENSEE NAME	LICENSE NUMBER	LICENSE TYPE	EVENT TYPE
01	NYNMP1	— —	4111 1	01
7–8	9–14	15–25	26–30	31–32

	CATEGORY	REPORT TYPE	REPORT SOURCE	DOCKET NUMBER	EVENT DATE	REPORT DATE
01 CON'T	MI	L	L	05 0—022 0	111 7 7 5	1 1 3 0 7 5
7–8	57–58	59	60	61–68	69–74	75–80

EVENT DESCRIPTION

02 An acid leak was experienced in the Make-Up Demin. acid storage tank. During
03 neutralizing, the make-up demin. regen. waste tank, the discharge valve to the
04 lake (BV 69-05) was found partically opened and resulted in approx. 16,000 gals
05 of (ph ~12.4 and high SO_4 content) water being inadvertantly discharged to the
06 lake. AOR 75-32

	SYSTEM CODE	CAUSE CODE	COMPONENT CODE	PRME COMPONENT SUPPLIER	COMPONENT MANUFACTURER	VIOLATION
07	ZZ	Z	ZZZZZZ	Z	ZZZZ	N
7–8	9–10	11	12–17	43	44–47	48

CAUSE DESCRIPTION

08 Valve was repaired and should not allow this incident to occur.
09
10

	FACILITY STATUS	% POWER	OTHER STATUS	METHOD OF DISCOVERY	DISCOVERY DESCRIPTION
11	H	000		a	
7–8	9	10–12	13–44	45	46–80

	FORM OF ACTIVITY RELEASED	CONTENT OF RELEASE	AMOUNT OF ACTIVITY	LOCATION OF RELEASE
12	Z	Z	N/A	
7–8	9	10	11–44	45–80

PERSONNEL EXPOSURES

	NUMBER	TYPE	DESCRIPTION
13	000	Z	N/A
7–8	9–11	12	13–80

PERSONNEL INJURIES

	NUMBER	DESCRIPTION
14	000	N/A
7–8	9–11	12–80

~~OFFSITE~~ CONSEQUENCES Probable

15 None

LOSS OR DAMAGE TO FACILITY

	TYPE	DESCRIPTION
16	Z	N/A
7–8	9	10–80

PUBLICITY

17 None

ADDITIONAL FACTORS

18 None

19

NAME: T.J. Dente PHONE: (315) 343-2110

GPO 881-667

LICENSEE EVENT REPORT

CONTROL BLOCK: [ ] (1–6)

(PLEASE PRINT ALL REQUIRED INFORMATION)

	LICENSEE NAME	LICENSE NUMBER	LICENSE TYPE	EVENT TYPE
01	NYNMP1	— —	4 1 1 1 1	0 3
(7–8, 9–14)	(15–25)	(26–30)	(31–32)	

	CATEGORY	REPORT TYPE	REPORT SOURCE	DOCKET NUMBER	EVENT DATE	REPORT DATE
01 CON'T	M I	L	L	0 5 0 — 0 2 2 0	1 1 2 1 7 5	1 2 0 3 7 5
(7–8)	(57–58)	(59)	(60)	(61–68)	(69–74)	(75–80)

EVENT DESCRIPTION

02 During reactor shutdown, #13 SRM failed to provide an adequate signal to the
03 monitor. Indication was downscale. Bypass was available for the system and
04 three SRM's were operable.
05
06 AOR-75-33

	SYSTEM CODE	CAUSE CODE	COMPONENT CODE	PRIME COMPONENT SUPPLIER	COMPONENT MANUFACTURER	VIOLATION
07	I E	E	I N S T R U	N	G 0 8 0	N
(7–8, 9)	(10)	(11)	(12–17)	(43)	(44–47)	(48)

CAUSE DESCRIPTION

08 Failed capacitor in the pre-amplifier unit.
09
10

	FACILITY STATUS	% POWER	OTHER STATUS	METHOD OF DISCOVERY	DISCOVERY DESCRIPTION
11	H	0 0 0		A	
(7–8)	(9)	(10–12)	(13–44)	(45)	(46–80)

	FORM OF ACTIVITY RELEASED	CONTENT OF RELEASE	AMOUNT OF ACTIVITY	LOCATION OF RELEASE
12	Z	Z	N/A	N/A
(7–8)	(9)	(10)	(11–44)	(45–80)

PERSONNEL EXPOSURES

	NUMBER	TYPE	DESCRIPTION
13	0 0 0	Z	N/A
(7–8)	(9–11)	(12)	(13–80)

PERSONNEL INJURIES

	NUMBER	DESCRIPTION
14	0 0 0	N/A
(7–8)	(9–11)	(12–80)

~~OFFSITE~~ CONSEQUENCES Probable

15 None

LOSS OR DAMAGE TO FACILITY

	TYPE	DESCRIPTION
16	Z	N/A
(7–8)	(9)	(10–80)

PUBLICITY

17 None

ADDITIONAL FACTORS

18 None

19

NAME: T.J. Dente PHONE: (315) 343-2110

LICENSEE EVENT REPORT

CONTROL BLOCK: [ ] (1–6)

[PLEASE PRINT ALL REQUIRED INFORMATION]

	LICENSEE NAME	LICENSE NUMBER	LICENSE TYPE	EVENT TYPE
01	NYNMP1	— —	41111	01
7–8	9–14	15–25	26–30	31–32

	CATEGORY	REPORT TYPE	REPORT SOURCE	DOCKET NUMBER	EVENT DATE	REPORT DATE
01 CON'T	MI	L	L	05 0 — 0220	112275	120375
7–8	57–58	59	60	61–68	69–74	75–80

EVENT DESCRIPTION

02 During surveillance testing, found 68-12A Torus Vacuum Relief Valve to operate
03 at 3.5" H_2O rather than 6.8" H_2O (more conservative but beyond normal set point
04 deviation). Other valves operated satisfactorily (Serial #P064756)
05
06 AOR 75-34

	SYSTEM CODE	CAUSE CODE	COMPONENT CODE	PRIME COMPONENT SUPPLIER	COMPONENT MANUFACTURER	VIOLATION
07	IE	E	INSTRU	N	M235	N
7–8	9–10	11	12–17	43	44–47	48

CAUSE DESCRIPTION

08 Recalibrated to acceptable values - set point drift.
09
10

	FACILITY STATUS	% POWER	OTHER STATUS	METHOD OF DISCOVERY	DISCOVERY DESCRIPTION
11	H	000		B	
7–8	9	10–12	13–44	45	46–80

	FORM OF ACTIVITY RELEASED	CONTENT OF RELEASE	AMOUNT OF ACTIVITY	LOCATION OF RELEASE
12	Z	Z	N/A	N/A
7–8	9	10	11–44	45–80

PERSONNEL EXPOSURES

	NUMBER	TYPE	DESCRIPTION
13	000	Z	N/A
7–8	9–11	12	13–80

PERSONNEL INJURIES

	NUMBER	DESCRIPTION
14	000	N/A
7–8	9–11	12–80

~~OBVIOUS~~ CONSEQUENCES Probable

15 None

LOSS OR DAMAGE TO FACILITY

	TYPE	DESCRIPTION
16	Z	N/A
7–8	9	10–80

PUBLICITY

17 None

ADDITIONAL FACTORS

18 None

19

NAME: T.J. Dente PHONE: (315) 343-2110

LICENSEE EVENT REPORT

CONTROL BLOCK: [ ] (1–6) **(PLEASE PRINT ALL REQUIRED INFORMATION)**

	LICENSEE NAME	LICENSE NUMBER	LICENSE TYPE	EVENT TYPE
01	NYNMP1	– –	4111	01
(7–8)	(9–14)	(15–25)	(26–30)	(31–32)

	CON'T	CATEGORY	REPORT TYPE	REPORT SOURCE	DOCKET NUMBER	EVENT DATE	REPORT DATE
01		MI	T	L	05 0–0220	112975	120575
(7–8)		(57–58)	(59)	(60)	(61–68)	(69–74)	(75–80)

EVENT DESCRIPTION

02 During an inspection of the Clean-Up System area, water was seen to be leaking
03 thru the pipe insulation leading to the regenerative heat exchanger. The in-
04 sulation was removed showing a 4" longitudinal crack.
05
06 AOR 75-36

	SYSTEM CODE	CAUSE CODE	COMPONENT CODE	PRIME COMPONENT SUPPLIER	COMPONENT MANUFACTURER	VIOLATION
07	CG	E		N		N
(7–8)	(9–10)	(11)	(12–17)	(43)	(44–47)	(48)

CAUSE DESCRIPTION

08 The section of pipe will be replaced and the defective piping examined to
09 determine its exact cause of failure. This will probably be available in early
10 1976 and will be filed at the Site for your inspection.

	FACILITY STATUS	% POWER	OTHER STATUS	METHOD OF DISCOVERY	DISCOVERY DESCRIPTION
11	C	015		a	
(7–8)	(9)	(10–12)	(13–44)	(45)	(46–80)

	FORM OF ACTIVITY RELEASED	CONTENT OF RELEASE	AMOUNT OF ACTIVITY	LOCATION OF RELEASE
12	Z	Z	N/A	
(7–8)	(9)	(10)	(11–44)	(45–80)

PERSONNEL EXPOSURES

	NUMBER	TYPE	DESCRIPTION
13	000	Z	
(7–8)	(9–11)	(12)	(13–80)

PERSONNEL INJURIES

	NUMBER	DESCRIPTION
14	000	N/A
(7–8)	(9–11)	(12–80)

~~EXPOSURE~~ CONSEQUENCES Probable

15 None

LOSS OR DAMAGE TO FACILITY

	TYPE	DESCRIPTION
16	Z	None
(7–8)	(9)	(10–80)

PUBLICITY

17 None

ADDITIONAL FACTORS

18 None

19

NAME: T.J. Dente PHONE: (315) 343-2110

LICENSEE EVENT REPORT

CONTROL BLOCK: [ ] (1–6)

[PLEASE PRINT ALL REQUIRED INFORMATION]

	LICENSEE NAME	LICENSE NUMBER	LICENSE TYPE	EVENT TYPE
01	NYNMP1	— —	41111	01
7–8	9–14	15–25	26–30	31–32

	CATEGORY	REPORT TYPE	REPORT SOURCE	DOCKET NUMBER	EVENT DATE	REPORT DATE
01 CON'T	MI	L	L	05 0—0220	112975	120375
7–8	57–58	59	60	61–68	69–74	75–80

EVENT DESCRIPTION

02 During reactor heat-up, chlorides increased from 80 ppb to 160 ppb. The reactor
03 was shutdown, and in cold shutdown within 10 hours. (Technical Specifications
04 3.3.3.a).
05
06 AOR 75-35

	SYSTEM CODE	CAUSE CODE	COMPONENT CODE	PRIME COMPONENT SUPPLIER	COMPONENT MANUFACTURER	VIOLATION
07	HC	E	HTEXCH	A	M120	N
7–8	9–10	11	12–17	43	44–47	48

CAUSE DESCRIPTION

08 Leak in condenser tube produced higher chloride levels. Tube was plugged.
09
10

	FACILITY STATUS	% POWER	OTHER STATUS	METHOD OF DISCOVERY	DISCOVERY DESCRIPTION
11	C	000		a	
7–8	9	10–12	13–44	45	46–80

	FORM OF ACTIVITY RELEASED	CONTENT OF RELEASE	AMOUNT OF ACTIVITY	LOCATION OF RELEASE
12	Z	Z	N/A	
7–8	9	10	11–44	45–80

PERSONNEL EXPOSURES

	NUMBER	TYPE	DESCRIPTION
13	000	Z	N/A
7–8	9–11	12	13–80

PERSONNEL INJURIES

	NUMBER	DESCRIPTION
14	000	N/A
7–8	9–11	12–80

OFFSITE CONSEQUENCES Probable

15 None

LOSS OR DAMAGE TO FACILITY

	TYPE	DESCRIPTION
16	Z	N/A
7–8	9	10–80

PUBLICITY

17 None

ADDITIONAL FACTORS

18 None

19

NAME: T.J. Dente PHONE: (315) 343-2110

NRC DISTRIBUTION FOR PART 50 DOCKET MATERIAL
(TEMPORARY FORM)

CONTROL NO: 13538
FILE: INCIDENT REPORT FI

FROM:	DATE OF DOC	DATE REC'D	LTR	TWX	RPT	OTHER
Niagara Mohawk Power Corp 300 Erie Blvd, West R.R. Schneider	11-28-75	12-3-75	XXX			

TO:	ORIG	CC	OTHER	
James P.O'Reilly	None	30		SENT AEC PDR XXX SENT LOCAL PDR XXX

CLASS	UNCLASS	PROP INFO	INPUT	NO CYS REC'D	DOCKET NO:
	XXX			30	50-220

DESCRIPTION:
Letter trans the following.....

ENCLOSURES:
A/O # 75-31, on 11-14-75, Concerning Failure of radiation monitors.....
A/O # 75-32, on 11-17-75, Concerning Specification level of ETS 2.33 and 2.34 exceed on SO_4 and pH (Table 2.3-1) .....

(30 Cys.R eceived)

PLANT NAME: Nine Mile Pt. # 1

FOR ACTION/INFORMATION SAB 12-4-75

BUTLER (L) W/ Copies
CLARK (L) W/ Copies
PARR (L) W/ Copies
KNIEL (L) W/ Copies
SCHWENCER (L) W/ Copies
STOLZ (L) W/ Copies
VASSALLO (L) W/ Copies
PURPLE (L) W/ Copies
ZIEMANN (L) W/ Copies
DICKER (E) W/ Copies
KNIGHTON (E) W/ Copies
YOUNGBLOOD (E) W/ Copies
REGAN (E) W/ Copies
LEAR (L) W/ Copies
SPELS W/ Copies
REID W/ Copies

ACKNOWLEDGED
DO NOT REMOVE

INTERNAL DISTRIBUTION

REG FILE
NRC PDR
OGC, ROOM P-506A
GOSSICK/STAFF
CASE
BOYD
MOORE (L)
DEYOUNG (L)
SKOVHOLT (L)
GOLLER (L) (Ltr)
P. COLLINS
DENISE
REG OPR
FILE & REGION (2)
MIPC/PE (3)
STEELE

TECH REVIEW
SCHROEDER
MACCARY
KNIGHT
PAWLICKI
SHAO
** STELLO
** HOUSTON
** NOVAK
ROSS
IPPOLITO
TEDESCO
J. COLLINS
LAINAS
BENAROYA
VOLLMER

DENTON
** GRIMES
GAMMILL
KASTNER
BALLARD
SPANGLER

ENVIRO
MULLER
DICKER
KNIGHTON
YOUNGBLOOD
REGAN
PROJECT LDR

HARLESS

LIC ASST
R. DIGGS (L)
H. GEARIN (L)
E. GOULBOURNE (L)
P. KREUTZER (E)
J. LEE (L)
M. RUSHBROOK (L)
S. REED (E)
M. SERVICE (L)
S. SHEPPARD (L)
M. SLATER (E)
H. SMITH (L)
S. TEETS (L)
G. WILLIAMS (E)
V. WILSON (L)
R. INGRAM (L)
M. DUNCAN (E)

A/T IND
BRAITMAN
SALTZMAN
MELTZ

PLANS
MCDONALD
CHAPMAN
DUBE (Ltr)
E. COUPE
PETERSON
HARTFIELD (2)
KLECKER
EISENHUT
WIGGINTON
F. WILLIAMS
HANAUER

EXTERNAL DISTRIBUTION

1 – LOCAL PDR Oswego, N.Y.
1 – TIC (ABERNATHY)
1 – NSIC (BUCHANAN)
1 – ASLB
1 – Newton Anderson
16 ACRS SENT TO LIC ASST S. Teets
** SEND ONLY TEN DAY REPORTS

(1)(2)(10) – NATIONAL LABS
1 – W. PENNINGTON, Rm E-201 GT
1 – CONSULTANTS NEWMARK/BLUME/AGBABIAN

1 – PDR-SAN/LA/NY
1 – BROOKHAVEN NAT LAB
1 – G. ULRIKSON, ORNL
1 – AGMED (RUTH GUSSMAN) Rm B-127 GT
1 – J. D. RUNKLES, Rm E-201 GT

NIAGARA MOHAWK POWER CORPORATION

NIAGARA MOHAWK

300 ERIE BOULEVARD, WEST
SYRACUSE, N. Y. 13202

Regulatory File Cy

November 28, 1975

RECEIVED DEC 3 1975 U.S. ATOMIC ENERGY COMMISSION Regulatory Mail Section

Mr. James P. O'Reilly
Directorate of Regulatory Operations
Region I
United States Nuclear Regulatory Commission
631 Park Avenue
King of Prussia, Pa. 19406

RE: Docket No. 50-220

Dear Mr. O'Reilly:

Enclosed please find Abnormal Occurrence Reports 75-31 and 75-32 for Nine Mile Point Nuclear Plant Unit #1. These reports are submitted in accordance with Regulatory Guide 1.16 and constitute fulfillment of the fifteen (15) day letter requirements. The Licensee Event Reports forms will be submitted by the 10th of December, 1975.

Very truly yours,

R.R. Schneider
Vice President
Electric Operations

DOCKETED USNRC DEC 3 1975 U.S. NUCLEAR REGULATORY COMMISSION Mail Section

TJD/mm

Enc.

13538

AOR 75-31

Conditions Prior to Occurrence:

	Steady State Power		Routine Shutdown
	Hot Standby		
	Cold Shutdown		Load Changes
X	Refueling Shutdown		
	Routine Startup		Other

Description of the Occurrence:

During routine radiation protection surveillance testing, both radiation monitors in the Reactor Building Ventilation Duct failed to provide transfer to Emergency Ventilation System until 20 mr/hr and 30 mr/hr respectively was applied to the sensors. The electronic calibration had just previously been performed.

Apparent Cause of the Occurrence:

	Design	X	Procedure
	Manufacture		Unusual Service Condition
	Installation/ Const.		
X	Operator		Component Failure
			Other (Specify)

Analysis of Occurrence:

During refueling operation, the radiation monitor located on the refueling platform will also cause a transfer to Emergency Ventilation. The plant has been in refueling since September 11, 1975. Thus protection for the public was adequately supplied by this monitor in the event of a dropped fuel assembly.

Corrective Action:

The investigation revealed that an inadvertant adjustment was made to these instruments prior to their calibration. Better coordination between the verification of trip point and the electronic alignment will be implemented, and should prevent this in the future. Additional administrative controls will be imposed for this type of calibration.

Failure Data:

None

NIAGARA MOHAWK POWER CORPORATION

NIAGARA MOHAWK

DATE: November 26, 1975

SUBJECT: Abnormal Occurrence Report No. 50-220 75-31
(10 Day Letter)

The enclosed Abnormal Occurrence Report is being submitted in accordance with Technical Specification Section 6.

TO: James P. O'Reilly
Directorate of Regulatory Operations
Region 1
631 Park Avenue
King of Prussia, Pa. 19406

FROM: Niagara Mohawk Power Corporation
Nine Mile Point - James A. FitzPatrick Site

P.O. Box #32
Lycoming, New York 13093

Docket No. 50-220

REFERENCE: License DPR-63

Report No.: 50-220/75-31

Report Date: 11/26/75

Occurrence Date: 11/14/75

Facility: NY NMP #1

Identification of Occurrence:

Failure of both radiation monitors located in the Reactor Building Ventilation Duct to provide a transfer to Emergency Ventilation System at 5 mr/hr.

NIAGARA MOHAWK POWER CORPORATION

NIAGARA MOHAWK

DATE: November 28, 1975

SUBJECT: Abnormal Occurrence Report No. 50- 220 75- 32
(10 Day Letter)

The enclosed Abnormal Occurrence Report is being submitted in accordance with Technical Specification Section 6.

TO: James P. O'Reilly
Directorate of Regulatory Operations
Region 1
631 Park Avenue
King of Prussia, Pa. 19406

FROM: Niagara Mohawk Power Corporation
Nine Mile Point - James A. FitzPatrick Site

P.O. Box #32
Lycoming, New York 13093

Docket No. 50- 220

REFERENCE: License DPR- 63

Report No.: 50- 220 /75-32

Report Date: 11/28/75

Occurrence Date: 11/17/75

Facility: NY NMP #1

Identification of Occurrence:

Specification level of ETS 2.33 and 2.34 exceed on SO_4 and pH (Table 2.3-1).

Conditions Prior to Occurrence:

	Steady State Power		Routine Shutdown
	Hot Standby		
	Cold Shutdown		Load Changes
X	Refueling Shutdown		
	Routine Startup		Other

Description of the Occurrence:

During shutdown for refueling, an acid leak was experienced in the Make-up Demin. acid storage tank. During neutralizing, the Make-up Demin. Regen. Waste Tank, the discharge valve to the lake (BV-69-05), was found partially opened and resulted in approximately 16,000 gals. of (pH$\sim$12.4 and high SO_4 content) water being inadvertantly discharged to the lake.

Apparent Cause of the Occurrence:

	Design		Procedure
	Manufacture	X	Unusual Service Condition
	Installation/ Const.		
	Operator		Component Failure
			Other (Specify)

Analysis of Occurrence:

It is estimated that the pH in the discharge canal during this discharge would be a maximum of 9.1, it was probably less than this since a small amount of acid was added after the last pH reading of 12.4 was taken on the tank. The SO_4^{-2} concentration in the discharge canal is estimated to be 17 ppm above the ambient concentration of approx. 30 ppm. It is felt that the above levels would not have had a significant impact on the lake water environment since the lake ambient conditions vary from pH 7.2 to pH 9.1 and 13 ppm to 50 ppm for SO_4^{-2} based on data in the Nine Mile Point Environmental Report.

Corrective Action:

Valve was repaired and should not allow this incident to occur.

Failure Data:

None

NIAGARA MOHAWK POWER CORPORATION

NIAGARA MOHAWK

DATE: November 18, 1975

SUBJECT: Abnormal Occurrence Report No. 50-220 75-32
(24 hour Notification)

The enclosed preliminary AOR is being submitted in accordance with Technical Specification Section 6.

Confirming T.J. Perkins phone conversation with Mr. Gallina AEC RO:I office on 11-18-75.

TO: James P. O'Reilly
Directorate of Regulatory Operations
Region 1
631 Park Avenue
King of Prussia, Pa. 19406

FROM: Niagara Mohawk Power Corporation
Nine Mile Point - James A. FitzPatrick Site

P.O. Box #32
Lycoming, New York 13093

Docket No. 50-220

REFERENCE: License DPR-63

Report No.: 50-220 /75-32

Report Date 11-18-75

Occurrence Date 11-17-75

Facility: NY NMP #1

Identification of Occurrance:

Specification level of ETS 2.33 & 2.34 exceed on SO_4 & pH (Table 2.3-1)

Conditions Prior to Occurrence:

	Steady State Power		Routine Shutdown
	Hot Standby		
	Cold Shutdown		Load Changes
X	Refueling Shutdown		
	Routine Startup		Other

Description of the Occurrence:

During shutdown for refueling, an acid leak was experienced in the Make-Up Demin. acid storage tank. During neutralizing, the Make Up Demin. regen. waste tank, BV-69-05, was found failed partially opened and resulted in approx. 16,000 gals. of (ph ~12.4 and high SO_4 content) water being inadvertantly discharged to the lake.

Apparent Cause of the Occurrence:

	Design		Procedure
	Manufacture	X	Unusual Service Condition
	Installation/ Const.		
	Operator		Component Failure
			Other (Specify)

Analysis of Occurrence:

Presently under investigation.

D Files

Corrective Action:

Valve will be repaired

Failure Data:

None

To: T.J. Shedlosky (NRC) 4/18/75 4:20 pm

T: R.R. Schneider

From: T. J. Perkins

D. Files

NIAGARA MOHAWK POWER CORPORATION

NIAGARA MOHAWK

DATE: November 17, 1975

SUBJECT: Abnormal Occurrence Report No. 50- 220 75- 31
(24 hour Notification)

The enclosed preliminary AOR is being submitted in accordance with Technical Specification Section 6.

Confirming T.J. Perkins phone conversation with T. Shedlosky AEC RO:I office on November 14, 1975.

TO: James P. O'Reilly
Directorate of Regulatory Operations
Region I
631 Park Avenue
King of Prussia, Pa. 19406

FROM: Niagara Mohawk Power Corporation
Nine Mile Point - James A. FitzPatrick Site
P.O. Box 63
Lycoming, New York 13093

Docket No. 50-220

REFERENCE: License DPR- 63

Report No. 50- 220 75- 31

Report Date: 11-17-75

Occurrence Date 11-14-75

Facility: NMP #1

Identification of Occurrence:

Failure of both radiation monitors located in the Reactor Building Ventilation Duct to provide a transfer to Emergency Ventilation system at 5 Mr/hr.

Description of the Occurrence:

During routine radiation protection surveillance testing, both radiation monitors in the Reactor Building Ventilation Duct failed to provide transfer to Emergency Ventilation System until 20 Mr/hr and 30 Mr/hr was applied to the sensor. The electronic calibration had just previously been performed.

Apparent Cause of the Occurrence:

	Design	X	Procedure
	Manufacture		Unusual Service Condition
	Installation/ Const.		
X	Operator		Component Failure
			Other (Specify)

Analysis of Occurrence:

During refueling operation, the radiation monitor located on the refueling platform will also cause a transfer to Emergency Ventilation. The plant has been in refueling since September 11, 1975. Thus protection for the public was adequately supplied by this monitor in the event of a dropped fuel assembly.

Corrective Action:

The monitors were recalibrated to proper levels. An investigation into the event surrounding the Abnormal Occurrence has been initiated by SORC and it is expected that the report of that investigation will be included in the 15-day report.

Failure Data:

None

Copy to: J. Shelby (NRC)

To: R.R. Schneider (NRC)

T. J. Pilens

11/17/75

8:00 a.m.

NOTICE OF ABNORMAL OCCURRENCE AND/OR INCIDENT

NRC DISTRIBUTION FOR PART 50 DOCKET MATERIAL
(TEMPORARY FORM)

CONTROL NO: 12806

FILE: INCIDENT REPORT FILE

FROM:	DATE OF DOC	DATE REC'D	LTR	TWX	RPT	OTHER
Niagara Mohawk power Co. Syracuse, N.Y. R.R. Schneider	11-4-75	11-8-75	XXX			

TO:	ORIG	CC	OTHER	
Mr. James O'Reilly	None	30		SENT AEC PDR XXX SENT LOCAL PDR XXX

CLASS	UNCLASS	PROP INFO	INPUT	NO CYS REC'D	DOCKET NO:
	XXX			30	50-220

DESCRIPTION:
Letter trans the following.....

ENCLOSURES:
Licensee Event Report Event # 75-29, on 10-1-75 and 75-30, on 10-1-75, Concerning a Main Steam Line Temperatur switch that was found to actuate the requiced isolation.....

(30 Copies Received)

PLANT NAME: Nine Mile Pt.# 1

FOR ACTION/INFORMATION SAB 11-10-75

BUTLER (L) W/ Copies	SCHWENCER (L) W/ Copies	ZIEMANN (L) W/ Copies	REGAN (E) W/ Copies
CLARK (L) W/ Copies	STOLZ (L) W/ Copies	DICKER (E) W/ Copies	LEAR (L) W/ Copies
PARR (L) W/ Copies	VASSALLO (L) W/ Copies	KNIGHTON (E) W/ Copies	SPELS W/ Copies
KNIEL (L) W/ Copies	PURPLE (L) W/ Copies	YOUNGBLOOD (E) W/ Copies	REID W/ Copies

ACKNOWLEDGED
DO NOT REMOVE

INTERNAL DISTRIBUTION

REG FILE	TECH REVIEW	DENTON	LIC ASST	A/T IND
NRC PDR	SCHROEDER	** GRIMES	R. DIGGS (L)	BRAITMAN
OGC, ROOM P-506A	MACCARY	GAMMILL	H. GEARIN (L)	SALTZMAN
GOSSICK/STAFF	KNIGHT	KASTNER	E. GOULBOURNE (L)	MELTZ
CASE	PAWLICKI	BALLARD	P. KREUTZER (E)	
GIAMBUSSO	SHAO	SPANGLER	J. LEE (L)	PLANS
BOYD	** STELLO		M. RUSHBROOK (L)	MCDONALD
MOORE (L)	** HOUSTON	ENVIRO	S. REED (E)	CHAPMAN
DEYOUNG (L)	** NOVAK	MULLER	M. SERVICE (L)	DUBE (Ltr)
SKOVHOLT (L)	ROSS	DICKER	S. SHEPPARD (L)	E. COUPE
GOLLER (L) (Ltr)	IPPOLITO	KNIGHTON	M. SLATER (E)	PETERSON
P. COLLINS	TEDESCO	YOUNGBLOOD	H. SMITH (L)	HARTFIELD (2)
DENISE	J. COLLINS	REGAN	S. TEETS (L)	KLECKER
REG OPR	LAINAS	PROJECT LDR	G. WILLIAMS (E)	EISENHUT
FILE & REGION (2)	BENAROYA		V. WILSON (L)	WIGGINTON
MIPC/PE (3)	VOLLMER	HARLESS	R. INGRAM (L)	F. WILLIAMS
STEELE			M. DUNCAN (E)	HANAUER

EXTERNAL DISTRIBUTION

1 – LOCAL PDR Oswego, N.Y.
1 – TIC (ABERNATHY)
1 – NSIC (BUCHANAN)
1 – ASLB
1 – Newton Anderson
5 – ACRS SENT TO LIC ASST S. Teets
** SEND ONLY TEN DAY REPORTS

(1)(2)(10) – NATIONAL LABS
1 – W. PENNINGTON, Rm E-201 GT
1 – CONSULTANTS
NEWMARK/BLUME/AGBABIAN

1 – PDR-SAN/LA/NY
1 – BROOKHAVEN NAT LAB
1 – G. ULRIKSON, ORNL
1 – AGMED (RUTH GUSSMAN) Rm B-127 GT
1 – J. D. RUNKLES, Rm E-201 GT

NIAGARA MOHAWK POWER CORPORATION

NIAGARA MOHAWK

300 ERIE BOULEVARD, WEST
SYRACUSE, N. Y. 13202

Regulatory File Cy

November 4, 1975

Mr. James P. O'Reilly
Directorate of Regulatory Operations
Region I
United States Nuclear Regulatory Commission
631 Park Avenue
King of Prussia, Pa. 19406

RE: Docket No. 50-220

Dear Mr. O'Reilly:

In accordance with Nine Mile Point Nuclear Station Unit #1 Technical Specification 6.9, we hereby submit Licensee Event Reports 75-29 and 75-30 which document the Abnormal Occurrences for October, 1975.

These reports conform to the requirements of Regulatory Guide 1.16, Revision 2 and were completed within the intent of the Licensee Event Report Instruction Booklet 00E-SS-001, dated October 1974, revised December 24, 1974. Due to the minimal significance category of the reports, no supplemental report is included.

Very truly yours,

Original signed by R.R. Schneider

R.R. Schneider
Vice President
Electric Operations

TJD/mm

Enc. 3 copies

cc: K.R. Goller (30 copies)

LICENSEE EVENT REPORT

CONTROL BLOCK: [ ] (1–6) [PLEASE PRINT ALL REQUIRED INFORMATION]

	LICENSEE NAME	LICENSE NUMBER	LICENSE TYPE	EVENT TYPE
01	NYNMP1	— —	4 1 1 1 1	0 1
7–8	9–14	15–25	26–30	31–32

	CON'T	CATEGORY	REPORT TYPE	REPORT SOURCE	DOCKET NUMBER	EVENT DATE	REPORT DATE
01		M I	L	L	0 5 0 — 0 2 2 0	1 0 0 1 7 5	1 1 0 3 7 5
7–8		57–58	59	60	61–68	69–74	75–80

EVENT DESCRIPTION

02 During routine surveillance testing involving a calibration check, a Main Steam
03 Line Temperature switch was found to actuate at 216°F rather than ≤200°F required
04 EP # IB-10P · Bi-metallic thermal switches - Part Number 17002-40
05 Range -100 to +600°F
06 AOR 75-29

	SYSTEM CODE	CAUSE CODE	COMPONENT CODE	PRIME COMPONENT SUPPLIER	COMPONENT MANUFACTURER	VIOLATION
07	I G	E	I N S T R U	N	F 0 8 0	N
7–8	9–10	11	12–17	43	44–47	48

CAUSE DESCRIPTION

08 Set point drift. The instrument was recalibrated to trip at 199°F.
09
10

	FACILITY STATUS	% POWER	OTHER STATUS	METHOD OF DISCOVERY	DISCOVERY DESCRIPTION
11	D	0 0 0		b	N/A
7–8	9	10–12	13–44	45	46–80

	FORM OF ACTIVITY RELEASED	CONTENT OF RELEASE	AMOUNT OF ACTIVITY	LOCATION OF RELEASE
12	0	Z		
7–8	9	10	11–44	45–80

PERSONNEL EXPOSURES

	NUMBER	TYPE	DESCRIPTION
13	0 0 0	Z	
7–8	9–11	12	13–80

PERSONNEL INJURIES

	NUMBER	DESCRIPTION
14	0 0 0	N/A
7–8	9–11	12–80

~~OFFSITE~~ CONSEQUENCES Probable

15 None

LOSS OR DAMAGE TO FACILITY

	TYPE	DESCRIPTION
16		
7–8	9	10–80

PUBLICITY

17

ADDITIONAL FACTORS

18 Sufficient temperature switches were functional to provide the required isolation
if required.
19

NAME: T.J. Dente PHONE: (315) 343-2110

GPO 881-667

LICENSEE EVENT REPORT

CONTROL BLOCK: [ ] (1–6) (PLEASE PRINT ALL REQUIRED INFORMATION)

	LICENSEE NAME	LICENSE NUMBER	LICENSE TYPE	EVENT TYPE
01	NYNMP1	— —	4111	01
7–8	9–14	15–25	26–30	31–32

	CATEGORY	REPORT TYPE	REPORT SOURCE	DOCKET NUMBER	EVENT DATE	REPORT DATE
01 CON'T	MI	L	L	05 0–022 0	100175	110375
7–8	57–58	59	60	61–68	69–74	75–80

EVENT DESCRIPTION

02 During routine surveillance testing involving a calibration check, a Main Steam
03 Line Temperature Switch was found to actuate at 212°F rather than ≤ 200°F required
04 EP # IB-10P Bi-metallic thermal switches - Part Number 17002-40
05 Range -100 to + 600°F
06 AOR 75-30

	SYSTEM CODE	CAUSE CODE	COMPONENT CODE	PRIME COMPONENT SUPPLIER	COMPONENT MANUFACTURER	VIOLATION
07	IG	E	INSTRU	N	F080	N
7–8	9–10	11	12–17	43	44–47	48

CAUSE DESCRIPTION

08 Set point drift. The instrument was recalibrated to trip at 199°F.
09
10

	FACILITY STATUS	% POWER	OTHER STATUS	METHOD OF DISCOVERY	DISCOVERY DESCRIPTION
11	D	000		b	N/A
7–8	9	10–12	13–44	45	46–80

	FORM OF ACTIVITY RELEASED	CONTENT OF RELEASE	AMOUNT OF ACTIVITY	LOCATION OF RELEASE
12	0	Z		
7–8	9	10	11–44	45–80

PERSONNEL EXPOSURES

	NUMBER	TYPE	DESCRIPTION
13	000	Z	
7–8	9–11	12	13–80

PERSONNEL INJURIES

	NUMBER	DESCRIPTION
14	000	N/A
7–8	9–11	12–80

~~OFFSITE~~ CONSEQUENCES Probable

15 None

LOSS OR DAMAGE TO FACILITY

	TYPE	DESCRIPTION
16		
7–8	9	10–80

PUBLICITY

17

ADDITIONAL FACTORS

18 Sufficient temperature switches were functional to provide the required isolation
19 if required.

NAME: T.J. Dente PHONE: (315) 343-2110

GPO 881-667

REP[redacted]OF ABNORMAL OCCURRENCE AND/[redacted]CIDENT

NRC DISTRIBUTION FOR PART 50 DOCKET MATERIAL
(TEMPORARY FORM)

CONTROL NO: 10771

FILE: INCIDENT REPORT FILE

FROM:	DATE OF DOC	DATE REC'D	LTR	TWX	RPT	OTHER
Niagara Mohawk Power Corp. Syracuse, N.Y. R.R. Schneider	10-3-75	10-9-75	XXX			

TO:	ORIG	CC	OTHER	
Mr. James P. O'Neilly	None	33		SENT AEC PDR XXX SENT LOCAL PDR XXX

CLASS	UNCLASS	PROP INFO	INPUT	NO CYS REC'D	DOCKET NO:
	XXX			33	50-220

DESCRIPTION:
Letter trans the following.....

ENCLOSURES:
A/O # 75-24, on 9-11-75; Concerning the LPRM to the APRM lossing their power.....
A/O # 75-25, on 9-13-75, Concerning inoperable feedwater pump # 12....
A/O # 75-26, on 9-13-75, Concerning the Drywell Floor Drain leakage increasing above 5 gpm...
A/O # 75-27, on 9-16-75, Concerning Failure of po power supply for radiation .....
A/O # 75-28, on 9-22-75, Concerning a Main Steam
(Cont)

PLANT NAME: Nine Mile Pt.

SAB 10-10-75

FOR ACTION/INFORMATION

BUTLER (L) W/ Copies	SCHWENCER (L) W/ Copies	ZIEMANN (L) W/ Copies	REGAN (E) W/ Copies
CLARK (L) W/ Copies	STOLZ (L) W/ Copies	DICKER (E) W/ Copies	LEAR (L) W/3 Copies
PARR (L) W/ Copies	VASSALLO (L) W/ Copies	KNIGHTON (E) W/ Copies	SPELS W/ Copies
KNIEL (L) W/ Copies	PURPLE (L) W/ Copies	YOUNGBLOOD (E) W/ Copies	W/ Copies

DO NOT REMOVE

ACKNOWLEDGED

INTERNAL DISTRIBUTION

REG FILE	TECH REVIEW	DENTON	LIC ASST	A/T IND
NRC PDR	SCHROEDER	**GRIMES	R. DIGGS (L)	BRAITMAN
OGC, ROOM P-506A	MACCARY	GAMMILL	H. GEARIN (L)	SALTZMAN
GOSSICK/STAFF	KNIGHT	KASTNER	E. GOULBOURNE (L)	MELTZ
CASE	PAWLICKI	BALLARD	P. KREUTZER (E)	
GIAMBUSSO	SHAO	SPANGLER	J. LEE (L)	PLANS
BOYD	** STELLO		M. RUSHBROOK (L)	MCDONALD
MOORE (L)	** HOUSTON	ENVIRO	S. REED (E)	CHAPMAN
DEYOUNG (L)	** NOVAK	MULLER	M. SERVICE (L)	DUBE (Ltr)
SKOVHOLT (L)	ROSS	DICKER	S. SHEPPARD (L)	E. COUPE
GOLLER (L) (Ltr)	IPPOLITO	KNIGHTON	M. SLATER (E)	PETERSON
P. COLLINS	TEDESCO	YOUNGBLOOD	H. SMITH (L)	HARTFIELD (2)
DENISE	J. COLLINS	REGAN	S. TEETS (L)	KLECKER
REG OPR	LAINAS	PROJECT LDR	G. WILLIAMS (E)	EISENHUT
FILE & REGION (2)	BENAROYA		V. WILSON (L)	WIGGINTON
MIPC/PE (3)	VOLLMER	HARLESS	R. INGRAM (L)	F. WILLIAMS
STEELE			M. DUNCAN (E)	HANAUER

EXTERNAL DISTRIBUTION

1 – LOCAL PDR Oswego, N.Y.
1 – TIC (ABERNATHY)
1 – NSIC (BUCHANAN)
1 – ASLB
1 – Newton Anderson
5 – ACRS SENT TO LIC ASST S. Teets
** SEND ONLY TEN DAY REPORTS

(1)(2)(10) – NATIONAL LABS
1 – W. PENNINGTON, Rm E-201 GT
1 – CONSULTANTS
NEWMARK/BLUME/AGBABIAN

1 – PDR-SAN/LA/NY
1 – BROOKHAVEN NAT LAB
1 – G. ULRIKSON, ORNL
1 – AGMED (RUTH GUSSMAN) Rm B-127 GT
1 – J. D. RUNKLES, Rm E-201 GT

Line Temperature Switch which was found acutuate .....
(33 Copies Enclosure Received)

NIAGARA MOHAWK POWER CORPORATION

NIAGARA MOHAWK

300 ERIE BOULEVARD, WEST
SYRACUSE, N.Y. 13202

Regulatory File Cy

October 3, 1975

Mr. James P. O'Reilly
Directorate of Regulatory Operations
Region I
United States Nuclear Regulatory Commission
631 Park Avenue
King of Prussia, Pa. 19406

RE: Docket No. 50-220

Dear Mr. O'Reilly:

In accordance with Nine Mile Point Nuclear Station Unit #1 Technical Specification 6.9, we hereby submit Licensee Event Reports 75-24 thru 75-28 which document the Abnormal Occurrences for September, 1975.

These reports conform to the requirements of Regulatory Guide 1.16, Revision 2 and were completed within the intent of the Licensee Event Report Instruction Booklet 00E-SS-001, dated October 1974, revised December 24, 1974. Due to the minimal significance category of the reports, no supplemental report is included.

Very truly yours,

R.R. Schneider
Vice President -
Electric Operations

TJD/mm

Enc. 3 copies

cc: K.R. Goller (30 copies)

10771

LICENSEE EVENT REPORT

CONTROL BLOCK: [ ] (1–6) [PLEASE PRINT ALL REQUIRED INFORMATION]

	LICENSEE NAME	LICENSE NUMBER	LICENSE TYPE	EVENT TYPE
01	NYNMP1	— —	41111	01
7–8	9–14	15–25	26–30	31–32

	CATEGORY	REPORT TYPE	REPORT SOURCE	DOCKET NUMBER	EVENT DATE	REPORT DATE
01 CON'T	MI	L	L	050—0220	091175	100175
7–8	57–58	59	60	61–68	69–74	75–80

EVENT DESCRIPTION

02 During normal power operation, one APRM (#14) went downscale. Investigation showed
03 that the LPRM inputs to the APRM had lost their power supply. APRM was bypassed.
04 Redundant componetns fully operable.
05
06 AOR 75-24

	SYSTEM CODE	CAUSE CODE	COMPONENT CODE	PRIME COMPONENT SUPPLIER	COMPONENT MANUFACTURER	VIOLATION
07	IA	E	INSTRU	N	G080	N
7–8	9–10	11	12–17	43	44–47	48

CAUSE DESCRIPTION

08 Problem with loose component in power supply. Corrected and returned to service.
09
10

	FACILITY STATUS	% POWER	OTHER STATUS	METHOD OF DISCOVERY	DISCOVERY DESCRIPTION
11	E	081		a	
7–8	9	10–12	13–44	45	46–80

	FORM OF ACTIVITY RELEASED	CONTENT OF RELEASE	AMOUNT OF ACTIVITY	LOCATION OF RELEASE
12	Z	0	N/A	
7–8	9	10	11–44	45–80

PERSONNEL EXPOSURES

	NUMBER	TYPE	DESCRIPTION
13	000	Z	N/A
7–8	9–11	12	13–80

PERSONNEL INJURIES

	NUMBER	DESCRIPTION
14	000	N/A
7–8	9–11	12–80

~~DESCRIP~~ CONSEQUENCES Probable

15 None

LOSS OR DAMAGE TO FACILITY

	TYPE	DESCRIPTION
16	Z	N/A
7–8	9	10–80

PUBLICITY

17 None

ADDITIONAL FACTORS

18 None

19

NAME: Thomas J. Dente PHONE: (315) 343-2110

GPO 881-667

LICENSEE EVENT REPORT

CONTROL BLOCK: [ ] (1–6)

[PLEASE PRINT ALL REQUIRED INFORMATION]

	LICENSEE NAME	LICENSE NUMBER	LICENSE TYPE	EVENT TYPE
01	NYNMP1	— —	4 1 1 1 1	0 1
7–8	9–14	15–25	26–30	31–32

	CATEGORY	REPORT TYPE	REPORT SOURCE	DOCKET NUMBER	EVENT DATE	REPORT DATE
01 CON'T	M I	L	L	0 5 0 — 0 2 2 0	0 9 1 3 7 5	1 0 0 1 7 5
7–8	57–58	59	60	61–68	69–74	75–80

EVENT DESCRIPTION

02 During process of shutdown, #12 feedwater pump would not start when given a signal
03 to do so. #11 feedwater pump was operational for HPCI. Problem isolated to oil
04 pump motor breaker.
05
06 AOR 75-25

	SYSTEM CODE	CAUSE CODE	COMPONENT CODE	PRIME COMPONENT SUPPLIER	COMPONENT MANUFACTURER	VIOLATION
07		E		A	Z Z Z Z	N
7–8	9–10	11	12–17	43	44–47	48

CAUSE DESCRIPTION

08 Found loose 120 V control fuse holder on terminal block. Apparent vibration caused
09 the loosening and interruption of control voltage.
10

	FACILITY STATUS	% POWER	OTHER STATUS	METHOD OF DISCOVERY	DISCOVERY DESCRIPTION
11	H	0 2 2		a	Attempt to start.
7–8	9	10–12	13–44	45	46–80

	FORM OF ACTIVITY RELEASED	CONTENT OF RELEASE	AMOUNT OF ACTIVITY	LOCATION OF RELEASE
12	Z	0	N/A	
7–8	9	10	11–44	45–80

PERSONNEL EXPOSURES

	NUMBER	TYPE	DESCRIPTION
13	0 0 0	Z	N/A
7–8	9–11	12	13–80

PERSONNEL INJURIES

	NUMBER	DESCRIPTION
14	0 0 0	N/A
7–8	9–11	12–80

~~LOSS OF OR~~ CONSEQUENCES PROBABLE

15 None

LOSS OR DAMAGE TO FACILITY

	TYPE	DESCRIPTION
16	Z	N/A
7–8	9	10–80

PUBLICITY

17 None

ADDITIONAL FACTORS

18 Lock washers or appropriate fix action will be reviewed to eliminate this problem.
19

NAME: Thomas J. Dente PHONE: (315) 343-2110

GPO 881-667

LICENSEE EVENT REPORT

CONTROL BLOCK: [ ] (1–6)

(PLEASE PRINT ALL REQUIRED INFORMATION)

	LICENSEE NAME	LICENSE NUMBER	LICENSE TYPE	EVENT TYPE
01	NYNMP1	— —	41111	01
7–8	9–14	15–25	26–30	31–32

	CATEGORY	REPORT TYPE	REPORT SOURCE	DOCKET NUMBER	EVENT DATE	REPORT DATE
01 CON'T	MI	L	L	050—0220	091675	100175
7–8	57–58	59	60	61–68	69–74	75–80

EVENT DESCRIPTION

02 During shutdown, power supply for radiation monitor failed causing operation of
03 Emergency Ventilation and Isolation of the Emergency Condenser System. All
04 Systems functioned as designed.
05
06 AOR 75-27

	SYSTEM CODE	CAUSE CODE	COMPONENT CODE	PRIME COMPONENT SUPPLIER	COMPONENT MANUFACTURER	VIOLATION
07	IB	E	INSTRU	N	G080	N
7–8	9–10	11	12–17	43	44–47	48

CAUSE DESCRIPTION

08 The power supply was replaced returning system to normal. Bad power supply
09 component will be replaced.
10

	FACILITY STATUS	% POWER	OTHER STATUS	METHOD OF DISCOVERY	DISCOVERY DESCRIPTION
11	0	000		a	
7–8	9	10–12	13–44	45	46–80

	FORM OF ACTIVITY RELEASED	CONTENT OF RELEASE	AMOUNT OF ACTIVITY	LOCATION OF RELEASE
12	Z	0	N/A	
7–8	9	10	11–44	45–80

PERSONNEL EXPOSURES

	NUMBER	TYPE	DESCRIPTION
13	000	Z	N/A
7–8	9–11	12	13–80

PERSONNEL INJURIES

	NUMBER	DESCRIPTION
14	000	N/A
7–8	9–11	12–80

~~LOSS OF~~ CONSEQUENCES Probable

15 None

LOSS OR DAMAGE TO FACILITY

	TYPE	DESCRIPTION
16	Z	N/A
7–8	9	10–80

PUBLICITY

17 None

ADDITIONAL FACTORS

18 None

19

NAME: Thomas J. Dente PHONE: (315) 343-2110

LICENSEE EVENT REPORT

CONTROL BLOCK: [ ] (1–6)

(PLEASE PRINT ALL REQUIRED INFORMATION)

	LICENSEE NAME	LICENSE NUMBER	LICENSE TYPE	EVENT TYPE
01	NYNMP1	— —	4111 1	01
7–8	9–14	15–25	26–30	31–32

	CATEGORY	REPORT TYPE	REPORT SOURCE	DOCKET NUMBER	EVENT DATE	REPORT DATE
01 CON'T	MI	L	L	05 0—022 0	091375	100175
7–8	57–58	59	60	61–68	69–74	75–80

EVENT DESCRIPTION

02 During a routine reactor shutdown for refueling and with 200 psig reactor pressure,
03 the Drywell Floor Drain leakage increased above .5 gpm. An operator was sent
04 into the drywell to investigate and found a leak on #15 Reactor Recirculation
05 Pump Motor Cooling Line (Not a part of the Reactor Coolant Boundary).
06 AOR 75-26

	SYSTEM CODE	CAUSE CODE	COMPONENT CODE	PRIME COMPONENT SUPPLIER	COMPONENT MANUFACTURER	VIOLATION
07	WG	E	ZZZZZZ	N	ZZZZ	N
7–8	9–10	11	12–17	43	44–47	48

CAUSE DESCRIPTION

08 Leak to be repaired. Insulated bushing in pump oil cooling system was the cause
09 of leak. Part will be replaced.
10

	FACILITY STATUS	% POWER	OTHER STATUS	METHOD OF DISCOVERY	DISCOVERY DESCRIPTION
11	G	000	380°F Shutting down	a	Rate of rise instrument (Analog)
7–8	9	10–12	13–44	45	46–80

	FORM OF ACTIVITY RELEASED	CONTENT OF RELEASE	AMOUNT OF ACTIVITY	LOCATION OF RELEASE
12	Z	0	N/A	
7–8	9	10	11–44	45–80

PERSONNEL EXPOSURES

	NUMBER	TYPE	DESCRIPTION
13	000	Z	N/A
7–8	9–11	12	13–80

PERSONNEL INJURIES

	NUMBER	DESCRIPTION
14	000	N/A
7–8	9–11	12–80

~~OFFSITE~~ CONSEQUENCES Probable

15 None

LOSS OR DAMAGE TO FACILITY

	TYPE	DESCRIPTION
16	Z	N/A
7–8	9	10–80

PUBLICITY

17 None

ADDITIONAL FACTORS

18 None

19

NAME: Thomas J. Dente PHONE: (315) 343-2110

GPO 881-667

LICENSEE EVENT REPORT

CONTROL BLOCK: [ ] (1–6)

(PLEASE PRINT ALL REQUIRED INFORMATION)

	LICENSEE NAME	LICENSE NUMBER	LICENSE TYPE	EVENT TYPE
01	NYNMP1	— —	4111 1	01
7–8	9–14	15–25	26–30	31–32

	CATEGORY	REPORT TYPE	REPORT SOURCE	DOCKET NUMBER	EVENT DATE	REPORT DATE
01 CON'T	MI	L	L	050—0220	092275	100175
7–8	57–58	59	60	61–68	69–74	75–80

EVENT DESCRIPTION

02 During routine surveillance involving calibration check, a Main Steam Line Temperature

03 Switch was found to actuate at 173°F or more conservative than the - 200 ±10°F.

04 Readjusted to required limits.

05

06 AOR 75-28

	SYSTEM CODE	CAUSE CODE	COMPONENT CODE	PRIME COMPONENT SUPPLIER	COMPONENT MANUFACTURER	VIOLATION
07	IB	E	INSTRU	N	F080	N
7–8	9–10	11	12–17	43	44–47	48

CAUSE DESCRIPTION

08 Set point drift.

09

10

	FACILITY STATUS	% POWER	OTHER STATUS	METHOD OF DISCOVERY	DISCOVERY DESCRIPTION
11	D	000	N/A	b	N/A
7–8	9	10–12	13–44	45	46–80

	FORM OF ACTIVITY RELEASED	CONTENT OF RELEASE	AMOUNT OF ACTIVITY	LOCATION OF RELEASE
12	0	Z	N/A	
7–8	9	10	11–44	45–80

PERSONNEL EXPOSURES

	NUMBER	TYPE	DESCRIPTION
13	000	Z	N/A
7–8	9–11	12	13–80

PERSONNEL INJURIES

	NUMBER	DESCRIPTION
14	000	N/A
7–8	9–11	12–80

~~PRESENT~~ CONSEQUENCES Probable

15 None

LOSS OR DAMAGE TO FACILITY

	TYPE	DESCRIPTION
16	Z	N/A
7–8	9	10–80

PUBLICITY

17 None

ADDITIONAL FACTORS

18 None

19

NAME: Thomas J. Dente PHONE: (315) 343-2110

NRC DISTRIBUTION FOR PART 50 DOCKET MATERIAL
(TEMPORARY FORM)

CONTROL NO: 9534

FILE: INCIDENT REPORT FILE

FROM:	DATE OF DOC	DATE REC'D	LTR	TWX	RPT	OTHER
Niagara Mohawk Power Corp. Syracuse, N.Y. R.R. Schneider	9-3-75	9-8-75			XX	

TO:	ORIG	CC	OTHER	
NRC	None			SENT AEC PDR XXX SENT LOCAL PDR XXX

CLASS	UNCLASS	PROP INFO	INPUT	NO CYS REC'D	DOCKET NO:
	XXX			1	50-220

DESCRIPTION:

Letter trans the following.....

PLANT NAME: Nine Mile Pt. # 1

ENCLOSURES:

A/O # 75-21, on 8-2-75, Concerning Core Spray Sparger tripped 6.4 psid instead of required 5 psid, durning surveillance testing.... ....
A/O # 75-22, on 8-14-75, Concerning inoperable Reactor Building Vent Monitor .....
A/O # 75-23, on 8-26-75, Concerning Iodine sensitivity in milk sample inadequate, per Appendix B 4.3.3.....
(1 Copy Enclosure Received)

FOR ACTION/INFORMATION SAB 9-9-75

BUTLER (L) W/ Copies	SCHWENCER (L) W/ Copies	ZIEMANN (L) W/ Copies	REGAN (E) W/ Copies
CLARK (L) W/ Copies	STOLZ (L) W/ Copies	DICKER (E) W/ Copies	LEAR (L) W/3 Copies
PARR (L) W/ Copies	VASSALLO (L) W/ Copies	KNIGHTON (E) W/ Copies	SPELS W/ Copies
KNIEL (L) W/ Copies	PURPLE (L) W/ Copies	YOUNGBLOOD (E) W/ Copies	W/ Copies

ACKNOWLEDGED

DO NOT REMOVE

INTERNAL DISTRIBUTION

REG FILE	TECH REVIEW	DENTON	LIC ASST	A/T IND
NRC PDR	SCHROEDER	**GRIMES	R. DIGGS (L)	BRAITMAN
OGC, ROOM P-506A	MACCARY	GAMMILL	H. GEARIN (L)	SALTZMAN
GOSSICK/STAFF	KNIGHT	KASTNER	E. GOULBOURNE (L)	MELTZ
CASE	PAWLICKI	BALLARD	P. KREUTZER (E)	
GIAMBUSSO	SHAO	SPANGLER	J. LEE (L)	PLANS
BOYD	** STELLO		M. RUSHBROOK (L)	MCDONALD
MOORE (L)	** HOUSTON	ENVIRO	S. REED (E)	CHAPMAN
DEYOUNG (L)	** NOVAK	MULLER	M. SERVICE (L)	DUBE (Ltr)
SKOVHOLT (L)	ROSS	DICKER	S. SHEPPARD (L)	E. COUPE
GOLLER (L) (Ltr)	IPPOLITO	KNIGHTON	M. SLATER (E)	PETERSON
P. COLLINS	TEDESCO	YOUNGBLOOD	H. SMITH (L)	HARTFIELD (2)
DENISE	J. COLLINS	REGAN	S. TEETS (L)	KLECKER
REG OPR	LAINAS	PROJECT LDR	G. WILLIAMS (E)	EISENHUT
FILE & REGION (2)	BENAROYA		V. WILSON (L)	WIGGINTON
MIPC/PE (3)	VOLLMER	HARLESS	R. INGRAM (L)	F. WILLIAMS
STEELE			M. DUNCAN (E)	HANAUER

EXTERNAL DISTRIBUTION

1 – LOCAL PDR Oswego, N.Y.
1 – TIC (ABERNATHY)
1 – NSIC (BUCHANAN)
1 – ASLB
1 – Newton Anderson
5 – ACRS SENT TO LIC ASST L.A. S. Teets
** SEND ONLY TEN DAY REPORTS

(1)(2)(10) – NATIONAL LABS
1 – W. PENNINGTON, Rm E-201 GT
1 – CONSULTANTS
NEWMARK/BLUME/AGBABIAN

1 – PDR-SAN/LA/NY
1 – BROOKHAVEN NAT LAB
1 – G. ULRIKSON, ORNL
1 – AGMED (RUTH GUSSMAN) Rm B-127 GT
1 – J. D. RUNKLES, Rm E-201 GT

NIAGARA MOHAWK POWER CORPORATION

NIAGARA MOHAWK

300 ERIE BOULEVARD, WEST
SYRACUSE, N. Y. 13202

Regulatory File Cy.

September 3, 1975

RECEIVED
SEP 8 1975
U.S. NUCLEAR REGULATORY COMMISSION
Mail Section

Mr. James P. O'Reilly
Directorate of Regulatory Operations
Region I
United States Nuclear Regulatory Commission
631 Park Avenue
King of Prussia, Pa. 19406

RE: Docket No. 50-220

Dear Mr. O'Reilly:

In accordance with Nine Mile Point Nuclear Station Unit #1 Technical Specification 6.9, we hereby submit Licensee Event Report 75-21, 75-22 and 75-23 which document the Abnormal Occurrences for August, 1975.

These reports conform to the requirements of Regulatory Guide 1.16, Revision 2 and were completed within the intent of the Licensee Event Report instruction booklet 00E-SS-001, dated October, 1974, revised December 24, 1974.

Very truly yours,

R.R. Schneider
Vice President
Electric Operations

TJD/mm

Enc. 3 copies

cc: 30 copies to K.R. Goller

DOCKETED
USNRC
SEP 8 1975
Mail Section
Docket Clerk

9534

LICENSEE EVENT REPORT

CONTROL BLOCK: [ ] (1–6)

[PLEASE PRINT ALL REQUIRED INFORMATION]

	LICENSEE NAME	LICENSE NUMBER	LICENSE TYPE	EVENT TYPE
01 (7–8)	NYNMP1 (9–14)	— — (15–25)	4111 1 (26–30)	01 (31–32)

	CATEGORY	REPORT TYPE	REPORT SOURCE	DOCKET NUMBER	EVENT DATE	REPORT DATE
01 CON'T (7–8)	MI (57–58)	L (59)	L (60)	050—0220 (61–68)	080275 (69–74)	090375 (75–80)

EVENT DESCRIPTION

02 During routine surveillance testing, RV-30A, Core Spray Sparger ΔP tripped at

03 6.4 psid instead of required 5 psid.

04

05

06 AOR 75-21

	SYSTEM CODE	CAUSE CODE	COMPONENT CODE	PRIME COMPONENT SUPPLIER	COMPONENT MANUFACTURER	VIOLATION
07 (7–8)	IE (9–10)	E (11)	INSTRU (12–17)	N (43)	B080 (44–47)	N (48)

CAUSE DESCRIPTION

08 Set point drift. Redundant component operable. Recalibrated instrument to

09 required value.

10

	FACILITY STATUS	% POWER	OTHER STATUS	METHOD OF DISCOVERY	DISCOVERY DESCRIPTION
11 (7–8)	E (9)	084 (10–12)	(13–44)	b (45)	(46–80)

	FORM OF ACTIVITY RELEASED	CONTENT OF RELEASE	AMOUNT OF ACTIVITY	LOCATION OF RELEASE
12 (7–8)	Z (9)	Z (10)	N/A (11–44)	(45–80)

PERSONNEL EXPOSURES

	NUMBER	TYPE	DESCRIPTION
13 (7–8)	000 (9–11)	Z (12)	N/A (13–80)

PERSONNEL INJURIES

	NUMBER	DESCRIPTION
14 (7–8)	000 (9–11)	N/A (12–80)

~~OFFSITE~~ CONSEQUENCES Probable

15 None

LOSS OR DAMAGE TO FACILITY

	TYPE	DESCRIPTION
16 (7–8)	Z (9)	N/A (10–80)

PUBLICITY

17 None

ADDITIONAL FACTORS

18 None

19

NAME: T.J. Dente PHONE: (315) 343-2110

GPO 881-667

LICENSEE EVENT REPORT

CONTROL BLOCK: [ ] (1–6) (PLEASE PRINT ALL REQUIRED INFORMATION)

	LICENSEE NAME	LICENSE NUMBER	LICENSE TYPE	EVENT TYPE
01	NYNMP1	— —	41111	01
7–8	9–14	15–25	26–30	31–32

	CATEGORY	REPORT TYPE	REPORT SOURCE	DOCKET NUMBER	EVENT DATE	REPORT DATE
01 CON'T	MI	L	L	050—0220	081475	090375
7–8	57–58	59	60	61–68	69–74	75–80

EVENT DESCRIPTION

02 During routine operations, the Reactor Building Vent Monitor spiked causing operation
03 of Emergency Vent system. During repair work, it was found that BV 202-36 would not
04 operate satisfactorily. It was failed open..
05
06 AOR 75-22

	SYSTEM CODE	CAUSE CODE	COMPONENT CODE	PRME COMPONENT SUPPLIER	COMPONENT MANUFACTURER	VIOLATION
07	IB	E	INSTRU	N	A610	N
7–8	9–10	11	12–17	43	44–47	48

CAUSE DESCRIPTION

08 Solenoid valve failed. Spring plunger nylon tip was found broken. This spring
09 plunger nylon tip was replaced.
10

	FACILITY STATUS	% POWER	OTHER STATUS	METHOD OF DISCOVERY	DISCOVERY DESCRIPTION
11	E	062		a	
7–8	9	10–12	13–44	45	46–80

	FORM OF ACTIVITY RELEASED	CONTENT OF RELEASE	AMOUNT OF ACTIVITY	LOCATION OF RELEASE
12	Z	Z	N/A	
7–8	9	10	11–44	45–80

PERSONNEL EXPOSURES

	NUMBER	TYPE	DESCRIPTION
13	000	Z	N/A
7–8	9–11	12	13–80

PERSONNEL INJURIES

	NUMBER	DESCRIPTION
14	000	N/A
7–8	9–11	12–80

~~DEASTER~~ CONSEQUENCES PROBABLE

15 None

LOSS OR DAMAGE TO FACILITY

	TYPE	DESCRIPTION
16	Z	N/A
7–8	9	10–80

PUBLICITY

17 None

ADDITIONAL FACTORS

18 None

19

NAME: T.J. Dente PHONE: (315)343-2110

GPO 881-667

LICENSEE EVENT REPORT

CONTROL BLOCK: [ ] (1–6) [PLEASE PRINT ALL REQUIRED INFORMATION]

	LICENSEE NAME	LICENSE NUMBER	LICENSE TYPE	EVENT TYPE
01	NYNMP1	— —	41111	01
7–8	9–14	15–25	26–30	31–32

	CATEGORY	REPORT TYPE	REPORT SOURCE	DOCKET NUMBER	EVENT DATE	REPORT DATE
01 CON'T	MI	L	I	050—0220	082675	090375
7–8	57–58	59	60	61–68	69–74	75–80

EVENT DESCRIPTION

02 Iodine detection sensitivity in milk sample inadequate, per Appendix B 4.3.3.

03 Milk sample from location #1 collected 7/22/75 showed activity of I 131 = 0.78 ±

04 0.38 pCi/l which has an associated error of ± 49% rather than required ±25%.

05

06 AOR 75-23

	SYSTEM CODE	CAUSE CODE	COMPONENT CODE	PRIME COMPONENT SUPPLIER	COMPONENT MANUFACTURER	VIOLATION
07	ZZ	Z	Z9999	Z	Z999	N
7–8	9–10	11	12–17	43	44–47	48

CAUSE DESCRIPTION

08 Procedural requirements were placed upon the contractor which he did not fulfill.

09 The contractor has been informed as to the absolute necessity to follow these

10 procedures.

	FACILITY STATUS	% POWER	OTHER STATUS	METHOD OF DISCOVERY	DISCOVERY DESCRIPTION
11	E	082			Inspection by NRC
7–8	9	10–12	13–44	45	46–80

	FORM OF ACTIVITY RELEASED	CONTENT OF RELEASE	AMOUNT OF ACTIVITY	LOCATION OF RELEASE
12	Z	Z		
7–8	9	10	11–44	45–80

PERSONNEL EXPOSURES

	NUMBER	TYPE	DESCRIPTION
13	000	Z	
7–8	9–11	12	13–80

PERSONNEL INJURIES

	NUMBER	DESCRIPTION
14	000	
7–8	9–11	12–80

~~OFFSITE~~ CONSEQUENCES PROBABLE

15 None

LOSS OR DAMAGE TO FACILITY

	TYPE	DESCRIPTION
16	Z	
7–8	9	10–80

PUBLICITY

17 None

ADDITIONAL FACTORS

18 None

19

NAME: T.J. Dente PHONE: (315) 343-2110

GPO 881-667

To: T. Shedlosky
From: R. C. Lempge

NIAGARA MOHAWK POWER CORPORATION

NIAGARA MOHAWK

DATE: August 29, 1975

UBJECT: Abnormal Occurrence Report No. 50-220 75- 23
(24 hour Notification)

The enclosed preliminary AOR is being submitted in accordance with Technical Specification Section 6.

Confirming R.A. Burns phone conversation with T. Shedlosky AEC RO:I office on August 27, 1975

O: James P. O'Reilly
Directorate of Regulatory Operations
Region 1
631 Park Avenue
King of Prussia, Pa. 19406

ROM: Niagara Mohawk Power Corporation
Nine Mile Point - James A. FitzPatrick Site

P.O. Box #32
Lyconing, New York 13093

Docket No. 50-220

EFERENCE: License DPR- 63

eport No.: 50- 220 /75- 23

eport Date August 29, 1975

ccurrence Date August 26, 1975

acility: NY NMP #1

Identification of Occurrance:

Iodine detection sensitivity in milk sample

dupe

NIAGARA MOHAWK POWER CORPORATION

NIAGARA MOHAWK

Conditions Prior to Occurrence:

X	Steady State Power		Routine Shutdown
	Hot Standby		
	Cold Shutdown		Load Changes
	Refueling Shutdown		
	Routine Startup		Other

Description of the Occurrence:

During an audit by NMP/JAF staff personnel of contractor's facility used in analyzing milk samples, it was discovered that required sensitivity per Appendix B 5.2.C was not met. Milk sample from location #1 collected 7/22/75 showed activity of I 131 = 0.78 ± 0.38 pCi/l which has an associated error in the analysis of ± 49% rather than the required ± 25%.

Apparent Cause of the Occurrence:

	Design	X	Procedure
	Manufacture		Unusual Service Condition
	Installation/ Const.		
	Operator		Component Failure
			Other (Specify)

Analysis of Occurrence:

No effect on the environmental because of failure to meet this required sensitivity.

Corrective Action:

Contractor has been informed that in order to meet the required sensitivity he must increase the milk sample counting time.

Failure Data:

REPORT OF ABNORMAL OCCURRENCE AND/OR INCIDENT

NRC DISTRIBUTION FOR PART 50 DOCKET MATERIAL
(TEMPORARY FORM)

CONTROL NO: 9360

FILE: INCIDENT REPORT FILE

FROM:	DATE OF DOC	DATE REC'D	LTR	TWX	RPT	OTHER
Niagara Mohawk Power Corp Syracuse, N.Y. R.R.Schneider	8-4-75	9-3-75	xxx			

TO:	ORIG	CC	OTHER	
Mr. James P. O'Reilly	not- signed			SENT AEC PDR xxx SENT LOCAL PDR xx

CLASS	UNCLASS	PROP INFO	INPUT	NO CYS REC'D	DOCKET NO:
	xxxx				50-220

DESCRIPTION:

Ltr trans the following:

ACKNOWLEDGED
DO NOT REMOVE

PLANT NAME: Nine Mile Point #1

ENCLOSURES:

License Event Report #75-18-#75-20
#75-18 on 7-4-75 concerning emergency condenser vent radiation monitor went upscale isolating the system as designed ....
#75-19 on 7-22-75 concerning the surveillance test on Torus Vacuum Relief to Atmosphere Switches was not completed ....
#75-20 on 7-25-75 concerning Milk Sample analysi ~~was not completed until 9 days following collec~~

FOR ACTION/INFORMATION 9-3-75 JGB

BUTLER (L) W/ Copies	SCHWENCER (L) W/ Copies	ZIEMANN (L) W/ Copies	REGAN (E) W/ Copies
CLARK (L) W/ Copies	STOLZ (L) W/ Copies	DICKER (E) W/ Copies	LEAR (L) W/ Copies
PARR (L) W/ Copies	VASSALLO (L) W/ Copies	KNIGHTON (E) W/ Copies	SPELS W/ Copies
KNIEL (L) W/ Copies	PURPLE (L) W/ Copies	YOUNGBLOOD (E) W/ Copies	W/ Copies

INTERNAL DISTRIBUTION

REG FILE	TECH REVIEW	DENTON	LIC ASST	A/T IND
NRC PDR	SCHROEDER	**GRIMES	R. DIGGS (L)	BRAITMAN
OGC, ROOM P-506A	MACCARY	GAMMILL	H. GEARIN (L)	SALTZMAN
GOSSICK/STAFF	KNIGHT	KASTNER	E. GOULBOURNE (L)	MELTZ
CASE	PAWLICKI	BALLARD	P. KREUTZER (E)	
GIAMBUSSO	SHAO	SPANGLER	J. LEE (L)	PLANS
BOYD	** STELLO		M. RUSHBROOK (L)	MCDONALD
MOORE (L)	** HOUSTON	ENVIRO	S. REED (E)	CHAPMAN
DEYOUNG (L)	** NOVAK	MULLER	M. SERVICE (L)	DUBE (Ltr)
SKOVHOLT (L)	ROSS	DICKER	S. SHEPPARD (L)	E. COUPE
GOLLER (L) (Ltr)	IPPOLITO	KNIGHTON	M. SLATER (E)	PETERSON
P. COLLINS	TEDESCO	YOUNGBLOOD	H. SMITH (L)	HARTFIELD (2)
DENISE	J. COLLINS	REGAN	S. TEETS (L)	KLECKER
REG OPR	LAINAS	PROJECT LDR	G. WILLIAMS (E)	EISENHUT
FILE & REGION (2)	BENAROYA		V. WILSON (L)	WIGGINTON
MIPC/PE (3)	VOLLMER	HARLESS	R. INGRAM (L)	F. WILLIAMS
STEELE			M. DUNCAN (E)	HANAUER

EXTERNAL DISTRIBUTION

1 – LOCAL PDR Oswego, N.Y.
1 – TIC (ABERNATHY)
1 – NSIC (BUCHANAN)
1 – ASLB
1 – Newton Anderson
5 – ACRS SENT TO LIC ASST
** SEND ONLY TEN DAY REPORTS

(1)(2)(10) – NATIONAL LABS
1 – W. PENNINGTON, Rm E-201 GT
1 – CONSULTANTS NEWMARK/BLUME/AGBABIAN

1 – PDR-SAN/LA/NY
1 – BROOKHAVEN NAT LAB
1 – G. ULRIKSON, ORNL
1 – AGMED (RUTH GUSSMAN) Rm B-127 GT
1 – J. D. RUNKLES, Rm E-201 GT

NIAGARA MOHAWK POWER CORPORATION

NIAGARA MOHAWK

300 ERIE BOULEVARD, WEST
SYRACUSE, N.Y. 13202

August 4, 1975

Mr. James P. O'Reilly
Directorate of Regulatory Operations
Region I
United States Nuclear Regulatory Commission
631 Park Avenue
King of Prussia, Pa. 19406

RE: Docket No. 50-220

Dear Mr. O'Reilly:

In accordance with Nine Mile Point Nuclear Station Unit #1 Technical Specification 6.9, we hereby submit Licensee Event Reports 75-18 thru 75-20 which document the Abnormal Occurrences for July 1975.

These reports conform to the requirements of Regulatory Guide 1.16, Revision 2 and were completed within the intent of the Licensee Event Report Instruction Booklet 00E-SS-001, dated October, 1974, revised December 24, 1974. Due to the minimal significance category of the reports, no supplemental report is included.

Very truly yours,

R.R. Schneider
Vice President
Electric Operations

TJD/mm

Enc. 3 copies

cc: K.R. Goller (30 copies)

9360

LICENSEE EVENT REPORT

CONTROL BLOCK: [ ] (1–6) [PLEASE PRINT ALL REQUIRED INFORMATION]

LICENSEE NAME	LICENSE NUMBER	LICENSE TYPE	EVENT TYPE
01 NYNMP1 (7–8, 9–14)	— — (15–25)	4 1 1 1 1 (26–30)	0 1 (31–32)

CON'T	CATEGORY	REPORT TYPE	REPORT SOURCE	DOCKET NUMBER	EVENT DATE	REPORT DATE
01 (7–8)	M I (57–58)	L (59)	L (60)	0 5 0 — 0 2 2 0 (61–68)	0 7 2 2 7 5 (69–74)	0 8 0 4 7 5 (75–80)

EVENT DESCRIPTION

02 Due to a recent revision in the Technical Specifications, a change in testing re-
03 quirements went unnoted and a surveillance test on Torus Vacuum Relief to Atmosphere
04 Switches was not completed. The review of the specifications was in progress at
05 that time and since has been completed.
06 AOR 75-19

SYSTEM CODE	CAUSE CODE	COMPONENT CODE	PRIME COMPONENT SUPPLIER	COMPONENT MANUFACTURER	VIOLATION
07 Z Z (9–10)	d (11)	Z Z Z Z Z Z (12–17)	-- (43)	Z 9 9 9 (44–47)	N (48)

CAUSE DESCRIPTION

08 Upon review completion of the Technical Specifications, the requirement was noted.
09
10

FACILITY STATUS	% POWER	OTHER STATUS	METHOD OF DISCOVERY	DISCOVERY DESCRIPTION
11 F (9)	0 8 0 (10–12)	(13–44)	b (45)	Review of revision to Tech. Spec. (46–80)

FORM OF ACTIVITY RELEASED	CONTENT OF RELEASE	AMOUNT OF ACTIVITY	LOCATION OF RELEASE
12 Z (9)	Z (10)	N/A (11–44)	(45–80)

PERSONNEL EXPOSURES

NUMBER	TYPE	DESCRIPTION
13 0 0 0 (9–11)	Z (12)	N/A (13–80)

PERSONNEL INJURIES

NUMBER	DESCRIPTION
14 0 0 0 (9–11)	N/A (12–80)

~~POSSIBLE~~ CONSEQUENCES Probable

15 None

LOSS OR DAMAGE TO FACILITY

TYPE	DESCRIPTION
16 Z (9)	N/A (10–80)

PUBLICITY

17 None

ADDITIONAL FACTORS

18 The test performed met all required limits for operation.

19

NAME: T.J. Dente PHONE: (315) 343-2110

GPO 881-667

LICENSEE EVENT REPORT

CONTROL BLOCK: [ ] (1–6) **(PLEASE PRINT ALL REQUIRED INFORMATION)**

	LICENSEE NAME	LICENSE NUMBER	LICENSE TYPE	EVENT TYPE
01	NYNMP1	— —	4 1 1 1 1	0 1
7 8	9–14	15–25	26–30	31 32

	CATEGORY	REPORT TYPE	REPORT SOURCE	DOCKET NUMBER	EVENT DATE	REPORT DATE
01 CON'T	M I	L	L	0 5 0 — 0 2 2 0	0 7 0 4 7 5	0 8 0 4 7 5
7 8	57 58	59	60	61–68	69–74	75–80

EVENT DESCRIPTION

02 During routine operations, the emergency condenser vent radiation monitor went
03 upscale isolating the system as designed. Investigation revealed no high radiation
04 zone and a failed component in the monitor.
05
06 AOR 75-18

	SYSTEM CODE	CAUSE CODE	COMPONENT CODE	PRIME COMPONENT SUPPLIER	COMPONENT MANUFACTURER	VIOLATION
07	S H	E	I N S T R U	N	G 0 8 0	N
7 8 9	10	11	12–17	43	44–47	48

CAUSE DESCRIPTION

08 Apparently the high temperature environment caused the failure of a component in
09 the monitor. The monitor was replaced. Redundant loop verified operational.
10

	FACILITY STATUS	% POWER	OTHER STATUS	METHOD OF DISCOVERY	DISCOVERY DESCRIPTION
11	E	0 8 0		a	
7 8	9	10–12	13–44	45	46–80

	FORM OF ACTIVITY RELEASED	CONTENT OF RELEASE	AMOUNT OF ACTIVITY	LOCATION OF RELEASE
12	Z	Z	N/A	
7 8	9	10	11–44	45–80

PERSONNEL EXPOSURES

	NUMBER	TYPE	DESCRIPTION
13	0 0 0	Z	N/A
7 8 9	11	12	13–80

PERSONNEL INJURIES

	NUMBER	DESCRIPTION
14	0 0 0	N/A
7 8 9	11	12–80

~~OFFSITE~~ CONSEQUENCES Probable

15 None

LOSS OR DAMAGE TO FACILITY

	TYPE	DESCRIPTION
16	Z	N/A
7 8 9	10	10–80

PUBLICITY

17 None

ADDITIONAL FACTORS

18 None

19

NAME: T.J. Dente PHONE: (315) 343-2110

GPO 881-667

LICENSEE EVENT REPORT

CONTROL BLOCK: [ ] (1–6)

[PLEASE PRINT ALL REQUIRED INFORMATION]

	LICENSEE NAME	LICENSE NUMBER	LICENSE TYPE	EVENT TYPE
01	NYNMP1	— —	41111	01
(7–8)	(9–14)	(15–25)	(26–30)	(31–32)

	CATEGORY	REPORT TYPE	REPORT SOURCE	DOCKET NUMBER	EVENT DATE	REPORT DATE
01 CON'T	MI	L	L	050—0220	072575	080475
(7–8)	(57–58)	(59)	(60)	(61–68)	(69–74)	(75–80)

EVENT DESCRIPTION

02 Environmental Technical Specifications requires an Environmental Sample (Milk Sample)
03 be collected and analysed within 8 days of collection. Analysis was not completed
04 until 9 days following collection.
05
06 AOR 75-20

	SYSTEM CODE	CAUSE CODE	COMPONENT CODE	PRIME COMPONENT SUPPLIER	COMPONENT MANUFACTURER	VIOLATION
07	ZZ	d	ZZZZZZ	Z	Z999	N
(7–8)	(9–10)	(11)	(12–17)	(43)	(44–47)	(48)

CAUSE DESCRIPTION

08 The sample was sent to the lab via ground transportation. In the future, it will
09 be sent by air. Eberline Corporation contacted and told of speed requirements.
10

	FACILITY STATUS	% POWER	OTHER STATUS	METHOD OF DISCOVERY	DISCOVERY DESCRIPTION
11	E	080		a	Review by Supervisor
(7–8)	(9)	(10–12)	(13–44)	(45)	(46–80)

	FORM OF ACTIVITY RELEASED	CONTENT OF RELEASE	AMOUNT OF ACTIVITY	LOCATION OF RELEASE
12	Z	Z	N/A	
(7–8)	(9)	(10)	(11–44)	(45–80)

PERSONNEL EXPOSURES

	NUMBER	TYPE	DESCRIPTION
13	000	Z	N/A
(7–8)	(9–11)	(12)	(13–80)

PERSONNEL INJURIES

	NUMBER	DESCRIPTION
14	000	N/A
(7–8)	(9–11)	(12–80)

~~OFFSITE~~ CONSEQUENCES Probable

15 None

LOSS OR DAMAGE TO FACILITY

	TYPE	DESCRIPTION
16	Z	N/A
(7–8)	(9)	(10–80)

PUBLICITY

17 None

ADDITIONAL FACTORS

18 The results of the analysis indicated I-131 well below limits.

19

NAME: T.J. Dente PHONE: (315) 343-2110

NRC DISTRIBUTION FOR PART 50 DOCKET MATERIAL
(TEMPORARY FORM)

CONTROL NO: 8639

FILE: INCIDENT REPORT FILE

FROM:	DATE OF DOC	DATE REC'D	LTR	TWX	RPT	OTHER
Niagara Mohawk Power Corp Syracuse, N.Y. R.R. Schneider	8-4-75	8-14-75	XXX			

TO:	ORIG	CC	OTHER	
NRC	1 Signed			SENT AEC PDR XXX SENT LOCAL PDR XXX

CLASS	UNCLASS	PROP INFO	INPUT	NO CYS REC'D	DOCKET NO:
	XXX			1	50-220

DESCRIPTION:
letter Trans the following

PLANT NAME: Nine Mile Pt.#1

ENCLOSURES:
Abnormal Occurance#75-18 on 7-4-75, Concerning the failure component in the condender vent radiation monitor.....
A/O #75-19 on 7-22-75, Concering a surveillance test on Torus Vacum Relief to Atmosphere Switches was not completed, do to a change in testing requirements.....
A/O #75-20 on 7-25-75, Advising of Analysis that won't be completed until 9 days following milk sample.....

FOR ACTION/INFORMATION SAB 8-18-75

BUTLER (L) W/ Copies	SCHWENCER (L) W/ Copies	ZIEMANN (L) W/ Copies	REGAN (E) W/2 Copies
CLARK (L) W/ Copies	STOLZ (L) W/ Copies	DICKER (E) W/ Copies	LEAR (L) W/3 Copies
PARR (L) W/ Copies	VASSALLO (L) W/ Copies	KNIGHTON (E) W/ Copies	SPELS W/ Copies
KNIEL (L) W/ Copies	PURPLE (L) W/ Copies	YOUNGBLOOD (E) W/ Copies	

DO NOT REMOVE

ACKNOWLEDGED

INTERNAL DISTRIBUTION

REG FILE	TECH REVIEW	DENTON	LIC ASST	A/T IND
NRC PDR	SCHROEDER	** GRIMES	R. DIGGS (L)	BRAITMAN
OGC, ROOM P-506A	MACCARY	GAMMILL	H. GEARIN (L)	SALTZMAN
GOSSICK/STAFF	KNIGHT	KASTNER	E. GOULBOURNE (L)	MELTZ
CASE	PAWLICKI	BALLARD	P. KREUTZER (E)	
GIAMBUSSO	SHAO	SPANGLER	J. LEE (L)	PLANS
BOYD	** STELLO		M. RUSHBROOK (L)	MCDONALD
MOORE (L)	** HOUSTON	ENVIRO	S. REED (E)	CHAPMAN
DEYOUNG (L)	** NOVAK	MULLER	M. SERVICE (L)	DUBE (Ltr)
SKOVHOLT (L)	ROSS	DICKER	S. SHEPPARD (L)	E. COUPE
GOLLER (L) (Ltr)	IPPOLITO	KNIGHTON	M. SLATER (E)	PETERSON
P. COLLINS	TEDESCO	YOUNGBLOOD	H. SMITH (L)	HARTFIELD (2)
DENISE	J. COLLINS	REGAN	S. TEETS (L)	KLECKER
REG OPR	LAINAS	PROJECT LDR	G. WILLIAMS (E)	EISENHUT
FILE & REGION (2)	BENAROYA	BEVAN	V. WILSON (L)	WIGGINTON
MIPC/PE (3)	VOLLMER	HARLESS	R. INGRAM (L)	F. WILLIAMS
STEELE			M. DUNCAN (E)	HANAUER

EXTERNAL DISTRIBUTION

1 – LOCAL PDR Oswego, NY.
1 – TIC (ABERNATHY)
1 – NSIC (BUCHANAN)
1 – ASLBP
1 – Newton Anderson
5 – ACRS, SENT TO LIC ASST Ltr
** SEND ONLY TEN DAY REPORTS

(1)(2)(10) NATIONAL LABS ANL
1 – W. PENNINGTON, Rm E-201 GT
1 – CONSULTANTS
NEWMARK/BLUME/AGBABIAN

1 – PDR-SAN/LA/NY
1 – BROOKHAVEN NAT LAB
1 – G. ULRIKSON, ORNL
1 – AGMED (RUTH GUSSMAN) Rm B-127 GT
1 – J. D. RUNKLES, Rm E-201 GT

Regulatory File Cy.

NIAGARA MOHAWK POWER CORPORATION

NIAGARA MOHAWK

300 ERIE BOULEVARD, WEST
SYRACUSE, N. Y. 13202

DOCKETED USNRC SAB AUG 14 1975 Mail Section Docket Clerk

RECEIVED 8-14-75 U.S. NUCLEAR REGULATORY COMMISSION Mail Section

August 4, 1975

Mr. James P. O'Reilly
Directorate of Regulatory Operations
Region I
United States Nuclear Regulatory Commission
631 Park Avenue
King of Prussia, Pa. 19406

RE: Docket No. 50-220

Dear Mr. O'Reilly:

In accordance with Nine Mile Point Nuclear Station Unit #1 Technical Specification 6.9, we hereby submit Licensee Event Reports 75-18 thru 75-20 which document the Abnormal Occurrences for July 1975.

These reports conform to the requirements of Regulatory Guide 1.16, Revision 2 and were completed within the intent of the Licensee Event Report Instruction Booklet 00E-SS-001, dated October, 1974, revised December 24, 1974. Due to the minimal significance category of the reports, no supplemental report is included.

Very truly yours,

R.R. Schneider
Vice President
Electric Operations

TJD/mm

Enc. 3 copies

cc: K.R. Goller (30 copies)

dupe

8639

LICENSEE EVENT REPORT

CONTROL BLOCK: [ ] (1–6)

(PLEASE PRINT ALL REQUIRED INFORMATION)

	LICENSEE NAME	LICENSE NUMBER	LICENSE TYPE	EVENT TYPE
01	NYNMP1	— —	4 1 1 1 1	0 1
7 8	9–14	15–25	26–30	31 32

	CATEGORY	REPORT TYPE	REPORT SOURCE	DOCKET NUMBER	EVENT DATE	REPORT DATE
01 CON'T	M I	L	L	0 5 0 — 0 2 2 0	0 7 0 4 7 5	0 8 0 4 7 5
7 8	57 58	59	60	61–68	69–74	75–80

EVENT DESCRIPTION

02 During routine operations, the emergency condenser vent radiation monitor went
03 upscale isolating the system as designed. Investigation revealed no high radiation
04 zone and a failed component in the monitor.
05
06 AOR 75-18

	SYSTEM CODE	CAUSE CODE	COMPONENT CODE	PRIME COMPONENT SUPPLIER	COMPONENT MANUFACTURER	VIOLATION
07	S H	E	I N S T R U	N	G 0 8 0	N
7 8	9 10	11	12–17	43	44–47	48

CAUSE DESCRIPTION

08 Apparently the high temperature environment caused the failure of a component in
09 the monitor. The monitor was replaced. Redundant loop verified operational.
10

	FACILITY STATUS	% POWER	OTHER STATUS	METHOD OF DISCOVERY	DISCOVERY DESCRIPTION
11	E	0 8 0		a	
7 8	9	10–12	13–44	45	46–80

	FORM OF ACTIVITY RELEASED	CONTENT OF RELEASE	AMOUNT OF ACTIVITY	LOCATION OF RELEASE
12	Z	Z	N/A	
7 8	9	10	11–44	45–80

PERSONNEL EXPOSURES

	NUMBER	TYPE	DESCRIPTION
13	0 0 0	Z	N/A
7 8	9–11	12	13–80

PERSONNEL INJURIES

	NUMBER	DESCRIPTION
14	0 0 0	N/A
7 8	9–11	12–80

~~OFFSITE~~ CONSEQUENCES Probable

15 None

LOSS OR DAMAGE TO FACILITY

	TYPE	DESCRIPTION
16	Z	N/A
7 8	9	10–80

PUBLICITY

17 None

ADDITIONAL FACTORS

18 None

19

NAME: T.J. Dente PHONE: (315) 343-2110

GPO 881-667

LICENSEE EVENT REPORT

CONTROL BLOCK: [ ] (1–6)

[PLEASE PRINT ALL REQUIRED INFORMATION]

	LICENSEE NAME	LICENSE NUMBER	LICENSE TYPE	EVENT TYPE
01	NYNMP1	— —	4111	01
7–8	9–14	15–25	26–30	31–32

	CATEGORY	REPORT TYPE	REPORT SOURCE	DOCKET NUMBER	EVENT DATE	REPORT DATE
01 CON'T	MI	L	L	050—0220	072275	080475
7–8	57–58	59	60	61–68	69–74	75–80

EVENT DESCRIPTION

02 Due to a recent revision in the Technical Specifications, a change in testing re-
03 quirements went unnoted and a surveillance test on Torus Vacuum Relief to Atmosphere
04 Switches was not completed. The review of the specifications was in progress at
05 that time and since has been completed.
06 AOR 75-19

	SYSTEM CODE	CAUSE CODE	COMPONENT CODE	PRIME COMPONENT SUPPLIER	COMPONENT MANUFACTURER	VIOLATION
07	ZZ	d	ZZZZZZ	--	Z999	N
7–8	9–10	11	12–17	43	44–47	48

CAUSE DESCRIPTION

08 Upon review completion of the Technical Specifications, the requirement was noted.
09
10

	FACILITY STATUS	% POWER	OTHER STATUS	METHOD OF DISCOVERY	DISCOVERY DESCRIPTION
11	E	0.80		b	Review of revision to Tech. Spec.
7–8	9	10–12	13–44	45	46–80

	FORM OF ACTIVITY RELEASED	CONTENT OF RELEASE	AMOUNT OF ACTIVITY	LOCATION OF RELEASE
12	Z	Z	N/A	
7–8	9	10	11–44	45–80

PERSONNEL EXPOSURES

	NUMBER	TYPE	DESCRIPTION
13	000	Z	N/A
7–8	9–11	12	13–80

PERSONNEL INJURIES

	NUMBER	DESCRIPTION
14	000	N/A
7–8	9–11	12–80

~~POSSIBLE~~ CONSEQUENCES Probable

15 None

LOSS OR DAMAGE TO FACILITY

	TYPE	DESCRIPTION
16	Z	N/A
7–8	9	10–80

PUBLICITY

17 None

ADDITIONAL FACTORS

18 The test performed met all required limits for operation.
19

NAME: T.J. Dente PHONE: (315) 343-2110

LICENSEE EVENT REPORT

CONTROL BLOCK: [ ] (1–6)

(PLEASE PRINT ALL REQUIRED INFORMATION)

	LICENSEE NAME	LICENSE NUMBER	LICENSE TYPE	EVENT TYPE
01	NYNMP1	— —	4111 1	01
7 8	9–14	15–25	26–30	31 32

	CATEGORY	REPORT TYPE	REPORT SOURCE	DOCKET NUMBER	EVENT DATE	REPORT DATE
01 CON'T	MI	L	L	050—0220	072575	080475
7 8	57 58	59	60	61–68	69–74	75–80

EVENT DESCRIPTION

02 Environmental Technical Specifications requires an Environmental Sample (Milk Sample)
03 be collected and analysed within 8 days of collection. Analysis was not completed
04 until 9 days following collection.
05
06 AOR 75-20

	SYSTEM CODE	CAUSE CODE	COMPONENT CODE	PRIME COMPONENT SUPPLIER	COMPONENT MANUFACTURER	VIOLATION
07	ZZ	d	ZZZZZZ	Z	Z999	N
7 8	9 10	11	12–17	43	44–47	48

CAUSE DESCRIPTION

08 The sample was sent to the lab via ground transportation. In the future, it will
09 be sent by air. Eberline Corporation contacted and told of speed requirements.
10

	FACILITY STATUS	% POWER	OTHER STATUS	METHOD OF DISCOVERY	DISCOVERY DESCRIPTION
11	E	080		a	Review by Supervisor
7 8	9	10–12	13–44	45	46–80

	FORM OF ACTIVITY RELEASED	CONTENT OF RELEASE	AMOUNT OF ACTIVITY	LOCATION OF RELEASE
12	Z	Z	N/A	
7 8	9	10	11–44	45–80

PERSONNEL EXPOSURES

	NUMBER	TYPE	DESCRIPTION
13	000	Z	N/A
7 8	9–11	12	13–80

PERSONNEL INJURIES

	NUMBER	DESCRIPTION
14	000	N/A
7 8	9–11	12–80

~~OFFSITE~~ CONSEQUENCES Probable

15 None

LOSS OR DAMAGE TO FACILITY

	TYPE	DESCRIPTION
16	Z	N/A
7 8	9	10–80

PUBLICITY

17 None

ADDITIONAL FACTORS

18 The results of the analysis indicated I-131 well below limits.

19

NAME: T.J. Dente PHONE: (315) 343-2110

GPO 881-667

REPORT OF ABNORMAL OCCURRENCE AND/OR INCIDENT

NRC DISTRIBUTION FOR PART 50 DOCKET MATERIAL
(TEMPORARY FORM)

CONTROL NO: 7222

FILE: INCIDENT REPORT FILE

FROM:	DATE OF DOC	DATE REC'D	LTR	TWX	RPT	OTHER
Niagra Mohawk Power Corp Syracuse, N.Y. R R Schneider	7-2-75	7-7-75	XX			

TO:	ORIG	CC	OTHER	
Mr. James O'Reilly	none signed			SENT AEC PDR XXXX SENT LOCAL PDR XXXX

CLASS	UNCLASS	PROP INFO	INPUT	NO CYS REC'D	DOCKET NO:
	XXXX			40	50-220

DESCRIPTION: Ltr trans the following:

ACKNOWLEDGED

DO NOT REMOVE

PLANT NAME: Nine Mile Point

ENCLOSURES: Licensee Event Report no. AOR 75-14 on 6-18-75, during testing, #11 Standby Liquid Control pump would not start.... AOR 75-15 on 6-26-75, during inspection it was noted that 10 KW heater test on emergency ventilation system was not being performed per Tech Spec.....

see attached paper

FOR ACTION/INFORMATION wtm 7-8-75

BUTLER (L) W/ Copies	SCHWENCER (L) W/ Copies	ZIEMANN (L) W/ Copies	REGAN (E) W/ Copies
CLARK (L) W/ Copies	STOLZ (L) W/ Copies	DICKER (E) W/ Copies	LEAR (L) W/ 3 Copies
PARR (L) W/ Copies	VASSALLO (L) W/ Copies	KNIGHTON (E) W/ Copies	SPELS W/ Copies
KNIEL (L) W/ Copies	PURPLE (L) W/ Copies	YOUNGBLOOD (E) W/ Copies	W/ Copies

INTERNAL DISTRIBUTION

REG FILE	TECH REVIEW	DENTON	LIC ASST	A/T IND
NRC PDR	SCHROEDER	**GRIMES	R. DIGGS (L)	BRAITMAN
OGC, ROOM P-506A	MACCARY	GAMMILL	H. GEARIN (L)	SALTZMAN
GOSSICK/STAFF	KNIGHT	KASTNER	E. GOULBOURNE (L)	MELTZ
CASE	PAWLICKI	BALLARD	P. KREUTZER (E)	
GIAMBUSSO	SHAO	SPANGLER	J. LEE (L)	PLANS
BOYD	** STELLO		M. MAIGRET (L)	MCDONALD
MOORE (L)	** HOUSTON	ENVIRO	S. REED (E)	CHAPMAN
DEYOUNG (L)	** NOVAK	MULLER	M. SERVICE (L)	DUBE (Ltr)
SKOVHOLT (L)	ROSS	DICKER	S. SHEPPARD (L)	E. COUPE
GOLLER (L) (Ltr)	IPPOLITO	KNIGHTON	M. SLATER (E)	PETERSON
P. COLLINS	TEDESCO	YOUNGBLOOD	H. SMITH (L)	HARTFIELD (2)
DENISE	J. COLLINS	REGAN	S. TEETS (L)	KLECKER
REG OPR	LAINAS	PROJECT LDR	G. WILLIAMS (E)	EISENHUT
FILE & REGION (2)	BENAROYA		V. WILSON (L)	WIGGINTON
MIPC/PE (3)	VOLLMER	HARLESS	R. INGRAM (L)	F. WILLIAMS
STEELE				HANAUER

EXTERNAL DISTRIBUTION

AO (4)

1 – LOCAL PDR OSWEGO, N.Y.		1 – PDR-SAN/LA/NY
1 – TIC (ABERNATHY)	(1)(2)(10) – NATIONAL LABS	1 – BROOKHAVEN NAT LAB
1 – NSIC (BUCHANAN)	1 – W. PENNINGTON, Rm E-201 GT	1 – G. ULRIKSON, ORNL
1 – ASLB	1 – CONSULTANTS	1 – AGMED (RUTH GUSSMAN) Rm B-127 GT
1 – Newton Anderson	NEWMARK/BLUME/AGBABIAN	1 – J. D. RUNKLES, Rm E-201 GT
1 – ACRS SENT TO LIC ASST		

** SEND ONLY TEN DAY REPORTS

NIAGARA MOHAWK POWER CORPORATION

NIAGARA · MOHAWK

300 ERIE BOULEVARD, WEST
SYRACUSE, N. Y. 13202

Regulatory Docket File

July 2, 1975

RECEIVED JUL 8 1975 U.S. NUCLEAR REGULATORY COMMISSION Mail Section

Mr. James P. O'Reilly
Directorate of Regulatory Operations
Region 1
United States Nuclear Regulatory Commission
631 Park Avenue
King of Prussia, Pa. 19406

RE: Docket No. 50-220

Dear Mr. O'Reilly:

In accordance with Nine Mile Point Nuclear Station Unit #1 Technical Specification 6.9, we hereby submit Licensee Event Reports 75-14 thru 75-17 which document the Abnormal Occurrences for June 1975.

These reports conform to the requirements of Regulatory Guide 1.16, Revision 2 and were completed within the intent of the Licensee Event Report Instruction Booklet 00E-SS-001, dated October 1974, revised December 24, 1974. Due to the minimal significance category of the reports, no supplemental report is included.

Very truly yours,

Original signed by R.R. Schneider

R.R. Schneider
Vice President
Electric Operations

TJD/mm

Enc. 3 copies

cc: Mr. K.R. Goller (30 copies)

7-7
WS

1222

LICENSEE EVENT REPORT

CONTROL BLOCK: [ ] (1–6) [PLEASE PRINT ALL REQUIRED INFORMATION]

LICENSEE NAME	LICENSE NUMBER	LICENSE TYPE	EVENT TYPE
01 NYNMP1 (7–8, 9–14)	— — (15–25)	4111 1 (26–30)	01 (31–32)

CONT	CATEGORY	REPORT TYPE	REPORT SOURCE	DOCKET NUMBER	EVENT DATE	REPORT DATE
01 (7–8)	MI (57–58)	L (59)	L (60)	050-0220 (61–68)	062875 (69–74)	070175 (75–80)

EVENT DESCRIPTION

01 During routine surveillance testing RE-04c, high drywell pressure tripped at
02 3.7 psig and RE-04d tripped at 3.75 psig. Required trip is 3.5 ± .053 psig.
03 Intermediate break (LOCA) analysis (FSAR) indicates that the drift would not have
04 affected the design transient due to the rapid pressure build-up. The small break
05 uses low water level as primary scram and high drywell as back-up. AOR 75-17

SYSTEM CODE	CAUSE CODE	COMPONENT CODE	PRIME COMPONENT SUPPLIER	COMPONENT MANUFACTURER	VIOLATION
07 IA (10)	E (11)	INSTRU (12–17)	N (43)	B080 (44–47)	N (48)

CAUSE DESCRIPTION

08 Minor set point drift. The instruments were recalibrated to required trip point.
09
10

FACILITY STATUS	% POWER	OTHER STATUS	METHOD OF DISCOVERY	DISCOVERY DESCRIPTION
11 E (9)	092 (10–12)	(13–44)	b (45)	Surveillance Testing (46–80)

FORM OF ACTIVITY RELEASED	CONTENT OF RELEASE	AMOUNT OF ACTIVITY	LOCATION OF RELEASE
12 Z (9)	Z (10)	N/A (11–44)	(45–80)

PERSONNEL EXPOSURES

NUMBER	TYPE	DESCRIPTION
13 000 (9–11)	Z (12)	N/A (13–80)

PERSONNEL INJURIES

NUMBER	DESCRIPTION
14 000 (9–11)	N/A (12–80)

~~OFFSITE~~ CONSEQUENCES Probable

15 The health and safety of the public was not jeopardized

LOSS OR DAMAGE TO FACILITY

TYPE	DESCRIPTION
16 Z (9)	0 (10–80)

PUBLICITY

17 None

ADDITIONAL FACTORS

18 An investigation into 1) replacement of the sensors or 2) relaxation of the
19 ± .053 psi allowable range in the Technical Specifications

NAME: T.J. Dente PHONE: (315) 343-2110

GPO 881-667

LICENSEE EVENT REPORT

CONTROL BLOCK: [ ] (1–6) [PLEASE PRINT ALL REQUIRED INFORMATION]

	LICENSEE NAME	LICENSE NUMBER	LICENSE TYPE	EVENT TYPE
01	NYNMP1	– –	41111	01
7–8	9–14	15–25	26–30	31–32

	CATEGORY	REPORT TYPE	REPORT SOURCE	DOCKET NUMBER	EVENT DATE	REPORT DATE
01 CON'T	MI	L	L	050–0220	062875	070175
7–8	57–58	59	60	61–68	69–74	75–80

EVENT DESCRIPTION

02 During routine surveillance testing of 3 of 4 reactor water Lo-Lo-Lo Level sensors
03 were found out of calibration, RE-18A ~8'2", RE-18B ~ 8'3.5", RE-18C ~7'7".
04 Required trip at 7'11" below min. normal. In the event ADS was required, the
05 trip would have occurred as intended due to the conservative drift of RE-18C.
06 AOR 75-16

	SYSTEM CODE	CAUSE CODE	COMPONENT CODE	PRME COMPONENT SUPPLIER	COMPONENT MANUFACTURER	VIOLATION
07	IB	E	INSTRU	N	B080	N
7–8	9–10	11	12–17	43	44–47	48

CAUSE DESCRIPTION

08 Minor set point drift. The instruments were recalibrated to required set points.
09
10

	FACILITY STATUS	% POWER	OTHER STATUS	METHOD OF DISCOVERY	DISCOVERY DESCRIPTION
11	E	092		b	Surveillance testing
7–8	9	10–12	13–44	45	46–80

	FORM OF ACTIVITY RELEASED	CONTENT OF RELEASE	AMOUNT OF ACTIVITY	LOCATION OF RELEASE
12	Z	Z	N/A	
7–8	9	10	11–44	45–80

PERSONNEL EXPOSURES

	NUMBER	TYPE	DESCRIPTION
13	000	Z	N/A
7–8	9–11	12	13–80

PERSONNEL INJURIES

	NUMBER	DESCRIPTION
14	000	N/A
7–8	9–11	12–80

~~XXXXXX~~ CONSEQUENCES Probable

15 The health and safety of the public was not jeopardized

LOSS OR DAMAGE TO FACILITY

	TYPE	DESCRIPTION
16	Z	0
7–8	9	10–80

PUBLICITY

17 None

ADDITIONAL FACTORS

18

19

NAME: T.J. Dente PHONE: (315) 343-2110

GPO 881-667

LICENSEE EVENT REPORT

CONTROL BLOCK: [ ] (1–6)

(PLEASE PRINT ALL REQUIRED INFORMATION)

	LICENSEE NAME	LICENSE NUMBER	LICENSE TYPE	EVENT TYPE
01	NYNMP1	— —	41111	01
7–8	9–14	15–25	26–30	31–32

	CATEGORY	REPORT TYPE	REPORT SOURCE	DOCKET NUMBER	EVENT DATE	REPORT DATE
01 CON'T	MI	L	L	050—0220	061875	070175
7–8	57–58	59	60	61–68	69–74	75–80

EVENT DESCRIPTION

02 During monthly testing, #11 Standby Liquid Control System pump would not start.

03 Investigation revealed that the power breaker trigger was not latched. Redundant

04 pump started to demonstrate SBLCS availability. #11 SBLCS also retested successfully

05 following reset.

06 AOR 75-14

	SYSTEM CODE	CAUSE CODE	COMPONENT CODE	PRIME COMPONENT SUPPLIER	COMPONENT MANUFACTURER	VIOLATION
07	SH	F	CKTBRK	N	G080	N
7–8	9–10	11	12–17	43	44–47	48

CAUSE DESCRIPTION

08 Reset breaker and successfully completed test. Redudant Standby Liquid Control

09 System fully operable.

10

	FACILITY STATUS	% POWER	OTHER STATUS	METHOD OF DISCOVERY	DISCOVERY DESCRIPTION
11	E	095		b	Surveillance Testing
7–8	9	10–12	13–44	45	46–80

	FORM OF ACTIVITY RELEASED	CONTENT OF RELEASE	AMOUNT OF ACTIVITY	LOCATION OF RELEASE
12	Z	0	N/A	
7–8	9	10	11–44	45–80

PERSONNEL EXPOSURES

	NUMBER	TYPE	DESCRIPTION
13	000	Z	N/A
7–8	9–11	12	13–80

PERSONNEL INJURIES

	NUMBER	DESCRIPTION
14	000	N/A
7–8	9–11	12–80

~~XXXXXX~~ OR SITE CONSEQUENCES Probable

15 None

LOSS OR DAMAGE TO FACILITY

	TYPE	DESCRIPTION
16	Z	0
7–8	9	10–80

PUBLICITY

17 None

ADDITIONAL FACTORS

18

19

NAME: T.J. Dente PHONE: (315) 343-2110

GPO 881-667

LICENSEE EVENT REPORT

CONTROL BLOCK: [ ] (1–6) [PLEASE PRINT ALL REQUIRED INFORMATION]

	LICENSEE NAME	LICENSE NUMBER	LICENSE TYPE	EVENT TYPE
01	NYNMP1	– –	4111	01
7–8	9–14	15–25	26–30	31–32

	CATEGORY	REPORT TYPE	REPORT SOURCE	DOCKET NUMBER	EVENT DATE	REPORT DATE
01 CON'T	MI	L	I	050–022 0	062675	070175
7–8	57–58	59	60	61–68	69–74	75–80

EVENT DESCRIPTION

02 During NRC inspection, inspector noted that 10 KW heater test on Emergency
03 Ventilation System was not being performed per Technical Specification 4.4.4a.2.
04 Test on 6/27 indicated 10.18 KW (acceptable). This is an annual test. Based
05 upon test results, no hazard was presented to the general public.
06 AOR 75-15

	SYSTEM CODE	CAUSE CODE	COMPONENT CODE	PRIME COMPONENT SUPPLIER	COMPONENT MANUFACTURER	VIOLATION
07	MB	D	ZZZZZZ	L	Z999	N
7–8	9–10	11	12–17	43	44–47	48

CAUSE DESCRIPTION

08 Due to an oversight, the test had not been performed. A review of all surveillance
09 requirements is underway to assure compliance with Technical Specifications.
10

	FACILITY STATUS	% POWER	OTHER STATUS	METHOD OF DISCOVERY	DISCOVERY DESCRIPTION
11	E	090		d	NRC Inspector
7–8	9	10–12	13–44	45	46–80

	FORM OF ACTIVITY RELEASED	CONTENT OF RELEASE	AMOUNT OF ACTIVITY	LOCATION OF RELEASE
12	Z	Z	N/A	
7–8	9	10	11–44	45–80

PERSONNEL EXPOSURES

	NUMBER	TYPE	DESCRIPTION
13	000	Z	N/A
7–8	9–11	12	13–80

PERSONNEL INJURIES

	NUMBER	DESCRIPTION
14	000	N/A
7–8	9–11	12–80

~~OFFSITE~~ CONSEQUENCES Probable

15 No hazard was presented to the general public.

LOSS OR DAMAGE TO FACILITY

	TYPE	DESCRIPTION
16	Z	0
7–8	9	10–80

PUBLICITY

17 None

ADDITIONAL FACTORS

18

19

NAME: T.J. Dente PHONE: (315) 343-2710

GPO 881-667

AOR 75-16 on 6-28-75, 3 of 4 reactor water LO-LO-LO Level sensors were found out of calibration....

AOR 75-17 on 6-28-75, high drywell pressure tripped at 3.7 psiq and RE-o4d tripped at 3.75 psiq....

40 copies encl rec'd

NRC DISTRIBUTION FOR PART 50 DOCKET MATERIAL
(TEMPORARY FORM)

CONTROL NO: 6190
FILE: INCIDENT REPORT FILE

FROM:	DATE OF DOC	DATE REC'D	LTR	TWX	RPT	OTHER
Niagra Mohawk Power Corp. Syracuse, N Y 13202 R R Schneider	6-3-75	6-6-75	XX			

TO:	ORIG	CC	OTHER	
Mr. James O'Reilly	no original			SENT AEC PDR XXX SENT LOCAL PDR XXX

CLASS	UNCLASS	PROP INFO	INPUT	NO CYS REC'D	DOCKET NO:
	XXXXXX			40	50-220

DESCRIPTION: Ltr trans the following:

ACKNOWLEDGED

DO NOT REMOVE

PLANT NAME: Nine Mile Point # 1

ENCLOSURES: Abnormal Occurrence Report 75-10, on 5-20-75,18 APRM failed to provide a trip during flow bias trip weekly functional testing at the 20% flow test
Abnormal Occurrence Report 75-11 on 5-22-75, Minor set point drift on 1B-05C Emergency Condenser High Flow...

FOR ACTION/INFORMATION wtm 6-6-75

BUTLER (L) W/ Copies	SCHWENCER (L) W/ Copies	ZIEMANN (L) W/ Copies	REGAN (E) W/ Copies
CLARK (L) W/ Copies	STOLZ (L) W/ Copies	DICKER (E) W/ Copies	LEAR (L) W/3 Copies
PARR (L) W/ Copies	VASSALLO (L) W/ Copies	KNIGHTON (E) W/ Copies	SPELS W/ Copies
KNIEL (L) W/ Copies	PURPLE (L) W/ Copies	YOUNGBLOOD (E) W/ Copies	W/ Copies

INTERNAL DISTRIBUTION

REG FILE	TECH REVIEW	DENTON	LIC ASST	A/T IND
NRC PDR	SCHROEDER	**GRIMES	R. DIGGS (L)	BRAITMAN
OGC, ROOM P-506A	MACCARY	GAMMILL	H. GEARIN (L)	SALTZMAN
GOSSICK/STAFF	KNIGHT	KASTNER	E. GOULBOURNE (L)	MELTZ
CASE	PAWLICKI	BALLARD	P. KREUTZER (E)	
GIAMBUSSO	SHAO	SPANGLER	J. LEE (L)	PLANS
BOYD	** STELLO		M. MAIGRET (L)	MCDONALD
MOORE (L)	** HOUSTON	ENVIRO	S. REED (E)	CHAPMAN
DEYOUNG (L)	** NOVAK	MULLER	M. SERVICE (L)	DUBE (Ltr)
SKOVHOLT (L)	ROSS	DICKER	S. SHEPPARD (L)	E. COUPE
GOLLER (L) (Ltr)	IPPOLITO	KNIGHTON	M. SLATER (E)	PETERSON
P. COLLINS	TEDESCO	YOUNGBLOOD	H. SMITH (L)	HARTFIELD (2)
DENISE	LONG	REGAN	S. TEETS (L)	KLECKER
REG OPR	LAINAS	PROJECT LDR	G. WILLIAMS (E)	EISENHUT
FILE & REGION (2)	BENAROYA		V. WILSON (L)	WIGGINTON
MIPC/PE (3)	VOLLMER	HARLESS	R. INGRAM (L)	F. WILLIAMS
STEELE				HANAUER

EXTERNAL DISTRIBUTION

1 – LOCAL PDR Oswego, N Y		1 – PDR-SAN/LA/NY
1 – TIC (ABERNATHY)	(1)(2)(10) – NATIONAL LABS	1 – BROOKHAVEN NAT LAB
1 – NSIC (BUCHANAN)	1 – W. PENNINGTON, Rm E-201 GT	1 – G. ULRIKSON, ORNL
1 – ASLB	1 – CONSULTANTS NEWMARK/BLUME/AGBABIAN	1 – AGMED (RUTH GUSSMAN) Rm B-127 GT
1 – Newton Anderson		1 – J. D. RUNKLES, Rm E-201 GT
5 – ACRS SENT TO LIC ASST		

** SEND ONLY TEN DAY REPORTS

Ao (4)

Abnormal Occurrence Report 75-12 on 5-29-75 Minor set point drift on RE-04A, B, & d Hi Drywell Pressure Sensors...

Abnormal Occurrence Report No. 75-13 on 5-29-75, During routine surveillance testing, minor set point drift was detected on RE-18D, A & C (lo-lo-lo- water level) 124.5," 132" , 124" respectively...

NIAGARA MOHAWK POWER CORPORATION

NIAGARA MOHAWK

300 ERIE BOULEVARD, WEST
SYRACUSE, N.Y. 13202

June 3, 1975

Mr. James P. O'Reilly
Directorate of Regulatory Operations
Region 1
United States Nuclear Regulatory Commission
631 Park Avenue
King of Prussia, Pa. 19406

RE: Docket No. 50-220

Dear Mr. O'Reilly:

In accordance with Nine Mile Point Nuclear Station Unit #1 Technical Specification 6.9, we hereby submit Licensee Event Reports 75-10, 75-11, 75-12 and 75-13 which document the Abnormal Occurrences for May 1975.

These reports conform to the requirements of Regulatory Guide 1.16, Revision 2 and were completed within the intent of the Licensee Event Report Instruction Booklet 00E-SS-001, dated October 1974, revised December 24, 1974. Due to the minimal significance category of the reports, no supplemental report is included.

Very truly yours,

Original signed by R.R. Schneider

R.R. Schneider
Vice President - Electric Operations

TJD/mm

Enc. 3 copies

cc: 30 copies to K.R. Goller

6190

LICENSEE EVENT REPORT

CONTROL BLOCK: [ ] (1–6) [PLEASE PRINT ALL REQUIRED INFORMATION]

	LICENSEE NAME	LICENSE NUMBER	LICENSE TYPE	EVENT TYPE
01	NYNMP1	00-00000-00	41111	01

	CATEGORY	REPORT TYPE	REPORT SOURCE	DOCKET NUMBER	EVENT DATE	REPORT DATE
01 CON'T	MI	L	L	050-0220	052075	060375

EVENT DESCRIPTION

02 18 APRM failed to provide a trip during flow bias trip weekly functional testing at
03 the 20% flow test. Redundant systems available and fully operable, therefore, no
04 hazard presented to the general public.
05
06 AOR 75-10

	SYSTEM CODE	CAUSE CODE	COMPONENT CODE	PRIME COMPONENT SUPPLIER	COMPONENT MANUFACTURER	VIOLATION
07	1A	E	Instru	N	G080	N

CAUSE DESCRIPTION

08 Set point drift which was corrected with a recalibration of the instrument.
09
10

	FACILITY STATUS	% POWER	OTHER STATUS	METHOD OF DISCOVERY	DISCOVERY DESCRIPTION
11	E	094		B	Weekly Functional Testing

	FORM OF ACTIVITY RELEASED	CONTENT OF RELEASE	AMOUNT OF ACTIVITY	LOCATION OF RELEASE
12	Z	Z	N/A	N/A

PERSONNEL EXPOSURES

	NUMBER	TYPE	DESCRIPTION
13	000	Z	N/A

PERSONNEL INJURIES

	NUMBER	DESCRIPTION
14	000	N/A

~~OFFSITE~~ CONSEQUENCES Probable

15 None

LOSS OR DAMAGE TO FACILITY

	TYPE	DESCRIPTION
16	Z	N/A

PUBLICITY

17 None

ADDITIONAL FACTORS

18 None

19

NAME: T.J. Dente PHONE: (315) 343-2110

GPO 881-667

LICENSEE EVENT REPORT

CONTROL BLOCK: [illegible] (PLEASE PRINT ALL REQUIRED INFORMATION)

	LICENSEE NAME	LICENSE NUMBER	LICENSE TYPE	EVENT TYPE
01	NYNMP1	00-00000-00	41111	01

	CATEGORY	REPORT TYPE	REPORT SOURCE	DOCKET NUMBER	EVENT DATE	REPORT DATE
01 CONT	MI	L	L	050-0220	052275	060375

EVENT DESCRIPTION

02 Minor set point drift on 1B-05C Emergency Condenser High Flow. Required set point
03 19 ± 1 psid - tripped at 17.5 psid. Redundant sensor was operable.
04
05
06 AOR 75-11

	SYSTEM CODE	CAUSE CODE	COMPONENT CODE	PRIME COMPONENT SUPPLIER	COMPONENT MANUFACTURER	VIOLATION
07	1B	E	Instru	A	B080	N

CAUSE DESCRIPTION

08 Instrument recalibrated to provide required trip within Technical Specification
09 limits. No hazard was presented to the general public.
10

	FACILITY STATUS	% POWER	OTHER STATUS	METHOD OF DISCOVERY	DISCOVERY DESCRIPTION
11	E	094		B	Routine Surveillance Testing

	FORM OF ACTIVITY RELEASED	CONTENT OF RELEASE	AMOUNT OF ACTIVITY	LOCATION OF RELEASE
12	Z	Z	N/A	N/A

PERSONNEL EXPOSURES

	NUMBER	TYPE	DESCRIPTION
13	000	Z	N/A

PERSONNEL INJURIES

	NUMBER	DESCRIPTION
14	000	N/A

~~OFFSITE~~ CONSEQUENCES Probable

15 None

LOSS OR DAMAGE TO FACILITY

	TYPE	DESCRIPTION
16	Z	N/A

PUBLICITY

17 None

ADDITIONAL FACTORS

18 None

19

NAME: T.J. Dente PHONE: (315) 343-2110

GPO 881-667

LICENSEE EVENT REPORT

CONTROL BLOCK: [ ] (PLEASE PRINT ALL REQUIRED INFORMATION)

	LICENSEE NAME	LICENSE NUMBER	LICENSE TYPE	EVENT TYPE
01	NYNMP1	00-00000-00	4111	03

	CATEGORY	REPORT TYPE	REPORT SOURCE	DOCKET NUMBER	EVENT DATE	REPORT DATE
01 CON'T	MI	L	L	050-0220	052975	060375

EVENT DESCRIPTION

02 During routine surveillance testing, minor set point drift was detected on
03 RE-18D, A & C (Lo-Lo-Lo Water Level) 124.5", 132", and 124" respectively. Should
04 be 128" water column. Instruments were recalibrated to required set point.
05 Three of the four instruments would actuate sooner than required, thus providing
06 the required function. AOR 75-13

	SYSTEM CODE	CAUSE CODE	COMPONENT CODE	PRIME COMPONENT SUPPLIER	COMPONENT MANUFACTURER	VIOLATION
07	IA	B	Instru	N	B080	N

CAUSE DESCRIPTION

08 Minor set point drift which would cause the desired action within the established
09 time frame for analyzed sequence operation of ADS. Therefore, no hazard was
10 presented to the general public.

	FACILITY STATUS	% POWER	OTHER STATUS	METHOD OF DISCOVERY	DISCOVERY DESCRIPTION
11	E	092		B	Routine Testing

	FORM OF ACTIVITY RELEASED	CONTENT OF RELEASE	AMOUNT OF ACTIVITY	LOCATION OF RELEASE
12	Z	Z	N/A	N/A

PERSONNEL EXPOSURES

	NUMBER	TYPE	DESCRIPTION
13	000	Z	N/A

PERSONNEL INJURIES

	NUMBER	DESCRIPTION
14	000	N/A

~~XXXXXX~~ CONSEQUENCES Probable

15 None

LOSS OR DAMAGE TO FACILITY

	TYPE	DESCRIPTION
16	Z	N/A

PUBLICITY

17 None

ADDITIONAL FACTORS

18 The existing surveillance testing and procedures are adequate to detect the
set point drift and therefore, no changes on frequency or method are contemplated.
19

NAME: T.J. Dente PHONE: (315) 343-2110

LICENSEE EVENT REPORT

CONTROL BLOCK: [ ] (PLEASE PRINT ALL REQUIRED INFORMATION)

	LICENSEE NAME	LICENSE NUMBER	LICENSE TYPE	EVENT TYPE
01	NYNMP1	00-00000-00	4111	03

	CATEGORY	REPORT TYPE	REPORT SOURCE	DOCKET NUMBER	EVENT DATE	REPORT DATE
01 CONT	MI	L	L	050-0220	052975	060275

EVENT DESCRIPTION

02 Minor set point drift on RE-04A, B, & D Hi Drywell Pressure Sensors. Technical
03 Specifications require a trip at 3.5 psig and the sensor provided a trip at 3.7 psig,
04 which would have been sufficient to cause the required action within the time frame
05 reference as established in the FSAR.
06 AOR 75-12

	SYSTEM CODE	CAUSE CODE	COMPONENT CODE	PRIME COMPONENT SUPPLIER	COMPONENT MANUFACTURER	VIOLATION
07	TA	E	INSTRU	N	B080	N

CAUSE DESCRIPTION

08 Minor set point drift which was immeidately corrected to Technical Specification
09 limits. The event occurried during routine surveillance testing. The allowable
10 limits for drift on these instrument is ± .053 psi which is quite restrictive.

	FACILITY STATUS	% POWER	OTHER STATUS	METHOD OF DISCOVERY	DISCOVERY DESCRIPTION
11	E	093		B	Routine Surveillance Testing

	FORM OF ACTIVITY RELEASED	CONTENT OF RELEASE	AMOUNT OF ACTIVITY	LOCATION OF RELEASE
12	Z	Z	N/A	N/A

PERSONNEL EXPOSURES

	NUMBER	TYPE	DESCRIPTION
13	000	Z	N/A

PERSONNEL INJURIES

	NUMBER	DESCRIPTION
14	000	N/A

~~OFFSITE CONSEQUENCES~~ Probable Consequences

15 None

LOSS OR DAMAGE TO FACILITY

	TYPE	DESCRIPTION
16	Z	N/A

PUBLICITY

17 None

ADDITIONAL FACTORS

18 None

19

NAME: T.J. Dente PHONE: (315) 343-2110

GPO 881-667

REPORT OF ABNORMAL OCCURRENCE AND/OR INCIDENT

NRC DISTRIBUTION FOR PART 50 DOCKET MATERIAL
(TEMPORARY FORM)

CONTROL NO: 5522

FILE: INCIDENT REPORT FILE

FROM:	DATE OF DOC	DATE REC'D	LTR	TWX	RPT	OTHER
Niagara Mohawk Pwr. Co. Syracuse, N.Y. R.R. Schneider	5-6-75	5-20-75	XXX			

TO:	ORIG	CC	OTHER	
James P. O'Reilly	1 Signed			SENT AEC PDR xxxx SENT LOCAL PDR xxxx

CLASS	UNCLASS	PROP INFO	INPUT	NO CYS REC'D	DOCKET NO:
	xxxx			1	50-220

DESCRIPTION:
Ltr. trans the following....

ENCLOSURES:
Reporting 4 Abnormn. Occurrs. as follows :
75-6-on 4-5-75-concern. Instrument appears to have drifted.....
75-7-on 4-12-75,concern.E.C.IV#11(AC)failed open to
75-8-on 4-14-75-concern.Relay coil in RPS relay 12K30 shorted.....
75-9-on 4-14-75-concern.APRM #11 failed to provide high alarm .....

PLANT NAME: Nine Mile Pt. # 1

FOR ACTION/INFORMATION — VCR 5-20-75

ACKNOWLEDGED — DO NOT REMOVE

BUTLER (L) W/ Copies	SCHWENCER (L) W/ Copies	ZIEMANN (L) W/ Copies	REGAN (E) W/ Copies
CLARK (L) W/ Copies	STOLZ (L) W/ Copies	DICKER (E) W/ Copies	LEAR (L) W/3 Copies
PARR (L) W/ Copies	VASSALLO (L) W/ Copies	KNIGHTON (E) W/ Copies	SPELS W/ Copies
KNIEL (L) W/ Copies	PURPLE (L) W/ Copies	YOUNGBLOOD (E) W/ Copies	W/ Copies

INTERNAL DISTRIBUTION

REG FILE	TECH REVIEW	DENTON	LIC ASST	A/T IND
NRC PDR	SCHROEDER	**GRIMES	R. DIGGS (L)	BRAITMAN
OGC, ROOM P-506A	MACCARY	GAMMILL	H. GEARIN (L)	SALTZMAN
GOSSICK/STAFF	KNIGHT	KASTNER	E. GOULBOURNE (L)	MELTZ
CASE	PAWLICKI	BALLARD	P. KREUTZER (E)	
GIAMBUSSO	SHAO	SPANGLER	J. LEE (L)	PLANS
BOYD	**STELLO		M. MAIGRET (L)	MCDONALD
MOORE (L)	**HOUSTON	ENVIRO	S. REED (E)	CHAPMAN
DEYOUNG (L)	**NOVAK	MULLER	M. SERVICE (L)	DUBE (Ltr)
SKOVHOLT (L)	ROSS	DICKER	S. SHEPPARD (L)	E. COUPE
GOLLER (L) (Ltr)	IPPOLITO	KNIGHTON	M. SLATER (E)	PETERSON
P. COLLINS	TEDESCO	YOUNGBLOOD	H. SMITH (L)	HARTFIELD (2)
DENISE	LONG	REGAN	S. TEETS (L)	KLECKER
REG OPR	LAINAS	PROJECT LDR	G. WILLIAMS (E)	EISENHUT
FILE & REGION (2)	BENAROYA		V. WILSON (L)	WIGGINTON
MIPC/PE (3)	VOLLMER	HARLESS	R. INGRAM (L)	F. WILLIAMS
STEELE				HANAUER

EXTERNAL DISTRIBUTION

1 – LOCAL PDR Oswego N.Y.
1 – TIC (ABERNATHY)
1 – NSIC (BUCHANAN)
1 – ASLB
1 – Newton Anderson
5 – ACRS SENT TO LIC ASST
** SEND ONLY TEN DAY REPORTS

(1)(2)(10) – NATIONAL LABS
1 – W. PENNINGTON, Rm E-201 GT
1 – CONSULTANTS
NEWMARK/BLUME/AGBABIAN

Teets

Ao (4)

1 – PDR-SAN/LA/NY
1 – BROOKHAVEN NAT LAB
1 – G. ULRIKSON, ORNL
1 – AGMED (RUTH GUSSMAN) Rm B-127 GT
1 – J. D. RUNKLES, Rm E-201 GT

Regulatory

File Cy

NIAGARA MOHAWK POWER CORPORATION

NIAGARA MOHAWK

300 ERIE BOULEVARD, WEST
SYRACUSE, N. Y. 13202

May 6, 1975

RECEIVED
MAY 20 1975
U.S. Atomic Energy Commission
Regulatory
Unit Stocks

Mr. James P. O'Reilly
Directorate of Regulatory Operations
Region I
United States Nuclear Regulatory Commission
631 Park Avenue
King of Prussia. 19406

RE: Docket No. 50-220

Dear Mr. O'Reilly:

In accordance with Nine Mile Point Nuclear Station Unit #1 Technical Specification 6.9, we hereby submit Licensee Event Report 75-6, 75-7, 75-8, and 75-9 which document the Abnormal Occurrences for April 1975.

These reports conform to the requirements of Regulatory Guide 1.16, Revision 2 and were completed within the intent of the Licensee Event Report instruction booklet 00E-SS-001., dated October, 1974, revised December 24, 1974. Due to the Minimal significance category of the reports, no supplemental report is included.

Very truly yours,

R.R. Schneider
Vice President
Electric Operations

TJD/mm

Enc. 3 copies

cc: 30 copies to K.R. Goller

5552

LICENSEE EVENT REPORT

CONTROL BLOCK: [ ] (1–6)

(PLEASE PRINT ALL REQUIRED INFORMATION)

	LICENSEE NAME	LICENSE NUMBER	LICENSE TYPE	EVENT TYPE
01	NYNMP1	— —	4111	01
7–8	9–14	15–25	26–30	31–32

	CATEGORY	REPORT TYPE	REPORT SOURCE	DOCKET NUMBER	EVENT DATE	REPORT DATE
01 CON'T	MI	L	L	050—0220	040575	050375
7–8	57–58	59	60	61–68	69–74	75–80

EVENT DESCRIPTION

02 During surveillance testing, RE-18A Rx Level Lo-Lo-Lo was found to actuate at 131 inches
03 of H_2O rather than 128.5 inches of water. Redundant sensors available and operable.
04 Instrument appears to have drifted - Instrument recalibrated to 128.5" of water and
05 tested.
06 AOR 75-06

	SYSTEM CODE	CAUSE CODE	COMPONENT CODE	PRIME COMPONENT SUPPLIER	COMPONENT MANUFACTURER	VIOLATION
07	IB	E	INSTRU	A	B080	N
7–8	9–10	11	12–17	43	44–47	48

CAUSE DESCRIPTION

08 Set Point Drift
09
10

	FACILITY STATUS	% POWER	OTHER STATUS	METHOD OF DISCOVERY	DISCOVERY DESCRIPTION
11	E	094		b	
7–8	9	10–12	13–44	45	46–80

	FORM OF ACTIVITY RELEASED	CONTENT OF RELEASE	AMOUNT OF ACTIVITY	LOCATION OF RELEASE
12	Z	Z	Z	Z
7–8	9	10	11–44	45–80

PERSONNEL EXPOSURES

	NUMBER	TYPE	DESCRIPTION
13	000	Z	Z
7–8	9–11	12	13–80

PERSONNEL INJURIES

	NUMBER	DESCRIPTION
14	000	Z
7–8	9–11	12–80

~~XXXXXXX~~ CONSEQUENCES Probable

15 None as redundant component available and operable.

LOSS OR DAMAGE TO FACILITY

	TYPE	DESCRIPTION
16	Z	None
7–8	9	10–80

PUBLICITY

17 None

ADDITIONAL FACTORS

18 None

19

NAME: T.J. Dente PHONE: (315) 343-2110

GPO 881-667

LICENSEE EVENT REPORT

CONTROL BLOCK: [ ] (1–6)

(PLEASE PRINT ALL REQUIRED INFORMATION)

	LICENSEE NAME	LICENSE NUMBER	LICENSE TYPE	EVENT TYPE
01	NYNMP1	— —	41111	01
7 8	9–14	15–25	26–30	31 32

	CATEGORY	REPORT TYPE	REPORT SOURCE	DOCKET NUMBER	EVENT DATE	REPORT DATE
01 CON'T	MI	L	L	050—0220	041275	050375
7 8	57 58	59	60	61–68	69–74	75–80

EVENT DESCRIPTION

02 During quarterly testing, E.C. IV #11 (A.C.) failed to open. E.P. # 39-09 part
03 NM-86A. Redundant system operable and available. Loose connection found in control
04 circuit terminal block 1S 65 cabinet "M" block.
05
06 AOR 75-07

	SYSTEM CODE	CAUSE CODE	COMPONENT CODE	PRIME COMPONENT SUPPLIER	COMPONENT MANUFACTURER	VIOLATION
07	IB	E	INSTRU	A	Z999	N
7 8	9 10	11	12–17	43	44–47	48

CAUSE DESCRIPTION

08 Loose connection was found in the remote manual wiring terminal block. Connection
09 tightened, valve operated properly.
10

	FACILITY STATUS	% POWER	OTHER STATUS	METHOD OF DISCOVERY	DISCOVERY DESCRIPTION
11	G	000		b	Z
7 8	9	10–12	13–44	45	46–80

	FORM OF ACTIVITY RELEASED	CONTENT OF RELEASE	AMOUNT OF ACTIVITY	LOCATION OF RELEASE
12	0	0	Z	Z
7 8	9	10	11–44	45–80

PERSONNEL EXPOSURES

	NUMBER	TYPE	DESCRIPTION
13	000	Z	Z
7 8	9–11	12	13–80

PERSONNEL INJURIES

	NUMBER	DESCRIPTION
14	000	Z
7 8	9–11	12–80

~~XXXXXX~~ CONSEQUENCES Probable

15 None as redundant component available and operable.

LOSS OR DAMAGE TO FACILITY

	TYPE	DESCRIPTION
16	Z	None
7 8	9	10–80

PUBLICITY

17 None

ADDITIONAL FACTORS

18 None

19

NAME: T.J. Dente PHONE: (315) 343-2110

GPO 881-667

LICENSEE EVENT REPORT

CONTROL BLOCK: [ ] (1–6)

(PLEASE PRINT ALL REQUIRED INFORMATION)

	LICENSEE NAME	LICENSE NUMBER	LICENSE TYPE	EVENT TYPE
01	NYNMP1	– –	4111	01
7–8	9–14	15–25	26–30	31–32

	CATEGORY	REPORT TYPE	REPORT SOURCE	DOCKET NUMBER	EVENT DATE	REPORT DATE
01 CON'T	MI	L	L	050–022 0	041475	050375
7–8	57–58	59	60	61–68	69–74	75–80

EVENT DESCRIPTION

02 During normal power operation, the relay coil in RPS relay 12K30 (turbine trip
03 1 out of 2 twice) shorted. EP# GEH-2024, part no. GEF-2757. Redundant relays were
04 fully operable. Relay assumed tripped condition upon failure. Relay coil was
05 replaced and unit tested.
06 AOR 75-08

	SYSTEM CODE	CAUSE CODE	COMPONENT CODE	PRIME COMPONENT SUPPLIER	COMPONENT MANUFACTURER	VIOLATION
07	IA	E	INSTRU	N	G080	N
7–8	9–10	11	12–17	43	44–47	48

CAUSE DESCRIPTION

08 Appears to be normal failure, the result of the environment and high usage. Coil
09 is always energized.
10

	FACILITY STATUS	% POWER	OTHER STATUS	METHOD OF DISCOVERY	DISCOVERY DESCRIPTION
11	C	055		a	
7–8	9	10–12	13–44	45	46–80

	FORM OF ACTIVITY RELEASED	CONTENT OF RELEASE	AMOUNT OF ACTIVITY	LOCATION OF RELEASE
12	Z	Z	Z	
7–8	9	10	11–44	45–80

PERSONNEL EXPOSURES

	NUMBER	TYPE	DESCRIPTION
13	000	0	Z
7–8	9–11	12	13–80

PERSONNEL INJURIES

	NUMBER	DESCRIPTION
14	000	Z
7–8	9–11	12–80

~~OFFSITE~~ CONSEQUENCES Probable

15 None as redundant component available and operable.

LOSS OR DAMAGE TO FACILITY

	TYPE	DESCRIPTION
16	Z	Z
7–8	9	10–80

PUBLICITY

17 None

ADDITIONAL FACTORS

18 None

19

NAME: T.J. Dente PHONE: (315) 343-2110

LICENSEE EVENT REPORT

CONTROL BLOCK: [ ] (1–6)

(PLEASE PRINT ALL REQUIRED INFORMATION)

	LICENSEE NAME	LICENSE NUMBER	LICENSE TYPE	EVENT TYPE
01	NYNMP1	— —	411	01
7–8	9–14	15–25	26–30	31–32

	CATEGORY	REPORT TYPE	REPORT SOURCE	DOCKET NUMBER	EVENT DATE	REPORT DATE
01 CON'T	MI	L	L	050—0220	041475	050475
7–8	57–58	59	60	61–68	69–74	75–80

EVENT DESCRIPTION

02 During weekly functional test of APRM's, APRM #11 failed to provide high alarm when
03 required to do so. The scram function tested satisfactory. Six APRM's are required
04 for operation, 7 were operable and available. Electronic failure with affected parts
05 replaced in kind.
06 AOR 75-09

	SYSTEM CODE	CAUSE CODE	COMPONENT CODE	PRIME COMPONENT SUPPLIER	COMPONENT MANUFACTURER	VIOLATION
07	IA	E	INSTRU	N	G080	N
7–8	9–10	11	12–17	43	44–47	48

CAUSE DESCRIPTION

08 Open transistor (Q4) in dual alarm unit (194X382G1). Transistor replaced, unit
09 tested satisfactory.
10

	FACILITY STATUS	% POWER	OTHER STATUS	METHOD OF DISCOVERY	DISCOVERY DESCRIPTION
11	C	055	Z	b	Z
7–8	9	10–12	13–44	45	46–80

	FORM OF ACTIVITY RELEASED	CONTENT OF RELEASE	AMOUNT OF ACTIVITY	LOCATION OF RELEASE
12	Z	Z	Z	Z
7–8	9	10	11–44	45–80

PERSONNEL EXPOSURES

	NUMBER	TYPE	DESCRIPTION
13	000	0	Z
7–8	9–11	12	13–80

PERSONNEL INJURIES

	NUMBER	DESCRIPTION
14	000	Z
7–8	9–11	12–80

OFFSITE CONSEQUENCES Probable

15 No consequences as redundant system were operable and available.

LOSS OR DAMAGE TO FACILITY

	TYPE	DESCRIPTION
16	Z	Z
7–8	9	10–80

PUBLICITY

17 None

ADDITIONAL FACTORS

18 None

19

NAME: T.J. Dente PHONE: (315) 343-2110

GPO 881-667

REPORT OF ABNORMAL OCCURRENCE AND/OR INCIDENT

NRC DISTRIBUTION FOR PART 50 DOCKET MATERIAL
(TEMPORARY FORM)

CONTROL NO: 5281

FILE: INCIDENT REPORT FILE

FROM:	DATE OF DOC	DATE REC'D	LTR	TWX	RPT	OTHER
Niagara Mohawk Pwr. Co. Syracuse, N.Y. ~~R.R. Schneider~~	5-6-75	5-13-75	XX			

TO:	ORIG	CC	OTHER	
James P. O'Reilly,	1 Signed			SENT AEC PDR xxxxx SENT LOCAL PDR xxxx

CLASS	UNCLASS	PROP INFO	INPUT	NO CYS REC'D	DOCKET NO:
	XXX			1	50-220

DESCRIPTION:

Ltr. trans the following...

PLANT NAME: Nine Mile Pt. # 1

ENCLOSURES: Reporting Abnorm. Occurrs. (4)
75-06-on 4-5-75-Set Point Drift.....
75-07-on 4-12-75-E.C.1V#11 failure.....
75-08-on 4-14-75-Relay Coil in RPS relay 12K30 shorted.....
75-09-on 4-14-75-APRM#11 failed to provide high alarm.....

DO NOT

FOR ACTION/INFORMATION

VCR 5-14-75

BUTLER (L) W/ Copies	SCHWENCER (L) W/ Copies	ZIEMANN (L) W/ Copies	REGAN (E) W/ Copies
CLARK (L) W/ Copies	STOLZ (L) W/ Copies	DICKER (E) W/ Copies	LEAR (L) W/ Copies
PARR (L) W/ Copies	VASSALLO (L) W/ Copies	KNIGHTON (E) W/ Copies	SPELS W/ Copies
KNIEL (L) W/ Copies	PURPLE (L) W/ Copies	YOUNGBLOOD (E) W/ Copies	W/ Copies

INTERNAL DISTRIBUTION

REG FILE	TECH REVIEW	DENTON	LIC ASST	A/T IND
NRC PDR	SCHROEDER	**GRIMES	R. DIGGS (L)	BRAITMAN
OGC, ROOM P-506A	MACCARY	GAMMILL	H. GEARIN (L)	SALTZMAN
GOSSICK/STAFF	KNIGHT	KASTNER	E. GOULBOURNE (L)	MELTZ
CASE	PAWLICKI	BALLARD	P. KREUTZER (E)	
GIAMBUSSO	SHAO	SPANGLER	J. LEE (L)	PLANS
BOYD	** STELLO		M. MAIGRET (L)	MCDONALD
MOORE (L)	** HOUSTON	ENVIRO	S. REED (E)	CHAPMAN
DEYOUNG (L)	** NOVAK	MULLER	M. SERVICE (L)	DUBE (Ltr)
SKOVHOLT (L)	ROSS	DICKER	S. SHEPPARD (L)	E. COUPE
GOLLER (L) (Ltr)	IPPOLITO	KNIGHTON	M. SLATER (E)	PETERSON
P. COLLINS	TEDESCO	YOUNGBLOOD	H. SMITH (L)	HARTFIELD (2)
DENISE	LONG	REGAN	S. TEETS (L)	KLECKER
REG OPR	LAINAS	PROJECT LDR	G. WILLIAMS (E)	EISENHUT
FILE & REGION (2)	BENAROYA		V. WILSON (L)	WIGGINTON
MIPC/PE (3)	VOLLMER	HARLESS	R. INGRAM (L)	F. WILLIAMS
STEELE				HANAUER

EXTERNAL DISTRIBUTION

Ao (4)

1 – LOCAL PDR Oswego-N.Y.
1 – TIC (ABERNATHY)
1 – NSIC (BUCHANAN)
1 – ASLB
1 – Newton Anderson
5 – ACRS SENT TO LIC ASST.
** SEND ONLY TEN DAY REPORTS

(1)(2)(10) – NATIONAL LABS
1 – W. PENNINGTON, Rm E-201 GT
1 – CONSULTANTS NEWMARK/BLUME/AGBABIAN

1 – PDR-SAN/LA/NY
1 – BROOKHAVEN NAT LAB
1 – G. ULRIKSON, ORNL
1 – AGMED (RUTH GUSSMAN) Rm B-127 GT
1 – J. D. RUNKLES, Rm E-201 GT

dupe

NIAGARA MOHAWK POWER CORPORATION

NIAGARA MOHAWK

300 ERIE BOULEVARD WEST
SYRACUSE, N. Y. 13202

May 6, 1975

Mr. James P. O'Reilly
Directorate of Regulatory Operations
Region I
United States Nuclear Regulatory Commission
631 Park Avenue
King of Prussia. 19406

RE: Docket No. 50-220

Dear Mr. O'Reilly:

In accordance with Nine Mile Point Nuclear Station Unit #1 Technical Specification 6.9, we hereby submit Licensee Event Report 75-6, 75-7, 75-8, and 75-9 which document the Abnormal Occurrences for April 1975.

These reports conform to the requirements of Regulatory Guide 1.16, Revision 2 and were completed within the intent of the Licensee Event Report instruction booklet 00E-SS-001, dated October, 1974, revised December 24, 1974. Due to the Minimal significance category of the reports, no supplemental report is included.

Very truly yours,

R.R. Schneider
Vice President
Electric Operations

TJD/mm

Enc. 3 copies

cc: 30 copies to K.R. Goller

5381

LICENSEE EVENT REPORT

CONTROL BLOC[redacted] 1 6 [redacted] PLEASE PRINT ALL REQUIRED INFORMATION

	LICENSEE NAME	LICENSE NUMBER	LICENSE TYPE	EVENT TYPE
01	NYNMP1	— —	4 1 1 1 1	0 1
7 8 9	14	15 25	26 30	31 32

	CATEGORY	REPORT TYPE	REPORT SOURCE	DOCKET NUMBER	EVENT DATE	REPORT DATE
01 CON'T	M I	L	L	0 5 0 — 0 2 2 0	0 4 0 5 7 5	0 5 0 3 7 5
7 8	57 58	59	60	61 68	69 74	75 80

EVENT DESCRIPTION

02 During surveillance testing, RE-18A Rx Level Lo-Lo-Lo was found to actuate at 131 inch
03 of H_2O rather than 128.5 inches of water. Redundant sensors available and operable.
04 Instrument appears to have drifted - Instrument recalibrated to 128.5" of water and
05 tested.
06 AOR 75-06

	SYSTEM CODE	CAUSE CODE	COMPONENT CODE	PRIME COMPONENT SUPPLIER	COMPONENT MANUFACTURER	VIOLATION
07	I B	E	I N S T R U	A	B 0 8 0	N
7 8 9	10	11	12 17	43	44 47	48

CAUSE DESCRIPTION

08 Set Point Drift
09
10

	FACILITY STATUS	% POWER	OTHER STATUS	METHOD OF DISCOVERY	DISCOVERY DESCRIPTION
11	E	0 9 4		b	
7 8	9	10 12	13 44	45	46 80

	FORM OF ACTIVITY RELEASED	CONTENT OF RELEASE	AMOUNT OF ACTIVITY	LOCATION OF RELEASE
12	Z	Z	Z	Z
7 8	9	10	11 44	45 80

PERSONNEL EXPOSURES

	NUMBER	TYPE	DESCRIPTION
13	0 0 0	Z	Z
7 8 9	11	12	13 80

PERSONNEL INJURIES

	NUMBER	DESCRIPTION
14	0 0 0	Z
7 8 9	11	12 80

~~XXXXXX~~ CONSEQUENCES Probable

15 None as redundant component available and operable.

LOSS OR DAMAGE TO FACILITY

	TYPE	DESCRIPTION
16	Z	None
7 8 9	10	80

PUBLICITY

17 None

ADDITIONAL FACTORS

18 None

19

NAME: T.J. Dente PHONE: (315) 343-2110

GPO 881-667

LICENSEE EVENT REPORT

CONTROL BLOCK: [ ] (1–6) [PLEASE PRINT ALL REQUIRED INFORMATION]

	LICENSEE NAME	LICENSE NUMBER	LICENSE TYPE	EVENT TYPE
01	NYNMP1	– –	4111	01
(7–8)	(9–14)	(15–25)	(26–30)	(31–32)

	CATEGORY	REPORT TYPE	REPORT SOURCE	DOCKET NUMBER	EVENT DATE	REPORT DATE
01 CON'T	MI	L	L	050–022 0	041275	050375
(7–8)	(57–58)	(59)	(60)	(61–68)	(69–74)	(75–80)

EVENT DESCRIPTION

02 During quarterly testing, E.C. IV #11 (A.C.) failed to open. E.P. # 39-09 part
03 NM-86A. Redundant system operable and available. Loose connection found in control
04 circuit terminal block 1S 65 cabinet "M" block.
05
06 AOR 75-07

	SYSTEM CODE	CAUSE CODE	COMPONENT CODE	PRIME COMPONENT SUPPLIER	COMPONENT MANUFACTURER	VIOLATION
07	IB	E	INSTRU	A	Z999	N
(7–8)	(9–10)	(11)	(12–17)	(43)	(44–47)	(48)

CAUSE DESCRIPTION

08 Loose connection was found in the remote manual wiring terminal block. Connection
09 tightened, valve operated properly.
10

	FACILITY STATUS	% POWER	OTHER STATUS	METHOD OF DISCOVERY	DISCOVERY DESCRIPTION
11	G	000		b	Z
(7–8)	(9)	(10–12)	(13–44)	(45)	(46–80)

	FORM OF ACTIVITY RELEASED	CONTENT OF RELEASE	AMOUNT OF ACTIVITY	LOCATION OF RELEASE
12	0	0	Z	Z
(7–8)	(9)	(10)	(11–44)	(45–80)

PERSONNEL EXPOSURES

	NUMBER	TYPE	DESCRIPTION
13	000	Z	Z
(7–8)	(9–11)	(12)	(13–80)

PERSONNEL INJURIES

	NUMBER	DESCRIPTION
14	000	Z
(7–8)	(9–11)	(12–80)

~~OBVIOUS~~ CONSEQUENCES Probable

15 None as redundant component available and operable.

LOSS OR DAMAGE TO FACILITY

	TYPE	DESCRIPTION
16	Z	None
(7–8)	(9)	(10–80)

PUBLICITY

17 None

ADDITIONAL FACTORS

18 None

19

NAME: T.J. Dente PHONE: (315) 343-2110

GPO 861-667

LICENSEE EVENT REPORT

CONTROL BLOCK [redacted] 1 6 [redacted] PLEASE PRINT ALL REQUIRED INFORMATION

	LICENSEE NAME	LICENSE NUMBER	LICENSE TYPE	EVENT TYPE
01	NYNMP1	– –	4111	01
7 8	9 14	15 25	26 30	31 32

	CATEGORY	REPORT TYPE	REPORT SOURCE	DOCKET NUMBER	EVENT DATE	REPORT DATE
01 CON'T	MI	L	L	050–022 0	041475	050375
7 8	57 58	59	60	61 68	69 74	75 80

EVENT DESCRIPTION

02 During normal power operation, the relay coil in RPS relay 12K30 (turbine trip
03 1 out of 2 twice) shorted. EP# GEH-2024, part no. GEF-2757. Redundant relays were
04 fully operable. Relay assumed tripped condition upon failure. Relay coil was
05 replaced and unit tested.
06 AOR 75-08

	SYSTEM CODE	CAUSE CODE	COMPONENT CODE	PRIME COMPONENT SUPPLIER	COMPONENT MANUFACTURER	VIOLATION
07	IA	E	INSTRU	N	G080	N
7 8	9 10	11	12 17	43	44 47	48

CAUSE DESCRIPTION

08 Appears to be normal failure, the result of the environment and high usage. Coil
09 is always energized.
10

	FACILITY STATUS	% POWER	OTHER STATUS	METHOD OF DISCOVERY	DISCOVERY DESCRIPTION
11	C	055		a	
7 8	9	10 12	13 44	45	46 80

	FORM OF ACTIVITY RELEASED	CONTENT OF RELEASE	AMOUNT OF ACTIVITY	LOCATION OF RELEASE
12	Z	Z	Z	
7 8	9	10	11 44	45 80

PERSONNEL EXPOSURES

	NUMBER	TYPE	DESCRIPTION
13	000	0	Z
7 8	9 11	12	13 80

PERSONNEL INJURIES

	NUMBER	DESCRIPTION
14	000	Z
7 8	9 11	12 80

~~XXXXX~~ CONSEQUENCES Probable

15 None as redundant component available and operable.

LOSS OR DAMAGE TO FACILITY

	TYPE	DESCRIPTION
16	Z	Z
7 8	9	10 80

PUBLICITY

17 None

ADDITIONAL FACTORS

18 None

19

NAME: T.J. Dente PHONE: (315) 343-2110

GPO 881-067

LICENSEE EVENT REPORT

CONTROL BLOCK: [ ] (1–6) (PLEASE PRINT ALL REQUIRED INFORMATION)

	LICENSEE NAME	LICENSE NUMBER	LICENSE TYPE	EVENT TYPE
01	NYNMP1	– –	4111	01
7–8	9–14	15–25	26–30	31–32

	CATEGORY	REPORT TYPE	REPORT SOURCE	DOCKET NUMBER	EVENT DATE	REPORT DATE
01 CONT	MI	L	L	050–022 0	041475	050475
7–8	57–58	59	60	61–68	69–74	75–80

EVENT DESCRIPTION

01 During weekly functional test of APRM's, APRM #11 failed to provide high alarm when
02 required to do so. The scram function tested satisfactory. Six APRM's are required
03 for operation, 7 were operable and available. Electronic failure with affected parts
04 replaced in kind.
05
06 AOR 75-09

	SYSTEM CODE	CAUSE CODE	COMPONENT CODE	PRIME COMPONENT SUPPLIER	COMPONENT MANUFACTURER	VIOLATION
07	IA	E	INSTRU	N	G080	N
7–8	9–10	11	12–17	43	44–47	48

CAUSE DESCRIPTION

08 Open transistor (Q4) in dual alarm unit (194X382G1). Transistor replaced, unit
09 tested satisfactory.
10

	FACILITY STATUS	% POWER	OTHER STATUS	METHOD OF DISCOVERY	DISCOVERY DESCRIPTION
11	C	055	Z	b	Z
7–8	9	10–12	13–44	45	46–80

	FORM OF ACTIVITY RELEASED	CONTENT OF RELEASE	AMOUNT OF ACTIVITY	LOCATION OF RELEASE
12	Z	Z	Z	Z
7–8	9	10	11–44	45–80

PERSONNEL EXPOSURES

	NUMBER	TYPE	DESCRIPTION
13	000	0	Z
7–8	9–11	12	13–80

PERSONNEL INJURIES

	NUMBER	DESCRIPTION
14	000	Z
7–8	9–11	12–80

OFFSITE CONSEQUENCES Probable

15 No consequences as redundant system were operable and available.

LOSS OR DAMAGE TO FACILITY

	TYPE	DESCRIPTION
16	Z	Z
7–8	9	10–80

PUBLICITY

17 None

ADDITIONAL FACTORS

18 None

19

NAME: T.J. Dente PHONE: (315) 343-2110

GPO 881-667

REPORT OF ABNORMAL OCCURRENCE AND/OR INCIDENT

NRC DISTRIBUTION FOR PART 50 DOCKET MATERIAL
(TEMPORARY FORM)

CONTROL NO: 4437

FILE: INCIDENT REPORT FILE

FROM:	DATE OF DOC	DATE REC'D	LTR	TWX	RPT	OTHER
Niagara Mohawk Power Corp. Syracuse, N.Y. 13202 R.R. Schneider	4-14-75	4-23-75	XX			

TO:	ORIG	CC	OTHER	
Mr. J. P. O'Reilly	1 signed			SENT AEC PDR XX SENT LOCAL PDR XX

CLASS	UNCLASS	PROP INFO	INPUT	NO CYS REC'D	DOCKET NO:
	XXX			1	50-220

DESCRIPTION: Ltr trans the following:

ENCLOSURES: Licensee Event Report No. AOR-75-5 on 4-1-75 re failure of the RPS solenoids to function thus not allowing AOV-202-36 to open....

(1 cy encl rec'd)

ACKNOWLEDGED
Do Not Remove

PLANT NAME: Nine Mile Pt. Unit 1

FOR ACTION/INFORMATION DHL 4-24-75

BUTLER (L) W/ Copies	SCHWENCER (L) W/ Copies	ZIEMANN (L) W/ Copies	REGAN (E) W/ Copies
CLARK (L) W/ Copies	STOLZ (L) W/ Copies	DICKER (E) W/ Copies	LEAR (L) W/ Copies
PARR (L) W/ Copies	VASSALLO (L) W/ Copies	KNIGHTON (E) W/ Copies	SPELS W/ Copies
KNIEL (L) W/ Copies	PURPLE (L) W/ Copies	YOUNGBLOOD (E) W/ Copies	W/ Copies

INTERNAL DISTRIBUTION

REG FILE	TECH REVIEW	DENTON	LIC ASST	A/T IND
NRC PDR	SCHROEDER	**GRIMES	R. DIGGS (L)	BRAITMAN
OGC, ROOM P-506A	MACCARY	GAMMILL	H. GEARIN (L)	SALTZMAN
GOSSICK/STAFF	KNIGHT	KASTNER	E. GOULBOURNE (L)	MELTZ
CASE	PAWLICKI	BALLARD	P. KREUTZER (E)	
GIAMBUSSO	SHAO	SPANGLER	J. LEE (L)	PLANS
BOYD	** STELLO		M. MAIGRET (L)	MCDONALD
MOORE (L)	** HOUSTON	ENVIRO	S. REED (E)	CHAPMAN
DEYOUNG (L)	** NOVAK	MULLER	M. SERVICE (L)	DUBE (Ltr)
SKOVHOLT (L)	ROSS	DICKER	S. SHEPPARD (L)	E. COUPE
GOLLER (L) (Ltr)	IPPOLITO	KNIGHTON	M. SLATER (E)	PETERSON
P. COLLINS	TEDESCO	YOUNGBLOOD	H. SMITH (L)	HARTFIELD (2)
DENISE	LONG	REGAN	S. TEETS (L)	KLECKER
REG OPR	LAINAS	PROJECT LDR	G. WILLIAMS (E)	EISENHUT
FILE & REGION (2)	BENAROYA		V. WILSON (L)	WIGGINTON
MIPC/PE (3)	VOLLMER	HARLESS	R. INGRAM (L)	F. WILLIAMS
STEELE				HANAUER

EXTERNAL DISTRIBUTION

1 – LOCAL PDR Oswego, N.Y.
1 – TIC (ABERNATHY)
1 – NSIC (BUCHANAN)
1 – ASLB
1 – Newton Anderson
5 – ACRS SENT TO LIC ASST S. Teets 4-24-75
** SEND ONLY TEN DAY REPORTS

(1)(2)(10) – NATIONAL LABS
1 – W. PENNINGTON, Rm E-201 GT
1 – CONSULTANTS NEWMARK/BLUME/AGBABIAN

1 – PDR-SAN/LA/NY
1 – BROOKHAVEN NAT LAB
1 – G. ULRIKSON, ORNL
1 – AGMED (RUTH GUSSMAN) Rm B-127 GT
1 – J. D. RUNKLES, Rm E-201 GT

Regulatory Docket File

NIAGARA MOHAWK POWER CORPORATION

NIAGARA MOHAWK

300 ERIE BOULEVARD, WEST
SYRACUSE, N. Y. 13202

DOCKETED USNRC APR 23 1975 MAIL SECTION DOCKET CLERK DL

April 14, 1975

RECEIVED APR 23 1975 U.S. ATOMIC ENERGY COMM. Regulatory Mail Section

Mr. James P. O'Reilly
Directorate of Regulatory Operations
Region 1
United States Nuclear Regulatory Commission
631 Park Avenue
King of Prussia, Pa. 19406

RE: Docket No. 50-220

Dear Mr. O'Reilly:

In accordance with Nine Mile Point Nuclear Station Unit #1 Technical Specification 6.9, we hereby submit Licensee Event Report 75-5 which documents the Abnormal Occurrence Report for April 1, 1975.

This report conforms to the requirements of Regulatory Guide 1.16, Revision 2 and was completed with the intent of the Licensee Event Report instruction booklet 00E-SS-001, dated October, 1974, revised December 24, 1974.

Very truly yours,

R.R. Schneider
Vice President
Electric Operations

TJD/mm

Enc. (3 copies)

cc: 30 copies to Mr. K.R. Goller

REGISTERED MAIL
RETURN RECEIPT REQUEST

4437

LICENSEE EVENT REPORT

Regulatory Docket File

CONTROL BLOCK: [ ] (PLEASE PRINT ALL REQUIRED INFORMATION)

4-14-75

	LICENSEE NAME	LICENSE NUMBER	LICENSE TYPE	EVENT TYPE
01	NYNMP1	— —	41110	01
7 8	9 14	15 25	26 30	31 32

	CATEGORY	REPORT TYPE	REPORT SOURCE	DOCKET NUMBER	EVENT DATE	REPORT DATE
01 CON'T	MI	T	L	050—0220	040175	041475
7 8	57 58	59	60	61 68	69 74	75 80

EVENT DESCRIPTION

02 During testing of the Emergency Ventilation System, the system failed to operate
03 due to a failure of the RPS solenoids to function thus not allowing AOV-202-36 to
04 open. The valve was immediately hand opened. SORC review indicated that further
05 inspection of this type of solenoid was in order. A further report will be made
06 on this item. AOR 75-5

	SYSTEM CODE	CAUSE CODE	COMPONENT CODE	PRIME COMPONENT SUPPLIER	COMPONENT MANUFACTURER	VIOLATION
07	SH	E	VALVOP	A	A61 1 0	N
7 8 9	10	11	12 17	43	44 47	48

CAUSE DESCRIPTION

08 The solenoid valves (SN-831630) failed due to (1) broken stem and (2) metal oxide
09 not allowing the valve to open. The SOV's were repaired and the system test completed
10 No hazard was presented to the general public as indicated in FSAR Supplement 1 VI-II.

	FACILITY STATUS	% POWER	OTHER STATUS	METHOD OF DISCOVERY	DISCOVERY DESCRIPTION
11	E	092		b	
7 8	9	10 12	13 44	45	46 80

	FORM OF ACTIVITY RELEASED	CONTENT OF RELEASE	AMOUNT OF ACTIVITY	LOCATION OF RELEASE
12	Z	Z	N/A	N/A
7 8	9	10	11 44	45 80

PERSONNEL EXPOSURES

	NUMBER	TYPE	DESCRIPTION
13	000	Z	N/A
7 8	9 11	12	13 80

PERSONNEL INJURIES

	NUMBER	DESCRIPTION
14	000	N/A
7 8	9 11	12 80

~~XXXXXXX~~ CONSEQUENCES Probable

15 None

LOSS OR DAMAGE TO FACILITY

	TYPE	DESCRIPTION
16	Z	N/A
7 8	9	10 80

PUBLICITY

17 N/A

ADDITIONAL FACTORS

18 A SORC ordered a review of the system operation be conducted, however, due to the 14
19 day requirements on LER's, the review which is not ready, will be submitted as a supplement.

NAME: T.J. Dente PHONE: (315) 343-2110

GPO 881-667

REPORT OF ABNORMAL OCCURRENCE AND/OR INCIDENT

NRC DISTRIBUTION FOR PART 50 DOCKET MATERIAL
(TEMPORARY FORM)

CONTROL NO: 4208

FILE: INCIDENT REPORT FILE

FROM:	DATE OF DOC	DATE REC'D	LTR	TWX	RPT	OTHER
Niagara Mohawk Power Corp Syracuse, N.Y. R,R, Schneider	4-14-75	4-17-75	xxx			

TO:	ORIG	CC	OTHER	
Mr. James P. O'Reilly	no	30		SENT AEC PDR xxx SENT LOCAL PDR xxx

CLASS	UNCLASS	PROP INFO	INPUT	NO CYS REC'D	DOCKET NO:
	xxxx			30	50-220

DESCRIPTION:

Ltr trans the following:

ENCLOSURES:

Abnormal Occurrence on 4-1-75 concerning failure of the RPS solenoids to function thus not allowing AOV-202-36 to open .....

PLANT NAME: Nine Mile Pt #1

FOR ACTION/INFORMATION 4-18-75 JGB

BUTLER (L) W/ Copies	SCHWENCER (L) W/ Copies	ZIEMANN (L) W/ Copies	REGAN (E) W/ Copies
CLARK (L) W/ Copies	STOLZ (L) W/ Copies	DICKER (E) W/ Copies	LEAR (L) W/ Copies
PARR (L) W/ Copies	VASSALLO (L) W/ Copies	KNIGHTON (E) W/ Copies	SPELS W/ Copies
KNIEL (L) W/ Copies	PURPLE (L) W/ Copies	YOUNGBLOOD (E) W/ Copies	W/ Copies

INTERNAL DISTRIBUTION

REG FILE	TECH REVIEW	DENTON	LIC ASST	A/T IND
NRC PDR	SCHROEDER	** GRIMES	R. DIGGS (L)	BRAITMAN
OGC, ROOM P-506A	MACCARY	GAMMILL	H. GEARIN (L)	SALTZMAN
GOSSICK/STAFF	KNIGHT	KASTNER	E. GOULBOURNE (L)	MELTZ
CASE	PAWLICKI	BALLARD	P. KREUTZER (E)	
GIAMBUSSO	SHAO	SPANGLER	J. LEE (L)	PLANS
BOYD	** STELLO		M. MAIGRET (L)	MCDONALD
MOORE (L)	** HOUSTON	ENVIRO	S. REED (E)	CHAPMAN
DEYOUNG (L)	** NOVAK	MULLER	M. SERVICE (L)	DUBE (Ltr)
SKOVHOLT (L)	ROSS	DICKER	S. SHEPPARD (L)	E. COUPE
GOLLER (L) (Ltr)	IPPOLITO	KNIGHTON	M. SLATER (E)	PETERSON
P. COLLINS	TEDESCO	YOUNGBLOOD	H. SMITH (L)	HARTFIELD (2)
DENISE	LONG	REGAN	S. TEETS (L)	KLECKER
REG OPR	LAINAS	PROJECT LDR	G. WILLIAMS (E)	EISENHUT
FILE & REGION (2)	BENAROYA		V. WILSON (L)	WIGGINTON
T.R. WILSON (3)	VOLLMER	HARLESS	R. INGRAM (L)	F. WILLIAMS
STEELE				HANAUER

EXTERNAL DISTRIBUTION

1 – LOCAL PDR Oswego, N.Y.
1 – TIC (ABERNATHY)
1 – NSIC (BUCHANAN)
1 – ASLB
1 – Newton Anderson
1 – ACRS SENT TO LIC ASST
** SEND ONLY TEN DAY REPORTS

(1)(2)(10) – NATIONAL LABS
1 – W. PENNINGTON, Rm E-201 GT
1 – CONSULTANTS NEWMARK/BLUME/AGBABIAN

AO (4)

1 – PDR-SAN/LA/NY
1 – BROOKHAVEN NAT LAB
1 – G. ULRIKSON, ORNL
1 – AGMED (RUTH GUSSMAN) Rm B-127 GT
1 – J. D. RUNKLES, Rm E-201 GT

NIAGARA MOHAWK POWER CORPORATION

NIAGARA MOHAWK

300 ERIE BOULEVARD, WEST
SYRACUSE, N. Y. 13202

April 14, 1975

Mr. James P. O'Reilly
Directorate of Regulatory Operations
Region 1
United States Nuclear Regulatory Commission
631 Park Avenue
King of Prussia, Pa. 19406

RE: Docket No. 50-220

Dear Mr. O'Reilly:

In accordance with Nine Mile Point Nuclear Station Unit #1 Technical Specification 6.9, we hereby submit Licensee Event Report 75-5 which documents the Abnormal Occurrence Report for April 1, 1975.

This report conforms to the requirements of Regulatory Guide 1.16, Revision 2 and was completed with the intent of the Licensee Event Report instruction booklet 00E-SS-001, dated October, 1974, revised December 24, 1974.

Very truly yours,

Original signed by R.R. Schneider

R.R. Schneider
Vice President
Electric Operations

TJD/mm

Enc. (3 copies)

cc: 30 copies to Mr. K.R. Goller

REGISTERED MAIL
RETURN RECEIPT REQUEST

4208

LICENSEE EVENT REPORT

CONTROL BLOCK: [ ] (1–6)

(PLEASE PRINT ALL REQUIRED INFORMATION)

	LICENSEE NAME	LICENSE NUMBER	LICENSE TYPE	EVENT TYPE
01	NYNMP1	– –	4 1 1 1 0	0 1
7–8	9–14	15–25	26–30	31–32

	CATEGORY	REPORT TYPE	REPORT SOURCE	DOCKET NUMBER	EVENT DATE	REPORT DATE
01 CON'T	M I	T	L	0 5 0 – 0 2 2 0	0 4 0 1 7 5	0 4 1 4 7 5
7–8	57–58	59	60	61–68	69–74	75–80

EVENT DESCRIPTION

02 During testing of the Emergency Ventilation System, the system failed to operate
03 due to a failure of the RPS solenoids to function thus not allowing AOV-202-36 to
04 open. The valve was immediately hand opened. SORC review indicated that further
05 inspection of this type of solenoid was in order. A further report will be made
06 on this item. AOR 75-5

	SYSTEM CODE	CAUSE CODE	COMPONENT CODE	PRIME COMPONENT SUPPLIER	COMPONENT MANUFACTURER	VIOLATION
07	S H	E	V A L V O P	A	A 6 1 0	N
7–8	9–10	11	12–17	43	44–47	48

CAUSE DESCRIPTION

08 The solenoid valves (SN-831630) failed due to (1) broken stem and (2) metal oxide
09 not allowing the valve to open. The SOV's were repaired and the system test completed
10 No hazard was presented to the general public as indicated in FSAR Supplement 1 VI-II.

	FACILITY STATUS	% POWER	OTHER STATUS	METHOD OF DISCOVERY	DISCOVERY DESCRIPTION
11	E	0 9 2		b	
7–8	9	10–12	13–44	45	46–80

	FORM OF ACTIVITY RELEASED	CONTENT OF RELEASE	AMOUNT OF ACTIVITY	LOCATION OF RELEASE
12	Z	Z	N/A	N/A
7–8	9	10	11–44	45–80

PERSONNEL EXPOSURES

	NUMBER	TYPE	DESCRIPTION
13	0 0 0	Z	N/A
7–8	9–11	12	13–80

PERSONNEL INJURIES

	NUMBER	DESCRIPTION
14	0 0 0	N/A
7–8	9–11	12–80

~~XOPFSNE~~ CONSEQUENCES Probable

15 None

LOSS OR DAMAGE TO FACILITY

	TYPE	DESCRIPTION
16	Z	N/A
7–8	9	10–80

PUBLICITY

17 N/A

ADDITIONAL FACTORS

18 SORC ordered a review of the system operation be conducted, however, due to the 14
19 day requirements on LER's, the review which is not ready, will be submitted as a supplement.

NAME: T.J. Dente PHONE: (315) 343-2110

REPORT OF ABNORMAL OCCURRENCE AND/OR INCIDENT

NRC DISTRIBUTION FOR PART 50 DOCKET MATERIAL
(TEMPORARY FORM)

CONTROL NO: 2702

FILE: INCIDENT REPORT FILE

FROM:	DATE OF DOC	DATE REC'D	LTR	TWX	RPT	OTHER
Niagara Mohawk Power Corp Syracuse, N.Y. R.R. Schneider	3-5-75	3-11-75	xxx			

TO:	ORIG	CC	OTHER	
Mr. James P. O'Reilly	designed			SENT AEC PDR xxxx SENT LOCAL PDR xxx

CLASS	UNCLASS	PROP INFO	INPUT	NO CYS REC'D	DOCKET NO:
	xxxx			80	50-220

DESCRIPTION:

Ltr trans the following:

ENCLOSURES:

Abnormal Occurrence on 2-12-75 concerning thru wall leakage was found along a horizontal line ....

PLANT NAME: Nine Mile Point Pt #1

FOR ACTION/INFORMATION 3-12-75 JGB

BUTLER (L) W/ Copies	SCHWENCER (L) W/ Copies	ZIEMANN (L) W/ Copies	REGAN (E) W/ Copies
CLARK (L) W/ Copies	STOLZ (L) W/ Copies	DICKER (E) W/ Copies	LEAR (L) W/3 Copies
PARR (L) W/ Copies	VASSALLO (L) W/ Copies	KNIGHTON (E) W/ Copies	SPELS W/ Copies
KNIEL (L) W/ Copies	PURPLE (L) W/ Copies	YOUNGBLOOD (E) W/ Copies	W/ Copies

INTERNAL DISTRIBUTION

REG FILE	TECH REVIEW	DENTON	LIC ASST	A/T IND
NRC PDR	SCHROEDER	GRIMES	R. DIGGS (L)	BRAITMAN
OGC, ROOM P-506A	MACCARY	GAMMILL	H. GEARIN (L)	SALTZMAN
GOSSICK/STAFF	KNIGHT	KASTNER	E. GOULBOURNE (L)	MELTZ
CASE	PAWLICKI	BALLARD	P. KREUTZER (E)	
GIAMBUSSO	SHAO	SPANGLER	J. LEE (L)	PLANS
BOYD	** STELLO		M. MAIGRET (L)	MCDONALD
MOORE (L)	** HOUSTON	ENVIRO	S. REED (E)	CHAPMAN
DEYOUNG (L)	** NOVAK	MULLER	M. SERVICE (L)	DUBE (Ltr)
SKOVHOLT (L)	ROSS	DICKER	S. SHEPPARD (L)	E. COUPE
GOLLER (L) (Ltr)	IPPOLITO	KNIGHTON	M. SLATER (E)	PETERSON
P. COLLINS	TEDESCO	YOUNGBLOOD	H. SMITH (L)	HARTFIELD (2)
DENISE	LONG	REGAN	S. TEETS (L)	KLECKER
REG OPR	LAINAS	PROJECT LDR	G. WILLIAMS (E)	EISENHUT
FILE & REGION (2)	BENAROYA		V. WILSON (L)	WIGGINTON
T.R. WILSON (3)	VOLLMER	HARLESS	R. INGRAM (L)	F. WILLIAMS
STEELE				HANAUER

EXTERNAL DISTRIBUTION

1 – LOCAL PDR Oswego, N.Y.
1 – TIC (ABERNATHY)
1 – NSIC (BUCHANAN)
1 – ASLB
1 – Newton Anderson
5 – ACRS SENT TO LIC ASST
** SEND ONLY TEN DAY REPORTS

(1)(2)(10) – NATIONAL LABS
1 – W. PENNINGTON, Rm E-201 GT
1 – CONSULTANTS NEWMARK/BLUME/AGBABIAN

1 – PDR-SAN/LA/NY
1 – BROOKHAVEN NAT LAB
1 – G. ULRIKSON, ORNL
1 – AGMED (RUTH GUSSMAN) Rm B-127 GT
1 – J. D. RUNKLES, Rm E-201 GT

NIAGARA MOHAWK POWER CORPORATION

NIAGARA MOHAWK

300 ERIE BOULEVARD, WEST
SYRACUSE, N. Y. 13202

March 5, 1975

Mr. James P. O'Reilly
Directorate of Regulatory Operations
Region 1
United States Nuclear Regulatory Commission
631 Park Avenue
King of Prussia, Pa. 19406

Dear Mr. O'Reilly:

In accordance with Nine Mile Point Nuclear Station Unit #1 Technical Specification 6.9, we hereby submit Licensee Event Report 75-3 and 75-4 which document the Abnormal Occurrences for February 1975.

These reports conform to the requirements of Regulatory Guide 1.16, Revision 2 and was completed within the intent of the Licensee Event Report instruction booklet 00E-SS-001, dated October, 1974, revised December 24, 1974. Due to the Minimal significance category of the report, no supplemental report is included.

Very truly yours,

R.R. Schneider
Vice President
Electric Operations

TJD/mm.

Enc. (3 copies)

cc: 30 copies to Mr. K.R. Goller

REGISTERED MAIL
RETURN RECEIPT REQUEST

2702

LICENSEE EVENT REPORT

CONTROL BLOCK: [ ] (1–6)

(PLEASE PRINT ALL REQUIRED INFORMATION)

	LICENSEE NAME	LICENSE NUMBER	LICENSE TYPE	EVENT TYPE
01	NYNMP1	— —	41111	01
7 8	9–14	15–25	26–30	31 32

	CATEGORY	REPORT TYPE	REPORT SOURCE	DOCKET NUMBER	EVENT DATE	REPORT DATE
01 CON'T	MI	L	L	050—0220	021275	030475
7 8	57 58	59	60	61–68	69–74	75–80

EVENT DESCRIPTION

02 During plant startup, thru wall leakage was found along a horizonatal line
03 approx. 1/2 inch below the circumferential weld between tank shell and tank
04 head on Waste Evaporator Concentrator. In addition, corroded areas were found
05 on the tank bottom. An evaluation is presently underway to determine feasibility
06 of repair or just scraping of this concentrator. AOR 75-3

	SYSTEM CODE	CAUSE CODE	COMPONENT CODE	PRIME COMPONENT SUPPLIER	COMPONENT MANUFACTURER	VIOLATION
07	MA	E	ZZZZZZ	L	2999	N
7 8 9	10	11	12–17	43	44–47	48

CAUSE DESCRIPTION

08 Failure of the concentrator resulted from gross corrosion and pitting
09 caused by sulfuric acid contamination.
10

	FACILITY STATUS	% POWER	OTHER STATUS	METHOD OF DISCOVERY	DISCOVERY DESCRIPTION
11	C	020		a	
7 8	9	10–12	13–44	45	46–80

	FORM OF ACTIVITY RELEASED	CONTENT OF RELEASE	AMOUNT OF ACTIVITY	LOCATION OF RELEASE
12	Z	Z	N/A	N/A
7 8	9	10	11–44	45–80

PERSONNEL EXPOSURES

	NUMBER	TYPE	DESCRIPTION
13	000	Z	N/A
7 8	9–11	12	13–80

PERSONNEL INJURIES

	NUMBER	DESCRIPTION
14	000	N/A
7 8	9–11	12–80

~~OFFSITE~~ CONSEQUENCES PROBABLE

15 N/A

LOSS OR DAMAGE TO FACILITY

	TYPE	DESCRIPTION
16	Z	N/A
7 8	9	10–80

PUBLICITY

17 N/A

ADDITIONAL FACTORS

18 N/A

19

NAME: T.J. Dente PHONE: (315) 343-2110

AEC DISTRIBUTION FOR PART 50 DOCKET MATERIAL
(TEMPORARY FORM)

CONTROL NO: 1440

FILE: INCIDENT REPORT

FROM:	DATE OF DOC	DATE REC'D	LTR	TWX	RPT	OTHER
Niagara Mohawk Power Corp. Syracuse, N.Y. 13202 R.R. Schneider	2-3-75	2-7-75	XX			

TO:	ORIG	CC	OTHER	
Mr. J. P. O'Reilly		30		SENT AEC PDR XX SENT LOCAL PDR XX

CLASS	UNCLASS	PROP INFO	INPUT	NO CYS REC'D	DOCKET NO:
	XXXX			30	50-220

DESCRIPTION: Ltr trans the following:

ENCLOSURES: Licensee Event Report 75-1 & 75-2 which document the AO for Jan. 1975 re failure(open) of level control valve to Emergency condensers & failure of raw water valve #121 to open....

(30 cys encl rec'd)

ACKNOWLEDGED

Do Not Remove

PLANT NAME: Nine Mile Pt. Unit 1

FOR ACTION/INFORMATION DHL 2-8-75

BUTLER (S)	SCHWENCER (S)	ZIEMANN (S)	REGAN (E)
W/ Copies	W/ Copies	W/ Copies	W/ Copies
CLARK (S)	STOLZ (S)	DICKER (E)	✓LEAR (S)
W/ Copies	W/ Copies	W/ Copies	W/4 Copies
PARR (S)	VASSALLO (S)	KNIGHTON (E)	SPEIS (S)
W/ Copies	W/ Copies	W/ Copies	W/ Copies
KNIEL (S)	PURPLE (S)	YOUNGBLOOD (E)	
W/ Copies	W/ Copies	W/ Copies	W/ Copies

INTERNAL DISTRIBUTION

✓REG FILE	TECH REVIEW	DENTON	LIC. ASST.	A/T IND
✓AEC PDR	✓SCHROEDER	GRIMES	DIGGS (S)	BRAITMAN
✓OGC, ROOM P-506-A	✓MACCARRY	GAMMILL	GEARIN (S)	SALTZMAN
✓GOSSICK /STAFF	✓KNIGHT	✓KASTNER	GOULBOURNE (S)	B. HURT
✓CASE	✓PAWLICKI	BALLARD	KREUTZER (E)	
GIAMBUSSO	✓SHAO	SPANGLER	LEE (S)	PLANS
BOYD	✓STELLO		MAIGRET (S)	MCDONALD
MOORE (S) (BWR)	✓HOUSTON	ENVIRO	REED (E)	CHAPMAN
DEYOUNG (S) (PWR)	✓NOVAK	MULLER	SERVICE (S)	DUBE w/input
SKOVHOLT (S)	✓ROSS	DICKER	SHEPPARD (S)	E. COUPE
GOLLER (S)	✓IPPOLITO	KNIGHTON	SLATER (E)	✓R. Hartfield (2)
P. COLLINS	TEDESCO	YOUNGBLOOD	SMITH (S)	✓KLECKER
DENISE	✓LONG	REGAN	✓TEETS (S)	✓F. WILLIAMS
REG OPR	✓LAINAS	PROJECT LDR	WILLIAMS (E)	
✓FILE & REGION (3)	✓BENAROYA		WILSON (S)	
✓T.R. WILSON ✓STEELE	✓VOLIMER	HARLESS	INGRAM (S)	

EXTERNAL DISTRIBUTION

✓1-LOCAL PDR Oswego, N.Y.	(1)(2)(10)-NATIONAL LABS	1-PDR SAN/LA/NY
✓1-TIC(ABERNATHY)	1-W. PENNINGTON, RM E-201 G.T.	1-BROOKHAVEN NAT LAB
✓1-NSIC(BUCHANAN)	1-CONSULTANTS	1-G. ULRIKSON, ORNL
1-ASLB	NEWMARK/BLUME/AGBABIAN	1-AGMED(RUTH GUSSMAN) RM B-127 G.T.
1-NEWTON ANDERSON		1-J. RUNKLES, RM E-201 G.T.
✓5-ACRS SENT TO LIC. ASST. S. Teets 2-8-75		

NIAGARA MOHAWK POWER CORPORATION

NIAGARA MOHAWK

300 ERIE BOULEVARD, WEST
SYRACUSE, N. Y. 13202

February 3, 1975

50-220

Mr. James P. O'Reilly
Directorate of Regulatory Operations
Region 1
United States Nuclear Regulatory Commission
631 Park Avenue
King of Prussia, Pa. 19406

Dear Mr. O'Reilly:

In accordance with Nine Mile Point Nuclear Station Unit #1 Technical Specification 6.9, we hereby submit Licensee Event Report 75-1 and 75-2 which document the Abnormal Occurrences for January, 1975.

This report conforms to the requirements of Regulatory Guide 1.16, Revision 2 and was completed within the intent of the Licensee Event Report instruction booklet 00E-SS-001, dated October, 1974, revised December 24, 1974. Due to the Minimal significance category of the report, no supplemental report is included.

Very truly yours,

R.R. Schneider
Vice President
Electric Operations

TJD/mm

Enc. (3 copies)

cc: 30 copies to Mr. K.R. Goller

1440

LICENSEE EVENT REPORT

Regulatory Docket File

CONTROL BLOCK: [ ] (1–6)

(PLEASE PRINT ALL REQUIRED INFORMATION)

2-3-75

	LICENSEE NAME	LICENSE NUMBER	LICENSE TYPE	EVENT TYPE
01	NYNMP1	— —	41111	01
7–8	9–14	15–25	26–30	31–32

	CATEGORY	REPORT TYPE	REPORT SOURCE	DOCKET NUMBER	EVENT DATE	REPORT DATE
01 CON'T	MI	L	L	05 0–0220	010975	020375
7–8	57–58	59	60	61–68	69–74	75–80

EVENT DESCRIPTION

02 Failure of raw water valve (#121) to open. (EP #93-52) This provides cross tie
03 between raw water system and C.S. C.S. System would operate normally. The
04 purpose of cross tie is to provide another method of flooding containment.
05 Redundant method for flooding was operable.
06 AOR 75-2

	SYSTEM CODE	CAUSE CODE	COMPONENT CODE	PRIME COMPONENT SUPPLIER	COMPONENT MANUFACTURER	VIOLATION
07	SF	E	VALVOR	A	L200	N
7–8	9–10	11	12–17	43	44–47	48

CAUSE DESCRIPTION

08 Limitorque operator bolts were loose. Program established to inspect all
09 limitorque bolts. Valve operates properly.
10

	FACILITY STATUS	% POWER	OTHER STATUS	METHOD OF DISCOVERY	DISCOVERY DESCRIPTION
11	E	082		a	Operator noted valve not open
7–8	9	10–12	13–44	45	46–80

	FORM OF ACTIVITY RELEASED	CONTENT OF RELEASE	AMOUNT OF ACTIVITY	LOCATION OF RELEASE
12	Z	Z	N/A	N/A
7–8	9	10	11–44	45–80

PERSONNEL EXPOSURES

	NUMBER	TYPE	DESCRIPTION
13	000	Z	N/A
7–8	9–11	12	13–80

PERSONNEL INJURIES

	NUMBER	DESCRIPTION
14	000	N/A
7–8	9–11	12–80

~~OFFSITE~~ CONSEQUENCES PROBABLE

15 Redundant systems operable no hazard to general public

LOSS OR DAMAGE TO FACILITY

	TYPE	DESCRIPTION
16	Z	N/A
7–8	9	10–80

PUBLICITY

17 N/A

ADDITIONAL FACTORS

18 N/A

19

NAME: T.J. Dente PHONE: (315) 343-2110 ext. 1309

GPO 881-667

Regulatory Docket File

LICENSEE EVENT REPORT

rcd w/Ltr Dated 2-3-75

CONTROL BLOCK: [ ] (1–6)

(PLEASE PRINT ALL REQUIRED INFORMATION)

	LICENSEE NAME	LICENSE NUMBER	LICENSE TYPE	EVENT TYPE
01	NYNMP1	– –	4111	01
7–8	9–14	15–25	26–30	31–32

	CATEGORY	REPORT TYPE	REPORT SOURCE	DOCKET NUMBER	EVENT DATE	REPORT DATE
01 CON'T	MI	L	L	050–0220	010975	020375
7–8	57–58	59	60	61–68	69–74	75–80

EVENT DESCRIPTION

02 Failure (open) of level control valve to Emergency condensers causing high
03 water level alarm. Failure was in safe condition. Spare controller installed.
04 Other system fully operable. Each set of E.C. has own make-up level control
05 from M.V. Tank.
06 AOR 75-1

	SYSTEM CODE	CAUSE CODE	COMPONENT CODE	PRIME COMPONENT SUPPLIER	COMPONENT MANUFACTURER	VIOLATION
07	CF	E	INSTRU	N	G080	N
7–8	9–10	11	12–17	43	44–47	48

CAUSE DESCRIPTION

08 Make-up tank alarmed on low level operator attempted to close valve could not.
09 Maintained levelwith manual valve (RMV).
10

	FACILITY STATUS	% POWER	OTHER STATUS	METHOD OF DISCOVERY	DISCOVERY DESCRIPTION
11	E	082		a	Operator noted alarm.
7–8	9	10–12	13–44	45	46–80

	FORM OF ACTIVITY RELEASED	CONTENT OF RELEASE	AMOUNT OF ACTIVITY	LOCATION OF RELEASE
12	Z	Z	N/A	N/A
7–8	9	10	11–44	45–80

PERSONNEL EXPOSURES

	NUMBER	TYPE	DESCRIPTION
13	000	Z	N/A
7–8	9–11	12	13–80

PERSONNEL INJURIES

	NUMBER	DESCRIPTION
14	000	N/A
7–8	9–11	12–80

OFFSITE CONSEQUENCES PROBABLE

15 None Failure was in safe direction

LOSS OR DAMAGE TO FACILITY

	TYPE	DESCRIPTION
16	Z	N/A
7–8	9	10–80

PUBLICITY

17 N/A

ADDITIONAL FACTORS

18

19

NAME: T.J. Dente PHONE: (315) 343-2110 ext. 1309

GPO 081-667

LICENSEE EVENT REPORT

CONTROL BLOCK: [ ] (1–6) (PLEASE PRINT ALL REQUIRED INFORMATION)

	LICENSEE NAME	LICENSE NUMBER	LICENSE TYPE	EVENT TYPE
01	NYNMP1	.. – –	4111	01
7–8	9–14	15–25	26–30	31–32

	CATEGORY	REPORT TYPE	REPORT SOURCE	DOCKET NUMBER	EVENT DATE	REPORT DATE
01 CON'T	MI	L	L	050-0220	021275	030475
7–8	57–58	59	60	61–68	69–74	75–80

EVENT DESCRIPTION

02 During plant startup, in run mode, #12 F.W. Pump failed to start (HPCI component)
03 due to broken linkage on suction pressure switch. Redundant pump was fully
04 operable. Switch linkage replaced. The pump was started not for HPCI but as
05 normal operation. (ANA-240941)
06 AOR 75-4

	SYSTEM CODE	CAUSE CODE	COMPONENT CODE	PRIME COMPONENT SUPPLIER	COMPONENT MANUFACTURER	VIOLATION
07	SF	E	INSTRU	A	M235	N
7–8	9–10	11	12–17	43	44–47	48

CAUSE DESCRIPTION

08 Due to vibration the linkage between the bourdon tube and the Mercoid switch
09 became disconnected. This will be rechecked periodically when pump is operating.
10

	FACILITY STATUS	% POWER	OTHER STATUS	METHOD OF DISCOVERY	DISCOVERY DESCRIPTION
11	C	017	N/A	a	N/A
7–8	9	10–12	13–44	45	46–80

	FORM OF ACTIVITY RELEASED	CONTENT OF RELEASE	AMOUNT OF ACTIVITY	LOCATION OF RELEASE
12	Z	Z	N/A	N/A
7–8	9	10	11–44	45–80

PERSONNEL EXPOSURES

	NUMBER	TYPE	DESCRIPTION
13	000	Z	N/A
7–8	9–11	12	13–80

PERSONNEL INJURIES

	NUMBER	DESCRIPTION
14	000	N/A
7–8	9–11	12–80

~~OFFSITE~~ CONSEQUENCES Probable

15 No consequences due to available redundant component.

LOSS OR DAMAGE TO FACILITY

	TYPE	DESCRIPTION
16	Z	N/A
7–8	9	10–80

PUBLICITY

17 N/A

ADDITIONAL FACTORS

18 No previous failures

19

NAME: T.J. Dente PHONE: (315) 343-2110

GPO 881-667

AEC DI[redacted]UTION FOR PART 50 DOCKET [redacted]RIAL
(TEMPORARY FORM)

CONTROL NO: 326

FILE: INCIDENT REPORT

FROM:	DATE OF DOC	DATE REC'D	LTR	TWX	RPT	OTHER
Niagara Mohawk Power Corp. Syracuse, N.Y. 13202 R.R. Schneider	1-6-75	1-13-75	XXXX			

TO:	ORIG	CC	OTHER	
Mr. Karl R. Goller	1 signed	39		SENT AEC PDR XX SENT LOCAL PDR XX

CLASS	UNCLASS	PROP INFO	INPUT	NO CYS REC'D	DOCKET NO:
	XXXX			40	50-220

DESCRIPTION: Ltr trans the following:

ENCLOSURES: Abnormal Occurrence Report No. 50-220/74-17 (10 cys letter) on 12-27-74 re one inoperable SRM(14)....

(40 cys encl rec'd)

PLANT NAME: Nine Mile Pt. 1

FOR ACTION/INFORMATION DHL 1-14-75

BUTLER (S)	SCHWENCER (S)	ZIEMANN (S)	REGAN (E)
W/ Copies	W/ Copies	W/ Copies	W/ Copies
CLARK (S)	STOLZ (S)	DICKER (E)	LEAR (S)
W/ Copies	W/ Copies	W/ Copies	W/4 Copies
PARR (S)	VASSALLO (S)	KNIGHTON (E)	SPEIS (S)
W/ Copies	W/ Copies	W/ Copies	W/ Copies
KNIEL (S)	PURPLE (S)	YOUNGBLOOD (E)	
W/ Copies	W/ Copies	W/ Copies	W/ Copies

INTERNAL DISTRIBUTION

REG FILE	TECH REVIEW	DENTON	LIC. ASST.	A/T IND
AEC PDR	SCHROEDER	GRIMES	DIGGS (S)	BRAITMAN
OGC, ROOM P-506-A	MACCARRY	GAMMILL	GEARIN (S)	SALTZMAN
MUNTZING/STAFF	KNIGHT	KASTNER	GOULBOURNE (S)	B. HURT
CASE	PAWLICKI	BALLARD	KREUTZER (E)	
GIAMBUSSO	SHAO	SPANGLER	LEE (S)	PLANS
BOYD	STELLO		MAIGRET (S)	MCDONALD
MOORE (S) (BWR)	HOUSTON	ENVIRO	REED (E)	CHAPMAN
DEYOUNG (S) (PWR)	NOVAK	MULLER	SERVICE (S)	DUBE w/input
SKOVHOLT (S)	ROSS	DICKER	SHEPPARD (S)	E. COUPE
GOLLER (S)	IPPOLITO	KNIGHTON	SLATER (E)	D. THOMPSON (2)
P. COLLINS	TEDESCO	YOUNGBLOOD	SMITH (S)	KLECKER
DENISE	LONG	REGAN	TEETS (S)	F. WILLIAMS
REG OPR	LAINAS	PROJECT LDR	WILLIAMS (E)	
FILE & REGION (2)	BENAROYA		WILSON (S)	
T.R. WILSON	STEELE	VOLIMER	HARLESS	INGRAM (S)

EXTERNAL DISTRIBUTION

1-LOCAL PDR Oswego, N.Y.	(1)(2)(10)-NATIONAL LABS	1-PDR SAN/LA/NY
1-TIC(ABERNATHY)	1-W. PENNINGTON, RM E-201 G.T.	1-BROOKHAVEN NAT LAB
1-NSIC(BUCHANAN)	1-CONSULTANTS	1-G. ULRIKSON, ORNL
1-ASLB	NEWMARK/BLUME/AGBABIAN	1-AGMED(RUTH GUSSMAN) RM B-127 G.T.
1-NEWTON ANDERSON		1-J. RUNKLES, RM E-201 G.T.
5-ACRS SENT TO LIC. ASST. S. Teet 1-14-75		

NIAGARA MOHAWK POWER CORPORATION

NIAGARA MOHAWK

300 ERIE BOULEVARD, WEST
SYRACUSE, N. Y. 13202

50-220

January 6, 1975

Mr. Karl R. Goller
Assistant Director of Operating Reactors
Directorate of Licensing
United States Atomic Energy Commission
Washington, D.C. 20545

DL

Dear Mr. Goller:

In accordance with the Technical Specifications for the Nine Mile Point Nuclear Station, Unit #1, the enclosed Abnormal Occurrance Report (74-17) is being submitted. This is in the accepted format as detailed in Regulatory Guide 1.16, Rev. 1.

Very truly yours,

R.R. Schneider
Vice President - Electric Operations

TJD/mm

Enc.

326

NIAGARA MOHAWK POWER CORPORATION

NIAGARA MOHAWK

1-6-75

DATE: January 6, 1975

SUBJECT: Abnormal Occurrence Report No. 50-220 /74-17

The enclosed Abnormal Occurrence Report is being submitted in accordance with Technical Specifications Section 6.

TO: James P. O'Reilly
Directorate of Regulatory Operations
Region 1
631 Park Avenue
King of Prussia, Pennsylvania 19406

FROM: Niagara Mohawk Power Corporation
Nine Mile Point - James A. FitzPatrick Site

Nine Mile Point Nuclear Station

P.O. Box #32
Lycoming, New York 13093

Docket 50-220

NIAGARA MOHAWK POWER CORPORATION

NIAGARA MOHAWK

SUBJECT: Abnormal Occurrence 10 Day Letter

REFERENCE: License DPR 17.

Report No.: 50- 220 /74- 17

Report Date: 12/30/74

Occurrence Date: 12/27/74

Facility: NMPP#1

Identification of Occurrence:

One inoperable SRM (14)

Conditions Prior to Occurrence:

	Steady State Power		Routine Shutdown
	Hot Standby		
X	Cold Shutdown		Load Changes
	Refueling Shutdown		
	Routine Startup		Other

Description of the Occurrence:

During shutdown surveillance testing, it was found that SRM (14) was inoperable. Technical Specifications Sec. 3.1.1b (4) requires 3 operable Instrument Channels for startup. This LCO was satisfied as the other 3 SRM's were operable.

Apparent Cause of the Occurrence:

_____	Design	_____	Procedure
_____	Manufacture	_____	Unusual Service Condition
_____	Installation/Const.	X	Component Failure
_____	Operator	_____	Other (Specify)

Detector failure

Analysis of Occurrence:

The source range monitor (SRM) system performs no automatic safety function. It does provide the operator with a visual indication of neutron level which is needed for knowledgeable and efficient reactor startup at low neutron levels and it also provides rod withdrawal blocks to the Rod Control System. The results of reactivity accidents are functions of the initial neutron flux. One operable SRM channel would be adequate to monitor the approach to critical using homogeneous patterns of scattered control rods. A minimum of three operable SRM's is required as an added conservatism.

Therefore, it can be concluded that one SRM being inoperable would not have prevented the performance of the intended function of the SRM system. Further, no hazard would have been presented to the plant safety or health and welfare of the general public from this event.

Corrective Action:

Detector was replaced with spare and system response to neutrons was verified.

AEC DISTRIBUTION FOR PART 50 DOCKET MATERIAL
(TEMPORARY FORM)

CONTROL NO: 99

FILE: INCIDENT REPORT

FROM:	DATE OF DOC	DATE REC'D	LTR	TWX	RPT	OTHER
Niagara Mohawk Power Corp Lycoming, New York 13093	12/30/74	1/6/75	XX			

TO:	ORIG	CC	OTHER	
James P. O'Reilly, Reg. 1		1		SENT AEC PDR XX SENT LOCAL PDR XX

CLASS	UNCLASS	PROP INFO	INPUT	NO CYS REC'D	DOCKET NO:
	XX			1	50-220

DESCRIPTION:
Ltr w/attch.....
Abnormal occurrence report No. 50-220/74-17; occurrence date 12/27/74, SRM (14) was found inoperable during shutdown surveillance testing (a component failure).

ENCLOSURES:

ACKNOWLEDGED

DO NOT REMOVE

PLANT NAME: Nine Mile Point

FOR ACTION/INFORMATION LDM 1/8/75

BUTLER (S)	SCHWENCER (S)	ZIEMANN (S)	REGAN (E)
W/ Copies	W/ Copies	W/ Copies	W/ Copies
CLARK (S)	STOLZ (S)	DICKER (E)	✓ LEAR (S)
W/ Copies	W/ Copies	W/ Copies	W/4 Copies
PARR (S)	VASSALLO (S)	KNIGHTON (E)	SPEIS (S)
W/ Copies	W/ Copies	W/ Copies	W/ Copies
KNIEL (S)	PURPLE (S)	YOUNGBLOOD (E)	
W/ Copies	W/ Copies	W/ Copies	W/ Copies

INTERNAL DISTRIBUTION

~~REG FILE~~	TECH REVIEW	DENTON	LIC. ASST.	A/T IND
AEC PDR	SCHROEDER	GRIMES	DIGGS (S)	BRAITMAN
OGC, ROOM P-506-A	MACCARRY	GAMMILL	GEARIN (S)	SALTZMAN
MUNTZING/STAFF	KNIGHT	KASTNER	GOULBOURNE (S)	B. HURT
CASE	PAWLICKI	BALLARD	KREUTZER (E)	
GIAMBUSSO	SHAO	SPANGLER	LEE (S)	PLANS
BOYD	STELLO		MAIGRET (S)	MCDONALD
MOORE (S) (BWR)	HOUSTON	ENVIRO	REED (E)	CHAPMAN
DEYOUNG (S) (PWR)	NOVAK	MULLER	SERVICE (S)	DUBE w/input
SKOVHOLT (S)	ROSS	DICKER	SHEPPARD (S)	E. COUPE
GOLLER (S)	IPPOLITO	KNIGHTON	SLATER (E)	D. THOMPSON (2)
P. COLLINS	TEDESCO	YOUNGBLOOD	SMITH (S)	KLECKER
DENISE	LONG	REGAN	✓ TEETS (S)	F. WILLIAMS
REG OPR	LAINAS	PROJECT LDR	WILLIAMS (E)	
FILE & REGION (2)	BENAROYA		WILSON (S)	
T.R. WILSON	STEELE VOLIMER	HARLESS	INGRAM (S)	

EXTERNAL DISTRIBUTION

1-LOCAL PDR Oswego, N.Y.	(1)(2)(10)-NATIONAL LABS	1-PDR SAN/LA/NY
1-TIC(ABERNATHY)	1-W. PENNINGTON, RM E-201 G.T.	1-BROOKHAVEN NAT LAB
1-NSIC(BUCHANAN)	1-CONSULTANTS	1-G. ULRIKSON, ORNL
1-ASLB	NEWMARK/BLUME/AGBABIAN	1-AGMED(RUTH GUSSMAN) RM B-127 G.T.
1-NEWTON ANDERSON		1-J. RUNKLES, RM E-201 G.T.
5-ACRS SENT TO LIC. ASST. Teets sent 1/8/75		

dupe

NIAGARA MOHAWK POWER CORPORATION

NIAGARA MOHAWK

DATE: December 30, 1974

SUBJECT: Abnormal Occurrence Report No. 50-220 /74-17

The enclosed preliminary AOR is being submitted in accordance with Technical Specifications Section 6.

Regulatory File cy.

TO: James P. O'Reilly
Directorate of Regulatory Operations
Region 1
631 Park Avenue
King of Prussia, Pennsylvania 19406

FROM: Niagara Mohawk Power Corporation
Nine Mile Point - James A. FitzPatrick Site

Nine Mile Point Nuclear Station.

P.O. Box #32
Lycoming, New York. 13093

Docket 50-220

DOCKETED USAEC
JAN 6 1975
REGULATORY MAIL SECTION DOCKET CLERK

99

NIAGARA MOHAWK POWER CORPORATION

NIAGARA MOHAWK

SUBJECT: Abnormal Occurrence 24 hour Notification

Confirming Mr. C. Stuart phone conversation with Mr. T. Shadlosky AEC RO:I office on 12/27/74.

REFERENCE: License DPR 17.

Report No.: 50- 220 /74-17

Report Date: 12/30/74

Occurrence Date: 12/27/74

Facility: NMP # 1

Identification of Occurrence:

One inoperable SRM (14)

Conditions Prior to Occurrence:

	Steady State Power		Routine Shutdown
	Hot Standby		
X	Cold Shutdown		Load Changes
	Refueling Shutdown		
	Routine Startup		Other

Description of the Occurrence:

During shutdown surveillance testing, it was found that SRM (14) was inoperable. Technical Specifications Sec. 3.1.1b (4) requires 3 operable Instrument channels for startup. This LCO was satisfied as the other 3 SRM's were operable.

Apparent Cause of the Occurrence:

_____	Design	_____	Procedure
_____	Manufacture	_____	Unusual Service Condition
_____	Installation/Const.	X	Component Failure
_____	Operator	_____	Other (Specify)

Detector failure

Analysis of Occurrence:

The source range monitor (SRM) system performs no automatic safety function. It does provide the operator with a visual indication of neutron level which is needed for knowledgeable and efficient reactor startup at low neutron levels and it also provides rod withdrawal blocks to the Rod Control System. The results of reactivity accidents are functions of the initial neutron flux. One operable SRM channel would be adequate to monitor the approach to critical using homogeneous patterns of scattered control rods. A minimum of three operatobs SRM's is required as an added conservatism.

Therefore, it can be concluded that one SRM being inoperable would not have prevented the performance of the intended function of the SRM system. Further, no hazard would have been presented to the plant safety or health and welfare of the general public from this event.

Corrective Action:

Detector replaced

Failure Data:

Later

AEC DISTRIBUTION FOR PART 50 DOCKET MATERIAL
(TEMPORARY FORM)

CONTROL NO: 12926

FILE: INCIDENT REPORT

FROM:	DATE OF DOC	DATE REC'D	LTR	TWX	RPT	OTHER
Niagara Mohawk Power Corp. Syracuse, N.Y. 13202 R.R. Schneider	12-19-74	12-23-74	X			

TO:	ORIG	CC	OTHER	
Mr. Karl R. Goller	1 signed	39		SENT AEC PDR XX SENT LOCAL PDR XX

CLASS	UNCLASS	PROP INFO	INPUT	NO CYS REC'D	DOCKET NO:
	XXXX			1	50-220

DESCRIPTION: Ltr trans the following:

ENCLOSURES: Abnormal Occurrence AO-50-220/74-16 on 12-10-74 involving one inoperable IRM (12) in Safety System 11.....

(1 Orig & 39 CC rec'd)

ACKNOWLEDGE

Do Not Remove

PLANT NAME: Nine Mile Pt. Unit 1

FOR ACTION/INFORMATION DHL 12-24-74

BUTLER (S)	SCHWENCER (S)	ZIEMANN (S)	REGAN (E)
W/ Copies	W/ Copies	W/ Copies	W/ Copies
CLARK (S)	STOLZ (S)	DICKER (E)	LEAR (S)
W/ Copies	W/ Copies	W/ Copies	W/ Copies
PARR (S)	VASSALLO (S)	KNIGHTON (E)	SPEIS (S)
W/ Copies	W/ Copies	W/ Copies	W/ Copies
KNIEL (S)	PURPLE (S)	YOUNGBLOOD (E)	
W/ Copies	W/ Copies	W/ Copies	W/ Copies

INTERNAL DISTRIBUTION

REG FILE	TECH REVIEW	DENTON	LIC. ASST.	A/T IND
AEC PDR	SCHROEDER	GRIMES	DIGGS (S)	BRAITMAN
OGC, ROOM P-506-A	MACCARRY	GAMMILL	GEARIN (S)	SALTZMAN
MUNTZING/STAFF	KNIGHT	KASTNER	GOULBOURNE (S)	B. HURT
CASE	PAWLICKI	BALLARD	KREUTZER (E)	
GIAMBUSSO	SHAO	SPANGLER	LEE (S)	PLANS
BOYD	STELLO		MAIGRET (S)	MCDONALD
MOORE (S) (BWR)	HOUSTON	ENVIRO	REED (E)	CHAPMAN
DEYOUNG (S) (PWR)	NOVAK	MULLER	SERVICE (S)	DUBE w/input
SKOVHOLT (S)	ROSS	DICKER	SHEPPARD (S)	E. COUPE
GOLLER (S)	IPPOLITO	KNIGHTON	SLATER (E)	D. THOMPSON (2)
P. COLLINS	TEDESCO	YOUNGBLOOD	SMITH (S)	KLEGKER
DENISE	LONG	REGAN	TEETS (S)	EISENHUT
REG OPR	LAINAS	PROJECT LDR	WILLIAMS (E)	
FILE & REGION (2)	BENAROYA		WILSON (S)	
T.R. WILSON	STEELE	VOLIMER	HARLESS	INGRAM (S)

EXTERNAL DISTRIBUTION

1-LOCAL PDR Oswego, N.Y.	(1)(2)(10)-NATIONAL LABS	1-PDR SAN/LA/NY
1-TIC(ABERNATHY)	1-W. PENNINGTON, RM E-201 G.T.	1-BROOKHAVEN NAT LAB
1-NSIC(BUCHANAN)	1-CONSULTANTS	1-G. ULRIKSON, ORNL
1-ASLB	NEWMARK/BLUME/AGBABIAN	1-AGMED(RUTH GUSSMAN) RM B-127 G.T.
1-NEWTON ANDERSON		1-J. RUNKLES, RM E-201 G.T.
5-ACRS, SENT TO LIC. ASST. S. Teets 12-24-74		

Regulatory File Cy

NIAGARA MOHAWK POWER CORPORATION

NIAGARA MOHAWK

300 ERIE BOULEVARD, WEST
SYRACUSE, N. Y. 13202

December 19, 1974

50-220

DOCKETED USAEC DEC 23 1974 REGULATORY MAIL SECTION DOCKET CLERK DL

Mr. Karl R. Goller
Assistant Director of Operating Reactors
Directorate of Licensing
United States Atomic Energy Commission
Washington, D.C. 20545

Dear Mr. Goller:

In accordance with the Technical Specifications for the Nine Mile Point Nuclear Station, Unit #1, the enclosed Abnormal Occurrance Report (74-16) is being submitted. This is in the accepted format as detailed in Regulatory Guide 1.16, Rev. 1.

Very truly yours,

R.R. Schneider
Vice President
Electric Operations

RECEIVED DEC 23 1974 U.S. ATOMIC ENERGY COMMISSION Regulatory Mail Section

mm

Enc.
REGISTERED MAIL
RETURN RECEIPT REQUEST

12926

Regulatory Cy

NIAGARA MOHAWK POWER CORPORATION

NIAGARA MOHAWK

Received w/Ltr Dated 12-19-74

DATE: December 16, 1974

SUBJECT: Abnormal Occurrence Report No. 50-220 /74-16

The enclosed Abnormal Occurrance Report is being submitted in accordance with Technical Specifications Section 6.

TO: James P. O'Reilly
Directorate of Regulatory Operations
Region 1
631 Park Avenue
King of Prussia, Pennsylvania 19406

FROM: Niagara Mohawk Power Corporation
Nine Mile Point - James A. FitzPatrick Site

P.O. Box #32
Lycoming, New York 13093

Docket 50-220

NIAGARA MOHAWK POWER CORPORATION

NIAGARA MOHAWK

SUBJECT: Abnormal Occurrence 10 Day Letter

REFERENCE: License DPR 17.

Report No.: 50-220/74-16

Report Date: 12/10/74

Occurrence Date: 12/10/74

Facility: NY NMP #1

Identification of Occurrence:

One inoperable IRM (12), in Safety System 11

Conditions Prior to Occurrence:

	Steady State Power		Routine Shutdown
	Hot Standby		
	Cold Shutdown		Load Changes
	Refueling Shutdown		
X	Routine Startup		Other

Description of the Occurrence:

During routine surveillance it was found that IRM (12) was inoperable. Technical Specifications Table 3.6.2a requires 3 operable Instrument Channels per trip system. This LCO was satisfied as the other 3 IRM's in safety system 11 were operable.

Apparent Cause of the Occurrence:

_____	Design	_____	Procedure
_____	Manufacture	_____	Unusual Service Condition
_____	Installation/Const.	X	Component Failure
_____	Operator	_____	Other (Specify)

Cable or detector failure

Analysis of Occurrence:

The IRM system is used to detect and indicate neutron flux level between the source range and the power range instrumentation. Trip signals are provided to the RPS in a one out of two twice logic. It is possible to bypass an inoperative IRM channel from the RPS. The switches for this function are arranged so that only one channel in a safety system bus can be bypassed at one time. The number and locations of the IRM detectors have been analytically and experimentally determined to provide sufficient intermediate range flux level information under the worst permitted bypass or detector failure conditions. A range of rod withdrawal accidents has been analyzed. In the most severe case the reactor is just sub-critical with one fourth of the control rods plus one more rod removed in the normal operating sequence. The error is the removal of the control rod adjacent to the last rod withdrawn. This location is chosen to maximize the distance to the second nearest detector for each RPS trip system. The nearest detector in each trip system is assumed to be bypassed. The rod withdrawal is "seen" and a trip initiated.

Therefore, it can be concluded that one IRM being inoperable would not have prevented the performance of the intended safety function of the IRM system. Further, no hazard would have been presented to the plant safety or health and welfare of the general public from this event.

Corrective Action:

The failure is apparently in either the cable or the detector itself. Therefore, a power reduction and de-inertion of the drywell would be required to repair the IRM. This repair will be undertaken during a refueling shutdown and the nature of repair included in the annual report.

Conclusion:

The IRM will remain bypassed or in a tripped condition until repairs can be made. The LCO Table 3.6.2a is satisfied. Therefore, it is concluded that no hazard is presented to the general public.

AEC DISTRIBUTION FOR PART 50 DOCKET MATERIAL
(TEMPORARY FORM)

CONTROL NO: 12788

FILE: INCIDENT REPORT

FROM:	DATE OF DOC	DATE REC'D	LTR	TWX	RPT	OTHER
Niagara Mohawk Power Corp Syracuse, N.Y. 13202 R.R. Schneider	12-17-74	12-19-74	X			

TO:	ORIG	CC	OTHER	
Mr. Karl R. Goller	1 signed	39		SENT AEC PDR XX SENT LOCAL PDR XX

CLASS	UNCLASS	PROP INFO	INPUT	NO CYS REC'D	DOCKET NO:
	XXXX			40	50-220

DESCRIPTION: Ltr trans the following:

ENCLOSURES: Abnormal Occurrence AO-74-15 on 11-26-74 involving operator error resulting in an inadvertent trip of power board #167...

(1 Orig & 39 CC rec'd)

Do Not Remove

ACKNOWLEDGED

PLANT NAME: Nine Mile Pt. 1

FOR ACTION/INFORMATION DHL 12-21-74

BUTLER (S)	SCHWENCER (S)	ZIEMANN (S)	REGAN (E)
W/ Copies	W/ Copies	W/ Copies	W/ Copies
CLARK (S)	STOLZ (S)	DICKER (E)	✓LEAR (S)
W/ Copies	W/ Copies	W/ Copies	W/4 Copies
PARR (S)	VASSALLO (S)	KNIGHTON (E)	SPEIS (S)
W/ Copies	W/ Copies	W/ Copies	W/ Copies
KNIEL (S)	PURPLE (S)	YOUNGBLOOD (E)	
W/ Copies	W/ Copies	W/ Copies	W/ Copies

INTERNAL DISTRIBUTION

REG FILE	TECH REVIEW	DENTON	LIC. ASST.	A/T IND
AEC PDR	SCHROEDER	GRIMES	DIGGS (S)	BRAITMAN
OGC, ROOM P-506-A	MACCARRY	GAMMILL	GEARIN (S)	SALTZMAN
MUNTZING/STAFF	KNIGHT	KASTNER	GOULBOURNE (S)	B. HURT
CASE	PAWLICKI	BALLARD	KREUTZER (E)	
GIAMBUSSO	SHAO	SPANGLER	LEE (S)	PLANS
BOYD	STELLO		MAIGRET (S)	MCDONALD
MOORE (S) (BWR)	HOUSTON	ENVIRO	REED (E)	CHAPMAN
DEYOUNG (S) (PWR)	NOVAK	MULLER	SERVICE (S)	DUBE w/input
SKOVHOLT (S)	ROSS	DICKER	SHEPPARD (S)	E. COUPE
GOLLER (S)	IPPOLITO	KNIGHTON	SLATER (E)	D. THOMPSON (2)
P. COLLINS	TEDESCO	YOUNGBLOOD	SMITH (S)	KLECKER
DENISE	LONG	REGAN	TEETS (S)	EISENHUT
REG OPR	LAINAS	PROJECT LDR	WILLIAMS (E)	
FILE & REGION (2)	BENAROYA		WILSON (S)	
T.R. WILSON	STEELE	VOLIMER	HARLESS	INGRAM (S)

EXTERNAL DISTRIBUTION

1-LOCAL PDR Oswego, N.Y.	(1)(2)(10)-NATIONAL LABS	1-PDR SAN/LA/NY
1-TIC(ABERNATHY)	1-W. PENNINGTON, RM E-201 G.T.	1-BROOKHAVEN NAT LAB
1-NSIC(BUCHANAN)	1-CONSULTANTS	1-G. ULRIKSON, ORNL
1-ASLB	NEWMARK/BLUME/AGBABIAN	1-AGMED(RUTH GUSSMAN) RM B-127 G.T.
1-NEWTON ANDERSON		1-J. RUNKLES, RM E-201 G.T.
5-ACRS SENT TO LIC. ASST. S. Teets 12-21-74		

Regulatory File Cy.

NIAGARA MOHAWK POWER CORPORATION

NIAGARA MOHAWK

300 ERIE BOULEVARD, WEST
SYRACUSE, N. Y. 13202

50-220

December 17, 1974

DOCKETED USNRC DEC 19 1974 REGULATORY MAIL SECTION DOCKET CLERK

Mr. Karl R. Goller
Assistant Director of Operating Reactors
Directorate of Licensing
United States Atomic Energy Commission
Washington, D.C. 20545

Dear Mr. Goller:

In accordance with the Technical Specifications for the Nine Mile Point Nuclear Station, Unit #1, the enclosed Abnormal Occurrance Report (74-15) is being submitted. This is in the accepted format as detailed in Regulatory Guide 1.16, Rev. 1.

Very truly yours,

R.R. Schneider

R.R. Schneider
Vice President
Electric Operations

mm

Enc.

RECEIVED DEC 19 1974 U.S. ATOMIC ENERGY COMMISSION Regulatory Mail Section

12788

[illegible]

Regulatory File Cy.

NIAGARA MOHAWK POWER CORPORATION

NIAGARA MOHAWK

Received w/Ltr Dated 12-17-74

DATE: December 17, 1974

SUBJECT: Abnormal Occurrence Report No. 50-220 /74-15

The enclosed Abnormal Occurrence Report is being submitted in accordance with Technical Specifications Section 6.

TO: James P. O'Reilly
Directorate of Regulatory Operations
Region 1
631 Park Avenue
King of Prussia, Pennsylvania 19406

FROM: Niagara Mohawk Power Corporation
Nine Mile Point P

P.O. Box #32
Lycoming, New York 13093

Docket 50-220

Regulatory File Cy.

NIAGARA MOHAWK POWER CORPORATION

NIAGARA MOHAWK

SUBJECT: Abnormal Occurrence 10 Day Letter

REFERENCE: License DPR 17.

Report No.: 50-220 /74-15

Report Date: 12/5/74

Occurrence Date: 11/26/74

Facility: NY NMP #1

Identification of Occurrence:

An operator error resulting in an inadvertent trip of power board #167

Conditions Prior to Occurrence:

X	Steady State Power		Routine Shutdown
	Hot Standby		
	Cold Shutdown		Load Changes
	Refueling Shutdown		
	Routine Startup		Other

1708 MWt 580 MWe

Description of the Occurrence:

During a process of Marking up MG Set #167 the operator inadvertently tripped the supply breaker for power board #167. This power board supplies certain components of the ECCS system with motive valve energy as well as indicating lights for valve position. This event was discovered during a weekly management review of plant operations and further reviewed during a SORC meeting to determine the significance of this event. The powerboard was de-energized for 15 minutes.

Apparent Cause of the Occurrence:

_____	Design	_____	Procedure
_____	Manufacture	_____	Unusual Service Condition
_____	Installation/Const.	_____	Component Failure
X	Operator	_____	Other (Specify)

Analysis of Occurrence:

All redundant components in the ECCS system were in an operable condition and therefore, no hazard would be presented to the general public.

Corrective Action:

The operator has been warned that procedures and orders must be carefully followed. This will be followed up in training sessions for all operators.

Failure Data:

N/A

AEC DISTRIBUTION FOR PART 50 DOCKET MATERIAL
(TEMPORARY FORM)

CONTROL NO: 12750

FILE: INCIDENT REPORT

FROM: Niagara Mohawk Power Corp. Lycoming, N.Y. 13093	DATE OF DOC 12-10-74	DATE REC'D 12-18-74	LTR X	TWX	RPT	OTHER
TO: Mr. J.P. O'Reilly	ORIG	CC 1	OTHER	SENT AEC PDR XX SENT LOCAL PDR XX		
CLASS	UNCLASS XXXX	PROP INFO	INPUT	NO CYS REC'D 1	DOCKET NO: 50-220	

DESCRIPTION: Ltr trans the following:

ENCLOSURES: Abnormal Occurrence AO-50-220/74-16 on 12-10-74 involving one inoperable IRM (12) in Safety System II....

(1 cy encl rec'd)

ACKNOWLEDGED
Do Not Remove

PLANT NAME: Nine Mile Pt. Unit 1

FOR ACTION/INFORMATION DHL 12-23-74

BUTLER (S) W/ Copies	SCHWENCER (S) W/ Copies	ZIEMANN (S) W/ Copies	REGAN (E) W/ Copies
CLARK (S) W/ Copies	STOLZ (S) W/ Copies	DICKER (E) W/ Copies	LEAR (S) W/4 Copies
PARR (S) W/ Copies	VASSALLO (S) W/ Copies	KNIGHTON (E) W/ Copies	SPEIS (S) W/ Copies
KNIEL (S) W/ Copies	PURPLE (S) W/ Copies	YOUNGBLOOD (E) W/ Copies	W/ Copies

INTERNAL DISTRIBUTION

REG FILE	TECH REVIEW	DENTON	LIC. ASST.	A/T IND
AEC PDR	SCHROEDER	GRIMES	DIGGS (S)	BRAITMAN
OGC, ROOM P-506-A	MACCARRY	GAMMILL	GEARIN (S)	SALTZMAN
MUNTZING/STAFF	KNIGHT	KASTNER	GOULBOURNE (S)	B. HURT
CASE	PAWLICKI	BALLARD	KREUTZER (E)	
GIAMBUSSO	SHAO	SPANGLER	LEE (S)	PLANS
BOYD	STELLO		MAIGRET (S)	MCDONALD
MOORE (S) (BWR)	HOUSTON	ENVIRO	REED (E)	CHAPMAN
DEYOUNG (S) (PWR)	NOVAK	MULLER	SERVICE (S)	DUBE w/input
SKOVHOLT (S)	ROSS	DICKER	SHEPPARD (S)	E. COUPE
GOLLER (S)	IPPOLITO	KNIGHTON	SLATER (E)	D. THOMPSON (2)
P. COLLINS	TEDESCO	YOUNGBLOOD	SMITH (S)	KLECKER
DENISE	LONG	REGAN	TEETS (S)	EISENHUT
REG OPR	LAINAS	PROJECT LDR	WILLIAMS (E)	
FILE & REGION (2)	BENAROYA		WILSON (S)	
T.R. WILSON	STEELE	VOLIMER	INGRAM (S)	
		HARLESS		

EXTERNAL DISTRIBUTION

1-LOCAL PDR Oswego, N.Y.	(1)(2)(10)-NATIONAL LABS	1-PDR SAN/LA/NY
1-TIC(ABERNATHY)	1-W. PENNINGTON, RM E-201 G.T.	1-BROOKHAVEN NAT LAB
1-NSIC(BUCHANAN)	1-CONSULTANTS NEWMARK/BLUME/AGBABIAN	1-G. ULRIKSON, ORNL
1-ASLB		1-AGMED(RUTH GUSSMAN) RM B-127 G.T.
1-NEWTON ANDERSON		1-J. RUNKLES, RM E-201 G.T.
5-ACRS SENT TO LIC. ASST. S. Teets 12-23-74		

NIAGARA MOHAWK POWER CORPORATION

NIAGARA MOHAWK

DATE: December 10, 1974

SUBJECT: Abnormal Occurrence Report No. 50-220 /74-16

The enclosed preliminary AOR is being submitted in accordance with Technical Specifications Section 6.

TO: James P. O'Reilly
Directorate of Regulatory Operations
Region I
631 Park Avenue
King of Prussia, Pennsylvania 19406

FROM: Niagara Mohawk Power Corporation
Nine Mile Point - James A. FitzPatrick Site

P.O. Box #32
Lycoming, New York 13093

Docket 50-220

12750

NIAGARA MOHAWK POWER CORPORATION

NIAGARA MOHAWK

Received Notice on 12-10-74

SUBJECT: Abnormal Occurrence 24 hour Notification

Confirming Mr. T. Perkins phone conversation with Mr. T. Shedlosky AEC RO:I office on 12/10/74.

REFERENCE: License DPR 17.

Report No.: 50-220 /74-16

Report Date: 12/10/74

Occurrence Date: 12/10/74

Facility: NY NMP #1

Identification of Occurrence:

One inoperable IRM (12), in Safety System II

Conditions Prior to Occurrence:

	Steady State Power		Routine Shutdown
	Hot Standby		
	Cold Shutdown		Load Changes
	Refueling Shutdown		
X	Routine Startup		Other

Description of the Occurrence:

During routine surveillance it was found that IRM (12) was inoperable. Technical Specifications Table 3.6.2a requires 3 operable Instrument channels per trip system. This LCO was satisfied as the other 3 IRM's in safety system II were operable.

Apparent Cause of the Occurrence:

_____	Design	_____	Procedure
_____	Manufacture	_____	Unusual Service Condition
_____	Installation/Const.	X	Component Failure
_____	Operator	_____	Other (Specify)

Cable or detector failure.

Analysis of Occurrence:

The IRM System is used to detect and indicate neutron flux level between the source range and the power range instrumentation. Trip signals are provided to the RPS in a one out of two twice logic. It is possible to bypass an inoperative IRM channel from the RPS. The switches for this function are arranged so that only one channel in a safety system bus can be bypassed at one time. The number and locations of the IRM detectors have been analytically and experimentally determined to provide sufficient intermediate range flux level information under the worst permitted bypass or detector failure conditions. A range of rod withdrawal accidents has been analyzed. In the most severe case the reactor is just sub-critical with one fourth of the control rods plus one more rod removed in the normal operating sequence. The error is the removal of the control rod adjacent to the last rod withdrawn. This location is chosen to maximize the distance to the second nearest detector for each RPS trip system. The nearest detector in each trip system is assumed to be bypassed. The rod withdrawal is "seen" and a trip initiated.

Therefore, it can be concluded that one IRM being inoperable would not have prevented the performance of the intended safety function of the IRM system. Further, no hazard would have been presented to the plant safety or health and welfare of the general public from this event.

Corrective Action:

Later

Failure Data:

Later

AEC DISTRIBUTION FOR PART 50 DOCKET MATERIAL
(TEMPORARY FORM)

CONTROL NO: 12527

FILE: INCIDENT REPORT

FROM:	DATE OF DOC	DATE REC'D	LTR	TWX	RPT	OTHER
Niagara Mohawk Power Corp. Syracuse, N.Y. 13202 R.R. Schneider	12-10-74	12-12-74	X			

TO:	ORIG	CC	OTHER	
Mr. Karl Goller	1 signed			SENT AEC PDR XX SENT LOCAL PDR XX

CLASS	UNCLASS	PROP INFO	INPUT	NO CYS REC'D	DOCKET NO:
	XXXX			1	50-220

DESCRIPTION: Ltr trans the following:

ENCLOSURES: Unusual Event on 11-10-74 involving calcualations of fuel channel deflections indicate an increase in core bypass flow over that assumed on the original design..

(1 cy encl rec'd)

Do Not Remove

ACKNOWLEDGED

PLANT NAME: Nine Mile Pt. Unit 1

FOR ACTION/INFORMATION DHL 12-13-74

BUTLER (S)	SCHWENCER (S)	ZIEMANN (S)	REGAN (E)
W/ Copies	W/ Copies	W/ Copies	W/ Copies
CLARK (S)	STOLZ (S)	DICKER (E)	✓LEAR (S)
W/ Copies	W/ Copies	W/ Copies	W/ 4 Copies
PARR (S)	VASSALLO (S)	KNIGHTON (E)	SPEIS (S)
W/ Copies	W/ Copies	W/ Copies	W/ Copies
KNIEL (S)	PURPLE (S)	YOUNGBLOOD (E)	
W/ Copies	W/ Copies	W/ Copies	W/ Copies

INTERNAL DISTRIBUTION

REG FILE	TECH REVIEW	DENTON	LIC. ASST.	A/T IND
AEC PDR	SCHROEDER	GRIMES	DIGGS (S)	BRAITMAN
OGC, ROOM P-506-A	MACCARRY	GAMMILL	GEARIN (S)	SALTZMAN
MUNTZING/STAFF	KNIGHT	KASTNER	GOULBOURNE (S)	B. HURT
CASE	PAWLICKI	BALLARD	KREUTZER (E)	
GIAMBUSSO	SHAO	SPANGLER	LEE (S)	PLANS
BOYD	STELLO		MAIGRET (S)	MCDONALD
MOORE (S) (BWR)	HOUSTON	ENVIRO	REED (E)	CHAPMAN
DEYOUNG (S) (PWR)	NOVAK	MULLER	SERVICE (S)	DUBE w/input
SKOVHOLT (S)	ROSS	DICKER	SHEPPARD (S)	E. COUPE
GOLLER (S)	IPPOLITO	KNIGHTON	SLATER (E)	D. THOMPSON (2)
P. COLLINS	TEDESCO	YOUNGBLOOD	SMITH (S)	KLECKER
DENISE	LONG	REGAN	TEETS (S)	EISENHUT
REG OPR	LAINAS	PROJECT LDR	WILLIAMS (E)	
FILE & REGION (2)	BENAROYA		WILSON (S)	
T.R. WILSON	STEELE	VOLIMER	HARLESS	INGRAM (S)

EXTERNAL DISTRIBUTION

1-LOCAL PDR Oswego, N.Y.	(1)(2)(10)-NATIONAL LABS	1-PDR SAN/LA/NY
1-TIC(ABERNATHY)	1-W. PENNINGTON, RM E-201 G.T.	1-BROOKHAVEN NAT LAB
1-NSIC(BUCHANAN)	1-CONSULTANTS	1-G. ULRIKSON, ORNL
1-ASLB	NEWMARK/BLUME/AGBABIAN	1-AGMED(RUTH GUSSMAN) RM B-127 G.T.
1-NEWTON ANDERSON		1-J. RUNKLES, RM E-201 G.T.
5-ACRS SENT TO LIC. ASST. S. Teets 12-13-74		

50-220

NIAGARA MOHAWK POWER CORPORATION

NIAGARA MOHAWK

300 ERIE BOULEVARD, WEST
SYRACUSE, N. Y. 13202

RECEIVED DEC 12 1974 U.S. ATOMIC ENERGY COMMISSION Correspondence Mail Section

Regulatory File Cy.

December 10, 1974

DOCKETED USAEC DEC 12 1974 REGULATORY MAIL SECTION DOCKET CLERK DL

Mr. Karl R. Goller
Assistant Director of Operating Reactors
Directorate of Licensing
U.S. Atomic Energy Commission
Washington, D.C. 20545

Dear Mr. Goller:

In accordance with the Technical Specifications for the Nine Mile Point Nuclear Station Unit #1, the enclosed Unusual Event is being submitted. This is in the accepted format as detailed in Regulatory Guide 1.16, Rev. 1.

Very truly yours,

R.R. Schneider
Vice President
Electric Operations

TJD/mm

Enc.

12527

NIAGARA MOHAWK POWER CORPORATION

NIAGARA MOHAWK

NINE MILE POINT NUCLEAR PLANT

Received w/Ltr Dated 12-10-74

UNUSUAL EVENT

1. Docket No. 50-220 DPR-17

2a. Date December 10, 1974

2b. Occurrence Date November 10, 1974

3. Facility NY NMP #1

4. Identification of Occurrence

Nine Mile Point Unit 1 has been informed by General Electric Co., our fuel supplier, that their calculations of fuel channel deflections indicate an increase in core bypass flow over that assumed on the original design.

5. Conditions of Plant

The reactor is presently 2200 MWD/ST into the operating cycle with a targeted cycle exposure potential of 5500 MWD/ST.

6. Description of Occurrence

Nine Mile Point Unit #1 has had a channel measuring and evaluation program for the past several years. Primarily the interested channel deflections are (1) elastic deflection due to differential pressure across the channel wall and (2) permanent deflection due to relaxation of fabricated stresses and inservice creep of irradiated zircalog.

These deflections could potentially cause three problems: (1) an increase in core leakage flow (less water flow thru the fuel assembly) (2) less clearance between the channel and the control rod (control rod interference) (3) less clearance between the corner fuel rod and the inside channel wall. The results of the studies and measurements indicated no control rod interference or corner rod to channel decrease clearance. The channel deflection study did show that an increase in bypass leakage flow has occurred. This concurs with a letter from Mr. J.A. Hinds (G.E. Co.) to the Atomic Energy Commission dated November 28, 1973. In this letter, it was stated that the major effect of channel deformation is a decrease in in-channel flow.

7. Analysis and Corrective Action

Changes in core bypass flow only slightly affect the void coefficient and operational transient analyses. Because a boundary analysis approach was taken in performing the transient analysis, the affects of increased core bypass flow are well within the applicability of the transient analyses and will remain so throughout this cycle. In the future, channels will be replaced on an accelerated schedule and finger springs will be used on reload fuel to control leakage.

The thermal margins during normal operation will be maintained. Minimum critical heat flux ratio will be maintained above 1.9 for all fuel and the minimum critical power racks will be maintained above 1.24 and 1.29 for 7x7 and 8x8 fuel respectively. Conservative adjustments will be applied to our calculational procedures to account for reductions in in-channel flow.

The locus of operating conditions for which the most limiting rod has a minimum critical heat flux ratio equal to 1.0 as described by Figure 2.1.1 of the Technical Specifications is essentially uneffected. That curve assumes an initial MCHFR of 1.9 at rated power and total core flow conditions. Because the reduction in in-channel flow is accounted for in the calculations of operation conditions, the initial MCHFR reamins at 1.9 (rated power and core flow) and the effect on the safety limit line is insignificant.

Another potential effect of channel bowing is the possibility of fuel channel-control rod interference. Any interference would be gradual and channels will be replaced well before any expected problems. Scram times and other parameters will be monitored to detect any onset of fuel channel-control rod interference.

DR Central File

NIAGARA MOHAWK POWER CORPORATION

NIAGARA MOHAWK

DATE: December 4, 1974

SUBJECT: Abnormal Occurrence Report No. 50-220/74-15

The enclosed preliminary AOR is being submitted in accordance with Technical Specifications Section 6.

TO: James P. O'Reilly
Directorate of Regulatory Operations
Region 1
631 Park Avenue
King of Prussia, Pennsylvania 19406

FROM: Niagara Mohawk Power Corporation
Nine Mile Point - James A. FitzPatrick Site

P.O. Box 632
Lycoming, New York 13093

Docket 50-220

NIAGARA MOHAWK POWER CORPORATION

NIAGARA MOHAWK

SUBJECT: Abnormal Occurrence 24 hour Notification

Confirming Mr. C.L. Stuart phone conversation with Mr. T. Shedlosky ABC RO:I office on 12/4/74.

REFERENCE: License DPR 17.

Report No.: 50- 220 /74- 15

Report Date: 12/5/74

Occurrence Date: 11/26/74

Facility: NY NMP # 1

Identification of Occurrence:

On operator error resulting in an inadvertant trip of power board #167

Conditions Prior to Occurrence:

X	Steady State Power		Routine Shutdown
	Hot Standby		
	Cold Shutdown		Load Changes
	Refueling Shutdown		
	Routine Startup		Other

1700 MWt 500 MWe

Description of the Occurrence:

During a process of "Marking Up" MG Set #167 the operator inadvertantly tripped the supply breaker for power board 167. This power board supplies certain components of the ECCS system with motive valve-energy as well as indicating lights for valve position. This event was discovered during a weekly management review of plant operations and further reviewed during a SORC meeting to determine the significance of this event. The powerboard was de-energized for 15 minutes.

Apparent Cause of the Occurrence:

_____	Design	_____	Procedure
_____	Manufacture	_____	Unusual Service Condition
_____	Installation/Const.	_____	Component Failure
X	Operator	_____	Other (Specify)

Analysis of Occurrence:

All redundant components in the ECCS system were in an operable condition and therefore, no hazard would be presented to the general public.

Corrective Action:

The operator has been warned that procedures and orders must be carefully followed. This will be followed up in training sessions for all operators.

Failure Data:

N/A

AEC DISTRIBUTION FOR PART 50 DOCKET MATERIAL
(TEMPORARY FORM)

CONTROL NO: 12148

FILE:

FROM:	DATE OF DOC	DATE REC'D	LTR	TWX	RPT	OTHER
Niagara Mohawk Power Corp. Syracuse, N.Y. 13202 R.R. Schneider	11-27-74	11-29-74	X			

TO:	ORIG	CC	OTHER	
Mr. Donald J. Skovholt	1 signed	39		SENT AEC PDR XX SENT LOCAL PDR XX

CLASS	UNCLASS	PROP INFO	INPUT	NO CYS REC'D	DOCKET NO:
	XXX			40	50-220

DESCRIPTION: Ltr trans the following:

ENCLOSURES: Abnormal Occurrence 50-220/74-14 which occurred on 11-20-74 involving failure to perform required surveillance frequency on battery tests.....

Do Not Remove

(40 cys encl rec'd) ACKNOWLEDGED

PLANT NAME: Nine Mile Pt. Unit 1

FOR ACTION/INFORMATION DHL 11-30-74

BUTLER (L)	SCHWENCER (L)	ZIEMANN (L)	REGAN (E)
W/ Copies	W/ Copies	W/ Copies	W/ Copies
CLARK (L)	STOLZ (L)	DICKER (E)	LEAR (L)
W/ Copies	W/ Copies	W/ Copies	W/ Copies
PARR (L)	VASSALLO (L)	KNIGHTON (E)	
W/ Copies	W/ Copies	W/ Copies	W/ Copies
KNIEL (L)	PURPLE (L)	YOUNGBLOOD (E)	
W/ Copies	W/ Copies	W/ Copies	W/ Copies

INTERNAL DISTRIBUTION

REG FILE	TECH REVIEW	DENTON	LIC ASST	A/T IND
AEC PDR	SCHROEDER	GRIMES		BRAITMAN
OGC, ROOM P-506A	MACCARY	GAMMILL	DIGGS (L)	SALTZMAN
MUNTZING/STAFF	KNIGHT	KASTNER	GEARIN (L)	B. HURT
CASE	PAWLICKI	BALLARD	GOULBOURNE (L)	
GIAMBUSSO	SHAO	SPANGLER	KREUTZER (E)	PLANS
BOYD	STELLO		LEE (L)	MCDONALD
MOORE (L) (BWR)	HOUSTON	ENVIRO	MAIGRET (L)	CHAPMAN
DEYOUNG (L) (PWR)	NOVAK	MULLER	REED (E)	DUBE w/input
SKOVHOLT (L)	ROSS	DICKER	SERVICE (L)	E. COUPE
GOLLER (L)	PROLITO	KNIGHTON	SHEPPARD (L)	
P. COLLINS	TEDESCO	YOUNGBLOOD	SLATER (E)	THOMPSON (2)
DENISE	LONG	REGAN	SMITH (L)	KLECKER
REG OPR	VAINAS	PROJECT LDR	TEETS (L)	EISENHUT
FILE & REGION (3)	BENAROYA		WILLIAMS (E)	
MORRIS	VOLLMER	HARLESS	WILSON (L)	
STEELE				

EXTERNAL DISTRIBUTION

1 – LOCAL PDR Oswego, N.Y.
1 – TIC (ABERNATHY)
1 – NSIC (BUCHANAN)
1 – ASLB
1 – Newton Anderson
16 – ACRS HOLDING

(1)(2)(10) – NATIONAL LABS
1 – ASLBP(E/W Bldg, Rm 529)
1 – W. PENNINGTON, Rm E-201 GT
1 – B&M SWINEBROAD, Rm E-201 GT
1 – CONSULTANTS
NEWMARK/BLUME/AGBABIAN

1 – PDR SAN/LA/NY
1 – BROOKHAVEN NAT LAB
1 – G. ULRIKSON, ORNL
1 – AGMED (RUTH GUSSMAN) Rm B-127 GT
1 – R. D. MUELLER, Rm E-201 GT

5 Sent to Lic Asst. S. TEETS 11-30-74

NIAGARA MOHAWK POWER CORPORATION

NIAGARA MOHAWK

300 ERIE BOULEVARD, WEST
SYRACUSE, N. Y. 13202

Regulatory File Cy.

November 27, 2974

50-220

Mr. Donald J. Skovholt
Assistant Director for Reactor Operations
Division of Reactor Licensing
United States Atomic Energy Commission
Washington, D.C. 20545

Dear Mr. Skovholt:

In accordance with the Technical Specifications for the Nine Mile Point Nuclear Station, Unit #1, the enclosed Abnormal Occurrence is submitted. The report is in the format detailed in Regulatory Guide 1.16 Rev. 1.

Very truly yours,

R.R. Schneider
Vice President
Electric Operations

TJD/mm

Enc.

12148

NIAGARA MOHAWK POWER CORPORATION

NIAGARA MOHAWK

NINE MILE POINT - J.A. FITZPATRICK

1. Report No. 50-220/74-14

2a. Date November 21, 1974

2b. Occurrence Date November 20, 1974

3. Facility NY NMP # 1

4. Identification of Occurrence

Failure to perform required surveillance frequency on battery tests. Specification 4.6.3b.

5. Condition Prior to Occurrence

During the period the unit was operated at a peak load of 1830 mwt, this load was maintained until October when a pattern swap at low power was completed and reactor power decreased to 0.

6. Description of Occurrence

During management review of monthly surveillance tests, it was found that the station batteries were not tested as required by specification 4.6.3b. (Specific gravity of each cell on monthly basis). The October readings were taken on November 5, the July readings on August 1 and the September readings on October 2. The maximum time between tests occurred between 8/26 and 10/2, 37 days.

7. Designation of Apparent Cause of the Occurrence

Misinterpretation of the requirements as related by Operations Department to the Maintenance Department.

8. Analysis of Occurrence

The station battery, two independent systems, is used as a power source for breaker operation and instrumentation and control. Certain plant emergency systems (lighting, bearing oil pumps, etc.) are powered from the battery, in the event of loss of AC power. The battery, therefore, could prevent serious equipment damage and excessive maintenance. The monthly checks of the battery are provided to assure that all cells will satisfactorily handle full-rated current if necessary. By extending the surveillance frequency to 37 days in one case does not reduce the capability of the system to function as required, however, it does complicate the process of logically determining whether or not a trendable discharge is in progress. Pilot cells are checked each day and the battery is floating across a battery charger which would maintain the battery in full readiness.

8. Continued

During review of the test no degradation of the cells was noted, therefore, no hazard would have been presented the general public.

9. Corrective Action

The maintenance foreman was notified of the requirement for monthly tests. In addition, management controls in this area of surveillance testing are being reviewed and methods are being evaluated. A change will be made to assure that this event does not happen again.

10. N/A

D R Central Files

NIAGARA MOHAWK POWER CORPORATION

NIAGARA MOHAWK

NINE MILE POINT - J.A. FITZPATRICK

1. Report No. 50-220/74-14

2a. Date 11-21-74

2b. Occurrence Date 11-20-74

3. Facility NY NMP 01

4. Identification of Occurrence

Failure to perform required surveillance frequency on battery tests. Specification 4.6.5b.

5. Condition Prior to Occurrence

During the period the unit was operated at a peak load of 1050 mwt, this load was maintained until October when a pattern swap at low power was completed and reactor power decreased to 0.

6. Description of Occurrence

During management review of monthly surveillance tests, it was found that the station batteries were not tested as required by specification 4.6.5b. (Specific gravity of each cell on monthly basis). The October readings were taken on November 5, the July readings on 1 August and the September readings on October 2. The maximum time between tests occurred between 8/26 and 10/2, 37 days.

7. Designation of Apparent Cause of the Occurrence

Misinterpretation of the requirements as related by Operations department to the Maintenance department.

8. Analysis of Occurrence

A,O,4

The station battery, two independent systems, is used as a power source for breaker operation and instrumentation and control. Certain plant emergency systems (lighting, bearing oil pumps, etc.) are powered from the battery, in the event of loss of AC power. The battery, therefore, could prevent serious equipment damage and excessive maintenance. The monthly checks of the battery are provided to assure that all cells will satisfactorily handle full-rated current if necessary. By extending the surveillance frequency to 37 days in one case does not reduce the capability of the system to function as required, however, it does complicate the process of logically determining whether or not a trendable discharge is in progress. Pilot cells are checked each day and the battery is floating across a battery charger which would maintain the battery in full readiness. During review of the test no degradation of the cells was noted, therefore, no hazard would have been presented to the general public.

Jwp

9. Corrective Action.

The maintenance foreman was notified of the requirement for monthly tests. In addition, management controls in this area of surveillance testing are being reviewed and methods are being evaluated. A change will be made to assure that this event does not happen again.

10. N/A

AEC DISTRIBUTION FOR PART 50 DOCKET MATERIAL
(TEMPORARY FORM)

CONTROL NO: 11261

FILE:

FROM:	DATE OF DOC	DATE REC'D	LTR	TWX	RPT	OTHER
Niagara Mohawk Power Corp Syracuse, N.Y. R.R.Schneider	10-31-74	11-4-74	xxx			

TO:	ORIG	CC	OTHER	
Mr. Donald J. Skovholt	1-signed			SENT AEC PDR xxxxxxxxxxx SENT LOCAL PDR xxxxxxx

CLASS	UNCLASS	PROP INFO	INPUT	NO CYS REC'D	DOCKET NO:
	xxxxxxxx				50-220

DESCRIPTION:

Ltr Trans the Following:

ACKNOWLEDGED
DO NOT REMOVE

PLANT NAME: Nine Mile Point Unit #1

ENCLOSURES:

Abnormal Occurrence on 10-1-74 concerning Variance from preformance specifications contained in the Tech-Specs.....

FOR ACTION/INFORMATION 11-7-74 JGB

BUTLER (L) W/ Copies	SCHWENCER (L) W/ Copies	ZIEMANN (L) W/ Copies	REGAN (E) W/ Copies
CLARK (L) W/ Copies	STOLZ (L) W/ Copies	DICKER (E) W/ Copies	✓ LEAR (L) W/4 Copies
PARR (L) W/ Copies	VASSALLO (L) W/ Copies	KNIGHTON (E) W/ Copies	W/ Copies
KNIEL (L) W/ Copies	PURPLE (L) W/ Copies	YOUNGBLOOD (E) W/ Copies	W/ Copies

INTERNAL DISTRIBUTION

✓ REG FILE	TECH REVIEW	DENTON	LIC ASST	A/T IND
✓ AEC PDR		GRIMES		BRAITMAN
✓ OGC, ROOM P-506A	✓ SCHROEDER	GAMMILL	DIGGS (L)	SALTZMAN
✓ MUNTZING/STAFF	✓ MACCARY	KASTNER	GEARIN (L)	B. HURT
✓ CASE	✓ KNIGHT	BALLARD	GOULBOURNE (L)	
GIAMBUSSO	✓ PAWLICKI	SPANGLER	KREUTZER (E)	PLANS
BOYD	✓ SHAO		LEE (L)	MCDONALD
MOORE (L) (BWR)	✓ STELLO	ENVIRO	MAIGRET (L)	CHAPMAN
DEYOUNG (L) (PWR)	✓ HOUSTON	MULLER	REED (E)	DUBE w/input
SKOVHOLT (L)	✓ NOVAK	DICKER	SERVICE (L)	E. COUPE
✓ GOLLER (L)	✓ ROSS	KNIGHTON	SHEPPARD (L)	
P. COLLINS	✓ IPPOLITO	YOUNGBLOOD	SLATER (E)	✓ D. THOMPSON (2)
DENISE	TEDESCO	REGAN	SMITH (L)	✓ KLECKER
✓ REG OPR	✓ LONG	PROJECT LDR	✓ TEETS (L)	✓ EISENHUT
FILE & REGION (3)	✓ LAINAS		WILLIAMS (E)	
✓ MORRIS	✓ BENAROYA	HARLESS	WILSON (L)	
✓ STEELE	✓ VOLIMER			

EXTERNAL DISTRIBUTION

✓ 1 – LOCAL PDR Oswego, N.Y.		
✓ 1 – TIC (ABERNATHY)	(1)(2)(10) – NATIONAL LABS	1 – PDR-SAN/LA/NY
✓ 1 – NSIC (BUCHANAN)	1 – ASLBP(E/W Bldg, Rm 529)	1 – BROOKHAVEN NAT LAB
1 – ASLB	1 – W. PENNINGTON, Rm E-201 GT	1 – G. ULRIKSON, ORNL
1 – Newton Anderson	1 – B&M SWINEBROAD, Rm E-201 GT	1 – AGMED (RUTH GUSSMAN) Rm B-127 GT
✓ 15 – ACRS ~~HOLDING~~	1 – CONSULTANTS NEWMARK/BLUME/AGBABIAN	1 – R. D. MUELLER, Rm E-201 GT

NIAGARA MOHAWK POWER CORPORATION

NIAGARA MOHAWK

300 ERIE BOULEVARD, WEST
SYRACUSE, N. Y. 13202

October 31, 1974

Regulatory File Cy.

Mr. Donald J. Skovholt
Assistant Director for Reactor Operations
Division of Reactor Licensing
United States Atomic Energy Commission
Washington, D.C. 20545

50-220

Dear Mr. Skovholt:

In accordance with Technical Specifications for Nine Mile Point Unit 1, the enclosed Unusual Event Report is submitted. This report is in accordance with the format set forth in Regulatory Guideline 1.16.

Very truly yours,

R.R. Schneider
Vice President -
Electric Operations

TJD/MM
Enc.

registered mail
return receipt requested

11261

UNUSUAL EVENT REPORT

1. Report No. — Unusual Event

2a. Date — October 30, 1974

2b. Occurrence Date — October 1, 1974

3. Facility — Nine Mile Point Unit #1

4. Identification of Occurrence

Variance from performance specifications contained in the Technical Specifications.

5. Condition Prior to Occurrence

Unit steady state 97%-98% power.

6. Description of Occurrence

During testing on the containment spray raw water pumps, it was revealed that the installed, as built design, for flow measurement was not adequate to determine performance as established in the Technical Specifications.

The existing flow instrumentation ranges from 0 to 150,000 lbs/hr (0-3000 gpm). During surveillance testing the indicated flow has generally indicated greater than the 150,000 lb/hr upper point, or off scale. Testing was then conducted, over and above surveillance requirements, to establish a reasonable range for the instrumentation in which the indicated flow would not exceed the upper readable point. During this testing, it was discovered that the precision required for system performance as established in the Technical Specifications could not be obtained on the flow measurements. This is due to the piping design of the system which does not permit the flow orifice to determine, within required accuracy, the raw flow parameter. Thus correlation to the certified pump curve cannot be made with both the Total Developed Head (TDH) and pump flow.

The acceptable performance of the system as documented by the Final Safety Analysis Report (FSAR), requires a system flow of 3000 gpm and a minimum pressure on the raw water side of the heat exchanger of 160 psig. A variance, therefore, exists between the Technical Specifications and the FSAR. This is an Unusual Event as defined in Technical Specification 6.6.b(2)b.

7. Designation of Apparent Cause of the Occurrence

Inability to adequately determine Laboratory pump curve flow at design TDH in the Station.

8. Analysis of Occurrence

Inspection of the vertical pump shows no unusual or unexpected condition. The shutoff head as measured compares favorably with the pump curve. The containment spray raw water system is a 400% redundant system designed to maintain containment spray water temperature no greater than 140 F under the most limiting operating conditions. A flow rate of 3000 gpm is used in the supporting safety analysis (FSAR) to maintain this temperature. A requirement to obtain a greater pressure on the raw water side of the heat exchanger is provided to maintain any leakage flow into the containment system. As indicated in the Safety Analysis (FSAR Vol. I VII-22), the containment side of the heat exchangers will operate at 123 psig, including containment pressure, under accident conditions. The design raw water side operating pressure is 160 psig. Presently, the raw water side operates at 180-185 psig with a pump total discharge head of 540 feet of water. This is considerably more than required.

9. Corrective Action

Each of the four (4) pumps were tested in accordance with the Hydraulic Institute Standard requirements before shipment from the factory in July 1969 and met or exceeded the specified design performance. During the course of the in-plant investigation it was decided to open up one of the pumps for inspection. This inspection revealed that little if any wear could be observed, or in other words the pump appeared to be in near new condition. This fact is further substantiated by operating reports that indicate total operating time on each pump since their original installation is less than 25 hours.

Because of the fact that these pumps did meet or exceed their design performance at the factory, have total operating time of less than 25 hours and recent inspection indicated like new condition, it is concluded that were the pumps subjected to a new test conducted in accord with the Hydraulic Institute Standards that they would meet their specified design performance.

Therefore, based on the above conclusion, the flow through each of the pumps will be adjusted such that the corrected TDH is 540 ft. of water. When operating at this TDH, the flow meter indication will be adjusted to read 3000 gpm. This activity will in effect calibrate the orifice plate and give a very accurate flow indication for that range of flows.

9. Continued

In addition, the performance specification as defined in the bases of the Technical Specification will be rewritten reflecting the safety analysis as presented in the FSAR. This change will rectify the existing variance. This change will be reviewed by the Safety Review and Audit Board at their next regular meeting and submitted in accordance with Section 6 of the Techncial Specifications. The change will reflect a requirement to measure the pressure on the raw water side of the heat exchanger (minimum 160 psig) at an indicated flow of at least 3000 gpm on the flow meter. With this clarification of performance determination, the system flow and heat exchanger pressure will correlate directly to the required Safety Analysis and not a design point on a pump curve.

10. Conclusion

The investigative actions, results and conclusions meet with full approval of the SORC and that committee concludes that this event does not present a hazard to the health and safety to the general public.

[illegible]

[illegible]

[illegible]

AEC DISTRIBUTION FOR PART 50 DOCKET MATERIAL
(TEMPORARY FORM)

CONTROL NO: 9916

FILE:

FROM:	DATE OF DOC	DATE REC'D	LTR	TWX	RPT	OTHER
Niagara Mohawk Power Co Syracuse, NY 13202 RR Schneider	9-20-74	9-26-74	XXX			

TO:	ORIG	CC	OTHER	
Mr Skovholt	1 signed			SENT AEC PDR XX SENT LOCAL PDR XX

CLASS	UNCLASS	PROP INFO	INPUT	NO CYS REC'D	DOCKET NO:
	XXXXX			1	50-220

DESCRIPTION:

Ltr trans the following:

DO NOT REMOVE

ACKNOWLEDGED

PLANT NAME: Nine Mile Pt #1

ENCLOSURES:

REPORT: Abnormal Occurrence #74-13 on 9-18-74 concerning inoperable containment spray pump #122.....

FOR ACTION/INFORMATION 10-3-74 ehf

BUTLER (L)	SCHWENCER (L)	ZIEMANN (L)	REGAN (E)
W/ Copies	W/ Copies	W/ Copies	W/ Copies
CLARK (L)	STOLZ (L)	DICKER (E)	✓LEAR (L)
W/ Copies	W/ Copies	W/ Copies	W/ Copies
PARR (L)	VASSALLO (L)	KNIGHTON (E)	
W/ Copies	W/ Copies	W/ Copies	W/ Copies
KNIEL (L)	PURPLE (L)	YOUNGBLOOD (E)	
W/ Copies	W/ Copies	W/ Copies	W/ Copies

INTERNAL DISTRIBUTION

✓REG FILE	TECH REVIEW	DENTON	LIC ASST	A/T IND
✓AEC PDR		GRIMES		BRAITMAN
✓OGC, ROOM P-506A	✓SCHROEDER	G[illegible]ILL	DIGGS (L)	SALTZMAN
✓MUNTZING/STAFF	✓MACCARY	K[illegible]NER	GEARIN (L)	B. HURT
✓CASE	✓KNIGHT	BALLARD	GOULBOURNE (L)	
GIAMBUSSO	✓PAWLICKI	SPANGLER	KREUTZER (E)	PLANS
BOYD	✓SHAO		LEE (L)	MCDONALD
MOORE (L) (BWR)	✓STELLO	ENVIRO	MAIGRET (L)	CHAPMAN
DEYOUNG (L) (PWR)	✓HOUSTON	MULLER	REED (E)	DUBE w/input
SKOVHOLT (L)	✓NOVAK	DICKER	SERVICE (L)	E. COUPE
GOLLER (L)	✓ROSS	KNIGHTON	SHEPPARD (L)	
P. COLLINS	✓IPPOLITO	YOUNGBLOOD	SLATER (E)	✓D. THOMPSON (2)
DENISE	✓TEDESCO	REGAN	SMITH (L)	✓KLECKER
✓REG OPR	✓LONG	PROJECT LDR	✓TEETS (L)	✓EISENHUT
FILE & REGION (3)	✓LAINAS		WILLIAMS (E)	
✓MORRIS	✓BENAROYA	HARLESS	WILSON (L)	
✓STEELE	✓VOLIMER			

EXTERNAL DISTRIBUTION LJD

✓1 – LOCAL PDR Oswego, NY		
✓1 - TIC (ABERNATHY)	(1)(2)(10) – NATIONAL LABS	1 – PDR-SAN/LA/NY
✓1 – NSIC (BUCHANAN)	1 – ASLBP(E/W Bldg, Rm 529)	1 – BROOKHAVEN NAT LAB
1 – ASLB	1 – W. PENNINGTON, Rm E-201 GT	1 – G. ULRIKSON, ORNL
1 – Newton Anderson	1 – B&M SWINEBROAD, Rm E-201 GT	1 – AGMED (RUTH GUSSMAN) Rm B-127 GT
✓5-ACRS SENT TO LIC ASST	1 – CONSULTANTS NEWMARK/BLUME/AGBABIAN	1 – R. D. MUELLER, Rm E-201 GT

Teets

Regulatory File Cy.

NIAGARA MOHAWK POWER CORPORATION

NIAGARA MOHAWK

300 ERIE BOULEVARD WEST
SYRACUSE, N. Y. 13202

50-220

September 20, 1974

RECEIVED SEP 26 1974 U.S. ATOMIC ENERGY COMMISSION Regulatory Mail Section

Mr. Donald J. Skovholt
Assistant Director for Reactor Operations
Division of Reactor Licensing
United States Atomic Energy Commission
Washington, D.C. 20545

Dear Mr. Skovholt:

In accordance with Technical Specifications 1.13d for Nine Mile Point Unit 1, the enclosed Abnormal Occurrence Report is submitted. This report is in accordance with the format set forth in Regulatory Guideline 1.16. This occurrence was reported to RO:I on September 18, 1974.

Very truly yours,

R.R. Schneider
Vice President - Electric Operations

TJD:mm

DOCKETED USAEC SEP 26 1974 REGULATORY MAIL SECTION DOCKET CLERK

9916

ABNORMAL OCCURRENCE REPORT

1. Report No. 74-13

2a. Date September 18, 1974

2b. Occurrence Date September 18, 1974

3. Facility Nine Mile Point Unit 1

4. Identification of Occurrence

Inoperable containment spray pump #122.

5. Conditions Prior to Occurrence

Unit #1 at steady state 98% power.

6. Description of Occurrence

During routine testing following a recalibration of the flow transmitter on September 17, 1974, the performance of containment spray pump #122 was found to have varied from previously expected performance. The three redundant pumps showed expected performance. The pump curve for containment spray pump #122 sets design flow at 3000 gpm at a pump developed head of 375 ft. at 60°F. The test data indicated the required developed head but the flow indication was approximately 2600 gpm. The pump was taken out of service and the required surveillance performed on the redundant pump. Technical Specification 3.3.7.b provides 15 days to return the effected pump to service provided the additional surveillance is performed. Specification 3.3.7.b was satisfied, therefore, fulfilling the L.C?O. The pump was disassembleddand a piece of wood was found wedged in the "eye" of the pump thus limiting its performance. Therefore, requiring the reporting of an abnormal occurrence pursuant to Technical Specification 1.13d.

7. Designation of Apparent Cause of the Occurrence

Restricted suction flow caused by foreign object. (1pβ/4X.x 5 1/4" x 3 1/4" piece of wood)

8. Analysis of Occurrence

Operation of only one containment spray pump is sufficient to remove post accident core energy releases including a substantial chemical reaction involving hydrogen generation and will also limit pressure and temperature rises in the pressure suppression system to below design values. The containment spray system is designed with four (4) pumps, therefore, providing 400% redundancy. The other three (3) pumps satisfactorily meet the performance requirements, therefore, it can be concluded that no hazard would have been presneted to the general public or station had the containment spray system been required.

9. Corrective Action

The foreign object, a piece of wood 1 3/4" x 3 1/4" x 5 1/4" was removed from its lodged location in the "eye" of the pump. None of the redundant three pumps has shown any behavior, which would lead to the conclusion that similiar problems with foreign objects have occurred.

Following removal of the object and reassembly of the pump, its performance was measured and demonstrated the following:

1. Pump discharge pressure was 165 psig or 379 feet of developed head. (required 375 feet)

2. Pump discharge flow was 150 k lbs / hr or 3000 gpm (required 3000 gpm)

Containment spray pump #122, therefore, is returned to service.

10. Failure Data

No previous containment spray pump failures.

AEC DISTRIBUTION FOR PART 50 DOCKET MATERIAL
(TEMPORARY FORM)

CONTROL NO: 9047

FILE:

FROM:	DATE OF DOC	DATE REC'D	LTR	TWX	RPT	OTHER
Niagara Mohawk Power Corp Syracuse, NY RRSchneider	8-28-74	9-3-74	X			

TO:	ORIG	CC	OTHER	
Donald J. Skovholt	1 signed	39		SENT AEC PDR X SENT LOCAL PDR X

CLASS	UNCLASS	PROP INFO	INPUT	NO CYS REC'D	DOCKET NO:
	XXX			40	50-220

DESCRIPTION:

Ltr trans the following.....

ACKNOWLEDGED

DO NOT REMOVE

PLANT NAME: Nine Mile Point Unit #1

ENCLOSURES:

Abnormal occurrence rpt #50-220/72-12 of 8-24-74 re set point drift on drywell high pressure.....

(40 cys encl rec'd)

FOR ACTION/INFORMATION 9-4-74 GMC

BUTLER (L)	SCHWENCER (L)	ZIEMANN (L)	REGAN (E)
W/ CYS	W/ CYS	W/ CYS	W/ CYS
CLARK (L)	STOLZ (L)	DICKER (E)	✓LEAR
W/ CYS	W/ CYS	W/ CYS	W/ 4 CYS
BARR (L)	MASSALLO (L)	KNIGHTON (E)	
W/ CYS	W/ CYS	W/ CYS	W/ CYS
KNIEL (L)	PURPLE (L)	YOUNGBLOOD (E)	
W/ CYS	W/ CYS	W/ CYS	W/ CYS

INTERNAL DISTRIBUTION

✓REG FILE	TECH REVIEW	DENTON	LIC ASST	A/T IND
✓AEC PDR		GRIMES	DIGGS (L)	BRAITMAN
✓OGC	✓SCHROEDER	GAMMILL	GEARIN (L)	SALTZMAN
✓MUNTZING/STAFF	✓MACCARY	KASTNER	GOULBOURNE (L)	B. HURT
✓CASE	✓KNIGHT	BALLARD	KREUTZER (E)	
GIAMBUSSO	✓PAWLICKI	SPANGLER	LEE (L)	PLANS
BOYD	✓SHAO		MAIGRET (L)	MCDONALD
MOORE (L)(LWR-2)	✓STELLO	ENVIRO	REED (E)	CHAPMAN
DEYOUNG (L)(LWR-1)	✓HOUSTON	MULLER	SERVICE (L)	DUBE w/input
SKOVHOLT (L)	✓NOVAK	DICKER	SHEPPARD (L)	E. COUPE
GOLLER (L)	✓ROSS	KNIGHTON	SLATER (E)	
P. COLLINS	✓IPPOLITO	YOUNGBLOOD	SMITH (L)	✓D. THOMPSON (2)
DENISE	✓TEDESCO	REGAN	✓TEETS (L)	✓KLECKER
✓REG OPR	✓LONG	PROJECT MGR	WILLIAMS (E)	✓EISENHUT
FILE & REGION (2)	✓LAINAS		WILSON (L)	
✓MORRIS	✓BENAROYA	HARLESS		
✓STEELE	✓VOLLMER			

EXTERNAL DISTRIBUTION

✓1 - LOCAL PDR Oswego, NY
✓1 - TIC (ABERNATHY)
✓1 - NSIC (BUCHANAN)
1 - ASLB
1 - Newton Anderson
✓5 - ACRS SENT TO LIC ASST Teets 9-4-74

(1)(2)(10)-NATIONAL LABS
1-ASLBP(E/W Bldg, Rm 529)
1-W. PENNINGTON, Rm E-201 GT
1-B&M SWINEBROAD, Rm E-201 GT
1-CONSULTANTS
NEWMARK/BLUME/AGBABIAN

1-PDR-SAN/LA/NY
1-BROOKHAVEN NAT LAB
1-G. ULRIKSON, ORNL
1-AGMED (RUTH GUSSMAN) Rm B-127 GT
1-RD. MUELLER, Rm F-309 GT

3b

NIAGARA MOHAWK POWER CORPORATION

NIAGARA MOHAWK

300 ERIE BOULEVARD, WEST
SYRACUSE, N. Y. 13202

August 28, 1974

50-220

Mr. Donald J. Skovholt
Assistant Director for Reactor Operations
Division of Reactor Licensing
United States Atomic Energy Commission
Washington, D.C. 20545

Dear Mr. Skovholt:

In accordance with Technical Specifications 1.13d for Nine Mile Point Unit 1, the enclosed Abnormal Occurrence Report is submitted. This report is in accordance with the format set forth in Regulatory Guideline 1.16. This occurrence was reported to RO:I on August 26, 1974.

Very truly yours,

R.R. Schneider
Vice President - Electric Operations

TJD:mm

9047

(B)

ABNORMAL OCCURRENCE REPORT

1. Report No. 50-220/74-12

2a. Date August 26, 1974

2b. Occurrence Date August 24, 1974

3. Facility Nine Mile Point Unit 1

4. Identification of Occurrence

Set point drift on Drywell High Pressure

5. Conditions Prior to Occurrence

Unit 1 was at steady state 98% power

6. Description of Occurrence

During routine surveillance testing on August 24, 1974 at approximately 1000 hours, one Barton Instrument used in the Drywell High Pressure (3.5 psig) RPS was found to have drifted .05 psi higher than required. The surveillance test consists of operating the switch thru regulated (mercury manometer) air signal to the sensor. The three other Barton instruments in the two trip systems actuated within the prescribed set point.

7. Designation of Apparent Cause of the Occurrence

Set point drift

8. Analysis of Occurrence

The high drywell pressure trip requires a one out of two twice logic to actuate the protective function. One channel in each trip system would have actuated at the required setpoint and thus produced the protective function. Therefore, no hazard would have been presented to the general public or station had the protective function been rerequired.

9. Corrective Action

The immediate corrective action involved recalibration of the Barton switch. The normal valve of setpoint is 3.5 ± .053 psig. A modification had been made to the Barton switch. A new switch plate locking device to prevent setpoint drift had been installed. (AOR 74-8). This modification was installed to minimize set point drift in this model of Barton instruments and is currently being evaluated to its usefulness.

10. Failure Data

Previous set point drift occurred on May 31, 1974 - AOR-74-8

AEC DISTRIBUTION FOR PART 50 DOCKET MATERIAL
(TEMPORARY FORM)

CONTROL NO: 9048

FILE:

FROM:	DATE OF DOC	DATE REC'D	LTR	TWX	RPT	OTHER
Niagara Mohawk Power Corp Syracuse, NY RRSchneider	8-28-74	9-3-74	X			

TO:	ORIG	CC	OTHER	
Donald J. Skovholt	1 signed	39		SENT AEC PDR X SENT LOCAL PDR X

CLASS	UNCLASS	PROP INFO	INPUT	NO CYS REC'D	DOCKET NO:
	XXX			40	50-220

DESCRIPTION:

Ltr trans the following.....

ENCLOSURES:

Abnormal occurrence rpt #50-220/74-11 of 8-24-74 re set point drift.....

ACKNOWLEDGED
DO NOT REMOVE

PLANT NAME: NINE MILE POINT UNIT #1

(40 cys encl rec'd)

FOR ACTION/INFORMATION 9-4-74 GMC

BUTLER (L)	SCHWENCER (L)	ZIEMANN (L)	REGAN (E)
W/ CYS	W/ CYS	W/ CYS	W/ CYS
CLARK (L)	STOLZ (L)	DICKER (E)	✓LEAR
W/ CYS	W/ CYS	W/ CYS	W/4 CYS
BAER (L)	MASSALLO (L)	KNIGHTON (E)	
W/ CYS	W/ CYS	W/ CYS	W/ CYS
KNIEL (L)	PURPLE (L)	YOUNGBLOOD (E)	
W/ CYS	W/ CYS	W/ CYS	W/ CYS

INTERNAL DISTRIBUTION

✓REG FILE	TECH REVIEW	DENTON	LIC ASST	A/T IND
✓AEC PDR		GRIMES	DIGGS (L)	BRAITMAN
✓OGC	✓SCHROEDER	GAMMILL	GEARIN (L)	SALTZMAN
✓MUNTZING/STAFF	✓MACCARY	KASTNER	GOULBOURNE (L)	B. HURT
✓CASE	✓KNIGHT	BALLARD	KREUTZER (E)	
GIAMBUSSO	✓PAWLICKI	SPANGLER	LEE (L)	PLANS
BOYD	✓SHAO		MAIGRET (L)	MCDONALD
MOORE (L)(LWR-2)	✓STELLO	ENVIRO	REED (E)	CHAPMAN
DEYOUNG (L)(LWR-1)	✓HOUSTON	MULLER	SERVICE (L)	DUBE w/input
SKOVHOLT (L)	✓NOVAK	DICKER	SHEPPARD (L)	E. COUPE
GOLLER (L)	✓ROSS	KNIGHTON	SLATER (E)	
P. COLLINS	✓IPPOLITO	YOUNGBLOOD	SMITH (L)	✓D. THOMPSON (2)
DENISE	✓TEDESCO	REGAN	✓TEETS (L)	✓KLECKER
✓REG OPR	✓LONG	PROJECT MGR	WILLIAMS (E)	✓EISENHUT
FILE & REGION (2)	✓LAINAS		WILSON (L)	
✓MORRIS	✓BENAROYA	HARLESS		
✓STEELE	✓VOLLMER			

EXTERNAL DISTRIBUTION

✓1 - LOCAL PDR Oswego, NY		
✓1 - TIC (ABERNATHY)	(1)(2)(10)-NATIONAL LABS	1-PDR-SAN/LA/NY
✓1 - NSIC (BUCHANAN)	1-ASLBP(E/W Bldg, Rm 529)	1-BROOKHAVEN NAT LAB
1 - ASLB	1-W. PENNINGTON, Rm E-201 GT	1-G. ULRIKSON, ORNL
1 - Newton Anderson	1-B&M SWINEBROAD, Rm E-201 GT	1-AGMED (RUTH GUSSMAN)
✓5 - ACRS SENT TO LIC ASST Teets 9-4-74	1-CONSULTANTS	Rm B-127 GT
	NEWMARK/BLUME/AGBABIAN	1-RD. MUELLER, Rm F-3 GT

36

NIAGARA MOHAWK POWER CORPORATION

NIAGARA MOHAWK

300 ERIE BOULEVARD, WEST
SYRACUSE, N. Y. 13202

50-220

August 28, 1974

Mr. Donald J. Skovholt
Assistant Director for Reactor Operations
Division of Reactor Licensing
United States Atomic Energy Commission
Washington, D.C. 20545

Dear Mr. Skovholt:

In accordance with Technical Specifications 1.13d for Nine Mile Point Unit 1, the enclosed Abnormal Occurrence Report is submitted. This report is in accordance with the format set forth in Regulatory Guideline 1.16. This occurrence was reported to RO:I on August 26, 1974.

Very truly yours,

R.R. Schneider
Vice President - Electric Operations

TJD:mm

REGULATORY DOCKET FILE COPY

9048

(A)

ABNORMAL OCCURRENCE REPORT

1. Report No. 50-220/74-11

2a. Date August 26, 1974

2b. Occurrence Date August 24, 1974

3. Facility Nine Mile Point Unit 1

4. Identification of Occurrence

Set point drift in RE-18C Rx Lo-Lo-Lo Level

5. Conditions Prior to Occurrence

Unit at steady state 98% full load

6. Description of Occurrence

During routine surveillance testing Barton instrument 288-3471 provided the desired trip action sooner than required.

7. Designation of Apparent Cause of the Occurrence

Set point drift.

8. Analysis of Occurrence

Each of two instruments provide inputs to one instrument channel in each trip system. RE-18C provided a trip in system 12 at 124.5" instead of 128 ± 2.6". (Technical Specifications 3.6.2) The signals for initiating automatic blowdown differ from other initiating signals in that only one of the two trip systems is required to start blowdown. This is due to the requirement that automatic depressurization be prevented unless A.C. power is available to the ECCS. In order to cause a trip both instrument channels in either trip system must be energized. With RE-18C tripping sooner than required, the desired action if required would still have occurred at the established set point. Therefore, no hazard was presented to the health and general welfare of the public.

9. Corrective Action

The immediate correction action was to recalibrate the instrument to the required set point.

10. Failure Data

Previous set point drift on this instrument occurred on Oct. 21, 1972.

DR Central files

1. Report No. 50-220/74-12

2a. Date August 26, 1974

2b. Occurrence Date August 24, 1974

3. Facility Nine Mile Point Unit 1

4. Identification of Occurrence

Set point drift on Drywell High Pressure

5. Conditions Prior to Occurrence

Unit 1 was at steady state 98% power

6. Description of Occurrence

During routine surveillance testing on August 24, 1974 at approximately 1000 hours, one Barton Instrument used in the Drywell High Pressure (3.5 psig) RPS was found to have drifted .45 psi higher than required. The surveillance test consists of operating the switch thru regulated (mercury manometer) air signal to the sensor. The three other Barton instruments in the two trip systems actuated within the prescribed set point.

7. Designation of Apparent Cause of the Occurrence

Set point drift

8. Analysis of Occurrence

The high drywell pressure trip requires a one out of two twice logic to actuate the protective function. One channel in each trip system would have actuated at the required setpoint and thus produced the protective function. Therefore, no hazard would have been presented to the general public or station had the protective function been required.

9. Corrective Action

The immediate corrective action involved recalibration of the Barton switch. The normal valve of setpoint is 3.5 ± .053 psig. A modification had been made to the Barton switch. A new switch plate locking device to prevent setpoint drift had been installed. (AOR 74-8). This modification was installed to minimize set point drift in this model of Barton instruments and is currently being evaluated to its usefulness.

10. Failure Data

Previous set point drift occurred on May 31, 1974 - AOR 74-8

1. Report No. 50-220/74-11

2a. Date August 26, 1974

2b. Occurrence Date August 24, 1974

3. Facility Nine Mile Point Unit 1

4. Identification of Occurrence

Set point drift in RE-18C Rx Lo-Lo-Lo Level

5. Conditions Prior to Occurrence

Unit at steady state 98% full load

6. Description of Occurrence

During routine surveillance testing Barton instrument 288-3471 provided the desired trip action sooner than required.

7. Designation of Apparent Cause of the Occurrence

Set point drift.

8. Analysis of Occurrence

Each of two instruments provide inputs to one instrument channel in each trip system. RE-18C provided a trip in system 12 at 124.5" instead of 128 ± 2.6". (Technical Specifications 3.6.2) The signals for initiating automatic blowdown differ from other initiating signals in that only one of the two trip systems is required to start blowdown. This is due to the requirement that automatic depressurization be prevented unless A.C. power is available to the ECCS. In order to cause a trip both instrument channels in either trip system must be energized. With RE-18C tripping sooner than required, the desired action if required would still have occurred at the established set point. Therefore, no hazard was presented to the health and general welfare of the public.

9. Corrective Action

The immediate correction action was to recalibrate the instrument to the required set point.

10. Failure Data

Previous set point drift on this instrument occurred on Oct. 21, 1972.

AEC DISTRIBUTION FOR PART 50 DOCKET MATERIAL
(TEMPORARY FORM)

CONTROL NO: 8857

FILE:

FROM:	DATE OF DOC	DATE REC'D	LTR	TWX	RPT	OTHER
Niagara Mohawk Power Corp Syracuse, NY RRSchneider	8-21-74	8-28-74	X			

TO:	ORIG	CC	OTHER	
Donald J. Skovholt	1 signed			SENT AEC PDR XXX SENT LOCAL PDR XXX

CLASS	UNCLASS	PROP INFO	INPUT	NO CYS REC'D	DOCKET NO:
	XXX			1	50-220

DESCRIPTION:

Ltr trans the following.....

ENCLOSURES:

Abnormal occurrence rpt #74-10 of 8-17-74 re set point drift in Barton differential pressure instrument 1 B05C.

DO NOT REMOVE

ACKNOWLEDGED

(1 cy encl rec'd)

PLANT NAME: NINE MILE POINT UNIT #1

FOR ACTION/INFORMATION 8-30-74 GMC

BUTLER (L)	SCHWENCER (L)	ZIEMANN (L)	REGAN (E)
W/ CYS	W/ CYS	W/ CYS	W/ CYS
CLARK (L)	STOLZ (L)	DICKER (E)	✓LEAR
W/ CYS	W/ CYS	W/ CYS	W/ 4 CYS
BARR (L)	VASSALLO (L)	KNIGHTON (E)	
W/ CYS	W/ CYS	W/ CYS	W/ CYS
KNIEL (L)	PURPLE (L)	YOUNGBLOOD (E)	
W/ CYS	W/ CYS	W/ CYS	W/ CYS

INTERNAL DISTRIBUTION

✓REG FILE	TECH REVIEW	DENTON	LIC ASST	A/T IND
✓AEC PDR		GRIMES	DIGGS (L)	BRAITMAN
✓OGC	✓SCHROEDER	GAMMILL	GEARIN (L)	SALTZMAN
✓MUNTZING/STAFF	✓MACCARY	KASTNER	GOULBOURNE (L)	B. HURT
✓CASE	✓KNIGHT	BALLARD	KREUTZER (E)	
GIAMBUSSO	✓PAWLICKI	SPANGLER	LEE (L)	PLANS
BOYD	✓SHAO		MAIGRET (L)	MCDONALD
MOORE (L)(LWR-2)	✓STELLO	ENVIRO	REED (E)	CHAPMAN
DEYOUNG (L)(LWR-1)	✓HOUSTON	MULLER	SERVICE (L)	DUBE w/input
SKOVHOLT (L)	✓NOVAK	DICKER	SHEPPARD (L)	E. COUPE
GOLLER (L)	✓ROSS	KNIGHTON	SLATER (E)	
P. COLLINS	✓IPPOLITO	YOUNGBLOOD	SMITH (L)	✓D. THOMPSON (2)
DENISE	✓TEDESCO	REGAN	✓TEETS (L)	✓KLECKER
✓REG OPR	✓LONG	PROJECT MGR	WILLIAMS (E)	✓EISENHUT
FILE & REGION (2)	✓LAINAS		WILSON (L)	
✓MORRIS	✓BENAROYA	HARLESS		
✓STEELE	✓VOLLMER			

EXTERNAL DISTRIBUTION

✓1 - LOCAL PDR OSWEGO, NY
✓1 - TIC (ABERNATHY)
✓1 - NSIC (BUCHANAN)
1 - ASLB
1 - Newton Anderson
✓5 - ACRS SENT TO LIC ASST TEETS 8-30-74

(1)(2)(10)-NATIONAL LABS
1-ASLBP(E/W Bldg, Rm 529)
1-W. PENNINGTON, Rm E-201 GT
1-B&M SWINEBROAD, Rm E-201 GT
1-CONSULTANTS
NEWMARK/BLUME/AGBABIAN

1-PDR-SAN/LA/NY
1-BROOKHAVEN NAT LAB
1-G. ULRIKSON, ORNL
1-AGMED (RUTH GUSSMAN) Rm B-127 GT
1-RD. MUELLER, Rm F-3 GT

50-220

NIAGARA MOHAWK POWER CORPORATION

NIAGARA MOHAWK

300 ERIE BOULEVARD, WEST
SYRACUSE, N. Y. 13202

August 21, 1974

Mr. Donald J. Skovholt
Assistant Director for Reactor Operations
Division of Reactor Licensing
United States Atomic Energy Commission
Washington, D.C. 20545

Dear Mr. Skovholt:

In accordance with Technical Specifications 1.13d for Nine Mile Point Unit 1, the enclosed Abnormal Occurrence Report is submitted. This report is in accordance with the format set forth in Regulatory Guideline 1.16. This occurrence was reported to RO:I on August 19, 1974.

Very truly yours,

R.R. Schneider
Vice President - Electric Operations

TJD:mm

Enc.

8857

ABNORMAL OCCURRENCE REPORT

1. Report No. 74-10

2a. Date August 19, 1974

2b. Occurrence Date August 17, 1974

3. Facility Nine Mile Point Unit 1

4. Identification of Occurrence

Set point drift in Barton differential pressure instrument 1 B05C (Emergency Cooling High Flow)

5. Conditions Prior to Occurrence

Unit at steady state 98% full load

6. Description of Occurrence

During routine surveillance testing Barton instrument 1 B05C provided the desired trip action at a lower than required value.

7. Designation of Apparent Cause of the Occurrence

Set point drift.

8. Analysis of Occurrence

Each of two differential pressure switches provided inputs to one instrument channel in each trip system. Therefore, with one instrument trip occurring at a lower than required value, the isolation of the emergency condensers would still have occurred at the desired set point. Based upon the fact that the redundant components actuated at the required set point as well as the fact that the set point drift was in the conservative direction it is concluded that at no time would a hazard be presented to the general public as a result of this set point drift.

9. Corrective Action

The instrument was recalibrated to required set point.

10. Failure Data

a. Type: Barton
b. No.: 289-793
c. Failures: First this instrument.

Central file

1. Report No. [redacted] 74-9[redacted]

2a. Date July 7, 1974

2b. Occurrence Date June 28, 1974

3. Facility Nine Mile Point Unit 1

50-220

4. Identification of Occurrence

Failure of RE-23D relay (RPS) to return to normal (untripped)

5. Conditions Prior to Occurrence

Unit was being restarted following Spring Refueling Outage.

6. Description of Occurrence

During the heat-up phase of unit restart with reactor pressure increasing as planned device RE-23D failed to reset at 850 psig. The relay was replaced and performed its intended function.

7. Designation of Apparent Cause of the Occurrence

Investigation revealed an open relay coil.

8. Analysis of Occurrence

Pressure instrumentation (RE-23) trips when the main steam line pressure reaches or decends below 850 psig. This trip function is utilized in the "RUN" mode position only. Primarily this function is provided to protect against a pressure regulator malfunction or main steam line break which would cause a coolant loss, either thru the break or the turbine bypass valve system, from the reactor vessel. With the trip set at 850 psig coolant loss is limited so that the fuel is not uncovered and peak clad temperatures are limited. The system logic is a one out of two, twice requiring one trip on each of the trip systems to actuate the required function. With the relay failure, (In the RPS all relaying is designed Fail-Safe i.e. fail to the safeguard condition) one of the two trip systems was tripped. In this instrumentation system where two trip systems are required to initiate action, having one trip system already tripped does not decrease the reliability in terms of initiating the desired designed action. Therefore, with the relay failure, the system assumed the tripped condition as designed. Based upon the above logic and actions, it is concluded that at no time would a hazard be presented to the general public as a result of this failure.

9. Corrective Action

The relay was replaced immediately to enable the sensor to perform its intended function.

10. Failure Data

a. Type Potter & Brumfield AL100BW
b. No. KR-4015-3
c. Manufacture for-boro
d. Failures First

AEC DISTRIBUTION FOR PART 50 DOCKET MATERIAL
(TEMPORARY FORM)

CONTROL NO: 5217

FILE: A/D

FROM:	DATE OF DOC	DATE REC'D	LTR	MEMO	RPT	OTHER
Niagara Mohawk Power Corp. Syracuse, N. Y. 13202 R. R. Schneider	6-3-74	6-11-74	X			

TO:	ORIG	CC	OTHER	
Mr. Skovholt	1 signed			SENT AEC PDR X SENT LOCAL PDR X

CLASS	UNCLASS	PROP INFO	INPUT	NO CYS REC'D	DOCKET NO:
	XXXX			1	50-220

DESCRIPTION:
Ltr trans the following:

ENCLOSURES:
Abnormal Occurrence Report No. 50-220/74-8 dtd 5-31-74, regarding setpoint drift on Drywell High Pressure

Do Not Remove

(40 cys rec'd)

ACKNOWLEDGED

PLANT NAME: Nine Mile Point Unit # 1

FOR ACTION/INFORMATION 6-11-74 AB

BUTLER(L)	SCHWENCER(L)	✓ZIEMANN(L)	REGAN(E)
W/ Copies	W/ Copies	W/ 7 Copies	W/ Copies
CLARK(L)	STOLZ(L)	DICKER(E)	
W/ Copies	W/ Copies	W/ Copies	W/ Copies
PARR(L)	VASSALLO(L)	KNIGHTON(E)	
W/ Copies	W/ Copies	W/ Copies	W/ Copies
KNIEL(L)	PURPLE (L)	YOUNGBLOOD(E)	
W/ Copies	W/ Copies	W/ Copies	W/ Copies

INTERNAL DISTRIBUTION

✓REG FILE	TECH REVIEW	DENTON		A/T IND
✓AEC PDR	✓HENDRIE	GRIMES	LIC ASST	BRAITMAN
✓OGC, ROOM P-506A	SCHROEDER	GAMMILL	✓DIGGS (L)	SALTZMAN
✓MUNTZING/STAFF	✓MACCARY	KASTNER	GEARIN (L)	B. HURT
✓CASE	✓KNIGHT	BALLARD	GOULBOURNE (L)	PLANS
GIAMBUSSO	✓PAWLICKI	SPANGLER	LEE (L)	MCDONALD
BOYD	✓SHAO		MAIGRET (L)	DUBE w/Input
MOORE (L)(BWR)	✓STELLO	ENVIRO	REED (E)	
DEYOUNG(L)(PWR)	✓HOUSTON	MULLER	SERVICE (L)	INFO
SKOVHOLT (L)	✓NOVAK	DICKER	SHEPPARD (L)	C. MILES
✓GOLLER(L)(LTR)	✓ROSS	KNIGHTON	SLATER (E)	✓KLECKER
P. COLLINS	✓IPPOLITO	YOUNGBLOOD	SMITH (L)	✓EISENHUT
DENISE	✓TEDESCO	REGAN	TEETS (L)	
REG OPR	✓LONG	PROJECT LDR	WADE (E)	AOR FILE
✓FILE & REGION(3)	✓LAINAS		WILLIAMS (E)	✓D. THOMPSON (2)
✓MORRIS	✓BENAROYA	HARLESS	WILSON (L)	
✓STEELE	✓VOLLMER			

EXTERNAL DISTRIBUTION

✓1 - LOCAL PDR Oswego, N. Y.
✓1 - TIC (ABERNATHY)
✓1 - NSIC(BUCHANAN)
1 - ASLB
1 - P. R. DAVIS (AEROJET NUCLEAR)
✓16 - CYS ACRS ~~MEETING~~ SENT TO LIC ASST. R. DIGGS ON 6-11-74

(1)(2)(10)-NATIONAL LAB'S
1-ASLBP(E/W Bldg,Rm 529)
1-W. PENNINGTON, Rm E-201 GT
1-CONSULTANT'S NEWMARK/BLUME/AGBABIAN
1-GERALD ULRIKSON...ORNL
1-B & M SWINEBROAD, Rm E-201 GT

1-PDR-SAN/LA/NY
1-GERALD LELLOUCHE
BROOKHAVEN NAT. LAB
1-AGMED(Ruth Gussman) RM-B-127, GT.
1-RD..MULLER..F-309 GT

Regulatory File Cy.

NIAGARA MOHAWK POWER CORPORATION

NIAGARA MOHAWK

300 ERIE BOULEVARD WEST
SYRACUSE, N. Y. 13202

June 3, 1974

50-220

Mr. Donald J. Skovholt
Assistant Director for Reactor Operations
Division of Reactor Licensing
United States Atomic Energy Commission
Washington, D.C. 20545

Dear. Mr. Skovholt:

In accordance with Technical Specifications for Nine Mile Point Unit 1, 1.13d, the enclosed Abnormal Occurrence Report is submitted. This report is in accordance with the format set forth in Regulatory Guideline 1.16.

Very truly yours,

R.R. Schneider
Vice President - Electric Operations

RRS/bar

5217

ABNORMAL OCCURRENCE REPORT

1. Report No. 50-220/74-8

2a. Date June 3, 1974

2b. Occurrence Date May 31, 1974

3. Facility Nine Mile Point Nuclear Station Unit 1

4. Identification of Occurrence

Setpoint drift on Drywell High Pressure

5. Conditions Prior to Occurrence

Unit 1 was shutdown for annual refueling

6. Description of Occurrence

During routine surveillance testing on May 31, 1974 at approximately 1600 hours, two Barton Instruments used in the Drywell High Pressure (3.5 psig) RPS were found to have drifted .20 psi higher than required. The surveillance test consists of operating the switch thru regulated (mercury manometer) air signal to the sensor. The two Barton Instruments Model 289, E.P. #RE04A&D are in separate RPS trip systems.

With reactor in refuel mode and the drywell under atmospheric conditions no operator action was necessary, as the plant was in a safe condition.

7. Designation of Apparent Cause of the Occurrence

Setpoint drift

8. Analysis of Occurrence

The high drywell pressure trip requires a one out of two twice logic to actuate the protective function. One channel in each trip system would have actuated at the required setpoint and thus produced the protective function. Therefore, no hazard would have been presented to the general public or station had the protective function been required.

9. Corrective Action

The immediate corrective action involved recalibration of the Barton switch. The normal valve of setpoint is 3.5 $\pm$ .053 psig. A modification has been made to the Barton switch. A new switch plate locking device to prevent setpoint drift has been installed. (AOR 74-1). This modification should reduce setpoint drift problems with this switch.

10. Failure Data

No previous setpoint drifting has occurred on these switches this year. AOR 74-1 concerning a Barton switch setpoint drift is the only other drift in setpoint to date in 1974.

AEC I[redacted]BUTION FOR PART 50 DOCKET M[redacted]AL
(TEMPORARY FORM)

CONTROL NO: 4231

FILE: A/O

FROM:	DATE OF DOC	DATE REC'D	LTR	MEMO	RPT	OTHER
Niagara Mohawk Power Corp. Syracuse, N. Y. R. R. Schneider	5-3-74	5-13-74	X			

TO:	ORIG	CC	OTHER	
Donald J. Skovholt	1 signed	39		SENT AEC PDR XXX SENT LOCAL PDR XXX

CLASS	UNCLASS	PROP INFO	INPUT	NO CYS REC'D	DOCKET NO:
	XXX			40	50-220

DESCRIPTION:

Ltr trans the following.....

ENCLOSURES:

Abnormal Occurrence Rpt #74-7 of 4-25-74 in whicha control rod blade tube inversion occurred

ACKNOWLEDGED
DO NOT REMOVE

(40 cys encl rec'd)

PLANT NAME: NINE MILE POINT UNIT #1

FOR ACTION/INFORMATION 5-13-74 GMC

BUTLER(L)	SCHWENCER(L)	✓ZIEMANN(L)	REGAN(E)
W/ Copies	W/ Copies	W/7 Copies	W/ Copies
CLARK(L)	STOLZ(L)	DICKER(E)	
W/ Copies	W/ Copies	W/ Copies	W/ Copies
PARR(L)	VASSALLO(L)	KNIGHTON(E)	
W/ Copies	W/ Copies	W/ Copies	W/ Copies
KNIEL(L)	PURPLE (L)	YOUNGBLOOD(E)	
W/ Copies	W/ Copies	W/ Copies	W/ Copies

INTERNAL DISTRIBUTION

✓REG FILE	TECH REVIEW	DENTON		A/T IND
✓~~AEC PDR~~	✓HENDRIE	GRIMES	LIC ASST	BRAITMAN
✓OGC, ROOM P-506A	SCHROEDER	GAMMILL	✓DIGGS (L)	SALTZMAN
✓MUNTZING/STAFF	✓MACCARY ltr	KASTNER	GEARIN (L)	B. HURT
✓CASE ltr	✓KNIGHT	BALLARD	GOULBOURNE (L)	PLANS
GIAMBUSSO	✓PAWLICKI	SPANGLER	LEE (L)	MCDONALD
BOYD	✓SHAO		MAIGRET (L)	DUBE w/Input
MOORE (L)(BWR)	✓STELLO ltr	ENVIRO	REED (E)	
DEYOUNG(L)(PWR)	✓HOUSTON	MULLER	SERVICE (L)	INFO
SKOVHOLT (L)	✓NOVAK	DICKER	SHEPPARD (L)	C. MILES
✓GOLLER(L) ltr	✓ROSS	KNIGHTON	SLATER (E)	B. KING (E/W-358)
P. COLLINS	✓IPPOLITO	YOUNGBLOOD	SMITH (L)	✓KLECKER
DENISE	✓TEDESCO ltr	REGAN	TEETS (L)	✓EISENHUT
✓REG OPR	✓LONG	PROJECT LDR	WADE (E)	
✓FILE & REGION(3)	✓LAINAS		WILLIAMS (E)	✓D. THOMPSON (2)
✓MORRIS	✓BENAROYA	HARLESS	WILSON (L)	W/AOR FILE CY
STEELE	✓VOLLMER			

EXTERNAL DISTRIBUTION

✓1 - LOCAL PDR OSWEGO, NY		
✓1 - TIC (ABERNATHY)	(1)(2)(10)-NATIONAL LAB'S	1-PDR-SAN/LA/NY
✓1 - NSIC(BUCHANAN)	1-ASLBP(E/W Bldg,Rm 529)	1-GERALD LELLOUCHE
1 - ASLB	1-W. PENNINGTON, Rm E-201 GT	BROOKHAVEN NAT. LAB
1 - P. R. DAVIS (AEROJET NUCLEAR)	1-CONSULTANT'S	1-AGMED(Ruth Gussman)
✓16 - CYS ACRS ~~HOLDING~~	NEWMARK/BLUME/AGBABIAN	RM-B-127, GT.
Sent to Lic Asst Diggs 5-13-74	1-GERALD ULRIKSON...ORNL	1-RD..MULLER..F-309 GT
	1-B & M.SWINEBROAD, Rm E-201 GT	

NIAGARA MOHAWK POWER CORPORATION

NIAGARA MOHAWK

300 ERIE BOULEVARD WEST
SYRACUSE, N. Y. 13202

May 3, 1974

50-220

50-220

Mr. Donald J. Skovholt
Assistant Director for Reactor Operations
Division of Reactor Licensing
United States Atomic Energy Commission
Washington, D.C. 20545

Dear Mr. Skovholt:

In accordance with Technical Specifications for Nine Mile Point Unit 1, the enclosed Abnormal Occurrence Report is submitted. This report is in accordance with the format set forth in Regulatory Guideline 1.16.

Very truly yours,

R.R. Schneider
Vice President - Electric Operations

RRS/bar

REGISTERED MAIL - RETURN RECEIPT REQUEST

4231

ABNORMAL OCCURRENCE REPORT

1. Report No. 74-7

2a. Date April 30, 1974

2b. Occurrence Date April 25, 1974

3. Facility Nine Mile Point Nuclear Station Unit 1

4. Identification of Occurrence

Control Rod Blade Tube Inversion

5. Conditions Prior to Occurrence

Unit 1 was shutdown for annual refueling

6. Description of Occurrence

During the previous operating cycle on September 25, 1973 you informed us of a possible problem involving inverted tubes in control rod blades. In our response to your letter and further communication we committed to:

1. A shutdown margin test on each control rod (completed in November 1973 with negative results).

2. An eddy current testing program on each control rod during the next refueling outage.

3. A change out of any affected control rod.

On April 24-25, 1974 the eddy current testing evaluation of individual control rod blades in the Nine Mile Point Unit 1 reactor core was completed. The eddy current test used was that as described in the General Electric submittal to your office on October 8, 1973. The results of the testing showed two control rod blades with possible inverted tubes. Immediate steps were taken to insure that the cells effected would be in a less reactive condition than that as experience during the previous cycle. The control rod would not be withdrawn and only two bundles were present in the cell affected. The control blades will be changed in these two cells later during the core refueling.

7. Designation of Apparent Cause of the Occurrence

Manufacturing Deficiency

8. Analysis of Occurrence

The inverted sheths were found at core location 22-15 and 30-39 two widely dispensed locations. In addition shutdown margin demonstrations

in November 1973 showed no inadequacy in more than necessary shutdown margin. Based on this it is concluded that no hazard was presented to the general public.

9. Corrective Action

The two control blades will be changed. In addition the Site Quality Control Organization will prevent further manufacturing deficiency from being used. This organization was not in existence when the original control blades were obtained.

10. Failure Data

First Failure of this nature.

ABNORMAL OCCURRENCE A[illegible]-220/74-7

DK Central File

TUBE INVERSION IN TWO CONTROL BLADES

PURSUANT TO TECHNICAL SPECIFICATIONS 1.13d WE ARE REPORTING AS AN ABNORMAL OCCURRENCE (AOR50-220/74-7) THE INVERSION OF TUBES IN TWO CONTROL ROD BLADES AT NINE MILE POINT NUCLEAR STATION UNIT 1.

DURING THE SPRING 1974 REFUELING OUTAGE AN EDDY CURRENT TEST WAS MADE OF EACH CONTROL BLADE IN THE REACTOR CORE. THE RESULTS WERE ANALYZED ON APRIL 24 AND INDICATED TUBE INVERSION IN CONTROL ROD BLADES, 30-39 AND 22-19.

THE EDDY CURRENT TESTING VERIFIES THE NON INVERSION OF INDIVIDUAL TUBES IN EACH WING OF THE CONTROL ROD BLADE. THEREFORE IT IS A CONSERVATIVE TEST IN THAT THE RESULTS INDICATE NON-INVERSION ONLY AND NOT INVERSION.

THE IMMEDIATE CORRECTIVE ACTION PERFORMED, WAS NOT LOADING THE CONTROL CELL TO ITS FINAL REACTIVE CONDITIONS DURING FUEL MOVEMENTS. THIS WILL INSURE THAT THE CONTROL BLADE "HOLDS DOWN" LESS REACTIVITY NOW THAN DURING ANY POINT IN THE PREVIOUS OPERATING CYCLE. DURING THE OPERATING CYCLE SHUTDOWN MARGIN TESTING WAS PERFORMED ON EACH CONTROL ROD IN THE REACTOR. THIS VERIFIED THAT MORE THAN ADEQUATE SHUTDOWN MARGIN EXISTED ON EVERY CONTROL BLADE IN THE CORE.

THE FINAL CORRECTIVE ACTION WILL BE TO REPLACE THE TWO CONTROL BLADES WITH BLADES VERIFIED TO BE NON-INVERTED.

BASED UPON THE FACT THAT MORE THAN ADEQUATE SHUTDOWN MARGIN EXISTED DURING THE OPERATING CYCLE AS DEMONSTRATED, NO HAZARD WAS PRESENTED TO THE GENERAL PUBLIC OR THE STATION DURING THE PREVIOUS OPERATING CYCLES.

THIS IS THE FIRST FAILURE OF THIS NATURE.

THOMAS J. PERKINS
STATION SUPERINTENDENT
NINE MILE POINT NUCLEAR STATION

a/b

AEC DISTRIBUTION FOR PART 50 DOCKET MATERIAL
(TEMPORARY FORM)

CONTROL NO: 4224

FILE: AJO

FROM:	DATE OF DOC	DATE REC'D	LTR	MEMO	RPT	OTHER
Niagara Mohawk Power Corp. Syracuse, N. Y. R. R. Schneider	4-29-74	5-13-74	X			

TO:	ORIG	CC	OTHER	
Donald J. Skovholt	1 signed	39		SENT AEC PDR XXX SENT LOCAL PDR XXX

CLASS	UNCLASS	PROP INFO	INPUT	NO CYS REC'D	DOCKET NO:
	XXX			40	50-220

DESCRIPTION:

Ltr trans the following.....

ENCLOSURES:

Abnormal Occurrence Rpt #74-6 of 4-19-74 in which excessive main steam line isolation valve leakage was discovered

ACKNOWLEDGED
DO NOT REMOVE

(40 cys encl rec'd)

PLANT NAME: NINE MILE POINT UNIT #1

FOR ACTION/INFORMATION 5-13-74 GMC

BUTLER(L)	SCHWENCER(L)	✓ZIEMANN(L)	REGAN(E)
W/ Copies	W/ Copies	W/7 Copies	W/ Copies
CLARK(L)	STOLZ(L)	DICKER(E)	
W/ Copies	W/ Copies	W/ Copies	W/ Copies
PARR(L)	VASSALLO(L)	KNIGHTON(E)	
W/ Copies	W/ Copies	W/ Copies	W/ Copies
KNIEL(L)	PURPLE (L)	YOUNGBLOOD(E)	
W/ Copies	W/ Copies	W/ Copies	W/ Copies

INTERNAL DISTRIBUTION

✓REG FILE	TECH REVIEW	DENTON		A/T IND
~~✓REG PDR~~	✓HENDRIE	GRIMES	LIC ASST	BRAITMAN
✓OGC, ROOM P-506A	SCHROEDER	GAMMILL	✓DIGGS (L)	SALTZMAN
✓MUNTZING/STAFF	✓MACCARY	KASTNER	GEARIN (L)	B. HURT
✓CASE	✓KNIGHT	BALLARD	GOULBOURNE (L)	PLANS
GIAMBUSSO	✓PAWLICKI	SPANGLER	LEE (L)	MCDONALD
BOYD	✓SHAO		MAIGRET (L)	DUBE w/Input
MOORE (L)(BWR)	✓STELLO	ENVIRO	REED (E)	
DEYOUNG(L)(PWR)	✓HOUSTON	MULLER	SERVICE (L)	INFO
SKOVHOLT (L)	✓NOVAK	DICKER	SHEPPARD (L)	C. MILES
✓GOLLER(L)	✓ROSS	KNIGHTON	SLATER (E)	B. KING (E/W-358)
P. COLLINS	✓IPPOLITO	YOUNGBLOOD	SMITH (L)	✓KLECKER
DENISE	✓TEDESCO	REGAN	TEETS (L)	✓EISENHUT
REG OPR	✓LONG	PROJECT LDR	WADE (E)	
✓FILE & REGION(3)	✓LAINAS		WILLIAMS (E)	✓D. THOMPSON (2)
✓MORRIS	✓BENAROYA	HARLESS	WILSON (L)	W/AOR FILE CY
STEELE	✓VOLLMER			

EXTERNAL DISTRIBUTION

✓1 - LOCAL PDR OSWEGO, NY		
✓1 - TIC (ABERNATHY)	(1)(2)(10)-NATIONAL LAB'S	1-PDR-SAN/LA/NY
✓1 - NSIC(BUCHANAN)	1-ASLBP(E/W Bldg,Rm 529)	1-GERALD LELLOUCHE
1 - ASLB	1-W. PENNINGTON, Rm E-201 GT	BROOKHAVEN NAT. LAB
✓1 - P. R. DAVIS (AEROJET NUCLEAR)	1-CONSULTANT'S	1-AGMED(Ruth Gussman)
16 - CYS ACRS ~~HOLDING~~	NEWMARK/BLUME/AGBABIAN	RM-B-127, GT.
Sent to Lic Asst Diggs 5-13-74	1-GERALD ULRIKSON...ORNL	1-RD..MULLER..F-309 GT
	1-B & M SWINEBROAD, Rm E-201 GT	

NIAGARA MOHAWK POWER CORPORATION

NIAGARA MOHAWK

300 ERIE BOULEVARD WEST
SYRACUSE, N. Y. 13202

April 29, 1974

50-220

Mr. Donald J. Skovholt
Assistant Director for Reactor Operations
Division of Reactor Licensing
United States Atomic Energy Commission
Washington, D.C. 20545

Dear Mr. Skovholt:

In accordance with Technical Specifications 1.136 and 4.3.3e for Nine Mile Point Unit 1, the enclosed Abnormal Occurrence Report is submitted. This report is in accordance with the format set forth in Regulatory Guideline 1.16.

Very truly yours,

R.R. Schneider
Vice President - Electric Operations

RRS/bar

REGISTERED MAIL
RETURN RECEIPT REQUEST

4224

ABNORMAL OCCURRENCE REPORT

1. Report No. 74-6

2a. Date April 20, 1974

2b. Occurrence Date April 19, 1974

3. Facility Nine Mile Point Unit 1

4. Identification of Occurrence

Excessive Main Steam Line Isolation Valve Leakage.

5. Conditions Prior to Occurrence

Unit 1 was shutdown for annual refueling.

6. Description of Occurrence

During the process of re-leak testing the MSIV's (AOR 50-220/74-3) the procedure called for low leakage outside isolation valves and a retest of them. During the retest the outside valve leakage (approx. 95 SCFM) exceeded 12.9 SCFH limit. This valve had already satisfied the leakage test on April 2, 1974, therefore the reason for excessive leakage on April 19, 1974 could be attributed to a not fully closed valve or particles trapped under the seat of the valve. Since the unit was shutdown during this period no hazard was presented to the general public.

7. Designation of Apparent Cause of the Occurrence

Still under investigation.

8. Analysis of Occurrence

The Main Steam Line Isolation Valve leakage through the outside valve would not present a problem during a shutdown, however prior to returning the unit to service all valves will be retested.

9. Corrective Action

The valve will be inspected to determine the exact cause of excessive leakage. If in fact, particles were caught under the seat it may become necessary to relap the valve.

10. Failure Data

At least one of these valves has failed to achieve the necessary leak tightness during the annual test while the unit is shutdown. Therefore, an outside consultant has been retained to study, examine and recommend corrective action. Results of this study and corrective actions will be submitted when available.

TO: MR. JAMES P. O'R[redacted] RO:I [redacted]ECOPY DF Central file

FROM: MR. THOMAS J. PERKINS - NINE MILE POINT APRIL 20, 1974

ABNORMAL OCCURRENCE 50-220-74-6 MSIV LEAKAGE

PURSUANT TO TECHNICAL SPECIFICATIONS 1.13 e WE ARE REPORTING AS AN ABNORMAL OCCURRENCE THE FAILURE OF MSIV #112 TO PASS A LEAK RATE TEST AS ESTABLISHED IN TECHNICAL SPECIFICATION 4.3.3.e (4) NINE MILE POINT NUCLEAR STATION UNIT #1.

ON APRIL 2, 1974, IN ACCORDANCE WITH TECHNICAL SPECIFICATION 4.3.3.e (4) THIS VALVE WAS LEAK TESTED AND SUCCESSFULLY PASSED THE TEST WITH 7.85 SCFH LEAKAGE. THE LIMIT FOR INDIVIDUAL VALVE LEAKAGE HAS BEEN ESTABLISHED AS 12.9 SCFH. ON THAT SAME DAY; AS REPORTED, THE TWO INSIDE MSIV's FAILED TO PASS THE LEAK RATE TEST. PRIOR TO RETESTING THE FAILED INSIDE VALVES A CHECK WAS MADE OF THE OUTSIDE VALVES. LEAKAGE THRU #112 WAS DISCOVERED TO BE EXCESSIVE (98.4 SCFH).

THE CAUSE FOR THIS CHANGE IS UNDER INVESTIGATION ALTHOUGH IT IS SUSPECTED THAT DIRT PARTICLES MAY HAVE BEEN TRAPPED UNDER THE SEAT OR THAT VALVE PACKING LEAKAGE MAY HAVE CAUSED THIS CHANGE.

THE UNIT WAS DOWN FOR REFUELING AT THE TIME SO NO HAZARD WOULD HAVE BEEN PRESENTED TO THE GENERAL PUBLIC. THE VALVE HAS BEEN DEMONSTRATED TO BE WITHIN SPECIFICATIONS IMMEDIATELY FOLLOWING SHUTDOWN.

THOMAS J. PERKINS
STATION SUPERINTENDENT

AD

AEC I[redacted]UTION FOR PART 50 DOCKET M[redacted]
(TEMPORARY FORM)

CONTROL NO: 4223

FILE: A10

FROM:	DATE OF DOC	DATE REC'D	LTR	MEMO	RPT	OTHER
Niagara Mohawk Power Corp. Syracuse, N. Y. R. R. Schneider	4-24-74	5-13-74	X			

TO:	ORIG	CC	OTHER	
Donald J. Skovholt	1 signed	39		SENT AEC PDR XXX SENT LOCAL PDR XXXX

CLASS	UNCLASS	PROP INFO	INPUT	NO CYS REC'D	DOCKET NO:
	XXX			40	50-220

DESCRIPTION:

Ltr trans the following....

ENCLOSURES:

Abnormal Occurrence Rpt #74-5 of 4-15-74 in which a main steam line high temperature sensor set point drift occurred

ACKNOWLEDGED
DO NOT REMOVE
(40 cys encl rec'd)

PLANT NAME: NINE MILE POINT #1

FOR ACTION/INFORMATION 5-13-74 GMC

BUTLER(L)	SCHWENCER(L)	✓ZIEMANN(L)	REGAN(E)
W/ Copies	W/ Copies	W/7 Copies	W/ Copies
CLARK(L)	STOLZ(L)	DICKER(E)	
W/ Copies	W/ Copies	W/ Copies	W/ Copies
PARR(L)	VASSALLO(L)	KNIGHTON(E)	
W/ Copies	W/ Copies	W/ Copies	W/ Copies
KNIEL(L)	PURPLE (L)	YOUNGBLOOD(E)	
W/ Copies	W/ Copies	W/ Copies	W/ Copies

INTERNAL DISTRIBUTION

✓REG FILE	TECH REVIEW	DENTON		A/T IND
✓AEC PDR	✓HENDRIE	GRIMES	LIC ASST	BRAITMAN
✓OGC, ROOM P-506A	SCHROEDER	GAMMILL	✓DIGGS (L)	SALTZMAN
✓MUNTZING/STAFF	✓MACCARY ltr	KASTNER	GEARIN (L)	B. HURT
✓CASE ltr	✓KNIGHT	BALLARD	GOULBOURNE (L)	
GIAMBUSSO	✓PAWLICKI	SPANGLER	LEE (L)	PLANS
BOYD	✓SHAO		MAIGRET (L)	MCDONALD
MOORE (L)(BWR)	✓STELLO ltr	ENVIRO	REED (E)	DUBE w/Input
DEYOUNG(L)(PWR)	✓HOUSTON	MULLER	SERVICE (L)	
SKOVHOLT (L)	✓NOVAK	DICKER	SHEPPARD (L)	INFO
✓GOLLER(L) ltr	✓ROSS	KNIGHTON	SLATER (E)	C. MILES
P. COLLINS	✓IPPOLITO	YOUNGBLOOD	SMITH (L)	B. KING (E/W-358)
DENISE	✓TEDESCO ltr	REGAN	TEETS (L)	✓KLECKER
REG OPR	✓LONG	PROJECT LDR	WADE (E)	✓EISENHUT
✓FILE & REGION(3)	✓LAINAS		WILLIAMS (E)	✓D. THOMPSON (2)
✓MORRIS	✓BENAROYA	HARLESS	WILSON (L)	W/AOR FILE CY
STEELE	✓VOLLMER			

EXTERNAL DISTRIBUTION

✓1 - LOCAL PDR OSWEGO, NY		
✓1 - TIC (ABERNATHY)	(1)(2)(10)-NATIONAL LAB'S	1-PDR-SAN/LA/NY
✓1 - NSIC(BUCHANAN)	1-ASLBP(E/W Bldg,Rm 529)	1-GERALD LELLOUCHE
1 - ASLB	1-W. PENNINGTON, Rm E-201 GT	BROOKHAVEN NAT. LAB
✓1 - P. R. DAVIS (AEROJET NUCLEAR)	1-CONSULTANT'S	1-AGMED(Ruth Gussman)
✓16 - CYS ACRS ~~HOLDING~~	NEWMARK/BLUME/AGBABIAN	RM-B-127, GT.
Sent to Lic Asst Diggs 5-13-74	1-GERALD ULRIKSON...ORNL	1-RD..MULLER..F-309 GT
	1-B & M SWINEBROAD, Rm E-201 GT	

NIAGARA MOHAWK POWER CORPORATION

NIAGARA MOHAWK

300 ERIE BOULEVARD WEST
SYRACUSE, N. Y. 13202

April 24, 1974

Mr. Donald J. Skovholt
Assistant Director for Reactor Operations
Division of Reactor Licensing
United States Atomic Energy Commission
Washington, D.C. 20545

50-220

50-220

Dear Mr. Skovholt:

In accordance with Technical Specifications 1.136 and 3.6.2 for Nine Mile Point Unit 1, the enclosed Abnormal Occurrence Report is submitted. This report is in accordance with the format set forth in Regulatory Guideline 1.16.

Very truly yours,

R.R. Schneider
Vice President - Electric Operations

RRS/bar

REGISTERED MAIL
RETURN RECEIPT REQUEST

4223

ABNORMAL OCCURRENCE REPORT

1. Report No. 74-5

2a. Date April 25, 1974

2b. Occurrence Date April 15, 1974

3. Facility Nine Mile Point Nuclear Station Unit 1

4. Identification of Occurrence

Main Steam Line High Temperature Sensor Set Point Drift.

5. Conditions Prior to Occurrence

Unit 1 was shutdown for annual refueling.

6. Description of Occurrence

During routine surveillance testing three High Temperature Main Steam Line Tunnel Sensors were found to actuate at a lower temperature than required. These signals provide a closure of the Main Steam Line Isolation Valves upon reaching 200°F. However, since the isolation function requirement is $\leq$ 200°F the necessary trip function would have been accomplished in the conservative direction. In as much as the set point drift was conservative no hazard would have been presented to the general public as a result of this drift.

7. Designation of Apparent Cause of the Occurrence

Set point Drift.

8. Analysis of Occurrence

The Technical Specifications require an isolation signal be sent to the Main Steam Isolation Line Valves, in the event the tunnel temperature reaches or exceeds 200°F. However, the basis for the Specification requires a deviation of $\pm$ 10°F. The as found trip point of these Fenwell Temperature Detectors is as follows:

IB-10F	187°F
IB-10G	186°F
IB=10P	185°F

9. Corrective Action

The instrument was recalibrated to 200°F trip point.

10. Failure Data

1st Setpoint Drift on these detectors.

AEC DISTRIBUTION FOR PART 50 DOCKET MATERIAL
(TEMPORARY FORM)

CONTROL NO: 3313

FILE:

FROM:	DATE OF DOC	DATE REC'D	LTR	MEMO	RPT	OTHER
Niagara Mohawk Power Corp. Lycoming, N. Y. 13202 P. A. Burt	4-11-74	4-15-74	X			

TO:	ORIG	CC	OTHER	
D. J. Skovholt	1 signed			SENT AEC PDR X SENT LOCAL PDR X

CLASS	UNCLASS	PROP INFO	INPUT	NO CYS REC'D	DOCKET NO:
	XXX			40	50-220

DESCRIPTION:
Ltr reporting abnormal occurrence 50-220-74-4 on 4-2-74, in which the four sensors NAMCO SNAP LOCK #D1200GU406 PT1 and D1200GSR0423 PT1 were reported to RO:I as drifting beyond allowable limits on 4-2-74.....

PLANT NAME: Nine Mile Point Unit #1

ENCLOSURES:

DO NOT REMOVE

ACKNOWLEDGED

FOR ACTION/INFORMATION 4-16-74 GC

BUTLER(L)	SCHWENCER(L)	✓ZIEMANN(L)	REGAN(E)
W/ Copies	W/ Copies	W/7 Copies	W/ Copies
CLARK(L)	STOLZ(L)	DICKER(E)	
W/ Copies	W/ Copies	W/ Copies	W/ Copies
PARR(L)	VASSALLO(L)	KNIGHTON(E)	
W/ Copies	W/ Copies	W/ Copies	W/ Copies
KNIEL(L)	PURPLE (L)	YOUNGBLOOD(E)	
W/ Copies	W/ Copies	W/ Copies	W/ Copies

INTERNAL DISTRIBUTION

✓REG FILE	TECH REVIEW	DENTON		A/T IND
✓AEC PDR	✓HENDRIE	GRIMES	LIC ASST	BRAITMAN
✓OGC, ROOM P-506A	SCHROEDER	GAMMILL	✓DIGGS (L)	SALTZMAN
✓MUNTZING/STAFF	✓MACCARY	KASTNER	GEARIN (L)	R. HURT
✓CASE	✓KNIGHT	BALLARD	GOULBOURNE (L)	PLANS
GIAMBUSSO	✓PAWLICKI	SPANGLER	LEE (L)	MCDONALD
BOYD	✓SHAO		MAIGRET (L)	DUBE w/Input
MOORE (L)(BWR)	✓STELLO	ENVIRO	REED (E)	
DEYOUNG(L)(PWR)	✓HOUSTON	MULLER	SERVICE (L)	INFO
SKOVHOLT (L)	✓NOVAK	DICKER	SHEPPARD (L)	C. MILES
✓GOLLER(L)	✓ROSS	KNIGHTON	SLATER (E)	✓B. KING (E/W-358)
P. COLLINS	✓IPPOLITO	YOUNGBLOOD	SMITH (L)	✓KLECKER
DENISE	✓TEDESCO	REGAN	TEETS (L)	✓EISENHUT
REG OPR	✓LONG	PROJECT LDR	WADE (E)	
FILE & REGION(3)	✓LAINAS		WILLIAMS (E)	
✓MORRIS	✓BENAROYA	HARLESS	WILSON (L)	
✓STEELE	✓VOLLMER			

A/O

EXTERNAL DISTRIBUTION

✓1 - LOCAL PDR Oswego, N. Y.
✓1 - TIC (ABERNATHY)
✓1 - NSIC(BUCHANAN)
1 - ASLB
✓1 - P. R. DAVIS (AEROJET NUCLEAR)
✓16 - CYS ACRS ~~XXXXXX~~ SENT TO LIC. ASST. 4-16-74 DIGGS

(1)(2)(10)-NATIONAL LAB'S
1-ASLBP(E/W Bldg,Rm 529)
1-W. PENNINGTON, Rm E-201 GT
1-CONSULTANT'S NEWMARK/BLUME/AGBABIAN
1-GERALD ULRIKSON...ORNL
1-B & M SWINEBROAD, Rm E-201 GT

1-PDR-SAN/LA/NY
1-GERALD LELLOUCHE BROOKHAVEN NAT. LAB
1-AGMED(Ruth Gussman) RM-B-127, GT.
1-RD..MULLER..F-309 GT

NIAGARA MOHAWK POWER CORPORATION

NIAGARA MOHAWK

Nine Mile Point Nuclear Station
Post Office Box 32
Lycoming, New York
April 11, 1974

Mr. Donald J. Skovholt
Assistant Director for Reactor Operations
Division of Reactor Licensing
United States Atomic Energy Commission
Washington, D. C. 20545

Re: Provisional Operating License: DPR-17
Docket No.: 50-220
Abnormal Occurrence 50-220-74-4

Dear Mr. Skovholt:

On April 2, 1974 during the Spring 1974 refueling outage the low condenser vacuum sensors were tested as required by Technical Specification 3.6.2 Nine Mile Point Nuclear Station Unit #1. Persuant to Technical Specifications 1.13b and 6.6.b.1 the four (4) sensors NAMCO SNAP LOCK #D1200GU406 PT1 and D1200GSRO423 PT1 were reported to RO:I as drifting beyond allowable limits on April 2, 1974.

The low condenser vacuum sensors provide a reactor scram of 23 ± .5" of Hg. The primary reason for this trip is protection of the Turbine-Generator unit and does not have a nuclear related safety function.

With the drift in sensor switch settings a reactor scram would have occurred slightly later in time in the event of decreasing condenser vacuum. The following is a tabulation of the test results:

Number	6/11/73	4/2/74
#11	22.55	21.80
#12	22.70	22.00
#21	22.62	21.90
#22	22.57	21.80

The immediate corrective action was to recalibrate the sensors switched to required actuation point. This is the first failure of this type on these sensors.

As these sensors are required only for Turbine Generator unit protection and that protective function would have occurred only slightly later in time, no hazard was presented to the general public.

Very truly yours,

P. Allister Burt

P. Allister Burt
General Superintendent
Nuclear Generation

3313

TJD:cm

FROM: THOMAS J. PERKINS - NINE MILE POINT NUCLEAR STATION #1

DR Central File

ABNORMAL OCCURRENCE 50-220-74-4

PERSUANT TO THE TECHNICAL SPECIFICATIONS 1.13b and 3.6.2, WE ARE REPORTING AS AN ABNORMAL OCCURRENCE THE DRIFT IN THE LOW CONDENSER VACUUM SENSORS.

THE LOW CONDENSER VACUUM SENSORS NORMALLY PROVIDE A REACTOR SCRAM AT 23 ± .5" OF HG. THE PRIMARY REASON FOR THE TRIP IS PROTECTION OF THE TURBINE GENERATOR UNIT AND DOES NOT HAVE A NUCLEAR RELATED SAFETY FUNCTION.

THE FOUR SENSORS ACTUATED LOW WHICH WOULD CAUSE THE REACTOR SCRAM TO OCCUR SLIGHTLY LATER IN TIME IN THE EVENT OF DECREASING CONDENSER VACUUM. THE FOLLOWING IS A TABULATION OF THE TEST RESULTS:

NUMBER	6/11/73	4/2/74	REQUIRED
#11	22.55	21.8	23 ± .5
#12	22.7	22.0	"
#21	22.62	21.9	"
#22	22.57	21.8	"

THE CORRECTIVE ACTION WAS TO RESET THE SENSORS, NAMCO SNAP-LOCK #D1200GU406PT1 + #D1200GSRU423PT1 TO THE REQUIRED TRIP POINT.

AS THE SENSORS PROVIDE TURBINE-GENERATOR PROTECTION ONLY AND WOULD HAVE CAUSED THAT PROTECTIVE FUNCTION ONLY SLIGHTLY LATER IN TIME NO HAZARD WAS PRESENTED TO THE STATION OR THE GENERAL PUBLIC.

T. J. PERKINS
STATION SUPERINTENDENT

AEC DISTRIBUTION FOR PART 50 DOCKET MATERIAL
(TEMPORARY FORM)

CONTROL NO: 3314

FILE:

FROM:	DATE OF DOC	DATE REC'D	LTR	MEMO	RPT	OTHER
Niagara Mohawk Power Corp. Syracuse, N. Y. 13202 P. A. Burt	4-9-74	4-15-74	X			

TO:	ORIG	CC	OTHER	
D. J. Skovholt	1 signed			SENT AEC PDR X SENT LOCAL PDR X

CLASS	UNCLASS	PROP INFO	INPUT	NO CYS REC'D	DOCKET NO:
	XXX			40	50-220

DESCRIPTION:
Ltr reporting abnormal occurrence on 4-2-74, in which the inside valves in both line failed to meet the required limit of 12.9 SCFH.....

ENCLOSURES:

DO NOT REMOVE

ACKNOWLEDGED

PLANT NAME: Nine Mile Point Unit #1

FOR ACTION/INFORMATION 4-16-74 GC

BUTLER(L)	SCHWENCER(L)	✓ZIEMANN(L)	REGAN(E)
W/ Copies	W/ Copies	W/ 7Copies	W/ Copies
CLARK(L)	STOLZ(L)	DICKER(E)	
W/ Copies	W/ Copies	W/ Copies	W/ Copies
PARR(L)	VASSALLO(L)	KNIGHTON(E)	
W/ Copies	W/ Copies	W/ Copies	W/ Copies
KNIEL(L)	PURPLE (L)	YOUNGBLOOD(E)	
W/ Copies	W/ Copies	W/ Copies	W/ Copies

INTERNAL DISTRIBUTION

✓REG FILE	TECH REVIEW	DENTON		A/T IND
✓AEC PDR	✓HENDRIE	GRIMES	LIC ASST	BRAITMAN
✓OGC, ROOM P-506A	SCHROEDER	GAMMILL	✓DIGGS (L)	SALTZMAN
✓MUNTZING/STAFF	✓MACCARY	KASTNER	GEARIN (L)	B. HURT
✓CASE	✓KNIGHT	BALLARD	GOULBOURNE (L)	
GIAMBUSSO	✓PAWLICKI	SPANGLER	LEE (L)	PLANS
BOYD	✓SHAO		MAIGRET (L)	MCDONALD
MOORE (L)(BWR)	✓STELLO	ENVIRO	REED (E)	DUBE w/Input
DEYOUNG(L)(PWR)	✓HOUSTON	MULLER	SERVICE (L)	
SKOVHOLT (L)	✓NOVAK	DICKER	SHEPPARD (L)	INFO
✓GOLLER(L)	✓ROSS	KNIGHTON	SLATER (E)	C. MILES
P. COLLINS	✓IPPOLITO	YOUNGBLOOD	SMITH (L)	✓B. KING (E/W-358)
DENISE	✓TEDESCO	REGAN	TEETS (L)	✓KLECKER
REG OPR	✓LONG	PROJECT LDR	WADE (E)	✓EISENHUT
✓FILE & REGION(3)	✓LAINAS		WILLIAMS (E)	
✓MORRIS	✓BENAROYA	HARLESS	WILSON (L)	
✓STEELE	✓VOLLMER			

A/D
RJ

EXTERNAL DISTRIBUTION

✓1 - LOCAL PDR Oswego, N. Y.	(1)(2)(10)-NATIONAL LAB'S	1-PDR-SAN/LA/NY
✓1 - TIC (ABERNATHY)	1-ASLBP(E/W Bldg,Rm 529)	1-GERALD LELLOUCHE
✓1 - NSIC(BUCHANAN)	1-W. PENNINGTON, Rm E-201 GT	BROOKHAVEN NAT. LAB
1 - ASLB	1-CONSULTANT'S	1-AGMED(Ruth Gussman)
1 - P. R. DAVIS (AEROJET NUCLEAR)	NEWMARK/BLUME/AGBABIAN	RM-B-127, GT.
✓16 - CYS ACRS ~~XXXXXXX~~ SENT TO LIC. ASST. 4-16-74 DIGGS	1-GERALD ULRIKSON...ORNL	1-RD..MULLER..F-309 GT
	1-B & M SWINEBROAD, Rm E-201 GT	

Regulatory Docket File

NIAGARA MOHAWK POWER CORPORATION

NIAGARA MOHAWK

300 ERIE BOULEVARD WEST
SYRACUSE, N. Y. 13202

April 9, 1974

Mr. Donald J. Skovholt
Assistant Director for Reactor Operations
Division of Reactor Licensing
United States Atomic Energy Commission
Washington, D. C. 20545

Re: Provisional Operating License: DPR-17
Docket No.: 50-220
Abnormal Occurrence - 50-220-74-3

Dear Mr. Skovholt:

On April 2, 1974, in accordance with Technical Specification 4.3.3 e(4), the four (4) Main Steam Isolation Valves were leak tested. The outside MSIV's in each line successfully passed the leak rate test, however the inside valves in both lines failed to meet the required limit of 12.9 SCFH. Notification was made to RO:I on April 2, 1974 in accordance with Technical Specification 1.13e.

The Main Steam Flow from the reactor to the turbine is through two independent 24" lines. Each line contains two isolation valves, one inside the containment and one immediately outside the containment. The two failed valves, one in each line, were the valves inside the containment.

Under containment design basis accident conditions, both main steam lines would be essentially leak tight with low leakage through the outside valves and no hazard would be presented to the plant or the general public.

The primary corrective measure taken will depend upon the cause of leakage. It appears from preliminary results that one valve (#111) experienced a drift in the position switch on the valve controller to cause the valve not to fully close. The other valve #121, appears to require machine lapping of the valve seat. Such repairs have been made in the past and this is not the first of a kind failure.[1]

The tabular results for each valve is indicated below:

#111	Inside	1400 SCFH
#112	Outside	7.85 SCFH
#121	Inside	120 SCFH
#122	Outside	0.24 SCFH

3314

3314

In the interest of maintaining an efficient refueling outage schedule, the repair and retesting of the inside valves has not been completed to this date, however, the results of the repair and retest will appear in the Semi-Annual report published in July, 1974.

Very truly yours,

P. Allister Burt

P. Allister Burt
General Superintendent
Nuclear Generation

TJD:cm

[1]Ltr. P.A. Burt - Skovholt - June 6, 1973.

AEC DI[redacted]BUTION FOR PART 50 DOCKET MA[redacted]L
(TEMPORARY FORM)

CONTROL NO: 3092

FILE: A/O

FROM:	DATE OF DOC	DATE REC'D	LTR	MEMO	RPT	OTHER
Niagara Mohawk Power Corp. Syracuse, N. Y. 13202 R. R. Schneider	4-1-74	4-9-74	X			

TO:	ORIG	CC	OTHER	
D. J. Skovholt	3 signed			SENT AEC PDR X SENT LOCAL PDR X

CLASS	UNCLASS	PROP INFO	INPUT	NO CYS REC'D	DOCKET NO:
	XXX			40	50-220

DESCRIPTION:
Ltr reporting abnormal occurrence 50-220-74-2 on 3-23-74, regarding a pipe crack in the waste concentrator piping.....

ENCLOSURES:

DO NOT REMOVE

ACKNOWLEDGED

PLANT NAME: Nine Mile Point #1

FOR ACTION/INFORMATION 4-11-74 GC

BUTLER(L)	SCHWENCER(L)	✓ZIEMANN(L)	REGAN(E)
W/ Copies	W/ Copies	W/ 7Copies	W/ Copies
CLARK(L)	STOLZ(L)	DICKER(E)	
W/ Copies	W/ Copies	W/ Copies	W/ Copies
GOLLER(L)	VASSALLO(L)	KNIGHTON(E)	
W/ Copies	W/ Copies	W/ Copies	W/ Copies
KNIEL(L)	SCHEMEL(L)	YOUNGBLOOD(E)	
W/ Copies	W/ Copies	W/ Copies	W/ Copies

INTERNAL DISTRIBUTION

REG FILE	TECH REVIEW	DENTON		A/T IND
✓AEC PDR	✓HENDRIE	GRIMES	LIC ASST	BRAITMAN
✓OGC, ROOM P-506A	SCHROEDER	GAMMILL	✓DIGGS (L)	SALTZMAN
✓MUNTZING/STAFF	✓MACCARY	KASTNER	GEARIN (L)	B. HURT
✓CASE	✓KNIGHT	BALLARD	GOULBOURNE (L)	
GIAMBUSSO	✓PAWLICKI	SPANGLER	LEE (L)	PLANS
BOYD	✓SHAO		MAIGRET (L)	MCDONALD
MOORE (L)(BWR)	✓STELLO	ENVIRO	REED (E)	DUBE w/Input
DEYOUNG(L)(PWR)	✓HOUSTON	MULLER	SERVICE (L)	
✓SKOVHOLT (L)	✓NOVAK	DICKER	SHEPPARD (L)	INFO
P. COLLINS	✓ROSS	KNIGHTON	SLATER (E)	C. MILES
DENISE	✓IPPOLITO	YOUNGBLOOD	SMITH (L)	✓B. KING(RO)
REG OPR	✓TEDESCO	REGAN	TEETS (L)	
FILE & REGION(3)	✓LONG	PROJECT LDR	WADE (E)	
✓MORRIS	✓LAINAS		WILLIAMS (E)	
✓STEELE	✓BENAROYA	HARLESS	WILSON (L)	
	✓VOLLMER			

EXTERNAL DISTRIBUTION

RG

✓1 - LOCAL PDR Oswego, N. Y.		
✓1 - DTIE(ABERNATHY)	(1)(2)(10)-NATIONAL LAB'S	1-PDR-SAN/LA/NY
✓1 - NSIC(BUCHANAN)	1-ASLBP(E/W Bldg,Rm 529)	1-GERALD LELLOUCHE
1 - ASLB(YORE	1-W. PENNINGTON, Rm E-201 GT	BROOKHAVEN NAT. LAB
	1-CONSULTANT'S	1-AGMED(Ruth Gussman)
✓16 - CYS ACRS ~~XXXXXX~~ SENT TO LIC. ASST. 4-11-74 DIGGS	NEWMARK/BLUME/AGBABIAN	RM-B-127, GT.
	1-GERALD ULRIKSON...ORNL	1-RD..MULLER..F-309 GT

Regulatory Docket File

NIAGARA MOHAWK POWER CORPORATION

NIAGARA MOHAWK

300 ERIE BOULEVARD WEST
SYRACUSE, N.Y. 13202

DOCKETED USAEC APR 9 1974 REGULATORY MAIL SECTION DOCKET CLERK

April 1, 1974

RECEIVED APR 9 1974 Mail Section

Mr. Donald J. Skovholt
Assistant Director for Reactor Operations
Division of Reactor Licensing
United States Atomic Energy Commission
Washington, D. C. 20545

Re: Provisional Operating License: DPR-17
Docket No.: 50-220

Dear Mr. Skovholt:

Pursuant to Nine Mile Point Nuclear Station Unit #1 Technical Specifications 1.13 d, we are reporting Abnormal Occurrence 50-220-74-2 a pipe crack in the waste concentrator piping.

On March 23, 1974 during routine operation of the concentrator steam was observed coming through the insulation surrounding a 12" section of pipe leading from the side arm heater to the bott m of the concentrator. The concentrator was shut down and the insulation removed revealing cracks in the pipe.

The primary cause of the failure can be attributed to improper installation techniques during construction. Due to a problem with pipe fit certain forcing means were employed to position the pipe. These means weakened the pipe and caused its cracking. The pipe section will be replaced using approved methods. A section of the failed pipe will be examined to determine if any underlying cause for cracking was present.

The expanded Administrative Procedures and the expanded Quality Control Group will prevent reoccurences of this failure in the future.

The cracking in the piping did not present a hazard to the Station Personnel or the General Public.

Very truly yours,

R. R. Schneider
Vice President - Electric Operations

TJD:cm

3092

UNITED STATES
ATOMIC ENERGY COMMISSION
DIRECTORATE OF REGULATORY OPERATIO
REGION I
631 PARK AVENUE
KING OF PRUSSIA, PENNSYLVANIA 19406

Central files

March 25, 1974

Distribution Code 2

Chief, Field Services and
Enforcement Branch, HQ

ABNORMAL OCCURRENCE

Licensee: Niagara Mohawk Power Corp.

Docket No.: 50-220

Abnormal Occurrence: 50-220-74-2 dated March 23, 1974

The attached report from the subject licensee is forwarded in accordance with RO Manual Chapter 1000. Follow-up will be performed during the next inspection, as appropriate. Copies of the report have been forwarded to the PDR, Local PDR, NSIC, DTIE, and State representatives. The licensee will submit a 10-day written report to Licensing.

A/0

FROM: T.J. PERKINS - NINE MILE POINT NUCLEAR STATION

ABNORMAL OCCURRENCE 50-220-74-2

PERSUANT TO TECHNICAL SPECIFICATION 1.13d WE ARE REPORTING AS AN ABNORMAL OCCURRENCE CRACKING IN THE WASTE CONCENTRATOR PIPING FROM THE SIDE ARM HEATER.

ON MARCH 23, 1974 DURING ROUTINE OPERATION OF THE CONCENTRATOR A SLIGHT PUFF OF STEAM WAS SEEN TO BE EMITTED FROM A SECTION OF 12" PIPE LEADING FROM SIDE ARM HEATER TO THE BOTTOM OF THE CONCENTRATOR. FOLLOWING SHUTDOWN OF THE CONCENTRATOR AND REMOVAL OF THE INSULATION SURROUNDING THE PIPE, SEVERAL CRACKS WERE REVEALED IN AND NEAR ONE WELD.

THE CAUSE OF THE FAILURE IS CURRENTLY UNDER INVESTIGATION AND WOULD OF COURSE DICTATE THE CORRECTIVE ACTION. NO HAZARD WAS PRESENTED TO THE GENERAL PUBLIC AS A RESULT OF THIS FAILURE.

T.J. PERKINS
STATION SUPERINTENDENT
NINE MILE POINT NUCLEAR STATION

AEC DISTRIBUTION FOR PART 50 DOCKET MATERIAL
(TEMPORARY FORM)

CONTROL NO: 2000

FILE: A10

FROM:	DATE OF DOC	DATE REC'D	LTR	MEMO	RPT	OTHER
NiagaraMMohawk Power Corporation Syracuse, N. Y. R. R. Schneider	3-8-74	3-11-74	X			

TO:	ORIG	CC	OTHER	
Donald J. Skovholt	1 signed	39		SENT AEC PDR XXX SENT LOCAL PDR XXX

CLASS	UNCLASS	PROP INFO	INPUT	NO CYS REC'D	DOCKET NO:
	XXX			40	50-220

DESCRIPTION:

Ltr reporting abnormal occurrence of 2-25-74 in which pne core spray differential pressure ins instrument (Barton 288-4802, RV-30A) was found to actuate at a lower value than allowed

PLANT NAME: NINE MILE POINT UNIT #1

ENCLOSURES:

ACKNOWLEDGED

DO NOT REMOVE

FOR ACTION/INFORMATION 3-12-74 GMC

BUTLER(L)	SCHWENCER(L)	✓ ZIEMANN(L)	REGAN(E)
W/ Copies	W/ Copies	W/ 7 Copies	W/ Copies
CLARK(L)	STOLZ(L)	DICKER(E)	
W/ Copies	W/ Copies	W/ Copies	W/ Copies
GOLLER(L)	VASSALLO(L)	KNIGHTON(E)	
W/ Copies	W/ Copies	W/ Copies	W/ Copies
KNIEL(L)	SCHEMEL(L)	YOUNGBLOOD(E)	
W/ Copies	W/ Copies	W/ Copies	W/ Copies

INTERNAL DISTRIBUTION

✓ REG FILE	TECH REVIEW	DENTON		A/T IND
✓ AEC PDR	✓ HENDRIE	GRIMES	LIC ASST	BRAITMAN
✓ OGC, ROOM P-506A	SCHROEDER	GAMMILL	✓ DIGGS (L)	SALTZMAN
✓ MUNTZING/STAFF	✓ MACCARY	KASTNER	GEARIN (L)	B. HURT
✓ CASE	✓ KNIGHT	BALLARD	GOULBOURNE (L)	
GIAMBUSSO	✓ PAWLICKI	SPANGLER	LEE (L)	PLANS
BOYD	✓ SHAO		MAIGRET (L)	MCDONALD
MOORE (L)(BWR)	✓ STELLO	ENVIRO	REED (L)	DUBE w/Input
DEYOUNG(L)(PWR)	✓ HOUSTON	MULLER	SERVICE (L)	
✓ SKOVHOLT (L)	✓ NOVAK	DICKER	SHEPPARD (E)	INFO
P. COLLINS	✓ ROSS	KNIGHTON	SMITH (L)	C. MILES
DENISE	✓ IPPOLITO	YOUNGBLOOD	TEETS (L)	✓ B. KING E/W BLDG
REG OPR	✓ TEDESCO	REGAN	WADE (E)	
✓ FILE & REGION(3)	✓ LONG	PROJECT LDR	WILLIAMS (E)	
✓ MORRIS	✓ LAINAS		WILSON (L)	
✓ STEELE	✓ BENAROYA	HARLESS		
	✓ VOLLMER			

EXTERNAL DISTRIBUTION

✓ 1 - LOCAL PDR OSWEGO, NY	1-B & M SWINEBROAD	1-P. R. DAVIS
✓ 1 - DTIE(ABERNATHY)	(1)(2)(10)-NATIONAL LAB'S	1-PDR-SAN/LA/NY
✓ 1 - NSIC(BUCHANAN)	1-ASLBP(E/W Bldg,Rm 529)	1-GERALD LELLOUCHE
1 - ASLB(YORE/SAYRE/	1-W. PENNINGTON, Rm E-201 GT	BROOKHAVEN NAT. LAB
WOODARD/"H" ST.	1-CONSULTANT'S	1-AGMED(Ruth Gussma
✓ 16 - CYS ACRS ~~XXXXX~~	NEWMARK/BLUME/AGBABIAN	RM-B-127, GT.
Sent to Lic Asst Diggs 3-12-74	1-GERALD ULRIKSON...ORNL	1-RD. MULLER. F-309

Regulatory File Cy.

NIAGARA MOHAWK POWER CORPORATION

NIAGARA MOHAWK

300 ERIE BOULEVARD WEST
SYRACUSE, N.Y. 13202

March 8, 1974

Mr. Donald J. Skovholt
Assistant Director for Reactor Operations
Division of Reactor Licensing
U.S. Atomic Energy Commission
Washington, D. C. 20545

Re: Provisional Operating License: DPR-17
Docket No.: 50-220

Dear Mr. Skovholt:

Pursuant to Nine Mile Point Nuclear Station Unit #1 Technical Specifications 1.13 d and 4.14 d we are reporting as an abnormal occurrence, an alarm limit drift on one core spray differential pressure instrument.

On February 25, 1974 during routine surveillance testing, one core spray differential pressure instrument (Barton 288-4802, RV-30A) was found to actuate at a lower value than that as set forth in the instrument surveillance checklist. This is the second drift in set point of this particular instrument[1] . Notification was made to Region I, Division of Regulatory Operations on February 26, 1974.

The instrument surveillance checklist set point is 5 psid +0-1.0. The instrument actuated on alarm at 3.5 psid or at a lower differential than is required. However awareness of an abnormal condition in the core spray piping would have alarmed sooner than required thus the drift was in a safe direction. The instrument as designed is intended to provide an alarm only and serves no protective circuitry function.

The primary function of the core spray differential pressure indicators is to monitor the condition of the core spray piping between the reactor vessel. A loss of integrity would create a differential pressure in the range of 20-25 psid under normal operating conditions.

To prevent re-occurrence of this instrument set point drift a modification will be made to the Barton instrument to minimize if not eliminate the problem. This modification will be made during the upcoming Spring refueling outage scheduled to commence this month.

2000

Mr. Donald J. Skovholt
U.S. Atomic Energy Commission

March 6, 1974

Based upon the fact that the drift was in the safe direction, no undue hazard was presented to the general public as a result of this instrument drift.

Very truly yours,

R.R. Schneider
Vice President - Electric Operations

TJD:cm

[1] Ltr. Schneider - Skovholt July 6, 1973

Regulatory File Cy.

AEC [redacted]RIBUTION FOR PART 50 DOCKET [redacted]RIAL
(TEMPORARY FORM)

CONTROL NO: 337

FILE:

FROM:	DATE OF DOC	DATE REC'D	LTR	MEMO	RPT	OTHER
Rudolph R. Schneider Niagara Mohawk Power Corporation 300 Erie Boulevard West Syracuse, N. Y. 13202	1-3-74	1-11-74	X			

TO:	ORIG	CC	OTHER	
Mr. Donald J. Skovholt	1 signed	39		SENT AEC PDR XXX SENT LOCAL PDR XXX

CLASS	UNCLASS	PROP INFO	INPUT	NO CYS REC'D	DOCKET NO:
	XXX			40	50-220

DESCRIPTION:
Ltr furnishing the following info:
1) inspection of snubbers 1-2-74
2) filing of record of inspection
3) next inspection 2-1-74

DO NOT REMOVE
ACKNOWLEDGED

ENCLOSURES:

PLANT NAME: Nine Mile Point #1

FOR ACTION/INFORMATION 1-11-74 GMC

BUTLER(L)	SCHWENCER(L)	✓ZIEMANN(L)	REGAN(E)
W/ Copies	W/ Copies	W/5 Copies	W/ Copies
CLARK(L)	STOLZ(L)	DICKER(E)	
W/ Copies	W/ Copies	W/ Copies	W/ Copies
GOLLER(L)	VASSALLO(L)	KNIGHTON(E)	
W/ Copies	W/ Copies	W/ Copies	W/ Copies
KNIEL(L)	SCHEMEL(L)	YOUNGBLOOD(E)	
W/ Copies	W/ Copies	W/ Copies	W/ Copies

INTERNAL DISTRIBUTION

✓REG FILE	TECH REVIEW	DENTON		A/T IND
✓AEC PDR	✓HENDRIE	GRIMES	LIC ASST	BRAITMAN
OGC, ROOM P-506A	SCHROEDER	GAMMILL	✓DIGGS (L)	SALTZMAN
MUNTZING/STAFF	✓MACCARY	KASTNER	GEARIN (L)	B. HURT
CASE	KNIGHT	BALLARD	GOULBOURNE (L)	
✓GIAMBUSSO	PAWLICKI	SPANGLER	LEE (L)	PLANS
BOYD	SHAO		MAIGRET (L)	✓MCDONALD
MOORE (L)(BWR)	STELLO	ENVIRO	SERVICE (L)	DUBE w/Input
DEYOUNG(L)(PWR)	HOUSTON	MULLER	SHEPPARD (E)	
SKOVHOLT (L)	NOVAK	DICKER	SMITH (L)	INFO
P. COLLINS	ROSS	KNIGHTON	TEETS (L)	C. MILES
DENISE	IPPOLITO	YOUNGBLOOD	WADE (E)	B. KING
✓REG OPR	TEDESCO	REGAN	WILLIAMS (E)	
FILE & REGION(3)	LONG	PROJECT LDR	WILSON (L)	
MORRIS	LAINAS			
STEELE	BENAROYA	HARLESS		
	VOLLMER			

J.H. BJ

EXTERNAL DISTRIBUTION

✓1 - LOCAL PDR Oswego, N. Y.		
1 - DTIE(ABERNATHY)	(1)(2)(10)-NATIONAL LAB'S	1-PDR-SAN/LA/NY
1 - NSIC(BUCHANAN)	1-ASLBP(E/W Bldg,Rm 529)	1-GERALD LELLOUCHE
1 - ASLB(YORE/SAYRE/ WOODARD/"H" ST.	1-W. PENNINGTON, Rm E-201 GT	BROOKHAVEN NAT. LAB
	1-CONSULTANT'S NEWMARK/BLUME/AGBABIAN	1-AGMED(Ruth Gussman) RM-B-127, GT.
✓16 - CYS ACRS Sent to Lic Asst. R. Diggs	1-GERALD ULRIKSON ORNL	1-RD. MULLER F-309 G

Regulatory File Cy

NIAGARA MOHAWK POWER CORPORATION

NIAGARA MOHAWK

300 ERIE BOULEVARD WEST
SYRACUSE, N.Y. 13202

January 3, 1974

RECEIVED JAN 11 1974 U.S. ATOMIC ENERGY COMMISSION Regulatory Mail Section

DOCKETED USAEC JAN 11 1974 REGULATORY MAIL SECTION DOCKET CLERK

Mr. Donald J. Skovholt
Assistant Director for Reactor Operations
Division of Reactor Licensing
United States Atomic Energy Commission
Washington, D. C. 20545

Re: Provisional Operating License: DPR-17
Docket No.: 50-220

Dear Mr. Skovholt:

In accordance with our commitment* to report the condition of Bergen-Paterson snubbers monthly the following information is furnished.

1. An inspection of all Bergen-Paterson snubbers was conducted on January 2, 1974.

2. All snubbers were found to be satisfactory and meet the criteria of the inspection as specified*.

3. A record of the inspection of each snubber has been made and filed as specified*.

4. The next inspection is scheduled for February 1, 1974.

Very truly yours,

Rudolph R. Schneider
Vice President - Electric Operations

TJD:cm

* Ltr. RRS to Skovholt - Dec. 5, 1973

337

AEC DISTRIBUTION FOR PART 50 DOCKET MATERIAL
(TEMPORARY FORM)

CONTROL NO: 10090

FILE:

FROM:	DATE OF DOC	DATE REC'D	LTR	MEMO	RPT	OTHER
Niagara Mohawk Power Corp. Syracuse, N.Y. 13202 Mr. R.R. Schneider	12-21-73	12-28-73	X			

TO:	ORIG	CC	OTHER	
D.J. Skovholt	1 signed			SENT AEC PDR XXX SENT LOCAL PDR XXX

CLASS	UNCLASS	PROP INFO	INPUT	NO CYS REC'D	DOCKET NO:
	XXX			40	50-220

DESCRIPTION:
Ltr re their 11-28-73 and 12-3-73 ltrs concern failures of 11 and 15 control rods to insert to 00 following a reactor scram at Nine Mile Point Unit #1.....submitting add'l info on the apparent cause of these abnormal occurrences....

ENCLOSURES:

ACKNOWLEDGED

DO NOT REMOVE

PLANT NAME: Nine Mile Point #1

FOR ACTION/INFORMATION 1-8-74 JB

BUTLER(L)	SCHWENCER(L)	✓ZIEMANN(L)	REGAN(E)
W/ Copies	W/ Copies	W/7 Copies	W/ Copies
CLARK(L)	STOLZ(L)	DICKER(E)	
W/ Copies	W/ Copies	W/ Copies	W/ Copies
GOLLER(L)	VASSALLO(L)	KNIGHTON(E)	
W/ Copies	W/ Copies	W/ Copies	W/ Copies
KNIEL(L)	SCHEMEL(L)	YOUNGBLOOD(E)	
W/ Copies	W/ Copies	W/ Copies	W/ Copies

INTERNAL DISTRIBUTION

✓REG FILE	TECH REVIEW	DENTON		A/T IND
✓AEC PDR	✓HENDRIE	GRIMES	LIC ASST	BRAITMAN
✓OGC, ROOM P-506A	SCHROEDER	GAMMILL	✓DIGGS (L)	SALTZMAN
✓MUNTZING/STAFF	✓MACCARY	KASTNER	GEARIN (L)	B. HURT
✓CASE	✓KNIGHT	BALLARD	GOULBOURNE (L)	PLANS
GIAMBUSSO	✓PAWLICKI	SPANGLER	LEE (L)	MCDONALD
BOYD	✓SHAO		MAIGRET (L)	DUBE
MOORE (L)(BWR)	✓STELLO	ENVIRO	SERVICE (L)	
DEYOUNG(L)(PWR)	✓HOUSTON	MULLER	SHEPPARD (E)	INFO
✓SKOVHOLT (L)	✓NOVAK	DICKER	SMITH (L)	C. MILES
P. COLLINS	✓ROSS	KNIGHTON	TEETS (L)	✓B. King (RO)
	✓IPPOLITO	YOUNGBLOOD	WADE (E)	
✓REG OPR	✓TEDESCO	REGAN	WILLIAMS (E)	
FILE & REGION(3)	✓LONG	PROJECT LDR	WILSON (L)	
✓MORRIS	✓LAINAS			
✓STEELE	✓BENAROYA	HARLESS		
	✓VOLLMER			

J.K.

EXTERNAL DISTRIBUTION

✓1 - LOCAL PDR Oswego, N.Y.		
✓1 - DTIE(ABERNATHY)	(1)(2)(10)-NATIONAL LAB'S	1-PDR-SAN/LA/NY
✓1 - NSIC(BUCHANAN)	1-ASLBP(E/W Bldg,Rm 529)	1-GERALD LELLOUCHE
1 - ASLB(YORE/SAYRE/ WOODARD/"H" ST.	1-W. PENNINGTON, Rm E-201 GT	BROOKHAVEN NAT. LAB
	1-CONSULTANT'S NEWMARK/BLUME/AGBABIAN	1-AGMED(Ruth Gussman) RM-B-127, GT.
✓16 - CYS ACRS ~~HOLDING~~ Sent to Diggs 1-8-74	1-GERALD ULRIKSON...ORNL	1-RD..MULLER..F-309 GT

Regulatory File Cy.

NIAGARA MOHAWK POWER CORPORATION

NIAGARA MOHAWK

300 ERIE BOULEVARD WEST
SYRACUSE, N.Y. 13202

December 21, 1973

Mr. Donald J. Skovholt
Assistant Director for Reactor Operations
Division of Reactor Licensing
United States Atomic Energy Commission
Washington, D.C. 20545

Re: Provisional Operating License: DPR-17
Docket No.: 50-220

Dear Mr. Skovholt:

This letter is to provide, as committed, additional clarifying information describing the apparent cause of the abnormal occurrences reported to you on November 28 and December 3, 1973, the failures of eleven (11) and fifteen (15), respectively, control rods to insert to 00 following a reactor scram at Nine Mile Point Nuclear Station 1 (NMPNS 1).

The control rod drives used at NMPNS 1 are the locking piston type using water as the hydraulic fluid. The assembly consists primarily of a stop piston and seals, which is fixed in position, a drive piston with seals, which is cylindrical around the stop piston and a collet-piston with rings, which locks the drive piston in an even notch position. The drive piston assembly has a subassembly, an index tube with 24 notches. The notches being similar to a right triangle cut, with the 90° angle at the notch top to prevent withdrawing of the control blade. The collet-piston has a latching mechanism made up of six fingers. Spring action in the fingers themselves hold them against the index tube. When these fingers are in a notch in the index tube the control blade cannot be withdrawn. Also if the fingers are not in a notch position but in contact with the index tube, the furthest the control rod can withdraw or settle is to the next notch position. In other words if a drive has been inserted beyond notch position 02 but not beyond position 00 the rod will settle back into notch position 02 and no further. The stop piston is a hollow assembly with two sets of seals and hydraulic ports (Buffer holes) between the above drive piston area an area between the two set of seals, and the scram exhaust valve. As pressure is increased under the drive piston the control rod tends to insert into the core. However the water above the drive piston must be evacuated as the drive piston assembly moves into this area. The water is exhausted through 8 ports in the stop piston assembly, (buffer holes). However as the drive piston moves closer to fully inserted position the holes are covered up by seals in the drive piston reducing the rate at which water may be evacuated from the over piston area. Thus on a scram this decreasing rate of water flow causes the drive to slow down once it passes the 02 notch position.

10090

Mr. Donald J. Skovholt
U.S. Atomic Energy Commission

December 21, 1973

As the rate of water flow decreases the pressure exerted must increase, however it remains much less than 1000 psi or reactor pressure. If the stop piston seals have become broken, scored or jammed and do not perform their function, reactor pressure water is introduced to the area between the two sets of seals. This excess water is carried away through the hydraulic port between the seals through the stop piston to the hollow interior. If the leakage is approximately 6 gpm past these seals it will force water at reactor pressure through the lower stop piston seal into the above drive piston area. Because of the number and size of the buffer holes available at notch 04 and notch 02 (Figure 1), no problem is presented to drive movement. However beyond the 02 notch position moving toward 00 the increased stop piston seal leakage becomes critical, such that the remaining buffer hole cannot vent the required water and the drive stops between position 01 and notch 00 (Figure 2). Upon reseting the scram signal, the scram dump valve closes. Pressure quickly builds up in the drive until reactor pressure is equalized. The drive then settles to notch 02. It can not proceed further to notch 04 because of the latching mechanism in the collet piston. Two important items which have been substantiated through testing by the General Electric Company can be drawn from the above sequence.

1. The drive slow down is not a problem until the drive has passed the 01 position. Sufficient buffer holes exist prior to this position.

2. The drive can only settle into the 02 notch position because of the latching mechanism in the collet-piston.

The drive design has been modified by the manufacturer (General Electric Company) to mount a .0012" mesh filter on the stop piston thus preventing the entry of dirt particles to the stop piston seals. These dirt particles cause the jamming and scoring of the stop piston seals. NMPNS 1 will start a conversion program at the Spring 1974 refueling outage.

Therefore having established that the only positions that the control rod with broken, jammed or scored stop piston seals can settle into is notch 00 or 02 consideration must be given to the shutdown margin with all control rods at notch 02. Calculations based upon shutdown margin tests and cold Xenon free criticals show a shutdown margin, with all rods at notch position 02 and the strongest control rod withdrawn, of 1.94% ΔK at Xenon free cold conditions.

In a random nine rod array (3x3) with the center rod withdrawn to 48 and adjacent rods at 02 notch position the shutdown margin is a minimum of 2.28%ΔK. If all rods were at notch 02 the shutdown margin would be 2.98% Δ K.

In conclusion, it has been established that adequate shutdown margin exists with all control rods at notch position 02. It has been further established that the possibility of even one rod settling in a notch position other than 00 or 02 is highly improbable if not impossible. Therefore it is concluded that no hazard exists to safe operation of the plant or to the general public during the remainder of this operating cycle as a result of this problem.

Very truly yours,

Rudolph R. Schneider
Vice President - Electric Operations

RRS:cm
Enclosures - 2 figures
REGISTERED MAIL - RETURN RECEIPT

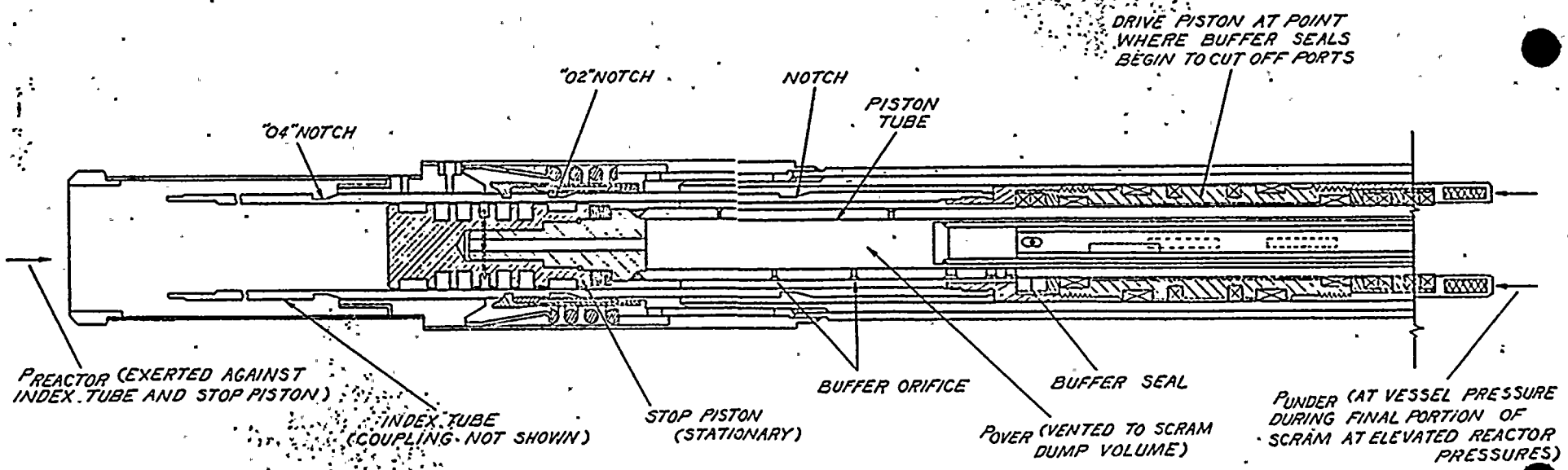

RELATIONSHIP OF PARTS AT TIME OF BUFFER ENTRY
FIG. 1

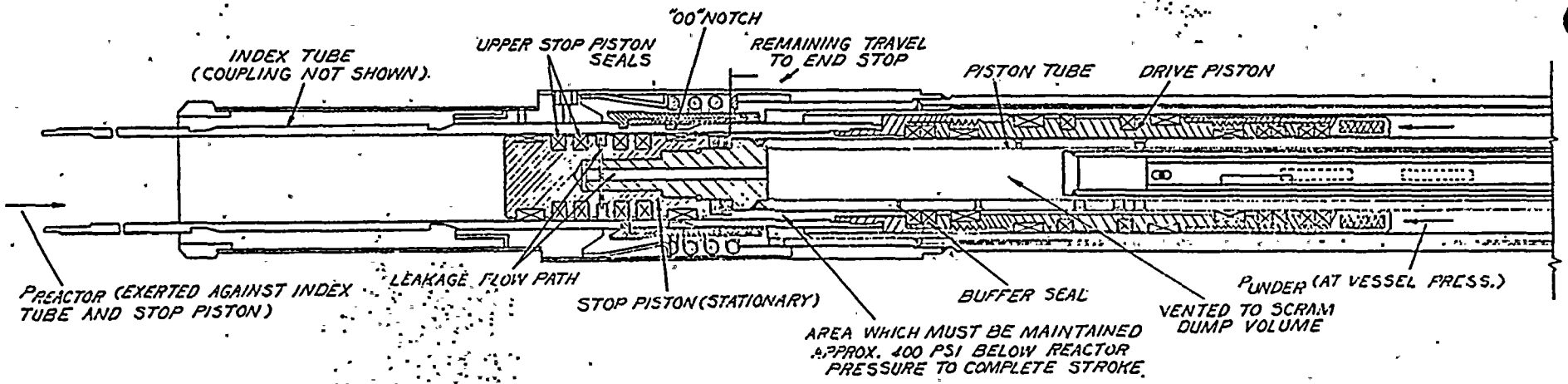

RELATIONSHIP OF PARTS WHEN PISTON IS 1 1/4" FROM POSITION "00"

FIG. 2

AEC DISTRIBUTION FOR PART 50 DOCKET MATERIAL
(TEMPORARY FORM)

CONTROL NO: 8914

FILE: A/6

FROM:	DATE OF DOC	DATE REC'D	LTR	MEMO	RPT	OTHER
Niagara Mohawk Power Corporation Syracuse, N. Y. 13202 Rudolph R. Schneider	12-10-73	12-14-73	X			

TO:	ORIG	CC	OTHER	
Mr. Skovholt	1 signed			SENT AEC PDR X SENT LOCAL PDR X

CLASS	UNCLASS	PROP INFO	INPUT	NO CYS REC'D	DOCKET NO:
	XXX			40	50-220

DESCRIPTION:
Ltr reporting an incident on 12-1-73, in which the Scram Dump Volume Level system failed to operate during routine surveillance testing.....

ENCLOSURES:

ACKNOWLEDGED
Do Not Remove

PLANT NAME: Nine Mile Point Unit # 1

FOR ACTION/INFORMATION 12-15-73 AB

BUTLER(L)	SCHWENCER(L)	✓ZIEMANN(L)	REGAN(E)
W/ Copies	W/ Copies	W/7 Copies	W/ Copies
CLARK(L)	STOLZ(L)	DICKER(E)	
W/ Copies	W/ Copies	W/ Copies	W/ Copies
GOLLER(L)	VASSALLO(L)	KNIGHTON(E)	
W/ Copies	W/ Copies	W/ Copies	W/ Copies
KNIEL(L)	SCHEMEL(L)	YOUNGBLOOD(E)	
W/ Copies	W/ Copies	W/ Copies	W/ Copies

INTERNAL DISTRIBUTION

✓REG FILE	TECH REVIEW	DENTON		A/T IND
✓AEC PDR	✓HENDRIE	GRIMES	LIC ASST	BRAITMAN
✓OGC, ROOM P-506A	SCHROEDER	GAMMILL	✓DIGGS (L)	SALTZMAN
✓MUNTZING/STAFF	✓MACCARY	KASTNER	GEARIN (L)	B. HURT
✓CASE	✓KNIGHT	BALLARD	GOULBOURNE (L)	PLANS
GIAMBUSSO	✓PAWLICKI	SPANGLER	LEE (L)	MCDONALD
BOYD	✓SHAO		MAIGRET (L)	DUBE
MOORE (L)(BWR)	✓STELLO	ENVIRO	SERVICE (L)	
DEYOUNG(L)(PWR)	✓HOUSTON	MULLER	SHEPPARD (E)	INFO
✓SKOVHOLT (L)	✓NOVAK	DICKER	SMITH (L)	C. MILES
P. COLLINS	✓ROSS	KNIGHTON	TEETS (L)	✓B. KING
	✓IPPOLITO	YOUNGBLOOD	WADE (E)	
REG OPR	✓TEDESCO	REGAN	WILLIAMS (E)	
✓FILE & REGION(3)	✓LONG	PROJECT LDR	WILSON (L)	
✓MORRIS	✓LAINAS			
✓STEELE	✓BENAROYA	HARLESS		
	✓VOLLMER			

EXTERNAL DISTRIBUTION

✓1 - LOCAL PDR Oswego, N. Y.		
✓1 - DTIE(ABERNATHY)	(1)(2)(10)-NATIONAL LAB'S	1-PDR-SAN/LA/NY
✓1 - NSIC(BUCHANAN)	1-ASLBP(E/W Bldg,Rm 529)	1-GERALD LELLOUCHE
1 - ASLB(YORE/SAYRE/	1-W. PENNINGTON, Rm E-201 GT	BROOKHAVEN NAT. LAB
WOODARD/"H" ST.	1-CONSULTANT'S	1-AGMED(Ruth Gussman)
✓16 - CYS ACRS ~~HOLDING~~ SENT TO LIC ASST.	NEWMARK/BLUME/AGBABIAN	RM-B-127, GT.
R. DIGGS ON 12-15-73	1-GERALD ULRIKSON...ORNL	1-RD..MULLER..F-309 GT

Regulatory Cy.

NIAGARA MOHAWK POWER CORPORATION

NIAGARA MOHAWK

300 ERIE BOULEVARD WEST
SYRACUSE, N.Y. 13202

December 10, 1973

AOR 73-12-1

Mr. Donald J. Skovholt
Assistant Director for Reactor Operations
Division of Reactor Licensing
United States Atomic Energy Commission
Washington, D. C. 20545

Re: Provisional Operating License: DPR-17
Docket No.: 50-220

Dear Mr. Skovholt:

On December 1, 1973 at 1300 hours at Nine Mile Point Nuclear Station Unit #1, a Magnetrol switch #352624 in the Scram Dump Volume level system failed to operate during routine surveillance testing. Persuant to Technical Specification 1.13 d,:

> d. Failure of one or more components of an engineered safety feature or Station system that causes or threatens to cause the feature or system to be incapable of performing its intended function,

this is an abnormal occurrence and was reported by telephone on December 1, 1973 and photocopy on December 3, 1973 to Director of Regulatory Operations, Region I.

Prior to the occurrence the unit was operating at 1272 MWt with all plant systems normal. Routine surveillance testing was in progress.

The scram dump volume level switches (37 gal.) cause a reactor scram in a 1 out of 2 twice logic. RD08C failed to cause the required actuation of #12 trip channel. The remaining three instruments in this system performed as required.

The apparent cause of this occurrence was the result of oxidized mercury in the bulb of the switch. Although the switch carriage would rotate as required the mercury would not move out of contact with the switch wire inside the bulb. A pin hole leak was found in the bulb.

Since the redundant component was fully operable a scram would have been produced if required and no hazard would have been presented to the general public.

To correct this situation, the mercury bulb was replaced and in the future as much as possible all mercoids will be checked for this condition during surveillance testing. This is the first failure of this type.

8914

Mr. Donald J. Skovholt
U.S. Atomic Energy Commission

December 10, 1973

As the mercury starts to oxidize it loses its mirror shine and becomes increasingly dull. The Instrumentation and Control Technicians will be alerted to look for this condition.

Very truly yours,

Rudolph R. Schneider
Vice President - Electric Operations

RRS:cm

REGISTERED MAIL
RETURN RECEIPT REQUEST

AEC DISTRIBUTION FOR PART 50 DOCKET MATERIAL
(TEMPORARY FORM)

CONTROL NO: 8728

FILE:

FROM:	DATE OF DOC	DATE REC'D	LTR	MEMO	RPT	OTHER
Niagara Mohawk Power Corporation Syracuse, New York 13202 Rudolph R. Schneider	12-3-73	12-7-73	x			

TO:	ORIG	CC	OTHER	
D. J. Skovholt	1 signed	39		SENT AEC PDR X SENT LOCAL PDR X

CLASS	UNCLASS	PROP INFO	INPUT	NO CYS REC'D	DOCKET NO:
	XXX			40	50-220

DESCRIPTION:

Ltr reporting abnormal occurrence on 11-26-73 regarding 15 control rod drives failed to insert to position 00 following a reactor scram.

ENCLOSURES:

ACKNOWLEDGED
DO NOT REMOVE

PLANT NAME: Nine Miles Point Unit # 1

FOR ACTION/INFORMATION 12-8-73 fod

BUTLER(L)	SCHWENCER(L)	✓ZIEMANN(L)	REGAN(E)
W/ Copies	W/ Copies	W/7 Copies	W/ Copies
CLARK(L)	STOLZ(L)	DICKER(E)	
W/ Copies	W/ Copies	W/ Copies	W/ Copies
GOLLER(L)	VASSALLO(L)	KNIGHTON(E)	
W/ Copies	W/ Copies	W/ Copies	W/ Copies
KNIEL(L)	SCHEMEL(L)	YOUNGBLOOD(E)	
W/ Copies	W/ Copies	W/ Copies	W/ Copies

INTERNAL DISTRIBUTION

✓REG FILE	TECH REVIEW	DENTON		A/T IND
✓AEC PDR	✓HENDRIE	GRIMES	LIC ASST	BRAITMAN
✓OGC, ROOM P-506A	SCHROEDER	GAMMILL	✓DIGGS (L)	SALTZMAN
✓MUNTZING/STAFF	✓MACCARY	KASTNER	GEARIN (L)	B. HURT
✓CASE	✓KNIGHT	BALLARD	GOULBOURNE (L)	PLANS
GIAMBUSSO	✓PAWLICKI	SPANGLER	LEE (L)	MCDONALD
BOYD	✓SHAO		MAIGRET (L)	DUBE
MOORE (L)(BWR)	✓STELLO	ENVIRO	SERVICE (L)	
DEYOUNG(L)(PWR)	✓HOUSTON	MULLER	SHEPPARD (E)	INFO
✓SKOVHOLT (L)	✓NOVAK	DICKER	SMITH (L)	C. MILES
P. COLLINS	✓ROSS	KNIGHTON	TEETS (L)	✓B. KING (RO)
	✓IPPOLITO	YOUNGBLOOD	WADE (E)	
REG OPR	✓TEDESCO	REGAN	WILLIAMS (E)	
✓FILE & REGION(3)	✓LONG	PROJECT LDR	WILSON (L)	
✓MORRIS	✓LAINAS			
✓STEELE	✓BENAROYA	HARLESS		
	✓VOLLMER			

EXTERNAL DISTRIBUTION

✓1 - LOCAL PDR Oswego, N. Y.		
✓1 - DTIE(ABERNATHY)	(1)(2)(10)-NATIONAL LAB'S	1-PDR-SAN/LA/NY
✓1 - NSIC(BUCHANAN)	1-ASLBP(E/W Bldg,Rm 529)	1-GERALD LELLOUCHE
1 - ASLB(YORE/SAYRE/ WOODARD/"H" ST.	1-W. PENNINGTON, Rm E-201 GT	BROOKHAVEN NAT. LAB
	1-CONSULTANT'S	1-AGMED(Ruth Gussman)
✓16 - CYS ACRS ~~HOLDING~~ Sent 12-8-73 to R. Diggs for Dist.	NEWMARK/BLUME/AGBABIAN	RM-B-127, GT.
	1-GERALD ULRIKSON...ORNL	1-RD..MULLER..F-309 GT

35

NIAGARA MOHAWK POWER CORPORATION

NIAGARA MOHAWK

300 ERIE BOULEVARD WEST
SYRACUSE, N.Y. 13202

December 3, 1973

AOR 73-11-29

Mr. Donald J. Skovholt
Assistant Director for Reactor Operations
Division of Reactor Licensing
United States Atomic Energy Commission
Washington, D. C. 20545

Re: Provisional Operating License: DPR-17
Docket No.: 50-220

Regulatory File Cy.

Dear Mr. Skovholt:

On November 26, 1973 at 0330 hours at Nine Mile Point Nuclear Station Unit #1, fifteen (15) control rod drives failed to insert to position 00 following a reactor scram. Persuant to Technical Specifications: 1.13 d,

> d. Failure of one or more components of an engineered safety feature or Station system that causes or threatens to cause the feature or system to be incapable of performing its intended function,

this is an abnormal occurrence and was reported by telephone and photocopy to Director of Regulatory Operations, Region I.

Prior to the occurrence the unit was being shutdown, mode switch in start-up and reactor pressure was less than 850 psig. A scram occurred on neutron instrumentation (IRM's) and upon resetting the scram fifteen (15) control rods showed position 02. Seven (7) of those were the subject of AOR 73-11-20. The operator immediately inserted these control rods to 00 using normal drive pressure and the manual control system.

The apparent cause of this occurrence following a review of testing by SORC has been identified as leakage past the stop piston seals.

The reactor was shutdown even with fifteen (15) control rods at 02 as indicated by decreasing neutron instrumentation therefore no hazard was presented to the general public nor was plant safety in jeopardy.

To correct this situation, the fifteen (15) control rods will be overhauled during the Spring 1974 refueling outage. This is the second incident of this nature (AOR 73-11-20) and appears to be a problem which occurs as a result of deteriorating stop piston seals causing a slowdown during the last 5% of drive travel.

Very truly yours,

Rudolph R. Schneider

8728

Rudolph R. Schneider
Vice President - Electric Operations

RRS:cm

REGISTERED MAIL
RETURN RECEIPT REQUEST

Mr. Donald J. Skovho
U.S. Atomic Energy Commission

November 28, 1973

The apparent cause of this occurrence has been identified as damaged stop piston seals causing excessive leakage past these seals. This was determined from stall leakage flow tests and scram testing of each of the affected control rods prior to unit power generation on the succeeding start-up. Excessive flow past the stop piston seals instead of thru the buffer holes (the number of those holes decreases as the control rod is inserted) will result in slowing down of the control rod over the last 5% of its travel.

Throughout the preceding transient and during the period of time that the eleven (11) control rods were at position 02 no hazard was presented to the general public. The reactor was highly subcritical and could not have been made critical using these eleven control rods at position 02.

To correct this situation, the control rods affected will be overhauled during the Spring 1974 refueling outage as well as any others which indicate the high stall leakage flows.

In the past replacement of control rod drives during refueling outages has been determined in part by high stall leakage flows. The deterioration of the stop piston seals of the General Electric control rod drive mechanism appears to increase with increasing drive pressure required to operate the control rod. Orders have been issued to operations to maintain the drive pressure within normal limits during rod withdrawals. However those control rods with existing deteriorated seals will have to be moved using higher than normal pressure.

Very truly yours,

Rudolph R. Schneider
Vice President - Electric Operations

RRS:cm

cc: Mr. James O'Reilly
RO:I

AEC DISTRIBUTION FOR PART 50 DOCKET MATERIAL
(TEMPORARY FORM)

CONTROL NO: 8703

FILE:

FROM:	DATE OF DOC	DATE REC'D	LTR	MEMO	RPT	OTHER
Niagara Mohawk Power Corp; Syracuse, N. Y. 13202 R. R. Schneider	11-30-73	12-6-73	X			

TO:	ORIG	CC	OTHER	
D. J. Skovholt	1 signed			SENT AEC PDR X SENT LOCAL PDR X

CLASS	UNCLASS	PROP INFO	INPUT	NO CYS REC'D	DOCKET NO:
	XXX			40	50-220

DESCRIPTION:
Ltr reporting abnormal occurrence 73-11-2 in fall of 73, in which adiscrepancy was noted in the pressure set point trip of the recirculation pumps for the analysis of transients without scram.....

PLANT NAME: Nine Mile Point Unit #1

ENCLOSURES:

ACKNOWLEDGED

DO NOT REMOVE

FOR ACTION/INFORMATION 12-7-73 GC

BUTLER(L) W/ Copies	SCHWENCER(L) W/ Copies	✓ZIEMANN(L) W/ 7 Copies	REGAN(E) W/ Copies
CLARK(L) W/ Copies	STOLZ(L) W/ Copies	DICKER(E) W/ Copies	W/ Copies
GOLLER(L) W/ Copies	VASSALLO(L) W/ Copies	KNIGHTON(E) W/ Copies	W/ Copies
KNIEL(L) W/ Copies	SCHEMEL(L) W/ Copies	YOUNGBLOOD(E). W/ Copies	W/ Copies

INTERNAL DISTRIBUTION

REG FILE	TECH REVIEW	DENTON		A/T IND
✓AEC PDR	✓HENDRIE	GRIMES	LIC ASST	BRAITMAN
✓OGC, ROOM P-506A	SCHROEDER	GAMMILL	✓DIGGS (L)	SALTZMAN
✓MUNTZING/STAFF	✓MACCARY	KASTNER	GEARIN (L)	B. HURT
✓CASE	✓KNIGHT	BALLARD	GOULBOURNE (L)	PLANS
GIAMBUSSO	✓PAWLICKI	SPANGLER	LEE (L)	MCDONALD
BOYD	✓SHAO		MAIGRET (L)	DUBE
MOORE (L)(BWR)	✓STELLO	ENVIRO	SERVICE (L)	
DEYOUNG(L)(PWR)	✓HOUSTON	MULLER	SHEPPARD (E)	INFO
✓SKOVHOLT (L)	✓NOVAK	DICKER	SMITH (L)	C. MILES
P. COLLINS	✓ROSS	KNIGHTON	TEETS (L)	✓B. KING (RO)
	✓IPPOLITO	YOUNGBLOOD	WADE (E)	
REG OPR	✓TEDESCO	REGAN	WILLIAMS (E)	
✓FILE & REGION(3)	✓LONG	PROJECT LDR	WILSON (L)	
✓MORRIS	✓LAINAS			
✓STEELE	✓BENAROYA	HARLESS		
	✓VOLLMER			

EXTERNAL DISTRIBUTION

✓1 - LOCAL PDR Oswego, N. Y.		
✓1 - DTIE(ABERNATHY)	(1)(2)(10)-NATIONAL LAB'S	1-PDR-SAN/LA/NY
✓1 - NSIC(BUCHANAN)	1-ASLBP(E/W Bldg,Rm 529)	1-GERALD LELLOUCHE
1 - ASLB(YORE/SAYRE/ WOODARD/"H" ST.	1-W. PENNINGTON, Rm E-201 GT	BROOKHAVEN NAT. LAB
	1-CONSULTANT'S	1-AGMED(Ruth Gussman)
✓16 - CYS ACRS ~~XXXXXXX~~ SENT TO LIC. ASST. 12-7-73 DIGGS	NEWMARK/BLUME/AGBABIAN	RM-B-127, GT.
	1-GERALD ULRIKSON...ORNL	1-RD..MULLER..F-309 GT

NIAGARA MOHAWK POWER CORPORATION

NIAGARA MOHAWK

300 ERIE BOULEVARD WEST
SYRACUSE, N.Y. 13202

November 30, 1973

Mr. Donald J. Skovholt
Assistant Director For Reactor Operations
Division of Reactor Licensing
U. S. Atomic Energy Commission
Washington, D. C. 20545

Dear Mr. Skovholt:

Re: Provisional Operating License: DPR-17 Unusual Event 73-11-2
Docket No.: 50-220

In accordance with Section 6.6. b 2 of the Nine Mile Point Nuclear Station, Unit #1 Technical Specifications, the following information is forwarded concerning an unusual event occurring at the Nine Mile Point Nuclear Station, Unit #1.

During the Spring 1973 refueling outage, the circuitry to cause the trip of all recirculation pumps upon reaching a pre-established reactor pressure was installed in accordance with reviewed and approved design change drawings. The requirement for this change is discussed in detail in the "Technical Supplement To Petition For Conversion From Provisional Operating License To Full Term Operating License" page IV 39 - IV 47.

A review of the existing Technical Specification with regard to updating was conducted this Fall, when a discrepancy was noted in the pressure set point trip of the recirculation pumps for the Analysis of Transients without scram. A thorough review by the Site Operating Review Committee revealed that the pumps will be tripped at 1080 psig rather than the intended 1150 psig as stated in the above mentioned document. The effect of lowering this set point has no detrimental effect on the Analysis of Transients without scram. However, it does have an adverse effect on the margin between peak pressure reached in a transient involving scram with turbine trip and failure of the bypass system and the lowest safety valve setting. Although no safety limits are reached, the degradation of the pressure margin is of concern. General Electric Company has concluded that existing power operation is permissible with no infringement on the safe operation of the plant or safety of the general public. However, as stated in my letter of November 30, 1973, to Mr. Giambusso, the trip of recirculation pumps on high reactor pressure is being deleted from the protection system circuitry to prevent assumed aggravation of other transients.

8703

U. S. Atomic Energy Commission
Mr. Donald J. Skovholt
November 30, 1973

The General Electric Company is completing a review of safety analysis to determine the effect of this new parameter on performance on transient conditions. When their review is complete, design changes will be formulated, reviewed,approved and installed.

Very truly yours,

R. R. Schneider
Vice President - Electric Operations

cc Mr. James P. O'Reilly

REGISTERED MAIL
RETURN RECEIPT REQUEST

AEC DISTRIBUTION FOR PART 50 DOCKET MATERIAL
(TEMPORARY FORM)

CONTROL NO: 8604

FILE:

FROM:	DATE OF DOC	DATE REC'D	LTR	MEMO	RPT	OTHER
Niagara Mohawk Power Corp. Syracuse, N. Y. 13202 R. R. Schneider	11-28-73	12-3-73	X			

TO:	ORIG	CC	OTHER	
D. J. Skovholt	1 signed			SENT AEC PDR X SENT LOCAL PDR X

CLASS	UNCLASS	PROP INFO	INPUT	NO CYS REC'D	DOCKET NO:
	XXXX			40	50-220

DESCRIPTION:
Ltr reporting an abnormal occurrence on 11-20-73, in which 11 control rod drives failed to insert to notch position 00 following a Reactor Scram.....

ENCLOSURES:

ACKNOWLEDGED

DO NOT REMOVE

PLANT NAME: Nine Mile Point Unit 1

FOR ACTION/INFORMATION 12-3-73 GC

BUTLER(L)	SCHWENCER(L)	ZIEMANN(L)	REGAN(E)
W/ Copies	W/ Copies	W/ 7 Copies	W/ Copies
CLARK(L)	STOLZ(L)	DICKER(E)	
W/ Copies	W/ Copies	W/ Copies	W/ Copies
GOLLER(L)	VASSALLO(L)	KNIGHTON(E)	
W/ Copies	W/ Copies	W/ Copies	W/ Copies
KNIEL(L)	SCHEMEL(L)	YOUNGBLOOD(E)	
W/ Copies	W/ Copies	W/ Copies	W/ Copies

INTERNAL DISTRIBUTION

REG FILE	TECH REVIEW	DENTON		A/T IND
AEC PDR	HENDRIE	GRIMES	LIC ASST	BRAITMAN
OGC, ROOM P-506A	SCHROEDER	GAMMILL	DIGGS (L)	SALTZMAN
MUNTZING/STAFF	MACCARY	KASTNER	GEARIN (L)	B. HURT
CASE	KNIGHT	BALLARD	GOULBOURNE (L)	
GIAMBUSSO	PAWLICKI	SPANGLER	LEE (L)	PLANS
BOYD	SHAO		MAIGRET (L)	MCDONALD
MOORE (L)(BWR)	STELLO	ENVIRO	SERVICE (L)	DUBE
DEYOUNG(L)(PWR)	HOUSTON	MULLER	SHEPPARD (E)	
SKOVHOLT (L)	NOVAK	DICKER	SMITH (L)	INFO
P. COLLINS	ROSS	KNIGHTON	TEETS (L)	C. MILES
	IPPOLITO	YOUNGBLOOD	WADE (E)	B.KING (RO)
REG OPR	TEDESCO	REGAN	WILLIAMS (E)	
FILE & REGION(3)	LONG	PROJECT LDR	WILSON (L)	
MORRIS	LAINAS			
STEELE	BENAROYA	HARLESS		
	VOLLMER			

EXTERNAL DISTRIBUTION

1 - LOCAL PDR Oswego, N. Y.		
1 - DTIE(ABERNATHY)	(1)(2)(10)-NATIONAL LAB'S	1-PDR-SAN/LA/NY
1 - NSIC(BUCHANAN)	1-ASLBP(E/W Bldg,Rm 529)	1-GERALD LELLOUCHE
1 - ASLB(YORE/SAYRE/	1-W. PENNINGTON, Rm E-201 GT	BROOKHAVEN NAT. LAB
WOODARD/"H" ST.	1-CONSULTANT'S	1-AGMED(Ruth Gussman)
16 - CYS ACRS ~~HOLDING~~ SENT TO LIC. ASST.	NEWMARK/BLUME/AGBABIAN	RM-B-127, GT.
12-3-73 DIGGS	1-GERALD ULRIKSON...ORNL	1-RD..MULLER..F-309 GT

Regulatory Docket File

NIAGARA MOHAWK POWER CORPORATION

NIAGARA MOHAWK

300 ERIE BOULEVARD WEST
SYRACUSE, N.Y. 13202

November 28, 1973

AOR 73-11-20

Mr. Donald J. Skovholt
Assistant Director for Reactor Operations
Division of Reactor Licensing
United States Atomic Energy Commission
Washington, D. C. 20545

Re: Provisional Operating License: DPR-17
Docket No.: 50-220

Dear Mr. Skovholt:

On November 20, 1973 at approximately 0230 hours at Nine Mile Point Nuclear Station, Unit #1, eleven (11) control rod drives failed to insert to notch position 00 following a Reactor Scram. Persuant to Technical Specification 1.13 d.,

> Failure of one or more components of an engineered safety feature or Station system that causes or threatens to cause the feature or system to be incapable of performing its intended function,

this is an abnormal occurrence and was reported by telephone and photocopy to the Director of Regulatory Operations, Region Office I on November 20, 1973.

Prior to the occurrence a routine startup was in progress with reactor power being increased, using reactor recirculation flow, following a scheduled shutdown for Operator Demonstration criticals. Reactor power had reached the 77% level, water level was normal, reactor pressure was 988 psig, the generator was on line with all systems operating normally for a routine start-up.

A sudden increase in recirculation flow rate occurred at 77% power causing an increase in positive reactivity (the result of voids being "swept" more rapidly from the core i.e. better moderation) resulting in a high flux reactor scram and anticipatory turbine generator trip. The control room operator immediately decreased recirculation flow when it became obvious that recirculation flow was on an upward ramp and neutron instrumentation began steadily increasing, however his proper action could not prevent the high flux flow bias reactor scram. The recirculation flow ramp increase will be the subject of an unusual event letter before December 20, 1973. All systems operated normally for this transient except the control rod drive system. The operator noted that upon resetting of the scram eleven (11) control rods indicated position 02 instead of 00. The operator immediately inserted the control rods to 00 using the reactor manual control system with normal control rod drive pressure.

8604

AEC DISTRIBUTION FOR PART 50 DOCKET MATERIAL
(TEMPORARY FORM)

CONTROL NO: 8502

FILE:

FROM:	DATE OF DOC	DATE REC'D	LTR	MEMO	RPT	OTHER
Niagara Mohawk Power Corporation Syracuse, N.Y. 13202 Mr. R.R. Schneider	11-21-73	11-28-73	X			

TO:	ORIG	CC	OTHER	
D.J. Skovholt	1 signed			SENT AEC PDR XXX SENT LOCAL PDR XXX

CLASS	UNCLASS	PROP INFO	INPUT	NO CYS REC'D	DOCKET NO:
	XXX			40	50-220

DESCRIPTION:
Ltr reporting an abnormal occurrence at the Nine Mile Point facility Unit #1....concern... loss of incoming 115 KV.....

ENCLOSURES:

ACKNOWLEDGED

DO NOT REMOVE

PLANT NAME: Nine Mile Point

FOR ACTION/INFORMATION 11-28-73 JB

BUTLER(L)	SCHWENCER(L)	✓ZIEMANN(L)	REGAN(E)
W/ Copies	W/ Copies	W/7 Copies	W/ Copies
CLARK(L)	STOLZ(L)	DICKER(E)	
W/ Copies	W/ Copies	W/ Copies	W/ Copies
GOLLER(L)	VASSALLO(L)	KNIGHTON(E)	
W/ Copies	W/ Copies	W/ Copies	W/ Copies
KNIEL(L)	SCHEMEL(L)	YOUNGBLOOD(E)	
W/ Copies	W/ Copies	W/ Copies	W/ Copies

INTERNAL DISTRIBUTION

✓REG FILE	TECH REVIEW	DENTON		A/T IND
✓AEC PDR	✓HENDRIE	GRIMES	LIC ASST	BRAITMAN
✓OGC, ROOM P-506A	SCHROEDER	GAMMILL	✓DIGGS (L)	SALTZMAN
✓MUNTZING/STAFF	✓MACCARY	KASTNER	GEARIN (L)	B. HURT
✓CASE	✓KNIGHT	BALLARD	GOULBOURNE (L)	
GIAMBUSSO	✓PAWLICKI	SPANGLER	LEE (L)	PLANS
BOYD	✓SHAO		MAIGRET (L)	MCDONALD
MOORE (L)(BWR)	✓STELLO	ENVIRO	SERVICE (L)	DUBE
DEYOUNG(L)(PWR)	✓HOUSTON	MULLER	SHEPPARD (E)	
✓SKOVHOLT (L)	✓NOVAK	DICKER	SMITH (L)	INFO
P. COLLINS	✓ROSS	KNIGHTON	TEETS (L)	C. MILES
	✓IPPOLITO	YOUNGBLOOD	WADE (E)	✓B. King
✓REG OPR	✓TEDESCO	REGAN	WILLIAMS (E)	
FILE & REGION(3)	✓LONG	PROJECT LDR	WILSON (L)	
✓MORRIS	✓LAINAS			
✓STEELE	✓BENAROYA	HARLESS		
	✓VOLLMER			

A/O

EXTERNAL DISTRIBUTION

✓1 - LOCAL PDR Oswego, N.Y.		
✓1 - DTIE(ABERNATHY)	(1)(2)(10)-NATIONAL LAB'S	1-PDR-SAN/LA/NY
✓1 - NSIC(BUCHANAN)	1-ASLBP(E/W Bldg,Rm 529)	1-GERALD LELLOUCHE
1 - ASLB(YORE/SAYRE/	1-W. PENNINGTON, Rm E-201 GT	BROOKHAVEN NAT. LAB
WOODARD/"H" ST.	1-CONSULTANT'S	1-AGMED(Ruth Gussman)
✓16 - CYS ACRS ~~HOLDING~~ Sent to Diggs 11-28-73	NEWMARK/BLUME/AGBABIAN	RM-B-127, GT.
	1-GERALD ULRIKSON...ORNL	1-RD..MULLER..F-309 GT

Regulatory File Cy.

NIAGARA MOHAWK POWER CORPORATION

NIAGARA MOHAWK

300 ERIE BOULEVARD WEST
SYRACUSE, N.Y. 13202

November 21, 1973

Mr. Donald J. Skovholt
Assistant Director for Reactor Operations
Division of Reactor Licensing
U. S. Atomic Energy Commission
Washington, D. C. 20545

Re: Provisional Operating License: DPR-17
Docket No.: 50-220

Dear Mr. Skovholt:

This is to report a condition relating to the operation of the Nine Mile Point Nuclear Station #1 (NMPNS) in which on November 17, 1973 at 1626 hours a loss of incoming 115 KV occurred.

Technical Specification 3.6.3.a states:

Specification:

a. For all reactor operating conditions except cold shutdown, there shall normally be available two 115 KV external lines, two diesel-generator power systems and two battery systems.....

On November 17, 1973 the reactor was scheduled for AEC Operator Examination involving a critical demonstration. After the reactor was shutdown in the early morning (∿2 a.m.) breaker R40 was opened to facilitate line work on the 115 KV line between James A. FitzPatrick Nuclear Power Plant (JAFNPP) and NMPNS #1. Breaker R10, the remaining 115 KV line breaker was closed and the station was operating on reserve power supplied by this line. Following the Reactor Operator critical demonstrations, the reactor was in the just critical condition, moderator temperature 207°F, mode switch in start-up and the JAFNPP-NMPNPS 115 KV line out of service. A plant electrician, working with the relay department in the auxiliary control room on the JAFNPP-NMPNPS 115 KV line relay accidentally bumped a relay (50 FDS/SI) causing Relay 945 to de-energize thus tripping the remaining 115 KV line. The plant remained without off-site power for 10 seconds until breaker R10 reclosed.

A reactor scram occurred within seconds (5.4) as M.G. Sets #131 and #141 (which supplies power to the scram pilot solenoids) upon loss of A.C. power, tripped at 55 hz. Within the allowable 10 seconds both diesel generator systems had started and energized the two control rod drive pumps to maintain reactor water within the normal expected range for this transient. As water level remained normal no other safeguard equipment was needed.

8502

Mr. Donald J. Skovholt
U.S. Atomic Energy Commission

November 21, 1973

Restoration of normal reserve station power occurred within 10 seconds and upon reseting necessary plant feeders normal reserve A.C. was established to plant equipment and the diesel generators shutdown.

The reactor was restarted at approximately 2100 hours with both 115 KV lines in service and normal plant conditions.

All systems performed their designed function as required and no hazard was presented to the general public.

To prevent a reoccurrence of this incident the plant electricians were made aware of the need to be extra cautious when working around relaying in particular when one line is already de-energized.

Very truly yours,

Rudolph R. Schneider

Rudolph R. Schneider
Vice President - Electric Operations

RRS:cm

AEC DISTRIBUTION FOR PART 50 DOCKET MATERIAL
(TEMPORARY FORM)

CONTROL NO: 8423

FILE:

FROM:	DATE OF DOC	DATE REC'D	LTR	MEMO	RPT	OTHER
Niagara Mohawk Power Corporation Syracuse, New York 13202 R. R. Schneider	11-19-73	11-23-73	x			

TO:	ORIG	CC	OTHER	
D. J. Skovholt	1 signed	39		SENT AEC PDR X SENT LOCAL PDR X

CLASS	UNCLASS	PROP INFO	INPUT	NO CYS REC'D	DOCKET NO:
	XXX			40	50-220

DESCRIPTION:
Ltr reporting a condition on 11-10-73.... a reactor low-low water level switch setting was found to actuate above the normal set point....

ENCLOSURES:

ACKNOWLEDGED

DO NOT REMOVE

PLANT NAME: Nine Mile Point Unit # 1

FOR ACTION/INFORMATION 11-24-73 fod

BUTLER(L)	SCHWENCER(L)	✓ZIEMANN(L)	REGAN(E)
W/ Copies	W/ Copies	W/ 7 Copies	W/ Copies
CLARK(L)	STOLZ(L)	DICKER(E)	
W/ Copies	W/ Copies	W/ Copies	W/ Copies
GOLLER(L)	VASSALLO(L)	KNIGHTON(E)	
W/ Copies	W/ Copies	W/ Copies	W/ Copies
KNIEL(L)	SCHEMEL(L)	YOUNGBLOOD(E)	
W/ Copies	W/ Copies	W/ Copies	W/ Copies

INTERNAL DISTRIBUTION

✓REG FILE	TECH REVIEW	DENTON		A/T IND
✓AEC PDR	✓HENDRIE	GRIMES	LIC ASST	BRAITMAN
✓OGC, ROOM P-506A	SCHROEDER	GAMMILL	✓DIGGS (L)	SALTZMAN
✓MUNTZING/STAFF	✓MACCARY	KASTNER	GEARIN (L)	B. HURT
✓CASE	✓KNIGHT	BALLARD	GOULBOURNE (L)	
GIAMBUSSO	✓PAWLICKI	SPANGLER	LEE (L)	PLANS
BOYD	✓SHAO		MAIGRET (L)	MCDONALD
MOORE (L)(BWR)	✓STELLO	ENVIRO	SERVICE (L)	DUBE
DEYOUNG(L)(PWR)	✓HOUSTON	MULLER	SHEPPARD (E)	
✓SKOVHOLT (L)	✓NOVAK	DICKER	SMITH (L)	INFO
P. COLLINS	✓ROSS	KNIGHTON	TEETS (L)	C. MILES
	✓IPPOLITO	YOUNGBLOOD	WADE (E)	✓B. KING (RO)
REG OPR	✓TEDESCO	REGAN	WILLIAMS (E)	
✓FILE & REGION(3)	✓LONG	PROJECT LDR	WILSON (L)	
✓MORRIS	✓LAINAS			
✓STEELE	✓BENAROYA	HARLESS		
	✓VOLLMER			

EXTERNAL DISTRIBUTION

✓1 - LOCAL PDR Oswego, N. Y.		
✓1 - DTIE(ABERNATHY)	(1)(2)(10)-NATIONAL LAB'S	1-PDR-SAN/LA/NY
✓1 - NSIC(BUCHANAN)	1-ASLBP(E/W Bldg,Rm 529)	1-GERALD LELLOUCHE
1 - ASLB(YORE/SAYRE/	1-W. PENNINGTON, Rm E-201 GT	BROOKHAVEN NAT. LAB
WOODARD/"H" ST.	1-CONSULTANT'S	1-AGMED(Ruth Gussman)
✓16 - CYS ACRS ~~HOLDING~~ Sent 11-24-73 to	NEWMARK/BLUME/AGBABIAN	RM-B-127, GT.
R. Diggs for Dist.	1-GERALD ULRIKSON...ORNL	1-RD..MULLER..F-309 GT

NIAGARA MOHAWK POWER CORPORATION

NIAGARA MOHAWK

300 ERIE BOULEVARD WEST
SYRACUSE, N.Y. 13202

November 19, 1973

Mr. Donald J. Skovholt
Assistant Director for Reactor Operations
Division of Reactor Licensing
United States Atomic Energy Commission
Washington, D. C. 20545

Regulatory File Cy.

Dear Mr. Skovholt:

RE: Provisional Operating License: DPR-17
Docket No.: 50-220

This is to report a condition relating to the operation of the Nine Mile Point Nuclear Station Unit 1 in which on November 10, 1973 at 1509 hours a reactor low-low water level switch setting was found to actuate above the normal set point, which is allowable by Technical Specifications, but beyond the deviations as established in the basis for that specification. This condition was related to Region I Compliance by telephone and on November 12, 1973 by photocopy at 1508 hours.

During routine surveillance testing of the reactor low-low water level sensors (at 90% rated power) the set point of one of the Yarway sensors (RE02D) was found to have drifted to 4' 9" below minimum normal water level. A change of three (3) inches from the last inspection on October 13, 1973 at which time the sensor tripped as required at five (5) feet below minimum normal water level.

The basis of Technical Specification 3.6.2 call for a deviation of no more than 2.6".

The purpose of the sensor is to detect decreasing reactor water level and upon reaching a level of five (5) feet below minimum normal water level or higher, a Primary Coolant Isolation, Containment Isolation, Emergency Cooling Initiation and Start Core Spray Pumps permissive signal is initiated. Also, if high drywell pressure permissive signal is present, containment spray initiates. The electrical arrangement for the permissive logic is a one out of two in each trip system. It would require two sensors, one in each trip system, actuating higher than prescribed deviations to give a permissive start of those systems above the five (5) foot level.

Had plant conditions required the use of any of these mentioned safeguard systems they would have actuated at the five (5) foot level below minimum normal. However, since the set point of RE02D was three (3) inches high it would have initiated a permissive signal for trip system 12 at 4' 9" below minimum normal water level instead of five (5) foot below minimum normal water level. When water level reached the five (5) foot level, the other trip system would actuate causing the safeguard systems mentioned to function.

8423

The safety of the plant and general public was not jeopardized as the required systems would have functioned at the design set point.

The immediate corrective action was to recalibrate the sensor to read five (5) foot below minimum normal water level. The other three sensors all actuated at five (5) foot below minimum normal water level.

This is the first known malfunction of this type on this instrument. However, it will be closely watched for any further deviation and if a trend is established further corrective action will be taken.

Very truly yours,

R. R. Schneider
Vice President - Electrical Operations

RRS:pw

REGISTERED MAIL
RETURN RECEIPT REQUEST

AEC DISTRIBUTION FOR PART 50 DOCKET MATERIAL
(TEMPORARY FORM)

CONTROL NO: 7978

FILE:

FROM:	DATE OF DOC	DATE REC'D	LTR	MEMO	RPT	OTHER
Niagara Mohawk Power Corp. Syracuse, N.Y. 13202 Mr. R.R. Schneider	10-26-73	11-2-73	X			

TO:	ORIG	CC	OTHER	
D.J. Skovholt	1 signed			SENT AEC PDR XXX SENT LOCAL PDR XXX

CLASS	UNCLASS	PROP INFO	INPUT	NO CYS REC'D	DOCKET NO:
	XXX			40	50-220

DESCRIPTION:
Ltr submitting information concern an abnormal occurrence at the Nine Mile Point Unit #1.....unidentifiable leakage in the drywell.....trans the following.....

ENCLOSURES:
ATTACHMENTS 1, 2, and 3

ACKNOWLEDGED
(40 cys encls rec'd)

DO NOT REMOVE

PLANT NAME: Nine Mile Point

FOR ACTION/INFORMATION 11-2-73 JB

BUTLER(L)	SCHWENCER(L)	✓ZIEMANN(L)	REGAN(E)
W/ Copies	W/ Copies	W/7 Copies	W/ Copies
CLARK(L)	STOLZ(L)	DICKER(E)	
W/ Copies	W/ Copies	W/ Copies	W/ Copies
GOLLER(L)	VASSALLO(L)	KNIGHTON(E)	
W/ Copies	W/ Copies	W/ Copies	W/ Copies
KNIEL(L)	SCHEMEL(L)	YOUNGBLOOD(E)	
W/ Copies	W/ Copies	W/ Copies	W/ Copies

INTERNAL DISTRIBUTION

✓REG FILE	TECH REVIEW	DENTON		A/T IND
✓AEC PDR	✓HENDRIE	GRIMES	LIC ASST	BRAITMAN
✓OGC, ROOM P-506A	SCHROEDER	GAMMILL	✓DIGGS (L)	SALTZMAN
✓MUNTZING/STAFF	✓MACCARY	KASTNER	GEARIN (L)	B. HURT
✓CASE	✓KNIGHT	BALLARD	GOULBOURNE (L)	
GIAMBUSSO	✓PAWLICKI	SPANGLER	LEE (L)	PLANS
BOYD	✓SHAO		MAIGRET (L)	MCDONALD
MOORE (L)(BWR)	✓STELLO	ENVIRO	SERVICE (L)	DUBE
DEYOUNG(L)(PWR)	✓HOUSTON	MULLER	SHEPPARD (E)	
✓SKOVHOLT (L)	✓NOVAK	DICKER	SMITH (L)	INFO
P. COLLINS	✓ROSS	KNIGHTON	TEETS (L)	C. MILES
	✓IPPOLITO	YOUNGBLOOD	WADE (E)	✓B. King
✓REG OPR	✓TEDESCO	REGAN	WILLIAMS (E)	
FILE & REGION(3)	✓LONG	PROJECT LDR	WILSON (L)	
✓MORRIS	✓LAINAS			
✓STEELE	✓BENAROYA	HARLESS		
	✓VOLLMER			

EXTERNAL DISTRIBUTION

✓1 - LOCAL PDR Oswego, N.Y.		
✓1 - DTIE(ABERNATHY)	(1)(2)(10)-NATIONAL LAB'S	1-PDR-SAN/LA/NY
✓1 - NSIC(BUCHANAN)	1-ASLBP(E/W Bldg,Rm 529)	1-GERALD LELLOUCHE
1 - ASLB(YORE/SAYRE/ WOODARD/"H" ST.	1-W. PENNINGTON, Rm E-201 GT	BROOKHAVEN NAT. LAB
	1-CONSULTANT'S	1-AGMED(Ruth Gussman)
✓16 - CYS ACRS ~~HOLDING~~ Sent to Diggs 11-2-73	NEWMARK/BLUME/AGBABIAN	RM-B-127, GT.
	1-GERALD ULRIKSON...ORNL	1-RD..MULLER..F-309 GT

Regulatory File Cy.

NIAGARA MOHAWK POWER CORPORATION

NIAGARA MOHAWK

300 ERIE BOULEVARD WEST
SYRACUSE, N.Y. 13202

October 26, 1973

Mr. Donald J. Skovholt
Assistant Director for Reactor Operations
Division of Reactor Licensing
United States Atomic Energy Commission
Washington, D. C. 20545

Re: Provisional Operating License: DPR-17
Docket No.: 50-220

Dear Mr. Skovholt:

On October 18, 1973, the Nine Mile Point Unit #1 reactor was shut down, the result of an increasing rate of unidentifiable leakage in the drywell.

The shutdown, which occurred during the routine RO:I AEC Inspection, provided the opportunity to perform the following:

1. Shutdown Margin Demonstrations - in accordance with your letter[1] dated September 25, 1973.

2. Inspections of hydraulic shock suppressors in response to your request on October 1, 1973[2] and RO:I telephoned request[3] on July 26, 1973.

3. The leak test of the manhole cover on the drywell which was committed in our letter of October 10, 1973[4] in response to your letter of September 28, 1973[5].

On August 17, 1973 leakage into the Drywell Floor Drain Tank (DWFDT) had increased to 2.5 gpm. Reactor Recirculation Pump 12 (RRP 12) was the immediate suspect as equalization was occurring between the low and high pressure seal. Once RRP 12 was secured the DWFDT leakage decreased to less than .25 gpm.

On October 1, 1973, with RRP 12 still secure leakage again was gradually increasing to the DWFDT. With leakage approaching 2.8 gpm on October 6, 1973 Station Supervision ordered increased surveillance on the DWFDT leakage. Although Technical Specifications call for a check of leakage only once per day, it was deemed necessary to continually plot leakage each hour to note trends or other indications which could provide an insight into the source of leakage. The Radiation Protection and Chemistry section had already determined that the major percentage of leaking liquid was not reactor coolant. On October 18, 1973 with DWFDT leakage indicating approximately 4.5 gpm, Plant Supervision ordered the reactor shutdown. During the subsequent drywell inspection the source of leakage was identified as steam leaks thru the valve packing on two electromatic relief systems blocking valves and a small leak on RRP 12 seal.

7978

Mr. Donald J. Skovholt
U.S. Atomic Energy Commission

October 26, 1973

During the shutdown and at Xenon free condition the shutdown margin demonstrations were performed. All control rods were verified to meet the minimum shutdown margin of 0.0075 delta k/k at cold, xenon free, operating samarium conditions. A complete report including responses to your question is being readied and will be sent to you prior to December 4, 1973 as outlined in your letter[1].

An inspection of the hydraulic shock suppressors was made during the shutdown. Enclosure 1 to this letter details the manufacturer, number of snubbers, identification of low fluid reservoirs, and corrective actions taken. In summary, no defective seals were found and no shock suppressors were found to be void of fluid. A certain amount of leakage was found from a few suppressors, the result of loose reservoir connections.

Also during the shutdown, the manhole cover on the drywell was leak tested. The penetration was pressurized to 35 psig and the decay in pressure noted over one half hour. No loss of pressure was observed.

Very truly yours,

Rudolph R. Schneider
Vice President - Electric Operations

RRS:cm

1. Ltr. Skovholt - Raymond Sept. 25, 1973
2. Ltr. Skovholt - Raymond Oct. 1, 1973
3. Tph. Cantrell - Perkins July 26, 1973
4. Ltr. Schneider- O'Reilly Oct. 10, 1973
5. Ltr. Skovholt - Schneider Sept. 28, 1973

ENCLOSURE 1

HYDRAULIC SHOCK SUPPRESSOR

1. Manufacturer: All Grinnell Manufacturer

2. Number of Snubbers: 110 Fluid SF-96-1000

3. Where fluid was added the connection that was leaking was tightened.

4.

Serial #	System	Condition	Corrective Action
1367- D2	* Elec.Vent Lines	Good	
1438- D2	Elec.Vent Lines	Good	
1188- D2	Elec.Vent Lines	Good	
1195- D2	Elec.Vent Lines	Good	
1463- D2	Elec.Vent Lines	Good	
1372- D2	Elec.Vent Lines	Good	
1340- D2	Elec.Vent Lines	Good	
1207- D2	Elec.Vent Lines	Good	
1459- D2	Elec.Vent Lines	Good	
1200- D2	Elec.Vent Lines	Good	
1454- D2	Elec.Vent Lines	Good	
1491- D3	Elec.Vent Lines	Good	
1344	Elec.Vent Lines	Good	
1450- D2	Elec.Vent Lines	Good	
1488- D3	Elec.Vent Lines	Good	
1495- D3	Elec.Vent Lines	Low oil in Res.	Added Fluid
1026- D3	Elec.Vent Lines	Good	
1028- D3	Elec.Vent Lines	Good	
1494- D3	Elec.Vent Lines	Low oil in Res.	Added Fluid
1217- D2	Elec.Vent Lines	Good	
1350- D2	Elec.Vent Lines	Good	
1379- D2	Elec.Vent Lines	Good	
1215- D2	Elec.Vent Lines	Good	
1349- D2	Elec.Vent Lines	Good	
1359- D2	Elec.Vent Lines	Good	
		Good	
381	Rx. Recir. System	Low oil in Res.	Added oil
373	Rx. Recir. System	Good	
388	Rx. Recir. System	Good	
384	Rx. Recir. System	Low oil in Res.	Added oil
390	Rx. Recir. System	Low Oil	Added oil
415	Rx. Recir. System	Low oil	Added oil
413	Rx. Recir. System	Low oil	Added oil
379	Rx. Recir. System	Low oil	Added oil
392	Rx. Recir. System	Low oil	Added oil
378	Rx. Recir. System	Low oil	Added oil
1088	Rx. Recir. System	Good	
1015	Rx. Recir. System	Good	
1016	Rx. Recir. System	Good	
1004	Rx. Recir. System	Good	
1010	Rx. Recir. System	Good	
1005	Rx. Recir. System	Good	

* Electromatic relief discharge piping to the Torus.

ENCLOSURE 1

Serial #	System	Condition	Corrective Action
124	Rx. Recirc. System	Good	
140	Rx. Recirc. System	Good	
118	Rx. Recirc. System	Good	
137	Rx. Recirc. System	Good	
86	Rx. Recirc. System	Good	
86	Rx. Recirc. System	Good	
101	Rx. Recirc. System	Good	
136	Rx. Recirc. System	Good	
120	Rx. Recirc. System	Good	
141	Rx. Recirc. System	Good	
383	Rx. Recirc. System	Good	
389	Rx. Recirc. System	Good	
375	Rx. Recirc. System	Good	
418	Rx. Recirc. System	Good	
391	Rx. Recirc. System	Good	
1017	Rx. Recirc. System	Good	
1006	Rx. Recirc. System	Good	
1007	Rx. Recirc. System	Good	
1014	Rx. Recirc. System	Good	
1012	Rx. Recirc. System	Good	
1011	Rx. Recirc. System	Good	
	Rx. Recirc. System	Good	
1008	Rx. Recirc. System	Good	
1025	Rx. Recirc. System	Good	
1022	Rx. Recirc. System	Good	
40-SC-47	Core Spray System	Good	
40-SC-10	Core Spray System	Good	
1760	Core Spray System	Good	
40-SC-8	Core Spray System	Good	
40-SC-7	Core Spray System2582	Good	
2582	Core Spray System	Good	
40-SC-28	Core Spray System	Good	
40-SC-27	Core Spray System	Good	
40-SC-26	Core Spray System	Good	
40-SC-25	Core Spray System	Good	
1368	Main Steam	Good	
1369	Main Steam	Good	
	Main Steam	Good	
	Main Steam	Good	
1367	Main Steam	Good	
1370	Main Steam	Good	
	Main Steam	Good	
	Main Steam	Good	
31-SC-6	Feedwater System	Good	
31-SC-3	Feedwater System	Low oil	Added oil
1760	Feedwater System	Good	
31-SC-5	Feedwater System	Low oil	Added oil
31-SC-4	Feedwater System	Low oil	Added oil
1761	Feedwater System	Good	
2189	Clean-Up System	Good	
2370	Clean-Up System	Good	
2293	Clean-Up System	Good	
1703	Clean-Up System	Good	
1789	Clean-Up System	Good	

ENCLOSURE 1

Serial #	System	Condition	Corrective Action
2167	Clean-Up Discharge	Low oil	Added oil
29-SC-3	Clean-Up Discharge	Good	
2189	Shutdown Cooling Suct.	Good	
2164	Shutdown Cooling Suct.	Good	
2190	Shutdown Cooling Disc.	Good	
2176	Emerg.Cond.Return	Low oil	Added oil
2182	Emerg.Cond.Return	Good	
1219- D2	Emerg.Cond.Return	Good	
21-27	Emerg.Cond.Return	Good	
2129	Emerg.Cond.Return	Good	
2126	Emerg.Cond.Return	Good	
39-SC-15	Emerg.Cond.Return	Good	
2128	Emerg.Cond.Return	Good	
2227	High Press Flange Leakoff	Good	

5. Most of the leaks were found at the reservoir end caps. These were tightened and where necessary teflon tape was used in connections.

In general, there were no inoperable hydraulic shock suppressors.

AEC DISTRIBUTION FOR PART 50 DOCKET MATERIAL
(TEMPORARY FORM)

CONTROL NO: 6843

FILE: Abn Occ

FROM:	DATE OF DOC	DATE REC'D	LTR	MEMO	RPT	OTHER
Niagara Mohawk Power Corporation Syracuse, N.Y. 13202 Mr. James Bartlett	9-7-73	9-10-73	x			

TO:	ORIG	CC	OTHER	
D.J. Skovholt	1			SENT AEC PDR XXX SENT LOCAL PDR XXX

CLASS	UNCLASS	PROP INFO	INPUT	NO CYS REC'D	DOCKET NO:
	XXX			40	50-220

DESCRIPTION:
Ltr reporting an abnormal occurence at the Nine Mile Point Unit #1.....concerning the loss of stack gas monitors for a period of approx. 2 hours

ENCLOSURES:

ACKNOWLEDGED

DO NOT REMOVE

PLANT NAME: Nine Mile Point Unit #1

FOR ACTION/INFORMATION 9-11-73 JB

BUTLER(L)	SCHWENCER(L)	✓ ZIEMANN(L)	REGAN(E)
W/ Copies	W/ Copies	W/7 Copies	W/ Copies
CLARK(L)	STOLZ(L)	DICKER(E)	
W/ Copies	W/ Copies	W/ Copies	W/ Copies
GOLLER(L)	VASSALLO(L)	KNIGHTON(E)	
W/ Copies	W/ Copies	W/ Copies	W/ Copies
KNIEL(L)	SCHEMEL(L)	YOUNGBLOOD(E)	
W/ Copies	W/ Copies	W/ Copies	W/ Copies

INTERNAL DISTRIBUTION

✓ REG FILE	TECH REVIEW	DENTON		A/T IND
✓ AEC PDR	✓ HENDRIE	GRIMES	LIC ASST	BRAITMAN
✓ OGC, ROOM P-506A	SCHROEDER	GAMMILL	✓ DIGGS (L)	SALTZMAN
✓ MUNTZING/STAFF	✓ MACCARY	KASTNER	GEARIN (L)	
✓ CASE	✓ KNIGHT	BALLARD	GOULBOURNE (L)	PLANS
GIAMBUSSO	✓ PAWLICKI	SPANGLER	LEE (L)	MCDONALD
BOYD	✓ SHAO		MAIGRET (L)	DUBE
MOORE (L)(BWR)	✓ STELLO	ENVIRO	SERVICE (L)	
DEYOUNG(L)(PWR)	✓ HOUSTON	MULLER	SHEPPARD (E)	INFO
✓ SKOVHOLT (L)	✓ NOVAK	DICKER	SMITH (L)	C. MILES
P. COLLINS	✓ ROSS	KNIGHTON	TEETS (L)	✓ B. King (RO)(OOE)
	✓ IPPOLITO	YOUNGBLOOD	WADE (E)	
✓ REG. OPR	✓ TEDESCO	REGAN	WILLIAMS (E)	
FILE & REGION(3)	✓ LONG	PROJECT LDR	WILSON (L)	
✓ MORRIS	✓ LAINAS			
✓ STEELE	✓ BENAROYA	HARLESS		
	✓ VOLLMER			

EXTERNAL DISTRIBUTION

✓ 1 - LOCAL PDR Oswego, N.Y.		
✓ 1 - DTIE(ABERNATHY)	(1)(2)(10)-NATIONAL LAB'S	1-PDR-SAN/LA/NY
✓ 1 - NSIC(BUCHANAN)	1-R.Schoonmaker,OC,GT,D-323	1-GERALD LELLOUCHE
1 - ASLB(YORE/SAYRE/	1-R. CATLIN, E-256-GT	BROOKHAVEN NAT. LAB
WOODARD/"H" ST.	1-CONSULTANT'S	1-AGMED(WALTER KOESTER
✓ 16 - CYS ACRS ~~NOXXXXX~~ Sent to Diggs 9-11-73	NEWMARK/BLUME/AGBABIAN	RM-C-427-GT
	1-GERALD ULRIKSON...ORNL	1-RD..MULLER..F-309 GT

34

Regulatory File Cy.

NIAGARA MOHAWK POWER CORPORATION

NIAGARA MOHAWK

300 ERIE BOULEVARD WEST
SYRACUSE, N.Y. 13202

September 7, 1973

Mr. Donald J. Skovholt
Assistant Director for Reactor Operations
Division of Reactor Licensing
United States Atomic Energy Commission
Washington, D. C. 20545

Re: Provisional Operating License: DPR-17
Docket No.: 50-220

Dear Mr. Skovholt:

Pursuant to your request, we are reporting as an abnormal occurance the loss of the stack gas monitors for a period of approximately 2 hours on June 26, 1973.

The plant was starting up following the Spring refueling outage with the reactor at approximately 1460 MWt. Reactor output was being increased slowly in an attempt to precondition the fuel assemblies and maintain the future stack gas release rate at as low a value as possible. Stack gas activity at this time was approximately 8500 μCi/sec well within all limits. There are two levels of continuous monitoring of the radioactivity level of the effluent gases removed from the main condenser by the steam jet air-ejector system. The Off-gas monitors which were continually monitoring the radioactivity level of the gaseous effluent which is eventually released to the stack, are located prior to the holdup pipe and the stack. Using information from the off-gas monitors the stack release rate can be determined. The stack gas monitors continuously monitor the activity of the gas released thru the stack. These monitors see the radioactivity level of the same gas as the off gas monitors after a holdup of 30 minutes and dilution of the gas with ventilation air from the plant.

At 1745 hours #12 stack sample pump tripped and could not be restarted. (Subsequent investigation revealed a bound motor). #11 stack sample pump was out of service and not piped-up at this time, awaiting an oil reservoir jar. The reservoir jar was leaking and although the pump would operate it would require constant monitor of the oil level. #11 stack sample pump was piped up and placed in service at 2000 hours.

6843

Mr. Donald J. Skovholt
U.S. Atomic Energy Commission

September 7, 1973

During the period of time the stack gas monitors were out of service the off gas monitors showed only a variation of 4 Mr/hr. It is important to note that the stack gas monitors provide only an alarm function. The off gas monitors which were functioning normally, provide for automatic closure of the isolation valve in the off gas line at the maximum release rate and their operation is the limiting condition for operation. The information from the stack gas monitoring system is used in preparation of plant radioactive effluent reports and demonstrating compliance with maximum release rates.

Before the stack release rate would have reached a point where the health and safety of the general public would have been endangered, the off gas monitors would have isolated the off gas line to the stack.

To prevent similar future occurances of this event a third sampling pump will be used as a spare and employed whenever one of the two normal sample pumps are out of service.

Very truly yours,

James Bartlett

James Bartlett
Executive Vice President
Operations and Engineering

JB:cm

AEC DISTRIBUTION FOR PART 50 DOCKET MATERIAL
(TEMPORARY FORM)

CONTROL NO: 6844

FILE: Non Dec

FROM:	DATE OF DOC	DATE REC'D	LTR	MEMO	RPT	OTHER
Niagara Mohawk Power Corp. Syracuse, N.Y. 13202 Mr. James Bartlett	9-7-73	9-10-73	X			

TO:	ORIG	CC	OTHER	
D.J. Skovholt	1			SENT AEC PDR XXX SENT LOCAL PDR XXX

CLASS	UNCLASS	PROP INFO	INPUT	NO CYS REC'D	DOCKET NO:
	XXX			40	50-220

DESCRIPTION:

Ltr adv that on 8-29-73 an abnormal occurence was noted.....concerning four fuel bundle segments which were found to be operating in exess Tech. Spec Requirements.

ENCLOSURES:

ACKNOWLEDGED

DO NOT REMOVE

PLANT NAME: Nine Mile Point #1

FOR ACTION/INFORMATION 9-11-73 JB

BUTLER(L)	SCHWENCER(L)	✓ZIEMANN(L)	REGAN(E)
W/ Copies	W/ Copies	W/7 Copies	W/ Copies
CLARK(L)	STOLZ(L)	DICKER(E)	
W/ Copies	W/ Copies	W/ Copies	W/ Copies
GOLLER(L)	VASSALLO(L)	KNIGHTON(E)	
W/ Copies	W/ Copies	W/ Copies	W/ Copies
KNIEL(L)	SCHEMEL(L)	YOUNGBLOOD(E)	
W/ Copies	W/ Copies	W/ Copies	W/ Copies

INTERNAL DISTRIBUTION

✓REG FILE	TECH REVIEW	DENTON		A/T IND
✓AEC PDR	✓HENDRIE	GRIMES	LIC ASST	BRAITMAN
✓OGC, ROOM P-506A	SCHROEDER	GAMMILL	✓DIGGS (L)	SALTZMAN
✓MUNTZING/STAFF	✓MACCARY	KASTNER	GEARIN (L)	
✓CASE	✓KNIGHT	BALLARD	GOULBOURNE (L)	PLANS
GIAMBUSSO	✓PAWLICKI	SPANGLER	LEE (L)	MCDONALD
BOYD	✓SHAO		MAIGRET (L)	DUBE
MOORE (L)(BWR)	✓STELLO	ENVIRO	SERVICE (L)	
DEYOUNG(L)(PWR)	✓HOUSTON	MULLER	SHEPPARD (E)	INFO
✓SKOVHOLT (L)	✓NOVAK	DICKER	SMITH (L)	C. MILES
P. COLLINS	✓ROSS	KNIGHTON	TEETS (L)	✓B. King (RO)(OOE)
	✓IPPOLITO	YOUNGBLOOD	WADE (E)	
✓REG OPR	✓TEDESCO	REGAN	WILLIAMS (E)	
FILE & REGION(3)	✓LONG	PROJECT LDR	WILSON (L)	
✓MORRIS	✓LAINAS			
✓STEELE	✓BENAROYA	HARLESS		
	✓VOLLMER			

EXTERNAL DISTRIBUTION

✓1 - LOCAL PDR Oswego, N.Y.		
✓1 - DTIE(ABERNATHY)	(1)(2)(10)-NATIONAL LAB'S	1-PDR-SAN/LA/NY
✓1 - NSIC(BUCHANAN)	1-R.Schoonmaker,OC,GT,D-323	1-GERALD LELLOUCHE
1 - ASLB(YORE/SAYRE/	1-R. CATLIN, E-256-GT	BROOKHAVEN NAT. LAB
WOODARD/"H" ST.	1-CONSULTANT'S	1-AGMED(WALTER KOESTER
✓16 - CYS ACRS ~~XXXXXX~~ Sent to Diggs	NEWMARK/BLUME/AGBABIAN	RM-C-427-GT
9-11-73	1-GERALD ULRIKSON...ORNL	1-RD..MULLER..F-309 GT

(35)

Regulatory File Cy.

NIAGARA MOHAWK POWER CORPORATION

NIAGARA MOHAWK

300 ERIE BOULEVARD WEST
SYRACUSE, N.Y. 13202

September 7, 1973

Mr. Donald J. Skovholt
Assistant Director for Reactor Operations
Division of Reactor Licensing
United States Atomic Energy Commission
Washington, D. C. 20545

Re: Provisional Operating License: DPR-17
Docket No.: 50-220

Dear Mr. Skovholt:

At approximately 1600 hours on August 29, 1973 following a routine calibration of the Local Power Range Monitors (LPRM) and subsequent core power distribution calculations, four fuel bundle segments were found to be operating slightly in excess of the allowable average planar LHGR as shown in Technical Specifications Figure 3.1.7 (change 9). This event was reported to Region I Compliance on August 30, 1973 at 1130 hours.

Technical Specification 3.1.7 a states:

a. Average Planar LHGR

During steady state power operation, the average linear heat generation rate (LHGR) of all the rods in any fuel assembly, as a function of average planar exposure, at any axial location shall not exceed the maximum average planar LHGR shown in Figure 3.1.7.

The LPRM's are routinely calibrated following extensive rod manipulations or upon the completion of each full power month. This consists of physically adjusting the gain of each LPRM amplifier by a factor determined thru a computer calculation. Following the physical adjustment of all LPRM amplifiers the Traversing Incore Probe (TIP) system is used to traverse each LPRM string and supply the current axial flux distribution to the computer system. Using this axial flux distribution base and the current LPRM readings along with the other thermal hydraulic parameters, a highly accurate power distribution can then be obtained from the computer.

Prior to the 27th of August, steps were taken to achieve compliance with the fuel densification specification[1] limiting both local LHGR and average planar LHGR within the reactor core and at the same time minimize possible electrical output loss from the station.

6844

[1] Ltr.; Giambusso A.E.C.-P.D. Raymond NMPC - Aug. 24, 1973

Mr. Donald J. Skovholt
U.S. Atomic Energy Commission

September 7, 1973

Adjustments in the power distribution were made to obtain an optimum power distribution and power output from the reactor. In conjunction with this, control rods were shifted to move the axial peaks higher in the core into more voided regions and thus flatten the axial power distribution. In order to closely monitor the power distribution, calculations were performed following each step and reactor power was reduced to provide an additional degree of conservatism.

Upon completion of preliminary rod movements on August 26-27, 1973 the new axial flux distributions were supplied to the process computer system via the TIP system. The subsequent calculation of power distribution on August 27, 1973 showed that all bundles were within prescribed limits and the reactor power could be increased. In an attempt to optimize plant power output more control rods were inserted thus increasing the margin between the existing average KW/FT and the limit. Reactor power was then increased using recirculation flow. Due to the fact that more control rods had been manipulated following the last axial flux distribution base supplied to the computer system it was necessary to update these distributions using the TIP system. However due to mechanical problems within the TIP system this was not possible until August 29, 1973. Following the LPRM calibration and inputing of the new axial flux distributions into the computer system a core power distribution was performed. A slight shift in calculated power distribution was noted and four fuel bundle segments were found to be slightly higher in maximum average planar LHGR than the limit prescribed in Figure 3.1.7 of the Technical Specifications. The four fuel bundle segments (reload 1) have a nodal exposure of 1930 MWD/ST and corresponding limit of 10.6 KW/FT (Figure 3.1.7). The four segments were operating .15 KW/FT over this limit. Immediate steps were taken to reduce the maximum average planar LHGR by reducing core thermal power using reactor recirculation flow. Subsequent core power distribution calculations showed all fuel types to be operating within limits shown on Figure 3.1.7.

To prevent reoccurance of this abnormal occurance, the LPRM's will be calibrated once every two full power weeks of operation or twice as often as was previously done. In addition, extension movement of control rods will be done at a substantially lower power level and once assurance to specification 3.1.7 is obtained, power will be slowly increased so as to assure validity of power distribution calculations. This violation is the first of its kind and evaluation of the safety implications of the incident in light of the cumulative experience obtained previously is not applicable. However, due to the degree of conservatism built into the calculations it is felt that no undue hazard would have been presented to the general public even had a LOCA occurred during this period.

Very truly yours,

James Bartlett

James Bartlett
Executive Vice President
Operations and Engineering

JB:cm

AEC DISTRIBUTION FOR PART 50 DOCKET MATERIAL
(TEMPORARY FORM)

CONTROL NO: 6075

FILE:

FROM:	DATE OF DOC	DATE REC'D	LTR	MEMO	RPT	OTHER
Niagara Mohawk Power Corporation Lycoming, N.Y. 13093 Mr. P.A. Burt	8-1-73	8-8-73	X			

TO:	ORIG	CC	OTHER	
D.J. Skovholt	1			SENT AEC PDR XXX SENT LOCAL PDR XXX

CLASS	UNCLASS	PROP INFO	INPUT	NO CYS REC'D	DOCKET NO:
	XXX			40	50-220

DESCRIPTION:
Ltr. reporting Abnormal Occurance concern. a reactor scram during routine surveillance testing of Main Steam Isolation Valves.

ENCLOSURES:

ACKNOWLEDGED

DO NOT REMOVE

PLANT NAME: Nine Mile Point

FOR ACTION/INFORMATION 8-8-73 jdb

BUTLER(L)	SCHWENCER(L)	ZIEMANN(L)	REGAN(E)
W/ Copies	W/ Copies	W/ 7 Copies	W/ Copies
CLARK(L)	STOLZ(L)	DICKER(E)	
W/. Copies	W/ Copies	W/ Copies	W/ Copies
GOLLER(L)	VASSALLO(L)	KNIGHTON(E)	
W/ Copies	W/ Copies	W/ Copies	W/ Copies
KNIEL(L)	SCHEMEL(L)	YOUNGBLOOD(E)	
W/ Copies	W/ Copies	W/ Copies	W/ Copies

INTERNAL DISTRIBUTION

REG FILE	TECH REVIEW	DENTON	LIC ASST	A/T IND
AEC PDR	HENDRIE	GRIMES	BROWN (E)	BRAITMAN
OGC, ROOM P-506A	SCHROEDER	GAMMILL	DIGGS (L)	SALTZMAN
MUNTZING/STAFF	MACCARY	KASTNER	GEARIN (L)	
CASE	KNIGHT	BALLARD	GOULBOURNE (L)	PLANS
GIAMBUSSO	PAWLICKI	SPANGLER	LEE (L)	MCDONALD
BOYD	SHAO		MAIGRET (L)	DUBE
MOORE (L)(BWR)	STELLO	ENVIRO	SERVICE (L)	
DEYOUNG(L)(PWR)	HOUSTON	MULLER	SHEPPARD (E)	INFO
SKOVHOLT (L)	NOVAK	DICKER	SMITH (L)	C. MILES
P. COLLINS	ROSS	KNIGHTON	TEETS (L)	B. King (Reg. Op.)
	IPPOLITO	YOUNGBLOOD	WADE (E)	(OOE) E/W
REG OPR	TEDESCO	REGAN	WILLIAMS (E)	
FILE & REGION(3)	LONG	PROJECT LDR	WILSON (L)	
MORRIS	LAINAS			
STEELE	BENAROYA	HARLESS		
	VOLLMER			

EXTERNAL DISTRIBUTION

1 - LOCAL PDR Oswego, N.Y.		
1 - DTIE(ABERNATHY)	(1)(2)(9)-NATIONAL LAB'S	1-PDR-SAN/LA/NY
1 - NSIC(BUCHANAN)	1-R.Schoonmaker,OC,GT,D-323	1-GERALD LELLOUCHE
1 - ASLB(YORE/SAYRE/	1-R. CATLIN, E-256-GT	BROOKHAVEN NAT. LAB
WOODARD/"H" ST.	1-CONSULTANT'S	1-AGMED(WALTER KOESTER
16 - CYS ACRS HOLDING Sent to R. Diggs 8-8-73	NEWMARK/BLUME/AGBABIAN	RM-C-427-GT
	1-GERALD ULRIKSON...ORNL	1-RD..MULLER..F-309..GT

(36 SS

Regulatory File Cy.

NIAGARA MOHAWK POWER CORPORATION

NIAGARA MOHAWK

Nine Mile Point Nuclear Station
Post Office Box 32
Lycoming, New York 13093

August 1, 1973

Mr. Donald J. Skovholt
Assistant Director for Reactor Operations
Division of Reactor Licensing
United States Atomic Energy Commission
Washington, D. C. 20545

Dear Mr. Skovholt:

Re: Provisional Operating License: DPR-17
Docket No.: 50-220

The following is a report relating to the operation of Nine Mile Point Nuclear Station Unit # 1 in which during routine surveillance testing of main steam isolation valves, a reactor scram occurred.

On July 8, 1973 at 0552 hours, Nine Mile Point Unit #1 experienced a reactor scram while operating at 560 MW_e and 1740 MW_t. The scram occurred during surveillance testing of the main steam line isolation valves. All systems operated as designed following the scram and no safety limits were exceeded.

Subsequent investigation showed that the scram resulted from the isolation of #12 main steam line, which caused an increase in reactor pressure which in turn resulted in a high neutron flux scram. The isolation of No. 12 main steam line was caused by the closing of the outside isolation valve in that line during the surveillance test.

Reactor pressure increased from a value of 1012 psig at the time of the scram to a peak value of 1091 psig, 12 seconds after the scram. This pressure increase occurred when high steam flow in the No. 11 steam line caused main steam line isolation. The high steam flow signal was caused because all of the steam being produced was being forced into one steam line at this time. The steam line isolation occurred approximately 7 seconds after the reactor scram. The electromatic valves and isolation condensers operated during the transient to relieve reactor pressure. Information pertaining to these operations is limited due to the nature of the data logging program in the process computer. The program is initiated by any half scram and runs for 5 seconds. It then is interrupted for approximately 2 minutes to allow data collection for the Post Mortem Recall program. It was during this time that the turbine trip occurred, electromatic valves and isolation condensers operated. Hence, the exact times of operation were not recorded. However, by observing the reactor pressure at one second intervals on the Post Mortem Recall print out, it was determined that the electromatic valves and isolation condensers did operate.

The Post Mortem Recall data indicates that the relief valves operated when the reactor pressure reached 1091 psig at 12 seconds after the scram. During the next 6 seconds, reactor pressure decreased from 1091 psig to 1067 psig while steam flow to the torus increased from 406 k lb/hr. to 1022 k lb/hr. and then decreased to 638 k lb/hr. At

6075

this time, reactor pressure again started to increase and again reached 1091 psig at 21 seconds after the scram. Once again the relief valves operated to relieve pressure. Steam flow to the torus increased from 210 k lb/hr. to 1086 k lb/hr. and then decreased to 575 k lb/hr. 27 seconds after the trip. Reactor pressure decreased to 1069 psig. At this point, reactor pressure again started to increase but did not go high enough to actuate relief valve operation. Instead the isolation condensers controlled pressure. The reactor pressure increased to 1086 psig at 32 seconds after the scram and then began to decrease on a steady downward ramp.

During the transient the feedwater control system provided adequate automatic control limiting reactor water level to -3.20 ft. 13 seconds after the scram and recovering to +1.08 ft. 37 seconds after the scram.

Immediately following the transient, members of the Nine Mile Point supervisory staff analyzed the transient and observed many operations of all four main steam line isolation valves in an attempt to determine if the valve controls had malfunctioned. All valves operated properly.

At this time, the staff members agreed that no safety limits had been exceeded and that a reactor startup could commence.

On July 9, 1973 the onsite review committee held a special meeting for the purpose of reviewing this transient. The control room operator was also interviewed by the committee.

The closure of a main steam isolation valves are a requirement for the safety analysis. To insure valve operability, a surveillance test is conducted twice weekly. Although the valve closed during a test, it assumed the proper position to preserve the health and safety of the general public.

The committee reached the following conclusions:

a. The reactor scram resulted from high neutron flux due to a pressure transient which occurred when #12 main steam line isolated.

b. Number 12 main steam line isolation was caused by the closure of a main steam isolation valve during surveillance testing.

c. The committee agreed that no safety limits had been exceeded and that all systems operated as designed. There was no threat to the health and safety of the general public during or following the transient.

Very truly yours,

P. Allister Burt

P. Allister Burt
General Superintendent
Nuclear Generation

PAB:pw

AEC DISTRIBUTION FOR PART 50 DOCKET MATERIAL
(TEMPORARY FORM)

CONTROL NO: 5366

FILE:

FROM:	DATE OF DOC	DATE REC'D	LTR	MEMO	RPT	OTHER
Niagara Mohawk Power Corporation Syracuse, New York 13202 Rudolph R. Schneider	7-6-73	7-11-73	x			

TO:	ORIG	CC	OTHER	
D. J. Skovholt	1 signed	39		SENT AEC PDR X SENT LOCAL PDR X

CLASS	UNCLASS	PROP INFO	INPUT	NO CYS REC'D	DOCKET NO:
	XXX			40	50-220

DESCRIPTION:

Ltr reporting a condition relating to operation of Unit # 1...during routine surveillance testing the core spray differential pressure instrumentation(Barton 288-480 3) was found to read higher value than set forth in instrumentation surveillance check list....

PLANT NAME: Nine Mile Point Unit # 1

ENCLOSURES:

ACKNOWLEDGED

DO NOT REMOVE

FOR ACTION/INFORMATION 7-12-73 fod

BUTLER(L)	SCHWENCER(L)	ZIEMANN(L)	REGAN(E)
W/ Copies	W/ Copies	W/7 Copies	W/ Copies
CLARK(L)	STOLZ(L)	DICKER(E)	
W/ Copies	W/ Copies	W/ Copies	W/ Copies
GOLLER(L)	VASSALLO(L)	KNIGHTON(E)	
W/ Copies	W/ Copies	W/ Copies	W/ Copies
KNIEL(L)	SCHEMEL(L)	YOUNGBLOOD(E)	
W/ Copies	W/ Copies	W/ Copies	W/ Copies

INTERNAL DISTRIBUTION

REG FILE	TECH REVIEW	DENTON	LIC ASST	A/T IND
AEC PDR	HENDRIE	GRIMES	BROWN (E)	BRAITMAN
OGC, ROOM P-506A	SCHROEDER	GAMMILL	DIGGS (L)	SALTZMAN
MUNTZING/STAFF	MACCARY	KASTNER	GEARIN (L)	
CASE	KNIGHT	BALLARD	GOULBOURNE (L)	PLANS
GIAMBUSSO	PAWLICKI	SPANGLER	LEE (L)	MCDONALD
BOYD	SHAO		MAIGRET (L)	DUBE
MOORE (L)(BWR)	STELLO	ENVIRO	SERVICE (L)	
DEYOUNG(L)(PWR)	HOUSTON	MULLER	SHEPPARD (E)	INFO
SKOVHOLT (L)	NOVAK	DICKER	SMITH (L)	C. MILES
P. COLLINS	ROSS	KNIGHTON	TEETS (L)	B. KING(RO,OOE)
	IPPOLITO	YOUNGBLOOD	WADE (E)	E/W Bldg
REG OPR	TEDESCO	REGAN	WILLIAMS (E)	
FILE & REGION(3)	LONG	PROJECT LDR	WILSON (L)	
MORRIS	LAINAS			
STEELE	BENAROYA	HARLESS		
	VOLLMER			

EXTERNAL DISTRIBUTION

1 - LOCAL PDR Oswego, N. Y.		
1 - DTIE(ABERNATHY)	(1)(2)(9)-NATIONAL LAB'S	1-PDR-SAN/LA/NY
1 - NSIC(BUCHANAN)	1-R.Schoonmaker,OC,GT,D-323	1-GERALD LELLOUCHE
1 - ASLB(YORE/SAYRE/	1-R. CATLIN, E-256-GT	BROOKHAVEN NAT. LAB
WOODARD/"H" ST.	1-CONSULTANT'S	1-AGMED(WALTER KOESTER
16 - CYS ACRS ~~HOLDING~~ Sent 7-12-73 to	NEWMARK/BLUME/AGBABIAN	RM-C-427-GT
R. Diggs for Dist.	1-GERALD ULRIKSON...ORNL	1-RD..MULLER..F-309..GT

NIAGARA MOHAWK POWER CORPORATION

NIAGARA MOHAWK

300 ERIE BOULEVARD WEST
SYRACUSE, N.Y. 13202

Regulatory File Cy.

July 6, 1973

Mr. Donald J. Skovholt
Assistant Director for Reactor Operations
Division of Reactor Licensing
United States Atomic Energy Commission
Washington, D. C. 20545

Dear Mr. Skovholt:

Re: Provisional Operating License: DPR-17
Docket No.: 50-220

This letter is to report a condition relating to the operation of Nine Mile Point Nuclear Station, Unit #1, in which, during routine surveillance testing the core spray differential pressure instrumentation (Barton 288-4802&3) was found to read higher value than that as set forth in the instrumentation surveillance check list. Technical Specification 4.1.4. (d) states:

"Core spray header ΔP Instrumentation"

Check	once/day
Calibrate	once/3 months
Test	once/3 months

On June 30, 1973 at 0100 hours during routine surveillance testing both of the core spray differential pressure instruments were found to be reading 8.3 psid or 3.3 psi above the value as stated in the instrument surveillance check list, (5 psid). This is the first deviation from the procedural accepted value of 5 psid. Notification was made to Mr. Brickly, Region I, Division of Regulatory Operations on June 30, 1973. These switches are designed and intended to provide an alarm only and do not have a protective circuitry function.

As a portion of the daily activities for the plant operators, they are required to read the dial indicator of the core spray differential pressure in the north instrument room (El. 237'). If these dial indicators had reached 5 psid or above (the alarm limit) it would have been recorded and thus awareness of an abnormal condition in the core spray header would be made known to Station Supervision that same day.

The primary function of the core spray differential pressure indicators is to monitor the condition of the core spray piping between the reactor vessel wall and the shroud inside the reactor vessel. As a consequence if ever the core spray piping between the reactor vessel wall and the shroud should suffer a loss of integrity the differential pressure instrument would read essentially recirculation pump differential pressure. Under normal power operating conditions the recirculation pump differential pressure would be in the range of 20-25 psid.

5366

Mr. Donald J. Skovholt
U.S. Atomic Energy Commission

July 6, 1973

Therefore even had the integrity of the piping suffered a loss an alarm would have been sounded in the control room.

To prevent reoccurrence of this problem the cycle of calibration will be increased to every two weeks for a month. If no instrument drift problems occur during this increased surveillance the technical specification surveillance schedule will be reinstated.

It is therefore concluded that no undue hazard was present to the general public as a result of this procedural deviation from set point.

Very truly yours,

Rudolph R. Schneider
Vice President - Electric Operations

RRS:cm

AEC DISTRIBUTION FOR PART 50 DOCKET MATERIAL
(TEMPORARY FORM)

CONTROL NO: 5329

FILE:

FROM:	DATE OF DOC	DATE REC'D	LTR	MEMO	RPT	OTHER
Niagara Mohawk Power Corporation Syracuse, New York 13202 Rudolph R. Schneider	7-3-73	7-9-73	x			

TO:	ORIG	CC	OTHER	
D. J. Skovholt	1 signed	37		SENT AEC PDR X SENT LOCAL PDR X

CLASS	UNCLASS	PROP INFO	INPUT	NO CYS REC'D	DOCKET NO:
	XXX			38	50-220

DESCRIPTION:
Ltr reporting a condition during routine surveillance testing of the turbine anticipatory trip bypass switches...two out of four were found to exceed the value specifies in the instrument surveillance check list.....

ENCLOSURES:
ACKNOWLEDGED

DO NOT REMOVE

PLANT NAME: Nine Mile Point Unit # 1

FOR ACTION/INFORMATION 7-10-73 fod

BUTLER(L)	SCHWENCER(L)	✓ZIEMANN(L)	REGAN(E)
W/ Copies	W/ Copies	W/7 Copies	W/ Copies
CLARK(L)	STOLZ(L)	DICKER(E)	
W/ Copies	W/ Copies	W/ Copies	W/ Copies
GOLLER(L)	VASSALLO(L)	KNIGHTON(E)	
W/ Copies	W/ Copies	W/ Copies	W/ Copies
KNIEL(L)	SCHEMEL(L)	YOUNGBLOOD(E)	
W/ Copies	W/ Copies	W/ Copies	W/ Copies

INTERNAL DISTRIBUTION

✓REG FILE	TECH REVIEW	DENTON	LIC ASST	A/T IND
✓AEC PDR	✓HENDRIE	GRIMES	BROWN (E)	BRAITMAN
✓OGC, ROOM P-506A	SCHROEDER	GAMMILL	✓DIGGS (L)	SALTZMAN
✓MUNTZING/STAFF	✓MACCARY	KASTNER	GEARIN (L)	
✓CASE	✓KNIGHT	BALLARD	GOULBOURNE (L)	PLANS
GIAMBUSSO	✓PAWLICKI	SPANGLER	LEE (L)	MCDONALD
BOYD	✓SHAO		MAIGRET (L)	DUBE
MOORE (L)(BWR)	✓STELLO	ENVIRO	SERVICE (L)	
DEYOUNG(L)(PWR)	✓HOUSTON	MULLER	SHEPPARD (E)	INFO
✓SKOVHOLT (L)	✓NOVAK	DICKER	SMITH (L)	C. MILES
P. COLLINS	✓ROSS	KNIGHTON	TEETS (L)	✓B. KING(RO, OOE)
	✓IPPOLITO	YOUNGBLOOD	WADE (E)	E/W Bldg
REG OPR	✓TEDESCO	REGAN	WILLIAMS (E)	
✓FILE & REGION(3)	✓LONG	PROJECT LDR	WILSON (L)	
✓MORRIS	✓LAINAS			
✓STEELE	✓BENAROYA	HARLESS		
	✓VOLLMER			

EXTERNAL DISTRIBUTION

✓1 - LOCAL PDR Oswego, N. Y.		
✓1 - DTIE(ABERNATHY)	(1)(2)(9)-NATIONAL LAB'S	1-PDR-SAN/LA/NY
✓1 - NSIC(BUCHANAN)	1-R.Schoonmaker,OC,GT,D-323	1-GERALD LELLOUCHE
1 - ASLB(YORE/SAYRE/	1-R. CATLIN, E-256-GT	BROOKHAVEN NAT. LAB
WOODARD/"H" ST.	1-CONSULTANT'S	1-AGMED(WALTER KOESTER
✓16 - CYS ACRS ~~XXXXXX~~ Sent 7-10-73 to	NEWMARK/BLUME/AGBABIAN	RM-C-427-GT
R. Diggs for Dist.	1-GERALD ULRIKSON...ORNL	1-RD...MULLER...F-309 GT

NIAGARA MOHAWK POWER CORPORATION

NIAGARA MOHAWK

300 ERIE BOULEVARD WEST
SYRACUSE, N.Y. 13202

July 3, 1973

Regulatory File Cy.

Mr. Donald J. Skovholt
Assistant Director for Reactor Operations
Division of Reactor Licensing
United States Atomic Energy Commission
Washington, D. C. 20545

Dear Mr. Skovholt:

Re: Provisional Operating License: DPR-17
Docket No.: 50-220

This is to report a condition relating to the operation of Nine Mile Point Nuclear Station, Unit #1, in which, during routine surveillance testing of the turbine anticipatory trip bypass switches, (Barksdale B2T-A12SS) two out of the four were found to exceed the value specified in the instrument surveillance check list. Technical Specifications 2.1.2.(i) states:

> "The generator load rejection scram shall be initiated by the signal for turbine control valve fast closure due to a loss of oil pressure to the acceleration relay any time the turbine first stage steam pressure is above a value corresponding to 833 Mwt, i.e. 45 percent of 1850 Mwt."

Technical Specification 2.1.2.(j) states:

> "The turbine stop valve closure scram setting shall be initiated at $\leq$ 10 percent of valve closure (stem position) from full open whenever the turbine first stage steam pressure is above a value corresponding to 833 Mwt, i.e. 45 percent of 1850 Mwt."

On June 29, 1973, at approximately 2130 hours during routine surveillance testing, two out of the four (one in RPS channel 11 and one in RPS channel 12) Turbine anticipatory trip bypass switches were found to actuate at a value of 365 psig and 366 psig (approximately 824-826 Mwt) or approximately 5 and 6 psi above the instrument surveillance checklist value of 360 psig. The remaining two switches were found within specifications. Notification of this deviation from the accepted value for calibration was made on June 30, 1973, to Mr. Brickly of Region I, Division of Regulatory Operation.

5329

Mr. Donald J. Skovholt
U.S. Atomic Energy Commission

July 3, 1973

The switches were instrument calibrated on May 25, 1973 and found correct at that time. The two switches actuating at 365 and 366 psig were recalibrated to read 357 and 358 psig.

To prevent possible recurrence of this incident and to insure that a turbine trip will provide a near instantaneous reactor scram above 45% power the Barksdale 02-13 A & B were calibrated lower than 360 psig (357 and 358 psig) and thus lower than 45% power. These will be rechecked in two weeks to insure that the instrumentation is not drifting.

In view of the fact that: (1) Redundancy was provided in the circuitry which would have caused a reactor scram at the 360 psig first stage steam pressure setting following a turbine trip, (2) The instrument surveillance checklist value for first stage steam pressure relates to a value less than that called for in Technical Specifications (806-810 Mwt), and (3) That even with the higher pressure the limit of 833 Mwt trip actuation was not exceeded; it is concluded that there are no implications or effects on the safety or health of the general public.

Very truly yours,

R R Schneider

Rudolph R. Schneider
Vice President - Electric Operations

RRS:cm

AEC DISTRIBUTION FOR PART 50 DOCKET MATERIAL
(TEMPORARY FORM)

CONTROL NO: 5015

FILE:

FROM:	DATE OF DOC	DATE REC'D	LTR	MEMO	RPT	OTHER
Niagara Mohawk Power Corporation Lycoming, New York 13093 P. Allister Burt	6-21-73	6-26-73	x			

TO:	ORIG	CC	OTHER	
D. J. Skovholt	1 signed	39		SENT AEC PDR X SENT LOCAL PDR X

CLASS	UNCLASS	PROP INFO	INPUT	NO CYS REC'D	DOCKET NO:
	XXX			40	50-220

DESCRIPTION:
Ltr reporting a failure of one of the six electromatic relief valves to close properly following manual actuation from the control room..... W/attached Fig 5..&.6...

ENCLOSURES:

ACKNOWLEDGED

DO NOT REMOVE

PLANT NAME: Nube Mile Point Unit # 1

FOR ACTION/INFORMATION 6-27-73 fod

BUTLER(L)	SCHWENCER(L)	✓ZIEMANN(L)	REGAN(E)
W/ Copies	W/ Copies	W/ 7 Copies	W/ Copies
CLARK(L)	STOLZ(L)	DICKER(E)	
W/ Copies	W/ Copies	W/ Copies	W/ Copies
GOLLER(L)	VASSALLO(L)	KNIGHTON(E)	
W/ Copies	W/ Copies	W/ Copies	W/ Copies
KNIEL(L)	SCHEMEL(L)	YOUNGBLOOD(E)	
W/ Copies	W/ Copies	W/ Copies	W/ Copies

INTERNAL DISTRIBUTION

✓REG FILE	TECH REVIEW	DENTON	LIC ASST	A/T IND
✓AEC PDR	✓HENDRIE	GRIMES	BROWN (E)	BRAITMAN
✓OGC, ROOM P-506A	SCHROEDER	GAMMILL	✓DIGGS (L)	SALTZMAN
✓MUNTZING/STAFF	✓MACCARY	KASTNER	GEARIN (L)	
CASE	✓KNIGHT	BALLARD	GOULBOURNE (L)	PLANS
GIAMBUSSO	✓PAWLICKI	SPANGLER	LEE (L)	MCDONALD
BOYD	✓SHAO		MAIGRET (L)	DUBE
MOORE (L)(BWR)	✓STELLO	ENVIRO	SERVICE (L)	
DEYOUNG(L)(PWR)	✓HOUSTON	MULLER	SHEPPARD (E)	INFO
✓SKOVHOLT (L)	✓NOVAK	DICKER	SMITH (L)	C. MILES
P. COLLINS	✓ROSS	KNIGHTON	TEETS (L)	✓B. KING(Reg Opr,OOE).
	✓IPPOLITO	YOUNGBLOOD	WADE (E)	E/W Bldg)
REG OPR	✓TEDESCO	REGAN	WILLIAMS (E)	
✓FILE & REGION(3)	✓LONG	PROJECT LDR	WILSON (L)	
✓MORRIS	✓LAINAS			
✓STEELE	✓BENAROYA	HARLESS		
	✓VOLLMER			

EXTERNAL DISTRIBUTION

✓1 - LOCAL PDR Oswego, N. Y.
✓1 - DTIE(ABERNATHY)
✓1 - NSIC(BUCHANAN)
1 - ASLB(YORE/SAYRE/ WOODARD/"H" ST.
✓16 - CYS ACRS ~~HOLDING~~ Sent 6-27-73 to R. Diggs for Dist.

(1)(2)(9)-NATIONAL LAB'S
1-R. CARROLL-OC,GT-B227
1-R. CATLIN, E-256-GT
1-CONSULTANT'S NEWMARK/BLUME/AGBABIAN
1-GERALD ULRIKSON...ORNL

1-PDR-SAN/LA/NY
1-GERALD LELLOUCHE BROOKHAVEN NAT. LAB
1-AGMED(WALTER KOESTER RM-C-427-GT
1-RD..MULLER..F-309 GT

35

NIAGARA MOHAWK POWER CORPORATION

NIAGARA MOHAWK

Nine Mile Point Nuclear Station
Post Office Box 32
Lycoming, New York 13093

Regulatory File Cy.

June 21, 1973

Mr. Donald J. Skovholt
Assistant Director for Reactor Operations
Division of Reactor Licensing
United States Atomic Energy Commission
Washington, D. C. 20545

Dear Mr. Skovholt:

Re: Provisional Operating License: DPR-17
Docket No.: 50-220

The purpose of this letter is to report a failure of one of the six electromatic relief valves to close properly following manual actuation from the control room. This event which occurred on June 12, 1973 at 0808 hours, was reported by phone to Directorate of Regulatory Operations - Region I that same day and followed with a telegram sent that evening containing as much preliminary data as was available at that time. During the Spring 1973 refueling outage of Nine Mile Point, Unit #1 all six of the electromatic relief valves were overhauled. There are three 6" Consolidated electromatic relief valves, Type 1525-VX, installed on each of the two steam lines within the drywell for a total of six. Three are required for depressurization in the loss of coolant accident and five are required to maintain pressure margin between peak transient pressure and the lowest safety valve setting on turbine trip without bypass transient. These valves were operated at low reactor power following the spring outage to ascertain their ability to function properly prior to power operation.

The reactor was operating at approximately 12% power with most of the steam being generated, bypassed to the condenser. Reactor pressure was 950 psig, torus water temperature 75°F and torus water level approximately 3.2-3.4 feet of submergence. Testing of the electromatic relief valves was in progress following their outage overhaul. All valves had responded satisfactorily up to this time and operation of the fifth electromatic (#113) began at 0808 hours.

The indicated bypass steam flow to the condenser dropped from 30% indicated (100% bypass equals 40% total steam) to 16% indicating approximately 400,000 #/hr. of steam was flowing through valve #113. Electromatic valve #113 was then given a close signal (duration of cycle 1.32 seconds) however the indicated bypass steam flow remained at 16%. Special Procedure No. 9 (Inadvertant Operation of an Electromatic Relief Valve) was initiated and an orderly shutdown of the reactor begun.

5015

Attempts were made to close the valve by pulling the fuses and depressing the reset button. In addition the containment spray system was aligned to cool the suppression chamber water should it be needed. The drywell was not inerted at this time and personnel were dispatched to close the manual blocking valve upstream of the operating electromatic. The blocking valve was successfully closed and bypassed steam flow returned to 27% indicated. (The reactor was being shutdown therefore the difference between starting and ending flows). Torus temperature peaked at 125°F indicated and torus level increased to approximately 3.6 foot submergence. Reactor water level and pressure remained essentially unchanged during the valve operation. The electromatic valve operated for 43 minutes and released approximately 25,000 gallons of coolant to the torus (207,000 pounds of steam). Torus coolant activity increased to 586 c/m/ml from 470 c/m/ml. The torus temperature returned to normal within an hour of the incident with use of the containment spray system heat exchanger as set forth in Special Procedure No. 9. The reactor was shutdown in an orderly manner to less than 110 psig at 1300 hours the same day. No pressure changes were noted in either the drywell or torus.

Subsequent investigation of the electromatic valve revealed the valve rings were scoured (Fig. 4, part K) causing the valve to stick in the opened position. In addition a possible leaking union on the pilot valve tube extension (part D, Fig. 4 attached) was found. This could have caused leakage from chamber C and thus may have reduced the motive force to close the valve. The union was replaced and new rings and guide were installed in the valve. A retest of the valve showed satisfactory operation upon three openings and closures of the valve.

As the transient occurred from low reactor power, coolant coverage of the reactor provided no problem. Sufficient inventory is available from not only the condenser hotwell but also the condensate storage tanks; demineralized water storage at all power levels. This inventory is so established to provide normal core coverage should this transient occur from 100% power. Therefore, no unreviewed safety questions existed nor did this incident present any significant hazard to the health and safety of the general public.

Very truly yours,

P. Allister Burt

P. Allister Burt
General Superintendent
Nuclear Generation

PAB:cm

Enc.

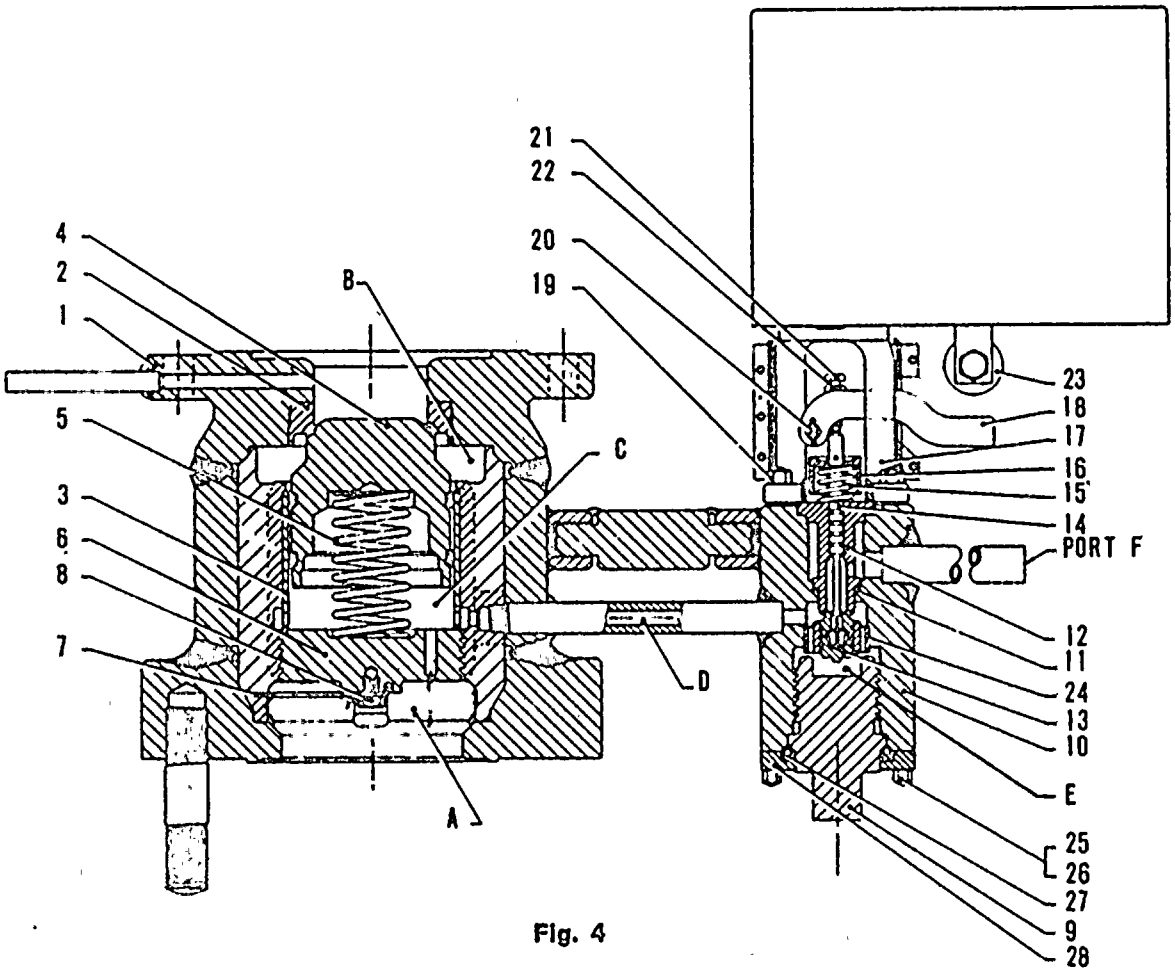

Fig. 4

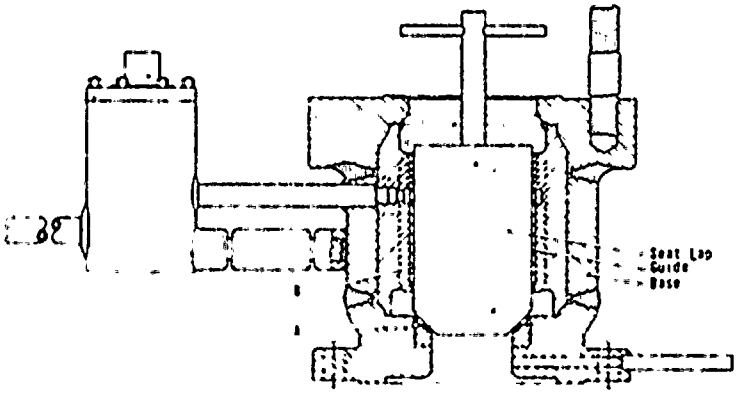

Fig. 5

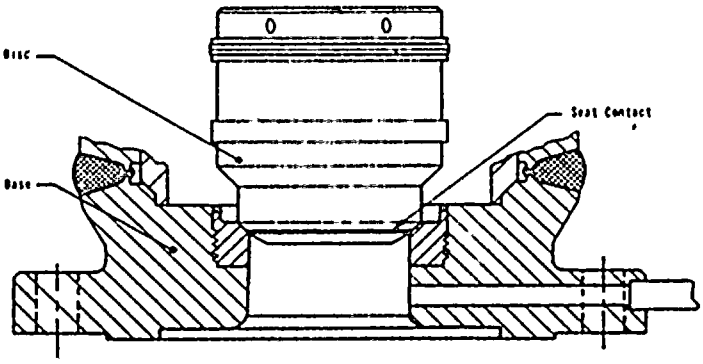

Fig. 6

AEC DISTRIBUTION FOR PART 50 DOCKET MATERIAL
(TEMPORARY FORM)

CONTROL NO: 3785

FILE

FROM:	DATE OF DOC:	DATE REC'D	LTR	MEMO	RPT	OTHER
Niagara Mohawk Power Corporation Lycoming, N. Y.. 13093 P. Allister Burt	6-6-73	6-12-73	x			

TO:	ORIG	CC	OTHER	
D. J. Skovholt	1			SENT AEC PDR x SENT LOCAL PDR x

CLASS:	INPUT	NO CYS REC'D	DOCKET NO:
(U) PROP INFO		1	50-220

DESCRIPTION:

Ltr reporting incident on 4/18-20/73 in which four valves failed to meet the leakage criteria of 12.9 SCFH.....

ENCLOSURES:

ACKNOWLEDGED
DO NOT REMOVE

PLANT NAMES: Nine Mile Point Unit #1

FOR ACTION/INFORMATION 6-12-73 LB

BUTLER(L)	SCHWENCER(L)	✓ZIEMANN(L)	YOUNGBLOOD(E)
W/ Copies	W/ Copies	W/9 Copies	W/ Copies
CLARK(L)	STOLZ(L)	ROUSE(FM)	REGAN(E)
W/ Copies	W/ Copies	W/ Copies	W/ Copies
GOLLER(L)	VASSALLO(L)	DICKER(E)	
W/ Copies	W/ Copies	W/ Copies	W/ Copies
KNIEL(L)	SCHEMEL(L)	KNIGHTON(E)	
W/ Copies	W/ Copies	W/ Copies	W/ Copies

INTERNAL DISTRIBUTION

✓REG FILE	TECH REVIEW	DENTON	F & M	WADE	E
✓AEC PDR	✓HENDRIE	GRIMES	SMILEY	BROWN	E
✓OGC, ROOM P-506A	SCHROEDER	GAMMILL	NUSSBAUMER	G. WILLIAMS	E
✓MUNTZING/STAFF	✓MACCARY	KASTNER		SHEPPARD	E
✓CASE	✓KNIGHT	BALLARD	LIC ASST.		
GIAMBUSSO	✓PAWLICKI	SPANGLER	SERVICE L	A/T IND	
BOYD	✓SHAO		WILSON L	BRAITMAN	
V. MOORE-L(BWR)	✓STELLO	ENVIRO	GOULBOURNE L	SALTZMAN	
DEYOUNG-L(PWR)	✓HOUSTON	MULLER	SMITH L		
✓SKOVHOLT-L	✓NOVAK	DICKER	GEARIN L	PLANS	
P. COLLINS	✓ROSS	KNIGHTON	✓DIGGS L	MCDONALD	
	✓IPPOLITO	YOUNGBLOOD	TEETS L	DUBE	
REG OPR	✓TEDESCO	REGAN	LEE L		
✓FILE & REGION(3)	✓LONG	PROJ LEADER	MAIGRET L	INFO	
✓MORRIS	✓LAINAS		SHAFER F & M	C. MILES	
✓STEELE	✓BENAROYA	HARLESS			
	✓VOLLMER				

EXTERNAL DISTRIBUTION

✓1-LOCAL PDR Oswego, N. Y.
✓1-DTIE(ABERNATHY)
✓1-NSIC(BUCHANAN)
1-ASLB-YORE/SAYRE
WOODWARD/H. ST.
✓16-CYS ACRS ~~XXXXXXX~~ SENT TO LIC ASST
R. DIGGS 6-12-73

(1)(2)(9)-NATIONAL LAB'S
1-R. CARROLL-OC, GT-B227
1- R. CATLIN,E-256-GT
1- CONSULTANT'S
NEWMARK/BLUME/AGABIAN
1- GERLAD ULRIKSON....ORNL

1-PDR-SAN/LA/NY
1- GERALD LELLOUCHE
BROOKHAVEN NAT. LAB
1-AGMED(WALTER KOESTER, RM C-427, GT)
1- RD...MULLER...F-309GT

Regulatory File Cy.

NIAGARA MOHAWK POWER CORPORATION

NIAGARA MOHAWK

Nine Mile Point Nuclear Station
Post Office Box 32
Lycoming, New York 13093

June 6, 1973

Mr. Donald J. Skovholt
Assistant Director for Reactor Operations
Division of Reactor Licensing
United States Atomic Energy Commission
Washington, D. C. 20545

Dear Mr. Skovholt:

Re: Provisional Operating License: DPR-17
Docket No.: 50-220

On April 18-20, 1973 during the Spring 1973 refueling outage at Nine Mile Point Nuclear Station, Unit #1, the main steam isolation valves were leak tested, as required by the Station Technical Specifications. Once the results of these tests were evaluated, Division 1, Compliance was notified that three of the four valves failed to meet the leakage criteria of 12.9 SCFH.

The main steam flow from the reactor to the turbine is through two independent 24" lines. Each line contains two isolation valves, one inside the containment and one immediately outside the containment. The three valves that failed to achieve less than the maximum leakage of 12.95 SCFH were both outside isolation valves and one inside isolation valve.

Under containment design basis accident condition therefore one main steam line would remain essentially leak tight while the other line would leak at a rate of 25.5 SCFH into a closed system eventually terminating at the stack.

The MSIV's are intended to be closed during the design basis loss-of-coolant accident with a low leakage rate to assure than any significant release of fission products is retained within the containment system.

The maximum allowable test leak rate from the containment is 1.5%/day as a pressure of 35 psig. This was derived from the maximum allowable accident leak rate of about 1.9%/day when corrected for the effects of containment environment under accident and test conditions.

3785

Mr. Donald J. Skovholt
U. S. Atomic Energy Commission

June 6, 1973

Although the dose calculations suggest that the allowable test leakage rate could be increased to about 3.0%/day before the 10 CFR 100 guideline thyroid dose limit would be exceeded. The limit was established at 1.5%/day to provide an adequate margin of safety to assure the health and safety of the general public. In addition the operational limit was established as the multiple of the allowable test leak rate and .75, thereby providing a 25% margin. Therefore even though the test leakage was higher than the operational limit the value is mitigated by the safety margins and conservation used to derive the operational limit, and it can be concluded that even with the slightly higher leakage rates thru the one line, no undue hazard would have been presented to the general public in the event of a containment design basis accident during the previous operating cycle.

The accident analysis for a main steam line break outside the drywell concerns itself with two primary considerations:

1. The coolant inventory of the Reactor Vessel,

2. The radiological releases to the environment.

Both cases depend upon the closure time of the main steam isolation valves. In order to maintain coolant coverage of the reactor core a maximum closure time of 10 seconds is assumed in the analysis. Using this closure time for one valve in each main steam line the reactor core remains covered. The radiological releases to the environment are within limits provided a maximum closure time of 11 seconds is maintained. However, this is also based upon the primary coolant radioactivity concentration limit of 25 μCi total iodine per gram of water.

The actual closure times for the inside isolation valves are below the analysis maximum values used. In addition, the yearly average primary coolant radioactivity concentration was .25 μCi total iodine per gram. of water. In conclusion, no undue hazard was presented to the general public if a main steam line break had occurred during the operating cycle.

Results for the four valves are as follows:

Valve Numbers	Leakage SCFH Before	Leakage SCFH After
#11 inside	25.5	9.90
#11 outside	1116.1	9.55
#12 inside	5.0	5.00
#12 outside	64.4	3.75

Following core refueling, repairs were effected to those leakage valves using machine lapping techniques. A blueing of the seats was made before and after repairs. The valves were then retested to determine their leakage. All valves meet the 12.9 SCFH prior to restart of the reactor.

Very truly yours,

P. Allister Burt

P. Allister Burt
General Superintendent
Nuclear Generation

PAB/cm

AEC DISTRIBUTION FOR PART 50 DOCKET MATERIAL
(TEMPORARY FORM)

CONTROL NO: 6162

FILE

FROM:	DATE OF DOC:	DATE REC'D	LTR	MEMO	RPT	OTHER
Niagara Mohawk Power Corporation Lycoming, N. Y. 13093 P. Allister Burt	11-3-72	11-9-72	X			

TO:	ORIG	CC	OTHER	
Mr. Skovholt	1			SENT AEC PDR X SENT LOCAL PDR X

CLASS:	INPUT	NO CYS REC'D	DOCKET NO:
U/PROP INFO		60	50-220

DESCRIPTION:
Ltr reporting an incident on 8-9-72, regarding a failure of the main fuel grapple.....

ENCLOSURES:

DO NOT REMOVE

ACKNOWLEDGED

PLANT NAMES: Nine Mile Point Unit 1

FOR ACTION/INFORMATION 11-10-72 AB

BUTLER(L)	SCHWENCER(L)	SCHEMEL(L)	KNIGHTON(E)
W/ Copies	W/ Copies	W/ Copies	W/ Copies
CLARK(L)	STOLZ(L)	✓ ZIEMANN(L)	YOUNGBLOOD(E)
W/ Copies	W/ Copies	W/9 Copies	W/ Copies
GOLLER(L)	VASSALLO(L)	CHITWOOD(FM)	REGAN(E)
W/ Copies	W/ Copies	W/ Copies	W/ Copies
KNIEL(L)	H. DENTON	DICKER(E)	
W/ Copies	W/ Copies	W/ Copies	W/ Copies

INTERNAL DISTRIBUTION

✓ REG FILE	TECH REVIEW	VOLLMER	HARLESS	WADE	E
✓ AEC PDR	✓ HENDRIE	DENTON		SHAFER	F & M
✓ OGC, ROOM P-506A	✓ SCHROEDER	GRIMES	F & M	BROWN	E
✓ MUNTZING/STAFF	✓ MACCARY	GAMMILL	SMILEY	G. WILLIAMS	E
✓ CASE	✓ LANGE	KASTNER	NUSSBAUMER	E. GOULBOURNE	L
GIAMBUSSO	✓ PAWLICKI	BALLARD		A/T IND	
✓ BOYD-L(BWR)	✓ SHAO	FINE	LIC ASST.	BRAITMAN	
DEYOUNG-L(PWR)	✓ KNUTH		SERVICE L	SALTZMAN	
✓ SKOVHOLT-L	✓ STELLO	ENVIRO	MASON L		
P. COLLINS	✓ MOORE	MULLER	WILSON L	PLANS	
	✓ HOUSTON	DICKER	MAIGRET L	MCDONALD	
REG OPR	✓ TEDESCO	KNIGHTON	SMITH L	DUBE	
✓ FILE & REGION (2)	✓ LONG	YOUNGBLOOD	GEARIN L		
✓ MORRIS	✓ LAINAS	PROJ LEADER	DIGGS L	INFO	
✓ STELLE	✓ BENAROYA		TEETS L	C. MILES	
		REGAN	LEE L		

EXTERNAL DISTRIBUTION

✓ 1-LOCAL PDR Oswego, N. Y.
✓ 1-DTIE(ABERNATHY)
✓ 1-NSIC(BUCHANAN)
1-ASLB-YORE/SAYRE
WOODWARD/H. ST.
✓ 16-CYS ACRS ~~[illegible]~~ SENT TO LIC ASST R. DIGGS ON 11-10-72

(1)(5)(9)-NATIONAL LAB'S
1-R. CARROLL-OC, GT-B227
1-R. CATLIN, E-256-GT
1-CONSULANT'S
NEWMARK/BLUME/AGABIAN

1-PDR-SAN/LA/NY
1-GERALD LELLOUCHE
BROOKHAVEN NAT. LAB
1-AGMED(WALTER KOESTER, Rm C-427, GT)
1-RD...MULLER...F-309GT

Regulatory File Cy.

NIAGARA MOHAWK POWER CORPORATION

NIAGARA MOHAWK

Nine Mile Point Nuclear Station
Post Office Box 32
Lycoming, New York 13093

November 3, 1972

Mr. Donald J. Skovholt
Assistant Director for Reactor Operations
Division of Reactor Licensing
United States Atomic Energy Commission
Washington, D. C. 20545

Dear Mr. Skovholt:

Re: Provisional Operation License: DPR-17
Docket No.: 50-220

On August 9, 1972, a failure of the main fuel grapple occurred. Although the failure occurred over the spent fuel storage pool, the grapple was not loaded and no fuel bundles were damaged or upset. The grapple was not carrying fuel at the time.

After transferring a fuel bundle from the spent fuel storage racks to the fuel preparation machine, the operator placed the grapple in the full-up or retracted position. As the operator was moving the bridge to the east side of the pool, he heard the contacts on the grapple and assumed that he had accidently hit the down lever on the grapple. Normal reaction to this was to reach with the other hand and place the lever in the up position to return the grapple to its retracted position. This was done without shifting his eyes from the direction that the crane was moving. Moments later, there was a loud bang.

When the operator stopped the crane and looked, the grapple was resting on the cab floor and the fuel storage rack in the pool below. The operator anchored the grapple to the bridge trolley with a rope in order to prevent it from dropping into the pool. The operator did not observe anything peculiar just prior to or during the grapple failure, therefore, could not give anyother information concerning the problem.

Inspection showed that the grapple cable had failed and the lower support pins between the first section of the grapple and swivel section had sheared. Failure of the cable allowed the telescoping section to extend out until the grapple head rested on the fuel storage rack in the pool.

6162

Shearing of the support pins allowed the first section to drop, first striking the power control panel support structure, and second, hitting the trolley floor. The grapple control boxes attached to the sides of the grapple came to rest on the trolley grating thus supporting the upper section of the grapple. The grapple was removed from the pool and dismantled.

Investigation showed that the grapple head had cracks in the welding which attached the head to the tubular section. This damage was probably due to the impact received during this incident.

Three parts of the sheared pins were found. The pins showed that they had sheared due to an impact in the downward direction. The diameter of the pin at the shear was 3/8". 1/8" wear had taken place between the pin and gimbal section.

The bushings in the grapple that housed the pins were worn in an oval shape and had cracks at the 12:00, 3:00 and 9:00 o'clock positions indicating over stress.

One arm on the grapple that held the bushing and pin was bent in. This was caused when the grapple fell and struck the power control panel support structure.

The control panels attached to the grapple were undamaged, but the connection attaching the control cable to the right side control box was crushed between the box and trolley floor. Wires in the cable were damaged.

The stops on the first section of the grapple showed markings where the second section made contact but no damage was found.

Further investigation showed that the support pins between the thrust bearing and gimbal were worn as badly as the failed pins and impact load could have sheared these as well.

The thrust bearing was disassembled and found to lack lubrication. No provision was supplied to apply any lubricant to this bearing. The balls and races were worn and had frettic corrosion.

The cam type limit switch which operates the hoist drum and limits both the fully extended and fully retracted grapple positions was found in the permissive position although the hoist drum was wound up to a position above the retracted position. It is felt that this condition can easily occur as the dynamic breaking effects from jogging the hoist near its upper limit can retract the grapple slightly above its upper limit. If the grapple is far enough beyond its upper limit, the limit switch becomes inoperable and the grapple hoist can be raised or lowered from this position.

Another limit switch was mounted on the top of the grapple and is called the overtravel switch. This switch was removed when the grapple was removed from the pool and could not be checked for proper adjustment. Although the switch was operable electrically, it is assumed that this switch was out of adjustment.

The load cell was checked for operability with a 1650 lb. load. Although the load cell did interrupt the hoist circuit at 1650 lbs., the hoist continued coasting for a short period of time until the mechanical brake stopped travel. No dynamic breaking occurs when the grapple is beyond its overtravel limit. The load on the cable was found to be 2400 lbs.

The vendor has been contacted concerning this matter. They have recommended the following system modifications for preventing this incident in the future:

1. Installation of a torque limiter between the hoist motor and the gear box to the hoist drive.

2. Change the dynamic breaking timer from a one second duration to 0.5 second duration.

3. Reconnect main hoist master switch wiring such that full hoisting speed is reduced to half hoisting speed electrically when any vertical limit trip is indicated.

These modifications have not yet been accepted by Niagara Mohawk. The major area of concern is the reliability of torque limiting devices. Further analysis of system modifications are underway.

On the matter of weld crack damage to the grapple head, the vendor has not yet resolved a final recommendation. There is concern over in plant re-plating methods after welding repairs. Testing of nickel plated specimens similar to the material used on the grapple are underway. Repairs to the grapple head will be initiated as soon as an acceptable method is approved.

Very truly yours,

P. Allister Burt

P. Allister Burt
General Superintendent
Nuclear Generation

PAB:pw

AEC DISTRIBUTION FOR PART 50 DOCKET MATERIAL
(TEMPORARY FORM)

CONTROL NO: 6247

FILE

FROM:	DATE OF DOC:	DATE REC'D	LTR	MEMO	RPT	OTHER
Niagara Mohawk Power Corp. Lycoming, N.Y. 13093 P. Allister Burt	11-3-72	11-15-72	X			

TO:	ORIG	CC	OTHER	
Mr. Donald J. Skovholt	1 signed			SENT AEC PDR ✓ SENT LOCAL PDR ✓

CLASS:	INPUT	NO CYS REC'D	DOCKET NO:
(U) PROP INFO		1	50-220

DESCRIPTION: Ltr adv of a problem on 9-19-72 when the identifiable leakage into #11 drywell equipment drain tank started to slowly increase.....
*PLEASE CIRCULATE-INSUFFICIENT CYS FOR FULL DISTRIBUTION

ENCLOSURES:

ACKNOWLEDGED
DO NOT REMOVE

PLANT NAMES: Nine Mile Pt. Station

FOR ACTION/INFORMATION DL 11-15-72

BUTLER(L)	SCHWENCER(L)	SCHEMEL(L)	KNIGHTON(E)
W/ Copies	W/ Copies	W/ Copies	W/ Copies
CLARK(L)	STOLZ(L)	ZIEMANN(L)	YOUNGBLOOD(E)
W/ Copies	W/ Copies	W/ Copies	W/ Copies
GOLLER(L)	VASSALLO(L)	CHITWOOD(FM)	REGAN(E)
W/ Copies	W/ Copies	W/ Copies	W/ Copies
KNIEL(L)	H. DENTON	DICKER(E)	
W/ Copies	W/ Copies	W/ Copies	W/ Copies

INTERNAL DISTRIBUTION

REG FILE	TECH REVIEW	VOLLMER	HARLESS	WADE	E
AEC PDR	HENDRIE	DENTON		SHAFER	F & M
OGC, ROOM P-506A	SCHROEDER	GRIMES	F & M	BROWN	E
MUNTZING/STAFF	*MACCARY	GAMMILL	SMILEY	G. WILLIAMS	E
CASE	LANGE	KASTNER	NUSSBAUMER	E. GOULBOURNE	L
GIAMBUSSO	PAWLICKI	BALLARD		A/T IND	
BOYD-L(BWR)	SHAO	FINE	LIC ASST.	BRAITMAN	
DEYOUNG-L(PWR)	*KNUTH		SERVICE L	SALTZMAN	
SKOVHOLT-L	STELLO	ENVIRO	MASON L		
P. COLLINS	MOORE	MULLER	WILSON L	PLANS	
	HOUSTON	DICKER	MAIGRET L	MCDONALD	
REG OPR	*TEDESCO	KNIGHTON	SMITH L	DUBE	
FILE & REGION (2)	LONG	YOUNGBLOOD	GEARIN L		
MORRIS	LAINAS	PROJ LEADER	DIGGS L	INFO	
STELLE	BENAROYA		TEETS L	C. MILES	
		REGAN	LEE L		

EXTERNAL DISTRIBUTION

1-LOCAL PDR Oswego, N.Y.
1-DTIE(ABERNATHY)
1-NSIC(BUCHANAN)
1-ASLB-YORE/SAYRE
WOODWARD/H. ST.
16-CYS ACRS [redacted] SENT TO LIC. ASST. R. DIGGS ON 11-15-72

(1)(5)(9)-NATIONAL LAB'S
1-R. CARROLL-OC, GT-B227
1-R. CATLIN, E-256-GT
1-CONSULANT'S
NEWMARK/BLUME/AGABIAN

1-PDR-SAN/LA/NY
1-GERALD LELLOUCHE
BROOKHAVEN NAT. LAB
1-AGMED(WALTER KOESTER, Rm C-427, GT)
1-RD...MULLER...F-309GT

NIAGARA MOHAWK POWER CORPORATION

NIAGARA MOHAWK

Nine Mile Point Nuclear Station
P. O. Box 32
Lycoming, New York 13093

November 3, 1972

Regulatory File Cy.

Mr. Donald J. Skovholt
Assistant Director for Reactor Operations
Division of Reactor Licensing
United States Atomic Energy Commission
Washington, D. C. 20545

Dear Mr. Skovholt:

Re: Provisional Operating License: DPR-17
Docket No.: 50-220

On September 19, 1972, with the Nine Mile Point Unit operating at 602 MW (e) the identifiable leakage into #11 drywell equipment drain tank started to slowly increase. The trend of this leakage closely followed previous trends resulting from recirculation system valve packing leakage into the drywell equipment drain tanks. The primary inputs to #11 drywell equipment drain tanks consist of #11 and #12 reactor recirculation pump suction and discharge valves and #13 reactor recirculation pump discharge valve. A planned program to discover the exact source of leakage was undertaken. The unit load was reduced to 510 MW (e) and reactor recirculation pumps #11, #12 and #13 were individually isolated to determine the effect in total drywell leakage. Throughout this period accurate determination of leakage was obtained on a continuous basis. No substantial change in leakage could be detected during the isolation attempts, however, the pressure on #11 reactor recirc pump low pressure seals fluctuated during the time that the pump was isolated as seen in the control room indication.

On September 20, 1972, surveillance data revealed that leakage into #11 DWEDT was approaching the limiting condition for operation (25 gpm total) . At 1745 hours plant shutdown was initiated in order to repair the pump seal on #11 reactor recirculation pump and repack certain recirculation system isolation valves. Four hours after starting to shutdown, the leakage reversed its trend and began to decrease with power level. Cold shutdown was achieved at 1400 hours on September 21, 1972 and recirculation system repairs were started.

6247

Mr. Donald Skovholt
U.S. Atomic Energy Commission

November 3, 1972

During the repair to the #11 recirculation pump seal, the pump suction valve was closed manually as the motor operated actuater (Limitorque valve operator) could not close the valve. Following repairs to the pump seal, the suction valve was cycled to test the valve operator, however, the valve locked up in the open position. Neither the motor operated or manual mode of operation could move the valve. The valve was jacked to the closed position and locked there.

Inspection of the valve operator revealed that extensive internal damage had occurred and immediate repairs could not be made. Damage to the valve operator was identified as a broken worm shaft in the drive assembly and a cracked case around the stem drive nut which damaged a thrust bearing assembly on the lower side of the drive nut. A replacement valve operator was ordered. Until installation of the replacement valve operator, the plant output was limited to 80% as only four of the five recirculation loops were in service.

On the weekend of October 28, 1972, the limitorque SMA-1 valve operator was successfully replaced by an SMB-1 valve operator as the SMA-1 is no longer made. The replacement unit is larger than the original and has greater power transmission capabilities, however, the driver motor is the same size as on the original unit. During this outage, considerable packing maintenance was also accomplished on all of the reactor recirculation isolation valve packing. All work was completed by October 29, 1972 and the plant was started up with all five recirculation loops available for service.

Very truly yours,

P. Allister Burt

P. Allister Burt
General Superintendent
Nuclear Generation

PAB/cm