9999999999

07-627-91

2VBB-UPS1A LOAD LIST

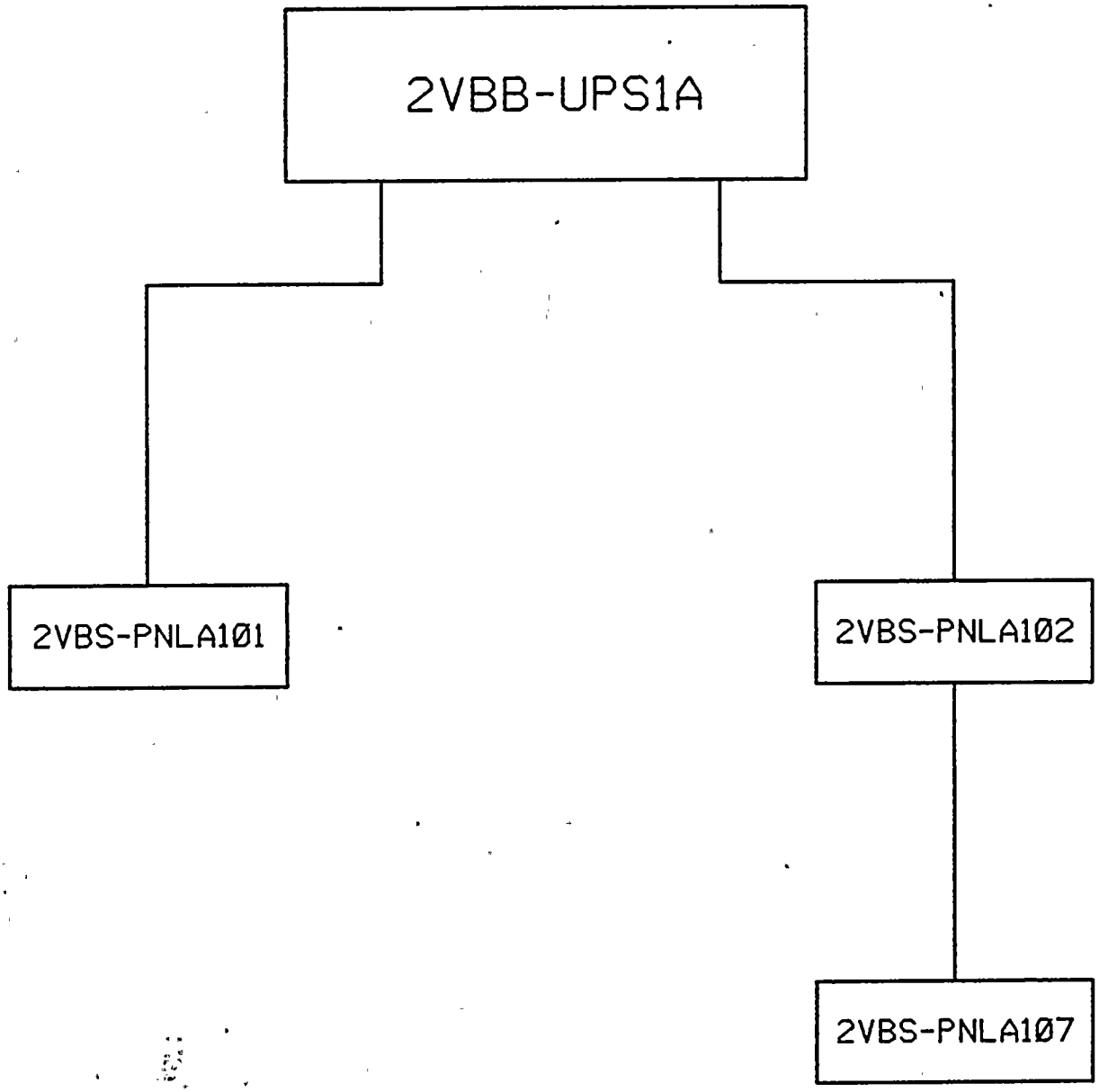

NOTE: THIS DRAWING WAS CREATED USING COMPUTER AIDED DRAFTING DO NOT MAKE MANUAL CHANGES

NUCLEAR NON-SAFETY RELATED

NIAGARA MOHAWK

NINE MILE POINT NUCLEAR STATION - UNIT 2
SCRIBA, N.Y.

LOAD LIST
UNINTERRUPTIBLE POWER SUPPLY
2VBB-UPS1A
SHEET 1 OF 117

SCALE NONE | DRAWING NO AE-100D

MK	DATE	BY	MF	DESCRIPTION	CK	APP
1	9-11-91	JPH JBP		ORIGINAL ISSUE- AS BUILT		

02

INDEX

PANEL	BKR. NO.	SHEET NO.
2VBS-PNLA101	1	4
	2	5
	3	6
	4	7
	5	8
	6	9
	7	10
	8	11
	9	12
	10	13
	11	14
	12	15
	13	16
	14	17-20
	15	21-24
	16	25-28
	17	29,30
	18	31,32,33
	19	34,35
	20	36,37
	21	38
	22	39
	23	40
	24	41
	25	42
	26	43
	27	44
	28	45
	29	46
	30	47
	31	48
	32	49
	33	50
	34	51
	35	52
	36	53
	37	54
2VBS-PNLA101	38	55

PANEL	BKR. NO.	SHEET NO.
2VBS-PNLA102	1	56,57,58
	2	59,60
	3	61
	4	62-66
	5	67-70
	6	71-74
	7	75-79
	8	80
	9	81
	10	82
	11	83
	12	84
	13	85
	14	86
	15	87
	16	88
	17	89
	18	90
	19	91
	20	92
	21	93
	22	94
	23	95
2VBS-PNLA102	24	96
2VBS-PNLA107	1	97
	2	98
	3	99
	4	100
	5	101
	6	102
	7	103
2VBS-PNLA107	8	104

(CONTINUED ON SHEET 3)

2VBB-UPS1A LOAD LIST
DWG. NO. AE-100D
SHEET 2 OF 117

INDEX (CONT'D)

PANEL	BKR. NO.	SHEET NO.

2VBB-UPS1A LOAD LIST
DWG. NO. AE-100D
SHEET 3 OF 117

UPS NO: 2VBB-UPS1A
PNL NO: 2VBS-PNLA101
BKR NO: 1
CIRCUIT NO: 2ADSN01

DRAWING REFERENCES

0007.212-001-021
0007.212-001-031
0007.212-001-054
0007.212-001-063
0007.520-001-410
0007.520-001-407
EE-11J
EE-3DS
147D7828, SH. 2

FEED TO DEVICE	DEVICE LOCATION		PLANT IMPACT
	BLDG	ELEV	
2CEC-PNL703 BAY A JB104	CCR	306	
B22C-W043 2CEC-PNL614	CCR	306	
B22-R614 MULTIPOINT TEMP RECORDER	CCR	306	LOSS OF TEMP IND FOR SAFETY/RELIEF VALVES 2MSS*PSV120 THRU 137 (FOR INPUTS 1 THRU 18) LOSS OF MAIN STEAM LINE DRAIN TEMP IND (FOR INPUTS 19 & 20), LOSS OF COMMON ANNUNCIATOR AND COMPUTER ALARM POINT

UPS NO: 2VBB-UPS1A
PNL NO: 2VBS-PNLA101
BKR NO: 2
CIRCUIT NO: N/A

DRAWING REFERENCES

EE-11J

FEED TO DEVICE	DEVICE LOCATION		PLANT IMPACT
	BLDG	ELEV	
SPARE			NONE

UPS NO: 2VBB-UPS1A
PNL NO: 2VBS-PNLA101
BKR NO: 3
CIRCUIT NO: 2IHAA06

DRAWING REFERENCES

0007.521-001-731 EE-11J
EE-3DN ESK-10IHA42
ESK-10IHA43, 147D7844, SH. 2

FEED TO DEVICE	DEVICE LOCATION		PLANT IMPACT
	BLDG	ELEV	
2CEC-PNL739 BAY A JB103	CRR	288	
2IHA-W854			
2CEC-PNL630 A8CB2-1A A8CB2-2A	CRR	288	LOSS OF CONTROL ROOM ANNUNCIATORS AT 2CEC*PNL601, 602, 603 AND LOSS OF ASSOCIATED COMPUTER ALARM POINTS

UPS NO: 2VBB-UPS1A
PNL NO: 2VBS-PNLA101
BKR NO: 4
CIRCUIT NO: 2CECN14

DRAWING REFERENCES

7.520-001-355, 7.520-001-357
147D7848, SH.2 7.520-001-347
ESK-11CEC01 EE-11J, EE-3DK

FEED TO DEVICE	DEVICE LOCATION		PLANT IMPACT
	BLDG	ELEV	
2CEC-PNL743 BAY B JB202	CCR	306	
2CEC-W089			
2CEC*PNL603	CCR	306	
2CEC-PWRS100	CCR	306	
2CEC-DC100	CCR	306	LOSS OF POWER TO 24 HR DIGITAL CLOCK AND LOSS OF INTERFACE WITH PMS COMPUTER

UPS NO: 2VBB-UPS1A
PNL NO: 2VBS-PNLA101
BKR NO: 5
CIRCUIT NO: 2SPGN04

DRAWING REFERENCES

147D7848, SH. 2 EE-3DK
7.520-001-351 EE-11J
7.520-001-339 ESK-11CEC02
7.520-001-350

FEED TO DEVICE	DEVICE LOCATION		PLANT IMPACT
	BLDG	ELEV	
2CEC-PNL743 BAY B JB203	CCR	306	
2CEC-WO91			
2CEC-PNL603	CCR	306	
2SPG-PWRS100	CCR	306	
2SPG-JI100	CCR	306	LOSS OF POWER TO MAIN GENERATOR GROSS WATTS DIGITAL DISPLAY AND LOSS OF INTERFACE WITH PMS COMPUTER

UPS NO: 2VBB-UPS1A
PNL NO: 2VBS-PNLA101
BKR NO: 6
CIRCUIT NO: 2RDSN09

DRAWING REFERENCES

7.520-001-375, 7.221-001-012, EE-3AC
7.221-001-038, 7.221-001-035 EE-11J
147D7834, SH. 2

FEED TO DEVICE	DEVICE LOCATION		PLANT IMPACT
	BLDG	ELEV	
2CEC*PNL709 BAY F JB404	CCR	306	
C12A-W054			
2CEC-PNL610	CCR	306	
C12A-PS2	CCR	306	LOSS OF POWER TO SCRAM TIME TEST PANEL

UPS NO: 2VBB-UPS1A
PNL NO: 2VBS-PNLA101
BKR NO: 7
CIRCUIT NO: 2RDSN08

DRAWING REFERENCES

7.520-001-924	EE-3AC
7.221-001-012	EE-11J
7.221-001-013	147D7834, SH. 2

FEED TO DEVICE	DEVICE LOCATION		PLANT IMPACT
	BLDG	ELEV	
2CEC*PNL709 BAY F JB402	CCR	306	
C12A-W050			
2CEC-PNL615	CCR	306	LOSS OF POWER TO ROD WORTH MINIMIZER SYSTEM (NUMAC) AND LOSS OF POWER TO ROD POSITION INFORMATION CABINET CAUSES: 1. LOSS OF CONTROL ROD POSITION INDICATION 2. ROD WITHDRAWAL TO BE INHIBITED

UPS NO: 2VBB-UPS1A
PNL NO: 2VBS-PNLA101
BKR NO: 8
CIRCUIT NO: 2IHAA02

DRAWING REFERENCES
EE-3BA
EE-11J
147D7845, SH. 2
ESK-10IHA40, SH. 1&2

FEED TO DEVICE	DEVICE LOCATION		PLANT IMPACT
	BLDG	ELEV	
2CEC-PNL740 BAY A JB101	CRR	288	
2IHA-W661			
2CEC-PNL858 ANNUNCIATOR POWER SUPPLIES	CRR	288	LOSS OF CONTROL ROOM ANNUNCIATORS AT 2CEC*PNL842, 851, 852, 870, 871, 873, 875 AND LOSS OF ASSOCIATED COMPUTER ALARM POINTS

UPS NO: 2VBB-UPS1A
PNL NO: 2VBS-PNLA101
BKR NO: 9
CIRCUIT NO: 2RDSN10

DRAWING REFERENCES

EE-3AC
7.520-001-933,
7.221-001-012

EE-11J
147D7834, SH.2

FEED TO DEVICE	DEVICE LOCATION		PLANT IMPACT
	BLDG	ELEV	
2CEC*PNL709 BAY F JB403	CCR	306	
C12A-W053			
2CEC-PNL659	CCR	306	
C12A-PS1	CCR	306	LOSS OF POWER TO ROD PATTERN CONTROLLER (RSCS) WILL INHIBIT ROD WITHDRAWAL

UPS NO: 2VBB-UPS1A
PNL NO: 2VBS-PNLA101
BKR NO: 10
CIRCUIT NO: N/A

DRAWING REFERENCES
EE-11J

FEED TO DEVICE	DEVICE LOCATION		PLANT IMPACT
	BLDG	ELEV	
SPARE			NONE

UPS NO: 2VBB-UPS1A
PNL NO: 2VBS-PNLA101
BKR NO: 11
CIRCUIT NO: 2RDSN04

DRAWING REFERENCES
EE-3DE EE-11J
0007.520-001-350
0007.520-001-338
0007.520-001-337
0007.221-001-010
0007.221-001-011
147D7826, SH. 2

FEED TO DEVICE	DEVICE LOCATION		PLANT IMPACT
	BLDG	ELEV	
2CEC*PNL701 BAY A JB105	CCR	306	
C12B-W016			
2CEC*PNL603	CCR	306	
C12-N600	CCR	306	CONTROL ROOM ANNUNCIATOR AND PMS ALARMED AND LOSS OF CONTROL ROOM POSITION INDICATION LIGHTS FOR 2RDS-FV6A/B (C12-F002A/B)

UPS NO: 2VBB-UPS1A
PNL NO: 2VBS-PNLA101
BKR NO: 12
CIRCUIT NO: 2RDSN07

DRAWING REFERENCES
EE-4X, EE-11J
0007.510-001-271
0007.221-001-012
0007.221-001-038

FEED TO DEVICE	DEVICE LOCATION		PLANT IMPACT
	BLDG	ELEV	
2CES-RAK007	SC	261	
C12-R018 CRD TEMP RECORDER	SC	261	LOSS OF CONTROL ROD DRIVE TEMPERATURE IND (185 INPUTS) AND LOSS OF COMMON ANNUNCIATOR AND COMPUTER ALARM POINT

UPS NO: 2VBB-UPS1A
PNL NO: 2VBS-PNLA101
BKR NO: 13
CIRCUIT NO: 2NMPN01

DRAWING REFERENCES

EE-11J	0007.224-001-070
EE-3DE	0007.224-001-055
147D7826, SH. 2	0007.224-001-021
7.520-001-350	0007.224-001-070
7.520-001-352	0007.212-001-012
7.224-001-020,035	
7.212-001-010,011,013	
1.764-001-021,026	

FEED TO DEVICE	DEVICE LOCATION		PLANT IMPACT
	BLDG	ELEV	
2CEC*PNL701 BAY A JB103	CCR	306	
C51B-W234			
2CEC*PNL603 C51-R602 C51-R603B C51-R603D C51-R603A C51-R603C B22-R613	CCR	306	LOSS OF POWER TO: SRM RECORDER IRM/APRM RECORDER IRM/APRM/RBM RECORDER IRM/APRM RECORDER IRM/APRM/RBM RECORDER JET PUMP INST RECORDER
2CEC*PNL603			LOSS OF POWER TO: APRM CHANNELS A THRU F STATUS LIGHTS, RBM CHANNELS A & B STATUS LIGHTS, FLOW UNIT A THRU D STATUS LIGHTS
2CEC*PNL602 B35-R614 G33-R613A G33-R613B	CCR	306	RECIRC FLOW RECORDER RWCU FILTER DEMIN INFLUENT RECORDER RX RECIRC INFLUENT A RECORDER
2CEC-PNL614 B22-R622	CCR	306	FEEDWATER TURBIDITY RECORDER

UPS NO: 2VBB-UPS1A
PNL NO: 2VBS-PNLA101
BKR NO: 14
CIRCUIT NO: 2CECA25

DRAWING REFERENCES
EE-11J
147D7836, SH. 2
EE-3AG
EE-3A
0007.159-451-316
0007.159-451-314

FEED TO DEVICE	DEVICE LOCATION		PLANT IMPACT
	BLDG	ELEV	
2CEC*PNL731 BAY E JB303	CRR	288	
2CEC-W001			
2CEC-PNL825	CRR	288	LOSS OF POWER TO 2CEC-PWRS825 FOR FOXBORO PANEL 2CEC-PNL825. FOR PLANT IMPACT, SEE ATTACHED
			NOTE: +/- 15 VDC STILL SUPPLIED FROM 2CEC-PNL888. SEE 2VBS-PNLA101 BKR #18 AND 2VBS-PNLB101 BKR #18.

UPS NO: 2VBB-UPS1A
PNL NO: 2VBS-PNLA101
BKR NO: 14

PLANT IMPACT: LOSS OF POWER TO 2CEC-PNL825

LOOP	PMS INDICATION	PMS ALARM	ERF INPUT	CR ANNUNCIATION	LOCAL ANNUNCIATION	CR INDICATION	LOCAL INDICATION	VALVE POSITION	DESCRIPTION/OTHER
2SWP-501 LSK-9-10T	X	X		X		X			DISCH BAY LEVEL
2SWP-502 LSK-9-10T	X	X		X		X			SERVICE WATER INTAKE LEVEL
2FWS-10B GE 807E160TY						X			MAIN FEEDWATER CONTROL LV10B POSITION INDICATION
2FWP-215 LSK-15-1.1B						X			FIRE HEADER DISCHARGE PRESS
2CNM-115 LSK-4-1.3K	X	X		X		X			CND BSTR PMPS SUCT HDR PR
2CNM-114 LSK-4-1.4	X	X		X		X		FO	CND PMP DISCH HDR FLOW/LOSS OF CONTROL OF FV114
2FWS-111 LSK-6-1.1F						X		FC	HIGH ENERGY FWCCU CONTROL/LOSS OF CONTROL OF HVX111, HVY111,HVZ111
2FWS-113 LSK-6-1.1F						X		FC	LOW ENERGY FWCCU CONTROL/LOSS OF CONTROL OF HVX113,HVY113
2FWS-40A LSK-6-1.1E	X					X			LOSS OF INDICATION OF REACTOR INLET PRESSURE
2FWS-109 LSK-6-1.1F	X					X			FWCCU FLOW INDICATION
2CNM-105 LSK-4-1.1J	X	X		X		X			CND PMPS DISCH HDR PRESS
2CNM-70A LSK-4-1.3K	X					X			FD WTR PMP P1A SUCT PRESS

UPS NO: 2VBB-UPS1A
PNL NO: 2VBS-PNLA101
BKR NO: 14

PLANT IMPACT: LOSS OF POWER TO 2CEC-PNL825

LOOP	PMS INDICATION	PMS ALARM	ERF INPUT	CR ANNUNCIATION	LOCAL ANNUNCIATION	CR INDICATION	LOCAL INDICATION	VALVE POSITION	DESCRIPTION/OTHER
2DER-101 LSK-32-9D	X	X		X		X			DRYWELL EQUIPMENT DRAIN LEAKAGE
2FWS-55A,B GE 807E160TY						X			HIGH PRESSURE LOW FLOW CONTROL VALVE FVSSAB POSITION INDICATION.
2CCP-266 LSK-9-1D	X	X		X		X			RB CLOSE LOOP COOLING WATER FLOW TO DRYWELL UNIT COOLERS
2CNM-38A LSK-4-1.3K	X	X		X		X		FO	CONDENSATE BOOSTER PUMP P2A SUCTION FLOW; LOSS OF CONTROL OF FV38A
2CNM-68A LSK-6-3	X	X		X		X		FO	REACTOR FD PUMP 2FWS-P1A SUCTION FLOW/LOSS OF CONTROL OF 2FWR-FV2A
2CCP-135 LSK-9-1D	X	X		X					RB CLOSE LOOP COOLING WATER FLOW FROM DW UNIT COOLERS
2CNM-45A LSK-4-1.1J	X		X			X	X		CONDENSER CND1A VACUUM
2CNM-104 LSK-4-1.3K	X					X			CONDENSER BOOSTER PUMPS DISCH HDR PR
2CNM-138 LSK-4-1.3K	X					X			START-UP LVL CONTROL VALVE FLOW
2DER-123 LSK-32-9D	X	X		X		X			DW EQUIPMENT DRAIN PUMPS P3A&B FLOW

UPS NO: 2VBB-UPS1A
PNL NO: 2VBS-PNLA101
BKR NO: 14

PLANT IMPACT: LOSS OF POWER TO 2CEC-PNL825

LOOP	PMS INDICATION	PMS ALARM	ERF INPUT	CR ANNUNCIATION	LOCAL ANNUNCIATION	CR INDICATION	LOCAL INDICATION	VALVE POSITION	DESCRIPTION/OTHER
2FWS-9A LSK-6-1.1D	X					X			2FWS-P1A PUMP DISCH PRESS
2HDL-4A LSK-4-2.1B	X					X		FC	4TH POINT HEATER 2CNM-E4A WATER LEVEL/LOSS OF CONTROL OF LV4A
2HDL-35A LSK-4-2.1C	X					X		FO	4TH POINT HEATER 2CNM-E4A DRAIN PUMP P1A FLOW/LOSS OF CONTROL OF FV35A
2HDL-41A LSK-4-2.1B	X					X			4TH POINT HEATER DRAIN PUMP P1A DISCHARGE PRESSURE
2MSS-238 PID-1G	X					X			MAIN STEAM PRESSURE INDICATION

UPS NO: 2VBB-UPS1A
PNL NO: 2VBS-PNLA101
BKR NO: 15
CIRCUIT NO: 2CECA26

DRAWING REFERENCES
EE-11J
EE-3B
EE-3AF
0007.159-451-319
0007.159-451-317
147D7836, SH. 2

FEED TO DEVICE	DEVICE LOCATION		PLANT IMPACT
	BLDG	ELEV	
2CEC*PNL731 BAY B JB202	CRR	288	
2CEC-W003			
2CEC-PNL826	CRR	288	LOSS OF POWER TO 2CEC-PWRS826 FOR FOXBORO PANEL 2CEC-PNL826. ALTERNATE POWER SUPPLY 2CEC-PWRS903 FOR 2CEC-PNL826 IS FED FROM 2VBB-UPS1B PANEL 2VBS-PNLB101 BKR #16. FOR PLANT IMPACT, SEE ATTACHED
			NOTE: +/- 15 VDC STILL SUPPLIED FROM 2CEC-PNL827. SEE 2VBS-PNLA101 BKR #16

UPS NO: 2VBB-UPS1A
PNL NO: 2VBS-PNLA101
BKR NO: 15
PNL NO: 2VBS-PNLB101
BKR NO: 16

PLANT IMPACT: LOSS OF POWER TO 2CEC-PNL826

LOOP	PMS INDICATION	PMS ALARM	ERF INPUT	CR ANNUNCIATION	LOCAL ANNUNCIATION	CR INDICATION	LOCAL INDICATION	VALVE POSITION	DESCRIPTION/OTHER
2CCP-126 LSK-9-L	X	X		X				FC	RB CLOSE LOOP COOLING WATER FLOW FROM REACTOR WATER CLEANUP HT EXCH. 2WCS-E3/LOSS OF CONTROL OF FV126LCW
2CCP-105 LSK-9-1L	X								RB CLOSE LOOP COOLING WATER BOOSTER PUMPS 2CCP-P3A, B &C DISCHARGE HDR FLOW
2CCP-107 LSK-9-1M	X					X			RB CLOSE LOOP COOLING WATER BOOSTER PUMPS DISCHARGE HEADER PRESSURE
2CCP-74B LSK-9-1D	X	X		X					RB CLOSE LOOP COOLING WATER FROM DRYWELL 2DRS-UC3B - TEMP
2CCP-24D LSK-9-1D	X	X		X					RB CLOSE LOOP COOLING WATER FROM DRYWELL 2DRS-UC2D-TEMP
2CCP-24B LSK-9-1D	X	X		X					RB CLOSE LOOP COOLING WATER FROM DRYWELL 2DRS-UC2B-TEMP
2CCP-30D LSK-9-1D	X	X		X					RB CLOSE LOOP COOLING WATER FROM DRYWELL 2DRS-UC1D-TEMP

UPS NO: 2VBB-UPS1A
PNL NO: 2VBS-PNLA101
BKR NO: 15
PNL NO: 2VBS-PNLB101
BKR NO: 16

PLANT IMPACT: LOSS OF POWER TO 2CEC-PNL826

LOOP	PMS INDICATION	PMS ALARM	ERF INPUT	CR ANNUNCIATION	LOCAL ANNUNCIATION	CR INDICATION	LOCAL INDICATION	VALVE POSITION	DESCRIPTION/OTHER
2CCP-30B LSK-9-1D	X	X		X					RB CLOSE LOOP COOLING WATER FLOW FROM DRYWELL 2DRS-UC1B-TEMP
2CNM-70B LSK-4-1.3K	X					X			REACTOR FEEDWATER PUMP P1B SUCT. PRESS
2SFC-2B LSK-34-2B	X	X		X		X			SPENT FUEL POOL WATER LEVEL
2CCP-51B LSK-9-1D	X								RB CLOSE LOOP COOLING WATER FLOW FROM 2RCS*P1B COOLERS
2HDL-41B LSK-4-2.1B	X					X			4TH POINT HEATER NO. 2CNM-E4B DRAIN PUMP DISCHARGE PRESSURE
2CNM-68B LSK-6-3	X	X		X		X		FO	REACTOR FEED PUMP 2FWS-P1B SUCTION FLOW/LOSS OF CONTROL OF 2FWR-FV2B
2HDL-4B LSK-4-2.1B	X					X	X	FC	4TH PT HTR 2CNM-E4B WATER LEVEL/LOSS OF CONTROL OF LV4B

UPS NO: 2VBB-UPS1A
PNL NO: 2VBS-PNLA101
BKR NO: 15
PNL NO: 2VBS-PNLB101
BKR NO: 16

PLANT IMPACT: LOSS OF POWER TO 2CEC-PNL826

LOOP	PMS INDICATION	PMS ALARM	ERF INPUT	CR ANNUNCIATION	LOCAL ANNUNCIATION	CR INDICATION	LOCAL INDICATION	VALVE POSITION	DESCRIPTION/OTHER
2CNM-45B LSK-4-1.1J	X		X			X	X		CONDENSER CND1B VACUUM
2FWS-9B LSK-6-1.1D	X					X			REACTOR FEEDWATER PUMP P1B DISCHARGE PRESSURE
2CNM-38B LSK-4-1.3K	X	X		X		X		FO	CONDENSATE BOOSTER PUMP P2B FLOW/LOSS OF CONTROL OF FV38B
2HDL-35B LSK-4-2.1C	X					X		FO	4TH POINT HEATER 2CNM-E4B DRAIN PUMP P1B FLOW/LOSS OF CONTROL OF FV35B
2FWS-40B LSK-6-1.1E	X					X			REACTOR INLET PRESSURE
2CCP-108 LSK-9-1B	X	X		X		X		FO	CLOSED LOOP COOLING SYSTEM HEAT EXCHANGE DISCHARGE TEMP/LOSS OF CONTROL OF TV108
2CCP-125 LSK-9-1A	X					X			RB CL LP COOLING HEADER PRESSURE

UPS NO: 2VBB-UPS1A
PNL NO: 2VBS-PNLA101
BKR NO: 16
CIRCUIT NO: 2CECA27

DRAWING REFERENCES
EE-11J
EE-3C
EE-3AF
0007.159-451-332
0007.159-451-322
147D7836, SH. 2

FEED TO DEVICE	DEVICE LOCATION		PLANT IMPACT
	BLDG	ELEV	
2CEC*PNL731 BAY B JB203	CRR	288	
2CEC-W005			
2CEC-PNL827	CRR	288	LOSS OF POWER TO 2CEC-PWRS827 FOR FOXBORO PANEL 2CEC-PNL827 SEE ATTACHED FOR PLANT IMPACT
			NOTE: +/- 15 VDC STILL SUPPLIED FROM 2CEC-PNL826. SEE 2VBS-PNLA101 BKR #15 AND 2VBS-PNLB101 BKR #16

UPS NO: 2VBB-UPS1A
PNL NO: 2VBS-PNLA101
BKR NO: 16

PLANT IMPACT: LOSS OF POWER TO 2CEC-PNL827

LOOP	PMS INDICATION	PMS ALARM	ERF INPUT	CR ANNUNCIATION	LOCAL ANNUNCIATION	CR INDICATION	LOCAL INDICATION	VALVE POSITION	DESCRIPTION/OTHER
2CNM-68C LSK-6-3	X	X		X		X		FO	REACTOR FD PUMP 2FWS-P1C SUCTION FLOW/LOSS OF CONTROL OF 2FWR-FV2C
2CCP-24A/C LSK-9-1D	X	X		X					RB CLOSE LOOP COOLING WATER FROM DRYWELL 2DRS-UC2A/C TEMP
2CCP-30A/C LSK-4-1.3K	X	X		X					RBCLCW FROM DRYWELL 2DRS-UC1A/C TEMP
2CNM-38C, LSK-4-1.3K	X	X		X		X		FO	CNST BSTR PUMP P2C SUCTION FLOW/LOSS OF CONTROL OF FV38C
2CCP-74A LSK-9-1D	X	X		X					RB CLOSE LOOP COOLING WATER FROM DRYWELL 2DRS-UC3A TEMP
2SFC-2A LSK-34-2B	X	X		X		X			SPENT FUEL POOL WATER LEVEL
2CCP-129 LSK-9-1E	X	X		X					RB CLOSE LOOP COOLING WATER PUMP P1A, P1B, P1C DISCHARGE FLOW
2HDL-4C LSK-4-2.1B	X					X	X	FC	4TH POINT HTR 2CNM-E4C WATER LEVEL LOSS OF CONTROL OF LV4C
2HDL-35C LSK-4-2.1C	X					X		FO	4TH POINT HTR 2CNM-E4C DRAIN PUMP P1C FLOW/LOSS OF CONTROL OF FV35C

UPS NO: 2VBB-UPS1A
PNL NO: 2VBS-PNLA101
BKR NO: 16

PLANT IMPACT: LOSS OF POWER TO 2CEC-PNL827

LOOP	PMS INDICATION	PMS ALARM	ERF INPUT	CR ANNUNCIATION	LOCAL ANNUNCIATION	CR INDICATION	LOCAL INDICATION	VALVE POSITION	DESCRIPTION/OTHER
2CCP-51A LSK-9-1D	X								RB CLOSE LOOP COOLING WATER FLOW FROM 2RCS*P1A COOLERS
2HDL-41C LSK-4-2.1B	X					X			4TH POINT HEATER NO. 2CNM-E4C DRAIN PUMP DISCHARGE PRESSURE
2CCS-149 LSK-9-7A	X					X			TB CLOSE LOOP COOLING WATER PUMP DISCHARGE HEADER PRESSURE
2CMS*178 LSK-33-2E	X					X			CONTAINMENT DW PRESSURE AROUND 12.5 TO 17 PSIA
2CMS-179 LSK-33-2E	X					X			SUPPRESSION CHAMBER PRESSURE AROUND 12.5 TO 17 PSIA
2SFC-124 LSK-34-2D						X		FC	SFPC WATER CIRC DUMP VALVE/LOSS OF CONTROL OF FV124
2SFC-104 LSK-34-2D	X					X			SFPC TOTAL FLOW
2CCS-136 LSK-9-7C	X	X		X					TB CLOSE LOOP COOLING WATER FLOW BELOW 2 PUMP LIMIT, 1 PUMP LIMIT
2FWS-9C LSK-6.1.1D	X					X			REACTOR FEED WATER PUMP P1C DISCHARGE PRESSURE
2TML-108 LSK-16-2.3	X					X			OIL TANK OIL LEVEL
2CNM-45C LSK-4-1.1J	X		X			X	X		CONDENSER 1C VACUUM

UPS NO: 2VBB-UPS1A
PNL NO: 2VBS-PNLA101
BKR NO: 16

PLANT IMPACT: LOSS OF POWER TO 2CEC-PNL827

LOOP	PMS INDICATION	PMS ALARM	ERF INPUT	CR ANNUNCIATION	LOCAL ANNUNCIATION	CR INDICATION	LOCAL INDICATION	VALVE POSITION	DESCRIPTION/OTHER
2CNM-70C LSK-4-1.3K	X					X			REACTOR FEED WATER PUMP P1C SUCTION PRESSURE
2CCS-104 LSK-9-7B	X	X		X		X		FO	TB COOLING WATER HEAT EXCH. DISCH TEMP HIGH/LOSS OF CONTROL OF TV104

UPS NO: 2VBB-UPS1A
PNL NO: 2VBS-PNLA101
BKR NO: 17
CIRCUIT NO: 2CECN05,
2CECN03,
2CECN01

DRAWING REFERENCES

LSK-3-1A	EE-11J
LSK-21-1A	147D7854, SH 2
LSK-21-1B	0007.520-001-555
LSK-21-1C	0007.520-001-545
LSK-16-8D	ESK-7CEC01
LSK-2-1.1F	0007.400-001-001
EE-3BS	0007.400-001-002

FEED TO DEVICE	DEVICE LOCATION		PLANT IMPACT
	BLDG	ELEV	
2CEC-PNL750 JB103	CCR	306	
2CEC*PNL851 PWRS1-2CECN05	CCR	306	POWER SUPPLY FOR BAILEY CHART DRIVES & RECORDERS
2CEC*PNL601 C91-R620	CCR	306	LOSS OF PERFORMANCE MONITORING SYSTEM TREND RECORDER #1 CHART DRIVE
2CEC*PNL603 C91-R621	CCR	306	LOSS OF PERFORMANCE MONITORING SYSTEM TREND RECORDER #2 CHART DRIVE
2CEC*PNL851 C91-R622	CCR	306	LOSS OF PERFORMANCE MONITORING SYSTEM TREND RECORDER #3 CHART DRIVE
2CEC*PNL851 2GMC-CR110/CR111	CCR	306	LOSS OF GENERATOR INLET CONDUCTIVITY INDICATION/ LOSS OF GENERATOR OUTLET CONDUCTIVITY INDICATION
2CEC*PNL851 2SST-CR106/ CR114/AR113	CCR	306	LOSS OF CNDS DMNRLZR SAMPLE INLET CNDT/LOSS OF CNDS DMNRLZR SAMPLE OUTLET CNDT/LOSS OF CNDS DMNRLZR SAMPLE OUTLET CNDT 02 IND
2CEC*PNL851 2SST-CR131/ AR132/AR133	CCR	306	LOSS OF COMMON 6TH PT HEATER OUTLET SAMPLE CNDT/LOSS OF COMMON 6TH PT HEATER OUTLET SAMPLE 02/LOSS OF COMMON 6TH PT HEATER OUTLET SAMPLE PH INDICATION

UPS NO: 2VBB-UPS1A
PNL NO: 2VBS-PNLA101
BKR NO: 17
CIRCUIT NO: 2CECN05,
2CECN03,
2CECN01

DRAWING REFERENCES

LSK-3-1A	EE-11J
LSK-21-1A	147D7854, SH 2
LSK-21-1B	0007.520-001-555
LSK-21-1C	0007.520-001-545
LSK-16-8D	ESK-7CEC01
LSK-2-1.1F	0007.400-001-001
EE-3BS	0007.400-001-002

FEED TO DEVICE	DEVICE LOCATION		PLANT IMPACT
	BLDG	ELEV	
2CEC*PNL851 2CWS-CR103	CCR	306	LOSS OF BLOWDOWN COOLING TOWER WATER CONDUCTIVITY INDICATION
2CEC*PNL851 2CWS-AR105	CCR	306	LOSS OF BLOWDOWN COOLING TOWER WATER PH INDICATION
2CEC*PNL851 2MSS-TR24A	CCR	306	LOSS OF REHEATER E1A REHEATING STEAM SUPPLY TEMP INDICATION
2CEC*PNL851 2MSS-TR24B	CCR	306	LOSS OF REHEATER E1B REHEATING STEAM SUPPLY TEMP E1B INDICATION
2CEC-CP622 CMPTR PT CECXM01	CRR	288	CHIME FOR ALARM CONDITION

2UPS NO: 2VBB-UPS1A
PNL NO: 2VBS-PNLA101
BKR NO: 18
CIRCUIT NO: 2CECA88

DRAWING REFERENCES
EE-11J
EE-3AG
0007.159-451-408
0007.159-451-407
EE-3N
147D7836 SH. 2

FEED TO DEVICE	DEVICE LOCATION		PLANT IMPACT
	BLDG	ELEV	
2CEC*PNL731 BAY E JB301	CRR	288	
2CEC-W031			
2CEC-PNL888	CRR	288	LOSS OF POWER TO 2CEC-PWRS888 FOR FOXBORO PANEL 2CEC-PNL888. ALTERNATE POWER SUPPLY 2CEC-PWRS902 FOR 2CEC-PNL888 IS FED FROM 2VBB-UPS1B PANEL 2VBS-PNLB101 BKR #18. FOR PLANT IMPACT, SEE ATTACHED.
			NOTE: +/- 15 VDC STILL SUPPLIED FROM 2CEC-PNL825. SEE 2VBS-PNLA101 BKR #14.

UPS NO: 2VBB-UPS1A
PNL NO: 2VBS-PNLA101
BKR NO: 18
UPS NO: 2VBB-UPS1B
PNL NO: 2VBS-PNLB101
BKR NO: 18

PLANT IMPACT: LOSS OF POWER TO 2CEC-PNL888

LOOP	PMS INDICATION	PMS ALARM	ERF INPUT	CR ANNUNCIATION	LOCAL ANNUNCIATION	CR INDICATION	LOCAL INDICATION	VALVE POSITION	DESCRIPTION/OTHER
2ABM-110 LSK-10-1A	X	X		X	X		X		AUX BOILERS STEAM HDR PRESS
2ABM-101 LSK-10-1A	X	X		X	X		X		AUX BOILER DEAR STEM INL PRESS
2CWS-66A,B LSK-2-1.1D		X		X					CLG TWR SCREENS WATER LVL HI
2CWS-109 LSK-2-1.1L	X	X		X				FAI	CLG TWR BASIN WTR TEMP/LOSS OF CONTROL OF MOG52A,B,C
2CWS-135 LSK-2-1.1L	X	X		X				FAI	CLG TWR BASIN WTR TEMP/LOSS OF CONTROL OF MOG52A,B,C
2CWS-136 LSK-2-1.1L	X	X		X				FAI	CLG TWR BASIN WTR TEMP/LOSS OF CONTROL OF MOG52A,B,C
2CWS-138 LSK-2-1.1D	X	X		X		X			CLG TWR FLUME WTR TEMP
2CWS-137 LSK-2-1.1L	X	X		X				FAI	CLG TWR BASIN WTR TEMP/LOSS OF CONTROL OF MOG52A,B,C
2CWS-147 LSK-9-10AC	X					X			CLG TWR BLOWDOWN FLOW/LOSS OF INDICATION ON 2SWP-FR602
2CWS-140 LSK-2-1.1D	X	X		X		X		FC	CLG TWR BASIN WTR LVL/LOSS OF CONTROL OF LV140

UPS NO: 2VBB-UPS1A
PNL NO: 2VBS-PNLA101
BKR NO: 18
UPS NO: 2VBB-UPS1B
PNL NO: 2VBS-PNLB101
BKR NO: 18

PLANT IMPACT: LOSS OF POWER TO 2CEC-PNL888

LOOP	PMS INDICATION	PMS ALARM	ERF INPUT	CR ANNUNCIATION	LOCAL ANNUNCIATION	CR INDICATION	LOCAL INDICATION	VALVE POSITION	DESCRIPTION/OTHER
2CWS-47B LSK-2-1.1D	X					X			CLG TWR RETURN FLOW TO CWS
2SST-50A,B,C LSK-4-2.1C	X	X		X	X	X			2HDL-P1A,B,C TURBIDITY SAMPLE
2SST-22A,B,C LSK-21-1A	X	X		X	X				MN COND A,B,C SHL EAST HALF CNDT
2SST-21A,B,C LSK-21-1A	X	X		X	X				MN COND A,B,C SHL WEST HALF CNDT
2SST-58A THRU J LSK-21-1E	X	X		X	X				CNDS DMNRLZR 1A THRU 1J EFFLUENT CNDT
2SST-53A,B,C LSK-21-1D	X	X		X	X				2HDL-P1A,B,C DISCH SAMPLE CNDT
2SSR-156 LSK-21-1C	X	X		X	X		X		CRD COM FLTR DISCH TURBIDITY
2SWP-512 LSK-9-10T	X					X		FO	INTAKE CHANNEL WATER TEMP LOSS OF CONTROL OF TV512
2SWP-511 LSK-9-10U	X					X			INTAKE TEMPERING WATER FLOW
2SWP-509 LSK-9-10U	X					X			JET MOTIVE PUMP FLOW
2SST-142 LSK-21-1C	X	X		X	X				COND DMNRLZR INL SAMPLE TURB
2WTS-323 LSK-13-1G	X					X			DISCH FLOW TO LAKE

UPS NO: 2VBB-UPS1A
PNL NO: 2VBS-PNLA101
BKR NO: 19
CIRCUIT NO: 2RCSA19

DRAWING REFERENCES
EE-11J
EE-3DT
147D7828, SH. 2
0007.221-001-089
0007.213-001-019

FEED TO DEVICE	DEVICE LOCATION		PLANT IMPACT
	BLDG	ELEV	
2CEC-PNL703 BAY B JB204	CCR	306	
B35A-W110			
2CEC-PNL634 RK1-142 RK1-143 RK1-144	CCR	306	LOSS OF POWER TO REACTOR RECIRC SYSTEM PNL634A, RACK 1 INSTR BUS. SEE ATTACHMENT.

UPS NO: 2VBB-UPS1A
PNL NO: 2VBS-PNLA101
DIST PNL NO: 2CEC-PNL634
BKR NO: 19

PLANT IMPACT: LOSS OF POWER TO 2CEC-PNL634

DWG. REF.
761E79ITY
442X559-002
0007.221-001-089
TL2RCS-103,TL2RCS-104
TL2RCS-105

LOOP	PMS INDICATION	PMS ALARM	ERF INPUT	CR ANNUNCIATION	LOCAL ANNUNCIATION	CR INDICATION	LOCAL INDICATION	VALVE POSITION	DESCRIPTION/OTHER
RECP #1 FEEDS POWER SUPPLIES NEST 2,3,4,5,8,9,10						X			RCS LOAD DEMAND ERROR CONTROL INSTRUMENTATION (INOP)
RECP #1 FEEDS POWER SUPPLIES NEST 2,3,4,5,8,9,10		X			X	X			RCS MASTER CONTROL INSTRUMENTATION (FLOW CONTROL) (INOP)
RECP #1 FEEDS POWER SUPPLIES NEST 2,3,4,5,8,9,10		X			X	X			RCS NEUTRON FLUX CONTROL INSTRUMENTATION (FLOW CONTROL) (INOP)
RECP #1 FEEDS POWER SUPPLIES NEST 2,3,4,5,8,9,10								FL	RCS FLOW CONTROL LOOP "A" INSTRUMENTATION (INOP) 2RCS*HYV17A
RECP #1 FEEDS POWER SUPPLIES NEST 2,3,4,5,8,9,10								FL	2RCS*HYV17A POSITION & VELOCITY CONTROL INSTRUMENTATION (INOP)
FUSE PLATE VALIDYNE PUMP								FL	2RCS*HYV17A POSITION & VELOCITY AMP (INOP)

UPS NO: 2VBB-UPS1A
PNL NO: 2VBS-PNLA101
BKR NO: 20
CIRCUIT NO: 2RCSA20

DRAWING REFERENCES
EE-11J
EE-3DU
147D7828, SH. 2
0007.221-001-099
0007.213-001-019

FEED TO DEVICE	DEVICE LOCATION		PLANT IMPACT
	BLDG	ELEV	
2CEC-PNL703 BAY E JB302	CCR	306	
B35A-W111			
2CEC-PNL634 RK3-194 RK3-195 RK3-196	CCR	306	LOSS OF POWER TO REACTOR RECIRC SYSTEM PNL634C, RACK 3, LOOP A INSTR BUS. SEE ATTACHMENT

UPS NO: 2VBB-UPS1A
PNL NO: 2VBS-PNLA101
DIST PNL NO: 2CEC-PNL634
BKR NO: 20

PLANT IMPACT: LOSS OF POWER TO 2CEC-PNL634

0007.221-001-116
0007.221-001-105

LOOP	PMS INDICATION	PMS ALARM	ERF INPUT	CR ANNUNCIATION	LOCAL ANNUNCIATION	CR INDICATION	LOCAL INDICATION	VALVE POSITION	DESCRIPTION/OTHER
15A CKT BKR		X		X	X			FL	2RCS*HYV17A HYDRAULIC POWER UNIT (HPU) (INOP)
15A CKT BKR		X		X	X			FL	2RCS*HYV17A MODICON CONTROLLER FOR HPU AND ASSOCIATED INPUT (INOP)

UPS NO: 2VBB-UPS1A
PNL NO: 2VBS-PNLA101
BKR NO: 21
CIRCUIT NO: N/A

DRAWING REFERENCES

EE-11J

FEED TO DEVICE	DEVICE LOCATION		PLANT IMPACT
	BLDG	ELEV	
SPARE			NONE

UPS NO: 2VBB-UPS1A
PNL NO: 2VBS-PNLA101
BKR NO: 22
CIRCUIT NO: 2SXSN09

DRAWING REFERENCES

ESK-10SXS27	147D7834, SH. 2
0007.520-001-375	EE-11J
0007.521-001-157	ESK-10SXS17
0007.227-001-003	EE-3AB
0007.227-001-014	
0007.227-001-018	

FEED TO DEVICE	DEVICE LOCATION		PLANT IMPACT
	BLDG	ELEV	
2CEC*PNL709 BAY E JB305	CCR	306	
C88A-W059			
2CEC-PNL610	CCR	306	
C88A-J1116 (AT) C88A-J1219 (AV)	CCR	306	LOSS OF POWER TO OPTICAL XMTR (GETARS) 2SXS-MUX16 AND -MUX28

UPS NO: 2VBB-UPS1A
PNL NO: 2VBS-PNLA101
BKR NO: 23
CIRCUIT NO: N/A

DRAWING REFERENCES

EE-11J

FEED TO DEVICE	DEVICE LOCATION		PLANT IMPACT
	BLDG	ELEV	
SPARE			NONE

UPS NO: 2VBB-UPS1A
PNL NO: 2VBS-PNLA101
BKR NO: 24
CIRCUIT NO: 2LMSN01

DRAWING REFERENCES

ESK-7LMS04	EE-11J
ESK-11LMS01	EE-3BE
ESK-11LMS02	147D7846, SH. 2
0007.520-001-658	0007.520-001-650
0007.520-001-649	LSK-33-1A

FEED TO DEVICE	DEVICE LOCATION		PLANT IMPACT
	BLDG	ELEV	
2CEC*PNL741 BAY A JB104	CCR	306	
2LMS-W020			
2CEC*PNL873 PS1-2LMSN01	CCR	306	
2LMS-PI123 2LMS-PI125	CCR	306	LOSS OF DRYWELL ABSOLUTE PRESSURE DIGITAL DISPLAY AND PMS INDICATION

UPS NO: 2VBB-UPS1A
PNL NO: 2VBS-PNLA101
BKR NO: 25
CIRCUIT NO: 2SXSN12

DRAWING REFERENCES

147D7834, SH. 2	EE-11J
0007.227-001-003	ESK-10SXS19
0007.227-001-016	EE-3AB
0007.227-001-019	0007.520-001-375
ESK-10SXS28	0007.520-001-157

FEED TO DEVICE	DEVICE LOCATION		PLANT IMPACT
	BLDG	ELEV	
2CEC*PNL709 BAY E JB306	CCR	306	
C88A-W061			
2CEC-PNL610	CCR	306	
C88A-J1220 (AW) C88A-J1118(AU)	CCR	306	LOSS OF POWER TO OPTICAL XMTR (GETARS) 2SXS-MUX18 AND MUX29

UPS NO: 2VBB-UPS1A
PNL NO: 2VBS-PNLA101
BKR NO: 26
CIRCUIT NO: 2RPSN11

DRAWING REFERENCES
EE-11J
ESK-11CEC03
EE-3DK
147D7848, SH. 2
0007.520-001-350
0007.520-001-337

FEED TO DEVICE	DEVICE LOCATION		PLANT IMPACT
	BLDG	ELEV	
2CEC-PNL743 BAY B JB204	CCR	306	
2CEC-W093			
2CEC-PNL603	CCR	306	
2RPS-PWRS100	CCR	306	
2RPS-JXI100	CCR	306	LOSS OF POWER TO REACTOR THERMAL POWER DIGITAL DISPLAY AND LOSS OF INTERFACE WITH PMS COMPUTER

UPS NO: 2VBB-UPS1A
PNL NO: 2VBS-PNLA101
BKR NO: 27
CIRCUIT NO: 2RPSN02

DRAWING REFERENCES
EE-11J
ESK-11CEC04
EE-3AX
0007.520-001-354
0007.520-001-357
0007.520-001-342
147D7848, SH. 2

FEED TO DEVICE	DEVICE LOCATION		PLANT IMPACT
	BLDG	ELEV	
2CEC-PNL743 BAY E JB301	CCR	306	
2CEC-W095			
2CEC*PNL603	CCR	306	
2RPS-PWRS101	CCR	306	
2RPS-PI101	CCR	306	LOSS OF POWER TO REACTOR PRESSURE DIGITAL DISPLAY AND LOSS OF INTERFACE WITH PMS COMPUTER

UPS NO: 2VBB-UPS1A
PNL NO: 2VBS-PNLA101
BKR NO: 28
CIRCUIT NO: 2CPSN09

DRAWING REFERENCES
EE-11J
LSK-22-23A
EE-3DJ
147D7848, SH. 2
0007.520-001-658
0007.520-001-647
ESK-11CEC05

FEED TO DEVICE	DEVICE LOCATION		PLANT IMPACT
	BLDG	ELEV	
2CEC-PNL743 BAY A JB104	CCR	306	
2CEC-W087			
2CEC*PNL873	CCR	306	
2CPS-PWRS126	CCR	306	
2CPS-FI126	CCR	306	LOSS OF POWER TO PRIMARY CONTAINMENT AIR FLOW DIGITAL DISPLAY AND LOSS OF INTERFACE WITH PMS COMPUTER

UPS NO: 2VBB-UPS1A
PNL NO: 2VBS-PNLA101
BKR NO: 29
CIRCUIT NO: N/A

DRAWING REFERENCES

EE-11J

FEED TO DEVICE	DEVICE LOCATION		PLANT IMPACT
	BLDG	ELEV	
SPARE			NONE

UPS NO: 2VBB-UPS1A
PNL NO: 2VBS-PNLA101
BKR NO: 30
CIRCUIT NO: 2DRSN01
2GTSN01

DRAWING REFERENCES

ESK-7DRS01	EE-11J
ESK-7GTS04	EE-3AS
ESK-6DRS01	0007.520-001-590
ESK-6DRS02	0007.520-001-584
ESK-6DRS03	147D7857, SH. 2
ESK-6DRS04	LSK-27-15H
ESK-6DRS05	LSK-22-22

FEED TO DEVICE	DEVICE LOCATION		PLANT IMPACT
	BLDG	ELEV	
2CEC*PNL753 BAY A JB111	CRR	288	
2DRS-W003			
2CEC-PNL856A	CRR	288	
3X1-2DRSN01 3X2-2DRSN01 33X1-2DRSN01 33X2-2DRSN01 3X1-2GTSN01 3X2-2GTSN01	CRR	288	UNIT COOLERS FANS STOP OR FAIL TO START, LOCA OVERRIDE INHIBITED INOP DW UNIT COOLERS: 2DRS-UC1A, 1C, 2A, 2C AND 3A PRIMARY CONTAINMENT PURGE TO SGTS ISOL VALVES 2GTS*AOV101 AND *AOV102 FAIL CLOSED

UPS NO: 2VBB-UPS1A
PNL NO: 2VBS-PNLA101
BKR NO: 31
CIRCUIT NO: N/A

DRAWING REFERENCES

EE-11J

FEED TO DEVICE	DEVICE LOCATION		PLANT IMPACT
	BLDG	ELEV	
SPARE			NONE

UPS NO: 2VBB-UPS1A
PNL NO: 2VBS-PNLA101
BKR NO: 32
CIRCUIT NO: N/A

DRAWING REFERENCES

EE-11J

FEED TO DEVICE	DEVICE LOCATION		PLANT IMPACT
	BLDG	ELEV	
SPARE			NONE

UPS NO: 2VBB-UPS1A
PNL NO: 2VBS-PNLA101
BKR NO: 33
CIRCUIT NO: N/A

DRAWING REFERENCES

EE-11J

FEED TO DEVICE	DEVICE LOCATION		PLANT IMPACT
	BLDG	ELEV	
SPARE			NONE

UPS NO: 2VBB-UPS1A
PNL NO: 2VBS-PNLA101
BKR NO: 34
CIRCUIT NO: N/A

DRAWING REFERENCES

EE-11J

FEED TO DEVICE	DEVICE LOCATION		PLANT IMPACT
	BLDG	ELEV	
SPARE			NONE

UPS NO: 2VBB-UPS1A
PNL NO: 2VBS-PNLA101
BKR NO: 35
CIRCUIT NO: N/A

DRAWING REFERENCES
EE-11J
EE-3FN
0007.330-002-022 THRU-035

FEED TO DEVICE	DEVICE LOCATION		PLANT IMPACT
	BLDG	ELEV	
2CEC-PNL738 (PULL THRU)	CRR	288	
2EHC-W117 2EHC-W115	CRR	288	
2CEC-PNL848 BAY F (EHC CABINET)	CRR	288	
S1 SWITCH BOX	CRR	288	LOSS OF THE LOAD REFERENCE MOTOR, THE 1ST STAGE PRESSURE POTENTIOMETER MOTOR, FAST ACTING SOLENOID VALVES. POWER SUPPLY REDUNDANCY PROVIDED BY MAGNETIC GENERATOR. NOTE: MAY CAUSE TURBINE TRIP

UPS NO: 2VBB-UPS1A
PNL NO: 2VBS-PNLA101
BKR NO: 36
CIRCUIT NO: 2RDSN06

DRAWING REFERENCES

0007.221-001-012	EE-11J
0007.221-001-016	EE-3AC
0007.221-001-017	0007.522-001-407
0007.221-001-041	147D7834, SH. 2

FEED TO DEVICE	DEVICE LOCATION		PLANT IMPACT
	BLDG	ELEV	
2CEC*PNL709 BAY F JB401	CCR	306	
C12A-W049			
2CEC-PNL616	CCR	306	LOSS OF POWER TO CONTROL ROD DRIVE RELAY CABINET CAUSES: 1) LOSS OF FULL CORE DISPLAY 2) LOSS OF 4-ROD DISPLAY 3) ROD WITHDRAWAL TO BE INHIBITED

UPS NO: 2VBB-UPS1A
PNL NO: 2VBS-PNLA101
BKR NO: 37
CIRCUIT NO: 2RDSN05

DRAWING REFERENCES

0007.221-001-012	EE-11J
0007.221-001-017	EE-3DE
0007.221-001-013	147D7826, SH. 2
0007.520-001-350	
0007.520-001-353	

FEED TO DEVICE	DEVICE LOCATION		PLANT IMPACT
	BLDG	ELEV	
2CEC*PNL701 BAY A JB101	CCR	306	
C12A-W051			
2CEC*PNL603	CCR	306	-LOSS OF POWER TO RWM OPERATOR'S DISPLAY, -LOSS OF POWER TO ROD SELECT MODULE, -LOSS OF PRIMARY POWER FOR FULL CORE DISPLAY FAN CONTROL, -LOSS OF POWER TO DISPLAY MEMORY MODULE, -FULL CORE DISPLAY IS INOP, -4-ROD DISPLAY IS INOP, -ROD WITHDRAWAL IS INHIBITED

UPS NO: 2VBB-UPS1A
PNL NO: 2VBS-PNLA101
BKR NO: 38
CIRCUIT NO: 2IHAA07

DRAWING REFERENCES
EE-11J
EE-3AN
ESK-10IHA40, SH. 2
147D7851, SH. 2

FEED TO DEVICE	DEVICE LOCATION		PLANT IMPACT
	BLDG	ELEV	
2CEC-PNL747 BAY A JB102	CRR	288	
2IHA-W028			
2CEC-PNL833	CRR	288	LOSS OF CONTROL ROOM ANNUNCIATORS AT 2CEC*PNL842, 851, 852, 870, 871, 873, 875 AND LOSS OF ASSOCIATED COMPUTER ALARM POINTS

UPS NO: 2VBB-UPS1A
PNL NO: 2VBS-PNLA102
BKR NO: 1
CIRCUIT NO: 2RDSN03

DRAWING REFERENCES
EE-11J
EE-3CR
14707829, SH. 2
0007.520-001-420
0007.520-001-403
0007.221-001-010

FEED TO DEVICE	DEVICE LOCATION		PLANT IMPACT
	BLDG	ELEV	
2CEC*PNL704 JB402	CCR	306	
C12A-W017			
2CEC*P613A C12A-F2	CCR	306	
C12-K600 (24 VDC PWR SUPPLY)	CCR	306	SEE ATTACHMENT

UPS NO: 2VBB-UPS1A
PNL NO: 2VBS-PNLA102
BKR NO: 1
DIST PNL NO: 2CEC-PNL613

PLANT IMPACT: LOSS OF POWER TO C12-K600

LOOP	PMS INDICATION	PMS ALARM	ERF INPUT	CR ANNUNCIATION	LOCAL ANNUNCIATION	CR INDICATION	LOCAL INDICATION	VALVE POSITION	DESCRIPTION/OTHER
24VDC PWR SUPPLY C12-K600 807E159TY						X	X		(C12-N008 DIFF PRESS XMTR) CRD DRIVE WATER DIFF PRESSURE
24VDC PWR SUPPLY C12-K600 807E159TY						X	X		(C12-N011 DIFF PRESS XMTR) CRD COOLING WTR DIFF PRESSURE
24VDC PWR SUPPLY C12-K600 807E159TY		X		X		X	X		(C12-N005 PRESS XMTR) CRD HYD SYSTEM CHARGING WATER PRESS
24VDC PWR SUPPLY C12-K600 807E159TY		X		X					(C12-N052 PRESS XMTR) CRD SCRAM VALVE PILOT AIR HDR PRESS HIGH & LOW
24VDC PWR SUPPLY C12-K600 807E159TY	X					X	X	FC	(C12-N004 FLOW XMTR) CRD HYD SYSTEM FLOW CONTROL 2RDS-FV6A & 6B

UPS NO: 2VBB-UPS1A
PNL NO: 2VBS-PNLA102
BKR NO: 1
DIST PNL NO: 2CEC-PNL613

PLANT IMPACT: LOSS OF POWER TO C12-K600

LOOP	PMS INDICATION	PMS ALARM	ERF INPUT	CR ANNUNCIATION	LOCAL ANNUNCIATION	CR INDICATION	LOCAL INDICATION	VALVE POSITION	DESCRIPTION/OTHER
24VDC PWR SUPPLY C12-K600 807E159TY						X			(C12-N009 FLOW XMTR) CRD COOLING WTR FLOW
24VDC PWR SUPPLY C12-K600 807E159TY						X	X		(C12-N007 FLOW XMTR) CRD DRIVE WATER FLOW
24VDC PWR SUPPLY C12-K600 791E406TY									(C12-N054A PRESS XMTR) 1ST STAGE TURBINE PRESSURE RSCS LOW POWER ALARM/SETPOINT 1 INOP
24VDC PWR SUPPLY C12-K600 791E406TY									(C12-N054B PRESS XMTR) 1ST STAGE TURBINE PRESSURE RRCS LOW POWER ALARM/SETPOINT 2 INOP

UPS NO: 2VBB-UPS1A
PNL NO: 2VBS-PNLA102

BKR NO: 2
CIRCUIT NO: 2MSSN19

DRAWING REFERENCES
EE-11J
EE-3CQ
147D7829, SH. 2
0007.520-001-425
0007.520-001-424

FEED TO DEVICE	DEVICE LOCATION		PLANT IMPACT
	BLDG	ELEV	
2CEC*PNL704 JB304-1 JB304-2	CCR	306	
B22B-W009			
2CEC-PNL619	CCR	306	
B22-K615	CCR	306	SEE ATTACHED

UPS NO: 2VBB-UPS1A
PNL NO: 2VBS-PNLA102
BKR NO: 2
DIST PNL NO: 2CEC-PNL619

PLANT IMPACT: LOSS OF POWER TO B22-K615

LOOP	PMS INDICATION	PMS ALARM	ERF INPUT	CR ANNUNCIATION	LOCAL ANNUNCIATION	CR INDICATION	LOCAL INDICATION	VALVE POSITION	DESCRIPTION/OTHER
FUSE B22B-F1 B22-K615 24VDC POWER SUPPLY									
(807E159TY)	X					X			LOSS OF JET PUMPS TOTAL FLOW LOOP A AND B
(807E159TY)	X					X			(B22-N034A THRU W FLOW XMTR) JET PUMP JP-1 THRU JP-2
(807E159TY)	X					X			(B22-N033 THRU D FLOW XMTR) CALIBRATED JET PUMP FLOW JP-5, 10, 15 & 20
(807E159TY)	X					X			(B22-N032 DIFF PRESS XMTR) REACTOR CORE PLATE DIFFERENTIAL PRESSURE
B22B-F2 FUSE	X					X			TOTAL JET PUMP FLOW SUMMING LOGIC INOP

UPS NO: 2VBB-UPS1A
PNL NO: 2VBS-PNLA102
BKR NO: 3
CIRCUIT NO: N/A

DRAWING REFERENCES

EE-11J

FEED TO DEVICE	DEVICE LOCATION		PLANT IMPACT
	BLDG	ELEV	
SPARE			NONE

UPS1A

September 11, 1991

2VBB-UPS1A LOAD LIST
DWG. NO. AE-100D
SHEET 61 OF 117

UPS NO: 2VBB-UPS1A
PNL NO: 2VBS-PNLA102
BKR NO: 4
CIRCUIT NO: 2CECA84

DRAWING REFERENCES

EE-11J
0007.159-451-323
EE-3AJ

FEED TO DEVICE	DEVICE LOCATION		PLANT IMPACT
	BLDG	ELEV	
2CEC*PNL730 JB102-1 JB102-2	CRR	288	
2CEC-PNL884	CRR	288	LOSS OF POWER TO 2CEC-PWRS884 FOR FOXBORO PANEL 2CEC-PNL884 FOR PLANT IMPACT SEE ATTACHED NOTE: +/- 15VDC STILL SUPPLIED FROM 2CEC-PNL885 SEE 2VBS-PNLA102 BKR NO. 5 AND 2VBS-PNLB102 BKR NO. 4

UPS NO: 2VBB-UPS1A
PNL NO: 2VBS-PNLA102
BKR NO: 4

PLANT IMPACT: LOSS OF POWER TO 2CEC-PNL884

LOOP	PMS INDICATION	PMS ALARM	ERF INPUT	CR ANNUNCIATION	LOCAL ANNUNCIATION	CR INDICATION	LOCAL INDICATION	VALVE POSITION	DESCRIPTION/OTHER
2ASS-6A LSK-3-9D	X	X		X		X			AUX. STEAM FLOW TO AIR REMOVAL SYSTEM
2MSS-103 LSK-3-1D & 1E	X								2TMS-T1 FIRST STAGE PRESSURE/GROUP 1 DRAIN VALVES
2WTS-243 LSK-13-1B	X	X		X	X		X		NEUTRALIZER TANK LEVEL HIGH/INHIBIT THE START OF REGENERATION
2DSR-68A LSK-32-6B	X	X		X			X	FO	REHEATER DRAIN RECEIVER TANK 6A WATER LEVEL, LOSS OF CONTROL OF LV-68A
2FOF-101 LSK-15-1.2C				X			X		FUEL OIL STORAGE TANK LEVEL FIRE COMPUTER ALARM
2DSR-78A LSK-32-6E	X	X		X				FAI	SCAVENGING STEAM LINE A PRESSURE LOSS OF CONTROL OF MOV-86A
2MSS-104 LSK-3-1E	X							FO	2TMS-TI 1ST STAGE PRESSURE/LOSS OF CONTROL OF A0V85A,B,C,D, 2CNM-A0V101 AND 2CNM-A0V109
2CNS-8A LSK-4-3A	X	X	X	X		X			CNDS. STOR TK1A LEVEL

UPS NO: 2VBB-UPS1A
PNL NO: 2VBS-PNLA102
BKR NO: 4

PLANT IMPACT: LOSS OF POWER TO 2CEC-PNL884

LOOP	PMS INDICATION	PMS ALARM	ERF INPUT	CR ANNUNCIATION	LOCAL ANNUNCIATION	CR INDICATION	LOCAL INDICATION	VALVE POSITION	DESCRIPTION/OTHER
2MSS-101 LSK-3-1B, F	X								2TMS-T1 MAIN STEAM INLET HDR. PRESSURE LOSS OF 2ASS-STV112 & 2ASS-AOV145
2MSS-24A LSK-3-1A	X					X			E1A REHEATING STEAM TEMP
2DSR-103 LSK-32-6C	X								SCAVENGING STEAM HEADER PRESSURE
2MSS-22A LSK-3-1M, 3-2	X					X		FC	MS/R REGULATED STEAM PRESSURE LOSS OF CONTROL OF 2MSS-PV28A AND 29A
2CRS-1A LSK-3-2	X								HIGH PRESSURE TURBINE EXHAUST COLD REHEATER STEAM TO 2MSS-E1A SHELL PRESSURE.
2CRS-2A LSK-3-2	X								H.P. TURB. EXH. COLD REHEATER STEAM TO 2MSS-E1A SHELL PRESSURE.
2CRS-3A LSK-3-2	X								H.P. TURBINE EXH. COLD REHEATER STEAM TO 2MSS-E1A SHELL PRESSURE.
2CRS-16A LSK-3-2	X								H.P. TURB. EXH. COLD REHEATER STEAM TO 2MSS-E1A SHELL PRESSURE
2CRS-19A LSK-3-2	X					X			REHEATER A COLD REHEAT PRESSURE

UPS NO: 2VBB-UPS1A
PNL NO: 2VBS-PNLA102
BKR NO: 4

PLANT IMPACT: LOSS OF POWER TO 2CEC-PNL884

LOOP	PMS INDICATION	PMS ALARM	ERF INPUT	CR ANNUNCIATION	LOCAL ANNUNCIATION	CR INDICATION	LOCAL INDICATION	VALVE POSITION	DESCRIPTION/OTHER
2ESS-1A LSK-3-4A	X					X			6TH POINT HTR 2FWS-E6A EXTR ST. PRESS.
2ESS-4A LSK-3-4A	X								TURB. 4TH STG EXTR STEAM PRESSURE
2ESS-7A LSK-3-4G	X					X			1ST POINT HTR 2CNM-E1A SHELL PRESSURE
2ESS-12A LSK-3-4G	X						X		2ND POINT HTR 2CNM-E2A SHELL PRESSURE
2ESS-17A LSK-3-4F	X						X		3RD POINT HTR 2CNM-E3A EXTR SHELL PRESSURE
2ESS-25A LSK-3-4D	X						X		4TH POINT HTR. 2CNM-E4A EXTR. STEAM PRESSURE
2ESS-31A LSK-3-4B	X						X		5TH POINT HTR 2CNM-E5A EXTR STEAM PRESSURE
2HRS-7A LSK-3-3	X								2TMS-T2A LP TURBINE INL PRESS.FR 2MSS-E1A
2HRS-8A LSK-3-3	X								2TMS-T2A HRS FROM 2MSS-E1B
2HRS-9A LSK-3-3	X								2TMS-T2A HRS FROM 2MSS-E1B
2MSS-23A LSK-3-1A	X			X					E1A REHEATING STEAM FLOW

UPS NO: 2VBB-UPS1A
PNL NO: 2VBS-PNLA102
BKR NO: 4

PLANT IMPACT: LOSS OF POWER TO 2CEC-PNL884

LOOP	PMS INDICATION	PMS ALARM	ERF INPUT	CR ANNUNCIATION	LOCAL ANNUNCIATION	CR INDICATION	LOCAL INDICATION	VALVE POSITION	DESCRIPTION/OTHER
2MSS-52A LSK-3-1A	X			X					E1A STEAM SUPPLY PRESS
2DSM-75A LSK-32-7A	X						X	FC	MOISTURE SEP. DRAIN RECEIVER TK4A WTR LEVEL/ LOSS OF CONTROL OF LUX75A, LVY75A, LVZ75A
2DSM-78A LSK-32-7B	X	X		X			X	FO	MOIST SEP. DRAIN RECEIVER TK4A WTR LEVEL/LOSS OF CONTROL OF LV78A
2DSR-65A LSK-32-6A	X						X	FC	NORM WTR LVL DR CONTROL/LOSS OF CONTROL OF LVX65A,LVY65A, AND LVZ65A
2CMS-72A,C LSK-33-2A	X					X			CONTAINMENT DEW PT.
2CNS-130 LSK-4-3A	X								CONDENSATE DRAW OFF FLOW PRESSURE
2CNS-131 LSK-4-3A	X								NORMAL CONDENSATE MAKEUP FLOW

UPS NO: 2VBB-UPS1A
PNL NO: 2VBS-PNLA102
BKR NO: 5
CIRCUIT NO: 2CECA85

DRAWING REFERENCES
EE-11J
0007.159-451-328
EE-3AJ

FEED TO DEVICE	DEVICE LOCATION		PLANT IMPACT
	BLDG	ELEV	
2CEC*PNL730	CRR	288	
2CEC-PNL885	CRR	288	LOSS OF POWER TO 2CEC-PWRS885 FOR FOXBORO PANEL 2CEC-PNL885 ALTERNATE POWER SUPPLY 2CEC-PWRS904 IS FED FROM 2VBB-UPS1B PANEL 2VBS-PNLB102 BKR #4 SEE ATTACHED FOR PLANT IMPACT NOTE: +/- 15VDC STILL SUPPLIED FROM 2CEC-PNL884 SEE 2VBS-PNLA102 BKR #4

UPS NO: 2VBB-UPS1B
PNL NO: 2VBS-PNLB102
BKR NO: 4
UPS NO: 2VBB-UPS1A
PNL NO: 2VBS-PNLA102
BKR NO: 5

PLANT IMPACT: LOSS OF POWER TO 2CEC-PNL885

LOOP	PMS INDICATION	PMS ALARM	ERF INPUT	CR ANNUNCIATION	LOCAL ANNUNCIATION	CR INDICATION	LOCAL INDICATION	VALVE POSITION	DESCRIPTION/OTHER
2CNS-8B LSK-4-3A	X	X	X	X		X			CNDS STOR TK1B LEVEL
2CNS-114 LSK-4-3B	X	X		X		X			CNDS XFR HDR FLOW HIGH/INHIBIT AUTO START OF 2CNS-P1A OR 2CNS-P1B
2CNS-102 LSK-4-3E	X					X			COND HOT WELL LEVEL
2ESS-25B LSK-3-4D	X						X		4TH PT HTR EXTR ST PRESS
2ESS-17B LSK-3-4F	X						X		3RD PT HTR EXTR ST PRESS
2ESS-12B LSK-3-4G	X						X		2ND PT HTR SHELL PRESS
2MSS-52B LSK-3-1A	X					X			E1B STEAM SUPPLY PRESS
2MSS-24B LSK-3-1A	X					X			E1B REHEATING STEAM TEMP
2MSS-23B LSK-3-1A	X			X					E1B REHEATING STEAM FLOW
2ESS-4B LSK-3-4A	X								TURB 4TH STG EXTR ST PRESS
2ESS-31B LSK-3-4B	X						X		5TH PT HTR 2CNM-ESB EXTR ST. PRESS
2MSS-22B LSK-3-1A	X					X		FC	MS/R REGULATED STEAM PRESS/LOSS OF CONTROL OF REHEAT CONTROL VALVES PV28B&PV29B

UPS NO: 2VBB-UPS1B
PNL NO: 2VBS-PNLB102
BKR NO: 4
UPS NO: 2VBB-UPS1A
PNL NO: 2VBS-PNLA102
BKR NO: 5

PLANT IMPACT: LOSS OF POWER TO 2CEC-PNL885

LOOP	PMS INDICATION	PMS ALARM	ERF INPUT	CR ANNUNCIATION	LOCAL ANNUNCIATION	CR INDICATION	LOCAL INDICATION	VALVE POSITION	DESCRIPTION/OTHER
2HRS-7B LSK-3-3	X								2TMS-T2B LP TURBINE INL PRESS FR 2MSS-E1A
2HRS-8B LSK-3-3	X								2TMS-T2B HRS FROM 2MSS-E1A
2HRS-9B LSK-3-3	X								2TMS-T2B HRS FROM 2MSS-E1B
2ASS-6B LSK-3-9D	X	X		X		X			AUX. STM FLOW TO AIR REMOVAL
2DSR-68B LSK-32-6B	X	X		X			X	FO	DRAIN RECEIVER HIGH LEVEL/LOSS OF CONTROL OF LV68B
2DSR-65B LSK-32-6A	X						X	FC	NORM WTR LVL DR CONTROL/LOSS OF CNTRL OF LVX65B, LVY65B AND LVZ65B
2DSM-75B LSK-32-7A	X						X		MOISTURE SEP. DRAIN RECEIVER TK4B WTR LEVEL
2DSM-78B LSK-32-7B	X	X		X			X	FO	MOIST SEP DR RCVR TK4B WTR LEVEL/LOSS OF CONTROL OF LV78B
2DSR-78B LSK-32-6E	X	X		X				FAI	SCAVENGING STEAM LINE B PRESSURE/LOSS OF CONTROL OF MOV 86B
2ESS-7B LSK-3-4G	X					X			1ST PT HTR 2CNM-E1B SHELL PRESS
2ESS-1B LSK-3-4A	X					X			6TH PT HTR 2FWS-E6B EXTR ST. PRESS

UPS NO: 2VBB-UPS1B
PNL NO: 2VBS-PNLB102
BKR NO: 4
UPS NO: 2VBB-UPS1A
PNL NO: 2VBS-PNLA102
BKR NO: 5

PLANT IMPACT: LOSS OF POWER TO 2CEC-PNL885

LOOP	PMS INDICATION	PMS ALARM	ERF INPUT	CR ANNUNCIATION	LOCAL ANNUNCIATION	CR INDICATION	LOCAL INDICATION	VALVE POSITION	DESCRIPTION/OTHER
2CRS-103 LSK-3-1M, 3-2	X					X		FC	REHEATER 1B SHELL PRESSURE/LOSS OF CONTROL OF PV28A, PV28B, PV29A & PV29B
2CRS-1B LSK-3-2	X								HIGH PRESSURE TURBINE EXH. COLD REHEATER STEAM TO 2MSS-E1B SHELL PRESSURE.
2CRS-2B LSK-3-2	X								HP TURB EXH COLD REHEATER STEAM TO 2MSS-E1B SHELL PRESSURE.
2CRS-3B LSK-3-2	X								HP TURB EXH COLD REHEATER STEAM TO 2MSS-E1B SHELL PRESSURE.
2CRS-16B LSK-3-2	X								HP TURB EXH. COLD REHEATER STEAM TO 2MSS-E1B SHELL PRESS.
2CRS-19B LSK-3-2	X					X			REHEATER B COLD REHEAT PRESS.
2CMS-72B,D LSK-33-2A	X					X			CONTAINMENT DEW POINT

UPS NO: 2VBB-UPS1A
PNL NO: 2VBS-PNLA102
BKR NO: 6
CIRCUIT NO: N/A

DRAWING REFERENCES

EE-11J
0007.159-451-331
EE-3AK

FEED TO DEVICE	DEVICE LOCATION		PLANT IMPACT
	BLDG	ELEV	
2CEC*PNL730 JB201-1 JB201-2	CRR	288	
2CEC-PNL886	CRR	288	LOSS OF POWER TO 2CEC-PWRS886 FOR FOXBORO PANEL 2CEC-PNL886. SEE ATTACHED FOR PLANT IMPACT. NOTE: +/- 15VDC STILL SUPPLIED FROM 2CEC-PNL887 SEE 2VBS-PNLA102 BKR #7 AND 2VBS-PNLB102 BKR #6

UPS NO: 2VBB-UPS1A
PNL NO: 2VBS-PNLA102
BKR NO: 6

PLANT IMPACT: LOSS OF POWER TO 2CEC-PNL886

LOOP	PMS INDICATION	PMS ALARM	ERF INPUT	CR ANNUNCIATION	LOCAL ANNUNCIATION	CR INDICATION	LOCAL INDICATION	VALVE POSITION	DESCRIPTION/OTHER
2AAS-113 LSK-12-9B	X	X		X		X			BRTHG AIR HDR PRESS
2ARC-20B LSK-5-1B	X	X		X					AIR REMOVAL PUMP-1B SEAL WTR TEMP HI
2ASS-116 LSK-3-9D	X	X		X		X			CLN STM REBLR STM PRESS
2ASS-122 LSK-3-9D	X	X		X		X			AIR EJECTOR 2A STM PRESS
2ASS-127 LSK-3-9D	X	X		X			X		OFFGAS STM PRESS
2CMS-72E,F LSK-33-2A	X					X			CONTAINMENT DEW POINT
2CMS-168 LSK-33-2D	X					X			SUPPR CHAMBER PRESS NORM
2CND-267 LSK-4-7D	X	X		X	X		X		LOW CONDUCTIVITY WASTE TK13 LEVEL
2CND-281 LSK-4-7C	X						X		NEUTRALIZING TK12 LEVEL
2CPS-102 LSK-22-23A	X	X		X		X			ENABLES 2CPS-FN1 (DISCH TO STOP PERMISSIVES DRYWELL)
2CPS-103 LSK-22-23A	X	X		X		X			ENABLES 2CPS-FN1 (DISCH TO STOP PERMISSIVES SUPPR PL)
2CPS-125 LSK-22-23A						X		FC	PRIMARY CONTAINMENT PRESS N2 INLET FLOW/LOSS OF CONTROL OF FV125
2CPS-126 LSK-22-23A	X	X		X		X			PRIMARY CONTAINMENT INLET NITROGEN FLOW

UPS NO: 2VBB-UPS1A
PNL NO: 2VBS-PNLA102
BKR NO: 6

PLANT IMPACT: LOSS OF POWER TO 2CEC-PNL886

LOOP	PMS INDICATION	PMS ALARM	ERF INPUT	CR ANNUNCIATION	LOCAL ANNUNCIATION	CR INDICATION	LOCAL INDICATION	VALVE POSITION	DESCRIPTION/OTHER
2CPS-127 LSK-22-23A	X	X		X		X			PRIMARY CONTAINMENT INLET NITROGEN PRESS
2GSN-138 LSK-14-1F		X		X		X			PRIMARY CONTAINMENT N2 PURGE TEMP LOW
2HRS-7C LSK-3-3	X								2TMS-T2C LP TURB INL FR 2MSS-E1A
2HRS-8C LSK-3-3	X								2TMS-T2C HRS FROM 2MSS-E1A
2HRS-9C LSK-3-3	X								2TMS-T2C HRS FROM 2MSS-E1B
2IAS-101 LSK-12-1E	X	X		X		X			INSTR AIR HDR PRESS
2IAS-178 LSK-12-1C,1F	X	X		X		X			ADS CPRSR RCVR TANK *TK4 PRESSURE HIGH
2IAS-183 LSK-12-1C	X	X		X		X			ADS CPRSR RCVR TANK *TK5 PRESSURE HIGH
2MWS-114 LSK-9-15, 13-1B	X	X		X	X	X			DMNRLZD WTR TK 1A OR 1B LVL
2MWS-116 LSK-9-15	X	X		X		X	X		DMNRLZD WTR PMP DISCH FL
2SSR-124 LSK-21-2B	X	X		X	X	X			CRD PUMP DISCH CNDT SAMPLE
2SSR-125 LSK-21-2B	X	X		X	X	X			CRD PUMP DISCH 02 SAMPLE
2SST-106 LSK-21-1A	X	X		X	X	X			COND DMNRLZR INL CNDT SAMPLE
2SST-113 LSK-21-1B	X	X		X	X	X			COND DEMIN OUT O2 SAMPLE

UPS NO: 2VBB-UPS1A
PNL NO: 2VBS-PNLA102
BKR NO: 6

PLANT IMPACT: LOSS OF POWER TO 2CEC-PNL886

LOOP	PMS INDICATION	PMS ALARM	ERF INPUT	CR ANNUNCIATION	LOCAL ANNUNCIATION	CR INDICATION	LOCAL INDICATION	VALVE POSITION	DESCRIPTION/OTHER
2SST-114 LSK-21-1B	X	X		X	X	X			COND DMNRLZR OUT CNDT SAMPLE
2SST-131 LSK-21-1B	X	X		X	X	X			COM 6TH PT HTR OUT CNDT SAMPLE
2SST-132 LSK-21-1C	X	X		X	X	X			COM 6TH PT HTR OUT O2 SAMPLE
2SST-133 LSK-21-1C	X	X		X	X	X			COM 6TH PT HTR OUT PH SAMPLE
2TML-132 LSK-16-2.1	X					X		FO	OIL CLRS OUTLET OIL TEMP/LOSS OF CONTROL OF 2CCS-TV43A AND 2CCS-TV43B
2ESS-1C LSK-3-4A	X						X		6TH PT HTR 2FWS-E6C EXTR STM PRESSURE
2ESS-7C LSK-3-4G	X						X		1ST PT HTR 2CNM-E1C SHELL PRESSURE
2ESS-12C LSK-3-4G	X						X		2ND PT HTR 2CNM-E2C SHELL PRESSURE
2ESS-17C LSK-3-4F	X						X		3RD PT HTR 2CNM-E3C EXTR STM PRESSURE
2ESS-25C LSK-3-4D	X						X		4TH PT HTR 2CNM-E4C EXTR STM PRESSURE
2ESS-31C LSK-3-4B	X						X		5TH PT HTR 2CNM-E5C EXTR STEAM PRESSURE

UPS NO: 2VBB-UPS1A
PNL NO: 2VBS-PNLA102
BKR NO: 7
CIRCUIT NO: 2CECA87

DRAWING REFERENCES
EE-11J
EE-3AK
0007.159-451-512
0007.159-451-334

FEED TO DEVICE	DEVICE LOCATION		PLANT IMPACT
	BLDG	ELEV	
2CEC*PNL730	CRR	288	
2CEC-PNL887	CRR	288	LOSS OF POWER TO 2CEC-PWRS887 FOR FOXBORO PANEL 2CEC-PNL887. ALTERNATE POWER SUPPLY 2CEC-PWRS905 FOR 2CEC-PNL887 IS FED FROM 2VBB-UPS1B PANEL 2VBS-PNLB102 BRK #6. FOR PLANT IMPACT SEE ATTACHED. NOTE: +/- 15 VDC STILL SUPPLIED FROM 2CEC-PNL886 SEE 2VBS-PNLA102 BKR#6

UPS NO: 2VBB-UPS1A
PNL NO: 2VBS-PNLA102
BKR NO: 7
UPS NO: 2VBB-UPS1B
PNL NO: 2VBS-PNLB102
BKR NO: 6

PLANT IMPACT: LOSS OF POWER TO 2CEC-PNL887

LOOP	PMS INDICATION	PMS ALARM	ERF INPUT	CR ANNUNCIATION	LOCAL ANNUNCIATION	CR INDICATION	LOCAL INDICATION	VALVE POSITION	DESCRIPTION/OTHER
2ARC-20A LSK-5-1B	X	X		X					AIR REM PP1A SEAL W TEMP H
2CNM-137						X			2FWS-P1A,B,C STARTUP BYPASS VALVE POSITION INDICATION
2CWS-47A LSK-2-1.1D	X					X			CLG TWR RETURN FLOW A
2DFR-106 LSK-23-6C	X	X		X		X			DRYWELL FLOOR DRAIN LEAKAGE TANK LEVEL
2DFR-137 LSK-23-6C	X	X		X		X			DW FL DR PUMPS P1A & P1B FLOW
2FWS-64A/B LSK-6-1.1H						X			FEEDWATER INLET TEMP TO REACTOR LINE A/B
2GMC-110 LSK-16-6C, 8D	X					X			GENERATOR INLET CONDUCTIVITY
2GMC-111 LSK-16-6C, 8D	X					X			GENERATOR OUTLET CONDUCTIVITY
2GMC-134 LSK-16-8C	X					X		FO	ALT COOLER AIR OUTLET TEMP, LOSE CONTROL OF TURBINE BLDG. CLOSED LOOP COOLING WATER VALVE 2CCS-TV32A AND B

UPS NO: 2VBB-UPS1A
PNL NO: 2VBS-PNLA102
BKR NO: 7
UPS NO: 2VBB-UPS1B
PNL NO: 2VBS-PNLB102
BKR NO: 6

PLANT IMPACT: LOSS OF POWER TO 2CEC-PNL887

LOOP	PMS INDICATION	PMS ALARM	ERF INPUT	CR ANNUNCIATION	LOCAL ANNUNCIATION	CR INDICATION	LOCAL INDICATION	VALVE POSITION	DESCRIPTION/OTHER
2GMH-105 LSK-16-7C	X					X			GENERATOR GAS PURITY
2GMH-117 LSK-16-7A	X					X			GENERATOR GAS PRESS
2GMH-156 LSK-16-7A						X		FO	H2 COLD GAS TEMP/TBCLC FLOW MODULATING VALVE 2CCS-TV109
2GML-103 LSK-16-10	X	X		X					GEN LEADS CLR RETURN AIR TEMP

UPS NO: 2VBB-UPS1A
PNL NO: 2VBS-PNLA102
BKR NO: 7
UPS NO: 2VBB-UPS1B
PNL NO: 2VBS-PNLB102
BKR NO: 6

PLANT IMPACT: LOSS OF POWER TO 2CEC-PNL887

LOOP	PMS INDICATION	PMS ALARM	ERF INPUT	CR ANNUNCIATION	LOCAL ANNUNCIATION	CR INDICATION	LOCAL INDICATION	VALVE POSITION	DESCRIPTION/OTHER
2GMO-103 LSK-16-6	X					X			HYDRAUL SEAL OIL BRG 9 PRESS
2GMO-104 LSK-16-6	X					X			HYDRAUL SEAL BRG 10 PRESS
2LOS-126 LSK-16-3	X	X		X	X		X		DIRTY OIL STOR TK2 LEVEL/STOP LUBE OIL XFER PUMP P2
2LOS-127 LSK-16-3	X	X		X	X		X		CLEAN OIL STOR TK1 LEVEL/STOP LUBE OIL XFER PUMP P2
2TME-15A,B LSK-16-1.1A	X					X			2TME-E1A & E1B REBLR DISCH STEAM PRESS
2TME-103 LSK-16-1.1B	X					X		FAI	E1A & E1B DISCH HDR PRESS/LOSS OF CONTROL OF 2TME-MOV110, 2TME-SOV121
2TME-107 LSK-16-1.1B	X					X		FAI	E1A & B STEM SEAL RED PRESS/LOSS OF CONTROL OF 2TME-MOV110, 2TME-SOV121
2TME-108 LSK-16-1.1D	X					X			STEAM SEAL EXHAUST VACUUM
2TMI-127 LSK-16-9	X					X			EXH HOOD A TURBINE END TEMP
2TMI-128 LSK-16-9	X					X			EXH HOOD B TURBINE TEMP
2TMI-129 LSK-16-9	X					X			EXH HOOD C TURBINE TEMP

UPS NO: 2VBB-UPS1A
PNL NO: 2VBS-PNLA102
BKR NO: 7
UPS NO: 2VBB-UPS1B
PNL NO: 2VBS-PNLB102
BKR NO: 6

PLANT IMPACT: LOSS OF POWER TO 2CEC-PNL887

LOOP	PMS INDICATION	PMS ALARM	ERF INPUT	CR ANNUNCIATION	LOCAL ANNUNCIATION	CR INDICATION	LOCAL INDICATION	VALVE POSITION	DESCRIPTION/OTHER
2TML-109 LSK-16-2.3	X					X			TURB BRG OIL PRESS
2TML-112 LSK-16-2.1	X					X			MN SHAFT OIL PUMP DISCH PRESS
2TMS-151 LSK-16-9	X					X			EXH HOOD SPRAY PRESS
2TMB-105 LSK-16-5.2	X					X			EHC HEADER PRESSURE

UPS NO: 2VBB-UPS1A
PNL NO: 2VBS-PNLA102
BKR NO: 8
CIRCUIT NO: 2EGSB07

DRAWING REFERENCES
EE-11J
EE-14C
EE-14B
0001.040-209-078
0001.040-209-022

FEED TO DEVICE	DEVICE LOCATION		PLANT IMPACT
	BLDG	ELEV	
2CEC*IPNL408 52U1 (C-4)	DG	261	
2CES*IPNL412	DG	261	LOSS OF POWER TO RUN TIME METER AND ANNUNCIATOR HORN IN 2CES*PNL412 FOR STANDBY DIESEL GENERATOR LOSS OF POWER TO 2EGS*EG3 LUBE OIL RETURN HEADER TEMPERATURE INDICATOR

UPS NO: 2VBB-UPS1A
PNL NO: 2VBS-PNLA102
BKR NO: 9
CIRCUIT NO: N/A

DRAWING REFERENCES
EE-11J
EE-14C
EE-14B
0001.040-209-078
0001.040-209-022

FEED TO DEVICE	DEVICE LOCATION		PLANT IMPACT
	BLDG	ELEV	
2CEC*IPNL406 52U1 (C-4)	DG	261	
2CES*IPNL407	DG	261	LOSS OF POWER TO RUN TIME METER AND ANNUNCIATOR HORN IN 2CES*PNL407 FOR STANDBY DIESEL GENERATOR LOSS OF POWER TO 2EGS*EG1 LUBE OIL RETURN HEADER TEMPERATURE INDICATOR

UPS NO: 2VBB-UPS1A
PNL NO: 2VBS-PNLA102
BKR NO: 10
CIRCUIT NO: 2SXSN01

DRAWING REFERENCES
944E995 (C88)
EE-11J
EE-35D
0007.511-414-479, 480

FEED TO DEVICE	DEVICE LOCATION		PLANT IMPACT
	BLDG	ELEV	
2CES-PNL518	TB	277	LOSS OF POWER TO GETARS MULTIPLEXERS:
FUSE C88A-F11			C88A-J1011 (2SXS-MUX11-B)
FUSE C88A-F12			C88A-J1012 (2SXS-MUX12-B)
FUSE C88A-F19			C88A-J1019 (2SXS-MUX19-B)
FUSE C88A-F4			C88A-J1004 & C88A-PS4 (2SXS-MUX04-B)

UPS NO: 2VBB-UPS1A
PNL NO: 2VBS-PNLA102
BKR NO: 11
CIRCUIT NO: N/A

DRAWING REFERENCES

EE-11J

FEED TO DEVICE	DEVICE LOCATION		PLANT IMPACT
	BLDG	ELEV	
SPARE			NONE

UPS NO: 2VBB-UPS1A
PNL NO: 2VBS-PNLA102
BKR NO: 12
CIRCUIT NO: N/A

DRAWING REFERENCES

EE-11J

FEED TO DEVICE	DEVICE LOCATION		PLANT IMPACT
	BLDG	ELEV	
SPARE			NONE

UPS NO: 2VBB-UPS1A
PNL NO: 2VBS-PNLA102
BKR NO: 13
CIRCUIT NO: N/A

DRAWING REFERENCES
EE-3TK
EE-11J
LOOP-2RMS-201
LSK-22-IT

FEED TO DEVICE	DEVICE LOCATION		PLANT IMPACT
	BLDG	ELEV	
2RMS-PNL200 GEM COMP. CONT. CONSOLE	TB	306	LOSS OF PWR TO 2RMS-PNL200 LOSS OF COMPUTER GEMS CPU LOSS OF ANNUNCIATOR WINDOW AND COMPUTER PT IN CONTROL ROOM (FOR 2RMS-CAB170 AND 2RMS-CAB180) REACTOR BLDG. VENT RADIATION MONITOR 2RMS-CAB180 INOP TURBINE BLDG. VENT RADIATION MONITOR 2RMS-CAB170 INOP

UPS NO: 2VBB-UPS1A
PNL NO: 2VBS-PNLA102
BKR NO: 14
CIRCUIT NO: 2SSPC14

DRAWING REFERENCES

EE-11J
EE-3TA

FEED TO DEVICE	DEVICE LOCATION		PLANT IMPACT
	BLDG	ELEV	
2SSP-IPNL102 2CES-PNL555, 2RHS*PNL100 & 2SSP-IPNL102	RW	261	LOSS OF POST ACCIDENT SAMPLING SYS SOURCE A, SOURCE B FROM 2VBS-PNLB107 STILL AVAILABLE SEE 2VBS-PNLB107 BKR# 20 FOR PLANT IMPACT

UPS NO: 2VBB-UPS1A
PNL NO: 2VBS-PNLA102
BKR NO: 15
CIRCUIT NO: N/A

DRAWING REFERENCES

EE-11J
EE-11GH

FEED TO DEVICE	DEVICE LOCATION		PLANT IMPACT
	BLDG	ELEV	
2RMS-RCPT12	TB	306	LOSS OF POWER TO RECEPTACLE 12, 2RMS-CP208 ALSO LOSES POWER (SYSTEMS PRINTER TECH SUPPORT CENTER)
2RMS-RCPT13	TB	306	LOSS OF POWER TO RECEPTACLE 13, 2RMS-CP208 ALSO LOSES POWER (SYSTEMS PRINTER TECH SUPPORT CENTER)

UPS NO: 2VBB-UPS1A
PNL NO: 2VBS-PNLA102
BKR NO: 16
CIRCUIT NO: N/A

DRAWING REFERENCES

EE-11J
EE-3TF
EE-11HL

FEED TO DEVICE	DEVICE LOCATION		PLANT IMPACT
	BLDG	ELEV	
2RMS-CAB180	TB	306	REACTOR BUILDING VENT RADIATION MONITOR 2RMS-CAB180 INOP

UPS NO: 2VBB-UPS1A
PNL NO: 2VBS-PNLA102
BKR NO: 17
CIRCUIT NO: N/A

DRAWING REFERENCES

EE-11J

FEED TO DEVICE	DEVICE LOCATION		PLANT IMPACT
	BLDG	ELEV	
2COR-RCPT1	CCR	306	120V RCPT FOR RADIAX CONSOLES. RECEPTACLE IS REQUIRED TO SUPPLY POWER FOR THE RADIAX BASE UNITS AND PLANT ANTENNA COMMUNICATIONS SYSTEM. RECEPTACLE IS MOUNTED UNDER THE EMERGENCY COMMUNICATIONS TABLE. RECEPTACLE 2COR-RCPT2 IS POWERED FROM 2VBS-PNLB102.

UPS NO: 2VBB-UPS1A
PNL NO: 2VBS-PNLA102
BKR NO: 18
CIRCUIT NO: N/A

DRAWING REFERENCES

EE-11J

FEED TO DEVICE	DEVICE LOCATION		PLANT IMPACT
	BLDG	ELEV	
SPARE			NONE

UPS NO: 2VBB-UPS1A
PNL NO: 2VBS-PNLA102
BKR NO: 19
CIRCUIT NO: N/A

DRAWING REFERENCES

EE-11J

FEED TO DEVICE	DEVICE LOCATION		PLANT IMPACT
	BLDG	ELEV	
SPARE			NONE

UPS NO: 2VBB-UPS1A
PNL NO: 2VBS-PNLA102
BKR NO: 20
CIRCUIT NO: N/A

DRAWING REFERENCES
EE-3TF
EE-11J
LSK-22-IT

FEED TO DEVICE	DEVICE LOCATION		PLANT IMPACT
	BLDG	ELEV	
2RMS-CAB180	TB	306	LOSS OF PWR TO RAD MONITORING PNL 2RMS-CAB180
4TB1-1, -2			REACTOR BUILDING VENT RADIATION MONITOR 2RMS-CAB180 INOP

UPS NO: 2VBB-UPS1A
PNL NO: 2VBS-PNLA102
BKR NO: 21
CIRCUIT NO: N/A

DRAWING REFERENCES

EE-11J

FEED TO DEVICE	DEVICE LOCATION		PLANT IMPACT
	BLDG	ELEV	
SPARE			NONE

UPS NO: 2VBB-UPS1A
PNL NO: 2VBS-PNLA102
BKR NO: 22
CIRCUIT NO: N/A

DRAWING REFERENCES

EE-3TF
EE-11J
LSK-22-IT

FEED TO DEVICE	DEVICE LOCATION		PLANT IMPACT
	BLDG	ELEV	
2RMS-CAB180	TB	306	LOSS OF PWR TO RAD MONITORING PNL 2RMS-CAB180
4TB1-1, -2			REACTOR BUILDING VENT RADIATION MONITOR 2RMS-CAB180 INOP

UPS NO: 2VBB-UPS1A
PNL NO: 2VBS-PNLA102
BKR NO: 23
CIRCUIT NO: N/A

DRAWING REFERENCES

EE-11J
EE-11GH

FEED TO DEVICE	DEVICE LOCATION		PLANT IMPACT
	BLDG	ELEV	
2VBS-ISLXA107	RCR	279	
2VBS-PNLA107	RCR	279	POWER DISTRIBUTION PANEL. SEE 2VBS-PNLA107 LOAD LIST.

UPS NO: 2VBB-UPS1A
PNL NO: 2VBS-PNLA102
BKR NO: 24
CIRCUIT NO: N/A

DRAWING REFERENCES

EE-11J

FEED TO DEVICE	DEVICE LOCATION		PLANT IMPACT
	BLDG	ELEV	
SPARE			NONE

UPS NO: 2VBB-UPS1A
PNL NO: 2VBS-PNLA102
BKR NO: 23
DIST PNL NO: 2VBS-PNLA107
BKR NO: 1
CIRCUIT NO: 2LWSNNK581

DRAWING REFERENCES

EE-11GH
EE-3NN

FEED TO DEVICE	DEVICE LOCATION		PLANT IMPACT
	BLDG	ELEV	
2LWS-PNL380 (PWR SUPPLY FOR CENTRAL PROCESSOR-B CAB)	RCR	279	LOSS OF ON-LINE OR BACK-UP COMPUTER FUNCTIONS. IF "B" ON LINE: ALL LWS PROCESSES & SUBSYSTEMS ARE DISABLED, - LWS - GEN TEMP MON - EMERGENCY RESPONSE FACILITY FUNCTIONS - SPDS IF "B" IS BACKUP: LWS REDUNDANCY FEATURE IS DISABLED.

UPS NO: 2VBB-UPS1A
PNL NO: 2VBS-PNLA102
BKR NO: 23
DIST PNL NO: 2VBS-PNLA107
BKR NO: 2
CIRCUIT NO: 2LWSNNK582

DRAWING REFERENCES

EE-11GH
EE-3NN

FEED TO DEVICE	DEVICE LOCATION		PLANT IMPACT
	BLDG	ELEV	
2LWS-PNL381 (PWR SUPPLY FOR CENTRAL PROCESSOR-A CAB)	RCR	279	LOSS OF ON-LINE OR BACK-UP COMPUTER FUNCTIONS. IF "A" ON LINE: ALL LWS PROCESSES & SUBSYSTEMS ARE DISABLED, - LWS - GEN TEMP MON - EMERGENCY RESPONSE FACILITY FUNCTIONS - SPDS IF "A" IS BACKUP: 2LWS REDUNDANCY FEATURE IS DISABLED.

UPS NO: 2VBB-UPS1A
PNL NO: 2VBS-PNLA102
BKR NO: 23
DIST PNL NO: 2VBS-PNLA107
BKR NO: 3
CIRCUIT NO: 2LWSNNK583

DRAWING REFERENCES

EE-11GH
EE-3NN

FEED TO DEVICE	DEVICE LOCATION		PLANT IMPACT
	BLDG	ELEV	
2LWS-PNL383 (PWS; CPU FAILOVER A CABINET)	RCR	279	LOSS OF: - EOF LINK - CONTROL ROOM SPDS DISP (1) - TSC DISPLAYS (2) - LWS ALARM SCREEN - UTILITY TYPERS - FAIL OVER FEATURE ADVERSELY AFFECTED

UPS NO: 2VBB-UPS1A
PNL NO: 2VBS-PNLA102
BKR NO: 23
DIST PNL NO: 2VBS-PNLA107
BKR NO: 4
CIRCUIT NO: 2LWSNNK584

DRAWING REFERENCES

EE-11GH
EE-3NN

FEED TO DEVICE	DEVICE LOCATION		PLANT IMPACT
	BLDG	ELEV	
2LWS-PNL382 (PWS, CPU FAILOVER-B CABINET	RCR	279	LOSS OF: - LWS OPERATOR STATION - CONTROL ROOM SPDS (1) - TSC DISPLAY (1) - ENGINEERS STATION (LWS) - LWS ALARM TYPER - TSC TYPERS (2) - ENGINEERS PERIPHERALS - FAIL OVER ADVERSELY AFFECTED

UPS NO: 2VBB-UPS1A
PNL NO: 2VBS-PNLA102
BKR NO: 23
DIST PNL NO: 2VBS-PNLA107
BKR NO: 5
CIRCUIT NO: 2LWSNNK585

DRAWING REFERENCES

EE-11GH
EE-3NN

FEED TO DEVICE	DEVICE LOCATION		PLANT IMPACT
	BLDG	ELEV	
2LWS-PNL385 (EE-3NN) (PWS, CPU CORE STATOR-1 CAB)	RCR	279	LOSS OF ON-LINE OR REDUNDANT STORAGE CAPABILITY

UPS NO: 2VBB-UPS1A
PNL NO: 2VBS-PNLA102
BKR NO: 23
DIST PNL NO: 2VBS-PNLA107
BKR NO: 6
CIRCUIT NO: 2LWSNNK586

DRAWING REFERENCES

EE-11GH
EE-3NN

FEED TO DEVICE	DEVICE LOCATION		PLANT IMPACT
	BLDG	ELEV	
2LWS-PNL384 (PWS, CPU CORE STATOR-2 CAB)	RCR	279	LOSS OF ON-LINE OR REDUNDANT STORAGE CAPABILITY

UPS NO: 2VBB-UPS1A
PNL NO: 2VBS-PNLA102
BKR NO: 23
DIST PNL NO: 2VBS-PNLA107
BKR NO: 7
CIRCUIT NO: 2LWSNNK

DRAWING REFERENCES

EE-11GH

FEED TO DEVICE	DEVICE LOCATION		PLANT IMPACT
	BLDG	ELEV	
2LWS-RCPT1 POWER SUPPLY FOR 2LWS-PNL386 LWS COMPUTER (RADWASTE) DISK DRIVE	RCR	279	LOSS OF RADWASTE MAIN MEMORY DISK DRIVE DKB01

UPS NO: 2VBB-UPS1A
PNL NO: 2VBS-PNLA102
BKR NO: 23
DIST PNL NO: 2VBS-PNLA107
BKR NO: 8
CIRCUIT NO: 2LWSNNK588

DRAWING REFERENCES

EE-11GH

FEED TO DEVICE	DEVICE LOCATION		PLANT IMPACT
	BLDG	ELEV	
2LWS-PNL387 2LWS-RCPT2 POWER SUPPLY FOR 2LWS-PNL387 LWS COMPUTER (RADWASTE) MAIN MEMORY DISK DRIVE DKD01	RCR	279	LOSS OF LWS MAIN MEMORY DISK DRIVE DKD01

UPS NO: 2VBB-UPS1A
PNL NO: 2VBS-PNLA102
BKR NO: 23
DIST PNL NO: 2VBS-PNLA107
BKR NO: 9
CIRCUIT NO: 2LWSNNK589

DRAWING REFERENCES

EE-11GH
EE-3NN

FEED TO DEVICE	DEVICE LOCATION		PLANT IMPACT
	BLDG	ELEV	
2LWS-PNL401 (PWS, SYS PRGM/ENGR CONSOLE)	RCR	279	LOSS OF LWS PRGRM/ENGR VIDEO KEYBOARD, FLOPPY DISK DRIVE

UPS NO: 2VBB-UPS1A
PNL NO: 2VBS-PNLA102
BKR NO: 23
DIST PNL NO: 2VBS-PNLA107
BKR NO: 10
CIRCUIT NO: 2LWSNNK590

DRAWING REFERENCES

EE-11GH

FEED TO DEVICE	DEVICE LOCATION		PLANT IMPACT
	BLDG	ELEV	
2LWS-CP403, CP404 2LWS-RCPT3 POWER SUPPLY FOR 2LWS-CP403, 404 LWS COMPUTER I/O TYPERS 1 AND 2	RCR	279	LOSS OF SYSTEM I/O TYPERS 1 AND 2

UPS NO: 2VBB-UPS1A
PNL NO: 2VBS-PNLA102
BKR NO: 23
DIST PNL NO: 2VBS-PNLA107
BKR NO: 11
CIRCUIT NO: 2LWSNNK591

DRAWING REFERENCES

EE-11GH
EE-3NN

FEED TO DEVICE	DEVICE LOCATION		PLANT IMPACT
	BLDG	ELEV	
2LWS-PNL388 (PWS, MAGNETIC TAPE CAB)	RCR	279	LOSS OF: - MAG TAPE - EOF LINK

UPS NO: 2VBB-UPS1A
PNL NO: 2VBS-PNLA102
BKR NO: 23
DIST PNL NO: 2VBS-PNLA107
BKR NO: 12
CIRCUIT NO: 2LWSNNK592

DRAWING REFERENCES

EE-11GH
EE-3NN

FEED TO DEVICE	DEVICE LOCATION		PLANT IMPACT
	BLDG	ELEV	
2LWS-PNL400 (PWS, OPERATORS CONSOLE)	RCR	279	LOSS OF: - LWS VIDEO, KEBOARD & ANNUNCIATORS (LOCAL)

UPS NO: 2VBB-UPS1A
PNL NO: 2VBS-PNLA102
BKR NO: 23
DIST PNL NO: 2VBS-PNLA107
BKR NO: 13
CIRCUIT NO: 2LWSNNK593

DRAWING REFERENCES

EE-11GH

FEED TO DEVICE	DEVICE LOCATION		PLANT IMPACT
	BLDG	ELEV	
2LWS-CP405, CP406 2LWS-RCPT4 POWER SUPPLY FOR 2LWS-CP405, 406 LWS COMPUTER	RCR	279	LOSS OF LWS OPERATOR'S ALARM AND UTILITY TYPER

UPS NO: 2VBB-UPS1A
PNL NO: 2VBS-PNLA102
BKR NO: 23
DIST PNL NO: 2VBS-PNLA107
BKR NO: 14
CIRCUIT NO: 2LWSNNK594

DRAWING REFERENCES

EE-11GH

FEED TO DEVICE	DEVICE LOCATION		PLANT IMPACT
	BLDG	ELEV	
2LWS-CP402 2LWS-RCPT5 POWER SUPPLY FOR 2LWS-CP402 LWS COMPUTER LINE PRINTER	RCR	279	LOSS OF LWS SYSTEM LINE PRINTER

UPS NO: 2VBB-UPS1A
PNL NO: 2VBS-PNLA102
BKR NO: 23
DIST PNL NO: 2VBS-PNLA107
BKR NO: 15
CIRCUIT NO: 2LWSNNK579

DRAWING REFERENCES

EE-11GH
EE-3NC

FEED TO DEVICE	DEVICE LOCATION		PLANT IMPACT
	BLDG	ELEV	
2LWS-PNL373 (PWS, H LVL ANLG/DGTL I/O CAB	RCR	279	LOSS OF LWS HIGH LEVEL INPUT & OUTPUT SIGNAL FUNCTIONS SUPPORTING LWS PROCESSES

UPS NO: 2VBB-UPS1A
PNL NO: 2VBS-PNLA102
BKR NO: 23
DIST PNL NO: 2VBS-PNLA107
BKR NO: 16
CIRCUIT NO: 2LWSNNK595

DRAWING REFERENCES

EE-11GH
EE-3NE

FEED TO DEVICE	DEVICE LOCATION		PLANT IMPACT
	BLDG	ELEV	
2LWS-PNL371 (PWS, LOW LVL ANALOG I/O CABINET)	RCR	279	LOSS OF LWS LOW LEVEL INPUT & OUTPUT SIGNAL MONITORING FUNCTIONS FOR SUPPORTING RADWASTE FUNCTIONS

UPS NO: 2VBB-UPS1A
PNL NO: 2VBS-PNLA102
BKR NO: 23
DIST PNL NO: 2VBS-PNLA107
BKR NO: 17
CIRCUIT NO: 2LWSNNK596

DRAWING REFERENCES

EE-11GH
EE-3NN

FEED TO DEVICE	DEVICE LOCATION		PLANT IMPACT
	BLDG	ELEV	
2LWS-PNL378 (PWS, H LVL ANLG/ DGTL I/O CABINET)	RCR	279	LOSS OF HIGH LEVEL INPUT & OUTPUT SIGNAL MONITORING FUNCTIONS SUPPORTING RADWASTE PROCESSES

UPS NO: 2VBB-UPS1A
PNL NO: 2VBS-PNLA102
BKR NO: 23
DIST PNL NO: 2VBS-PNLA107
BKR NO: 18
CIRCUIT NO: 2LWSNNK597

DRAWING REFERENCES

EE-11GH
EE-3NN

FEED TO DEVICE	DEVICE LOCATION		PLANT IMPACT
	BLDG	ELEV	
2LWS-PNL377 (PWS, H LVL ANLG/ DGTL I/O CABINET)	RCR	279	LOSS OF HIGH LEVEL INPUT & OUTPUT SIGNAL MONITORING FUNCTIONS FOR SUPPORTING RADWASTE FUNCTIONS

UPS NO: 2VBB-UPS1A
PNL NO: 2VBS-PNLA102
BKR NO: 23
DIST PNL NO: 2VBS-PNLA107
BKR NO: 19
CIRCUIT NO: 2LWSNNK598

DRAWING REFERENCES

EE-11GH
EE-3NA

FEED TO DEVICE	DEVICE LOCATION		PLANT IMPACT
	BLDG	ELEV	
2LWS-PNL376 (PWS, H LVL ANLG/ DGTL I/O CABINET)	RCR	279	LOSS OF HIGH LEVEL INPUT & OUTPUT SIGNAL MONITORING FUNCTIONS FOR SUPPORTING RADWASTE FUNCTIONS

UPS NO: 2VBB-UPS1A
PNL NO: 2VBS-PNLA102
BKR NO: 23
DIST PNL NO: 2VBS-PNLA107
BKR NO: 20
CIRCUIT NO: 2LWSNNK599

DRAWING REFERENCES

EE-11GH
EE-3NB

FEED TO DEVICE	DEVICE LOCATION		PLANT IMPACT
	BLDG	ELEV	
2LWS-PNL374 (PWS, H LVL ANLG/ DGTL I/O CABINET)	RCR	279	LOSS OF HIGH LEVEL INPUT & OUTPUT SIGNAL MONITORING FUNCTIONS FOR SUPPORTING RADWASTE FUNCTIONS

UPS NO: 2VBB-UPS1A
PNL NO: 2VBS-PNLA102
BKR NO: 23
DIST PNL NO: 2VBS-PNLA107
BKR NO: 21 THROUGH 42
CIRCUIT NO: N/A

DRAWING REFERENCES

EE-11GH

FEED TO DEVICE	DEVICE LOCATION		PLANT IMPACT
	BLDG	ELEV	
SPARE			NONE

2VBB-UPS1B LOAD LIST

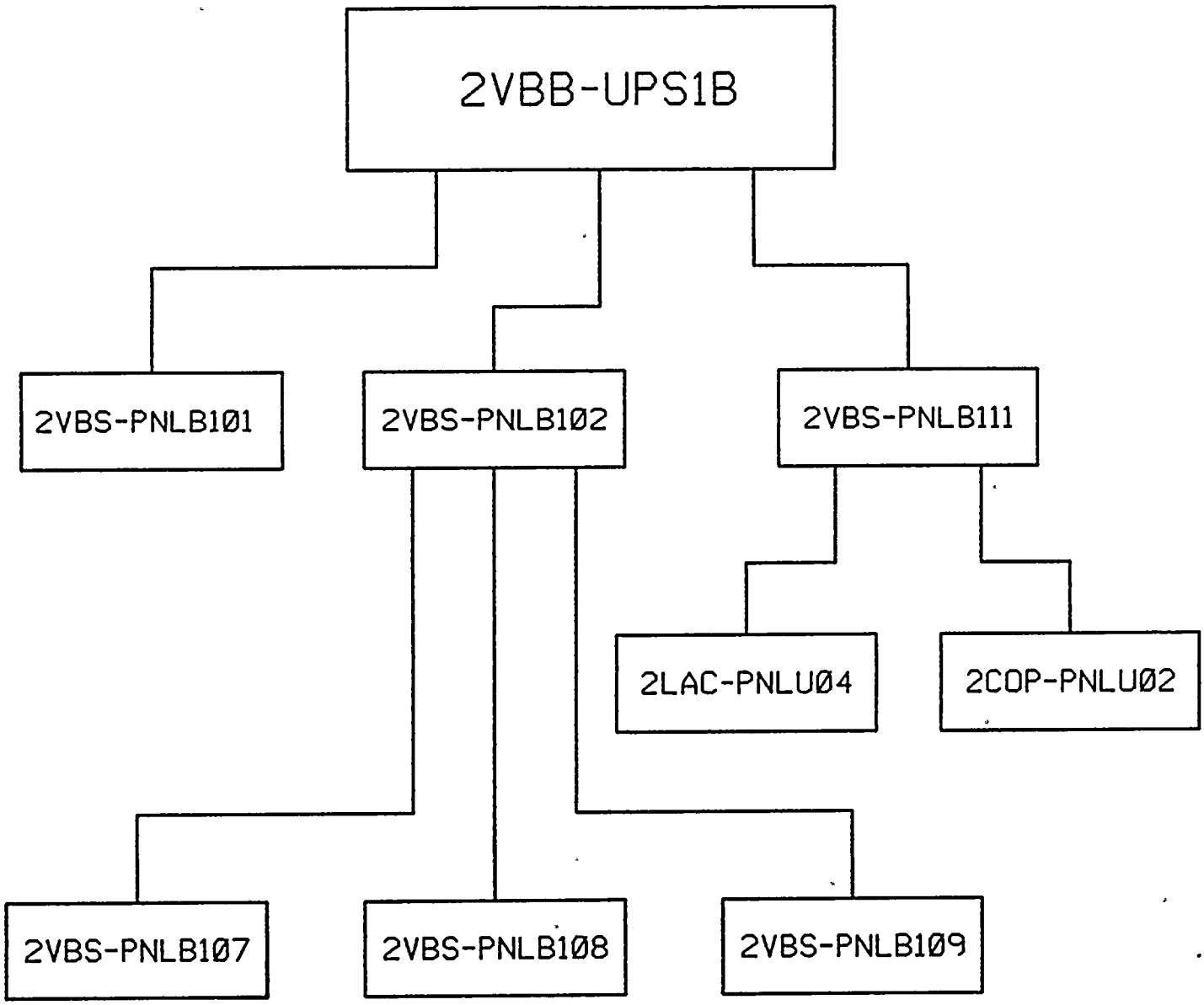

NOTE: THIS DRAWING WAS CREATED USING COMPUTER AIDED DRAFTING DO NOT MAKE MANUAL CHANGES

NUCLEAR NON-SAFETY RELATED

NIAGARA MOHAWK

NINE MILE POINT NUCLEAR STATION - UNIT 2 SCRIBA, N.Y.

LOAD LIST
UNINTERRUPTIBLE POWER SUPPLY
2VBB-UPS1B
SHEET 1 OF 228

MK	DATE	BY	MF	DESCRIPTION	CK	APP
1	9-21-91	JPH JBP		ORIGINAL ISSUE- AS BUILT		

SCALE NONE | DRAWING NO AE-100E

INDEX

PANEL	BKR. NO.	SHEET NO.
2VBS-PNLB101	1	5
	2	6
	3	7
	4	8
	5	9,10
	6	11,12
	7	13
	8	14
	9	15,16,17
	10	18
	11	19
	12	20
	13	21
	14	22
	15	23-31
	16	32
	17	33
	18	34
	19	35
	20	36
	21	37,38
	22	39-42
	23	43
	24	44,45
	25	46
	26	47,48,49
	27	50
	28	51
	29	52
	30	53
	31	54
	32	55
	33	56
	34	57
	35	58
	36	59
	37	60
2VBS-PNLB101	38	61

PANEL	BKR. NO.	SHEET NO.
2VBS-PNLB101	39	62,63
2VBS-PNLB101	40	64
2VBS-PNLB102	1	65
	2	66
	3	67,68,69
	4	70
	5	71
	6	72
	7	73,74,75
	8	76
	9	77
	10	78
	11	79
	12	80
	13	81
	14	82
	15	83
	16	84
	17	85
	18	86
	19	87
	20	88
	21	89
	22	90
	23	91
2VBS-PNLB102	24	92
2VBS-PNLB107	1	93
	2	94
	3	95
	4	96
2VBS-PNLB107	5	97

(CONTINUED ON SHEET 3)

2VBB-UPS1B LOAD LIST
DWG. NO. AE-100E
SHEET 2 OF 228

INDEX

PANEL	BKR. NO.	SHEET NO.
2VBS-PNLB107	6	98
	7	99
	8	100
	9	101
	10	102
	11	103
	12	104
	13	105
	14	106
	15	107
	16	108
	17	109
	18	110
	19	111
	20	112,113
	21	115-119
	22	121
	23	122
	24	123
	25	124
	26	125
	27	126
2VBS-PNLB107	28	127
2VBS-PNLB107	NOTES	128
2VBS-PNLB108	1	129
	2	130
	3	131
	4	132
	5	133
	6	134
	7	135
	8	136
	9	137
	10	138
	11	139
	12	140
2VBS-PNLB108	13	141

PANEL	BKR. NO.	SHEET NO.
2VBS-PNL108	14	142
	15	143
	16	144
	17	145
	18	146
	19	147
	20	148
	21	149
	22	150
	23	151
	24	152
	25	153
	26	154
	27	155
2VBS-PNL108	28	156
2VBS-PNL108	NOTES	157
2VBS-PNL109	1	158
	2	159
	3	160
	4	161
	5	162
	6	163
	7	164
	8	165
	9	166
	10	167
	11	168
	12	169
	13	170
	14	171
	15	172
2VBS-PNL109	16	173

(CONTINUED ON SHEET 4)

2VBB-UPS1B LOAD LIST
DWG. NO. AE-100E
SHEET 3 OF 228

INDEX

PANEL	BKR. NO.	SHEET NO.
2VBS-PNL109	17	174
	18	175
	19	176
	20	177
	21	178
	22	179
	23	180
	24	181
	25	182
	26	183
	27	184
	28	185
2VBS-PNL109	NOTES	186
2VBS-PNLB11	1	187
	2	188
	3	189
	4	190
	5	191
	6	192
	7	193
	8	194
	9	195
	10	196
	11	197
	12	198
	13	199
	14	200
	15	201
	16	202
	17	203
	18	204
	19	205
	20	206
	21	207
	22	208
	23	209
2VBS-PNLB11	24	210

PANEL	BKR. NO.	SHEET NO.
2VBS-PNLB11	25	211
	26	212
	27	213
	28	214
	29	215
	30	216
	31	217
	32	218
	33	219
	34	220
	35	221
	36	222
	37	223
	38	224
	39	225
	40	226
	41	227
2VBS-PNLB11	42	228

2VBB-UPS1B LOAD LIST
DWG. NO. AE-100E
SHEET 4 OF 228

UPS NO: 2VBB-UPS1B
PNL NO: 2VBS-PNLB101

BKR NO: 1
CIRCUIT NO: N/A

DRAWING REFERENCES
EE-011Y
EE-002R
0007.370-002-006
0007.370-002-010

FEED TO DEVICE	DEVICE LOCATION		PLANT IMPACT
	BLDG	ELEV	
2CEC-PNL841	CCR	306	LOSS OF TURBINE SUPERVISORY PANEL VIBRATION AND DIFFERENTIAL EXPANSION ALARMS

UPS NO: 2VBB-UPS1B
PNL NO: 2VBS-PNLB101

BKR NO: 2
CIRCUIT NO: N/A

DRAWING REFERENCES
EE-11Y
EE-3ET
0007.520-001-555
0007.520-001-544

FEED TO DEVICE	DEVICE LOCATION		PLANT IMPACT
	BLDG	ELEV	
2TMI-ZR136	CCR	306	LOSS OF POWER TO ECCENTRICITY RECORDER (2TMS-T1 TURBINE ECCENTRICITY) IN PANEL 2CEC*PNL851

UPS NO: 2VBB-UPS1B
PNL NO: 2VBS-PNLB101

BKR NO: 3
CIRCUIT NO: 2TMIN10

DRAWING REFERENCES
EE-11Y
ESK 7CEC14
LSK 16-07
LSK 16-09

FEED TO DEVICE	DEVICE LOCATION		PLANT IMPACT
	BLDG	ELEV	
2GMH-AR130	CCR	306	LOSS OF GENERATOR CORE MONITOR RECORDER (RECORDER IS PLUGGED INTO DR-2TMIN10)
2TMI-TR137	CCR	306	LOSS EXT VLV CHEST UPPER SURFACE TEMP RECORDER
2TMI-NBR134	CCR	306	LOSS OF TURBINE BEARING 1 VIBRATION RECORDER
2TMI-TJR166	CCR	306	LOSS OF TURBINE BEARING 1 METAL TEMPERATURE RECORDER
2TMI-TJR167	CCR	306	LOSS OF TURBINE BEARING 1 DRAIN TEMPERATURE RECORDER
DR-2TMIN10 (RECPT)	CCR	306	LOSS OF INSTRUMENT RECEPTACLE FOR 2GMH-AR130

UPS NO: 2VBB-UPS1B
PNL NO: 2VBS-PNLB101

BKR NO: 4
CIRCUIT NO: 2IHAN06

DRAWING REFERENCES
EE-11Y
ESK-10IHA42, 43
EE-3DN
147D7844, SH. 2

FEED TO DEVICE	DEVICE LOCATION		PLANT IMPACT
	BLDG	ELEV	
2CEC-PNL739 JB104 2IHA-W855 2CEC-PNL630 BREAKER A8CB3-1A A8CB3-2A	CRR	288	LOSS OF CONTROL ROOM ANNUNCIATORS AT 2CEC*PNL601, 602, 603 AND LOSS OF ASSOCIATED COMPUTER ALARM POINTS

UPS NO: 2VBB-UPS1B
PNL NO: 2VBS-PNLB101
DIST PNL NO: 2CEC-PNL634
BKR NO: 5
CIRCUIT NO: 2RCSB20

DRAWING REFERENCES
EE-11Y, EE-3DU,
ESK-10IHA40
147D7838 SH. 2
442X559 (0007.221-001-116 & 105)
761E79ITY SH.4 (0007.223-001-019)

FEED TO DEVICE	DEVICE LOCATION		PLANT IMPACT
	BLDG	ELEV	
2CEC-PNL703	CCR	306	
15A CKT BKR			SEE ATTACHMENT

UPS NO: 2VBB-UPS1B
PNL NO: 2VBS-PNLB101
DIST PNL NO: 2CEC-PNL634
BKR NO: 5

PLANT IMPACT: LOSS OF POWER TO 2CEC-PNL634

0007.221-001-116
0007.221-001-105

LOOP	PMS INDICATION	PMS ALARM	ERF INPUT	CR ANNUNCIATION	LOCAL ANNUNCIATION	CR INDICATION	LOCAL INDICATION	VALVE POSITION	DESCRIPTION/OTHER
15A CKT BKR		X		X	X			FL	2RCS*HYV17B HYDRAULIC POWER UNIT (HPU) (INOP)
15A CKT BKR		X		X	X			FL	2RCS*HYV17B MODICON CONTROLLER FOR HPU AND ASSOCIATED INPUTS (INOP)

UPS NO: 2VBB-UPS1B
PNL NO: 2VBS-PNLB101
DIST PNL NO:
BKR NO: 6
CIRCUIT NO: 2RCSB19

DRAWING REFERENCES
EE-11Y
EE-3DU
147D7828
0007.213-001-019
0007.221-001-108

FEED TO DEVICE	DEVICE LOCATION		PLANT IMPACT
	BLDG	ELEV	
2RCSBNK510 2CEC-PNL703	CCR	306	
JB304-1, JB304-2, B35A-W113			
2CEC-PNL634 RACK 2	CCR	306	LOSS OF PWR TO 2CEC-PNL634 RACK 2 SEE ATTACHED

UPS NO: 2VBB-UPS1B
PNL NO: 2VBS-PNLB101
DIST PNL NO: 2CEC-PNL634
BKR NO: 6

761E791ITY
442X559-003
0007.221-001-108

PLANT IMPACT: LOSS OF POWER TO 2CEC-PNL634

LOOP	PMS INDICATION	PMS ALARM	ERF INPUT	CR ANNUNCIATION	LOCAL ANNUNCIATION	CR INDICATION	LOCAL INDICATION	VALVE POSITION	DESCRIPTION/OTHER
FUSE L2 AND N2 0.25A SLOW BURN		X		X					RCS FLUX ESTIMATOR (INOP) TIMER & COUNTER POWER SUPPLY (24VDC) RCS FLOW CONTROL
RECP. #2 FEEDS POWER SUPPLIES NEST 2,3,4,5,8,9,10									RCS FLUX ESTIMATOR INSTRUMENTATION RCS FLOW CONTROL (INOP)
RECP. #2 FEEDS POWER SUPPLIES NEST 2,3,4,5,8,9,10		X		X		X		FL	RCS FLOW CONTROL LOOP B INSTRUMENTATION 2RCS*HYV17B (INOP)
RECP. #2 FEEDS POWER SUPPLIES NEXT 2,3,4,5,8,9,10		X		X		X		FL	2RCS*HYV17B POSITION & VELOCITY CONTROL INSTRUMENTATION (INOP)
RECP. #2 FEEDS POWER SUPPLIES NEXT 2,3,4,5,8,9,10									RCS PUMP B SUCT. TEMP VS. DOME PRESSURE CAVITATION INTERLOCK (INOP)
FUSE PLATE VALIDINE AMP								FL	2RCS*FYV17B POSITION & VELOCITY AMP (INOP)

UPS NO: 2VBB-UPS1B
PNL NO: 2VBS-PNLB101
DIST PNL NO: 2CEC*PNL602A
BKR NO: 7
CIRCUIT NO: 2RCSN01

DRAWING REFERENCES
EE-11Y
0007.213-001-019
0007.213-001-027
147D7828
0007.213-001-025

FEED TO DEVICE	DEVICE LOCATION		PLANT IMPACT
	BLDG	ELEV	
2CEC-PNL703 BAY E JB301-1,2	CCR	306	
B35A-W102 2CEC*PNL602 2RCS-TR1650 (B35-R650) FLUX ESTIMATOR	CCR	306	LOSE TEMP RECORDER AND FLUX ESTIMATOR (RCS) INOP

UPS NO: 2VBB-UPS1B
PNL NO: 2VBS-PNLB101
DIST PNL NO: 2CEC-PNL614
BKR NO: 8
CIRCUIT NO: 2RCSN02

DRAWING REFERENCES
EE-11Y
0007.213-001-019
147D7828
0007.213-001-022
0007.213-001-025

FEED TO DEVICE	DEVICE LOCATION		PLANT IMPACT
	BLDG	ELEV	
2CEC-PNL703 BAY B JB203-1,2	CCR	306	
B35A-W108 2CEC-PNL614 2RCS-TRSH1601 (B35-R601)	CCR	306	RCS PUMP/MOTOR A & B TEMP INDICATION & ALARMS (INOP)

UPS NO: 2VBB-UPS1B
PNL NO: 2VBS-PNLB101

BKR NO: 9
CIRCUIT NO: 2RCSN04

DRAWING REFERENCES
EE-11Y
EE-3DT
0007.520-001-393
0007.520-001-394
0007.520-001-396
0007.520-001-397
0007.520-001-399
0007.520-001-400
0007.520-001-401
0007.213-001-020
0007.213-001-024
0007.213-001-025
0007.213-001-028
0007.213-001-029
147D7828

FEED TO DEVICE	DEVICE LOCATION		PLANT IMPACT
	BLDG	ELEV	
2CEC-PNL703	CCR	306	
JB201	CCR	306	
B35-W104 2CEC-PNL612	CCR	306	SEE ATTACHMENT

UPS NO: 2VBB-UPS1B
PNL NO: 2VBS-PNLB101
DIST PNL NO: 2CEC-PNL612
BKR NO: 9

PLANT IMPACT: LOSS OF POWER TO 2CEC-PNL612

LOOP	PMS INDICATION	PMS ALARM	ERF INPUT	CR ANNUNCIATION	LOCAL ANNUNCIATION	CR INDICATION	LOCAL INDICATION	VALVE POSITION	DESCRIPTION/OTHER
B35A-F103 B35-K600 (24VDC POWR)						X			(B35-N005A,B,C,D PRESSURE XMTR) RCS PUMP A&B SEAL WATER PRESSURE
(GE DRAWINGS #761E791TY)						X			(B35-N015A&B DIFF PRESS XMTR) RCS PUMP A&B
(GE DRAWINGS #761E791TY)		X		X		X			(B35-N040 PRESSURE XMTR) RX DOME PRESSURE
(GE DRAWINGS #761E791TY)		X		X					RX VESSEL BOTTOM DRAIN LINE TEMP "A"
GE DRAWINGS #761E791TY)						X		FL	(B35-N050A&B PRESSURE XMTR) DRYWELL PRESSURE RCS FCV A&B MOTION INHIBIT LOGIC ACTUATED
(GE DRAWINGS #761E791TY)	X	X		X					RX VESSEL BOTTOM DRAIN LINE TEMP "B"
(GE DRAWINGS #761E791TY)		X		X					RCS PUMP "A" SUCTION TEMP VS. RX DOME TEMP
(GE DRAWINGS #761E791TY)	X	X		X					RX DOME PRESSURE
(GE DRAWINGS #761E791TY)									RCS PUMP A SUCT TEMP VS. DOME PRESSURE RCS THERMAL SHOCK INTERLOCKS INOP

UPS NO: 2VBB-UPS1B
PNL NO: 2VBS-PNLB101
DIST PNL NO: 2CEC-PNL612
BKR NO: 9

PLANT IMPACT: LOSS OF POWER TO 2CEC-PNL612

LOOP	PMS INDICATION	PMS ALARM	ERF INPUT	CR ANNUNCIATION	LOCAL ANNUNCIATION	CR INDICATION	LOCAL INDICATION	VALVE POSITION	DESCRIPTION/OTHER
(GE DRAWINGS #761E791TY)		X		X					RCS PUMP "B" SUCTION TEMP VS. RX DOME TEMP
(GE DRAWINGS #761E791TY)									RCS PUMP B SUCT. TEMP VS. DOME PRESSURE RCS THERMAL SHOCK INTERLOCKS INOP
(GE DRAWINGS #761E791TY)									RCS PUMP A VS. PUMP B SUCT. TEMP RCS THERMAL SHOCK INTERLOCKS INOP
(GE DRAWINGS #761E791TY)									VESSEL BOTTOM DRAIN "A" VS. DOME PRESSURE RCS THERMAL SHOCK INTERLOCKS INOP
(GE DRAWINGS #761E791TY)									VESSEL BOTTOM DRAIN "B" VS. DOME PRESSURE RCS THERMAL SHOCK INTERLOCKS INOP
B35A-F104									RCS THERMAL SHOCK INTERLOCKS (LFMG SET "A" & B TRANSFER LOGIC) INOP
B35A-F1	X								RCS PUMP A & B SUCT. TEMP.

UPS NO: 2VBB-UPS1B
PNL NO: 2VBS-PNLB101

BKR NO: 10
CIRCUIT NO: 2IHAB02

DRAWING REFERENCES
EE-11Y
ESK-10IHA40
D-1034-913
EE-3BA
14707845, SH. 2

FEED TO DEVICE	DEVICE LOCATION		PLANT IMPACT
	BLDG	ELEV	
2CEC-PNL740 JB102 2CEC-PNL858	CCR	288	
BREAKER A13CB2-1A A13CB2-2A			SPARE 30 AMP BREAKER IN 2CEC-PNL858

UPS NO: 2VBB-UPS1B
PNL NO: 2VBS-PNLB101

BKR NO: 11
CIRCUIT NO:2IHAB06

DRAWING REFERENCES
EE-11Y
EE-3DN
ESK-101HA42
0007.521-001-261
147D7844

FEED TO DEVICE	DEVICE LOCATION		PLANT IMPACT
	BLDG	ELEV	
2CEC-PNL739 JB102 2IHA-W853 2CEC-PNL630 BREAKER A1CB1-1A A1CB1-2A	CCR	388	SPARE 30 AMP BREAKER IN 2CEC-PNL630

UPS NO: 2VBB-UPS1B
PNL NO: 2VBS-PNLB101

BKR NO: 12
CIRCUIT NO:2RDSN11

DRAWING REFERENCES
EE-11Y
EE-3DE
147D7826
0007.520-001-353
0007.520-001-350
0007.520-001-339
0007.221-001-012
0007.221-001-017
0007.221-001-038

FEED TO DEVICE	DEVICE LOCATION		PLANT IMPACT
	BLDG	ELEV	
2CEC*PNL701	CCR	306	
JB102-1, J8102-2 C12A-W052	CCR	306	
2CEC*PNL603	CCR	306	1. LOSS OF ALTERNATE POWER SOURCE TO FAN CONTROL CKT FOR FULL CORE DISPLAY. MAIN SOURCE: 2VBB-UPS1A PANEL 2VBS-PNLA101 BKR #37 2. LOSS OF RSCS LOGIC POWER SUPPLY C12A-PS6. LOCK-UP OF ALL RODS AND LOSS OF MIMIC DISPLAY.

UPS NO: 2VBB-UPS1B
PNL NO: 2VBS-PNLB101

BKR NO: 13
CIRCUIT NO:2RHSN06

DRAWING REFERENCES
EE-11Y
EE-3DE
147D7826
0007.520-001-314
0007.241-001-007
0007.520-001-298

FEED TO DEVICE	DEVICE LOCATION		PLANT IMPACT
	BLDG	ELEV	
2CEC*PNL701	CCR	306	
JB107		306	
E12A-W099 2CEC*P601B	CCR	306	
E12-R601	CCR	306	LOSS OF E12-R601 TEMPERATURE RECORDER. LOSS OF THE FOLLOWING INDICATIONS: 1. RHR INLET TO HX E12-B001A 2. RHR INLET TO HX E12-B001B 3. RHR HX E12-B001A OUTLET 4. RHR HX E12-B001B OUTLET 5. E12-B001A RHR SERVICE WATER DISCHARGE 6. E12-B001B RHR SERVICE WATER DISCHARGE 7. RHR DISCHARGE TO RADWASTE

UPS NO: 2VBB-UPS1B
PNL NO: 2VBS-PNLB101

BKR NO: 14
CIRCUIT NO:2MSSN21

DRAWING REFERENCES
EE-11Y
EE-3DS
0007.520-001-410
0007.520-001-407
0007.520-001-409
147D7828

FEED TO DEVICE	DEVICE LOCATION		PLANT IMPACT
	BLDG	ELEV	
2CEC-PNL703 JB103	CCR	306	
B22A-W026 2CEC-PNL614	CCR	306	
B22-R643			LOSS OF REACTOR VESSEL SHELL FLANGE TEMP (RECORDER 2ISC-TR1643) LOSS OF REACTOR VESSEL BOTTOM FEED DRAIN LINE TEMP (RECORDER 2WCS-TR1643) LOSS OF MAIN STEAM LINE "A" TEMP TO TEST JACKS (2MSS-TTY117 & 2MSS-TTZ117) LOSS OF FEEDWATER FLOW LINE "A" & "B" TEMP (2FWS-TT19A & B, 20A & B)

UPS NO: 2VBB-UPS1B
PNL NO: 2VBS-PNLB101

BKR NO: 15
CIRCUIT NO:2FWSN34

DRAWING REFERENCES
EE-11Y
EE-3DU
0007.520-001-401
0007.520-001-400
0007.520-001-357
0007.520-001-355
0007.222-001-005
0007.520-001-348
0007.222-001-004
147D7828

FEED TO DEVICE	DEVICE LOCATION		PLANT IMPACT
	BLDG	ELEV	
2CEC-PNL703 JB306 JB307	CCR	306	
C33A-W023 2CEC-PNL612	CCR	306	SEE ATTACHMENT
C33A-W028 2CEC-PNL603	CCR	306	SEE ATTACHMENT

UPS NO: 2VBB-UPS1B
PNL NO: 2VBS-PNLB101
DIST PNL NO: 2CEC-PNL612
BKR NO: 15

PLANT IMPACT: LOSS OF POWER TO 2CEC-PNL612

LOOP	PMS INDICATION	PMS ALARM	ERF INPUT	CR ANNUNCIATION	LOCAL ANNUNCIATION	CR INDICATION	LOCAL INDICATION	VALVE POSITION	DESCRIPTION/OTHER
C33A-F1 C33-K612 (24VDC PWR)	X					X			(C33-N007 PRESS XMTR) TURBINE STEAM FLOW (INOP)
GE DRAWING 807E160TY	X					X			(C33-N008A PRESS XMTR) RX PRESSURE SIGNAL TO RCS DIFF TEMP CAVITATION INTERLOCK (INOP)
GE DRAWING 807E160TY	X					X			(C33-N008C PRESS XMTR) RX PRESSURE SIGNAL TO RCS DIFF TEMP CAVITATION INTERLOCK (INOP)
GE DRAWING 807E160TY	X					X			(C33-N003D FLOW XMTR) (FEEDWATER CONTROL) MAIN STEAM LINE D (INOP)
GE DRAWING 807E160TY	X					X			(C33-N002A FLOW XMTR) (FEEDWATER CONTROL) FEEDWATER LINE "A" FLOW (INOP)
GE DRAWING 807E160TY	X	X		X		X			(C33-N005 PRESS XMTR) RX PRESS (INOP)
GE DRAWING 807E160TY	X	X		X		X			(C33-N004A LEVEL XMTR) (INOP) RX WATER LEVEL NARROW RANGE "A"

UPS NO: 2VBB-UPS1B
PNL NO: 2VBS-PNLB101
DIST PNL NO: 2CEC-PNL612
BKR NO: 15

PLANT IMPACT: LOSS OF POWER TO 2CEC-PNL612

LOOP	PMS INDICATION	PMS ALARM	ERF INPUT	CR ANNUNCIATION	LOCAL ANNUNCIATION	CR INDICATION	LOCAL INDICATION	VALVE POSITION	DESCRIPTION/OTHER
GE DRAWING 807E160TY									STARTUP VALVES TRANSFER TO MANUAL (HALF TRIP) FEEDWATER PUMP/ TURBINE (HALF TRIP)
GE DRAWING 807E160TY	X	X		X		X			FEEDWATER CONTROL 3 ELEMENT CONTROL (INOP)
GE DRAWING 807E160TY						X		FL	2FWS-LV10A
GE DRAWING 807E160TY						X			AUTO/MANUAL TRANSFER (INOP) 2FWS-LV10B (CONTROL STATUS)
GE DRAWING 807E160TY									FEEDWATER CONTROL SINGLE ELEMENT CONTROL (INOP)
GE DRAWING 807E160TY						X			MASTER CONTROLLER 2FWS-LV10A, B & C (INOP)
GE DRAWING 807E160TY									FEEDWATER CONTROL SETPOINT SETDOWN (INOP)
GE DRAWING 761E791TY SH 9									RX PRESSURE VS. VESSEL BOTTOM DRAIN "B" TEMP RCS THERMAL SHOCK INTERLOCKS (INOP)
GE DRAWING 761E791TY SH 9									RX PRESSURE VS. RCS PUMP B SUCT. TEMP RCS THERMAL SHOCK INTERLOCKS (INOP)

UPS NO: 2VBB-UPS1B
PNL NO: 2VBS-PNLB101
DIST PNL NO: 2CEC-PNL612
BKR NO: 15

PLANT IMPACT: LOSS OF POWER TO 2CEC-PNL612

LOOP	PMS INDICATION	PMS ALARM	ERF INPUT	CR ANNUNCIATION	LOCAL ANNUNCIATION	CR INDICATION	LOCAL INDICATION	VALVE POSITION	DESCRIPTION/OTHER
C33A-F4						X			STARTUP VALVES TRANSFER TO MANUAL (HALF TRIP) FEEDWATER PUMP/TURBINE (HALF TRIP)
C33A-F7 C33-K611 (24VDC PWR)	X	X		X		X			(C33-N003A FLOW XMTR) (FEEDWATER CONTROL) STEAM FLOW LINE "A" (INOP)
C33A-F7 C33-K611 (24VDC PWR)	X	X		X		X			(C33-N003B FLOW XMTR) (FEEDWATER CONTROL) STEAM FLOW LINE "B" (INOP)
C33A-F7 C33-K611 (24VDC PWR)	X	X		X		X			(C33-N003C FLOW XMTR) (FEEDWATER CONTROL) STEAM FLOW LINE "C" (INOP)
C33A-F7 C33-K611 (24VDC PWR)								FL	LOW PRESSURE START-UP 2CNM-LV137
C33A-F7 C33-K611 (24VDC PWR)								FL	HIGH PRESSURE START-UP 2FWS-LV55A
C33A-F7 C33-K611 (24VDC PWR)								FL	HIGH PRESSURE START-UP 2FWS-LV55B
C33A-F7 C33-K611 (24VDC PWR)									FEEDWATER CONTROL SETPOINT SETDOWN (INOP)
C33A-F7 C33-K611 (24VDC PWR)									RCS LOW Rx WATER LEVEL 3& 4 TRIP

UPS NO: 2VBB-UPS1B
PNL NO: 2VBS-PNLB101
DIST PNL NO: 2CEC-PNL612
BKR NO: 15

PLANT IMPACT: LOSS OF POWER TO 2CEC-PNL612

LOOP	PMS INDICATION	PMS ALARM	ERF INPUT	CR ANNUNCIATION	LOCAL ANNUNCIATION	CR INDICATION	LOCAL INDICATION	VALVE POSITION	DESCRIPTION/OTHER
C33A-F7 C33-K611 (24VDC PWR)								FL	2FWS-LV10C
C33A-F7 C33-K611 (24VDC PWR)								FL	2FWS-LV10B
C33A-F7 C33-K611 (24VDC PWR)									FEEDWATER CONTROL START-UP VALVE (HIGH PRESSURE) MASTER CONTROLLER (INOP)
C33A-F7 C33-K611 (24VDC PWR)						X			FEEDWATER CONTROL TOTAL MAIN STEAM FLOW (INOP)
C33A-F7 C33-K611 (24VDC PWR)						X			Rx WATER LEVEL UPSET RANGE (INOP)
C33A-F7 C33-K611 (24VDC PWR)						X			Rx WATER LEVEL NARROW RANGE (INOP)
C33A-F7 C33-K611 (24VDC PWR)						X			FEEDWATER CONTROL TOTAL FEEDWATER FLOW (INOP)
C33A-F7 C33-K611 (24VDC PWR)						X			TURBINE STEAM FLOW (INOP)
C33A-F7 C33-K611 (24VDC PWR)						X			FEEDWATER CONTROL Rx PRESSURE (INOP)
C33A-F7 C33-K611 (24VDC PWR)									FEEDWATER CONTROL Rx WATER LEVEL 3&4 RCS TRIP INPUT "A" & "B" (INOP)

UPS NO: 2VBB-UPS1B
PNL NO: 2VBS-PNLB101
DIST PNL NO: 2CEC-PNL612
BKR NO: 15

PLANT IMPACT: LOSS OF POWER TO 2CEC-PNL612

LOOP	PMS INDICATION	PMS ALARM	ERF INPUT	CR ANNUNCIATION	LOCAL ANNUNCIATION	CR INDICATION	LOCAL INDICATION	VALVE POSITION	DESCRIPTION/OTHER
C33A-F7 C33-K611 (24VDC PWR)						X			FEEDWATER CONTROL (INOP) FEEDWATER FLOW SIGNAL LINE "A"
C33A-F8 C33-K612 (24VDC PWR)	X	X		X					RX WATER LEVEL 4&7 NARROW RANGE (INOP)
C33A-F8 C33-K612 (24VDC PWR)	X	X		X					RX PRESSURE HIGH (INOP)
C33A-F8 C33-K612 (24VDC PWR)									FEEDWATER CONTROL 3 ELEMENT CONTROL (INOP)
C33A-F8 C33-K612 (24VDC PWR)		X		X					FEEDWATER CONTROL TOTAL MAIN STEAM FLOW (INOP)
C33A-F8 C33-K612 (24VDC PWR)									FEEDWATER CONTROL LOW POWER TRIP INPUT TO REACTOR MANUAL CONTROL (INOP)
C33A-F8 C33-K612 (24VDC PWR)	X					X			FEEDWATER CONTROL MAIN STEAM FLOW LINE "D" (INOP)
C33A-F8 C33-K612 (24VDC PWR)									FEEDWATER CONTROL LOW FEEDWATER FLOW TRIP INPUT TO RCS PUMP "A" & "B" NPSH & POWER INTERLOCKS
C33A-F8 C33-K612 (24VDC PWR)									2FWS-LV10C AUTO CONTROL (INOP)

UPS NO: 2VBB-UPS1B
PNL NO: 2VBS-PNLB101
DIST PNL NO: 2CEC-PNL612
BKR NO: 15

PLANT IMPACT: LOSS OF POWER TO 2CEC-PNL612

LOOP	PMS INDICATION	PMS ALARM	ERF INPUT	CR ANNUNCIATION	LOCAL ANNUNCIATION	CR INDICATION	LOCAL INDICATION	VALVE POSITION	DESCRIPTION/OTHER
C33A-F8 C33-K612 (24VDC PWR)						X			FEEDWATER CONTROL (INOP) TOTAL FEEDWATER FLOW
C33A-F8 C33-K612 (24VDC PWR								FL	2FWS-LV10C
C33A-F8 CEE-K612 (24VDC PWR)						X			A/M TRANSFER (INOP) 2CNM-LV137
C33A-F8 C33-K612 (24VDC PWR)						X			FEEDWATER CONTROL HIGH PRESS/LOW FLOW MASTER CONTROLLER A/M TRANSFER (INOP)
C33A-F8 C33-K612 (24VDC PWR)						X			A/M TRANSFER (INOP) 2FWS-LV55A
C33A-F8 C33-K612 (24VDC PWR)						X			A/M TRANSFER (INOP) 2FWS-LV55B
C33A-F9						X			FEEDWATER PUMP CAVITATION INTLK LV10 LIMITER LOGIC (INOP)
C33A-F10						X			FEEDWATER CONTROL SETPOINT SETDOWN LOGIC (INOP)
C33A-F11									LOW FEEDWATER FLOW RCS RUNBACK A&B LOGIC ACTUATED
C33A-F13									2FWS-LV55A, 2FWS-LV55B, 2CNM-LV137 TRANSFER TO MANUAL

UPS NO: 2VBB-UPS1B
PNL NO: 2VBS-PNLB101
DIST PNL NO: 2CEC-PNL612
BKR NO: 15

PLANT IMPACT: LOSS OF POWER TO 2CEC-PNL612

LOOP	PMS INDICATION	PMS ALARM	ERF INPUT	CR ANNUNCIATION	LOCAL ANNUNCIATION	CR INDICATION	LOCAL INDICATION	VALVE POSITION	DESCRIPTION/OTHER
C33A-F14									FEEDWATER CONTROL Rx WATER LEVEL 3&4 RCS TRIP INPUT "A" & "B"
C33A-F14 C33A-F15									FEEDWATER CONTROL LOW FEEDWATER FLOW TRIP INPUT TO RCS PUMP "A" & "B" NPSH & POWER INTERLOCKS

UPS NO: 2VBB-UPS1B
PNL NO: 2VBS-PNLB101
DIST PNL NO: 2CEC*PNL603
BKR NO: 15

PLANT IMPACT: LOSS OF POWER TO 2CEC*PNL603

LOOP	PMS INDICATION	PMS ALARM	ERF INPUT	CR ANNUNCIATION	LOCAL ANNUNCIATION	CR INDICATION	LOCAL INDICATION	VALVE POSITION	DESCRIPTION/OTHER
C33A-F2A						X			2FWS-LV10A (STATUS)
C33A-F2B						X			2FWS-LV10B (STATUS)
C33A-F2C						X			2FWS-LV10C (STATUS)
C33A-F3A	X			X					2FWS-LV10A CONTROL SIGNAL FAILURE AND ACTUATOR TROUBLE/RESET (INOP)
C33A-F3B	X			X					2FWS-LV10B CONTROL SIGNAL FAILURE AND ACTUATOR TROUBLE/RESET (INOP)
C33A-F3C	X			X					2FWS-LV10C CONTROL SIGNAL FAILURE AND ACTUATOR TROUBLE/RESET (INOP)

UPS NO: 2VBB-UPS1B
PNL NO: 2VBS-PNLB101

BKR NO: 16
CIRCUIT NO: 2CECB26

DRAWING REFERENCES
EE-11Y
EE-EAG
EE-3B
0007.159-451-317
0007.159-451-319
147D7836

FEED TO DEVICE	DEVICE LOCATION		PLANT IMPACT
	BLDG	ELEV	
2CEC*PNL731 JB304 TB1-1,2	CRR	288	
2CEC-W083 2CEC-PNL826	CRR	288	LOSS OF POWER TO 2CEC-PWRS903 FOR FOXBORO PANEL 2CEC-PNL826. ALTERNATE POWER SUPPLY 2CEC-PWRS826 FOR 2CEC-PNL826 IS FED FROM 2VBB-UPS1A PANEL 2VBS-PNLA101 BKR #15. FOR PLANT IMPACT, SEE 2VBS-PNLA101, BKR #15 NOTE: +/- 15 VDC STILL SUPPLIED FROM 2CEC-PNL827 SEE 2VBS-PNLA101 BKR #16

UPS NO: 2VBB-UPS1B
PNL NO: 2VBS-PNLB101

BKR NO: 17
CIRCUIT NO:2WCSN25

DRAWING REFERENCES
147D7830
EE-11Y
EE-3CV
0007.520-001-446
0007.520-001-462
0007.224-001-003
0007.224-001-006

FEED TO DEVICE	DEVICE LOCATION		PLANT IMPACT
	BLDG	ELEV	
2CEC*PNL705 JB402	CCR	306	
E31A-W049 2CEC-PNL632	CCR	306	POWER FAILURE TO ANALOG ISOLATOR ASSEMBLY AT13 & AT12
2WCS-FI602 (G33-R602)	CCR	306	LOSS OF RWCU SYSTEM DUMP FLOW INDICATION
G33-R609	CCR	306	LOSS OF RWCU SYSTEM INLET FLOW INDICATION
MSSFA101			LOSS OF RWCU SYSTEM PMS FLOW INDICATION

UPS NO: 2VBB-UPS1B
PNL NO: 2VBS-PNLB101

BKR NO: 18
CIRCUIT NO: 2CECB88

DRAWING REFERENCES
147D7836
EE-11Y
EE-AG
EE-3N
0007.159-451-407
0007.159-451-408

FEED TO DEVICE	DEVICE LOCATION		PLANT IMPACT
	BLDG	ELEV	
2CEC*PNL731 JB302 TB1-1,2	CRR	288	
2CEC-W032 2CEC-PNL888	CRR	288	LOSS OF POWER TO 2CEC-PWRS902 FOR FOXBORO PANEL 2CEC-PNL888. ALTERNATE POWER SUPPLY 2CEC-PWRS888 FOR 2CEC-PNL888 IS FED FROM 2VBB-UPS1A PANEL 2VBS-PNLA101 BKR #18. FOR PLANT IMPACT, SEE 2VBS-PNLA101, BKR #18 NOTE: +/- 15 VDC STILL SUPPLIED FROM 2CEC-PNL825 SEE 2VBS-PNLA101 BKR #14

UPS NO: 2VBB-UPS1B
PNL NO: 2VBS-PNLB101

DRAWING REFERENCES
EE-11Y

BKR NO: 19
CIRCUIT NO: N/A

FEED TO DEVICE	DEVICE LOCATION		PLANT IMPACT
	BLDG	ELEV	
SPARE			

UPS NO: 2VBB-UPS1B
PNL NO: 2VBS-PNLB101

DRAWING REFERENCES
EE-11Y

BKR NO: 20
CIRCUIT NO: N/A

FEED TO DEVICE	DEVICE LOCATION		PLANT IMPACT
	BLDG	ELEV	
SPARE			

UPS NO: 2VBB-UPS1B
PNL NO: 2VBS-PNLB101
BKR NO: 21
CIRCUIT NO:2CECN06, 2CECN04, 2CECN02

DRAWING REFERENCES
EE-11Y
ESK-7CEC01
LSK-32-09D
LSK-23-06C
LSK-09-01D
LSK-21-02B
ESK-7CEC14, SH. 1
LSK-33-02A
LSK-22-22
EE-3BE
147D7846, SH. 2

FEED TO DEVICE	DEVICE LOCATION		PLANT IMPACT
	BLDG	ELEV	
2CEC*PNL741 JB103	CCR	306	
2CEC-W056 2CEC*PNL873 PWRS2-CECN06	CCR	306	POWER SUPPLY FOR CHART DRIVES & RECORDERS
2CEC*PNL873 2DER-FR101	CCR	306	LOSS OF DW EQUIP. DRAINS LEAK RATE RECORDER INDICATION
2CEC*PNL873 2DER-LR101/FR123	CCR	306	LOSS OF DW EQUIP DRN TANK 2DER-TK1 LEVEL RECORDER. LOSS OF DW EQUIP DRN PMP 3A/B FLOW RECORDER.
2CEC*PNL873 2DFR-FR106	CCR	306	LOSS OF DW FLR DRN LEAK RATE RECORDER.
2CEC*PNL873 2DFR-LR106/FR137	CCR	306	LOSS OF DW FLR DRN TANK 2DER-TK1 LVL RECORDER. LOSS OF DW FLR DRN P1A/B PUMP FLOW RATE RECORDER.
2CEC*PNL873 2CCP-FR266	CCR	306	LOSS OF RBCLCW FLOW TO DW UNIT COOLERS RECORDER.
2CEC*PNL603 2SSR-CR124/AR125	CCR	306	LOSS OF CRD PUMP DISCH SAMPLE CONDUCTIVITY RECORDER/LOSS OF CRD PUMP DISCH SAMPLE 02 CONC RECORDER
2CEC*PNL873 2CEC-LU101	CCR	306	LOSS OF DW FLR & EQP DRN LEAK RATE PROG CONTROLLER

UPS NO: 2VBB-UPS1B
PNL NO: 2VBS-PNLB101
BKR NO: 21
CIRCUIT NO:2CECN06, 2CECN04, 2CECN02

DRAWING REFERENCES
EE-11Y
ESK-7CEC01
LSK-32-09D
LSK-23-06C
LSK-09-01D
LSK-21-02B
ESK-7CEC14, SH. 1
LSK-33-02A
LSK-22-22
EE-3BE
147D7846, SH. 2

FEED TO DEVICE	DEVICE LOCATION		PLANT IMPACT
	BLDG	ELEV	
2DRS-TR10A	CCR	306	LOSS OF DW UNIT COOLERS UC1A/C/2A/C/3A DISCH AIR TEMP RECORDER
2DRS-TR10B	CCR	306	LOSS OF DW UNIT COOLER UC1B/D/2B/D/3B DISCH AIR TEMP RECORDER
2CEC*PNL873 2CMS-MR72A/C/E	CCR	306	LOSS OF DW MOISTURE ANALYZERS RECORDER
2CEC*PNL875 2CMS-MR72B/D/F	CCR	306	LOSS OF DW MOISTURE ANALYZERS RECORDER

UPS NO: 2VBB-UPS1B
PNL NO: 2VBS-PNLB101
BKR NO: 22
CIRCUIT NO: 2SSTN54

DRAWING REFERENCES

ESK-7SST01	PID-17A	EE-11Y
ESK-7SST02	PID-17C	EE-3HE
ESK-7SST03	PID-17E	0007.511-989-029
ESK-7SST10	PID-17F	0007.511-989-030
LSK-21-1D	LSK-21-1G	

FEED TO DEVICE	DEVICE LOCATION		PLANT IMPACT
	BLDG	ELEV	
2SST-IPNL154	HB	250	LOSS OF POWER TO TURBINE PLANT SAMPLE PANEL 2SST-IPNL154 SEE ATTACHED

UPS NO: 2VBB-UPS1B
PNL NO: 2VBS-PNLB101
BKR NO: 22

PLANT IMPACT: LOSS OF POWER TO 2SST-IPNL154

LOOP	PMS INDICATION	PMS ALARM	ERF INPUT	CR ANNUNCIATION	LOCAL ANNUNCIATION	CR INDICATION	LOCAL INDICATION	VALVE POSITION	DESCRIPTION/OTHER
2SST-122 LSK-21-1D		X		X	X			FC	LOW PRESSURE FDW HTR SAMPLE TEMP/LOSS OF CONTROL OF AOV151
2SST-126 LSK-21-1D		X		X	X			FC	6TH PT FDW HTR DISCHARGE SAMPLE TEMP/LOSS OF CONTROL OF AOV152
2SST-118 LSK-21-1D		X		X	X			FC	4TH PT FDW HTR SAMPLE TEMP/LOSS OF CONTROL OF AOV23A/B/C
2SST-156 LSK-21-1D		X		X	X			FC	AUX BOILER STM HDR SAMPLE TEMP/LOSS OF CONTROL OF AOV177
2SST-52A/B/C LSK-21-1D		X		X	X			FC	HTR DRAIN PUMP P1A/B/C DISCH SAMPLE TEMP/LOSS OF CONTROL OF AOV44A/B/C
2SST-136 LSK-21-1D		X		X	X			FC	MAIN STEAM SAMPLE TEMP/LOSS OF CONTROL OF AOV173
2SST-153 LSK-21-1D		X		X	X			FC	CLEAN STEAM REBOILER 2TME-E1A BLOWDOWN SAMPLE TEMP/LOSS OF CONTROL OF AOV174
2SST-165 LSK-21-1D		X		X	X			FC	CLEAN STEAM REBOILER 2TME-E1B BLOWDOWN SAMPLE TEMP/LOSS OF CONTROL OF AOV175

UPS NO: 2VBB-UPS1B
PNL NO: 2VBS-PNLB101
BKR NO: 22

PLANT IMPACT: LOSS OF POWER TO 2SST-IPNL154

LOOP	PMS INDICATION	PMS ALARM	ERF INPUT	CR ANNUNCIATION	LOCAL ANNUNCIATION	CR INDICATION	LOCAL INDICATION	VALVE POSITION	DESCRIPTION/OTHER
2SST-283 LSK-21-1D		X		X	X				AUX BOILER FEEDPUMP DISCH HDR SAMPLE TEMP/LOSS OF CONTROL OF AOV176
2SST-291 LSK-21-1G		X		X	X			FC	5TH PT HTR DRAIN DISCH SAMPLE TEMP/LOSS OF CONTROL OF AOV61A/B/C
2SST-295 LSK-21-1G		X		X	X			FC	6TH PT HTR DRAIN DISCH SAMPLE TEMP/LOSS OF CONTROL OF AOV62A/B/C
2SST-299 LSK-21-1G		X		X	X			FC	MOISTURE SEP DRAIN RCVR SAMPLE TEMP/LOSS OF CONTROL OF AOV63A/B
2SST-303 LSK-21-1G		X		X	X			FC	MOISTURE SEP DRAIN RCVR SAMPLE TEMP/LOSS OF CONTROL OF AOV64A/B
2SST-L PID-17A							X		COND DMNRLZR INLET SMPLG TEMP IND/LOSS OF TI104
2SST-L PID-17A							X		COND DMNRLZR OUTLET SMPLG TEMP IND/LOSS OF TI110
2SST-L PID-17A							X		COM 6TH PT HTR SMPLG TEMP IND/LOSS OF TI127

UPS NO: 2VBB-UPS1B
PNL NO: 2VBS-PNLB101
BKR NO: 22

PLANT IMPACT: LOSS OF POWER TO 2SST-IPNL154

LOOP	PMS INDICATION	PMS ALARM	ERF INPUT	CR ANNUNCIATION	LOCAL ANNUNCIATION	CR INDICATION	LOCAL INDICATION	VALVE POSITION	DESCRIPTION/OTHER
2SST-L PID-17C							X		2HDL-P1A/B/C DISCH SMPLG TEMP IND/LOSS OF TI55A/B/C
2SST-K PID-17E,F							X		MN COND A/B/C SHL WEST SMPLG TEMP IND/LOSS OF TI17A/B/C
2SST-K PID-17E,F							X		MN COND A/B/C SHL EAST SMPLG TEMP IND/LOSS OF TI18A/B/C

UPS NO: 2VBB-UPS1B
PNL NO: 2VBS-PNLB101

BKR NO: 23
CIRCUIT NO: 2SXSN10

DRAWING REFERENCES
EE-11Y
ESK-10SXS01
ESK-10SXS14

FEED TO DEVICE	DEVICE LOCATION		PLANT IMPACT
	BLDG	ELEV	
GETARS	CCR	306	LOSS OF GETARS

UPS NO: 2VBB-UPS1B
PNL NO: 2VBS-PNLB101

BKR NO: 24
CIRCUIT NO: 2SSTN84

DRAWING REFERENCES
PID-17D
EE-11Y
EE-3HE
0007.510-989-031
ESK-07SST03

FEED TO DEVICE	DEVICE LOCATION		PLANT IMPACT
	BLDG	ELEV	
2SST-IPNL284 (TB-8, TB-9)	TB	250	LOSS OF TURBINE PLANT SAMPLE PANEL 2SST-IPNL284 INSTRUMENTATION, ANNUNCIATION AND POWER. SEE ATTACHMENT.

UPS NO: 2VBB-UPS1B
PNL NO: 2VBS-PNLB101

PLANT IMPACT: LOSS OF POWER TO 2SST-IPNL284

BKR NO: 24

LOOP	PMS INDICATION	PMS ALARM	ERF INPUT	CR ANNUNCIATION	LOCAL ANNUNCIATION	CR INDICATION	LOCAL INDICATION	VALVE POSITION	DESCRIPTION/OTHER
2SST-C PID-17D							X		COND DMNRLZR 1A OUTLET SMPLG TEMP IND/LOSS OF TI10A
2SST-C PID-17D							X		COND DMNRLZR 1B OUTLET SMPLG TEMP IND/LOSS OF TI10B
2SST-C PID-17D							X		COND DMNRLZR 1C OUTLET SMPLG TEMP IND/LOSS OF TI10C
2SST-C PID-17D							X		COND DMNRLZR 1D OUTLET SMPLG TEMP IND/LOSS OF TI10D
2SST-C PID-17D							X		COND DMNRLZR 1E OUTLET SMPLG TEMP IND/LOSS OF TI10E
2SST-C PID-17D							X		COND DMNRLZR 1F OUTLET SMPLG TEMP IND/LOSS OF TI10F
2SST-C PID-17D							X		COND DMNRLZR 1G OUTLET SMPLG TEMP IND/LOSS OF TI10G
2SST-C PID-17D							X		COND DMNRLZR 1H OUTLET SMPLG TEMP IND/LOSS OF TI10H
2SST-C PID-17D							X		COND DMNRLZR 1J OUTLET SMPLG TEMP IND/LOSS OF TI10J
2SST-286 PID-17D		X		X	X		X	FC	TURB GEN GLND SEAL & EXHST STM SMPLG TEMP/LOSS OF CONTROL OF AOV287

UPS NO: 2VBB-UPS1B
PNL NO: 2VBS-PNLB101

BKR NO: 25
CIRCUIT NO:2SXSN11

DRAWING REFERENCES
EE-11Y
ESK-10SXS18

FEED TO DEVICE	DEVICE LOCATION		PLANT IMPACT
	BLDG	ELEV	
GETARS	CCR	306	LOSS OF GETARS

UPS NO: 2VBB-UPS1B
PNL NO: 2VBS-PNLB101

BKR NO: 26
CIRCUIT NO:2SSTN85

DRAWING REFERENCES

EE-11Y	PID-17A
EE-3HF	PID-17C
0007.510-989-105	PID-17D
0007.510-989-105	PID-17E
0007.510-989-108	PID-17F
0007.510-989-109	
0007.510-989-106	

FEED TO DEVICE	DEVICE LOCATION		PLANT IMPACT
	BLDG	ELEV	
2SST-IPNL285 PTB3-1, PTB3-2	TB	250	LOSS OF POWER TO PANEL 2SST-IPNL285 (TURBINE PLANT SAMPLE PANEL) RESULTING IN LOSS OF CONDUCTIVITY CELL ANNUNCIATION & INDICATION. SEE ATTACHMENT.

UPS NO: 2VBB-UPS1B PLANT IMPACT: LOSS OF POWER TO 2SST-IPNL285
PNL NO: 2VBS-PNLB101

BKR NO: 26

LOOP	PMS INDICATION	PMS ALARM	ERF INPUT	CR ANNUNCIATION	LOCAL ANNUNCIATION	CR INDICATION	LOCAL INDICATION	VALVE POSITION	DESCRIPTION/OTHER
2SST-113 LSK-21-1B		X		X	X	X	X		CNDS DMNRLZR OUTLET SAMPLE OXYGEN IND/LOSS OF AIT113
2SST-132 LSK-21-1C		X		X	X	X	X		COM 6TH PT HTR OUTLET SAMPLE OXYGEN IND/LOSS OF AIT132
2SST-133 LSK-21-1C		X		X	X	X	X		COM 6TH PT HTR OUTLET SAMPLE PH IND/LOSS OF AIT133
2SST-131 LSK-21-1B		X		X	X	X	X		COM 6TH PT HTR OUTLET SAMPLE CNDT IND/LOSS OF CIT131
2SST-114 LSK-21-1B		X		X	X	X	X		CNDS DMNRLZR OUTLET SAMPLE CNDT IND/LOSS OF CIT114
2SST-106 LSK-21-1A		X		X	X	X	X		CNDS DMNRLZR INLET SAMPLE CNDT IND/LOSS OF CIT106
2SST-53 LSK-21-1D		X		X	X		X		LP FDW HTR DRN PUMP 1A/1B/1C SMPL CNDT IND/LOSS OF CIT53A/B/C
2SST-22 LSK-21-1A		X		X	X		X		MN COND A/B/C SHELL EAST HLF CNDT IND/LOSS OF CIT22A/B/C
2SST-21 LSK-21-1A		X		X	X		X		MN COND A/B/C SHELL WEST HLF CNDT IND/LOSS OF CIT21A/B/C

UPS NO: 2VBB-UPS1B PLANT IMPACT: LOSS OF POWER TO 2SST-IPNL285
PNL NO: 2VBS-PNLB101

BKR NO: 26

LOOP	PMS INDICATION	PMS ALARM	ERF INPUT	CR ANNUNCIATION	LOCAL ANNUNCIATION	CR INDICATION	LOCAL INDICATION	VALVE POSITION	DESCRIPTION/OTHER
2SST-58 LSK-21-1E		X		X	X		X		CNDS DMNRLZR 1A THRU 1J EFFLUENT CNDT IND/LOSS OF CIT58A THRU 58J
2SST-50 LSK-21-1D		X		X	X	X	X		LP FDW HTR DRN PUMP 1A/1B/1C SMPL TURBIDITY IND/LOSS OF AIT50A/B/C
2SST-142 LSK-21-1C		X		X	X	X	X		CNDS DMNRLZR INLET SAMPLE TURBIDITY IND/LOSS OF AIT142

UPS NO: 2VBB-UPS1B
PNL NO: 2VBS-PNLB101

DRAWING REFERENCES
EE-11Y
ESK-10SXS16

BKR NO: 27
CIRCUIT NO: 2SXSN08

FEED TO DEVICE	DEVICE LOCATION		PLANT IMPACT
	BLDG	ELEV	
GETARS	CCR	306	LOSS OF GETARS

UPS NO: 2VBB-UPS1B
PNL NO: 2VBS-PNLB101

BKR NO: 28
CIRCUIT NO: 2SXSN07

DRAWING REFERENCES
EE-11Y
ESK-10SXS15

FEED TO DEVICE	DEVICE LOCATION		PLANT IMPACT
	BLDG	ELEV	
GETARS	CCR	306	LOSS OF GETARS

UPS NO: 2VBB-UPS1B
PNL NO: 2VBS-PNLB101
BKR NO: 29
CIRCUIT NO: N/A

DRAWING REFERENCES
EE-11Y

FEED TO DEVICE	DEVICE LOCATION		PLANT IMPACT
	BLDG	ELEV	
SPARE			

UPS NO: 2VBB-UPS1B
PNL NO: 2VBS-PNLB101
BKR NO: 30
CIRCUIT NO: N/A

DRAWING REFERENCES
EE-11Y

FEED TO DEVICE	DEVICE LOCATION		PLANT IMPACT
	BLDG	ELEV	
SPARE			

UPS NO: 2VBB-UPS1B
PNL NO: 2VBS-PNLB101
BKR NO: 31
CIRCUIT NO: N/A

DRAWING REFERENCES
EE-11Y

FEED TO DEVICE	DEVICE LOCATION		PLANT IMPACT
	BLDG	ELEV	
SPARE			

UPS NO: 2VBB-UPS1B
PNL NO: 2VBS-PNLB101
BKR NO: 32
CIRCUIT NO: N/A

DRAWING REFERENCES
EE-11Y

FEED TO DEVICE	DEVICE LOCATION		PLANT IMPACT
	BLDG	ELEV	
SPARE			

UPS NO: 2VBB-UPS1B
PNL NO: 2VBS-PNLB101
BKR NO: 33
CIRCUIT NO: N/A

DRAWING REFERENCES
EE-11Y

FEED TO DEVICE	DEVICE LOCATION		PLANT IMPACT
	BLDG	ELEV	
SPARE			

UPS NO: 2VBB-UPS1B
PNL NO: 2VBS-PNLB101
BKR NO: 34
CIRCUIT NO: N/A

DRAWING REFERENCES
EE-11Y

FEED TO DEVICE	DEVICE LOCATION		PLANT IMPACT
	BLDG	ELEV	
SPARE			

UPS NO: 2VBB-UPS1B
PNL NO: 2VBS-PNLB101
BKR NO: 35
CIRCUIT NO: N/A

DRAWING REFERENCES
EE-11Y

FEED TO DEVICE	DEVICE LOCATION		PLANT IMPACT
	BLDG	ELEV	
SPARE			

UPS NO: 2VBB-UPS1B
PNL NO: 2VBS-PNLB101
BKR NO: 36
CIRCUIT NO: N/A

DRAWING REFERENCES
EE-11Y

FEED TO DEVICE	DEVICE LOCATION		PLANT IMPACT
	BLDG	ELEV	
SPARE			

UPS NO: 2VBB-UPS1B
PNL NO: 2VBS-PNLB101

BKR NO: 37
CIRCUIT NO: 2IHAN02

DRAWING REFERENCES
EE-11Y
ESK-10IHA40
EE-3BA
147D7845

FEED TO DEVICE	DEVICE LOCATION		PLANT IMPACT
	BLDG	ELEV	
2CEC-PNL740 JB103 2IHA-W029 2CEC-PNL858 BREAKER A13CB3-1A A13CB3-2A	CRR	288	LOSS OF CONTROL ROOM ANNUNCIATORS AT 2CEC*PNL871, 873, 842, 851, 870, 875 AND 852 AND LOSS OF ASSOCIATED COMPUTER ALARM POINTS

UPS NO: 2VBB-UPS1B
PNL NO: 2VBS-PNLB101

BKR NO: 38
CIRCUIT NO: 2IHAB07

DRAWING REFERENCES
EE-11Y
ESK-10IHA40

FEED TO DEVICE	DEVICE LOCATION		PLANT IMPACT
	BLDG	ELEV	
2CEC-PNL747 JB101 2IHA-W027 2CEC-PNL833 BREAKER A1CB2-1A A1CB2-2A	CRR	288	LOSS OF CONTROL ROOM ANNUNCATIORS AT 2CEC*PNL871, 873, 842, 851, 870, 875 AND 852 AND LOSS OF ASSOCIATED COMPUTER ALARM POINTS

UPS NO: 2VBB-UPS1B
PNL NO: 2VBS-PNLB101

BKR NO: 39
CIRCUIT NO: 2SWPN52

DRAWING REFERENCES

EE-11Y
ESK-7SWP30 THRU 36
LSK 9-10AB
ESK 11SWP03

FEED TO DEVICE	DEVICE LOCATION		PLANT IMPACT
	BLDG	ELEV	
2SWP-MOV583	TB	319	2HVT-UC222B OUTLET VAC BKR. LOSS OF INDICATION LIGHTS. FAIL AS IS.
2SWP-MOV586	TB	329	2HVT-UC221A&B, UC219 AND UC220 OUTLET VAC BKR. LOSS OF INDICATING LIGHTS. FAIL AS IS.
2SWP-MOV596	TB	303	CHILLER BUILDING VAC BKR. LOSS OF INDICATION LIGHTS. FAIL AS IS.
2SWP-MOV584	TB	319	2HVR-UC222C OUTLET VAC BKR. LOSS OF INDICATION LIGHTS. FAIL AS IS.
2SWP-MOV587	TB	280	2HVT-UC216B OUTLET VAC BKR. LOSS OF INDICATION LIGHTS. FAIL AS IS.
2SWP-MOV597	TB	301	CHILLER BUILDING VAC BKR. LOSS OF INDICATION LIGHTS. FAIL AS IS.
2SWP-MOV585	TB	320	2HVT-UC222A OUTLET VAC BKR. LOSS OF INDICATION LIGHTS. FAIL AS IS.
2SWP-MOV588	TB	303	2HVT-UC225 OUTLET VAC BKR. LOSS OF INDICATION LIGHTS. FAIL AS IS.
2SWP-MOV589	TB	323	2HVT-UC223A OUTLET VAC BKR. LOSS OF INDICATION LIGHTS. FAIL AS IS.
2SWP-MOV591	TB	322	2HVT-UC222D OUTLET VAC BKR. LOSS OF INDICATION LIGHTS. FAIL AS IS.

UPS NO: 2VBB-UPS1B
PNL NO: 2VBS-PNLB101

BKR NO: 39
CIRCUIT NO: 2SWPN52

DRAWING REFERENCES

EE-11Y
ESK-7SWP30 THRU 36
LSK 9-10AB
ESK 11SWP03

FEED TO DEVICE	DEVICE LOCATION		PLANT IMPACT
	BLDG	ELEV	
2SWP-MOV592	TB	319	2HVT-UC222E OUTLET VAC BKR. LOSS OF INDICATION LIGHTS. FAIL AS IS
2SWP-MOV590	TB	329	2HVT-UC223B OUTLET VAC BKR. LOSS OF INDICATION LIGHTS. FAIL AS IS.
2SWP-MOV593	TB	319	2HVT-UC223F OUTLET VAC BKR. LOSS OF INDICATION LIGHTS. FAIL AS IS.
2SWP-MOV594	TB	294	2HVT-UC218E OUTLET VAC BKR. LOSS OF INDICATION LIGHTS. FAIL AS IS.
2SWP-MOV598	SC	312	REACTOR BUILDING VAC BKR. LOSS OF INDICATION LIGHTS. FAIL AS IS.
2SWP-MOV595	SC	296	2HVT-UC217B OUTLET VAC BKR. LOSS OF INDICATION LIGHTS. FAIL AS IS.
2SWP-MOV582	SC	312	REACTOR BUILDING VAC BKR. LOSS OF INDICATION LIGHTS. FAIL AS IS.

UPS NO: 2VBB-UPS1B
PNL NO: 2VBS-PNLB101
BKR NO: 40
CIRCUIT NO: N/A

DRAWING REFERENCES
EE-11Y

FEED TO DEVICE	DEVICE LOCATION		PLANT IMPACT
	BLDG	ELEV	
SPARE			

UPS NO: 2VBB-UPS1B
PNL NO: 2VBS-PNLB102
BKR NO: 1
CIRCUIT NO: N/A

DRAWING REFERENCES
EE-11Y 147D7829
EE-3CR
7.520-001-402

FEED TO DEVICE	DEVICE LOCATION		PLANT IMPACT
	BLDG	ELEV	
2CEC*PNL704 JB404	CCR	306	
B35A-W106 2CEC-PNL613	CCR	306	FLD SPARE AT 2CEC-PNL613 TERMINAL A-1 & 2

UPS NO: 2VBB-UPS1B
PNL NO: 2VBS-PNLB102
BKR NO: 2
CIRCUIT NO:(2VBS-PNLB102)

DRAWING REFERENCES
EE-11Y
E&DCR Z21002C
E&DCR Z21003
N2OP-763

FEED TO DEVICE	DEVICE LOCATION		PLANT IMPACT
	BLDG	ELEV	
2COR-RCPT2	CCR	306 AD/12	LOSS OF 120V RECEPTACLE FOR RADIAX CONSOLES. RECEPTACLE IS REQ'D TO SUPPLY POWER FOR THE RADIO BASE UNITS AND PLANT ANTENNA COMMUNICATIONS SYSTEM. RECEPTACLE IS MOUNTED UNDER THE EMERGENCY COMMUNICATIONS TABLE (2CEC-TBL800A) RECEPTACLE 2COR-RCPT1 IS POWERED FROM 2VBS-PNLA102, BKR #17

UPS NO: 2VBB-UPS1B
PNL NO: 2VBS-PNLB102
BKR NO: 3
CIRCUIT NO:2WCSN21

DRAWING REFERENCES
147D7829
7.212-001-012
EE-11Y
EE-3CR
7.520-001-402
7.520-001-403
7.224-001-035
7.224-001-020
1.764-001-021

FEED TO DEVICE	DEVICE LOCATION		PLANT IMPACT
	BLDG	ELEV	
2CEC*PNL704 JB406	CCR	306	
G33A-W022 2CEC-PNL613	CCR	306	
G33A-W001 2CEC*PNL602	CCR	306	
C51-W264 2CEC*PNL603	CCR	306	
B22A-W025 2CEC-PNL619	CCR	306	
B22A-W014 2CEC-PNL614	CCR	306	
K600-2WCSN21 120V PWR SUPPLY	CCR	306	PWR SUPPLY TO K1A & K1B-2WCSN21 VIA G33A-F4
K1A-2WCSN21 RELAY	CCR	306	LOSS OF ALARM RELAY PUMP INLET TEMP RWCU PUMP SEAL GLAND PLATE
K1B-2WCSN21 RELAY	CCR	306	LOSS OF ALARM RELAY PUMP INLET TEMP RWCU PUMP SEAL GLAND PLATE. SEE ATTACHED.

UPS NO: 2VBB-UPS1B
PNL NO: 2VBS-PNLB102
BKR NO: 3

PLANT IMPACT:LOSS OF POWER TO: POWER SUPPLY G33-K600

LOOP	PMS INDICATION	PMS ALARM	ERF INPUT	CR ANNUNCIATION	LOCAL ANNUNCIATION	CR INDICATION	LOCAL INDICATION	VALVE POSITION	DESCRIPTION/OTHER
G33-R613A						X			RECORDER FOR RX WTR CLNUP FLTR DEMIN INFLUENT
G33-R613B						X			RECORDER FOR RX RECIRC INFLUENT A
G33-K601						X			CLEANUP SYS TEMP INDICATION
G33-N602	X	X		X		X	X		CONDUCTIVITY ALARM SWITCH FOR FLTR DEMIN INFLUENT
G33-N603A	X	X		X	X	X	X		CONDUCTIVITY ALARM FLTR A DEMIN EFFLUENT
G33-N603B	X	X		X	X	X	X		CONDUCTIVITY ALARM FLTR B DEMIN EFFLUENT
G33-N603C	X	X		X	X	X	X		CONDUCTIVITY ALARM FLTR C DEMIN EFFLUENT
G33-N603D	X	X		X	X	X	X		CONDUCTIVITY ALARM FLTR D DEMIN EFFLUENT
G33-SRU1						X			BOTTOM HEAD DRAIN FLOW INDICATION
G33-SRU1						X			REGEN HT EX INLET PRESS INDICATION
G33-R606								FC	2WCS-FV135 DUMP VLV MANUAL CONTROL
B22-K616		X		X		X			HEAD STUD CORE TEMP

UPS NO: 2VBB-UPS1B
PNL NO: 2VBS-PNLB102
BKR NO: 3

PLANT IMPACT: LOSS OF POWER TO: POWER SUPPLY G33-K600

LOOP	PMS INDICATION	PMS ALARM	ERF INPUT	CR ANNUNCIATION	LOCAL ANNUNCIATION	CR INDICATION	LOCAL INDICATION	VALVE POSITION	DESCRIPTION/OTHER
B22-N606	X	X		X		X			FW TURBIDITY SWITCH-ALARM
B22-SRU1						X			B22-R605 SHUTDOWN RANGE REACTOR VESSEL LEVEL IND
B22-K617		X		X		X			BOTTOM HEAD TEMP
B22-K618		X		X		X			SHELL FLANGE TEMP
B22-K620		X		X		X			BOTTOM HEAD DRAIN TEMP
B22-N648		X		X		X			TEMP SWITCH FOR HEAD STUD CORE
B22-N649		X		X		X			TEMP SWITCH FOR BOTTOM HEAD
B22-N650		X		X		X			TEMP SWITCH FOR SHELL FLANGE
B22-N652		X		X		X			TEMP SWITCH FOR BOTTOM HEAD DRAIN
B22-R622						X			FW TURBIDITY RECORDER
B35-R614						X			RECIRC FLOW RECORDER
C51-R602						X			SRM RECORDER
C51-R603A						X			IRM/APRM RECORDER
C51-R603B						X			IRM/APRM RECORDER
C51-R603C						X			IRM/APRM/RBM RECORDER
C51-R603D						X			IRM/APRM/RBM RECORDER

UPS NO: 2VBB-UPS1B
PNL NO: 2VBS-PNLB102
BKR NO: 4
CIRCUIT NO: 2CECB85

DRAWING REFERENCES
EE-11Y
EE-3AJ
7.159-451-328
7.159-451-327

FEED TO DEVICE	DEVICE LOCATION		PLANT IMPACT
	BLDG	ELEV	
2CEC-PNL885 (2CEC-PWRS904 120V PWR SUPPLY)	CRR	288	LOSS OF POWER TO 2CEC-PWRS904 FOR FOXBORO PANEL 2CEC-PNL885. ALTERNATE POWER SUPPLY 2CEC-PWRS885 FOR 2CEC-PNL885 IS FED FROM 2VBB-UPS1A/2VBS-PNLA102, BKR #5. FOR PLANT IMPACT, SEE 2VBS-PNLA102, BKR #5

UPS NO: 2VBB-UPS1B
PNL NO: 2VBS-PNLB102
BKR NO: 5
CIRCUIT NO: N/A

DRAWING REFERENCES
EE-11Y
7.511-414-168

FEED TO DEVICE	DEVICE LOCATION		PLANT IMPACT
	BLDG	ELEV	
120V TO 2CEC-PNL849	CRR	306	LOSS OF POWER TO CEC-PNL849. FIRE PROTECTION PANEL LOSS OF ANNUNCIATION IN CONTROL ROOM

UPS NO: 2VBB-UPS1B
PNL NO: 2VBS-PNLB102
BKR NO: 6
CIRCUIT NO: 2CECB87

DRAWING REFERENCES
EE-11Y
7.159-451-334

FEED TO DEVICE	DEVICE LOCATION		PLANT IMPACT
	BLDG	ELEV	
2CEC-PNL887	CRR	288	LOSS OF POWER TO 2CEC-PWRS905 FOR FOXBORO PANEL 2CEC-PNL887 ALTERNATE POWER SUPPLY 2CEC-PWRS887 FOR 2CEC-PNL887 IS FED FROM 2VBB-UPS1A/2VBS-PNLA102, BKR #7. FOR PLANT IMPACT, SEE 2VBS-PNLA102, BKR #7.

UPS NO: 2VBB-UPS1B
PNL NO: 2VBS-PNLB102
BKR NO: 7
CIRCUIT NO: 2SCRN45

DRAWING REFERENCES
EE-11Y
EE-3HH
7.511-989-110
7.511-989-111

FEED TO DEVICE	DEVICE LOCATION		PLANT IMPACT
	BLDG	ELEV	
2SSR-IPNL145	SC	240	LOSE ALL INSTRUMENT PWR IN 2SSR-IPNL145 REACTOR BUILDING SAMPLE SYSTEM. SEE ATTACHED FOR PLANT IMPACT.

UPS NO: 2VBB-UPS1B
PNL NO: 2VBS-PNLB102
BKR NO: 7

PLANT IMPACT:LOSS OF POWER TO: 2SSR-INPL145

LOOP	PMS INDICATION	PMS ALARM	ERF INPUT	CR ANNUNCIATION	LOCAL ANNUNCIATION	CR INDICATION	LOCAL INDICATION	VALVE POSITION	DESCRIPTION/OTHER
2SSR-124 LSK-21-2B	X	X		X	X	X	X		CONTROL ROD DRIVE PUMP DISCH SAMPLE CONDUCTIVITY
2SSR-113 LSK-21-2A	X	X		X	X	X	X		REACTOR RECIRC INFLUENT A SAMPLE CONDUCTIVITY
2SSR-6A,B,C,D LSK-21-2A	X	X		X	X	X	X		RWCU FILTER DEMIN 4A,B,C,D OUTLET CONDUCTIVITY
2SSR-106 LSK-21-2A	X			X		X	X		RWCU FILTER DEMIN INFLUENT SAMPLE CONDUCTIVITY
2SFC-146 LSK-34-2D	X	X		X	X		X		SPENT FUEL POOL COOLING POOL CONDUCTIVITY
2SSR-AIT125 LSK-21-2B	X	X		X	X		X		CONTROL ROD DRIVE PUMP DISCH SAMPLE OXYGEN CONCENTRATION
2SSR-AIT14B LSK-21-2C	X	X		X	X	X	X		REACTOR RECIRC INFLUENT A SAMPLE OXYGEN
2SSR-AIT130 LSK-21-2B	X	X		X	X	X	X		RWCU FILTER DEMIN INFLUENT SAMPLE OXYGEN CONCENTRATION
2SSR-AIT156 LSK-21-2C	X	X		X	X		X		CONTROL ROD DRIVE COMMON FLTR DISCH TURBIDITY
2SSR-TIS9A,B LSK-21-2D		X		X	X		X		RHS HT EXCH E1A, 1B DISCH SAMPLE TEMP

UPS NO: 2VBB-UPS1B
PNL NO: 2VBS-PNLB102
BKR NO: 7

PLANT IMPACT:LOSS OF POWER TO: 2SSR-IPNL145

LOOP	PMS INDICATION	PMS ALARM	ERF INPUT	CR ANNUNCIATION	LOCAL ANNUNCIATION	CR INDICATION	LOCAL INDICATION	VALVE POSITION	DESCRIPTION/OTHER
2SSR-TIS136 LSK-21-2C		X		X	X		X		REACTOR RECIRC SAMPLE TEMP
2SSR-TI4A,B,C,D PID-17D							X		RWCU FILTER DEMIN 4A,B,C,D EFFLUENT SAMPLE TEMP
2SSR-TI104 PID-17D							X		RWCU FILTER COMMON INFLUENT SAMPLE TEMP
2SSR-TI111 PID-17G							X		2RCS*P1A DISCH SAMPLE TEMP
2SSR-TI121 PID-17G							X		2RDS-FLT2A,2B COMMON EFFLUENT SAMPLE TEMP

UPS NO: 2VBB-UPS1B
PNL NO: 2VBS-PNLB102
BKR NO: 8
CIRCUIT NO: N/A

DRAWING REFERENCES
1470-7827, SH 2
EE-3CM, 3LM
EE-11Y
400B07-001, SH.4&6
400B07-002, SH.4&6
400B07-003, SH. 4&6
400B07-004, SH. 4&6

FEED TO DEVICE	DEVICE LOCATION		PLANT IMPACT
	BLDG	ELEV	
2CEC*PNL880			1) IMPACT - LOSE LIGHT (LT1) AND OUTLET (U01) IN EACH PNL BAY 2) LOSS OF CLASS 1E DRMS INPUTS: 2CMS*CAB10A, B, 2HVC*CAB18A, B,C,D, 2HVR*CAB14A, B, 2HVR*CAB32A, B, 2RMS*CAB1A,B,C,D, 2SWP*CAB23A,B, 2SWP*CAB146A,B TO DATA ACQUISITION SYSTEM COMPUTER PANELS 2CEC-CP850, 854

UPS NO: 2VBB-UPS1B
PNL NO: 2VBS-PNLB102
BKR NO: 9
CIRCUIT NO: N/A

DRAWING REFERENCES
EE-11Y

FEED TO DEVICE	DEVICE LOCATION		PLANT IMPACT
	BLDG	ELEV	
SPARE			

UPS NO: 2VBB-UPS1B
PNL NO: 2VBS-PNLB102
BKR NO: 10
CIRCUIT NO: 2DRSN02

DRAWING REFERENCES
EE-1A, 3ER, EE-11Y
EE-27B, 402R EE-3AW
ESK-7DRS01
ESK-11DRS01
ESK-6DRS01,2,3&4

FEED TO DEVICE	DEVICE LOCATION		PLANT IMPACT
	BLDG	ELEV	
TO RELAY FM (3-2DRSB05) INTERLOCKING RELAY (DRYWELL COOLING SYS)	CRR	288	
3X1, 3X2, 33X1, 33X2, 2DRSUC1B 2DRSUC1D 2DRSUC2B 2DRSUC2D 2DRSUC3B	PC PC PC PC PC	252 251 282 279 288	UNIT COOLERS FANS STOP OR FAIL TO START, LOCA OVERRIDE INHIBITED INOP DW UNIT COOLERS: 2DRS-UC1B, 1D, 2B, 2D AND 3B

UPS NO: 2VBB-UPS1B
PNL NO: 2VBS-PNLB102
BKR NO: 11
CIRCUIT NO: N/A

DRAWING REFERENCES
EE-11Y

FEED TO DEVICE	DEVICE LOCATION		PLANT IMPACT
	BLDG	ELEV	
SPARE			

UPS NO: 2VBB-UPS1B
PNL NO: 2VBS-PNLB102
BKR NO: 12
CIRCUIT NO: N/A

DRAWING REFERENCES
EE-11Y

FEED TO DEVICE	DEVICE LOCATION		PLANT IMPACT
	BLDG	ELEV	
SPARE			

UPS NO: 2VBB-UPS1B
PNL NO: 2VBS-PNLB102
BKR NO: 13
CIRCUIT NO: N/A

DRAWING REFERENCES
EE-11Y

FEED TO DEVICE	DEVICE LOCATION		PLANT IMPACT
	BLDG	ELEV	
SPARE			

UPS NO: 2VBB-UPS1B
PNL NO: 2VBS-PNLB102
BKR NO: 14
CIRCUIT NO: N/A

DRAWING REFERENCES
EE-11Y

FEED TO DEVICE	DEVICE LOCATION		PLANT IMPACT
	BLDG	ELEV	
SPARE			

UPS NO: 2VBB-UPS1B
PNL NO: 2VBS-PNLB102
BKR NO: 15
CIRCUIT NO: N/A

DRAWING REFERENCES
EE-11Y

FEED TO DEVICE	DEVICE LOCATION		PLANT IMPACT
	BLDG	ELEV	
SPARE			

UPS NO: 2VBB-UPS1B
PNL NO: 2VBS-PNLB102
BKR NO: 16
CIRCUIT NO: N/A

DRAWING REFERENCES
EE-11Y

FEED TO DEVICE	DEVICE LOCATION		PLANT IMPACT
	BLDG	ELEV	
SPARE			

UPS NO: 2VBB-UPS1B
PNL NO: 2VBS-PNLB102
BKR NO: 17
CIRCUIT NO: N/A

DRAWING REFERENCES
EE-11Y

FEED TO DEVICE	DEVICE LOCATION		PLANT IMPACT
	BLDG	ELEV	
SPARE			

UPS NO: 2VBB-UPS1B
PNL NO: 2VBS-PNLB102
BKR NO: 18
CIRCUIT NO: N/A

DRAWING REFERENCES
EE-11Y

FEED TO DEVICE	DEVICE LOCATION		PLANT IMPACT
	BLDG	ELEV	
SPARE			

UPS NO: 2VBB-UPS1B
PNL NO: 2VBS-PNLB102
BKR NO: 19
CIRCUIT NO: N/A

DRAWING REFERENCES
EE-11Y

FEED TO DEVICE	DEVICE LOCATION		PLANT IMPACT
	BLDG	ELEV	
SPARE			

UPS NO: 2VBB-UPS1B
PNL NO: 2VBS-PNLB102
BKR NO: 20
CIRCUIT NO: N/A

DRAWING REFERENCES
EE-11Y

FEED TO DEVICE	DEVICE LOCATION		PLANT IMPACT
	BLDG	ELEV	
SPARE			

UPS NO: 2VBB-UPS1B
PNL NO: 2VBS-PNLB102
BKR NO: 21
CIRCUIT NO:N/A

DRAWING REFERENCES
EE-11S
EE-11Y

FEED TO DEVICE	DEVICE LOCATION		PLANT IMPACT
	BLDG	ELEV	
2VBS-XB107	TB	277	LOSS OF PNL 2VBS-PNLB107 SEE SECTION OF LOAD LIST FOR 2VBS-PNLB107

UPS NO: 2VBB-UPS1B
PNL NO: 2VBS-PNLB102
BKR NO: 22
CIRCUIT NO: N/A

DRAWING REFERENCES
EE-11S
EE-11Y

FEED TO DEVICE	DEVICE LOCATION		PLANT IMPACT
	BLDG	ELEV	
2VBS-XB108	TB	277	LOSS OF PNL 2VBS-PNLB108 SEE SECTION OF LOAD LIST FOR 2VBS-PNLB108

UPS NO: 2VBB-UPS1B
PNL NO: 2VBS-PNLB102
BKR NO: 23
CIRCUIT NO: N/A

DRAWING REFERENCES
EE-11S
EE-11Y

FEED TO DEVICE	DEVICE LOCATION		PLANT IMPACT
	BLDG	ELEV	
2VBS-XB109	EB	261	LOSS OF PNL 2VBS-PNLB109 SEE SEPARATE LOAD LIST FOR 2VBS-PNLB109

UPS1B

September 10, 1991

2VBB-UPS1B LOAD LIST
DWG. NO. AE-100E
SHEET 91 OF 228

UPS NO: 2VBB-UPS1B
PNL NO: 2VBS-PNLB102
BKR NO: 24
CIRCUIT NO: N/A

DRAWING REFERENCES

EE-11Y

FEED TO DEVICE	DEVICE LOCATION		PLANT IMPACT
	BLDG	ELEV	
SPARE			

UPS NO: 2VBB-UPS1B
PNL NO: 2VBS-PNLB102
BKR NO: 21
DIST PNL NO: 2VBS-PNLB107
BKR NO: 1
CIRCUIT NO: 2RU121

DRAWING REFERENCES

EE-11S
EE-3LE
LSK-22-3M

FEED TO DEVICE	DEVICE LOCATION		PLANT IMPACT
	BLDG	ELEV	
2RMS-RU121	RCR	284	RADWASTE CONTROL ROOM RADIATION MONITOR MICRO PROCESSOR 2RMS-RU121 INOPERABLE
			NOTES 1, 2 & 3, SHEET 128

UPS NO: 2VBB-UPS1B
PNL NO: 2VBS-PNLB102
BKR NO: 21
DIST PNL NO: 2VBS-PNLB107
BKR NO: 2
CIRCUIT NO: 2RU152

DRAWING REFERENCES

EE-11S
EE-3LE
LSK-22-5R

FEED TO DEVICE	DEVICE LOCATION		PLANT IMPACT
	BLDG	ELEV	
2RMS-RU152	RW	246	RADWASTE BUILDING FLOOR DRAIN SUMP PUMP AREA RADIATION MONITOR MICRO PROCESSOR 2RMS-RU152 INOPERABLE
			NOTES 1, 2 & 3, SHEET 128

UPS NO: 2VBB-UPS1B
PNL NO: 2VBS-PNLB102
BKR NO: 21
DIST PNL NO: 2VBS-PNLB107
BKR NO: 3
CIRCUIT NO: 2RU153

DRAWING REFERENCES

EE-11S
EE-3LE
LSK-22-5R

FEED TO DEVICE	DEVICE LOCATION		PLANT IMPACT
	BLDG	ELEV	
2RMS-RU153	RW	245	RADWASTE BUILDING BSMT ENTR AREA RADIATION MONITOR MICRO PROCESSOR 2RMS-RU153 INOPERABLE
			NOTES 1, 2 & 3, SHEET 128

UPS NO: 2VBB-UPS1B
PNL NO: 2VBS-PNLB102
BKR NO: 21
DIST PNL NO: 2VBS-PNLB107
BKR NO: 4
CIRCUIT NO: 2RU153

DRAWING REFERENCES

EE-11S
EE-3LE
LSK-9-7E

FEED TO DEVICE	DEVICE LOCATION		PLANT IMPACT
	BLDG	ELEV	
2CCS-CAB152	RW	240	TURBINE BUILDING CLOSED LOOP COOLING WATER RADWASTE BUILDING RTN HDR RADIATION MONITOR CABINET 2CCS-CAB152 INOPERABLE
			NOTES 2 & 3, SHEET 128

UPS NO: 2VBB-UPS1B
PNL NO: 2VBS-PNLB102
BKR NO: 21
DIST PNL NO: 2VBS-PNLB107
BKR NO: 5
CIRCUIT NO: 2RU134

DRAWING REFERENCES

EE-11S
EE-3LE
LSK-22-5R

FEED TO DEVICE	DEVICE LOCATION		PLANT IMPACT
	BLDG	ELEV	
2RMS-RU134	RW	264	RADWASTE BUILDING EVAPORATOR SAMPLING AREA RADIATION MONITOR MICROPROCESSOR 2CCS-RU134 INOPERABLE
			NOTES 1, 2, 3, SHEET 128

UPS NO: 2VBB-UPS1B
PNL NO: 2VBS-PNLB102
BKR NO: 21
DIST PNL NO: 2VBS-PNLB107
BKR NO: 6
CIRCUIT NO: 2RU1324

DRAWING REFERENCES

EE-11S
EE-3LE
LSK-22-5R

FEED TO DEVICE	DEVICE LOCATION		PLANT IMPACT
	BLDG	ELEV	
2RMS-RU132	RW	270	RADWASTE BUILDING COMPACTED WASTE STORAGE AREA RADIATION MONITOR MICROPROCESSOR 2CCS-RU132 INOPERABLE
			NOTES 1, 2 & 3, SHEET 128

UPS NO: 2VBB-UPS1B
PNL NO: 2VBS-PNLB102
BKR NO: 21
DIST PNL NO: 2VBS-PNLB107
BKR NO: 7
CIRCUIT NO: 2RU125

DRAWING REFERENCES

EE-11S
EE-3LE
LSK-22-5R

FEED TO DEVICE	DEVICE LOCATION		PLANT IMPACT
	BLDG	ELEV	
2RMS-RU125	RW	266	RADWASTE BUILDING TRK DOCK RADIATION MONITOR MICROPROCESSOR 2CCS-RU125 INOPERABLE
			NOTES 1, 2 & 3, SHEET 128

UPS NO: 2VBB-UPS1B
PNL NO: 2VBS-PNLB102
BKR NO: 21
DIST PNL NO: 2VBS-PNLB107
BKR NO: 8
CIRCUIT NO: 2RU206

DRAWING REFERENCES

EE-11S
EE-3TR
LSK-31-1.21D

FEED TO DEVICE	DEVICE LOCATION		PLANT IMPACT
	BLDG	ELEV	
2LWS-CAB206, (WINDOW 400214)	RW	279	LIQUID RADWASTE LAKE DISCHARGE RADIATION MONITORING CABINET 2LWS-CAB206 BECOMES INOPERABLE
			CLOSE 2LWS-AOV142 WASTE DISCHARGE TO LAKE

UPS NO: 2VBB-UPS1B
PNL NO: 2VBS-PNLB102
BKR NO: 21
DIST PNL NO: 2VBS-PNLB107
BKR NO: 9
CIRCUIT NO: 2RU142

DRAWING REFERENCES

EE-11S
EE-3LE
LSK-22-5R

FEED TO DEVICE	DEVICE LOCATION		PLANT IMPACT
	BLDG	ELEV	
2RMS-RU142	RW	283	RADWASTE BUILDING DISTILLATE CONDENSER AREA RADIATION MONITOR MICROPROCESSOR 2RMS-RU142 INOPERABLE
			NOTES 1, 2 & 3, SHEET 128

UPS NO: 2VBB-UPS1B
PNL NO: 2VBS-PNLB102
BKR NO: 21
DIST PNL NO: 2VBS-PNLB107
BKR NO: 10
CIRCUIT NO: 2RU146

DRAWING REFERENCES

EE-11S
EE-3LE
LSK-22-5R

FEED TO DEVICE	DEVICE LOCATION		PLANT IMPACT
	BLDG	ELEV	
2RMS-RU146	RW	283	RADWASTE BUILDING CASK CAPPING A AREA RADIATION MONITOR MICROPROCESSOR 2RMS-RU146 INOPERABLE
			NOTES 1, 2 & 3, SHEET 128

UPS NO: 2VBB-UPS1B
PNL NO: 2VBS-PNLB102
BKR NO: 21
DIST PNL NO: 2VBS-PNLB107
BKR NO: 11
CIRCUIT NO: 2RU133

DRAWING REFERENCES

EE-11S
EE-3LF
LSK-22-5R

FEED TO DEVICE	DEVICE LOCATION		PLANT IMPACT
	BLDG	ELEV	
2RMS-RU133	RW	295	RADWASTE BUILDING DISTILLATE ROUGHING FILTERS AREA RADIATION MONITOR MICROPROCESSOR 2RMS-RU133 INOPERABLE
			NOTES 1, 2 & 3, SHEET 128

UPS NO: 2VBB-UPS1B
PNL NO: 2VBS-PNLB102
BKR NO: 21
DIST PNL NO: 2VBS-PNLB107
BKR NO: 12
CIRCUIT NO: 2RU148

DRAWING REFERENCES

EE-11S
EE-3LF
LSK-22-5R

FEED TO DEVICE	DEVICE LOCATION		PLANT IMPACT
	BLDG	ELEV	
2RMS-RU148	RW	283	RADWASTE BUILDING SAMPLE PANEL AREA RADIATION MONITOR MICROPROCESSOR 2RMS-RU148 INOPERABLE
			NOTES 1, 2 & 3, SHEET 128

UPS NO: 2VBB-UPS1B
PNL NO: 2VBS-PNLB102
BKR NO: 21
DIST PNL NO: 2VBS-PNLB107
BKR NO: 13
CIRCUIT NO: 2RU147

DRAWING REFERENCES
EE-11S
EE-3RV
LSK-22-5R

FEED TO DEVICE	DEVICE LOCATION		PLANT IMPACT
	BLDG	ELEV	
2RMS-RU147	RW	283	RADWASTE BUILDING EXTD/EVAP TURNTABLE AREA RADIATION MONITOR MICROPROCESSOR 2RMS-RU147 INOPERABLE
			NOTES 1, 2 & 3, SHEET 128

UPS NO: 2VBB-UPS1B
PNL NO: 2VBS-PNLB102
BKR NO: 21
DIST PNL NO: 2VBS-PNLB107
BKR NO: 14
CIRCUIT NO: 2RU207

DRAWING REFERENCES

EE-11S
EE-3TM
LSK-31-3A

FEED TO DEVICE	DEVICE LOCATION		PLANT IMPACT
	BLDG	ELEV	
2WSS-RU207	RW	279	SOLID WASTE SLUDGE FEED TO EXTRUDER/EVAPORATOR RADIATION MONITOR MICROPROCESSOR 2WSS-RU207 INOPERABLE
			NOTES 2, 3 & 5, SHEET 128

UPS NO: 2VBB-UPS1B
PNL NO: 2VBS-PNLB102
BKR NO: 21
DIST PNL NO: 2VBS-PNLB107
BKR NO: 15
CIRCUIT NO: 2RU208

DRAWING REFERENCES

EE-11S
EE-3TM
LSK-31-3A

FEED TO DEVICE	DEVICE LOCATION		PLANT IMPACT
	BLDG	ELEV	
2WSS-RU208	RW	279	WASTE CONCENTRATE FEED TO EXTRUDER/EVAPORATOR RADIATION MONITOR MICROPROCESSOR 2WSS-RU208 INOPERABLE
			NOTES 2, 3 & 5, SHEET 128

UPS NO: 2VBB-UPS1B
PNL NO: 2VBS-PNLB102
BKR NO: 21
DIST PNL NO: 2VBS-PNLB107
BKR NO: 16
CIRCUIT NO: 2RU195

DRAWING REFERENCES

EE-11S
EE-3TP
LSK-22-5S

FEED TO DEVICE	DEVICE LOCATION		PLANT IMPACT
	BLDG	ELEV	
2HVW-RCPT1 (2HVW-CAB195)	RW	309 JX 10.7	RADWASTE BUILDING EQUIPMENT EXHAUST RADIATION MONITOR CABINET 2HVW-CAB195 INOPERABLE
			NOTES 1, 2, 3 & 6, SHEET 128

UPS NO: 2VBB-UPS1B
PNL NO: 2VBS-PNLB102
BKR NO: 21
DIST PNL NO: 2VBS-PNLB107
BKR NO: 17
CIRCUIT NO: 2RU196

DRAWING REFERENCES

EE-11S
EE-3TP
LSK-22-5S

FEED TO DEVICE	DEVICE LOCATION		PLANT IMPACT
	BLDG	ELEV	
2HVW-RCPT2 (2HVW-CAB196)	RW	309	RADWASTE BUILDING TANKS VENT RADIATION MONITOR CABINET 2HVW-CAB196 INOPERABLE
			NOTES 1, 2, 3 & 6, SHEET 128

UPS NO: 2VBB-UPS1B
PNL NO: 2VBS-PNLB102
BKR NO: 21
DIST PNL NO: 2VBS-PNLB107
BKR NO: 18
CIRCUIT NO: 2RU197

DRAWING REFERENCES

EE-11S
EE-3TP
LSK-22-5S

FEED TO DEVICE	DEVICE LOCATION		PLANT IMPACT
	BLDG	ELEV	
2HVW-RCPT3 (2HVW-CAB197)	RW	309	RADWASTE BUILDING EXHAUST DUCT RADIATION MONITOR CABINET 2HVW-CAB197 INOPERABLE
			NOTES 1, 2, 3 & 6, SHEET 128

UPS NO: 2VBB-UPS1B
PNL NO: 2VBS-PNLB102
BKR NO: 21
DIST PNL NO: 2VBS-PNLB107
BKR NO: 19
CIRCUIT NO: 2RU199

DRAWING REFERENCES

EE-11S
EE-3TP
LSK-22-5S

FEED TO DEVICE	DEVICE LOCATION		PLANT IMPACT
	BLDG	ELEV	
2HVW-RCPT4 (2HVW-CAB199)	RW	279	RADWASTE BUILDING DECONTAMINATION AREA EXHAUST RADIATION MONITOR CABINET 2HVW-CAB199 INOPERABLE
			NOTES 1, 2, 3 & 6, SHEET 128

UPS NO: 2VBB-UPS1B
PNL NO: 2VBS-PNLB102
BKR NO: 21
DIST PNL NO: 2VBS-PNLB107
BKR NO: 20
CIRCUIT NO: 2SSPC20

DRAWING REFERENCES

EE-11S
EE-3TA
16.230-001-021
16.230-001-022
16.230-001-023

FEED TO DEVICE	DEVICE LOCATION		PLANT IMPACT
	BLDG	ELEV	
2SSP-IPNL102 POST ACCIDENT SAMPLING STATION	RW	261	LOSS OF POST ACCIDENT SAMPLING STATION NOTE: STATION ALSO FED FROM 2VBS-PNLA102 BKR 14 VIA HC-600
			SEE ATTACHED

UPS NO: 2VBB-UPS1B
PNL NO: 2VBS-PNLB102
DIST PNL NO: 2VBS-PNLB107
BKR NO: 20

PLANT IMPACT: LOSS OF POWER TO 2SSP-IPNL102

LOOP	PMS INDICATION	PMS ALARM	ERF INPUT	CR ANNUNCIATION	LOCAL ANNUNCIATION	CR INDICATION	LOCAL INDICATION	VALVE POSITION	DESCRIPTION/OTHER
2SSP-FI104							X		RHR SYSTEM SAMPLE RETURN FLOW
2SSP-PI1661							X		REACTOR COOLANT SAMPLE INLET PRESSURE
2SSP-PI1662							X		GAS COLLECTION CHAMBER PRESSURE
2SSP-PI1708							X		GAS SAMPLE BOTTLE PRESSURE
2SSP-TI1660							X		REACTOR COOLANT SAMPLE INLET TEMP
2SSP-TI1724							X		SAMPLE GAS INLET TEMP.
2SSP-CI1663							X		REACTOR COOLANT SAMPLE INLET CONDUCTIVITY
2SSP-RI1507							X		SAMPLE AREA RADIATION
2SSP-RI1665							X		SAMPLE RETURN RADIATION
2SSP-RI1704							X		IODINE CARTRIDGE RADIATION
2SSP-LS1717							X		GAS COOLER TRAP LEVEL

THIS SHEET LEFT INTENTIONALLY BLANK

UPS NO: 2VBB-UPS1B
PNL NO: 2VBS-PNLB102
BKR NO: 21
DIST PNL NO: 2VBS-PNLB107
BKR NO: 21
CIRCUIT NO: 2GSNN01

DRAWING REFERENCES

EE-11S
EE-3TA
EE-11FQ, ESK-7GSN01, LSK-14-1F

FEED TO DEVICE	DEVICE LOCATION		PLANT IMPACT
	BLDG	ELEV	
2CES-PNL555 POST ACCIDENT SAMPLING	RW	261	PANEL LOSES POWER; SEE BELOW FOR AFFECTED EQUIPMENT
2GSN-SOV163-PURGES SAMPLE LINE SERVICING PRIMARY CONTAINMENT TRAIN "A" AIR	SC	256	VALVE FAILS CLOSE ON LOSS OF POWER; LOSS OF LOCAL INDICATING LIGHTS
2GSN-SOV164-PURGES SAMPLE LINE SERVICING PRIMARY CONTAINMENT TRAIN "B" AIR	SC	283	VALVE FAILS CLOSE ON LOSS OF POWER; LOSS OF LOCAL INDICATING LIGHTS
2GSN-SOV165-PURGES SAMPLE LINE SERVICING SECONDARY CONTAINMENT AIR	SC	292	VALVE FAILS CLOSE ON LOSS OF POWER; LOSS OF LOCAL INDICATING LIGHTS
ITEMS 1, 2, 3 ARE POST ACCIDENT SAMPLING NITROGEN PURGE VALVES			

THIS SHEET LEFT INTENTIONALLY BLANK

UPS NO: 2VBB-UPS1B
PNL NO: 2VBS-PNLB102
BKR NO: 21
DIST PNL NO: 2VBS-PNLB107
BKR NO: 21
CIRCUIT NO: 2GSNN02

DRAWING REFERENCES

EE-11S
EE-3TA
EE-11FL, ESK-7MWS02, LSK-9-15

FEED TO DEVICE	DEVICE LOCATION		PLANT IMPACT
	BLDG	ELEV	
2MWS-SOV150 FLUSHES SAMPLE LINE SERVICING RX JET PUMP #5	SC	244	VALVE FAILS CLOSE ON LOSS OF POWER; LOSS OF LOCAL INDICATING LIGHTS
2MWS-SOV151 FLUSHES SAMPLE LINE SERVICING RX JET PUMP #15	SC	284	VALVE FAILS CLOSE ON LOSS OF POWER; LOSS OF LOCAL INDICATING LIGHTS
2MWS-SOV152 FLUSHES SAMPLE LINE SERVICING H.E. 2RHS*E1B	ABN	184	VALVE FAILS CLOSE ON LOSS OF POWER; LOSS OF LOCAL INDICATING LIGHTS
ITEMS 4, 5, 6, 7 ARE POST ACCIDENT SAMPLING LINE FLUSHING VALVES	ABS	181	VALVE FAILS CLOSE ON LOSS OF POWER; LOSS OF LOCAL INDICATING LIGHTS

THIS SHEET LEFT INTENTIONALLY BLANK

UPS NO: 2VBB-UPS1B
PNL NO: 2VBS-PNLB102
BKR NO: 21
DIST PNL NO: 2VBS-PNLB107
BKR NO: 21
CIRCUIT NO: 2GSNN04

DRAWING REFERENCES

EE-11S
EE-3TA
EE-11FL, ESK-7SSR02, LSK-21-2C

FEED TO DEVICE	DEVICE LOCATION		PLANT IMPACT
	BLDG	ELEV	
2SSR-SOV17A (2RHS*E1A H.E. TO POST ACCIDENT SAMPLING ISOLATION VALVE)	ABN	99	VALVE FAILS CLOSE ON LOSS OF POWER; LOSS OF LOCAL INDICATING LIGHTS
2SSR-SOV17B (2RHS*E1B H.E. TO POST ACCIDENT SAMPLING ISOLATION VALVE)	ABS	180	VALVE FAILS CLOSE ON LOSS OF POWER; LOSS OF LOCAL INDICATING LIGHTS
ITEMS 8, 9 ARE POST ACCIDENT SAMPLING ISOLATION VALVES			
			TOTAL PLANT IMPACT: POST ACCIDENT VALVES 2GSN-SOV163, 164, 165; 2MWS-SOV151, 152, 153; 2SSR-SOV17A, B WILL CLOSE AND ALSO WILL LOSE VALVE'S INDICATING LIGHTS

THIS SHEET LEFT INTENTIONALLY BLANK

UPS NO: 2VBB-UPS1B
PNL NO: 2VBS-PNLB102
BKR NO: 21
DIST PNL NO: 2VBS-PNLB107
BKR NO: 22
CIRCUIT NO: 2HVWN17

DRAWING REFERENCES
ESK-6HVW10
LSK-22-5E
EE-11S
EE-3TA

FEED TO DEVICE	DEVICE LOCATION		PLANT IMPACT
	BLDG	ELEV	
2HVW-MST13 FOR POST ACCIDENT SAMPLING PANEL EXHAUST FAN 2HVW-FN13 PANEL EXHAUST FAN 2HVW-FN13	RW	306	FAN STOPS OR FAILS TO START; LOSS OF LOCAL INDICATING LIGHTS

UPS NO: 2VBB-UPS1B
PNL NO: 2VBS-PNLB102
BKR NO: 21
DIST PNL NO: 2VBS-PNLB107
BKR NO: 23
CIRCUIT NO: N/A

DRAWING REFERENCES

EE-11S

FEED TO DEVICE	DEVICE LOCATION		PLANT IMPACT
	BLDG	ELEV	
SPARE			NO IMPACT (SPARE)

UPS NO: 2VBB-UPS1B
PNL NO: 2VBS-PNLB102
BKR NO: 21
DIST PNL NO: 2VBS-PNLB107
BKR NO: 24
CIRCUIT NO: N/A

DRAWING REFERENCES

EE-11S

FEED TO DEVICE	DEVICE LOCATION		PLANT IMPACT
	BLDG	ELEV	
SPARE			NO IMPACT (SPARE)

UPS NO: 2VBB-UPS1B
PNL NO: 2VBS-PNLB102
BKR NO: 21
DIST PNL NO: 2VBS-PNLB107
BKR NO: 25
CIRCUIT NO: N/A

DRAWING REFERENCES

EE-11S

FEED TO DEVICE	DEVICE LOCATION		PLANT IMPACT
	BLDG	ELEV	
SPARE			NO IMPACT (SPARE)

UPS NO: 2VBB-UPS1B
PNL NO: 2VBS-PNLB102
BKR NO: 21
DIST PNL NO: 2VBS-PNLB107
BKR NO: 26
CIRCUIT NO: N/A

DRAWING REFERENCES

EE-11S

FEED TO DEVICE	DEVICE LOCATION		PLANT IMPACT
	BLDG	ELEV	
SPARE			NO IMPACT (SPARE)

UPS NO: 2VBB-UPS1B
PNL NO: 2VBS-PNLB102
BKR NO: 21
DIST PNL NO: 2VBS-PNLB107
BKR NO: 27
CIRCUIT NO: N/A

DRAWING REFERENCES

EE-11S

FEED TO DEVICE	DEVICE LOCATION		PLANT IMPACT
	BLDG	ELEV	
SPARE			NO IMPACT (SPARE)

UPS NO: 2VBB-UPS1B
PNL NO: 2VBS-PNLB102
BKR NO: 21
DIST PNL NO: 2VBS-PNLB107
BKR NO: 28
CIRCUIT NO: N/A

DRAWING REFERENCES

EE-11S

FEED TO DEVICE	DEVICE LOCATION		PLANT IMPACT
	BLDG	ELEV	
SPARE			NO IMPACT (SPARE)

NOTES:

1. Lose local horns, alarms & indicators.

2. Lose annunciator window & computer pt in control room.

3. RMS computer will have indication of microprocessor failure.

4. Lose local annunciator window.

5. Lose local recorders.

UPS NO: 2VBB-UPS1B
PNL NO: 2VBS-PNLB102
BKR NO: 22
DIST PNL NO: 2VBS-PNLB108
BKR NO: 1
CIRCUIT NO: 2RU118

DRAWING REFERENCES
EE-11S
EE-3RT
LSK-22-3M

FEED TO DEVICE	DEVICE LOCATION		PLANT IMPACT
	BLDG	ELEV	
2RMS-RU118	TB	265	NOTES 1, 2 & 3, SHEET 157 RAD AREA MONITOR FOR RADW SAMPL RM (TURBINE BUILDING) 2RMS-RU118 INOP

UPS NO: 2VBB-UPS1B
PNL NO: 2VBS-PNLB102
BKR NO: 22
DIST PNL NO: 2VBS-PNLB108
BKR NO: 2
CIRCUIT NO: 2RU137

DRAWING REFERENCES
EE-11S
EE-3RT
LSK-22-3M

FEED TO DEVICE	DEVICE LOCATION		PLANT IMPACT
	BLDG	ELEV	
2RMS-RU137	TB	266	NOTES 1, 2 & 3, SHEET 157 RAD AREA MONITOR FOR HOT MACH SHOP (TURBINE BUILDING) 2RMS-RU137 INOP

UPS NO: 2VBB-UPS1B
PNL NO: 2VBS-PNLB102
BKR NO: 22
DIST PNL NO: 2VBS-PNLB108
BKR NO: 3
CIRCUIT NO: 2RU119

DRAWING REFERENCES
EE-11S
EE-3RT
LSK-22-3M

FEED TO DEVICE	DEVICE LOCATION		PLANT IMPACT
	BLDG	ELEV	
2RMS-RU119	TB	254	NOTES 1, 2 & 3, SHEET 157 RAD AREA MONITOR FOR TRUCK AISLE-N (TURBINE BUILDING) 2RMS-RU119 INOP

UPS NO: 2VBB-UPS1B
PNL NO: 2VBS-PNLB102
BKR NO: 22
DIST PNL NO: 2VBS-PNLB108
BKR NO: 4
CIRCUIT NO: 2RU119

DRAWING REFERENCES
EE-11S
EE-3RT
LSK-22-3M

FEED TO DEVICE	DEVICE LOCATION		PLANT IMPACT
	BLDG	ELEV	
2RMS-RU141	TB	252	NOTES 1, 2 & 3, SHEET 157 RAD AREA MONITOR FOR TURB SAMPL ROOM 2RMS-RU141 INOP

UPS NO: 2VBB-UPS1B
PNL NO: 2VBS-PNLB102
BKR NO: 22
DIST PNL NO: 2VBS-PNLB108
BKR NO: 5
CIRCUIT NO: 2RU3A

DRAWING REFERENCES
EE-11S
EE-3RT
LSK-22-3M

FEED TO DEVICE	DEVICE LOCATION		PLANT IMPACT
	BLDG	ELEV	
2RMS-RU3A	TB	255	NOTES 1, 2 & 3, SHEET 157 RAD AREA MONITOR FOR HEATER BAY 'A' (TURBINE BUILDING) 2RMS-RU3A INOP

UPS NO: 2VBB-UPS1B
PNL NO: 2VBS-PNLB102
BKR NO: 22
DIST PNL NO: 2VBS-PNLB108
BKR NO: 6
CIRCUIT NO: 2RU3B

DRAWING REFERENCES
EE-11S
EE-3RT
LSK-22-3M

FEED TO DEVICE	DEVICE LOCATION		PLANT IMPACT
	BLDG	ELEV	
2RMS-RU3B	TB	255	NOTES 1, 2 & 3, SHEET 157 RAD AREA MONITOR FOR HEATER BAY 'B' (TURBINE BUILDING) 2RMS-RU3B INOP

UPS NO: 2VBB-UPS1B
PNL NO: 2VBS-PNLB102
BKR NO: 22
DIST PNL NO: 2VBS-PNLB108
BKR NO: 7
CIRCUIT NO: 2RU3C

DRAWING REFERENCES
EE-11S
EE-3RT
LSK-22-3M

FEED TO DEVICE	DEVICE LOCATION		PLANT IMPACT
	BLDG	ELEV	
2RMS-RU3C	TB	255	NOTES 1, 2 & 3, SHEET 157 RAD AREA MONITOR FOR HEATER BAY 'C' (TURBINE BUILDING) 2RMS-RU3C INOP

UPS NO: 2VBB-UPS1B
PNL NO: 2VBS-PNLB102
BKR NO: 22
DIST PNL NO: 2VBS-PNLB108
BKR NO: 8
CIRCUIT NO: 2RU138

DRAWING REFERENCES
EE-11S
EE-3RT
LSK-22-3M

FEED TO DEVICE	DEVICE LOCATION		PLANT IMPACT
	BLDG	ELEV	
2RMS-RU138	TB	255	NOTES 1, 2 & 3, SHEET 157 RAD AREA MONITOR FOR RX FWP 'A' (TURBINE BUILDING) 2RMS-RU138 INOP

UPS NO: 2VBB-UPS1B
PNL NO: 2VBS-PNLB102
BKR NO: 22
DIST PNL NO: 2VBS-PNLB108
BKR NO: 9
CIRCUIT NO: 2RU116

DRAWING REFERENCES
EE-11S
EE-3RT
LSK-22-3M

FEED TO DEVICE	DEVICE LOCATION		PLANT IMPACT
	BLDG	ELEV	
2RMS-RU116	TB	254	NOTES 1, 2 & 3, SHEET 157 RAD AREA MONITOR FOR CNDS PMP 'A' (TURBINE BUILDING) 2RMS-RU116 INOP

UPS NO: 2VBB-UPS1B
PNL NO: 2VBS-PNLB102
BKR NO: 22
DIST PNL NO: 2VBS-PNLB108
BKR NO: 10
CIRCUIT NO: 2RU117

DRAWING REFERENCES
EE-11S
EE-3RT
LSK-22-3M

FEED TO DEVICE	DEVICE LOCATION		PLANT IMPACT
	BLDG	ELEV	
2RMS-RU117	TB	254	NOTES 1, 2 & 3, SHEET 157 RAD AREA MONITOR FOR RESIN 'A'(TURBINE BUILDING) 2RMS-RU117 INOP

UPS NO: 2VBB-UPS1B
PNL NO: 2VBS-PNLB102
BKR NO: 22
DIST PNL NO: 2VBS-PNLB108
BKR NO: 11
CIRCUIT NO: 2RU150

DRAWING REFERENCES
EE-11S
EE-3RT
LSK-22-3M

FEED TO DEVICE	DEVICE LOCATION		PLANT IMPACT
	BLDG	ELEV	
2RMS-RU150	TB	255	NOTES 1, 2 & 3, SHEET 157 RAD AREA MONITOR FOR RESIN REGEN ROOM (TURBINE BUILDING) 2RMS-RU150 INOP

UPS NO: 2VBB-UPS1B
PNL NO: 2VBS-PNLB102
BKR NO: 22
DIST PNL NO: 2VBS-PNLB108
BKR NO: 12
CIRCUIT NO: 2RU135

DRAWING REFERENCES
EE-11S
EE-3RT
LSK-22-3M

FEED TO DEVICE	DEVICE LOCATION		PLANT IMPACT
	BLDG	ELEV	
2RMS-RU135	TB	255	NOTES 1, 2 & 3, SHEET 157 RAD AREA MONITOR FOR AIR RMV PMP 'A' (TURBINE BUILDING) 2RMS-RU135 INOP

UPS NO: 2VBB-UPS1B
PNL NO: 2VBS-PNLB102
BKR NO: 22
DIST PNL NO: 2VBS-PNLB108
BKR NO: 13
CIRCUIT NO: 2RU154

DRAWING REFERENCES
EE-11S
EE-3RT
LSK-22-3M

FEED TO DEVICE	DEVICE LOCATION		PLANT IMPACT
	BLDG	ELEV	
2RMS-RU154	TB	256	NOTES 1, 2 & 3, SHEET 157 RAD AREA MONITOR FOR COND 'A' (TURBINE BUILDING) 2RMS-RU154 INOP

UPS NO: 2VBB-UPS1B
PNL NO: 2VBS-PNLB102
BKR NO: 22
DIST PNL NO: 2VBS-PNLB108
BKR NO: 14
CIRCUIT NO: 2RU120

DRAWING REFERENCES
EE-11S
EE-3RT
LSK-22-3M

FEED TO DEVICE	DEVICE LOCATION		PLANT IMPACT
	BLDG	ELEV	
2RMS-RU120	TB	281	NOTES 1, 2 & 3, SHEET 157 RAD AREA MONITOR FOR URC FLOW ADJ PNL (TURBINE BUILDING) 2RMS-RU120 INOP

UPS NO: 2VBB-UPS1B
PNL NO: 2VBS-PNLB102
BKR NO: 22
DIST PNL NO: 2VBS-PNLB108
BKR NO: 15
CIRCUIT NO: 2RU136

DRAWING REFERENCES
EE-11S
EE-3RT
LSK-22-3M

FEED TO DEVICE	DEVICE LOCATION		PLANT IMPACT
	BLDG	ELEV	
2RMS-RU136	TB	292	NOTES 1, 2 & 3, SHEET 157 RAD AREA MONITOR FOR OFG CONT PNL A (TURBINE BUILDING) 2RMS-RU136 INOP

UPS NO: 2VBB-UPS1B
PNL NO: 2VBS-PNLB102
BKR NO: 22
DIST PNL NO: 2VBS-PNLB108
BKR NO: 16
CIRCUIT NO: 2RU151

DRAWING REFERENCES
EE-11S
EE-3RT
LSK-22-3M

FEED TO DEVICE	DEVICE LOCATION		PLANT IMPACT
	BLDG	ELEV	
2RMS-RU151	TB	209	NOTES 1, 2 & 3, SHEET 157 RAD AREA MONITOR FOR LP TURB 'A' (TURBINE BUILDING) 2RMS-RU151 INOP

UPS NO: 2VBB-UPS1B
PNL NO: 2VBS-PNLB102
BKR NO: 22
DIST PNL NO: 2VBS-PNLB108
BKR NO: 17
CIRCUIT NO: 2RU123

DRAWING REFERENCES
EE-11S
EE-3RT
LSK-22-3M

FEED TO DEVICE	DEVICE LOCATION		PLANT IMPACT
	BLDG	ELEV	
2RMS-RU123	TB	312	NOTES 1, 2 & 3, SHEET 157 RAD AREA MONITOR FOR OPR FL ENTR (TURBINE BUILDING) 2RMS-RU123 INOP

UPS NO: 2VBB-UPS1B
PNL NO: 2VBS-PNLB102
BKR NO: 22
DIST PNL NO: 2VBS-PNLB108
BKR NO: 18
CIRCUIT NO: 2RU191

DRAWING REFERENCES
EE-11S
EE-3RT
LSK-22-3M

FEED TO DEVICE	DEVICE LOCATION		PLANT IMPACT
	BLDG	ELEV	
2RMS-RU191	TB	311	NOTES 1, 2 & 3, SHEET 157 RAD AREA MONITOR FOR H-P COUNTING RM (TURBINE BUILDING) 2RMS-RU191 INOP

UPS NO: 2VBB-UPS1B
PNL NO: 2VBS-PNLB102
BKR NO: 22
DIST PNL NO: 2VBS-PNLB108
BKR NO: 19
CIRCUIT NO: 2RU192

DRAWING REFERENCES
EE-11S
EE-3RT
LSK-22-3M

FEED TO DEVICE	DEVICE LOCATION		PLANT IMPACT
	BLDG	ELEV	
2RMS-RU192	TB	312	NOTES 1, 2 & 3, SHEET 157 RAD AREA MONITOR FOR RX/RADW VENT MON 'A' 2RMS-RU192 INOP

UPS NO: 2VBB-UPS1B
PNL NO: 2VBS-PNLB102
BKR NO: 22
DIST PNL NO: 2VBS-PNLB108
BKR NO: 20
CIRCUIT NO: 2RU129

DRAWING REFERENCES
EE-11S
EE-3RU
LSK-22-9.1J

FEED TO DEVICE	DEVICE LOCATION		PLANT IMPACT
	BLDG	ELEV	
2RMS-RU129	CCR	306	NOTES 1, 2 & 3, SHEET 157 RAD AREA MONITOR FOR MN CONTROL RM 2RMS-RU129 INOP

UPS NO: 2VBB-UPS1B
PNL NO: 2VBS-PNLB102
BKR NO: 22
DIST PNL NO: 2VBS-PNLB108
BKR NO: 21
CIRCUIT NO: 2RU190

DRAWING REFERENCES
EE-11S
EE-3RU
LSK-22-9.1J

FEED TO DEVICE	DEVICE LOCATION		PLANT IMPACT
	BLDG	ELEV	
2RMS-RU190	CCR	293	NOTES 1, 2 & 3, SHEET 157 RAD AREA MONITOR FOR RLY AND COMPTR RM (CONTROL BUILDING) 2RMS-RU190 INOP

UPS NO: 2VBB-UPS1B
PNL NO: 2VBS-PNLB102
BKR NO: 22
DIST PNL NO: 2VBS-PNLB108
BKR NO: 22
CIRCUIT NO: 2RU130

DRAWING REFERENCES
EE-11S
EE-3RU
LSK-22-9.1J

FEED TO DEVICE	DEVICE LOCATION		PLANT IMPACT
	BLDG	ELEV	
2RMS-RU130	TB	261	NOTES 1, 2 & 3, SHEET 157 RAD AREA MONITOR FOR RMT SHT DN PNL 'A' (CONTROL ROOM) 2RMS-RU130 INOP

UPS NO: 2VBB-UPS1B
PNL NO: 2VBS-PNLB102
BKR NO: 22
DIST PNL NO: 2VBS-PNLB108
BKR NO: 23
CIRCUIT NO: 2RU13B

DRAWING REFERENCES
EE-11S
EE-3TQ
LSK-31-4F

FEED TO DEVICE	DEVICE LOCATION		PLANT IMPACT
	BLDG	ELEV	
20FG-CAB13B	GR	317	NOTES 2, 3, 4 & 5, SHEET 157 RAD PROCESS MONITOR FOR OFG PRE-TREAT 'B' 20FG-CAB13B INOP (OFFGAS ISOLATION INOP)

UPS NO: 2VBB-UPS1B
PNL NO: 2VBS-PNLB102
BKR NO: 22
DIST PNL NO: 2VBS-PNLB108
BKR NO: 24
CIRCUIT NO: 2RU13A

DRAWING REFERENCES
EE-11S
EE-3TQ
LSK-31-4F

FEED TO DEVICE	DEVICE LOCATION		PLANT IMPACT
	BLDG	ELEV	
20FG-CAB13A	GR	317	NOTES 2, 3, 4 & 5, SHEET 157 RAD PROCESS MONITOR FOR OFG PRE-TREAT 'A' 20FG-CAB13B INOP (OFFGAS ISOLATION INOP)

UPS NO: 2VBB-UPS1B
PNL NO: 2VBS-PNLB102
BKR NO: 22
DIST PNL NO: 2VBS-PNLB108
BKR NO: 25
CIRCUIT NO: 2RU157

DRAWING REFERENCES
EE-11S
EE-3TR
LSK-2-1.1J

FEED TO DEVICE	DEVICE LOCATION		PLANT IMPACT
	BLDG	ELEV	
2CWS-CAB157	SA	261	NOTES 2 & 3, SHEET 157 RAD PROCESS MONITOR FOR COOLING TWR BLOWDN 2CWS-CAB157 INOP

UPS NO: 2VBB-UPS1B
PNL NO: 2VBS-PNLB102
BKR NO: 22
DIST PNL NO: 2VBS-PNLB108
BKR NO: 26
CIRCUIT NO: 2RU206

DRAWING REFERENCES
EE-11S
EE-3TP
LSK-22-3Q

FEED TO DEVICE	DEVICE LOCATION		PLANT IMPACT
	BLDG	ELEV	
2HVT-RCPT1	TB	306	NOTES 1, 2, 3, SHEET 157 2HVT-RCPT1 IS THE POWER FOR 2HVT-CAB206
2HVT-CAB206	TB	306	RAD PROCESS MONITOR FOR TB EXH DUCT 2HVT-CAB206 INOP

UPS NO: 2VBB-UPS1B
PNL NO: 2VBS-PNLB102
BKR NO: 22
DIST PNL NO: 2VBS-PNLB108
BKR NO: 27
CIRCUIT NO: 2GM2NNK

DRAWING REFERENCES
EE-11S
EE-3NG

FEED TO DEVICE	DEVICE LOCATION		PLANT IMPACT
	BLDG	ELEV	
2GMC-PNL141	TB	277	LOSS OF INPUTS TO GENERATOR TEMP MONITORING & LOGGING FUNCTIONS ON LWS COMPUTER

UPS NO: 2VBB-UPS1B
PNL NO: 2VBS-PNLB108
BKR NO: 22
DIST PNL NO: 2VBS-PNLB108
BKR NO: 28
CIRCUIT NO: N/A

DRAWING REFERENCES
EE-118

FEED TO DEVICE	DEVICE LOCATION		PLANT IMPACT
	BLDG	ELEV	
SPARE			NONE

NOTES:

1. LOSS OF LOCAL HORNS, ALARMS & INDICATORS

2. LOSS OF ANNUNCIATOR WINDOW & COMPTR PT IN CONTROL ROOM

3. RMS COMPUTER WILL HAVE INDICATION OF MICROPROCESSOR FAILURE

4. VALVE 20FG-AOV103 (OFFGAS TO THE STACK LINE) WILL LOSE THE AUTOMATIC CLOSE FUNCTION ON HIGH RADIATION

5. LOSS OF LOCAL ANNUNCIATOR WINDOW

UPS NO: 2VBB-UPS1B
PNL NO: 2VBS-PNLB102
BKR #23
DIST PNL NO: 2VBS-PNLB109
BKR NO: 1
CIRCUIT NO: 2RU108

DRAWING REFERENCES

EE-11S
LSK-22-1R
EE-3LF

FEED TO DEVICE	DEVICE LOCATION		PLANT IMPACT
	BLDG	ELEV	
2RMS-RU108	SC	294	RB CRD MAINT FACIL. A RADN MONITOR NOTES 1, 2 & 3, SHEET 186 2RMS-RU108 INOP

UPS NO: 2VBB-UPS1B
PNL NO: 2VBS-PNLB102
BKR #23
DIST PNL NO: 2VBS-PNLB109
BKR NO: 2
CIRCUIT NO: 2RU106

DRAWING REFERENCES

EE-11S
LSK-22-1R
EE-3LF

FEED TO DEVICE	DEVICE LOCATION		PLANT IMPACT
	BLDG	ELEV	
2RMS-RU106	SC	266	RB ENTRANCE A RADON NOTES 1, 2 & 3, SHEET 186 2RMS-RU106 INOP

UPS NO: 2VBB-UPS1B
PNL NO: 2VBS-PNLB102
BKR #23
DIST PNL NO: 2VBS-PNLB109
BKR NO: 3
CIRCUIT NO: 2RU144

DRAWING REFERENCES

EE-11S
LSK-22-1R
EE-3LF

FEED TO DEVICE	DEVICE LOCATION		PLANT IMPACT
	BLDG	ELEV	
2RMS-RU144	SC	266	RB CRD MODULE A-S NOTES 1, 2 & 3, SHEET 186 2RMS-RU144 INOP

UPS NO: 2VBB-UPS1B
PNL NO: 2VBS-PNLB102
BKR #23
DIST PNL NO: 2VBS-PNLB109
BKR NO: 4
CIRCUIT NO: 2RU143

DRAWING REFERENCES

EE-11S
EE-3LF
LSK-22-1R

FEED TO DEVICE	DEVICE LOCATION		PLANT IMPACT
	BLDG	ELEV	
2RMS-RU143	SC	266	RB CRD MODULE A-N NOTES 1, 2 & 3, SHEET 186 2RMS-RU143 INOP

UPS NO: 2VBB-UPS1B
PNL NO: 2VBS-PNLB102
BKR #23
DIST PNL NO: 2VBS-PNLB109
BKR NO: 5
CIRCUIT NO: 2RU145

DRAWING REFERENCES

EE-11S
LSK-22-1R
EE-3LF

FEED TO DEVICE	DEVICE LOCATION		PLANT IMPACT
	BLDG	ELEV	
2RMS-RU145	SC	245	REAC SAMPL A RADN NOTES 1, 2 & 3, SHEET 186 2RMS-RU145 INOP

UPS NO: 2VBB-UPS1B
PNL NO: 2VBS-PNLB102
BKR # 23
DIST PNL NO: 2VBS-PNLB109
BKR NO: 6
CIRCUIT NO: 2RU4105

DRAWING REFERENCES

EE-11S
LSK-22-1R
EE-3LF

FEED TO DEVICE	DEVICE LOCATION		PLANT IMPACT
	BLDG	ELEV	
2RMS-RU105	SC	225	RB TIP EQPT A RADN NOTES 1, 2 & 3, SHEET 186 2RMS-RU105 INOP

UPS NO: 2VBB-UPS1B
PNL NO: 2VBS-PNLB102
BKR #23
DIST PNL NO: 2VBS-PNLB109
BKR NO: 7
CIRCUIT NO: 2RU2B

DRAWING REFERENCES

EE-11S
LSK-22-1R
EE-3LF

FEED TO DEVICE	DEVICE LOCATION		PLANT IMPACT
	BLDG	ELEV	
2RMS-RU2B	SC	220	RB RECIRC PUMP 1B PNL RADN NOTES 1, 2 & 3, SHEET 186 2RMS-RU2B INOP

UPS NO: 2VBB-UPS1B
PNL NO: 2VBS-PNLB102
BKR #23
DIST PNL NO: 2VBS-PNLB109
BKR NO: 8
CIRCUIT NO: 2RU2A

DRAWING REFERENCES

EE-11S
LSK-22-1R
EE-3RS

FEED TO DEVICE	DEVICE LOCATION		PLANT IMPACT
	BLDG	ELEV	
2RMS-RU2A	SC	220	RB RECIRC PUMP 1A PNL NOTES 1, 2 & 3, SHEET 186 2RMS-RU2A INOP

UPS NO: 2VBB-UPS1B
PNL NO: 2VBS-PNLB102
BKR #23
DIST PNL NO: 2VBS-PNLB109
BKR NO: 9
CIRCUIT NO: 2RU139

DRAWING REFERENCES

EE-11S
LSK-R22-1R
EE-3TM

FEED TO DEVICE	DEVICE LOCATION		PLANT IMPACT
	BLDG	ELEV	
2RMS-RU139	SC	220	RB ABOVE SUPPLY POOL RADN NOTES 1, 2 & 3, SHEET 186 2RMS-RU139 INOP

UPS NO: 2VBB-UPS1B
PNL NO: 2VBS-PNLB102
BKR #23
DIST PNL NO: 2VBS-PNLB109
BKR NO: 10
CIRCUIT NO: 2RU101

DRAWING REFERENCES

EE-11S
LSK-22-1R
EE-3RS

FEED TO DEVICE	DEVICE LOCATION		PLANT IMPACT
	BLDG	ELEV	
2RMS-RU101	ABN	180	RB N RHS EQPT RM RADN NOTES 1, 2 & 3, SHEET 186 2RMS-RU101 INOP

UPS NO: 2VBB-UPS1B
PNL NO: 2VBS-PNLB102
BKR #23
DIST PNL NO: 2VBS-PNLB109
BKR NO: 11
CIRCUIT NO: 2RU104

DRAWING REFERENCES

EE-11S
LSK-22-1R
EE-3RS

FEED TO DEVICE	DEVICE LOCATION		PLANT IMPACT
	BLDG	ELEV	
2RMS-RU104	SC	178	RB EQPT DR WEST RADN NOTES 1, 2 & 3, SHEET 186 2RMS-RU104 INOP

UPS NO: 2VBB-UPS1B
PNL NO: 2VBS-PNLB102
BKR #23
DIST PNL NO: 2VBS-PNLB109
BKR NO: 12
CIRCUIT NO: 2RU103

DRAWING REFERENCES

EE-11S
LSK-22-1R
EE-3RS

FEED TO DEVICE	DEVICE LOCATION		PLANT IMPACT
	BLDG	ELEV	
2RMS-RU103	ABS	180	RB & RHS EQPT RM RADN NOTES 1, 2 & 3, SHEET 186 2RMS-RU103 INOP

UPS NO: 2VBB-UPS1B
PNL NO: 2VBS-PNLB102
BKR #23
DIST PNL NO: 2VBS-PNLB109
BKR NO: 13
CIRCUIT NO: 2RU102

DRAWING REFERENCES

EE-11S
LSK-22-1R
EE-3RS

FEED TO DEVICE	DEVICE LOCATION		PLANT IMPACT
	BLDG	ELEV	
2RMS-RU102	SC	180	RB EQPT DR EAST RADN NOTES 1, 2 & 3, SHEET 186 2RMS-RU102 INOP

UPS NO: 2VBB-UPS1B
PNL NO: 2VBS-PNLB102
BKR #23
DIST PNL NO: 2VBS-PNLB109
BKR NO: 14
CIRCUIT NO: 2RU149

DRAWING REFERENCES

EE-11S
LSK-22-1R
EE-3RV

FEED TO DEVICE	DEVICE LOCATION		PLANT IMPACT
	BLDG	ELEV	
2RMS-RU149	SC	333	RB RWCU VALVE A RADN NOTES 1, 2 & 3, SHEET 186 2RMS-RU149 INOP

UPS NO: 2VBB-UPS1B
PNL NO: 2VBS-PNLB102
BKR #23
DIST PNL NO: 2VBS-PNLB109
BKR NO: 15
CIRCUIT NO: 2RU109

DRAWING REFERENCES

EE-11S
LSK-22-1R
EE-3RS

FEED TO DEVICE	DEVICE LOCATION		PLANT IMPACT
	BLDG	ELEV	
2RMS-RU109	SC	333	RB CONTAM EQPT STOR A RADN NOTES 1, 2 & 3, SHEET 186 2RMS-RU109 INOP

UPS NO: 2VBB-UPS1B
PNL NO: 2VBS-PNLB102
BKR #23
DIST PNL NO: 2VBS-PNLB109
BKR NO: 16
CIRCUIT NO: 2RU113

DRAWING REFERENCES

EE-11S
LSK-22-1R
EE-3RS

FEED TO DEVICE	DEVICE LOCATION		PLANT IMPACT
	BLDG	ELEV	
2RMS-RU113	RB	358	OUT NEW FUEL STOR VAULT RADN NOTES 1, 2 & 3, SHEET 186 2RMS-RU113 INOP

UPS NO: 2VBB-UPS1B
PNL NO: 2VBS-PNLB102
BKR #23
DIST PNL NO: 2VBS-PNLB109
BKR NO: 17
CIRCUIT NO: 2RU140

DRAWING REFERENCES

EE-11S
LSK-22-1R
EE-3RS

FEED TO DEVICE	DEVICE LOCATION		PLANT IMPACT
	BLDG	ELEV	
2RMS-RU140	RB	358	INSIDE NEW FUEL STOR VAULT RADN NOTES 1, 2 & 3, SHEET 186 2RMS-RU140 INOP

UPS NO: 2VBB-UPS1B
PNL NO: 2VBS-PNLB102
BKR #23
DIST PNL NO: 2VBS-PNLB109
BKR NO: 18
CIRCUIT NO: 2RU112

DRAWING REFERENCES

EE-11S
LSK-22-1R
EE-3RU

FEED TO DEVICE	DEVICE LOCATION		PLANT IMPACT
	BLDG	ELEV	
2RMS-RU112	RB	358	SPC REFUEL PLATF HI RNG RADN NOTES 1, 2 & 3, SHEET 186 2RMS-RU112 INOP

UPS NO: 2VBB-UPS1B
PNL NO: 2VBS-PNLB102
BKR# 23
DIST PNL NO: 2VBS-PNLB109
BKR NO: 19
CIRCUIT NO: 2RU111

DRAWING REFERENCES

EE-11S
LSK-22-1R
EE-3RU

FEED TO DEVICE	DEVICE LOCATION		PLANT IMPACT
	BLDG	ELEV	
2RMS-RU111	RB	358	SPC REFUEL PLATF LOW RNG RADN NOTES 1, 2 & 3, SHEET 186 2RMS-RU111 INOP

UPS NO: 2VBB-UPS1B
PNL NO: 2VBS-PNLB102
BKR #23
DIST PNL NO: 2VBS-PNLB109
BKR NO: 20
CIRCUIT NO: 2RU114

DRAWING REFERENCES

EE-11S
LSK-22-1R
EE-3RS

FEED TO DEVICE	DEVICE LOCATION		PLANT IMPACT
	BLDG	ELEV	
2RMS-RU114	RB	358	RB OPR FL EQPT RADN NOTES 1, 2 & 3, SHEET 186 2RMS-RU114 INOP

UPS NO: 2VBB-UPS1B
PNL NO: 2VBS-PNLB102
BKR# 23
DIST PNL NO: 2VBS-PNLB109
BKR NO: 21
CIRCUIT NO: 2RU105

DRAWING REFERENCES

EE-11S
LSK-27-15G
EE-3TQ

FEED TO DEVICE	DEVICE LOCATION		PLANT IMPACT
	BLDG	ELEV	
2GTS-CAB105	MS	261	STANDBY GAS TREATMENT RAD. MON. CAB. NOTES 2 & 3, SHEET 186 2GTS-CAB105 INOP

UPS NO: 2VBB-UPS1B
PNL NO: 2VBS-PNLB102
BKR #23
DIST PNL NO: 2VBS-PNLB109
BKR NO: 22
CIRCUIT NO: 2RU193

DRAWING REFERENCES

EE-11S
LSK-22-3M
EE-3RU

FEED TO DEVICE	DEVICE LOCATION		PLANT IMPACT
	BLDG	ELEV	
2RMS-RU193	MS	265	MAIN STACK RLSE MON A RADN NOTES 1, 2 & 3, SHEET 186 2RMS-RU193 INOP

UPS NO: 2VBB-UPS1B
PNL NO: 2VBS-PNLB102
BKR# 23
DIST PNL NO: 2VBS-PNLB109
BKR NO: 23
CIRCUIT NO: 2RU115

DRAWING REFERENCES

EE-11S
LSK-9-1H
EE-3TR

FEED TO DEVICE	DEVICE LOCATION		PLANT IMPACT
	BLDG	ELEV	
2CCP-CAB115	SC	188	RB CL LOOP COOLING RTN HDR RAD. MON. NOTES 2 & 3, SHEET 186 2CCP-CAB115 INOP

UPS NO: 2VBB-UPS1B
PNL NO: 2VBS-PNLB102
BKR# 23
DIST PNL NO: 2VBS-PNLB109
BKR NO: 24
CIRCUIT NO: 2RU131

DRAWING REFERENCES

EE-11S
LSK-9-1H
EE-3TR

FEED TO DEVICE	DEVICE LOCATION		PLANT IMPACT
	BLDG	ELEV	
2CCP-CAB131	SC	306	RB CLOSED LOOP COOLING HDR RWCU RAD MON. NOTES 2 & 3, SHEET 186 2CCP-CAB131 INOP

UPS NO: 2VBB-UPS1B
PNL NO: 2VBS-PNLB102
BKR #23
DIST PNL NO: 2VBS-PNLB109
BKR NO: 25
CIRCUIT NO: 2RU142

DRAWING REFERENCES

EE-11S
LSK-34-2G
EE-3TR

FEED TO DEVICE	DEVICE LOCATION		PLANT IMPACT
	BLDG	ELEV	
2SFC-CAB142	SC	289	SF COOL FLTRS INLET RAD. MON. NOTES 2 & 3, SHEET 186 2SFC-CAB142 INOP

UPS NO: 2VBB-UPS1B
PNL NO: 2VBS-PNLB102
BKR #23
DIST PNL NO: 2VBS-PNLB109
BKR NO: 26
CIRCUIT NO: 2RU229

DRAWING REFERENCES

EE-11S
EE-3TP
LSK-22-1S

FEED TO DEVICE	DEVICE LOCATION		PLANT IMPACT
	BLDG	ELEV	
2HVR-CAB229 RCPT	SC	306	CABINET RB RECIRC DUCT RAD MON. NOTES 2 & 3, SHEET 186 2HVR-CAB229 INOP

UPS NO: 2VBB-UPS1B
PNL NO: 2VBS-PNLB102
BKR# 23
DIST PNL NO: 2VBS-PNLB109
BKR NO: 27
CIRCUIT NO: 2RU237

DRAWING REFERENCES

EE-11S
EE-3TP
LSK-22-1S

FEED TO DEVICE	DEVICE LOCATION		PLANT IMPACT
	BLDG	ELEV	
2HVR-CAB237 RCPT	ABN	198	2RHS*E1A CUBICLE RADN MON. NOTES 2 & 3, SHEET 186 2HVR-CAB237 INOP

UPS NO: 2VBB-UPS1B
PNL NO: 2VBS-PNLB102
BKR# 23
DIST PNL NO: 2VBS-PNLB109
BKR NO: 28
CIRCUIT NO: 2RU238

DRAWING REFERENCES

EE-11S
EE-3TP
LSK-22-1S

FEED TO DEVICE	DEVICE LOCATION		PLANT IMPACT
	BLDG	ELEV	
2HVR-CAB238 RCPT	ABS	198	2RHS*E1B CUBICLE RADN MON. NOTES 2 & 3, SHEET 186 2HVR-CAB238 INOP

NOTES:

1. LOSE LOCAL HORNS, ALARMS AND INDICATORS
2. LOSE ANNUNCIATOR WINDOW AND COMPUTER PT. IN CONTROL ROOM
3. RMS COMPUTER WILL HAVE INDICATION OF MICROPROCESSOR FAILURE

UPS NO: 2VBB-UPS1B
PNL NO: 2VBS-PNLB111

DRAWING REFERENCES

EE-11BK

BKR NO: 1
CIRCUIT NO: N/A

FEED TO DEVICE	DEVICE LOCATION		PLANT IMPACT
	BLDG	ELEV	
RADIAX SYSTEM			PARTIAL LOSS OF RADIAX SYSTEM

UPS NO: 2VBB-UPS1B
PNL NO: 2VBS-PNLB111

BKR NO: 2
CIRCUIT NO: N/A

DRAWING REFERENCES

EE-11BK

FEED TO DEVICE	DEVICE LOCATION		PLANT IMPACT
	BLDG	ELEV	
RADIAX SYSTEM			PARTIAL LOSS OF RADIAX SYSTEM

UPS NO: 2VBB-UPS1B
PNL NO: 2VBS-PNLB111

BKR NO: 3
CIRCUIT NO: N/A

DRAWING REFERENCES

EE-11BK

FEED TO DEVICE	DEVICE LOCATION		PLANT IMPACT
	BLDG	ELEV	
RADIAX SYSTEM			PARTIAL LOSS OF RADIAX SYSTEM

UPS NO: 2VBB-UPS1B
PNL NO: 2VBS-PNLB111

DRAWING REFERENCES

EE-11BK

BKR NO: 4
CIRCUIT NO: N/A

FEED TO DEVICE	DEVICE LOCATION		PLANT IMPACT
	BLDG	ELEV	
RADIAX SYSTEM			PARTIAL LOSS OF RADIAX SYSTEM

UPS NO: 2VBB-UPS1B
PNL NO: 2VBS-PNLB111

DRAWING REFERENCES

EE-11BK

BKR NO: 5
CIRCUIT NO: N/A

FEED TO DEVICE	DEVICE LOCATION		PLANT IMPACT
	BLDG	ELEV	
RADIAX SYSTEM			PARTIAL LOSS OF RADIAX SYSTEM

UPS NO: 2VBB-UPS1B
PNL NO: 2VBS-PNLB111

BKR NO: 6
CIRCUIT NO: N/A

DRAWING REFERENCES

EE-11BK

FEED TO DEVICE	DEVICE LOCATION		PLANT IMPACT
	BLDG	ELEV	
RADIAX SYSTEM			PARTIAL LOSS OF RADIAX SYSTEM

UPS NO: 2VBB-UPS1B
PNL NO: 2VBS-PNLB111

BKR NO: 7
CIRCUIT NO: N/A

DRAWING REFERENCES

EE-11BK

FEED TO DEVICE	DEVICE LOCATION		PLANT IMPACT
	BLDG	ELEV	
RADIAX SYSTEM			PARTIAL LOSS OF RADIAX SYSTEM

UPS NO: 2VBB-UPS1B
PNL NO: 2VBS-PNLB111

BKR NO: 8
CIRCUIT NO: N/A

DRAWING REFERENCES

EE-11BK

FEED TO DEVICE	DEVICE LOCATION		PLANT IMPACT
	BLDG	ELEV	
RADIAX SYSTEM			PARTIAL LOSS OF RADIAX SYSTEM

UPS NO: 2VBB-UPS1B
PNL NO: 2VBS-PNLB111

DRAWING REFERENCES

EE-11BK

BKR NO: 9
CIRCUIT NO: N/A

FEED TO DEVICE	DEVICE LOCATION		PLANT IMPACT
	BLDG	ELEV	
RADIAX SYSTEM			PARTIAL LOSS OF RADIAX SYSTEM

UPS NO: 2VBB-UPS1B
PNL NO: 2VBS-PNLB111

DRAWING REFERENCES

EE-11BK

BKR NO: 10
CIRCUIT NO: N/A

FEED TO DEVICE	DEVICE LOCATION		PLANT IMPACT
	BLDG	ELEV	
RADIAX SYSTEM			PARTIAL LOSS OF RADIAX SYSTEM

UPS NO: 2VBB-UPS1B
PNL NO: 2VBS-PNLB111

BKR NO: 11
CIRCUIT NO: N/A

DRAWING REFERENCES

EE-11BK

FEED TO DEVICE	DEVICE LOCATION		PLANT IMPACT
	BLDG	ELEV	
RADIAX SYSTEM			PARTIAL LOSS OF RADIAX SYSTEM

UPS NO: 2VBB-UPS1B
PNL NO: 2VBS-PNLB111

BKR NO: 12
CIRCUIT NO: N/A

DRAWING REFERENCES

EE-11BK

FEED TO DEVICE	DEVICE LOCATION		PLANT IMPACT
	BLDG	ELEV	
RADIAX SYSTEM			PARTIAL LOSS OF RADIAX SYSTEM

UPS NO: 2VBB-UPS1B
PNL NO: 2VBS-PNLB111

BKR NO: 13
CIRCUIT NO: N/A

DRAWING REFERENCES

EE-11BK

FEED TO DEVICE	DEVICE LOCATION		PLANT IMPACT
	BLDG	ELEV	
RADIAX SYSTEM			PARTIAL LOSS OF RADIAX SYSTEM

UPS NO: 2VBB-UPS1B
PNL NO: 2VBS-PNLB111

BKR NO: 14
CIRCUIT NO: N/A

DRAWING REFERENCES

EE-11BK

FEED TO DEVICE	DEVICE LOCATION		PLANT IMPACT
	BLDG	ELEV	
RADIAX SYSTEM			PARTIAL LOSS OF RADIAX SYSTEM

UPS NO: 2VBB-UPS1B
PNL NO: 2VBS-PNLB111

BKR NO: 15
CIRCUIT NO: N/A

DRAWING REFERENCES

EE-11BK

FEED TO DEVICE	DEVICE LOCATION		PLANT IMPACT
	BLDG	ELEV	
RADIAX SYSTEM			PARTIAL LOSS OF RADIAX SYSTEM

UPS NO: 2VBB-UPS1B
PNL NO: 2VBS-PNLB111

BKR NO: 16
CIRCUIT NO: N/A

DRAWING REFERENCES

EE-11BK

FEED TO DEVICE	DEVICE LOCATION		PLANT IMPACT
	BLDG	ELEV	
RADIAX SYSTEM			PARTIAL LOSS OF RADIAX SYSTEM

UPS NO: 2VBB-UPS1B
PNL NO: 2VBS-PNLB111

BKR NO: 17
CIRCUIT NO: N/A

DRAWING REFERENCES

EE-11BK

FEED TO DEVICE	DEVICE LOCATION		PLANT IMPACT
	BLDG	ELEV	
RADIAX SYSTEM			PARTIAL LOSS OF RADIAX SYSTEM

UPS NO: 2VBB-UPS1B
PNL NO: 2VBS-PNLB111

BKR NO: 18
CIRCUIT NO: N/A

DRAWING REFERENCES

EE-11BK

FEED TO DEVICE	DEVICE LOCATION		PLANT IMPACT
	BLDG	ELEV	
RADIAX SYSTEM			PARTIAL LOSS OF RADIAX SYSTEM

UPS NO: 2VBB-UPS1B
PNL NO: 2VBS-PNLB111

BKR NO: 19
CIRCUIT NO: N/A

DRAWING REFERENCES

EE-11BK

FEED TO DEVICE	DEVICE LOCATION		PLANT IMPACT
	BLDG	ELEV	
RADIAX SYSTEM			PARTIAL LOSS OF RADIAX SYSTEM

UPS NO: 2VBB-UPS1B
PNL NO: 2VBS-PNLB111

BKR NO: 20
CIRCUIT NO: N/A

DRAWING REFERENCES

EE-11BK

FEED TO DEVICE	DEVICE LOCATION		PLANT IMPACT
	BLDG	ELEV	
RADIAX SYSTEM			PARTIAL LOSS OF RADIAX SYSTEM

UPS NO: 2VBB-UPS1B
PNL NO: 2VBS-PNLB111

BKR NO: 21
CIRCUIT NO: N/A

DRAWING REFERENCES

EE-11BK

FEED TO DEVICE	DEVICE LOCATION		PLANT IMPACT
	BLDG	ELEV	
RADIAX SYSTEM			PARTIAL LOSS OF RADIAX SYSTEM

UPS NO: 2VBB-UPS1B
PNL NO: 2VBS-PNLB111

BKR NO: 22
CIRCUIT NO: N/A

DRAWING REFERENCES

EE-11BK

FEED TO DEVICE	DEVICE LOCATION		PLANT IMPACT
	BLDG	ELEV	
RADIAX SYSTEM			PARTIAL LOSS OF RADIAX SYSTEM

UPS NO: 2VBB-UPS1B
PNL NO: 2VBS-PNLB111

BKR NO: 23
CIRCUIT NO: N/A

DRAWING REFERENCES

EE-11BK

FEED TO DEVICE	DEVICE LOCATION		PLANT IMPACT
	BLDG	ELEV	
RADIAX SYSTEM			PARTIAL LOSS OF RADIAX SYSTEM

UPS NO: 2VBB-UPS1B
PNL NO: 2VBS-PNLB111

BKR NO: 24
CIRCUIT NO: N/A

DRAWING REFERENCES

EE-11BK

FEED TO DEVICE	DEVICE LOCATION		PLANT IMPACT
	BLDG	ELEV	
RADIAX SYSTEM			PARTIAL LOSS OF RADIAX SYSTEM

UPS NO: 2VBB-UPS1B
PNL NO: 2VBS-PNLB111

BKR NO: 25
CIRCUIT NO: N/A

DRAWING REFERENCES

EE-11BK

FEED TO DEVICE	DEVICE LOCATION		PLANT IMPACT
	BLDG	ELEV	
RADIAX SYSTEM			PARTIAL LOSS OF RADIAX SYSTEM

UPS NO: 2VBB-UPS1B
PNL NO: 2VBS-PNLB111

DRAWING REFERENCES

EE-11BK

BKR NO: 26
CIRCUIT NO: N/A

FEED TO DEVICE	DEVICE LOCATION		PLANT IMPACT
	BLDG	ELEV	
RADIAX SYSTEM			PARTIAL LOSS OF RADIAX SYSTEM

UPS NO: 2VBB-UPS1B
PNL NO: 2VBS-PNLB111

BKR NO: 27
CIRCUIT NO: N/A

DRAWING REFERENCES

EE-11BK

FEED TO DEVICE	DEVICE LOCATION		PLANT IMPACT
	BLDG	ELEV	
RADIAX SYSTEM			PARTIAL LOSS OF RADIAX SYSTEM

UPS NO: 2VBB-UPS1B
PNL NO: 2VBS-PNLB111

DRAWING REFERENCES

EE-11BK

BKR NO: 28
CIRCUIT NO: N/A

FEED TO DEVICE	DEVICE LOCATION		PLANT IMPACT
	BLDG	ELEV	
RADIAX SYSTEM			PARTIAL LOSS OF RADIAX SYSTEM

UPS NO: 2VBB-UPS1B
PNL NO: 2VBS-PNLB111

DRAWING REFERENCES

EE-11BK

BKR NO: 29
CIRCUIT NO: N/A

FEED TO DEVICE	DEVICE LOCATION		PLANT IMPACT
	BLDG	ELEV	
RADIAX SYSTEM			PARTIAL LOSS OF RADIAX SYSTEM

UPS NO: 2VBB-UPS1B
PNL NO: 2VBS-PNLB111

BKR NO: 30
CIRCUIT NO: N/A

DRAWING REFERENCES

EE-11BK

FEED TO DEVICE	DEVICE LOCATION		PLANT IMPACT
	BLDG	ELEV	
RADIAX SYSTEM			PARTIAL LOSS OF RADIAX SYSTEM

UPS NO: 2VBB-UPS1B
PNL NO: 2VBS-PNLB111

BKR NO: 31
CIRCUIT NO: N/A

DRAWING REFERENCES

EE-11BK

FEED TO DEVICE	DEVICE LOCATION		PLANT IMPACT
	BLDG	ELEV	
RADIAX SYSTEM			PARTIAL LOSS OF RADIAX SYSTEM

UPS NO: 2VBB-UPS1B
PNL NO: 2VBS-PNLB111

BKR NO: 32
CIRCUIT NO: N/A

DRAWING REFERENCES

EE-11BK

FEED TO DEVICE	DEVICE LOCATION		PLANT IMPACT
	BLDG	ELEV	
RADIAX SYSTEM			PARTIAL LOSS OF RADIAX SYSTEM

UPS NO: 2VBB-UPS1B
PNL NO: 2VBS-PNLB111

BKR NO: 33
CIRCUIT NO: N/A

DRAWING REFERENCES

EE-11BK
E&DCR Y03801D

FEED TO DEVICE	DEVICE LOCATION		PLANT IMPACT
	BLDG	ELEV	
PNL-2COP-PNLU02			LOSS OF PAGING

UPS NO: 2VBB-UPS1B
PNL NO: 2VBS-PNLB111

BKR NO: 34
CIRCUIT NO: N/A

DRAWING REFERENCES

EE-11BK
EE-11X

FEED TO DEVICE	DEVICE LOCATION		PLANT IMPACT
	BLDG	ELEV	
2LAC-PNLU04	CCR	261	N/A

UPS NO: 2VBB-UPS1B
PNL NO: 2VBS-PNLB111

BKR NO: 35
CIRCUIT NO: N/A

DRAWING REFERENCES

EE-11BK
E&DCR Y03801D

FEED TO DEVICE	DEVICE LOCATION		PLANT IMPACT
	BLDG	ELEV	
PNL-2COP-PNLU02			LOSS OF PAGING

UPS NO: 2VBB-UPS1B
PNL NO: 2VBS-PNLB111

BKR NO: 36
CIRCUIT NO: N/A

DRAWING REFERENCES

EE-11BK
EE-11X

FEED TO DEVICE	DEVICE LOCATION		PLANT IMPACT
	BLDG	ELEV	
2LAC-PNLU04	CCR	261	N/A

UPS NO: 2VBB-UPS1B
PNL NO: 2VBS-PNLB111

BKR NO: 37
CIRCUIT NO: N/A

DRAWING REFERENCES

EE-11BK
E&DCR Y03801D

FEED TO DEVICE	DEVICE LOCATION		PLANT IMPACT
	BLDG	ELEV	
PNL-2COP-PNLU02			LOSS OF PAGING

UPS NO: 2VBB-UPS1B
PNL NO: 2VBS-PNLB111

BKR NO: 38
CIRCUIT NO: N/A

DRAWING REFERENCES

EE-11BK
EE-11X

FEED TO DEVICE	DEVICE LOCATION		PLANT IMPACT
	BLDG	ELEV	
2LAC-PNLU04	CCR	261	N/A

UPS NO: 2VBB-UPS1B
PNL NO: 2VBS-PNLB111

DRAWING REFERENCES

EE-11BK

BKR NO: 39
CIRCUIT NO: N/A

FEED TO DEVICE	DEVICE LOCATION	PLANT IMPACT
SPACE		

UPS NO: 2VBB-UPS1B
PNL NO: 2VBS-PNLB111

DRAWING REFERENCES

EE-11BK

BKR NO: 40
CIRCUIT NO: N/A

FEED TO DEVICE	DEVICE LOCATION	PLANT IMPACT
SPACE		

UPS NO: 2VBB-UPS1B
PNL NO: 2VBS-PNLB111

BKR NO: 41
CIRCUIT NO: N/A

DRAWING REFERENCES

EE-11BK

FEED TO DEVICE	DEVICE LOCATION	PLANT IMPACT
SPACE		

UPS NO: 2VBB-UPS1B
PNL NO: 2VBS-PNLB111

BKR NO: 42
CIRCUIT NO: N/A

DRAWING REFERENCES

EE-11BK

FEED TO DEVICE	DEVICE LOCATION	PLANT IMPACT
SPACE		

2VBB-UPS1C LOAD LIST

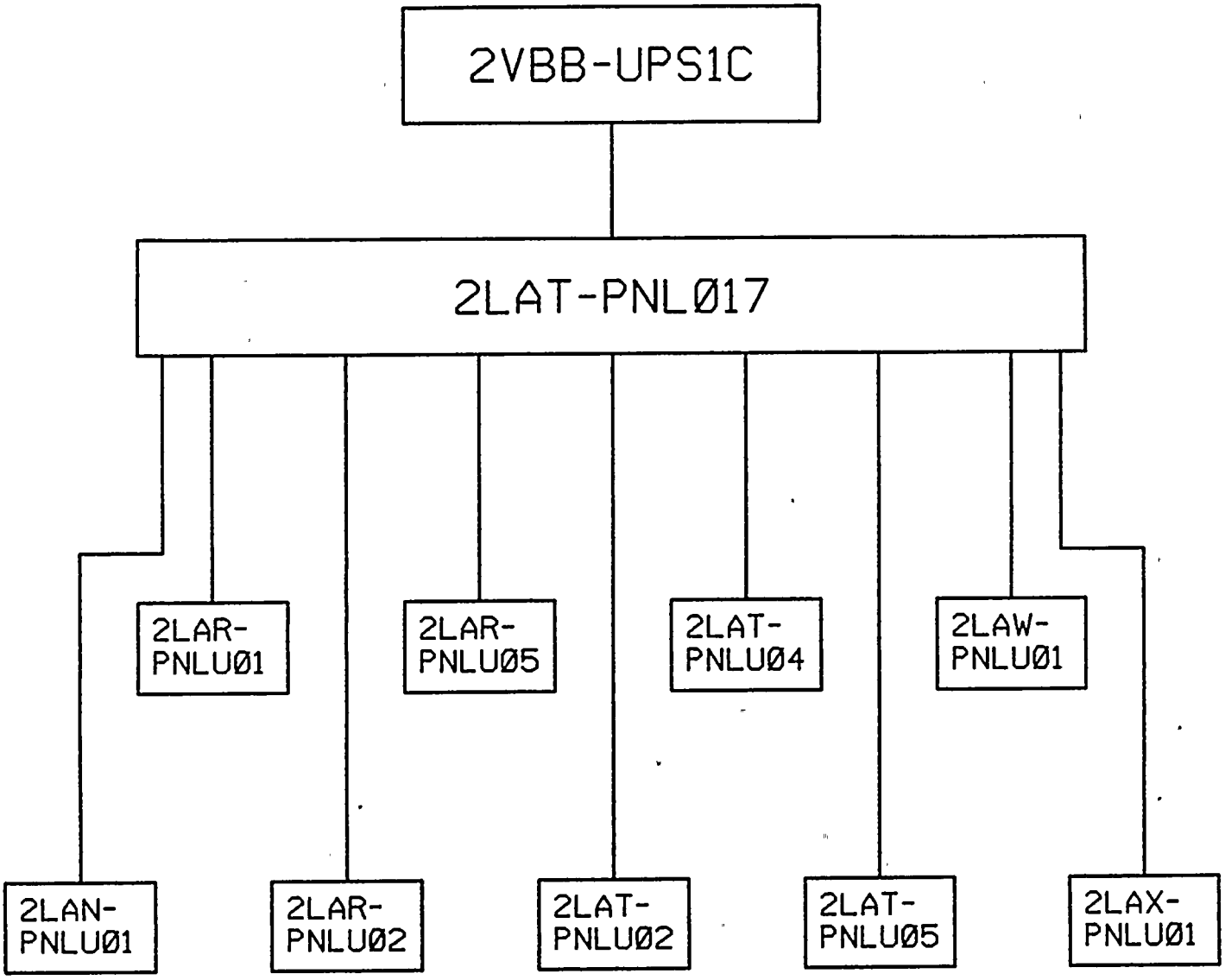

NOTE: THIS DRAWING WAS CREATED USING COMPUTER AIDED DRAFTING DO NOT MAKE MANUAL CHANGES

NUCLEAR NON-SAFETY RELATED

NIAGARA MOHAWK

NINE MILE POINT NUCLEAR STATION - UNIT 2 SCRIBA, N.Y.

LOAD LIST
UNINTERRUPTIBLE POWER SUPPLY
2VBB-UPS1C
SHEET 1 OF 33

SCALE: NONE | DRAWING NO: AE-100F

MK	DATE	BY	MF	DESCRIPTION	CK	APP
1	9-11-91	JBP		ORIGINAL ISSUE- AS BUILT	AR	

INDEX

PANEL	BKR. NO.	SHEET NO.
2LAR-PNLU01	1	8
	2	8
	3	8
	4	8
	5	8
	6	8
	7	8
	8	8
	9	8
	10	8
	11	8
	12	8
	13	8
	14	8
	15	8
	16	8
	17	8
	18	8
	19 21	8
	20 22	8
	23 25	9
	24 26	9
	27 29	9
	28 30	9
	31 33	9
	32 34	9
	35 37	9
2LAR-PNLU01	36 38	9

PANEL	BKR. NO.	SHEET NO.
2LAR-PNLU01	39 41	9
2LAR-PNLU01	40 42	9
2LAR-PNLU05	1	10
	2 4	10
	3	10
	5	10
	6	10
	7 9	10
	8 10	10
	11	10
	12 14	11
	13	11
	15	11
	16	11
	17	11
	18	11
	19	11
	20	11
	21	11
	22	11
	23 25	11
	24 26	11
2LAR-PNLU05	27 29	11

(CONTINUED ON SHEET 3)

2VBB-UPS1C LOAD LIST
DWG. NO. AE-100F
SHEET 2 OF 33

INDEX

PANEL	BKR. NO.	SHEET NO.
2LAR-PNLU05	28	11
	30	
	31	11
	33	
	32	12
	34	
	35	12
	37	
	36	12
	38	
	39	12
	41	
	40	12
2LAR-PNLU05	42	
2LAT-PNLU04	1	13
	2	13
	3	13
	4	13
	5	13
	6	13
	7	13
	8	13
	9	13
	10	13
	11	13
	12	13
	13	13
	14	13
	15	13
	16	13
	17	13
	18	13
	19	14
	20	14
	21	14
	22	14
2LAT-PNLU04	23	14

PANEL	BKR. NO.	SHEET NO.
2LAT-PNLU04	24	14
	25	14
	26	14
	27	14
	28	14
	29	14
	30	14
	31	14
	32	14
	33	14
	34	14
	35	15
	36	15
	38	
	37	15
	39	15
	41	
	40	15
2LAT-PNLU04	42	
2LAW-PNLU01	1	16
	3	
	2	16
	4	
	5	16
	7	
	6	16
	8	
	9	16
	11	
	10	16
2LAW-PNLU01	12	

(CONTINUED ON SHEET 4)

2VBB-UPS1C LOAD LIST
DWG. NO. AE-100F
SHEET 3 OF 33

INDEX

PANEL	BKR. NO.	SHEET NO.
2LAW-PNLU01	13 15	16
	14 16	16
	17 19	16
	18 20	16
	21 23	16
	22 24	16
	25 27	17
	26 28	17
	29 31	17
	30	17
	32	17
	33	17
	34	17
	35	17
	36	17
	37	17
	38	17
	39	17
	40	17
	41	17
2LAW-PNLU01	42	17
2LAN-PNLU01	1	18
	2	18
	3	18
	4	18
	5	18
	6	18
2LAN-PNLU01	7	18

PANEL	BKR. NO.	SHEET NO.
2LAN-PNLU01	8	18
	9	18
	10	18
	11	18
	12	19
	13	19
	14	19
	15	19
	16	19
	17	19
	18	19
	19 21	19
	20	19
	22	19
	23 25	19
	24	19
	26	19
	27	20
	28	20
	29	20
	30	20
	31 33 35	20
	32	20
	34	20
	36	20
	37	20
	38	20
	39	20
2LAN-PNLU01	40	20

(CONTINUED ON SHEET 5)

2VBB-UPS1C LOAD LIST
DWG. NO. AE-100F
SHEET 4 OF 33

INDEX

PANEL	BKR. NO.	SHEET NO.
2LAN-PNLU01	41	20
2LAN-PNLU01	42	20
2LAR-PNLU02	1	21
	2	21
	3	21
	4	21
	5	21
	6	21
	7	21
	8	21
	9	21
	10	21
	11 13	21
	12	21
	14	22
	15	22
	16	22
	17	22
	18	22
	19	22
	20	22
	21	22
	22	22
	23 25	22
	24 26	22
	27 29	22
	28 30	22
	31 33	22
2LAR-PNLU02	32 34	22

PANEL	BKR. NO.	SHEET NO.
2LAR-PNLU02	35 37	22
	36 38	23
	39 41	23
2LAR-PNLU02	40 42	23
2LAT-PNLU02	1 3	24
	2 4	24
	5 7	24
	6 8	24
	9 11	24
	10 12	24
	13 15	24
	14 16	24
	17 19	25
	18 20	25
	21 23	25
2LAT-PNLU02	22 24	25

(CONTINUED ON SHEET 6)

2VBB-UPS1C LOAD LIST
DWG. NO. AE-100F
SHEET 5 OF 33

INDEX

PANEL	BKR. NO.	SHEET NO.
2LAT-PNLU02	25 27	25
	26 28	25
	29 31	25
	30 32	25
	33	25
	34	25
	35	25
	36	25
	37	25
	38	25
	39	25
	40	25
	41	26
2LAT-PNLU02	42	26
2LAT-PNLU05	1	27
	2	27
	3	27
	4	27
	5	27
	6	27
	7	27
	8	27
	9	27
	10 12	27
	11 13	27
	14 16	27
	15 17	27
	18	27
2LAT-PNLU05	19	27

PANEL	BKR. NO.	SHEET NO.
2LAT-PNLU05	20	28
	21	28
	22	28
	23	28
	24	28
	25	28
	26	28
	27	28
	28	28
	29	28
	30	28
	31	29
	32	29
	33	29
	34	29
	35 37	29
	36 38	29
	39 41	29
	40 42	29
2LAT-PNLU05		
2LAX-PNLU01	1 3	30
	2 4	30
	5 7	30
	6 8	30
2LAX-PNLU01		

(CONTINUED ON SHEET 7)

2VBB-UPS1C LOAD LIST
DWG. NO. AE-100F
SHEET 6 OF 33

INDEX

PANEL	BKR. NO.	SHEET NO.
2LAX-PNLU01	9	30
	10	30
	11	30
	12	30
	13	30
	14	30
	15	30
	16	30
	17	30
	18	30
	19	30
	20	30
	21	30
	22	30
	23	31
	24	31
	25	31
	26	31
	27	31
	28	31
	29	31
	30	31
	31	31
	32	31
	33	31
	34	31
	35	31
	36	31
	37	31
	38	31
	39	31
	40	31
	41	32
2LAX-PNLU01	42	32

PANEL	BKR. NO.	SHEET NO.
2LAR-PNLU01	N/A	FOR NOTES SEE SHEET 33
2LAR-PNLU05	N/A	
2LAT-PNLU04	N/A	
2LAW-PNLU01	N/A	
2LAN-PNLU01	N/A	
2LAR-PNLU02	N/A	
2LAT-PNLU02	N/A	
2LAT-PNLU05	N/A	
2LAX-PNLU01	N/A	

2VBB-UPS1C LOAD LIST
DWG. NO. AE-100F
SHEET 7 OF 33

UPS NO: 2VBB-UPS1C
PNL NO: 2LAT-PNL017
DIST PNL NO: 2LAR-PNLU01
CIRCUIT NO: N/A

DRAWING REFERENCES

CE-100K

FEED TO DEVICE	BKR NO.	LTG. DWG.	DEVICE LOCATION BUILDING	ELEVATION	PLANT IMPACT OTHER LIGHTING COVERAGE AS INDICATED
ESSENTIAL LIGHTING	1	EE-67C	RX BLDG E	215	NORMAL
ESSENTIAL LIGHTING	2	EE-67A	RX BLDG. NE	175	NORMAL
ESSENTIAL LIGHTING	3	EE-67C	RX BLDG. NW	215	NORMAL
ESSENTIAL LIGHTING	4	EE-67A	RX BLDG. SE	175	NORMAL
ESSENTIAL LIGHTING	5	EE-67C	RX BLDG. NE	196	NORMAL
ESSENTIAL LIGHTING	6	EE-67B	RX BLDG. E	196	NORMAL
ESSENTIAL LIGHTING	7	EE-67B	RX BLDG.	215	NORMAL
RECEPTACLES	8	EE-67C	RX BLDG	215	LOSE RECEPTACLES
SPARE	9				
EXIT LIGHT	10	EE-67A	RX BLDG	175	LOSE EXIT LIGHT
EXIT LIGHT	11	EE-67B	RX BLDG	196	LOSE EXIT LIGHT
EXIT LIGHT	12	EE-67C	RX BLDG	215	LOSE EXIT LIGHT
EXIT LIGHT	13	EE-67D	RX BLDG	240	LOSE EXIT LIGHT
COMMUNICATION EQUIPMENT	14	EE-80K,L, M,AB, AC	RX BLDG & EL TUNNEL	VARIOUS	LOSE COMMUNICATION SEE NOTE 1 & 2, SHEET 33
COMMUNICATION EQUIPMENT	15	EE-80M	RX BLDG	215	LOSE COMMUNICATION SEE NOTE 1 & 2, SHEET 33
SPARE	16				
SPARE	17				
SPARE	18				
ESSENTIAL LIGHTING	19 21	EE-67D	RX BLDG	240	NORMAL LIGHTING
ESSENTIAL LIGHTING	20 22	EE-67A	RX BLDG	175	NORMAL

UPS NO: 2VBB-UPS1C
PNL NO: 2LAT-PNL017
DIST PNL NO: 2LAR-PNLU01
CIRCUIT NO: N/A

DRAWING REFERENCES

CE-100K

FEED TO DEVICE	BKR NO.	LTG. DWG.	DEVICE LOCATION BUILDING	ELEVATION	PLANT IMPACT OTHER LIGHTING COVERAGE AS INDICATED
ESSENTIAL LIGHTING	23 25	EE-67D EE-67E	RX BLDG.	240 261	NORMAL NORMAL
ESSENTIAL LIGHTING	24 26	EE-67A	RX BLDG.	175	NORMAL
SPARE	27 29				
ESSENTIAL LIGHTING	28 30	EE-67B	RX BLDG.	196	NORMAL
ESSENTIAL LIGHTING	31 33	EE-67B	RX BLDG	196	NORMAL
ESSENTIAL LIGHTING	32 34	EE-67C	RX BLDG	215	NORMAL
SPARE	35 37				
ESSENTIAL LIGHTING	36 38	EE-67C	RX BLDG	215	NORMAL
SPARE	39 41				
SPARE	40 42				

UPS NO: 2VBB-UPS1C
PNL NO: 2LAT-PNL017
DIST PNL NO: 2LAR-PNLU05
CIRCUIT NO: N/A

DRAWING REFERENCES

CE-100P

FEED TO DEVICE	BKR NO.	LTG. DWG.	DEVICE LOCATION BUILDING	ELEVATION	PLANT IMPACT OTHER LIGHTING COVERAGE AS INDICATED
EXIT LIGHTS	1	EE-67K	NORTH AUX.BAY	175	LOSE EXIT LIGHTS
ESSENTIAL LIGHTING	2 4	EE-67K	NORTH AUX.BAY	175	NORMAL LIGHTING
ESSENTIAL LIGHTING	3	EE-67K,L	NORTH AUX.BAY STAIRWELL	VARIOUS	NO OTHER LIGHTING
ESSENTIAL LIGHTING	5	EE-67K,L	NORTH AUX. BAY STAIRWELL	VARIOUS	NO OTHER LIGHTING
EXIT LIGHTS	6	EE-67K	NORTH AUX. BAY STAIRWELL	198	LOSE EXIT LIGHTS
ESSENTIAL LIGHTING	7 9	EE-67K	NORTH AUX. BAY	198	NO OTHER LIGHTING
ESSENTIAL LIGHTING	8 10	EE-67L	NORTH AUX. BAY	215	NORMAL
ESSENTIAL LIGHTING	11	EE-67L	NORTH AUX. BAY	250	NORMAL

UPS NO: 2VBB-UPS1C
PNL NO: 2LAT-PNL017
DIST PNL NO: 2LAR-PNLU05
CIRCUIT NO: N/A

DRAWING REFERENCES

CE-100P

FEED TO DEVICE	BKR NO.	LTG. DWG.	DEVICE LOCATION BUILDING	ELEVATION	PLANT IMPACT OTHER LIGHTING COVERAGE AS INDICATED
ESSENTIAL LIGHTING	12 14	EE-67L	NORTH AUX.BAY	240	NORMAL
EXIT LIGHTS	13	EE-67L	NORTH AUX.BAY	215 240	LOSE EXIT LIGHTS
SPARE	15				
SPARE	16				
SPARE	17				
SPARE	18				
COMMUNICATION EQUIPMENT	19	EE-80N,U,V	RX BLDG. N. AUX BAY	VARIOUS	LOSE COMMUNICATION SEE NOTE 1 & 2, SHEET 33
SPARE	20				
SPARE	21				
SPARE	22				
SPARE	23 25				
SPARE	24 26				
SPARE	27 29				
SPARE	28 30				
SPARE	31 33				

UPS NO: 2VBB-UPS1C
PNL NO: 2LAT-PNL017
DIST PNL NO: 2LAR-PNLU05
CIRCUIT NO: N/A

DRAWING REFERENCES

CE-100P

FEED TO DEVICE	BKR NO.	LTG. DWG.	DEVICE LOCATION BUILDING	ELEVATION	PLANT IMPACT OTHER LIGHTING COVERAGE AS INDICATED
SPARE	32 34				
SPARE	35 37				
SPARE	36 38				
SPARE	39 41				
SPARE	40 42				

UPS NO: 2VBB-UPS1C
PNL NO: 2LAT-PNL017
DIST PNL NO: 2LAT-PNLU04
CIRCUIT NO: N/A

DRAWING REFERENCES

CE-100H

FEED TO DEVICE	BKR NO.	LTG. DWG.	DEVICE LOCATION BLDG	ELEV	PLANT IMPACT OTHER LIGHTING COVERAGE AS INDICATED
ESSENTIAL LIGHTING	1	EE-78E	PIPE TUNNEL	N/A	NORMAL LIGHTING
ESSENTIAL LIGHTING	2	EE-78B, 78F	PIPE TUNNEL	N/A	NORMAL LIGHTING
ESSENTIAL LIGHTING	3	EE-78E	PIPE TUNNEL	N/A	NORMAL LIGHTING
EXIT SIGNS	4	EE-78B, 78F	PIPE TUNNEL	N/A	LOSE EXIT LIGHTS
SPARE	5				
ESSENTIAL LIGHTS	6	EE-78F	PIPE TUNNEL	N/A	NORMAL LIGHTING
ESSENTIAL LIGHTS	7	EE-66H	TB. CLEAN ACCESS AREA	VARIOUS	NORMAL LIGHTING
ESSENTIAL LIGHTS	8	EE-78F	PIPE TUNNEL	N/A	NORMAL LIGHTING
ESSENTIAL LIGHTS	9	EE-66H	TB. CLEAN ACCESS AREA	VARIOUS	NORMAL LIGHTING
ESSENTIAL LIGHTS	10	EE-78F	PIPE TUNNEL	N/A	NORMAL LIGHTING
ESSENTIAL LIGHTS	11	EE-66H	TB. CLEAN ACCESS AREA	288	NO OTHER LIGHTING
ESSENTIAL LIGHTS	12	EE-78F	PIPE TUNNEL	N/A	NORMAL LIGHTING
ESSENTIAL LIGHTS	13	EE-66H	TB. CLEAN ACCESS AREA	250 261	NO OTHER LIGHTING
EXIT LIGHTS	14	EE-78F	PIPE TUNNEL	N/A	LOSE EXIT LIGHTS
EXIT LIGHTS	15	EE-66H	TB. CLEAN ACCESS AREA	N/A	LOSE EXIT LIGHTS
SPARE	16				
ESSENTIAL LIGHTS	17	EE-67P	AUX BLDG SOUTH	261	NORMAL LIGHTING
SPARE	18				

UPS NO: 2VBB-UPS1C
PNL NO: 2LAT-PNL017
DIST PNL NO: 2LAT-PNLU04
CIRCUIT NO: N/A

DRAWING REFERENCES

CE-100H

FEED TO DEVICE	BKR NO.	LTG. DWG.	DEVICE LOCATION BLDG	ELEV	PLANT IMPACT OTHER LIGHTING COVERAGE AS INDICATED
ESSENTIAL LIGHTS	19	EE-67P	AUX BLDG SOUTH	261	NORMAL LIGHTING
COMMUNICATION EQUIPMENT	20	EE-80D, 80E	TURB BLDG	250	LOSE COMMUNICATION SEE NOTE 1 & 2, SHEET 33
EXIT LIGHTS	21	EE-67P	AUX BLDG SOUTH	261	LOSE EXIT LIGHTS
SPARE	22				
SPARE	23				
SPARE	24				
SPARE	25				
SPARE	26				
SPARE	27				
SPARE	28				
SPARE	29				
SPARE	30				
SPARE	31				
SPARE	32				
SPARE	33				
SPARE	34				

UPS NO: 2VBB-UPS1C
PNL NO: 2LAT-PNL017
DIST PNL NO: 2LAT-PNLU04
CIRCUIT NO: N/A

DRAWING REFERENCES

CE-100H

FEED TO DEVICE	BKR NO.	LTG. DWG.	DEVICE LOCATION BLDG	ELEV	PLANT IMPACT OTHER LIGHTING AS INDICATED
SPARE	35				
SPARE	36 38				
SPARE	37				
ESSENTIAL LIGHTING	39 41	EE-67P	AUX BLDG SOUTH	261	NORMAL LIGHTING
SPARE	40 42				

UPS NO: 2VBB-UPS1C
PNL NO: 2LAT-PNL017
DIST PNL NO: 2LAW-PNLU01
CIRCUIT NO: N/A

DRAWING REFERENCES

CE-1008

FEED TO DEVICE	BKR NO	LTG DWG	DEVICE LOCATION		PLANT IMPACT (OTHER LIGHTING COVERAGE AS INDICATED)
			BLDG.	ELEV.	
ESSENTIAL LIGHTING	1 3	EE-72A, B	SCREENWELL	NA	NORMAL LIGHTING
ESSENTIAL LIGHTING	2 4	EE-72A, B	SCREENWELL	NA	NORMAL LIGHTING
ESSENTIAL LIGHTING	5 7	EE-72A, B	SCREENWELL	NA	NORMAL LIGHTING
ESSENTIAL LIGHTING	6 8	EE-72A, B	SCREENWELL	NA	NORMAL LIGHTING
ESSENTIAL LIGHTING	9 11	EE-72C	SCREENWELL	NA	NORMAL LIGHTING
ESSENTIAL LIGHTING	10 12	EE-72C	SCREENWELL	NA	NORMAL LIGHTING
ESSENTIAL LIGHTING	13 15	EE-72A	SCREENWELL	NA	NORMAL LIGHTING
SPARE	14 16				
SPARE	17 19				
SPARE	18 20				
SPARE	21 23				
SPARE	22 24				

UPS NO: 2VBB-UPS1C
PNL NO: 2LAT-PNL017
DIST PNL NO: 2LAW-PNLU01
CIRCUIT NO: N/A

DRAWING REFERENCES

CE-1008

FEED TO DEVICE	BKR NO.	LTG. DWG.	DEVICE LOCATION		PLANT IMPACT OTHER LIGHTING COVERAGE AS INDICATED
			BLDG.	ELEV.	
SPARE	25 27				
SPARE	26 28				
SPARE	29 31				
EXIT LIGHT	30	EE-72B	SCREENWELL	NA	LOSE EXIT LIGHTS
EXIT LIGHT	32	EE-72A	SCREENWELL	NA	LOSE EXIT LIGHTS
SPARE	33				
SPARE	34				
ESSENTIAL LIGHTING	35	EE-72A, B	SCREENWELL	NA	NORMAL LIGHTING
COMMUNICATION EQUIPMENT	36	EE-80Z, AD, AE, AF, AG, AQ	SA, ASB HB	VAR	LOSE COMMUNICATION SEE NOTE 1 & 2, SHEET 33
SPARE	37				
SPARE	38				
SPARE	39				
SPARE	40				
SPARE	41				
SPARE	42				

UPS NO: 2VBB-UPS1C
PNL NO: 2LAT-PNL017
DIST PNL NO: 2LAN-PNLU01
CIRCUIT NO: N/A

DRAWING REFERENCES
CE-100R

FEED TO DEVICE	BKR NO.	LTG. DWG.	DEVICE LOCATION		PLANT IMPACT (OTHER LIGHTING COVERAGE AS INDICATED)
			BLDG.	ELEV.	
ESSENTIAL LIGHTING	1	EE-69A	RADWASTE	240	NORMAL LIGHTING
ESSENTIAL LIGHTING	2	EE-69A	RADWASTE	261	NORMAL LIGHTING
EXIT LIGHTS	3	EE-69A	RADWASTE	240	LOSE EXIT LIGHTS
ESSENTIAL LIGHTING	4	EE-69A, B, C	RADWASTE STAIRS	VARIOUS	NO OTHER LIGHTING
EXIT LIGHTS	5	EE-69A	RADWASTE	261	LOSE EXIT LIGHTS
ESSENTIAL LIGHTING	6	EE-69A, B, C	RADWASTE STAIRS	VARIOUS	NO OTHER LIGHTING
ESSENTIAL LIGHTING	7	EE-69A	RADWASTE	240	NORMAL
ESSENTIAL LIGHTING	8	EE-69A	RADWASTE	261	NORMAL LIGHTING
ESSENTIAL LIGHTING	9	EE-69A	RADWASTE	240	NORMAL LIGHTING
SPARE	10				
ESSENTIAL LIGHTING	11	EE-69A	RADWASTE	261	NORMAL LIGHTING

UPS NO: 2VBB-UPS1C
PNL NO: 2LAT-PNL017
DIST PNL NO: 2LAN-PNLU01
CIRCUIT NO: N/A

DRAWING REFERENCES
CE-100R

FEED TO DEVICE	BKR NO.	LTG. DWG.	DEVICE LOCATION		PLANT IMPACT (OTHER LIGHTING COVERAGE AS INDICATED)
			BLDG.	ELEV.	
SPARE	12				
EXIT LIGHTS	13	EE-69B	RADWASTE	279	LOSE EXIT LIGHTS
SPARE	14				
ESSENTIAL LIGHTING	15	EE-69B, C	RADWASTE	279, 287	NORMAL LIGHTING
COMMUNICATION EQUIPMENT	16	EE-80W,AJ	RADWASTE COND. STORAGE	VAR.	LOSE COMMUNICATION SEE NOTE 1 & 2, SHEET 33
ESSENTIAL LIGHTING	17	EE-69B, C	RADWASTE	279, 287	NORMAL LIGHTING
COMMUNICATION EQUIPMENT	18	EE-80X, Y	RADWASTE	VAR	LOSE COMMUNICATION SEE NOTE 1 & 2, SHEET 33
ESSENTIAL LIGHTING	19 21	EE-69A, B, C	RADWASTE STAIRS	VAR	NO OTHER LIGHTING
EXIT LIGHTS	20	EE-69B	RADWASTE	291	LOSE EXIT LIGHTS
ESSENTIAL LIGHTING	22	EE-69B	RADWASTE	291	NORMAL LIGHTING
ESSENTIAL LIGHTING	23 25	EE-69A, B, C	RADWASTE & STAIRS	VAR	NO OTHER LIGHTING
ESSENTIAL LIGHTING	24	EE-69B	RADWASTE	291	NORMAL LIGHTING
EXIT LIGHTS	26	EE-69C	RADWASTE	309	LOSE EXIT LIGHTS

UPS NO: 2VBB-UPS1C
PNL NO: 2LAT-PNL017
DIST PNL NO: 2LAN-PNLU01
CIRCUIT NO: N/A

DRAWING REFERENCES
CE-100R

FEED TO DEVICE	BKR NO.	LTG. DWG.	DEVICE LOCATION		PLANT IMPACT (OTHER LIGHTING COVERAGE AS INDICATED)
			BLDG.	ELEV.	
ESSENTIAL LIGHTING	27	EE-69C	RADWASTE	301	NORMAL LIGHTING
ESSENTIAL LIGHTING	28	EE-69C	RADWASTE	309, 318	NORMAL LIGHTING
SPARE	29				
SPARE	30				
OUTSIDE COMMUN. EQUIP. 2COP-PNLU01	31 33 35	EE-80A	NA	NA	LOSE COMMUNICATION SEE NOTE 1 & 2, SHEET 33
SPARE	32				
AIR CONDITIONERS 2RMS-CAB170; - RAK170	34	EE-3FT			LOSS OF 2RMS-CAB170 MAIN STACK
SPARE	36				
SPARE	37				
ESSENTIAL LIGHTING	38	EE-80AJ	COND. STORAGE	VAR	NORMAL LIGHTING
CHEMISTRY LAB RECEPTACLES	39	EE-69E	RADWASTE CONT. RM	261	LOSE RECEPTACLES
ESSENTIAL LIGHTING	40	EE-69E	RADWASTE CONT. RM	261, 279	NORMAL LIGHTING
ESSENTIAL LIGHTING	41	EE-69E	RADWASTE CONT. RM	261	NORMAL LIGHTING
SPARE	42				

UPS NO: 2VBB-UPS1C
PNL NO: 2LAT-PNL017
DIST PNL NO: 2LAR-PNLU02
CIRCUIT NO: N/A

DRAWING REFERENCES
CE-100L

FEED TO DEVICE	BKR NO.	LTG. DWG.	DEVICE LOCATION BLDG	ELEV	PLANT IMPACT OTHER LIGHTING AS INDICATED
ESSENTIAL LIGHTING	1	EE-67E	RX BLDG E	261	NORMAL LIGHTING
EXIT LIGHTS	2	EE-67E	RX BLDG W	261	LOSE EXIT LIGHTS
ESSENTIAL LIGHTING	3	EE-67E	RX BLDG E	261	NO OTHER LIGHTING
ESSENTIAL LIGHTING	4	EE-67F	RX BLDG S	289	NORMAL LIGHTING
ESSENTIAL LIGHTING	5	EE-67E, 67F	TRACK BAY & RX BLDG	261 289	NORMAL LIGHTING
ESSENTIAL LIGHTING	6	EE-67F	TRACK BAY & RX BLDG	289	NORMAL LIGHTING
COMMUNICATION	7	EE-8ON, P, Q, R, S, T, V	RX BLDG S.AUX BLDG	VAR	LOSE COMMUNICATION SEE NOTE 1 & 2, SHEET 33
ESSENTIAL LIGHTING	8	EE-67F	RX BLDG	289	NORMAL LIGHTING
SPARE	9				
ESSENTIAL LIGHTING	10	EE-67F	RX BLDG	289	NORMAL LIGHTING
ESSENTIAL LIGHTING	11 13	EE-67E, F, L	RX BLDG & OUT TRACK BAY	NA	NORMAL LIGHTING
ESSENTIAL LIGHTING	12	EE-67F	PRI CONT	261	NORMAL LIGHTING

UPS NO: 2VBB-UPS1C
PNL NO: 2LAT-PNL017
DIST PNL NO: 2LAR-PNLU02
CIRCUIT NO: N/A

DRAWING REFERENCES
CE-100L

FEED TO DEVICE	BKR NO.	LTG. DWG.	DEVICE LOCATION BLDG	ELEV	PLANT IMPACT OTHER LIGHTING AS INDICATED
ESSENTIAL LIGHTING	14	EE-67D	PRI CONT	249 240	NORMAL LIGHTING
ESSENTIAL LIGHTING	15	EE-67E EE-67F	PRI CONT	VARIOUS	NORMAL LIGHTING
ESSENTIAL LIGHTING	16	EE-67F	PRI CONT	289 305	NORMAL LIGHTING
SPARE	17				
SPARE	18				
SPARE	19				
SPARE	20				
SPARE	21				
SPARE	22				
ESSENTIAL LIGHTING	23 25	EE-67E	RX BLDG	261	NORMAL LIGHTING
	24 26				
ESSENTIAL LIGHTING	27 29	EE-67E	RX BLDG	261	NORMAL LIGHTING
	28 30				
SPARE	31 33				
SPARE	32 34				
SPARE	35 37				

UPS NO: 2VBB-UPS1C
PNL NO: 2LAT-PNL017
DIST PNL NO: 2LAR-PNLU02
CIRCUIT NO: N/A

DRAWING REFERENCES
CE-100L

FEED TO DEVICE	BKR NO.	LTG. DWG.	DEVICE LOCATION BLDG	ELEV	PLANT IMPACT OTHER LIGHTING COVERAGE AS INDICATED
SPARE	36 38				
SPARE	39 41				
SPARE	40 42				

UPS NO: 2VBB-UPS1C
PNL NO: 2LAT-PNL017
DIST PNL NO: 2LAT-PNLU02
CIRCUIT NO: N/A

DRAWING REFERENCES
CE-100F

FEED TO DEVICE	BKR NO.	LTG. DWG.	DEVICE LOCATION BLDG	ELEV	PLANT IMPACT OTHER LIGHTING COVERAGE AS INDICATED
ESSENTIAL LIGHTING	1 3	EE-66C	TURB MEZZ	277	NORMAL LIGHTING
ESSENTIAL LIGHTING	2 4	EE-66D	TURB MEZZ	277	NORMAL LIGHTING
ESSENTIAL LIGHTING	5 7	EE-66C	TURB MEZZ	277	NORMAL LIGHTING
SPARE	6 8				
ESSENTIAL LIGHTING	9 11	EE-66C	TURB MEZZ FL AIR EJECTOR	277	NORMAL LIGHTING
ESSENTIAL LIGHTING	10 12	EE-66D	TURB MEZZ	277	NORMAL LIGHTING
ESSENTIAL LIGHTING	13 15	EE-66A EE-66C	TURB STAIRS SE	NA	NORMAL LIGHTING NORMAL FROM EL 250
ESSENTIAL LIGHTING	14 16	EE-66D	TURB MEZZ	277	NORMAL LIGHTING

UPS NO: 2VBB-UPS1C
PNL NO: 2LAT-PNL017
DIST PNL NO: 2LAT-PNLU02
CIRCUIT NO: N/A

DRAWING REFERENCE
CE-100F

FEED TO DEVICE	BKR NO.	LTG. DWG.	DEVICE LOCATION BLDG	ELEV	PLANT IMPACT OTHER LIGHTING COVERAGE AS INDICATED
ESSENTIAL LIGHTING	17 19	EE-66D	TURB MEZZ	277	NORMAL LIGHTING
SPARE	18 20				
SPARE	21 23				
ESSENTIAL LIGHTING	22 24	EE-79C	HEATER BAY DEMIN AREA	277	NORMAL LIGHTING
SPARE	25 27				
SPARE	26 28				
SPARE	29 31				
ESSENTIAL LIGHTING	30 32	EE-66D	TURB SWGR RM	277	NORMAL LIGHTING
SPARE	33				
SPARE	34				
ESSENTIAL LIGHTING	35	EE-66C	TURB MEZZ	277	NORMAL LIGHTING
COMMUNICATIONS EQUIPMENT	36	EE-80D, F, G, H, J, AG, AJ, AR	COMM EQUIP TB, FOAM RM PIPE TUNNEL	VARIOUS	LOSE COMMUNICATIONS SEE NOTE 1 & 2 SHEET 33
ESSENTIAL LIGHTING	37	EE-66D	TURB BLDG	292	NORMAL LIGHTING
ESSENTIAL LIGHTING	38	EE-79C	HEATER BAY, DEMIN AREA	277	NORMAL LIGHTING
EXIT LIGHTS	39	EE-66A EE-66C	TURB BLDG	268 277	LOSE EXIT LIGHTS
SPARE	40				

UPS NO: 2VBB-UPS1C
PNL NO: 2LAT-PNL017
DIST PNL NO: 2LAT-PNLU02
CIRCUIT NO: N/A

DRAWING REFERENCE
CE-100F

FEED TO DEVICE	BKR NO.	LTG. DWG.	DEVICE LOCATION BLDG	ELEV	PLANT IMPACT OTHER LIGHTING COVERAGE AS INDICATED
ESSENTIAL LIGHTING	41	EE-79C	HEATER BAY DEMIN AREA	277	NORMAL LIGHTING
ESSENTIAL LIGHTING	42	EE-66D	TURB BLDG	277	NORMAL LIGHTING

UPS NO: 2VBB-UPS1C
PNL NO: 2LAT-PNL017
DIST PNL NO: 2LAT-PNLU05
CIRCUIT NO: N/A

DRAWING REFERENCE
CE-100J

FEED TO DEVICE	BKR NO.	LTG. DWG.	DEVICE LOCATION BLDG	ELEV	PLANT IMPACT OTHER LIGHTING COVERAGE AS INDICATED
SPARE	1				
SPARE	2				
SPARE	3				
SPARE	4				
ESSENTIAL LIGHTING	5	EE-66A, C, E	TURB BLDG NW	STAIR	NO OTHER LIGHTING
SPARE	6				
ESSENTIAL LIGHTING	7	EE-66A, C, E	TURB BLDG NW	STAIR	NO OTHER LIGHTING
SPARE	8				
EXIT LIGHT	9	EE-66A	TURB BLDG	250, 261	LOSE EXIT LIGHTS
ESSENTIAL LIGHTING	10 12	EE-79A	OFFGAS & RR PLATE AREA	261	NORMAL LIGHTING
ESSENTIAL LIGHTING	11 13	EE-79A	OFFGAS & DEMIN STAIRS & PASS	250, 261	NORMAL LIGHTING EXCEPT STAIRS
ESSENTIAL LIGHTING	14 16	EE-79A	HEATER BAY	250	NORMAL LIGHTING
SPARE	15 17				
ELEVATOR	18	EE-66A	TURB BLDG	250	NO OTHER LIGHTING
SPARE	19				

UPS NO: 2VBB-UPS1C
PNL NO: 2LAT-PNL017
DIST PNL NO: 2LAT-PNLU05
CIRCUIT NO: N/A

DRAWING REFERENCE
CE-100J

FEED TO DEVICE	BKR NO.	LTG. DWG.	DEVICE LOCATION BLDG	ELEV	PLANT IMPACT OTHER LIGHTING COVERAGE AS INDICATED
SPARE	20				
SPARE	21				
SPARE	22				
SPARE	23				
ESSENTIAL LIGHTING	24	EE-68A	SERVICE BLDG FOAM R	261	NORMAL LIGHTING
SPARE	25				
ESSENTIAL LIGHTING	26	EE-68A	SERVICE BLDG CORRIDOR	261	NORMAL LIGHTING
SPARE	27				
ESSENTIAL LIGHTING	28	EE-68A	SERVICE BLDG/TRUCK AISLE	248	NORMAL LIGHTING
SPARE	29				
SPARE	30				

UPS NO: 2VBB-UPS1C
PNL NO: 2LAT-PNL017
DIST PNL NO: 2LAT-PNLU05
CIRCUIT NO: N/A

DRAWING REFERENCE
CE-100J

FEED TO DEVICE	BKR NO.	LTG. DWG.	DEVICE LOCATION BLDG	ELEV	PLANT IMPACT OTHER LIGHTING COVERAGE AS INDICATED
SPARE	31				
EXIT LIGHTS	32	EE-79A	OFFGAS DEMIN AREA	250	LOSE EXIT LIGHTS
ESSENTIAL LIGHTING	33	EE-79A	OFFGAS DEMIN AREA	250	NORMAL LIGHTING
ESSENTIAL LIGHTING	34	EE-68A, 79A	SERVICE BLDG TRUCK AISLE, DEMIN. AREA	250	NORMAL LIGHTING
ESSENTIAL LIGHTING	35 37	EE-79C	HTR BAY "A"	277	NORMAL LIGHTING
ESSENTIAL LIGHTING	36 38	EE-68A	SERVICE BLDG TRUCK AISLE	250	NORMAL LIGHTING
SPARE	39 41				
SPARE	40 42				

UPS NO: 2VBB-UPS1C
PNL NO: 2LAT-PNL017
DIST PNL NO: 2LAX-PNLU01
CIRCUIT NO: N/A

DRAWING REFERENCE
CE-100T

FEED TO DEVICE	BKR NO.	LTG. DWG.	DEVICE LOCATION		PLANT IMPACT (OTHER LIGHTING COVERAGE AS INDICATED)
			BLDG.	ELEV.	
ESSENTIAL LIGHTING	1 3	EE-68B	AUX BOILER	261	NORMAL LIGHTING
ESSENTIAL LIGHTING	2 4	EE-68B	AUX BOILER	261	NORMAL LIGHTING
ESSENTIAL LIGHTING	5 7	EE-68B	AUX BOILER	261	NORMAL LIGHTING
SPARE	6 8				
SPARE	9 11				
SPARE	10 12				
SPARE	13 15				
SPARE	14 16				
EXIT LIGHTS	17	EE-68B	AUX BOILER	261	LOSE EXIT LIGHTS
SPARE	18				
SPARE	19				
SPARE	20				
SPARE	21				
SPARE	22				

UPS NO: 2VBB-UPS1C
PNL NO: 2LAT-PNL017
DIST PNL NO: 2LAX-PNLU01
CIRCUIT NO: N/A

DRAWING REFERENCE
CE-100T

FEED TO DEVICE	BKR NO.	LTG. DWG.	DEVICE LOCATION		PLANT IMPACT (OTHER LIGHTING COVERAGE AS INDICATED)
			BLDG.	ELEV.	
SPARE	23				
SPARE	24				
SPARE	25				
SPARE	26				
COMMUNICATION EQUIPMENT	27	EE-80W	RADWASTE BLDG	VARIOUS	LOSE COMMUNICATION SEE NOTE 1 & 2, SHEET 33
COMMUNICATION EQUIPMENT	28	EE-80Y EE-80X	RADWASTE BLDG	VARIOUS	LOSE COMMUNICATION SEE NOTE 1 & 2, SHEET 33
SPARE	29				
SPARE	30				
SPARE	31				
SPARE	32				
SPARE	33				
SPARE	34				
SPARE	35				
SPARE	36				
SPARE	37				
SPARE	38				
SPARE	39				
SPARE	40				

UPS NO: 2VBB-UPS1C
PNL NO: 2LAT-PNL017
DIST PNL NO: 2LAX-PNLU01
CIRCUIT NO: N/A

DRAWING REFERENCE
CE-100T

FEED TO DEVICE	BKR NO.	LTG. DWG.	DEVICE LOCATION		PLANT IMPACT (OTHER LIGHTING COVERAGE AS INDICATED)
			BLDG.	ELEV.	
SPARE	41				
SPARE	42				

NOTES:

1. THE HANDSET LOCATIONS OF THE COMMUNICATION SYSTEM HAVE BEEN LOCATED AT POSITIONS TO MEET THE INTENT OF THE NFPA 72D CODE REQUIREMENTS REGARDING THE INSTALLATION OF MANUAL FIRE ALARM PULL STATIONS. AS SUCH, THE LOSS OF COMMUNICATION SYSTEM HANDSETS RESULT IN THE EQUIVALENT LOSS OF MANUAL FIRE ALARM PULL STATIONS.

2. THESE AREAS ARE PROVIDED PARTIAL PAGING COMMUNICATION FROM UPS 2VBB-UPS1D.

2VBB-UPS1D LOAD LIST

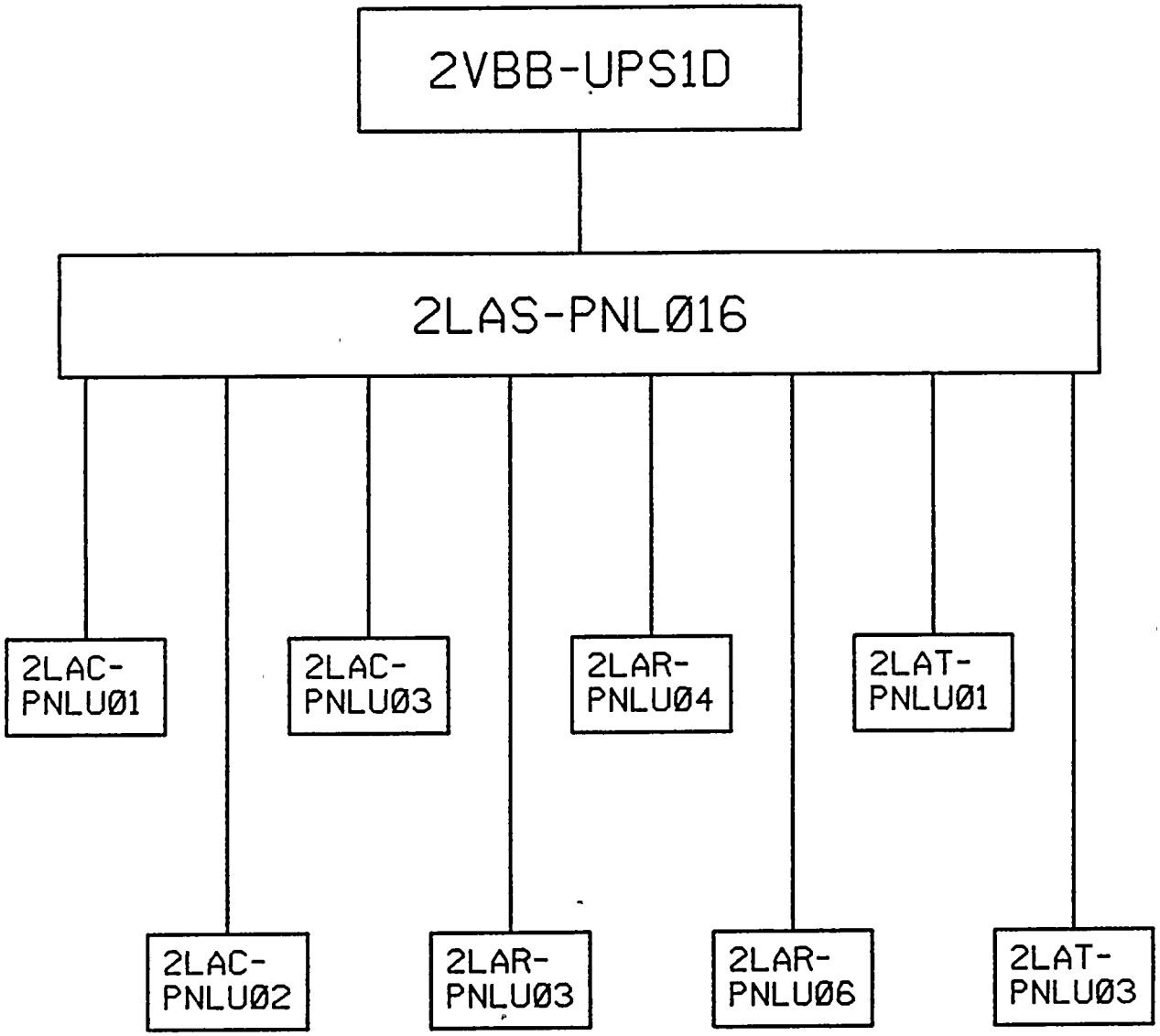

NOTE: THIS DRAWING WAS CREATED USING COMPUTER AIDED DRAFTING DO NOT MAKE MANUAL CHANGES

NUCLEAR NON-SAFETY RELATED

NIAGARA MOHAWK

NINE MILE POINT NUCLEAR STATION - UNIT 2 SCRIBA, N.Y.

LOAD LIST
UNINTERRUPTIBLE POWER SUPPLY
2VBB-UPS1D
SHEET 1 OF 33

SCALE NONE | DRAWING NO AE-100G

MK	DATE	BY	MF	DESCRIPTION	CK	APP
1	9-11-91	JBP		ORIGINAL ISSUE- AS BUILT	DWA AR	AKJ

INDEX

PANEL	BKR. NO.	SHEET NO.
2LAC-PNLU01	1	7
	2	7
	3	7
	4	7
	5	7
	6	7
	7	7
	8	7
	9	7
	10	7
	11	7
	12	8
	13	8
	14	8
	15	8
	16	8
	17	8
	18	8
	19	8
	20	8
	21	8
	22	8
	23	8
	24	8
	25	9
	26	9
	27	9
	28	9
	29	9
	30	9
	31	9
	32 34	9
	33	9
	35	9
	36 38	9
2LAC-PNLU01	37	10

PANEL	BKR. NO.	SHEET NO.
2LAC-PNLU01	39	10
	40	10
	41	10
2LAC-PNLU01	42	10
2LAC-PNLU03	1	11
	2	11
	3	11
	4	11
	5	11
	6	11
	7	11
	8	11
	9	11
	10	11
	11	11
	12	12
	13	12
	14	12
	15	12
	16	12
	17	12
	18	12
	19	12
	20	12
	21	12
	22	12
	23	12
	24	12
	25	12
	26	12
	27	12
2LAC-PNLU03	28	13

(CONTINUED ON SHEET 3)

2VBB-UPS1D LOAD LIST
DWG. NO. AE-100G
SHEET 2 OF 33

INDEX

PANEL	BKR. NO.	SHEET NO.
2LAC-PNLU03	29	13
	30	13
	31	13
	32	13
	33 35 37	13
	34	13
	36	13
	38	13
	39	13
	40	13
	41	14
2LAC-PNLU03	42	14
2LAR-PNLU04	1	15
	2	15
	3	15
	4	15
	5	15
	6	15
	7	15
	8	15
	9	15
	10	15
	11	15
	12	15
	13	15
	14	15
	15	15
	16	15
	17	15
	18	16
	19	16
	20	16
	21	16
2LAR-PNLU04	22	16

PANEL	BKR. NO.	SHEET NO.
2LAR-PNLU04	23 25	16
	24 26	16
	27 29	16
	28 30	16
	31 33	16
	32 34	16
	35 37	16
	36 38	16
	39 41	16
	40 42	16
2LAT-PNLU01	1 3	17
	2 4	17
	5 7	17
	6 8	17
	9 11	17
	10 12	17

(CONTINUED ON SHEET 4)

2VBB-UPS1D LOAD LIST
DWG. NO. AE-100G
SHEET 3 OF 33

INDEX

PANEL	BKR. NO.	SHEET NO.
2LAT-PNLU01	13	17
	15	
	14	17
	16	
	17	17
	19	
	18	17
	20	
	21	17
	23	
	22	17
	24	
	25	18
	26	18
	27	18
	29	
	28	18
	30	
	31	18
	33	
	32	18
	34	
	35	18
	36	18
	37	18
	38	18
	39	18
	40	19
	41	19
2LAT-PNLU01	42	19
2LAC-PNLU02	1	20
	2	20
	3	20
	4	20
	5	20
	6	20
2LAC-PNLU02	7	20

PANEL	BKR. NO.	SHEET NO.
2LAC-PNLU02	8	20
	9	20
	10	20
	11	21
	12	21
	13	21
	14	21
	15	21
	16	21
	17	21
	18	21
	19	21
	20	21
	21	21
	22	21
	23	22
	24	22
	26	
	25	22
	27	
	28	22
	30	
	29	22
	31	
	32	22
	34	
	33	22
	35	
	36	22
	37	23
	38	23
	39	23
2LAC-PNLU02	40	23

(CONTINUED ON SHEET 5)

2VBB-UPS1D LOAD LIST
DWG. NO. AE-100G
SHEET 4 OF 33

INDEX

PANEL	BKR. NO.	SHEET NO.
2LAC-PNLU02	41	23
2LAC-PNLU02	42	23
2LAR-PNLU03	1	24
	2	24
	3	24
	4	24
	5	24
	6	24
	7	24
	8	24
	9	24
	10	24
	11	24
	12	24
	13	25
	14	25
	15	25
	16	25
	17	25
	18	25
	19	25
	20	25
	21	25
	22	26
	23 25	26
	24	26
	26	26
	27 29	26
	28 30	26
	31 33	26
2LAR-PNLU03	32 34	26

PANEL	BKR. NO.	SHEET NO.
2LAR-PNLU03	35 37	26
	36 38	26
	39 41	26
2LAR-PNLU03	40 42	26
2LAR-PNLU06	1	27
	2 4	27
	3	27
	5	27
	6	27
	7 9	27
	8	27
	10 12	28
	11 13	28
	14	28
	15	28
	16	28
	17	28
	18	28
	19	28
	20	28
	21	29
	22	29
2LAR-PNLU06	23 25	29

(CONTINUED ON SHEET 6)

2VBB-UPS1D LOAD LIST
DWG. NO. AE-100G
SHEET 5 OF 33

INDEX

PANEL	BKR. NO.	SHEET NO.
2LAR-PNLU06	24 26	29
	27 29	29
	28 30	29
	31 33	29
	32 34	29
	35 37	29
	36 38	29
	39 41	29
2LAR-PNLU06	40 42	29
2LAT-PNLU03	1 3	30
	2 4	30
	5 7	30
	6 8	30
	9 11	30
	10 12	30
	13 15	30
	14 16	30
2LAT-PNLU03	17 19	30

PANEL	BKR. NO.	SHEET NO.
2LAT-PNLU03	18 20	30
	21 23	30
	22 24	30
	25	30
	26	31
	27	31
	28	31
	29	31
	30	31
	31	31
	32	31
	33	31
	34	31
	35 37	31
	36	31
	38	32
	39 41	32
2LAT-PNLU03	40 42	32
2LAC-PNLU01	N/A	FOR NOTES SEE SHEET 33
2LAC-PNLU03	N/A	
2LAR-PNLU04	N/A	
2LAT-PNLU01	N/A	
2LAC-PNLU02	N/A	
2LAR-PNLU03	N/A	
2LAR-PNLU06	N/A	
2LAT-PNLU03	N/A	

2VBB-UPS1D LOAD LIST
DWG. NO. AE-100G
SHEET 6 OF 33

UPS NO: 2VBB-UPS1D
PNL NO: 2LAS-PNL016
DIST PNL NO: 2LAC-PNLU01
CIRCUIT NO: N/A

DRAWING REFERENCES

CE-100A

FEED TO DEVICE	BKR NO.	LTG. DWG.	DEVICE LOCATION BLDG	ELEV	PLANT IMPACT
ESSENTIAL LIGHTING	1	EE-78C,D	ELEC. TUNNEL	214	COVERED BY NORMAL
ESSENTIAL LIGHTING	2	EE-78D	ELEC. TUNNEL	214	COVERED BY NORMAL
ESSENTIAL LIGHTING	3	EE-78D	ELEC. TUNNEL	214	COVERED BY NORMAL
ESSENTIAL LIGHTING	4	EE-78C	ELEC. TUNNEL	214	COVERED BY NORMAL
ESSENTIAL LIGHTING	5	EE-78C,D	ELEC. TUNNEL	214	LOSE EXIT LIGHT BUT ALL LTG. COVERED BY NORMAL
ESSENTIAL LIGHTING	6	EE-78C	ELEC. TUNNEL	214	COVERED BY NORMAL
ESSENTIAL LIGHTING	7	EE-78C	LTG- STAIR NO. 1 ELEC. TUNNEL	N/A	NOT COVERED
ESSENTIAL LIGHTING	8	EE-78C	LTG- STAIR NO. 1 ELEC. TUNNEL	N/A	NOT COVERED
ESSENTIAL LIGHTING	9	EE-78D	LTG-STAIR NO. 3 ELEC TUNNEL	N/A	NOT COVERED
ESSENTIAL LIGHTING	10	EE-78D	LTG-STAIR NO. 3 ELEC TUNNEL	N/A	NOT COVERED
ESSENTIAL LIGHTING	11	EE-78D	LTG-STAIR NO. 2 ELEC TUNNEL	N/A	NOT COVERED

UPS NO: 2VBB-UPS1D
PNL NO: 2LAS-PNL016
DIST PNL NO: 2LAC-PNLU01
CIRCUIT NO: N/A

DRAWING REFERENCES

CE-100A

FEED TO DEVICE	BKR NO.	LTG. DWG.	DEVICE LOCATION BLDG	DEVICE LOCATION ELEV	PLANT IMPACT
ESSENTIAL LIGHTING	12	EE-78D	LTG-STAIR NO. 2 ELEC TUNNEL	N/A	NOT COVERED
ESSENTIAL LIGHTING	13	EE-78D	LTG-STAIR NO. 2 ELEC TUNNEL	N/A	NOT COVERED
SPARE	14				
EXIT LIGHTS	15	EE-67P, 78C,D	ASB ELEC TUNNEL	261 214	LOSE EXIT LIGHTS
EXIT LIGHTS	16	EE-65A	CONT. BLDG.	214	LOSE EXIT LIGHTS
ESSENTIAL LIGHTING	17	EE-67P, 78C	LTG-STAIR 315° AZ	N/A	NOT COVERED
EXIT LIGHTS	18	EE-65B	CONT BLDG	214	LOSE EXIT LIGHTS
ESSENTIAL LIGHTING	19	EE-65A	CONT BLDG	210 214	COVERED BY NORMAL
SPARE	20				
ESSENTIAL LIGHTING	21	EE-65A	CONT BLDG STAIRWAY	214	NOT COVERED
ESSENTIAL LIGHTING	22	EE-65A	CONT BLDG	214	COVERED BY NORMAL
ESSENTIAL LIGHTING	23	EE-65A	CONT BLDG	214	COVERED BY NORMAL
COMMUNICATION EQUIPMENT	24	EE-80AB, 80AC, 80AG, 80AM	ELEC TUNNELS ASB CONT BLDG	VARIOUS	LOSE COMMUNICATION SEE NOTE 1 & 2 SHEET 33

UPS NO: 2VBB-UPS1D
PNL NO: 2LAS-PNL016
DIST PNL NO: 2LAC-PNLU01
CIRCUIT NO: N/A

DRAWING REFERENCES

CE-100A

FEED TO DEVICE	BKR NO.	LTG. DWG.	DEVICE LOCATION BLDG	ELEV	PLANT IMPACT
SPARE	25				
SPARE	26				
SPARE	27				
SPARE	28				
SPARE	29				
SPARE	30				
SPARE	31				
SPARE	32 34				
SPARE	33				
SPARE	35				
SPARE	36 38				

UPS NO: 2VBB-UPS1D
PNL NO: 2LAS-PNL016
DIST PNL NO: 2LAC-PNLU01
CIRCUIT NO: N/A

DRAWING REFERENCES

CE-100A

FEED TO DEVICE	BKR NO.	LTG. DWG.	DEVICE LOCATION BLDG	ELEV	PLANT IMPACT
SPARE	37				
SPARE	39				
SPARE	40				
SPARE	41				
SPARE	42				

UPS NO: 2VBB-UPS1D
PNL NO: 2LAS-PNL016
DIST PNL NO: 2LAC-PNLU03
CIRCUIT NO: N/A

DRAWING REFERENCES

CE-100C

FEED TO DEVICE	BKR NO.	LTG. DWG.	DEVICE LOCATION BLDG	ELEV	PLANT IMPACT
ESSENTIAL LIGHTING	1	EE-65D	CB COMPUTER RM	288	COVERED BY NORMAL LTG
ESSENTIAL LIGHTING	2	EE-65D	CB INSTRUMENT RM	288	COVERED BY NORMAL LTG & EMERG. LTG
ESSENTIAL LIGHTING RECEPTACLES	3	65D,E	CB RELAY RM CB CONTROL RM	288 306	COVERED BY NORMAL LTG & EMERG. LTG
EXIT LIGHTS	4	EE-65D	CB	288	LOSS OF EXIT SIGN
ESSENTIAL LIGHTING	5	EE-65D	CB WEST CORRIDORS	288	COVERED BY NORMAL
ESSENTIAL LIGHTING	6	EE-65D	CB CABLE CHASE	288	COVERED BY NORMAL EXCEPT LT IN RM BET COL AC & AB & COL 10 1/4 AND 10 3/4
ESSENTIAL LIGHTING	7	EE-65E	CB WEST CORRIDORS	306	COVERED BY NORMAL
ESSENTIAL LIGHTING	8	EE-65E	CB SHIFT SUPV. OFFICE	306	COVERED BY NORMAL & EMERG. LTG
ESSENTIAL LIGHTING	9	EE-65E,F	CB SOUTH CORRIDORS	306	COVERED BY NORMAL
EXIT SIGNS	10	EE-65E,F	CB	306	LOSS OF EXIT SIGN
ESSENTIAL LIGHTING	11	EE-65F	CB, HVAC & INST. RMS	306	COVERED BY NORMAL & EMERG. LTG

UPS NO: 2VBB-UPS1D
PNL NO: 2LAS-PNL016
DIST PNL NO: 2LAC-PNLU03
CIRCUIT NO: N/A

DRAWING REFERENCES

CE-100C

FEED TO DEVICE	BKR NO.	LTG. DWG.	DEVICE LOCATION BLDG	ELEV	PLANT IMPACT
SPARE	12				
SPARE	13				
SPARE	14				
SPARE	15				
SPARE	16				
SPARE	17				
SPARE	18				
COMMUNICATION EQUIPMENT	19	EE-80C, 80AM	CB	306	LOSE COMM. IN CORRIDORS, CABLE RISER AREAS & LUNCH RM. CONTROL RM ALSO LOSES COMM. BUT IS PICKED UP BY JACKS HOOKED UP TO NORMAL PWR. SEE NOTE 1 & 2, SHEET 33
ESSENTIAL LIGHTING	20	EE-65D	CB, HAVAC RM	288	COVERD BY NORMAL
SPARE	21				
SPARE	22				
SPARE	23				
SPARE	24				
SPARE	25				
SPARE	26				
SPARE	27				

UPS NO: 2VBB-UPS1D
PNL NO: 2LAS-PNL016
DIST PNL NO: 2LAC-PNLU03
CIRCUIT NO: N/A

DRAWING REFERENCES

CE-100C

FEED TO DEVICE	BKR NO.	LTG. DWG.	DEVICE LOCATION BLDG	ELEV	PLANT IMPACT
SPARE	28				
SPARE	29				
SPARE	30				
SPARE	31				
RECEPTACLES	32	EE-65E	CB TRAINING RM	306	N/A
DIMMER PANEL 2LAC-PNLU13	33 35 37	EE-65E, EE-65G	CB CONTROL RM	306	LOSE ESSENTIAL LIGHTS IN CONTROL ROOM-NORMAL AND EMERGENCY LIGHTS REMAINING
RECEPTACLES	34	EE-65E	CB TRAINING RM	306	N/A
SPARE	36				
RECEPTACLES	38	EE-66H	TB HEALTH PHYSICS RM	306	N/A
RECEPTACLES	39	EE-66H	TB HEALTH PHYSICS RM	306	N/A
RECEPTACLES	40	EE-66H	TB HEALTH PHYSICS RM	306	N/A

UPS NO: 2VBB-UPS1D
PNL NO: 2LAS-PNL016
DIST PNL NO: 2LAC-PNLU03
CIRCUIT NO: N/A

DRAWING REFERENCES

CE-100C

FEED TO DEVICE	BKR NO.	LTG. DWG.	DEVICE LOCATION BLDG	ELEV	PLANT IMPACT
RECEPTACLES	41	EE-65D	CB TELPHONE RM	306	LOSS OF DIAL TELEPHONE
RECEPTACLES	42	EE-65E	CB CONTROL RM	306	N/A

UPS NO: 2VBB-UPS1D
PNL NO: 2LAS-PNL016
DIST PNL NO: 2LAR-PNLU04
CIRCUIT NO: N/A

DRAWING REFERENCES

CE-100N

FEED TO DEVICE	BKR NO.	LTG. DWG.	DEVICE LOCATION BLDG	ELEV	PLANT IMPACT
SPARE	1				
ESSENTIAL LIGHTING	2	EE-67J	RX BLDG N STAIRWAY	353	NOT COVERED
SPARE	3				
ESSENTIAL LIGHTING	4	EE-67J	RX BLDG E	353	COVERED BY NORMAL
SPARE	5				
ESSENTIAL LIGHTING	6	EE-67J	RX BLDG W	353	COVERED BY NORMAL
SPARE	7				
ESSENTIAL LIGHTING	8	EE-67J	RX BLDG N	353	COVERED BY NORMAL
SPARE	9				
SPARE	10				
SPARE	11				
SPARE	12				
SPARE	13				
SPARE	14				
SPARE	15				
SPARE	16				
SPARE	17				

UPS NO: 2VBB-UPS1D
PNL NO: 2LAS-PNL016
DIST PNL NO: 2LAR-PNLU04
CIRCUIT NO: N/A

DRAWING REFERENCES

CE-100N

FEED TO DEVICE	BKR NO.	LTG. DWG.	DEVICE LOCATION BLDG	ELEV	PLANT IMPACT
SPARE	18				
SPARE	19				
SPARE	20				
SPARE	21				
SPARE	22				
ESSENTIAL LIGHTING	23 25	EE-67J	RX BLDG	353	COVERED BY NORMAL
SPARE	24 26				
SPARE	27 29				
ESSENTIAL LIGHTING	28 30	EE-67J	RX BLDG	353	COVERED BY NORMAL
SPARE	31 33				
SPARE	32 34				
SPARE	35 37				
SPARE	36 38				
SPARE	39 41				
SPARE	40 42				

UPS NO: 2VBB-UPS1D
PNL NO: 2LAS-PNL016
DIST PNL NO: 2LAT-PNLU01
CIRCUIT NO: N/A

DRAWING REFERENCES

CE-100E

FEED TO DEVICE	BKR NO.	LTG. DWG.	DEVICE LOCATION BLDG	ELEV	PLANT IMPACT
ESSENTIAL LIGHTING	1 3	EE-66E	TURB BLDG	306	2 LIGHTS COVERED BY NORMAL LOSE 1 LIGHT NEAR EL. NO. 1
ESSENTIAL LIGHTING	2 4	EE-66E	TURB BLDG	306	COVERED BY NORMAL
ESSENTIAL LIGHTING	5 7	EE-66F	TURB BLDG	306	COVERED BY NORMAL
SPARE	6 8				
ESSENTIAL LIGHTING	9 11	EE-66F	TURB BLDG	306	COVERED BY NORMAL
ESSENTIAL LIGHTING	10 12	EE-66F	TURB BLDG CONTAMIN INSTR RM	306	COVERAGE PROVIDED
ESSENTIAL LIGHTING	13 15	EE-66G	TURB BLDG MOISTURE SEP/ REHEATER AREA B	306	COVERED BY NORMAL
SPARE	14 16				
ESSENTIAL LIGHTING	17 19	EE-66G	TURB BLDG MOISTURE SEP/ REHEATER AREA A	306	COVERED BY NORMAL
SPARE	18 20				
ESSENTIAL LIGHTING	21 23	EE-66G	TURB BLDG CLEAN STEAM RBLB AREA	306	COVERED BY NORMAL
SPARE	22 24				

UPS NO: 2VBB-UPS1D
PNL NO: 2LAS-PNL016
DIST PNL NO: 2LAT-PNLU01
CIRCUIT NO: N/A

DRAWING REFERENCES

CE-100E

FEED TO DEVICE	BKR NO.	LTG. DWG.	DEVICE LOCATION BLDG	ELEV	PLANT IMPACT
ESSENTIAL LIGHTING	25	EE-66G	TURB BLDG MOISTURE SEP/ REHEATER ENT	306	NO COVERAGE PROVIDED
EXIT LIGHTS	26	EE-66E,F	TURB BLDG	306	LOSE EXIT LIGHTS
SPARE	27 29				
ESSENTIAL LIGHTING	28 30	EE-79E	VENTILATION RM	288 306	COVERAGE PROVIDED
ESSENTIAL LIGHTING	31 33	EE-79E	VENTILATION RM	288 306	COVERED BY NORMAL
ESSENTIAL LIGHTING	32 34	EE-79E	OFFGAS AREA	288 317	COVERED BY NORMAL
COMMUNICATION EQUIPMENT	35	EE-80F,G, H,J	TURB BLDG	277 306	LOSE COMMUNICATION SEE NOTE 1 & 2 SHEET 33
ESSENTIAL LIGHTING	36	EE-66F, 66G	TURB BLDG CONTAMIN INSTR RM, CLEAN STEAM REBOILER	306	COVERED BY NORMAL
COMMUNICATION EQUIPMENT	37	EE-80AD, AE, AF	HEATER BAYS, VENT EQUIP RM	250,277, 288,306	LOSE COMMUNICATION SEE NOTE 1 & 2, SHEET 33
ESSENTIAL LIGHTING	38	EE-79E	OFFGAS AREA	288,306	COVERED BY NORMAL EXCEPT LIGHT BY COLUMN FA-3 1/2
ELEVATOR #3	39	EE-66B	TURB BLDG	250	NO COVERAGE PROVIDED

UPS NO: 2VBB-UPS1D
PNL NO: 2LAS-PNL016
DIST PNL NO: 2LAT-PNLU01
CIRCUIT NO:

DRAWING REFERENCES

CE-100E

FEED TO DEVICE	BKR NO.	LTG. DWG.	DEVICE LOCATION BLDG	ELEV	PLANT IMPACT
ESSENTIAL LIGHTING	40	EE-66D	TURB BLDG STAIRS	277,288	NO COVERAGE PROVIDED
ESSENTIAL LIGHTING	41	EE-66B, 66F	TURB BLDG STAIRS	261	NO COVERAGE PROVIDED
SPARE	42				

UPS NO: 2VBB-UPS1D
PNL NO: 2LAS-PNL016
DIST PNL NO: 2LAC-PNLU02
CIRCUIT NO: N/A

DRAWING REFERENCES

CE-100B

FEED TO DEVICE	BKR NO.	LTG. DWG.	DEVICE LOCATION BLDG	ELEV	PLANT IMPACT
ESSENTIAL LIGHTING	1	EE-65B	CB, CBL CHASE, CORRIDOR	237	NO COVERAGE STAIRS BETWEEN AA-AB & 10 1/4 AND 10 3/4
ESSENTIAL LIGHTING	2	EE-65B	CB, CABLE ROUTING	237	COVERAGE PROVIDED BY NORMAL
ESSENTIAL LIGHTING	3	EE-65D EE-65B	CB, STAIRS SW	237 250	NO COVERAGE STAIRS BETWEEN AA-AB & 10 1/4 AND 10 3/4
ESSENTIAL LIGHTING	4	EE-65B	CB, CABLE ROUTING	237	COVERAGE PROVIDED BY NORMAL
ESSENTIAL LIGHTING	5	EE-65B, 68C	CB CABLE CHASE DIE. GEN	237 244	COVERAGE PROVIDED BY NORMAL
ESSENTIAL LIGHTING	6	EE-65C	CB, STANDBY SWG. RM	261	COVERAGE PROVIDED BY NORMAL & EMERG.
ESSENTIAL LIGHTING	7	EE-65C	CB, STANDBY SWG. RM	261	COVERAGE PROVIDED BY NORMAL & EMERG.
ESSENTIAL LIGHTING	8	EE-65C	CB, STAIRS NE	261 270	NO COVERAGE
ESSENTIAL LIGHTING	9	EE-65C	CB, CABLE CHASE	261	COVERAGE PROVIDED BY NORMAL
ESSENTIAL LIGHTING	10	EE-65C	CB, BATTERY RMS	261	COVERAGE PROVIDED BY NORMAL

UPS NO: 2VBB-UPS1D
PNL NO: 2LAS-PNL016
DIST PNL NO: 2LAC-PNLU02
CIRCUIT NO: N/A

DRAWING REFERENCES

CE-100B

FEED TO DEVICE	BKR NO.	LTG. DWG.	DEVICE LOCATION BLDG	ELEV	PLANT IMPACT
ESSENTIAL LIGHTING	11	EE-65C	CB, CORRIDOR	261	COVERAGE PROVIDED BY NORMAL
ESSENTIAL LIGHTING	12	EE-65C	CB, CORRIDOR	237	COVERAGE PROVIDED BY NORMAL
EXIT LIGHTS	13	EE-65C	CB	261	LOSE EXIT LIGHTS
ESSENTIAL LIGHTING	14	EE-78A	ELEC. BAY	261	COVERAGE PROVIDED BY NORMAL
ESSENTIAL LIGHTING	15	EE-65C	CB, STAIRS SW	261 279	NO COVERAGE
ESSENTIAL LIGHTING	16	EE-78A	ELEC. BAY	261	COVERAGE PROVIDED BY NORMAL
ESSENTIAL LIGHTING	17	EE-65C	CB, VENT EQUIP & HPCS SWG. RMS	261	COVERAGE PROVIDED BY NORMAL
ESSENTIAL LIGHTING	18	EE-66H, 78A	ELEC. BAY	261	NO COVERAGE STAIRWELL
SPARE	19				
EXIT LIGHTS	20	EE-66H, 78A	ELEC BAY	261	LOSE EXIT LIGHTS
ESSENTIAL LIGHTING	21	EE-65D, 65F	CB, STAIRS SW	288 296 306	NO COVERAGE
SPARE	22				

UPS NO: 2VBB-UPS1D
PNL NO: 2LAS-PNL016
DIST PNL NO: 2LAC-PNLU02
CIRCUIT NO: N/A

DRAWING REFERENCES

CE-100B

FEED TO DEVICE	BKR NO.	LTG. DWG.	DEVICE LOCATION BLDG	DEVICE LOCATION ELEV	PLANT IMPACT
ESSENTIAL LIGHTING	23	EE-65C, 65D,E	CB, STAIRS NE	261 288 296	NO COVERAGE
SPARE	24 26				
ESSENTIAL LIGHTING	25 27	EE-68C	DIESEL GEN RMS	261	COVERAGE PROVIDED BY NORMAL & EMERG
SPARE	28 30				
SPARE	29 31				
SPARE	32 34				
SPARE	33 35				
COMMUNICATION EQUIPMENT	36	EE-80A,AL AM,AN, AP,AS	NS CB DG 115KV & 345KV SWYD	237/261 214/237 261	AT EL. 261 LOSE COMM IN REMOTE SHUTDOWN RM BUT STILL HAVE JACKS AT NORM PWR. SEE NOTE 1 & 2, SHEET 33

UPS NO: 2VBB-UPS1D
PNL NO: 2LAS-PNL016
DIST PNL NO: 2LAC-PNLU02
CIRCUIT NO: N/A

DRAWING REFERENCES

CE-100B

FEED TO DEVICE	BKR NO.	LTG. DWG.	DEVICE LOCATION BLDG	DEVICE LOCATION ELEV	PLANT IMPACT
COMMUNICATION EQUIPMENT	37	EE-80B,C, AM	CONT BLCG	288 306	EL 288 IS COVERED BY 2LAC-PNLU04 IN COMP & RELAY RM ONLY AND AT EL 306 COMM IS LOST IN CORRIDOR AND CABLE RISER AREA. CONTROL RM COMM IS PICKED UP FROM JACKS FROM NORM PWR. SEE NOTE 1&2, SHEET 33
EXIT LIGHTS	38	EE-68C	DIESEL GEN BLDG	261	LOSE EXIT LIGHTS
ESSENTIAL LIGHTING	39	EE-68C	DIESEL GEN BLDG	261	COVERAGE PROVIDED BY NORMAL
ESSENTIAL LIGHTING	40	EE-68C	DIESEL GEN BLDG	261	COVERAGE PROVIDED BY NORMAL
SPARE	41				
ESSENTIAL LIGHTING	42	EE-68C	DIESEL GEN BLDG	261	NO COVERAGE PROVIDED SOUTH ENT/EACH BAY

UPS NO: 2VBB-UPS1D
PNL NO: 2LAS-PNL016
DIST PNL NO: 2LAR-PNLU03
CIRCUIT NO: N/A

DRAWING REFERENCES

CE-100M

FEED TO DEVICE	BKR NO.	LTG. DWG.	DEVICE LOCATION BLDG	ELEV	PLANT IMPACT
ESSENTIAL LIGHTING	1	EE-67G	RX. BLDG	306	COVERAGE PROVIDED BY NORMAL
ESSENTIAL LIGHTING	2	EE-67G	RX. BLDG	306	COVERAGE BY NORMAL
ESSENTIAL LIGHTING	3	EE-67G	RX. BLDG	306	COVERAGE BY NORMAL
ESSENTIAL LIGHTING	4	EE-67G	RX. BLDG	306	COVERAGE BY NORMAL
SPARE	5				
ESSENTIAL LIGHTING	6	EE-67H	RX. BLDG	328	COVERAGE PROVIDED BY NORMAL
ESSENTIAL LIGHTING	7	EE-67H	RX. BLDG	328	COVERAGE PROVIDED BY NORMAL
ESSENTIAL LIGHTING	8	EE-67H	RX. BLDG	328	COVERAGE PROVIDED BY NORMAL
ESSENTIAL LIGHTING	9	EE-67H	RX. BLDG	328	COVERAGE PROVIDED BY NORMAL
ESSENTIAL LIGHTING	10	EE-67H	RX. BLDG	328	COVERAGE PROVIDED BY NORMAL
ESSENTIAL LIGHTING	11	EE-67H	RX. BLDG	328	COVERAGE PROVIDED BY NORMAL
COMMUNICATION EQUIPMENT	12	EE-80N, P, Q, R	RX. BLDG. PAGE/PARTY JACKS	240, 261, 289, 306	LOSE COMMUNICATION SEE NOTE 1&2, SHEET 33

UPS NO: 2VBB-UPS1D
PNL NO: 2LAS-PNL016
DIST PNL NO: 2LAR-PNLU03
CIRCUIT NO: N/A

DRAWING REFERENCES

CE-100M

FEED TO DEVICE	BKR NO.	LTG. DWG.	DEVICE LOCATION BLDG	ELEV	PLANT IMPACT
COMMUNICATION EQUIPMENT	13	EE-80M, N, P, Q, R, S, T, U, V	RX. BLDG. N. AUX. BLDG	215, 240, 261, 289, 306, 328, 353 175, 198	LOSE COMMUNICATIONS SEE NOTE 1&2, SHEET 33
ESSENTIAL LIGHTING	14	EE-67E	RX. BLDG STAIRS S.	261	NO COVERAGE IN SOUTH STAIR-TOWER OF RX. BLDG
ESSENTIAL LIGHTING	15	EE-67F, 67G	RX. BLDG STAIRS S.	289, 306	NO COVERAGE IN SOUTH STAIR-TOWER OF RX. BLDG.
ESSENTIAL LIGHTING	16	EE-67E, 67F,67G	RX. BLDG STAIRS N.	261, 289, 306	NO COVERAGE IN NORTH STAIR-TOWER OF RX. BLDG
ESSENTIAL LIGHTING	17	EE-67G, 67H	RX. BLDG STAIRS N.	306, 328	NO COVERAGE IN SOUTH STAIR-TOWER OF RX. BLDG
ESSENTIAL LIGHTING	18	EE-67G, 67H	RX. BLDG STAIRS N.	306, 328	NO COVERAGE IN NORTH STAIR-TOWER OF RX. BLDG
SPARE	19				
ESSENTIAL LIGHTING	20	EE-67J	RX. BLDG STAIRS S.	353	NO COVERAGE IN SOUTH STAIR-WAY
SPARE	21				

UPS NO: 2VBB-UPS1D
PNL NO: 2LAS-PNL016
DIST PNL NO: 2LAR-PNLU03
CIRCUIT NO: N/A

DRAWING REFERENCES

CE-100M

FEED TO DEVICE	BKR NO.	LTG. DWG.	DEVICE LOCATION BLDG	ELEV	PLANT IMPACT
ESSENTIAL LIGHTING	22	EE-67J	RX. BLDG STAIRS S.	363, 378, 394	NO COVERAGE IN SOUTH STAIR-WAY
SPARE	23 25				
ESSENTIAL LIGHTING	24	EE-67J	RX. BLDG. STAIRS S.	408, 421, 427	NO COVERAGE IN SOUTH STAIRWAY
SPARE	26				
SPARE	27 29				
SPARE	28 30				
SPARE	31 33				
SPARE	32 34				
SPARE	35 37				
SPARE	36 38				
SPARE	39 41				
SPARE	40 42				

UPS NO: 2VBB-UPS1D
PNL NO: 2LAS-PNL016
DIST PNL NO: 2LAR-PNLU06
CIRCUIT NO: N/A

DRAWING REFERENCES

CE-100Q

FEED TO DEVICE	BKR NO.	LTG. DWG.	DEVICE LOCATION BLDG	DEVICE LOCATION ELEV	PLANT IMPACT
EXIT LIGHTS	1	EE-67K	ABS	175	LOSE EXIT LIGHTS
ESSENTIAL LIGHTING	2 4	EE-67K,L	ABS	175 215	COVERAGE PROVIDED BY NORMAL
ESSENTIAL LIGHTING	3	EE-67K,L	ABS STAIRWELL	175,198, 215 & 240	NO COVERAGE WITHIN AUX BAY SOUTH STAIRWELL & RX BLDG. ENT. AT STAIRWELL
ESSENTIAL LIGHTING	5	EE-67K,L	ABS STAIRWELL	175, 198,215 & 250	NO COVERAGE WITHIN AUX BAY SOUTH STAIRWELL & RX BLDG. ENT. AT STAIRWELL
EXIT LIGHTS	6	EE-67K	ABS	198	LOSE EXIT LIGHTS
ESSENTIAL LIGHTING	7 9	EE-67K,L	ABS	198,240	COVERAGE PROVIDED BY NORMAL
EXIT LIGHTS	8	EE-67L	ABS	215,240, 261	LOSE ENT. LIGHTS

UPS NO: 2VBB-UPS1D
PNL NO: 2LAS-PNL016
DIST PNL NO: 2LAR-PNLU06
CIRCUIT NO: N/A

DRAWING REFERENCES

CE-100Q

FEED TO DEVICE	BKR NO.	LTG. DWG.	DEVICE LOCATION BLDG	ELEV	PLANT IMPACT
ESSENTIAL LIGHTING	10 12	EE-67L	ABS	215	COVERAGE PROVIDED BY NORMAL
ESSENTIAL LIGHTING	11 13	EE-67L	ABS	240	COVERAGE PROVIDED BY NORMAL
ESSENTIAL LIGHTING	14	EE-67L	ABS	250	COVERAGE PROVIDED BY NORMAL
SPARE	15				
SPARE	16				
SPARE	17				
SPARE	18				
SPARE	19				
SPARE	20				

UPS NO: 2VBB-UPS1D
PNL NO: 2LAS-PNL016
DIST PNL NO: 2LAR-PNLU06
CIRCUIT NO: N/A

DRAWING REFERENCES

CE-100Q

FEED TO DEVICE	BKR NO.	LTG. DWG.	DEVICE LOCATION BLDG	ELEV	PLANT IMPACT
COMMUNICATION EQUIPMENT	21	EE-80K,L,N,U,V	RX BLDG ABS	175,196, 240 175,198, 215 & 240	LOSE COMMUNICATION SEE NOTE 1&2, SHEET 33
SPARE	22				
SPARE	23 25				
SPARE	24 26				
SPARE	27 29				
SPARE	28 30				
SPARE	31 33				
SPARE	32 34				
SPARE	35 37				
SPARE	36 38				
SPARE	39 41				
SPARE	40 42				

UPS NO: 2VBB-UPS1D
PNL NO: 2LAS-PNL016
DIST PNL NO: 2LAT-PNLU03
CIRCUIT NO: N/A

DRAWING REFERENCES

CE-100G

FEED TO DEVICE	BKR NO.	LTG. DWG.	DEVICE LOCATION BLDG	ELEV	PLANT IMPACT
ESSENTIAL LIGHTING	1 3	EE-66A	TURB. BLDG. GRD. FL.	250	COVERAGE PROVIDED BY NORMAL
ESSENTIAL LIGHTING	2 4	EE-66B	TURB. BLDG. GRD. FL.	250	COVERAGE PROVIDED BY NORMAL
ESSENTIAL LIGHTING	5 7	EE-79B	RAMP TO SCREENWELL BLDG.	250	COVERAGE PROVIDED BY NORMAL
SPARE	6 8				
SPARE	9 11				
ESSENTIAL LIGHTING	10 12	EE-66B	TURB. BLDG. GRD. FL.	250	COVERAGE PROVIDED BY NORMAL
SPARE	13 15				
SPARE	14 16				
SPARE	17 19				
ESSENTIAL LIGHTING	18 20	EE-79B	HTR. BAY "B"	250	COVERAGE PROVIDED BY NORMAL
ESSENTIAL LIGHTING	21 23	EE-79B	HTR. BAY "C"	250	COVERAGE PROVIDED BY NORMAL
SPARE	22 24				
ESSENTIAL LIGHTING	25	EE-66B	TURB. BLDG. HEAT EXCH. RM.	250	COVERAGE PROVIDED BY NORMAL

UPS NO: 2VBB-UPS1D
PNL NO: 2LAS-PNL016
DIST PNL NO: 2LAT-PNLU03
CIRCUIT NO: N/A

DRAWING REFERENCES

CE-100G

FEED TO DEVICE	BKR NO.	LTG. DWG.	DEVICE LOCATION BLDG	ELEV	PLANT IMPACT
EXIT LIGHTING	26	EE-66B	TURB. BLDG.	250	LOSE EXIT LIGHTS
EXIT LIGHTS	27	EE-78B, 78E	PIPE TUNNELS	N/A	LOSE EXIT LIGHTS
COMMUNICATION EQUIPMENT	28	EE-80AE, 80AH	HEATER BAYS PIPE TUNNEL	277	LOSE COMMUNICATION SEE NOTE 1&2, SHEET 33
COMMUNICATION EQUIPMENT	29	EE-80D, E, Z, AD, AH, AJ, AR	TURB. BLDG., SCREENWELL, HTR. BAY, PIPE TUNNEL SERV. BLDG.	250 261 250 261	LOSE COMMUNICATION SEE NOTE 1&2, SHEET 33
ESSENTIAL LIGHTING	30	EE-66B	TURB. BLDG. MAINSTEAM CHASE ENT.	250	COVERAGE PROVIDED BY NORMAL
ESSENTIAL LIGHTING	31	EE-78B	PIPE TUNNEL	N/A	COVERAGE PROVIDED BY NORMAL
ESSENTIAL LIGHTING	32	EE-78E	PIPE TUNNEL	N/A	COVERAGE PROVIDED BY NORMAL
ESSENTIAL LIGHTING	33	EE-78B	PIPE TUNNEL	N/A	COVERAGE PROVIDED BY NORMAL
ESSENTIAL LIGHTING	34	EE-79B	HEATER BAY "B" & "C"	250	COVERAGE PROVIDED BY NORMAL
ESSENTIAL LIGHTING	35 37	EE-79D	HEATER BAY "B"	250	COVERAGE PROVIDED BY NORMAL
ESSENTIAL LIGHTING	36	EE-78E	PIPE TUNNEL		COVERAGE PROVIDED BY NORMAL

UPS NO: 2VBB-UPS1D
PNL NO: 2LAS-PNL016
DIST PNL NO: 2LAT-PNLU03
CIRCUIT NO: N/A

DRAWING REFERENCES

CE-100G

FEED TO DEVICE	BKR NO.	LTG. DWG.	DEVICE LOCATION BLDG	ELEV	PLANT IMPACT
SPARE	38				
ESSENTIAL LIGHTING	39 41	EE-79D	HEATER BAY "C" MAINSTEAM CHASE ENT.	277	COVERAGE PROVIDED BY NORMAL EXCEPT IN STAIRWELL
SPARE	40 42				

NOTES:

1. THE HANDSET LOCATIONS OF THE COMMUNICATION SYSTEM HAVE BEEN LOCATED AT POSITIONS TO MEET THE INTENT OF THE NFPA 72D CODE REQUIREMENTS REGARDING THE INSTALLATION OF MANUAL FIRE ALARM PULL STATIONS. AS SUCH, THE LOSS OF COMMUNICATION SYSTEM HANDSETS RESULT IN THE EQUIVALENT LOSS OF MANUAL FIRE ALARM PULL STATIONS.

2. THESE AREAS ARE PROVIDED PARTIAL PAGING COMMUNICATION FROM UPS 2VBB-UPS1C.

2VBB-UPS1G LOAD LIST

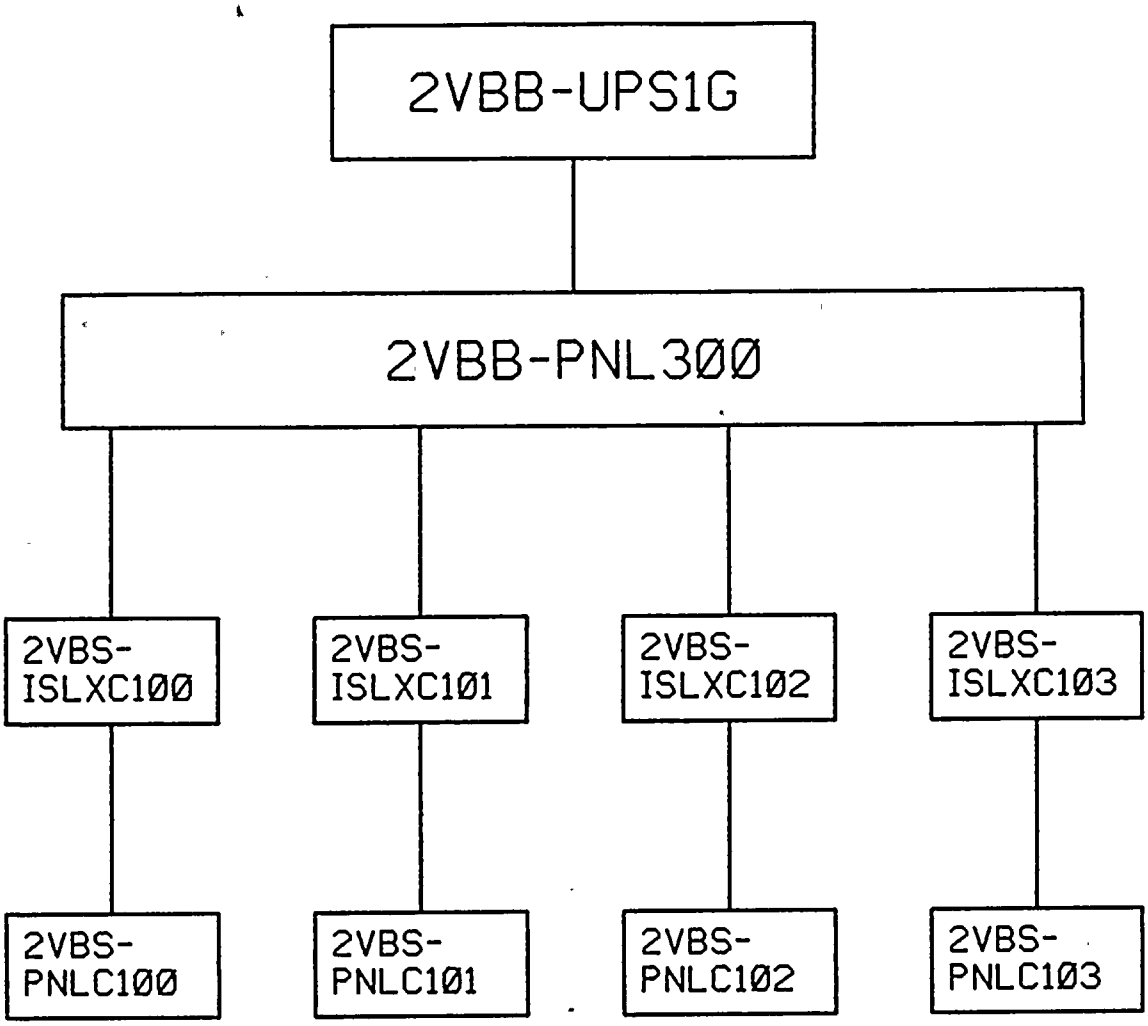

NOTE: THIS DRAWING WAS CREATED USING COMPUTER AIDED DRAFTING DO NOT MAKE MANUAL CHANGES

NUCLEAR NON-SAFETY RELATED

NIAGARA MOHAWK

NINE MILE POINT
NUCLEAR STATION - UNIT 2
SCRIBA, N.Y.

LOAD LIST
UNINTERRUPTIBLE POWER SUPPLY
2VBB-UPS1G
SHEET 1 OF 18

SCALE NONE | DRAWING NO AE-100H

MK	DATE	BY	MF	DESCRIPTION	CK	APP
1	9-11-91	JBP		ORIGINAL ISSUE- AS BUILT	Ond UB	dwf

INDEX

PANEL	BKR. NO.	SHEET NO.
2VBS-PNLC100	1	4
	2	4
	3	4
	4	4
	5	4
	6	4
	7	4
	8	5
	9	5
	10	5
	11	5
	12	5
	13	5
	14	5
	15	5
	16	5
	17	6
	18	6,7
	19	6,8
	20	6
	21	6
	22	6
	23	6
	24	6
	25	6
	26	6
	27	6
2VBS-PNLC100	28	6

PANEL	BKR. NO.	SHEET NO.
2VBS-PNLC101	1	9
	2	9
	3	9
	4	9
	5	9
	6	9
	7	9
	8	10
2VBS-PNLC101	9	10

PANEL	BKR. NO.	SHEET NO.
2VBS-PNLC101	10	10
	11	10
	12	10
	13	10
	14	10
	15	10
	16	10
	17	10
	18	11
	19	11
	20	11
	21	11
	22	11
	23	11
	24	11
	25	12
	26	12
	27	12
2VBS-PNLC101	28	12

PANEL	BKR. NO.	SHEET NO.
2VBS-PNLC102	1	13
	2	13
	3	13
	4	13
	5	14
	6	14
	7	14
	8	14
	9	14
	10	14
	11	14
	12	14.
2VBS-PNLC102	13	14

(CONTINUED ON SHEET 3)

2VBB-UPS1G LOAD LIST
DWG. NO. AE-100H
SHEET 2 OF 18

INDEX

PANEL	BKR. NO.	SHEET NO.
2VBS-PNLC102	14	14
	15	15
	16	15
	17	15
	18	15
	19	15
	20	15
	21	15
	22	15
	23	15
	24	15
	25	15
	26	16
	27	16
2VBS-PNLC102	28	16
2VBS-PNLC103	1	17
	2	17
	3	17
	4	17
	5	17
	6	17
	7	17
	8	17
	9	17
	10	17
	11	17
	12	17
	13	17
	14	17
	15	17
	16	17
	17	17
	18	17
	19	18
	20	18
	21	18
2VBS-PNLC103	22	18

PANEL	BKR. NO.	SHEET NO.
2VBS-PNLC103	23	18
	24	18
	25	18
	26	18
	27	18
2VBS-PNLC103	28	18

2VBB-UPS1G LOAD LIST
DWG. NO. AE-100H
SHEET 3 OF 18

UPS NO: 2VBB-UPS1G
PNL NO: 2VBB-PNL300
DIST PNL NO: 2VBS-PNLC100
CIRCUIT NO: N/A

DRAWING REFERENCES
EE-27B

FEED TO DEVICE	BKR NO.	CONN. DWG.	DEVICE LOCATION		PLANT IMPACT
			BLDG.	ELEV.	
2CEC-CP600	1	EE-11J EE-11BH	CRR	288	LOSE BOP CENTRAL PROCESSING UNIT - "A" (PMS COMPUTER) INTEGRAL PART TO SPECIFIC SPDS AND/OR 3D MONICORE FUNCTIONS
2CEC-CP603	2	EE-11J EE-11BH	CRR	288	LOSE BOP LARGE CORE STORAGE CABINET NO. 1 (PMS COMPUTER) INTEGRAL PART TO SPECIFIC PSDS AND/OR 3D MONICORE FUNCTIONS
2CEC-CP612	3	EE-11J EE-11BH	CRR	288	LOSE DISPLAY GENERATION CABINET (PMS COMPUTER)
2CEC-CP608	4	EE-11J EE-11BH	CRR	288	LOSE MAGNETIC TAPE NO. 1 CABINET. LONG TERM DATA STORAGE (PMS COMPUTER)
2CEC-CP619	5	EE-11J EE-11BH	CRR	288	LOSE NSSS ANALOG/DIGITAL I/O CABINET (PMS COMPUTER) INTEGRAL PART TO SPECIFIC SPDS AND/OR 3D MONICORE FUNCTIONS
2CEC-CP620	6	EE-11J EE-11BH	CRR	288	LOSE NSSS DIGITAL I/O CABINET (PMS COMPUTER) INTEGRAL PART TO SPECIFIC SPDS AND/OR 3D MONICORE FUNCTIONS
2CEC-CP607	7	EE-11J EE-11BH	CRR	288	LOSE COMMON CORE MEMORY (PMS COMPUTER)

UPS NO: 2VBB-UPS1G
PNL NO: 2VBB-PNL300
DIST PNL NO: 2VBS-PNLC100
CIRCUIT NO: N/A

DRAWING REFERENCES
EE-27B

FEED TO DEVICE	BKR NO.	CONN. DWG.	DEVICE LOCATION		PLANT IMPACT
			BLDG.	ELEV.	
2CEC-CP624	8	EE-11J EE-11BH	CRR	288	LOSE BOP DIGITAL I/O CABINET NO. 3 (PMS COMPUTER)
2CEC-CP622	9	EE-11J EE-11BH	CRR	288	LOSE BOP DIGITAL I/O CABINET NO. 1 (PMS COMPUTER) INTEGRAL PART TO SPECIFIC SPDS AND/OR 3D MONICORE FUNCTIONS. LOSE SIGNAL OUTPUT TO SERVICE WATER PEN RECORDERS REQUIRED FOR STATE DEC. (2SWP-FR602)
2CEC-CP6261	10	EE-11J EE-11BH	CRR	288	LOSE BOP DIGITAL I/O CABINET NO. 5 (PMS COMPUTER)
2CEC-CP625	11	EE-11J EE-11BH	CRR	288	LOSE BOP DIGITAL I/O CABINET NO. 4 (PMS COMPUTER)
2CEC-CP617	12	EE-11J EE-11BH	CRR	288	LOSE BOP ANALOG INPUT CABINET NO. 4 (PMS COMPUTER)
2CEC-CP616	13	EE-11J EE-11BH	CRR	288	LOSE BOP ANALOG INPUT CABINET NO. 4 (PMS COMPUTER)
2CEC-RCTP1	14	EE-11J EE-11BH	CSA	261	CABLE SPARED ON ELEV. 261
2CEC-CP618	15	EE-11J EE-11BH	CRR	288	LOSE BOP ANALOG INPUT CABINET NO. 5 (PMS COMPUTER)
2CEC-RCPT2	16	EE-11J EE-11BH	CRR	288	CABLE SPARED IN FALSE FLOOR

UPS NO: 2VBB-UPS1G
PNL NO: 2VBB-PNL300
DIST PNL NO: 2VBS-PNLC100
CIRCUIT NO: N/A

DRAWING REFERENCES
EE-27B
EE-27A

FEED TO DEVICE	BKR NO.	CONN. DWG.	DEVICE LOCATION		PLANT IMPACT
			BLDG.	ELEV.	
2CEC-RCPT10	17	EE-11J EE-11BH	CCR	306	CABLES ON ELEV. 306 SPARED IN FALSE FLOOR
2EPG*PNL101	18	EE-8DS EE-11J	DG	261	DSL GEN DIV 1 GETARS INPUT SIGNALS LOSS OF ALL FUNCTIONS. SEE ATTACHED.
2EPG*PNL103	19	EE-8DS EE-11J	DG	261	DSL GEN DIV 2 GETARS INPUT SIGNALS LOSS OF ALL FUNCTIONS. SEE ATTACHED
SPARE	20				
SPARE	21				
SPARE	22				
SPARE	23				
SPARE	24				
SPARE	25				
SPARE	26				
SPARE	27				
SPARE	28				

UPS NO: 2VBB-UPS1G
PNL NO: 2VBB-PNL300
DIST. PNL NO: 2VBS-PNLC100
BKR NO: 18
CIRCUIT NO: 2EGPA09/2SXSA01

DRAWING REFERENCES
0001420-221-098
EE-8DR, 14B, 11J, 3KY
ESK-8EGP01, 02, 04
ESK-10SXS02

FEED TO DEVICE	DEVICE LOCATION		PLANT IMPACT
	BLDG.	ELEV.	
2EGP*PNL101 DIESEL GEN. DIV. 1 GETARS INPUT SIGNAL	DG	261	LOSS OF THE GETARS' ABILITY TO MONITOR DIV. 1 DIE. GEN. WATTS, VARS, FREQ, DC FIELD VOLTS, AC VOLTS, AND SPEED, LOSS OF ALL FUNCTIONS
2CES*PNL517 STARTUP TESTING/TRANSIENT ANALYSIS RECORDING SYS	CB	237	

UPS NO: 2VBB-UPS1G
PNL NO: 2VBB-PNLC100
DIST PNL NO: 2VBS-PNLC100
BKR NO: 19
CIRCUIT NO: 2EGPB09/2SXSB01

DRAWING REFERENCES
EE-11J, 8DS
ESK-8EGP03, 10SXS03

FEED TO DEVICE	DEVICE LOCATION		PLANT IMPACT
	BLDG.	ELEV.	
2EGP*PNL103 DIESEL GEN. DIV. 2 GETARS INPUT SIGNAL	DG	261	LOSS OF THE GETARS' ABILITY TO MONITOR DIV. II DIE. GEN. WATTS, VARS, FREQ, DC FIELD VOLTS, AC VOLTS, AND SPEED, LOSS OF ALL FUNCTIONS
2CES*PNL519 STARTUP TESTING/TRANSIENT ANALYSIS RECORDING SYS	CB	237	

UPS NO: 2VBB-UPS1G
PNL NO: 2VBB-PNL300
DIST PNL NO: 2VBS-PNLC101
CIRCUIT NO: N/A

DRAWING REFERENCES
EE-27B

FEED TO DEVICE	BKR NO.	CONN. DWG.	DEVICE LOCATION BLDG	ELEV	PLANT IMPACT
2CEC-CP601	1	EE-11BH	CRR	288	LOSS OF POWER TO CENTRAL PROCESSING UNIT-"B" (PMS COMPUTER) INTEGRAL PART TO SPECIFIC SPDS AND/OR 3D-MONICORE FUNCTIONS
2CEC-CP604	2	EE-11BH	CRR	288	LOSS OF POWER TO LARGE CORE STORAGE CABINET NO. 2 INTEGRAL PART TO SPECIFIC SPDS AND/OR 3D-MONICORE FUNCTIONS
2CEC-RCPT6 SPARE	3	EE-11BH	CRR	288	
2CEC-CP656	4	EE-11BH	CRR	288	LOSS OF POWR TO MAGNETIC TAPE CABINET NO. 2 (PROCESS COMPUTER) LONG TERM DATA STORAGE
2CEC-CP623	5	EE-11BH	CRR	288	LOSS OF POWER TO DIGITAL I/O CABINET, BOP NO. 2
2CEC-CP627	6	EE-11BH	CRR	288	LOSS OF POWER TO DIGITAL I/O CABINET, BOP NO. 6
2CEC-CP628	7	EE-11BH	CRR	288	LOSS OF POWER TO DIGITAL I/O CABINET, BOP NO. 7

UPS NO: 2VBB-UPS1G
PNL NO: 2VBB-PNL300
DIST PNL NO: 2VBS-PNLC101
CIRCUIT NO: N/A

DRAWING REFERENCES
CE-27B

FEED TO DEVICE	BKR NO.	CONN. DWG.	DEVICE LOCATION BLDG	DEVICE LOCATION ELEV	PLANT IMPACT
2CEC-CP610	8	EE-11BH	CRR	288	LOSS OF POWER TO DIGITAL I/O CABINET, BOP NO. 8
2CEC-CP611	9	EE-11BH	CRR	288	LOSS OF POWER TO DIGITAL I/O CABINET, BOP NO. 9
2CEC-CP621	10	EE-11BH	CRR	288	LOSS OF POWER TO DIGITAL I/O CABINET, BOP NO. 10
2CEC-CP640	11	EE-11BH	CRR	288	LOSS OF POWER TO DIGITAL I/O CABINET, BOP NO. 11
2CEC-CP613	12	EE-11BH	CRR	288	LOSS OF POWR TO ANALOG INPUT CABINET, NSSS NO. 3
2CEC-CP614	13	EE-11BH	CRR	288	LOSS OF POWER TO ANALOG INPUT CABINET, BOP NO. 1
2CEC-CP615	14	EE-11BH	CRR	288	LOSS OF POWER TO ANALOG INPUT CABINET, BOP NO. 2
2CEC-RCPT3 2CEC-CP864	15	EE-11BH	CRR	288	LOSS OF POWER TO DRMS CPU-2 PRINTER
2CEC-RCPT4 2CEC-CP863	16	EE-11BH	CRR	288	LOSS OF POWER TO DRMS CPU-1 PRINTER
2CEC-RCPT5 2CEC-CP638, 862	17	EE-11BH	CRR	288	LOSS OF POWER TO PROCESS COMPUTER CARD READER AND DRMS PROGRAM CONSOLE

UPS NO: 2VBB-UPS1G
PNL NO: 2VBB-PNL300
DIST PNL NO: 2VBS-PNLC101
CIRCUIT NO: N/A

DRAWING REFERENCES
EE-27B

FEED TO DEVICE	BKR NO.	CONN. DWG.	DEVICE LOCATION BLDG	DEVICE LOCATION ELEV	PLANT IMPACT
2CEC-RCPT7 2CEC-KYBD600, DSPL605, 606	18	EE-11BH	CRR	288	LOSS OF POWER TO OPERATOR'S KEYBOARD, OPERATOR'S MONITOR, AND ALARM MONITOR (PROCESS COMPUTER)
2CEC-RCPT8 2CEC-KYBD601, DSPL609	19	EE-11BH	CRR	288	LOSS OF POWER TO UTILITY KEYBOARD AND MONITOR (PROCESS COMPUTER)
2CEC-RCPT9 2CEC-CP633, 634, 636	20	EE-11BH	CRR	288	LOSS OF POWER TO LOG PRINTER, UTILITY PRINTER, AND ALARM PRINTER (PROCESS COMPUTER)
2CEC-CP657	21	EE-11BH	CRR	288	LOSS OF POWER TO SWITCHING CABINET (PROCESS COMPUTER)
SPARE	22				
SPARE	23				
SPARE	24				

UPS NO: 2VBB-UPS1G
PNL NO: 2VBB-PNL300
DIST PNL NO: 2VBS-PNLC101
CIRCUIT NO: N/A

DRAWING REFERENCES
EE-27B

FEED TO DEVICE	BKR NO.	CONN. DWG.	DEVICE LOCATION BLDG	ELEV	PLANT IMPACT
SPARE	25				
SPARE	26				
SPARE	27				
SPARE	28				

UPS NO: 2VBB-UPS1G
PNL NO: 2VBB-PNL300
DIST PNL NO: 2VBS-PNLC102
CIRCUIT NO: N/A

DRAWING REFERENCES
EE-27B

FEED TO DEVICE	BKR NO.	CONN DWG.	DEVICE LOCATION BUILDING	ELEVATION	PLANT IMPACT
2IHS-PNL105 ERF COMPUTER	1	EE-11GH EE-3NF	CRR	288	POWER TO ERF COMPUTER INPUT PANEL, LOSS OF INPUTS WHICH SUPPORT SAFETY PARAMETER DISPLAY SYSTEM (SPDS) AND EMERGENCY RESPONSE FACILITY (ERF) FUNCTIONS.
2IHS-PNL106 ERF COMPUTER	2	EE-11GH EE-3ND	CRR	288	POWER TO ERF COMPUTER INPUT PANEL, LOSS OF INPUTS WHICH SUPPORT SAFETY PARAMETER DISPLAY SYSTEM (SPDS) AND EMERGENCY RESPONSE FACILITY (ERF) FUNCTIONS.
2IHS-PNL107 ERF COMPUTER	3	EE-11GH EE-3NP	CRR	288	POWER TO ERF COMPUTER INPUT PANEL, LOSS OF INPUTS WHICH SUPPORT SAFETY PARAMETER DISPLAY SYSTEM (SPDS) AND EMERGENCY RESPONSE FACILITY (ERF) FUNCTIONS.
2CEC-RCPT 23 2CEC-CP652	4	EE-11GH	CRR	288	POWER TO DRMS 2CEC-CP652

UPS NO: 2VBB-UPS1G
PNL NO: 2VBB-PNL300
DIST PNL NO: 2VBS-PNLC102
CIRCUIT NO: N/A

DRAWING REFERENCES
EE-27B

FEED TO DEVICE	BKR NO.	CONN DWG.	DEVICE LOCATION BUILDING	ELEVATION	PLANT IMPACT
2CEC-RCPT 24 2CEC-CP851	5	EE-11GH	CRR	288	DRMS MAIN PROCESSOR #1 POWER
2CEC-RCPT 25 2CEC-CP850	6	EE-11GH	CRR	288	DRMS COMPUTER I/O CAB. 1 POWER, LOSE PORTION OF MONITORING CAPABILITIES
2CEC-RCPT 26 2CEC-CP853	7	EE-11GH	CRR	288	DRMS MAIN PROCESSOR #2 POWER, LOSE PORTION OF MONITORING CAPABILITIES
2CEC-RCPT 27 2CEC-CP854	8	EE-11GH	CRR	288	DRMS COMPUTER I/O CAB. 2 POWER
2CEC-RCPT20 2CEC-CP861	9	EE-11GH	CRR	288	POWER TO DRMS DATA LOGGER
2CEC-CP860	10	EE-11GH EE-4CM	CRR	288	POWER TO DRMS ENGR. CONSOLE
2CEC-RCPT 11 2IHS-DSPL102,KYBD102	11	EE-11GH	CCR	306	COMPUTER KEYBOARD/ DISPLAY
2CEC-RCPT 14 2RMS-DSPL175,KYBD175	12	EE-11GH	CCR	306	COMPUTER KEYBOARD/ DISPLAY
2CEC-RCPT 16 2LWS-CP457	13	EE-11GH	CCR	306	COMPUTER KEYBOARD/ DISPLAY
2CEC-RCPT 18 2MMS-DSPL106,CP107	14	EE-11GH	CCR	306	POWER TO METEOROOLOGICAL MONITOR

UPS NO: 2VBB-UPS1G
PNL NO: 2VBB-PNL300
DIST PNL NO: 2VBS-PNLC102
CIRCUIT NO: N/A

DRAWING REFERENCES
EE-27B

FEED TO DEVICE	BKR NO.	CONN DWG.	DEVICE LOCATION BUILDING	ELEVATION	PLANT IMPACT
2FPM-PNL201	15	EE-11GH EE-18AC	CRR	288	AC POWER TO PANEL 2FPM-PNL201 FIRE PROTECTION SYSTEM, LOSS OF MONITORING FUNCTIONS
2FPM-PNL200	16	EE-11GH EE-18AC	CRR	288	AC POWER TO PANEL 2FPM-PNL200 FIRE PROTECTION SYSTEM, LOSS OF MONITORING FUNCTIONS.
2SXS-RCPT1 2SXS-CB204	17	EE-11GH	CCR	306	GETARS COMPUTER CAB/ POWER
2CEC-RCPT35	18	EE-11GH	CRR	288	RECEPTACLES FOR COMPUTER EQUIP.
2CEC-RCPT 36	19	EE-11GH	CRR	288	RECEPTACLES FOR COMPUTER EQUIP.
2CEC-RCPT 37	20	EE-11GH	CRR	288	RECEPTACLES FOR COMPUTER EQUIP.
2CEC-RCPT 39	21	EE-11GH	CRR	288	RECEPTACLES FOR COMPUTER EQUIP.
2CEC-RCPT 41	22	EE-11GH	CRR	288	RECEPTACLES FOR COMPUTER EQUIP.
2CEC-RCPT 40	23	EE-11GH	CRR	288	RECEPTACLES FOR COMPUTER EQUIP.
SPARE	24				
SPARE	25				

UPS NO: 2VBB-UPS1G
PNL NO: 2VBB-PNL300
DIST PNL NO: 2VBS-PNLC102
CIRCUIT NO: N/A

DRAWING REFERENCES
EE-27B

FEED TO DEVICE	BKR NO.	CONN DWG.	DEVICE LOCATION BUILDING	ELEVATION	PLANT IMPACT
SPARE	26				
SPARE	27				
SPARE	28				

UPS NO: 2VBB-UPS1G
PNL NO: 2VBB-PNL300
DIST PNL NO: 2VBS-PNLC103
CIRCUIT NO: N/A

DRAWING REFERENCES

EE-27A

FEED TO DEVICE	BKR NO.	CONN DWG.	DEVICE LOCATION BUILDING	ELEVATION	PLANT IMPACT
2RMS-PNL187	1	EE-4CM EE-11GH	TB	306	LOSE HP-2 CONSOLE
2RMS-RCPT1 2RMS-CP186	2	EE-11GH	TB	306	LOSE HP-2 PRINTER
2RMS-RCPT2 COUNTING RM RCPT.	3	EE-11GH	TB	306	LOSE RECEPTACLES
2RMS-RCPT6 RECEPTACLE FOR COUNTING RM TABLE	4	EE-11GH	TB	306	LOSE RECEPTACLES
2RMS-RCPT10 COUNTING RM RCPT	5	EE-11GH	TB	306	LOSE RECEPTACLES
SPARE	6				
SPARE	7				
SPARE	8				
SPARE	9				
SPARE	10				
SPARE	11				
SPARE	12				
SPARE	13				
SPARE	14				
SPARE	15				
SPARE	16				
SPARE	17				
SPARE	18				

UPS NO: 2VBB-UPS1G
PNL NO: 2VBB-PNL300
DIST PNL NO: 2VBS-PNLC103
CIRCUIT NO: N/A

FEED TO DEVICE	BKR NO.	CONN DWG.	DEVICE LOCATION BUILDING	ELEVATION	PLANT IMPACT
SPARE	19				
SPARE	20				
SPARE	21				
SPARE	22				
SPARE	23				
SPARE	24				
SPARE	25				
SPARE	26				
SPARE	27				
SPARE	28				