A 06/22/78

REGULATORY INFORMATION DISTRIBUTION SYSTEM (RIDS)
DISTRIBUTION FOR INCOMING MATERIAL TOPREP

REC: STOLZ J F
NRC

ORG: SOBON L J
GEN ELEC

DOCDATE: 06/19/78
DATE RCVD: 06/21/78

DOCTYPE: LETTER NOTARIZED: NO

COPIES RECEIVED
LTR 1 ENCL 10

SUBJECT:
RESPONSE TO NRC LTR DTD 02/23/78...FORWARDING ADDL INFO OF REPT NEDM-20988, "CAORSO RELIEF VALVE LOAD TESTS - TEXT PLANT" WHICH WAS SUBMITTED BY GE ON BEHALF OF THE MARK II OWNERS GROUP.

REVIEWER INITIAL: XJM
DISTRIBUTOR INITIAL: ME

********** DISTRIBUTION OF THIS MATERIAL IS AS FOLLOWS **********

TOPICAL RPTS & CORRESPONDENCE RE MARK II CONTAINMENT
(DISTRIBUTION CODE T002)

INTERNAL:

REG FILE**W/0 ENCL
50-322 FILE**LTR ONLY
50-353 FILE**LTR ONLY
50-367 FILE**LTR ONLY
50-374 FILE**LTR ONLY
50-410 FILE**LTR ONLY
STRUCTURAL ENG BR**W/2 ENCL
AD FOR ENG**W/2 ENCL
I PELTIER**W/ENCL
J SNELL**W/ENCL
W KANE**W/ENCL
D TIBBETTS**W/ENCL
D VASSALLO**LTR ONLY
LWR#3 CHIEF**LTR ONLY
AD FOR PLANT SYSTEMS**LTR ONLY
W PIKE**LTR ONLY
CENTRAL FILE**W/2 ENCL
50-352 FILE**LTR ONLY
50-358 FILE**LTR ONLY
50-373 FILE**LTR ONLY
50-397 FILE**LTR ONLY
NRC PDR**W/ENCL
CONTAINMENT SYSTEMS**W/7 ENCL
C ANDERSON**W/ENCL
M D LYNCH**W/ENCL
A BOURNIA**W/ENCL
S MINER**W/ENCL
DEPUTY DIR DPM**LTR ONLY
LWR#2 CHIEF**LTR ONLY
LWR#1 CHIEF**LTR ONLY
M RUSHBROOK**LTR ONLY
LWR#4 CHIEF**LTR ONLY

EXTERNAL:

LPDR'S
PORT JEFFERSON-PDR**W/ENCL
POTTSTOWN, PA-PDR**W/ENCL
BATAVIA, OH-PDR**W/ENCL
CHESTERTON, IN-PDR**W/ENCL
OGLESBY, IL-PDR**W/ENCL
RICHLAND, WA-PDR**W/ENCL
OSWEGO, NY-PDR**W/ENCL
TIC**W/ENCL
NSIC**W/ENCL
ACRS CAT **W/16 ENCL

DISTRIBUTION: LTR 65 ENCL 47
SIZE: 1P+22P

CONTROL NBR: 781720193

********** THE END **********

mat
RB

GENERAL ELECTRIC

NUCLEAR ENERGY

PROJECTS DIVISION

GENERAL ELECTRIC COMPANY, 175 CURTNER AVE., SAN JOSE, CALIFORNIA 95125
MC 681, (408) 925-3495

MFN-244-78

June 19, 1978

U. S. Nuclear Regulatory Commission
Office of Nuclear Reactor Regulation
Washington, D. C. 20555

Attention: Mr. John F. Stolz, Chief
Light Water Reactor Branch No. 1
Division of Project Management

Gentlemen:

SUBJECT: MARK II CONTAINMENT REQUEST FOR ADDITIONAL INFORMATION

In response to your February 23, 1978 letter to Dr. G. G. Sherwood, attached are ten (10) copies of additional information requested based on your review of Report NEDM-20988, "Caorso Relief Valve Load Tests - Test Plan," which was submitted to the NRC by GE on behalf of the Mark II Owners Group. The information provided in the attachment to this letter addresses the February 23 request plus comments made by the staff at a July 7, 1977 meeting.

The information in the attachment to this letter has also been discussed with the staff on several occasions using draft response material as a basis for that discussion. Staff comments from those discussions have been incorporated. This information is being incorporated into Addendum 2 to Revision 2 of Report NEDM-20988, which will be resubmitted to the NRC in its entirety in July 1978.

Your cooperation is requested in addressing all future requests for additional information on documents submitted by General Electric on behalf of the Mark II Owners Group directly to me rather than Dr. Sherwood.

Very truly yours,

L. J. Sobon, Manager
BWR Containment Licensing
Containment Improvement Programs

781720193

LJS:mh/1623

Attachment

cc: C. J. Anderson H. C. Brinkmann L. S. Gifford
I. A. Peltier R. L. Tedesco File: 3.2.7

T002 S 1/10

RESPONSE TO NRC COMMENTS OF JULY 7, 1977 AND FEBRUARY 23, 1978
ON CAORSO TEST PLAN

NRC Comment 1:

Effects of leaking SRV on quencher loads has been identified as an area of concern. The Caorso test plan, however, does not address this concern. It is our position that tests on a leaking SRV should be conducted. Therefore, a test plan considering a leaking SRV should be provided for our review.

RESPONSE:

Optional tests to measure the effects of leaking SRV on quencher loads have been incorporated into the Caorso test matrix as tests 41 through 44. During the normal course of the Caorso tests, these tests will be performed as soon as it is determined that valve A is leaking. This determination will be made on the criteria that if temperature sensor T21 does not return to within 10°F of its pre-test reading, the valve is leaking. Four discharge tests of valve A will be performed under this condition with all instrumentation channels recording data. Following the completion of these tests, valve A will be repaired or replaced and the normal course of testing continued.

While the suggestion to implement controlled leaking SRV tests at Caorso is valid, this plan was not implemented for two major reasons.

a) Major in-plant hardware modifications would be required to implement controlled leaking valve tests. Such tests would require major site work to provide a source of controlled steam flow from either an auxiliary boiler or from the reactor through modifications to the SRV and its piping. Because the plant is not readily amenable to test operations, particularly from the utility point of view, such an approach was not feasible. Additionally, the difficulty in specifying a leak rate, or series of leak rates such that a true leaky valve could be simulated, prohibited any attempt to design a deliberate leaky

valve condition into the test plan. Alternate approaches, as specified below, would be expected to give satisfactory, if not complete, answers to the leaky valve question without impacting the plant hardware.

b) As an alternative to controlled leaky valve tests, an optional leaky valve test series, as previously described, has been incorporated into the Caorso test matrix. Finally, because the primary concern relative to the first actuation of a leaky valve is its second - pop - like behavior, sufficient data regarding leaky valves will be obtained from the second pop tests that will be conducted.

NRC Comment 2:

The Caorso test matrix indicates that most of the parameters of interest will be repeated only once. Tests performed either for ramshead (Quad cities and Monticello) or for quencher (NEDE-11314-08) exhibited a great degree of data scatter. Therefore, we believe that the current Caorso test matrix is insufficient to determine the repeatability of the test data. We recommend additional tests be conducted for first actuation of an SRV and subsequent actuations of the same SRV to demonstrate repeatability. The number of tests should result in test data with statistical significance.

RESPONSE:

Extensive changes have been made to the Caorso test matrix from the version transmitted to the NRC in revision 2 of the Caorso Test Plan (NEDM-20988) dated December 1976. Attachment (1) shows the current test matrix as it appears in addendum 2 to revision 2 of the test plan issued in April 1978.

In the developement of the test matrix, the following criteria has been the basis for the selection of tests to be conducted and the number of repetitions.

1) Tests which accomplish the most important objectives of the testing program are repeated most often in order to reduce the uncertainty in the major effects. These primary objectives would include confirmation of the following:

   a. Bubble pressures for first and subsequent actuations.
   b. Air clearing bubble pressure attenuation with distance.
   c. Discharge line pressure and water level transient.

   To accomplish these objectives, 16 single valve first actuations, seven sequences of 5 actuations each (4 subsequent actuations per sequence) and seven single valve actuations at reactor pressures ranging from 50 to 1000 psia will be conducted. These tests will not only establish the data base for the primary objectives but will also test for the influence on bubble pressure of steam flowrate, which has been established as important influence parameter in

other tests.

2) Tests conducted for the purpose of measuring the influence of variables which previous testing has shown to have only minor effects are conducted in numbers sufficient to establish this trend. These include valve open time, vacuum breaker size and quencher location. Should the effect of variations in these parameters be greater than is currently believed, this trend can also be established with the current number of tests planned.

While it is believed that the test matrix for the single valve tests is sufficient to accomplish the objectives described above, provision is established for performance of retests should it become apparent that repetitions of certain tests are required (see item 23 of attachment (1))

During the 4/6/78 meetings with N. Su (NRC), the concern was expressed that the number of multiple valve tests was insufficient for the purposes of verifying design basis methods. While it is believed that the observed loads for the multiple pop cases will be sufficiently below design values to make more than the previous number of multiple valve tests unnecessary, an additional four valve test (see attachment (1) test #30) has been incorporated into the test matrix. Therefore, the total number of planned multiple valve tests currently stands at two two valve tests, one three valve test, five four valve tests and one eight valve test. Further, a provision has been incorporated into the test plan for up to five additional four valve tests should the observed pressure loads and data scatter be greater than expected (see attachment (1), test #45).

NRC Comment 3:

Based on our evaluation of previous SRV test data, we find that the SRV discharge time and duration between first actuation and subsequent actuation influence the quencher load due to subsequent actuation. Therefore, provide the value and the basis for the selection of the times for the Caorso tests.

RESPONSE:

The SRV discharge times for the sequential pop tests (see attachment (1), tests 5, 6, 11, 12, 13, 14) were selected to measure the effect of SRV discharge pipe temperature on quencher loads. This will be accomplished by incrementally heating the pipe with 5 second sequential discharges. Based on the Monticello ramshead test results, the last pop (and probably the next to last pop) on each sequential actuation test will be at maximum pipe temperature. Further, to determine if changes in the subsequent pop loads are due to temperature effects only, test 22, which now starts with a 20 second blowdown and is followed by 5 second consecutive pops, has been incorporated into the test matrix. This serves the purpose of heating the discharge pipe to maximum pipe temperature for the second pop. Comparison of second pop loads for test 22 with second pop loads for tests 5, 6, 11, 12, 13, 14, will allow determination of whether changes in subsequent pop loads are due only to pipe temperature effects (at a given water level).

The effect of valve closed times between actuations will be tested by closing the valve for 60 seconds between actuations in tests 5 and 11, and for about 10 seconds in tests 6 and 12. In addition, per the informal discussions with N. Su of 4/6/78, tests with $\sim$ 2 seconds valve closed times between consecutive pops has been incorporated into the test matrix (see tests 13 and 14 of attachment (1)). The purpose of this test series is to obtain subsequent pop loads at maximum reflood water level. Prior to this series, the data from previous tests will be reviewed to determine the time of maximum water reflood. Valve closed times of less than 2 seconds are impracticable because of valve response limitations to openning and closing signals. (Valve response time from open signal to full valve opening is $\sim$.2 seconds; response time from close signal to full valve closure ranges from 1 to 2 seconds.)

NRC Comment 4:

Page 4-6 states that a complete understanding of the subsequent actuation effect requires data on pool temperature in the vicinity of the quencher, pipe temperature and pressure following valve closure, flow rate of air through the vacuum breaker and dynamics of back flow of water. We agree that the air temperature history inside the pipe could be important. However, insufficient information has been given in the test plan regarding the measurement of air temperature in the pipe. Clarify what measurements or calculations will be made to monitor this temperature.

Response:

The temperature history of the saturated air-steam mixture inside the SRV discharge line will be measured using sensors T1, T2, T3, and T27 (See attachment (2)). These sensors are designed to measure the temperature of the environment in the discharge line, not the temperature of the discharge line wall. The temperature of the saturated air-steam mixture can be verified using the methods described below.

For the first actuation, the saturated air-steam mixture temperature can be approximated as being equal to the temperature of the discharge pipe inner wall. This temperature will be measured on sensors T24, T25, and T26 (see attachment (2)). For sequential actuations, the air mass will be measured as it enters the discharge line through the vacuum breaker. Given this measured air mass, the discharge line pressure and the total discharge line air-steam mixture volume at the end of the water reflood transient, the temperature of the gas mixture can be calculated using the ideal gas laws by assuming that the steam in the mixture is at saturation corresponding to the discharge line pressure.

NRC Comment 5:

The sensor failure rate was found to be quite high in the Monticello Plant ramshead test program. Sensors of the same manufacturer model used in the Monticello test will also be used in the Caorso test. In light of this experience, we believe that redundant instrumentation is needed in critical areas. For instance, redundant sensors should be provided in the following locations:

a. The vicinity of Quencher A and the place by which combined loads from multiple SRV's actuation will be determined.

b. SRV line between elevation 51.612 and 45.770. In addition, level probes should be added between L1 and L21.

Response:

(a) Slight rearrangement of instrumentation in the suppression pool was accomplished since the issue of revision 2 to the Caorso test plan (NEDM-20988) dated December 1976. Specifically, pressure transducers P36 and P37 were shifted from their original locations near support column 8 to the positions shown on attachment (3). While this shift does not represent a direct backup for sensors P23 and P38, data from these sensors will be sufficient to allow evaluation of multiple valve pop loads should either P23 or P38 fail. At the same time, should sensors P23 and P38 remain intact, sensors P36 and P38 will provide additional useful data which would not be exact duplicates of readings from P23 and P38.
(b) The spacing of level probes L1 and L12 is considered to be of minor importance for the following reasons:

(1) Licensee data and GE models indicate that the water column will not rise to sensor L1 during the normal vacuum breaker tests.

(2) The large number of level probes between sensors L1 and L7 allow an evaluation of the velocity and acceleration of the water column; this information, in turn, can be used to determine approximately the maximum level to which the water column rises during the reflood transient.

(3) Temperature sensor T3 (see attachment (2)) can be used to provide additional water level information between sensors L1 and L12 if required.

(4) Low pressure sensors P7 and P8 (see attachment(5)) (0-25 psia) in the SRV line can also be used to measure water level. This was done in the recent Monticello T-Quencher tests where the water level sensors and the inferred water level from the low pressure readings compared favorably.

With regard to the question of redunduncy for level probes between elevations 51.612 and 45.770, temperature sensors T3, T4, T5, T27, and T28 can function as level sensors if required and will provide redunduncy for the level probes in case of failure.

NRC Comment 6:

Submerged structure loads have been identified as a primary design load for the Mark II containment. We believe that the analytical program indicated in the Mark II Owners Group meeting which was held on February 16 and 17, 1977, is insufficient to support the design loads for submerged structure without experimental data. Therefore, we recommend that additional pressure sensors should be installed on support columns and downcomers to measure the drag load during SRV operation.

Response:

Instrumentation which has been installed at Caorso is expected to provide experimental data to support the analytical quencher models relative to submerged structure load caused by SRV actuations.

Measurements on two downcomers and a support column adjacent to Quencher A will provide the needed loads information. The instrumentation used, which is shown in attachments 6, 7 and 8 consists of the following:

1. Strain gauges on vents Nos. 1 and 9.

2. Pressure transducers on Support Column No. 7 and Vent No. 9.

GE believes the information obtained on pressure loadings, supplemented by the strain gauge data, will provide sufficient information to show that the analytical models predict reasonably conservative loads. The in-plant test data itself is not intended to provide a loading basis for submerged structure loads that can be directly or indirectly applied to define loads for other Mark II plants. The tests are planned as a confirmatory test to show the conservatism of the analytical models, which could then be used to define loads for other structures (not instrumented in Caorso) and for structures in other Mark II plants.

NRC Comment 7:

Provide the locations for pressure sensors Nos. 19, 23, 35, 36, and 37.

Response:

The locations of these sensors are shown in attachment (3).

TABLE 6.1

TEST MATRIX (14)

Test #	Test Type (1) (2) (10) (13)	Valve	Initial Pipe Conditions (3)	Discharge Time, sec.	Valve Closed Time CVA, sec	Valve Closed Time Pipe Cooling, hrs.
0	SVA	A	CP, NWL, 10" VB	5	—	>2
1	SVA	A	CP, NWL, 10" VB	5	--	> 2
2	SVA	A	CP, NWL, 10" VB	5	--	> 2
3	SVA	A	CP, NWL, 10" VB	2	--	> 2
4	SVA	A	CP, NWL, 10" VB	20	--	> 2
501	SVA	A	CP, NWL, 10" VB	5	60	-
502	CVA	A	WP, TWL, 10" VB	5	60	-
503	CVA	A	WP, TWL, 10" VB	5	60	-
504	CVA	A	HP, TWL, 10" VB	5	60	-
505	CVA	A	HP, TWL, 10" VB	5	--	> 2
601	SVA	A	CP, NWL, 10" VB	5	10(4)	-
602	CVA	A	WP, TWL, 10" VB	5	10(4)	-
603	CVA	A	WP, TWL, 10" VB	5	10(4)	-
604	CVA	A	HP, TWL, 10" VB	5	10(4)	-
605	CVA	A	HP, TWL, 10" VB	5	--	> 2
7	SVA	A	CP, NWL, Reduced VB (5)	5	--	> 2
8	SVA	A	CP, NWL, Reduced VB (5)	5	--	> 2
9	SVA	A	CP, NWL, Reduced VB (6)	5	--	> 2
10	SVA	A	CP, NWL, Reduced VB (6)	5	--	> 2
1101	SVA	A	CP, NWL, Reduced VB (7)	5	60	--
1102	CVA	A	WP, TWL, Reduced VB (7)	5	60	--
1103	CVA	A	WP, TWL, Reduced VB (7)	5	60	--
1104	CVA	A	HP, TWL, Reduced VB (7)	5	60	--
1105	CVA	A	HP, TWL, Reduced VB (7)	5	--	> 2
1201	SVA	A	CP, NWL, Reduced VB (7)	5	10(4)	--
1202	CVA	A	WP, TWL, Reduced VB (7)	5	10(4)	--
1203	CVA	A	WP, TWL, Reduced VB (7)	5	10(4)	--
1204	CVA	A	HP, TWL, Reduced VB (7)	5	10(4)	--
1205	CVA	A	HP, TWL, Reduced VB (7)	5	--	> 2
1301	SVA	A	CP, NWL, 10" VB	5	2(15)	--
1302	CVA	A	WP, TWL, 10" VB	5	2(15)	--
1303	CVA	A	WP, TWL, 10" VB	5	2(15)	--
1304	CVA	A	HP, TWL, 10" VB	5	2(15)	--
1305	CVA	A	HP, TWL, 10" VB	5	--(15)	> 2

ATTACHMENT (1)

Test #	Test Type (1) (2) (10) (13)	Valve	Initial Pipe Conditions (3)	Discharge Time, Sec.	Valve Closed Time CVA, Sec	Pipe Cooling, Hrs.
1401	SVA	A	CP, NWL, 10" VB	5	2(15)	--
1402	CVA	A	WP, TWL, 10" VB	5	2(15)	--
1403	CVA	A	WP, TWL, 10" VB	5	2(15)	--
1404	CVA	A	HP, TWL, 10" VB	5	2(15)	--
1405	CVA	A	HP, TWL, 10" VB	5	--	>2
15	SVA	F	CP, NWL, 10" VB	5	--	>2
16	SVA	F	CP, NWL, 10" VB	5	--	>2
17	SVA	E	CP, NWL, 10" VB	5	--	>2
18	SVA	E	CP, NWL, 10" VB	5	--	>2
19	SVA	U	CP, NWL, 10" VB	5	--	>2
20	SVA	U	CP, NWL, 10" VB	5	--	>2
21	SVA	A	CP, NWL, 10" VB	20	--	>2
2201	SVA	A	CP, NWL, 10" VB	20(8)	10(4)	--
2202	CVA	A	HP, TWL, 10" VB	5	10(4)	--
2203	CVA	A	HP, TWL, 10" VB	5	10(4)	--
2204	CVA	A	HP, TWL, 10" VB	5	10(4)	--
2205	CVA	A	HP, TWL, 10" VB	5	--	>2
23	Retest of Tests 1 Through 22 as Required					
24	MVA	A,F	CP, NWL, 10" VB	5,10(9)	--	>2
25	MVA	A,F	CP, NWL, 10" VB	5,10(9)	--	>2
26	MVA	A,F,E	CP, NWL, 10" VB	5,10,15(9)	--	>2
27	MVA	A,F,E,U	CP, NWL, 10" VB	5,10,15,20(9)	--	>2
28	MVA	A,F,E,U	CP, NWL, 10" VB	5,10,15,20(9)	--	>2
29	MVA	A,F,E,U	CP, NWL, 10" VB	5,10,15,20(9)	--	>2
30	MVA	A,F,E,U	CP, NWL, 10" VB	5,10,15,20(9)	--	>2
31 (16)	MVA	B,C,D,L	CP, NWL, 10" VB	5,10,15,20(9)	--	>2
32	MVA	A,B,D,H K,L,R,V	CP, NWL, 10" VB	5,10,15,20,25, 30,35,40(9)	--	>2

Test #	Test Type (1) (2) (10) (13)	Valve	Initial Pipe Conditions (3)	Discharge Time, Sec.	Valve Closed Time CVA, Sec	Pipe Cooling, Hrs.	
33	50 psia Reactor Pres (10) SVA	A	CP, NWL, 10" VB	20	--	> 2	
34	100 psia Reactor Pres (10) SVA	A	CP, NWL, 10" VB	20	--	> 2	
35	200 psia Reactor Pres (10) SVA	A	CP, NWL, 10" VB	20	--	> 2	
36	400 psia Reactor Pres (10) SVA	A	CP, NWL, 10" VB	20	--	> 2	
37	600 psia Reactor Pres (10) SVA	A	CP, NWL, 10" VB	20	--	> 2	
38	800 psia Reactor Pres (10) SVA	A	CP, NWL, 10" VB	20	--	> 2	
39	SVA	A	CP, NWL, 10" VB	20	--	> 2	
40	Extended Blowdown	A	CP, NWL, 10" VB	(11) (12)	--	> 2	
41	SVA (13)	A	LV, NWL, 10" VB	5	--	> 2	Optional
42	SVA	A	LV, NWL, 10" VB	5	--	> 2	Optional
43	SVA	A	LV, NWL, 10" VB	5	--	> 2	Optional
4401	SVA (13)	A	LV, NWL, 10" VB	5	10(4)	--	Optional
4402	CVA	A	LV, TWL, 10" VB	5	10(4)	--	Optional
4403	CVA	A	LV, TWL, 10" VB	5	10(4)	--	Optional
4404	CVA	A	LV, TWL, 10" VB	5	10(4)	--	Optional
4405	CVA	A	LV, TWL, 10" VB	5	10(4)	> 2	Optional
45	Retests of Tests 24 Through 41 as Required						

Notes:

(1) SVA = Single valve actuation
CVA = Consecutive valve actuation

(2) Reactor power level to be as follows at the beginning of each test:

Test No.	Reactor Power Level
1 through 22, 41through 44	25-100%
24 and 25	30-95%
26	40-90%
27,28,29,30,31	50-85%
32	50-85%
0, 33 through 39	Determined at site
40	50-100% power

(3) CP = Cool pipe
WP = Warm pipe
HP = Hot pipe
NWL = Normal water level
TWL = Transient water level
VB = Vacuum breaker size (Only one VB in use on line A, both VB in use on all other lines)

(4) Subsequent Actuation - Transient Water Level

Predetermined valve closed time to be the minimum time required to assure that the water leg has returned to a steady water level with oscillations of less than ± 1 foot about this steady value. Evaluation of the predicted water leg transient is to be based on water leg transient data from prior test runs.

(5) Vacuum breaker butterfly valve at 25-29° (90° is full open), but at same settin for both tests.

(6) Vacuum breaker butterfly valve at 9-14°, but same setting for both tests.

(7) Test Nos. 11 and 12 are to be run with the smallest vacuum breaker size tested in tests 7 to 10 which resulted in the highest water level overshoot in the SRV line of less than 15.0 ft. (4.6 M).

(8) Predetermined valve open time to be the minimum time required to assure that the discharge line has reached a steady state temperature. This time will be the time at which both T21 and T23 are constant to within 2°F (1°C) rise per second in Test 21

(9) The valves are closed sequentially to avoid the possibility of a scram.

(10) Initial pressure at safety/relief valves to be 950 psia (66.8 Kg/cm^2) to 1000 psia (70.4 Kg/cm^2) except during Test Nos. 33 through 39. Initial temperature in the suppression pool at the start of each test will be 80 to 85°F (26.7 to 29.4°C) for all multiple valve tests and 80-90°F (26.7 - 32.3°C) for all single valve tests except Test No.40 (see Note 11).

Notes: (Cont'd)

(11) Prior to the test, the pool shall be cooled to within 5°F of service water temperature or for 12 hours, whichever is shorter.

(12) Extended SRV blowdown to continue until the highest reading from the in-plant monitoring system reaches 101.5°F (38.6°C) or for the predicted time for the bulk pool temperature to reach 101.5°F, whichever is shorter.

(13) Optional Leaking SRV test

a) Tests 41 through 44 will be performed if it is determined that SRV "A" is leaking.

b) SRV "A" will be determined to be leaking if pipe temperature sensor T21 does not return to within 10°F of its pre-test reading (5.6°C) within 3 hours.

(14) It is desirable to obtain a record of any unscheduled conditions (such as loss of site power and containment isolation) which results in relief valve discharges which heat the suppression pool to temperature above 48.9°C (120°F). All instrumentation which is utilized for these tests (see section 6.1) should be actuated and the data recorded continuously at all times that the pool temperatures exceed 48.9°C (120°F) and a relief valve is open.

(15) Tests 13 and 14 to be conducted only if it has been determined from tests 1 through 4 that the maximum water level overshoot in the discharge line is < 15.0 FT (4.6 M) from SRV closure.

(16) This note applies to maximum positive and maximum negative bubble pressures. If one or more of the four four-valve tests exceeds the mean plus one standard deviation from all the SVAs, run two additional four-valve tests. If these six four-valve tests have an average pressure exceeding the average four-valve predicted pressure from the empirical model, OR if the maximum pressure from the six four-valve tests exceeds the predicted value plus two-thirds of the difference of the 90-90 design value and the predicted value from the empirical model, run three additional four-valve tests, for a total of nine such tests. (Maximum pressures at the highest real-time pool boundary pressure sensors are to be used as bubble pressures. The empirical model is to be evaluated at actual Caorso test conditions.)

FIG. 5-2A PIPE AND QUENCHER TEMPERATURE SENSORS

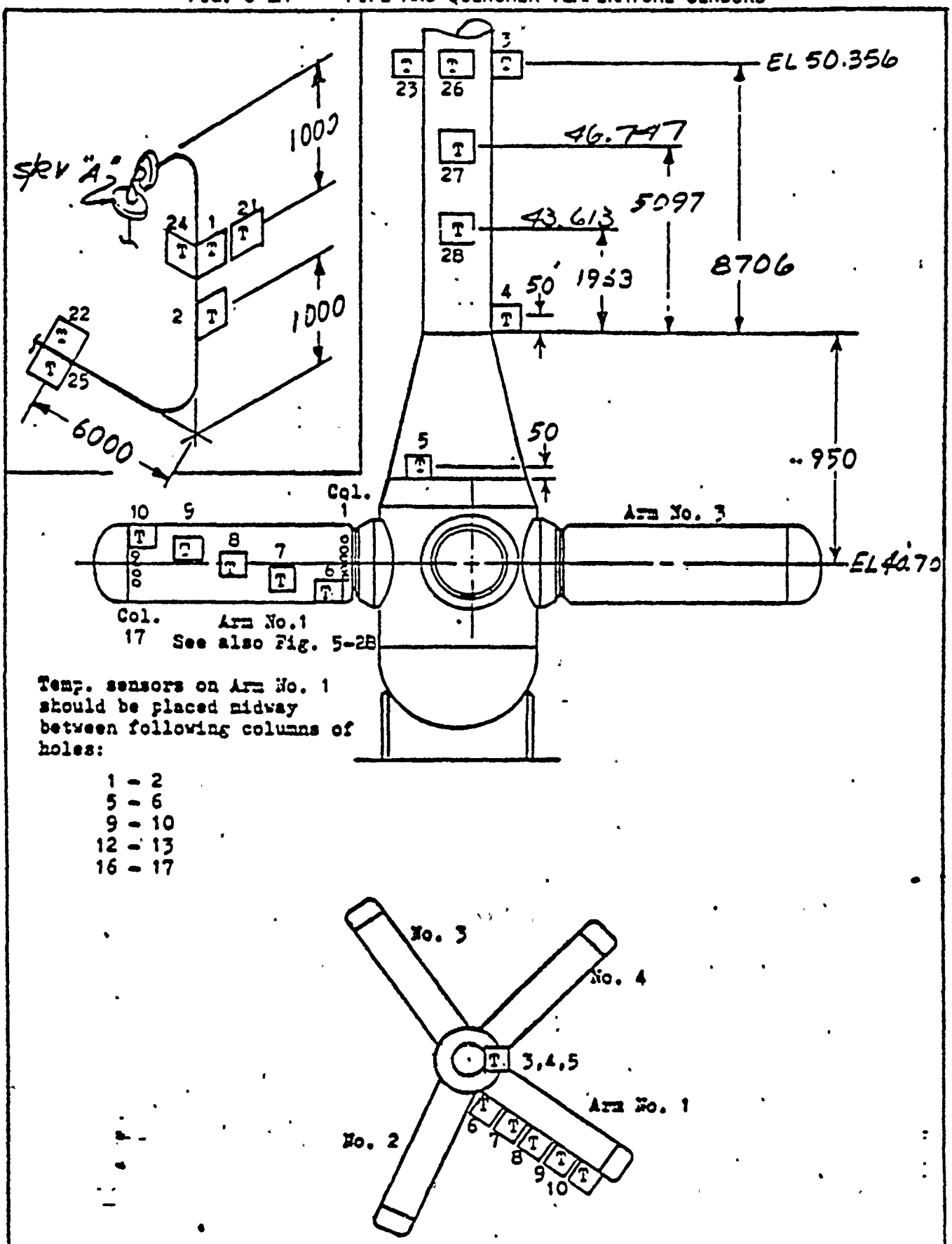

Temp. sensors on Arm No. 1 should be placed midway between following columns of holes:

1 - 2
5 - 6
9 - 10
12 - 13
16 - 17

Note: T1 through T10, and T27, T28 located inside piping or quencher
T21, 22, 23 located on outer surface of pipe
T24, 25, 26 located near inner wall of pipe

ATTACHMENT (2)

FIG. 5-5A POOL PRESSURE SENSORS

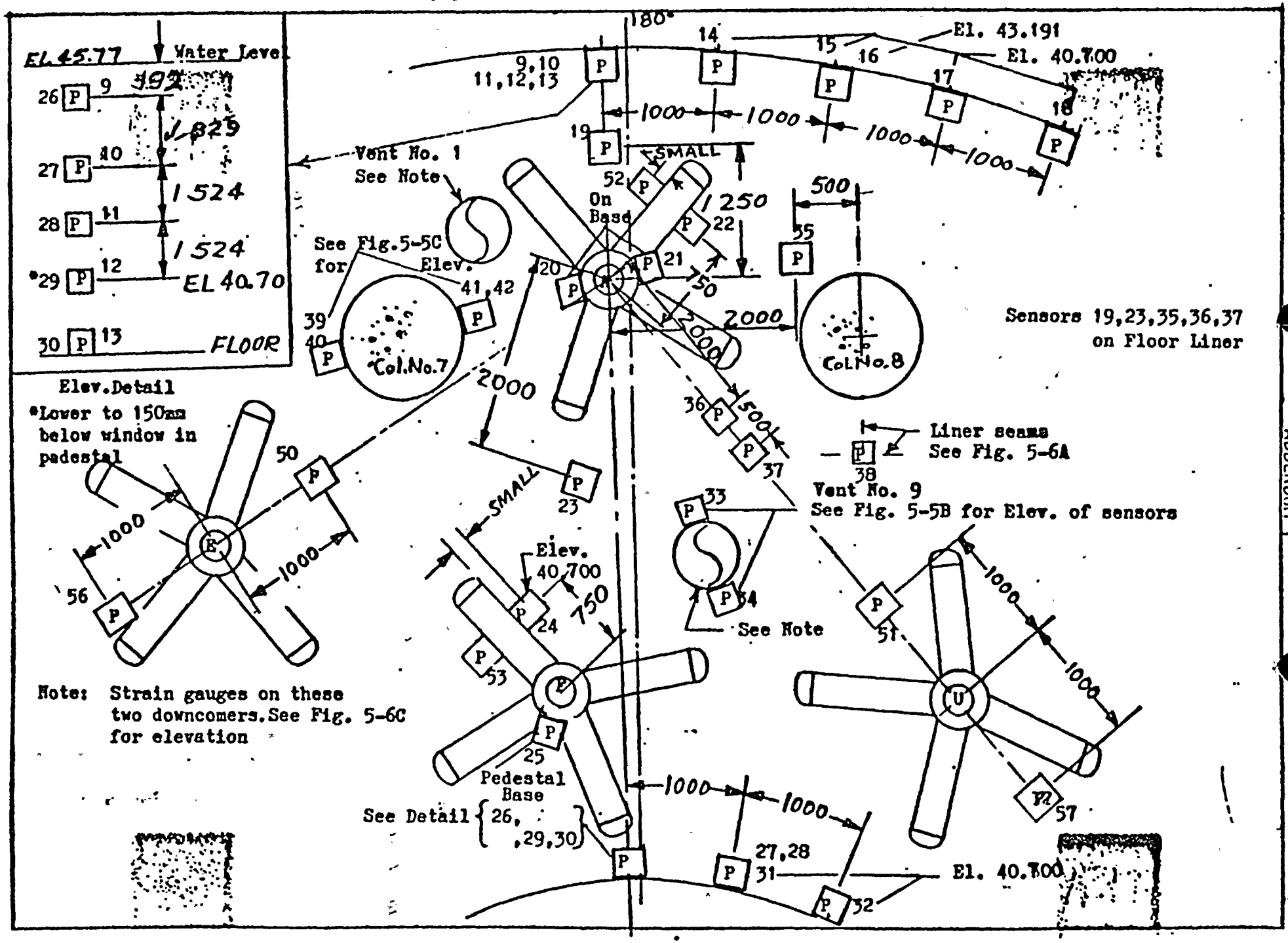

Note: Strain gauges on these two downcomers. See Fig. 5-6C for elevation

FIG. 5-3A LEVEL SENSORS

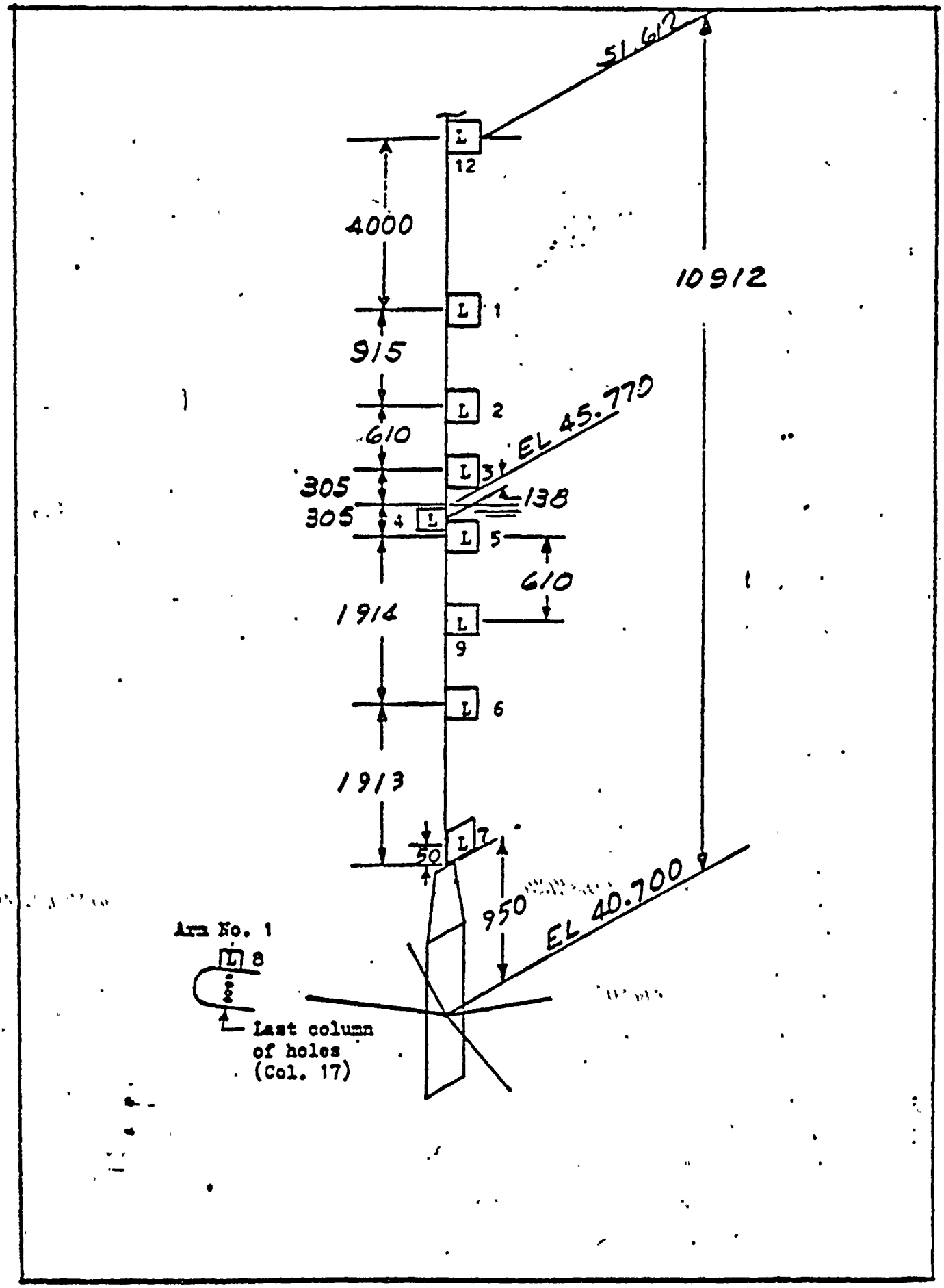

FIG. 5-1A PIPE AND QUENCHER PRESSURE SENSORS

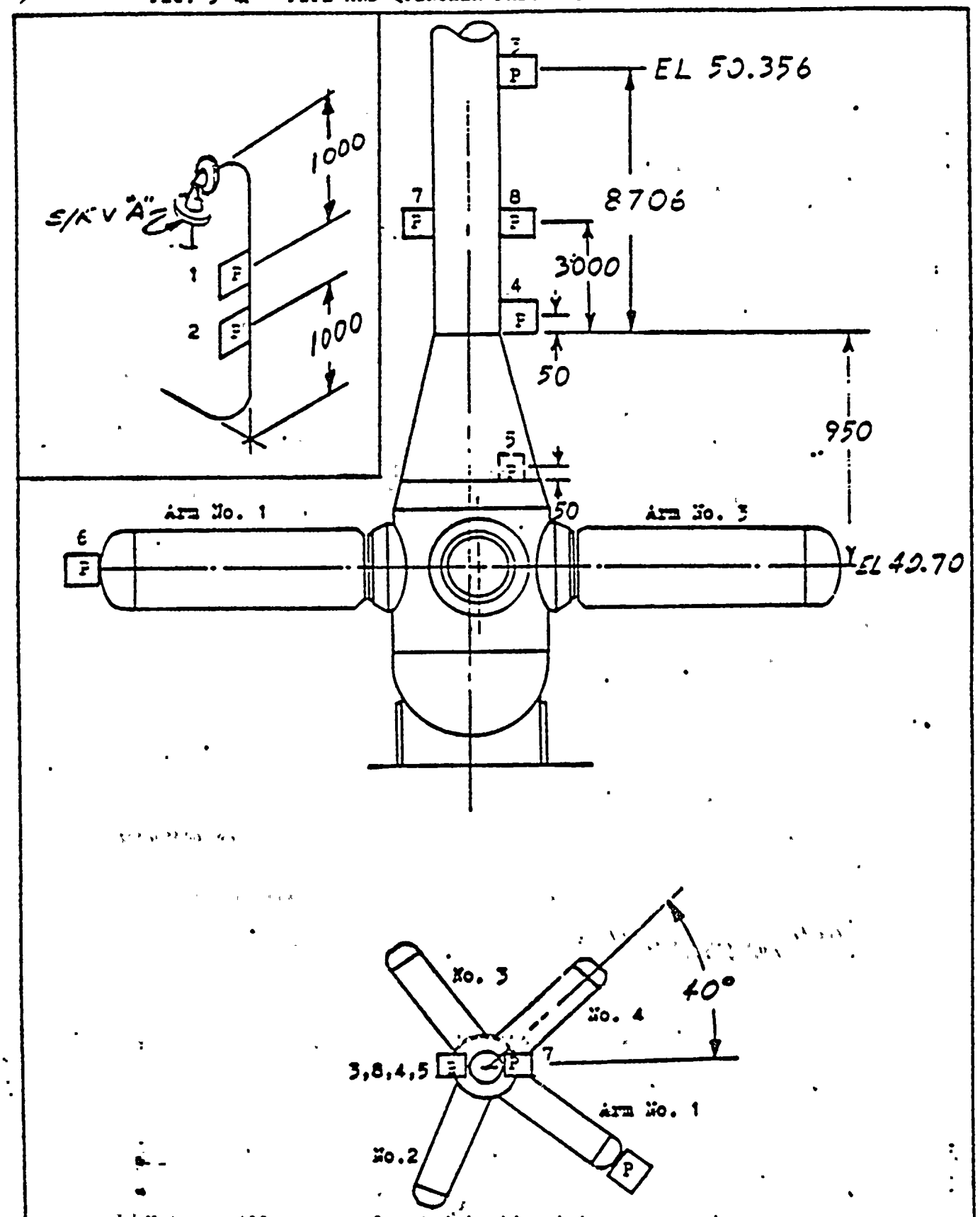

Notes: All sensors located inside piping or quencher

• All distances in mm.

Attachment (5)

FIG. 5-53 DOWNCOMER VENT PRESSURE SENSORS

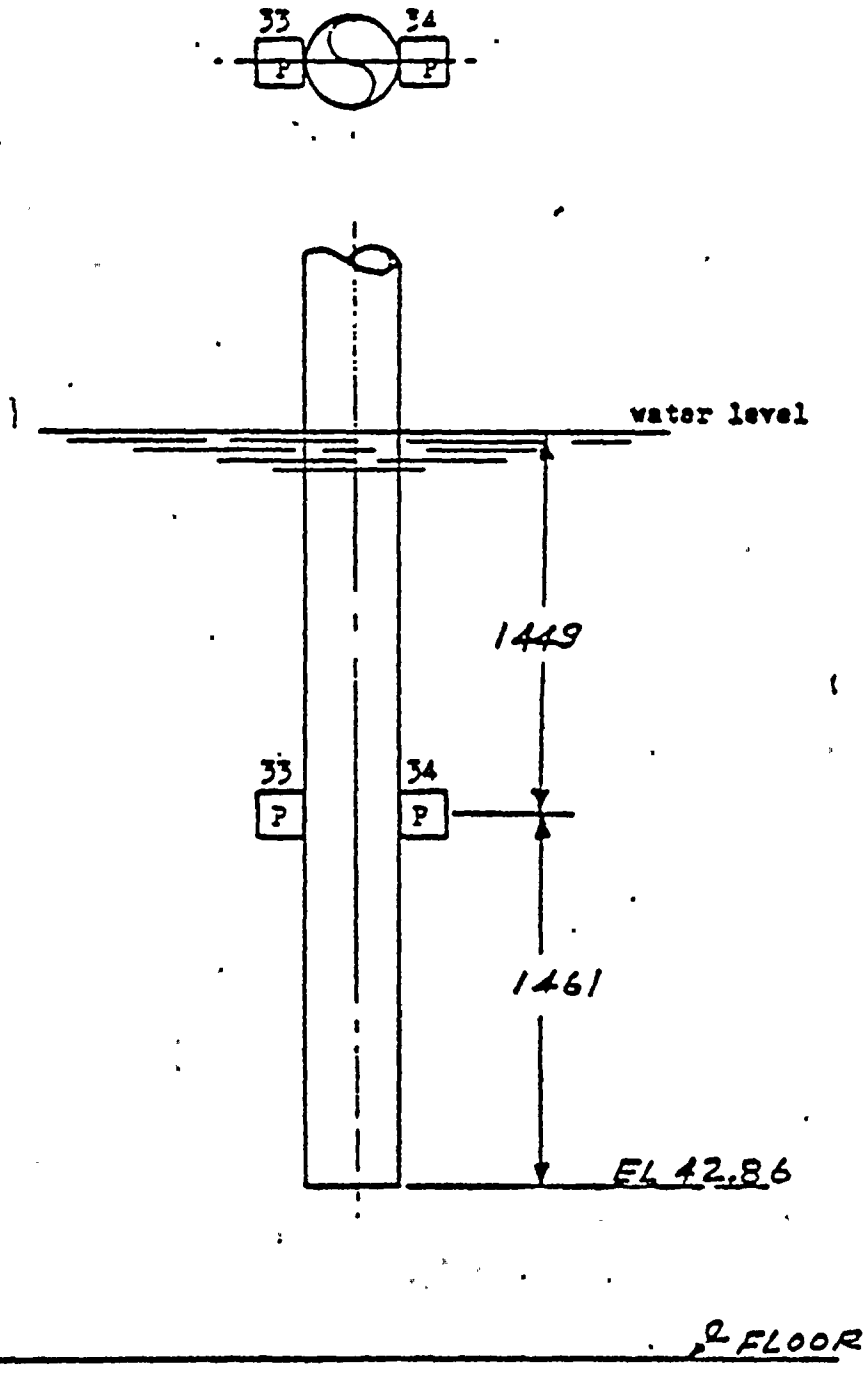

Note: Pressure transducers to be oriented on radial line to quencher "A"

FIG. 5-6C STRAIN GAUGE LOCATION ON DOWNCOMER VENTS

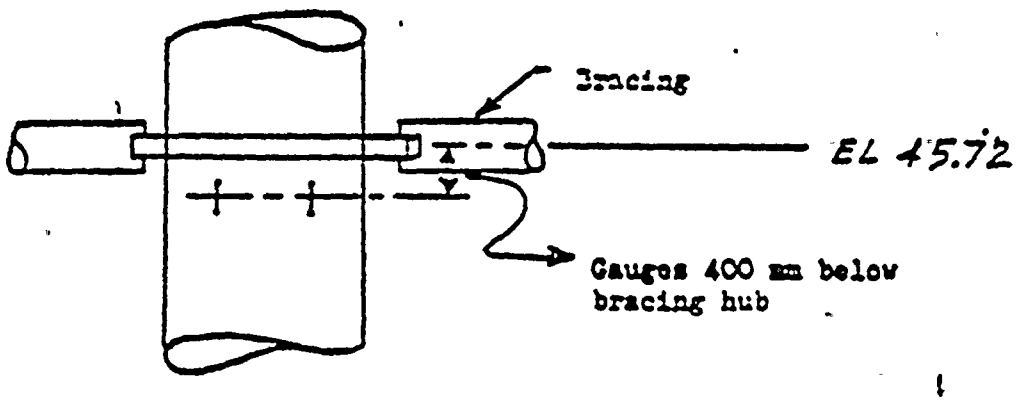

Note: Four uniaxial gauges to be located at 90° intervals around circumference on 2 selected downcomer vents (see Fig. 5-5A for location). Pairs of diametrically opposed strain gauges to be connected to read moments. Orientation of gauges relative to containment axes to be recorded.

S.G. Nos.51,52,53, 54 on Vent No. 1
S.G. Nos.55,56,57, 58 on Vent No. 9

ATTACHMENT (8)

FIG. 5-5C PRESSURE SENSORS ON CONCRETE COLUMN

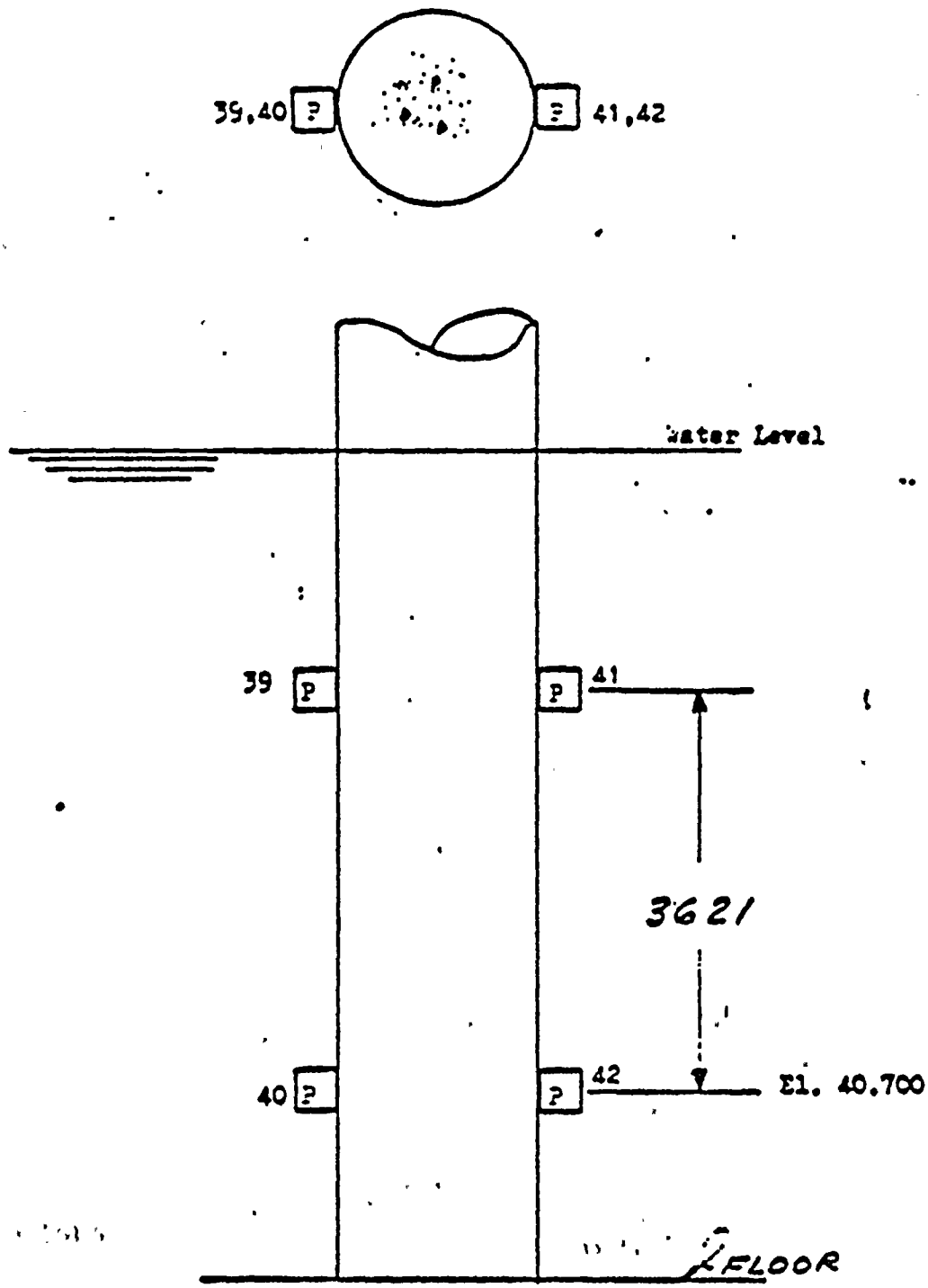

Note: Pressure sensors to be oriented along radial line to quencher "A"

ATTACHMENT (7)

NIAGARA MOHAWK POWER CORPORATION

NIAGARA MOHAWK

300 ERIE BOULEVARD, WEST
SYRACUSE, N. Y. 13202

April 28, 1978

Office of Inspection and Enforcement
Region I
Attn: Mr. R. T. Carlson, Chief
Reactor Construction and Engineering
Support Branch
U. S. Nuclear Regulatory Commission
631 Park Avenue
King of Prussia, Pennsylvania 19406

Dear Mr. Carlson:

Re: Nine Mile Point Unit 2
Docket No. 50-410

On November 1, 1977 you were notified of our continuing effort to evaluate the criteria for stress relief design for a safety related tunnel wall for Nine Mile Point Unit 2. The rock stress evaluation which is described in the report entitled "Geologic Investigation for Nine Mile Point Unit 2" is now complete and provides much of the basic data required for this evaluation. My April 28, 1978 letter to Mr. Case transmits this report.

The specific design requirements for stress relief are now being resolved. Design information will be provided in July, 1978.

Very truly yours,

NIAGARA MOHAWK POWER CORPORATION

Gerald K. Rhode, Vice President
System Project Management

98-25 ma2 RB