CATEGORY 1

REGULATORY INFORMATION DISTRIBUTION SYSTEM (RIDS)

ACCESSION NBR:9603270295 DOC.DATE: 96/02/28 NOTARIZED: NO DOCKET #
FACIL:50-250 Turkey Point Plant, Unit 3, Florida Power and Light C 05000250
50-251 Turkey Point Plant, Unit 4, Florida Power and Light C 05000251
AUTH.NAME AUTHOR AFFILIATION
NUDING,M. MKW Power Systems, Inc.
RECIP.NAME RECIPIENT AFFILIATION
HODGE,V. NRC - No Detailed Affiliation Given

SUBJECT: Part 21 rept 10CFR21-0073 re defect w/voltage adjust potentiometer mfg by Chicago Telephone Supply used on NEI Peebles (Portec) voltage regulators at plant.Util updating voltage regulators w/Maury Instrument Corp potentiometer.

DISTRIBUTION CODE: IE19T COPIES RECEIVED:LTR 1 ENCL 1 SIZE: 8
TITLE: Part 21 Rept (50 DKT)

NOTES:

	RECIPIENT ID CODE/NAME	COPIES LTTR	COPIES ENCL	RECIPIENT ID CODE/NAME	COPIES LTTR	COPIES ENCL
	PD2-1 PD	1	1	CROTEAU,R	1	1
INTERNAL:	FILE CENTER 01	1	1	NRR/DRCH/HQMB	1	1
	NRR/DRPM/PECB	2	2	PDR WARD, M.	1	1
	RES/DSIR/EIB	1	1	RGN1	1	1
	RGN2	1	1	RGN3	1	1
	RGN4	1	1			
EXTERNAL:	INPO RECORD CTR	1	1	NOAC SILVER,E	1	1
	NRC PDR	1	1	NUDOCS FULL TXT	1	1

C A T E G O R Y 1 D O C U M E N T

THIS DOCUMENT HAS BEEN SCANNED

NOTE TO ALL "RIDS" RECIPIENTS:
PLEASE HELP US TO REDUCE WASTE! CONTACT THE DOCUMENT CONTROL DESK, ROOM OWFN 5D-5(EXT. 415-2083) TO ELIMINATE YOUR NAME FROM DISTRIBUTION LISTS FOR DOCUMENTS YOU DON'T NEED!

FULL TEXT CONVERSION REQUIRED
TOTAL NUMBER OF COPIES REQUIRED: LTTR 16 ENCL 16

MKW POWER SYSTEMS, Inc.

96290
P621 ~~96290~~

AUTHORIZED DISTRIBUTOR

28 February, 1996

Vern Hodge

USNRC
Mail Stop 0-11A1
Washington, DC 20555

Reference: Report No. 10CFR21-0073

Subject: Reportable defect with NEI voltage regulator voltage adjust potentiometer

Dear Mr. Hodge:

MKW Power Systems' report 10CFR21-0073 is attached which addresses a 10CFR21 reportable defect with the voltage adjust potentiometer used on the NEI Peebles (Portec) voltage regulators. This was brought to our attention by FP&L - Turkey Point and we immediately began an investigation to determine the impact on other users of the same/similar equipment. Our investigation was completed on 2/26/96.

Yours very truly,

MKW POWER SYSTEMS, INC.

Michael Nuding

Michael Nuding
General Manager - Quality Assurance

MN:dg

Enclosure

9603270295 960228
PDR ADOCK 05000250
S PDR

IE19
1/1

220043

Post Office Box 1928 • Rocky Mount, North Carolina 27802-1928 • Phone: (919) 977-2720
TWX: (510) 929-0725 • FAX: (919) 446-3830

MKW POWER SYSTEMS, Inc.

P-21 96290 ~~96280~~

AUTHORIZED DISTRIBUTOR

Report No. 10CFR21-0073
FEBRUARY 27, 1996

10CFR21 REPORTING OF DEFECTS AND NON-COMPLIANCE

COMPONENT: Chicago Telephone Supply (CTS), p/n 115R251A Voltage Adjust Potentiometer

SYSTEM: Diesel Generator control systems with NEI Peebles (Portec) Voltage Regulators

CONCLUSION: Defect is Reportable in Accordance with 10CFR21

PREPARED BY: _____ DATE: 2/28/96
Donald D. Galeazzi
Engineering Manager

REVIEWED BY: _____ DATE: Feb 28, 1996
Michael Nuding
General Manager, Quality Assurance

Post Office Box 1928 • Rocky Mount, North Carolina 27802-1928 • Phone: (919) 977-2720
TWX: (510) 929-0725 • FAX: (919) 446-3830

SUMMARY

MKW Power Systems witnessed repair and testing of a voltage regulator for FP&L Turkey Point at NEI Peebles on 2/10/96 and 2/11/96. NEI manufactured many of the voltage regulators utilized in MKW's safety related diesel generators. Voltage instability was observed and was determined to be caused by foreign material on the stationary wiper portion of the R4 voltage adjust potentiometer. The potentiometer is 250 ohm, 2w, manufactured by Chicago Telephone Supply (CTS), p/n 115R251A and had been used by NEI for over twenty years for this application. Because of availability problems, NEI replaced the CTS potentiometer with Maury Instrument Corporation p/n 50-M123-251 in 8/94). This is an enclosed precision wirewound potentiometer, 250 ohm, 1.5w, with a shaft locking nut. According to NEI, applied burden is 0.06w. When compared to the CTS component, the Maury is an upgrade in quality and appears to be less susceptible to contamination on the wiper surface. The FP&L regulator had the R4 potentiometer replaced with the Maury part while at NEI and the voltage instability was corrected.

The purpose of the R4 potentiometer is to adjust generator voltage to rated value after installation of the remote voltage adjust motor operated potentiometer. This is normally a one-time adjustment which occurs during initial installation/startup of the EDG and is applicable to the automatic and manual (if used) voltage regulators.

MKW has been supplying NEI voltage regulators for safety related EDG control systems since 1972. This incident and one prior in 1994 (FP&L EDG 4A and 4B respectively) are the only reported problems of this type; therefore, it is difficult to interpret this occurrence as a defect. In addition, because R4 is normally a one-time adjustment, any foreign material which develops/ accumulates on the wiper surface will not affect voltage regulator operation because it will not interfere with the wiper surface to wiper arm interface. It is recognized that this could cause problems if field adjustment of R4 is required; therefore, MKW Power Systems will notify all customers with NEI voltage regulators about this potential condition.

COMPONENT

Chicago Telephone Supply (CTS), p/n 115R251A (NEI p/n 01068).

CUSTOMERS AFFECTED	AUTO VOLT REG	MANUAL VOLT REG
U.S.		
Duke Power - Oconee	#72-13000-100	
FP&L - St. Lucie #2	#72-05000-100	#72-05100-100
FP&L - Turkey Point	#72-13000-100	#72-13200-100
Grand Gulf	#72-03200-100	#72-03100-100
Knolls Atomic - Kesselring	#72-05000-100	#72-05100-100
Portland G.E. - Trogan	#72-00101-100	
PP&L - Susquehanna	#72-08300-100	#72-08400-100
SMUD	#72-05000-100	#72-05100-100
TVA - Watts Bar	#72-06204-100	#72-05100-100
TVA - Watts Bar/Sequoyah	#72-06204-100	#72-05100-100
Wisconsin Elec - Pt Beach	#72-05000-100	#72-05100-100
Foreign		
Almaraz - Spain	#72-05000-100	#72-05100-100
CNV/G.E. - Spain	#72-05000-100	#72-05100-100
Cofrentes/G.E. - Spain	#72-05000-100	#72-05100-100
Korea Elec - Kori II	#72-05000-100	#72-05100-100
KRSKO - Slovenia	#72-05000-100	
Kuo Sheng/G.E.	#72-05000-100	#72-05100-100
Laguna Verde (HPCS)	#72-01200-201S	#72-01200-101
Laguna Verde - Units 1&2	#72-05000-100	#72-05100-100
Phillippines	#72-05000-100	#72-05100-100
Zorita - Spain	#72-05000-100	#72-05100-100

DEFECT

Microscopic examination of the potentiometer showed foreign material on the surface and edge of the stationary slip-ring under the wiper arm collar. The material on the edge was translucent/white-ish and appeared to be a lubricant. The material on the surface was blackish with some white flakes. It is postulated that the lubricate accumulated contaminants and/or dried on the surface. The total amount of foreign material is very small.

CORRECTIVE ACTION

1) FP&L is in the process of updating their voltage regulators with the Maury potentiometer. Other users should be aware of this possible problem and monitor their EDG output voltage for unstable output during routine testing. Replacement of the potentiometer is dependent upon monitoring/testing. Immediate response to this notification does not appear to be necessary as the majority of the in-service voltage regulators have been operating without incident for approximately 15-20 years.

2) The potentiometer is soldered to a circuit board within the voltage regulator assembly; therefore, field modification is not recommended. For replacement of the potentiometer, it is recommended that the regulator be returned to NEI (either directly or through MKW Power Systems) where proper testing can be performed before the regulator is returned to the customer. Contact MKW Parts Department for assistance.

   If a regulator is to upgraded, we would also recommend replacement of the R5 (stability) potentiometer which is the same type as the R4 potentiometer except it is 100 ohms. This is strictly optional, no voltage regulator operability problems exist with the R5 potentiometer. The R5 potentiometer is CTS p/n 115R101A (NEI p/n 01070) and its replacement is Maury p/n 50-M123-101.

EXHIBIT 1
(1 page attached)

VOLTAGE ADJUST POTENTIOMETER "R4"
NEI DRAWING A-01068
CHICAGO TELEPHONE COMPANY POTENTIOMETER #115R251A

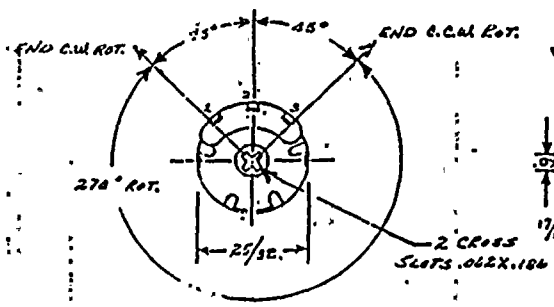

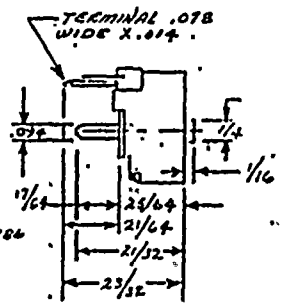

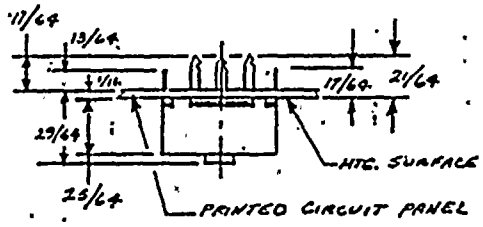

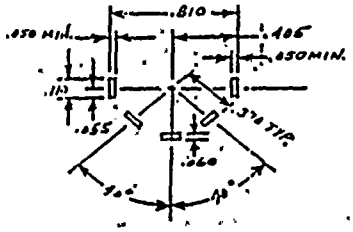

NOTES:

1. VALUE & RATING: 250Ω ± 20% 2 WATT
2. APPROVED PART:
   CHICAGO TELEPHONE SUPPLY
   P/N 115R251A
3. FULLY ENCLOSED CONSTRUCTION.
4. LINEAR TAPER

(WT = 0.2 OUNCE)

"A" IN P/N DESIGNATES ±10% ACCURACY (NOT 20%)

LETTER	REVISION	DATE	BY

DO NOT SCALE. ALL DIMENSIONS ARE IN INCHES. TOLERANCE UNLESS OTHERWISE SPECIFIED:

TITLE: RESISTOR, VARIABLE, WIREWOUND, 250Ω

MATERIAL:

DRAWN BY	DATE	CHECKED BY	DATE	APPROVED BY	DATE	SCALE
J.S.	11-21-73				2/1/74	—

PORTEC inc.
Electric Products Controls Div.

DRAWING NUMBER: A 01068

REV.

EXHIBIT 2
(1 page attached)

"R4" REPLACEMENT
MAURY #50-M-123-251

REPLACEMENT FOR 115R251A USED IN VOLTAGE REGULATOR 72-13000-100 AS RESISTOR R4.

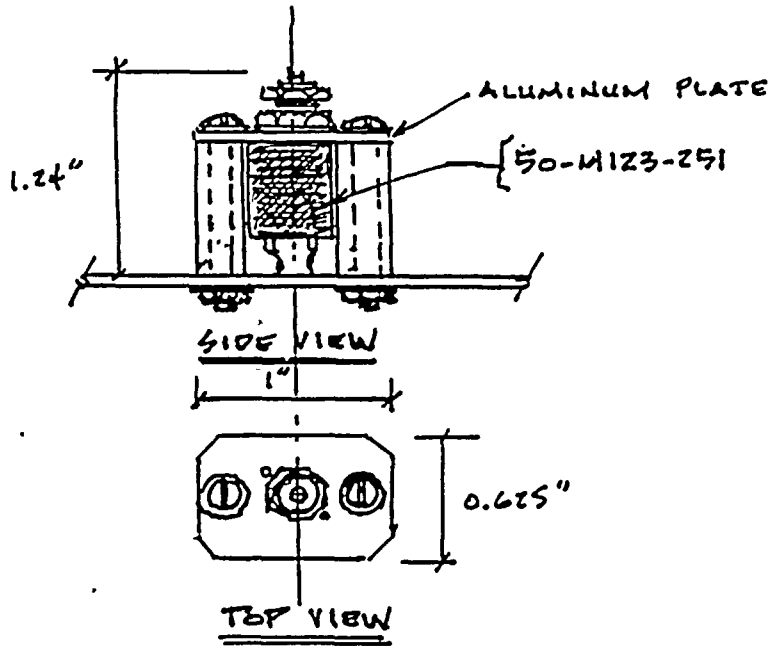

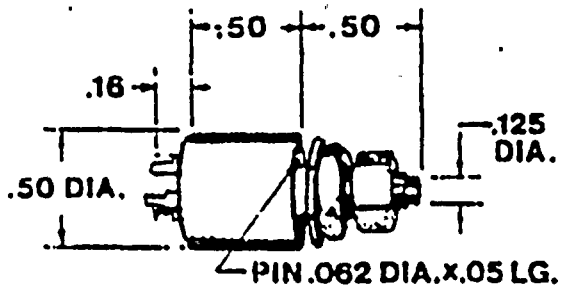

50-M123 WIREWOUND **MIL-TRIMMER**

WT = 0.2 OUNCE

Rugged instrumentation trimmer potentiometer with shaft locking nut meets MIL-R-12934C. Extensively used in critical military aircraft applications where small size and reliability are essential. 1.5 Watts at 85 degree C; special 0.5 Watt at 150 degree C.