# ACCELERATED DISTRIBUTION DEMONSTRATION SYSTEM

REGULATORY INFORMATION DISTRIBUTION SYSTEM (RIDS)

ACCESSION NBR:9401260330 DOC.DATE: 94/01/12 NOTARIZED: NO DOCKET #
FACIL:50-250 Turkey Point Plant, Unit 3, Florida Power and Light C 05000250
50-251 Turkey Point Plant, Unit 4, Florida Power and Light C 05000251
AUTH.NAME AUTHOR AFFILIATION
PLUNKETT,T.F. Florida Power & Light Co.
RECIP.NAME RECIPIENT AFFILIATION
Document Control Branch (Document Control Desk) See Reports

SUBJECT: Forwards "Turkey Point Nuclear Power Plant Third Ten-Yr ISI Interval IST Program for Pumps & Valves."

DISTRIBUTION CODE: A047D COPIES RECEIVED:LTR 1 ENCL 1 SIZE: 1+250
TITLE: OR Submittal: Inservice/Testing/Relief from ASME Code

NOTES:

| | RECIPIENT ID CODE/NAME | COPIES LTTR | COPIES ENCL | RECIPIENT ID CODE/NAME | COPIES LTTR | COPIES ENCL |
|---|---|---|---|---|---|---|
| | PD2-2 LA | 1 | 0 | PD2-2 PD | 1 | 1 |
| | RAGHAVAN,L | 2 | 2 | | | |
| INTERNAL: | AEOD/DSP/ROAB | 1 | 1 | NRR/DE/EMEB | 1 | 1 |
| | NRR/EMCB | 1 | 1 | NUDOCS-ABSTRACT | 1 | 1 |
| | OC/LFDCB | 1 | 0 | OGC/HDS3 | 1 | 0 |
| | REG FILE 01 | 1 | 1 | RES/DSIR/EIB | 1 | 1 |
| EXTERNAL: | EG&G BROWN,B | 1 | 1 | EG&G RANSOME,C | 1 | 1 |
| | NRC PDR | 1 | 1 | NSIC | 1 | 1 |

R I D S / A D D S

R I D S / A D D S

NOTE TO ALL "RIDS" RECIPIENTS:

PLEASE HELP US TO REDUCE WASTE! CONTACT THE DOCUMENT CONTROL DESK, ROOM P1-37 (EXT. 20079) TO ELIMINATE YOUR NAME FROM DISTRIBUTION LISTS FOR DOCUMENTS YOU DON'T NEED!

TOTAL NUMBER OF COPIES REQUIRED: LTTR 16 ENCL 13

FPL

P.O. Box 029100, Miami, FL, 33102-9100

JAN 12 1994

L-94-001
10 CFR 50.55a

U. S. Nuclear Regulatory Commission
Attn: Document Control Desk
Washington, D. C. 20555

Gentlemen:

Re: Turkey Point Units 3 and 4
Docket Nos. 50-250 and 50-251
Inservice Testing Program

This letter submits to the Nuclear Regulatory Commission (NRC) revision 0 of the Third Ten-Year Inservice Testing (IST) Program for Turkey Point Units 3 and 4.

Attachment 1 is a status and abstract of the relief requests associated with the program. Attachment 2 is revision 0 of the Third Ten-Year IST Program for Turkey Point. Attachment 3 is a current set of drawings to assist in pump and valve identification. The program incorporates seven relief requests, of which five are reliefs from pump testing requirements and two are reliefs from valve testing requirements. One new relief request (PR-5) is being submitted for NRC review and approval. FPL requests that the NRC's review and approval of the new relief request be completed by August 31, 1994. One additional relief request (PR-3) has received prior NRC approval, however it has been revised to clarify that the pump discharge pressure gauge is included within the scope of the relief request. As this revision is only a clarification, with no change to the alternate testing being performed, no NRC review is requested and the relief continues to be implemented. The remaining relief requests (reliefs which have received previous NRC approval) have been revised to reference the appropriate version of the ASME code and the latest plant drawings. No additional NRC review is being asked for these relief requests and the reliefs continue to be implemented.

If you should have any questions, please contact us.

Very truly yours,

T. F. Plunkett
Vice President
Turkey Point Nuclear

attachments

cc: Stewart D. Ebneter, Regional Administrator, Region II, USNRC (w/o att.)
Thomas P. Johnson, Senior Resident Inspector, USNRC, Turkey Point Plant (w/o att.)

AD47

240076

FLORIDA POWER and LIGHT COMPANY
TURKEY POINT NUCLEAR POWER PLANT
UNIT NOS. 3&4
P.O. BOX 3088
FLORIDA CITY, FLORIDA 33034

# THIRD TEN-YEAR INSERVICE INSPECTION INTERVAL INSERVICE TESTING PROGRAM

FOR

PUMPS AND VALVES

NRC DOCKET NUMBERS: 50-250 / 50-251

COMMERCIAL SERVICE DATE: PTN-3 DECEMBER 14, 1972
COMMERCIAL SERVICE DATE: PTN-4 SEPTEMBER 14, 1973

TURKEY POINT PLANT REVIEWS AND APPROVALS:

PREPARED BY: _____ DATE: 11-18-93
PTN PLANT IST COORDINATOR

APPROVED BY: _____ DATE: 11-18-93
PTN SYSTEM PERFORMANCE SUPERVISOR

APPROVED BY: _____ DATE: 12-28-93
PTN TECHNICAL DEPT. MANAGER

9401260330

# LIST OF EFFECTIVE PAGES

| Page | Revision | Page | Revision | Page | Revision |
|---|---|---|---|---|---|
| i | 10/28/93 | Appendix A | | 83 | 10/28/93 |
| ii | 10/28/93 | | | 84 | 10/28/93 |
| iii | 10/28/93 | 44 | 10/28/93 | 85 | 10/28/93 |
| iv | 10/28/93 | 45 | 10/28/93 | 86 | 10/28/93 |
| 1 | 10/28/93 | 46 | 10/28/93 | 87 | 10/28/93 |
| 2 | 10/28/93 | | | 88 | 10/28/93 |
| 3 | 10/28/93 | Appendix B | | 89 | 10/28/93 |
| 4 | 10/28/93 | | | 90 | 10/28/93 |
| 5 | 10/28/93 | 47 | 10/28/93 | 91 | 10/28/93 |
| 6 | 10/28/93 | 48 | 10/28/93 | 92 | 10/28/93 |
| 7 | 10/28/93 | 49 | 10/28/93 | 93 | 10/28/93 |
| 8 | 10/28/93 | | | 94 | 10/28/93 |
| 9 | 10/28/93 | Appendix C | | 95 | 10/28/93 |
| 10 | 10/28/93 | | | 96 | 10/28/93 |
| 11 | 10/28/93 | 50 | 10/28/93 | 97 | 10/28/93 |
| 12 | 10/28/93 | 51 | 10/28/93 | 98 | 10/28/93 |
| 13 | 10/28/93 | 52 | 10/28/93 | | |
| 14 | 10/28/93 | 53 | 10/28/93 | Appendix D | |
| 15 | 10/28/93 | 54 | 10/28/93 | | |
| 16 | 10/28/93 | 55 | 10/28/93 | 99 | 10/28/93 |
| 17 | 10/28/93 | 56 | 10/28/93 | 100 | 10/28/93 |
| 18 | 10/28/93 | 57 | 10/28/93 | 101 | 10/28/93 |
| 19 | 10/28/93 | 58 | 10/28/93 | 102 | 10/28/93 |
| 20 | 10/28/93 | 59 | 10/28/93 | 103 | 10/28/93 |
| 21 | 10/28/93 | 60 | 10/28/93 | 104 | 10/28/93 |
| 22 | 10/28/93 | 61 | 10/28/93 | 105 | 10/28/93 |
| 23 | 10/28/93 | 62 | 10/28/93 | 106 | 10/28/93 |
| 24 | 10/28/93 | 63 | 10/28/93 | 107 | 10/28/93 |
| 25 | 10/28/93 | 64 | 10/28/93 | 108 | 10/28/93 |
| 26 | 10/28/93 | 65 | 10/28/93 | 109 | 10/28/93 |
| 27 | 10/28/93 | 66 | 10/28/93 | 110 | 10/28/93 |
| 28 | 10/28/93 | 67 | 10/28/93 | 111 | 10/28/93 |
| 29 | 10/28/93 | 68 | 10/28/93 | 112 | 10/28/93 |
| 30 | 10/28/93 | 69 | 10/28/93 | 113 | 10/28/93 |
| 31 | 10/28/93 | 70 | 10/28/93 | 114 | 10/28/93 |
| 32 | 10/28/93 | 71 | 10/28/93 | 115 | 10/28/93 |
| 33 | 10/28/93 | 72 | 10/28/93 | 116 | 10/28/93 |
| 34 | 10/28/93 | 73 | 10/28/93 | 117 | 10/28/93 |
| 35 | 10/28/93 | 74 | 10/28/93 | 118 | 10/28/93 |
| 36 | 10/28/93 | 75 | 10/28/93 | 119 | 10/28/93 |
| 37 | 10/28/93 | 76 | 10/28/93 | 120 | 10/28/93 |
| 38 | 10/28/93 | 77 | 10/28/93 | 121 | 10/28/93 |
| 39 | 10/28/93 | 78 | 10/28/93 | 122 | 10/28/93 |
| 40 | 10/28/93 | 79 | 10/28/93 | 123 | 10/28/93 |
| 41 | 10/28/93 | 80 | 10/28/93 | 124 | 10/28/93 |
| 42 | 10/28/93 | 81 | 10/28/93 | 125 | 10/28/93 |
| 43 | 10/28/93 | 82 | 10/28/93 | 126 | 10/28/93 |

## LIST OF EFFECTIVE PAGES

| Page | Revision |
|---|---|
| 127 | 10/28/93 |
| 128 | 10/28/93 |
| 129 | 10/28/93 |
| 130 | 10/28/93 |
| 131 | 10/28/93 |
| 132 | 10/28/93 |
| 133 | 10/28/93 |
| 134 | 10/28/93 |
| 135 | 10/28/93 |
| 136 | 10/28/93 |
| 137 | 10/28/93 |
| 138 | 10/28/93 |
| 139 | 10/28/93 |
| 140 | 10/28/93 |
| 141 | 10/28/93 |
| 142 | 10/28/93 |
| 143 | 10/28/93 |
| 144 | 10/28/93 |
| 145 | 10/28/93 |
| 146 | 10/28/93 |
| 147 | 10/28/93 |

# Table of Contents

| | | Page |
|---|---|---|
| List of Effective Pages | | i |
| Table of Contents | | iii |
| Record of Revisions | | iv |
| 1.0 | Introduction | 1 |
| 2.0 | Applicable Documents | 2 |
| 3.0 | Program Development | 3 |
| 4.0 | Inservice Testing Program For Pumps | 6 |
| 4.1 | Code Compliance | 6 |
| 4.2 | Allowable Ranges of Test Quantities | 6 |
| 4.3 | Testing Intervals | 6 |
| 4.4 | Pump Program Tables | 6 |
| 4.5 | Relief Requests for Pump Testing | 6 |
| 5.0 | Inservice Testing Program For Valves | 15 |
| 5.1 | Code Compliance | 15 |
| 5.2 | Stroke Time Acceptance Criteria | 15 |
| 5.3 | Check Valve Testing | 15 |
| 5.4 | Testing Intervals | 15 |
| 5.5 | Valve Program Tables | 15 |
| 5.6 | Deferred Testing Justification | 16 |
| 5.6.1 | Cold Shutdown Testing | 16 |
| 5.6.2 | Refueling Outage Testing | 26 |
| 5.7 | Relief Requests For Valve Testing | 35 |
| Legends | | |
| A | Pump Program Tables | 41 |
| B | Valve Program Tables | 42 |
| Appendices | | |
| A | Pump Program Tables - Unit 3 | 44 |
| B | Pump Program Tables - Unit 4 | 47 |
| C | Valve Program Tables - Unit 3 | 50 |
| | Valve Table Notes - Unit 3 | 97 |
| D | Valve Program Tables - Unit 4 | 99 |
| | Valve Table Notes - Unit 4 | 147 |

## RECORD OF REVISIONS

| REVISION NUMBER | DESCRIPTION OF REVISION REASON FOR THE CHANGE | DATE REVISED |
|---|---|---|
| 0 | TURKEY POINT PLANT, UNIT 3&4 THIRD TEN YEAR PUMP AND VALVE TESTING PROGRAM | 10-28-93 |

# INSERVICE TESTING (IST) PROGRAM PLAN
# TURKEY POINT UNITS 3&4

## 1.0 INTRODUCTION

This document outlines the Turkey Point Plant, Units 3 and 4, Inservice Test (IST) Program for the third 10-year interval based on the requirements of Section XI of the ASME Boiler and Pressure Vessel Code, 1989 Edition. Subsections IWP and IWV thereof refer to implementing ASME/ANSI OM-6 and OM-10, respectively. In accordance with Title 10, Part 50 of the Code of Federal Regulations, paragraph 50.55a, the Turkey Point IST Program is based on the applicable requirements set forth in ASME/ANSI OM-1987, Operation and Maintenance of Nuclear Power Plants, including ASME/ANSI OMa-1988 Addenda.

Revision 0 of the third 10-year IST Program will be in effect through the end of the third 120-month (10-year) interval unless changed and reissued for reasons other than the routine update required at the start of the fourth interval per 10 CFR 50.55a(g). The third inspection intervals are defined as follows:

| | Begins | Ends |
|---|---|---|
| Unit 3 | February 22, 1994 | February 21, 2004 |
| Unit 4 | April 15, 1994 | April 14, 2004 |

## 2.0 APPLICABLE DOCUMENTS

This Program Plan was developed per the requirements and guidance provided by the following documents:

2.1 Title 10, Code of Federal Regulations, Part 50.55a.
2.2 NRC Regulatory Guides - Division 1
2.3 Standard Review Plan 3.9.6, Inservice Testing of Pumps and Valves.
2.4 Final Safety Analysis Report, Turkey Point Units 3 & 4
2.5 Turkey Point Plant Units 3&4 Technical Specifications
2.6 ASME Boiler and Pressure Vessel Code, Section XI, 1989 Edition
2.7 NRC Generic Letter 89-04, Guidance on Developing Acceptable Inservice Testing Programs.
2.8 ASME/ANSI OM-1987, Operation and Maintenance of Nuclear Power Plants including ASME/ANSI OMa-1988 Addenda.

## 3.0 PROGRAM DEVELOPMENT

ASME B&PV Code, Section XI (hereby referred to as the 'Code') requires that the owner of each nuclear power plant prepare and submit a plan for testing and inspection of systems and components under the jurisdiction of the Code and in compliance with Title 10, Part 50 of the Code of Federal Regulations (Para. 50.55.a). With respect to the elements of that plan related to the testing of pumps and valves, Section XI, Subsections IWP and IWV direct each licensee to comply with the applicable portions of ASME/ANSI OM-6 and OM-10. In response to this, the NRC directed that pump and valve testing should be performed in accordance with Parts 6 and 10 of ASME/ANSI OM-1987 with OMa-1988 Addenda. Specifically, Part 1 of OM-1987 and Paragraphs 1.1 of OMa-1988 Addenda, Parts 6 and 10, establish the Program scope with the provision that the rules apply only to ISI Class 1,2, and 3 as stated by the NRC via Federal Register, Vol. 56, No. 21 dated January 31, 1991.

The IST Program must include those pumps and valves that perform a specific function in shutting down a reactor to the cold shutdown condition, in maintaining the cold shutdown condition, or in mitigating the consequences of an accident. During development of the Program, each of the systems within the ISI Class 1,2, or 3 boundaries were evaluated taking into account the function of each component and the need for its operability as it relates to the scope of applicability as defined in ASME Section XI Code. The following guidelines are set forth for evaluation of system components (pumps and valves) with respect to their inclusion in the Turkey Point IST Program and to what extent testing will be performed.

3.1 Components performing redundant functions are included in the testing program only if, in the process of analysis or licensing justification, they are relied upon to be operable during the design basis accident (ie. containment isolation valves, redundant pumps, valves with alternate power supplies, etc.)

3.2 Valves installed primarily for the purpose of providing convenient operational flexibility are not included in the Program.

3.3 For pumps and valves that are not categorized as ISI Class 1,2, or 3 but included in the IST Program, specific relief from Code requirements is not required as stated therein 10CFR50.55a(f)(5)(iv).

3.4 Valves that are actuated as a result of a safety system automatic response are included in the Program to the extent that the testing shall verify valve operational readiness as defined by the Code.

3.5 Valves whose sole function is to provide system or component redundancy related to failure of passive components are not included if a set of all of the active components (pumps and valves) needed to fulfill the specified system (train) function are tested - i.e. double or unrelated simultaneous failures need not be assumed.

3.6 System safety/relief valves are included to the extent that a valve protects a system (or portions thereof) that performs a required function in shutting down the reactor to the cold shutdown condition, maintaining the cold shutdown condition, or mitigating the consequences of an accident.

3.7 All valves included in the Turkey Point leakrate testing program complying with 10CFR50, Appendix J are included in the Program as Category A valves. (Reference 2.7, Position 10)

3.8 All valves designated as high-low pressure interface valves (pressure isolation valves) are included in the Program as Category A valves. (Reference 2.7, Position 4)

3.9 Pumps and valves whose only safety function is predicated on plant shutdown and recovery from a fire per commitments made as a result of 10CFR50, Appendix R are not included in the IST Program.

3.10 All active Category A valves are designated for testing (exercising) to the closed direction.

3.11 Valves whose normal position during operation is the position required to perform the designated safety function, where valve movement may be required due to normal plant evolutions or possible repositioning during accident response or recovery operations, are included (ie. the valve cannot be considered passive).

3.12 Where an air-operated valve is provided with a simple air-pilot valve, the pilot valve is not specifically included in the Program provided that the testing

performed on the main valve verifies the proper operation of the pilot valve.

3.13 Control valves are specifically excluded from testing provided they are used only for system control (eg. pressure regulating valves). If a control valve must change position to support a safety-related function and it has a fail-safe position, then it is included in the Program.

3.14 Where a valve performs a safety function in both directions (open and closed), exercising in both directions is included. For power-operated valves, stroke time measurements in both directions is required.

Based upon the rules outlined above, all pumps and valves which have been determined to be within the scope of 10 CFR 50.55a and the applicable version of ASME Section XI Code, and their respective testing requirements, have been included in the IST Program.

During the third 10-year interval, it is expected that the scope of the Program will be modified in response to unrelated activities including, but not limited to, plant design changes, changes in operating practices, and changes in accident mitigating procedures or philosophy. To ensure the continued maintenance of the Program, the plant staff has assigned designated engineers who are responsible for revisions to the Program Plan and the respective plant procedures.

# 4.0 INSERVICE TESTING PROGRAM FOR PUMPS

## 4.1 Code Compliance

This IST Program for pumps meets the requirements of Part 6 of Reference 2.8 and any interpretations or additional requirements imposed by Reference 2.7. Paragraph and table references in this section refer to specific paragraphs and tables in Reference 2.8, Part 6. Where these requirements have been determined to be impractical, conformance would cause unreasonable hardship without any compensating increase in safety, or an alternative test provides an acceptable level of quality and safety, relief from Code requirements is requested pursuant to the requirements of 10 CFR 50.55a(g)(iii) and Reference 2.7.

## 4.2 Allowable Ranges of Test Quantities

The allowable ranges for test parameters as specified in Table 3 of Reference 2.8 will be used for all measurements of pressure, flow, and vibrations except as provided for in specific relief requests.

## 4.3 Testing Intervals

The test frequency for pumps included in the Program will be as set forth in Part 6 of Reference 2.8 and related relief requests. An allowable extension, not to exceed +25 percent of the surveillance interval, may be applied to a test schedule as allowed by the Turkey Point Technical Specifications to provide for operational flexibility.

## 4.4 Pump Program Tables

Appendices A and B list those pumps included in the IST Program with references to parameters to be measured and applicable requests for relief.

## 4.5 Relief Requests for Pump Testing

Relief requests PR-1 through PR-5 are initiated per 10CFR50.55a where appropriate.

# RELIEF REQUEST NO. PR-1

COMPONENTS:

Boric Acid Transfer Pumps *-P203 A&B

PART 6 REQUIREMENT:

An inservice test shall be conducted with the pump operating at specified test reference conditions. Pressure, flow rate and vibration shall be determined and compared with corresponding reference values. (Paragraph 5.2(d))

BASIS FOR RELIEF:

The normal test loops for these pumps consist of fixed resistance circuits sized to limit flow but with no flow measuring devices installed. Since the system resistance is fixed and can be assumed to be a constant, pump degradation can be monitored by comparing successive measurements of pump differential pressure.

An alternative test circuit is available in which pump flowrate can be measured, however it requires injection of highly concentrated boric acid solution into the reactor coolant system. During plant operation, this is not practical since it would adversely effect reactor power level and create a potential plant transient. If injection were to be performed during cold shutdown periods the result would be excessive boration of the reactor coolant system and associated potential difficulties during the subsequent plant startup. This is especially significant near the end of core life.

ALTERNATE TESTING:

During quarterly testing of these pumps, differential pressure and vibration measurements will be taken utilizing the fixed resistance flowpath and evaluated in accordance with Table 3. At each reactor refueling these pumps will be tested and all appropriate measurements taken in accordance with Paragraph 5.2. This satisfies the requirements of Reference 2.7, Position 9.

# RELIEF REQUEST NO. PR-2

COMPONENTS:

Residual Heat Removal (RHR) Pumps *-P210 A&B

PART 6 REQUIREMENT:

The resistance of the system shall be varied until the flowrate equals the reference value. Alternatively, the flowrate may be varied until the differential pressure equals the reference value. (Para. 5.2(b))

BASIS FOR RELIEF:

During quarterly testing of the RHR Pumps, flow is routed through a minimum flow recirculation line leading to the suction of the pump being tested. This recirculation flowpath is capable of passing a flowrate somewhat less than 10 percent of that at the pump design operating point. A flow instrument is installed in this recirculation piping, however there is concern regarding the practice of throttling under minimum flow conditions with the potential for causing pump damage. In addition, hydraulic pump test data at or near a pump's shutoff head provides little information as to the mechanical condition of a pump.

NRC Generic Letter 89-04, Position 9, (Reference 2.7) allows elimination of minimum flow test line flowrate measurements providing inservice tests are performed during cold shutdowns or refueling under full or substantial flow conditions where pump flowrate is recorded and evaluated. The proposed alternate testing is consistent with this philosophy and the intent of this position.

These pumps are standby pumps and little degradation is expected with respect to hydraulic performance during operational periods when the pumps are idle. Thus, the alternate testing will provide adequate monitoring of these pumps with respect to the applicable Code requirements to ensure continued operability and availability for accident mitigation.

RELIEF REQUEST NO. PR-2 (cont.)

ALTERNATE TESTING:

During quarterly testing of the RHR pumps, a fixed-resistance test circuit will be used and pump differential pressure and flowrate will be determined and compared to their respective reference values per Paragraph 5.2(c).

During testing performed at cold shutdown or refueling, pump differential pressure, flowrate, and vibration will be recorded and evaluated per Paragraph 5.2(b). Testing during cold shutdowns will be on a frequency determined by intervals between shutdowns as follows:

For intervals of 3 months or longer - each shutdown.

For intervals of less than 3 months - testing is not required unless 3 months have passed since the last shutdown test.

RELIEF REQUEST NO. PR-3

COMPONENTS:

Residual Heat Removal Pumps *-P210 A&B

PART 6 REQUIREMENT:

The full-scale range of each analog instrument shall be not greater than three times the reference value. (Para. 4.6.1.2(a))

BASIS FOR RELIEF:

The installed suction and discharge pressure gauges of the RHR pumps are sized to accommodate the pressure range of 4 to 600 psig expected under standby and cold shutdown testing conditions (instrument range is 0-600 psig). As a result, the instrument range exceeds the Code requirement since, under some test conditions, the pump suction and/or discharge pressures can be considerably less than 200 psig. or 1/3 times the pressure gauge range.

In this particular case, the specification for the installed gauges is as follows:

Range: Compound gauge: 1st revolution 0-300 psig;
2nd revolution 300-600 psig.

Accuracy: ±0.25 percent of full scale (±1.5 psig)

Suction Pressure

Suction pressure measurements are used primarily to derive the pump differential pressure through calculation. The accuracy of the suction pressure measurement normally has little or no effect on the results of this calculation since, generally, the pump discharge pressure exceeds the suction pressure by 2 or 3 orders of magnitude. When determining pump differential pressure (Dp), where typically RHR Pump Dp is approximately 100 psig (discharge and suction pressures approximately 120 and 20 psig, respectively) the maximum effect of suction pressure inaccuracy is ±1.5 psig, or ±1.5 percent of the calculated Dp. This compares reasonably with the maximum allowable accuracy (per Code) of the suction pressure gauge of ±2 percent of 60 psig, or ±1.2 psig.

RELIEF REQUEST NO. PR-3 (cont.)

BASIS FOR RELIEF (cont.):

Discharge Pressure

Discharge pressure measurements are also used to derive the pump differential pressure through calculation. When determining pump differential pressure (Dp), where typically RHR Pump Dp is approximately 100 psig. (discharge and suction pressures approximately 120 and 20 psig., respectively) the maximum effect of the discharge pressure inaccuracy is ±1.5 psig, or ±1.5 percent of the calculated Dp. This is considered to be negligible when compared to the maximum allowable accuracy (per Code) of the discharge pressure gauge of ±2 percent of 360 psig, or ±7.2 psig.

Combination

Based on the inaccuracies of the suction and discharge pressure gauges (±1.5 psig), the largest possible error in the differential pressure calculation is ±3 psig (assuming a conservative simple arithmetical method). Thus the maximum inaccuracy is approximately three times better (5.4 psig) than the "allowable" combined Code inaccuracy of 8.4 psig.

ALTERNATE TESTING:

When measuring the suction and discharge pressures of the RHR pumps, in lieu of satisfying the specified instrument range requirement of Paragraph 4.6.1.2.(a), the instruments used for measuring pressure will meet the following specifications:

Accuracy: ±0.25 percent of Full Scale (or better)

Range: Compound Gauge: 1st revolution 0-300 psig.
2nd revolution 300-600 psig.
(or better)

RELIEF REQUEST NO. PR-4

COMPONENTS:

All pumps in the Program

PART 6 REQUIREMENT:

If the presence or absence of liquid in a gage line could produce a difference of more than 0.25% in the indicated value of the measured pressure, means shall be provided to ensure or determine the presence or absence of liquid as required for the static correction used. (Paragraph 4.6.2.1)

BASIS FOR RELIEF:

When this requirement is applied where measured pressures are at relatively low levels, e.g. suction pressure, the 0.25% limit many times results in complicated venting procedures and related health physics risks associated with the disposal of radioactive contaminated water with no commensurate improvement of test reliability.

Normally, the only quantitative use of suction pressure measurements, where significant accuracy is required, is in determining pump differential pressure or head. In most cases the pump discharge pressure exceeds the suction pressure by at least a factor of five (5). This being the case, a .25% error introduced into the suction pressure measurement results in an error of .05% in the differential pressure calculation. This is insignificant in light of the potential 6% error allowance applied to both the suction and discharge pressure instruments (Paragraph 4.6.1.1).

ALTERNATE TESTING:

If the presence or absence of liquid in a gage line used for sensing pump suction pressure could produce a difference of more than 0.25% in the calculated value of the pump differential pressure, means shall be provided to ensure or determine the presence or absence of liquid as required for the static correction used.

RELIEF REQUEST NO. PR-5

COMPONENTS:

Intake Cooling Water Pumps *-P9A thru *-P9C

PART 6 REQUIREMENT:

The frequency response range of the vibration measuring transducers and their readout system shall be from one-third minimum pump shaft rotational speed to at least 1000 Hz. (Paragraph 4.6.1.6)

BASIS FOR RELIEF:

The speed of the intake cooling water (ICW) pumps is approximately 900 rpm relating to a rotational frequency of 15 Hz. In order to satisfy the requirements of Paragraph 4.6.1.6, a vibration measurement system capable of measuring vibration to a lower limiting frequency of 5 Hz. would be required.

The instruments currently being used at Turkey Point have a lower frequency limit of 350 CPM or 5.8 Hz. This instrumentation is "state-of-the-art" industrial grade, high quality equipment. Satisfying the Code requirements with respect to frequency response would require the unnecessary procurement of new and more sophisticated equipment beyond that intended by the Code.

Monitoring lower frequencies (less than rotational speed) is performed primarily for the purpose of detecting oil whirl in the pump bearings. Other conditions that could result in low frequency vibration (less than shaft speed) are included in the general category of mechanical "rub" which is not considered to be significant from the aspect of pump degradation.

RELIEF REQUEST NO. PR-5 (cont.)

BASIS FOR RELIEF (cont.):

The use of the existing instrumentation as specified by the alternate testing will adequately provide for monitoring pump condition for the following reasons:

a) For vertical shaft equipment rotating at these speeds oil whirl is an unlikely phenomenon; and

b) If oil whirl were to occur, it would be manifested at a frequency equal to one-half of the rotational frequency, or, in this case, approximately 7.5 Hz., which is well within the range of the proposed instrumentation.

Vibration measurements taken on these pumps with instruments capable of monitoring frequencies to 5.8 Hz. are adequate for assessing the operational readiness of these pumps as required by the Code.

ALTERNATE TESTING:

The instruments used for measuring vibration on the ICW pumps will have a frequency response range that extends to a lower limiting frequency of 6 Hz. or less.

# 5.0 INSERVICE TESTING PROGRAM FOR VALVES

## 5.1 Code Compliance

This IST Program for valves meets the requirements of Reference 2.8, Parts 1 and 10 and any interpretations or additional requirements imposed by Reference 2.7. Paragraph and table references in this section refer to specific paragraphs and tables in Reference 2.8, Part 10. Where these requirements have been determined to be impractical, conformance would cause unreasonable hardship without any compensating increase in safety, or an alternative test provides an acceptable level of quality and safety, relief from Code requirements is requested pursuant to the requirements of 10 CFR 50.55a(g)(iii) and Reference 2.7.

## 5.2 Stroke Time Acceptance Criteria

When required, the acceptance criteria for the stroke times of power-operated valves will be as set forth in References 2.7 and 2.8.

## 5.3 Check Valve Testing

Where required, full-stroke exercising of check valves to the open position using system flow requires that a test be performed whereby the predicted full accident condition flowrate through the valve be verified and measured or full stroke of the obturator is verified by appropriate non-obtrusive methods. Any deviation to this requirement must satisfy the requirements of Reference 2.7, Position 1.

## 5.4 Testing Intervals

The test frequency for valves included in the Program will be as set forth in Parts 1 and 10 of Reference 2.8, and related relief requests. An allowable extension, not to exceed +25 percent of the surveillance interval, may be applied to the test schedule as allowed by the Turkey Point Technical Specifications to provide for operational flexibility.

## 5.5 Valve Program Tables

Appendices C and D list those valves included in the IST Program with references to required testing, respective test intervals, and requests for relief.

## 5.6 Deferred Testing

Where quarterly testing of valves is impractical or otherwise undesirable, testing may be deferred and performed during cold shutdown or refueling periods as permitted by Paragraphs 4.2.1.2 and 4.3.2.2.

It should be noted that there are two conditions of cold shutdown identified in the program tables (Appendices C and D). For the purpose of this requirement, the term 'cold shutdown' refers to the respective condition as noted in the tables. The program tables identify those valves to which deferred testing applies. Justification for such testing (arranged by system) follows:

### 5.6.1 COLD SHUTDOWN TESTING JUSTIFICATION

Component Cooling - (5613(4)-M-3030-5(4))

**MOV-3-0626, MOV-3-0716 A&B and MOV-3-0730**
**MOV-4-0626, MOV-4-0716 A&B and MOV-4-0730**
**Component Cooling Water Supply/Return Isolation Valves**

These valves are required to be open to ensure continued cooling of reactor coolant pump auxiliary components including the controlled seal leakage system, the pump seals, and the main drive motors. Closing these valves during pump operation could result in degradation of the RCP seals and motors, eventually resulting in potential RCP damage and subsequent plant shutdown.

**MOV-3-1417 and MOV-3-1418**
**MOV-4-1417 and MOV-4-1418**
**Component Cooling Cont. Supply/Return Isolation Valves**

These valves provide normal cooling to the normal containment coolers, control rod drive mechanism coolers, and the primary shield cooling coils. Exercising any of these valves during plant operation at power could cause overheating of the associated components. Should any one of these valves fail to reopen after closure serious damage to equipment could occur necessitating an immediate plant shutdown and cooldown.

**3-0738**
**4-0738**

**Excess Letdown Heat Exchanger CCW Supply Check Valves**

These valves are simple check valves located inside the containment building with no external or remote position indication; thus the only practical method of determining disc position is via a backflow or backleakage test. During the performance of such a test, a considerable length of piping (and potentially the heat exchanger) is drained. Since the CCW water is treated with a chemical corrosion inhibitor, this would create a significant waste disposal problem, whereby performance of this test on a quarterly basis would prove to be an unwarranted burden on the plant staff.

Reactor Coolant (5613(4)-M-3041-2)

**PCV-3-0455C and PCV-3-0456**
**PCV-4-0455C and PCV-4-0456**
**Power-Operated Relief Valves**

Exercising these valves at power has the potential for causing seat damage that could result in unacceptable RCS leakage. Consequently, this could necessitate isolation of the affected PORV(s).

**SV-3-6318 A&B, SV-3-6611 and SV-3-6612**
**SV-4-6318 A&B, SV-4-6611 and SV-4-6612**
**Reactor Coolant System Vents**

These valves are administratively controlled in the key-locked closed position to prevent inadvertent operation. Since these are Class 1 isolation valves for the reactor coolant system, failure of a valve to close or leakage following closure could result in a loss of coolant in excess of the limits imposed by the Plant Technical Specifications. Furthermore, failure of the valve to indicate a return to the fully closed position following exercising, could likely result in a containment entry at power or a plant shutdown.

Chemical & Volume Control - (5613(4)-M-3047-1)

**CV-3-0204**
**CV-4-0204**
**Letdown Line Outboard Isolation Valves**

Closing these valves during operation would result in undesirable pressurizer level or CVCS system transients with the potential for a plant trip. If a valve failed to reopen, then an expedited plant shutdown would be required.

Chemical & Volume Control - (5613(4)-M-3047-2)

**3-0357**
**4-0357**
**RWST Discharge Valves**

Exercising these check valves during operation would require injection of RWST borated water into the reactor coolant system. This would, in turn, result in boration of the reactor coolant system with an adverse reaction in reactor power and the potential of a power transient.

**HCV-3-0121**
**HCV-4-0121**
**Charging Line Flow Control Valves**

These valves provide the primary flow path to the RCS via the Charging Pumps. Measuring valve opening stroke time would first necessitate valve closure. Closing these valves during operation could result in oscillations in RCP seal injection flow and undesirable pressurizer level transients with the potential for a plant trip.

**LCV-3-0115B**
**LCV-4-0115B**
**RWST Outlet Valves**

Opening these valves during operation would result in injection of RWST borated water into the reactor coolant system. This would, in turn, result in boration of the reactor coolant system with an adverse reaction in reactor power and the potential for a power transient.

**LCV-3-0115C**
**LCV-4-0115C**
**Volume Control Tank Outlet Valves**

Closing these valves during operation would necessitate configuring the Charging Pump suction from the VCT to the RWST in order to maintain charging flow. Injection of RWST borated water into the RCS would result in overboration with an adverse reaction in reactor power level and a potential for a reactor power transient.

Chemical & Volume Control (5613(4)-M-3047-3)

**MOV-3-0381 and MOV-3-6386**
**MOV-4-0381 and MOV-4-6386**
**RCP Seal Water Return Isolation Valves**

Exercising these valves to the closed position when the reactor coolant pumps (RCP's) are in operation would interrupt flow from the RCP seals and may result in damage to the pumps' seals.

Residual Heat Removal (5613(4)-M-3050-1)

**3-0753 A&B**
**4-0753 A&B**
**Residual Heat Removal (RHR) Pump Discharge Check Valves**

The only flowpath available for full-flow exercising these valves to the open position requires pumping from each RHR pump to the reactor coolant system. The residual heat removal system is designed and interlocked so as to make it impossible to pump to the reactor coolant system at elevated pressures. Note that these valves will be partial-stroke exercised open on a quarterly basis via the minimum flow test lines.

**MOV-3-0750 and MOV-3-0751**
**MOV-4-0750 and MOV-4-0751**
**RHR Supply From the Reactor Coolant System Isolation Valves**

These valves are provided with electrical interlocks that prevent opening when any one of the following conditions exists (in the corresponding unit):

* Reactor coolant system pressure exceeds 525 psig;
* MOV-*-862 A or B is open; or
* MOV-*-863 A or B is open.

This precludes exercising these valves in any other plant condition than cold shutdown.

**MOV-3-0862 A&B**
**MOV-4-0862 A&B**
**RHR Pump Suction Isolation Valves**

Exercising and failure of either of these valves in the closed position during testing will isolate both unit's residual heat removal pumps from the respective refueling water storage tank rendering them inoperable and losing all capability of low-pressure safety injection.

**MOV-3-0863 A&B**
**MOV-4-0863 A&B**
**Safety Injection Pump Recirculation Phase Suction Stop Valves**

Failure of either of these valves in the open position during testing will open a recirculation path from the discharge of the RHR heat exchangers to the RWST or suction of the RHR pumps. In the event of a safety injection signal, this would result in diverting flow from the injection flowpath and thus adversely impact the effectiveness of the LP safety injection system function.

<u>Containment Purge System (5613(4)-M-3053-1)</u>

**POV-3-2600 and POV-3-2602**
**POV-4-2600 and POV-4-2602**
**Containment Bldg. Purge Supply/Exhaust Otbd. Isolation Valves**

Due to the history of these valves with respect to operational-related seat leakage, the plant staff has imposed restrictions on their operation whereby unnecessary cycling of the valves is to be avoided and additional leaktests are performed based on cycling frequency. Thus, it is undesirable to cycle these valves more often than is absolutely necessary. In addition, typically these valves are closed (their safety-related position) during plant operation and are usually opened only for containment ventilation during shutdown periods.

**POV-3-2601 and POV-3-2603**
**POV-4-2601 and POV-4-2603**
**Containment Bldg. Purge Supply/Exhaust Inbd. Isolation Valves**

Due to the history of these valves with respect to operational-related seat leakage, the plant staff has imposed restrictions on their operation whereby unnecessary cycling of the valves is to be avoided and additional leaktests are performed based on cycling frequency. Thus, it is undesirable to cycle these valves more often than is absolutely necessary. In addition, typically these valves are closed (their safety-related position) during plant operation and are usually opened only for containment ventilation during shutdown periods.

Safety Injection (5613(4)-M-3062-1)

**MOV-0878 A&B**
**SIS Pump Discharge Unit Cross-Tie**

The Turkey Point plant design takes credit for the added redundancy of the shared safety injection systems and the capability of maintaining four (4) pumps capable of taking suction from either refueling water storage tank. The plant Technical Specifications require three of the four pumps to be operable during single unit power operation, and all four pumps to be operable during dual unit power operation, when Tavg is greater than 380 deg.-F. Failure of either one of these valves to reopen while testing would reduce the capability of the safety injection system to respond to a LOCA in the operating unit(s) and place the plants in a 72 hour LCO action statement.

**MOV-3-0856 A&B**
**MOV-4-0856 A&B**
**Minimum Flow Line Isolation Valves**

Exercising or failure of either of these valves in the closed position during testing will prohibit flow through the minimum flow recirculation lines for the associated safety injection and containment spray pumps. Due to the probability of damage should these pumps be started and operated in this condition (no flow), exercising of these valves will only be performed during cold shutdown periods when these pumps are not required to be operable.

**MOV-3-864 A&B**
**MOV-4-864 A&B**
**RWST Outlet Isolation Valves**

Failure of these valves in the closed position isolates the associated RWST rendering the associated safety injection and containment spray systems inoperable. Thus, closing any of these valves while the associated unit is not in a cold shutdown or refueling mode is considered imprudent.

**MOV-3-866 A&B**
**MOV-4-866 A&B**
**Hot Leg Safety Injection (SI) Isolation Valves**

Opening either of these valves while the RCS is at operating pressure subjects the SI system to a situation where the only isolation between the RCS and SI systems is established by a single check valve. Because of this, opening these motor-operated valves while the RCS is at pressures above 600 psig is considered to be imprudent.

<u>Safety Injection (5613/4-M-3064-1)</u>

**3-0876A**
**4-0876A**
**Low-head Safety Injection/RHR Injection Check Valves**

The only flowpath available for full-flow exercising these valves is via the RHR pumps to the reactor coolant system. The residual heat removal system is designed and interlocked to preclude injection into the reactor coolant system at elevated pressures.

Verifying closure of these valves would require establishing a test boundary which could only be obtained via isolation of the RWST, thereby rendering the Low Head Safety Injection System capability inoperative.

**3-0876 B&C**
**4-0876 B&C**
**Low-Head Safety Injection/RHR Injection Check Valves**

Verifying closure of these valves would require establishing a test boundary which could only be obtained via isolation of the RWST, thereby rendering the Low Head Safety Injection System inoperative.

**3-0875 A,B,&C**
**4-0875 A,B,&C**
**SIS Cold Leg Injection Check Valves**

Verifying closure of these valves during power operation would require establishing a test boundary which could only be obtained via isolation or de-pressurization of the SIS Accumulators, and is therefore considered imprudent.

**MOV-3-0744 A&B**
**MOV-4-0744 A&B**
**RHR/Low-Head Cold Leg Injection/Isolation Valves**

Opening these valves while the RCS is at operating pressure results in a situation where the only isolation between the RCS and RHR systems is established by two check valves. Failure of these check valves to seat could subject the RHR system to pressures above its design pressure. Therefore, opening these motor-operated valves while the RCS is at pressures above 600 psig is considered imprudent.

**MOV-3-0865A thru MOV-3-0865C**
**MOV-4-0865A thru MOV-4-0865C**
**Safety Injection Accumulator Isolation Valves**

During plant operation these valves are required to be locked open to ensure availability of the safety injection accumulators. Intentionally isolating an accumulator during operation is considered to be imprudent. Furthermore, if a valve were to fail in the closed position during testing, a plant shutdown would be required.

<u>Main Steam (5613(4)-M-3072-1)</u>

**3-10-0004 thru 3-10-0006**
**4-10-0004 thru 4-10-0006**
**Main Steam Non-Return Valves**

During plant operation at power, closure of any one of these valves is not practical as it would require isolating a steam generator which would result in a severe transient on the steam and reactor systems and result in a probable plant trip.

**CV-3-1606 thru CV-3-1608**
**CV-4-1606 thru CV-4-1608**
**Main Steamline Atmospheric Steam Dump Valves**

Opening these valves during power operation would result in unacceptable power transients unless the valves are isolated prior to opening. Isolation of one of these lines will reduce the related plant capability to limit a pressure transient and prevent lifting of a safety valve in the event of such an occurrence.

**POV-3-2604, POV-3-2605 and POV-3-2606**
**POV-4-2604, POV-4-2605 and POV-4-2606**
**Main Steam Isolation Valves**

During plant operation at power, closure of any one of these valves is not practical as it would require isolating a steam generator which would result in a severe transient on the steam and reactor systems and result in a plant trip.

Feedwater (5613(4)-M-3074-3)

**FCV-3-0478, FCV-3-0488 and FCV-3-0498**
**FCV-4-0478, FCV-4-0488 and FCV-4-0498**
**Main Feedwater Flow Control Valves**

Testing of these valves to the closed position during plant operation above 20% reactor power would result in severe steam generator level transients and a plant trip.

**FCV-3-0479, FCV-3-489 and FCV-3-499**
**FCV-4-0479, FCV-4-489 and FCV-4-499**
**Main Feedwater Regulating Valve Bypass Valves**

Opening these normally closed valves in order to exercise them to the closed position would result in possible steam generator level transients with the potential of a plant trip. In addition, testing requires installation of electrical jumpers in various safeguard relay racks which provides the potential for an inadvertent plant trip. These valves are normally closed and remain so except for low-power periods associated with startup and shutdown.

Auxiliary Feedwater (5613(4)-M-3075-1)

3-10-0381, 3-10-0382 and 3-10-0383
4-10-0381, 4-10-0382 and 4-10-0383
Aux. Feedwater Steam Supply Non-Return Valves

Verification of closure capability for these valves requires isolation of the respective steam supply line from its associated steam generator and performing a backflow test. Considering the importance of the auxiliary feedwater system and the undesirability of altering system lineups while the plant is operating, it would be imprudent to perform such a test at plant conditions other than cold shutdown.

## 5.6.2 REFUELING OUTAGE TESTING JUSTIFICATION

Plant Service Air (5610-M-3013-1)

**3-40-0205**
**4-40-0205**
**Service Air Containment Isolation Check Valves**

These are simple check valves with no external means of position indication, thus the only practical means of verifying closure is by performing a leaktest or backflow test. This would require entry into the containment building and thus is impractical to perform during plant operation and would be an unreasonable burden on the plant staff to perform at cold shutdown.

Component Cooling - (5613(4)-M-3030-5(4))

**3-0721A,B,&C**
**4-0721A,B,&C**
**CCW Supply to RCP Thermal Barrier Cooling Coil**

These piston check valves are located inside the containment building with no external or remote position indication; thus the only practical method of verifying closure is via a backflow or backleakage test. Performance of such a test during shutdowns would require draining a considerable length of piping. Since the CCW water is treated with a chemical corrosion inhibitor, this would create a significant waste disposal problem, which would prove to be an unwarranted burden on the plant staff.

Chemical and Volume Control (CVCS) (5610-M-3046-1)

**3-0397 A&B**
**4-0397 C&D**
**Boric Acid Transfer Pump Discharge Check Valves**

During plant operation the boric acid pumps are tested via a recirculation flowpath that is not provided with flow indication. At cold shutdown conditions, the pumps can be aligned to the suction of the charging pumps and thus through an instrumented line. However, testing these valves in this manner would result in the introduction of highly concentrated boric acid solution to the RCS, and thus cause considerable operational difficulty during the ensuing startup. This would be especially true near the end of core life (EOL).

Residual Heat Removal (5613(4)-M-3050-1)

**3-2052**
**4-2052**
**Containment Spray Suction Relief Discharge Check Valves**

These valves are located between the containment recirculation sump and the innermost containment isolation valve located outside containment. The only feasible method of exercising these valves to the open position is to induce flow in the line via an alternate medium such as air or water. Opening the drain connection valve during power operation would constitute a breach of containment integrity and therefore is considered imprudent. The injection of air or water into this system during cold shutdowns could ultimately result airborne contamination or drainage to the containment sump, thereby creating a significant clean-up effort which would prove to be an unwarranted burden on the plant staff.

Nitrogen and Hydrogen (5610-M-3065-1)

**3-0518**
**4-0518**
**Nitrogen Supply To PRT Containment Isolation Check Valves**
These are simple check valves with no external means of position indication, thus the only practical means of verifying closure is by performing a leaktest or backflow test. This would require entry into the containment building and thus is impractical to perform during plant operation and would be an unreasonable burden on the plant staff to perform at cold shutdown.

**3-0519**
**4-0519**
**Nitrogen Supply To PRT Containment Isolation Check Valves**

These valves are normally closed with the valve operating shaft for 3-0519 (stop check) in the open position. The only effective method of verifying closure of these valves is to perform a reverse flow (leak test). This would require entry into the containment building and thus is impractical to perform during plant operation and would be an unreasonable burden on the plant staff to perform at cold shutdown.

Auxiliary Feedwater (5610-M-3075-2)

**AFWU-3-0017**
**AFWU-4-0016**
**AFW Pump Bearing Cooling Water Return Check Valves**

Full-stroke exercising of these valves would require simultaneous operation of all three auxiliary feedwater pumps. Operation in such a mode during a test is not practical nor desirable.

It is unlikely that the 8-18 gpm developed by one operating auxiliary feedwater pump is sufficient to fully open these valves. Thus, the use of non-intrusive methods of verifying full stroke is impractical.

Instrument Air (5613(4)-M-3013-7)

**3-40-0336**
**4-40-0336**
**Instrument Air Supply Containment Isolation Check Valves**

These valves are simple check valves with no external means of position indication, thus the only practical means of verifying closure is by performing a leaktest or backflow test. This would require entry into the containment building and thus is impractical to perform during plant operation and would be an unreasonable burden on the plant staff to perform at cold shutdown.

**3-40-340A**
**4-40-340A**
**Instrument Air Supply Containment Isolation Check Valves**

Stop-check valve 3-40-340A is normally closed with the valve operating shaft in the open direction while 4-40-340A is a simple, normally closed, check valve. The only effective method of verifying closure of either of these valves is to perform a reverse flow (leak test). This would require entry into the containment building and thus is impractical to perform during plant operation and would be an unreasonable burden on the plant staff to perform at cold shutdowns.

Primary Makeup Water (5613(4)-M-3020-2)

**3-10-0567**
**4-10-0567**
**Primary Makeup Water Containment Isolation Check Valves**

These are simple check valves with no external means of position indication, thus the only practical means of verifying closure is by performing a leaktest or backflow test. This would require a considerable effort, including bleeding down the pressure in the primary water supply system, which is undesirable during plant operation and would be an unreasonable burden on the plant staff to perform at cold shutdown.

In addition, these valves are normally closed during plant operation with the inboard manual valves (*-10-0582) also closed. Thus, in effect, they are passive valves and essentially, need not be exercised.

Chemical & Volume Control (CVCS) (5613(4)-M-3047-2)

**3-0312C**
**4-0312C**
**Charging Header Containment Isolation Check Valves**

These are simple check valves with no external means of position indication, thus the only practical means of verifying closure is by performing a leaktest or backflow test. During plant operation, the valves are normally open supplying charging water to the reactor coolant system. Interruption of this flow during operation could result in a CVCS flow imbalance and a possible plant trip as a result of pressurizer level fluctuations. Performing leaktests of these valves involves a considerable effort such that testing at each cold shutdown outage would constitute an unreasonable burden on the plant staff.

**3-0351**
**4-0351**
**Emergency Boration Check Valves**

Testing these valves requires the introduction of highly concentrated boric acid solution from the boric acid tanks to the suction of the charging pumps. This, in turn, would result in the addition of excess boron to the RCS which adversely affects plant power level

and operational parameters with the potential for an undesirable plant transient and a plant trip or shutdown. During cold shutdown, the additional boric acid introduced into the RCS would cause considerable operational difficulty during the ensuing startup.

Chemical & Volume Control (CVCS) (5613(4)-M-3047-3)

**3-0298A thru 3-0298C**
**4-0298A thru 4-0298C**
**RCP Seal Water Containment Isolation Check Valves**

These are simple check valves with no external means of position indication, thus the only practical means of verifying closure is by performing a leaktest or backflow test. During plant operation, the valves are normally opened supplying seal water to the RCP's. Interruption of this flow during pump operation could result in RCP seal failure. Performing leaktests of these valves involves a considerable effort such that testing at each cold shutdown outage would constitute an unreasonable burden on the plant staff.

Safety Injection (5613(4)-M-3062-1)

**3-0874 A&B**
**4-0874 A&B**
**Safety Injection Hot-Leg Injection Check Valves**

Exercising these valves (open) requires operating a safety injection pump and injecting into the reactor coolant system. At power operation this is not possible because the SIS pumps cannot develop sufficient discharge pressure to overcome reactor coolant system pressure. During normal cold shutdown conditions, injection via the SIS pumps is precluded by operational restrictions related to low-temperature over-pressurization protection concerns and Technical Specifications.

**3-0879 A&B**
**4-0879 C&D**
**Safety Injection Pump Discharge Check Valves**

Full stroke exercising of these valves would require operating each safety injection pump at nominal accident flowrate. At power operation the only

flowpath available for such operation would necessitate injecting into the reactor coolant system since the full flow recirculation path is located upstream of the pump discharge check valves. During cold shutdown conditions, injection via the SIS pumps is precluded by operational restrictions related to low-temperature over-pressurization protection concerns and Turkey Point Technical Specifications, Section 3.4.9.3.

Safety Injection (SIS) (5613(4)-M-3064-1)

**3-0873A thru 3-0873C**
**4-0873A thru 4-0873C**
**SIS Cold Leg Branch Injection Line Check Valves**

Full stroke exercising of these valves would require operating a safety injection pump at nominal accident flowrate and injecting into the reactor coolant system. At power operation this is not possible because the safety injection pumps can not develop sufficient discharge pressure to overcome reactor coolant system pressure. During normal cold shutdown conditions, injection via the safety injection pumps is precluded by operational restrictions related to low-temperature over-pressurization protection concerns.

**3-0875A thru 3-0875C**
**4-0875A thru 4-0875C**
**SIS Cold Leg Injection Check Valves**

Partial-flow testing of these valves requires injecting fluid into the RCS. At power operation this is not possible because neither the RHR or the SIS pumps can develop sufficient discharge pressure to overcome reactor coolant system pressure. During normal cold shutdown conditions, however, injection via the RHR pumps can be accomplished.

With respect to full stroke exercising of these valves to the open position, in order to satisfy the requirements of Generic Letter 89-04, a demonstration of the maximum accident flow must be performed or some other indication of full-stroke of the obturator must be provided. For these valves the maximum accident flowrate is defined as that flowrate resulting from a fully pressurized SIS accumulator injecting into a de-pressurized RCS loop. Achieving this flowrate during power operation is not practical due to limitations associated with the reactor coolant system pressure.

It has been demonstrated, by past testing, that these valves can be opened by blowdown from a partially pressurized (~100 psi) accumulator to the associated RCS loop. Performing such a test during plant operation is not possible due to the limitations associated with reactor coolant system pressure. The extensive preparations (including insulation removal, erection of scaffolding, etc.) required to perform such a test make it impractical to perform during cold shutdown periods.

**3-0875 D-F**
**4-0875 D-F**
**SI Accumulator Discharge Check Valves**

Full stroke exercising of these valves to the open position, based on the maximum accident flowrate resulting from SIS accumulator injection to a de-pressurized RCS loop, is not practical due to limitations associated with the effects of such a test on system components.

It has been demonstrated, by past testing, that these valves can be fully opened by blowdown from a partially pressurized (100 psig.) accumulator to the associated RCS loop. Performing such a test during plant operation is not possible due to the limited pressure capability of the SI tanks. During cold shutdown periods the extensive preparations required to perform an accumulator discharge test make it impractical.

The only practical means of verifying closure involves performing a leakage test. Performance of such a test would necessitate closure of the upstream motor operated valve or de-pressurization of the associated SIS acumulator, which is not practical during power operation and would constitute an unwarranted burden on plant staff during cold shutdowns.

**3-0876 B&C**
**4-0876 B&C**
**Low Head Injection Line Check Valves**

Since no recirculation path exists, exercising these valves requires operating an RHR pump and injecting into the reactor coolant system. At power operation this is not possible due to system design pressure and interlocks that prevent operation of the RHR system in cooldown alignment when RCS pressure exceeds 515 psig.

During normal cold shutdown conditions, injection via the RHR pumps is practical and these valves can be full-stroke exercised. Since they have no position indicators and are installed such that the only lineup available causes them to form a parallel path, full accident flow through each valve cannot be confirmed and thus full stroke verification by simple means is not possible. Employing non-obtrusive methods for verifying full stroke would require extensive preparations including containment entry, insulation removal, erection of scaffolding, etc. and thus is not practical during cold shutdown periods.

**3-0945E**
**4-0945E**
**Safety Injection Nitrogen Supply Check Valve**

These are check valves with no external means of position indication, thus the only practical means of verifying closure is by performing a leaktest or backflow test. This would require entry into the containment building and thus is impractical to perform during plant operation and would be an unreasonable burden on the plant staff to perform at cold shutdown.

<u>Containment Spray (5613(4)-M-3068-1)</u>

**3-0890 A&B**
**4-0890 A&B**
**Containment Spray Pump Discharge Check Valves**

Since these are simple-acting check valves with no provision for determining disc position, the only practical means of verifying closure involves performing a leaktest. Performance of such a test would require considerable effort, including isolation and draining of the containment spray piping, system reconfiguration, hooking up and disconnecting leak testing equipment, and pressurizing the downstream piping with air or nitrogen while venting the upstream piping. Such a test is not practical during plant operation and could result in delays in the return to power operation during cold shutdown periods to the extent that it would be an unreasonable burden on the plant staff. These valves remain closed at all times except during an MHA in which the containment spray system operates for containment cooling and de-pressurization.

Containment Post-Accident Evaluation (5613(4)-M-3094-1)

**3-11-0003**
**4-11-0003**
**Containment Atmosphere Sample Return Isolation Check Valves**

These are simple check valves with no external means of position indication, thus the only practical means of verifying closure is by performing a leaktest or backflow test. This would require entry into the containment building and thus is impractical to perform during plant operation and would be an unreasonable burden on the plant staff to perform at cold shutdown.

Breathing Air System (5613(4)-M-3101-1)

**3-BA-0201**
**4-BA-0201**
**Breathing Air Supply Containment Isolation Check Valves**

These are simple check valves with no external means of position indication, thus the only practical means of verifying closure is by performing a leaktest or backflow test. This would require entry into the containment building and thus is impractical to perform during plant operation and would be an unreasonable burden on the plant staff to perform at cold shutdown.

## 5.7 Relief Requests for Valve Testing

Relief requests VR-1 and VR-2, provided in the following pages, are initiated per 10CFR50.55a where appropriate.

# RELIEF REQUEST NO. VR-1

SYSTEM:

Containment Spray (5613(4)-M-3068-1)

COMPONENTS:

3-0890 A&B
4-0890 A&B

CATEGORY:

A/C

FUNCTION:

These check valves open to provide flowpaths from the containment spray pumps to the containment spray headers in containment. They are required to close for containment isolation.

PART 10 REQUIREMENT:

Check valves shall be exercised nominally every 3 months, except as provided by Paragraph 4.3.2.2, 4.3.2.3, 4.3.2.4, and 4.3.2.5. (Paragraph 4.3.2)

As an alternative to the testing in (a) or (b) above, disassembly every refueling outage to determine operability of check valves may be used. (Paragraph 4.3.2.4(c))

BASIS FOR RELIEF:

Full-stroke exercising these valves to the open position would require operating each containment spray pump at nominal accident flowrate. Since no recirculation flowpath exists downstream of these valves, the only flowpath available for such a test would result in injecting radioactive-contaminated borated water into the containment spray headers and thence into the containment building via the spray nozzles. Dousing personnel and equipment in this manner is obviously undesirable.

RELIEF REQUEST NO. VR-1 (cont.)

BASIS FOR RELIEF (cont.)

Partial stroking of the valves can be achieved by pressurizing the upstream piping with air or nitrogen via the air test connection. Performing partial flow exercising by this method during any mode of plant operation (at power or cold shutdown), however, has the potential of creating an airborne contamination personnel hazard in the auxiliary building and containment.

The alternate testing proposed below meets the intent of Reference 2.7, Position 2 for sample inspection programs.

Background

Each of these valves has been disassembled and inspected in the past and they have not displayed any indication of degradation that would impede their capability to perform their safety function to open. Past inspections were conducted as follows with no indication of a valve in-operability with respect to its capability to full open:

| | |
|---|---|
| 3-0890A | 4-7-90 and 11-28-92 |
| 3-0890B | 3-24-90 and 11-28-92 |
| 4-0890A | 3-18-89 and 3-8-91 |
| 4-0890B | 3-18-89, 3-8-91 and 5-18-93 |

ALTERNATE TESTING:

During each reactor refueling outage at least one of these valves will be disassembled, inspected, and manually exercised on a sequential and rotating schedule. If, in the course of this inspection a valve is found to be inoperable with respect to its function to fully open, then the other valve will be inspected during the same outage. During activities associated with valve disassembly and inspection and prior to system closure, appropriate precautions will be applied and inspections performed to ensure internal

RELIEF REQUEST NO. VR-1 (cont.)

ALTERNATE TESTING (cont).:

cleanliness standards are maintained and foreign materials are excluded from valve and system internals. These measures may include creating controlled work areas, maintaining a tool and equipment accounting system, installation of covers during non-work periods, and final close-out inspections.

Following valve re-assembly, the subject valve will be partial-stroked in the open direction and a seat leakage test will be performed. These functional testing activities will ensure that the subject valve has been re-assembled and aligned properly.

# RELIEF REQUEST NO. VR-2

SYSTEM:

Safety Injection (SIS) (5613(4)-M-3062-1)
Safety Injection (SIS) (5613(4)-M-3064-1)

COMPONENTS:

3-0873 A&B
4-0873 A&B
3-0874 A&B
4-0874 A&B

CATEGORY:

A/C

FUNCTIONS:

3-0873 A&B and 4-0873 A&B

These valves open to provide flowpaths for borated water injection from the SIS pumps each of the RCS cold legs. Additionally, they close to provide isolation of the safety injection system from the RCS high pressure.

3-0874 A&B and 4-0874 A&B

These valves open to provide flowpaths for borated water injection from the SIS pumps to "A" and "B" RCS hot legs. Additionally, they close to provide isolation of the safety injection system from the RCS high pressure.

PART 10 REQUIREMENT:

Check valves shall be exercised nominally every 3 months, except as provided by Paragraph 4.3.2.2, 4.3.2.3, 4.3.2.4, and 4.3.2.5. (Paragraph 4.3.2)

RELIEF REQUEST NO. VR-2 (cont.)

BASIS FOR RELIEF:

Since these are simple-acting check valves with no provision for determining disc position, the only practical means of verifying closure involves performing a leaktest. Performance of such a test at each cold shutdown would constitute an unreasonable burden on the plant staff. The Technical Specifications, Section 4.4.6.2.2, establishes a more appropriate frequency for leak testing based on their pressure isolation function. The Technical Specification requirements are adequate to confirm valve operability in the closed position. The requirements of the Technical Specifications are as follows:

* At least once every 18 months;

* Prior to entering Mode 2 whenever the plant has been in cold shutdown for 72 hours or more and if leakage testing has not been performed in the previous 9 months;

* Prior to returning a valve to service following maintenance, repair, or replacement work on the valve; and

* Following valve actuation due to automatic or manual action or flow through the valve:

    1. Within 24 hours by verifying valve closure, and

    2. Prior to entering Mode 2 by verifying valve leakrate

ALTERNATE TESTING:

Valve closure testing will conform to the requirements of Turkey Point Technical Specification, Section 4.4.6.2.2.

# LEGEND A

## LEGEND FOR PUMP PROGRAM TABLES

| | |
|---|---|
| PUMP NUMBER | Numerical designator indicated on the respective flow diagram. |
| PUMP NUMBER, C/D | Refers to system test configuration during cold shutdown or refueling outage conditions. |
| DESCRIPTION | Generic name/function of the pump. |
| CL | ISI Classification per the associated ISI boundary drawing(s) |
| DRAWING #/COORD | Corresponds to the flow diagram and drawing coordinates of the pump. |
| Test Parameters | The table indicates by a "Y" (yes) or "N" (no) that the specific parameter is measured, evaluated, and recorded per the applicable Code requirement. If a "N" is indicated, the associated relief request number is also noted in the same column. "NA" indicates that the specific parameter is not applicable to this pump. |
| PR-XX | Where indicated this refers to the specific relief request where there is a deviation regarding the measurement or analysis of a parameter. |

# LEGEND B

## LEGEND FOR VALVE PROGRAM TABLES

| | |
|---|---|
| VALVE NUMBER | The plant alpha-numerical designator for the subject valve |
| COORD | The coordinate location of the valve on the designated drawing |
| CL | The ISI Classification of the valve |
| CAT | The valve category per Paragraph 1.4 |
| SIZE | The valve's nominal size in inches |
| TYPE | The valve type |
| A/P | The active (A) or passive (P) determination for the valve |
| ACT. TYPE | The valve actuator type as follows:<br>A/O Air-operated<br>MAN Manual valve<br>MO Electric motor-operated<br>S/A Self-actuated<br>SO Solenoid-operated |
| NORM POS. | Designates the normal position of the valve during plant operation at power |
| REM IND | Notes if a valve has remote position indication |
| FAIL MODE | Identifies the failure mode (open or closed) for a valve. FAI indicates the valve fails "as is". |
| EXAM | Identifies the test requirements for a valve as follows:<br>EO Exercise to the open position-stroke time will not be measured.<br>EC Exercise to the closed position-stroke time will not be measured.<br>FS Fail safe test<br>INSP Disassembly and inspection of check valves<br>PEO Partial-stroke test to the open position of check valves<br>S/R Safety/relief valve setpoint test<br>SLT-1 Seat leakrate test per 10 CFR 50, App J<br>SLT-2 Seat leakrate test for pressure isolation valves<br>TC Exercise to closed position-stroke time will be measured.<br>TO Exercise to open position-stroke time will be measured<br>V Position indication verification |

# LEGEND B

## LEGEND FOR VALVE PROGRAM TABLES, con't.

| | | |
|---|---|---|
| TEST FREQ | | Identifies the required test interval as follows: |
| | 1 | Each reactor refueling outage (cycle) |
| | 2 | Cold shutdown as defined by Tech. Specs. |
| | 3 | Quarterly (during plant operation) |
| | 4 | During cold shutdown with the reactor coolant system cooled down and vented |
| | 5 | Every 2 years |
| | 6 | Prior to placing a system or component in operable status |
| | 7 | Other (See applicable Request for Relief) |
| | 8 | 5 Years |
| | 9 | 10 Years |
| RELIEF REQ | | Refers to the specific relief request associated with the indicated test requirement. |

# Appendix A

## Pump Program Tables
## Unit 3

| PUMP NUMBER | DESCRIPTION | CL | DRAWING #/COORD | SPEED | DISCH. PRES. | DIFF. PRES. | FLOW RATE | VIBRA. | REMARKS |
|---|---|---|---|---|---|---|---|---|---|
| 3-P10A | DIESEL OIL TRANSFER | NA | 5613-M-3022-3/D-5 | NA | NA | Y | Y | Y | |
| 3-P10B | DIESEL OIL TRANSFER | NA | 5613-M-3022-4/C-4 | NA | NA | Y | Y | Y | |
| 3-P201A | CHARGING | 2 | 5613-M-3047-2/G-5 | Y | Y | NA | Y | Y | |
| 3-P201B | CHARGING | 2 | 5613-M-3047-2/F-5 | Y | Y | NA | Y | Y | |
| 3-P201C | CHARGING | 2 | 5613-M-3047-2/D-5 | Y | Y | NA | Y | Y | |
| 3-P203A | BORIC ACID TRANSFER | 2 | 5610-M-3046-1/D-6 | NA | NA | Y | N:PR-1 | Y | |
| 3-P203A,C/D | BORIC ACID TRANSFER | 2 | 5610-M-3046-1/D-6 | NA | NA | Y | Y | Y | |
| 3-P203B | BORIC ACID TRANSFER | 2 | 5610-M-3046-1/E-5 | NA | NA | Y | N:PR-1 | Y | |
| 3-P203B,C/D | BORIC ACID TRANSFER | 2 | 5610-M-3046-1/E-5 | NA | NA | Y | Y | Y | |
| 3-P210A | RESIDUAL HEAT REMOVAL | 2 | 5613-M-3050-1/C-3 | NA | NA | Y:PR-3 | Y:PR-2 | Y | |
| 3-P210A,C/D | RESIDUAL HEAT REMOVAL | 2 | 5613-M-3050-1/C-3 | NA | NA | Y:PR-3 | Y | Y | |
| 3-P210B | RESIDUAL HEAT REMOVAL | 2 | 5613-M-3050-1/E-3 | NA | NA | Y:PR-3 | Y:PR-2 | Y | |
| 3-P210B,C/D | RESIDUAL HEAT REMOVAL | 2 | 5613-M-3050-1/E-3 | NA | NA | Y:PR-3 | Y | Y | |
| 3-P211A | COMPONENT COOLING | 3 | 5613-M-3030-1/F-4 | NA | NA | Y | Y | Y | |
| 3-P211B | COMPONENT COOLING | 3 | 5613-M-3030-1/F-3 | NA | NA | Y | Y | Y | |
| 3-P211C | COMPONENT COOLING | 3 | 5613-M-3030-1/F-2 | NA | NA | Y | Y | Y | |
| 3-P212A | SPENT FUEL PIT COOLING | 3 | 5613-M-3033-1/F-5 | NA | NA | Y | Y | Y | |
| 3-P212B | SPENT FUEL PIT COOLING | 3 | 5613-M-3033-1/E-5 | NA | NA | Y | Y | Y | |
| 3-P214A | CONTAINMENT SPRAY | 2 | 5613-M-3068-1/D-3 | NA | NA | Y | Y | Y | |
| 3-P214B | CONTAINMENT SPRAY | 2 | 5613-M-3068-1/G-3 | NA | NA | Y | Y | Y | |
| 3-P215A | HIGH HEAD SAFETY INJECT | 2 | 5613-M-3062-1/E-3 | NA | NA | Y | Y | Y | |
| 3-P215B | HIGH HEAD SAFETY INJECT | 2 | 5613-M-3062-1/G-3 | NA | NA | Y | Y | Y | |
| 3-P9A | INTAKE COOLING WATER | 3 | 5613-M-3019-1/F-2 | NA | NA | Y | Y | Y:PR-5 | |
| 3-P9B | INTAKE COOLING WATER | 3 | 5613-M-3019-1/D-2 | NA | NA | Y | Y | Y:PR-5 | |

| PUMP NUMBER | DESCRIPTION | CL | DRAWING #/COORD | SPEED | DISCH. PRES. | DIFF. PRES. | FLOW RATE | VIBRA. | REMARKS |
|---|---|---|---|---|---|---|---|---|---|
| 3-P9C | INTAKE COOLING WATER | 3 | 5613-M-3019-1/B-2 | NA | NA | Y | Y | Y:PR-5 | |
| P2A | AUXILIARY FEED | 3 | 5610-M-3075-2/B-3 | Y | NA | Y | Y | Y | COMMON |
| P2B | AUXILIARY FEED | 3 | 5610-M-3075-2/E-3 | Y | NA | Y | Y | Y | COMMON |
| P2C | AUXILIARY FEED | 3 | 5610-M-3075-2/G-3 | Y | NA | Y | Y | Y | COMMON |

# Appendix B

## Pump Program Tables
## Unit 4

| PUMP NUMBER | DESCRIPTION | CL | DRAWING #/COORD | SPEED | DISCH. PRES. | DIFF. PRES. | FLOW RATE | VIBRA. | REMARKS |
|---|---|---|---|---|---|---|---|---|---|
| 4-P201A | CHARGING | 2 | 5614-M-3047-2/G-5 | Y | Y | NA | Y | Y | |
| 4-P201B | CHARGING | 2 | 5614-M-3047-2/F-5 | Y | Y | NA | Y | Y | |
| 4-P201C | CHARGING | 2 | 5614-M-3047-2/D-5 | Y | Y | NA | Y | Y | |
| 4-P203A | BORIC ACID TRANSFER | 2 | 5610-M-3046-1/E-4 | NA | NA | Y | N:PR-1 | Y | |
| 4-P203A,C/D | BORIC ACID TRANSFER | 2 | 5610-M-3046-1/E-4 | NA | NA | Y | Y | Y | |
| 4-P203B | BORIC ACID TRANSFER | 2 | 5610-M-3046-1/F-3 | NA | NA | Y | N:PR-1 | Y | |
| 4-P203B,C/D | BORIC ACID TRANSFER | 2 | 5610-M-3046-1/F-3 | NA | NA | Y | Y | Y | |
| 4-P210A | RESIDUAL HEAT REMOVAL | 2 | 5614-M-3050-1/C-3 | NA | NA | Y:PR-3 | Y:PR-2 | Y | |
| 4-P210A,C/D | RESIDUAL HEAT REMOVAL | 2 | 5614-M-3050-1/C-3 | NA | NA | Y:PR-3 | Y | Y | |
| 4-P210B | RESIDUAL HEAT REMOVAL | 2 | 5614-M-3050-1/E-3 | NA | NA | Y:PR-3 | Y:PR-2 | Y | |
| 4-P210B,C/D | RESIDUAL HEAT REMOVAL | 2 | 5614-M-3050-1/E-3 | NA | NA | Y:PR-3 | Y | Y | |
| 4-P211A | COMPONENT COOLING | 3 | 5614-M-3030-1/F-4 | NA | NA | Y | Y | Y | |
| 4-P211B | COMPONENT COOLING | 3 | 5614-M-3030-1/F-3 | NA | NA | Y | Y | Y | |
| 4-P211C | COMPONENT COOLING | 3 | 5614-M-3030-1/F-2 | NA | NA | Y | Y | Y | |
| 4-P212A | SPENT FUEL PIT COOLING | 3 | 5614-M-3033-1/F-5 | NA | NA | Y | Y | Y | |
| 4-P212B | SPENT FUEL PIT COOLING | 3 | 5614-M-3033-1/E-5 | NA | NA | Y | Y | Y | |
| 4-P214A | CONTAINMENT SPRAY | 2 | 5614-M-3068-1/C-3 | NA | NA | Y | Y | Y | |
| 4-P214B | CONTAINMENT SPRAY | 2 | 5614-M-3068-1/G-3 | NA | NA | Y | Y | Y | |
| 4-P215A | HIGH HEAD SAFETY INJECT | 2 | 5614-M-3062-1/E-3 | NA | NA | Y | Y | Y | |
| 4-P215B | HIGH HEAD SAFETY INJECT | 2 | 5614-M-3062-1/G-3 | NA | NA | Y | Y | Y | |
| 4-P241A | DIESEL OIL TRANSFER | 3 | 5614-M-3022-3/C-5 | NA | Y | NA | Y | Y | |
| 4-P241B | DIESEL OIL TRANSFER | 3 | 5614-M-3022-4/C-5 | NA | Y | NA | Y | Y | |
| 4-P9A | INTAKE COOLING WATER | 3 | 5614-M-3019-1/F-2 | NA | NA | Y | Y | Y:PR-5 | |
| 4-P9B | INTAKE COOLING WATER | 3 | 5614-M-3019-1/D-2 | NA | NA | Y | Y | Y:PR-5 | |

| PUMP NUMBER | DESCRIPTION | CL | DRAWING #/COORD | SPEED | DISCH. PRES. | DIFF. PRES. | FLOW RATE | VIBRA. | REMARKS |
|---|---|---|---|---|---|---|---|---|---|
| 4-P9C | INTAKE COOLING WATER | 3 | 5614-M-3019-1/B-2 | NA | NA | Y | Y | Y:PR-5 | |

# Appendix C

## Valve Program Tables
## Unit 3

P & ID: 5610-M-3013-1 SYSTEM: INSTRUMENT AIR/SERVICE AIR DIST.

| VALVE NUMBER | COORD. | CL | CAT. | SIZE | TYPE | A/P | ACT. TYPE | NORM POS. | REM IND | FAIL MODE | EXAM | TEST FREQ | RELIEF REQ. | REMARKS |
|---|---|---|---|---|---|---|---|---|---|---|---|---|---|---|
| 3-40-0204 | C-6 | 2 | A | 2.000 | GATE | P | MAN | LC | NO | | SLT-1 | 5 | | |
| 3-40-0205 | C-7 | 2 | A/C | 2.000 | CHECK | A | S/A | NC | NO | | EC | 1 | | |
| | | | | | | | | | | | SLT-1 | 5 | | |
| HV-3-0017 | C-6 | 2 | A | 2.000 | GLOBE | P | MAN | LC | NO | | SLT-1 | 5 | | |

P & ID: 5610-M-3046-1 SYSTEM: CVCS - BORIC ACID

| VALVE NUMBER | COORD. | CL | CAT. | SIZE | TYPE | A/P | ACT. TYPE | NORM POS. | REM IND | FAIL MODE | EXAM | TEST FREQ | RELIEF REQ. | REMARKS |
|---|---|---|---|---|---|---|---|---|---|---|---|---|---|---|
| 3-0397A | D-7 | 2 | C | 2.000 | CHECK | A | S/A | NC | NO | | EC | 3 | | |
| | | | | | | | | | | | EO | 1 | | |
| | | | | | | | | | | | PEO | 3 | | |
| 3-0397B | E-6 | 2 | C | 2.000 | CHECK | A | S/A | NC | NO | | EC | 3 | | |
| | | | | | | | | | | | EO | 1 | | |
| | | | | | | | | | | | PEO | 3 | | |

P & ID: 5610-M-3065-1 SYSTEM: NITROGEN AND HYDROGEN

| VALVE NUMBER | COORD. | CL | CAT. | SIZE | TYPE | A/P | ACT. TYPE | NORM POS. | REM IND | FAIL MODE | EXAM | TEST FREQ | RELIEF REQ. | REMARKS |
|---|---|---|---|---|---|---|---|---|---|---|---|---|---|---|
| 3-0518 | D-7 | 2 | A/C | 0.750 | CHECK | A | S/A | NC | NO | | EC | 1 | | |
| | | | | | | | | | | | SLT-1 | 5 | | |
| 3-0519 | D-6 | 2 | A/C | 0.750 | S/CHK | A | S/A | NC | NO | | EC | 1 | | |
| | | | | | | | | | | | SLT-1 | 5 | | |
| 3-4656 | D-7 | 2 | A | 1.000 | DIAPH | P | MAN | LC | NO | | SLT-1 | 5 | | |
| CV-3-0855 | E-6 | 2 | A | 1.000 | GLOBE | A | A/O | NC | YES | FC | FS | 3 | | |
| | | | | | | | | | | | SLT-1 | 5 | | |
| | | | | | | | | | | | TC | 3 | | |
| | | | | | | | | | | | V | 5 | | |
| PCV-3-1014 | D-6 | 2 | A | 1.000 | GLOBE | P | A/O | NC | NO | FC | SLT-1 | 5 | | |

P & ID: 5610-M-3075-1 SYSTEM: AFW - TURBINE DRIVE FOR AFW PUMPS

| VALVE NUMBER | COORD. | CL | CAT. | SIZE | TYPE | A/P | ACT. TYPE | NORM POS. | REM IND | FAIL MODE | EXAM | TEST FREQ | RELIEF REQ. | REMARKS |
|---|---|---|---|---|---|---|---|---|---|---|---|---|---|---|
| AFSS-0003B | D-4 | 3 | C | 4.000 | CHECK | A | S/A | NC | NO | | EO | 3 | | |
| AFSS-0003C | F-4 | 3 | C | 4.000 | CHECK | A | S/A | NC | NO | | EO | 3 | | |
| MOV-6459A | B-5 | 3 | B | 3.000 | GATE | A | MO | NO | YES | FAI | TO | 3 | | |
| | | | | | | | | | | | V | 5 | | |
| MOV-6459B | D-5 | 3 | B | 3.000 | GATE | A | MO | NO | YES | FAI | TO | 3 | | |
| | | | | | | | | | | | V | 5 | | |
| MOV-6459C | F-5 | 3 | B | 3.000 | GATE | A | MO | NO | YES | FAI | TO | 3 | | |
| | | | | | | | | | | | V | 5 | | |

P & ID: 5610-M-3075-2 SYSTEM: AFW - AUX. FEEDWATER SUPPLY TO STM GEN

| VALVE NUMBER | COORD. | CL | CAT. | SIZE | TYPE | A/P | ACT. TYPE | NORM POS. | REM IND | FAIL MODE | EXAM | TEST FREQ | RELIEF REQ. | REMARKS |
|---|---|---|---|---|---|---|---|---|---|---|---|---|---|---|
| 20-0143 | B-7 | 3 | C | 6.000 | CHECK | A | S/A | NC | NO | | EC | 6 | | NOTE 1 |
| | | | | | | | | | | | EO | 3 | | |
| 20-0243 | D-7 | 3 | C | 6.000 | CHECK | A | S/A | NC | NO | | EC | 3 | | |
| | | | | | | | | | | | EO | 3 | | |
| 20-0343 | G-7 | 3 | C | 6.000 | CHECK | A | S/A | NC | NO | | EC | 3 | | |
| | | | | | | | | | | | EO | 3 | | |
| AFWU-0013 | A-4 | 3 | C | 1.000 | CHECK | A | S/A | NC | NO | | EO | 3 | | |
| AFWU-0014 | D-4 | 3 | C | 1.000 | CHECK | A | S/A | NC | NO | | EO | 3 | | |
| AFWU-0015 | F-4 | 3 | C | 1.000 | CHECK | A | S/A | NC | NO | | EO | 3 | | |
| AFWU-3-0017 | A-6 | 3 | C | 2.000 | CHECK | A | S/A | NC | NO | | INSP | 1 | | |
| | | | | | | | | | | | PEO | 3 | | |
| RV-6401A | B-4 | 3 | C | 1.000 | SAFE | A | S/A | NC | NO | | S/R | 9 | | |
| RV-6401B | D-4 | 3 | C | 1.000 | SAFE | A | S/A | NC | NO | | S/R | 9 | | |
| RV-6401C | F-4 | 3 | C | 1.000 | SAFE | A | S/A | NC | NO | | S/R | 9 | | |

P & ID: 5613-M-3013-7 SYSTEM: INSTRUMENT AIR

| VALVE NUMBER | COORD. | CL | CAT. | SIZE | TYPE | A/P | ACT. TYPE | NORM POS. | REM IND | FAIL MODE | EXAM | TEST FREQ | RELIEF REQ. | REMARKS |
|---|---|---|---|---|---|---|---|---|---|---|---|---|---|---|
| 3-40-0336 | B-3 | 2 | A/C | 2.000 | CHECK | A | S/A | NO | NO | | EC | 1 | | |
| | | | | | | | | | | | SLT-1 | 5 | | |
| 3-40-0340A | B-3 | 2 | A/C | 2.000 | S/CHK | A | S/A | NO | NO | | EC | 1 | | |
| | | | | | | | | | | | SLT-1 | 5 | | |

P & ID: 5613-M-3018-1 SYSTEM: CONDENSATE STORAGE

| VALVE NUMBER | COORD. | CL | CAT. | SIZE | TYPE | A/P | ACT. TYPE | NORM POS. | REM IND | FAIL MODE | EXAM | TEST FREQ | RELIEF REQ. | REMARKS |
|---|---|---|---|---|---|---|---|---|---|---|---|---|---|---|
| 3-20-0401 | D-3 | 3 | C | 8.000 | CHECK | A | S/A | NC | NO | | EO | 3 | | |

P & ID: 5613-M-3019-1 SYSTEM: INTAKE COOLING WATER

| VALVE NUMBER | COORD. | CL | CAT. | SIZE | TYPE | A/P | ACT. TYPE | NORM POS. | REM IND | FAIL MODE | EXAM | TEST FREQ | RELIEF REQ. | REMARKS |
|---|---|---|---|---|---|---|---|---|---|---|---|---|---|---|
| 3-50-0311 | F-3 | 3 | C | 24.000 | CHECK | A | S/A | NO | NO | | EC | 3 | | |
| | | | | | | | | | | | EO | 3 | | |
| 3-50-0321 | D-3 | 3 | C | 24.000 | CHECK | A | S/A | NO | NO | | EC | 3 | | |
| | | | | | | | | | | | EO | 3 | | |
| 3-50-0331 | B-3 | 3 | C | 24.000 | CHECK | A | S/A | NO | NO | | EC | 3 | | |
| | | | | | | | | | | | EO | 3 | | |
| POV-3-4882 | B-4 | 3 | B | 30.000 | BUTFY | A | A/O | NO | YES | FC | FS | 3 | | |
| | | | | | | | | | | | TC | 3 | | |
| | | | | | | | | | | | V | 5 | | |
| POV-3-4883 | F-4 | 3 | B | 30.000 | BUTFY | A | A/O | NO | YES | FC | FS | 3 | | |
| | | | | | | | | | | | TC | 3 | | |
| | | | | | | | | | | | V | 5 | | |

P & ID: 5613-M-3020-2 SYSTEM: PRIMARY MAKEUP WATER

| VALVE NUMBER | COORD. | CL | CAT. | SIZE | TYPE | A/P | ACT. TYPE | NORM POS. | REM IND | FAIL MODE | EXAM | TEST FREQ | RELIEF REQ. | REMARKS |
|---|---|---|---|---|---|---|---|---|---|---|---|---|---|---|
| 3-10-0567 | D-5 | 2 | A/C | 2.000 | CHECK | A | S/A | NC | NO | | EC | 1 | | |
| | | | | | | | | | | | SLT-1 | 5 | | |
| 3-10-0582 | D-6 | 2 | A | 2.000 | GATE | P | MAN | NC | NO | | SLT-1 | 5 | | |

P & ID: 5613-M-3022-1 SYSTEM: EDG 3A AIR STARTING

| VALVE NUMBER | COORD. | CL | CAT. | SIZE | TYPE | A/P | ACT. TYPE | NORM POS. | REM IND | FAIL MODE | EXAM | TEST FREQ | RELIEF REQ. | REMARKS |
|---|---|---|---|---|---|---|---|---|---|---|---|---|---|---|
| 3-70-0274A | C-3 | NC | C | 2.000 | CHECK | A | S/A | NC | NO | | EC | 3 | | NOTE 2 |
| 3-70-0276A | D-3 | NC | C | 2.000 | CHECK | A | S/A | NC | NO | | EC | 3 | | NOTE 2 |
| RV-3-0210A | B-4 | NC | C | 0.750 | SAFE | A | S/A | NC | NO | | S/R | 9 | | NOTE 2 |
| RV-3-0211A | B-4 | NC | C | 0.750 | SAFE | A | S/A | NC | NO | | S/R | 9 | | NOTE 2 |
| RV-3-0212A | B-3 | NC | C | 0.750 | SAFE | A | S/A | NC | NO | | S/R | 9 | | NOTE 2 |
| RV-3-0213A | B-3 | NC | C | 0.750 | SAFE | A | S/A | NC | NO | | S/R | 9 | | NOTE 2 |

P & ID: 5613-M-3022-2 SYSTEM: EDG 3B AIR STARTING

| VALVE NUMBER | COORD. | CL | CAT. | SIZE | TYPE | A/P | ACT. TYPE | NORM POS. | REM IND | FAIL MODE | EXAM | TEST FREQ | RELIEF REQ. | REMARKS |
|---|---|---|---|---|---|---|---|---|---|---|---|---|---|---|
| 3-70-0274B | C-3 | NC | C | 2.000 | CHECK | A | S/A | NC | NO | | EC | 3 | | NOTE 2 |
| 3-70-0276B | D-3 | NC | C | 2.000 | CHECK | A | S/A | NC | NO | | EC | 3 | | NOTE 2 |
| RV-3-0210B | B-4 | NC | C | 0.750 | SAFE | A | S/A | NC | NO | | S/R | 9 | | NOTE 2 |
| RV-3-0211B | B-4 | NC | C | 0.750 | SAFE | A | S/A | NC | NO | | S/R | 9 | | NOTE 2 |
| RV-3-0212B | B-3 | NC | C | 0.750 | SAFE | A | S/A | NC | NO | | S/R | 9 | | NOTE 2 |
| RV-3-0213B | B-3 | NC | C | 0.750 | SAFE | A | S/A | NC | NO | | S/R | 9 | | NOTE 2 |

P & ID: 5613-M-3022-3 SYSTEM: EDG 3A FUEL SYSTEM

| VALVE NUMBER | COORD. | CL | CAT. | SIZE | TYPE | A/P | ACT. TYPE | NORM POS. | REM IND | FAIL MODE | EXAM | TEST FREQ | RELIEF REQ. | REMARKS |
|---|---|---|---|---|---|---|---|---|---|---|---|---|---|---|
| 3-70-0006A | C-5 | NC | C | 2.000 | CHECK | A | S/A | NC | NO | | EO | 3 | | |
| CV-3-2046A | D-6 | NC | B | 2.000 | GLOBE | A | A/O | NC | NO | FC | EO | 3 | | NOTE 3 |
| SV-3-2051A | C-4 | NC | B | 2.000 | GLOBE | A | SO | NC | NO | FC | EO | 3 | | NOTE 3 |
| SV-3-3522A | F-4 | NC | B | 1.500 | GLOBE | A | SO | NC | NO | FC | EO | 3 | | NOTE 3 |

P & ID: 5613-M-3022-4 SYSTEM: EDG 3B FUEL SYSTEM

| VALVE NUMBER | COORD. | CL | CAT. | SIZE | TYPE | A/P | ACT. TYPE | NORM POS. | REM IND | FAIL MODE | EXAM | TEST FREQ | RELIEF REQ. | REMARKS |
|---|---|---|---|---|---|---|---|---|---|---|---|---|---|---|
| 3-70-0006B | C-4 | NC | C | 2.000 | CHECK | A | S/A | NC | NO | | EO | 3 | | |
| CV-3-2046B | C-6 | NC | B | 2.000 | GLOBE | A | A/O | NC | NO | FC | EO | 3 | | NOTE 3 |
| SV-3-2051B | C-2 | NC | B | 2.000 | GLOBE | A | SO | NC | NO | FC | EO | 3 | | NOTE 3 |
| SV-3-3522B | E-4 | NC | B | 1.500 | GLOBE | A | SO | NC | NO | FC | EO | 3 | | NOTE 3 |

P & ID: 5613-M-3030-1 SYSTEM: COMPONENT COOLING WATER

| VALVE NUMBER | COORD. | CL | CAT. | SIZE | TYPE | A/P | ACT. TYPE | NORM POS. | REM IND | FAIL MODE | EXAM | TEST FREQ | RELIEF REQ. | REMARKS |
|---|---|---|---|---|---|---|---|---|---|---|---|---|---|---|
| 3-0702A | E-4 | 3 | C | 16.000 | CHECK | A | S/A | NO | NO | | EC | 3 | | |
| | | | | | | | | | | | EO | 3 | | |
| 3-0702B | E-3 | 3 | C | 16.000 | CHECK | A | S/A | NO | NO | | EC | 3 | | |
| | | | | | | | | | | | EO | 3 | | |
| 3-0702C | E-2 | 3 | C | 16.000 | CHECK | A | S/A | NO | NO | | EC | 3 | | |
| | | | | | | | | | | | EO | 3 | | |
| CWST VAC BKR | C-6 | 3 | C | 2.000 | CHECK | A | S/A | NC | NO | | EC | 3 | | |
| | | | | | | | | | | | EO | 3 | | |
| RV-3-0707 | C-7 | 3 | C | 3.000 | SAFE | A | S/A | NC | NO | | S/R | 9 | | |

P & ID: 5613-M-3030-2 SYSTEM: COMPONENT COOLING WATER

| VALVE NUMBER | COORD. | CL | CAT. | SIZE | TYPE | A/P | ACT. TYPE | NORM POS. | REM IND | FAIL MODE | EXAM | TEST FREQ | RELIEF REQ. | REMARKS |
|---|---|---|---|---|---|---|---|---|---|---|---|---|---|---|
| MOV-3-0749A | F-7 | 3 | B | 16.000 | GATE | A | MO | NC | YES | FAI | TO | 3 | | |
| | | | | | | | | | | | V | 5 | | |
| MOV-3-0749B | F-7 | 3 | B | 16.000 | GATE | A | MO | NC | YES | FAI | TO | 3 | | |
| | | | | | | | | | | | V | 5 | | |

P & ID: 5613-M-3030-4 SYSTEM: COMPONENT COOLING WATER

| VALVE NUMBER | COORD. | CL | CAT. | SIZE | TYPE | A/P | ACT. TYPE | NORM POS. | REM IND | FAIL MODE | EXAM | TEST FREQ | RELIEF REQ. | REMARKS |
|---|---|---|---|---|---|---|---|---|---|---|---|---|---|---|
| CV-3-2903 | D-3 | 2 | B | 10.000 | BUTFY | P | A/O | NO | YES | FO | V | 5 | | |
| CV-3-2904 | C-3 | 2 | B | 10.000 | BUTFY | P | A/O | NO | YES | FO | V | 5 | | |
| CV-3-2905 | B-3 | 2 | B | 10.000 | BUTFY | P | A/O | NO | YES | FO | V | 5 | | |
| CV-3-2906 | G-3 | 2 | B | 10.000 | BUTFY | A | A/O | NC | YES | FO | FS | 3 | | |
| | | | | | | | | | | | TO | 3 | | |
| | | | | | | | | | | | V | 5 | | |
| CV-3-2907 | F-3 | 2 | B | 10.000 | BUTFY | A | A/O | NC | YES | FO | FS | 3 | | |
| | | | | | | | | | | | TO | 3 | | |
| | | | | | | | | | | | V | 5 | | |
| CV-3-2908 | E-3 | 2 | B | 10.000 | BUTFY | A | A/O | NC | YES | FO | FS | 3 | | |
| | | | | | | | | | | | TO | 3 | | |
| | | | | | | | | | | | V | 5 | | |

P & ID: 5613-M-3030-5 SYSTEM: COMPONENT COOLING WATER

| VALVE NUMBER | COORD. | CL | CAT. | SIZE | TYPE | A/P | ACT. TYPE | NORM POS. | REM IND | FAIL MODE | EXAM | TEST FREQ | RELIEF REQ. | REMARKS |
|---|---|---|---|---|---|---|---|---|---|---|---|---|---|---|
| 3-0721A | E-6 | 3 | C | 1.500 | CHECK | A | S/A | NO | NO | | EC | 1 | | |
| 3-0721B | A-6 | 3 | C | 1.500 | CHECK | A | S/A | NO | NO | | EC | 1 | | |
| 3-0721C | C-6 | 3 | C | 1.500 | CHECK | A | S/A | NO | NO | | EC | 1 | | |
| 3-0738 | D-3 | 2 | C | 3.000 | CHECK | A | S/A | NC | NO | | EC | 2 | | |
| CV-3-0739 | C-2 | 2 | B | 3.000 | GLOBE | A | A/O | NO | YES | FC | FS | 3 | | |
| | | | | | | | | | | | TC | 3 | | |
| | | | | | | | | | | | V | 5 | | |
| MOV-3-0626 | H-3 | 2 | B | 3.000 | GATE | A | MO | NO | YES | FAI | TC | 4 | | |
| | | | | | | | | | | | V | 5 | | |
| MOV-3-0716A | E-2 | 3 | B | 6.000 | GATE | A | MO | NO | YES | FAI | TC | 4 | | |
| | | | | | | | | | | | V | 5 | | |
| MOV-3-0716B | E-2 | 2 | B | 6.000 | GATE | A | MO | NO | YES | FAI | TC | 4 | | |
| | | | | | | | | | | | V | 5 | | |
| MOV-3-0730 | G-3 | 2 | B | 6.000 | GATE | A | MO | NO | YES | FAI | TC | 4 | | |
| | | | | | | | | | | | V | 5 | | |
| MOV-3-1417 | B-2 | 2 | B | 10.000 | GATE | A | MO | NO | YES | FAI | TC | 2 | | |
| | | | | | | | | | | | V | 5 | | |
| MOV-3-1418 | F-2 | 2 | B | 10.000 | GATE | A | MO | NO | YES | FAI | TC | 2 | | |
| | | | | | | | | | | | V | 5 | | |
| RV-3-0715 | C-3 | 3 | C | 3.000 | SAFE | A | S/A | NC | NO | | S/R | 9 | | |
| RV-3-0729 | F-7 | 3 | C | 3.000 | SAFE | A | S/A | NC | NO | | S/R | 9 | | |
| RV-3-1426 | E-4 | 3 | C | 0.750 | SAFE | A | S/A | NC | NO | | S/R | 9 | | |
| RV-3-1427 | E-4 | 3 | C | 0.750 | SAFE | A | S/A | NC | NO | | S/R | 9 | | |
| RV-3-1428 | C-4 | 3 | C | 0.750 | SAFE | A | S/A | NC | NO | | S/R | 9 | | |
| RV-3-1429 | A-4 | 3 | C | 0.750 | SAFE | A | S/A | NC | NO | | S/R | 9 | | |
| RV-3-1430 | D-4 | 3 | C | 0.750 | SAFE | A | S/A | NC | NO | | S/R | 9 | | |
| RV-3-1431 | B-4 | 3 | C | 0.750 | SAFE | A | S/A | NC | NO | | S/R | 9 | | |

P & ID: 5613-M-3032-1 SYSTEM: STEAM GENERATOR BLOWDOWN RECOVERY

| VALVE NUMBER | COORD. | CL | CAT. | SIZE | TYPE | A/P | ACT. TYPE | NORM POS. | REM IND | FAIL MODE | EXAM | TEST FREQ | RELIEF REQ. | REMARKS |
|---|---|---|---|---|---|---|---|---|---|---|---|---|---|---|
| MOV-3-1425 | D-2 | 2 | B | 1.000 | GATE | A | MO | NO | YES | FAI | TC | 3 | | |
| | | | | | | | | | | | V | 5 | | |
| MOV-3-1426 | C-2 | 2 | B | 1.000 | GATE | A | MO | NO | YES | FAI | TC | 3 | | |
| | | | | | | | | | | | V | 5 | | |
| MOV-3-1427 | B-2 | 2 | B | 1.000 | GATE | A | MO | NO | YES | FAI | TC | 3 | | |
| | | | | | | | | | | | V | 5 | | |

P & ID: 5613-M-3033-1. SYSTEM: SPENT FUEL POOL COOLING

| VALVE NUMBER | COORD. | CL | CAT. | SIZE | TYPE | A/P | ACT. TYPE | NORM POS. | REM IND | FAIL MODE | EXAM | TEST FREQ | RELIEF REQ. | REMARKS |
|---|---|---|---|---|---|---|---|---|---|---|---|---|---|---|
| 3-0911 | F-5 | 3 | C | 8.000 | CHECK | A | S/A | NO | NO | | EO | 3 | | |
| 3-0914 | E-5 | 3 | C | 8.000 | CHECK | A | S/A | NO | NO | | EO | 3 | | |

P & ID: 5613-M-3036-1 SYSTEM: SAMPLE SYSTEM - NSSS

| VALVE NUMBER | COORD. | CL | CAT. | SIZE | TYPE | A/P | ACT. TYPE | NORM POS. | REM IND | FAIL MODE | EXAM | TEST FREQ | RELIEF REQ. | REMARKS |
|---|---|---|---|---|---|---|---|---|---|---|---|---|---|---|
| CV-3-0951 | A-2 | 2 | A | 0.375 | GLOBE | A | A/O | NC | YES | FC | FS | 3 | | |
| | | | | | | | | | | | SLT-1 | 5 | | |
| | | | | | | | | | | | TC | 3 | | |
| | | | | | | | | | | | V | 5 | | |
| CV-3-0953 | B-2 | 2 | A | 0.375 | GLOBE | A | A/O | NC | YES | FC | FS | 3 | | |
| | | | | | | | | | | | SLT-1 | 5 | | |
| | | | | | | | | | | | TC | 3 | | |
| | | | | | | | | | | | V | 5 | | |
| CV-3-0955C | D-2 | 2 | A | 0.375 | GLOBE | A | A/O | NC | YES | FC | FS | 3 | | |
| | | | | | | | | | | | SLT-1 | 5 | | |
| | | | | | | | | | | | TC | 3 | | |
| | | | | | | | | | | | V | 5 | | |
| CV-3-0955D | E-2 | 2 | A | 0.375 | GLOBE | A | A/O | NC | YES | FC | FS | 3 | | |
| | | | | | | | | | | | SLT-1 | 5 | | |
| | | | | | | | | | | | TC | 3 | | |
| | | | | | | | | | | | V | 5 | | |
| CV-3-0955E | E-2 | 2 | A | 0.375 | GLOBE | A | A/O | NC | YES | FC | FS | 3 | | |
| | | | | | | | | | | | SLT-1 | 5 | | |
| | | | | | | | | | | | TC | 3 | | |
| | | | | | | | | | | | V | 5 | | |
| CV-3-0956A | A-3 | 2 | A | 0.375 | GLOBE | A | A/O | NC | YES | FC | FS | 3 | | |
| | | | | | | | | | | | SLT-1 | 5 | | |
| | | | | | | | | | | | TC | 3 | | |
| | | | | | | | | | | | V | 5 | | |
| CV-3-0956B | B-3 | 2 | A | 0.375 | GLOBE | A | A/O | NC | YES | FC | FS | 3 | | |
| | | | | | | | | | | | SLT-1 | 5 | | |
| | | | | | | | | | | | TC | 3 | | |
| | | | | | | | | | | | V | 5 | | |
| CV-3-0956D | E-3 | 2 | A | 0.375 | GLOBE | A | A/O | NC | YES | FC | FS | 3 | | |
| | | | | | | | | | | | SLT-1 | 5 | | |
| | | | | | | | | | | | TC | 3 | | |
| | | | | | | | | | | | V | 5 | | |
| SV-3-6427A | C-2 | 2 | A | 0.375 | GLOBE | A | SO | NC | YES | FC | FS | 3 | | |
| | | | | | | | | | | | SLT-1 | 5 | | |
| | | | | | | | | | | | TC | 3 | | |
| | | | | | | | | | | | V | 5 | | |

P & ID: 5613-M-3036-1 (cont) SYSTEM: SAMPLE SYSTEM - NSSS

| VALVE NUMBER | COORD. | CL | CAT. | SIZE | TYPE | A/P | ACT. TYPE | NORM POS. | REM IND | FAIL MODE | EXAM | TEST FREQ | RELIEF REQ. | REMARKS |
|---|---|---|---|---|---|---|---|---|---|---|---|---|---|---|
| SV-3-6427B | D-2 | 2 | A | 0.375 | GLOBE | A | SO | NC | YES | FC | FS | 3 | | |
| | | | | | | | | | | | SLT-1 | 5 | | |
| | | | | | | | | | | | TC | 3 | | |
| | | | | | | | | | | | V | 5 | | |
| SV-3-6428 | C-3 | 2 | A | 0.375 | GLOBE | A | SO | NC | YES | FC | FS | 3 | | |
| | | | | | | | | | | | SLT-1 | 5 | | |
| | | | | | | | | | | | TC | 3 | | |
| | | | | | | | | | | | V | 5 | | |

P & ID: 5613-M-3041-2 SYSTEM: REACTOR COOLANT (RCS)

| VALVE NUMBER | COORD. | CL | CAT. | SIZE | TYPE | A/P | ACT. TYPE | NORM POS. | REM IND | FAIL MODE | EXAM | TEST FREQ | RELIEF REQ. | REMARKS |
|---|---|---|---|---|---|---|---|---|---|---|---|---|---|---|
| CV-3-0516 | G-2 | 2 | A | 0.375 | GLOBE | A | A/O | NC | YES | FC | FS | 3 | | |
| | | | | | | | | | | | SLT-1 | 5 | | |
| | | | | | | | | | | | TC | 3 | | |
| | | | | | | | | | | | V | 5 | | |
| MOV-3-0535 | B-6 | 1 | B | 3.000 | GATE | A | MO | NO | YES | FAI | TC | 3 | | |
| | | | | | | | | | | | V | 5 | | |
| MOV-3-0536 | C-6 | 1 | B | 3.000 | GATE | A | MO | NO | YES | FAI | TC | 3 | | |
| | | | | | | | | | | | V | 5 | | |
| PCV-3-0455C | C-7 | 1 | B | 2.000 | GLOBE | A | A/O | NC | YES | FC | FS | 2 | | |
| | | | | | | | | | | | TC | 2 | | |
| | | | | | | | | | | | TO | 2 | | |
| | | | | | | | | | | | V | 5 | | |
| PCV-3-0456 | B-7 | 1 | B | 2.000 | GLOBE | A | A/O | NC | YES | FC | FS | 2 | | |
| | | | | | | | | | | | TC | 2 | | |
| | | | | | | | | | | | TO | 2 | | |
| | | | | | | | | | | | V | 5 | | |
| RV-3-0551A | B-5 | 1 | C | 4.000 | SAFE | A | S/A | NC | NO | | S/R | 8 | | |
| RV-3-0551B | C-4 | 1 | C | 4.000 | SAFE | A | S/A | NC | NO | | S/R | 8 | | |
| RV-3-0551C | C-3 | 1 | C | 4.000 | SAFE | A | S/A | NC | NO | | S/R | 8 | | |
| SV-3-6318A | E-7 | 2 | B | 1.000 | GLOBE | A | SO | LC | YES | FC | TO | 4 | | |
| | | | | | | | | | | | V | 5 | | |
| SV-3-6318B | E-7 | 2 | B | 1.000 | GLOBE | A | SO | LC | YES | FC | TO | 4 | | |
| | | | | | | | | | | | V | 5 | | |
| SV-3-6385 | G-2 | 2 | A | 0.375 | GLOBE | A | SO | NC | YES | FC | FS | 3 | | |
| | | | | | | | | | | | SLT-1 | 5 | | |
| | | | | | | | | | | | TC | 3 | | |
| | | | | | | | | | | | V | 5 | | |
| SV-3-6611 | F-7 | 2 | B | 1.000 | GLOBE | A | SO | LC | YES | FC | TO | 4 | | |
| | | | | | | | | | | | V | 5 | | |
| SV-3-6612 | F-6 | 2 | B | 1.000 | GLOBE | A | SO | LC | YES | FC | TO | 4 | | |
| | | | | | | | | | | | V | 5 | | |

P & ID: 5613-M-3041-3 SYSTEM: RCS - REACTOR COOLANT PUMPS

| VALVE NUMBER | COORD. | CL | CAT. | SIZE | TYPE | A/P | ACT. TYPE | NORM POS. | REM IND | FAIL MODE | EXAM | TEST FREQ | RELIEF REQ. | REMARKS |
|---|---|---|---|---|---|---|---|---|---|---|---|---|---|---|
| CV-3-0519A | A-8 | 2 | A | 3.000 | DIAPH | A | A/O | NC | YES | FC | FS | 3 | | |
| | | | | | | | | | | | SLT-1 | 5 | | |
| | | | | | | | | | | | TC | 3 | | |
| | | | | | | | | | | | V | 5 | | |
| CV-3-0519B | A-3 | 2 | A | 3.000 | DIAPH | A | A/O | NC | YES | FC | FS | 3 | | |
| | | | | | | | | | | | SLT-1 | 5 | | |
| | | | | | | | | | | | TC | 3 | | |
| | | | | | | | | | | | V | 5 | | |
| CV-3-0522A | B-7 | 2 | A | 0.750 | DIAPH | A | A/O | NC | YES | FC | FS | 3 | | |
| | | | | | | | | | | | SLT-1 | 5 | | |
| | | | | | | | | | | | TC | 3 | | |
| | | | | | | | | | | | V | 5 | | |
| CV-3-0522B | B-7 | 2 | A | 0.750 | DIAPH | A | A/O | NC | YES | FC | FS | 3 | | |
| | | | | | | | | | | | SLT-1 | 5 | | |
| | | | | | | | | | | | TC | 3 | | |
| | | | | | | | | | | | V | 5 | | |
| CV-3-0522C | C-7 | 2 | A | 0.750 | DIAPH | A | A/O | NC | YES | FC | FS | 3 | | |
| | | | | | | | | | | | SLT-1 | 5 | | |
| | | | | | | | | | | | TC | 3 | | |
| | | | | | | | | | | | V | 5 | | |

P & ID: 5613-M-3047-1 SYSTEM: CVCS - CHARGING AND LETDOWN

| VALVE NUMBER | COORD. | CL | CAT. | SIZE | TYPE | A/P | ACT. TYPE | NORM POS. | REM IND | FAIL MODE | EXAM | TEST FREQ | RELIEF REQ. | REMARKS |
|---|---|---|---|---|---|---|---|---|---|---|---|---|---|---|
| CV-3-0200A | A-2 | 1 | A | 2.000 | GLOBE | A | A/O | NO | YES | FC | FS | 3 | | |
| | | | | | | | | | | | SLT-1 | 5 | | |
| | | | | | | | | | | | TC | 3 | | |
| | | | | | | | | | | | V | 5 | | |
| CV-3-0200B | B-2 | 1 | A | 2.000 | GLOBE | A | A/O | NO | YES | FC | FS | 3 | | |
| | | | | | | | | | | | SLT-1 | 5 | | |
| | | | | | | | | | | | TC | 3 | | |
| | | | | | | | | | | | V | 5 | | |
| CV-3-0200C | C-2 | 1 | A | 2.000 | GLOBE | A | A/O | NO | YES | FC | FS | 3 | | |
| | | | | | | | | | | | SLT-1 | 5 | | |
| | | | | | | | | | | | TC | 3 | | |
| | | | | | | | | | | | V | 5 | | |
| CV-3-0204 | C-4 | 2 | A | 2.000 | GLOBE | A | A/O | NO | YES | FC | FS | 2 | | |
| | | | | | | | | | | | SLT-1 | 5 | | |
| | | | | | | | | | | | TC | 2 | | |
| | | | | | | | | | | | V | 5 | | |
| RV-3-0203 | A-3 | 2 | A/C | 2.000 | SAFE | A | S/A | NC | NO | | S/R | 9 | | |
| | | | | | | | | | | | SLT-1 | 5 | | |

P & ID: 5613-M-3047-2 SYSTEM: CVCS - CHARGING AND LETDOWN

| VALVE NUMBER | COORD. | CL | CAT. | SIZE | TYPE | A/P | ACT. TYPE | NORM POS. | REM IND | FAIL MODE | EXAM | TEST FREQ | RELIEF REQ. | REMARKS |
|---|---|---|---|---|---|---|---|---|---|---|---|---|---|---|
| 3-0312A | C-8 | 1 | C | 3.000 | CHECK | A | S/A | NO | NO | | EO | 3 | | |
| 3-0312B | A-8 | 1 | C | 3.000 | CHECK | A | S/A | NC | NO | | EO | 3 | | |
| 3-0312C | E-7 | 1 | C | 3.000 | CHECK | A | S/A | NO | NO | | EC | 5 | | |
| | | | | | | | | | | | EO | 3 | | |
| 3-0351 | F-1 | 2 | C | 2.000 | CHECK | A | S/A | NC | NO | | EO | 1 | | |
| 3-0357 | F-3 | 2 | C | 4.000 | CHECK | A | S/A | NC | NO | | EO | 2 | | |
| CV-3-0310A | C-7 | 1 | B | 3.000 | GLOBE | A | A/O | NO | YES | FO | FS | 3 | | |
| | | | | | | | | | | | TO | 3 | | |
| | | | | | | | | | | | V | 5 | | |
| CV-3-0310B | A-7 | 1 | B | 3.000 | GLOBE | A | A/O | NC | YES | FO | FS | 3 | | |
| | | | | | | | | | | | TO | 3 | | |
| | | | | | | | | | | | V | 5 | | |
| HCV-3-0121 | F-7 | 2 | B | 3.000 | GLOBE | A | A/O | NO | NO | FO | FS | 2 | | |
| | | | | | | | | | | | TO | 2 | | |
| LCV-3-0115B | F-4 | 2 | B | 4.000 | BUTFY | A | A/O | NC | YES | FC | TO | 2 | | |
| | | | | | | | | | | | V | 5 | | |
| LCV-3-0115C | C-4 | 2 | B | 4.000 | GATE | A | MO | NO | YES | FAI | TC | 2 | | |
| | | | | | | | | | | | V | 5 | | |
| MOV-3-0350 | F-1 | 2 | B | 2.000 | GATE | A | MO | NC | YES | FAI | TO | 3 | | |
| | | | | | | | | | | | V | 5 | | |
| RV-3-0283A | G-5 | 2 | C | 0.750 | SAFE | A | SA | NC | NO | | S/R | 9 | | |
| RV-3-0283B | E-5 | 2 | C | 0.750 | SAFE | A | SA | NC | NO | | S/R | 9 | | |
| RV-3-0283C | C-5 | 2 | C | 0.750 | SAFE | A | SA | NC | NO | | S/R | 9 | | |

P & ID: 5613-M-3047-3 SYSTEM: CVCS - SEAL WATER INJECTION TO RCP

| VALVE NUMBER | COORD. | CL | CAT. | SIZE | TYPE | A/P | ACT. TYPE | NORM POS. | REM IND | FAIL MODE | EXAM | TEST FREQ | RELIEF REQ. | REMARKS |
|---|---|---|---|---|---|---|---|---|---|---|---|---|---|---|
| 3-0298A | F-4 | 1 | C | 2.000 | CHECK | A | S/A | NO | NO | | EC | 1 | | |
| 3-0298B | B-4 | 1 | C | 2.000 | CHECK | A | S/A | NO | NO | | EC | 1 | | |
| 3-0298C | D-4 | 1 | C | 2.000 | CHECK | A | S/A | NO | NO | | EC | 1 | | |
| MOV-3-0381 | H-3 | 2 | A | 3.000 | GATE | A | MO | NO | YES | FAI | SLT-1 | 5 | | |
| | | | | | | | | | | | TC | 4 | | |
| | | | | | | | | | | | V | 5 | | |
| MOV-3-6386 | H-4 | 2 | A | 3.000 | GATE | A | MO | NO | YES | FAI | SLT-1 | 5 | | |
| | | | | | | | | | | | TC | 4 | | |
| | | | | | | | | | | | V | 5 | | |

P & ID: 5613-M-3050-1 SYSTEM: RESIDUAL HEAT REMOVAL

| VALVE NUMBER | COORD. | CL | CAT. | SIZE | TYPE | A/P | ACT. TYPE | NORM POS. | REM IND | FAIL MODE | EXAM | TEST FREQ | RELIEF REQ. | REMARKS |
|---|---|---|---|---|---|---|---|---|---|---|---|---|---|---|
| 3-0741A | D-7 | 2 | B | 2.000 | GATE | A | MAN | NC | NO | | EC | 3 | | |
| | | | | | | | | | | | EO | 3 | | |
| 3-0752A | C-2 | 2 | B | 14.000 | GATE | A | MAN | NO | NO | | EC | 3 | | |
| | | | | | | | | | | | EO | 3 | | |
| 3-0752B | E-2 | 2 | B | 14.000 | GATE | A | MAN | NO | NO | | EC | 3 | | |
| | | | | | | | | | | | EO | 3 | | |
| 3-0753A | C-4 | 2 | C | 10.000 | CHECK | A | S/A | NC | NO | | EC | 2 | | |
| | | | | | | | | | | | EO | 2 | | |
| | | | | | | | | | | | PEO | 3 | | |
| 3-0753B | E-4 | 2 | C | 10.000 | CHECK | A | S/A | NC | NO | | EC | 2 | | |
| | | | | | | | | | | | EO | 2 | | |
| | | | | | | | | | | | PEO | 3 | | |
| 3-2052 | A-7 | 2 | C | 1.000 | CHECK | A | S/A | NC | NO | | EO | 1 | | |
| MOV-3-0750 | F-8 | 1 | A | 14.000 | GATE | A | MO | LC | YES | FAI | SLT-2 | 5 | | |
| | | | | | | | | | | | TC | 2 | | |
| | | | | | | | | | | | TO | 2 | | |
| | | | | | | | | | | | V | 5 | | |
| MOV-3-0751 | F-7 | 1 | A | 14.000 | GATE | A | MO | LC | YES | FAI | SLT-2 | 5 | | |
| | | | | | | | | | | | TC | 2 | | |
| | | | | | | | | | | | TO | 2 | | |
| | | | | | | | | | | | V | 5 | | |
| MOV-3-0860A | A-6 | 2 | B | 14.000 | GATE | A | MO | NC | YES | FAI | TO | 3 | | |
| | | | | | | | | | | | V | 5 | | |
| MOV-3-0860B | B-6 | 2 | B | 14.000 | GATE | A | MO | NC | YES | FAI | TO | 3 | | |
| | | | | | | | | | | | V | 5 | | |
| MOV-3-0861A | A-5 | 2 | B | 14.000 | GATE | A | MO | NC | YES | FAI | TO | 3 | | |
| | | | | | | | | | | | V | 5 | | |
| MOV-3-0861B | B-5 | 2 | B | 14.000 | GATE | A | MO | NC | YES | FAI | TO | 3 | | |
| | | | | | | | | | | | V | 5 | | |
| MOV-3-0862A | E-1 | 2 | B | 14.000 | GATE | A | MO | LO | YES | FAI | TC | 2 | | |
| | | | | | | | | | | | V | 5 | | |

P & ID: 5613-M-3050-1 (cont) SYSTEM: RESIDUAL HEAT REMOVAL

| VALVE NUMBER | COORD. | CL | CAT. | SIZE | TYPE | A/P | ACT. TYPE | NORM POS. | REM IND | FAIL MODE | EXAM | TEST FREQ | RELIEF REQ. | REMARKS |
|---|---|---|---|---|---|---|---|---|---|---|---|---|---|---|
| MOV-3-0862B | D-1 | 2 | B | 14.000 | GATE | A | MO | LO | YES | FAI | TC | 2 | | |
| | | | | | | | | | | | V | 5 | | |
| MOV-3-0863A | F-5 | 2 | B | 8.000 | GATE | A | MO | LC | YES | FAI | TO | 2 | | |
| | | | | | | | | | | | V | 5 | | |
| MOV-3-0863B | F-5 | 2 | B | 8.000 | GATE | A | MO | LC | YES | FAI | TO | 2 | | |
| | | | | | | | | | | | V | 5 | | |
| MOV-3-0872 | G-6 | 2 | B | 8.000 | GATE | P | MO | NC | YES | FAI | V | 5 | | |

P & ID: 5613-M-3053-1 SYSTEM: CONTAINMENT PURGE AND PENETRATION CLG

| VALVE NUMBER | COORD. | CL | CAT. | SIZE | TYPE | A/P | ACT. TYPE | NORM POS. | REM IND | FAIL MODE | EXAM | TEST FREQ | RELIEF REQ. | REMARKS |
|---|---|---|---|---|---|---|---|---|---|---|---|---|---|---|
| 3-2024 | H-6 | 2 | A | 0.375 | GATE | P | MAN | NC | NO | | SLT-1 | 5 | | |
| 3-2025 | A-6 | 2 | A | 0.375 | GLOBE | P | MAN | NC | NO | | SLT-1 | 5 | | |
| 3-2026 | B-6 | 2 | A | 0.375 | GLOBE | P | MAN | NC | NO | | SLT-1 | 5 | | |
| CV-3-2819 | E-7 | 2 | A | 2.000 | GLOBE | A | A/O | NO | YES | FC | FS | 3 | | |
| | | | | | | | | | | | SLT-1 | 5 | | |
| | | | | | | | | | | | TC | 3 | | |
| | | | | | | | | | | | V | 5 | | |
| CV-3-2826 | E-6 | 2 | A | 2.000 | GLOBE | A | A/O | NO | YES | FC | FS | 3 | | |
| | | | | | | | | | | | SLT-1 | 5 | | |
| | | | | | | | | | | | TC | 3 | | |
| | | | | | | | | | | | V | 5 | | |
| POV-3-2600 | C-6 | 2 | A | 48.000 | BUTFY | A | A/O | NC | YES | FC | FS | 2 | | |
| | | | | | | | | | | | SLT-1 | 5 | | |
| | | | | | | | | | | | TC | 2 | | |
| | | | | | | | | | | | V | 5 | | |
| POV-3-2601 | C-7 | 2 | A | 48.000 | BUTFY | A | A/O | NC | YES | FC | FS | 2 | | |
| | | | | | | | | | | | SLT-1 | 5 | | |
| | | | | | | | | | | | TC | 2 | | |
| | | | | | | | | | | | V | 5 | | |
| POV-3-2602 | D-6 | 2 | A | 54.000 | BUTFY | A | A/O | NC | YES | FC | FS | 2 | | |
| | | | | | | | | | | | SLT-1 | 5 | | |
| | | | | | | | | | | | TC | 2 | | |
| | | | | | | | | | | | V | 5 | | |
| POV-3-2603 | D-7 | 2 | A | 54.000 | BUTFY | A | A/O | NC | YES | FC | FS | 2 | | |
| | | | | | | | | | | | SLT-1 | 5 | | |
| | | | | | | | | | | | TC | 2 | | |
| | | | | | | | | | | | V | 5 | | |

P & ID: 5613-M-3061-1 SYSTEM: WASTE DISPOSAL LIQUID - RCDT AND PUMPS

| VALVE NUMBER | COORD. | CL | CAT. | SIZE | TYPE | A/P | ACT. TYPE | NORM POS. | REM IND | FAIL MODE | EXAM | TEST FREQ | RELIEF REQ. | REMARKS |
|---|---|---|---|---|---|---|---|---|---|---|---|---|---|---|
| CV-3-2821 | H-6 | 2 | A | 3.000 | GLOBE | A | A/O | NO | YES | FC | FS | 3 | | |
| | | | | | | | | | | | SLT-1 | 5 | | |
| | | | | | | | | | | | TC | 3 | | |
| | | | | | | | | | | | V | 5 | | |
| CV-3-2822 | H-5 | 2 | A | 3.000 | GLOBE | A | A/O | NO | YES | FC | FS | 3 | | |
| | | | | | | | | | | | SLT-1 | 5 | | |
| | | | | | | | | | | | TC | 3 | | |
| | | | | | | | | | | | V | 5 | | |
| CV-3-4658A | B-6 | 2 | A | 1.000 | DIAPH | A | A/O | NO | YES | FC | FS | 3 | | |
| | | | | | | | | | | | SLT-1 | 5 | | |
| | | | | | | | | | | | TC | 3 | | |
| | | | | | | | | | | | V | 5 | | |
| CV-3-4658B | B-6 | 2 | A | 1.000 | DIAPH | A | A/O | NO | YES | FC | FS | 3 | | |
| | | | | | | | | | | | SLT-1 | 5 | | |
| | | | | | | | | | | | TC | 3 | | |
| | | | | | | | | | | | V | 5 | | |
| CV-3-4659A | D-6 | 2 | A | 0.750 | DIAPH | A | A/O | NO | YES | FC | FS | 3 | | |
| | | | | | | | | | | | SLT-1 | 5 | | |
| | | | | | | | | | | | TC | 3 | | |
| | | | | | | | | | | | V | 5 | | |
| CV-3-4659B | D-6 | 2 | A | 0.750 | DIAPH | A | A/O | NO | YES | FC | FS | 3 | | |
| | | | | | | | | | | | SLT-1 | 5 | | |
| | | | | | | | | | | | TC | 3 | | |
| | | | | | | | | | | | V | 5 | | |
| CV-3-4668A | G-5 | 2 | A | 3.000 | DIAPH | A | A/O | NO | YES | FC | FS | 3 | | |
| | | | | | | | | | | | SLT-1 | 5 | | |
| | | | | | | | | | | | TC | 3 | | |
| | | | | | | | | | | | V | 5 | | |
| CV-3-4668B | G-6 | 2 | A | 3.000 | DIAPH | A | A/O | NO | YES | FC | FS | 3 | | |
| | | | | | | | | | | | SLT-1 | 5 | | |
| | | | | | | | | | | | TC | 3 | | |
| | | | | | | | | | | | V | 5 | | |

P & ID: 5613-M-3062-1 SYSTEM: SAFETY INJECTION

| VALVE NUMBER | COORD. | CL | CAT. | SIZE | TYPE | A/P | ACT. TYPE | NORM POS. | REM IND | FAIL MODE | EXAM | TEST FREQ | RELIEF REQ. | REMARKS |
|---|---|---|---|---|---|---|---|---|---|---|---|---|---|---|
| 3-0874A | C-7 | 1 | A/C | 2.000 | CHECK | A | S/A | NC | NO | | EC | 7 | VR-2 | |
| | | | | | | | | | | | EO | 1 | | |
| | | | | | | | | | | | SLT-2 | 5 | | |
| 3-0874B | F-7 | 1 | A/C | 2.000 | CHECK | A | S/A | NC | NO | | EC | 7 | VR-2 | |
| | | | | | | | | | | | EO | 1 | | |
| | | | | | | | | | | | SLT-2 | 5 | | |
| 3-0874C | F-2 | 2 | C | 2.000 | CHECK | A | S/A | NC | NO | | EO | 3 | | |
| 3-0879A | G-5 | 2 | C | 3.000 | CHECK | A | S/A | NC | NO | | EC | 3 | | |
| | | | | | | | | | | | EO | 1 | | |
| | | | | | | | | | | | PEO | 3 | | |
| 3-0879B | D-4 | 2 | C | 3.000 | CHECK | A | S/A | NC | NO | | EC | 3 | | |
| | | | | | | | | | | | EO | 1 | | |
| | | | | | | | | | | | PEO | 3 | | |
| 3-0893A | F-4 | 2 | C | 0.750 | CHECK | A | S/A | NC | NO | | EO | 3 | | |
| 3-0893B | E-4 | 2 | C | 0.750 | CHECK | A | S/A | NC | NO | | EO | 3 | | |
| MOV-0878A | D-5 | 2 | B | 4.000 | GATE | A | MO | NO | YES | FAI | TC | 2 | | |
| | | | | | | | | | | | V | 5 | | |
| MOV-0878B | D-5 | 2 | B | 4.000 | GATE | A | MO | NO | YES | FAI | TC | 2 | | |
| | | | | | | | | | | | V | 5 | | |
| MOV-3-0856A | B-1 | 2 | B | 2.000 | GLOBE | A | MO | NO | YES | FAI | TC | 2 | | |
| | | | | | | | | | | | V | 5 | | |
| MOV-3-0856B | B-2 | 2 | B | 2.000 | GLOBE | A | MO | NO | YES | FAI | TC | 2 | | |
| | | | | | | | | | | | V | 5 | | |
| MOV-3-0864A | B-4 | 2 | B | 16.000 | GATE | A | MO | LO | YES | FAI | TC | 2 | | |
| | | | | | | | | | | | V | 5 | | |
| MOV-3-0864B | B-4 | 2 | B | 16.000 | GATE | A | MO | LO | YES | FAI | TC | 2 | | |
| | | | | | | | | | | | V | 5 | | |
| MOV-3-0866A | D-7 | 1 | B | 2.000 | GLOBE | A | MO | LC | YES | FAI | TC | 2 | | |
| | | | | | | | | | | | TO | 2 | | |
| | | | | | | | | | | | V | 5 | | |

P & ID: 5613-M-3062-1 (cont) SYSTEM: SAFETY INJECTION

| VALVE NUMBER | COORD. | CL | CAT. | SIZE | TYPE | A/P | ACT. TYPE | NORM POS. | REM IND | FAIL MODE | EXAM | TEST FREQ | RELIEF REQ. | REMARKS |
|---|---|---|---|---|---|---|---|---|---|---|---|---|---|---|
| MOV-3-0866B | F-7 | 1 | B | 2.000 | GLOBE | A | MO | LC | YES | FAI | TC | 2 | | |
| | | | | | | | | | | | TO | 2 | | |
| | | | | | | | | | | | V | 5 | | |
| MOV-3-0869 | E-6 | 2 | B | 3.000 | GATE | A | MO | NC | YES | FAI | TC | 3 | | |
| | | | | | | | | | | | TO | 3 | | |
| | | | | | | | | | | | V | 5 | | |
| RV-3-6511 | E-8 | 2 | C | 0.250 | SAFE | A | S/A | NC | NO | | S/R | 9 | | |

P & ID: 5613-M-3062-2 SYSTEM: SAFETY INJECTION

| VALVE NUMBER | COORD. | CL | CAT. | SIZE | TYPE | A/P | ACT. TYPE | NORM POS. | REM IND | FAIL MODE | EXAM | TEST FREQ | RELIEF REQ. | REMARKS |
|---|---|---|---|---|---|---|---|---|---|---|---|---|---|---|
| MOV-3-0843A | B-6 | 2 | B | 4.000 | GATE | A | MO | NC | YES | FAI | TC | 3 | | |
| | | | | | | | | | | | TO | 3 | | |
| | | | | | | | | | | | V | 5 | | |
| MOV-3-0843B | C-6 | 2 | B | 4.000 | GATE | A | MO | NC | YES | FAI | TC | 3 | | |
| | | | | | | | | | | | TO | 3 | | |
| | | | | | | | | | | | V | 5 | | |
| RV-3-0857 | D-4 | 2 | C | 0.750 | SAFE | A | S/A | NC | NO | | S/R | 9 | | |

P & ID: 5613-M-3064-1 SYSTEM: SAFETY INJECTION ACCUMULATOR INSIDE CTMT

| VALVE NUMBER | COORD. | CL | CAT. | SIZE | TYPE | A/P | ACT. TYPE | NORM POS. | REM IND | FAIL MODE | EXAM | TEST FREQ | RELIEF REQ. | REMARKS |
|---|---|---|---|---|---|---|---|---|---|---|---|---|---|---|
| 3-0873A | B-2 | 1 | A/C | 2.000 | CHECK | A | S/A | NC | NO | | EC | 7 | VR-2 | |
| | | | | | | | | | | | EO | 1 | | |
| | | | | | | | | | | | SLT-2 | 5 | | |
| 3-0873B | B-2 | 1 | A/C | 2.000 | CHECK | A | S/A | NC | NO | | EC | 7 | VR-2 | |
| | | | | | | | | | | | EO | 1 | | |
| | | | | | | | | | | | SLT-2 | 5 | | |
| 3-0873C | B-2 | 1 | A/C | 2.000 | CHECK | A | S/A | NC | NO | | EC | 7 | VR-2 | |
| | | | | | | | | | | | EO | 1 | | |
| | | | | | | | | | | | SLT-2 | 5 | | |
| 3-0875A | D-8 | 1 | A/C | 10.000 | CHECK | A | S/A | NC | NO | | EC | 7 | | |
| | | | | | | | | | | | EO | 1 | | |
| | | | | | | | | | | | PEO | 2 | | |
| | | | | | | | | | | | SLT-2 | 5 | | |
| 3-0875B | E-8 | 1 | A/C | 10.000 | CHECK | A | S/A | NC | NO | | EC | 7 | | |
| | | | | | | | | | | | EO | 1 | | |
| | | | | | | | | | | | PEO | 2 | | |
| | | | | | | | | | | | SLT-2 | 5 | | |
| 3-0875C | E-8 | 1 | C | 10.000 | CHECK | A | S/A | NC | NO | | EC | 7 | | |
| | | | | | | | | | | | EO | 1 | | |
| | | | | | | | | | | | PEO | 2 | | |
| | | | | | | | | | | | SLT-2 | 5 | | |
| 3-0875D | G-7 | 1 | C | 10.000 | CHECK | A | S/A | NC | NO | | EC | 1 | | |
| | | | | | | | | | | | EO | 1 | | |
| 3-0875E | G-5 | 1 | C | 10.000 | CHECK | A | S/A | NC | NO | | EC | 1 | | |
| | | | | | | | | | | | EO | 1 | | |
| 3-0875F | G-3 | 1 | C | 10.000 | CHECK | A | S/A | NC | NO | | EC | 1 | | |
| | | | | | | | | | | | EO | 1 | | |
| 3-0876A | H-7 | 1 | A/C | 8.000 | CHECK | A | S/A | NC | NO | | EC | 7 | | |
| | | | | | | | | | | | EO | 2 | | |
| | | | | | | | | | | | SLT-2 | 5 | | |
| 3-0876B | G-5 | 1 | A/C | 8.000 | CHECK | A | S/A | NC | NO | | EC | 7 | | |
| | | | | | | | | | | | EO | 1 | | |
| | | | | | | | | | | | PEO | 2 | | |
| | | | | | | | | | | | SLT-2 | 5 | | |

P & ID: 5613-M-3064-1 (cont) SYSTEM: SAFETY INJECTION ACCUMULATOR INSIDE CTMT

| VALVE NUMBER | COORD. | CL | CAT. | SIZE | TYPE | A/P | ACT. TYPE | NORM POS. | REM IND | FAIL MODE | EXAM | TEST FREQ | RELIEF REQ. | REMARKS |
|---|---|---|---|---|---|---|---|---|---|---|---|---|---|---|
| 3-0876C | G-3 | 1 | A/C | 8.000 | CHECK | A | S/A | NC | NO | | EC | 7 | | |
| | | | | | | | | | | | EO | 1 | | |
| | | | | | | | | | | | PEO | 2 | | |
| | | | | | | | | | | | SLT-2 | 5 | | |
| 3-0876D | G-5 | 1 | A/C | 8.000 | CHECK | P | S/A | NC | NO | | SLT-2 | 5 | | |
| 3-0876E | G-3 | 1 | A/C | 8.000 | CHECK | P | S/A | NC | NO | | SLT-2 | 5 | | |
| 3-0945E | C-2 | 2 | A/C | 1.000 | S/CHK | A | S/A | NC | NO | | EC | 1 | | |
| | | | | | | | | | | | SLT-1 | 5 | | |
| CV-3-0850A | F-7 | 2 | B | 0.750 | GLOBE | P | A/O | NC | YES | FC | V | 5 | | |
| CV-3-0850B | F-7 | 2 | B | 0.750 | GLOBE | P | A/O | NC | YES | FC | V | 5 | | |
| CV-3-0850C | F-5 | 2 | B | 0.750 | GLOBE | P | A/O | NC | YES | FC | V | 5 | | |
| CV-3-0850D | F-5 | 2 | B | 0.750 | GLOBE | P | A/O | NC | YES | FC | V | 5 | | |
| CV-3-0850E | F-3 | 2 | B | 0.750 | GLOBE | P | A/O | NC | YES | FC | V | 5 | | |
| CV-3-0850F | F-3 | 2 | B | 0.750 | GLOBE | P | A/O | NC | YES | FC | V | 5 | | |
| CV-3-0851A | C-7 | 2 | B | 1.000 | GLOBE | A | A/O | NC | YES | FC | FS | 3 | | |
| | | | | | | | | | | | TC | 3 | | |
| | | | | | | | | | | | V | 5 | | |
| CV-3-0851B | C-5 | 2 | B | 1.000 | GLOBE | A | A/O | NC | YES | FC | FS | 3 | | |
| | | | | | | | | | | | TC | 3 | | |
| | | | | | | | | | | | V | 5 | | |
| CV-3-0851C | C-3 | 2 | B | 1.000 | GLOBE | A | A/O | NC | YES | FC | FS | 3 | | |
| | | | | | | | | | | | TC | 3 | | |
| | | | | | | | | | | | V | 5 | | |
| CV-3-0852A | F-6 | 2 | B | 0.750 | GLOBE | P | A/O | NC | YES | FC | V | 5 | | |
| CV-3-0852B | F-4 | 2 | B | 0.750 | GLOBE | P | A/O | NC | YES | FC | V | 5 | | |
| CV-3-0852C | F-2 | 2 | B | 0.750 | GLOBE | P | A/O | NC | YES | FC | V | 5 | | |
| CV-3-0853A | C-6 | 2 | B | 1.000 | GLOBE | A | A/O | NC | YES | FC | FS | 3 | | |
| | | | | | | | | | | | TC | 3 | | |
| | | | | | | | | | | | V | 5 | | |

P & ID: 5613-M-3064-1 (cont) SYSTEM: SAFETY INJECTION ACCUMULATOR INSIDE CTMT

| VALVE NUMBER | COORD. | CL | CAT. | SIZE | TYPE | A/P | ACT. TYPE | NORM POS. | REM IND | FAIL MODE | EXAM | TEST FREQ | RELIEF REQ. | REMARKS |
|---|---|---|---|---|---|---|---|---|---|---|---|---|---|---|
| CV-3-0853B | C-4 | 2 | B | 1.000 | GLOBE | A | A/O | NC | YES | FC | FS | 3 | | |
| | | | | | | | | | | | TC | 3 | | |
| | | | | | | | | | | | V | 5 | | |
| CV-3-0853C | C-2 | 2 | B | 1.000 | GLOBE | A | A/O | NC | YES | FC | FS | 3 | | |
| | | | | | | | | | | | TC | 3 | | |
| | | | | | | | | | | | V | 5 | | |
| MOV-3-0744A | H-3 | 2 | B | 10.000 | GATE | A | MO | NC | YES | FAI | TC | 2 | | |
| | | | | | | | | | | | TO | 2 | | |
| | | | | | | | | | | | V | 5 | | |
| MOV-3-0744B | G-3 | 2 | B | 10.000 | GATE | A | MO | NC | YES | FAI | TC | 2 | | |
| | | | | | | | | | | | TO | 2 | | |
| | | | | | | | | | | | V | 5 | | |
| MOV-3-0865A | F-6 | 2 | B | 10.000 | GATE | A | MO | LO | YES | FAI | TC | 2 | | |
| | | | | | | | | | | | V | 5 | | |
| MOV-3-0865B | F-4 | 2 | B | 10.000 | GATE | A | MO | LO | YES | FAI | TC | 2 | | |
| | | | | | | | | | | | V | 5 | | |
| MOV-3-0865C | F-2 | 2 | B | 10.000 | GATE | A | MO | LO | YES | FAI | TC | 2 | | |
| | | | | | | | | | | | V | 5 | | |
| RV-3-0706 | G-2 | 2 | C | 2.000 | SAFE | A | S/A | NC | NO | | S/R | 9 | | |
| RV-3-0858A | D-6 | 2 | C | 2.000 | SAFE | A | S/A | NC | NO | | S/R | 9 | | |
| RV-3-0858B | D-4 | 2 | C | 2.000 | SAFE | A | S/A | NC | NO | | S/R | 9 | | |
| RV-3-0858C | D-2 | 2 | C | 2.000 | SAFE | A | S/A | NC | NO | | S/R | 9 | | |
| RV-3-0859 | A-2 | 2 | C | 0.750 | SAFE | A | S/A | NC | NO | | S/R | 9 | | |

P & ID: 5613-M-3068-1 SYSTEM: CONTAINMENT SPRAY

| VALVE NUMBER | COORD. | CL | CAT. | SIZE | TYPE | A/P | ACT. TYPE | NORM POS. | REM IND | FAIL MODE | EXAM | TEST FREQ | RELIEF REQ. | REMARKS |
|---|---|---|---|---|---|---|---|---|---|---|---|---|---|---|
| 3-0883M | C-5 | 2 | A | 1.000 | GLOBE | P | MAN | NC | NO | | SLT-1 | 5 | | |
| 3-0883N | E-5 | 2 | A | 1.000 | GLOBE | P | MAN | NC | NO | | SLT-1 | 5 | | |
| 3-0890A | D-5 | 2 | A/C | 6.000 | CHECK | A | S/A | NC | NO | | EC | 5 | | |
| | | | | | | | | | | | INSP | 7 | VR-1 | |
| | | | | | | | | | | | PEO | 7 | VR-1 | |
| | | | | | | | | | | | SLT-1 | 5 | | |
| 3-0890B | G-5 | 2 | A/C | 6.000 | CHECK | A | S/A | NC | NO | | EC | 5 | | |
| | | | | | | | | | | | INSP | 7 | VR-1 | |
| | | | | | | | | | | | PEO | 7 | VR-1 | |
| | | | | | | | | | | | SLT-1 | 5 | | |
| MOV-3-0880A | D-5 | 2 | A | 6.000 | GATE | A | MO | NC | YES | FAI | SLT-1 | 5 | | |
| | | | | | | | | | | | TC | 3 | | |
| | | | | | | | | | | | TO | 3 | | |
| | | | | | | | | | | | V | 5 | | |
| MOV-3-0880B | G-5 | 2 | A | 6.000 | GATE | A | MO | NC | YES | FAI | SLT-1 | 5 | | |
| | | | | | | | | | | | TC | 3 | | |
| | | | | | | | | | | | TO | 3 | | |
| | | | | | | | | | | | V | 5 | | |
| RV-3-0871 | C-2 | 2 | C | 0.750 | SAFE | A | SA | NC | NO | | S/R | 9 | | |

P & ID: 5613-M-3072-1 SYSTEM: MAIN STEAM

| VALVE NUMBER | COORD. | CL | CAT. | SIZE | TYPE | A/P | ACT. TYPE | NORM POS. | REM IND | FAIL MODE | EXAM | TEST FREQ | RELIEF REQ. | REMARKS |
|---|---|---|---|---|---|---|---|---|---|---|---|---|---|---|
| 3-10-0004 | G-6 | NC | C | 26.000 | S/CHK | A | S/A | NO | NO | | EC | 2 | | NOTE 4 |
| | | | | | | | | | | | INSP | 7 | | |
| 3-10-0005 | E-6 | NC | C | 26.000 | S/CHK | A | S/A | NO | NO | | EC | 2 | | NOTE 4 |
| | | | | | | | | | | | INSP | 7 | | |
| 3-10-0006 | B-6 | NC | C | 26.000 | S/CHK | A | S/A | NO | NO | | EC | 2 | | NOTE 4 |
| | | | | | | | | | | | INSP | 7 | | |
| CV-3-1606 | F-4 | 2 | B | 6.000 | GLOBE | A | A/O | NC | YES | FC | FS | 2 | | |
| | | | | | | | | | | | TC | 2 | | |
| | | | | | | | | | | | TO | 2 | | |
| CV-3-1607 | D-4 | 2 | B | 6.000 | GLOBE | A | A/O | NC | YES | FC | FS | 2 | | |
| | | | | | | | | | | | TC | 2 | | |
| | | | | | | | | | | | TO | 2 | | |
| CV-3-1608 | B-4 | 2 | B | 6.000 | GLOBE | A | A/O | NC | YES | FC | FS | 2 | | |
| | | | | | | | | | | | TC | 2 | | |
| | | | | | | | | | | | TO | 2 | | |
| MOV-3-1400 | F-6 | 2 | B | 2.000 | GLOBE | A | MO | NC | YES | FAI | TC | 3 | | |
| | | | | | | | | | | | V | 5 | | |
| MOV-3-1401 | D-6 | 2 | B | 2.000 | GLOBE | A | MO | NC | YES | FAI | TC | 3 | | |
| | | | | | | | | | | | V | 5 | | |
| MOV-3-1402 | B-6 | 2 | B | 2.000 | GLOBE | A | MO | NC | YES | FAI | TC | 3 | | |
| | | | | | | | | | | | V | 5 | | |
| POV-3-2604 | G-6 | 2 | B/C | 26.000 | PA/CHK | A | A/O | NO | YES | FAI | TC | 2 | | |
| | | | | | | | | | | | V | 5 | | |
| POV-3-2605 | E-6 | 2 | B/C | 26.000 | PA/CHK | A | A/O | NO | YES | FAI | TC | 2 | | |
| | | | | | | | | | | | V | 5 | | |
| POV-3-2606 | B-6 | 2 | B/C | 26.000 | PA/CHK | A | A/O | NO | YES | FAI | TC | 2 | | |
| | | | | | | | | | | | V | 5 | | |
| RV-3-1400 | G-5 | 2 | C | 6.000 | SAFE | A | S/A | NC | NO | | S/R | 8 | | |
| RV-3-1401 | G-5 | 2 | C | 6.000 | SAFE | A | S/A | NC | NO | | S/R | 8 | | |
| RV-3-1402 | H-5 | 2 | C | 6.000 | SAFE | A | S/A | NC | NO | | S/R | 8 | | |

P & ID: 5613-M-3072-1 (cont) SYSTEM: MAIN STEAM

| VALVE NUMBER | COORD. | CL | CAT. | SIZE | TYPE | A/P | ACT. TYPE | NORM POS. | REM IND | FAIL MODE | EXAM | TEST FREQ | RELIEF REQ. | REMARKS |
|---|---|---|---|---|---|---|---|---|---|---|---|---|---|---|
| RV-3-1403 | F-5 | 2 | C | 6.000 | SAFE | A | S/A | NC | NO | | S/R | 8 | | |
| RV-3-1405 | E-5 | 2 | C | 6.000 | SAFE | A | S/A | NC | NO | | S/R | 8 | | |
| RV-3-1406 | D-5 | 2 | C | 6.000 | SAFE | A | S/A | NC | NO | | S/R | 8 | | |
| RV-3-1407 | E-5 | 2 | C | 6.000 | SAFE | A | S/A | NC | NO | | S/R | 8 | | |
| RV-3-1408 | D-5 | 2 | C | 6.000 | SAFE | A | S/A | NC | NO | | S/R | 8 | | |
| RV-3-1410 | B-5 | 2 | C | 6.000 | SAFE | A | S/A | NC | NO | | S/R | 8 | | |
| RV-3-1411 | B-5 | 2 | C | 6.000 | SAFE | A | S/A | NC | NO | | S/R | 8 | | |
| RV-3-1412 | C-5 | 2 | C | 6.000 | SAFE | A | S/A | NC | NO | | S/R | 8 | | |
| RV-3-1413 | A-5 | 2 | C | 6.000 | SAFE | A | S/A | NC | NO | | S/R | 8 | | |

P & ID: 5613-M-3074-3 SYSTEM: FEEDWATER

| VALVE NUMBER | COORD. | CL | CAT. | SIZE | TYPE | A/P | ACT. TYPE | NORM POS. | REM IND | FAIL MODE | EXAM | TEST FREQ | RELIEF REQ. | REMARKS |
|---|---|---|---|---|---|---|---|---|---|---|---|---|---|---|
| 3-20-0137 | G-6 | 2 | C | 0.500 | CHECK | A | S/A | NO | NO | | EC | 3 | | |
| 3-20-0237 | E-6 | 2 | C | 0.500 | CHECK | A | S/A | NO | NO | | EC | 3 | | |
| 3-20-0337 | B-6 | 2 | C | 0.500 | CHECK | A | S/A | NO | NO | | EC | 3 | | |
| FCV-3-0478 | G-4 | 2 | B | 14.000 | GLOBE | A | A/O | NO | NO | FC | FS | 2 | | |
| | | | | | | | | | | | TC | 2 | | |
| | | | | | | | | | | | V | 5 | | |
| FCV-3-0479 | H-3 | 2 | B | 4.000 | GLOBE | A | A/O | NC | NO | FC | FS | 2 | | |
| | | | | | | | | | | | TC | 2 | | |
| | | | | | | | | | | | V | 5 | | |
| FCV-3-0488 | D-4 | 2 | B | 14.000 | GLOBE | A | A/O | NO | NO | FC | FS | 2 | | |
| | | | | | | | | | | | TC | 2 | | |
| | | | | | | | | | | | V | 5 | | |
| FCV-3-0489 | E-3 | 2 | B | 4.000 | GLOBE | A | A/O | NC | NO | FC | FS | 2 | | |
| | | | | | | | | | | | TC | 2 | | |
| | | | | | | | | | | | V | 5 | | |
| FCV-3-0498 | B-4 | 2 | B | 14.000 | GLOBE | A | A/O | NO | NO | FC | FS | 2 | | |
| | | | | | | | | | | | TC | 2 | | |
| | | | | | | | | | | | V | 5 | | |
| FCV-3-0499 | C-3 | 2 | B | 4.000 | GLOBE | A | A/O | NC | NO | FC | FS | 2 | | |
| | | | | | | | | | | | TC | 2 | | |
| | | | | | | | | | | | V | 5 | | |

P & ID: 5613-M-3074-4 SYSTEM: STEAM GENERATOR BLOWDOWN RECOVERY

| VALVE NUMBER | COORD. | CL | CAT. | SIZE | TYPE | A/P | ACT. TYPE | NORM POS. | REM IND | FAIL MODE | EXAM | TEST FREQ | RELIEF REQ. | REMARKS |
|---|---|---|---|---|---|---|---|---|---|---|---|---|---|---|
| CV-3-6275A | G-2 | 2 | B | 6.000 | GLOBE | A | A/O | NO | YES | FAI | TC | 3 | | |
| | | | | | | | | | | | V | 5 | | |
| CV-3-6275B | E-2 | 2 | B | 6.000 | GLOBE | A | A/O | NO | YES | FAI | TC | 3 | | |
| | | | | | | | | | | | V | 5 | | |
| CV-3-6275C | C-2 | 2 | B | 6.000 | GLOBE | A | A/O | NO | YES | FAI | TC | 3 | | |
| | | | | | | | | | | | V | 5 | | |
| SV-3-6275A-1 | G-3 | 2 | B | 0.750 | GLOBE | A | SO | NO | YES | FC | FS | 3 | | |
| | | | | | | | | | | | TC | 3 | | |
| | | | | | | | | | | | V | 5 | | |
| SV-3-6275B-1 | D-3 | 2 | B | 0.750 | GLOBE | A | SO | NO | YES | FC | FS | 3 | | |
| | | | | | | | | | | | TC | 3 | | |
| | | | | | | | | | | | V | 5 | | |
| SV-3-6275C-1 | B-3 | 2 | B | 0.750 | GLOBE | A | SO | NO | YES | FC | FS | 3 | | |
| | | | | | | | | | | | TC | 3 | | |
| | | | | | | | | | | | V | 5 | | |

P & ID: 5613-M-3075-1 SYSTEM: AFW STEAM TO AUX. FEEDWATER PUMP TURBINE

| VALVE NUMBER | COORD. | CL | CAT. | SIZE | TYPE | A/P | ACT. TYPE | NORM POS. | REM IND | FAIL MODE | EXAM | TEST FREQ | RELIEF REQ. | REMARKS |
|---|---|---|---|---|---|---|---|---|---|---|---|---|---|---|
| 3-10-0083 | C-7 | 3 | C | 4.000 | CHECK | A | S/A | NC | NO | | EO | 3 | | |
| 3-10-0087 | F-7 | 3 | C | 4.000 | CHECK | A | S/A | NC | NO | | EO | 6 | | NOTE 1 |
| 3-10-0375 | G-3 | 2 | C | 3.000 | CHECK | A | S/A | NC | NO | | EO | 3 | | |
| 3-10-0376 | E-3 | 2 | C | 3.000 | CHECK | A | S/A | NC | NO | | EO | 3 | | |
| 3-10-0377 | C-3 | 2 | C | 3.000 | CHECK | A | S/A | NC | NO | | EO | 3 | | |
| 3-10-0381 | G-4 | 3 | C | 4.000 | CHECK | A | S/A | NC | NO | | EC | 2 | | |
| | | | | | | | | | | | EO | 3 | | |
| 3-10-0382 | E-4 | 3 | C | 4.000 | CHECK | A | S/A | NC | NO | | EC | 2 | | |
| | | | | | | | | | | | EO | 3 | | |
| 3-10-0383 | C-4 | 3 | C | 4.000 | CHECK | A | S/A | NC | NO | | EC | 2 | | |
| | | | | | | | | | | | EO | 3 | | |
| AFSS-3-0005 | B-6 | 3 | C | 4.000 | CHECK | A | S/A | NC | NO | | EO | 3 | | |
| MOV-3-1403 | G-3 | 2 | B | 4.000 | GLOBE | A | MO | NC | YES | FAI | TC | 3 | | |
| | | | | | | | | | | | TO | 3 | | |
| | | | | | | | | | | | V | 5 | | |
| MOV-3-1404 | E-3 | 2 | B | 4.000 | GLOBE | A | MO | NC | YES | FAI | TC | 3 | | |
| | | | | | | | | | | | TO | 3 | | |
| | | | | | | | | | | | V | 5 | | |
| MOV-3-1405 | C-3 | 2 | B | 4.000 | GLOBE | A | MO | NC | YES | FAI | TC | 3 | | |
| | | | | | | | | | | | TO | 3 | | |
| | | | | | | | | | | | V | 5 | | |

P & ID: 5613-M-3075-2 SYSTEM: AFW - AUXILIARY FEEDWATER TO STM GEN

| VALVE NUMBER | COORD. | CL | CAT. | SIZE | TYPE | A/P | ACT. TYPE | NORM POS. | REM IND | FAIL MODE | EXAM | TEST FREQ | RELIEF REQ. | REMARKS |
|---|---|---|---|---|---|---|---|---|---|---|---|---|---|---|
| 3-20-0140 | F-7 | 2 | C | 4.000 | CHECK | A | S/A | NC | NO | | EO | 3 | | |
| 3-20-0240 | D-7 | 2 | C | 4.000 | CHECK | A | S/A | NC | NO | | EO | 3 | | |
| 3-20-0340 | B-7 | 2 | C | 4.000 | CHECK | A | S/A | NC | NO | | EO | 3 | | |
| AFPD-3-0010 | H-3 | 3 | C | 4.000 | CHECK | A | S/A | NC | NO | | EO | 3 | | |
| AFPD-3-0012 | E-3 | 3 | C | 4.000 | CHECK | A | S/A | NC | NO | | EO | 3 | | |
| AFPD-3-0014 | C-3 | 3 | C | 4.000 | CHECK | A | S/A | NC | NO | | EO | 3 | | |
| CV-3-2816 | F-7 | 3 | B | 4.000 | GLOBE | A | A/O | NC | NO | FC | TO | 3 | | |
| CV-3-2817 | D-7 | 3 | B | 4.000 | GLOBE | A | A/O | NC | NO | FC | TO | 3 | | |
| CV-3-2818 | B-7 | 3 | B | 4.000 | GLOBE | A | A/O | NC | NO | FC | TO | 3 | | |
| CV-3-2831 | G-7 | 2 | B | 4.000 | GLOBE | A | A/O | NC | NO | FC | TO | 3 | | |
| CV-3-2832 | E-7 | 2 | B | 4.000 | GLOBE | A | A/O | NC | NO | FC | TO | 3 | | |
| CV-3-2833 | C-7 | 2 | B | 4.000 | GLOBE | A | A/O | NC | NO | FC | TO | 3 | | |

P & ID: 5613-M-3094-1 SYSTEM: CONTAINMENT POST-ACCIDENT EVALUATION.

| VALVE NUMBER | COORD. | CL | CAT. | SIZE | TYPE | A/P | ACT. TYPE | NORM POS. | REM IND | FAIL MODE | EXAM | TEST FREQ | RELIEF REQ. | REMARKS |
|---|---|---|---|---|---|---|---|---|---|---|---|---|---|---|
| 3-11-0003 | B-2 | 2 | A/C | 1.000 | CHECK | A | S/A | NO | NO | | EC | 1 | | |
| | | | | | | | | | | | SLT-1 | 5 | | |
| HV-3-0001 | H-2 | 2 | A | 2.000 | DIAPH | P | MAN | LC | NO | | SLT-1 | 5 | | |
| HV-3-0002 | H-4 | 2 | A | 2.000 | DIAPH | P | MAN | LC | NO | | SLT-1 | 5 | | |
| HV-3-0003 | G-2 | 2 | A | 2.000 | DIAPH | P | MAN | LC | NO | | SLT-1 | 5 | | |
| HV-3-0004 | G-4 | 2 | A | 2.000 | DIAPH | P | MAN | LC | NO | | SLT-1 | 5 | | |
| PAHM-3-0001A | B-3 | 2 | A | 0.750 | GLOBE | P | MAN | NC | NO | | SLT-1 | 5 | | |
| PAHM-3-0001B | B-2 | 2 | A | 0.750 | GLOBE | P | MAN | NC | NO | | SLT-1 | 5 | | |
| PAHM-3-0002A | D-4 | 2 | A | 0.750 | GLOBE | P | MAN | NC | NO | | SLT-1 | 5 | | |
| PAHM-3-0002B | D-3 | 2 | A | 0.750 | GLOBE | P | MAN | NC | NO | | SLT-1 | 5 | | |
| SV-3-2911 | A-3 | 2 | A | 1.000 | GLOBE | A | SO | NO | YES | FC | FS | 3 | | |
| | | | | | | | | | | | SLT-1 | 5 | | |
| | | | | | | | | | | | TC | 3 | | |
| | | | | | | | | | | | V | 5 | | |
| SV-3-2912 | B-3 | 2 | A | 1.000 | GLOBE | A | SO | NO | YES | FC | FS | 3 | | |
| | | | | | | | | | | | SLT-1 | 5 | | |
| | | | | | | | | | | | TC | 3 | | |
| | | | | | | | | | | | V | 5 | | |
| SV-3-2913 | A-3 | 2 | A | 1.000 | GLOBE | A | SO | NO | YES | FC | FS | 3 | | |
| | | | | | | | | | | | SLT-1 | 5 | | |
| | | | | | | | | | | | TC | 3 | | |
| | | | | | | | | | | | V | 5 | | |

P & ID: 5613-M-3101-1 SYSTEM: BREATHING AIR SYSTEM (BA)

| VALVE NUMBER | COORD. | CL | CAT. | SIZE | TYPE | A/P | ACT. TYPE | NORM POS. | REM IND | FAIL MODE | EXAM | TEST FREQ | RELIEF REQ. | REMARKS |
|---|---|---|---|---|---|---|---|---|---|---|---|---|---|---|
| 3-BA-0201 | D-3 | 2 | A/C | 2.500 | CHECK | A | S/A | NC | NO | | EC | 1 | | |
| | | | | | | | | | | | SLT-1 | 5 | | |
| CV-3-6165 | D-2 | 2 | A | 2.500 | GATE | P | A/O | LC | YES | | SLT-1 | 5 | | |
| | | | | | | | | | | | V | 5 | | |

P & ID: VARIOUS SYSTEM: TEST CONNECTION

| VALVE NUMBER | COORD. | CL | CAT. | SIZE | TYPE | A/P | ACT. TYPE | NORM POS. | REM IND | FAIL MODE | EXAM | TEST FREQ | RELIEF REQ. | REMARKS |
|---|---|---|---|---|---|---|---|---|---|---|---|---|---|---|
| 3-10-0879 | | 2 | A | 0.375 | GLOBE | P | MAN | NC | NO | | SLT-1 | 5 | | |

## NOTES

Pg 55,92 1. Auxiliary Feedwater (AFW) Pump "A" Discharge Check Valve, 20-143, will be exercised closed whenever "A" AFW Pump is lined up to operate in parallel with either of the other AFW Pumps. Auxiliary Feedwater Steam Supply Valve, 3-10-087 will be exercised open whenever AFW Pump "C" is aligned to Train 1.

Pg 60,61 2. Valves 3-70-274 A&B, 3-70-276 A&B, RV-3-210 A&B, RV-3-211 A&B, RV-3-212 A&B, and RV-3-213 A&B are not included within the ISI class boundaries and, as such, are exempt from the inclusive requirements of the Code. These valves will be tested in accordance with Code requirements, except where determined impractical, in which case specific relief from the Code is not required.

Pg 62,63 3. Valves CV-3-2046 A&B, SV-3-2051 A&B, SV-3-3522 A&B are not included within the ISI class boundaries and, as such, are exempt from the inclusive requirements of the Code. These valves have been included in the Program to ensure that inservice testing is adequate to demonstrate their continued operability. These valves will be tested in accordance with Code requirements, except where determined impractical, in which case specific relief from the Code is not required.

These valves will be tested in conjunction with testing of the emergency diesel generators and the associated fuel oil transfer pumps. However, valve stroke time will not be measured. The satisfactory response of the associated diesel generator and the fuel oil transfer pumps will demonstrate valve operability.

NOTES con't

Pg 88 4. Valves 3-10-004 through 3-10-006 are not included within the ISI class boundaries and, as such, are exempt from the inclusive requirements of the Code. These components have been included in the Program to ensure that inservice testing is adequate to demonstrate their continued operability. These valves will be tested in accordance with Code requirements, except where determined impractical, in which case specific relief from the Code is not required.

These are large stop check valves in the main steam lines leading to the main turbine generator. There is no practical way of verifying closure of these valves by way of a back seat or reverse flow test. Exercising a valve manually using the hand wheel provides some assurance that the disc moves freely within the valve body. Furthermore, the valves are disassembled, inspected, and manually exercised at least once during each 10-year inspection interval.

# Appendix D

## Valve Program Tables
## Unit 4

P & ID: 5610-M-3075-1 SYSTEM: AFW - TURBINE DRIVE FOR AFW PUMPS

| VALVE NUMBER | COORD. | CL | CAT. | SIZE | TYPE | A/P | ACT. TYPE | NORM POS. | REM IND | FAIL MODE | EXAM | TEST FREQ | RELIEF REQ. | REMARKS |
|---|---|---|---|---|---|---|---|---|---|---|---|---|---|---|
| AFSS-0003B | D-4 | 3 | C | 4.000 | CHECK | A | S/A | NC | NO | | EO | 3 | | |
| AFSS-0003C | F-4 | 3 | C | 4.000 | CHECK | A | S/A | NC | NO | | EO | 3 | | |
| MOV-6459A | B-5 | 3 | B | 3.000 | GATE | A | MO | NO | YES | FAI | TO<br>V | 3<br>5 | | |
| MOV-6459B | D-5 | 3 | B | 3.000 | GATE | A | MO | NO | YES | FAI | TO<br>V | 3<br>5 | | |
| MOV-6459C | F-5 | 3 | B | 3.000 | GATE | A | MO | NO | YES | FAI | TO<br>V | 3<br>5 | | |

P & ID: 5610-M-3075-2 SYSTEM: AFW - AUX. FEEDWATER SUPPLY TO STM GEN

| VALVE NUMBER | COORD. | CL | CAT. | SIZE | TYPE | A/P | ACT. TYPE | NORM POS. | REM IND | FAIL MODE | EXAM | TEST FREQ | RELIEF REQ. | REMARKS |
|---|---|---|---|---|---|---|---|---|---|---|---|---|---|---|
| 20-0143 | B-7 | 3 | C | 6.000 | CHECK | A | S/A | NC | NO | | EC | 6 | | NOTE 1 |
| | | | | | | | | | | | EO | 3 | | |
| 20-0243 | D-7 | 3 | C | 6.000 | CHECK | A | S/A | NC | NO | | EC | 3 | | |
| | | | | | | | | | | | EO | 3 | | |
| 20-0343 | G-7 | 3 | C | 6.000 | CHECK | A | S/A | NC | NO | | EC | 3 | | |
| | | | | | | | | | | | EO | 3 | | |
| AFWU-0013 | A-4 | 3 | C | 1.000 | CHECK | A | S/A | NC | NO | | EO | 3 | | |
| AFWU-0014 | D-4 | 3 | C | 1.000 | CHECK | A | S/A | NC | NO | | EO | 3 | | |
| AFWU-0015 | F-4 | 3 | C | 1.000 | CHECK | A | S/A | NC | NO | | EO | 3 | | |
| AFWU-3-0017 | A-6 | 3 | C | 2.000 | CHECK | A | S/A | NC | NO | | INSP | 1 | | |
| | | | | | | | | | | | PEO | 3 | | |
| RV-6401A | B-4 | 3 | C | 1.000 | SAFE | A | S/A | NC | NO | | S/R | 9 | | |
| RV-6401B | D-4 | 3 | C | 1.000 | SAFE | A | S/A | NC | NO | | S/R | 9 | | |
| RV-6401C | F-4 | 3 | C | 1.000 | SAFE | A | S/A | NC | NO | | S/R | 9 | | |

P & ID: 5613-M-3013-7 SYSTEM: INSTRUMENT AIR

| VALVE NUMBER | COORD. | CL | CAT. | SIZE | TYPE | A/P | ACT. TYPE | NORM POS. | REM IND | FAIL MODE | EXAM | TEST FREQ | RELIEF REQ. | REMARKS |
|---|---|---|---|---|---|---|---|---|---|---|---|---|---|---|
| 3-40-0336 | B-3 | 2 | A/C | 2.000 | CHECK | A | S/A | NO | NO | | EC | 1 | | |
| | | | | | | | | | | | SLT-1 | 5 | | |
| 3-40-0340A | B-3 | 2 | A/C | 2.000 | S/CHK | A | S/A | NO | NO | | EC | 1 | | |
| | | | | | | | | | | | SLT-1 | 5 | | |

P & ID: 5613-M-3018-1 SYSTEM: CONDENSATE STORAGE

| VALVE NUMBER | COORD. | CL | CAT. | SIZE | TYPE | A/P | ACT. TYPE | NORM POS. | REM IND | FAIL MODE | EXAM | TEST FREQ | RELIEF REQ. | REMARKS |
|---|---|---|---|---|---|---|---|---|---|---|---|---|---|---|
| 3-20-0401 | D-3 | 3 | C | 8.000 | CHECK | A | S/A | NC | NO | | EO | 3 | | |

P & ID: 5613-M-3019-1 SYSTEM: INTAKE COOLING WATER

| VALVE NUMBER | COORD. | CL | CAT. | SIZE | TYPE | A/P | ACT. TYPE | NORM POS. | REM IND | FAIL MODE | EXAM | TEST FREQ | RELIEF REQ. | REMARKS |
|---|---|---|---|---|---|---|---|---|---|---|---|---|---|---|
| 3-50-0311 | F-3 | 3 | C | 24.000 | CHECK | A | S/A | NO | NO | | EC | 3 | | |
| | | | | | | | | | | | EO | 3 | | |
| 3-50-0321 | D-3 | 3 | C | 24.000 | CHECK | A | S/A | NO | NO | | EC | 3 | | |
| | | | | | | | | | | | EO | 3 | | |
| 3-50-0331 | B-3 | 3 | C | 24.000 | CHECK | A | S/A | NO | NO | | EC | 3 | | |
| | | | | | | | | | | | EO | 3 | | |
| POV-3-4882 | B-4 | 3 | B | 30.000 | BUTFY | A | A/O | NO | YES | FC | FS | 3 | | |
| | | | | | | | | | | | TC | 3 | | |
| | | | | | | | | | | | V | 5 | | |
| POV-3-4883 | F-4 | 3 | B | 30.000 | BUTFY | A | A/O | NO | YES | FC | FS | 3 | | |
| | | | | | | | | | | | TC | 3 | | |
| | | | | | | | | | | | V | 5 | | |

P & ID: 5613-M-3020-2 SYSTEM: PRIMARY MAKEUP WATER

| VALVE NUMBER | COORD. | CL | CAT. | SIZE | TYPE | A/P | ACT. TYPE | NORM POS. | REM IND | FAIL MODE | EXAM | TEST FREQ | RELIEF REQ. | REMARKS |
|---|---|---|---|---|---|---|---|---|---|---|---|---|---|---|
| 3-10-0567 | D-5 | 2 | A/C | 2.000 | CHECK | A | S/A | NC | NO | | EC | 1 | | |
| | | | | | | | | | | | SLT-1 | 5 | | |
| 3-10-0582 | D-6 | 2 | A | 2.000 | GATE | P | MAN | NC | NO | | SLT-1 | 5 | | |

P & ID: 5613-M-3022-1 SYSTEM: EDG 3A AIR STARTING

| VALVE NUMBER | COORD. | CL | CAT. | SIZE | TYPE | A/P | ACT. TYPE | NORM POS. | REM IND | FAIL MODE | EXAM | TEST FREQ | RELIEF REQ. | REMARKS |
|---|---|---|---|---|---|---|---|---|---|---|---|---|---|---|
| 3-70-0274A | C-3 | NC | C | 2.000 | CHECK | A | S/A | NC | NO | | EC | 3 | | NOTE 2 |
| 3-70-0276A | D-3 | NC | C | 2.000 | CHECK | A | S/A | NC | NO | | EC | 3 | | NOTE 2 |
| RV-3-0210A | B-4 | NC | C | 0.750 | SAFE | A | S/A | NC | NO | | S/R | 9 | | NOTE 2 |
| RV-3-0211A | B-4 | NC | C | 0.750 | SAFE | A | S/A | NC | NO | | S/R | 9 | | NOTE 2 |
| RV-3-0212A | B-3 | NC | C | 0.750 | SAFE | A | S/A | NC | NO | | S/R | 9 | | NOTE 2 |
| RV-3-0213A | B-3 | NC | C | 0.750 | SAFE | A | S/A | NC | NO | | S/R | 9 | | NOTE 2 |

P & ID: 5613-M-3022-2 SYSTEM: EDG 3B AIR STARTING

| VALVE NUMBER | COORD. | CL | CAT. | SIZE | TYPE | A/P | ACT. TYPE | NORM POS. | REM IND | FAIL MODE | EXAM | TEST FREQ | RELIEF REQ. | REMARKS |
|---|---|---|---|---|---|---|---|---|---|---|---|---|---|---|
| 3-70-0274B | C-3 | NC | C | 2.000 | CHECK | A | S/A | NC | NO | | EC | 3 | | NOTE 2 |
| 3-70-0276B | D-3 | NC | C | 2.000 | CHECK | A | S/A | NC | NO | | EC | 3 | | NOTE 2 |
| RV-3-0210B | B-4 | NC | C | 0.750 | SAFE | A | S/A | NC | NO | | S/R | 9 | | NOTE 2 |
| RV-3-0211B | B-4 | NC | C | 0.750 | SAFE | A | S/A | NC | NO | | S/R | 9 | | NOTE 2 |
| RV-3-0212B | B-3 | NC | C | 0.750 | SAFE | A | S/A | NC | NO | | S/R | 9 | | NOTE 2 |
| RV-3-0213B | B-3 | NC | C | 0.750 | SAFE | A | S/A | NC | NO | | S/R | 9 | | NOTE 2 |

P & ID: 5613-M-3022-3 SYSTEM: EDG 3A FUEL SYSTEM

| VALVE NUMBER | COORD. | CL | CAT. | SIZE | TYPE | A/P | ACT. TYPE | NORM POS. | REM IND | FAIL MODE | EXAM | TEST FREQ | RELIEF REQ. | REMARKS |
|---|---|---|---|---|---|---|---|---|---|---|---|---|---|---|
| 3-70-0006A | C-5 | NC | C | 2.000 | CHECK | A | S/A | NC | NO | | EO | 3 | | |
| CV-3-2046A | D-6 | NC | B | 2.000 | GLOBE | A | A/O | NC | NO | FC | EO | 3 | | NOTE 3 |
| SV-3-2051A | C-4 | NC | B | 2.000 | GLOBE | A | SO | NC | NO | FC | EO | 3 | | NOTE 3 |
| SV-3-3522A | F-4 | NC | B | 1.500 | GLOBE | A | SO | NC | NO | FC | EO | 3 | | NOTE 3 |

P & ID: 5613-M-3022-4 SYSTEM: EDG 3B FUEL SYSTEM

| VALVE NUMBER | COORD. | CL | CAT. | SIZE | TYPE | A/P | ACT. TYPE | NORM POS. | REM IND | FAIL MODE | EXAM | TEST FREQ | RELIEF REQ. | REMARKS |
|---|---|---|---|---|---|---|---|---|---|---|---|---|---|---|
| 3-70-0006B | C-4 | NC | C | 2.000 | CHECK | A | S/A | NC | NO | | EO | 3 | | |
| CV-3-2046B | C-6 | NC | B | 2.000 | GLOBE | A | A/O | NC | NO | FC | EO | 3 | | NOTE 3 |
| SV-3-2051B | C-2 | NC | B | 2.000 | GLOBE | A | SO | NC | NO | FC | EO | 3 | | NOTE 3 |
| SV-3-3522B | E-4 | NC | B | 1.500 | GLOBE | A | SO | NC | NO | FC | EO | 3 | | NOTE 3 |

P & ID: 5613-M-3030-1 SYSTEM: COMPONENT COOLING WATER

| VALVE NUMBER | COORD. | CL | CAT. | SIZE | TYPE | A/P | ACT. TYPE | NORM POS. | REM IND | FAIL MODE | EXAM | TEST FREQ | RELIEF REQ. | REMARKS |
|---|---|---|---|---|---|---|---|---|---|---|---|---|---|---|
| 3-0702A | E-4 | 3 | C | 16.000 | CHECK | A | S/A | NO | NO | | EC | 3 | | |
| | | | | | | | | | | | EO | 3 | | |
| 3-0702B | E-3 | 3 | C | 16.000 | CHECK | A | S/A | NO | NO | | EC | 3 | | |
| | | | | | | | | | | | EO | 3 | | |
| 3-0702C | E-2 | 3 | C | 16.000 | CHECK | A | S/A | NO | NO | | EC | 3 | | |
| | | | | | | | | | | | EO | 3 | | |
| CWST VAC BKR | C-6 | 3 | C | 2.000 | CHECK | A | S/A | NC | NO | | EC | 3 | | |
| | | | | | | | | | | | EO | 3 | | |
| RV-3-0707 | C-7 | 3 | C | 3.000 | SAFE | A | S/A | NC | NO | | S/R | 9 | | |

P & ID: 5613-M-3030-2 SYSTEM: COMPONENT COOLING WATER

| VALVE NUMBER | COORD. | CL | CAT. | SIZE | TYPE | A/P | ACT. TYPE | NORM POS. | REM IND | FAIL MODE | EXAM | TEST FREQ | RELIEF REQ. | REMARKS |
|---|---|---|---|---|---|---|---|---|---|---|---|---|---|---|
| MOV-3-0749A | F-7 | 3 | B | 16.000 | GATE | A | MO | NC | YES | FAI | TO | 3 | | |
| | | | | | | | | | | | V | 5 | | |
| MOV-3-0749B | F-7 | 3 | B | 16.000 | GATE | A | MO | NC | YES | FAI | TO | 3 | | |
| | | | | | | | | | | | V | 5 | | |

P & ID: 5613-M-3030-4 SYSTEM: COMPONENT COOLING WATER

| VALVE NUMBER | COORD. | CL | CAT. | SIZE | TYPE | A/P | ACT. TYPE | NORM POS. | REM IND | FAIL MODE | EXAM | TEST FREQ | RELIEF REQ. | REMARKS |
|---|---|---|---|---|---|---|---|---|---|---|---|---|---|---|
| CV-3-2903 | D-3 | 2 | B | 10.000 | BUTFY | P | A/O | NO | YES | FO | V | 5 | | |
| CV-3-2904 | C-3 | 2 | B | 10.000 | BUTFY | P | A/O | NO | YES | FO | V | 5 | | |
| CV-3-2905 | B-3 | 2 | B | 10.000 | BUTFY | P | A/O | NO | YES | FO | V | 5 | | |
| CV-3-2906 | G-3 | 2 | B | 10.000 | BUTFY | A | A/O | NC | YES | FO | FS | 3 | | |
| | | | | | | | | | | | TO | 3 | | |
| | | | | | | | | | | | V | 5 | | |
| CV-3-2907 | F-3 | 2 | B | 10.000 | BUTFY | A | A/O | NC | YES | FO | FS | 3 | | |
| | | | | | | | | | | | TO | 3 | | |
| | | | | | | | | | | | V | 5 | | |
| CV-3-2908 | E-3 | 2 | B | 10.000 | BUTFY | A | A/O | NC | YES | FO | FS | 3 | | |
| | | | | | | | | | | | TO | 3 | | |
| | | | | | | | | | | | V | 5 | | |

P & ID: 5613-M-3030-5 SYSTEM: COMPONENT COOLING WATER

| VALVE NUMBER | COORD. | CL | CAT. | SIZE | TYPE | A/P | ACT. TYPE | NORM POS. | REM IND | FAIL MODE | EXAM | TEST FREQ | RELIEF REQ. | REMARKS |
|---|---|---|---|---|---|---|---|---|---|---|---|---|---|---|
| 3-0721A | E-6 | 3 | C | 1.500 | CHECK | A | S/A | NO | NO | | EC | 1 | | |
| 3-0721B | A-6 | 3 | C | 1.500 | CHECK | A | S/A | NO | NO | | EC | 1 | | |
| 3-0721C | C-6 | 3 | C | 1.500 | CHECK | A | S/A | NO | NO | | EC | 1 | | |
| 3-0738 | D-3 | 2 | C | 3.000 | CHECK | A | S/A | NC | NO | | EC | 2 | | |
| CV-3-0739 | C-2 | 2 | B | 3.000 | GLOBE | A | A/O | NO | YES | FC | FS | 3 | | |
| | | | | | | | | | | | TC | 3 | | |
| | | | | | | | | | | | V | 5 | | |
| MOV-3-0626 | H-3 | 2 | B | 3.000 | GATE | A | MO | NO | YES | FAI | TC | 4 | | |
| | | | | | | | | | | | V | 5 | | |
| MOV-3-0716A | E-2 | 3 | B | 6.000 | GATE | A | MO | NO | YES | FAI | TC | 4 | | |
| | | | | | | | | | | | V | 5 | | |
| MOV-3-0716B | E-2 | 2 | B | 6.000 | GATE | A | MO | NO | YES | FAI | TC | 4 | | |
| | | | | | | | | | | | V | 5 | | |
| MOV-3-0730 | G-3 | 2 | B | 6.000 | GATE | A | MO | NO | YES | FAI | TC | 4 | | |
| | | | | | | | | | | | V | 5 | | |
| MOV-3-1417 | B-2 | 2 | B | 10.000 | GATE | A | MO | NO | YES | FAI | TC | 2 | | |
| | | | | | | | | | | | V | 5 | | |
| MOV-3-1418 | F-2 | 2 | B | 10.000 | GATE | A | MO | NO | YES | FAI | TC | 2 | | |
| | | | | | | | | | | | V | 5 | | |
| RV-3-0715 | C-3 | 3 | C | 3.000 | SAFE | A | S/A | NC | NO | | S/R | 9 | | |
| RV-3-0729 | F-7 | 3 | C | 3.000 | SAFE | A | S/A | NC | NO | | S/R | 9 | | |
| RV-3-1426 | E-4 | 3 | C | 0.750 | SAFE | A | S/A | NC | NO | | S/R | 9 | | |
| RV-3-1427 | E-4 | 3 | C | 0.750 | SAFE | A | S/A | NC | NO | | S/R | 9 | | |
| RV-3-1428 | C-4 | 3 | C | 0.750 | SAFE | A | S/A | NC | NO | | S/R | 9 | | |
| RV-3-1429 | A-4 | 3 | C | 0.750 | SAFE | A | S/A | NC | NO | | S/R | 9 | | |
| RV-3-1430 | D-4 | 3 | C | 0.750 | SAFE | A | S/A | NC | NO | | S/R | 9 | | |
| RV-3-1431 | B-4 | 3 | C | 0.750 | SAFE | A | S/A | NC | NO | | S/R | 9 | | |

P & ID: 5613-M-3032-1 SYSTEM: STEAM GENERATOR BLOWDOWN RECOVERY

| VALVE NUMBER | COORD. | CL | CAT. | SIZE | TYPE | A/P | ACT. TYPE | NORM POS. | REM IND | FAIL MODE | EXAM | TEST FREQ | RELIEF REQ. | REMARKS |
|---|---|---|---|---|---|---|---|---|---|---|---|---|---|---|
| MOV-3-1425 | D-2 | 2 | B | 1.000 | GATE | A | MO | NO | YES | FAI | TC | 3 | | |
| | | | | | | | | | | | V | 5 | | |
| MOV-3-1426 | C-2 | 2 | B | 1.000 | GATE | A | MO | NO | YES | FAI | TC | 3 | | |
| | | | | | | | | | | | V | 5 | | |
| MOV-3-1427 | B-2 | 2 | B | 1.000 | GATE | A | MO | NO | YES | FAI | TC | 3 | | |
| | | | | | | | | | | | V | 5 | | |

P & ID: 5613-M-3033-1 SYSTEM: SPENT FUEL POOL COOLING

| VALVE NUMBER | COORD. | CL | CAT. | SIZE | TYPE | A/P | ACT. TYPE | NORM POS. | REM IND | FAIL MODE | EXAM | TEST FREQ | RELIEF REQ. | REMARKS |
|---|---|---|---|---|---|---|---|---|---|---|---|---|---|---|
| 3-0911 | F-5 | 3 | C | 8.000 | CHECK | A | S/A | NO | NO | | EO | 3 | | |
| 3-0914 | E-5 | 3 | C | 8.000 | CHECK | A | S/A | NO | NO | | EO | 3 | | |

P & ID: 5613-M-3036-1 SYSTEM: SAMPLE SYSTEM - NSSS

| VALVE NUMBER | COORD. | CL | CAT. | SIZE | TYPE | A/P | ACT. TYPE | NORM POS. | REM IND | FAIL MODE | EXAM | TEST FREQ | RELIEF REQ. | REMARKS |
|---|---|---|---|---|---|---|---|---|---|---|---|---|---|---|
| CV-3-0951 | A-2 | 2 | A | 0.375 | GLOBE | A | A/O | NC | YES | FC | FS | 3 | | |
| | | | | | | | | | | | SLT-1 | 5 | | |
| | | | | | | | | | | | TC | 3 | | |
| | | | | | | | | | | | V | 5 | | |
| CV-3-0953 | B-2 | 2 | A | 0.375 | GLOBE | A | A/O | NC | YES | FC | FS | 3 | | |
| | | | | | | | | | | | SLT-1 | 5 | | |
| | | | | | | | | | | | TC | 3 | | |
| | | | | | | | | | | | V | 5 | | |
| CV-3-0955C | D-2 | 2 | A | 0.375 | GLOBE | A | A/O | NC | YES | FC | FS | 3 | | |
| | | | | | | | | | | | SLT-1 | 5 | | |
| | | | | | | | | | | | TC | 3 | | |
| | | | | | | | | | | | V | 5 | | |
| CV-3-0955D | E-2 | 2 | A | 0.375 | GLOBE | A | A/O | NC | YES | FC | FS | 3 | | |
| | | | | | | | | | | | SLT-1 | 5 | | |
| | | | | | | | | | | | TC | 3 | | |
| | | | | | | | | | | | V | 5 | | |
| CV-3-0955E | E-2 | 2 | A | 0.375 | GLOBE | A | A/O | NC | YES | FC | FS | 3 | | |
| | | | | | | | | | | | SLT-1 | 5 | | |
| | | | | | | | | | | | TC | 3 | | |
| | | | | | | | | | | | V | 5 | | |
| CV-3-0956A | A-3 | 2 | A | 0.375 | GLOBE | A | A/O | NC | YES | FC | FS | 3 | | |
| | | | | | | | | | | | SLT-1 | 5 | | |
| | | | | | | | | | | | TC | 3 | | |
| | | | | | | | | | | | V | 5 | | |
| CV-3-0956B | B-3 | 2 | A | 0.375 | GLOBE | A | A/O | NC | YES | FC | FS | 3 | | |
| | | | | | | | | | | | SLT-1 | 5 | | |
| | | | | | | | | | | | TC | 3 | | |
| | | | | | | | | | | | V | 5 | | |
| CV-3-0956D | E-3 | 2 | A | 0.375 | GLOBE | A | A/O | NC | YES | FC | FS | 3 | | |
| | | | | | | | | | | | SLT-1 | 5 | | |
| | | | | | | | | | | | TC | 3 | | |
| | | | | | | | | | | | V | 5 | | |
| SV-3-6427A | C-2 | 2 | A | 0.375 | GLOBE | A | SO | NC | YES | FC | FS | 3 | | |
| | | | | | | | | | | | SLT-1 | 5 | | |
| | | | | | | | | | | | TC | 3 | | |
| | | | | | | | | | | | V | 5 | | |

P & ID: 5613-M-3036-1 (cont) SYSTEM: SAMPLE SYSTEM - NSSS

| VALVE NUMBER | COORD. | CL | CAT. | SIZE | TYPE | A/P | ACT. TYPE | NORM POS. | REM IND | FAIL MODE | EXAM | TEST FREQ | RELIEF REQ. | REMARKS |
|---|---|---|---|---|---|---|---|---|---|---|---|---|---|---|
| SV-3-6427B | D-2 | 2 | A | 0.375 | GLOBE | A | SO | NC | YES | FC | FS | 3 | | |
| | | | | | | | | | | | SLT-1 | 5 | | |
| | | | | | | | | | | | TC | 3 | | |
| | | | | | | | | | | | V | 5 | | |
| SV-3-6428 | C-3 | 2 | A | 0.375 | GLOBE | A | SO | NC | YES | FC | FS | 3 | | |
| | | | | | | | | | | | SLT-1 | 5 | | |
| | | | | | | | | | | | TC | 3 | | |
| | | | | | | | | | | | V | 5 | | |

P & ID: 5613-M-3041-2 SYSTEM: REACTOR COOLANT (RCS)

| VALVE NUMBER | COORD. | CL | CAT. | SIZE | TYPE | A/P | ACT. TYPE | NORM POS. | REM IND | FAIL MODE | EXAM | TEST FREQ | RELIEF REQ. | REMARKS |
|---|---|---|---|---|---|---|---|---|---|---|---|---|---|---|
| CV-3-0516 | G-2 | 2 | A | 0.375 | GLOBE | A | A/O | NC | YES | FC | FS | 3 | | |
| | | | | | | | | | | | SLT-1 | 5 | | |
| | | | | | | | | | | | TC | 3 | | |
| | | | | | | | | | | | V | 5 | | |
| MOV-3-0535 | B-6 | 1 | B | 3.000 | GATE | A | MO | NO | YES | FAI | TC | 3 | | |
| | | | | | | | | | | | V | 5 | | |
| MOV-3-0536 | C-6 | 1 | B | 3.000 | GATE | A | MO | NO | YES | FAI | TC | 3 | | |
| | | | | | | | | | | | V | 5 | | |
| PCV-3-0455C | C-7 | 1 | B | 2.000 | GLOBE | A | A/O | NC | YES | FC | FS | 2 | | |
| | | | | | | | | | | | TC | 2 | | |
| | | | | | | | | | | | TO | 2 | | |
| | | | | | | | | | | | V | 5 | | |
| PCV-3-0456 | B-7 | 1 | B | 2.000 | GLOBE | A | A/O | NC | YES | FC | FS | 2 | | |
| | | | | | | | | | | | TC | 2 | | |
| | | | | | | | | | | | TO | 2 | | |
| | | | | | | | | | | | V | 5 | | |
| RV-3-0551A | B-5 | 1 | C | 4.000 | SAFE | A | S/A | NC | NO | | S/R | 8 | | |
| RV-3-0551B | C-4 | 1 | C | 4.000 | SAFE | A | S/A | NC | NO | | S/R | 8 | | |
| RV-3-0551C | C-3 | 1 | C | 4.000 | SAFE | A | S/A | NC | NO | | S/R | 8 | | |
| SV-3-6318A | E-7 | 2 | B | 1.000 | GLOBE | A | SO | LC | YES | FC | TO | 4 | | |
| | | | | | | | | | | | V | 5 | | |
| SV-3-6318B | E-7 | 2 | B | 1.000 | GLOBE | A | SO | LC | YES | FC | TO | 4 | | |
| | | | | | | | | | | | V | 5 | | |
| SV-3-6385 | G-2 | 2 | A | 0.375 | GLOBE | A | SO | NC | YES | FC | FS | 3 | | |
| | | | | | | | | | | | SLT-1 | 5 | | |
| | | | | | | | | | | | TC | 3 | | |
| | | | | | | | | | | | V | 5 | | |
| SV-3-6611 | F-7 | 2 | B | 1.000 | GLOBE | A | SO | LC | YES | FC | TO | 4 | | |
| | | | | | | | | | | | V | 5 | | |
| SV-3-6612 | F-6 | 2 | B | 1.000 | GLOBE | A | SO | LC | YES | FC | TO | 4 | | |
| | | | | | | | | | | | V | 5 | | |

P & ID: 5613-M-3041-3 SYSTEM: RCS - REACTOR COOLANT PUMPS

| VALVE NUMBER | COORD. | CL | CAT. | SIZE | TYPE | A/P | ACT. TYPE | NORM POS. | REM IND | FAIL MODE | EXAM | TEST FREQ | RELIEF REQ. | REMARKS |
|---|---|---|---|---|---|---|---|---|---|---|---|---|---|---|
| CV-3-0519A | A-8 | 2 | A | 3.000 | DIAPH | A | A/O | NC | YES | FC | FS | 3 | | |
| | | | | | | | | | | | SLT-1 | 5 | | |
| | | | | | | | | | | | TC | 3 | | |
| | | | | | | | | | | | V | 5 | | |
| CV-3-0519B | A-3 | 2 | A | 3.000 | DIAPH | A | A/O | NC | YES | FC | FS | 3 | | |
| | | | | | | | | | | | SLT-1 | 5 | | |
| | | | | | | | | | | | TC | 3 | | |
| | | | | | | | | | | | V | 5 | | |
| CV-3-0522A | B-7 | 2 | A | 0.750 | DIAPH | A | A/O | NC | YES | FC | FS | 3 | | |
| | | | | | | | | | | | SLT-1 | 5 | | |
| | | | | | | | | | | | TC | 3 | | |
| | | | | | | | | | | | V | 5 | | |
| CV-3-0522B | B-7 | 2 | A | 0.750 | DIAPH | A | A/O | NC | YES | FC | FS | 3 | | |
| | | | | | | | | | | | SLT-1 | 5 | | |
| | | | | | | | | | | | TC | 3 | | |
| | | | | | | | | | | | V | 5 | | |
| CV-3-0522C | C-7 | 2 | A | 0.750 | DIAPH | A | A/O | NC | YES | FC | FS | 3 | | |
| | | | | | | | | | | | SLT-1 | 5 | | |
| | | | | | | | | | | | TC | 3 | | |
| | | | | | | | | | | | V | 5 | | |

P & ID: 5613-M-3047-1 SYSTEM: CVCS - CHARGING AND LETDOWN

| VALVE NUMBER | COORD. | CL | CAT. | SIZE | TYPE | A/P | ACT. TYPE | NORM POS. | REM IND | FAIL MODE | EXAM | TEST FREQ | RELIEF REQ. | REMARKS |
|---|---|---|---|---|---|---|---|---|---|---|---|---|---|---|
| CV-3-0200A | A-2 | 1 | A | 2.000 | GLOBE | A | A/O | NO | YES | FC | FS | 3 | | |
| | | | | | | | | | | | SLT-1 | 5 | | |
| | | | | | | | | | | | TC | 3 | | |
| | | | | | | | | | | | V | 5 | | |
| CV-3-0200B | B-2 | 1 | A | 2.000 | GLOBE | A | A/O | NO | YES | FC | FS | 3 | | |
| | | | | | | | | | | | SLT-1 | 5 | | |
| | | | | | | | | | | | TC | 3 | | |
| | | | | | | | | | | | V | 5 | | |
| CV-3-0200C | C-2 | 1 | A | 2.000 | GLOBE | A | A/O | NO | YES | FC | FS | 3 | | |
| | | | | | | | | | | | SLT-1 | 5 | | |
| | | | | | | | | | | | TC | 3 | | |
| | | | | | | | | | | | V | 5 | | |
| CV-3-0204 | C-4 | 2 | A | 2.000 | GLOBE | A | A/O | NO | YES | FC | FS | 2 | | |
| | | | | | | | | | | | SLT-1 | 5 | | |
| | | | | | | | | | | | TC | 2 | | |
| | | | | | | | | | | | V | 5 | | |
| RV-3-0203 | A-3 | 2 | A/C | 2.000 | SAFE | A | S/A | NC | NO | | S/R | 9 | | |
| | | | | | | | | | | | SLT-1 | 5 | | |

P & ID: 5613-M-3047-2 SYSTEM: CVCS - CHARGING AND LETDOWN

| VALVE NUMBER | COORD. | CL | CAT. | SIZE | TYPE | A/P | ACT. TYPE | NORM POS. | REM IND | FAIL MODE | EXAM | TEST FREQ | RELIEF REQ. | REMARKS |
|---|---|---|---|---|---|---|---|---|---|---|---|---|---|---|
| 3-0312A | C-8 | 1 | C | 3.000 | CHECK | A | S/A | NO | NO | | EO | 3 | | |
| 3-0312B | A-8 | 1 | C | 3.000 | CHECK | A | S/A | NC | NO | | EO | 3 | | |
| 3-0312C | E-7 | 1 | C | 3.000 | CHECK | A | S/A | NO | NO | | EC | 5 | | |
| | | | | | | | | | | | EO | 3 | | |
| 3-0351 | F-1 | 2 | C | 2.000 | CHECK | A | S/A | NC | NO | | EO | 1 | | |
| 3-0357 | F-3 | 2 | C | 4.000 | CHECK | A | S/A | NC | NO | | EO | 2 | | |
| CV-3-0310A | C-7 | 1 | B | 3.000 | GLOBE | A | A/O | NO | YES | FO | FS | 3 | | |
| | | | | | | | | | | | TO | 3 | | |
| | | | | | | | | | | | V | 5 | | |
| CV-3-0310B | A-7 | 1 | B | 3.000 | GLOBE | A | A/O | NC | YES | FO | FS | 3 | | |
| | | | | | | | | | | | TO | 3 | | |
| | | | | | | | | | | | V | 5 | | |
| HCV-3-0121 | F-7 | 2 | B | 3.000 | GLOBE | A | A/O | NO | NO | FO | FS | 2 | | |
| | | | | | | | | | | | TO | 2 | | |
| LCV-3-0115B | F-4 | 2 | B | 4.000 | BUTFY | A | A/O | NC | YES | FC | TO | 2 | | |
| | | | | | | | | | | | V | 5 | | |
| LCV-3-0115C | C-4 | 2 | B | 4.000 | GATE | A | MO | NO | YES | FAI | TC | 2 | | |
| | | | | | | | | | | | V | 5 | | |
| MOV-3-0350 | F-1 | 2 | B | 2.000 | GATE | A | MO | NC | YES | FAI | TO | 3 | | |
| | | | | | | | | | | | V | 5 | | |
| RV-3-0283A | G-5 | 2 | C | 0.750 | SAFE | A | SA | NC | NO | | S/R | 9 | | |
| RV-3-0283B | E-5 | 2 | C | 0.750 | SAFE | A | SA | NC | NO | | S/R | 9 | | |
| RV-3-0283C | C-5 | 2 | C | 0.750 | SAFE | A | SA | NC | NO | | S/R | 9 | | |

P & ID: 5613-M-3047-3 SYSTEM: CVCS - SEAL WATER INJECTION TO RCP

| VALVE NUMBER | COORD. | CL | CAT. | SIZE | TYPE | A/P | ACT. TYPE | NORM POS. | REM IND | FAIL MODE | EXAM | TEST FREQ | RELIEF REQ. | REMARKS |
|---|---|---|---|---|---|---|---|---|---|---|---|---|---|---|
| 3-0298A | F-4 | 1 | C | 2.000 | CHECK | A | S/A | NO | NO | | EC | 1 | | |
| 3-0298B | B-4 | 1 | C | 2.000 | CHECK | A | S/A | NO | NO | | EC | 1 | | |
| 3-0298C | D-4 | 1 | C | 2.000 | CHECK | A | S/A | NO | NO | | EC | 1 | | |
| MOV-3-0381 | H-3 | 2 | A | 3.000 | GATE | A | MO | NO | YES | FAI | SLT-1 | 5 | | |
| | | | | | | | | | | | TC | 4 | | |
| | | | | | | | | | | | V | 5 | | |
| MOV-3-6386 | H-4 | 2 | A | 3.000 | GATE | A | MO | NO | YES | FAI | SLT-1 | 5 | | |
| | | | | | | | | | | | TC | 4 | | |
| | | | | | | | | | | | V | 5 | | |

P & ID: 5613-M-3050-1 SYSTEM: RESIDUAL HEAT REMOVAL

| VALVE NUMBER | COORD. | CL | CAT. | SIZE | TYPE | A/P | ACT. TYPE | NORM POS. | REM IND | FAIL MODE | EXAM | TEST FREQ | RELIEF REQ. | REMARKS |
|---|---|---|---|---|---|---|---|---|---|---|---|---|---|---|
| 3-0741A | D-7 | 2 | B | 2.000 | GATE | A | MAN | NC | NO | | EC | 3 | | |
| | | | | | | | | | | | EO | 3 | | |
| 3-0752A | C-2 | 2 | B | 14.000 | GATE | A | MAN | NO | NO | | EC | 3 | | |
| | | | | | | | | | | | EO | 3 | | |
| 3-0752B | E-2 | 2 | B | 14.000 | GATE | A | MAN | NO | NO | | EC | 3 | | |
| | | | | | | | | | | | EO | 3 | | |
| 3-0753A | C-4 | 2 | C | 10.000 | CHECK | A | S/A | NC | NO | | EC | 2 | | |
| | | | | | | | | | | | EO | 2 | | |
| | | | | | | | | | | | PEO | 3 | | |
| 3-0753B | E-4 | 2 | C | 10.000 | CHECK | A | S/A | NC | NO | | EC | 2 | | |
| | | | | | | | | | | | EO | 2 | | |
| | | | | | | | | | | | PEO | 3 | | |
| 3-2052 | A-7 | 2 | C | 1.000 | CHECK | A | S/A | NC | NO | | EO | 1 | | |
| MOV-3-0750 | F-8 | 1 | A | 14.000 | GATE | A | MO | LC | YES | FAI | SLT-2 | 5 | | |
| | | | | | | | | | | | TC | 2 | | |
| | | | | | | | | | | | TO | 2 | | |
| | | | | | | | | | | | V | 5 | | |
| MOV-3-0751 | F-7 | 1 | A | 14.000 | GATE | A | MO | LC | YES | FAI | SLT-2 | 5 | | |
| | | | | | | | | | | | TC | 2 | | |
| | | | | | | | | | | | TO | 2 | | |
| | | | | | | | | | | | V | 5 | | |
| MOV-3-0860A | A-6 | 2 | B | 14.000 | GATE | A | MO | NC | YES | FAI | TO | 3 | | |
| | | | | | | | | | | | V | 5 | | |
| MOV-3-0860B | B-6 | 2 | B | 14.000 | GATE | A | MO | NC | YES | FAI | TO | 3 | | |
| | | | | | | | | | | | V | 5 | | |
| MOV-3-0861A | A-5 | 2 | B | 14.000 | GATE | A | MO | NC | YES | FAI | TO | 3 | | |
| | | | | | | | | | | | V | 5 | | |
| MOV-3-0861B | B-5 | 2 | B | 14.000 | GATE | A | MO | NC | YES | FAI | TO | 3 | | |
| | | | | | | | | | | | V | 5 | | |
| MOV-3-0862A | E-1 | 2 | B | 14.000 | GATE | A | MO | LO | YES | FAI | TC | 2 | | |
| | | | | | | | | | | | V | 5 | | |

P & ID: 5613-M-3050-1 (cont) SYSTEM: RESIDUAL HEAT REMOVAL

| VALVE NUMBER | COORD. | CL | CAT. | SIZE | TYPE | A/P | ACT. TYPE | NORM POS. | REM IND | FAIL MODE | EXAM | TEST FREQ | RELIEF REQ. | REMARKS |
|---|---|---|---|---|---|---|---|---|---|---|---|---|---|---|
| MOV-3-0862B | D-1 | 2 | B | 14.000 | GATE | A | MO | LO | YES | FAI | TC<br>V | 2<br>5 | | |
| MOV-3-0863A | F-5 | 2 | B | 8.000 | GATE | A | MO | LC | YES | FAI | TO<br>V | 2<br>5 | | |
| MOV-3-0863B | F-5 | 2 | B | 8.000 | GATE | A | MO | LC | YES | FAI | TO<br>V | 2<br>5 | | |
| MOV-3-0872 | G-6 | 2 | B | 8.000 | GATE | P | MO | NC | YES | FAI | V | 5 | | |

P & ID: 5613-M-3053-1 SYSTEM: CONTAINMENT PURGE AND PENETRATION CLG

| VALVE NUMBER | COORD. | CL | CAT. | SIZE | TYPE | A/P | ACT. TYPE | NORM POS. | REM IND | FAIL MODE | EXAM | TEST FREQ | RELIEF REQ. | REMARKS |
|---|---|---|---|---|---|---|---|---|---|---|---|---|---|---|
| 3-2024 | H-6 | 2 | A | 0.375 | GATE | P | MAN | NC | NO | | SLT-1 | 5 | | |
| 3-2025 | A-6 | 2 | A | 0.375 | GLOBE | P | MAN | NC | NO | | SLT-1 | 5 | | |
| 3-2026 | B-6 | 2 | A | 0.375 | GLOBE | P | MAN | NC | NO | | SLT-1 | 5 | | |
| CV-3-2819 | E-7 | 2 | A | 2.000 | GLOBE | A | A/O | NO | YES | FC | FS | 3 | | |
| | | | | | | | | | | | SLT-1 | 5 | | |
| | | | | | | | | | | | TC | 3 | | |
| | | | | | | | | | | | V | 5 | | |
| CV-3-2826 | E-6 | 2 | A | 2.000 | GLOBE | A | A/O | NO | YES | FC | FS | 3 | | |
| | | | | | | | | | | | SLT-1 | 5 | | |
| | | | | | | | | | | | TC | 3 | | |
| | | | | | | | | | | | V | 5 | | |
| POV-3-2600 | C-6 | 2 | A | 48.000 | BUTFY | A | A/O | NC | YES | FC | FS | 2 | | |
| | | | | | | | | | | | SLT-1 | 5 | | |
| | | | | | | | | | | | TC | 2 | | |
| | | | | | | | | | | | V | 5 | | |
| POV-3-2601 | C-7 | 2 | A | 48.000 | BUTFY | A | A/O | NC | YES | FC | FS | 2 | | |
| | | | | | | | | | | | SLT-1 | 5 | | |
| | | | | | | | | | | | TC | 2 | | |
| | | | | | | | | | | | V | 5 | | |
| POV-3-2602 | D-6 | 2 | A | 54.000 | BUTFY | A | A/O | NC | YES | FC | FS | 2 | | |
| | | | | | | | | | | | SLT-1 | 5 | | |
| | | | | | | | | | | | TC | 2 | | |
| | | | | | | | | | | | V | 5 | | |
| POV-3-2603 | D-7 | 2 | A | 54.000 | BUTFY | A | A/O | NC | YES | FC | FS | 2 | | |
| | | | | | | | | | | | SLT-1 | 5 | | |
| | | | | | | | | | | | TC | 2 | | |
| | | | | | | | | | | | V | 5 | | |

P & ID: 5613-M-3061-1 SYSTEM: WASTE DISPOSAL LIQUID - RCDT AND PUMPS

| VALVE NUMBER | COORD. | CL | CAT. | SIZE | TYPE | A/P | ACT. TYPE | NORM POS. | REM IND | FAIL MODE | EXAM | TEST FREQ | RELIEF REQ. | REMARKS |
|---|---|---|---|---|---|---|---|---|---|---|---|---|---|---|
| CV-3-2821 | H-6 | 2 | A | 3.000 | GLOBE | A | A/O | NO | YES | FC | FS | 3 | | |
| | | | | | | | | | | | SLT-1 | 5 | | |
| | | | | | | | | | | | TC | 3 | | |
| | | | | | | | | | | | V | 5 | | |
| CV-3-2822 | H-5 | 2 | A | 3.000 | GLOBE | A | A/O | NO | YES | FC | FS | 3 | | |
| | | | | | | | | | | | SLT-1 | 5 | | |
| | | | | | | | | | | | TC | 3 | | |
| | | | | | | | | | | | V | 5 | | |
| CV-3-4658A | B-6 | 2 | A | 1.000 | DIAPH | A | A/O | NO | YES | FC | FS | 3 | | |
| | | | | | | | | | | | SLT-1 | 5 | | |
| | | | | | | | | | | | TC | 3 | | |
| | | | | | | | | | | | V | 5 | | |
| CV-3-4658B | B-6 | 2 | A | 1.000 | DIAPH | A | A/O | NO | YES | FC | FS | 3 | | |
| | | | | | | | | | | | SLT-1 | 5 | | |
| | | | | | | | | | | | TC | 3 | | |
| | | | | | | | | | | | V | 5 | | |
| CV-3-4659A | D-6 | 2 | A | 0.750 | DIAPH | A | A/O | NO | YES | FC | FS | 3 | | |
| | | | | | | | | | | | SLT-1 | 5 | | |
| | | | | | | | | | | | TC | 3 | | |
| | | | | | | | | | | | V | 5 | | |
| CV-3-4659B | D-6 | 2 | A | 0.750 | DIAPH | A | A/O | NO | YES | FC | FS | 3 | | |
| | | | | | | | | | | | SLT-1 | 5 | | |
| | | | | | | | | | | | TC | 3 | | |
| | | | | | | | | | | | V | 5 | | |
| CV-3-4668A | G-5 | 2 | A | 3.000 | DIAPH | A | A/O | NO | YES | FC | FS | 3 | | |
| | | | | | | | | | | | SLT-1 | 5 | | |
| | | | | | | | | | | | TC | 3 | | |
| | | | | | | | | | | | V | 5 | | |
| CV-3-4668B | G-6 | 2 | A | 3.000 | DIAPH | A | A/O | NO | YES | FC | FS | 3 | | |
| | | | | | | | | | | | SLT-1 | 5 | | |
| | | | | | | | | | | | TC | 3 | | |
| | | | | | | | | | | | V | 5 | | |

P & ID: 5613-M-3062-1 SYSTEM: SAFETY INJECTION

| VALVE NUMBER | COORD. | CL | CAT. | SIZE | TYPE | A/P | ACT. TYPE | NORM POS. | REM IND | FAIL MODE | EXAM | TEST FREQ | RELIEF REQ. | REMARKS |
|---|---|---|---|---|---|---|---|---|---|---|---|---|---|---|
| 3-0874A | C-7 | 1 | A/C | 2.000 | CHECK | A | S/A | NC | NO | | EC | 7 | VR-2 | |
| | | | | | | | | | | | EO | 1 | | |
| | | | | | | | | | | | SLT-2 | 5 | | |
| 3-0874B | F-7 | 1 | A/C | 2.000 | CHECK | A | S/A | NC | NO | | EC | 7 | VR-2 | |
| | | | | | | | | | | | EO | 1 | | |
| | | | | | | | | | | | SLT-2 | 5 | | |
| 3-0874C | F-2 | 2 | C | 2.000 | CHECK | A | S/A | NC | NO | | EO | 3 | | |
| 3-0879A | G-5 | 2 | C | 3.000 | CHECK | A | S/A | NC | NO | | EC | 3 | | |
| | | | | | | | | | | | EO | 1 | | |
| | | | | | | | | | | | PEO | 3 | | |
| 3-0879B | D-4 | 2 | C | 3.000 | CHECK | A | S/A | NC | NO | | EC | 3 | | |
| | | | | | | | | | | | EO | 1 | | |
| | | | | | | | | | | | PEO | 3 | | |
| 3-0893A | F-4 | 2 | C | 0.750 | CHECK | A | S/A | NC | NO | | EO | 3 | | |
| 3-0893B | E-4 | 2 | C | 0.750 | CHECK | A | S/A | NC | NO | | EO | 3 | | |
| MOV-0878A | D-5 | 2 | B | 4.000 | GATE | A | MO | NO | YES | FAI | TC | 2 | | |
| | | | | | | | | | | | V | 5 | | |
| MOV-0878B | D-5 | 2 | B | 4.000 | GATE | A | MO | NO | YES | FAI | TC | 2 | | |
| | | | | | | | | | | | V | 5 | | |
| MOV-3-0856A | B-1 | 2 | B | 2.000 | GLOBE | A | MO | NO | YES | FAI | TC | 2 | | |
| | | | | | | | | | | | V | 5 | | |
| MOV-3-0856B | B-2 | 2 | B | 2.000 | GLOBE | A | MO | NO | YES | FAI | TC | 2 | | |
| | | | | | | | | | | | V | 5 | | |
| MOV-3-0864A | B-4 | 2 | B | 16.000 | GATE | A | MO | LO | YES | FAI | TC | 2 | | |
| | | | | | | | | | | | V | 5 | | |
| MOV-3-0864B | B-4 | 2 | B | 16.000 | GATE | A | MO | LO | YES | FAI | TC | 2 | | |
| | | | | | | | | | | | V | 5 | | |
| MOV-3-0866A | D-7 | 1 | B | 2.000 | GLOBE | A | MO | LC | YES | FAI | TC | 2 | | |
| | | | | | | | | | | | TO | 2 | | |
| | | | | | | | | | | | V | 5 | | |

P & ID: 5613-M-3062-1 (cont) SYSTEM: SAFETY INJECTION

| VALVE NUMBER | COORD. | CL | CAT. | SIZE | TYPE | A/P | ACT. TYPE | NORM POS. | REM IND | FAIL MODE | EXAM | TEST FREQ | RELIEF REQ. | REMARKS |
|---|---|---|---|---|---|---|---|---|---|---|---|---|---|---|
| MOV-3-0866B | F-7 | 1 | B | 2.000 | GLOBE | A | MO | LC | YES | FAI | TC | 2 | | |
| | | | | | | | | | | | TO | 2 | | |
| | | | | | | | | | | | V | 5 | | |
| MOV-3-0869 | E-6 | 2 | B | 3.000 | GATE | A | MO | NC | YES | FAI | TC | 3 | | |
| | | | | | | | | | | | TO | 3 | | |
| | | | | | | | | | | | V | 5 | | |
| RV-3-6511 | E-8 | 2 | C | 0.250 | SAFE | A | S/A | NC | NO | | S/R | 9 | | |

P & ID: 5613-M-3062-2 SYSTEM: SAFETY INJECTION

| VALVE NUMBER | COORD. | CL | CAT. | SIZE | TYPE | A/P | ACT. TYPE | NORM POS. | REM IND | FAIL MODE | EXAM | TEST FREQ | RELIEF REQ. | REMARKS |
|---|---|---|---|---|---|---|---|---|---|---|---|---|---|---|
| MOV-3-0843A | B-6 | 2 | B | 4.000 | GATE | A | MO | NC | YES | FAI | TC | 3 | | |
| | | | | | | | | | | | TO | 3 | | |
| | | | | | | | | | | | V | 5 | | |
| MOV-3-0843B | C-6 | 2 | B | 4.000 | GATE | A | MO | NC | YES | FAI | TC | 3 | | |
| | | | | | | | | | | | TO | 3 | | |
| | | | | | | | | | | | V | 5 | | |
| RV-3-0857 | D-4 | 2 | C | 0.750 | SAFE | A | S/A | NC | NO | | S/R | 9 | | |

P & ID: 5613-M-3064-1 SYSTEM: SAFETY INJECTION ACCUMULATOR INSIDE CTMT

| VALVE NUMBER | COORD. | CL | CAT. | SIZE | TYPE | A/P | ACT. TYPE | NORM POS. | REM IND | FAIL MODE | EXAM | TEST FREQ | RELIEF REQ. | REMARKS |
|---|---|---|---|---|---|---|---|---|---|---|---|---|---|---|
| 3-0873A | B-2 | 1 | A/C | 2.000 | CHECK | A | S/A | NC | NO | | EC | 7 | VR-2 | |
| | | | | | | | | | | | EO | 1 | | |
| | | | | | | | | | | | SLT-2 | 5 | | |
| 3-0873B | B-2 | 1 | A/C | 2.000 | CHECK | A | S/A | NC | NO | | EC | 7 | VR-2 | |
| | | | | | | | | | | | EO | 1 | | |
| | | | | | | | | | | | SLT-2 | 5 | | |
| 3-0873C | B-2 | 1 | A/C | 2.000 | CHECK | A | S/A | NC | NO | | EC | 7 | VR-2 | |
| | | | | | | | | | | | EO | 1 | | |
| | | | | | | | | | | | SLT-2 | 5 | | |
| 3-0875A | D-8 | 1 | A/C | 10.000 | CHECK | A | S/A | NC | NO | | EC | 7 | | |
| | | | | | | | | | | | EO | 1 | | |
| | | | | | | | | | | | PEO | 2 | | |
| | | | | | | | | | | | SLT-2 | 5 | | |
| 3-0875B | E-8 | 1 | A/C | 10.000 | CHECK | A | S/A | NC | NO | | EC | 7 | | |
| | | | | | | | | | | | EO | 1 | | |
| | | | | | | | | | | | PEO | 2 | | |
| | | | | | | | | | | | SLT-2 | 5 | | |
| 3-0875C | E-8 | 1 | C | 10.000 | CHECK | A | S/A | NC | NO | | EC | 7 | | |
| | | | | | | | | | | | EO | 1 | | |
| | | | | | | | | | | | PEO | 2 | | |
| | | | | | | | | | | | SLT-2 | 5 | | |
| 3-0875D | G-7 | 1 | C | 10.000 | CHECK | A | S/A | NC | NO | | EC | 1 | | |
| | | | | | | | | | | | EO | 1 | | |
| 3-0875E | G-5 | 1 | C | 10.000 | CHECK | A | S/A | NC | NO | | EC | 1 | | |
| | | | | | | | | | | | EO | 1 | | |
| 3-0875F | G-3 | 1 | C | 10.000 | CHECK | A | S/A | NC | NO | | EC | 1 | | |
| | | | | | | | | | | | EO | 1 | | |
| 3-0876A | H-7 | 1 | A/C | 8.000 | CHECK | A | S/A | NC | NO | | EC | 7 | | |
| | | | | | | | | | | | EO | 2 | | |
| | | | | | | | | | | | SLT-2 | 5 | | |
| 3-0876B | G-5 | 1 | A/C | 8.000 | CHECK | A | S/A | NC | NO | | EC | 7 | | |
| | | | | | | | | | | | EO | 1 | | |
| | | | | | | | | | | | PEO | 2 | | |
| | | | | | | | | | | | SLT-2 | 5 | | |

P & ID: 5613-M-3064-1 (cont) SYSTEM: SAFETY INJECTION ACCUMULATOR INSIDE CTMT

| VALVE NUMBER | COORD. | CL | CAT. | SIZE | TYPE | A/P | ACT. TYPE | NORM POS. | REM IND | FAIL MODE | EXAM | TEST FREQ | RELIEF REQ. | REMARKS |
|---|---|---|---|---|---|---|---|---|---|---|---|---|---|---|
| 3-0876C | G-3 | 1 | A/C | 8.000 | CHECK | A | S/A | NC | NO | | EC | 7 | | |
| | | | | | | | | | | | EO | 1 | | |
| | | | | | | | | | | | PEO | 2 | | |
| | | | | | | | | | | | SLT-2 | 5 | | |
| 3-0876D | G-5 | 1 | A/C | 8.000 | CHECK | P | S/A | NC | NO | | SLT-2 | 5 | | |
| 3-0876E | G-3 | 1 | A/C | 8.000 | CHECK | P | S/A | NC | NO | | SLT-2 | 5 | | |
| 3-0945E | C-2 | 2 | A/C | 1.000 | S/CHK | A | S/A | NC | NO | | EC | 1 | | |
| | | | | | | | | | | | SLT-1 | 5 | | |
| CV-3-0850A | F-7 | 2 | B | 0.750 | GLOBE | P | A/O | NC | YES | FC | V | 5 | | |
| CV-3-0850B | F-7 | 2 | B | 0.750 | GLOBE | P | A/O | NC | YES | FC | V | 5 | | |
| CV-3-0850C | F-5 | 2 | B | 0.750 | GLOBE | P | A/O | NC | YES | FC | V | 5 | | |
| CV-3-0850D | F-5 | 2 | B | 0.750 | GLOBE | P | A/O | NC | YES | FC | V | 5 | | |
| CV-3-0850E | F-3 | 2 | B | 0.750 | GLOBE | P | A/O | NC | YES | FC | V | 5 | | |
| CV-3-0850F | F-3 | 2 | B | 0.750 | GLOBE | P | A/O | NC | YES | FC | V | 5 | | |
| CV-3-0851A | C-7 | 2 | B | 1.000 | GLOBE | A | A/O | NC | YES | FC | FS | 3 | | |
| | | | | | | | | | | | TC | 3 | | |
| | | | | | | | | | | | V | 5 | | |
| CV-3-0851B | C-5 | 2 | B | 1.000 | GLOBE | A | A/O | NC | YES | FC | FS | 3 | | |
| | | | | | | | | | | | TC | 3 | | |
| | | | | | | | | | | | V | 5 | | |
| CV-3-0851C | C-3 | 2 | B | 1.000 | GLOBE | A | A/O | NC | YES | FC | FS | 3 | | |
| | | | | | | | | | | | TC | 3 | | |
| | | | | | | | | | | | V | 5 | | |
| CV-3-0852A | F-6 | 2 | B | 0.750 | GLOBE | P | A/O | NC | YES | FC | V | 5 | | |
| CV-3-0852B | F-4 | 2 | B | 0.750 | GLOBE | P | A/O | NC | YES | FC | V | 5 | | |
| CV-3-0852C | F-2 | 2 | B | 0.750 | GLOBE | P | A/O | NC | YES | FC | V | 5 | | |
| CV-3-0853A | C-6 | 2 | B | 1.000 | GLOBE | A | A/O | NC | YES | FC | FS | 3 | | |
| | | | | | | | | | | | TC | 3 | | |
| | | | | | | | | | | | V | 5 | | |

P & ID: 5613-M-3064-1 (cont) SYSTEM: SAFETY INJECTION ACCUMULATOR INSIDE CTMT

| VALVE NUMBER | COORD. | CL | CAT. | SIZE | TYPE | A/P | ACT. TYPE | NORM POS. | REM IND | FAIL MODE | EXAM | TEST FREQ | RELIEF REQ. | REMARKS |
|---|---|---|---|---|---|---|---|---|---|---|---|---|---|---|
| CV-3-0853B | C-4 | 2 | B | 1.000 | GLOBE | A | A/O | NC | YES | FC | FS | 3 | | |
| | | | | | | | | | | | TC | 3 | | |
| | | | | | | | | | | | V | 5 | | |
| CV-3-0853C | C-2 | 2 | B | 1.000 | GLOBE | A | A/O | NC | YES | FC | FS | 3 | | |
| | | | | | | | | | | | TC | 3 | | |
| | | | | | | | | | | | V | 5 | | |
| MOV-3-0744A | H-3 | 2 | B | 10.000 | GATE | A | MO | NC | YES | FAI | TC | 2 | | |
| | | | | | | | | | | | TO | 2 | | |
| | | | | | | | | | | | V | 5 | | |
| MOV-3-0744B | G-3 | 2 | B | 10.000 | GATE | A | MO | NC | YES | FAI | TC | 2 | | |
| | | | | | | | | | | | TO | 2 | | |
| | | | | | | | | | | | V | 5 | | |
| MOV-3-0865A | F-6 | 2 | B | 10.000 | GATE | A | MO | LO | YES | FAI | TC | 2 | | |
| | | | | | | | | | | | V | 5 | | |
| MOV-3-0865B | F-4 | 2 | B | 10.000 | GATE | A | MO | LO | YES | FAI | TC | 2 | | |
| | | | | | | | | | | | V | 5 | | |
| MOV-3-0865C | F-2 | 2 | B | 10.000 | GATE | A | MO | LO | YES | FAI | TC | 2 | | |
| | | | | | | | | | | | V | 5 | | |
| RV-3-0706 | G-2 | 2 | C | 2.000 | SAFE | A | S/A | NC | NO | | S/R | 9 | | |
| RV-3-0858A | D-6 | 2 | C | 2.000 | SAFE | A | S/A | NC | NO | | S/R | 9 | | |
| RV-3-0858B | D-4 | 2 | C | 2.000 | SAFE | A | S/A | NC | NO | | S/R | 9 | | |
| RV-3-0858C | D-2 | 2 | C | 2.000 | SAFE | A | S/A | NC | NO | | S/R | 9 | | |
| RV-3-0859 | A-2 | 2 | C | 0.750 | SAFE | A | S/A | NC | NO | | S/R | 9 | | |

P & ID: 5613-M-3068-1 SYSTEM: CONTAINMENT SPRAY

| VALVE NUMBER | COORD. | CL | CAT. | SIZE | TYPE | A/P | ACT. TYPE | NORM POS. | REM IND | FAIL MODE | EXAM | TEST FREQ | RELIEF REQ. | REMARKS |
|---|---|---|---|---|---|---|---|---|---|---|---|---|---|---|
| 3-0883M | C-5 | 2 | A | 1.000 | GLOBE | P | MAN | NC | NO | | SLT-1 | 5 | | |
| 3-0883N | E-5 | 2 | A | 1.000 | GLOBE | P | MAN | NC | NO | | SLT-1 | 5 | | |
| 3-0890A | D-5 | 2 | A/C | 6.000 | CHECK | A | S/A | NC | NO | | EC | 5 | | |
| | | | | | | | | | | | INSP | 7 | VR-1 | |
| | | | | | | | | | | | PEO | 7 | VR-1 | |
| | | | | | | | | | | | SLT-1 | 5 | | |
| 3-0890B | G-5 | 2 | A/C | 6.000 | CHECK | A | S/A | NC | NO | | EC | 5 | | |
| | | | | | | | | | | | INSP | 7 | VR-1 | |
| | | | | | | | | | | | PEO | 7 | VR-1 | |
| | | | | | | | | | | | SLT-1 | 5 | | |
| MOV-3-0880A | D-5 | 2 | A | 6.000 | GATE | A | MO | NC | YES | FAI | SLT-1 | 5 | | |
| | | | | | | | | | | | TC | 3 | | |
| | | | | | | | | | | | TO | 3 | | |
| | | | | | | | | | | | V | 5 | | |
| MOV-3-0880B | G-5 | 2 | A | 6.000 | GATE | A | MO | NC | YES | FAI | SLT-1 | 5 | | |
| | | | | | | | | | | | TC | 3 | | |
| | | | | | | | | | | | TO | 3 | | |
| | | | | | | | | | | | V | 5 | | |
| RV-3-0871 | C-2 | 2 | C | 0.750 | SAFE | A | SA | NC | NO | | S/R | 9 | | |

P & ID: 5613-M-3072-1 SYSTEM: MAIN STEAM

| VALVE NUMBER | COORD. | CL | CAT. | SIZE | TYPE | A/P | ACT. TYPE | NORM POS. | REM IND | FAIL MODE | EXAM | TEST FREQ | RELIEF REQ. | REMARKS |
|---|---|---|---|---|---|---|---|---|---|---|---|---|---|---|
| 3-10-0004 | G-6 | NC | C | 26.000 | S/CHK | A | S/A | NO | NO | | EC | 2 | | NOTE 4 |
| | | | | | | | | | | | INSP | 7 | | |
| 3-10-0005 | E-6 | NC | C | 26.000 | S/CHK | A | S/A | NO | NO | | EC | 2 | | NOTE 4 |
| | | | | | | | | | | | INSP | 7 | | |
| 3-10-0006 | B-6 | NC | C | 26.000 | S/CHK | A | S/A | NO | NO | | EC | 2 | | NOTE 4 |
| | | | | | | | | | | | INSP | 7 | | |
| CV-3-1606 | F-4 | 2 | B | 6.000 | GLOBE | A | A/O | NC | YES | FC | FS | 2 | | |
| | | | | | | | | | | | TC | 2 | | |
| | | | | | | | | | | | TO | 2 | | |
| CV-3-1607 | D-4 | 2 | B | 6.000 | GLOBE | A | A/O | NC | YES | FC | FS | 2 | | |
| | | | | | | | | | | | TC | 2 | | |
| | | | | | | | | | | | TO | 2 | | |
| CV-3-1608 | B-4 | 2 | B | 6.000 | GLOBE | A | A/O | NC | YES | FC | FS | 2 | | |
| | | | | | | | | | | | TC | 2 | | |
| | | | | | | | | | | | TO | 2 | | |
| MOV-3-1400 | F-6 | 2 | B | 2.000 | GLOBE | A | MO | NC | YES | FAI | TC | 3 | | |
| | | | | | | | | | | | V | 5 | | |
| MOV-3-1401 | D-6 | 2 | B | 2.000 | GLOBE | A | MO | NC | YES | FAI | TC | 3 | | |
| | | | | | | | | | | | V | 5 | | |
| MOV-3-1402 | B-6 | 2 | B | 2.000 | GLOBE | A | MO | NC | YES | FAI | TC | 3 | | |
| | | | | | | | | | | | V | 5 | | |
| POV-3-2604 | G-6 | 2 | B/C | 26.000 | PA/CHK | A | A/O | NO | YES | FAI | TC | 2 | | |
| | | | | | | | | | | | V | 5 | | |
| POV-3-2605 | E-6 | 2 | B/C | 26.000 | PA/CHK | A | A/O | NO | YES | FAI | TC | 2 | | |
| | | | | | | | | | | | V | 5 | | |
| POV-3-2606 | B-6 | 2 | B/C | 26.000 | PA/CHK | A | A/O | NO | YES | FAI | TC | 2 | | |
| | | | | | | | | | | | V | 5 | | |
| RV-3-1400 | G-5 | 2 | C | 6.000 | SAFE | A | S/A | NC | NO | | S/R | 8 | | |
| RV-3-1401 | G-5 | 2 | C | 6.000 | SAFE | A | S/A | NC | NO | | S/R | 8 | | |
| RV-3-1402 | H-5 | 2 | C | 6.000 | SAFE | A | S/A | NC | NO | | S/R | 8 | | |

P & ID: 5613-M-3072-1 (cont) SYSTEM: MAIN STEAM

| VALVE NUMBER | COORD. | CL | CAT. | SIZE | TYPE | A/P | ACT. TYPE | NORM POS. | REM IND | FAIL MODE | EXAM | TEST FREQ | RELIEF REQ. | REMARKS |
|---|---|---|---|---|---|---|---|---|---|---|---|---|---|---|
| RV-3-1403 | F-5 | 2 | C | 6.000 | SAFE | A | S/A | NC | NO | | S/R | 8 | | |
| RV-3-1405 | E-5 | 2 | C | 6.000 | SAFE | A | S/A | NC | NO | | S/R | 8 | | |
| RV-3-1406 | D-5 | 2 | C | 6.000 | SAFE | A | S/A | NC | NO | | S/R | 8 | | |
| RV-3-1407 | E-5 | 2 | C | 6.000 | SAFE | A | S/A | NC | NO | | S/R | 8 | | |
| RV-3-1408 | D-5 | 2 | C | 6.000 | SAFE | A | S/A | NC | NO | | S/R | 8 | | |
| RV-3-1410 | B-5 | 2 | C | 6.000 | SAFE | A | S/A | NC | NO | | S/R | 8 | | |
| RV-3-1411 | B-5 | 2 | C | 6.000 | SAFE | A | S/A | NC | NO | | S/R | 8 | | |
| RV-3-1412 | C-5 | 2 | C | 6.000 | SAFE | A | S/A | NC | NO | | S/R | 8 | | |
| RV-3-1413 | A-5 | 2 | C | 6.000 | SAFE | A | S/A | NC | NO | | S/R | 8 | | |

P & ID: 5613-M-3074-3 SYSTEM: FEEDWATER

| VALVE NUMBER | COORD. | CL | CAT. | SIZE | TYPE | A/P | ACT. TYPE | NORM POS. | REM IND | FAIL MODE | EXAM | TEST FREQ | RELIEF REQ. | REMARKS |
|---|---|---|---|---|---|---|---|---|---|---|---|---|---|---|
| 3-20-0137 | G-6 | 2 | C | 0.500 | CHECK | A | S/A | NO | NO | | EC | 3 | | |
| 3-20-0237 | E-6 | 2 | C | 0.500 | CHECK | A | S/A | NO | NO | | EC | 3 | | |
| 3-20-0337 | B-6 | 2 | C | 0.500 | CHECK | A | S/A | NO | NO | | EC | 3 | | |
| FCV-3-0478 | G-4 | 2 | B | 14.000 | GLOBE | A | A/O | NO | NO | FC | FS | 2 | | |
| | | | | | | | | | | | TC | 2 | | |
| | | | | | | | | | | | V | 5 | | |
| FCV-3-0479 | H-3 | 2 | B | 4.000 | GLOBE | A | A/O | NC | NO | FC | FS | 2 | | |
| | | | | | | | | | | | TC | 2 | | |
| | | | | | | | | | | | V | 5 | | |
| FCV-3-0488 | D-4 | 2 | B | 14.000 | GLOBE | A | A/O | NO | NO | FC | FS | 2 | | |
| | | | | | | | | | | | TC | 2 | | |
| | | | | | | | | | | | V | 5 | | |
| FCV-3-0489 | E-3 | 2 | B | 4.000 | GLOBE | A | A/O | NC | NO | FC | FS | 2 | | |
| | | | | | | | | | | | TC | 2 | | |
| | | | | | | | | | | | V | 5 | | |
| FCV-3-0498 | B-4 | 2 | B | 14.000 | GLOBE | A | A/O | NO | NO | FC | FS | 2 | | |
| | | | | | | | | | | | TC | 2 | | |
| | | | | | | | | | | | V | 5 | | |
| FCV-3-0499 | C-3 | 2 | B | 4.000 | GLOBE | A | A/O | NC | NO | FC | FS | 2 | | |
| | | | | | | | | | | | TC | 2 | | |
| | | | | | | | | | | | V | 5 | | |

P & ID: 5613-M-3074-4 SYSTEM: STEAM GENERATOR BLOWDOWN RECOVERY

| VALVE NUMBER | COORD. | CL | CAT. | SIZE | TYPE | A/P | ACT. TYPE | NORM POS. | REM IND | FAIL MODE | EXAM | TEST FREQ | RELIEF REQ. | REMARKS |
|---|---|---|---|---|---|---|---|---|---|---|---|---|---|---|
| CV-3-6275A | G-2 | 2 | B | 6.000 | GLOBE | A | A/O | NO | YES | FAI | TC | 3 | | |
| | | | | | | | | | | | V | 5 | | |
| CV-3-6275B | E-2 | 2 | B | 6.000 | GLOBE | A | A/O | NO | YES | FAI | TC | 3 | | |
| | | | | | | | | | | | V | 5 | | |
| CV-3-6275C | C-2 | 2 | B | 6.000 | GLOBE | A | A/O | NO | YES | FAI | TC | 3 | | |
| | | | | | | | | | | | V | 5 | | |
| SV-3-6275A-1 | G-3 | 2 | B | 0.750 | GLOBE | A | SO | NO | YES | FC | FS | 3 | | |
| | | | | | | | | | | | TC | 3 | | |
| | | | | | | | | | | | V | 5 | | |
| SV-3-6275B-1 | D-3 | 2 | B | 0.750 | GLOBE | A | SO | NO | YES | FC | FS | 3 | | |
| | | | | | | | | | | | TC | 3 | | |
| | | | | | | | | | | | V | 5 | | |
| SV-3-6275C-1 | B-3 | 2 | B | 0.750 | GLOBE | A | SO | NO | YES | FC | FS | 3 | | |
| | | | | | | | | | | | TC | 3 | | |
| | | | | | | | | | | | V | 5 | | |

P & ID: 5613-M-3075-1 SYSTEM: AFW STEAM TO AUX. FEEDWATER PUMP TURBINE

| VALVE NUMBER | COORD. | CL | CAT. | SIZE | TYPE | A/P | ACT. TYPE | NORM POS. | REM IND | FAIL MODE | EXAM | TEST FREQ | RELIEF REQ. | REMARKS |
|---|---|---|---|---|---|---|---|---|---|---|---|---|---|---|
| 3-10-0083 | C-7 | 3 | C | 4.000 | CHECK | A | S/A | NC | NO | | EO | 3 | | |
| 3-10-0087 | F-7 | 3 | C | 4.000 | CHECK | A | S/A | NC | NO | | EO | 6 | | NOTE 1 |
| 3-10-0375 | G-3 | 2 | C | 3.000 | CHECK | A | S/A | NC | NO | | EO | 3 | | |
| 3-10-0376 | E-3 | 2 | C | 3.000 | CHECK | A | S/A | NC | NO | | EO | 3 | | |
| 3-10-0377 | C-3 | 2 | C | 3.000 | CHECK | A | S/A | NC | NO | | EO | 3 | | |
| 3-10-0381 | G-4 | 3 | C | 4.000 | CHECK | A | S/A | NC | NO | | EC | 2 | | |
| | | | | | | | | | | | EO | 3 | | |
| 3-10-0382 | E-4 | 3 | C | 4.000 | CHECK | A | S/A | NC | NO | | EC | 2 | | |
| | | | | | | | | | | | EO | 3 | | |
| 3-10-0383 | C-4 | 3 | C | 4.000 | CHECK | A | S/A | NC | NO | | EC | 2 | | |
| | | | | | | | | | | | EO | 3 | | |
| AFSS-3-0005 | B-6 | 3 | C | 4.000 | CHECK | A | S/A | NC | NO | | EO | 3 | | |
| MOV-3-1403 | G-3 | 2 | B | 4.000 | GLOBE | A | MO | NC | YES | FAI | TC | 3 | | |
| | | | | | | | | | | | TO | 3 | | |
| | | | | | | | | | | | V | 5 | | |
| MOV-3-1404 | E-3 | 2 | B | 4.000 | GLOBE | A | MO | NC | YES | FAI | TC | 3 | | |
| | | | | | | | | | | | TO | 3 | | |
| | | | | | | | | | | | V | 5 | | |
| MOV-3-1405 | C-3 | 2 | B | 4.000 | GLOBE | A | MO | NC | YES | FAI | TC | 3 | | |
| | | | | | | | | | | | TO | 3 | | |
| | | | | | | | | | | | V | 5 | | |

P & ID: 5613-M-3075-2 SYSTEM: AFW - AUXILIARY FEEDWATER TO STM GEN

| VALVE NUMBER | COORD. | CL | CAT. | SIZE | TYPE | A/P | ACT. TYPE | NORM POS. | REM IND | FAIL MODE | EXAM | TEST FREQ | RELIEF REQ. | REMARKS |
|---|---|---|---|---|---|---|---|---|---|---|---|---|---|---|
| 3-20-0140 | F-7 | 2 | C | 4.000 | CHECK | A | S/A | NC | NO | | EO | 3 | | |
| 3-20-0240 | D-7 | 2 | C | 4.000 | CHECK | A | S/A | NC | NO | | EO | 3 | | |
| 3-20-0340 | B-7 | 2 | C | 4.000 | CHECK | A | S/A | NC | NO | | EO | 3 | | |
| AFPD-3-0010 | H-3 | 3 | C | 4.000 | CHECK | A | S/A | NC | NO | | EO | 3 | | |
| AFPD-3-0012 | E-3 | 3 | C | 4.000 | CHECK | A | S/A | NC | NO | | EO | 3 | | |
| AFPD-3-0014 | C-3 | 3 | C | 4.000 | CHECK | A | S/A | NC | NO | | EO | 3 | | |
| CV-3-2816 | F-7 | 3 | B | 4.000 | GLOBE | A | A/O | NC | NO | FC | TO | 3 | | |
| CV-3-2817 | D-7 | 3 | B | 4.000 | GLOBE | A | A/O | NC | NO | FC | TO | 3 | | |
| CV-3-2818 | B-7 | 3 | B | 4.000 | GLOBE | A | A/O | NC | NO | FC | TO | 3 | | |
| CV-3-2831 | G-7 | 2 | B | 4.000 | GLOBE | A | A/O | NC | NO | FC | TO | 3 | | |
| CV-3-2832 | E-7 | 2 | B | 4.000 | GLOBE | A | A/O | NC | NO | FC | TO | 3 | | |
| CV-3-2833 | C-7 | 2 | B | 4.000 | GLOBE | A | A/O | NC | NO | FC | TO | 3 | | |

P & ID: 5613-M-3094-1 SYSTEM: CONTAINMENT POST-ACCIDENT EVALUATION.

| VALVE NUMBER | COORD. | CL | CAT. | SIZE | TYPE | A/P | ACT. TYPE | NORM POS. | REM IND | FAIL MODE | EXAM | TEST FREQ | RELIEF REQ. | REMARKS |
|---|---|---|---|---|---|---|---|---|---|---|---|---|---|---|
| 3-11-0003 | B-2 | 2 | A/C | 1.000 | CHECK | A | S/A | NO | NO | | EC | 1 | | |
| | | | | | | | | | | | SLT-1 | 5 | | |
| HV-3-0001 | H-2 | 2 | A | 2.000 | DIAPH | P | MAN | LC | NO | | SLT-1 | 5 | | |
| HV-3-0002 | H-4 | 2 | A | 2.000 | DIAPH | P | MAN | LC | NO | | SLT-1 | 5 | | |
| HV-3-0003 | G-2 | 2 | A | 2.000 | DIAPH | P | MAN | LC | NO | | SLT-1 | 5 | | |
| HV-3-0004 | G-4 | 2 | A | 2.000 | DIAPH | P | MAN | LC | NO | | SLT-1 | 5 | | |
| PAHM-3-0001A | B-3 | 2 | A | 0.750 | GLOBE | P | MAN | NC | NO | | SLT-1 | 5 | | |
| PAHM-3-0001B | B-2 | 2 | A | 0.750 | GLOBE | P | MAN | NC | NO | | SLT-1 | 5 | | |
| PAHM-3-0002A | D-4 | 2 | A | 0.750 | GLOBE | P | MAN | NC | NO | | SLT-1 | 5 | | |
| PAHM-3-0002B | D-3 | 2 | A | 0.750 | GLOBE | P | MAN | NC | NO | | SLT-1 | 5 | | |
| SV-3-2911 | A-3 | 2 | A | 1.000 | GLOBE | A | SO | NO | YES | FC | FS | 3 | | |
| | | | | | | | | | | | SLT-1 | 5 | | |
| | | | | | | | | | | | TC | 3 | | |
| | | | | | | | | | | | V | 5 | | |
| SV-3-2912 | B-3 | 2 | A | 1.000 | GLOBE | A | SO | NO | YES | FC | FS | 3 | | |
| | | | | | | | | | | | SLT-1 | 5 | | |
| | | | | | | | | | | | TC | 3 | | |
| | | | | | | | | | | | V | 5 | | |
| SV-3-2913 | A-3 | 2 | A | 1.000 | GLOBE | A | SO | NO | YES | FC | FS | 3 | | |
| | | | | | | | | | | | SLT-1 | 5 | | |
| | | | | | | | | | | | TC | 3 | | |
| | | | | | | | | | | | V | 5 | | |

P & ID: 5613-M-3101-1 SYSTEM: BREATHING AIR SYSTEM (BA)

| VALVE NUMBER | COORD. | CL | CAT. | SIZE | TYPE | A/P | ACT. TYPE | NORM POS. | REM IND | FAIL MODE | EXAM | TEST FREQ | RELIEF REQ. | REMARKS |
|---|---|---|---|---|---|---|---|---|---|---|---|---|---|---|
| 3-BA-0201 | D-3 | 2 | A/C | 2.500 | CHECK | A | S/A | NC | NO | | EC | 1 | | |
| | | | | | | | | | | | SLT-1 | 5 | | |
| CV-3-6165 | D-2 | 2 | A | 2.500 | GATE | P | A/O | LC | YES | | SLT-1 | 5 | | |
| | | | | | | | | | | | V | 5 | | |

P & ID: VARIOUS SYSTEM: TEST CONNECTION

| VALVE NUMBER | COORD. | CL | CAT. | SIZE | TYPE | A/P | ACT. TYPE | NORM POS. | REM IND | FAIL MODE | EXAM | TEST FREQ | RELIEF REQ. | REMARKS |
|---|---|---|---|---|---|---|---|---|---|---|---|---|---|---|
| 3-10-0879 | | 2 | A | 0.375 | GLOBE | P | MAN | NC | NO | | SLT-1 | 5 | | |

NOTES

Pg 55,92 1. Auxiliary Feedwater (AFW) Pump "A" Discharge Check Valve, 20-143, will be exercised closed whenever "A" AFW Pump is lined up to operate in parallel with either of the other AFW Pumps. Auxiliary Feedwater Steam Supply Valve, 3-10-087 will be exercised open whenever AFW Pump "C" is aligned to Train 1.

Pg 60,61 2. Valves 3-70-274 A&B, 3-70-276 A&B, RV-3-210 A&B, RV-3-211 A&B, RV-3-212 A&B, and RV-3-213 A&B are not included within the ISI class boundaries and, as such, are exempt from the inclusive requirements of the Code. These valves will be tested in accordance with Code requirements, except where determined impractical, in which case specific relief from the Code is not required.

Pg 62,63 3. Valves CV-3-2046 A&B, SV-3-2051 A&B, SV-3-3522 A&B are not included within the ISI class boundaries and, as such, are exempt from the inclusive requirements of the Code. These valves have been included in the Program to ensure that inservice testing is adequate to demonstrate their continued operability. These valves will be tested in accordance with Code requirements, except where determined impractical, in which case specific relief from the Code is not required.

These valves will be tested in conjunction with testing of the emergency diesel generators and the associated fuel oil transfer pumps. However, valve stroke time will not be measured. The satisfactory response of the associated diesel generator and the fuel oil transfer pumps will demonstrate valve operability.

NOTES con't

Pg 88 4. Valves 3-10-004 through 3-10-006 are not included within the ISI class boundaries and, as such, are exempt from the inclusive requirements of the Code. These components have been included in the Program to ensure that inservice testing is adequate to demonstrate their continued operability. These valves will be tested in accordance with Code requirements, except where determined impractical, in which case specific relief from the Code is not required.

These are large stop check valves in the main steam lines leading to the main turbine generator. There is no practical way of verifying closure of these valves by way of a back seat or reverse flow test. Exercising a valve manually using the hand wheel provides some assurance that the disc moves freely within the valve body. Furthermore, the valves are disassembled, inspected, and manually exercised at least once during each 10-year inspection interval.

# Appendix D

## Valve Program Tables
## Unit 4

P & ID: 5610-M-3013-1 SYSTEM: INSTRUMENT AIR/SERVICE AIR DIST.

| VALVE NUMBER | COORD. | CL | CAT. | SIZE | TYPE | A/P | ACT. TYPE | NORM POS. | REM IND | FAIL MODE | EXAM | TEST FREQ | RELIEF REQ. | REMARKS |
|---|---|---|---|---|---|---|---|---|---|---|---|---|---|---|
| 4-40-0204 | F-6 | 2 | A | 2.000 | GATE | P | MAN | LC | NO | | SLT-1 | 5 | | |
| 4-40-0205 | F-7 | 2 | A/C | 2.000 | CHECK | A | S/A | NC | NO | | EC | 1 | | |
| | | | | | | | | | | | SLT-1 | 5 | | |
| HV-4-0017 | E-6 | 2 | A | 2.000 | GLOBE | P | MAN | LC | NO | | SLT-1 | 5 | | |

P & ID: 5610-M-3046-1 SYSTEM: CVCS - BORIC ACID

| VALVE NUMBER | COORD. | CL | CAT. | SIZE | TYPE | A/P | ACT. TYPE | NORM POS. | REM IND | FAIL MODE | EXAM | TEST FREQ | RELIEF REQ. | REMARKS |
|---|---|---|---|---|---|---|---|---|---|---|---|---|---|---|
| 4-0397C | E-5 | 2 | C | 2.000 | CHECK | A | S/A | NC | NO | | EC | 3 | | |
| | | | | | | | | | | | EO | 1 | | |
| | | | | | | | | | | | PEO | 3 | | |
| 4-0397D | F-4 | 2 | C | 2.000 | CHECK | A | S/A | NC | NO | | EC | 3 | | |
| | | | | | | | | | | | EO | 1 | | |
| | | | | | | | | | | | PEO | 3 | | |

P & ID: 5610-M-3065-1 SYSTEM: NITROGEN AND HYDROGEN

| VALVE NUMBER | COORD. | CL | CAT. | SIZE | TYPE | A/P | ACT. TYPE | NORM POS. | REM IND | FAIL MODE | EXAM | TEST FREQ | RELIEF REQ. | REMARKS |
|---|---|---|---|---|---|---|---|---|---|---|---|---|---|---|
| 4-0518 | D-7 | 2 | A/C | 0.750 | CHECK | A | S/A | NC | NO | | EC | 1 | | |
| | | | | | | | | | | | SLT-1 | 5 | | |
| 4-0519 | D-6 | 2 | A/C | 0.750 | CHECK | A | S/A | NC | NO | | EC | 1 | | |
| | | | | | | | | | | | SLT-1 | 5 | | |
| 4-4656 | C-7 | 2 | A | 1.000 | DIAPH | P | MAN | LC | NO | | SLT-1 | 5 | | |
| CV-4-0855 | E-3 | 2 | A | 1.000 | GLOBE | A | A/O | NC | YES | FC | FS | 3 | | |
| | | | | | | | | | | | SLT-1 | 5 | | |
| | | | | | | | | | | | TC | 3 | | |
| | | | | | | | | | | | V | 5 | | |
| PCV-4-1014 | B-6 | 2 | A | 1.000 | GLOBE | P | A/O | NC | NO | FC | SLT-1 | 5 | | |

P & ID: 5610-M-3075-2 SYSTEM: AUX FEEDWATER SUPPLY TO STM GEN

| VALVE NUMBER | COORD. | CL | CAT. | SIZE | TYPE | A/P | ACT. TYPE | NORM POS. | REM IND | FAIL MODE | EXAM | TEST FREQ | RELIEF REQ. | REMARKS |
|---|---|---|---|---|---|---|---|---|---|---|---|---|---|---|
| AFWU-4-0016 | G-6 | 3 | C | 2.000 | CHECK | A | S/A | NC | NO | | INSP | 1 | | |
| | | | | | | | | | | | PEO | 3 | | |

P & ID: 5614-M-3013-7 SYSTEM: INSTRUMENT AIR

| VALVE NUMBER | COORD. | CL | CAT. | SIZE | TYPE | A/P | ACT. TYPE | NORM POS. | REM IND | FAIL MODE | EXAM | TEST FREQ | RELIEF REQ. | REMARKS |
|---|---|---|---|---|---|---|---|---|---|---|---|---|---|---|
| 4-40-0336 | D-3 | 2 | A/C | 2.000 | CHECK | A | S/A | NO | NO | | EC | 1 | | |
| | | | | | | | | | | | SLT-1 | 5 | | |
| 4-40-0340A | C-3 | 2 | A/C | 2.000 | CHECK | A | S/A | NO | NO | | EC | 1 | | |
| | | | | | | | | | | | SLT-1 | 5 | | |

P & ID: 5614-M-3018-1 SYSTEM: CONDENSATE STORAGE

| VALVE NUMBER | COORD. | CL | CAT. | SIZE | TYPE | A/P | ACT. TYPE | NORM POS. | REM IND | FAIL MODE | EXAM | TEST FREQ | RELIEF REQ. | REMARKS |
|---|---|---|---|---|---|---|---|---|---|---|---|---|---|---|
| 4-20-0401 | E-6 | 3 | C | 8.000 | CHECK | A | S/A | NC | NO | | EO | 3 | | |

P & ID: 5614-M-3019-1 SYSTEM: INTAKE COOLING WATER

| VALVE NUMBER | COORD. | CL | CAT. | SIZE | TYPE | A/P | ACT. TYPE | NORM POS. | REM IND | FAIL MODE | EXAM | TEST FREQ | RELIEF REQ. | REMARKS |
|---|---|---|---|---|---|---|---|---|---|---|---|---|---|---|
| 4-50-0311 | F-3 | 3 | C | 24.000 | CHECK | A | S/A | NO | NO | | EC | 3 | | |
| | | | | | | | | | | | EO | 3 | | |
| 4-50-0321 | D-3 | 3 | C | 24.000 | CHECK | A | S/A | NO | NO | | EC | 3 | | |
| | | | | | | | | | | | EO | 3 | | |
| 4-50-0331 | B-3 | 3 | C | 24.000 | CHECK | A | S/A | NO | NO | | EC | 3 | | |
| | | | | | | | | | | | EO | 3 | | |
| POV-4-4882 | F-4 | 3 | B | 30.000 | BUTFY | A | A/O | NO | YES | FC | FS | 3 | | |
| | | | | | | | | | | | TC | 3 | | |
| | | | | | | | | | | | V | 5 | | |
| POV-4-4883 | B-4 | 3 | B | 30.000 | BUTFY | A | A/O | NO | YES | FC | FS | 3 | | |
| | | | | | | | | | | | TC | 3 | | |
| | | | | | | | | | | | V | 5 | | |

P & ID: 5614-M-3020-2 SYSTEM: PRIMARY MAKEUP WATER

| VALVE NUMBER | COORD. | CL | CAT. | SIZE | TYPE | A/P | ACT. TYPE | NORM POS. | REM IND | FAIL MODE | EXAM | TEST FREQ | RELIEF REQ. | REMARKS |
|---|---|---|---|---|---|---|---|---|---|---|---|---|---|---|
| 4-10-0567 | C-5 | 2 | A/C | 2.000 | CHECK | A | S/A | NC | NO | | EC | 1 | | |
| | | | | | | | | | | | SLT-1 | 5 | | |
| 4-10-0582 | C-6 | 2 | A | 2.000 | GATE | P | MAN | NC | NO | | SLT-1 | 5 | | |

P & ID: 5614-M-3022-1 SYSTEM: EMERGENCY DIESEL 4A AIR STARTING

| VALVE NUMBER | COORD. | CL | CAT. | SIZE | TYPE | A/P | ACT. TYPE | NORM POS. | REM IND | FAIL MODE | EXAM | TEST FREQ | RELIEF REQ. | REMARKS |
|---|---|---|---|---|---|---|---|---|---|---|---|---|---|---|
| 4-70-0530A | D-2 | 3 | C | 2.000 | CHECK | A | S/A | NC | NO | | EC | 3 | | |
| 4-70-0531A | D-3 | 3 | C | 2.000 | CHECK | A | S/A | NC | NO | | EC | 3 | | |
| RV-4-1456A | B-2 | 3 | C | 0.750 | SAFE | A | S/A | NC | NO | | S/R | 9 | | |
| RV-4-1457A | B-3 | 3 | C | 0.750 | SAFE | A | S/A | NC | NO | | S/R | 9 | | |
| RV-4-1458A | B-4 | 3 | C | 0.750 | SAFE | A | S/A | NC | NO | | S/R | 9 | | |
| RV-4-1459A | B-4 | 3 | C | 0.750 | SAFE | A | S/A | NC | NO | | S/R | 9 | | |

P & ID: 5614-M-3022-2 SYSTEM: EMERGENCY DIESEL 4B AIR STARTING

| VALVE NUMBER | COORD. | CL | CAT. | SIZE | TYPE | A/P | ACT. TYPE | NORM POS. | REM IND | FAIL MODE | EXAM | TEST FREQ | RELIEF REQ. | REMARKS |
|---|---|---|---|---|---|---|---|---|---|---|---|---|---|---|
| 4-70-0530B | D-2 | 3 | C | 2.000 | CHECK | A | S/A | NC | NO | | EC | 3 | | |
| 4-70-0531B | D-3 | 3 | C | 2.000 | CHECK | A | S/A | NC | NO | | EC | 3 | | |
| RV-4-1456B | B-2 | 3 | C | 0.750 | SAFE | A | S/A | NC | NO | | S/R | 9 | | |
| RV-4-1457B | B-3 | 3 | C | 0.750 | SAFE | A | S/A | NC | NO | | S/R | 9 | | |
| RV-4-1458B | B-4 | 3 | C | 0.750 | SAFE | A | S/A | NC | NO | | S/R | 9 | | |
| RV-4-1459B | B-4 | 3 | C | 0.750 | SAFE | A | S/A | NC | NO | | S/R | 9 | | |

P & ID: 5614-M-3022-3 SYSTEM: EDG 4A FUEL SYSTEM

| VALVE NUMBER | COORD. | CL | CAT. | SIZE | TYPE | A/P | ACT. TYPE | NORM POS. | REM IND | FAIL MODE | EXAM | TEST FREQ | RELIEF REQ. | REMARKS |
|---|---|---|---|---|---|---|---|---|---|---|---|---|---|---|
| 4-70-0349A | C-7 | 3 | C | 2.000 | CHECK | A | S/A | NC | NO | | EO | 3 | | |
| RV-4-1450A | B-6 | 3 | C | 1.000 | SAFE | A | S/A | NC | NO | | S/R | 9 | | |
| SV-4-3434A | F-5 | 3 | B | 1.500 | GATE | A | SO | NC | NO | FC | TO | 3 | | |

P & ID: 5614-M-3022-4 SYSTEM: EDG 4B FUEL SYSTEM

| VALVE NUMBER | COORD. | CL | CAT. | SIZE | TYPE | A/P | ACT. TYPE | NORM POS. | REM IND | FAIL MODE | EXAM | TEST FREQ | RELIEF REQ. | REMARKS |
|---|---|---|---|---|---|---|---|---|---|---|---|---|---|---|
| 4-70-0349B | C-7 | 3 | C | 2.000 | CHECK | A | S/A | NC | NO | | EO | 3 | | |
| RV-4-1450B | B-6 | 3 | C | 1.000 | SAFE | A | S/A | NC | NO | | S/R | 9 | | |
| SV-4-3434B | D-7 | 3 | B | 1.500 | GATE | A | SO | NC | NO | FC | TO | 3 | | |

P & ID: 5614-M-3022-5 SYSTEM: EDG 4A LUBE OIL AND COOLING WATER

| VALVE NUMBER | COORD. | CL | CAT. | SIZE | TYPE | A/P | ACT. TYPE | NORM POS. | REM IND | FAIL MODE | EXAM | TEST FREQ | RELIEF REQ. | REMARKS |
|---|---|---|---|---|---|---|---|---|---|---|---|---|---|---|
| RV-4-1451A | E-4 | 3 | C | 1.000 | SAFE | A | S/A | NC | NO | | S/R | 9 | | |

P & ID: 5614-M-3022-6 SYSTEM: EDG 4B LUBE OIL AND COOLING WATER

| VALVE NUMBER | COORD. | CL | CAT. | SIZE | TYPE | A/P | ACT. TYPE | NORM POS. | REM IND | FAIL MODE | EXAM | TEST FREQ | RELIEF REQ. | REMARKS |
|---|---|---|---|---|---|---|---|---|---|---|---|---|---|---|
| RV-4-1451B | E-4 | 3 | C | 1.000 | SAFE | A | S/A | NC | NO | | S/R | 9 | | |

P & ID: 5614-M-3030-1 SYSTEM: COMPONENT COOLING WATER

| VALVE NUMBER | COORD. | CL | CAT. | SIZE | TYPE | A/P | ACT. TYPE | NORM POS. | REM IND | FAIL MODE | EXAM | TEST FREQ | RELIEF REQ. | REMARKS |
|---|---|---|---|---|---|---|---|---|---|---|---|---|---|---|
| 4-0702A | E-4 | 3 | C | 16.000 | CHECK | A | S/A | NO | NO | | EC | 3 | | |
| | | | | | | | | | | | EO | 3 | | |
| 4-0702B | E-3 | 3 | C | 16.000 | CHECK | A | S/A | NO | NO | | EC | 3 | | |
| | | | | | | | | | | | EO | 3 | | |
| 4-0702C | E-2 | 3 | C | 16.000 | CHECK | A | S/A | NO | NO | | EC | 3 | | |
| | | | | | | | | | | | EO | 3 | | |
| CWST VAC BKR | C-6 | 3 | C | 2.000 | CHECK | A | S/A | NC | NO | | EC | 3 | | |
| | | | | | | | | | | | EO | 3 | | |
| RV-4-0707 | C-7 | 3 | C | 3.000 | SAFE | A | S/A | NC | NO | | S/R | 9 | | |

P & ID: 5614-M-3030-2 SYSTEM: COMPONENT COOLING WATER

| VALVE NUMBER | COORD. | CL | CAT. | SIZE | TYPE | A/P | ACT. TYPE | NORM POS. | REM IND | FAIL MODE | EXAM | TEST FREQ | RELIEF REQ. | REMARKS |
|---|---|---|---|---|---|---|---|---|---|---|---|---|---|---|
| MOV-4-0749A | F-6 | 3 | B | 16.000 | GATE | A | MO | NC | YES | FAI | TO<br>V | 3<br>5 | | |
| MOV-4-0749B | F-7 | 3 | B | 16.000 | GATE | A | MO | NC | YES | FAI | TO<br>V | 3<br>5 | | |

P & ID: 5614-M-3030-3 SYSTEM: COMPONENT COOLING WATER

| VALVE NUMBER | COORD. | CL | CAT. | SIZE | TYPE | A/P | ACT. TYPE | NORM POS. | REM IND | FAIL MODE | EXAM | TEST FREQ | RELIEF REQ. | REMARKS |
|---|---|---|---|---|---|---|---|---|---|---|---|---|---|---|
| CV-4-2903 | D-3 | 2 | B | 10.000 | BUTFY | P | A/O | NO | YES | FO | V | 5 | | |
| CV-4-2904 | C-3 | 2 | B | 10.000 | BUTFY | P | A/O | NO | YES | FO | V | 5 | | |
| CV-4-2905 | B-3 | 2 | B | 10.000 | BUTFY | P | A/O | NO | YES | FO | V | 5 | | |
| CV-4-2906 | G-3 | 2 | B | 10.000 | BUTFY | A | A/O | NC | YES | FO | FS | 3 | | |
| | | | | | | | | | | | TO | 3 | | |
| | | | | | | | | | | | V | 5 | | |
| CV-4-2907 | F-3 | 2 | B | 10.000 | BUTFY | A | A/O | NC | YES | FO | FS | 3 | | |
| | | | | | | | | | | | TO | 3 | | |
| | | | | | | | | | | | V | 5 | | |
| CV-4-2908 | E-3 | 2 | B | 10.000 | BUTFY | A | A/O | NC | YES | FO | FS | 3 | | |
| | | | | | | | | | | | TO | 3 | | |
| | | | | | | | | | | | V | 5 | | |

P & ID: 5614-M-3030-4 SYSTEM: COMPONENT COOLING WATER

| VALVE NUMBER | COORD. | CL | CAT. | SIZE | TYPE | A/P | ACT. TYPE | NORM POS. | REM IND | FAIL MODE | EXAM | TEST FREQ | RELIEF REQ. | REMARKS |
|---|---|---|---|---|---|---|---|---|---|---|---|---|---|---|
| 4-0721A | E-6 | 3 | C | 1.500 | CHECK | A | S/A | NO | NO | | EC | 1 | | |
| 4-0721B | B-6 | 3 | C | 1.500 | CHECK | A | S/A | NO | NO | | EC | 1 | | |
| 4-0721C | D-6 | 3 | C | 1.500 | CHECK | A | S/A | NO | NO | | EC | 1 | | |
| 4-0738 | D-3 | 2 | C | 3.000 | CHECK | A | S/A | NC | NO | | EC | 2 | | |
| CV-4-0739 | C-2 | 2 | B | 3.000 | GLOBE | A | A/O | NO | YES | FC | FS | 3 | | |
| | | | | | | | | | | | TC | 3 | | |
| | | | | | | | | | | | V | 5 | | |
| MOV-4-0626 | H-3 | 2 | B | 3.000 | GATE | A | MO | NO | YES | FAI | TC | 4 | | |
| | | | | | | | | | | | V | 5 | | |
| MOV-4-0716A | E-2 | 3 | B | 6.000 | GATE | A | MO | NO | YES | FAI | TC | 4 | | |
| | | | | | | | | | | | V | 5 | | |
| MOV-4-0716B | E-2 | 2 | B | 6.000 | GATE | A | MO | NO | YES | FAI | TC | 4 | | |
| | | | | | | | | | | | V | 5 | | |
| MOV-4-0730 | G-3 | 2 | B | 6.000 | GATE | A | MO | NO | YES | FAI | TC | 4 | | |
| | | | | | | | | | | | V | 5 | | |
| MOV-4-1417 | B-2 | 2 | B | 10.000 | GATE | A | MO | NO | YES | FAI | TC | 2 | | |
| | | | | | | | | | | | V | 5 | | |
| MOV-4-1418 | F-2 | 2 | B | 10.000 | GATE | A | MO | NO | YES | FAI | TC | 2 | | |
| | | | | | | | | | | | V | 5 | | |
| RV-4-0715 | C-3 | 3 | C | 3.000 | SAFE | A | S/A | NC | NO | | S/R | 9 | | |
| RV-4-0729 | F-7 | 3 | C | 3.000 | SAFE | A | S/A | NC | NO | | S/R | 9 | | |
| RV-4-1426 | E-4 | 3 | C | 0.750 | SAFE | A | S/A | NC | NO | | S/R | 9 | | |
| RV-4-1427 | D-4 | 3 | C | 0.750 | SAFE | A | S/A | NC | NO | | S/R | 9 | | |
| RV-4-1428 | B-4 | 3 | C | 0.750 | SAFE | A | S/A | NC | NO | | S/R | 9 | | |
| RV-4-1429 | A-4 | 3 | C | 0.750 | SAFE | A | S/A | NC | NO | | S/R | 9 | | |
| RV-4-1430 | D-4 | 3 | C | 0.750 | SAFE | A | S/A | NC | NO | | S/R | 9 | | |
| RV-4-1431 | C-4 | 3 | C | 0.750 | SAFE | A | S/A | NC | NO | | S/R | 9 | | |

P & ID: 5614-M-3032-1 SYSTEM: STEAM GENERATOR BLOWDOWN RECOVERY

| VALVE NUMBER | COORD. | CL | CAT. | SIZE | TYPE | A/P | ACT. TYPE | NORM POS. | REM IND | FAIL MODE | EXAM | TEST FREQ | RELIEF REQ. | REMARKS |
|---|---|---|---|---|---|---|---|---|---|---|---|---|---|---|
| MOV-4-1425 | D-2 | 2 | B | 1.000 | GATE | A | MO | NO | YES | FAI | TC | 3 | | |
| | | | | | | | | | | | V | 5 | | |
| MOV-4-1426 | C-2 | 2 | B | 1.000 | GATE | A | MO | NO | YES | FAI | TC | 3 | | |
| | | | | | | | | | | | V | 5 | | |
| MOV-4-1427 | A-2 | 2 | B | 1.000 | GATE | A | MO | NO | YES | FAI | TC | 3 | | |
| | | | | | | | | | | | V | 5 | | |

P & ID: 5614-M-3033-1 SYSTEM: SPENT FUEL POOL COOLING

| VALVE NUMBER | COORD. | CL | CAT. | SIZE | TYPE | A/P | ACT. TYPE | NORM POS. | REM IND | FAIL MODE | EXAM | TEST FREQ | RELIEF REQ. | REMARKS |
|---|---|---|---|---|---|---|---|---|---|---|---|---|---|---|
| 4-0911 | F-5 | 3 | C | 8.000 | CHECK | A | S/A | NO | NO | | EO | 3 | | |
| 4-0914 | E-5 | 3 | C | 8.000 | CHECK | A | S/A | NO | NO | | EO | 3 | | |

P & ID: 5614-M-3036-1 SYSTEM: SAMPLE SYSTEM - NSSS

| VALVE NUMBER | COORD. | CL | CAT. | SIZE | TYPE | A/P | ACT. TYPE | NORM POS. | REM IND | FAIL MODE | EXAM | TEST FREQ | RELIEF REQ. | REMARKS |
|---|---|---|---|---|---|---|---|---|---|---|---|---|---|---|
| CV-4-0951 | A-2 | 2 | A | 0.375 | GLOBE | A | A/O | NC | YES | FC | FS | 3 | | |
| | | | | | | | | | | | SLT-1 | 5 | | |
| | | | | | | | | | | | TC | 3 | | |
| | | | | | | | | | | | V | 5 | | |
| CV-4-0953 | B-2 | 2 | A | 0.375 | GLOBE | A | A/O | NC | YES | FC | FS | 3 | | |
| | | | | | | | | | | | SLT-1 | 5 | | |
| | | | | | | | | | | | TC | 3 | | |
| | | | | | | | | | | | V | 5 | | |
| CV-4-0955C | D-2 | 2 | A | 0.375 | GLOBE | A | A/O | NC | YES | FC | FS | 3 | | |
| | | | | | | | | | | | SLT-1 | 5 | | |
| | | | | | | | | | | | TC | 3 | | |
| | | | | | | | | | | | V | 5 | | |
| CV-4-0955D | E-2 | 2 | A | 0.375 | GLOBE | A | A/O | NC | YES | FC | FS | 3 | | |
| | | | | | | | | | | | SLT-1 | 5 | | |
| | | | | | | | | | | | TC | 3 | | |
| | | | | | | | | | | | V | 5 | | |
| CV-4-0955E | E-2 | 2 | A | 0.375 | GLOBE | A | A/O | NC | YES | FC | FS | 3 | | |
| | | | | | | | | | | | SLT-1 | 5 | | |
| | | | | | | | | | | | TC | 3 | | |
| | | | | | | | | | | | V | 5 | | |
| CV-4-0956A | A-3 | 2 | A | 0.375 | GLOBE | A | A/O | NC | YES | FC | FS | 3 | | |
| | | | | | | | | | | | SLT-1 | 5 | | |
| | | | | | | | | | | | TC | 3 | | |
| | | | | | | | | | | | V | 5 | | |
| CV-4-0956B | B-3 | 2 | A | 0.375 | GLOBE | A | A/O | NC | YES | FC | FS | 3 | | |
| | | | | | | | | | | | SLT-1 | 5 | | |
| | | | | | | | | | | | TC | 3 | | |
| | | | | | | | | | | | V | 5 | | |
| CV-4-0956D | E-3 | 2 | A | 0.375 | GLOBE | A | A/O | NC | YES | FC | FS | 3 | | |
| | | | | | | | | | | | SLT-1 | 5 | | |
| | | | | | | | | | | | TC | 3 | | |
| | | | | | | | | | | | V | 5 | | |
| SV-4-6427A | C-2 | 2 | A | 0.375 | GLOBE | A | SO | NC | YES | FC | FS | 3 | | |
| | | | | | | | | | | | SLT-1 | 5 | | |
| | | | | | | | | | | | TC | 3 | | |
| | | | | | | | | | | | V | 5 | | |

P & ID: 5614-M-3036-1 (cont) SYSTEM: SAMPLE SYSTEM - NSSS

| VALVE NUMBER | COORD. | CL | CAT. | SIZE | TYPE | A/P | ACT. TYPE | NORM POS. | REM IND | FAIL MODE | EXAM | TEST FREQ | RELIEF REQ. | REMARKS |
|---|---|---|---|---|---|---|---|---|---|---|---|---|---|---|
| SV-4-6427B | C-2 | 2 | A | 0.375 | GLOBE | A | SO | NC | YES | FC | FS | 3 | | |
| | | | | | | | | | | | SLT-1 | 5 | | |
| | | | | | | | | | | | TC | 3 | | |
| | | | | | | | | | | | V | 5 | | |
| SV-4-6428 | C-3 | 2 | A | 0.375 | GLOBE | A | SO | NC | YES | FC | FS | 3 | | |
| | | | | | | | | | | | SLT-1 | 5 | | |
| | | | | | | | | | | | TC | 3 | | |
| | | | | | | | | | | | V | 5 | | |

P & ID: 5614-M-3041-2 SYSTEM: REACTOR COOLANT (RCS)

| VALVE NUMBER | COORD. | CL | CAT. | SIZE | TYPE | A/P | ACT. TYPE | NORM POS. | REM IND | FAIL MODE | EXAM | TEST FREQ | RELIEF REQ. | REMARKS |
|---|---|---|---|---|---|---|---|---|---|---|---|---|---|---|
| CV-4-0516 | G-2 | 2 | A | 0.375 | GLOBE | A | A/O | NC | YES | FC | FS | 3 | | |
| | | | | | | | | | | | SLT-1 | 5 | | |
| | | | | | | | | | | | TC | 3 | | |
| | | | | | | | | | | | V | 5 | | |
| MOV-4-0535 | B-6 | 1 | B | 3.000 | GATE | A | MO | NO | YES | FAI | TC | 3 | | |
| | | | | | | | | | | | V | 5 | | |
| MOV-4-0536 | C-6 | 1 | B | 3.000 | GATE | A | MO | NO | YES | FAI | TC | 3 | | |
| | | | | | | | | | | | V | 5 | | |
| PCV-4-0455C | C-7 | 1 | B | 2.000 | GLOBE | A | A/O | NC | YES | FC | FS | 2 | | |
| | | | | | | | | | | | TC | 2 | | |
| | | | | | | | | | | | TO | 2 | | |
| | | | | | | | | | | | V | 5 | | |
| PCV-4-0456 | B-7 | 1 | B | 2.000 | GLOBE | A | A/O | NC | YES | FC | FS | 2 | | |
| | | | | | | | | | | | TC | 2 | | |
| | | | | | | | | | | | TO | 2 | | |
| | | | | | | | | | | | V | 5 | | |
| RV-4-0551A | B-5 | 1 | C | 4.000 | SAFE | A | S/A | NC | NO | | S/R | 8 | | |
| RV-4-0551B | B-4 | 1 | C | 4.000 | SAFE | A | S/A | NC | NO | | S/R | 8 | | |
| RV-4-0551C | B-3 | 1 | C | 4.000 | SAFE | A | S/A | NC | NO | | S/R | 8 | | |
| SV-4-6318A | D-6 | 2 | B | 1.000 | GLOBE | A | SO | LC | YES | FC | TO | 4 | | |
| | | | | | | | | | | | V | 5 | | |
| SV-4-6318B | E-6 | 2 | B | 1.000 | GLOBE | A | SO | LC | YES | FC | TO | 4 | | |
| | | | | | | | | | | | V | 5 | | |
| SV-4-6385 | G-2 | 2 | A | 0.375 | GLOBE | A | SO | NC | YES | FC | FS | 3 | | |
| | | | | | | | | | | | SLT-1 | 5 | | |
| | | | | | | | | | | | TC | 3 | | |
| | | | | | | | | | | | V | 5 | | |
| SV-4-6611 | F-7 | 2 | B | 1.000 | GLOBE | A | SO | LC | YES | FC | TO | 4 | | |
| | | | | | | | | | | | V | 5 | | |
| SV-4-6612 | F-6 | 2 | B | 1.000 | GLOBE | A | SO | LC | YES | FC | TO | 4 | | |
| | | | | | | | | | | | V | 5 | | |

P & ID: 5614-M-3041-3 SYSTEM: RCS - REACTOR COOLANT PUMPS

| VALVE NUMBER | COORD. | CL | CAT. | SIZE | TYPE | A/P | ACT. TYPE | NORM POS. | REM IND | FAIL MODE | EXAM | TEST FREQ | RELIEF REQ. | REMARKS |
|---|---|---|---|---|---|---|---|---|---|---|---|---|---|---|
| CV-4-0519A | A-8 | 2 | A | 3.000 | DIAPH | A | A/O | NC | YES | FC | FS | 3 | | |
| | | | | | | | | | | | SLT-1 | 5 | | |
| | | | | | | | | | | | TC | 3 | | |
| | | | | | | | | | | | V | 5 | | |
| CV-4-0519B | A-2 | 2 | A | 3.000 | DIAPH | A | A/O | NC | YES | FC | FS | 3 | | |
| | | | | | | | | | | | SLT-1 | 5 | | |
| | | | | | | | | | | | TC | 3 | | |
| | | | | | | | | | | | V | 5 | | |
| CV-4-0522A | B-7 | 2 | A | 0.750 | DIAPH | A | A/O | NC | YES | FC | FS | 3 | | |
| | | | | | | | | | | | SLT-1 | 5 | | |
| | | | | | | | | | | | TC | 3 | | |
| | | | | | | | | | | | V | 5 | | |
| CV-4-0522B | B-7 | 2 | A | 0.750 | DIAPH | A | A/O | NC | YES | FC | FS | 3 | | |
| | | | | | | | | | | | SLT-1 | 5 | | |
| | | | | | | | | | | | TC | 3 | | |
| | | | | | | | | | | | V | 5 | | |
| CV-4-0522C | B-7 | 2 | A | 0.750 | DIAPH | A | A/O | NC | YES | FC | FS | 3 | | |
| | | | | | | | | | | | SLT-1 | 5 | | |
| | | | | | | | | | | | TC | 3 | | |
| | | | | | | | | | | | V | 5 | | |

P & ID: 5614-M-3047-1 SYSTEM: CVCS - CHARGING AND LETDOWN

| VALVE NUMBER | COORD. | CL | CAT. | SIZE | TYPE | A/P | ACT. TYPE | NORM POS. | REM IND | FAIL MODE | EXAM | TEST FREQ | RELIEF REQ. | REMARKS |
|---|---|---|---|---|---|---|---|---|---|---|---|---|---|---|
| CV-4-0200A | A-2 | 1 | A | 2.000 | GLOBE | A | A/O | NO | YES | FC | FS | 3 | | |
| | | | | | | | | | | | SLT-1 | 5 | | |
| | | | | | | | | | | | TC | 3 | | |
| | | | | | | | | | | | V | 5 | | |
| CV-4-0200B | B-2 | 1 | A | 2.000 | GLOBE | A | A/O | NO | YES | FC | FS | 3 | | |
| | | | | | | | | | | | SLT-1 | 5 | | |
| | | | | | | | | | | | TC | 3 | | |
| | | | | | | | | | | | V | 5 | | |
| CV-4-0200C | C-2 | 1 | A | 2.000 | GLOBE | A | A/O | NO | YES | FC | FS | 3 | | |
| | | | | | | | | | | | SLT-1 | 5 | | |
| | | | | | | | | | | | TC | 3 | | |
| | | | | | | | | | | | V | 5 | | |
| CV-4-0204 | C-4 | 2 | A | 2.000 | GLOBE | A | A/O | NO | YES | FC | FS | 2 | | |
| | | | | | | | | | | | SLT-1 | 5 | | |
| | | | | | | | | | | | TC | 2 | | |
| | | | | | | | | | | | V | 5 | | |
| RV-4-0203 | A-3 | 2 | A/C | 2.000 | SAFE | A | S/A | NC | NO | | S/R | 9 | | |
| | | | | | | | | | | | SLT-1 | 5 | | |

P & ID: 5614-M-3047-2 SYSTEM: CVCS - CHARGING AND LETDOWN

| VALVE NUMBER | COORD. | CL | CAT. | SIZE | TYPE | A/P | ACT. TYPE | NORM POS. | REM IND | FAIL MODE | EXAM | TEST FREQ | RELIEF REQ. | REMARKS |
|---|---|---|---|---|---|---|---|---|---|---|---|---|---|---|
| 4-0312A | C-8 | 1 | C | 3.000 | CHECK | A | S/A | NO | NO | | EO | 3 | | |
| 4-0312B | A-7 | 1 | C | 3.000 | CHECK | A | S/A | NC | NO | | EO | 3 | | |
| 4-0312C | E-7 | 1 | C | 3.000 | CHECK | A | S/A | NO | NO | | EC | 5 | | |
| | | | | | | | | | | | EO | 3 | | |
| 4-0351 | F-2 | 2 | C | 2.000 | CHECK | A | S/A | NC | NO | | EO | 1 | | |
| 4-0357 | F-3 | 2 | C | 4.000 | CHECK | A | S/A | NC | NO | | EO | 2 | | |
| CV-4-0310A | C-7 | 1 | B | 3.000 | GLOBE | A | A/O | NO | YES | FO | FS | 3 | | |
| | | | | | | | | | | | TO | 3 | | |
| | | | | | | | | | | | V | 5 | | |
| CV-4-0310B | A-7 | 1 | B | 3.000 | GLOBE | A | A/O | NC | YES | FO | FS | 3 | | |
| | | | | | | | | | | | TO | 3 | | |
| | | | | | | | | | | | V | 5 | | |
| HCV-4-0121 | F-7 | 2 | B | 3.000 | GLOBE | A | A/O | NO | NO | FO | FS | 2 | | |
| | | | | | | | | | | | TO | 2 | | |
| LCV-4-0115B | F-4 | 2 | B | 4.000 | BUTFY | A | A/O | NC | YES | FC | TO | 2 | | |
| | | | | | | | | | | | V | 5 | | |
| LCV-4-0115C | C-4 | 2 | B | 4.000 | GATE | A | MO | NO | YES | FAI | TC | 2 | | |
| | | | | | | | | | | | V | 5 | | |
| MOV-4-0350 | F-1 | 2 | B | 2.000 | GATE | A | MO | NC | YES | FAI | TO | 3 | | |
| | | | | | | | | | | | V | 5 | | |
| RV-4-0283A | G-5 | 2 | C | 0.750 | SAFE | A | S/A | NC | NO | | S/R | 9 | | |
| RV-4-0283B | E-5 | 2 | C | 0.750 | SAFE | A | S/A | NC | NO | | S/R | 9 | | |
| RV-4-0283C | C-5 | 2 | C | 0.750 | SAFE | A | S/A | NC | NO | | S/R | 9 | | |

P & ID: 5614-M-3047-3 SYSTEM: CVCS - SEAL WATER INJECTION TO RCP

| VALVE NUMBER | COORD. | CL | CAT. | SIZE | TYPE | A/P | ACT. TYPE | NORM POS. | REM IND | FAIL MODE | EXAM | TEST FREQ | RELIEF REQ. | REMARKS |
|---|---|---|---|---|---|---|---|---|---|---|---|---|---|---|
| 4-0298A | F-4 | 1 | C | 2.000 | CHECK | A | S/A | NO | NO | | EC | 1 | | |
| 4-0298B | D-4 | 1 | C | 2.000 | CHECK | A | S/A | NO | NO | | EC | 1 | | |
| 4-0298C | B-4 | 1 | C | 2.000 | CHECK | A | S/A | NO | NO | | EC | 1 | | |
| MOV-4-0381 | H-2 | 2 | A | 3.000 | GATE | A | MO | NO | YES | FAI | SLT-1 | 5 | | |
| | | | | | | | | | | | TC | 4 | | |
| | | | | | | | | | | | V | 5 | | |
| MOV-4-6386 | H-4 | 2 | A | 3.000 | GATE | A | MO | NO | YES | FAI | SLT-1 | 5 | | |
| | | | | | | | | | | | TC | 4 | | |
| | | | | | | | | | | | V | 5 | | |

P & ID: 5614-M-3050-1 SYSTEM: RESIDUAL HEAT REMOVAL

| VALVE NUMBER | COORD. | CL | CAT. | SIZE | TYPE | A/P | ACT. TYPE | NORM POS. | REM IND | FAIL MODE | EXAM | TEST FREQ | RELIEF REQ. | REMARKS |
|---|---|---|---|---|---|---|---|---|---|---|---|---|---|---|
| 4-0741A | D-7 | 2 | B | 2.000 | GATE | A | MAN | NC | NO | | EC | 3 | | |
| | | | | | | | | | | | EO | 3 | | |
| 4-0752A | C-2 | 2 | B | 14.000 | GATE | A | MAN | NO | NO | | EC | 3 | | |
| | | | | | | | | | | | EO | 3 | | |
| 4-0752B | E-2 | 2 | B | 14.000 | GATE | A | MAN | NO | NO | | EC | 3 | | |
| | | | | | | | | | | | EO | 3 | | |
| 4-0753A | E-4 | 2 | C | 10.000 | cHECK | A | S/A | NC | NO | | EC | 2 | | |
| | | | | | | | | | | | EO | 2 | | |
| | | | | | | | | | | | PEO | 3 | | |
| 4-0753B | E-4 | 2 | C | 10.000 | CHECK | A | S/A | NC | NO | | EC | 2 | | |
| | | | | | | | | | | | EO | 2 | | |
| | | | | | | | | | | | PEO | 3 | | |
| 4-2052 | A-7 | 2 | C | 1.000 | CHECK | A | S/A | NC | NO | | EO | 1 | | |
| MOV-4-0750 | F-8 | 1 | A | 14.000 | GATE | A | MO | LC | YES | FAI | SLT-2 | 5 | | |
| | | | | | | | | | | | TC | 2 | | |
| | | | | | | | | | | | TO | 2 | | |
| | | | | | | | | | | | V | 5 | | |
| MOV-4-0751 | F-7 | 1 | A | 14.000 | GATE | A | MO | LC | YES | FAI | SLT-2 | 5 | | |
| | | | | | | | | | | | TC | 2 | | |
| | | | | | | | | | | | TO | 2 | | |
| | | | | | | | | | | | V | 5 | | |
| MOV-4-0860A | A-6 | 2 | B | 14.000 | GATE | A | MO | NC | YES | FAI | TO | 3 | | |
| | | | | | | | | | | | V | 5 | | |
| MOV-4-0860B | B-6 | 2 | B | 14.000 | GATE | A | MO | NC | YES | FAI | TO | 3 | | |
| | | | | | | | | | | | V | 5 | | |
| MOV-4-0861A | A-5 | 2 | B | 14.000 | GATE | A | MO | NC | YES | FAI | TO | 3 | | |
| | | | | | | | | | | | V | 5 | | |
| MOV-4-0861B | B-5 | 2 | B | 14.000 | GATE | A | MO | NC | YES | FAI | TO | 3 | | |
| | | | | | | | | | | | V | 5 | | |
| MOV-4-0862A | E-1 | 2 | B | 14.000 | GATE | A | MO | LO | YES | FAI | TC | 2 | | |
| | | | | | | | | | | | V | 5 | | |

P & ID: 5614-M-3050-1 (cont) SYSTEM: RESIDUAL HEAT REMOVAL

| VALVE NUMBER | COORD. | CL | CAT. | SIZE | TYPE | A/P | ACT. TYPE | NORM POS. | REM IND | FAIL MODE | EXAM | TEST FREQ | RELIEF REQ. | REMARKS |
|---|---|---|---|---|---|---|---|---|---|---|---|---|---|---|
| MOV-4-0862B | D-1 | 2 | B | 14.000 | GATE | A | MO | LO | YES | FAI | TC | 2 | | |
| | | | | | | | | | | | V | 5 | | |
| MOV-4-0863A | F-5 | 2 | B | 8.000 | GATE | A | MO | LC | YES | FAI | TO | 2 | | |
| | | | | | | | | | | | V | 5 | | |
| MOV-4-0863B | F-5 | 2 | B | 8.000 | GATE | A | MO | LC | YES | FAI | TO | 2 | | |
| | | | | | | | | | | | V | 5 | | |
| MOV-4-0872 | G-6 | 2 | B | 8.000 | GATE | P | MO | NC | YES | FAI | V | 5 | | |

P & ID: 5614-M-3053-1 SYSTEM: CONTAINMENT PURGE AND PENETRATION CLG

| VALVE NUMBER | COORD. | CL | CAT. | SIZE | TYPE | A/P | ACT. TYPE | NORM POS. | REM IND | FAIL MODE | EXAM | TEST FREQ | RELIEF REQ. | REMARKS |
|---|---|---|---|---|---|---|---|---|---|---|---|---|---|---|
| 4-2024 | H-3 | 2 | A | 0.375 | GATE | P | MAN | NC | NO | | SLT-1 | 5 | | |
| 4-2025 | A-3 | 2 | A | 0.375 | GLOBE | P | MAN | NC | NO | | SLT-1 | 5 | | |
| 4-2026 | B-3 | 2 | A | 0.375 | GLOBE | P | MAN | NC | NO | | SLT-1 | 5 | | |
| CV-4-2819 | F-2 | 2 | A | 2.000 | GLOBE | A | A/O | NO | YES | FC | FS | 3 | | |
| | | | | | | | | | | | SLT-1 | 5 | | |
| | | | | | | | | | | | TC | 3 | | |
| | | | | | | | | | | | V | 5 | | |
| CV-4-2826 | F-3 | 2 | A | 2.000 | GLOBE | A | A/O | NO | YES | FC | FS | 3 | | |
| | | | | | | | | | | | SLT-1 | 5 | | |
| | | | | | | | | | | | TC | 3 | | |
| | | | | | | | | | | | V | 5 | | |
| POV-4-2600 | B-3 | 2 | A | 48.000 | BUTFY | A | A/O | NC | YES | FC | FS | 2 | | |
| | | | | | | | | | | | SLT-1 | 5 | | |
| | | | | | | | | | | | TC | 2 | | |
| | | | | | | | | | | | V | 5 | | |
| POV-4-2601 | B-2 | 2 | A | 48.000 | BUTFY | A | A/O | NC | YES | FC | FS | 2 | | |
| | | | | | | | | | | | SLT-1 | 5 | | |
| | | | | | | | | | | | TC | 2 | | |
| | | | | | | | | | | | V | 5 | | |
| POV-4-2602 | D-3 | 2 | A | 54.000 | BUTFY | A | A/O | NC | YES | FC | FS | 2 | | |
| | | | | | | | | | | | SLT-1 | 5 | | |
| | | | | | | | | | | | TC | 2 | | |
| | | | | | | | | | | | V | 5 | | |
| POV-4-2603 | D-2 | 2 | A | 54.000 | BUTFY | A | A/O | NC | YES | FC | FS | 2 | | |
| | | | | | | | | | | | SLT-1 | 5 | | |
| | | | | | | | | | | | TC | 2 | | |
| | | | | | | | | | | | V | 5 | | |

P & ID: 5614-M-3061-1 SYSTEM: WASTE DISPOSAL - LIQUID - RCDT AND PUMPS

| VALVE NUMBER | COORD. | CL | CAT. | SIZE | TYPE | A/P | ACT. TYPE | NORM POS. | REM IND | FAIL MODE | EXAM | TEST FREQ | RELIEF REQ. | REMARKS |
|---|---|---|---|---|---|---|---|---|---|---|---|---|---|---|
| CV-4-2821 | H-6 | 2 | A | 3.000 | GLOBE | A | A/O | NO | YES | FC | FS | 3 | | |
| | | | | | | | | | | | SLT-1 | 5 | | |
| | | | | | | | | | | | TC | 3 | | |
| | | | | | | | | | | | V | 5 | | |
| CV-4-2822 | H-5 | 2 | A | 3.000 | GLOBE | A | A/O | NO | YES | FC | FS | 3 | | |
| | | | | | | | | | | | SLT-1 | 5 | | |
| | | | | | | | | | | | TC | 3 | | |
| | | | | | | | | | | | V | 5 | | |
| CV-4-4658A | B-6 | 2 | A | 1.000 | DIAPH | A | A/O | NO | YES | FC | FS | 3 | | |
| | | | | | | | | | | | SLT-1 | 5 | | |
| | | | | | | | | | | | TC | 3 | | |
| | | | | | | | | | | | V | 5 | | |
| CV-4-4658B | B-7 | 2 | A | 1.000 | DIAPH | A | A/O | NO | YES | FC | FS | 3 | | |
| | | | | | | | | | | | SLT-1 | 5 | | |
| | | | | | | | | | | | TC | 3 | | |
| | | | | | | | | | | | V | 5 | | |
| CV-4-4659A | D-6 | 2 | A | 0.750 | DIAPH | A | A/O | NO | YES | FC | FS | 3 | | |
| | | | | | | | | | | | SLT-1 | 5 | | |
| | | | | | | | | | | | TC | 3 | | |
| | | | | | | | | | | | V | 5 | | |
| CV-4-4659B | D-7 | 2 | A | 0.750 | DIAPH | A | A/O | NO | YES | FC | FS | 3 | | |
| | | | | | | | | | | | SLT-1 | 5 | | |
| | | | | | | | | | | | TC | 3 | | |
| | | | | | | | | | | | V | 5 | | |
| CV-4-4668A | G-5 | 2 | A | 3.000 | DIAPH | A | A/O | NO | YES | FC | FS | 3 | | |
| | | | | | | | | | | | SLT-1 | 5 | | |
| | | | | | | | | | | | TC | 3 | | |
| | | | | | | | | | | | V | 5 | | |
| CV-4-4668B | G-6 | 2 | A | 3.000 | DIAPH | A | A/O | NO | YES | FC | FS | 3 | | |
| | | | | | | | | | | | SLT-1 | 5 | | |
| | | | | | | | | | | | TC | 3 | | |
| | | | | | | | | | | | V | 5 | | |

P & ID: 5614-M-3062-1 SYSTEM: SAFETY INJECTION

| VALVE NUMBER | COORD. | CL | CAT. | SIZE | TYPE | A/P | ACT. TYPE | NORM POS. | REM IND | FAIL MODE | EXAM | TEST FREQ | RELIEF REQ. | REMARKS |
|---|---|---|---|---|---|---|---|---|---|---|---|---|---|---|
| 4-0874A | C-7 | 1 | A/C | 2.000 | CHECK | A | S/A | NC | NO | | EC | 7 | VR-2 | |
| | | | | | | | | | | | EO | 1 | | |
| | | | | | | | | | | | SLT-2 | 5 | | |
| 4-0874B | F-7 | 1 | A/C | 2.000 | CHECK | A | S/A | NC | NO | | EC | 7 | VR-2 | |
| | | | | | | | | | | | EO | 1 | | |
| | | | | | | | | | | | SLT-2 | 5 | | |
| 4-0874C | F-2 | 2 | C | 2.000 | CHECK | A | S/A | NC | NO | | EO | 3 | | |
| 4-0879C | E-4 | 2 | C | 3.000 | CHECK | A | S/A | NC | NO | | EC | 3 | | |
| | | | | | | | | | | | EO | 1 | | |
| | | | | | | | | | | | PEO | 3 | | |
| 4-0879D | G-5 | 2 | C | 3.000 | CHECK | A | S/A | NC | NO | | EC | 3 | | |
| | | | | | | | | | | | EO | 1 | | |
| | | | | | | | | | | | PEO | 3 | | |
| 4-0893C | E-4 | 2 | C | 0.750 | CHECK | A | S/A | NC | NO | | EO | 3 | | |
| 4-0893D | F-4 | 2 | C | 0.750 | CHECK | A | S/A | NC | NO | | EO | 3 | | |
| MOV-4-0856A | B-1 | 2 | B | 2.000 | GLOBE | A | MO | NO | YES | FAI | TC | 2 | | |
| | | | | | | | | | | | V | 5 | | |
| MOV-4-0856B | B-1 | 2 | B | 2.000 | GLOBE | A | MO | NO | YES | FAI | TC | 2 | | |
| | | | | | | | | | | | V | 5 | | |
| MOV-4-0864A | B-4 | 2 | B | 16.000 | GATE | A | MO | LO | YES | FAI | TC | 2 | | |
| | | | | | | | | | | | V | 5 | | |
| MOV-4-0864B | B-4 | 2 | B | 16.000 | GATE | A | MO | LO | YES | FAI | TC | 2 | | |
| | | | | | | | | | | | V | 5 | | |
| MOV-4-0866A | C-7 | 1 | B | 2.000 | GLOBE | A | MO | LC | YES | FAI | TC | 2 | | |
| | | | | | | | | | | | TO | 2 | | |
| | | | | | | | | | | | V | 5 | | |
| MOV-4-0866B | F-7 | 1 | B | 2.000 | GLOBE | A | MO | LC | YES | FAI | TC | 2 | | |
| | | | | | | | | | | | TO | 2 | | |
| | | | | | | | | | | | V | 5 | | |
| MOV-4-0869 | E-6 | 2 | B | 3.000 | GATE | A | MO | NC | YES | FAI | TC | 3 | | |
| | | | | | | | | | | | TO | 3 | | |
| | | | | | | | | | | | V | 5 | | |

P & ID: 5614-M-3062-1 (cont) SYSTEM: SAFETY INJECTION

| VALVE NUMBER | COORD. | CL | CAT. | SIZE | TYPE | A/P | ACT. TYPE | NORM POS. | REM IND | FAIL MODE | EXAM | TEST FREQ | RELIEF REQ. | REMARKS |
|---|---|---|---|---|---|---|---|---|---|---|---|---|---|---|
| RV-4-6511 | F-7 | 2 | C | 0.250 | SAFE | A | S/A | NC | NO | | S/R | 9 | | |

P & ID: 5614-M-3062-2 SYSTEM: SAFETY INJECTION

| VALVE NUMBER | COORD. | CL | CAT. | SIZE | TYPE | A/P | ACT. TYPE | NORM POS. | REM IND | FAIL MODE | EXAM | TEST FREQ | RELIEF REQ. | REMARKS |
|---|---|---|---|---|---|---|---|---|---|---|---|---|---|---|
| MOV-4-0843A | B-6 | 2 | B | 4.000 | GATE | A | MO | NC | YES | FAI | TC | 3 | | |
| | | | | | | | | | | | TO | 3 | | |
| | | | | | | | | | | | V | 5 | | |
| MOV-4-0843B | C-6 | 2 | B | 4.000 | GATE | A | MO | NC | YES | FAI | TC | 3 | | |
| | | | | | | | | | | | TO | 3 | | |
| | | | | | | | | | | | V | 5 | | |
| RV-4-0857 | D-4 | 2 | C | 0.750 | SAFE | A | S/A | NC | NO | | S/R | 9 | | |

P & ID: 5614-M-3064-1 SYSTEM: SAFETY INJECTION ACCUMULATOR INSIDE CTMT

| VALVE NUMBER | COORD. | CL | CAT. | SIZE | TYPE | A/P | ACT. TYPE | NORM POS. | REM IND | FAIL MODE | EXAM | TEST FREQ | RELIEF REQ. | REMARKS |
|---|---|---|---|---|---|---|---|---|---|---|---|---|---|---|
| 4-0873A | B-2 | 1 | A/C | 2.000 | CHECK | A | S/A | NC | NO | | EC | 7 | VR-2 | |
| | | | | | | | | | | | EO | 1 | | |
| | | | | | | | | | | | SLT-2 | 5 | | |
| 4-0873B | B-2 | 1 | A/C | 2.000 | CHECK | A | S/A | NC | NO | | EC | 7 | VR-2 | |
| | | | | | | | | | | | EO | 1 | | |
| | | | | | | | | | | | SLT-2 | 5 | | |
| 4-0873C | B-2 | 1 | A/C | 2.000 | CHECK | A | S/A | NC | NO | | EC | 7 | VR-2 | |
| | | | | | | | | | | | EO | 1 | | |
| | | | | | | | | | | | SLT-2 | 5 | | |
| 4-0875A | D-8 | 1 | A/C | 10.000 | CHECK | A | S/A | NC | NO | | EC | 2 | | |
| | | | | | | | | | | | EO | 1 | | |
| | | | | | | | | | | | PEO | 2 | | |
| | | | | | | | | | | | SLT-2 | 5 | | |
| 4-0875B | E-8 | 1 | A/C | 10.000 | CHECK | A | S/A | NC | NO | | EC | 2 | | |
| | | | | | | | | | | | EO | 1 | | |
| | | | | | | | | | | | PEO | 2 | | |
| | | | | | | | | | | | SLT-2 | 5 | | |
| 4-0875C | E-8 | 1 | A/C | 10.000 | CHECK | A | S/A | NC | NO | | EC | 2 | | |
| | | | | | | | | | | | EO | 1 | | |
| | | | | | | | | | | | PEO | 2 | | |
| | | | | | | | | | | | SLT-2 | 5 | | |
| 4-0875D | G-7 | 1 | C | 10.000 | CHECK | A | S/A | NC | NO | | EC | 1 | | |
| | | | | | | | | | | | EO | 1 | | |
| 4-0875E | G-5 | 1 | C | 10.000 | CHECK | A | S/A | NC | NO | | EC | 1 | | |
| | | | | | | | | | | | EO | 1 | | |
| 4-0875F | G-3 | 1 | C | 10.000 | CHECK | A | S/A | NC | NO | | EC | 1 | | |
| | | | | | | | | | | | EO | 1 | | |
| 4-0876A | H-7 | 1 | A/C | 8.000 | CHECK | A | S/A | NC | NO | | EC | 2 | | |
| | | | | | | | | | | | EO | 2 | | |
| | | | | | | | | | | | SLT-2 | 5 | | |
| 4-0876B | G-5 | 1 | A/C | 8.000 | CHECK | A | S/A | NC | NO | | EC | 2 | | |
| | | | | | | | | | | | EO | 1 | | |
| | | | | | | | | | | | PEO | 2 | | |
| | | | | | | | | | | | SLT-2 | 5 | | |

P & ID: 5614-M-3064-1 (cont) SYSTEM: SAFETY INJECTION ACCUMULATOR INSIDE CTMT

| VALVE NUMBER | COORD. | CL | CAT. | SIZE | TYPE | A/P | ACT. TYPE | NORM POS. | REM IND | FAIL MODE | EXAM | TEST FREQ | RELIEF REQ. | REMARKS |
|---|---|---|---|---|---|---|---|---|---|---|---|---|---|---|
| 4-0876C | G-3 | 1 | A/C | 8.000 | CHECK | A | S/A | NC | NO | | EC | 2 | | |
| | | | | | | | | | | | EO | 1 | | |
| | | | | | | | | | | | PEO | 2 | | |
| | | | | | | | | | | | SLT-2 | 5 | | |
| 4-0876D | G-5 | 1 | A/C | 8.000 | CHECK | P | S/A | NC | NO | | SLT-2 | 5 | | |
| 4-0876E | G-6 | 1 | A/C | 8.000 | CHECK | P | S/A | NC | NO | | SLT-2 | 5 | | |
| 4-0945E | B-2 | 2 | A/C | 1.000 | CHECK | A | S/A | NC | NO | | EC | 1 | | |
| | | | | | | | | | | | SLT-1 | 5 | | |
| CV-4-0850A | F-7 | 2 | B | 0.750 | GLOBE | P | A/O | NC | YES | FC | V | 5 | | |
| CV-4-0850B | F-7 | 2 | B | 0.750 | GLOBE | P | A/O | NC | YES | FC | V | 5 | | |
| CV-4-0850C | F-5 | 2 | B | 0.750 | GLOBE | P | A/O | NC | YES | FC | V | 5 | | |
| CV-4-0850D | F-5 | 2 | B | 0.750 | GLOBE | P | A/O | NC | YES | FC | V | 5 | | |
| CV-4-0850E | F-3 | 2 | B | 0.750 | GLOBE | P | A/O | NC | YES | FC | V | 5 | | |
| CV-4-0850F | F-3 | 2 | B | 0.750 | GLOBE | P | A/O | NC | YES | FC | V | 5 | | |
| CV-4-0851A | C-7 | 2 | B | 1.000 | GLOBE | A | A/O | NC | YES | FC | FS | 3 | | |
| | | | | | | | | | | | TC | 3 | | |
| | | | | | | | | | | | V | 5 | | |
| CV-4-0851B | C-5 | 2 | B | 1.000 | GLOBE | A | A/O | NC | YES | FC | FS | 3 | | |
| | | | | | | | | | | | TC | 3 | | |
| | | | | | | | | | | | V | 5 | | |
| CV-4-0851C | C-3 | 2 | B | 1.000 | GLOBE | A | A/O | NC | YES | FC | FS | 3 | | |
| | | | | | | | | | | | TC | 3 | | |
| | | | | | | | | | | | V | 5 | | |
| CV-4-0852A | F-6 | 2 | B | 0.750 | GLOBE | P | A/O | NC | YES | FC | V | 5 | | |
| CV-4-0852B | F-4 | 2 | B | 0.750 | GLOBE | P | A/O | NC | YES | FC | V | 5 | | |
| CV-4-0852C | F-2 | 2 | B | 0.750 | GLOBE | P | A/O | NC | YES | FC | V | 5 | | |
| CV-4-0853A | C-6 | 2 | B | 1.000 | GLOBE | A | A/O | NC | YES | FC | FS | 3 | | |
| | | | | | | | | | | | TC | 3 | | |
| | | | | | | | | | | | V | 5 | | |

P & ID: 5614-M-3064-1 (cont) SYSTEM: SAFETY INJECTION ACCUMULATOR INSIDE CTMT

| VALVE NUMBER | COORD. | CL | CAT. | SIZE | TYPE | A/P | ACT. TYPE | NORM POS. | REM IND | FAIL MODE | EXAM | TEST FREQ | RELIEF REQ. | REMARKS |
|---|---|---|---|---|---|---|---|---|---|---|---|---|---|---|
| CV-4-0853B | C-4 | 2 | B | 1.000 | GLOBE | A | A/O | NC | YES | FC | FS | 3 | | |
| | | | | | | | | | | | TC | 3 | | |
| | | | | | | | | | | | V | 5 | | |
| CV-4-0853C | C-2 | 2 | B | 1.000 | GLOBE | A | A/O | NC | YES | FC | FS | 3 | | |
| | | | | | | | | | | | TC | 3 | | |
| | | | | | | | | | | | V | 5 | | |
| MOV-4-0744A | H-3 | 2 | B | 10.000 | GATE | A | MO | NC | YES | FAI | TC | 2 | | |
| | | | | | | | | | | | TO | 2 | | |
| | | | | | | | | | | | V | 5 | | |
| MOV-4-0744B | G-3 | 2 | B | 10.000 | GATE | A | MO | NC | YES | FAI | TC | 2 | | |
| | | | | | | | | | | | TO | 2 | | |
| | | | | | | | | | | | V | 5 | | |
| MOV-4-0865A | F-6 | 2 | B | 10.000 | GATE | A | MO | LO | YES | FAI | TC | 2 | | |
| | | | | | | | | | | | V | 5 | | |
| MOV-4-0865B | F-4 | 2 | B | 10.000 | GATE | A | MO | LO | YES | FAI | TC | 2 | | |
| | | | | | | | | | | | V | 5 | | |
| MOV-4-0865C | F-2 | 2 | B | 10.000 | GATE | A | MO | LO | YES | FAI | TC | 2 | | |
| | | | | | | | | | | | V | 5 | | |
| RV-4-0706 | G-2 | 2 | C | 2.000 | SAFE | A | S/A | NC | NO | | S/R | 9 | | |
| RV-4-0858A | D-6 | 2 | C | 2.000 | SAFE | A | S/A | NC | NO | | S/R | 9 | | |
| RV-4-0858B | D-4 | 2 | C | 2.000 | SAFE | A | S/A | NC | NO | | S/R | 9 | | |
| RV-4-0858C | D-2 | 2 | C | 2.000 | SAFE | A | S/A | NC | NO | | S/R | 9 | | |
| RV-4-0859 | A-2 | 2 | C | 0.750 | SAFE | A | S/A | NC | NO | | S/R | 9 | | |

P & ID: 5614-M-3068-1 SYSTEM: CONTAINMENT SPRAY

| VALVE NUMBER | COORD. | CL | CAT. | SIZE | TYPE | A/P | ACT. TYPE | NORM POS. | REM IND | FAIL MODE | EXAM | TEST FREQ | RELIEF REQ. | REMARKS |
|---|---|---|---|---|---|---|---|---|---|---|---|---|---|---|
| 4-0883M | C-5 | 2 | A | 1.000 | GLOBE | P | MAN | NC | NO | | SLT-1 | 5 | | |
| 4-0883N | D-5 | 2 | A | 1.000 | GLOBE | P | MAN | NC | NO | | SLT-1 | 5 | | |
| 4-0890A | C-6 | 2 | A/C | 6.000 | CHECK | A | S/A | NC | NO | | EC | 5 | | |
| | | | | | | | | | | | INSP | 7 | VR-1 | |
| | | | | | | | | | | | PEO | 7 | VR-1 | |
| | | | | | | | | | | | SLT-1 | 5 | | |
| 4-0890B | F-6 | 2 | A/C | 6.000 | CHECK | A | S/A | NC | NO | | EC | 5 | | |
| | | | | | | | | | | | INSP | 7 | VR-1 | |
| | | | | | | | | | | | PEO | 7 | VR-1 | |
| | | | | | | | | | | | SLT-1 | 5 | | |
| MOV-4-0880A | C-4 | 2 | A | 6.000 | GATE | A | MO | NC | YES | FAI | SLT-1 | 5 | | |
| | | | | | | | | | | | TC | 3 | | |
| | | | | | | | | | | | TO | 3 | | |
| | | | | | | | | | | | V | 5 | | |
| MOV-4-0880B | F-4 | 2 | A | 6.000 | GATE | A | MO | NC | YES | FAI | SLT-1 | 5 | | |
| | | | | | | | | | | | TC | 3 | | |
| | | | | | | | | | | | TO | 3 | | |
| | | | | | | | | | | | V | 5 | | |
| RV-4-0871 | G-2 | 2 | C | 0.750 | SAFE | A | S/A | NC | NO | | S/R | 9 | | |

P & ID: 5614-M-3072-1 SYSTEM: MAIN STEAM

| VALVE NUMBER | COORD. | CL | CAT. | SIZE | TYPE | A/P | ACT. TYPE | NORM POS. | REM IND | FAIL MODE | EXAM | TEST FREQ | RELIEF REQ. | REMARKS |
|---|---|---|---|---|---|---|---|---|---|---|---|---|---|---|
| 4-10-0004 | G-7 | NC | C | 26.000 | S/CHK | A | S/A | NO | NO | | EC | 2 | | NOTE 1 |
| | | | | | | | | | | | INSP | 7 | | |
| 4-10-0005 | D-7 | NC | C | 26.000 | S/CHK | A | S/A | NO | NO | | EC | 2 | | NOTE 1 |
| | | | | | | | | | | | INSP | 7 | | |
| 4-10-0006 | B-7 | NC | C | 26.000 | S/CHK | A | S/A | NO | NO | | EC | 2 | | NOTE 1 |
| | | | | | | | | | | | INSP | 7 | | |
| CV-4-1606 | F-4 | 2 | B | 6.000 | GLOBE | A | A/O | NC | YES | FC | FS | 2 | | |
| | | | | | | | | | | | TC | 2 | | |
| | | | | | | | | | | | TO | 2 | | |
| CV-4-1607 | D-4 | 2 | B | 6.000 | GLOBE | A | A/O | NC | YES | FC | FS | 2 | | |
| | | | | | | | | | | | TC | 2 | | |
| | | | | | | | | | | | TO | 2 | | |
| CV-4-1608 | B-4 | 2 | B | 6.000 | GLOBE | A | A/O | NC | YES | FC | FS | 2 | | |
| | | | | | | | | | | | TC | 2 | | |
| | | | | | | | | | | | TO | 2 | | |
| MOV-4-1400 | F-6 | 2 | B | 2.000 | GLOBE | A | MO | NC | YES | FAI | TC | 3 | | |
| | | | | | | | | | | | V | 5 | | |
| MOV-4-1401 | D-6 | 2 | B | 2.000 | GLOBE | A | MO | NC | YES | FAI | TC | 3 | | |
| | | | | | | | | | | | V | 5 | | |
| MOV-4-1402 | B-6 | 2 | B | 2.000 | GLOBE | A | MO | NC | YES | FAI | TC | 3 | | |
| | | | | | | | | | | | V | 5 | | |
| POV-4-2604 | G-6 | 2 | B/C | 26.000 | PA/CHK | A | A/O | NO | YES | FAI | TC | 2 | | |
| | | | | | | | | | | | V | 5 | | |
| POV-4-2605 | D-6 | 2 | B/C | 26.000 | PA/CHK | A | A/O | NO | YES | FAI | TC | 2 | | |
| | | | | | | | | | | | V | 5 | | |
| POV-4-2606 | B-6 | 2 | B/C | 26.000 | PA/CHK | A | A/O | NO | YES | FAI | TC | 2 | | |
| | | | | | | | | | | | V | 5 | | |
| RV-4-1400 | G-5 | 2 | C | 6.000 | SAFE | A | S/A | NC | NO | | S/R | 8 | | |
| RV-4-1401 | G-5 | 2 | C | 6.000 | SAFE | A | S/A | NC | NO | | S/R | 8 | | |
| RV-4-1402 | H-5 | 2 | C | 6.000 | SAFE | A | S/A | NC | NO | | S/R | 8 | | |

P & ID: 5614-M-3072-1 (cont) SYSTEM: MAIN STEAM

| VALVE NUMBER | COORD. | CL | CAT. | SIZE | TYPE | A/P | ACT. TYPE | NORM POS. | REM IND | FAIL MODE | EXAM | TEST FREQ | RELIEF REQ. | REMARKS |
|---|---|---|---|---|---|---|---|---|---|---|---|---|---|---|
| RV-4-1403 | F-5 | 2 | C | 6.000 | SAFE | A | S/A | NC | NO | | S/R | 8 | | |
| RV-4-1405 | E-5 | 2 | C | 6.000 | SAFE | A | S/A | NC | NO | | S/R | 8 | | |
| RV-4-1406 | D-5 | 2 | C | 6.000 | SAFE | A | S/A | NC | NO | | S/R | 8 | | |
| RV-4-1407 | E-5 | 2 | C | 6.000 | SAFE | A | S/A | NC | NO | | S/R | 8 | | |
| RV-4-1408 | D-5 | 2 | C | 6.000 | SAFE | A | S/A | NC | NO | | S/R | 8 | | |
| RV-4-1410 | B-5 | 2 | C | 6.000 | SAFE | A | S/A | NC | NO | | S/R | 8 | | |
| RV-4-1411 | B-5 | 2 | C | 6.000 | SAFE | A | S/A | NC | NO | | S/R | 8 | | |
| RV-4-1412 | C-5 | 2 | C | 6.000 | SAFE | A | S/A | NC | NO | | S/R | 8 | | |
| RV-4-1413 | A-5 | 2 | C | 6.000 | SAFE | A | S/A | NC | NO | | S/R | 8 | | |

P & ID: 5614-M-3074-3 SYSTEM: FEEDWATER

| VALVE NUMBER | COORD. | CL | CAT. | SIZE | TYPE | A/P | ACT. TYPE | NORM POS. | REM IND | FAIL MODE | EXAM | TEST FREQ | RELIEF REQ. | REMARKS |
|---|---|---|---|---|---|---|---|---|---|---|---|---|---|---|
| 4-20-0137 | G-6 | 2 | C | 0.500 | CHECK | A | S/A | NO | NO | | EC | 3 | | |
| 4-20-0237 | E-6 | 2 | C | 0.500 | CHECK | A | S/A | NO | NO | | EC | 3 | | |
| 4-20-0337 | B-6 | 2 | C | 0.500 | CHECK | A | S/A | NO | NO | | EC | 3 | | |
| FCV-4-0478 | G-4 | 2 | B | 14.000 | GLOBE | A | A/O | NO | NO | FC | FS | 2 | | |
| | | | | | | | | | | | TC | 2 | | |
| | | | | | | | | | | | V | 5 | | |
| FCV-4-0479 | H-3 | 2 | B | 4.000 | GLOBE | A | A/O | NC | NO | FC | FS | 2 | | |
| | | | | | | | | | | | TC | 2 | | |
| | | | | | | | | | | | V | 5 | | |
| FCV-4-0488 | D-4 | 2 | B | 14.000 | GLOBE | A | A/O | NO | NO | FC | FS | 2 | | |
| | | | | | | | | | | | TC | 2 | | |
| | | | | | | | | | | | V | 5 | | |
| FCV-4-0489 | E-3 | 2 | B | 4.000 | GLOBE | A | A/O | NC | NO | FC | FS | 2 | | |
| | | | | | | | | | | | TC | 2 | | |
| | | | | | | | | | | | V | 5 | | |
| FCV-4-0498 | B-4 | 2 | B | 14.000 | GLOBE | A | A/O | NO | NO | FC | FS | 2 | | |
| | | | | | | | | | | | TC | 2 | | |
| | | | | | | | | | | | V | 5 | | |
| FCV-4-0499 | C-3 | 2 | B | 4.000 | GLOBE | A | A/O | NC | NO | FC | FS | 2 | | |
| | | | | | | | | | | | TC | 2 | | |
| | | | | | | | | | | | V | 5 | | |

P & ID: 5614-M-3074-4 SYSTEM: STEAM GEN BLOWDOWN RECOVERY

| VALVE NUMBER | COORD. | CL | CAT. | SIZE | TYPE | A/P | ACT. TYPE | NORM POS. | REM IND | FAIL MODE | EXAM | TEST FREQ | RELIEF REQ. | REMARKS |
|---|---|---|---|---|---|---|---|---|---|---|---|---|---|---|
| CV-4-6275A | G-2 | 2 | B | 6.000 | GLOBE | A | A/O | NO | YES | FAI | TC | 3 | | |
| | | | | | | | | | | | V | 5 | | |
| CV-4-6275B | E-2 | 2 | B | 6.000 | GLOBE | A | A/O | NO | YES | FAI | TC | 3 | | |
| | | | | | | | | | | | V | 5 | | |
| CV-4-6275C | C-2 | 2 | B | 6.000 | GLOBE | A | A/O | NO | YES | FAI | TC | 3 | | |
| | | | | | | | | | | | V | 5 | | |
| SV-4-6275A-1 | F-3 | 2 | B | 0.750 | GLOBE | A | SO | NO | YES | FC | FS | 3 | | |
| | | | | | | | | | | | TC | 3 | | |
| | | | | | | | | | | | V | 5 | | |
| SV-4-6275B-1 | D-3 | 2 | B | 0.750 | GLOBE | A | SO | NO | YES | FC | FS | 3 | | |
| | | | | | | | | | | | TC | 3 | | |
| | | | | | | | | | | | V | 5 | | |
| SV-4-6275C-1 | B-3 | 2 | B | 0.750 | GLOBE | A | SO | NO | YES | FC | FS | 3 | | |
| | | | | | | | | | | | TC | 3 | | |
| | | | | | | | | | | | V | 5 | | |

P & ID: 5614-M-3075-1 SYSTEM: AFW-STEAM TO AUX. FEEDWATER PUMP TURBINE

| VALVE NUMBER | COORD. | CL | CAT. | SIZE | TYPE | A/P | ACT. TYPE | NORM POS. | REM IND | FAIL MODE | EXAM | TEST FREQ | RELIEF REQ. | REMARKS |
|---|---|---|---|---|---|---|---|---|---|---|---|---|---|---|
| 4-10-0083 | A-7 | 3 | C | 4.000 | CHECK | A | S/A | NC | NO | | EO | 3 | | |
| 4-10-0087 | D-7 | 3 | C | 4.000 | CHECK | A | S/A | NC | NO | | EO | 6 | | NOTE 2 |
| 4-10-0375 | F-3 | 2 | C | 3.000 | CHECK | A | S/A | NC | NO | | EO | 3 | | |
| 4-10-0376 | D-3 | 2 | C | 3.000 | CHECK | A | S/A | NC | NO | | EO | 3 | | |
| 4-10-0377 | B-3 | 2 | C | 3.000 | CHECK | A | S/A | NC | NO | | EO | 3 | | |
| 4-10-0381 | F-4 | 3 | C | 4.000 | CHECK | A | S/A | NC | NO | | EC | 2 | | |
| | | | | | | | | | | | EO | 3 | | |
| 4-10-0382 | D-4 | 3 | C | 4.000 | CHECK | A | S/A | NC | NO | | EC | 2 | | |
| | | | | | | | | | | | EO | 3 | | |
| 4-10-0383 | B-4 | 3 | C | 4.000 | CHECK | A | S/A | NC | NO | | EC | 2 | | |
| | | | | | | | | | | | EO | 3 | | |
| AFSS-4-0005 | F-5 | 3 | C | 4.000 | CHECK | A | S/A | NC | NO | | EO | 3 | | |
| MOV-4-1403 | F-3 | 2 | B | 3.000 | GATE | A | MO | NC | YES | FAI | TC | 3 | | |
| | | | | | | | | | | | TO | 3 | | |
| | | | | | | | | | | | V | 5 | | |
| MOV-4-1404 | D-3 | 2 | B | 3.000 | GATE | A | MO | NC | YES | FAI | TC | 3 | | |
| | | | | | | | | | | | TO | 3 | | |
| | | | | | | | | | | | V | 5 | | |
| MOV-4-1405 | B-3 | 2 | B | 3.000 | GATE | A | MO | NC | YES | FAI | TC | 3 | | |
| | | | | | | | | | | | TO | 3 | | |
| | | | | | | | | | | | V | 5 | | |

P & ID: 5614-M-3075-2 SYSTEM: AFW - AUXILIARY FEEDWATER TO STM GEN

| VALVE NUMBER | COORD. | CL | CAT. | SIZE | TYPE | A/P | ACT. TYPE | NORM POS. | REM IND | FAIL MODE | EXAM | TEST FREQ | RELIEF REQ. | REMARKS |
|---|---|---|---|---|---|---|---|---|---|---|---|---|---|---|
| 4-20-0140 | F-7 | 2 | C | 4.000 | CHECK | A | S/A | NC | NO | | EO | 3 | | |
| 4-20-0240 | D-7 | 2 | C | 4.000 | CHECK | A | S/A | NC | NO | | EO | 3 | | |
| 4-20-0340 | B-7 | 2 | C | 4.000 | CHECK | A | S/A | NC | NO | | EO | 3 | | |
| AFPD-4-0009 | H-3 | 3 | C | 4.000 | CHECK | A | S/A | NC | NO | | EO | 3 | | |
| AFPD-4-0011 | E-3 | 3 | C | 4.000 | CHECK | A | S/A | NC | NO | | EO | 3 | | |
| AFPD-4-0013 | C-3 | 3 | C | 4.000 | CHECK | A | S/A | NC | NO | | EO | 3 | | |
| CV-4-2816 | F-7 | 3 | B | 4.000 | GLOBE | A | A/O | NC | NO | FC | TO | 3 | | |
| CV-4-2817 | D-7 | 3 | B | 4.000 | GLOBE | A | A/O | NC | NO | FC | TO | 3 | | |
| CV-4-2818 | B-7 | 3 | B | 4.000 | GLOBE | A | A/O | NC | NO | FC | TO | 3 | | |
| CV-4-2831 | G-7 | 2 | B | 4.000 | GLOBE | A | A/O | NC | NO | FC | TO | 3 | | |
| CV-4-2832 | E-7 | 2 | B | 4.000 | GLOBE | A | A/O | NC | NO | FC | TO | 3 | | |
| CV-4-2833 | C-7 | 2 | B | 4.000 | GLOBE | A | A/O | NC | NO | FC | TO | 3 | | |

P & ID: 5614-M-3094-1 SYSTEM: CONTAINMENT POST-ACCIDENT EVALUATION

| VALVE NUMBER | COORD. | CL | CAT. | SIZE | TYPE | A/P | ACT. TYPE | NORM POS. | REM IND | FAIL MODE | EXAM | TEST FREQ | RELIEF REQ. | REMARKS |
|---|---|---|---|---|---|---|---|---|---|---|---|---|---|---|
| 4-11-0003 | B-2 | 2 | A/C | 1.000 | CHECK | A | S/A | NO | NO | | EC | 1 | | |
| | | | | | | | | | | | SLT-1 | 5 | | |
| HV-4-0001 | H-2 | 2 | A | 2.000 | DIAPH | P | MAN | LC | NO | | SLT-1 | 5 | | |
| HV-4-0002 | H-4 | 2 | A | 2.000 | DIAPH | P | MAN | LC | NO | | SLT-1 | 5 | | |
| HV-4-0003 | G-2 | 2 | A | 2.000 | DIAPH | P | MAN | LC | NO | | SLT-1 | 5 | | |
| HV-4-0004 | G-4 | 2 | A | 2.000 | DIAPH | P | MAN | LC | NO | | SLT-1 | 5 | | |
| PAHM-4-0001A | B-2 | 2 | A | 0.750 | GLOBE | P | MAN | NC | NO | | SLT-1 | 5 | | |
| PAHM-4-0001B | B-3 | 2 | A | 0.750 | GLOBE | P | MAN | NC | NO | | SLT-1 | 5 | | |
| PAHM-4-0002A | D-4 | 2 | A | 0.750 | GLOBE | P | MAN | NC | NO | | SLT-1 | 5 | | |
| PAHM-4-0002B | D-3 | 2 | A | 0.750 | GLOBE | P | MAN | NC | NO | | SLT-1 | 5 | | |
| SV-4-2911 | A-3 | 2 | A | 1.000 | GLOBE | A | SO | NO | YES | FC | FS | 3 | | |
| | | | | | | | | | | | SLT-1 | 5 | | |
| | | | | | | | | | | | TC | 3 | | |
| | | | | | | | | | | | V | 5 | | |
| SV-4-2912 | B-3 | 2 | A | 1.000 | GLOBE | A | SO | NO | YES | FC | FS | 3 | | |
| | | | | | | | | | | | SLT-1 | 5 | | |
| | | | | | | | | | | | TC | 3 | | |
| | | | | | | | | | | | V | 5 | | |
| SV-4-2913 | A-3 | 2 | A | 1.000 | GLOBE | A | SO | NO | YES | FC | FS | 3 | | |
| | | | | | | | | | | | SLT-1 | 5 | | |
| | | | | | | | | | | | TC | 3 | | |
| | | | | | | | | | | | V | 5 | | |

P & ID: 5614-M-3101-1 SYSTEM: BREATHING AIR SYSTEM (BA)

| VALVE NUMBER | COORD. | CL | CAT. | SIZE | TYPE | A/P | ACT. TYPE | NORM POS. | REM IND | FAIL MODE | EXAM | TEST FREQ | RELIEF REQ. | REMARKS |
|---|---|---|---|---|---|---|---|---|---|---|---|---|---|---|
| 4-BA-0201 | D-3 | 2 | A/C | 2.500 | CHECK | A | S/A | NC | NO | | EC | 1 | | |
| | | | | | | | | | | | SLT-1 | 5 | | |
| CV-4-6165 | D-2 | 2 | A | 2.500 | GATE | P | A/O | LC | YES | FAI | SLT-1 | 5 | | |
| | | | | | | | | | | | V | 5 | | |

P & ID: VARIOUS SYSTEM: TEST CONNECTION

| VALVE NUMBER | COORD. | CL | CAT. | SIZE | TYPE | A/P | ACT. TYPE | NORM POS. | REM IND | FAIL MODE | EXAM | TEST FREQ | RELIEF REQ. | REMARKS |
|---|---|---|---|---|---|---|---|---|---|---|---|---|---|---|
| 4-10-0879 | | 2 | A | 0.375 | GLOBE | P | MAN | NC | NO | | SLT-1 | 5 | | |

## NOTES

Pg 138 1. Valves 4-10-004 through 4-10-006 are not included within the ISI class boundaries and, as such, are exempt from the inclusive requirements of the Code. These components have been included in the Program to ensure that inservice testing is adequate to demonstrate their continued operability. These valves will be tested in accordance with Code requirements, except where determined impractical, in which case specific relief from the Code is not required.

These are large stop check valves in the main steam lines leading to the main turbine generator. There is no practical way of verifying closure of these valves by way of a back seat or reverse flow test. Exercising a valve manually using the hand wheel provides some assurance that the disc moves freely within the valve body. Furthermore, the valves are disassembled, inspected, and manually exercised at least once during each 10-year inspection interval.

Pg 142 2. Auxiliary Feedwater Steam Supply Valve, 4-10-087 will be tested whenever AFW Pump "C" is aligned to Train 1.

ATTACHMENT 3

5610-M-3000

FOR INFORMATION ONLY

POD

FPL

TURKEY POINT NUCLEAR UNIT 3 & 4

PIPING & INSTRUMENT DIAGRAM INDEX

STONE & WEBSTER ENGINEERING CORP
FT. LAUDERDALE, FLORIDA

5610-M-3000

ALL

6

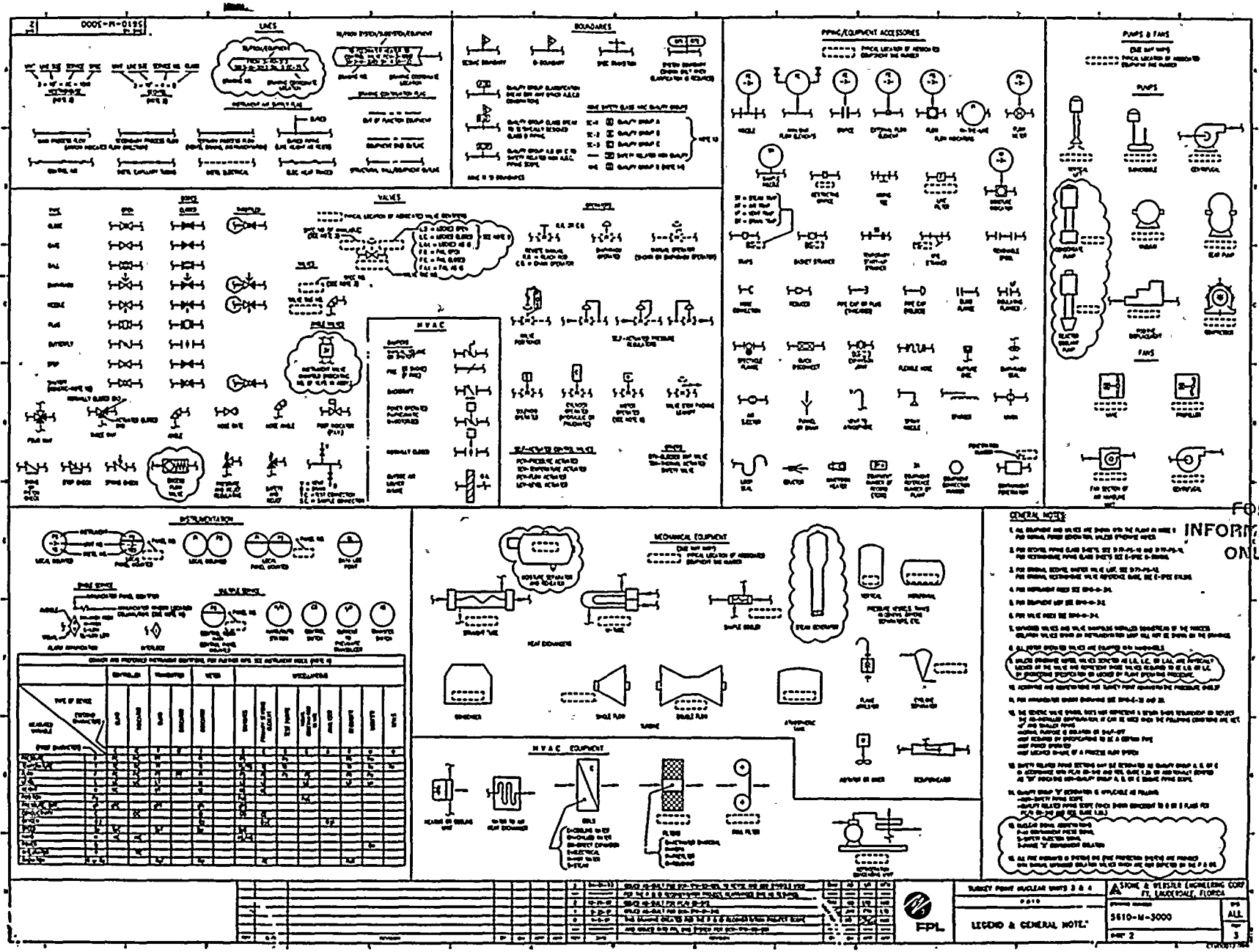
LINES
BOUNDARIES
PIPING/EQUIPMENT ACCESSORIES
PUMPS & FANS
VALVES
HVAC
INSTRUMENTATION
MECHANICAL EQUIPMENT
HVAC EQUIPMENT
GENERAL NOTES
FOR INFORMATION ONLY
FPL
TURKEY POINT NUCLEAR UNITS 3 & 4
LEGEND & GENERAL NOTES
STONE & WEBSTER ENGINEERING CORP.
FT. LAUDERDALE, FLORIDA
5610-M-3000
SHT. 2
ALL
3

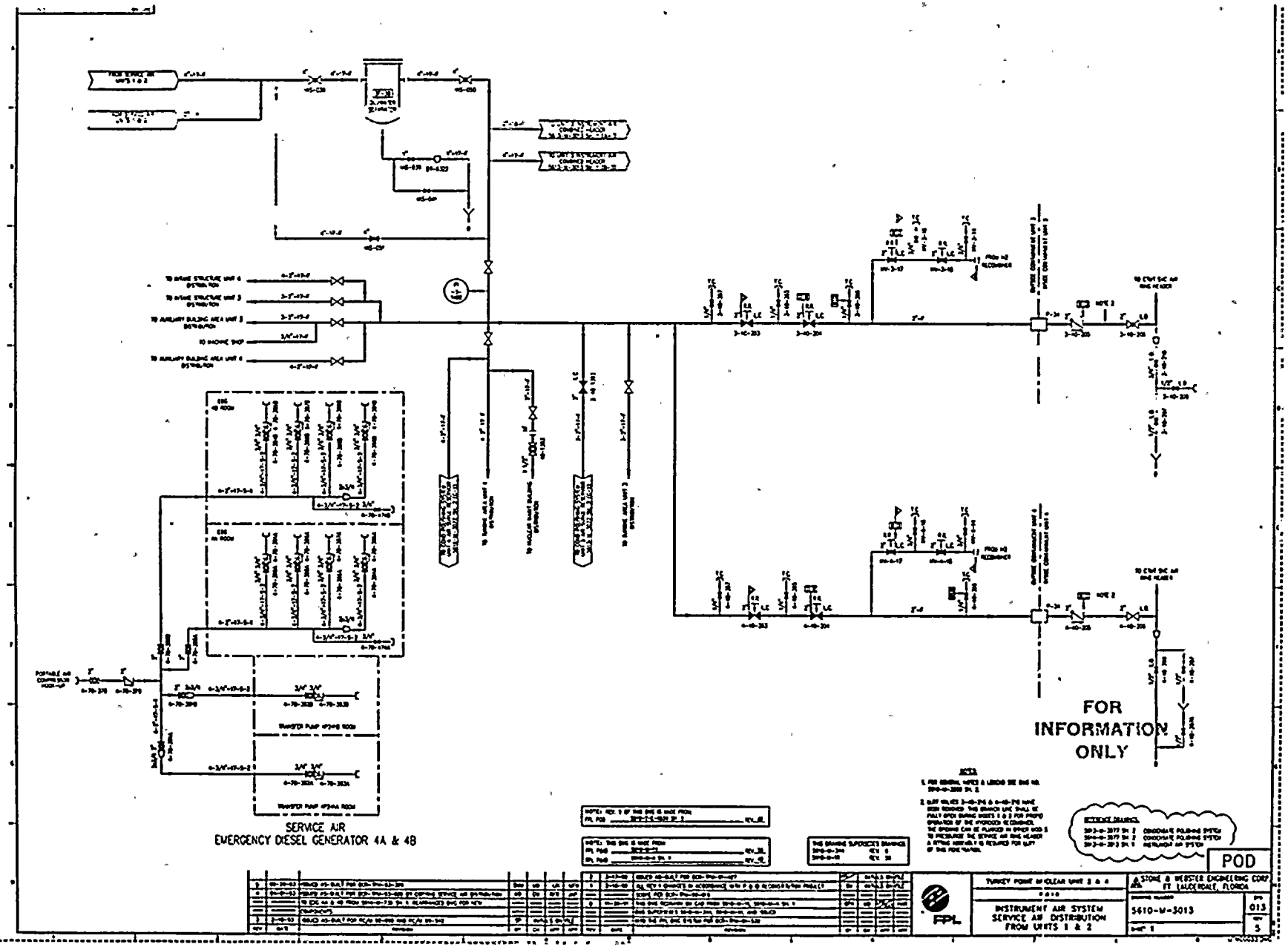
SERVICE AIR
EMERGENCY DIESEL GENERATOR 4A & 4B
FOR INFORMATION ONLY
POD
TURKEY POINT NUCLEAR UNIT 3 & 4
INSTRUMENT AIR SYSTEM
SERVICE AIR DISTRIBUTION
FROM UNITS 1 & 2
FPL
STONE & WEBSTER ENGINEERING CORP.
FT. LAUDERDALE, FLORIDA
5610-M-3013
013
3

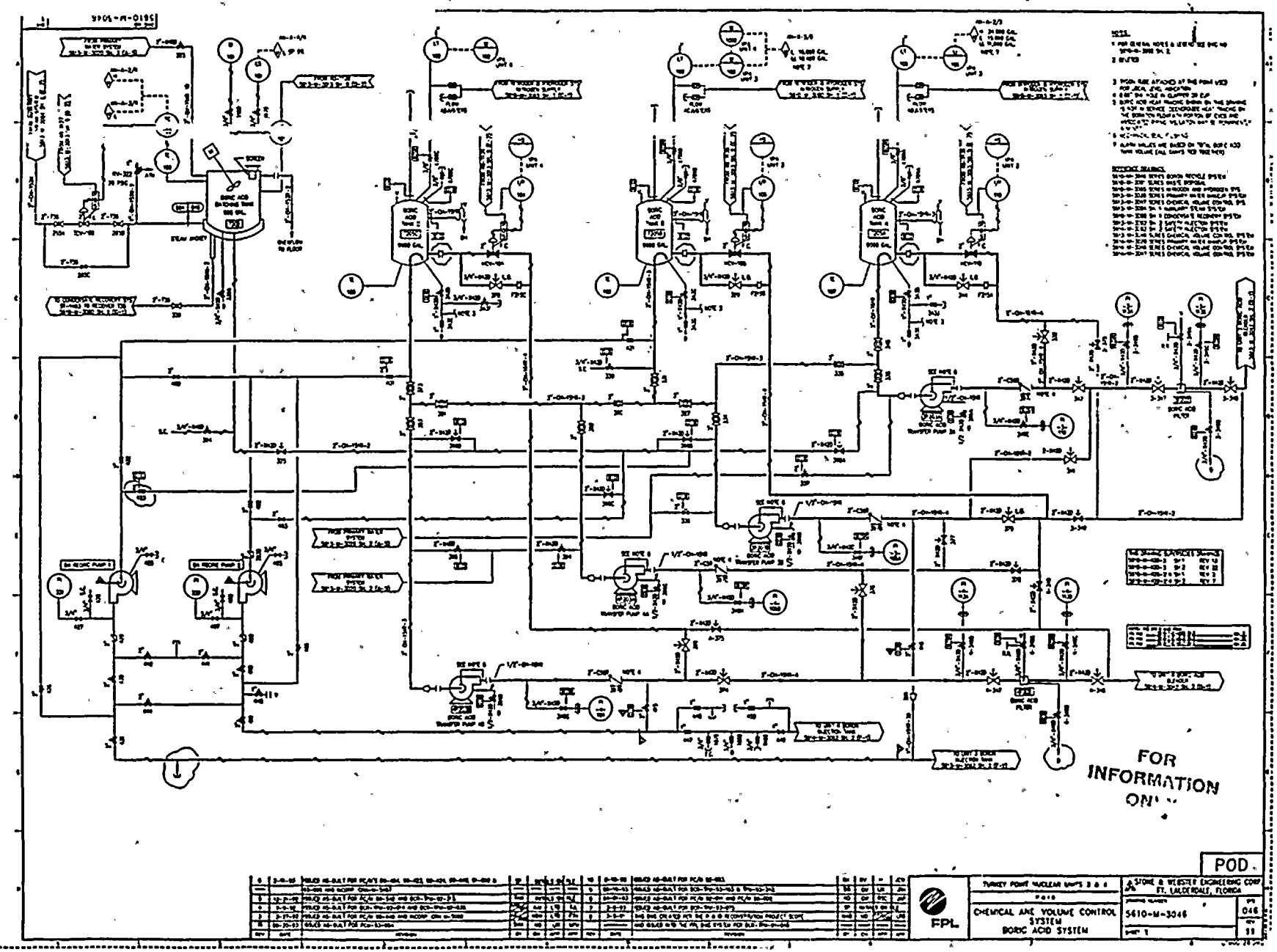
FOR INFORMATION ONLY
POD
FPL
TURKEY POINT NUCLEAR UNITS 3 & 4
CHEMICAL AND VOLUME CONTROL SYSTEM
BORIC ACID SYSTEM
STONE & WEBSTER ENGINEERING CORP.
FT. LAUDERDALE, FLORIDA
5610-M-3046

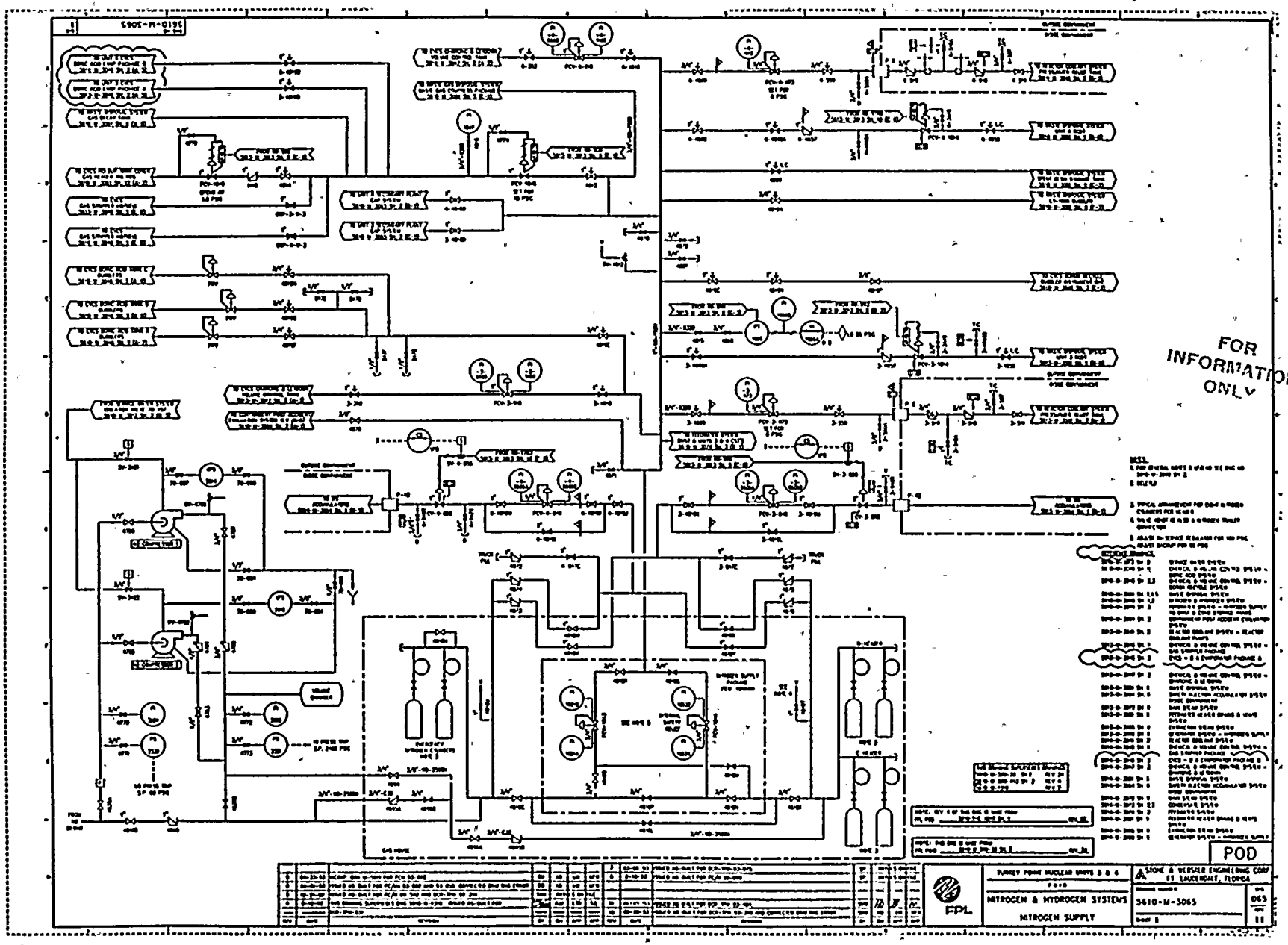
FOR INFORMATION ONLY
POD
NITROGEN & HYDROGEN SYSTEMS
NITROGEN SUPPLY
5610-M-3065
FPL

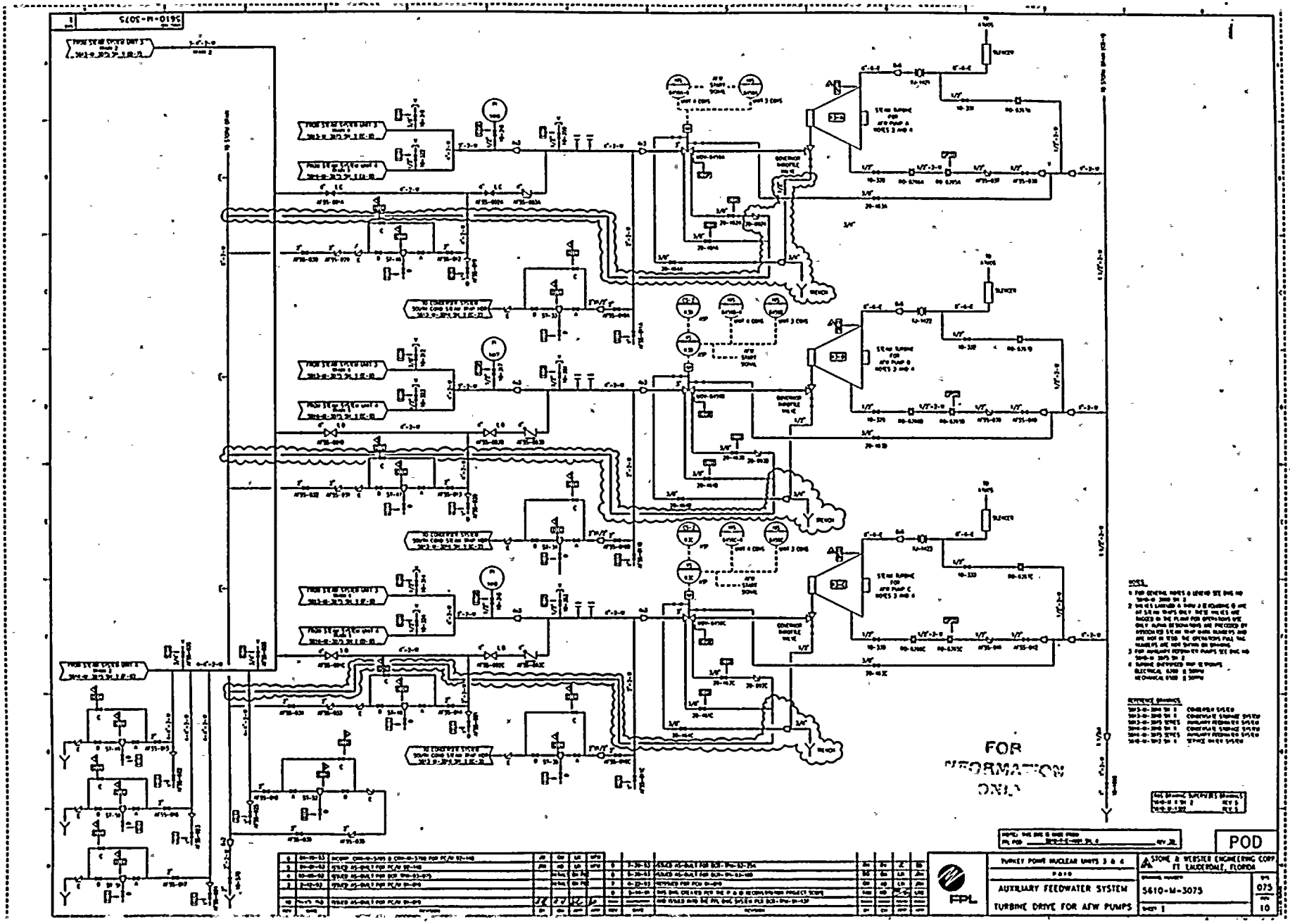
5610-M-3075
FOR INFORMATION ONLY
POD
TURKEY POINT NUCLEAR UNITS 3 & 4
AUXILIARY FEEDWATER SYSTEM
TURBINE DRIVE FOR AFW PUMPS
FPL
STONE & WEBSTER ENGINEERING CORP
FT. LAUDERDALE, FLORIDA
5610-M-3075
075
10

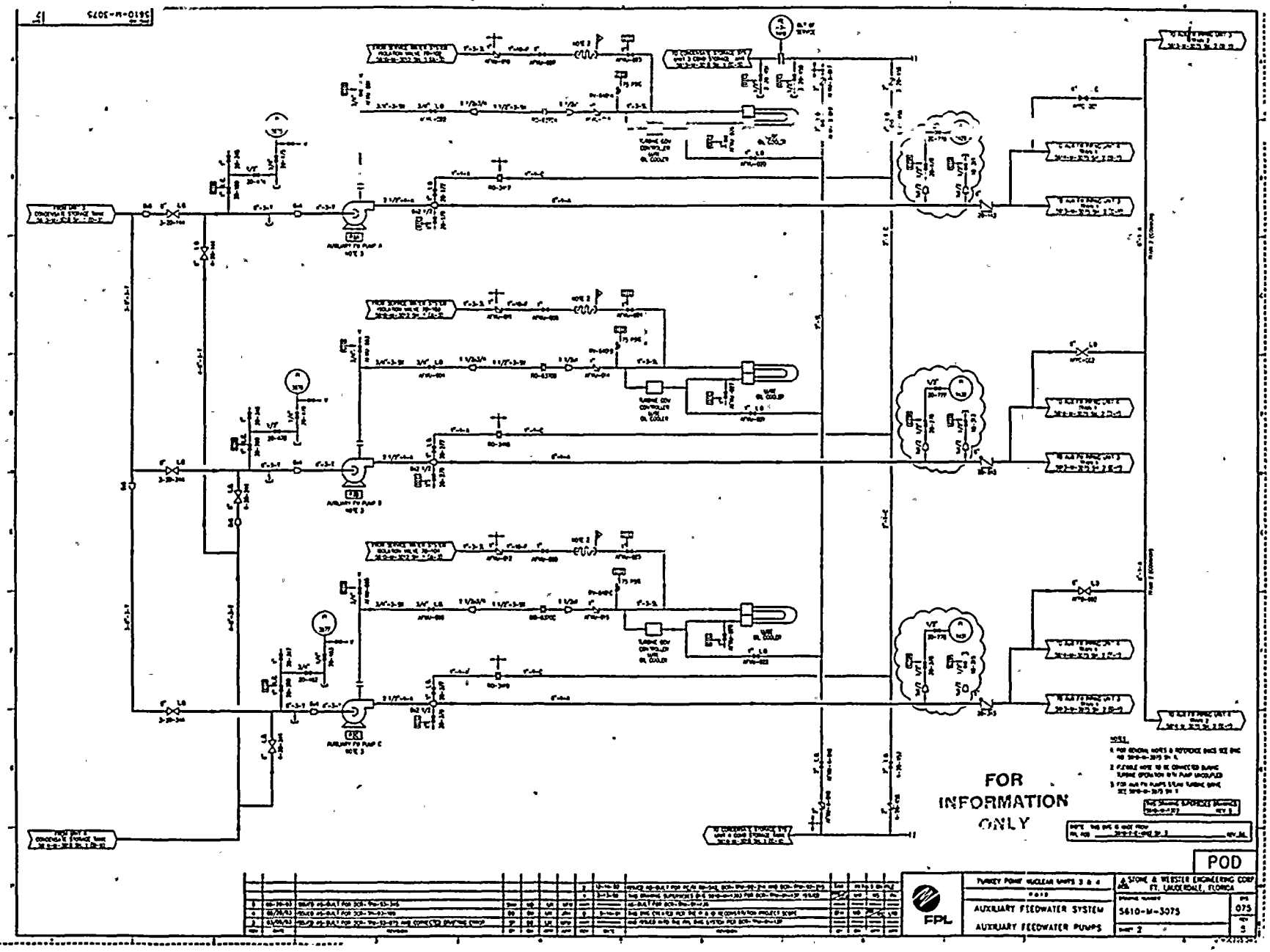
FOR INFORMATION ONLY
POD
TURKEY POINT NUCLEAR UNITS 3 & 4
AUXILIARY FEEDWATER SYSTEM
AUXILIARY FEEDWATER PUMPS
STONE & WEBSTER ENGINEERING CORP.
FT. LAUDERDALE, FLORIDA
5610-M-3075
075
FPL

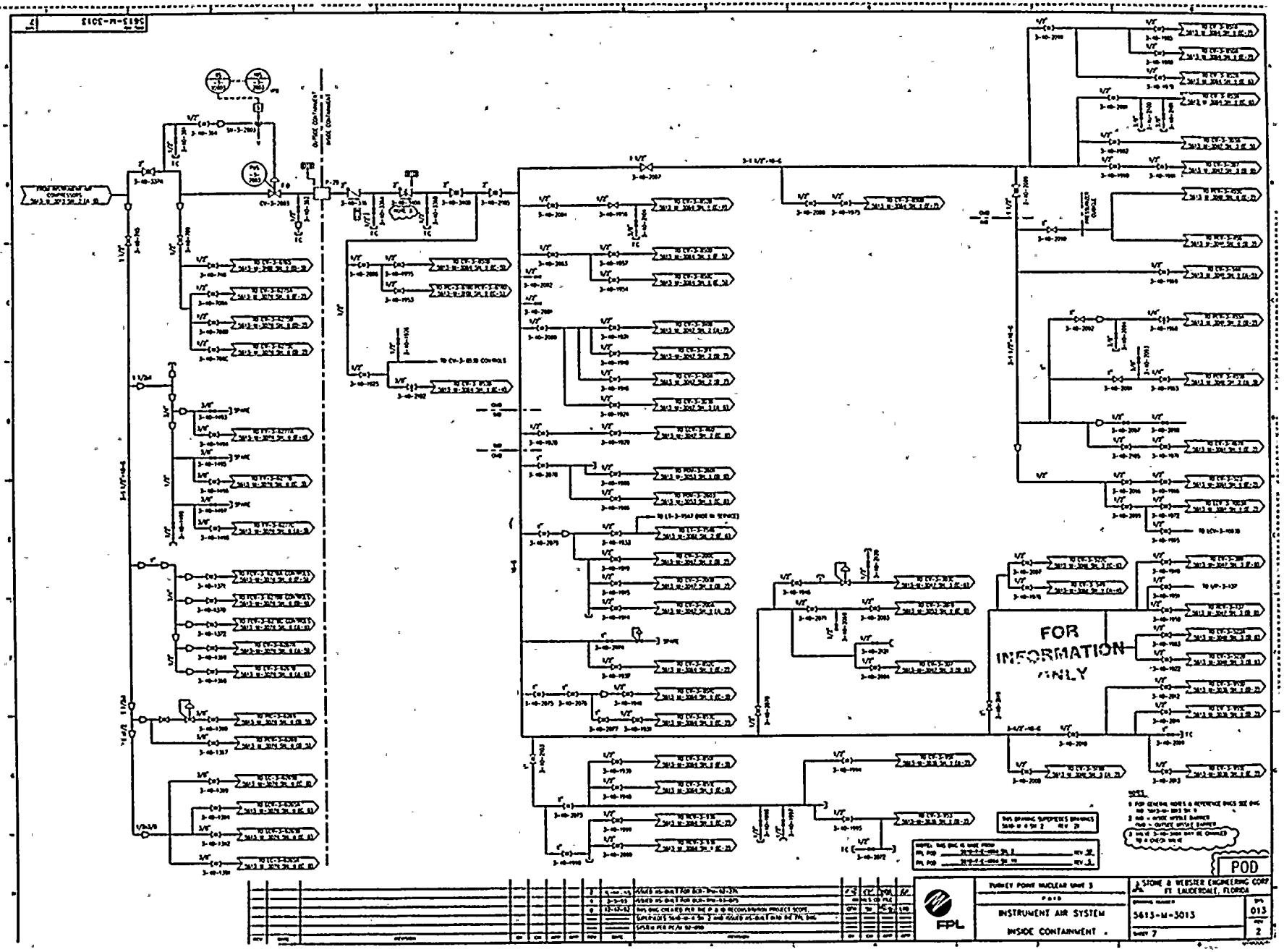
FOR INFORMATION ONLY
POD
FPL
TURKEY POINT NUCLEAR UNIT 3
INSTRUMENT AIR SYSTEM
INSIDE CONTAINMENT
STONE & WEBSTER ENGINEERING CORP
FT. LAUDERDALE, FLORIDA
5613-M-3013
013
2

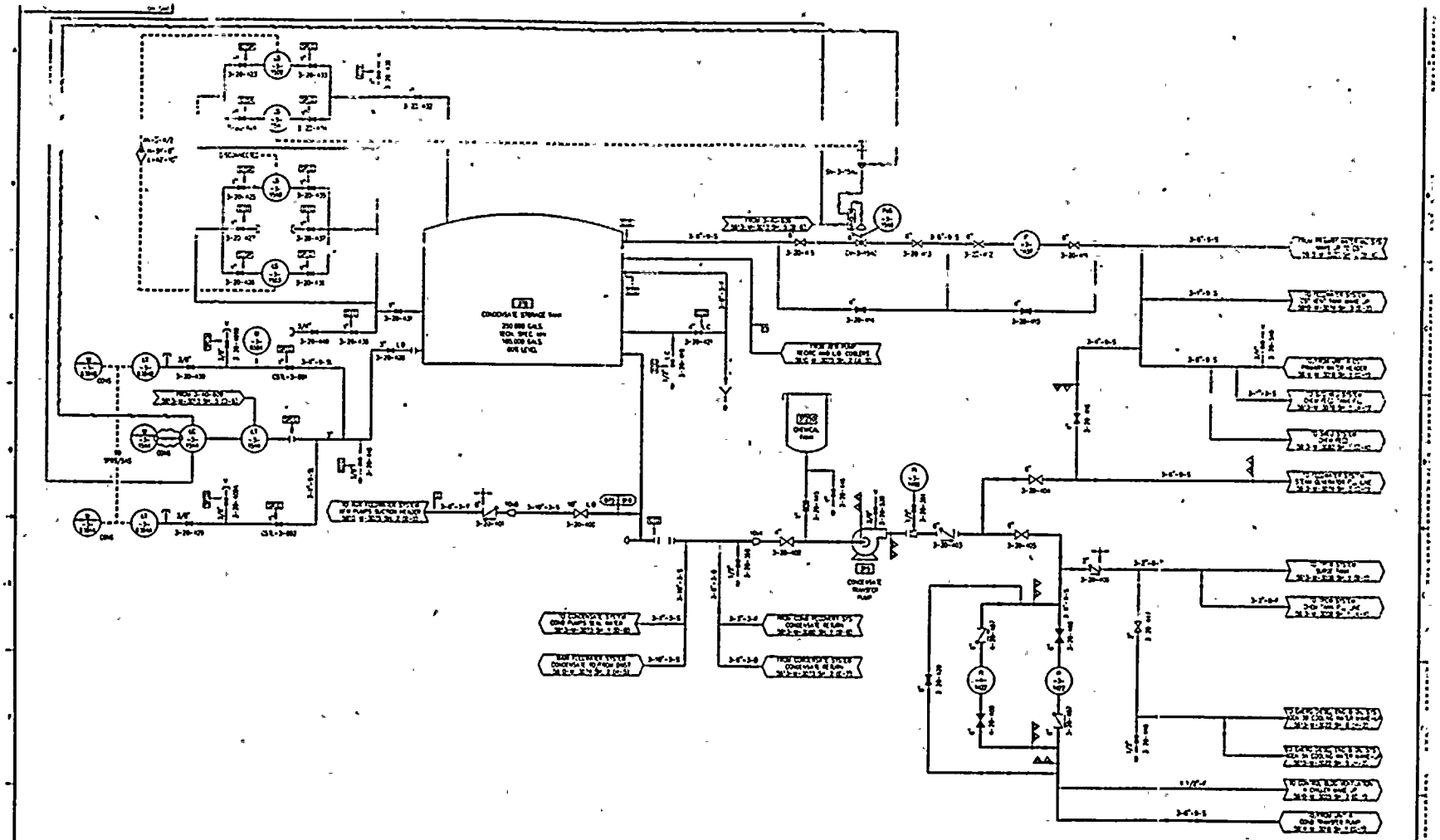

FOR INFORMATION ONLY

POD

FPL

TURKEY POINT NUCLEAR UNIT 3

CONDENSATE STORAGE SYSTEM

STONE & WEBSTER ENGINEERING CORP
FT. LAUDERDALE, FLORIDA

5613-M-3018

018

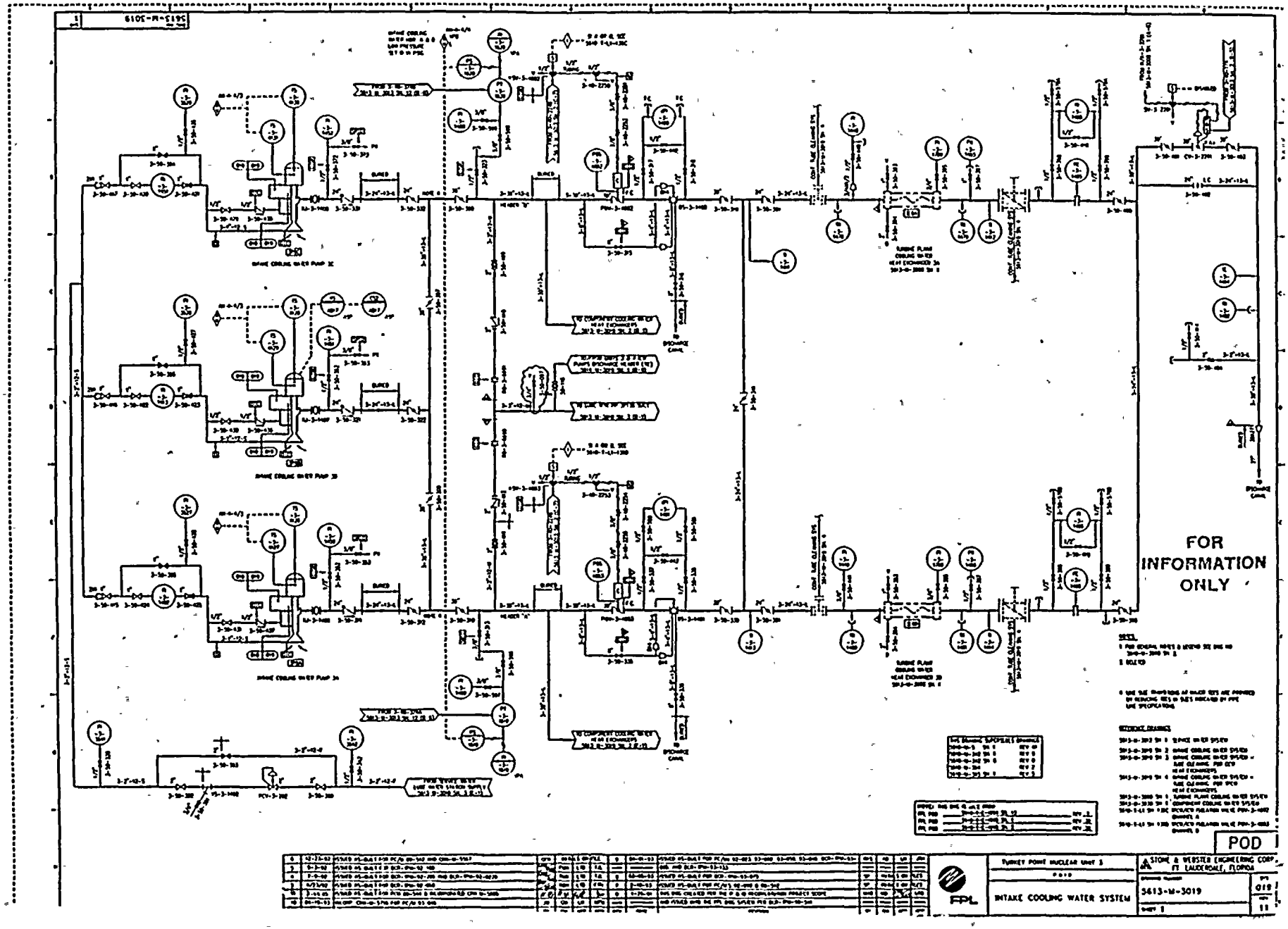
FOR INFORMATION ONLY
POD
TURKEY POINT NUCLEAR UNIT 3
INTAKE COOLING WATER SYSTEM
FPL
STONE & WEBSTER ENGINEERING CORP.
FT. LAUDERDALE, FLORIDA
5613-M-3019

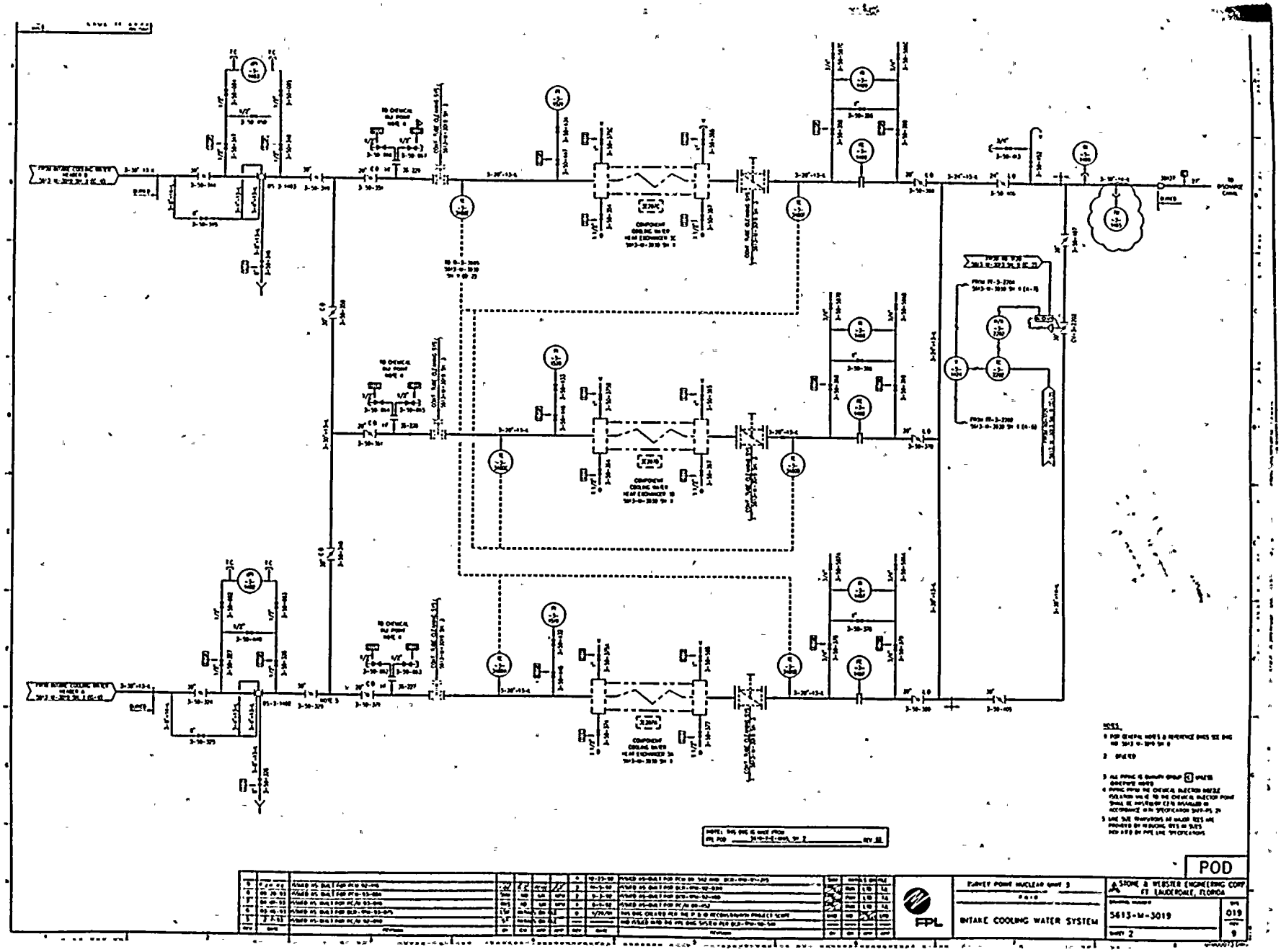
POD
FPL
INTAKE COOLING WATER SYSTEM
STONE & WEBSTER ENGINEERING CORP.
FT. LAUDERDALE, FLORIDA
5613-M-3019
019

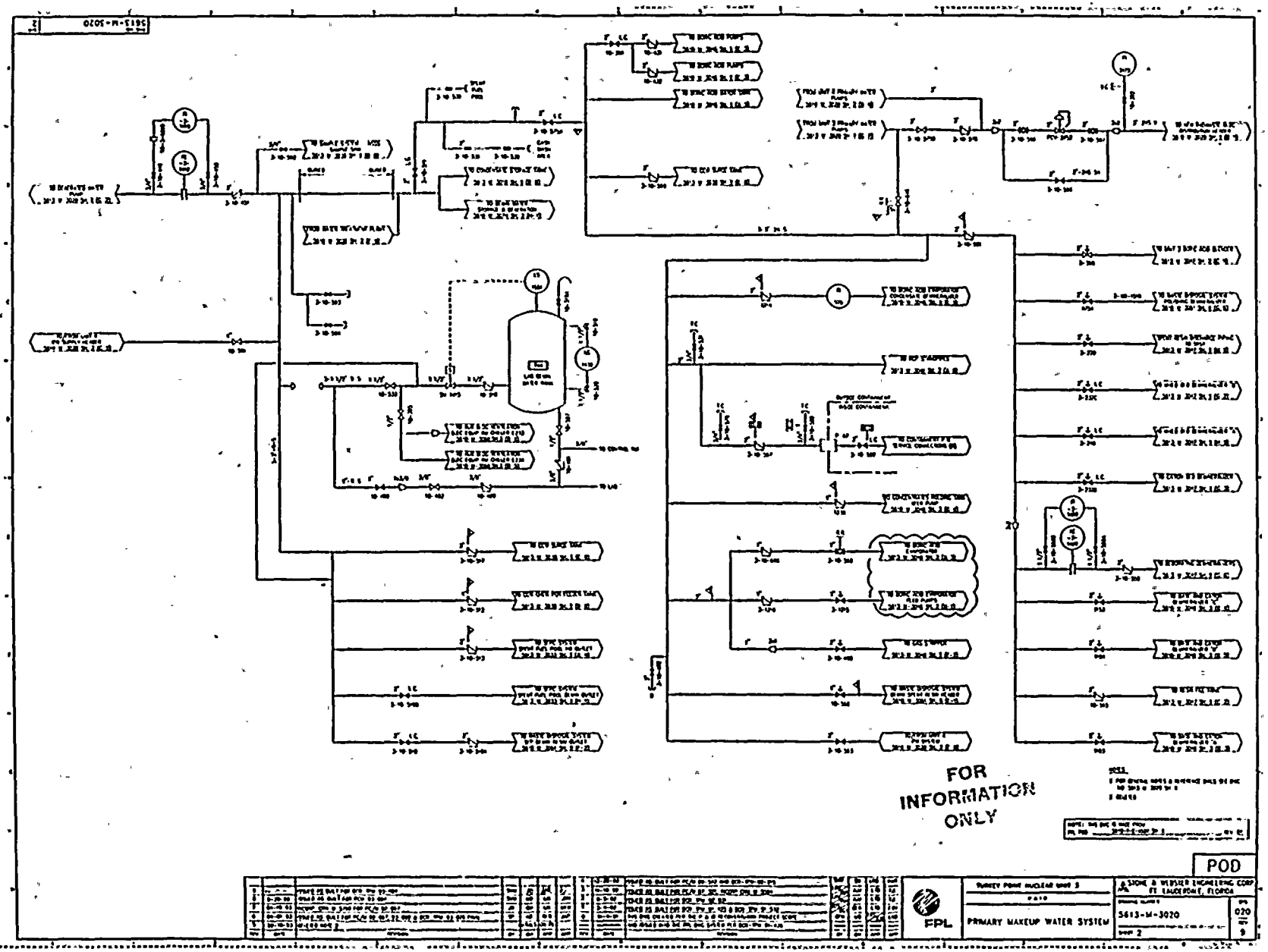
FOR INFORMATION ONLY
POD
FPL
PRIMARY MAKEUP WATER SYSTEM
5613-M-3020

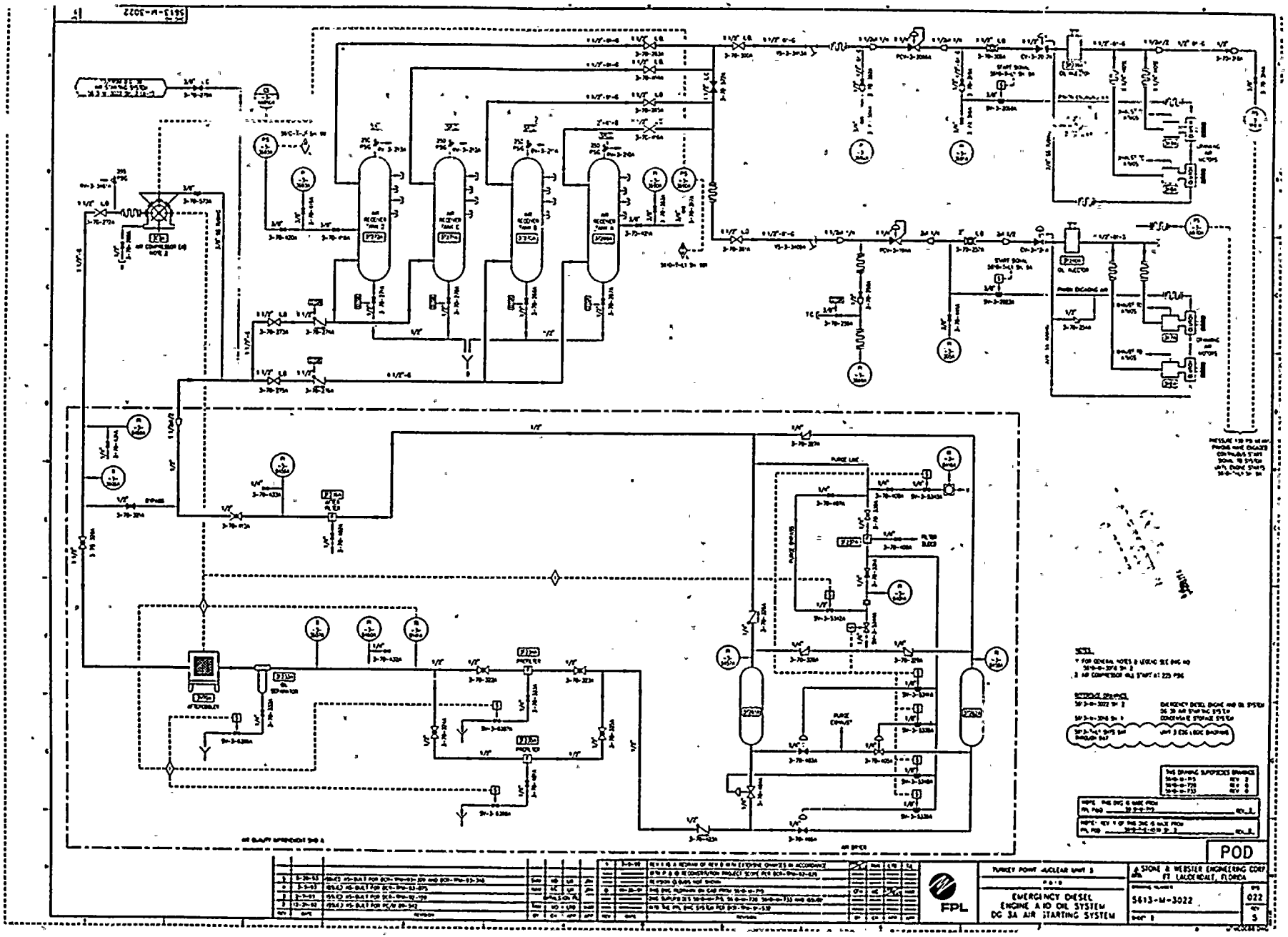
POD
FPL
TURKEY POINT NUCLEAR UNIT 3
EMERGENCY DIESEL
ENGINE AIR OIL SYSTEM
DG 3A AIR STARTING SYSTEM
STONE & WEBSTER ENGINEERING CORP
FT. LAUDERDALE, FLORIDA
5613-M-3022
022
5

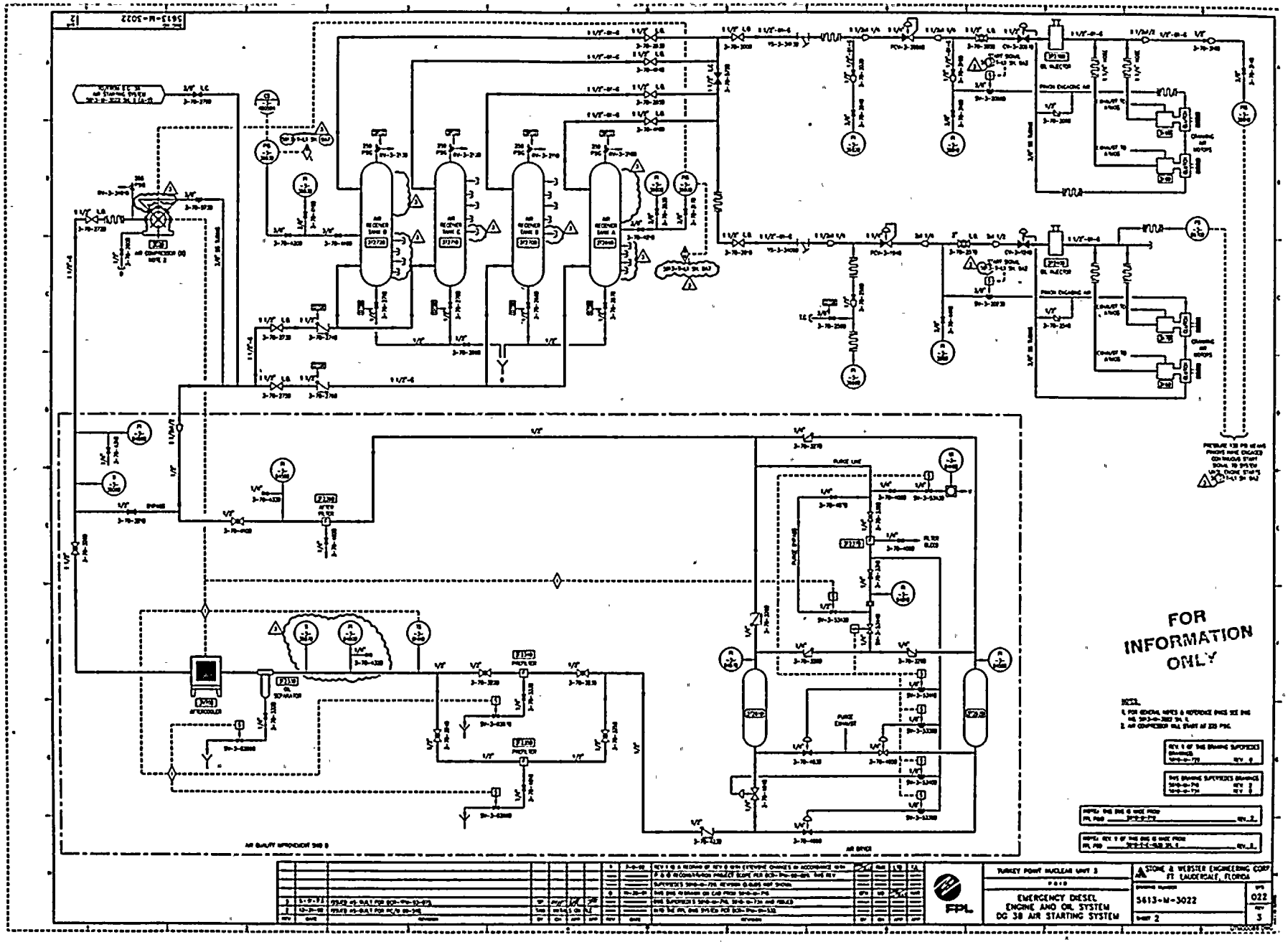
FOR INFORMATION ONLY
TURKEY POINT NUCLEAR UNIT 3
EMERGENCY DIESEL ENGINE AND OIL SYSTEM
DG 3B AIR STARTING SYSTEM
STONE & WEBSTER ENGINEERING CORP
FT. LAUDERDALE, FLORIDA
5613-M-3022
022
3
FPL

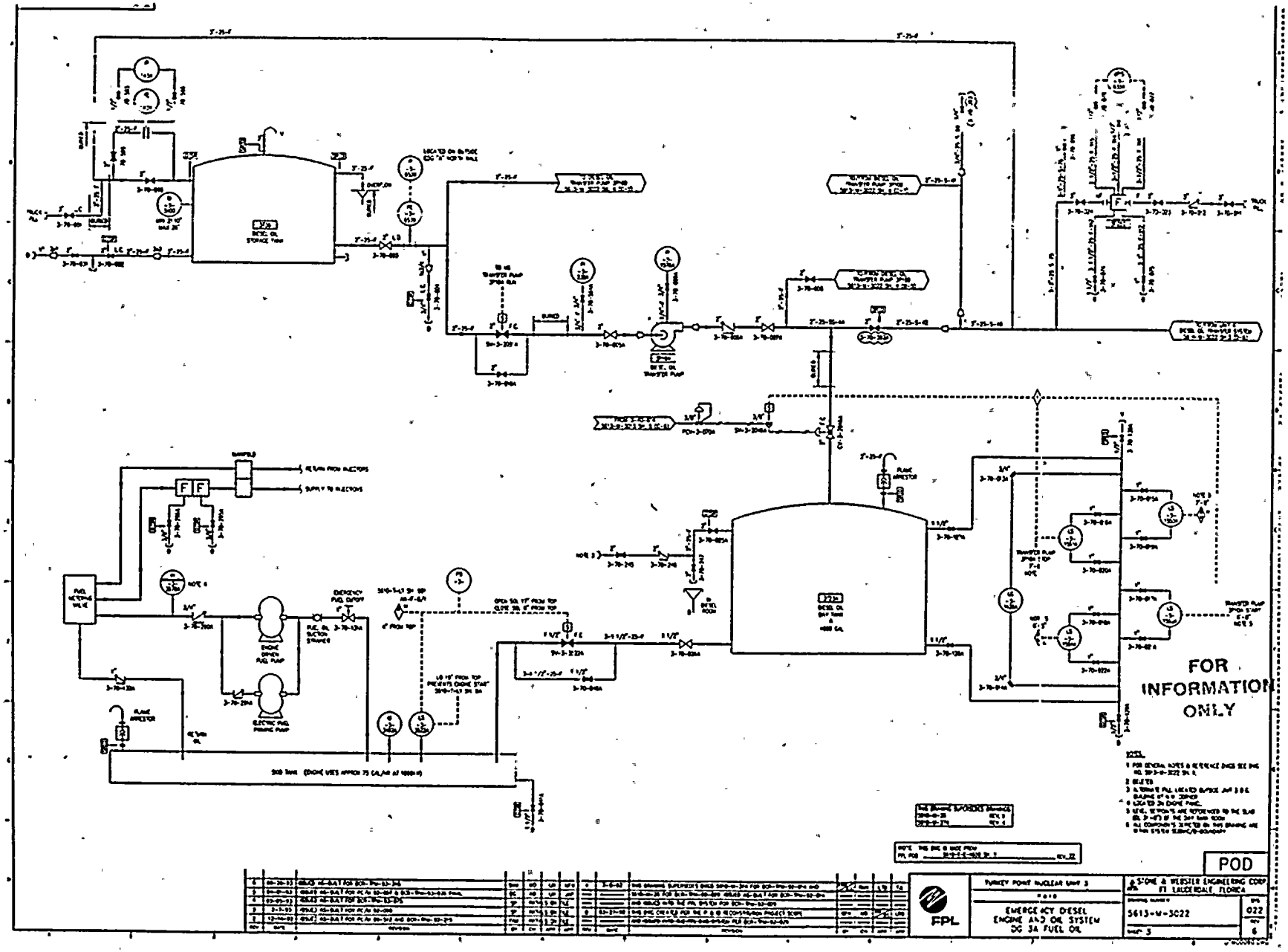
FOR INFORMATION ONLY
POD
FPL
TURKEY POINT NUCLEAR UNIT 3
EMERGENCY DIESEL ENGINE AND OIL SYSTEM DG 3A FUEL OIL
STONE & WEBSTER ENGINEERING CORP.
FT. LAUDERDALE, FLORIDA
5613-M-3022
022
6

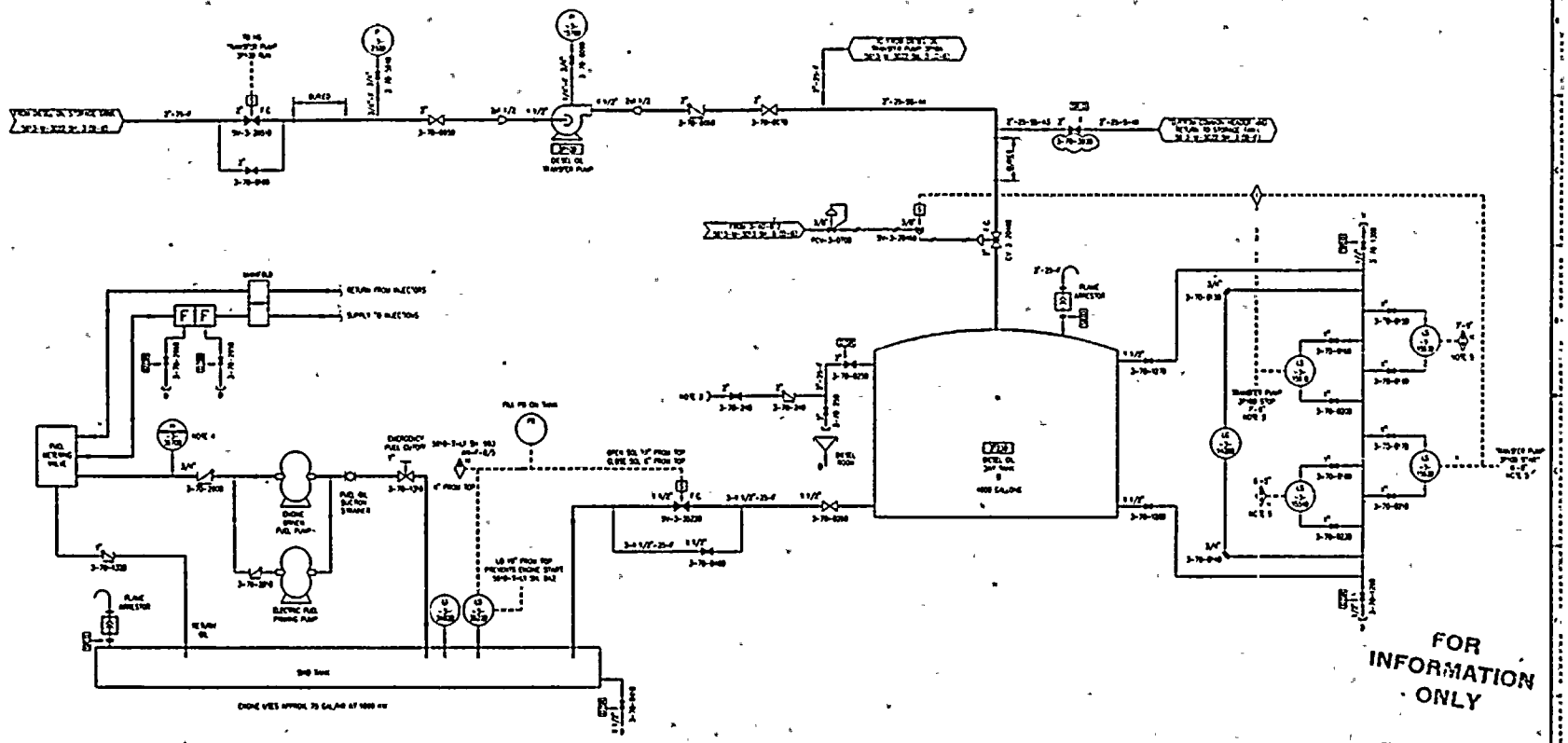

FOR INFORMATION ONLY

NOTES

POD

FPL

TURKEY POINT NUCLEAR UNIT 3

EMERGENCY DIESEL ENGINE AND OIL SYSTEM DG 3E FUEL OIL

STONE & WEBSTER ENGINEERING CORP. FT. LAUDERDALE, FLORIDA

5613-M-3022

022

5

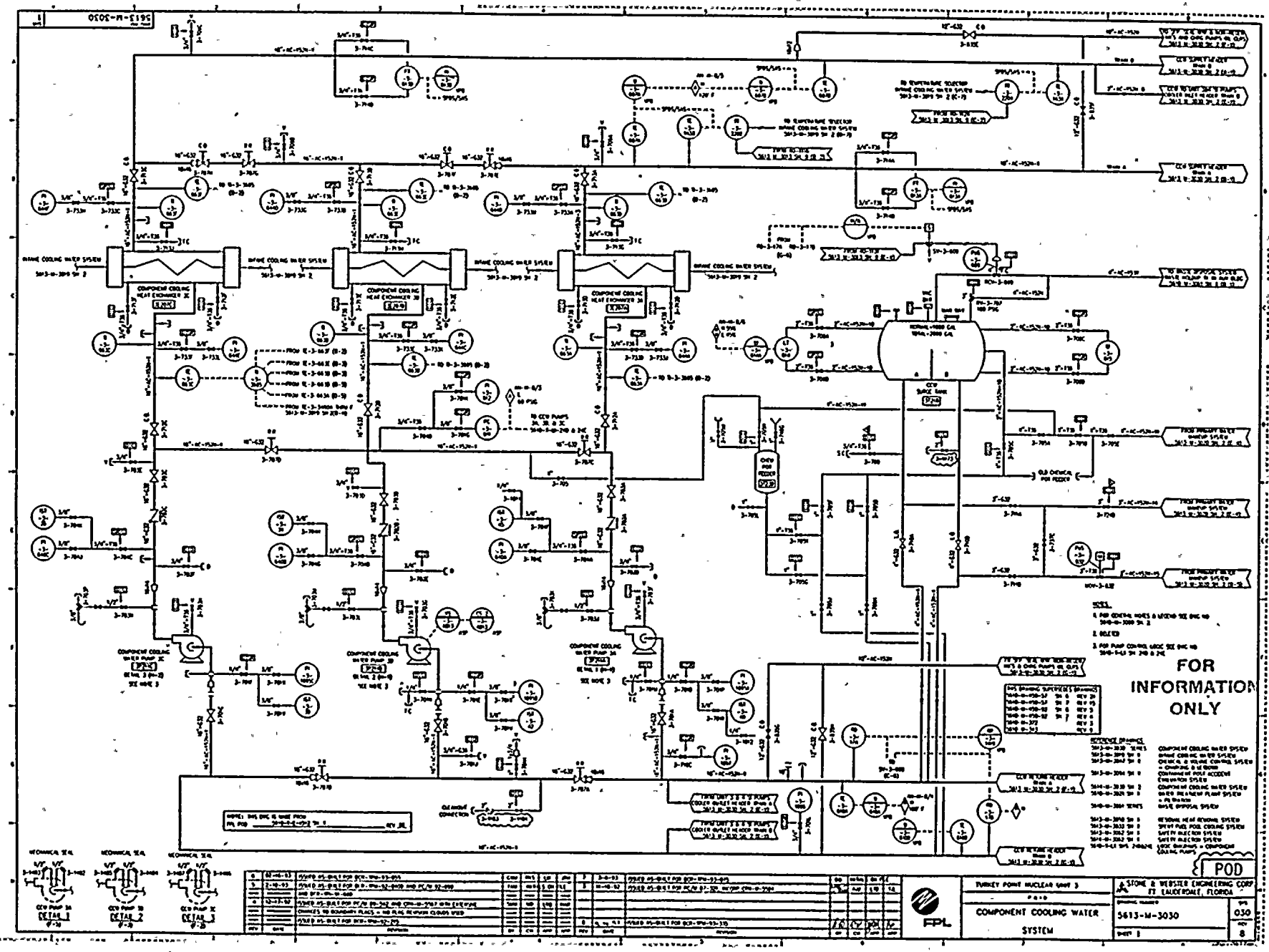
FOR INFORMATION ONLY
POD
COMPONENT COOLING WATER SYSTEM
TURKEY POINT NUCLEAR UNIT 3
STONE & WEBSTER ENGINEERING CORP.
FT. LAUDERDALE, FLORIDA
5613-M-3030
030
8
FPL

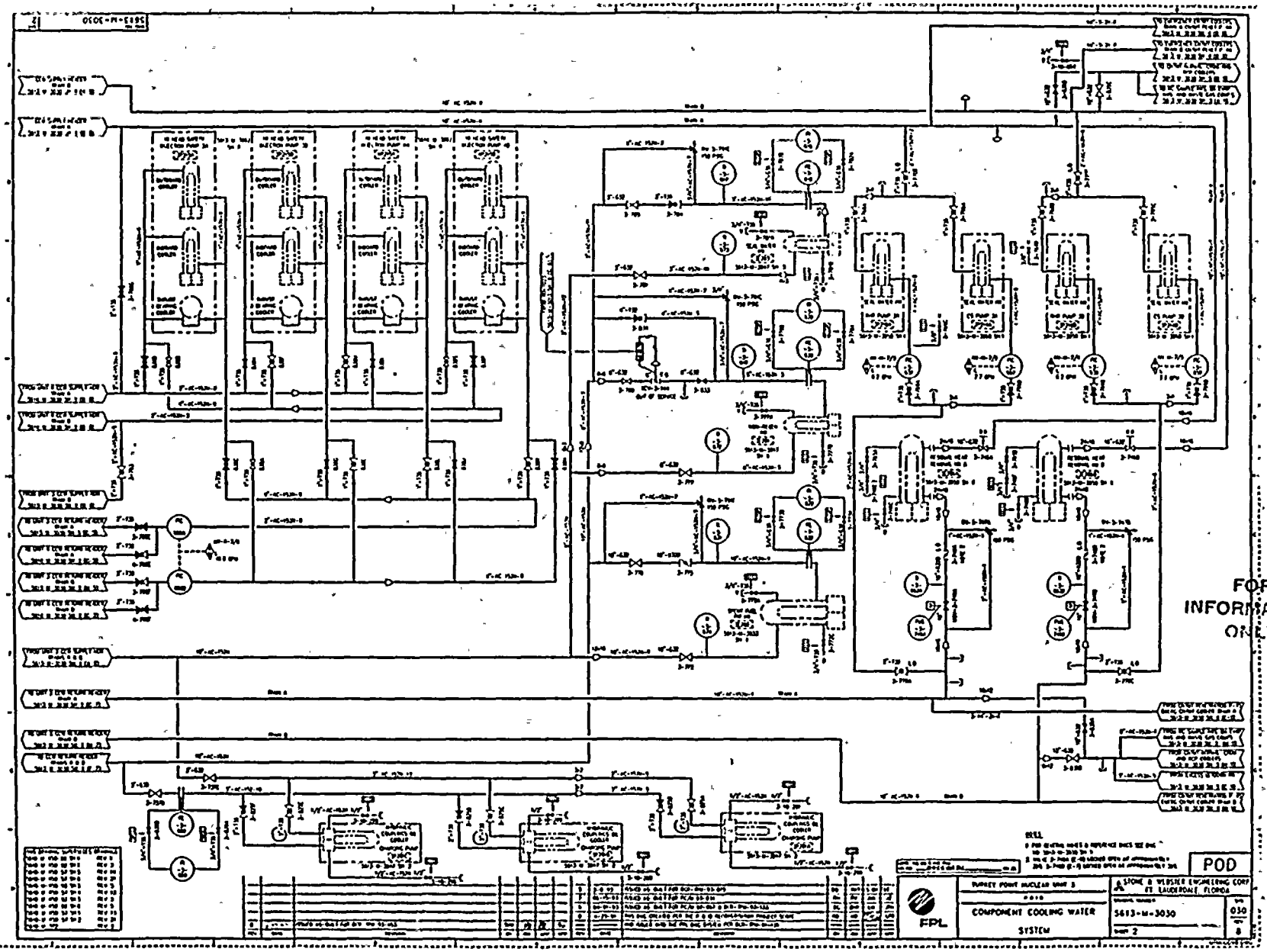
FOR INFORMATION ONLY
POD
FPL
COMPONENT COOLING WATER SYSTEM
5613-M-3030
STONE & WEBSTER ENGINEERING CORP
FT. LAUDERDALE, FLORIDA

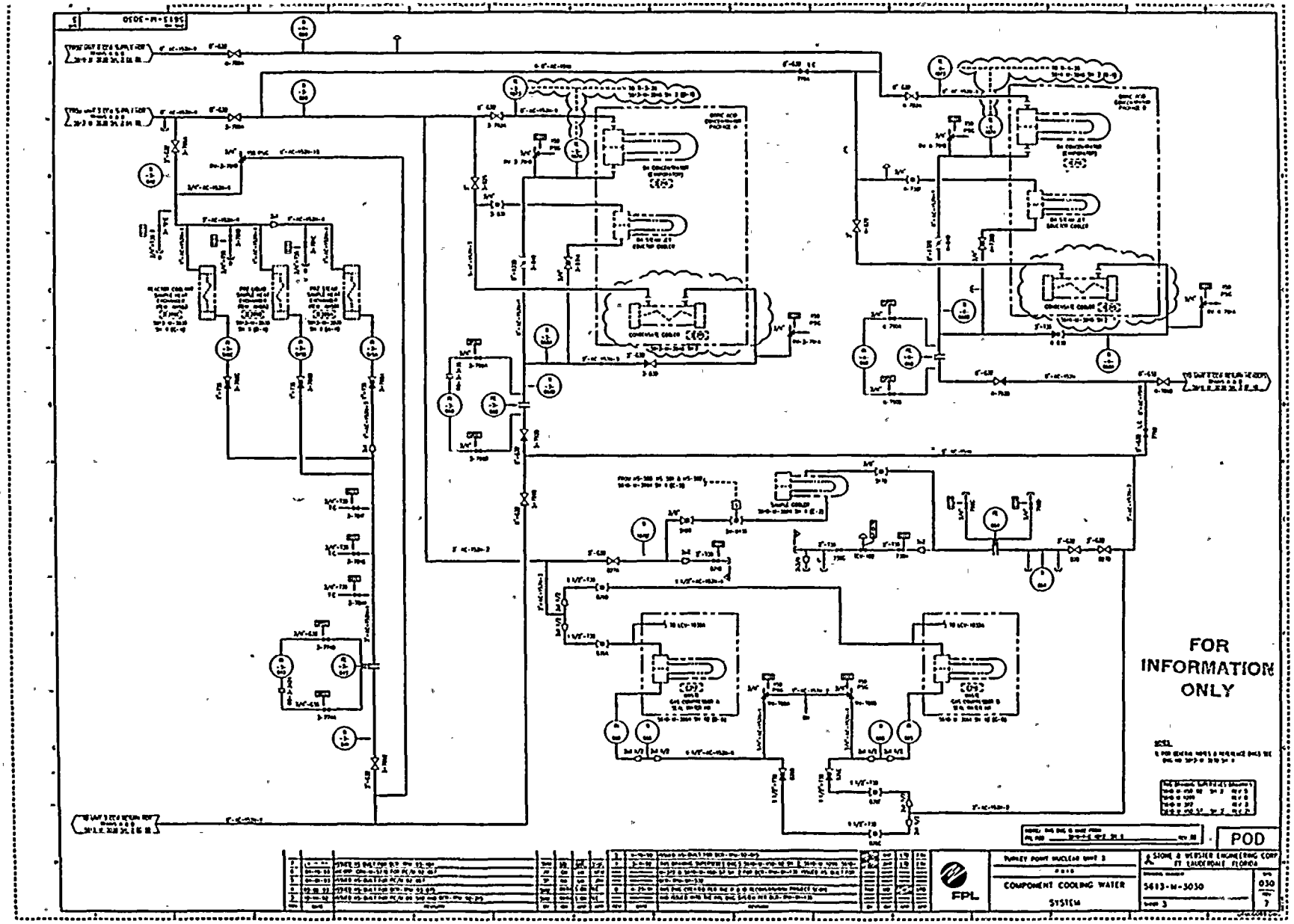
FOR INFORMATION ONLY
POD
FPL
COMPONENT COOLING WATER SYSTEM
5613-M-3030

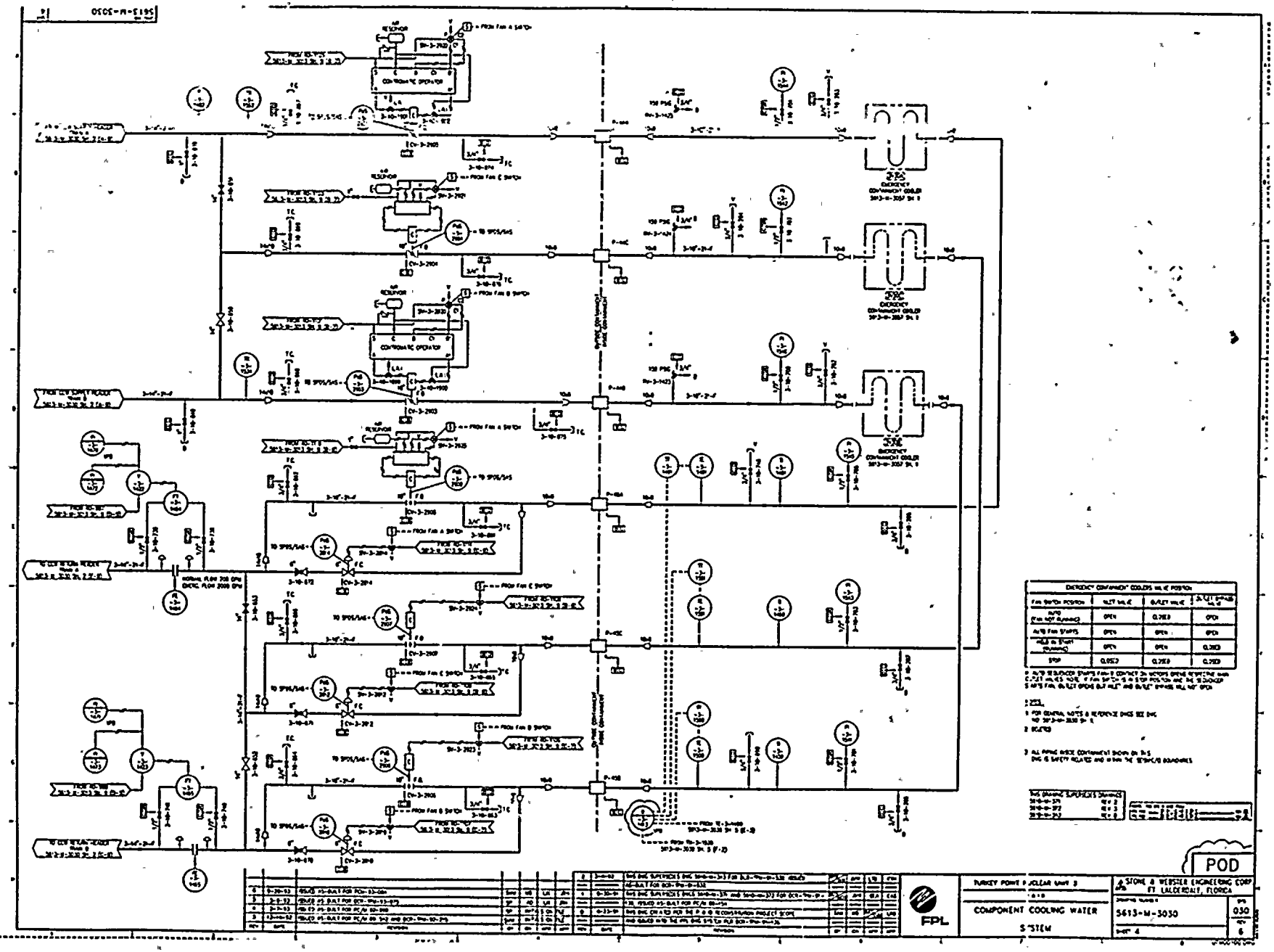
5613-M-3030
POD
FPL
TURKEY POINT NUCLEAR UNIT 3
COMPONENT COOLING WATER
SYSTEM
STONE & WEBSTER ENGINEERING CORP
FT. LAUDERDALE, FLORIDA
5613-M-3030
030
SHEET 4

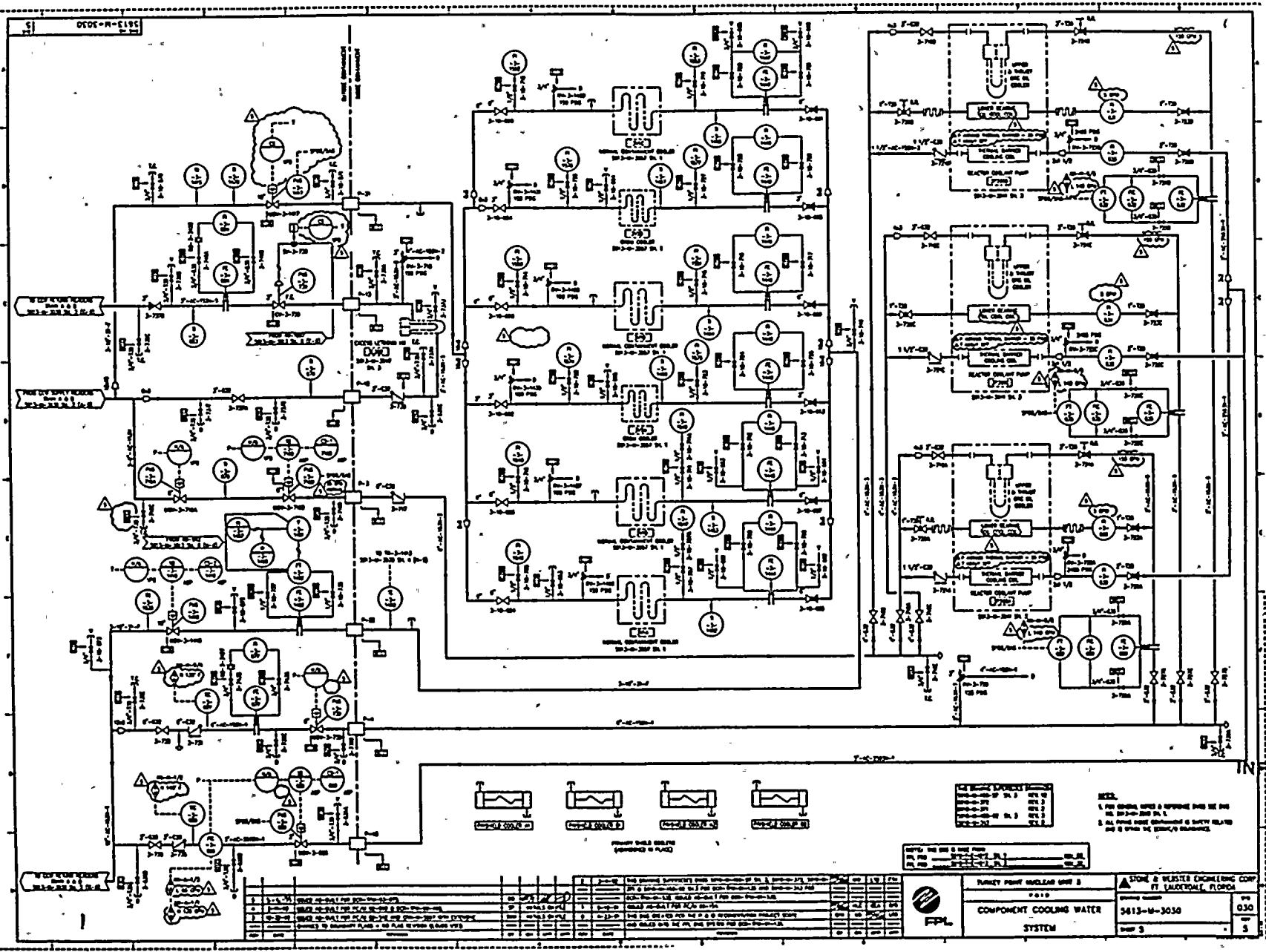


FOR INFORMATION ONLY

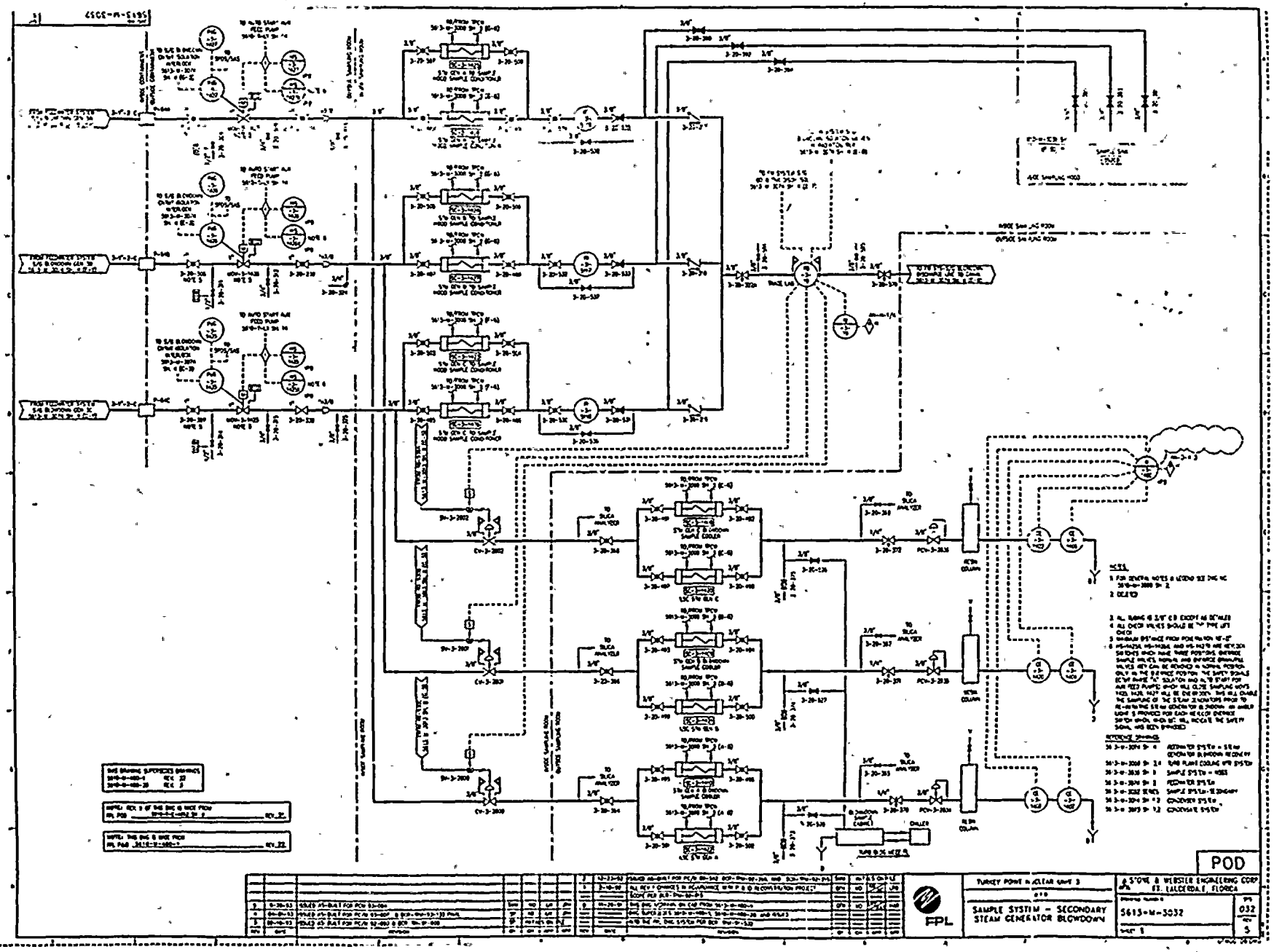
POD
FPL
TURKEY POINT NUCLEAR UNIT 3
SAMPLE SYSTEM - SECONDARY STEAM GENERATOR BLOWDOWN
STONE & WEBSTER ENGINEERING CORP.
FT. LAUDERDALE, FLORIDA
5613-M-3032
032
5

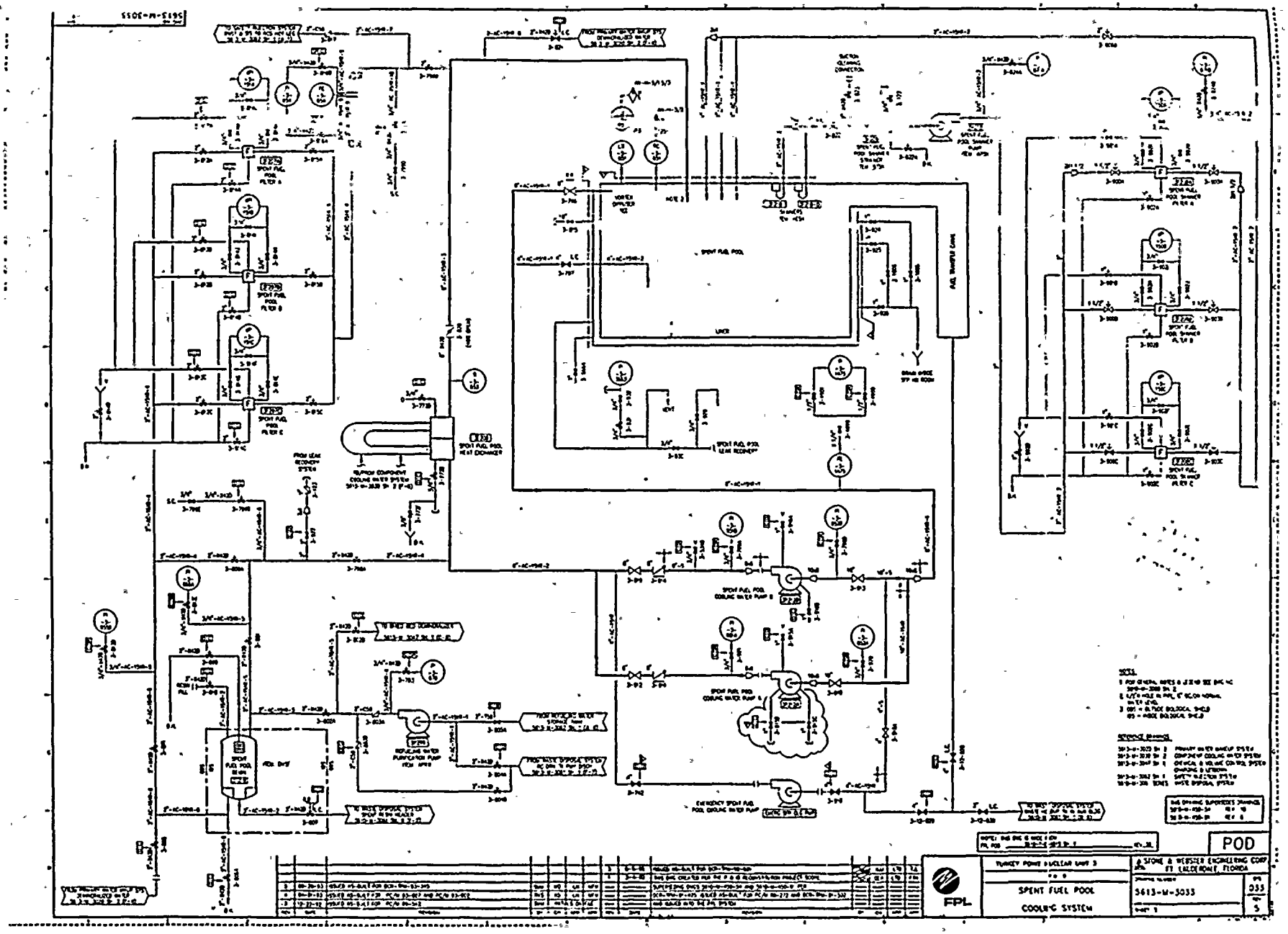
POD
TURKEY POINT NUCLEAR UNIT 3
SPENT FUEL POOL
COOLING SYSTEM
5613-M-3033
STONE & WEBSTER ENGINEERING CORP
FT. LAUDERDALE, FLORIDA
FPL

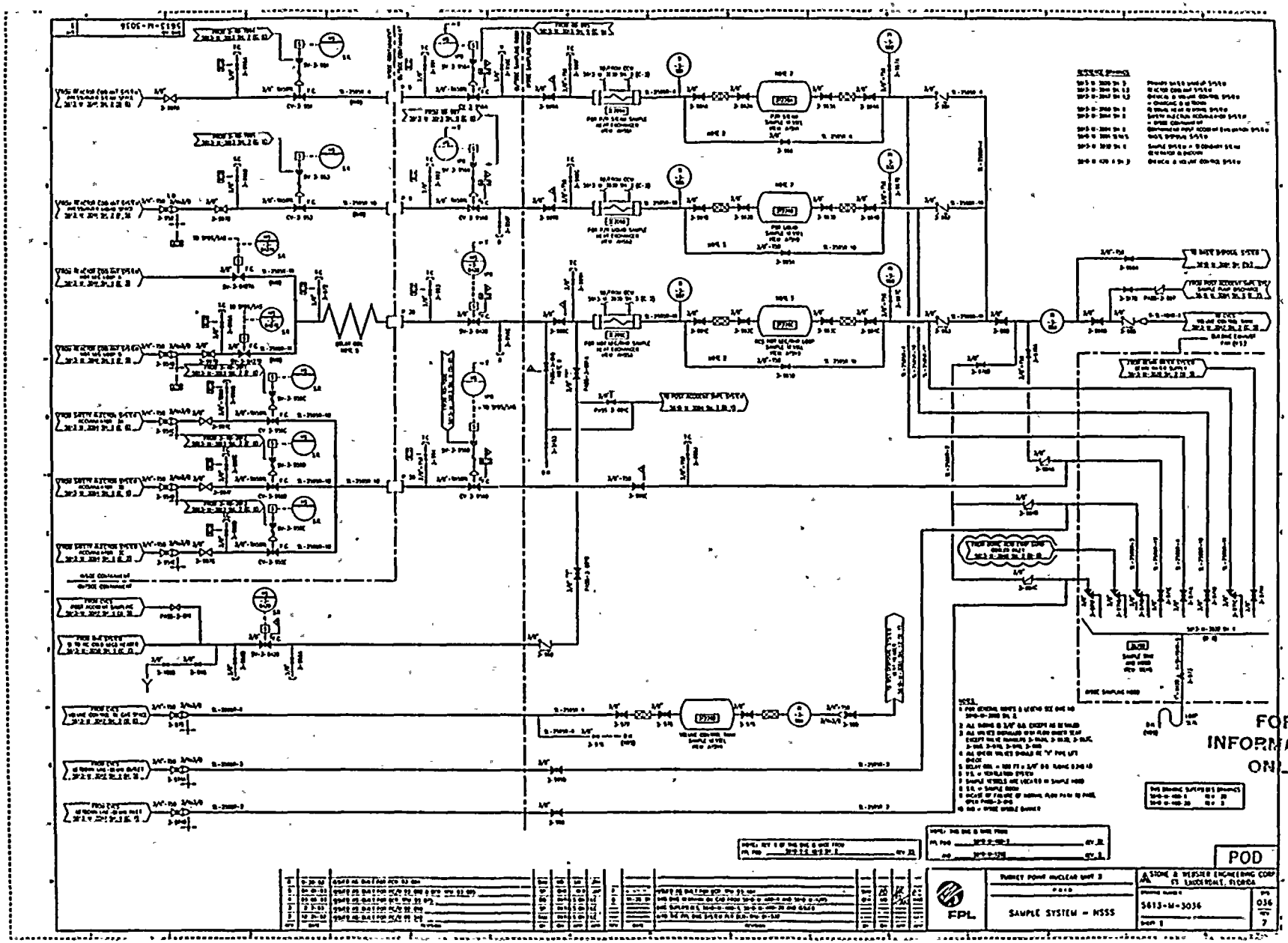
FOR INFORMATION ONLY
POD
FPL
TURKEY POINT NUCLEAR UNIT 3
SAMPLE SYSTEM - NSSS
STONE & WEBSTER ENGINEERING CORP
FT. LAUDERDALE, FLORIDA
5613-M-3036
036
7

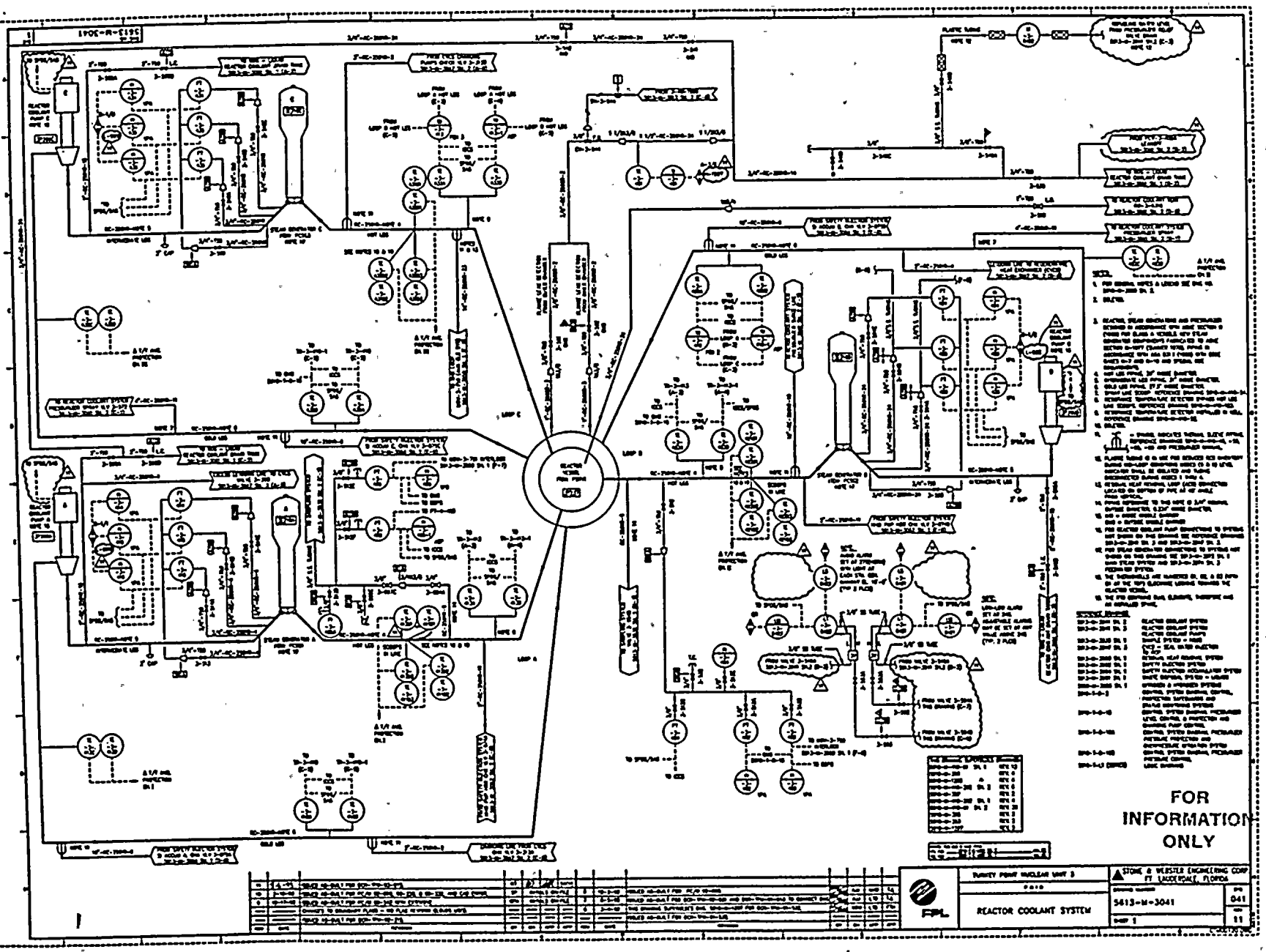
FOR INFORMATION ONLY
REACTOR COOLANT SYSTEM
5613-M-3041
FPL

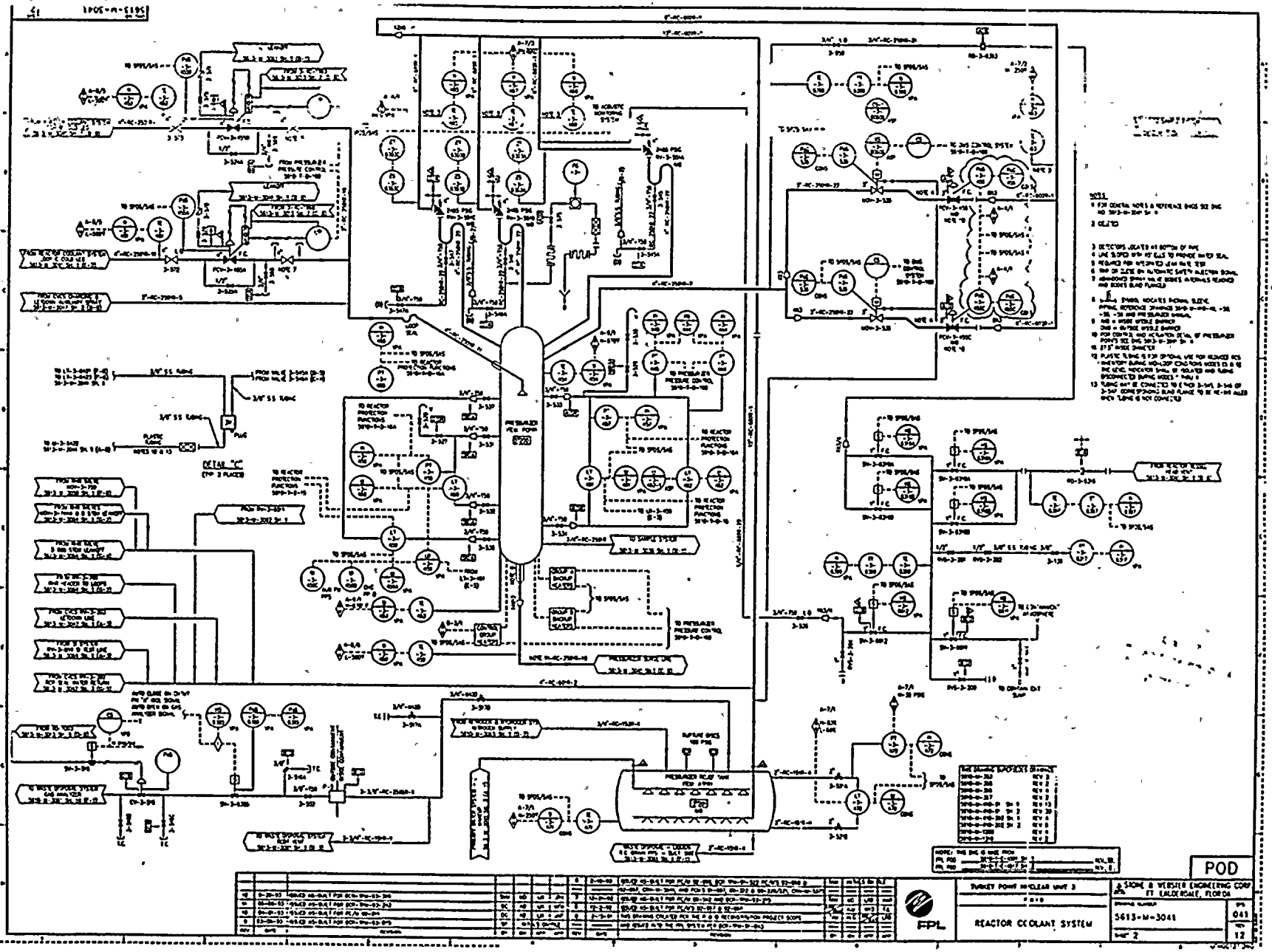
POD
FPL
TURKEY POINT NUCLEAR UNIT 3
REACTOR COOLANT SYSTEM
STONE & WEBSTER ENGINEERING CORP
FT. LAUDERDALE, FLORIDA
5613-M-3041
SHT 2
041
12

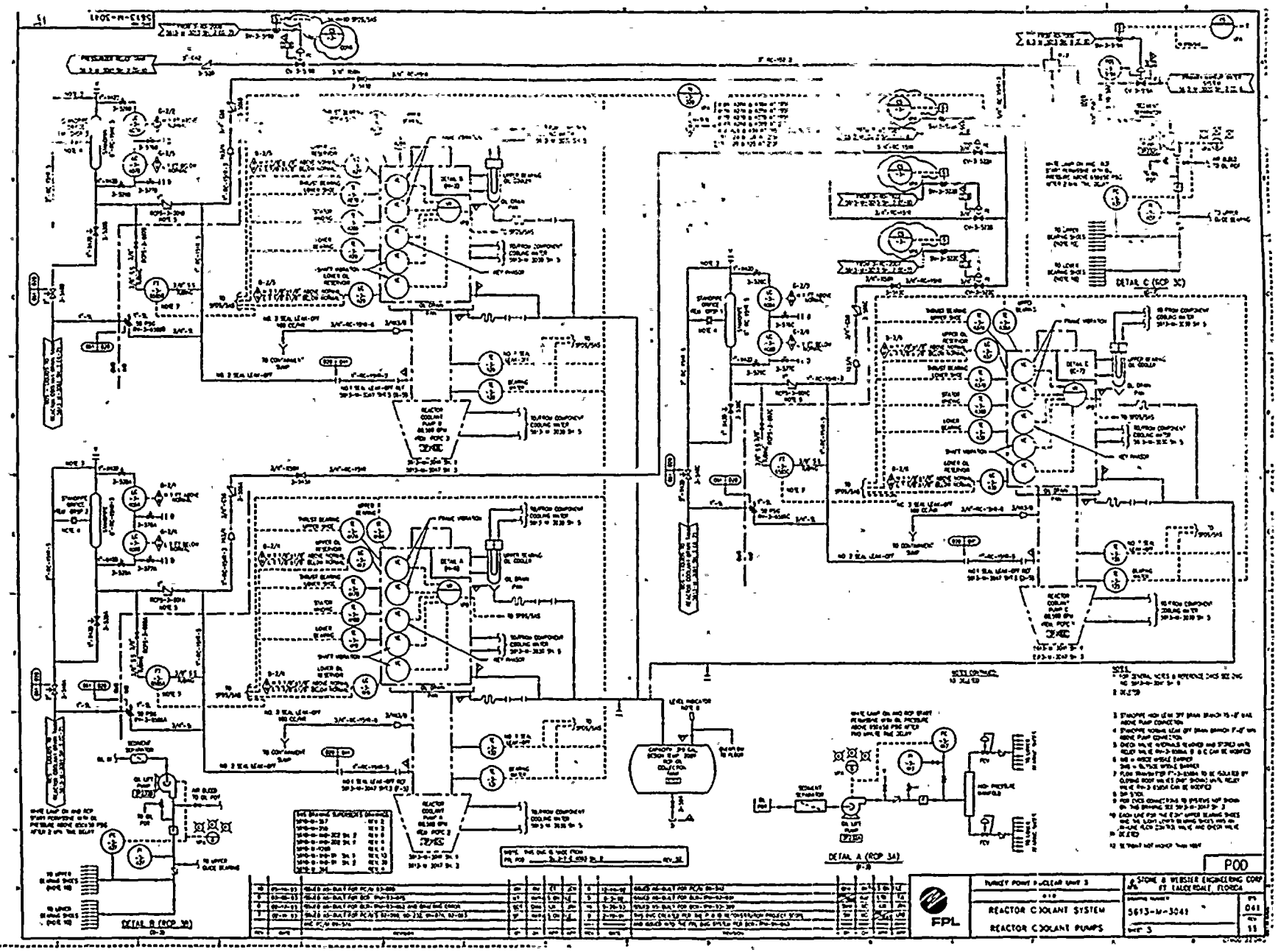
DETAIL C (RCP 3C)
DETAIL A (RCP 3A)
DETAIL B (RCP 3B)
FPL
REACTOR COOLANT SYSTEM
REACTOR COOLANT PUMPS
5613-M-3041
P00

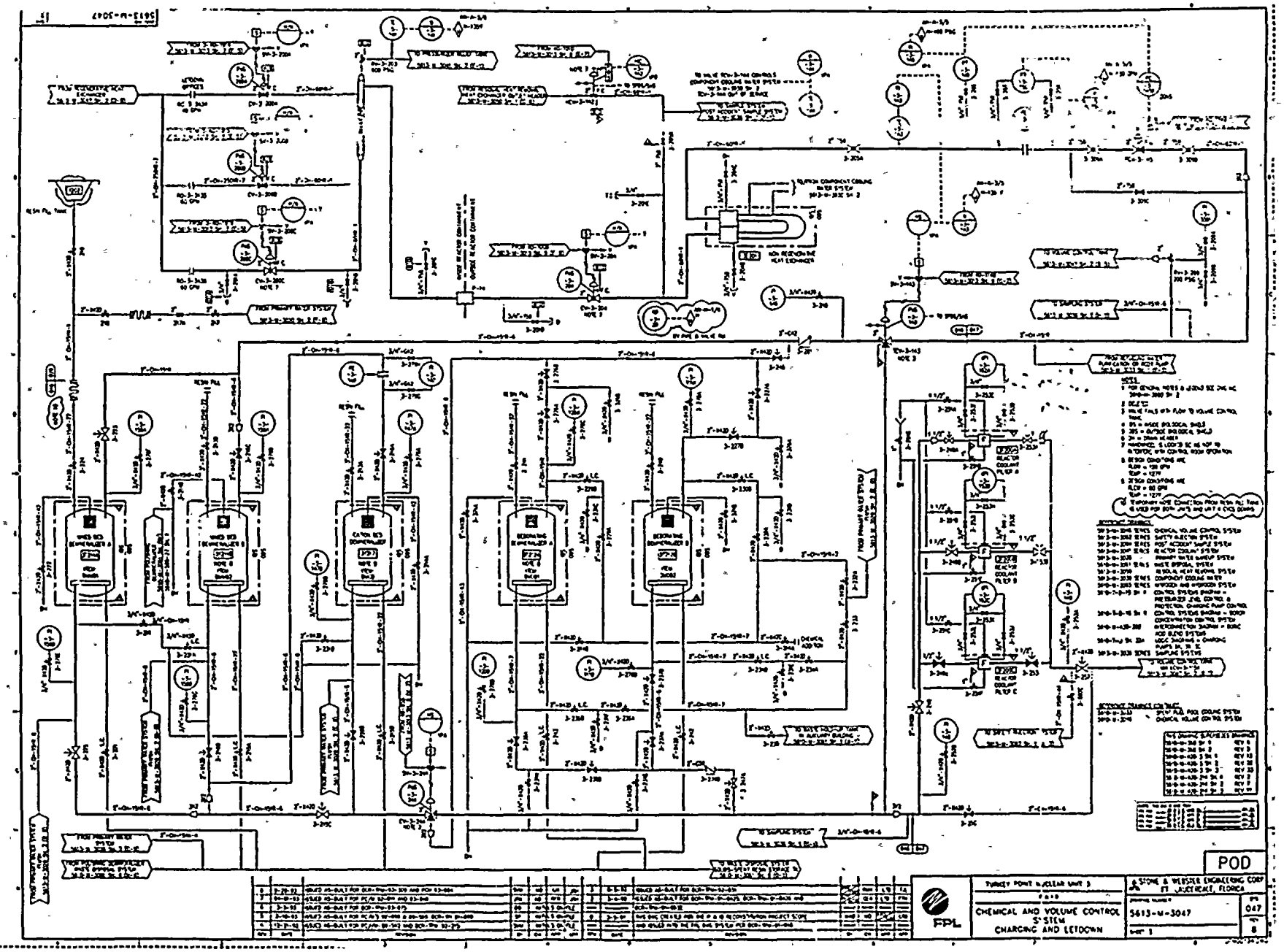
POD
FPL
TURKEY POINT NUCLEAR UNIT 3
CHEMICAL AND VOLUME CONTROL SYSTEM
CHARGING AND LETDOWN
STONE & WEBSTER ENGINEERING CORP
5613-M-3047

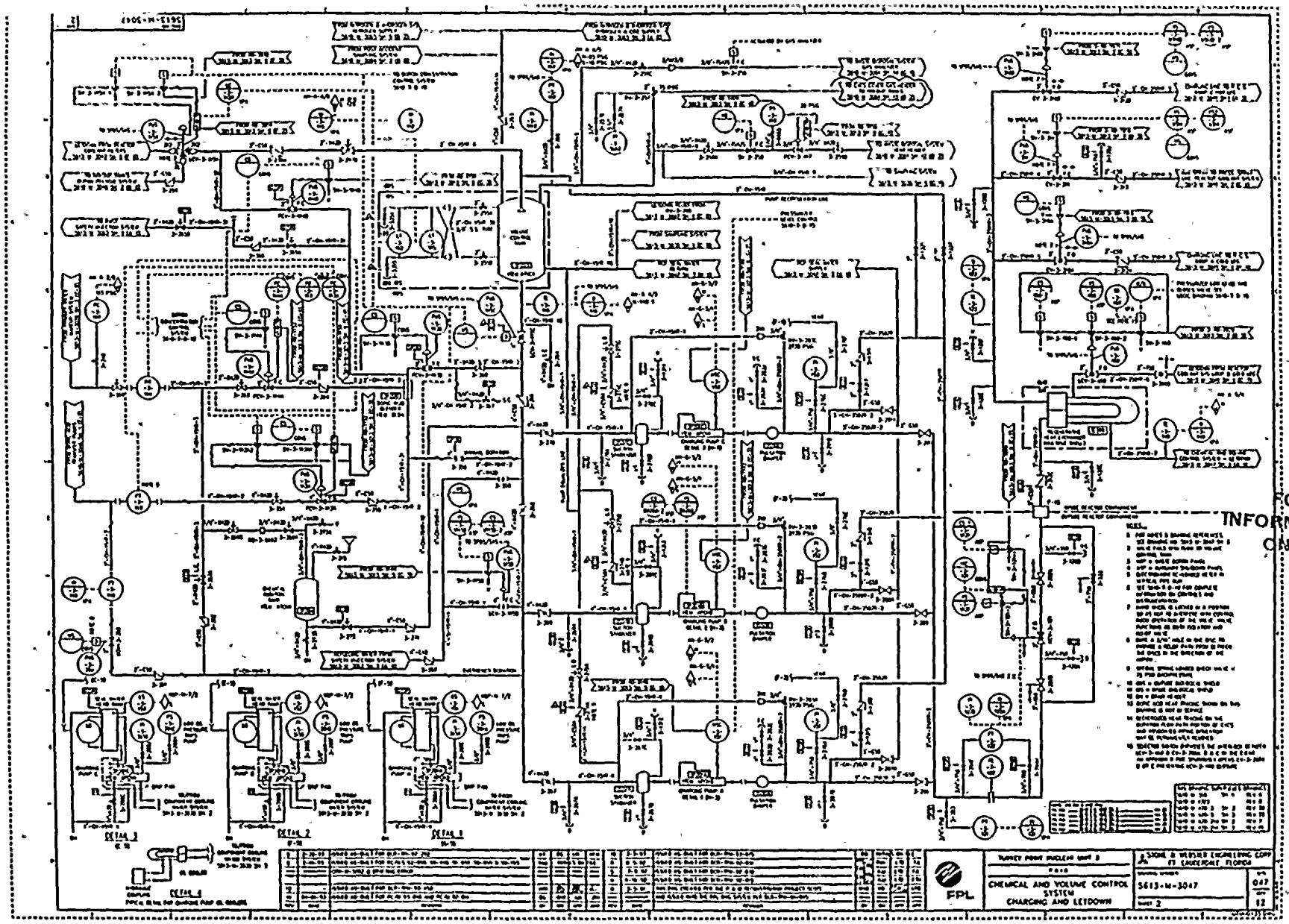
FOR INFORMATION ONLY
DETAIL 1
DETAIL 2
DETAIL 3
DETAIL 4
FPL
TURKEY POINT NUCLEAR UNIT 3
CHEMICAL AND VOLUME CONTROL SYSTEM
CHARGING AND LETDOWN
5613-M-3047
SHEET 2
12

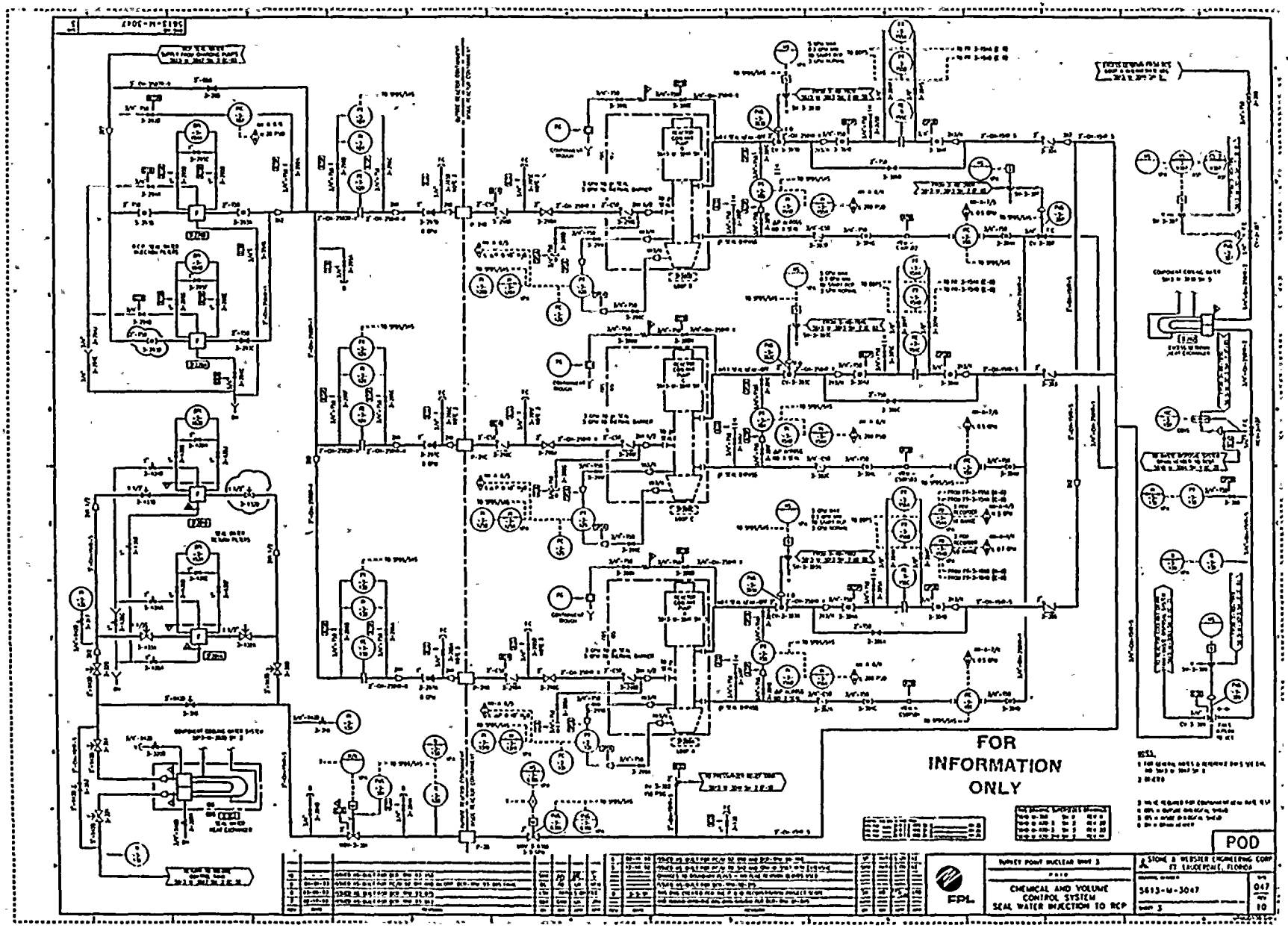
FOR
INFORMATION
ONLY
POD
FPL
SURRY POINT NUCLEAR UNIT 3
CHEMICAL AND VOLUME
CONTROL SYSTEM
SEAL WATER INJECTION TO RCP
5613-M-3047
STONE & WEBSTER ENGINEERING CORP.
FT. LAUDERDALE, FLORIDA

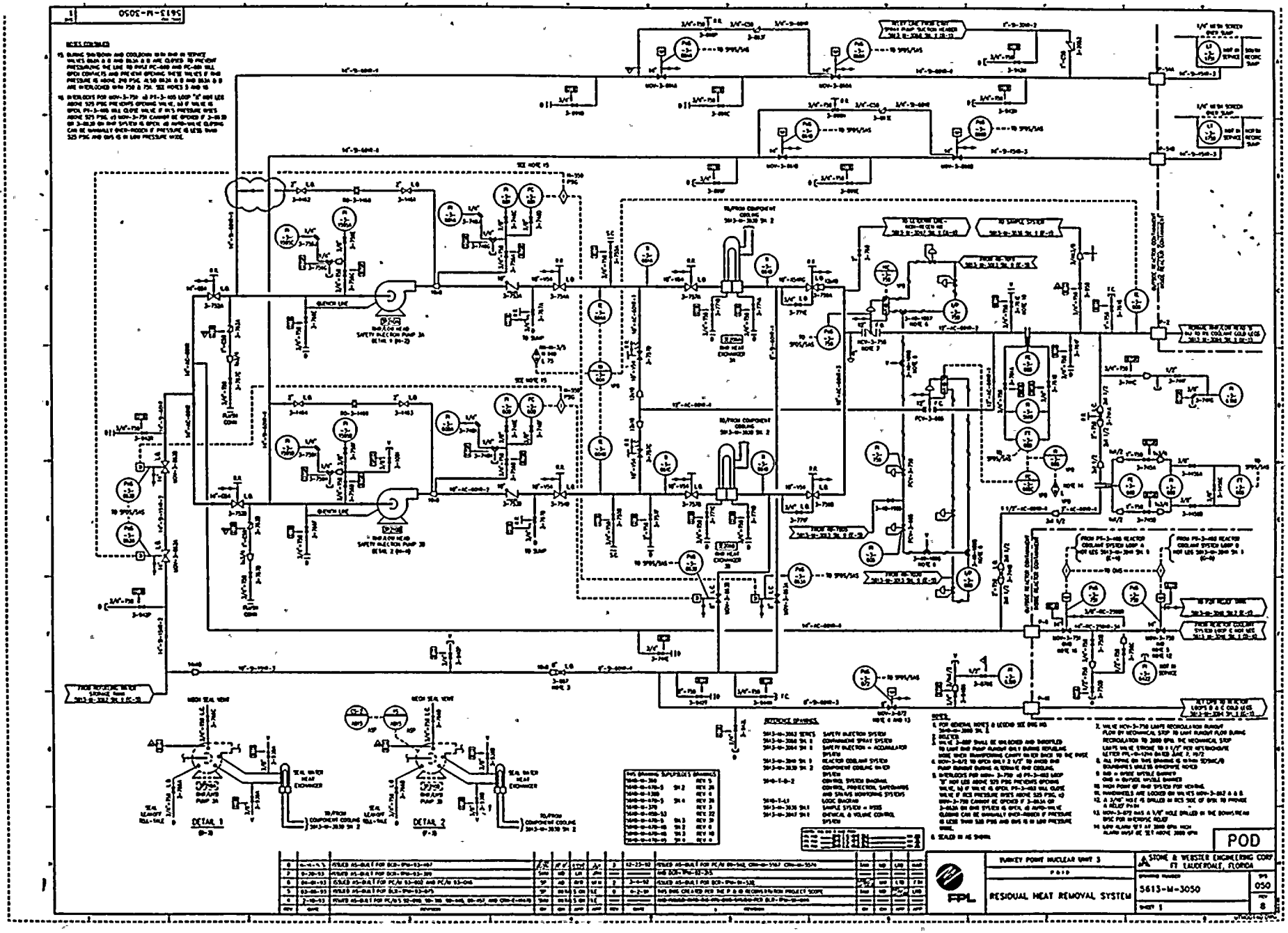
5613-M-3050
DETAIL 1
DETAIL 2
POD
TURKEY POINT NUCLEAR UNIT 3
STONE & WEBSTER ENGINEERING CORP
FT. LAUDERDALE, FLORIDA
FPL
RESIDUAL HEAT REMOVAL SYSTEM
5613-M-3050
050
8

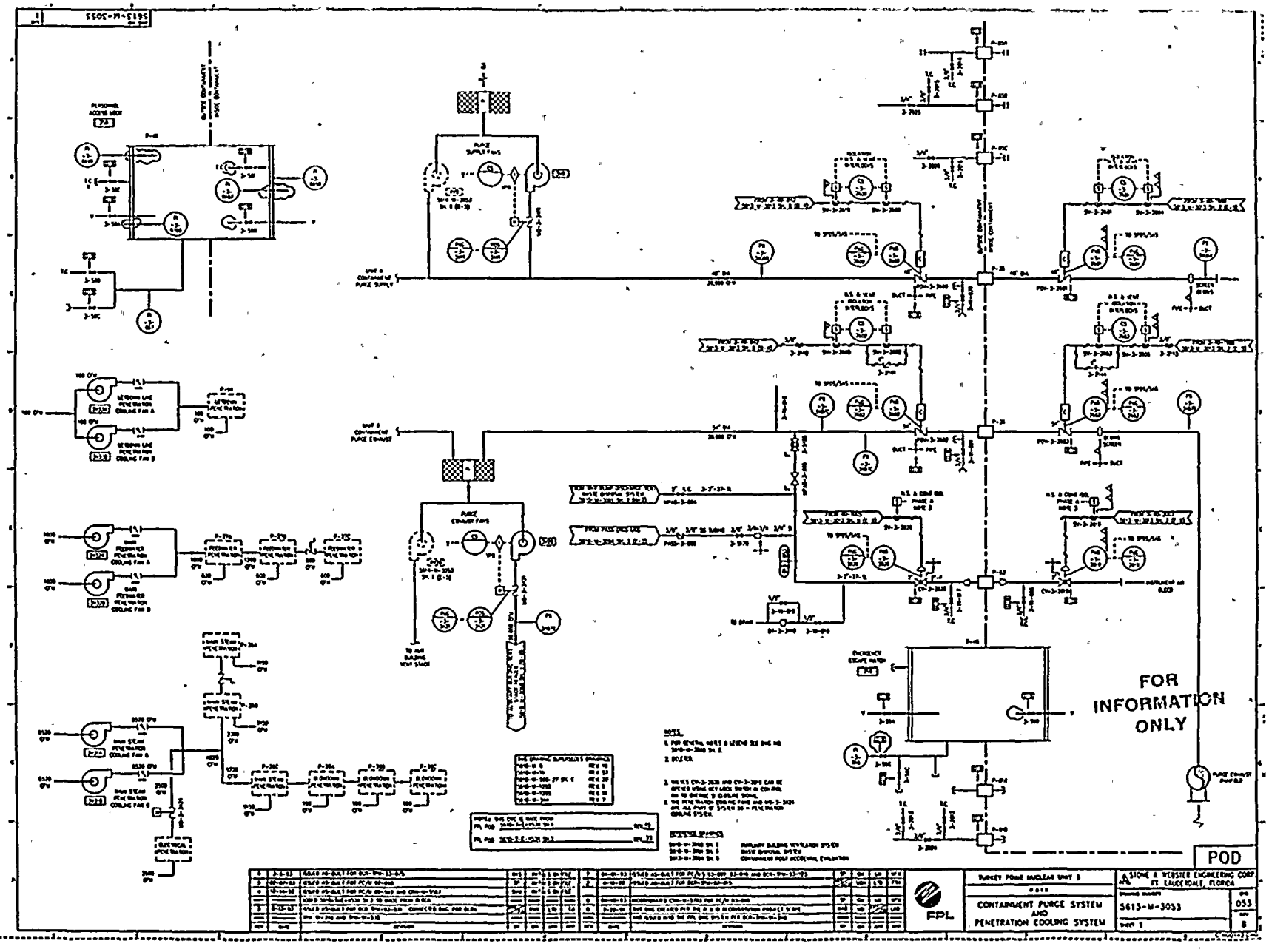
FOR INFORMATION ONLY
POD
TURKEY POINT NUCLEAR UNIT 3
CONTAINMENT PURGE SYSTEM AND PENETRATION COOLING SYSTEM
STONE & WEBSTER ENGINEERING CORP
FT. LAUDERDALE, FLORIDA
5613-M-3053
FPL

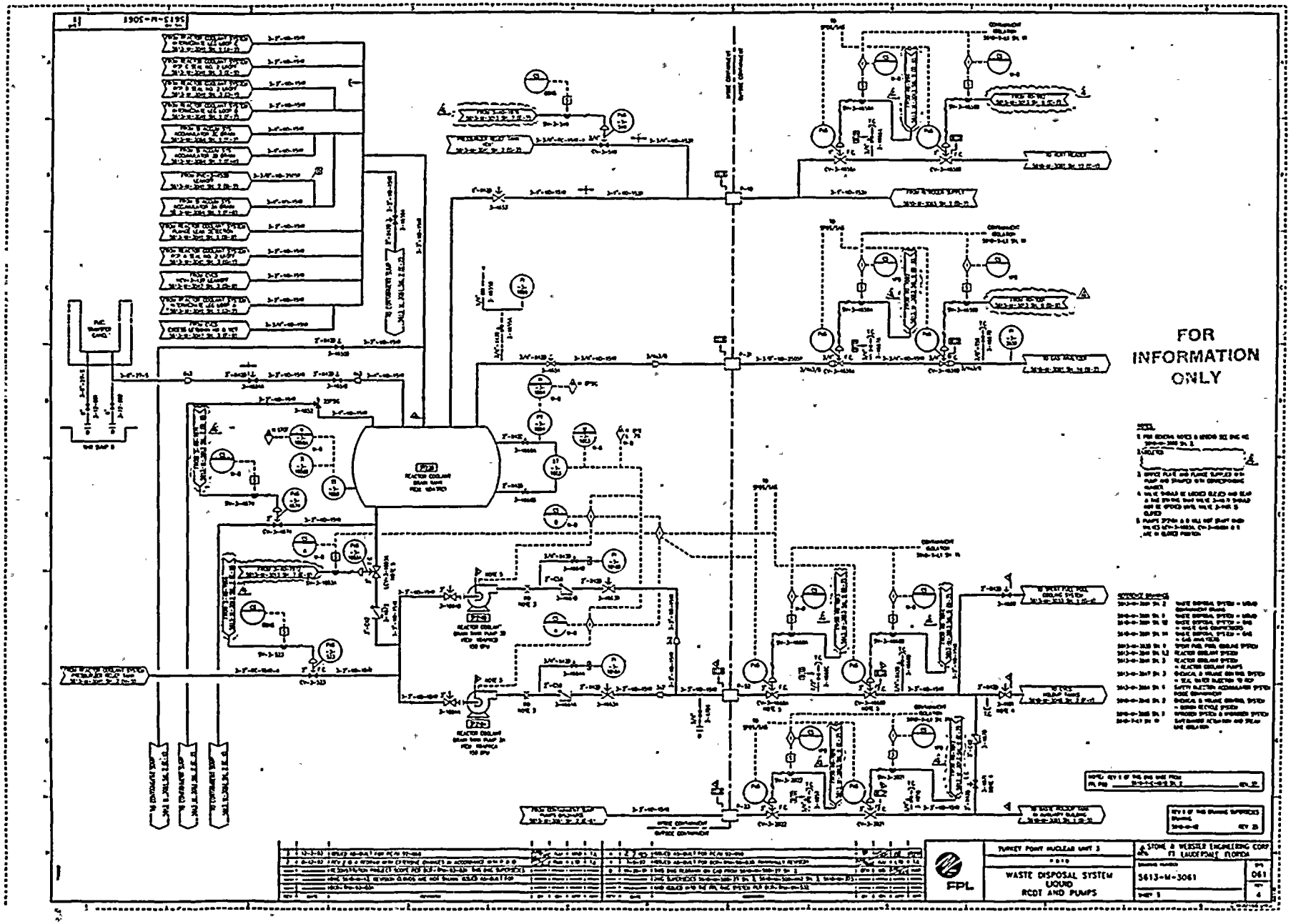
FOR INFORMATION ONLY
FPL
TURKEY POINT NUCLEAR UNIT 3
WASTE DISPOSAL SYSTEM
LIQUID
RCDT AND PUMPS
STONE & WEBSTER ENGINEERING CORP.
FT. LAUDERDALE, FLORIDA
5613-M-3061
061

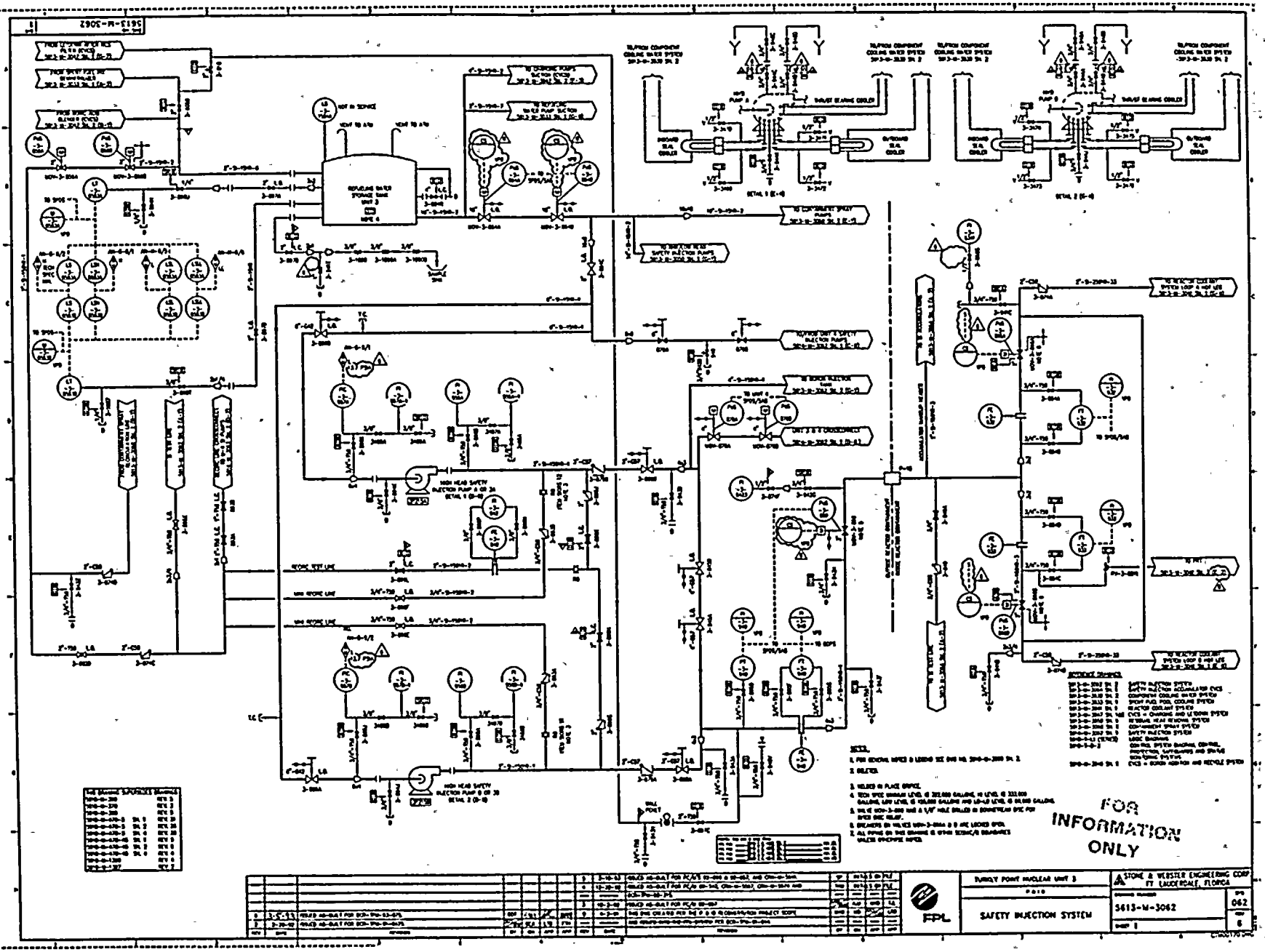
FOR INFORMATION ONLY
FPL
TURKEY POINT NUCLEAR UNIT 3
SAFETY INJECTION SYSTEM
STONE & WEBSTER ENGINEERING CORP.
FT. LAUDERDALE, FLORIDA
5613-M-3062

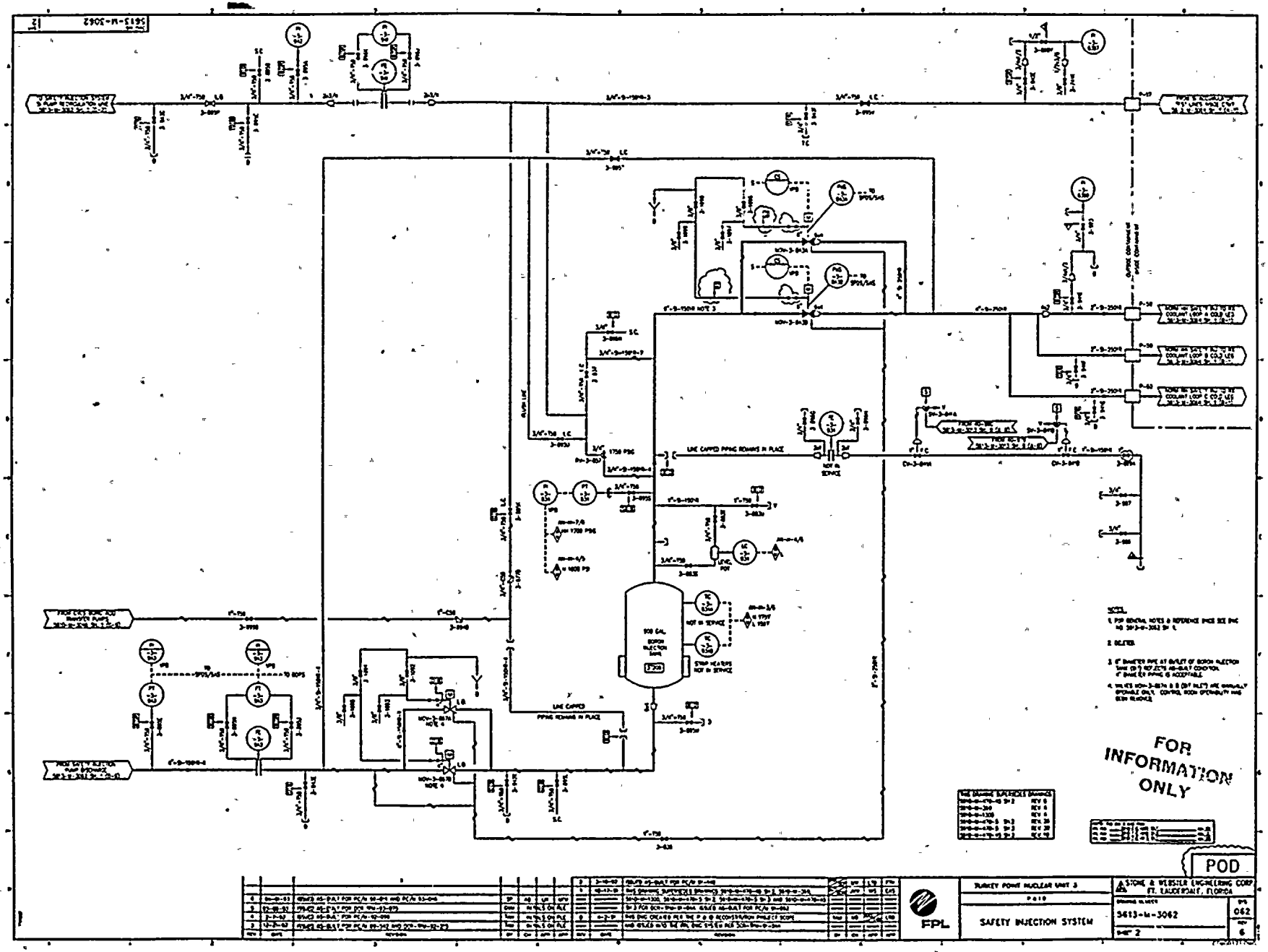
FOR INFORMATION ONLY
POD
TURKEY POINT NUCLEAR UNIT 3
SAFETY INJECTION SYSTEM
FPL
STONE & WEBSTER ENGINEERING CORP
FT. LAUDERDALE, FLORIDA
5613-M-3062
062
6
2

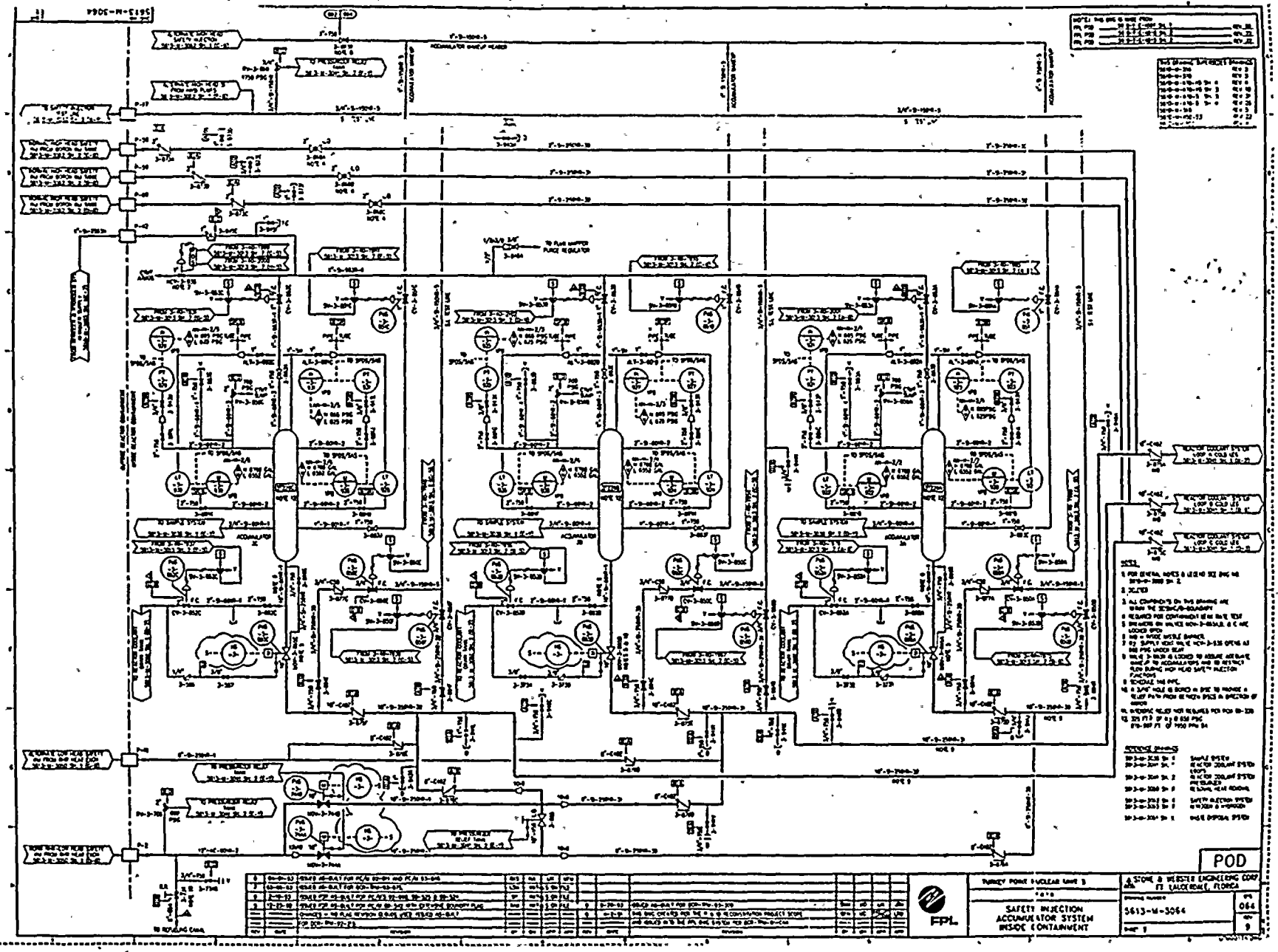
POD
FPL
TURKEY POINT NUCLEAR UNIT 3
SAFETY INJECTION
ACCUMULATOR SYSTEM
INSIDE CONTAINMENT
STONE & WEBSTER ENGINEERING CORP.
FT. LAUDERDALE, FLORIDA
5613-M-3064

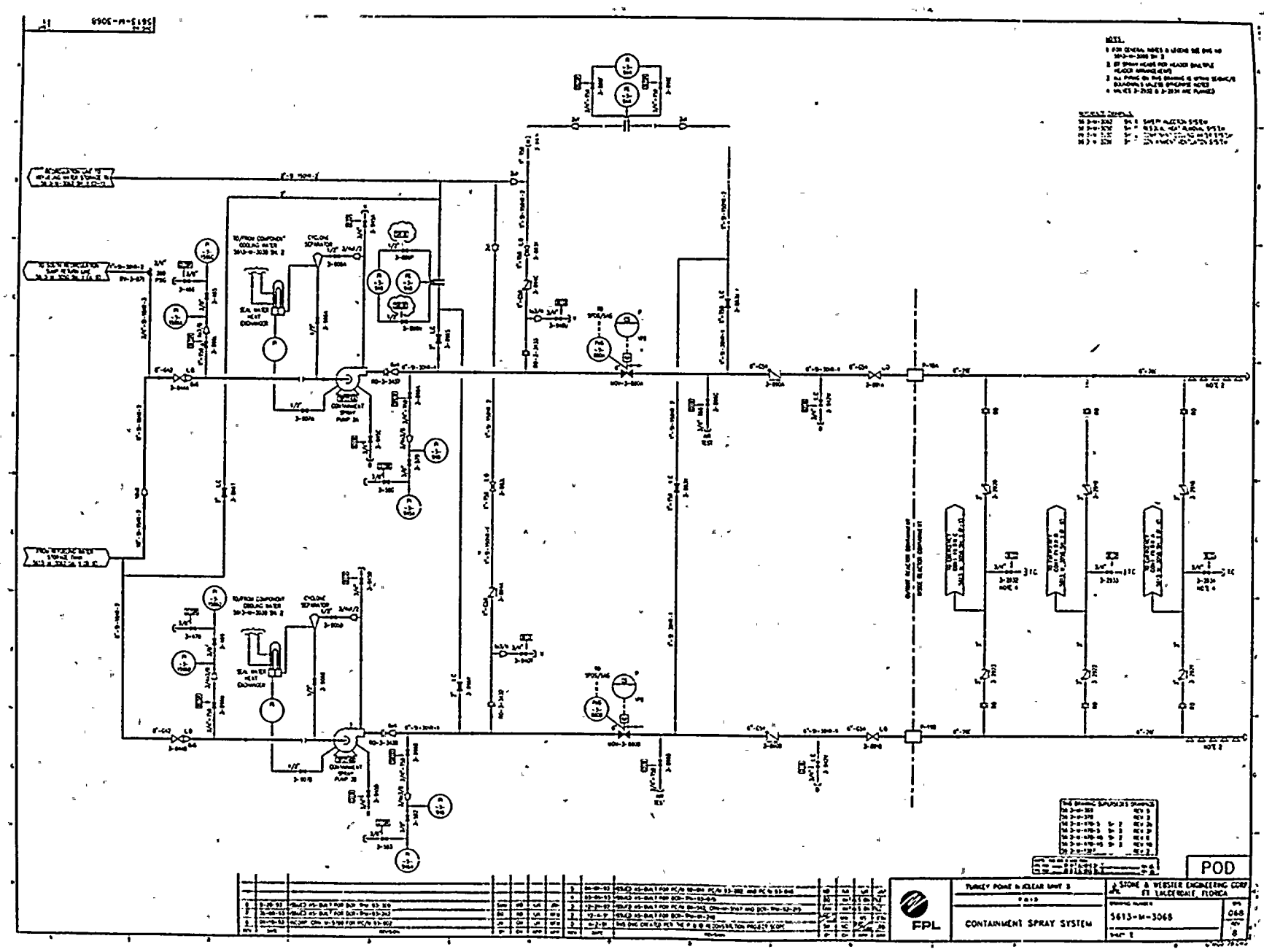
POD
FPL
CONTAINMENT SPRAY SYSTEM
TURKEY POINT NUCLEAR UNIT 3
STONE & WEBSTER ENGINEERING CORP
FT. LAUDERDALE, FLORIDA
5613-M-3068

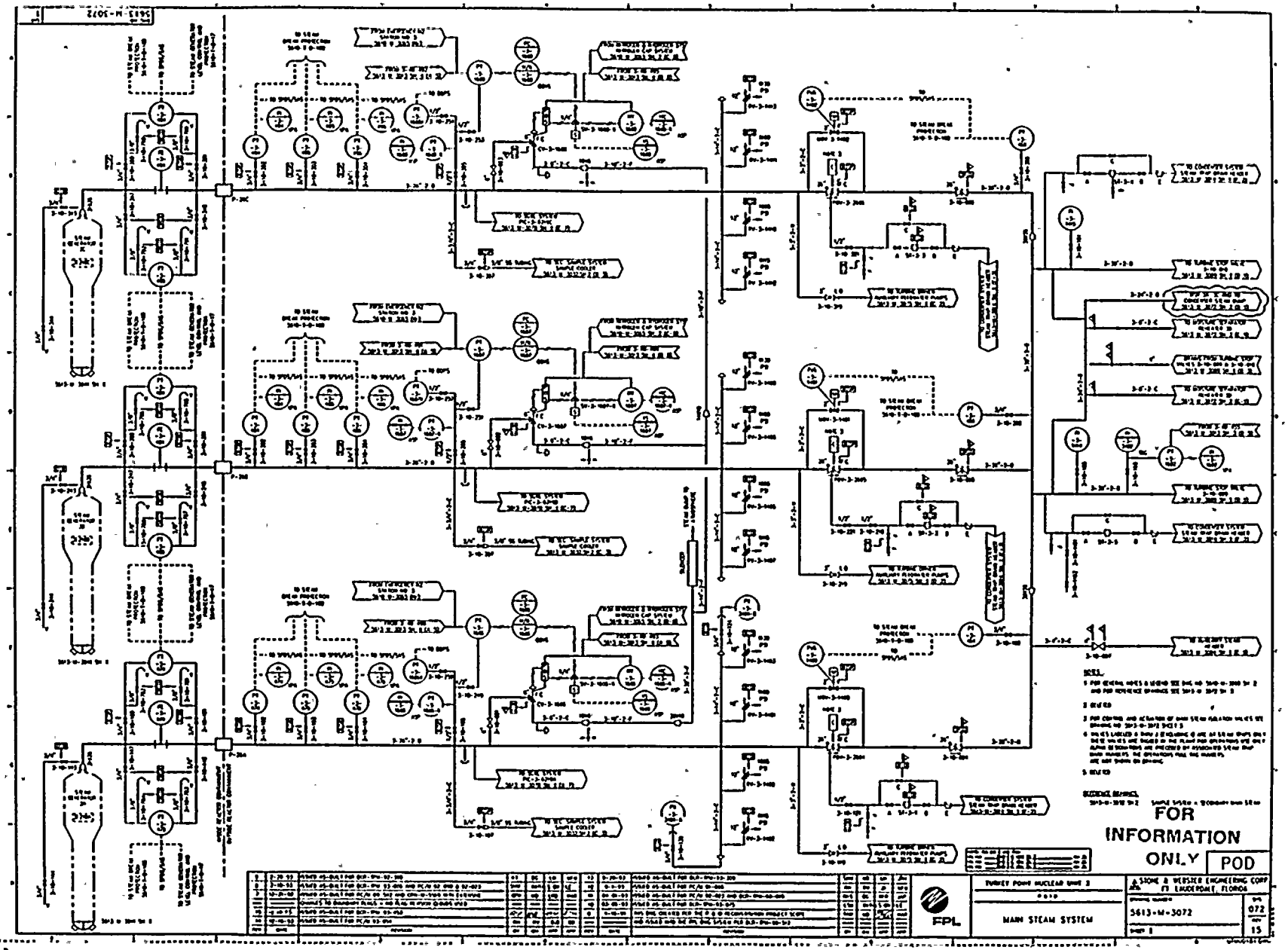
FOR INFORMATION ONLY
POD
FPL
TURKEY POINT NUCLEAR UNIT 3
MAIN STEAM SYSTEM
STONE & WEBSTER ENGINEERING CORP
FT. LAUDERDALE, FLORIDA
5613-M-3072

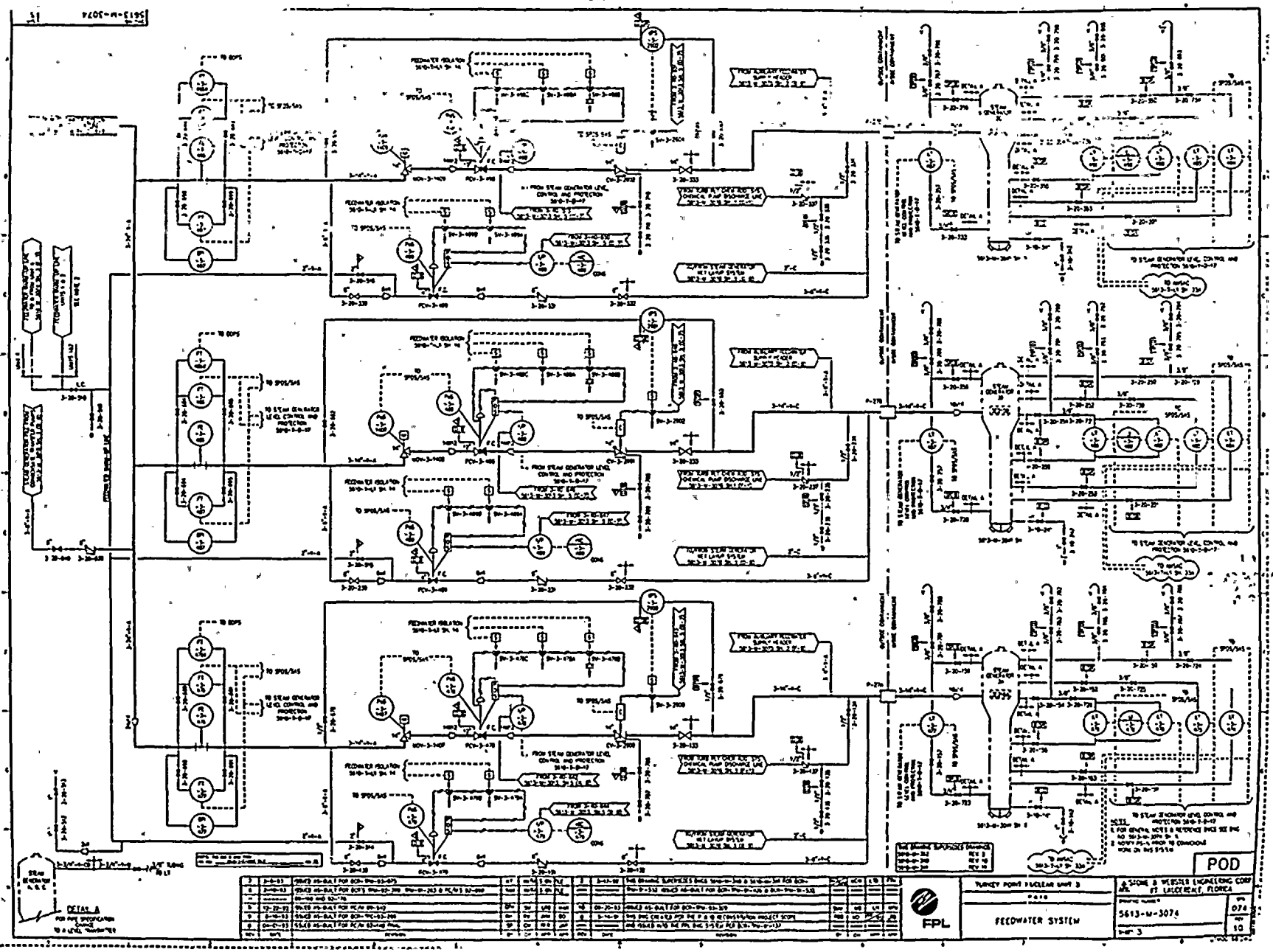
5613-M-3074
POD
FPL
TURKEY POINT NUCLEAR UNIT 3
FEEDWATER SYSTEM
STONE & WEBSTER ENGINEERING CORP.
FT. LAUDERDALE, FLORIDA
5613-M-3074
DETAIL A

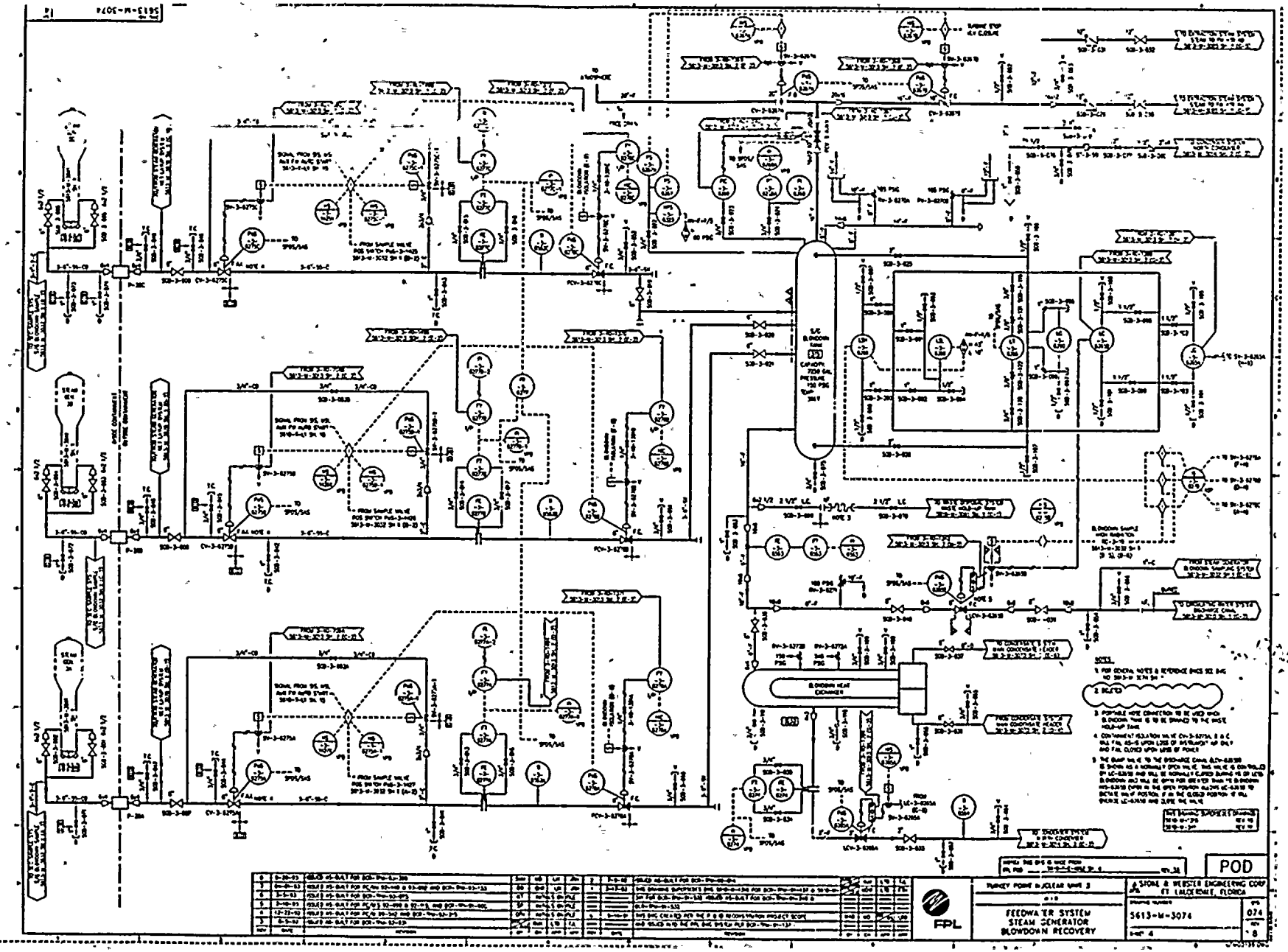
POD
FPL
FEEDWATER SYSTEM
STEAM GENERATOR
BLOWDOWN RECOVERY
5613-M-3074
STONE & WEBSTER ENGINEERING CORP
FT. LAUDERDALE, FLORIDA
TURKEY POINT NUCLEAR UNIT 3

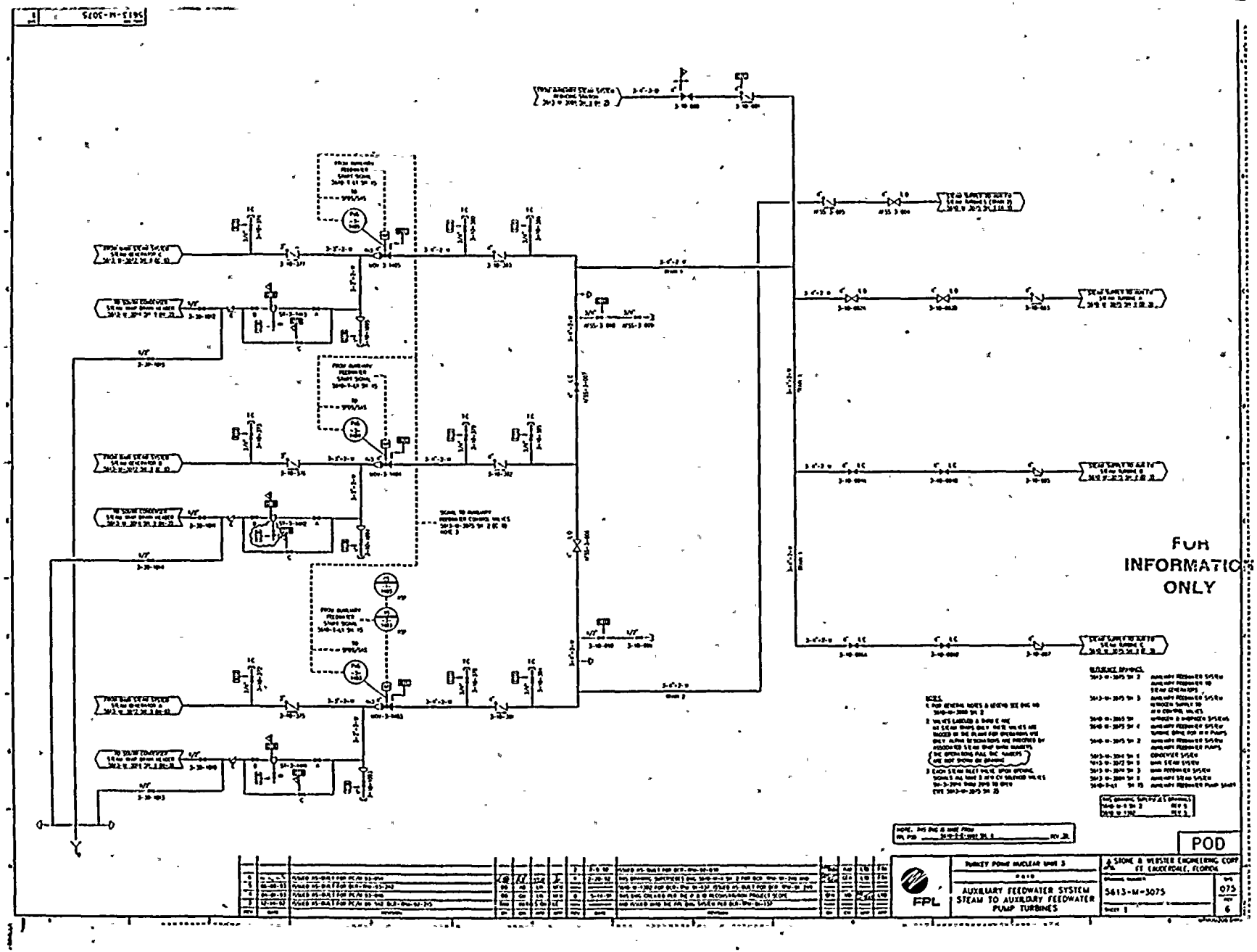
FOR INFORMATION ONLY
POD
FPL
TURKEY POINT NUCLEAR UNIT 3
AUXILIARY FEEDWATER SYSTEM
STEAM TO AUXILIARY FEEDWATER PUMP TURBINES
5613-M-3075
075
6

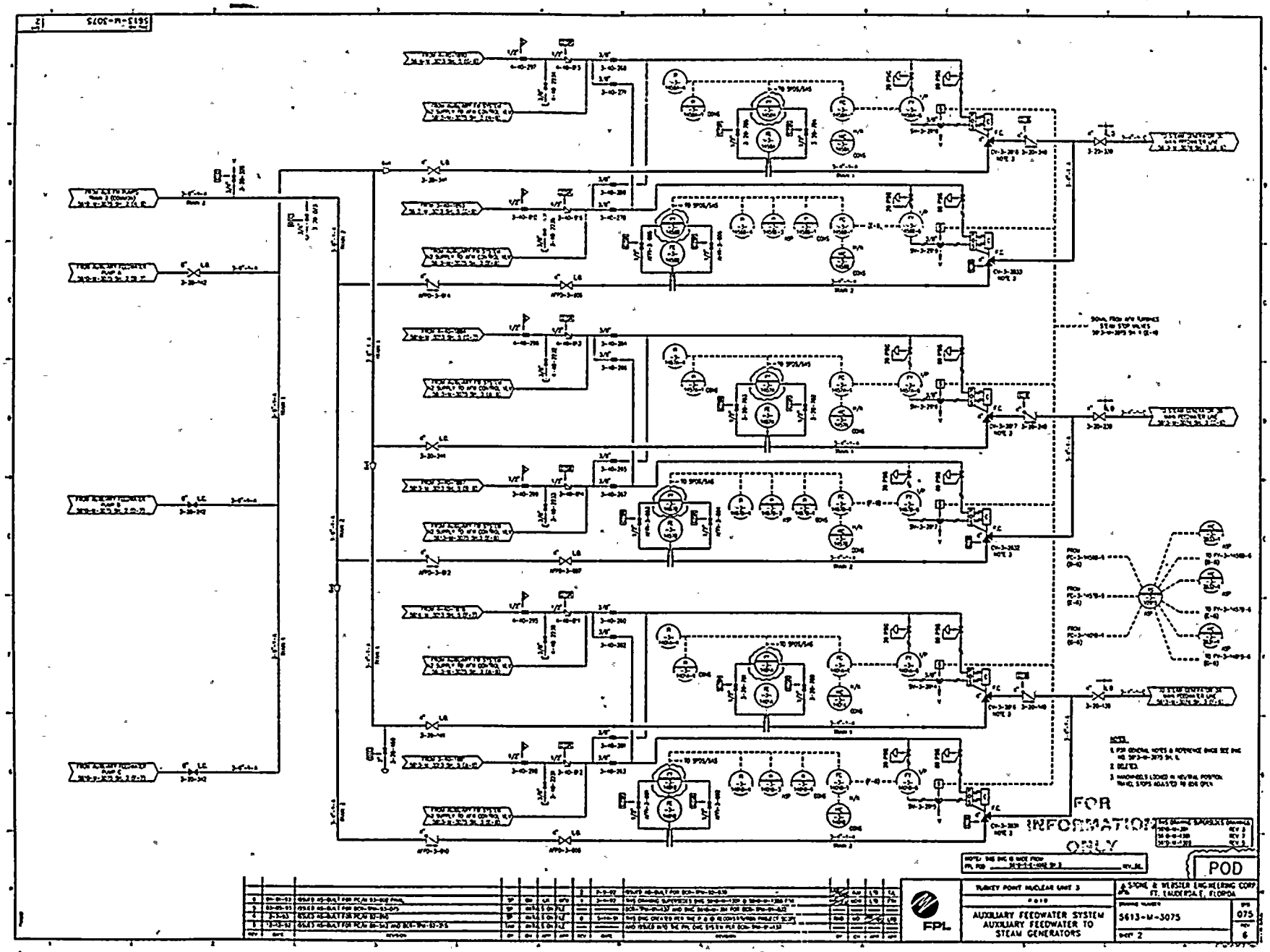
FOR INFORMATION ONLY
POD
TURKEY POINT NUCLEAR UNIT 3
AUXILIARY FEEDWATER SYSTEM
AUXILIARY FEEDWATER TO STEAM GENERATORS
STONE & WEBSTER ENGINEERING CORP
FT. LAUDERDALE, FLORIDA
5613-M-3075
075
6
FPL

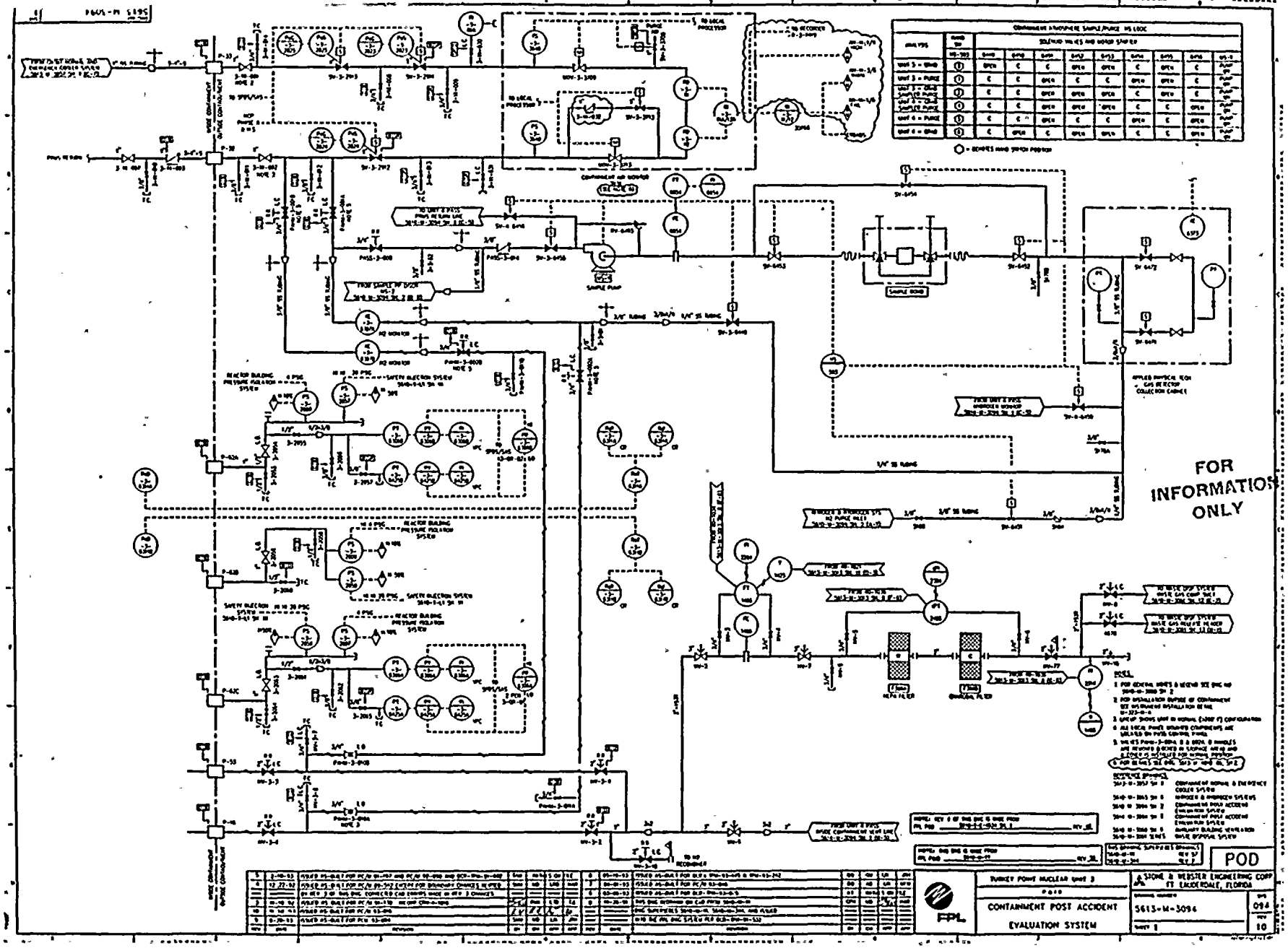
FOR INFORMATION ONLY
POD
TURKEY POINT NUCLEAR UNIT 3
CONTAINMENT POST ACCIDENT EVALUATION SYSTEM
FPL
STONE & WEBSTER ENGINEERING CORP
FT LAUDERDALE, FLORIDA
5613-M-3096

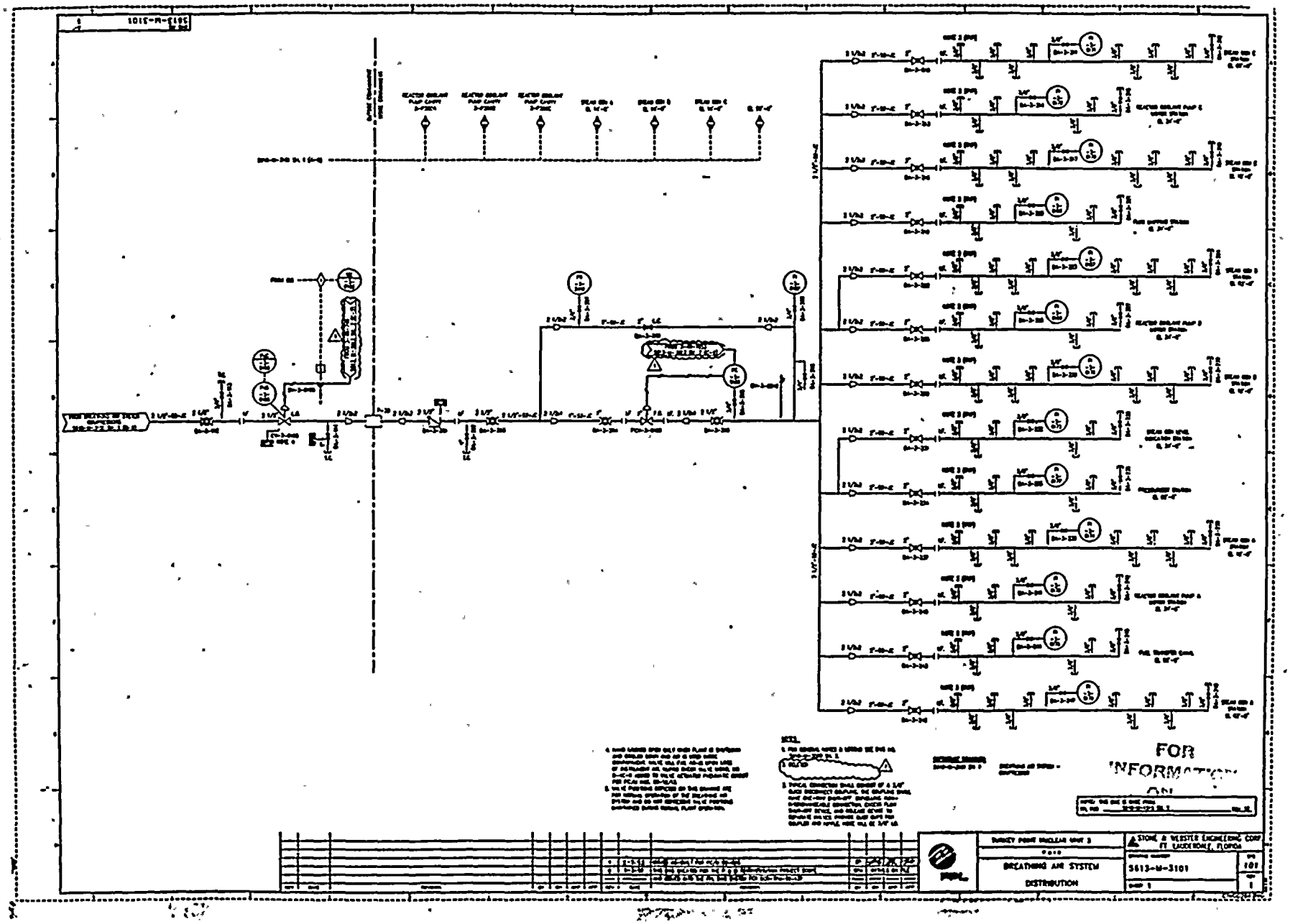
FOR INFORMATION ONLY
BREATHING AIR SYSTEM
DISTRIBUTION
STONE & WEBSTER ENGINEERING CORP.
FT. LAUDERDALE, FLORIDA
5613-M-3101

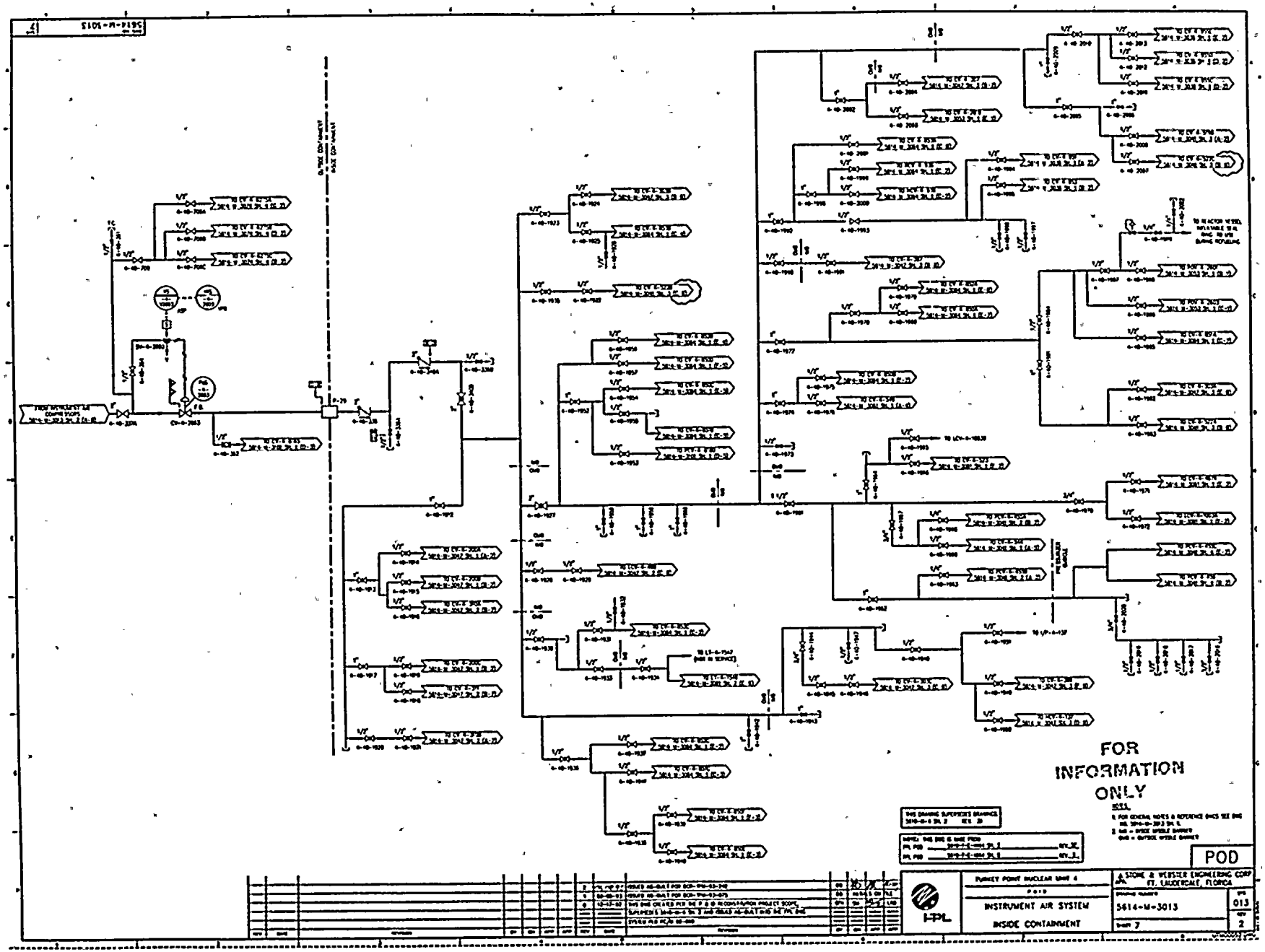
FOR INFORMATION ONLY
POD
PURKEY POINT NUCLEAR UNIT 4
INSTRUMENT AIR SYSTEM
INSIDE CONTAINMENT
STONE & WEBSTER ENGINEERING CORP
FT. LAUDERDALE, FLORIDA
5614-M-3013
013
2
FPL

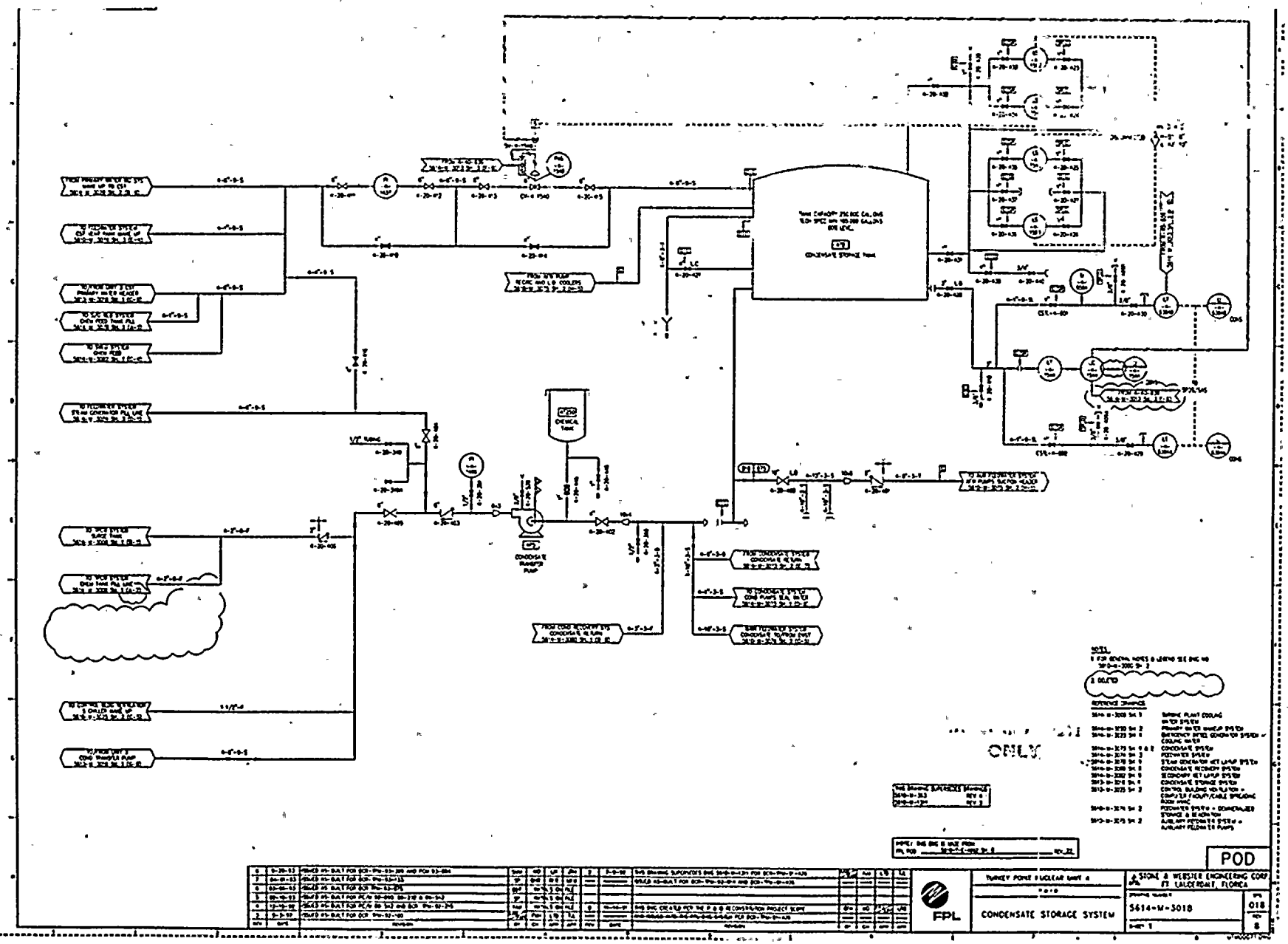
CONDENSATE STORAGE TANK
CONDENSATE TRANSFER PUMP
ONLY
POD
FPL
TURKEY POINT NUCLEAR UNIT 4
CONDENSATE STORAGE SYSTEM
STONE & WEBSTER ENGINEERING CORP
FT. LAUDERDALE, FLORIDA
5614-M-3018
018
8

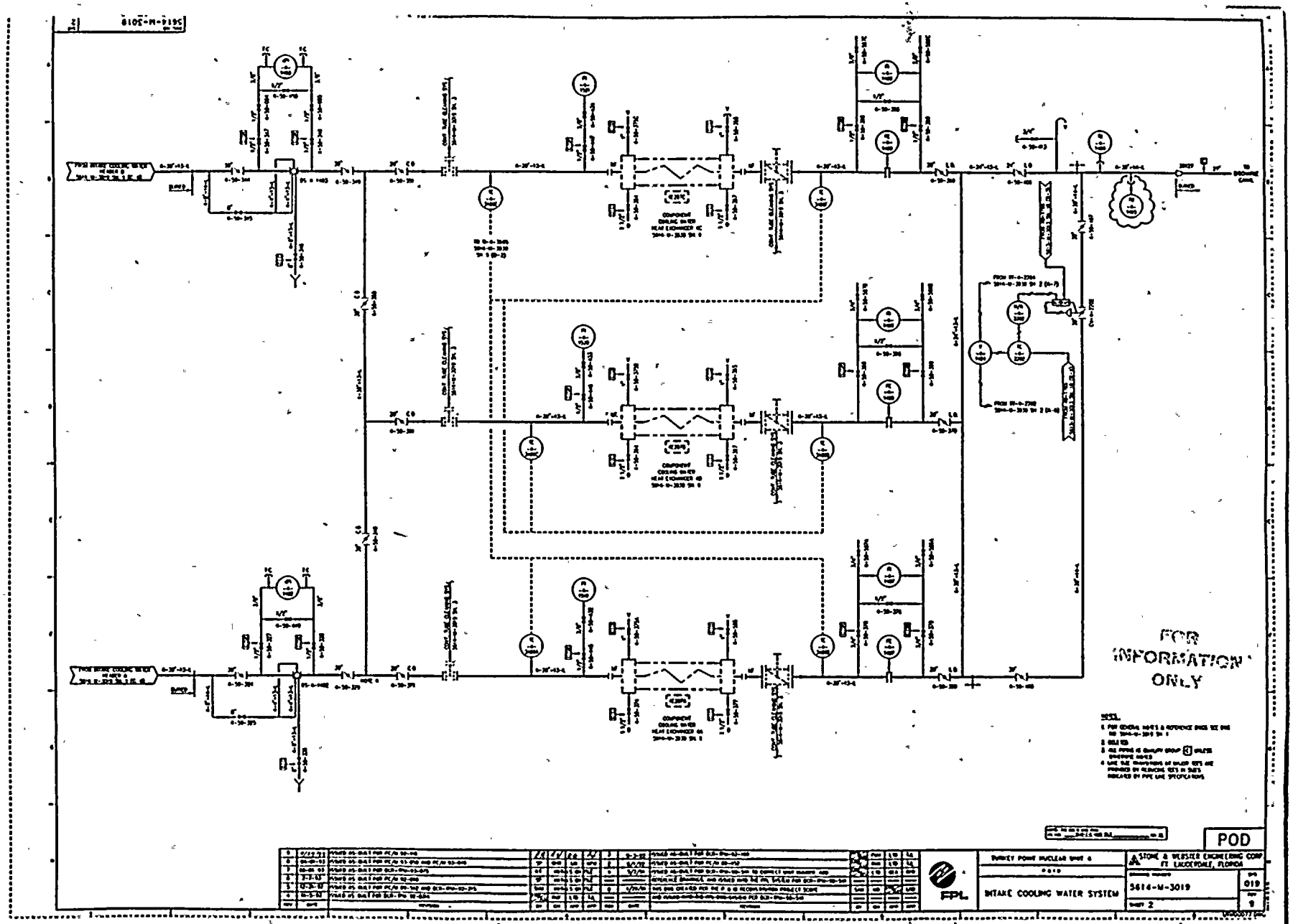
FOR INFORMATION ONLY
POD
TURKEY POINT NUCLEAR UNIT 4
FPL
INTAKE COOLING WATER SYSTEM
STONE & WEBSTER ENGINEERING CORP
FT. LAUDERDALE, FLORIDA
5614-M-3019
019
9

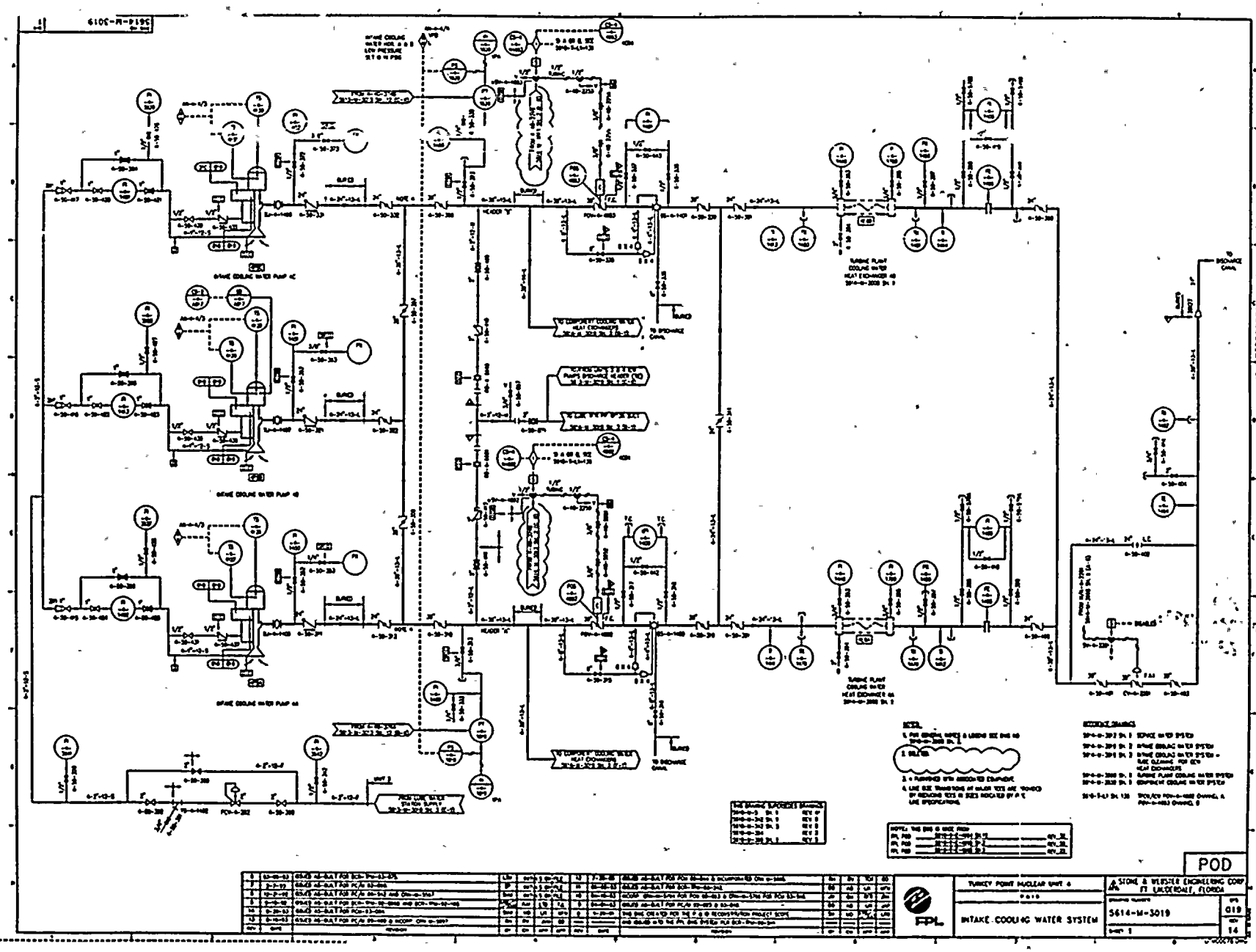
POD
TURKEY POINT NUCLEAR UNIT 4
INTAKE COOLING WATER SYSTEM
FPL
STONE & WEBSTER ENGINEERING CORP
FT. LAUDERDALE, FLORIDA
5614-M-3019
019
14

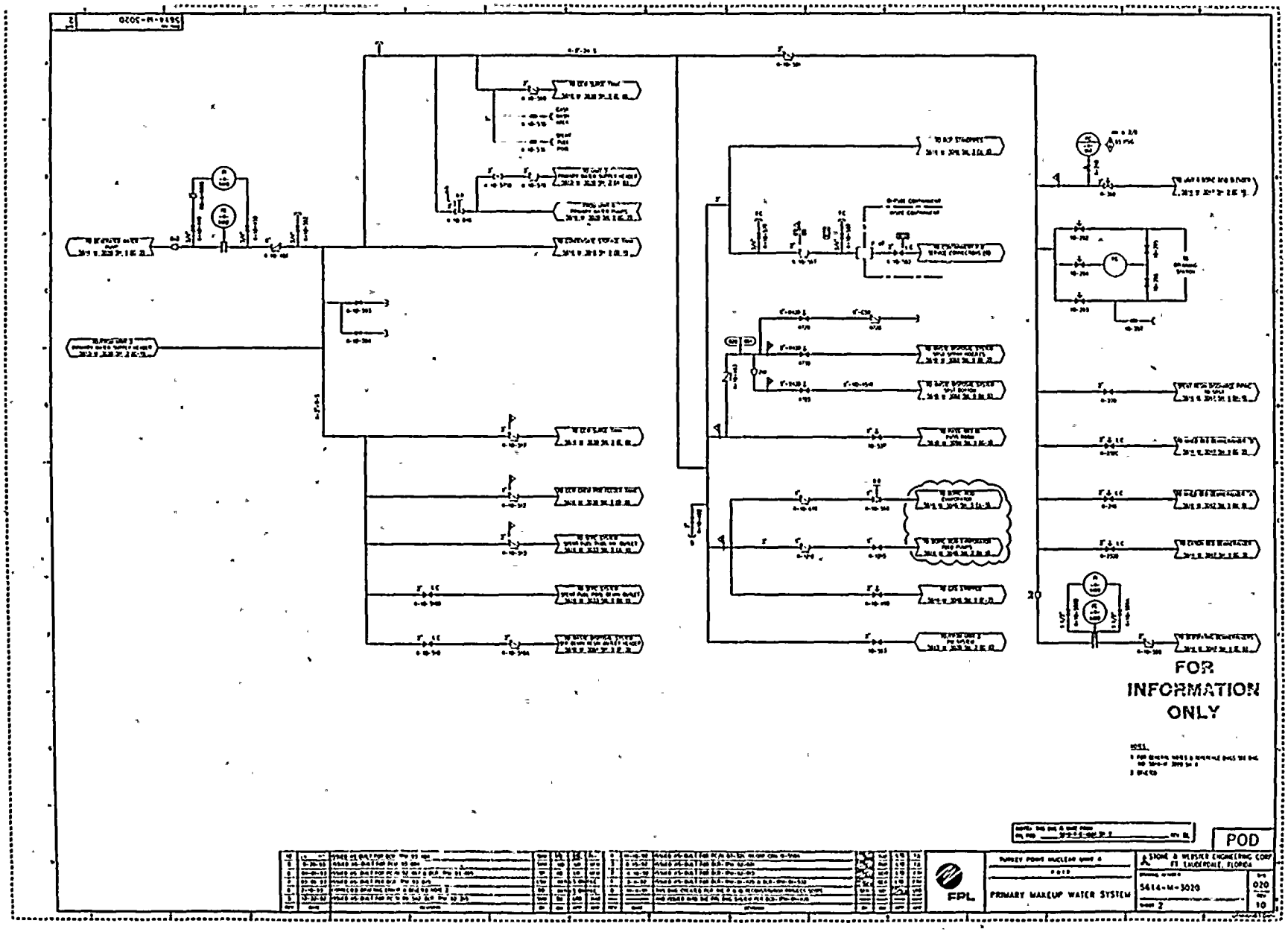
FOR INFORMATION ONLY
POD
FPL
PRIMARY MAKEUP WATER SYSTEM
5614-M-3020
020
10

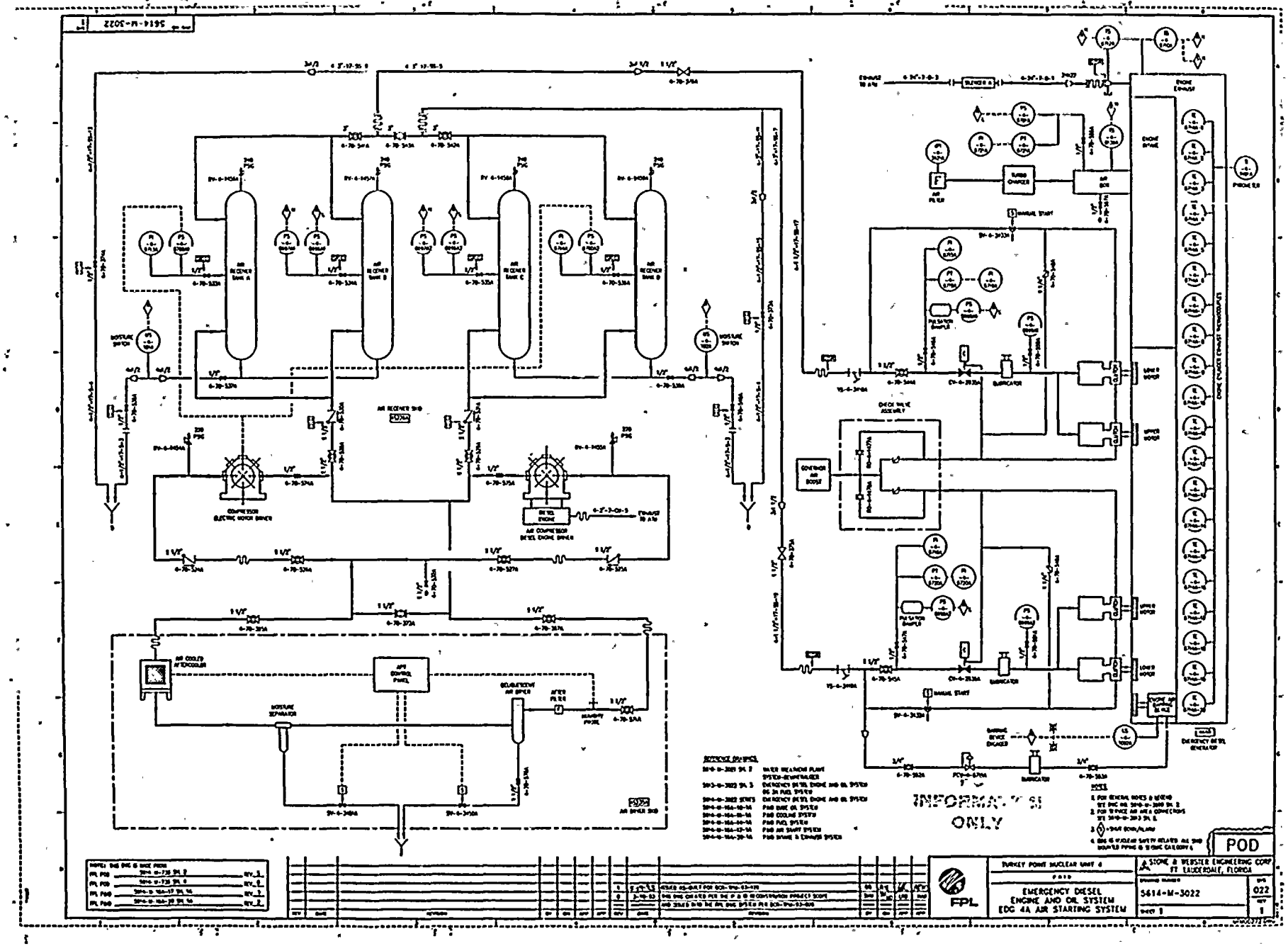
5614-M-3022
AIR REGENERATOR SHD
AIR COMPRESSOR ELECTRIC MOTOR DRIVER
AIR COMPRESSOR DIESEL ENGINE DRIVER
AIR COOLED AFTERCOOLER
MOISTURE SEPARATOR
AIR CONTROL PANEL
AIR DRYER SHD
CONTROL AIR BOOST
CHECK VALVE ASSEMBLY
LUBRICATOR
MANUAL START
ENGINE EXHAUST
ENGINE STARTER
EMERGENCY DIESEL GENERATOR
INFORMATION ONLY
POD
TURKEY POINT NUCLEAR UNIT 4
EMERGENCY DIESEL ENGINE AND OIL SYSTEM
EDG 4A AIR STARTING SYSTEM
STONE & WEBSTER ENGINEERING CORP
FT. LAUDERDALE, FLORIDA
5614-M-3022
022
1
FPL

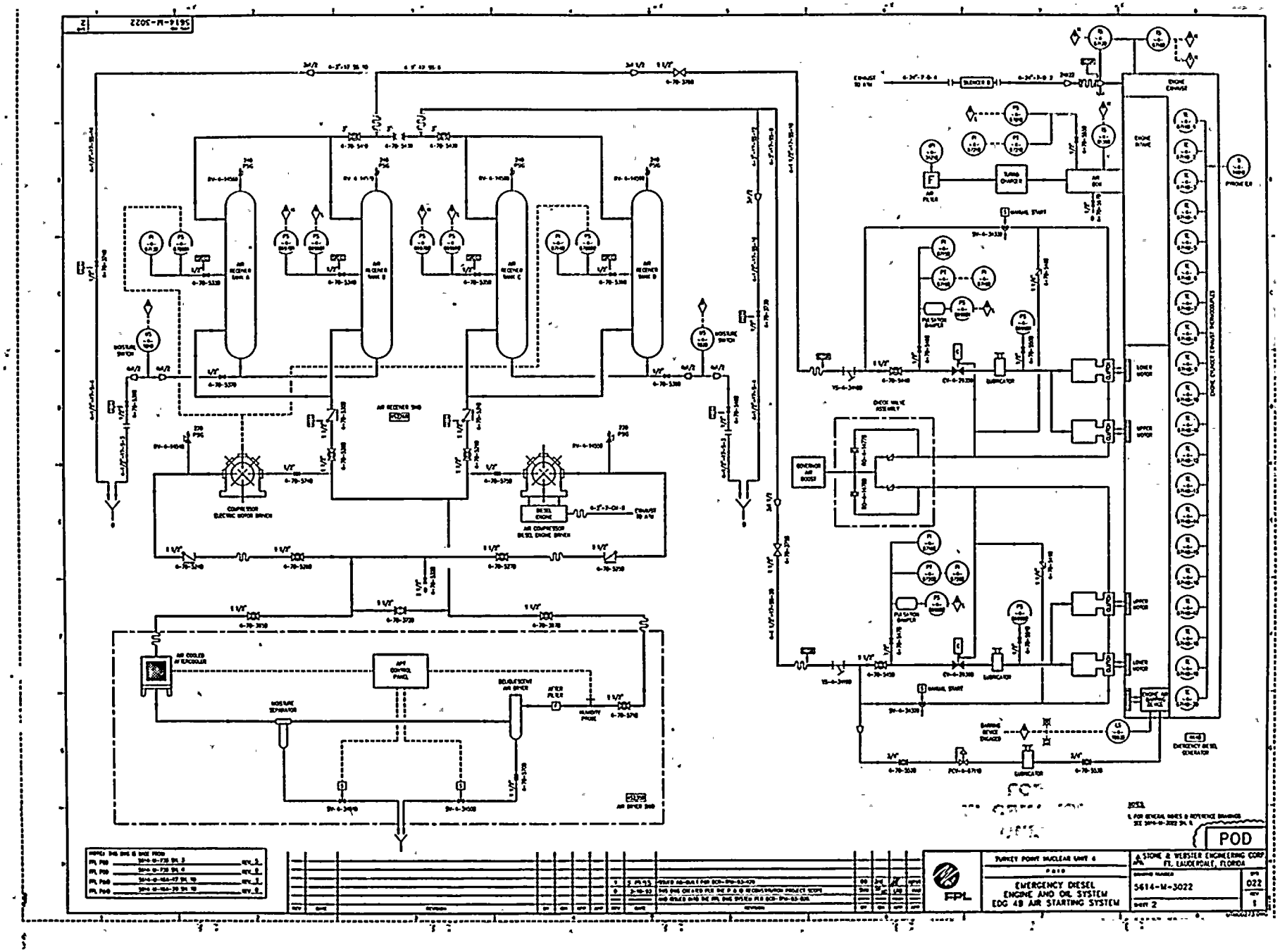
POD
TURKEY POINT NUCLEAR UNIT 4
EMERGENCY DIESEL ENGINE AND OIL SYSTEM EDG 4B AIR STARTING SYSTEM
STONE & WEBSTER ENGINEERING CORP. FT. LAUDERDALE, FLORIDA
5614-M-3022
FPL

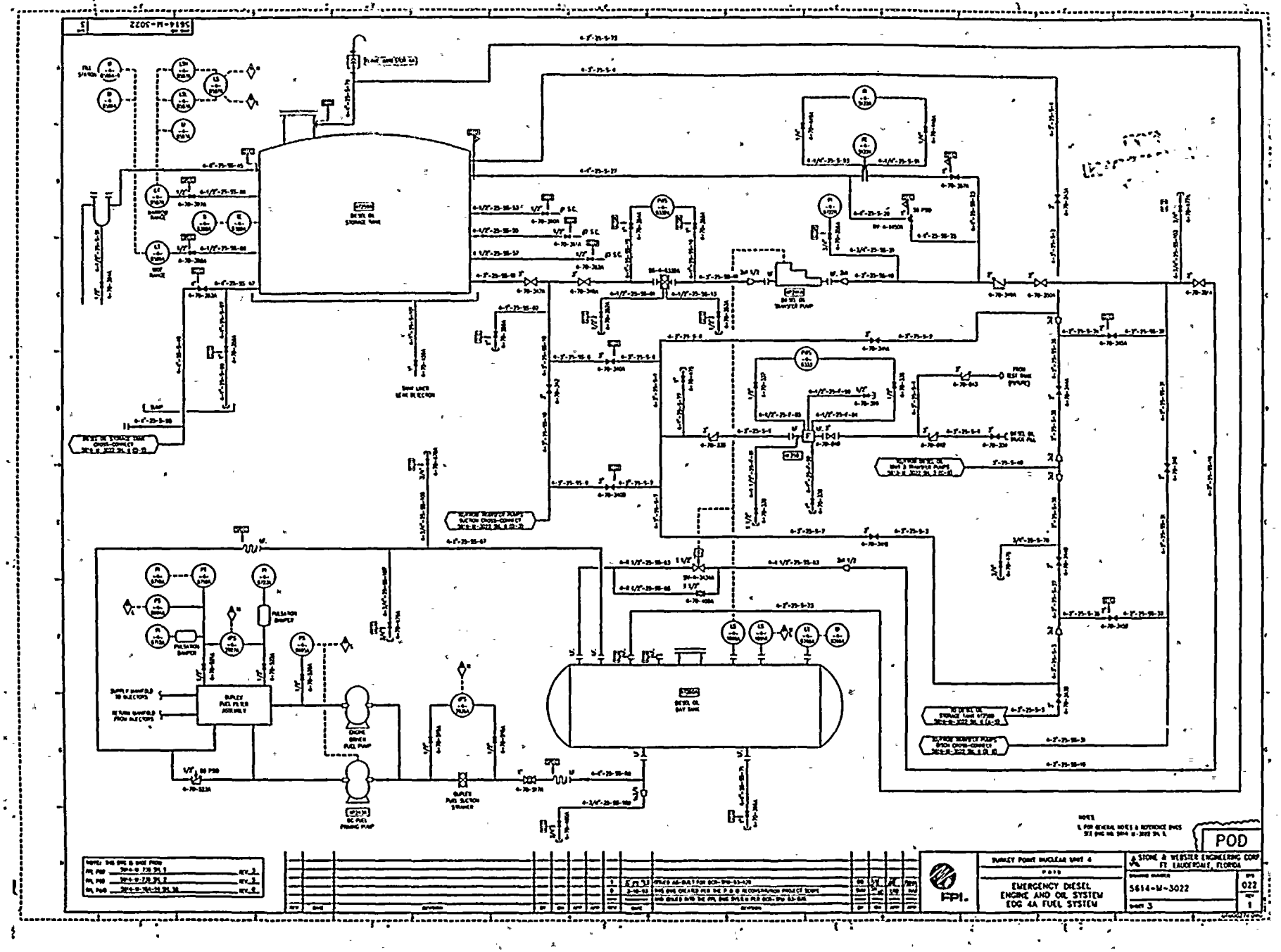
POD
TURKEY POINT NUCLEAR UNIT 4
EMERGENCY DIESEL
ENGINE AND OIL SYSTEM
EDG 4A FUEL SYSTEM
STONE & WEBSTER ENGINEERING CORP
FT. LAUDERDALE, FLORIDA
5614-M-3022
SHEET 3
022
1
FPL

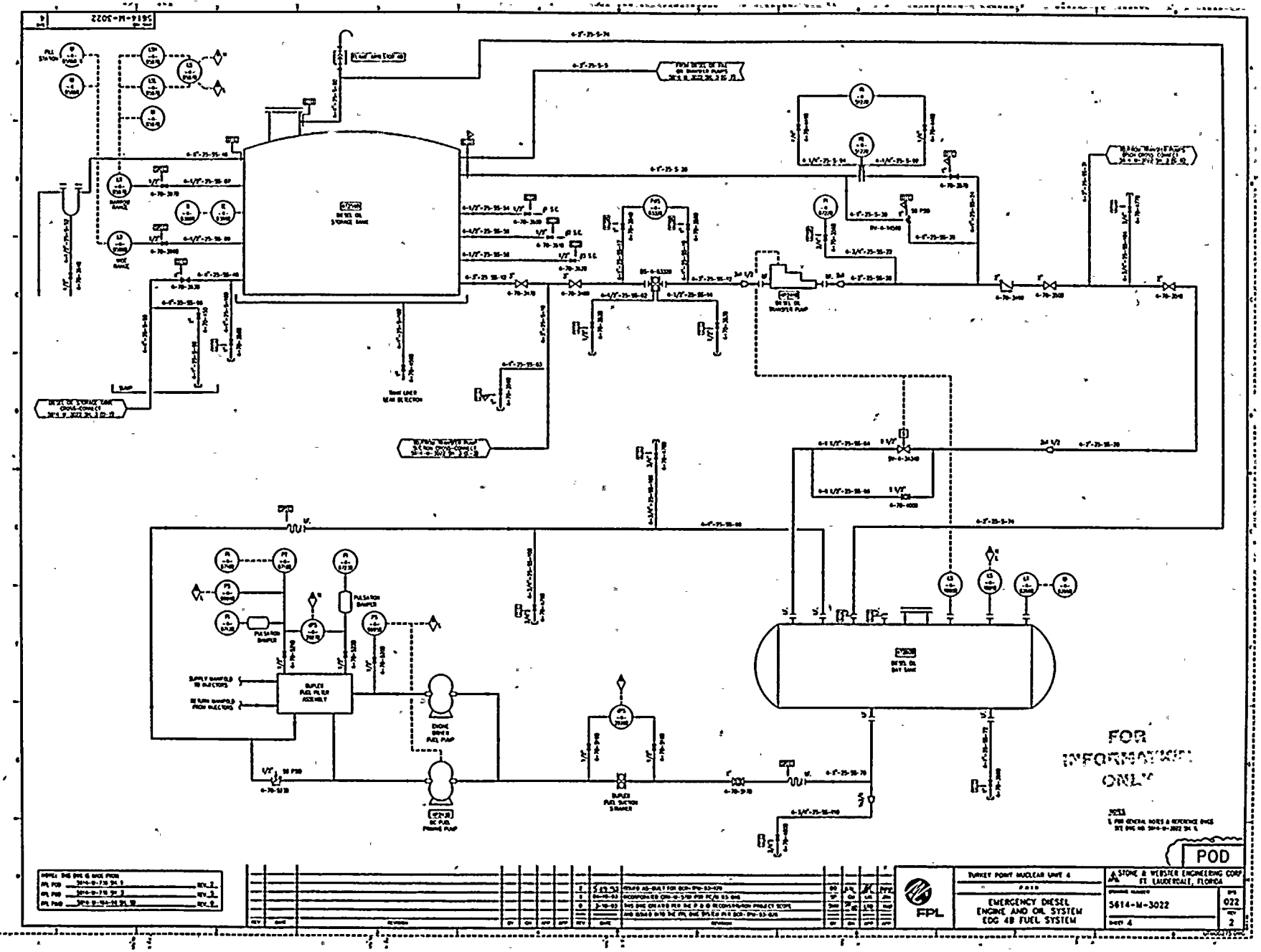
5614-M-3022
DIESEL OIL STORAGE TANK
DIESEL OIL TRANSFER PUMP
DIESEL OIL DAY TANK
DUPLEX FUEL FILTER ASSEMBLY
ENGINE DRIVEN FUEL PUMP
DC FUEL PRIMING PUMP
DUPLEX FUEL SUCTION STRAINER
PULSATION DAMPER
FOR INFORMATION ONLY
POD
TURKEY POINT NUCLEAR UNIT 4
EMERGENCY DIESEL ENGINE AND OIL SYSTEM
EDG 4B FUEL SYSTEM
FPL
STONE & WEBSTER ENGINEERING CORP
FT. LAUDERDALE, FLORIDA
5614-M-3022
022
2

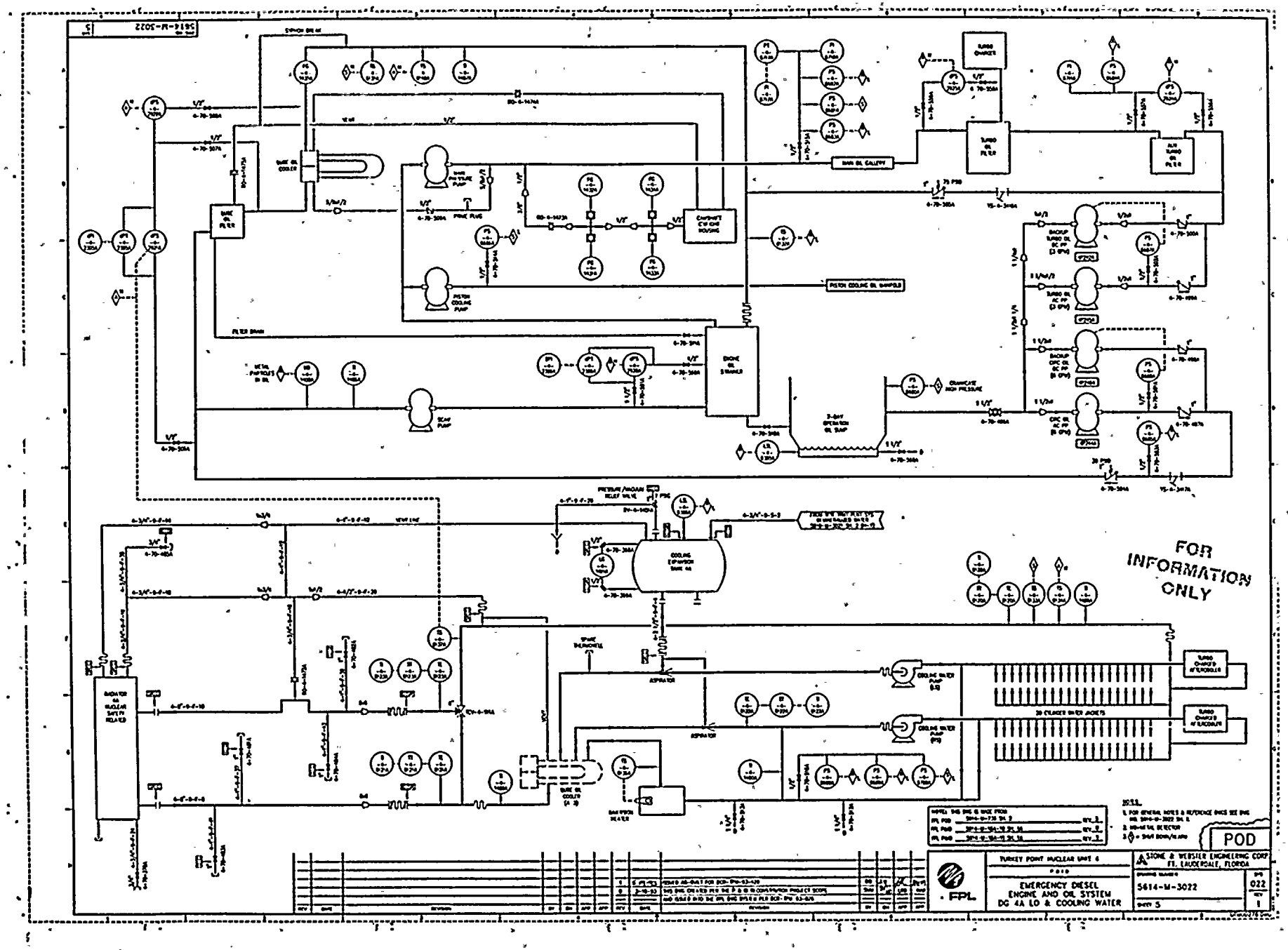
5614-M-3022
FOR INFORMATION ONLY
POD
TURKEY POINT NUCLEAR UNIT 4
EMERGENCY DIESEL ENGINE AND OIL SYSTEM DG 4A LO & COOLING WATER
STONE & WEBSTER ENGINEERING CORP. FT. LAUDERDALE, FLORIDA
5614-M-3022
022
1
SHT 5
FPL

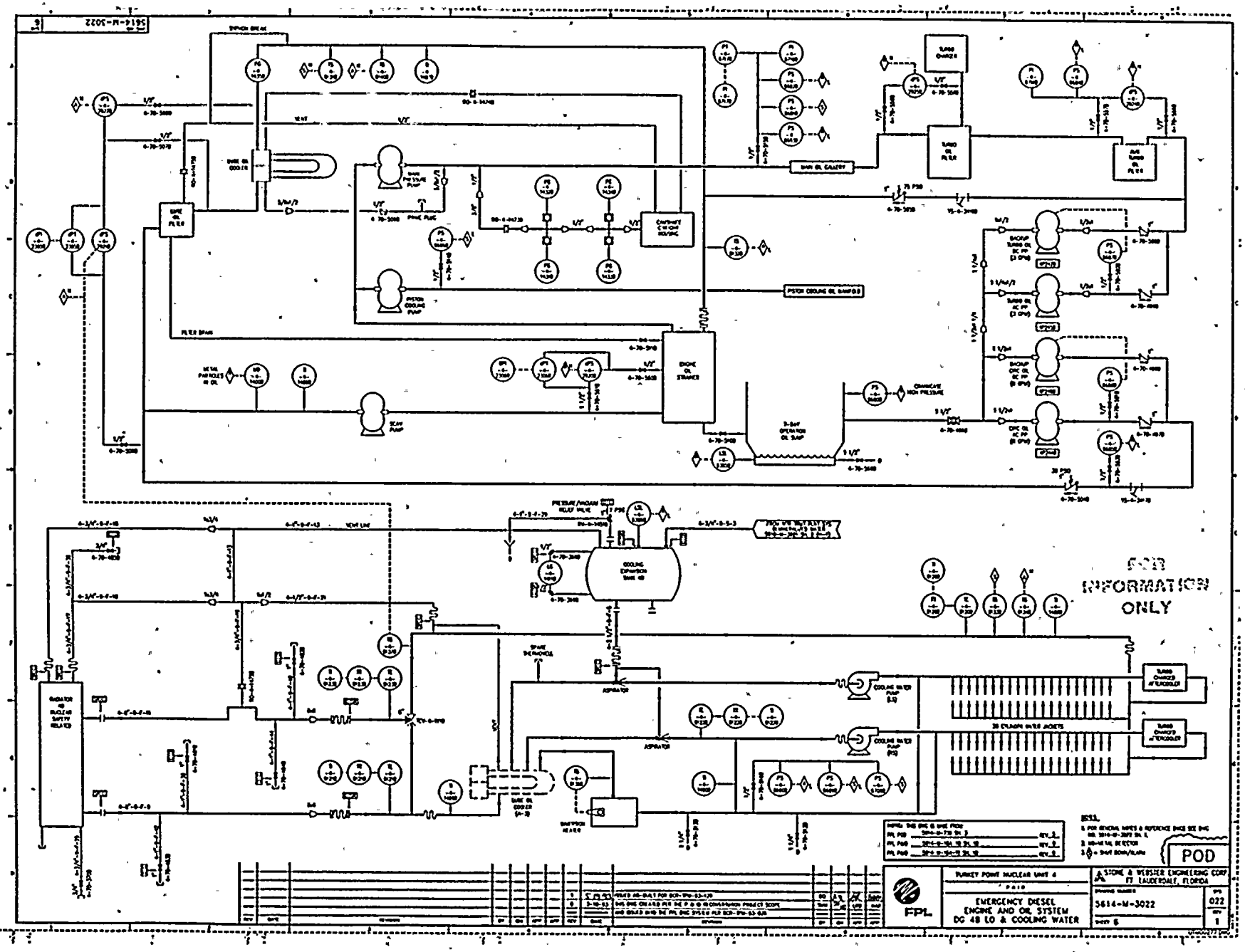
FOR INFORMATION ONLY
POD
FPL
TURKEY POINT NUCLEAR UNIT 4
EMERGENCY DIESEL ENGINE AND OIL SYSTEM DG 4B LO & COOLING WATER
STONE & WEBSTER ENGINEERING CORP FT. LAUDERDALE, FLORIDA
5614-M-3022
022
1

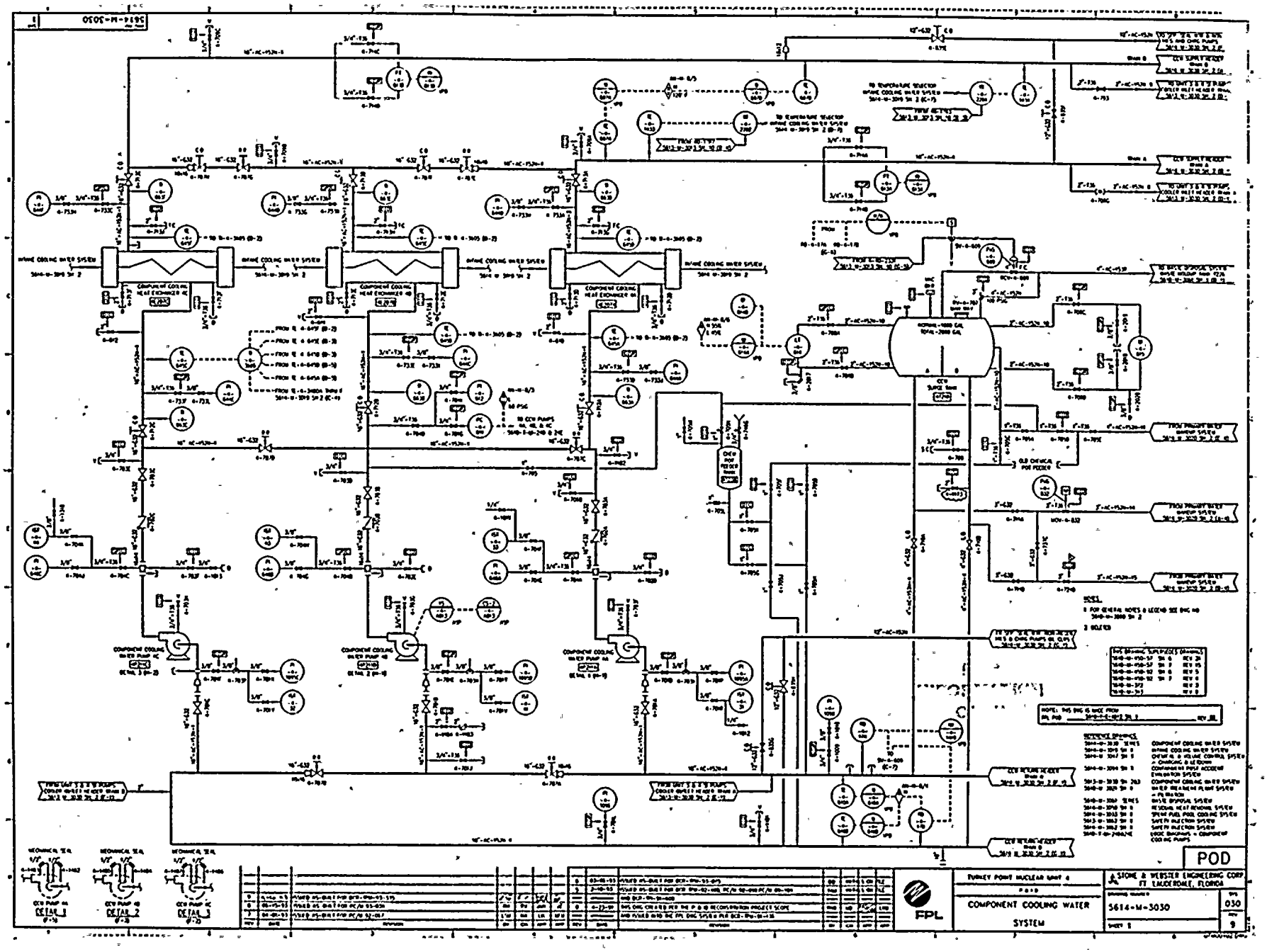
POD
COMPONENT COOLING WATER SYSTEM
5614-M-3030
FPL
TURKEY POINT NUCLEAR UNIT 4
STONE & WEBSTER ENGINEERING CORP.
FT. LAUDERDALE, FLORIDA
030
9

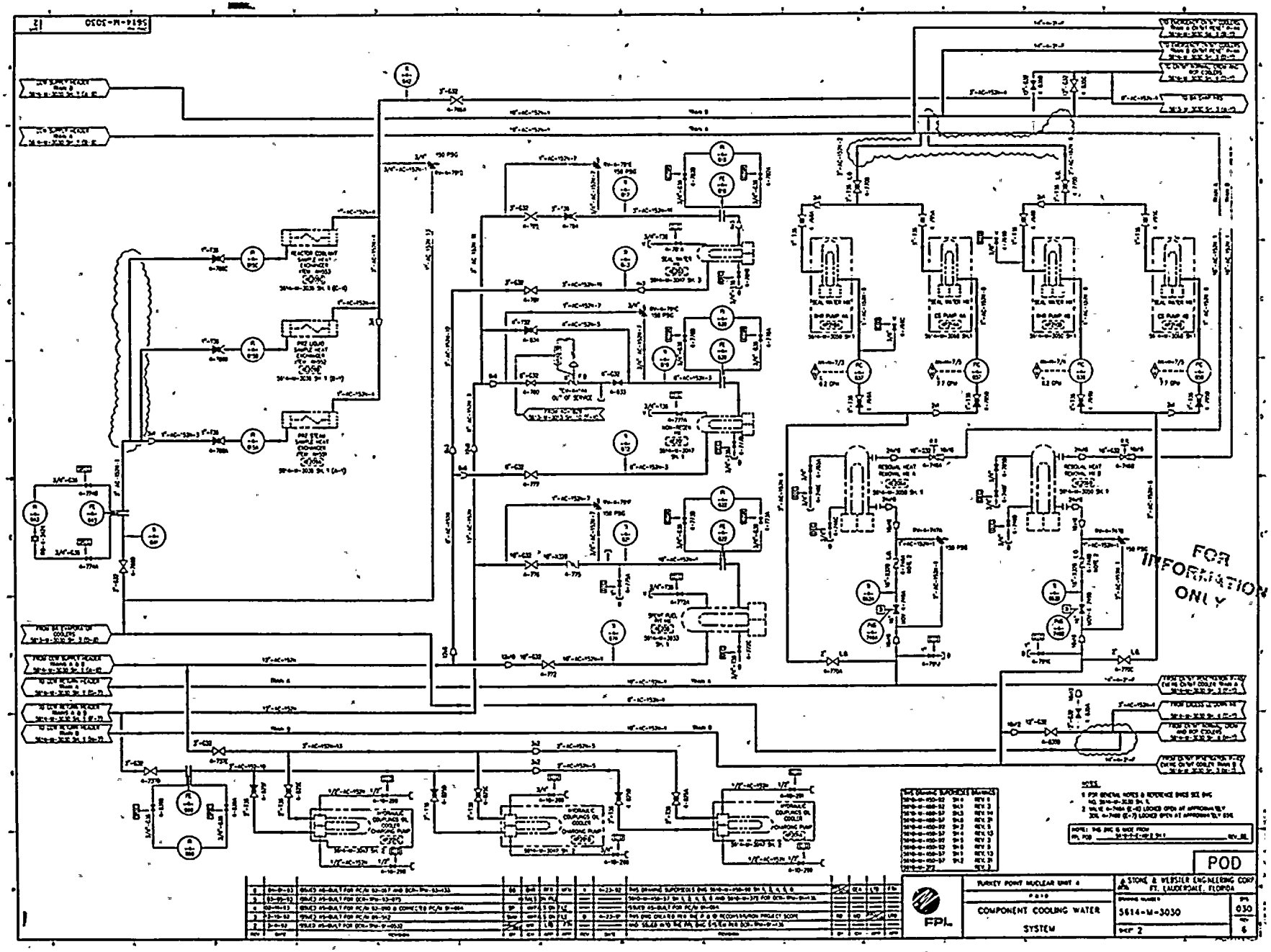
FOR INFORMATION ONLY
POD
FPL
TURKEY POINT NUCLEAR UNIT 4
COMPONENT COOLING WATER SYSTEM
STONE & WEBSTER ENGINEERING CORP.
FT. LAUDERDALE, FLORIDA
5614-M-3030
030

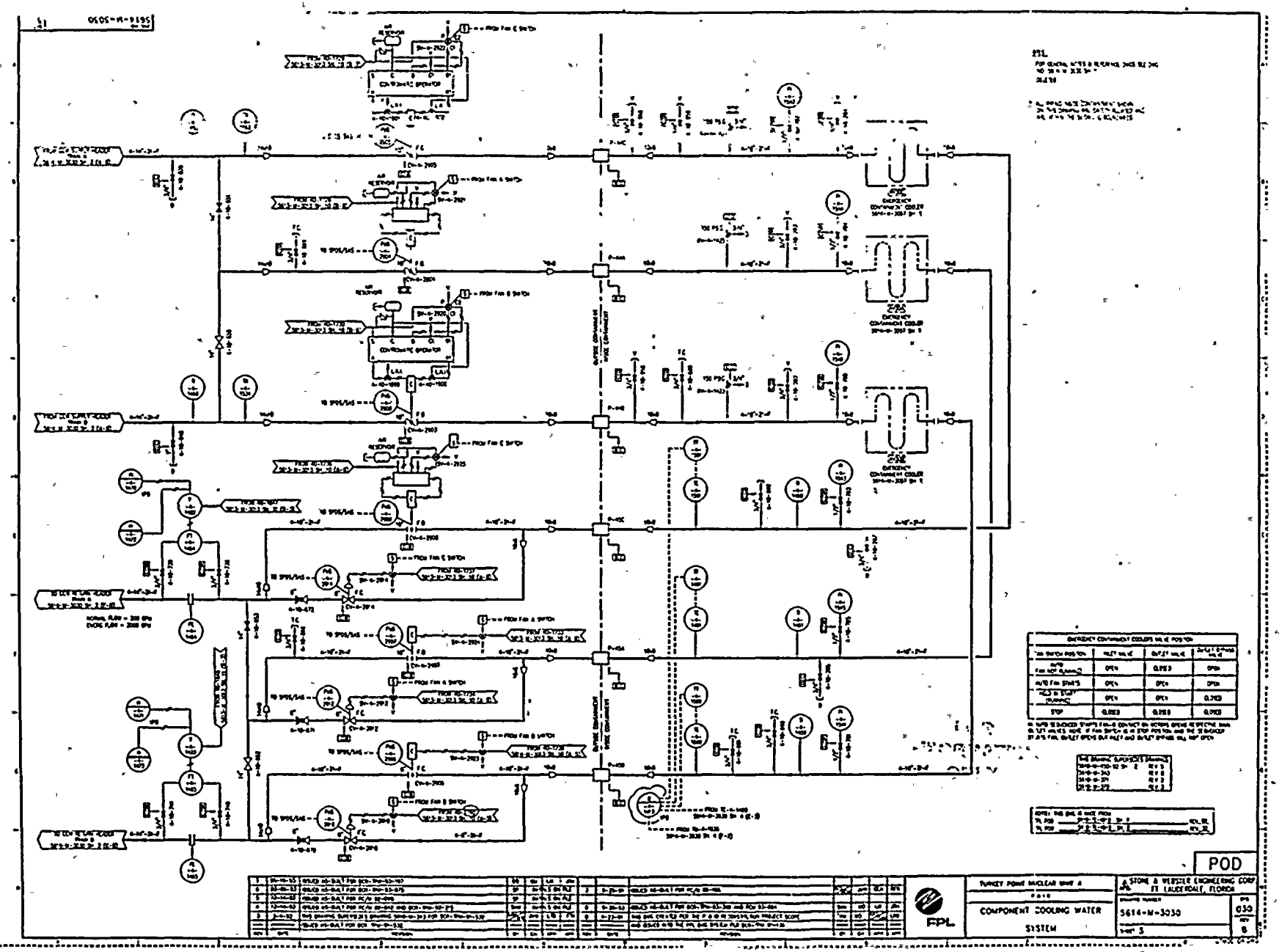
5614-M-3030
EMERGENCY COMPONENT COOLER VALVE POSITION
POD
FPL
TURKEY POINT NUCLEAR UNIT 4
COMPONENT COOLING WATER
SYSTEM
5614-M-3030
SHEET 3
030
B

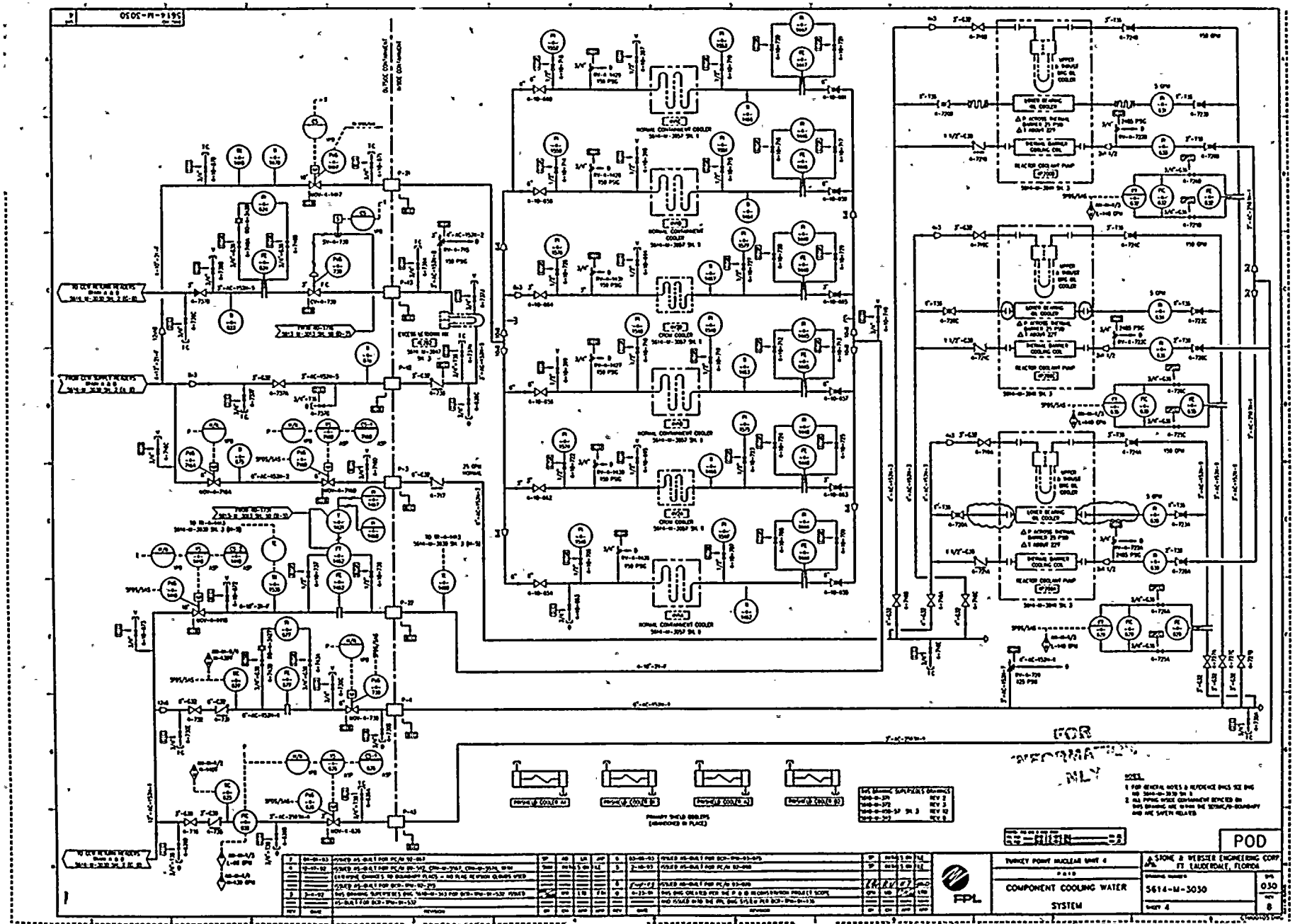
5614-M-3030
FOR INFORMATION ONLY
POD
TURKEY POINT NUCLEAR UNIT 4
COMPONENT COOLING WATER SYSTEM
FPL
STONE & WEBSTER ENGINEERING CORP
FT. LAUDERDALE, FLORIDA
5614-M-3030
SHEET 4
030
8

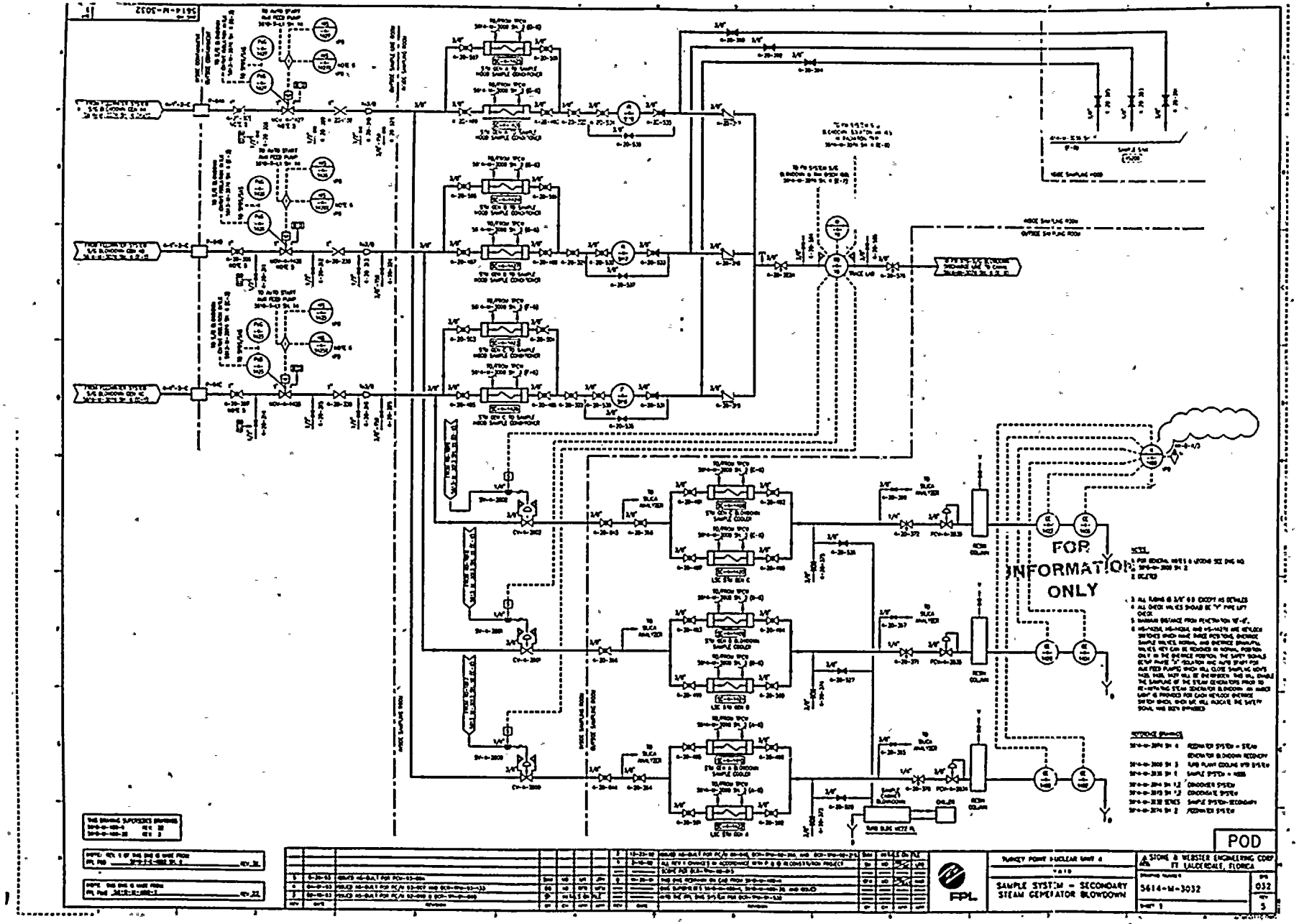
FOR INFORMATION ONLY
POD
TURKEY POINT NUCLEAR UNIT 4
SAMPLE SYSTEM - SECONDARY STEAM GENERATOR BLOWDOWN
STONE & WEBSTER ENGINEERING CORP
FT. LAUDERDALE, FLORIDA
5614-M-3032
032
5
FPL

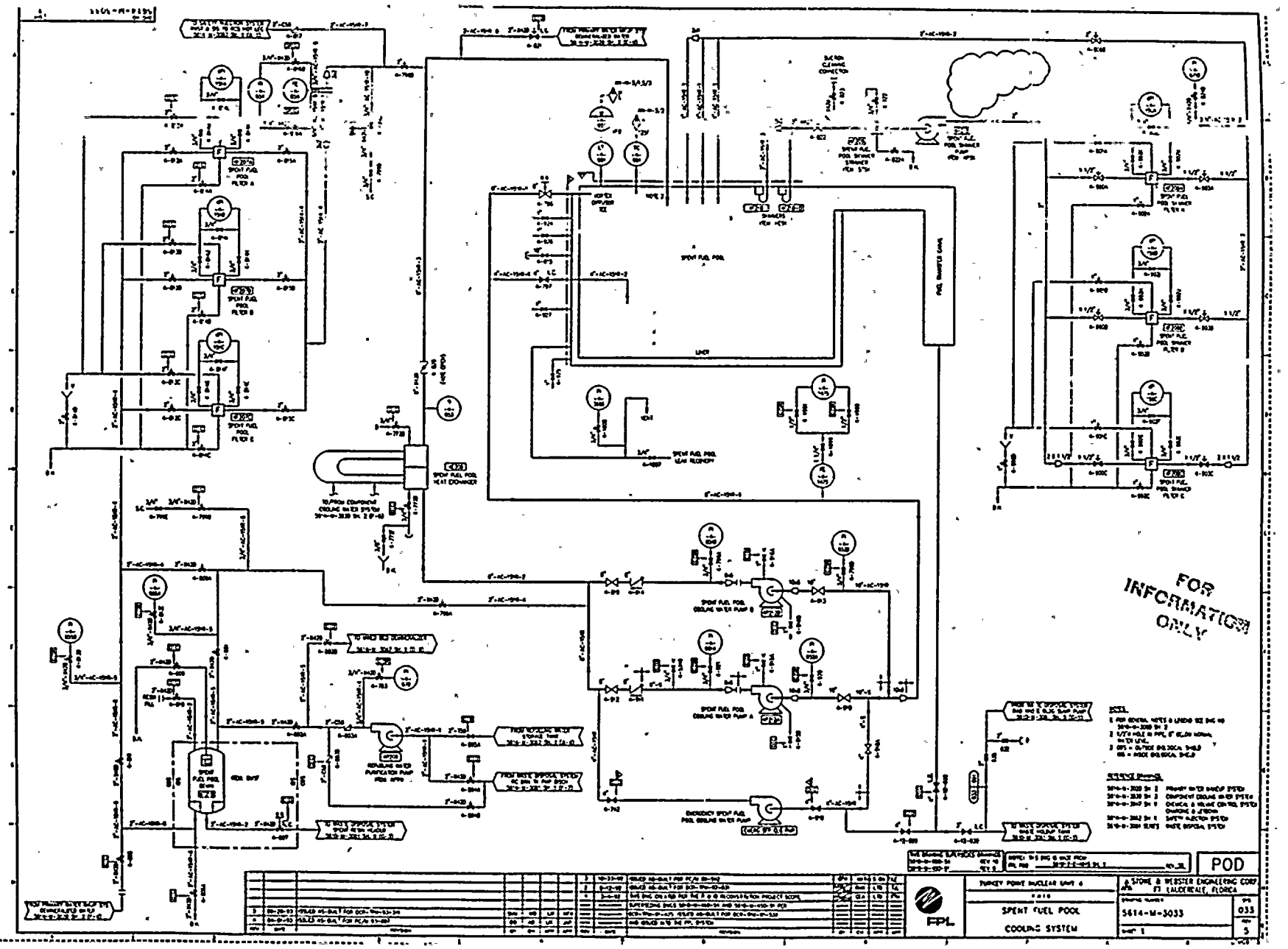
FOR INFORMATION ONLY
POD
TURKEY POINT NUCLEAR UNIT 4
SPENT FUEL POOL
COOLING SYSTEM
STONE & WEBSTER ENGINEERING CORP.
FT. LAUDERDALE, FLORIDA
5614-M-3033
033
FPL

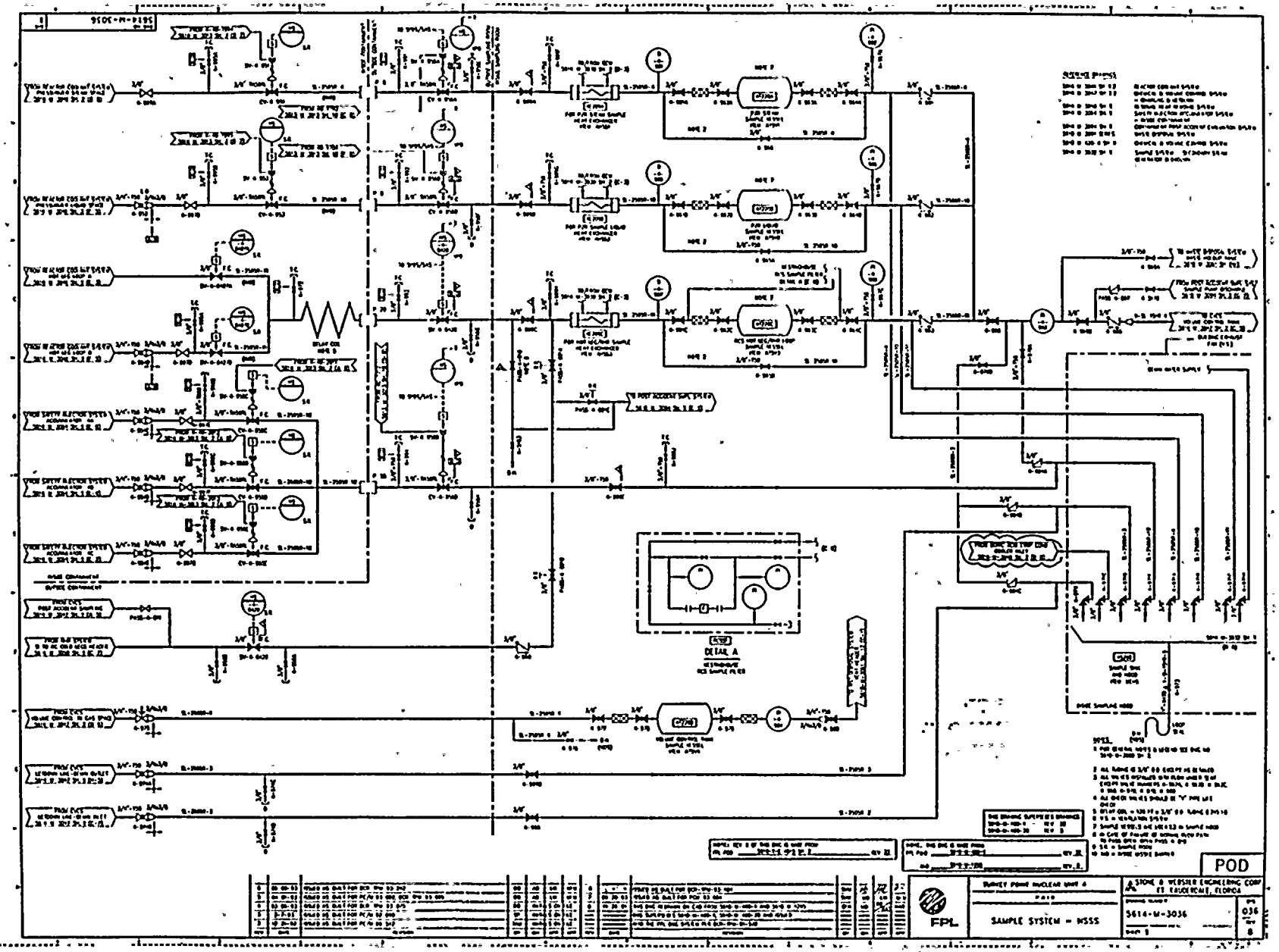
POD
FPL
SAMPLE SYSTEM - NSSS
5614-M-3036
DETAIL A

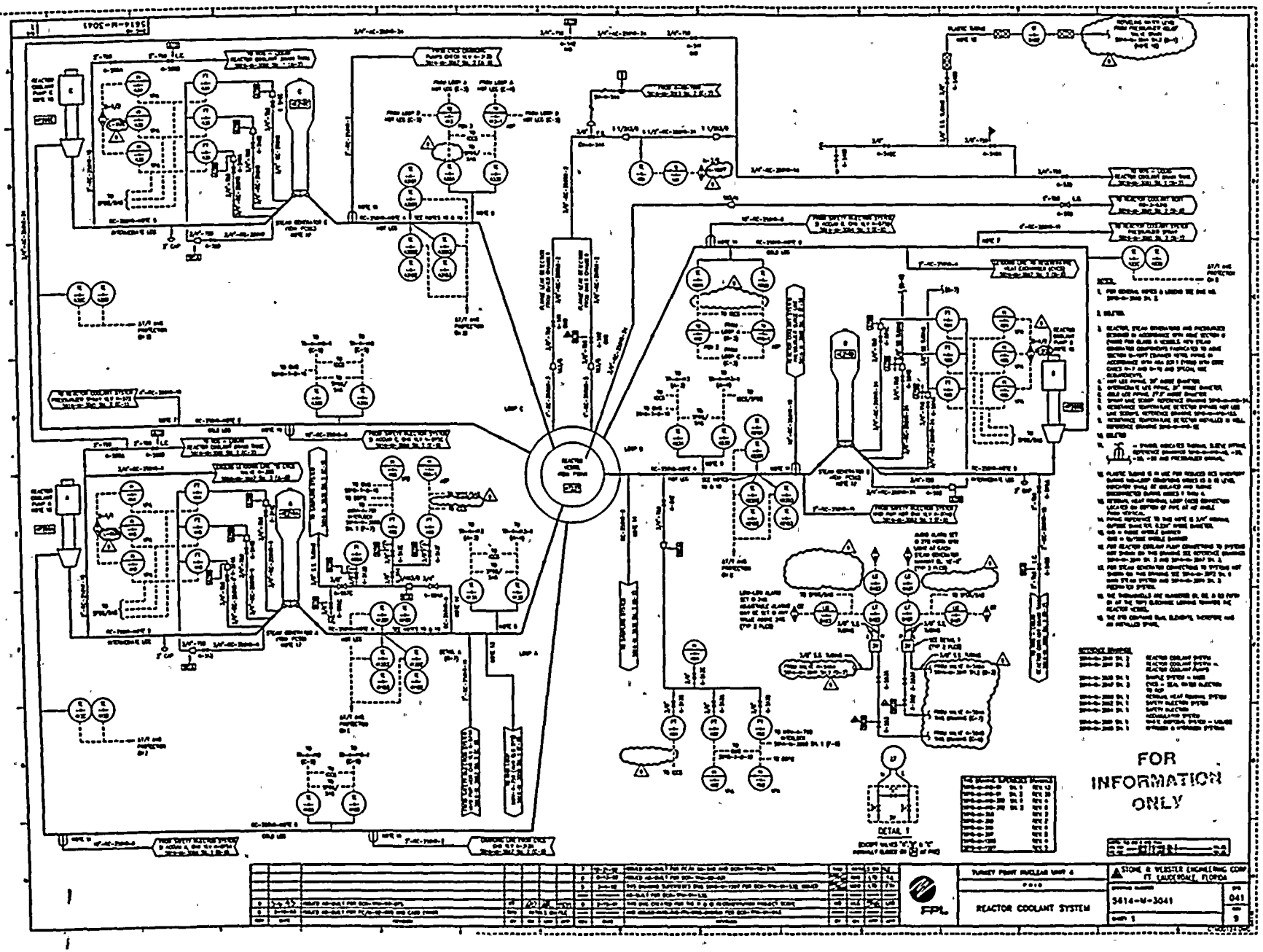
FOR INFORMATION ONLY
DETAIL 1
REACTOR COOLANT SYSTEM
TURKEY POINT NUCLEAR UNIT 4
STONE & WEBSTER ENGINEERING CORP
FT. LAUDERDALE, FLORIDA
5614-M-3041
041
FPL

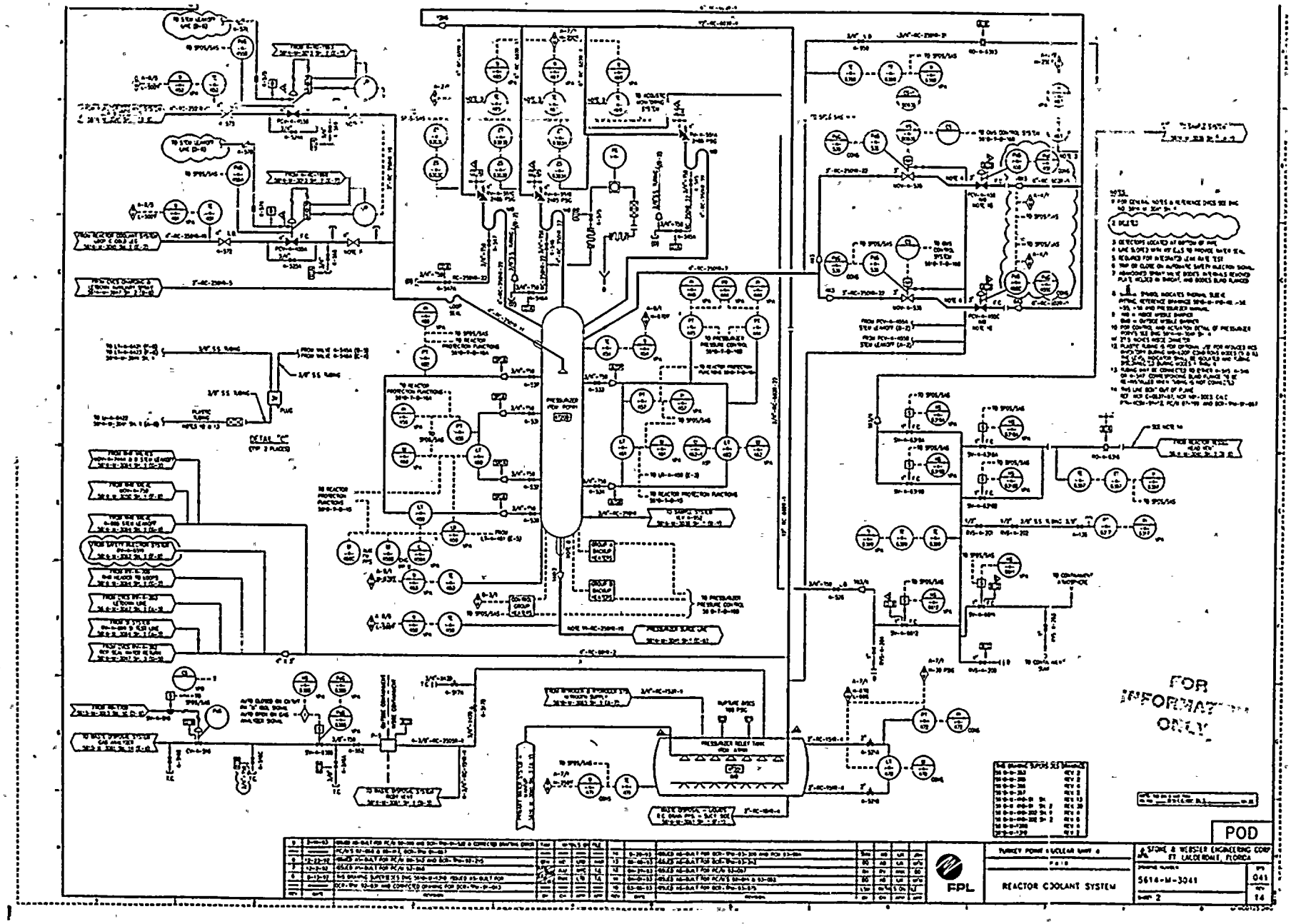
FOR INFORMATION ONLY
POD
FPL
TURKEY POINT NUCLEAR UNIT 4
REACTOR COOLANT SYSTEM
STONE & WEBSTER ENGINEERING CORP.
FT. LAUDERDALE, FLORIDA
5614-M-3041
041
14
SHEET 2

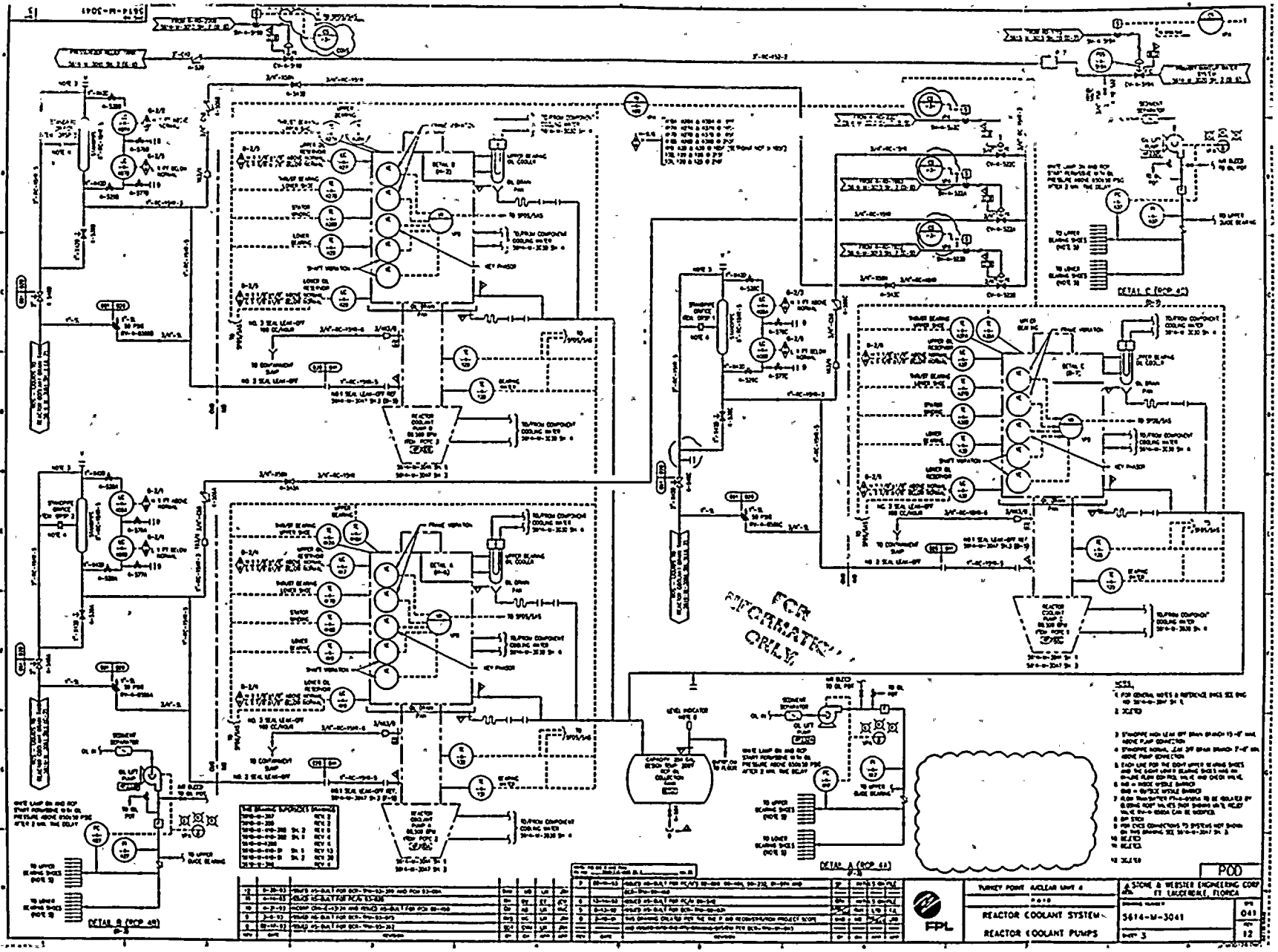
FOR INFORMATION ONLY
DETAIL B (RCP 4A)
DETAIL A (RCP 4B)
DETAIL C (RCP 4C)
REACTOR COOLANT SYSTEM
REACTOR COOLANT PUMPS
TURKEY POINT NUCLEAR UNIT 4
STONE & WEBSTER ENGINEERING CORP
FT. LAUDERDALE, FLORIDA
5614-M-3041
FPL
POD

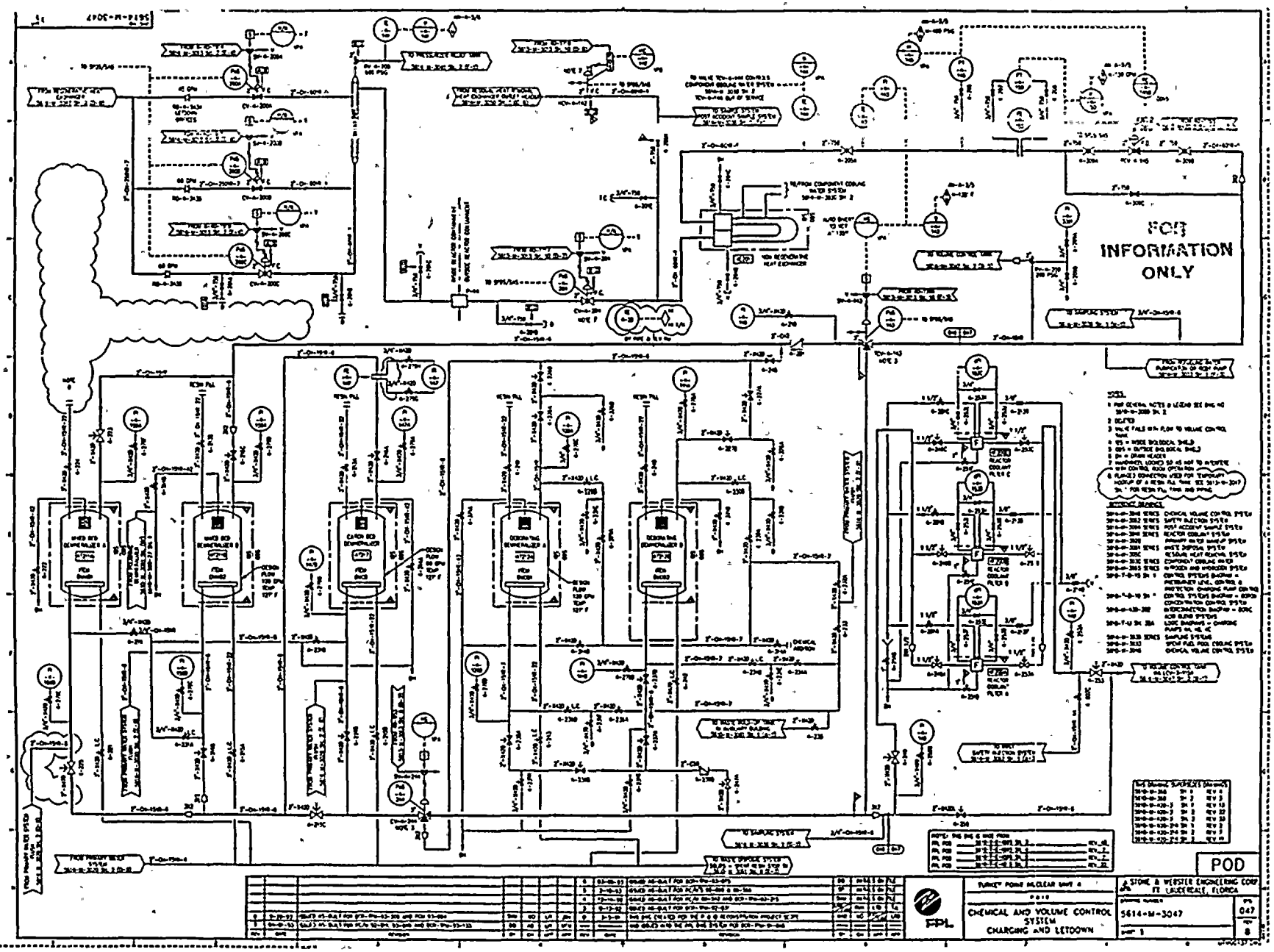
FOR INFORMATION ONLY
POD
FPL
CHEMICAL AND VOLUME CONTROL SYSTEM
CHARGING AND LETDOWN
STONE & WEBSTER ENGINEERING CORP
FT. LAUDERDALE, FLORIDA
5614-M-3047

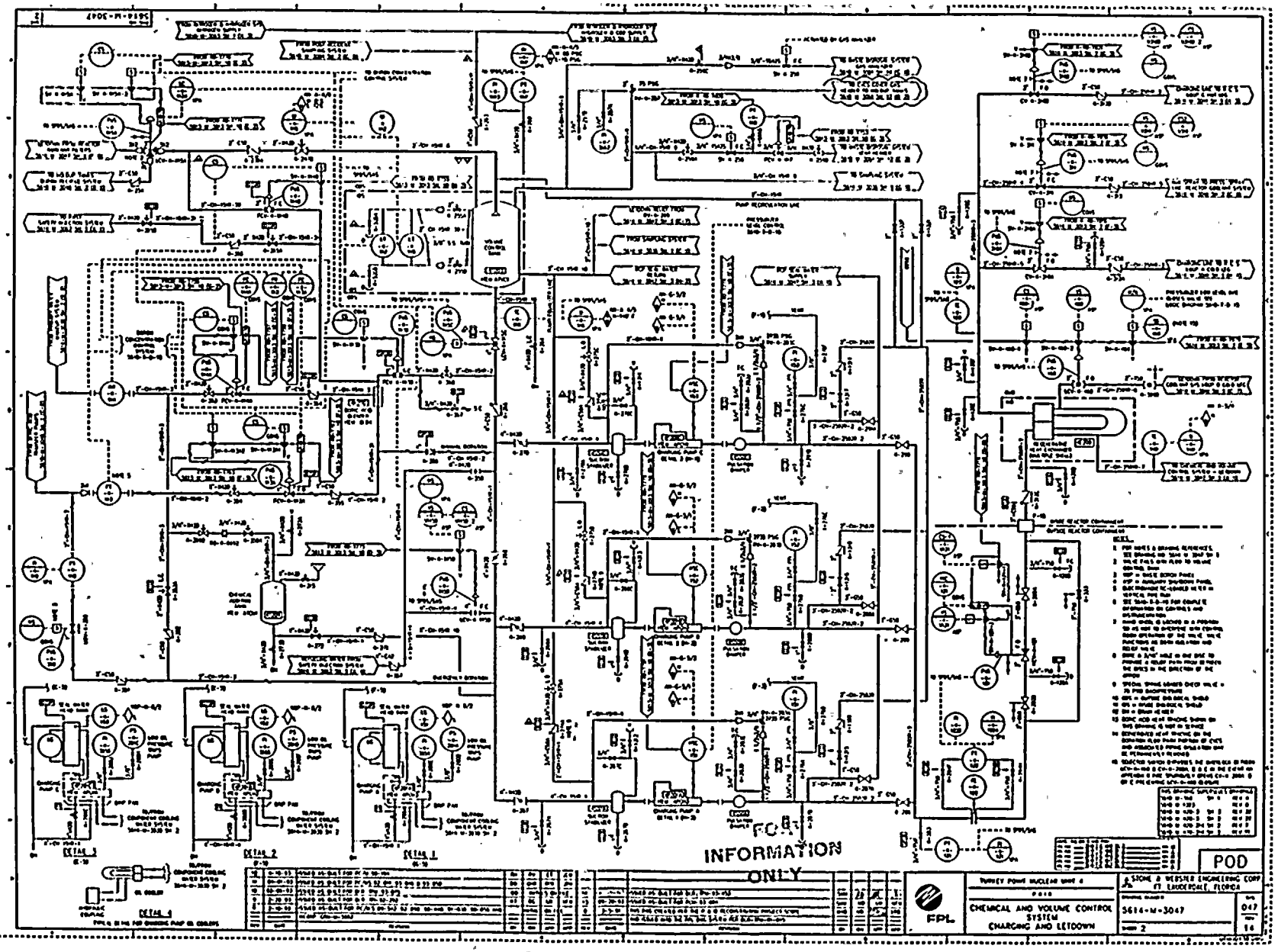
INFORMATION ONLY
POD
FPL
TURKEY POINT NUCLEAR UNIT 4
CHEMICAL AND VOLUME CONTROL SYSTEM
CHARGING AND LETDOWN
STONE & WEBSTER ENGINEERING CORP
FT. LAUDERDALE, FLORIDA
5614-M-3047
DETAIL 1
DETAIL 2
DETAIL 3
DETAIL 4

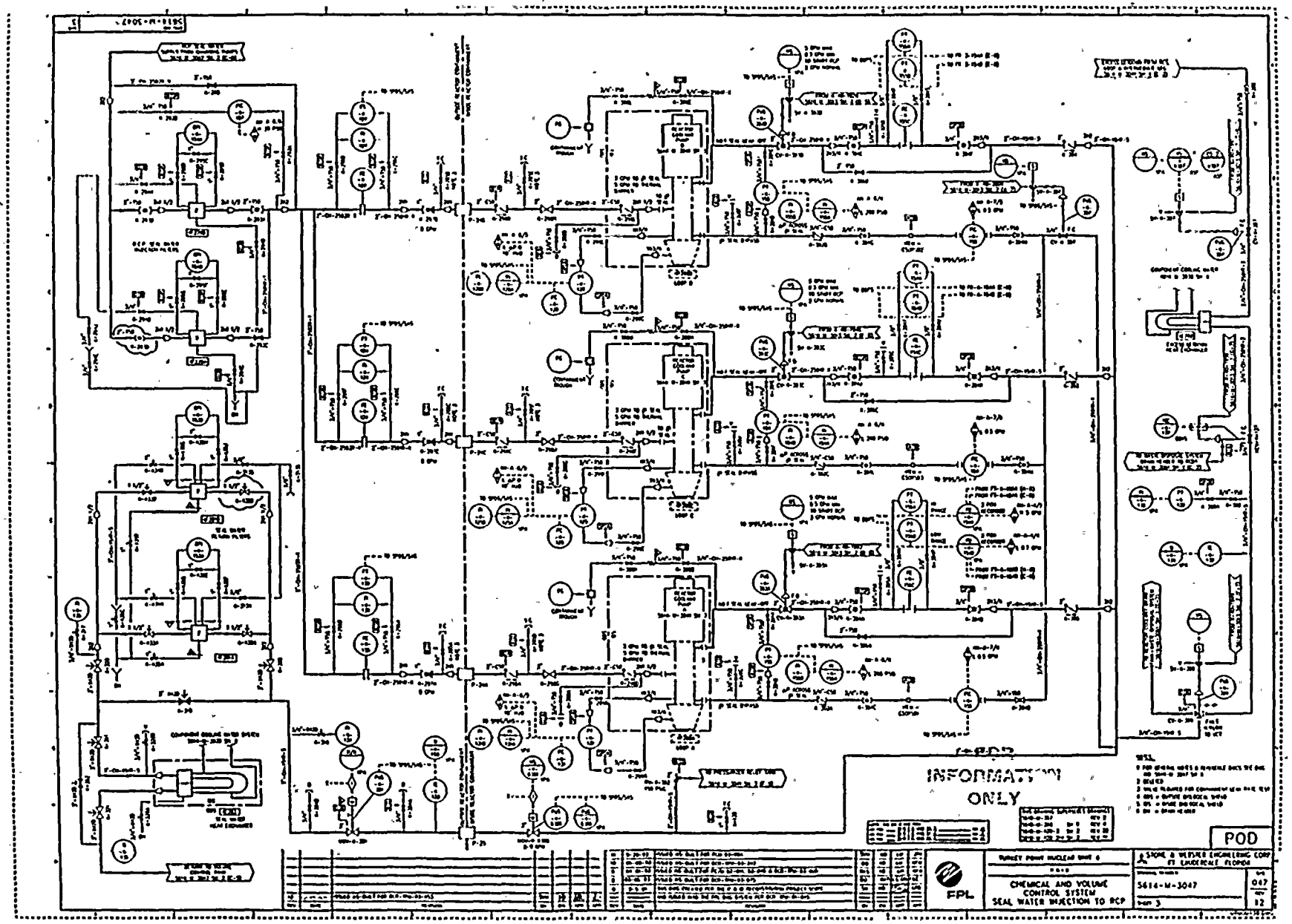
INFORMATION ONLY
POD
FPL
CHEMICAL AND VOLUME CONTROL SYSTEM
SEAL WATER INJECTION TO RCP
5614-M-3047

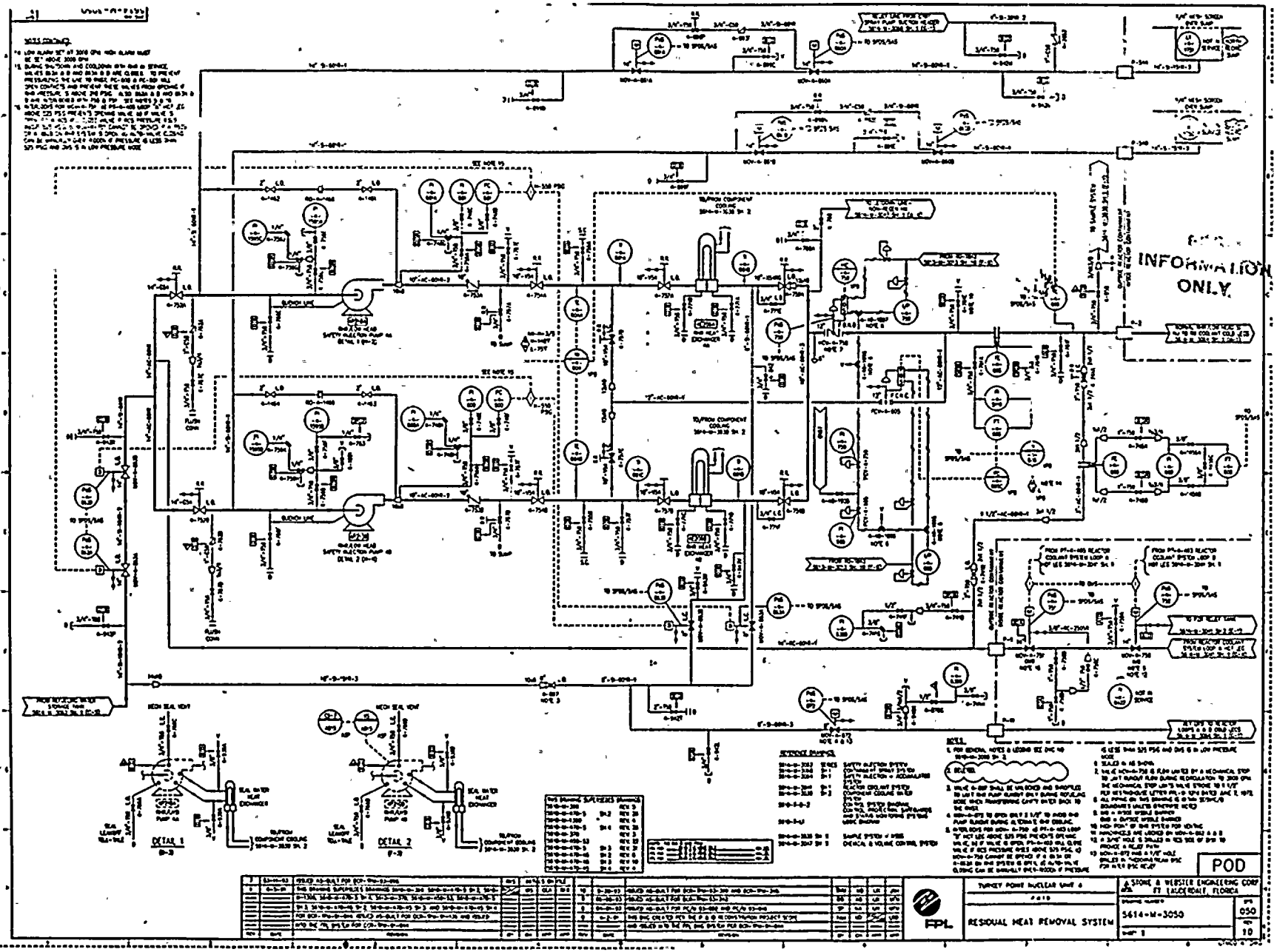
INFORMATION ONLY
DETAIL 1
DETAIL 2
POD
TURKEY POINT NUCLEAR UNIT 4
RESIDUAL HEAT REMOVAL SYSTEM
STONE & WEBSTER ENGINEERING CORP
FT LAUDERDALE, FLORIDA
5614-M-3050
050
10
FPL

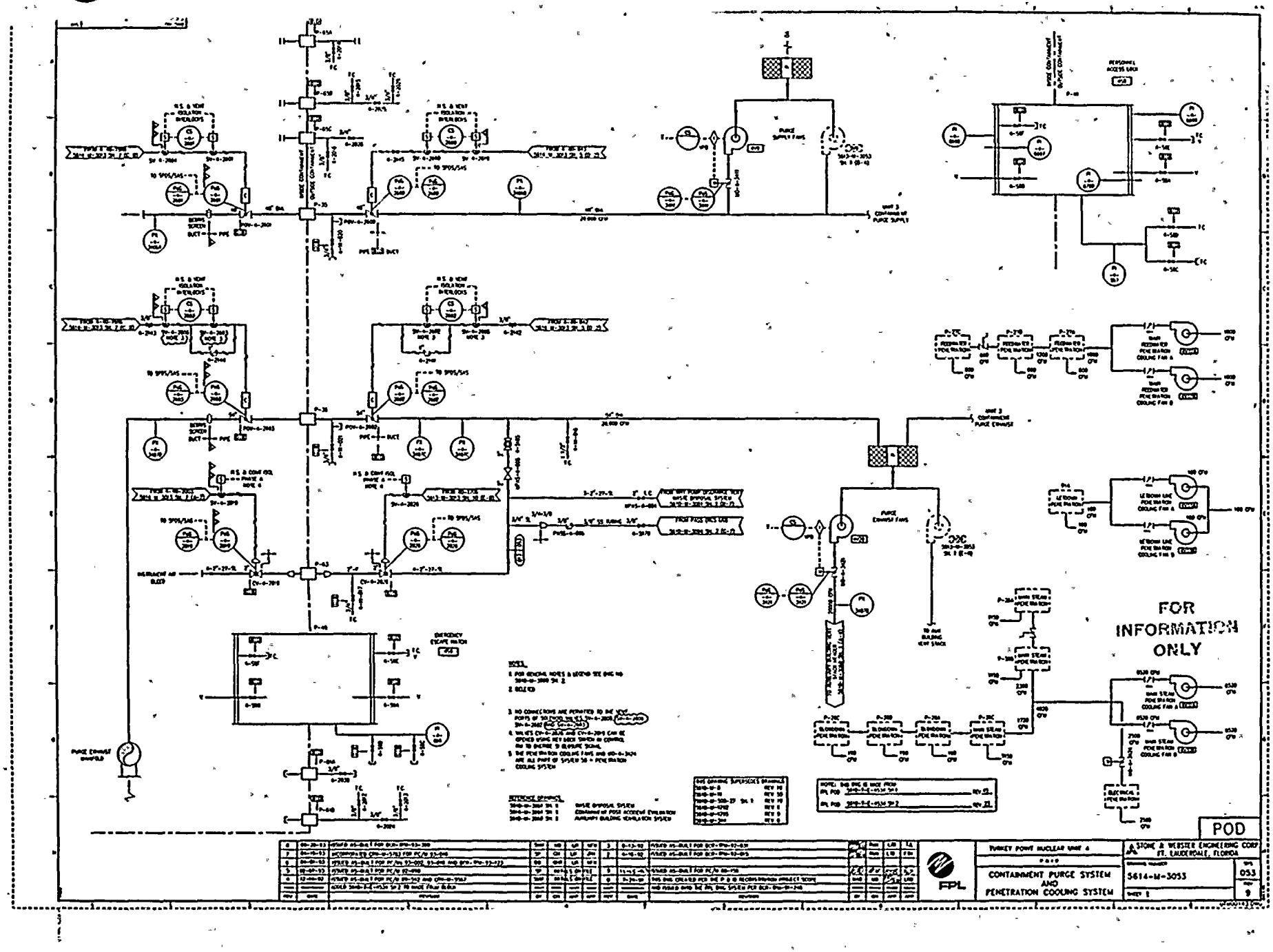
FOR INFORMATION ONLY
POD
TURKEY POINT NUCLEAR UNIT 4
CONTAINMENT PURGE SYSTEM AND PENETRATION COOLING SYSTEM
STONE & WEBSTER ENGINEERING CORP
FT. LAUDERDALE, FLORIDA
5614-M-3053
053
9
FPL

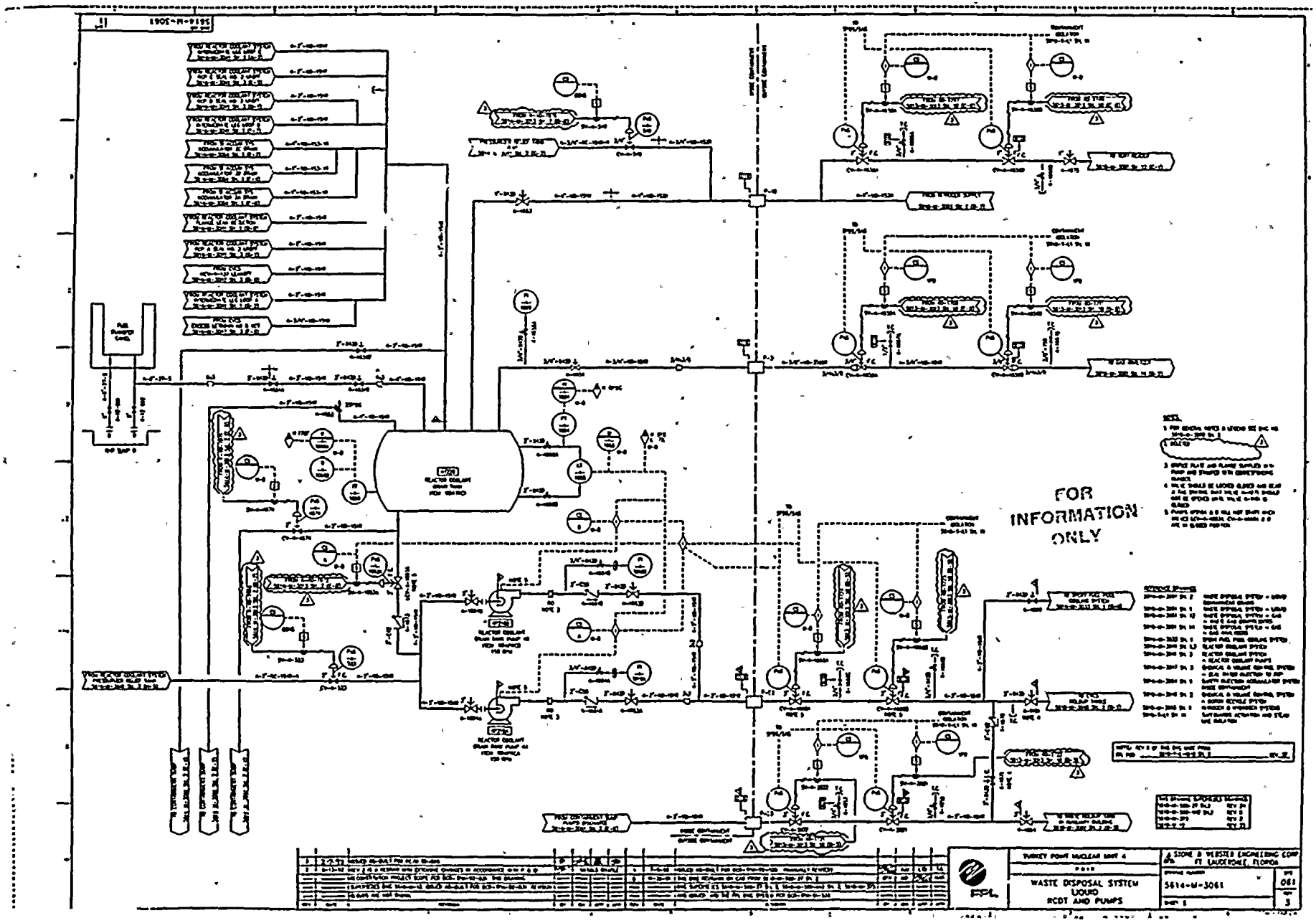
FOR INFORMATION ONLY
WASTE DISPOSAL SYSTEM
LIQUID
RCDT AND PUMPS
5614-M-3061

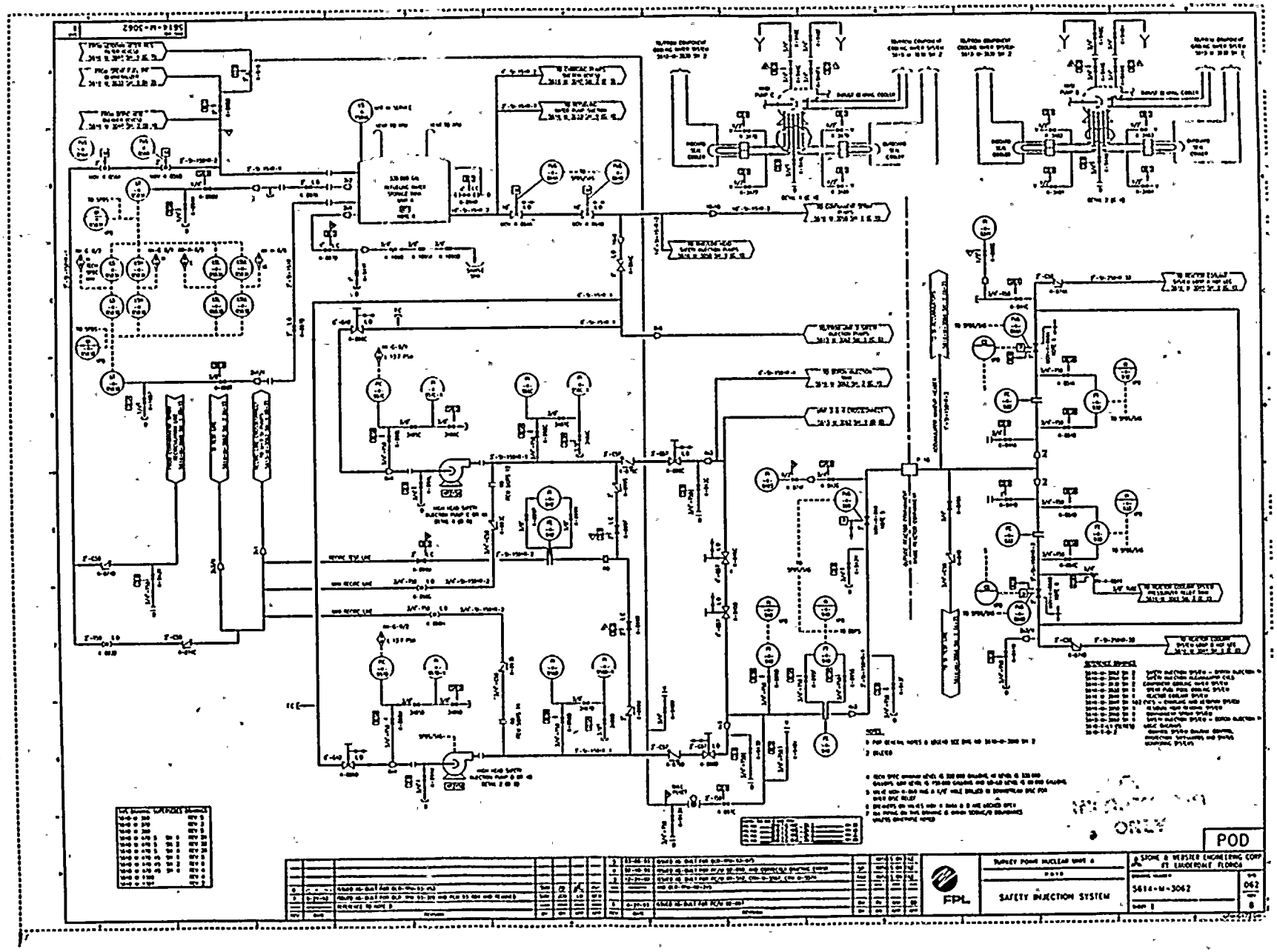
POD
FPL
SAFETY INJECTION SYSTEM
STONE & WEBSTER ENGINEERING CORP
FT. LAUDERDALE, FLORIDA
5614-M-3062

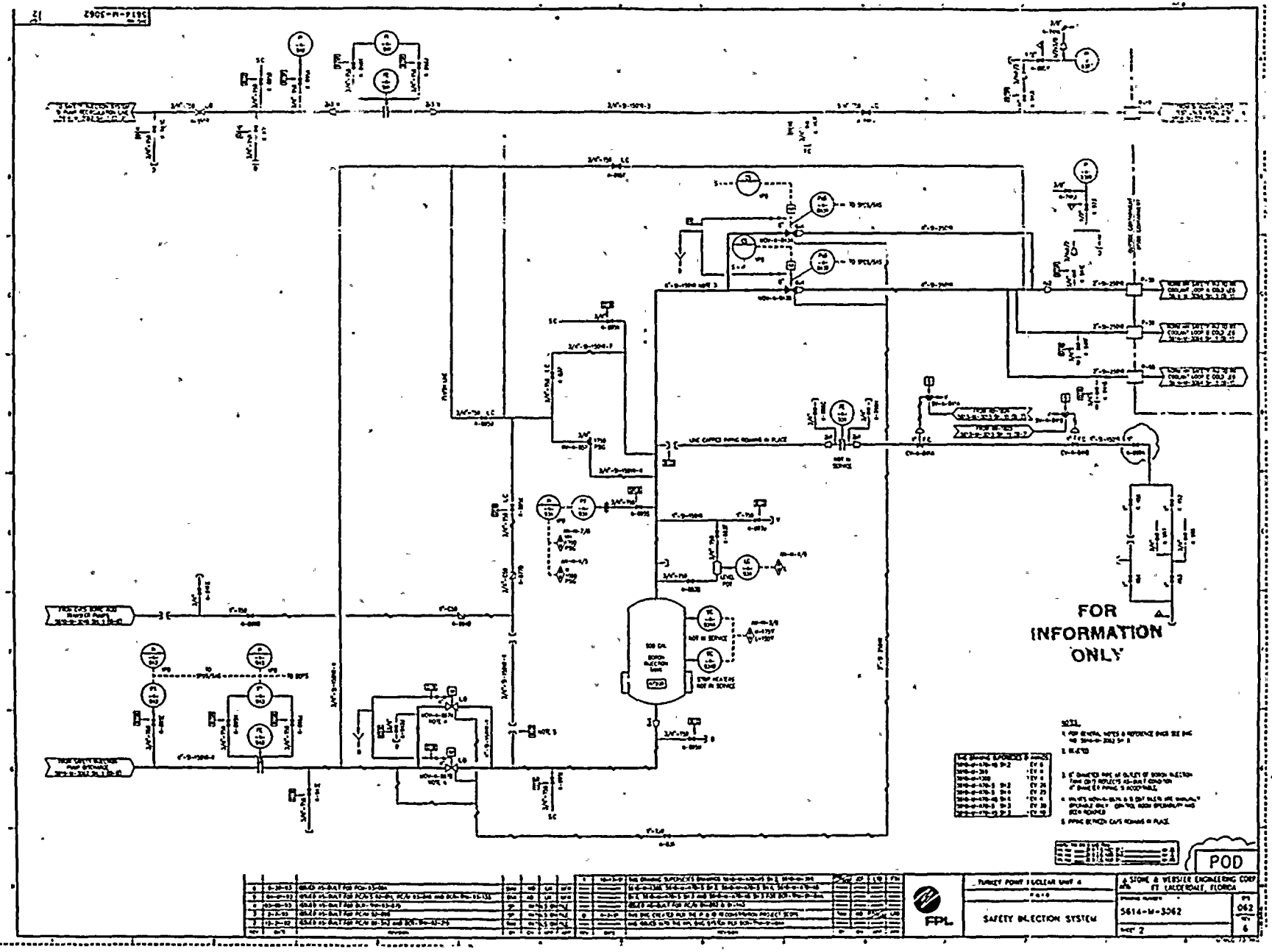
FOR INFORMATION ONLY
POD
FPL
TURKEY POINT NUCLEAR UNIT 4
SAFETY INJECTION SYSTEM
STONE & WEBSTER ENGINEERING CORP
FT. LAUDERDALE, FLORIDA
5614-M-3062
062

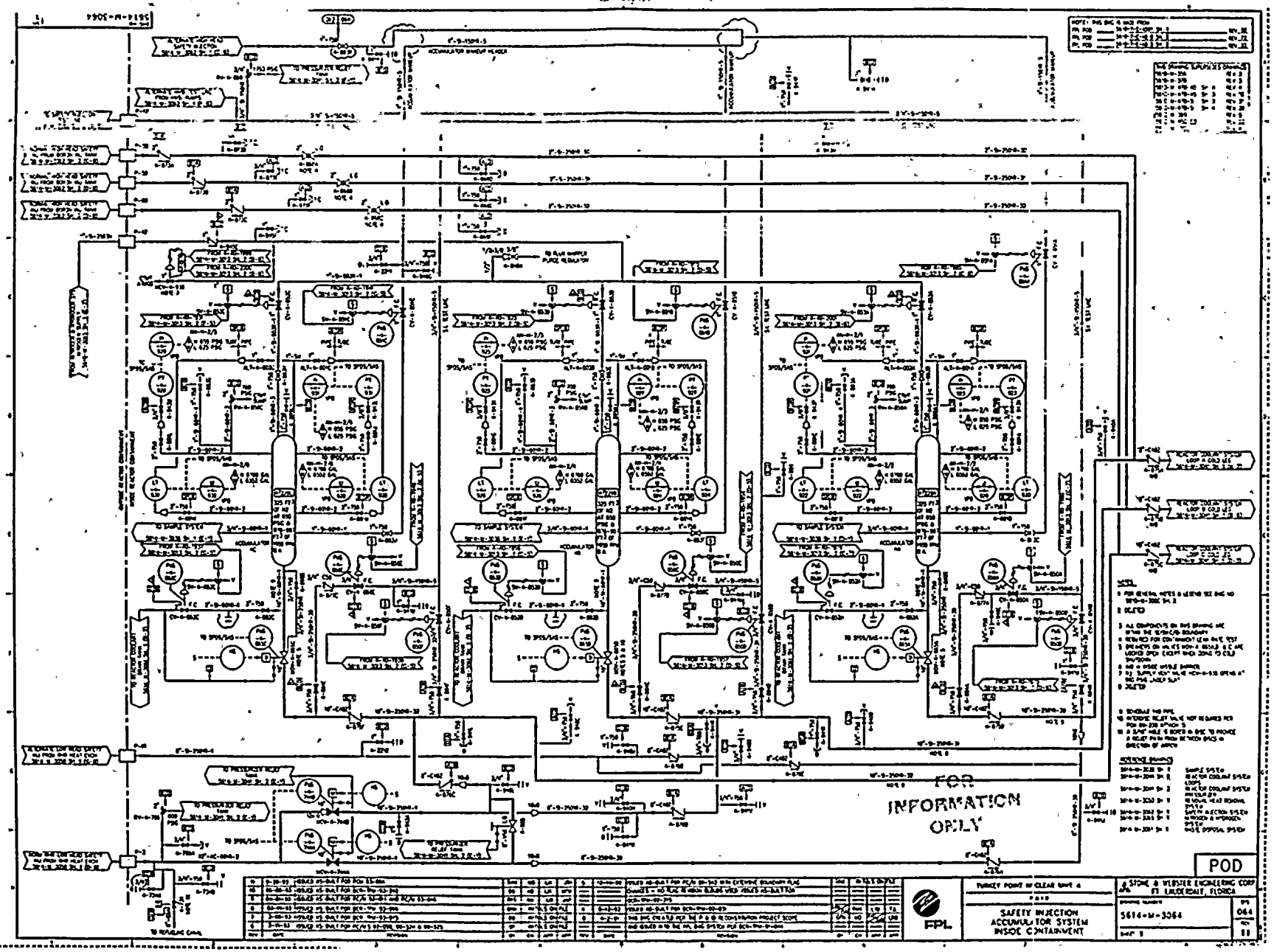
FOR INFORMATION ONLY
POD
FPL
TURKEY POINT NUCLEAR UNIT 4
SAFETY INJECTION ACCUMULATOR SYSTEM INSIDE CONTAINMENT
STONE & WEBSTER ENGINEERING CORP.
FT. LAUDERDALE, FLORIDA
5614-M-3064

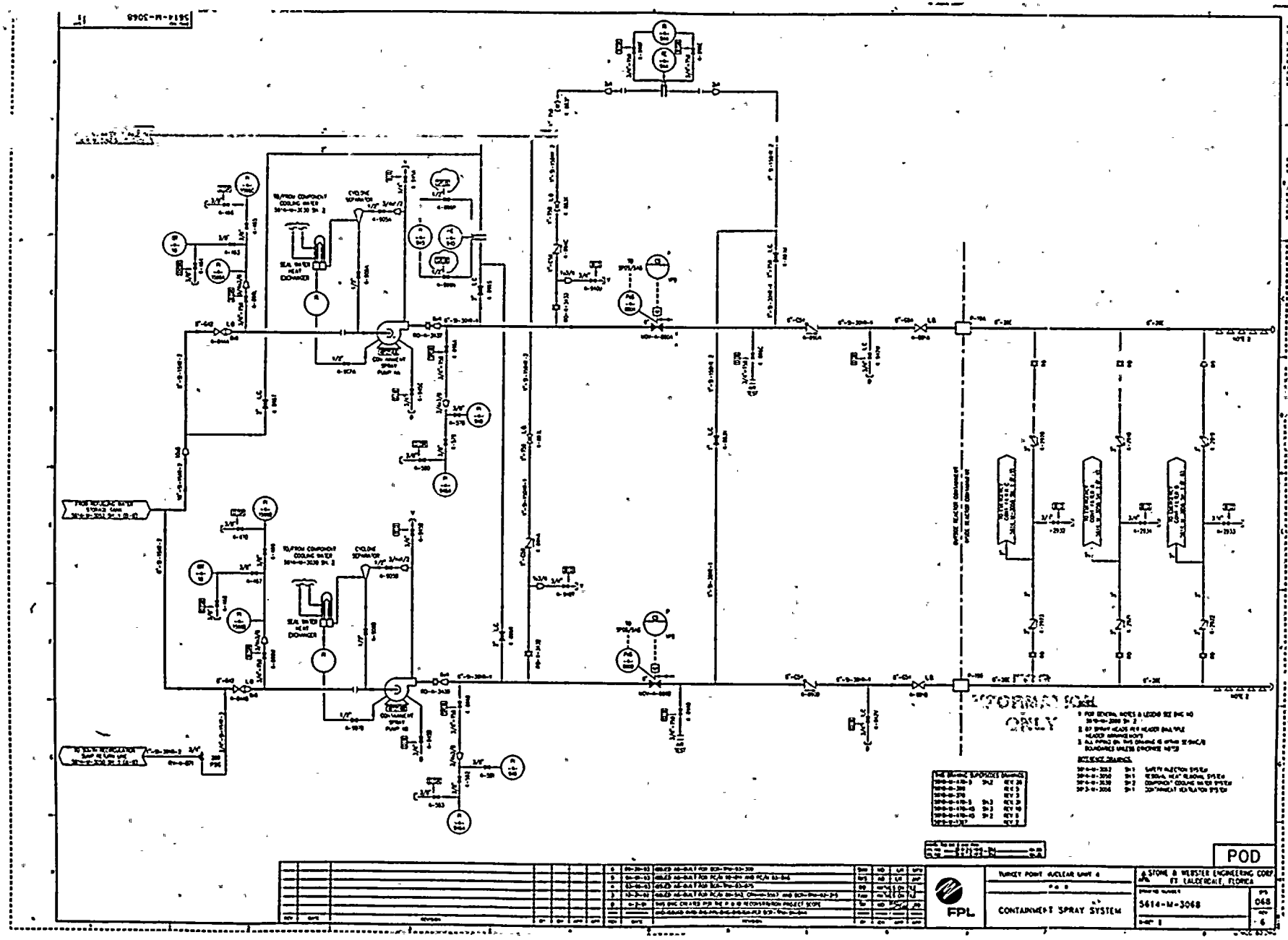
INFORMATION ONLY
POD
FPL
TURKEY POINT NUCLEAR UNIT 4
CONTAINMENT SPRAY SYSTEM
STONE & WEBSTER ENGINEERING CORP.
FT. LAUDERDALE, FLORIDA
5614-M-3068

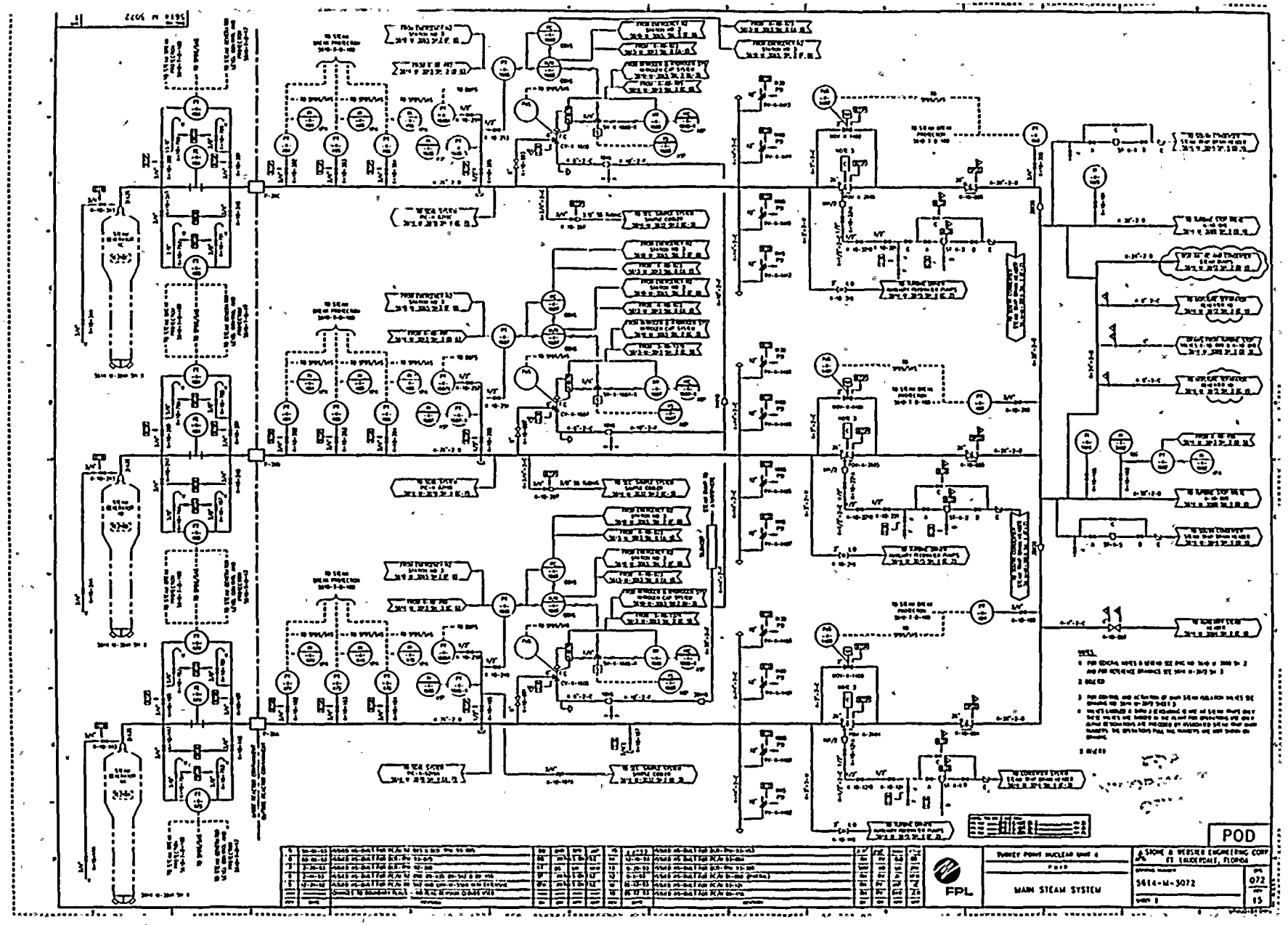
POD
FPL
MAIN STEAM SYSTEM
5614-M-5072

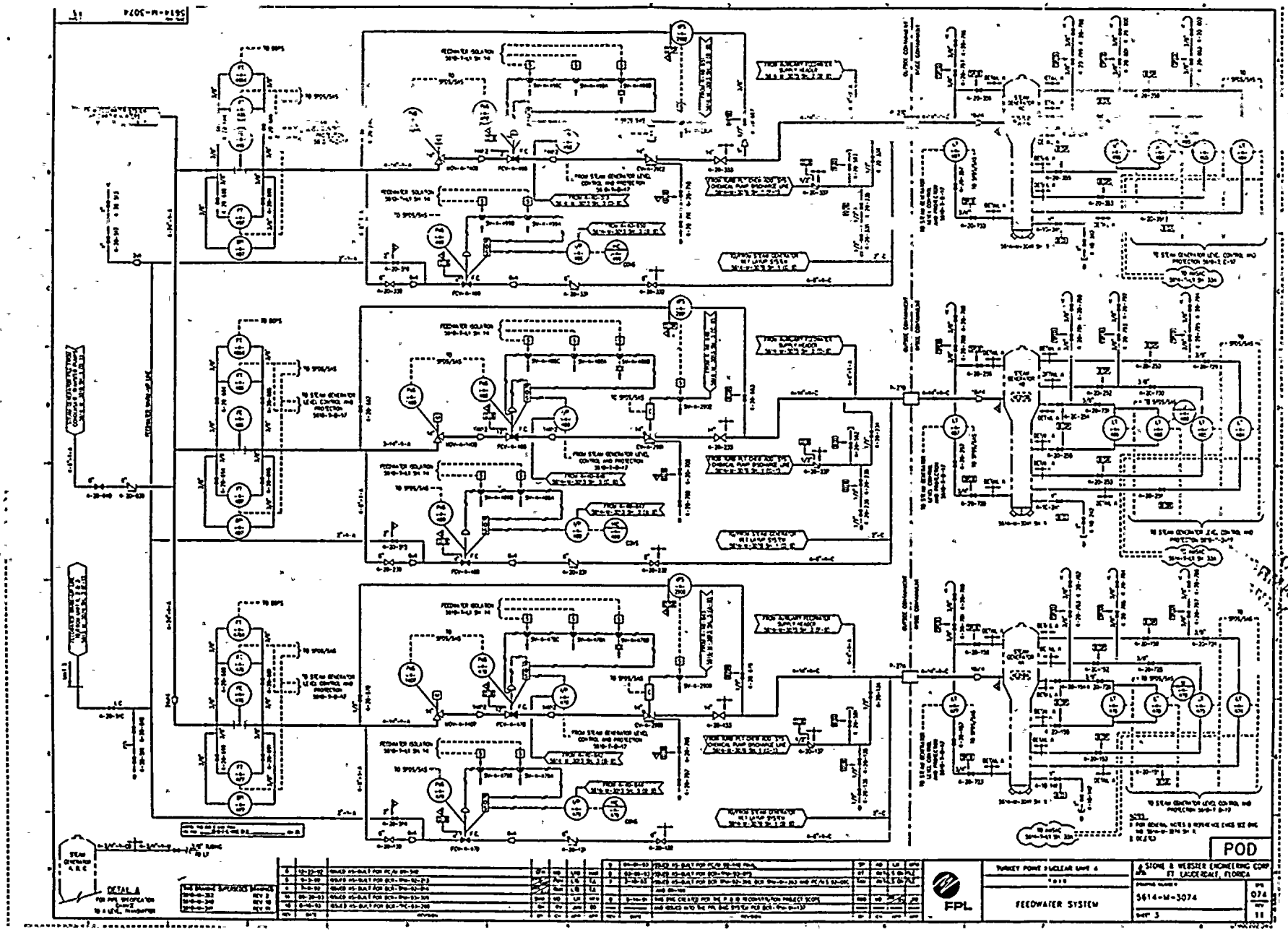
POD
FPL
TURKEY POINT NUCLEAR UNIT 4
FEEDWATER SYSTEM
STONE & WEBSTER ENGINEERING CORP
FT. LAUDERDALE, FLORIDA
5614-M-3074
DETAIL A

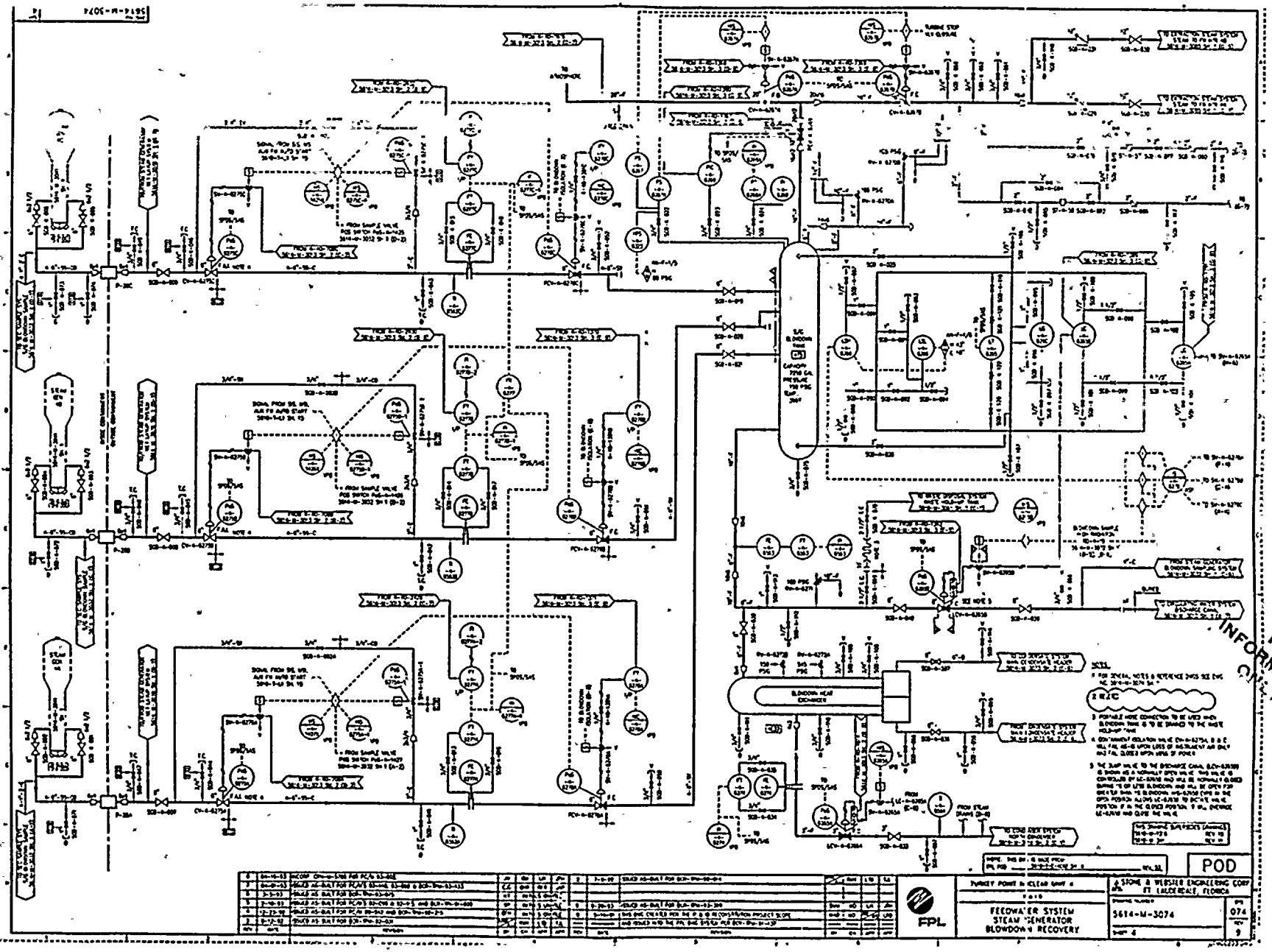
POD
FPL
TURKEY POINT NUCLEAR UNIT 4
FEEDWATER SYSTEM
STEAM GENERATOR
BLOWDOWN RECOVERY
5614-M-3074
074
9
STONE & WEBSTER ENGINEERING CORP.
FT. LAUDERDALE, FLORIDA
FOR INFORMATION ONLY

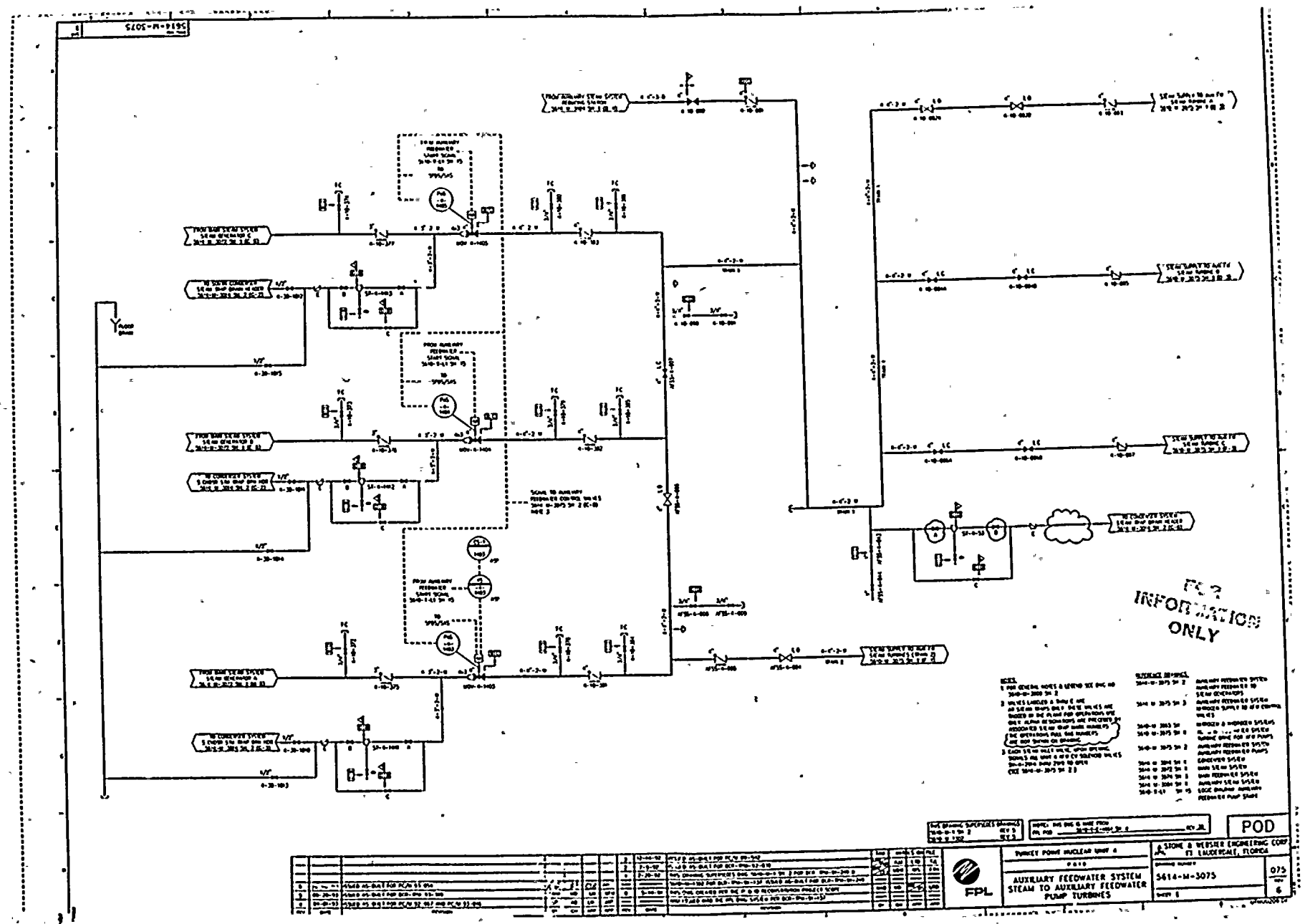
5614-M-3075
FOR INFORMATION ONLY
POD
PURKEY POINT NUCLEAR UNIT 4
AUXILIARY FEEDWATER SYSTEM
STEAM TO AUXILIARY FEEDWATER PUMP TURBINES
FPL
STONE & WEBSTER ENGINEERING CORP
FT. LAUDERDALE, FLORIDA
5614-M-3075

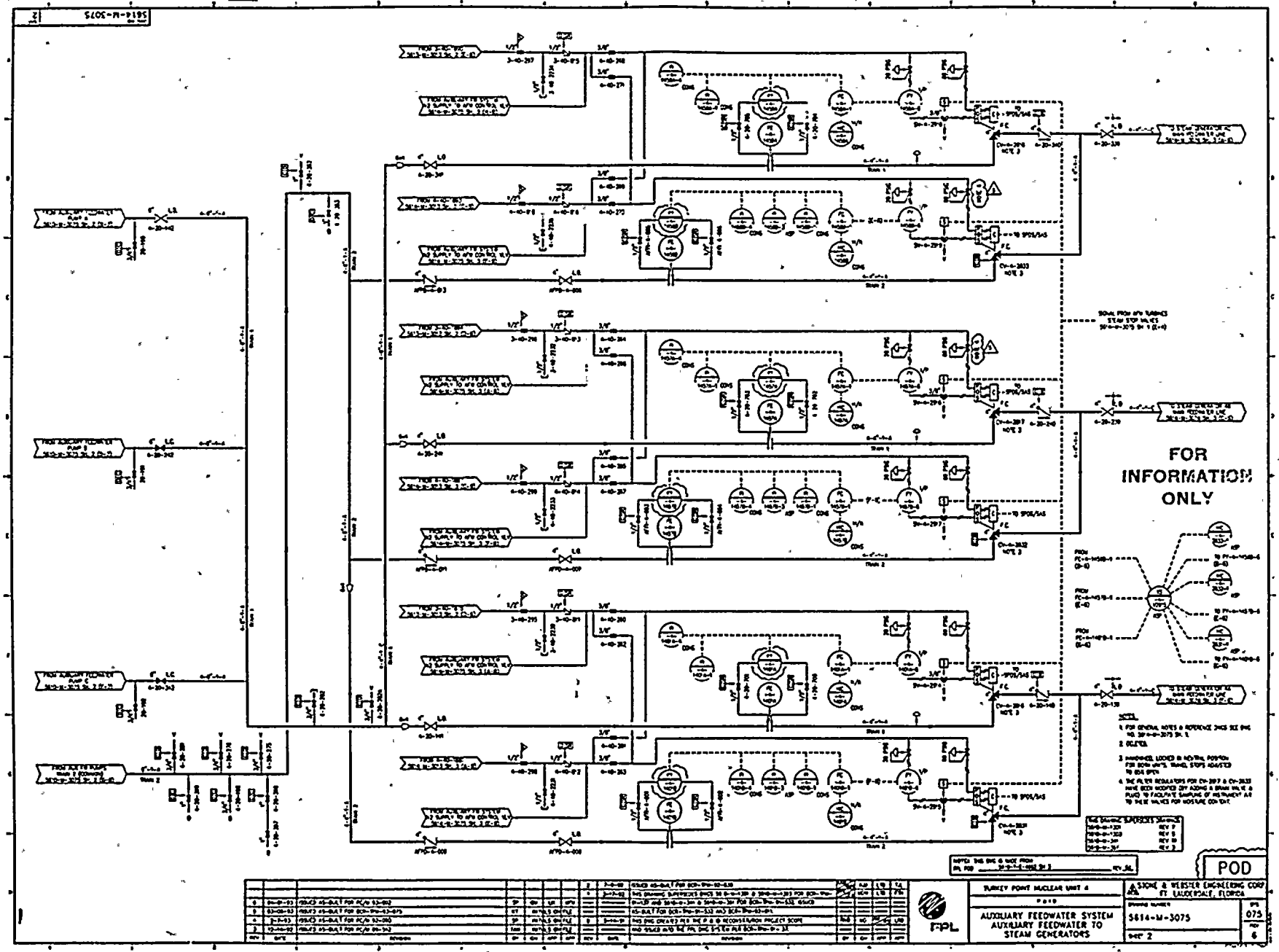
FOR INFORMATION ONLY
POD
TURKEY POINT NUCLEAR UNIT 4
AUXILIARY FEEDWATER SYSTEM
AUXILIARY FEEDWATER TO STEAM GENERATORS
STONE & WEBSTER ENGINEERING CORP.
FT. LAUDERDALE, FLORIDA
5614-M-3075
SHT 2
075
6
FPL

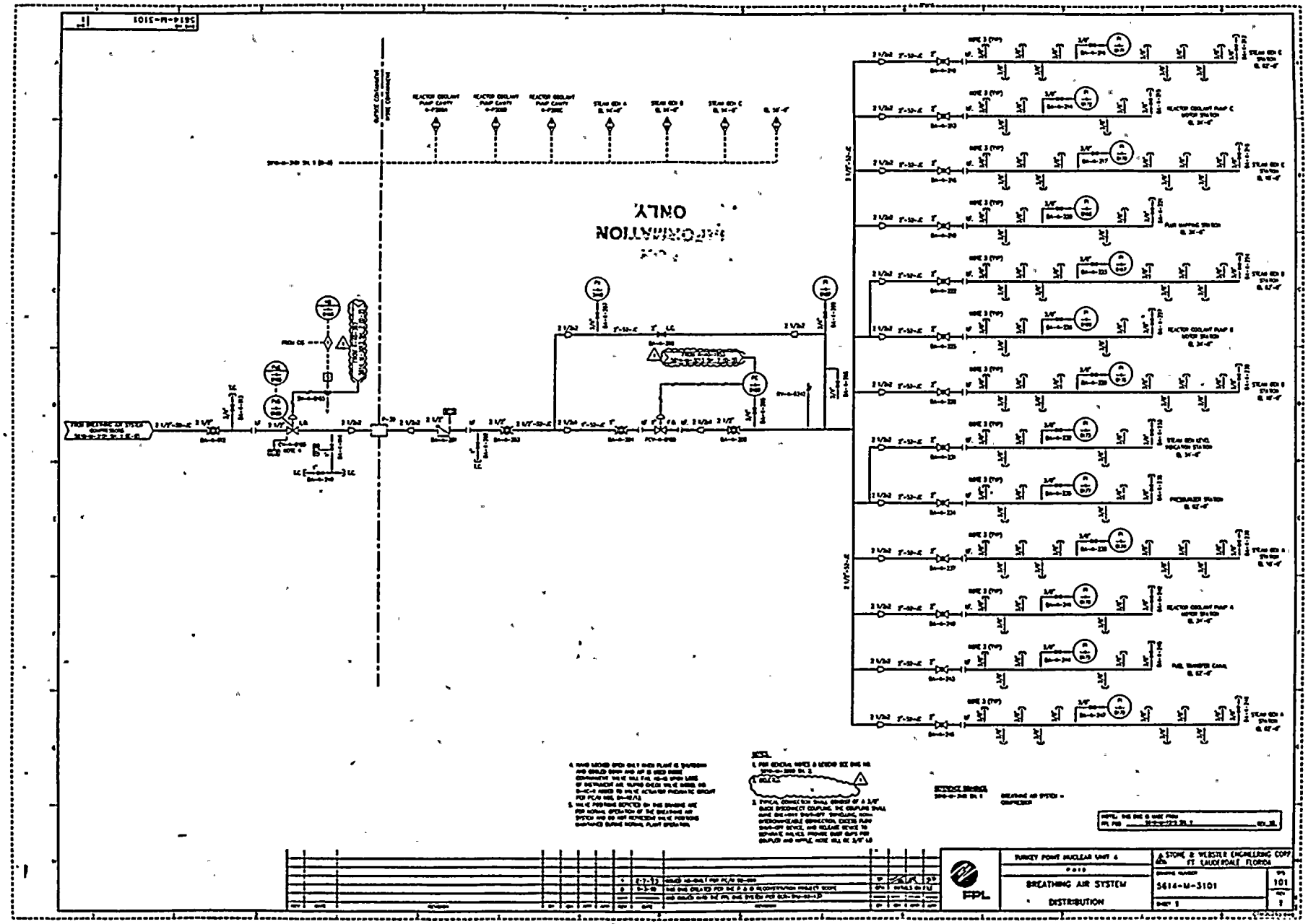
5614-M-3101
INFORMATION ONLY
FPL
TURKEY POINT NUCLEAR UNIT 4
BREATHING AIR SYSTEM
DISTRIBUTION
STONE & WEBSTER ENGINEERING CORP
FT. LAUDERDALE, FLORIDA
5614-M-3101
101

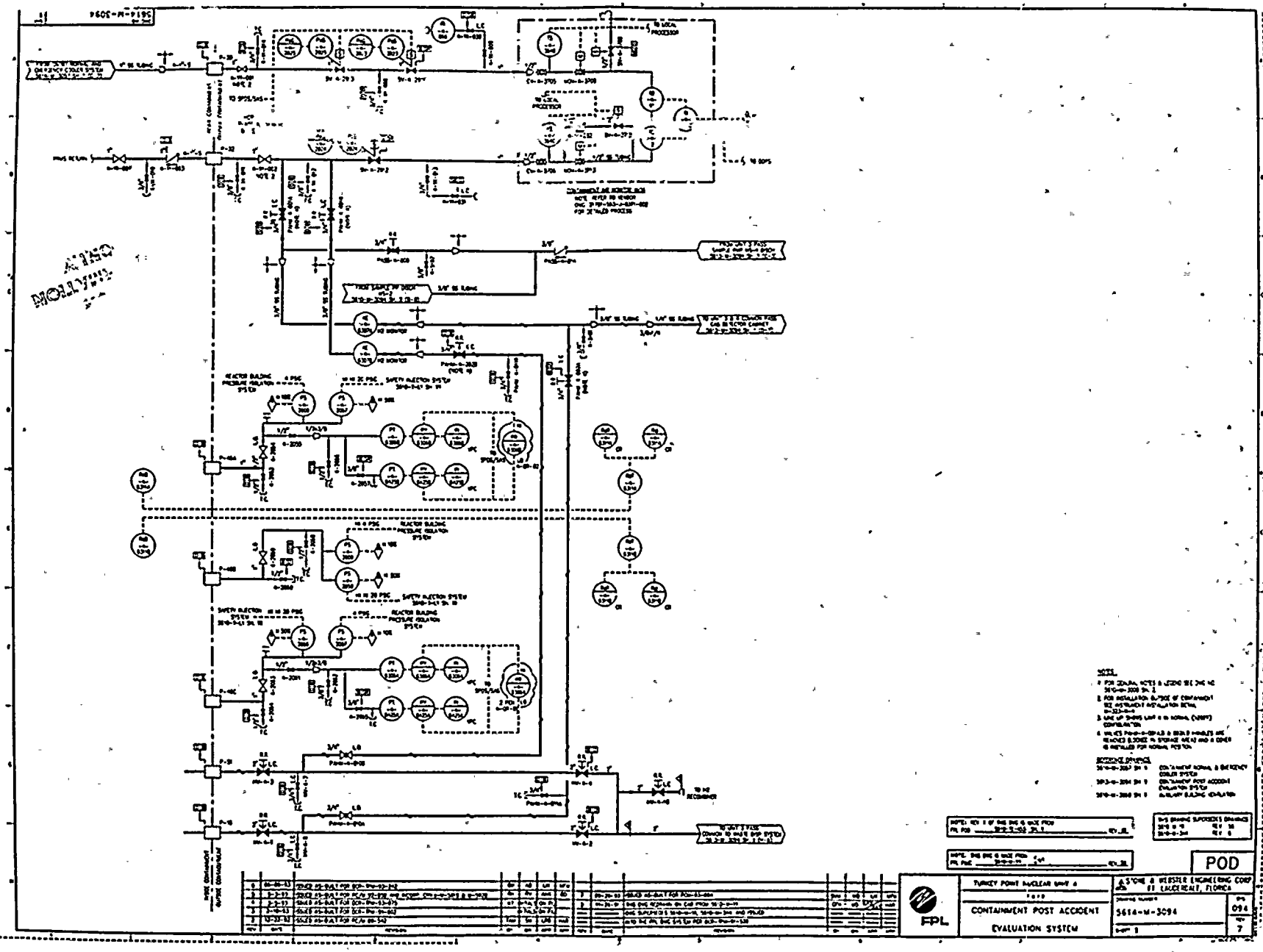
5614-M-3094
POD
FPL
TURKEY POINT NUCLEAR UNIT 4
CONTAINMENT POST ACCIDENT
EVALUATION SYSTEM
STONE & WEBSTER ENGINEERING CORP
FT. LAUDERDALE, FLORIDA
5614-M-3094
094
7