Juno Nuclear Engineering
Equipment Support and Inspections Group
700 Universe Blvd.
Juno Beach, Florida
33408

Third Ten-Year Inservice Inspection Program

for

Turkey Point Nuclear Power Plants
Units 3 and 4

Florida Power and Light Company
P.O. Box 3088
Florida City, Florida 33034

Commercial Service Date: September 7, 1973

USNRC Docket Numbers: 50-250: Unit 3
50-251: Unit 4

Document Number: JPN-ESI-PTN-3/4 Rev. 0

Prepared by: Russell L. Turner Date: 8/30/93
ISI Specialist

Reviewed by: J. N. Kelly Date: 8/30/93
Supervisor - CPS

Approved by: [illegible] Date: 9/1/93
Manager - ESI

Table of Contents

Record of Revision

Revision No.	Date	Affected Pages	Reason for Revision
0	August 27, 1993	Entire Document	Original Issue Third Ten Year Inspection Program

List of Figures

List of Tables

Abbreviations

Listed below are the abbreviations utilized in this document:

ANII	Authorized Nuclear Inservice Inspector
ASME	American Society of Mechanical Engineers
B&PV	Boiler and Pressure Vessel Code
CCW	Component Cooling Water
CRDM	Control Rod Drive Mechanism
CH	Charging System
CPS	Code Programs Section
CTMT	Containment
CV	Control Valve
CVCS	Chemical and Volume Control System
ECCS	Emergency Core Cooling System
ECT	Eddy Current Testing (Examination)
ESI	Equipment Support and Inspections
FPL	Florida Power and Light Company
FPS	Fuel Pool System
FSAR	Final Safety Analysis Report
FW	Feedwater System
HPSI	High Pressure Safety Injection
JPN	Juno Nuclear Engineering
LPSI	Low Pressure Safety Injection
MOV	Motor Operated Valve
MSIV	Main Steam Isolation Valve
MS	Main Steam System
MT	Magnetic Particle Testing (Examination)
N/A	Not Applicable
NDE	Nondestructive Examination
NPS	Nominal Pipe Size
P&ID	Piping and Instrumentation Diagram
POV	Pneumatic Operated Valve
PT	Liquid Penetrant Testing (Examination)
PTN	Turkey Point Nuclear Power Plant

QA	Quality Assurance
QC	Quality Control
PWR	Pressurized Water Reactor
PZR	Pressurizer
RCS	Reactor Coolant System
RCP	Reactor Coolant Pump
RGX	Regenerative Heat Exchanger
RPV	Reactor Pressure Vessel
SD	Structural Discontinuity
SG	Steam Generator
SGBD	Steam Generator Blowdown
SI	Safety Injection
t	Thickness of Component, Pipe, etc.
TE	Terminal End
USNRC	United States Nuclear Regulatory Commission
UT	Ultrasonic Testing (Examination)
VT	Visual Testing (Examination)

Glossary of Terms

ASSESS - to determine by evaluation of data compared with previously obtained data such as operating data or design specifications.

AUTHORIZED INSPECTION AGENCY - an organization that is empowered by the enforcement authority to provide inspection personnel and services as required by Section XI.

AUTHORIZED NUCLEAR INSERVICE INSPECTOR - a person who is employed and has been qualified by an Authorized Inspection Agency to verify that examinations, tests and repairs are performed in accordance with the rules and requirements of Section XI.

AUTHORIZED NUCLEAR INSPECTOR - an employee of an Authorized Inspection Agency who has been qualified in accordance with NCA-5000 of Section III.

CODE, the - as used in this document, the 1989 Edition of the American Society of Mechanical Engineers, Section XI, Rules for Inservice Inspection of Nuclear Power Plant Components

COMPONENT - an item in a nuclear power plant such as a vessel, pump, valve or piping system.

COMPONENT STANDARD SUPPORT - a support consisting of one or more generally mass - produced units usually referred to as catalog items.

COMPONENT SUPPORT - a metal support designed to transmit loads from a component to the load-carrying building or foundation structure. Component supports include piping supports and encompass those structural elements relied upon to either support the weight or provide structural stability to components.

CONSTRUCTION - an all-inclusive term comprising materials, design, fabrication, examination, testing, inspection and certification required in the manufacture and installation of items.

CONSTRUCTION CODE - the body of technical requirements that governed the construction of the item.

DEFECT - a flaw (imperfection or unintentional discontinuity) of such size, shape, orientation, location or properties as to be rejectable.

DISCONTINUITY - a lack of continuity or cohesion; an interruption in the normal physical structure of material or a product.

ENFORCEMENT AUTHORITY - a regional or local governing body, such as a State or Municipality of the United States or a Province of Canada, empowered to enact and enforce Boiler and Pressure Vessel Code legislation.

ENGINEERING EVALUATION - an evaluation of indications that exceed allowable acceptance standards to determine if the margins required by the Design Specification and the Construction Code are maintained.

EVALUATION - the process of determining the significance of examination or of test results, including the comparison of examination or test results with applicable acceptance criteria or previous results.

EXAMINATION CATEGORY - a grouping of items to be examined or tested.

FLAW - an imperfection or unintentional discontinuity that is detectable by nondestructive examination.

GENERAL CORROSION - an approximately uniform wastage of a surface of a component through chemical or electro-chemical action, free of deep pits and cracks.

GROSS STRUCTURAL DISCONTINUITY - Examples include junctions between shells of different thickness, cylinder shell-to-conical shell junctions.

IMPERFECTION - a condition of being imperfect; a departure of a quality characteristic from its intended condition.

INDICATION - the response or evidence from the application of a nondestructive examination.

INSERVICE EXAMINATION - the process of visual, surface, or volumetric examination performed in accordance with the rules and requirements of Section XI.

INSERVICE INSPECTION - methods and actions for assuring the structural and pressure-retaining integrity of safety-related nuclear power plant components in accordance with the rules of Section XI.

INSERVICE TEST - a test to determine the operational readiness of a component or system.

INSPECTION PROGRAM - the plan and schedule for performing examinations or tests.

INSPECTION - verification of the performance of examinations and tests by an Inspector.

INSPECTOR - an Authorized Nuclear Inservice Inspector, except for those instances where so designated as Authorized Nuclear Inspector.

INSPECTION INTERVAL - a duration of time, 10-years.

INSPECTION PERIOD - a duration of time within an inspection interval, determined by inspection program B.

ITEM - a material, part, appurtenance, piping sub-assembly, component or component support.

MAINTENANCE - replacement of parts, adjustments, and similar actions that do not change the design of an item, taken to correct deficiencies in the function of the item.

NONDESTRUCTIVE EXAMINATION - an examination by the visual, surface or volumetric method.

NOMINAL PIPE SIZE - a designation assigned for the purpose of convenient specification of pipe size.

OWNER - the organization legally responsible for the operation, maintenance, safety and power generation of the nuclear power plant.

REGULATORY AUTHORITY - a federal government agency, such as the United States Nuclear Regulatory Commission, that is empowered to issue and enforce regulations affecting the design, construction, and operation of nuclear power plants.

RELEVANT CONDITION - a condition observed during a visual examination that requires supplemental examinations, corrective measures, repair, replacement or analytical evaluation. Relevant conditions do not include fabrication marks, material roughness, and other conditions acceptable by material, design and manufacturing specifications of the component.

REPAIR ORGANIZATION - the organization that replaces or repairs components or systems under the provisions of the Owners's Quality Assurance Program. The Owner may be the repair organization.

ROUTINE SERVICING - the performance of planned, preventive maintenance that does not require disassembly or replacement of parts.

STRUCTURAL DISCONTINUITY - As used in this program: includes pipe weld joints to vessel nozzles, valve bodies, pump casings, pipe fittings (such as tees, elbows, reducers, flanges, etc. conforming to ANSI B16.9) and pipe branch connections and fittings.

TERMINAL ENDS - the extremities of piping runs that connect to structures, components, or pipe anchors, each of which acts as a rigid restraint or provides at least 2 degrees of restraint to piping thermal expansion.

TEST - a procedure to obtain information through measurement or observation to determine the operational readiness of a component or system while under controlled conditions.

VERIFY - to determine that a particular action has been performed in accordance with the rules and requirements of Section XI either by witnessing the action or by reviewing records.

Abstract

This document describes the bases for the Third Ten-Year Inservice Inspection Program for Turkey Point Nuclear Power Plant, Units 3 and 4.

This program was developed and prepared to meet the requirements of the American Society of Mechanical Engineers, Boiler and Pressure Vessel Code, Section XI, 1989 edition, and is subject to the limitations and modifications of 10 CFR 50.55a (b)(2), except the design and access provisions and preservice examination requirements. It identifies those components and/or systems and their supports which are subject to examination and testing.

Additional requirements for augmented examinations are addressed.

This program contains requests for relief from certain code requirements. The basis for the relief and proposed alternative examinations are included.

Tables have been developed showing the bases for selection of components.

1.0 Introduction

1.1 This document details the Long-Term Inservice Inspection Program for the Third Ten-Year Inspection Interval for Turkey Point Nuclear Plants (PTN), Units 3 and 4.

1.1.1 The Inservice Inspection Program for Class 1, Class 2, and Class 3 (or Quality Groups A, B, and C respectively) systems and components (and their supports) was developed after giving due consideration to the following documents to the extent practical within the limitations of design, geometry, and materials of construction.

- 10 CFR 50.55a Code of Federal Regulations
- Sections V and XI of the American Society of Mechanical Engineers (ASME) Code, 1989 Edition
- United States Nuclear Regulatory Commission (USNRC) Regulatory Guides

  1.14 - Reactor Coolant Pump Flywheel Integrity Revision 1, August 1975

  1.26 - Quality Group Classifications and standards for Water-, Steam-, and Radioactive-Waste-Containing Components of Nuclear Power Plants, Rev. 2, June 1975

  1.65 - Materials and Inspections for Reactor Vessel Closure Studs

  1.68 - Initial Test Program for Water Cooled Nuclear Power Plants, Rev. 2, Aug. 1978

  1.83 - Inservice Examination of Pressurized Water Reactor Steam Generator Tubes, Revision 1, july 1975

  1.147 - Inservice Inspection Code Case Acceptability ASME Section XI Latest Revision

  1.150 - Ultrasonic Testing of Reactor Vessel Welds during Preservice and Inservice Examinations, Rev. 1, February 1983

- Turkey Point 3 Final Safety Analysis Report
- Turkey Point 4 Final Safety Analysis Report
- Turkey Point Technical Specifications, sections 4.0.5, 3/4.4.5, 3/4.4.11, 3/4.7.9
- USNRC Standard Review Plan 6.6, Section I.8, (for Class 2 Augmented Inspections)

- Branch Technical Position APCSB 3.1, paragraph B.2.c(4)

- First and Second Ten year Interval Inspection Plans

1.1.2 Programs outside the scope of this document:

The program for Inservice testing of Class 1, 2, and 3 Pumps and Valves is covered by the Turkey Point IST program which is submitted and approved separately.

The Steam Generator ECT Program is controlled by Plant Technical Specifications.

1.1.3 The first two periods of the first Inservice Inspection Interval were conducted in accordance with the 1970 Edition with Addenda through Winter 1970 Addenda of the ASME Boiler and Pressure Vessel (B&PV) Code, Section XI. The last period was conducted in accordance with the 1974 Edition with Addenda through Summer 1975 of ASME B&PV Code, Section XI.

The first Interval for Turkey Point Unit 3 began on December 13, 1972 and ended on February 22, 1984. The first Interval for Turkey Point Unit 4 began on September 7, 1973 and ended on April 14, 1984. An extension of the First Intervals was granted by the USNRC on March 1, 1984.

1.1.4 The Second Ten Year Inservice Inspection Interval for both Units was conducted in accordance with the 1980 Edition thru Winter 1981 Addenda of Section XI. Turkey Point Unit 3 second interval ran from February 22, 1984 to February 21, 1994. Turkey Point Unit 4 second interval ran from April 15, 1984 to April 14, 1994.

1.1.5 The Construction permit for Turkey Point was issued on April 27, 1967, Florida Power and Light Company (FPL) is the Owner of Record.

1.1.6 The operating licenses for Turkey Point Unit 3 and 4 were issued on July 19, 1972 and April 10, 1973, respectively.

1.1.7 The dates of the Third Interval and Periods are as follows:

	Unit 3		Unit 4	
Interval	2/22/1994	2/21/2004	4/15/1994	4/14/2004
1st Period	2/22/1994	2/21/1997	4/15/1994	4/14/1997
2nd Period	2/22/1997	2/21/2001	4/15/1997	4/14/2001
3rd Period	2/22/2001	2/21/2004	4/15/2001	4/14/2004

1.2 Applicable Editions and Addenda to Section XI

Pursuant to Title 10 of the Code of Federal Regulations, paragraph 50.55a(b)(2), the Inservice Inspection Requirements applicable to nondestructive examination and system pressure testing at Turkey Point Units 3 and 4 are based on the 1989 Edition of ASME Section XI. This Edition of ASME Section XI was endorsed by the USNRC twelve months prior to the start of the Third Ten Year Interval (February 22, 1993 for Unit 3 and April 15, 1993 for Unit 4).

1.3 System Classification

1.3.1 The system classification used as a basis for the Inservice Inspection Program are based on the requirements of 10 CFR 50 and Regulatory Guide 1.26.

Class 1 system boundaries are developed based on 10 CFR 50.2(v), and the Turkey Point Plant Units 3 and 4 FSAR's.

Class 2 and 3 system boundaries are developed based on Regulatory Guide 1.26 and the Turkey Point Plant Units 3 and 4 FSAR's.

1.3.2 Optional construction of a component within a system boundary to a classification higher than the minimum class established in the component Design Specification shall not affect the overall system classification by which the applicable rules of Section XI are determined.

1.3.3 The portions of piping that penetrates the containment vessel which is required to be constructed to Class 1 or 2 rules for piping and which may differ from the classification of the balance of the piping system, shall not affect the overall system classification that determines the applicable rules of Section XI.

1.3.4 Piping and Instrumentation Diagrams are provided to show the specific boundaries for the Class 1, 2, and 3 systems (see Section 5.0).

1.4 Inspection Program

Examinations are scheduled in accordance with Inservice Inspection Program B for all Class 1, 2, and 3 systems and components, as described in sub-article IWA-2400 of the Code. Examinations are scheduled based upon the Second Ten Year Interval Program, to the extent practical. Appendix G lists those areas where schedules were changed and reasons for the changes.

1.5 Regulatory Guides

The Regulatory Guides which have been determined to be applicable to Turkey Point for purposes of this Program are listed below:

USNRC Regulatory Guides			
R.G. Number	Description of Regulatory Guide	Applicable to Program Plan	Applicable to Implementation
1.14	Reactor Coolant Pump Flywheel Integrity, Rev. 1	Yes	Yes
1.26	Quality Group Classifications, Rev. 2	Yes	No
1.65	Materials and Inspections for Reactor Vessel Closure Studs	Yes	Yes
1.147	Section XI Code Case Acceptability, latest revision	Yes	Yes
1.150	UT of RPV Welds During PSI and ISI, Rev. 1	No	Yes

1.6 ASME Section XI Code Cases

Section XI Code Cases applicable to ISI are shown below. Each of the code cases have been approved by the USNRC, and are listed in Regulatory Guide 1.147.

Applicable Code Cases			
Number	Description	Applicable to Plans	Applicable to Implementation
N-307-1	Revised UT Exams for B-G-1	No	Yes
N-355	Calibration Block for Angle Beam UT of Large Fittings	No	Yes
N-416	Alternative Rules for Hydrostatic Testing of Repair or Replacement of Class 2 Piping, Section XI, Division 1	No	No
N-460	Alternate Examination Coverage for Class 1 and Class 2 Welds, Section XI, Division 1	No	Yes
N-461	Alternate Rules for Piping Calibration Block Thickness, Section XI, Division 1	Yes	Yes
N-481	Alternate Examination Coverage for Cast Austenitic Pump Casings, Section XI, Division 1	Yes	Yes
N-489	Alternative Rules for Level III NDE Qualification Examinations	No	Yes
N-498	Alternate Rules for 10 Year Hydrostatic Pressure Testing for Class 1 & 2 Systems, Section XI Division 1	Yes	Yes

Note: Code Case N-481 requirements will be modified by Florida Power and Light from Hydrostatic to System Pressure Test to conform with Code Case N-498.

The Guidelines of Code Case N-509 will be used for scheduling Integral Attachments (see Relief Request No. 8).

2.0 Development of the Inspection Plans

The following is the detailed description of the Inspection Program Basis for components and/or systems subject to examination.

Each Code Class has the requirement to repeat the schedule of examinations established during the First Interval. The First Interval examinations performed at Turkey Point were largely examined under Codes that did not require Class 2 or Class 3 components to be examined. In order to reduce radiation exposure and use the Second Interval as the guideline for performing examinations, Relief Request No. 9 has been written to address this issue.

2.1 Class 1

The Class 1 system boundaries are developed based upon the requirements of 10 CFR 50.2(v) and the Turkey Point Units 3 and 4 FSAR's. The components/systems to be examined in the Class 1 systems are described in detail below:

2.1.1 ASME Code Exemptions Employed

IWB-1220 - The following components (or parts of components) are exempted from the volumetric and surface examination requirements of IWB-2500:

(a) Components that are connected to the reactor coolant system and part of the reactor coolant pressure boundary and that are of such a size and shape so that upon postulated rupture the resulting flow of coolant from the reactor coolant system under normal plant operating conditions is within the capacity of makeup systems which are operable from on-site emergency power.

(b) 1. Piping of 1" nominal pipe size and smaller, except for steam generator tubing; and

2. Components and their connections in piping of 1" nominal pipe size and smaller.

(c) Reactor Vessel head connections and associated piping, 2" nominal pipe size and smaller, made inaccessible by control rod drive penetrations.

2.1.2 Component/Piping Examination Basis

2.1.2.1 Category B-A, Pressure Retaining Welds in the Reactor Pressure Vessel

B1.11 - Circumferential Shell Welds
B1.12 - Longitudinal Shell Welds

Scope of Examination - 100% of all longitudinal and circumferential shell welds (does not include shell to flange weld).

	PTN-3	PTN-4
- longitudinal shell welds	0	0
- circumferential shell welds	2	2

B1.21 - Circumferential Bottom Head Welds
B1.22 - Meridional Bottom Head Welds

Scope of Examination - 100% of accessible length of circumferential and meridional head welds.

	PTN-3	PTN-4
- meridional head welds	0	0
- circumferential head weld	2	2

B1.21 - Circumferential Top Head Welds
B1.22 - Meridional Top Head Welds

Scope of Examination - 100% of accessible length of circumferential and meridional head welds.

	PTN-3	PTN-4
- meridional head welds	0	0
- circumferential head welds	0	0

B1.30 - Shell-to-Flange Weld

Scope of Examination - 100% of the shell to flange weld.

	PTN-3	PTN-4
- Circumferential shell to flange weld	1	1

Note: If partial examinations are conducted from the flange face, the remaining volumetric examinations required to be conducted from the vessel wall may be performed at or near the end of each inspection interval. The examination may be performed during the first and third inspection periods in conjunction with the

nozzle examinations of Category B-D (Program B). At least 50% of the weld shall be examined by the end of the first inspection period, and the remainder by the end of the third inspection period.

B1.40 - Head to Flange Weld

Scope of Examination - 100% of the head to flange weld.

	PTN-3	PTN-4
- circumferential head to flange weld	1	1

B1.51 - Repair Welds (Beltline Region)

- Not applicable to Turkey Point Units 3 or 4

28% of the Category B-A welds will be examined by the end of the first period, with the remaining welds examined during the third period for both units.

See Paragraph 2.1.2.17(b) for additional requirements.

2.1.2.2 Category B-B, Pressure Retaining welds in vessels other than Reactor Vessels

Pressurizer:
B2.11 - Circumferential Shell to Head Welds
B2.12 - Longitudinal Shell to Head Welds

Scope of Examination - 100% of both shell to head welds and 1 ft. on one intersecting longitudinal weld at each circumferential weld.

	PTN-3	PTN-4
- circumferential welds	2	2
- longitudinal welds	2	2

Pressurizer:
B2.21 - Circumferential Head Welds
B2.22 - Meridional Head Welds

Scope of Examination - 100% of 1 circumferential and 1 meridional weld per head.

- Not applicable to Turkey Point Units 3 or 4

Steam Generators:
B2.31 - Circumferential Head Welds
B2.32 - Meridional Head Welds

Scope of Examination - 100% of one circumferential and one meridional weld per head (the exams may be limited to one vessel among the group of vessels performing a similar function).

- Not applicable to Turkey Point Units 3 or 4

Steam Generators:
B2.40 - Tubesheet to Head Welds

Scope of Examination - 100% of one weld on one Steam Generator

	PTN-3	PTN-4
- 3 Tubesheet to head welds per unit	SG-B	SG-A

Heat Exchangers:
B2.51 - Circumferential Head Welds
B2.52 - Meridional Head Welds
B2.60 - Tubesheet to Head Welds
B2.70 - Longitudinal Welds
B2.80 - Tubesheet to Shell Welds

	PTN-3	PTN-4
- B2.51	6	6
- B2.52	0	0
- B2.60	0	0
- B2.70	0	0
- B2.80	6	6

No welds scheduled, see Relief Request No. 3

Due to scheduling, the relief request on the Regenerative Heat Exchanger, and in order to minimize radiation exposure, 60% of the required B-B examinations on Turkey Point Unit 3 will be completed during the first period.

2.1.2.3 Category B-D, Full Penetration Welds of Nozzle in Vessels (Program B)

Reactor Vessel:
B3.90 - Nozzle to Vessel Welds
B3.100 - Nozzle Inside Radius Section

Scope of Examination - 100% of all nozzles

	PTN-3	PTN-4
- RPV Nozzle Welds	6	6
- RPV Nozzle Inner Radius	6	6

All examinations have been deferred to near the end of the Interval. See Relief Request No. 8.

Pressurizer:
B3.110 - Nozzle to Vessel Welds
B3.120 - Nozzle Inside Radius Sections

Scope of Examination - 100% of all nozzles

	PTN-3	PTN-4
- Nozzle to Vessel Welds	0	0
- Nozzle Inner Radius	6	6

Steam Generators:
B3.130 - Nozzle to Vessel Welds
B3.140 - Nozzle Inside Radius Sections

Scope of Examination - 100% of all nozzles

	PTN-3	PTN-4
- Nozzle to Vessel Welds	0	0
- Nozzle Inner Radius (2 per vessel)	6	6

Heat Exchangers:

B3.150 - Nozzle to Vessel Welds
B3.160 - Nozzle Inside Radius Section

Scope of Examination - 100% of all nozzles

	PTN-3	PTN-4
- B3.150	12	12
- B3.160	12	12

No examinations scheduled. See Relief Request No. 3.

Due to scheduling, the relief request on the Regenerative Heat Exchanger, and in order to minimize radiation exposure, 8% of the required B-D examinations on Turkey Point Unit 4 will be completed during the First Period. 41% of the required examinations for Unit 3 and 4 will be complete by the end of the Second Period.

2.1.2.4 Category B-E, Pressure Retaining Partial Penetration Welds in Vessels

Partial Penetration Welds
B4.11 - Vessel Nozzles
B4.12 - Control Rod Drive Nozzles
B4.13 - Instrumentation Nozzles

Scope of Examination - VT-2 on 25% of the nozzles each interval.

Pressurizer:
Item B4.20 - Heater Penetration Welds

Scope of Examination - VT-2 on all heater penetration welds each interval.

2.1.2.5 Category B-F, Pressure Retaining Dissimilar Metal Welds

Reactor Vessel:
B5.10 - NPS 4 or Larger Nozzle to Safe End Butt Welds
B5.20 - Less Than NPS 4 Nozzle to Safe End Butt Welds
B5.30 - Nozzle to Safe End Socket Welds

Scope of Examination - 100% of all dissimilar welds each interval

	PTN-3	PTN-4
- B5.10 - ≥ 4" Safe-End Butt Welds	6	6
- B5.20 - < 4" Safe-End Butt Welds	0	0
- B5.30 - Socket Welds	0	0

Pressurizer:
B5.40 - NPS 4 or Larger Nozzle-to-safe End Butt Welds
B5.50 - Less Than NPS 4 Nozzle-to Safe End Butt Welds
B5.60 - Nozzle-to-Safe End Socket Welds

Scope of Examination - 100% of all dissimilar welds each interval.

	PTN-3	PTN-4
- B5.40 - ≥ 4" Safe End Butt Welds	6	6
- B5.50 - < 4" Safe-End Butt Welds	0	0
- B5.60 - Socket Welds	0	0

Steam Generator:
B5.70 - NPS 4 or Larger Nozzle to Safe End Butt Welds
B5.80 - Less Than NPS 4 Nozzle to Safe End Butt Welds
B5.90 - Nozzle to Safe End Socket Welds

Scope of Examination - 100% of all dissimilar welds each interval

	PTN-3	PTN-4
- B5.70 - ≥ 4" Safe-End Butt Welds	6	6
- B5.80 - < 4" Safe-End Butt Welds	0	0
- B5.90 - Socket Welds	0	0

Heat Exchangers:
B5.100 - NPS 4 or Larger Nozzle to Safe End Butt Welds
B5.110 - Less Than NPS 4 Nozzle to Safe End Butt Welds
B5.120 - Nozzle to Safe End Socket Welds

- Not Applicable to Turkey Point Units 3 or 4

Piping:
B5.130 - NPS 4 or Larger Dissimilar Metal Butt Welds
B5.140 - Less Than 4 NPS Dissimilar Metal Butt Welds
B5.150 - Dissimilar Metal Socket Weld

- Not Applicable to Turkey Point Units 3 or 4

See Table A-1 for Listing of B-F Welds.

Due to scheduling and to reduce radiation exposure, 55% of the required B-F examinations in PTN-3 will be completed during the First Period and 77% by the end of the Second Period.

2.1.2.6 Category B-G-1, Pressure Retaining Bolting, Greater Than 2 in. In Diameter

Reactor Vessel: Items B6.10, B6.30, B6.40, B6.50

Scope of Examination - 100% of required exams each interval.

	PTN-3	PTN-4
- B6.10 Closure Nuts	58	58
- B6.30 Closure Studs	58	58
- B6.40 Threads in Flange	58	58
- B6.50 Closure Washers	116	116

Pressurizer:	Items B6.60, B6.70, B6.80
Steam Generators:	Items B6.90, B6.100, B6.110
Heat Exchangers:	Items B6.120,B6.130, B6.140
Piping:	Items B6.150,B6.160, B6.170
Valves:	Items B6.210,B6.220, B6.230

- Not Applicable to Turkey Point Units 3 or 4

Pumps: Items B6.180, B6.190, B6.200

Scope of Examination - 100% of the above items in one Reactor Coolant Pump in the interval. See Tables B-1 and B-3 for summary listing by Unit.

	PTN-3	PTN-4
- (72) B6.180 Studs per Unit	24	24
- (3) B6.190 Flange Surfaces per Unit	1	1
- (72) B6.200 Nuts, Washers per Unit	24	24

There are no bushings in the Reactor Coolant Pumps.

Due to scheduling and to reduce radiation exposure, 68% of the required B-G-1 examinations in PTN-3 will be completed by the end of the Second Period. 41% of PTN-4 will be completed by the end of the First period and 70% by the end of the Second Period.

2.1.2.7 Category B-G-2, Pressure Retaining Bolting, 2 in. and Less in Diameter

Items: B7.10, B7.20, B7.30, B7.40, B7.50, B7.60, B7.70, B7.80

Scope of Examination - Visual examinations each interval are limited to components selected for examination under B-B, B-J, B-L-2, and B-M-2. See Table B-2 for summary listing of valve bolting for Unit 3 and Table B-4 for Unit 4.

Due to scheduling and to reduce radiation exposure, 45% of the required B-G-2 examinations in PTN-3 will be completed by the end of the First Period, 70% by the end of the Second Period. 41% of the required examinations for PTN-4 will be completed by the end of the First period and 70% by the end of the Second Period.

2.1.2.8 Category B-H, Integral Attachments for Vessels

Reactor Vessel:
B8.10 - Integrally Welded Attachment

- Not applicable to Turkey Point Unit 3 or 4

Pressurizer:
B8.20 - Integrally Welded Attachment

Scope of Examination - 100% surface exam of support skirt to vessel weld.

Support Skirts on both Units have welds outside the inspection envelope defined in Fig IWB-2500-14. No examinations are required.

Steam Generator:
B8.30 - Integrally Welded Attachment

- Not Applicable to Turkey Point Unit 3 or 4

Heat Exchangers:
B8.40 - Integrally Welded Attachment

Scope of Examination- 100% of each integral attachment

	PTN-3	PTN-4
B8.40 Heat Exchanger (RGX)	3	3

- No exams to be performed - See Relief Request No. 3

2.1.2.9 Category B-J, Pressure Retaining Welds in Piping

Items: B9.11, B9.12, B9.21, B9.22, B9.31, B9.32, B9.40

Scope of Examination - All dissimilar metal pipe welds, high stress welds, terminal ends, plus an additional number of piping welds so that 25% of all nonexempt circumferential and branch connection pipe welds are examined. All longitudinal pipe welds intersecting any of the selected circumferential welds will also be examined.

Refer to Tables C-1,2,3 (Unit 3) and Tables C-4,5,6 (Unit 4) for a complete listing, by zone, of welds subject to examination for this category.

2.1.2.10 Category B-K, Integral Attachments to Piping, Pumps, and Valves

The guidelines of Code Case N-509 will be used in the performance and scheduling of examinations in lieu of the B-K-1 requirements of the 1989 Edition of Section XI which do not require examinations for the third and fourth intervals.

Scope of examination -10% of the Integral Attachments will receive a Surface examination, 100% of required areas of each welded attachment. In the case of multiple components within a system of similar design, function, and service, only one of the integral attachments of only one of the multiple components shall be examined. The integral attachments selected for examination shall correspond to those component supports selected by IWF-2510(b).

B10.10 - Piping Integrally Welded Attachments
B10.20 - Pump Integrally Welded Attachments

Scope of examination: 10% of the Integral Attachments will receive a surface examination.

See Relief Request No. 8.

B10.30 - Valve Integrally Welded Attachments

- Not applicable to Turkey Point Units 3 or 4.

2.1.2.11 Category B-L-1, Pressure Retaining Welds in Pump Casings; and Category B-L-2, Pump Casings

B12.10 - Pump Casing Welds

Scope of Examination: 100% volumetric exam of weld in one of the three Reactor Coolant Pumps per Unit. Code Case N-481 will be utilized as an alternate examination.

See Appendix B for details of requirements for both Units 3 and 4.

In order to reduce radiation exposure, 100% of the required B12.10 examinations in PTN-3 and PTN-4 will be completed during the 3rd period.

B12.20 - Pump Casing

Scope of Examination: Visual examination of interior surfaces of one of the three Reactor Coolant Pumps when disassembled for maintenance.

See Appendix B for Pump and Valve Groupings.

2.1.2.12 Category B-M-1, Pressure Retaining Welds in Valve Bodies; and Category B-M-2, Valve Bodies

B12.30 - Valve Body Welds, < NPS 4
B12.40 - Valve Body Welds, ≥ NPS 4

- Not applicable to Turkey Point Units 3 or 4.

B12.50 - Valve Body, > NPS 4

Scope of Examination - Visual examination of at least one valve of a group of valves once per interval when disassembled for maintenance or repair. See Appendix B, Table B-2 for details on Unit 3 and, and Table B-4 for Unit 4.

2.1.2.13 Category B-N-1, Interior of Reactor Vessel; Category B-N-2, Integrally Welded Core Support Structures and Interior Attachments to Reactor Vessels; and Category B-N-3, Removable Core Support Structures

B13.10 - Reactor Vessel Interior

Scope of Examination - Visual examination of accessible areas (areas above and below the reactor core made accessible for exam by removal of components during normal refueling), once each inspection period.

Item: B13.20, B13.30, B13.40

- Not applicable to Turkey Point Units 3 or 4.

Item: B13.50

Scope of Examination - Interior attachments within the beltline region (once per interval) for both Units 3 and 4.

Item: B13.60

Scope of Examination - Interior attachments beyond the beltline region (once per interval) for both Units 3 and 4.

Item: B13.70

Scope of Examination - Visual examination of accessible surfaces of core support structures when removed from the vessel (once per interval) For both Units 3 and 4.

Due to scheduling and in order to reduce radiation exposure, these Categories are scheduled together to meet the requirements of Program B.

2.1.2.14 Category B-O, Pressure Retaining Welds in Control Rod Housings

Item: B14.10

Scope of Examination 10% of peripheral housings.

	PTN-3	PTN-4
B14.10 Control Rod Housings	65	65

In order to reduce radiation exposure, all required examinations for PTN-3 will be performed during the second period and during the first period for PTN-4.

2.1.2.15 Category B-P, All Pressure Retaining Components

Items: B15.10, B15.11, B15.20, B15.21, B15.30, B15.31, B15.50, B15.51, B15.60, B15.61, B15.70, B15.71

Scope of Examination - System pressure tests are conducted on Class 1 systems and components as follows:

(a) A System Leakage Test, IWA-5211(a) - is conducted prior to plant startup following each occurrence where the Class 1 pressure boundary is breached, such as during a refueling outage.

The pressure retaining boundary subject to the leakage test corresponds to the reactor coolant system boundary, as established with all valves aligned as required by approved plant operating procedures for startup and normal reactor operation. The VT-2

examination boundary extends to include the second closed valve at the boundary extremity, which may be a check valve opposing Reactor Coolant system pressure. The test is conducted at system operating temperature and pressure.

(b) A System Leakage Test will be performed in accordance with alternate exam techniques of Code Case N-498 "Alternative Rules for 10-Year Hydrostatic Pressure Testing for Class 1 and 2 Systems Section XI, Division I".

All ASME Section XI Pressure Testing requirements are controlled by site procedures.

2.1.2.16 Category B-Q, Steam Generator Tubing

B16.20 - Steam Generator Tubing in U-Tube Design

Scope of Examination - The extent and frequency of examination shall be governed by the plant Technical Specifications. The Steam Generator tubing surveillance requirements are contained in Plant Technical Specification 3/4.4.5.

2.1.2.17 Augmented Examinations

(a) Reactor Coolant Pump Flywheels - As required by Regulatory Guide 1.14, the bore and keyway areas of each RCP flywheel are examined ultrasonically once each period. Additionally, the flywheels receive a 100% volumetric examination and a surface examination near the end of each Inspection Interval. Reference PTN 3/4 Technical Specifications, Paragraph 4.4.10.

(b) The Reactor Vessel examinations (including the Closure Head) are performed to Regulatory Guide 1.150, Rev. 1 as augmented by Appendix VII of the 1989 Edition of Section XI.

2.2 Class 2

The Class 2 System Boundaries are developed based upon the requirements of Regulatory Guide 1.26 and the Turkey Point Units 3 and 4 FSAR'S.

Specific examination requirements for components and systems are based upon the 1989 Edition of ASME Section XI. Augmented examinations required by SRP 6.6, Section I.8 and APCSB 3.1 para. B.2.c(4) are incorporated as described in para. 2.2.2.9.

2.2.1 Components Exempt from Examination

IWC-1220 - The following components (or parts of components) are exempted from the volumetric and surface examination requirements of IWC-2500.

2.2.1.1 IWC-1221 - Components within RHR, ECC, and CHR systems (or portions of systems).

(a) Vessels, piping, pumps, valves, and other components NPS 4 and smaller in all systems except high pressure safety injection systems of pressurized water reactor plants.

(b) Vessels, piping, pumps, valves, and other components NPS 1½ and smaller in high pressure safety injection systems of pressurized water reactor plants.

(c) Component connections NPS 4 and smaller (including nozzles, socket fittings, and other connections) in vessels, piping, pumps, valves, and other components of any size in all systems except high pressure safety injection systems of pressurized water reactor plants.

(d) Component connections NPS 1½ and smaller (including nozzles, socket fittings, and other connections) in vessels, piping, pumps, valves, and other components of any size in high pressure safety injection systems of pressurized water reactor plants.

(e) Vessels, piping, pumps, valves, other components, and component connections of any size in statically pressurized, passive (i.e., no pumps) safety injection systems of pressurized water reactor plants.

(f) Piping and other components of any size beyond the last shutoff valve in open ended portions of systems that do not contain water during normal plant operating conditions.

2.2.1.2 IWC-1222 - Components within systems (or portions of systems) other than RHR, ECC and CHR systems

(a) Vessels, piping, pumps, valves, and other components NPS 4 and smaller.

(b) Component connections NPS 4 and smaller (including nozzles, socket fittings, and other connections) in vessels, piping, pumps, valves, and other components of any size.

(c) Vessels, piping, pumps, valves, other components, and component connections of any size in systems or portions of systems that operate (when the system function is required) at a pressure equal to or less than 275 psig and at a temperature equal to or less than 200 degrees F.

(d) Piping and other components of any size beyond the last shutoff valve in open ended portions of systems that do not contain water during normal plant operating conditions.

2.2.1.3 IWC-1230 - Concrete Encased Components. Piping support members and piping support components that are encased in concrete shall be exempted from the examination requirements of IWC-2500.

2.2.2 Component/Piping Examination Basis

2.2.2.1 Category C-A, Pressure Retaining Welds in Pressure Vessels

C1.10 - Shell Circumferential Welds

Scope of Examination - 100% of all welds at gross structural discontinuities only. The examination may be limited to one vessel or distributed among the vessels. Components applicable to:

Steam Generators (3)

	PTN-3	PTN-4
- Ext. Ring to Lower Shell	SG-A	SG-A
- Lower Shell to transition	SG-B	SG-B
- Transition to Upper Shell	SG-B	SG-A

RHR Heat Exchangers (2)

- No C1.10 welds on RHR Heat Exchanger

C1.20 - Head Circumferential Welds

Scope of examination: 100% of head-to-shell welds, (limited to one of multiple vessels). Components applicable to:

Steam Generators (3)	PTN-3	PTN-4
- Upper Shell to Head	SG-B	SG-C

RHR-Heat Exchangers (2)

- Head to Shell	RHR-HX-A	RHR-HX-A

C1.30 - Tubesheet to Shell Welds

Scope of examination: 100% of tubesheet to shell welds (limited to one of multiple vessels).
Components applicable to:

Steam Generators(3)	PTN-3	PTN-4
- Ext. Ring to Tubesheet	SG-A	SG-A
RHR Heat Exchanger (2)		
- Shell to Tubesheet	RHR-HX-A	RHR-HX-A
Excess Letdown Heat Exchanger (1)		
- Cap to Shell	LDHX	LDHX
- Shell to Flange	LDHX	LDHX

2.2.2.2 Category C-B, Pressure Retaining Nozzle Welds in Vessels

C2.10 - Nozzles in Vessels ≤ ½" Nominal Thickness
C2.11 - Nozzle to Shell (or Head) Weld

- Not applicable to Turkey Point Units 3 or 4

Item: C2.20, C2.21, C2.22

- Nozzles without Reinforcing Plate in Vessels > 1/2" Nominal Thickness.

C2.21 - Nozzle to Shell or Head Welds

Scope of Examination - All nozzles at terminal ends of piping runs (limited to one of multiple vessels)

Steam Generators (3)	PTN-3	PTN-4
- Main Steam Nozzles	SG-A	SG-A
- Main Feedwater Nozzles	SG-A	SG-A

Note: Third Interval Nozzle to Shell examinations will be performed on Steam Generator A only based on C-F-2 weld selection changes from the Second Interval (decrease from 25% to 7.5%). Performing C-B examinations only on Steam Generator A is in compliance with the Code and provides consistency with the C-F-2 selections.

C2.22 - Nozzle Inside Radius Section

Scope of Examination - All nozzles at terminal ends of piping runs (limited to one of multiple vessels).

Steam Generators (3)	PTN-3	PTN-4
- Main Steam Nozzles	SG-A	SG-A
- Main Feedwater Nozzles	SG-A	SG-A

Note: Third Interval Inner Radius examinations will be performed on Steam Generator A only based on C-F-2 weld selection changes from the Second Interval (decrease from 25% to 7.5%). Performing C-B examinations only on Steam Generator A is in compliance with the Code and provides consistency with the C-F-2 selections.

C2.30, C2.31, C2.32, & C2.33

- Nozzles with Reinforcing Plate in Vessels > 1/2" Nominal Thickness.

C2.31 - Reinforcing Plate Welds to Nozzle and Vessel

Scope of Examination - All nozzles at terminal ends of piping runs (limited to one of multiple vessels).

RHR-Heat Exchangers(2)	PTN-3	PTN-4
- Reinforcing Plate Welds	RHR-HX-A	RHR-HX-A

C2.32 - Nozzle to Shell (or Head) Welds When Inside of Vessel is Accessible

- Not applicable to Turkey Point Units 3 and 4

C2.33 - Nozzle to Shell (or Head) Welds When Inside of Vessel is Inaccessible

Scope of Examination - VT-2 of telltale hole in reinforcing plates (limited to one of multiple vessels).

RHR Heat Exchangers (2)	PTN-3	PTN-4
- VT-2 of Heat Exchangers	RHR-HX-A	RHR-HX-A

Due to scheduling and in order to reduce radiation exposure, the Category C-B required examinations are scheduled as follows:

	1st Per	2nd Per	3rd Per
PTN-3	0%	50%	50%
PTN-4	50%	50%	0%

2.2.2.3 Category C-C, Integral Attachments for Vessels, Piping, Pumps and Valves

The guidelines of Code Case N-509 will be used in the performance and scheduling of examinations in lieu of the C-C requirements of the 1989 Edition of Section XI.

Scope of examination -10% of the Integral Attachments will receive a Surface examination, 100% of required areas of each welded attachment. In the case of multiple components within a system of similar design, function, and service, only one of the integral attachments of only one of the multiple components shall be examined. The integral attachments selected for examination shall correspond to those component supports selected by IWF-2510(b).

See Relief Request No. 8.

<u>C3.10 - Pressure Vessels, Integrally Welded Attachments</u>

- No integrally welded attachment on Turkey Point Steam Generators

- <u>RHR Heat Exchangers</u> (2)

	PTN-3	PTN-4
- One per Heat Exchanger	RHR-HX-A	RHR-HX-A

<u>C3.20 - Piping, Integrally Welded Attachments</u>

Scope of Examination - 100% of required areas of welded attachments (limited to attachments of components examined per C-F-1 and C-F-2). Multiple component concept is not applicable.

<u>C3.30 - Pumps, Integrally Welded Attachments</u>

- There are no Class 2 Pumps with integrally welded attachments at Turkey Point Units 3 or 4.

2.2.2.4 Category C-D, Pressure Retaining Bolting > 2" in Diameter

<u>C4.10, C4.20, C4.30, and C4.40</u>

- Not applicable to Turkey Point Units 3 and 4

2.2.2.5 Category C-F-1, Pressure Retaining Welds in Austenitic Stainless Steel or High Alloy Piping.

C5.10, C5.11, C5.12, C5.20, C5.21, C5.22, C5.30, C5.40, C5.41, and C5.42

Welds are selected as noted below. Refer to Tables D-1 through D-11 for a complete listing by zone and unit of welds selected for examination.

(a) Requirements for examination of welds in piping ≤ NPS 4 apply to PWR high pressure safety injection systems in accordance with the exemption criteria of IWC-1220.

(b) The welds selected for examination shall include 7.5%, but not less than 28 welds, of all austenitic stainless steel of high alloy welds not exempted by IWC-1220 (some welds not exempted by IWC-1220 are not required to be nondestructively examined per Examination Category C-F-1. These welds, however, shall be included in the total weld count to which the 7.5% sampling rate is applied, listed as Category C-F). The examinations shall be distributed as follows:

(1) the examinations shall be distributed among the Class 2 systems prorated, to the degree practicable, on the number of nonexempt austenitic stainless steel or high alloy welds in each system (i.e., if a system contains 30% of the nonexempt welds, then 30% of the nondestructive examinations required by Examination Category C-F-1 should be performed on that system);

(2) within a system, the examinations shall be distributed among terminal ends and structural discontinuities prorated, to the degree practicable, on the number of nonexempt terminal ends and structural discontinuities in that system; and

(3) within each system, examinations shall be distributed between line sizes prorated to the degree practicable.

(c) Structural discontinuities include pipe weld joints to vessel nozzles, valve bodies, pump casings, pipe fittings (such as elbows, tees, reducers, flanges, etc., conforming to ANSI B16.9), and pipe branch connections and fittings.

(d) The welds selected for examination shall be reexamined during subsequent inspections over the

service lifetime of the piping component to the extent practical.

2.2.2.6 Category C-F-2, Pressure Retaining Welds in Carbon or Low Alloy Steel Piping

Items C5.60, C5.61 and C5.62

- Not applicable to Turkey Point Units 3 and 4

Items C5.50, C5.51, C5.52, C5.70, C5.80, C5.81 and C5.82

Welds are selected as noted below. Refer to Tables E-1 through E-8 for a complete listing by zone and unit of welds selected for examination.

(a) Requirements for examination of welds in piping ≤ NPS 4" apply to PWR high pressure safety injection systems in accordance with the exemption criteria of IWC-1220.

(b) The welds selected for examination shall include 7.5%, but not less than 28 welds, of all carbon and low alloy steel welds not exempted by IWC-1220. (Some welds not exempted by IWC-1220 are not required to be nondestructively examined per Examination Category C-F-2. These welds, however, shall be included in the total weld count to which the 7.5% sampling rate is applied, listed as Category C-F). The examinations shall be distributed as follows:

(1) the examinations shall be distributed among the Class 2 systems prorated, to the degree practicable, on the number of nonexempt carbon and low alloy steel welds in each system (i.e., if a system contains 30% of the nonexempt welds, then 30% of the nondestructive examinations required by Examination Category C-F-2 should be performed on that system);

(2) within a system, the examination shall be distributed among terminal ends and structural discontinuities prorated, to the degree practicable, on the number of nonexempt terminal ends and structural discontinuities in that system; and

(3) within each system, examinations shall be distributed between line sizes prorated to the degree practicable.

(c) Structural discontinuities include pipe weld joints to vessel nozzles, valve bodies, pump casings, pipe fittings (such as elbows, tees, reducers, flanges,

etc., conforming to ANSI B16.9), and pipe branch connections and fittings.

(d) The welds selected for examination shall be reexamined during subsequent inspection intervals over the service lifetime of the piping component to the extent practical.

(e) Only those welds showing reportable preservice transverse indications need to be examined for transverse reflectors.

2.2.2.7 Category C-F, Piping Exempt from Examination Under Categories C-F-1 and C-F-2

Welds that are exempt from examination under Categories C-F-1 and C-F-2 do not require examination. They are included within the Summary Tables for counting purposes only.

2.2.2.8 Category C-G, Pressure Retaining Welds in Pumps and Valves

Items C6.10 & C6.20

- Not applicable to Turkey Point Units 3 and 4

2.2.2.9 Category C-H, All Pressure Retaining Components

Items C7.10, C7.20, C7.30, C7.40, C7.50, C7.60, C7.70 & C7.80

Scope of Examination - The pressure retaining components within the Class 2 system boundaries are subjected to System Pressure Tests in accordance with IWC-5210 and visually examined (VT-2) per IWA-5240. The tests are conducted as follows:

(a) System Functional Test, IWA-5211(b) - For those systems or portions of systems not required to operate during normal reactor operation, but for which periodic system or component functional tests are performed as required by the Plant Technical Specifications and/or the Pump and Valve (IST) program, a VT-2 examination is performed at least once during each period during the system or component functional test. The boundary subject to pressurization during a System Functional Test includes only those pressure retaining components within the system boundary pressurized under the test mode required during the performance of the periodic system (or component) functional test. Nominal operating pressure of the system functional test is acceptable as the system test pressure.

(b) A System Leakage Test, will be performed in accordance with alternate exam techniques of Code Case N-498, "Alternative Rules for 10 Year Hydrostatic Pressure Testing for Class 1 and 2 Systems Section XI, Division 1", except for Steam Generators out to the first isolation valve where Code Case N-416 will be utilized.

2.2.2.10 Augmented Examinations

(a) Welds in those portions of systems addressed in USNRC Branch Technical Position APCSB 3.1 para. B.2.c(4);

(b) Welds in those portions of systems addressed in SRP 6.6 paragraph I.8.

(c) Steam Generator Feedwater Nozzle Piping Augmented Examination - FPL will perform an augmented examination each refuel outage on the Steam Generator Feedwater Nozzle piping from the nozzle taper to a point one pipe diameter down on the first elbow. These examinations will continue until an engineering evaluation concludes these examinations are no longer required.

2.3 Class 3

The Class 3 system boundary examination is based upon the requirements of Regulatory Guide 1.26, and ASME Section XI, Table IWD-2500-1.

2.3.1 ASME Code Exemptions employed

2.3.1.1 Integral attachments of supports and restraints to components that are 4" nominal pipe size and smaller within the system boundaries of Examination Categories D-A, D-B, and D-C of Table IWD-2500-1 shall be exempt from the visual examination VT-3, except for the Auxiliary Feedwater System.

2.3.1.2 Integral attachments of supports and restraints to components exceeding 4" Nominal Pipe Size may be exempted provided:

(a) The components are located in systems (or portions of systems) whose function is not required in support of reactor residual heat removal, containment heat removal, and emergency core cooling; and

(b) The components operate at a pressure of 275 psig or less and at a temperature of 200° F (93° C), or less.

2.3.2 Component/Piping Examination Basis

The guidelines of Code Case N-509 will be used in the performance and scheduling of examinations in lieu of the D-A, D-B, and D-C requirements of the 1989 Edition of Section XI.

See Relief Request No. 8.

2.3.2.1 Category D-A, Systems in Support of Reactor Shutdown Function

D1.20 - Integral Attachments - Component Supports and Restraints
D1.30 - Integral Attachments - Mechanical and Hydraulic Snubbers
D1.40 - Integral Attachments - Spring Type Supports
D1.50 - Integral Attachments - Constant Load Type Supports
D1.60 - Integral Attachments - Shock Absorbers

Scope of Examination - 10% of the Integral Attachments will receive a Visual (VT-1) examination, 100% of required areas of each welded attachment. In the case of multiple components within a system of similar design, function, and service, the integral attachment of only one of the multiple components shall be examined. The integral attachments selected for examination shall correspond to those component supports selected by IWF-2510(b).

2.3.2.2 Category D-B, Systems in Support of Emergency Core Cooling, Containment Heat Removal, Atmosphere Cleanup, and Reactor Residual Heat Removal

D2.20 - Integral Attachments - Component Supports and Restraints
D2.30 - Integral Attachments - Mechanical and Hydraulic Snubbers
D2.40 - Integral Attachments - Spring Type Supports
D2.50 - Integral Attachments - Constant Load Type Supports
D2.60 - Integral Attachments - Shock Absorbers

Scope of examination -10% of the Integral Attachments will receive a Visual (VT-1) examination, 100% of required areas of each welded attachment. In the case of multiple components within a system of similar design, function, and service, the integral attachment of only one of the multiple components shall be examined. The integral attachments selected for examination shall correspond to those component supports selected by IWF-2510(b).

2.3.2.3 Category D-C, Systems in Support of Residual Heat Removal from Spent Fuel Storage Pool

D3.20 - Integral Attachments - Component Supports and Restraints
D3.30 - Integral Attachments - Mechanical and Hydraulic Snubbers
D3.40 - Integral Attachments - Spring Type Supports
D3.50 - Integral Attachments - Constant Load Type Supports
D3.60 - Integral Attachments - Shock Absorbers

Scope of examination -10% of the Integral Attachments will receive a Visual (VT-1) examination, 100% of required areas of each welded attachment. In the case of multiple components within a system of similar design, function, and service, the integral attachment of only one of the multiple components shall be examined. The integral attachments selected for examination shall correspond to those component supports selected by IWF-2510(b).

2.3.3 System Pressure Tests

2.3.3.1 The pressure retaining components within the boundary of each system specified for Examination Categories D-A, D-B, and D-C are pressure tested and visually examined (VT-2) for leakage during the following tests:

(a) System Inservice Test, IWA-5211(c) - For systems required to operate during normal plant operation, a VT-2 examination is conducted at least once each period while the system is in operation and at operating pressure. The boundary subject to test pressurization during a System Inservice Test extends to those pressure retaining components under operating pressures during normal system operation;

or

(b) System Functional Test, IWA-5211(b) - For those systems or portions of systems not required to operate during normal reactor operation, but for which periodic system or component functional tests are performed as required by the Plant Technical Specifications and/or the Pump and Valve (IST) program, a VT-2 examination is performed at least once during each period during the system or component functional test. The boundary subject to pressurization during a System Functional Test includes only those pressure retaining components within the system boundary pressurized under the test mode required during the performance of the

periodic system (or component) functional test. Nominal operating pressure of the system functional test is acceptable as the system test pressure.

(c) System Hydrostatic Test, IWA-5211(d) - is performed on Class 3 systems once in each interval. The boundary subject to test pressurization extends up to and includes the first normally closed valve or valve capable of automatic closure as required to perform the safety-related system function.

The system pressure requirements are defined in sub-article IWD-5223 of the Code. The VT-2 examination performed during a system hydrostatic test is used to satisfy the system pressure test requirements of (a) and (b) above for that period in which it is conducted.

2.3.3.2 All ASME Section XI Pressure Testing requirements are controlled by site procedures. The boundaries subject to system Pressure tests, Functional tests, Inservice tests, and Hydrostatic tests are shown in the Piping and Instrumentation Diagrams (see Section 5.0).

2.4 Component Supports

Scope of Examination - Component supports subject to examination are selected in accordance with sub-article IWF-2510. A minimum sample of 25% will be examined. Those supports selected receive a visual examination (VT-3) to determine their general mechanical and structural condition. Spring type supports and mechanical and hydraulic snubbers receive a visual examination to determine conditions relating to their operability. All Code item numbers will be examined as applicable. See Appendix F for details of selections for both Units 3 and 4. Credit will be taken for 25% of the Snubber examinations.

Several supports hold more than one classified line. These supports are counted only once and if scheduled for examination, will cover all of the applicable lines. The support will be counted once for credit.

2.5 Reexamination of Flaw Indications

2.5.1 Class 1

Pursuant to the Section XI Code, sub-article IWB-2420, in the case of Class 1 components, where examinations reveal the presence of flaw indications that exceed the acceptance standards and the component is analyzed as acceptable for service (see section 4.4), the areas containing the flaw indications will be scheduled for

reexamination during the next three (3) inspection periods of Inspection Plan B (IWB-2410). Provided the flaw indications remain essentially unchanged over that period, the component examination schedule will revert to the original schedule of successive inspections.

2.5.2 Class 2

Pursuant to the Section XI Code, sub-article IWC-2420, in the case of Class 2 components, where examinations reveal the presence of flaw indications that exceed the acceptance standards and the component is analyzed as acceptable for service (see section 4.4), the areas containing the flaw indications will be scheduled for reexamination during the next inspection period of Inspection Plan B (IWC-2412). Provided the flaw indications remain essentially unchanged over that period, the component examination schedule will revert to the original schedule of successive inspections.

2.5.3 Class 3

Class 3 components with flaw indications that exceed the acceptance standards and are analyzed as acceptable for continued service (see section 4.4) need not be scheduled for reexamination except as required by Inspection Plan B (IWD-2412).

2.5.4 Component Supports

Component supports with flaw indications that render them non-functional but are accepted for continued service by evaluation shall be reexamined during the next inspection period.

2.6 Substitute Examinations

FPL may substitute unscheduled components for scheduled components when the original selection was part of a sample. This substitution may be performed when conditions such as limited physical access, high radiation levels, or other situations which may necessitate a substitute examination. Specific exams required by the Code that can not be completed will be the subject of a relief request.

2.7 Class MC Components

10 CFR 50.55A presently incorporates only those portions of Section XI that address the ISI requirements for Class 1, 2, and 3 components and their supports. The regulations do not currently address the ISI of containments. Since this proposed amendment is only

intended to include the latest ASME Code edition and addenda, the requirements of Subsection IWE is not imposed upon Commission licensees by this amendment.

Per the above statement, Subsection IWE of Section XI is not applicable, and is not addressed in this Program.

The incorporation by reference Subsection of IWE into 50.55a is presently the subject of a separate rulemaking action.

Reference: Federal Register, Vol. 57, No. 152, Dated August 6, 1992

3.0 Relief Requests

3.1 During the First and Second Ten Year Inspection Intervals, there were cases where component configuration and/or interference prevented the code required volume or surface area from being examined. In each case where limitations were encountered, the details were documented in a Relief Request. Those items which are scheduled for examination during the third inspection interval are included in this section. As allowed by Code Case N-460, only those examinations where less than 90% coverage was attained will be part of a Relief Request.

3.2 In cases where parts of the required examination areas cannot by effectively examined because of a combination of component design or current inspection technique limitations, FPL will continue evaluating the development of new or improved examination techniques with the intent of applying these techniques where a practical improvement in the examination can be achieved.

3.3 Each Relief Request contains the following information:

A. Component Identification - describes the Code Class and a brief description of the component;

B. Examination Requirement - describes the Code Category and Item Numbers, and the examination requirements;

C. Relief Requested - description of the Code requirements that are being requested for relief;

D. Basis for Relief - describes examinations conducted and/or evaluated to support the reason relief is being requested;

E. Alternative Examinations - describes examinations conducted and/or evaluated to support the basis for relief; and

F. Implementation Schedule - when the relief request is expected to be implemented;

G. Attachments to the Relief - identify all Figures, Tables, Sketches, Photographs, etc., attached to the Request for Relief.

3.4 Relief Requests are found in Appendix G.

4.0 Evaluation Criteria

Florida Power and Light will perform non-destructive examinations using Visual, Surface (Penetrant and Magnetic Particle), and volumetric (Ultrasonic, Radiography, and Eddy Current) techniques. Other NDE techniques may be utilized when required.

During Inservice Inspections, NDE indications are evaluated against the acceptance standards of ASME Section XI (see tables 4.1 through 4.4). Components with indications that do not exceed the acceptance criteria will be considered acceptable for continued service. Additional examinations are not required.

Examinations that reveal indications exceeding the acceptance standards identified in tables 4.1 through 4.4 will be made acceptable by an engineering evaluation, repair, replacement, or an analytical evaluation.

4.1 Acceptance by Engineering Evaluation

Examinations that reveal indications exceeding the acceptance standards identified in Tables 4.1 through 4.4 may be submitted to Nuclear Engineering for evaluation and disposition as follows:

A. Indications determined to be acceptable by the FPL Design and/or Manufacturer's Specifications shall be acceptable for continued service provided they meet the minimum requirements of the Construction Code.

B. Indications determined to be surface anomalies (e.g fabrication marks, scratches, surface abrasion, material roughness, or other conditions) are acceptable for continued service provided the indication is removed by light flapping and/or grinding (surface preparation) without violating the design minimum wall thickness.

4.2 Acceptance by Repair

Components whose volumetric or surface examination reveals indications exceeding the acceptance criteria of Tables 4.1 through 4.4 shall be unacceptable for continued service until repaired. Repairs are further covered by section 7.0.

4.3 Acceptance by Replacement

As an alternative to repairing the component, the portion of the component containing the indication may be replaced. Replacements are further covered by section 7.0.

4.4 Acceptance by Analytical Evaluation

Components whose volumetric or surface examination reveals indications exceeding the acceptance criteria of Tables 4.1 through 4.4 are acceptable for continued service without the repair or replacement if an analytical evaluation meets the acceptance criteria of IWB-3600.

4.5 Component Support Indications

If the evaluations conducted on a component support demonstrates that the support was performing its intended safety function, additional exams are not required. Corrective action may still be performed.

4.6 Supplemental Examinations

Volumetric, visual, or surface examinations that detect indications requiring evaluation may be supplemented by other examination methods and techniques to determine the character of the indication.

4.7 Additional Examinations

Additional examinations that are required in accordance with IWB-2430, IWC-2430, and IWF-2430 will be performed before the end of the outage.

4.8 Minimum Thread Engagement Requirements

Turkey Point Nuclear Engineering has reviewed the Code requirements applicable to thread engagement for safety related bolted connections. When studs or bolts are threaded into nuts, the end of the stud or bolt, excluding any points, shall extend through the nut at least until it is flush with the face of the nut and until there is no evidence of unengaged threads in the nut.

Bolting that does not meet this criteria shall be unacceptable for further service until a JPN Engineering evaluation has been completed and approval for continued use is obtained or the bolting has been repaired or replaced.

Reference: Letter from S.T. Hale to L.N. Motley, dated February 12, 1991, document no. JPNS-PTN-91-0684.

Table 4.1 - Class 1 Acceptance Standards

Examination Category	Component or Part Examined	Acceptance Standard
B-A	Welds in Reactor Vessels	IWB-3510
B-B	Welds in Other Vessels	IWB-3510
B-D	Vessel Nozzle Welds	IWB-3512
B-E	Partial Penetration welds in Vessels	IWB-3522
B-F, B-J	Dissimilar and Similar Metal Welds in Piping	IWB-3514
B-G-1	Bolting > 2" diameter	IWB-3515/3517
B-G-2	Bolting ≤ 2" diameter	IWB-3517
B-H	Integral Attachments for Vessels	IWB-3516
B-L-1, B-M-1	Welds in Pumps and Valves	IWB-3518
B-L-2, B-M-2	Pump Casings and Valve Bodies	IWB-3519
B-N-1, B-N-2 B-N-3	Interior Surfaces and Internal Components of Reactor Vessels	IWB-3520
B-O	Control Rod Drive Housing Welds	IWB-3523
B-P	Pressure Retaining Boundary	IWB-3522
B-Q	Steam Generator Tubing	IWB-3521

Table 4.2 - Class 2 Acceptance Standards

Examination Category	Component or Part Examined	Acceptance Standard
C-A	Welds in Pressure Vessels	IWC-3510
C-B	Nozzle Welds in Vessels	IWC-3511
C-C	Integral Attachments for Vessels, Piping, Pumps and Valves	IWC-3512
C-D	Bolting	IWC-3513
C-F-1, C-F-2	Welds in Piping	IWC-3514
C-G	Welds in Pumps and Valves	IWC-3515
C-H	Pressure Retaining Components	IWC-3516

Table 4.3 - Class 3 Acceptance Standards

Examination Category	Component or Part Examined	Acceptance Standard
D-A	Pressure Boundary (VT-2) Integral Attachments (VT-3)	IWD-3000
D-B	Pressure Boundary (VT-2) Integral Attachments (VT-3)	IWD-3000
D-C	Pressure Boundary (VT-2) Integral Attachments (VT-3)	IWD-3000

Table 4.4 - Component Support Acceptance Standards

Examination Category	Component or Part Examined	Acceptance Standard
F-A	Supports	IWF-3410

FPL will consider as acceptable paint spatter found on close tolerance machined or sliding surfaces as long as an engineering evaluation has determined that its presence does not interfere with the function of the support.

5.0 Program Boundary Drawings

The code required boundaries for all Class 1, 2, and 3 systems are denoted by a boxed-in letter (A, B, and C respectively) on Piping and Instrument Diagrams (P&IDs).

6.0 Records

6.1 General

Records of Inservice Inspection Program, Plans, outage schedules, calibration standards, examination and test procedures, results of activities, final reports, certifications, and corrective actions taken or recommended will be developed and maintained in accordance with IWA-6000 of the ASME Boiler and Pressure Vessel Code, Section XI, and Relief Request No. 6.

6.2 Nondestructive Examinations

Completed data packages shall be submitted to the ISI Specialist following completion of the Inservice examination activity.

6.3 Final Reports

Final reports shall be generated for the following activities:

(a) Nondestructive Examination Activities performed on Class 1, 2, or 3 systems, components and their supports.

(b) Snubber examinations and tests

(c) System Pressure Tests

(d) Eddy Current examinations

(e) Repairs and Replacements

6.4 Final Report Format

Final reports shall contain, as a minimum, the information required on the NIS-1A or NIS-2B form or similar format, as applicable.

6.5 Inservice Inspection Summary Reports

One Hundred Twenty days (120) following the end of the period, FPL shall forward a Summary Report of the ISI activity to the Nuclear Regulatory Commission in accordance with IWA-6220.

Included within the Summary Report, the following Owners' Data Reports shall be included:

(a) NIS-1A, Owners' Data Report for Inservice Inspections.

(b) NIS-1B, Abstract of Examinations and Tests

(c) NIS-1C, Examinations not Performed as Identified in the Inspection Plan

(d) NIS-1D, Identification of Items with Flaws which Require Analytical Evaluation for Continued Acceptability

(e) ISI Summary Records (or similar form)

(f) NIS-2A, Repair/Replacement Plan Certification Record

(g) NIS-2B, Abstract of Repairs and Replacements

(h) NIS-BB Owners' Data Report for Eddy Current Examinations

The reports submitted shall include information since the last submittal.

These reports are designed to include the information required by the Code and the additional requirements of the Plant Technical Specifications.

DATE: 08/27/93 (A)
REVISION : 1 (B)

TURKEY POINT NUCLEAR PLANT UNIT 3
INSERVICE INSPECTION SUMMARY REPORT
SECOND INTERVAL, THIRD PERIOD, FIRST OUTAGE (1991)
CLASS 1 ALL STATUS COMPONENTS
(C)

(D) PAGE: 1

REACTOR PRESSURE VESSEL (E)

ZONE NUMBER : 001 (F)

SUMMARY NUMBER	EXAMINATION AREA IDENTIFICATION	ASME SEC. XI CATGY	ITEM NO	EXAM METHOD	PROCEDURE	STATUS	NONE	INSERVICE	INGOING	OUTGOING	REMARKS **CALIBRATION BLOCK**
	3PSRV1 REF. DWG. NO. 3-V01 (G)										
00100	3-WR-18 (I)	(L)	B-A	UT 0	NDE 5.4	C	X	-	-	-	12/90 - DATE AND REMARKS ON COMPLETED
(H)	FLANGE TO UPPER SHELL (J)	(M)	B1.30	UT 45	NDE 5.4	(P)	X	-	-	-	EXAM
	CTMT, 58' LEVEL (K)			UT 45T	NDE 5.4		X	-	-	-	(S)
				UT 60	NDE 5.4		X	-	-	-	
				UT 60T	NDE 5.4		X	-	-	-	**UT-1**
				(N)	(O)				(Q)		(R)

(A) Date the inspection plan table was printed
(B) Current revision number of the inspection plan
(C) Specific outage and classification of system
(D) Page number of the table
(E) System designation
(F) Zone number
(G) Isometric drawing
(H) Summary number of the record
(I) Component or weld identification number
(J) Component or weld description
(K) Elevation and/or location of component
(L) ASME Code category
(M) ASME Code item number
(N) NDE methods
(O) Procedure number
(P) Shows status of examination
- X - Scheduled
- C - Completed
- A - Augmented
- P - Partial
- E - Expanded Scope

(Q) Types of indications found
(R) Ultrasonic calibration block
(S) Remarks on examinations performed during this outage. Date is optional.

Inservice Inspection Summary Record

Eddy Current Summary of Results					
Plant:					
Examination Dates:		Through			
Steam Generator Number	Total Tubes Inspected	Total Ind. ≥ 20% to 39%	Total Ind. ≥ 40% to 100%	Total Tubes Plugged as Preventive Maintenance	Total Tubes Plugged

Location of Indications

Steam Generator	AVB Bars	Drilled Support 1 through 6		Top of Tube Sheet to 1 Drilled Support	
		Cold Leg	Hot Leg	Cold Leg	Hot Leg

Certification of Record

We certify that the statements in this record are correct and the tubes inspected were tested in accordance with the requirements of Section XI of the ASME Code.

FLORIDA POWER and LIGHT COMPANY
Organization

Date: _____ By: _____
NDE Supervisor

Steam Generator Tubes Plugged								
Plant:								
Steam Generator 3E210A			Steam Generator 3E210B			Steam Generator 3E210C		
Row	Column	Remarks	Row	Column	Remarks	Row	Column	Remarks

Steam Generator Eddy Current Examination Results				
Plant: Examination Dates: through				
Row	Column	% Tube Wall Penetration	Origin	Location

7.0 Repairs, Replacements and Modifications

A Repair/Replacement Plan shall be prepared in accordance with the requirements of the 1992 Edition of Section XI, IWA-4140. All other applicable requirements of the 1989 Edition of Section XI, IWA-4000, shall be met.

7.1 Repairs

7.1.1 Code repairs are performed in accordance with approved procedures or instructions in accordance with IWA-4000.

7.1.2 Repair operations shall be performed in accordance with a program delineating essential requirements of the complete repair cycle and shall include the following:

(a) The NDE method that revealed the flaw and a description of the flaw.

(b) The flaw removal method, method of measurement of the cavity created by removing the flaw, and dimensional requirements for reference points during and after the repair.

(c) Weld procedures and postweld heat treatment and the nondestructive examination methods to be used after the repair.

(d) Evaluation as described in 7.4.

(e) The repair programs shall be subject to review by the enforcement and regulatory authorities having jurisdiction at the plant site.

7.1.3 After repairs by welding on the pressure retaining boundary, a system pressure test shall be performed in accordance with IWA-5000 (when required by IWA-4700).

7.1.4 The repaired area shall be reexamined to establish a new preservice record. The examination shall include the method that detected the flaw.

7.2 Replacements

7.2.1 Replacements are performed using approved procedures or instructions in accordance with IWA-7000. The Program for replacements shall include the following:

(a) The applicable Edition and Addenda of Section XI.

(b) A Description of the Items being replaced and the Codes to which they were constructed

(c) A description of the work to be performed.

(d) The Code Edition, Addenda and Code Cases applicable to materials, design manufacture, and installation.

(e) any special requirements pertaining to materials, welding, heat treatment, and nondestructive examination requirements.

(f) the test and acceptance criteria to be used to verify the acceptability of the replacement.

(g) The documentation required by IWA-7500.

(h) The application of the ASME Code Symbol Stamp in accordance with IWA-7300.

7.2.2 Replacements that involve substitution of materials, dimensional changes, process changes, deviations to specifications or changes to design codes require engineering approval.

7.2.3 All procedures for the installation of renewal, spare, and replacement parts shall be in accordance with IWA-4100.

7.2.4 Prior to the systems return to service, a preservice examination shall be made in accordance with IWB-2200, IWC-2200, IWD-2200, or IWF-2200, as applicable, for the component and part replaced.

7.3 Modifications

The performance of modifications is controlled in accordance with Quality Procedure QP 3.4.

7.4 Evaluation

When the repair, replacement, or modification is required because of failure of a part or component pressure boundary, an evaluation shall be done to ensure that the replacement and/or the repair procedure selected is suitable. The cause of failure shall be evaluated in accordance with the Code. When equipment cannot be restored to design configuration, equipment substitutions are needed, or conditional use is necessary, and plant modifications are deemed inappropriate for various reasons, the necessary engineering evaluations shall be documented.

7.5 Access

Adequate access and clearances for examination and tests shall be considered by Nuclear Engineering as part of the processing of design or arrangement changes of system components in accordance with Quality Procedure QP 3.4.

7.6 Determination of Design and Construction Codes

7.6.1 Components, parts, and piping shall be procured to the requirements of the construction code of record as indicated in the original purchase order specification. Later editions and addenda of the Code may be used provided they are in accordance with IWA-7210.

7.6.2 The design and analysis of piping, components and supports shall meet the design code of record as identified in the FSAR or design specification.

7.6.3 Welding activities shall meet the requirements of the original construction code. Alternatively, Nuclear Engineering may specify that the use of a later edition of the construction code, or Section III, as identified in the welding control manual, may be used.

Note: Later editions and addenda may be used provided that they have been endorsed by the USNRC and are incorporated in 10 CFR 50.55a(g).

7.7 Authorized Nuclear Inservice Inspector

The services of an Authorized Inspection Agency (ANII) shall be used when making repairs. FPL shall notify the ANII prior to starting the repair, replacement, or modification, and keep the inspector informed of the progress of the work so necessary inspections may be performed.

7.8 Implementation

All ASME Section XI Class 1, 2, and 3 Repairs and Replacements are controlled by Engineering procedures.

8.0 Inservice Inspection Plan and Schedules

8.1 Inspection Plan Tables

8.1.1 The Inservice Inspection Plan Tables for the Inservice examinations of the major components of Florida Power and Light, Turkey Point Units 3 and 4 will be in a format similar to the Table found on page 51.

8.1.2 The Inspection Plan has been divided into zones. Each zone is defined by a drawing which identifies and locates welds and other examination areas for each system.

8.1.3 For the sake of continuity and clarity, all items to which a Code category and Code item number can be applied are identified.

8.2 Ten Year Inspection Plan

The Ten Year Inspection Plan provides the following information:

8.2.1 Program Summary Number - Each weld or component is assigned a unique summary number. These are for administrative control and are subject to change. This provides a format for accessing multiple data bases relating to each weld or component.

8.2.2 ASME Section XI Item Number - The Code item number from table IWB-2500-1, IWC-2500-1, IWD-2500-1, or IWF-2500-1, as applicable, of the ASME Boiler and Pressure Vessel Code, Section XI.

8.2.3 Component Identification - The unique component or weld identification number. This number appears on the applicable ISI isometric drawing.

8.2.4 Component Description - A brief description of the component or, in the case of a weld, the parts being joined.

8.2.5 Code Category - The Code category from table IWB-2500-1, IWC-2500-1, IWD-2500-1, or IWF-2500-1, as applicable, of the ASME Boiler and Pressure Vessel Code, Section XI.

8.2.6 Code Exam Methods - The examination method(s) to be used for each item number, if applicable.

8.2.7 ISI Interval - The numbers 1, 2, 3, or 4 signify a ten-year interval. The current inspection interval

relating to this table is number 3 (see Figure 8-1). Each outage within a period will have an "X" placed in the applicable period and outage in which it will be examined or an "A", "B", "C", "E", or "P" to show when the examination took place and the type of exam performed.

8.2.8 Instructions - Identifies specific examination notes.

8.3 Weld Identification

Welds and other components that are subject to examination and have not been identified by plant drawings have been assigned identification numbers for tracking purposes.

When new longitudinal seam welds are identified, they reference the intersecting circumferential weld.

```
DATE:  08/27/93 (A)                    TURKEY POINT NUCLEAR PLANT UNIT 3                          (D) PAGE:   146
REVISION:     1 (B)                    TEN-YEAR INSERVICE INSPECTION PLAN
                                              CLASS 1 COMPONENTS (C)

                                 INSPECTION INTERVAL_ ___________PLAN STATUS___________
RPV CLOSURE HEAD (E)                                |   FIRST      SECOND       THIRD    |
ZONE NUMBER: 051 (F)                 ASME           |   PERIOD     PERIOD       PERIOD   |
                                     SEC. XI        | ----------- ----------- -----------|
SUMMARY EXAMINATION AREA             CATGY   NDE    | - - - - - - O U T A G E - - - - - -  |   INSTRUCTIONS
NUMBER  IDENTIFICATION               ITEM NO METH   | 1 2 3 4 1 2 3 4 1 2 3 4              |   **CALIBRATION BLOCK**
------- ---------------------------- ------- ---- - ----------- ----------- ----------- -  -----------------------------------

        SYSTEM NO. 41, 5613-P-570-S  SH. 1 OF 3  REF. DWG. NO. 3-A24 (G)

091000  2"-RC-1305-28 (I)          (L) B-J    PT    1 - - - - C - - - - - - - -          (P)
(H)     ELBOW TO PIPE (J)          (M) B9.40  (N)   2 - - - - X - - - - - - - -
        CTMT, 24'0" (K)                             3 - - - - - - - - - - - - -
                                                    4 - - - - - - - - - - - -        ** (Q) **
                                                                  (O)

7/4/93 - THIS IS WHERE REMARKS FROM PREVIOUS OUTAGES ARE LOCATED  (R)
```

(A) Date the inspection plan table was printed
(B) Current revision number of the inspection plan
(C) Classification of system
(D) Page number of the table
(E) System designation
(F) Zone number
(G) Isometric drawing
(H) Summary number of the record
(I) Component or weld identification number
(J) Component or weld description
(K) Elevation and/or location of component
(L) ASME Code category
(M) ASME Code item number
(N) NDE methods
(O) Shows when an item was examined or is scheduled to be examined. Any interval can be shown separately.

- A - Augmented
- B - Baseline
- C - Completed
- E - Expanded Scope
- P - Partial
- X - Scheduled

Other Codes may be used as needed.

(P) Specific instructions for this component
(Q) Ultrasonic calibration block
(R) Remarks from previous outages. Date is optional.

Inspection Plan Table Format

Figure 8-1, Summary Tables in the Ten-Year Plan

9.0 Nondestructive Examination Procedures

The following is a list of the standard NDE procedures used for ISI activities. The specific revision used during an activity will be listed in the examination plan for that activity. Other NDE procedures may be used as required.

Procedure No.	Title
NDE 1.3	Eddy Current Examinations of Non Ferro-magnetic Tubing with Multi Frequency Techniques MIZ-12
NDE 2.2	Magnetic Particle Examination
NDE 3.3	Liquid Penetrant Examination Solvent Removable Visible Dye Technique
NDE 4.1	Visual Examination VT-1 for Welds/Bolting/Bushings/Washers
NDE 4.2	Visual Examination VT-2 Conducted During System Pressure Tests
NDE 4.3	Visual Examination VT-3
NDE 4.4	Steam Generator Secondary Side Visual Examination
NDE 5.1	Ultrasonic Examination of Pressure Vessel Welds Except Reactor Vessels
NDE 5.2	Ultrasonic Examination of Ferritic Piping Welds
NDE 5.4	Ultrasonic Examination of Austenitic Piping Welds
NDE 5.5	Ultrasonic Examination of Main Coolant Piping Welds, Turkey Point 3 and 4
NDE 5.6	Ultrasonic Examination of Integrally Welded Attachments to Piping
NDE 5.7	Ultrasonic Examination of Reactor Pressure Vessel Studs and Reactor Coolant Pump Studs
NDE 5.8	Ultrasonic Examination of Bolting Material for Cracking
NDE 5.9	Ultrasonic Examination of Bolting Material for Corrosion
NDE 5.10	Ultrasonic Examination of Nuts Two Inches in Diameter or Greater

Procedure No.	Title
NDE 5.11	Ultrasonic Examination of Dissimilar Metal Welds
NDE 5.12	Manual Ultrasonic Examination of Reactor Vessel Flange to Shell Welds and Stud Hole Threads
NDE 5.13	Ultrasonic Examination of Nozzle Inner Radius Areas
NDE 5.14	Manual Ultrasonic Examination of Reactor Pressure Vessel Shell and Closure Head Welds
NDE 5.15	Ultrasonic Examination of Reactor Coolant Pump Flywheels
NDE 5.16	Ultrasonic Examination Technique for the Evaluation of Cracking in Steam Generator Feedwater Piping
NDE 5.18	Ultrasonic Thickness Measurement
NDE 5.19	Ultrasonic Examination of Socket welds in the Pressurizer Auxiliary Spray Line PTN-3/4

10.0 Calibration Block Table

Block Number	Thickness	Diameter	Material	Drawing Number	Heat Number
UT-1	9.000"	FLAT	SA 508 CL 2	D-4352-038	218993
UT-2	6.988"	FLAT	SA 508 CL 2	D-4352-022	216817
UT-3	4.812"	FLAT	SA 508	D-ISI-005	---
UT-4	IR	N/A	SA 508 CL 2	D-4352-028	216817
UT-5	IR	N/A	SA 533 GR B	D-4352-016	C5312-1
UT-6	5.000"	Flat	SA 533 GR B	D-4352-023	C5312-1
UT-7	3.620"	N/A	SA 302 GR B	C-ISI-008	---
UT-8	5.750"	N/A	SA 216 GR WCC	C-ISI-007	17436/27256
UT-9	5.500"	N/A	SA 216 GR WCC	C-ISI-009	17436/27256
UT-10	3.000"	Flat	SA 508	C-ISI-010	---
UT-11	N/A	6.00"	RPV STUD	D-4352-024	---
UT-12	2.635"	27.5"	SA 376 TP 316	C-ISI-20	D8770
UT-13	3.000"	Flat	SA 533 GR B	C-ISI-006	C5312-1
UT-14	7.000"	N/A	SA 508 CL 2	D-4352-041	218993
UT-15	6.937"	N/A	SA 508 CL 2	D-4352-039	218993
UT-16	No longer used				
UT-17	1.500"	26"	SA 155 KC 70	D-4352-030	202575

Block Number	Thickness	Diameter	Material	Drawing Number	Heat Number
UT-18	N/A	3.500"	RCP STUD	C-ISI-013	---
UT-19	N/A	5.375"	RCP NUT	D-4352-021	---
UT-20	.594"	14"	SA 106 GR B	C-ISI-002	---
UT-21	.875"	26"	SA 155 KC 70 CL1	E-ISI-003	---
UT-22	.750"	6"	---	E-ISI-004	R81221
UT-23	.437"	6"	SA 106 Gr B	C-ISI-002	23242
UT-24	No longer used				
UT-25	N/A	7.875"	RPV NUT	D-4352-025	---
UT-26	3.016"	27.5"	Sa 351 CF8M	C-4352-040	FB117-01
UT-27	1.0"	10"	SA 376 TP 316	C-ISI-023	J2009
UT-28	1.8"	8.750"	MANWAY BOLT	B-ISI-017	T05989
UT-29	.750"	18"	SA 106 GR B	LMT-106	L84404
UT-30	1.250"	14"	SA 376 TP 316	C-4174-023	E1473
UT-31	1.250"	14"	SA 132 TP 304	C-ISI-001	---
UT-32	No longer used				
UT-33	.375"	14"	SA 312 TP 304	LMT-101	V71515
UT-34	1.125"	12"	SA 376 TP 316	C-4174-025	51420
UT-35	.375"	12"	SA 312 TP 304	LMT-102	F81528

Block Number	Thickness	Diameter	Material	Drawing Number	Heat Number
UT-36	.330"	12"	SA 358 TP 304	D-4352-034	17493
UT-37	.280"	6"	SA 312 TP 304	D-4352-033	M2444
UT-38	.593"	10"	SA 106 GR B	LMT-107	N35898
UT-39	.365"	10"	SA 312 TP 304	D-4352-032	A29600
UT-40	1.160"	8.9"	SA 105	D-4352-036	225026
UT-41	.718"	8"	SA 376 TP 316	C-4174-024	J1424
UT-42	.718"	8"	SA 376 TP 304	LMT-104	M0194
UT-43	.322"	8"	SA 312 TP 304	LMT-103	8052226
UT-44	.438"	3"	SA 312 TP 316	C-4174-019	2P3278
UT-45	.438"	4"	SA 312 TP 316	C-4174-020	2P1941
UT-46	2.437"	29"	SA 376 TP 316	C-4174-026	D8770
UT-47	.300"	3"	SA 312 TP 304	LMT-105	05032
UT-48	N/A	4"	---	---	2P6396
UT-49	.875"	8"	SA 182 TP 304	C-ISI-002	0890-18-1-2
UT-50	1.000"	12"	SA 312 TP 304	C-ISI-001	---
UT-51	1.406"	14"	SA 106 GR B	-	---
UT-52	1.5"	Flat	SA 336	-	---
UT-53	0.438"	4.00"	SA 182 TP 316	-	1G4865

Block Number	Thickness	Diameter	Material	Drawing Number	Heat Number
UT-54	.344"	2"	SS	FSK-M-3077	---
UT-55	1.018	Flat	SS		RHR Heat Exchanger
N/A	N/A	N/A	CSCL	N/A	Steam Generator Mockup

Appendix A
Table A-1

Turkey Point Unit 3
Category B-F Weld Listing

Zone Number	Weld Identification	Summary Number	Code Item Number	Size
007	31"-RCS-1301-5	043800	B5.70	31"
008	29"-RCS-1304-1	044700	B5.10	29"
008	29"-RCS-1304-4	045100	B5.70	29"
009	27.5"-RCS-1307-14	046000	B5.10	27.5"
010	31"-RCS-1302-5	046200	B5.70	31"
011	29"-RCS-1305-1	047100	B5.10	29"
011	29"-RCS-1305-4	047700	B5.70	29"
012	27.5"-RCS-1306-14	048600	B5.10	27.5"
013	31"-RCS-1303-5	048800	B5.70	31"
014	29"-RCS-1308-1	049700	B5.10	29"
014	29"-RCS-1308-4	050200	B5.70	29"
015	27.5"-RCS-1309-14	051000	B5.10	27.5"
016	14"-RC-1302-8A	052500	B5.40	14"
017	4"-RC-1301-1A	052700	B5.40	4"
018	4"-RC-1302-1A	054100	B5.40	4"
019	4"-RC-1303-1A	055500	B5.40	4"
020	4"-RC-1304-1A	062100	B5.40	4"
022	4"-RC-1306-1A	068700	B5.40	4"

Appendix A
Table A-2

Turkey Point Unit 4
Category B-F Weld Listing

Zone Number	Weld Identification	Summary Number	Code Item Number	Size
007	31"-RCS-1401-5	055800	B5.70	31"
008	29"-RCS-1404-1	056600	B5.10	29"
008	29"-RCS-1404-4	056900	B5.70	29"
009	27.5"-RCS-1407-14	057500	B5.10	27.5"
010	31"-RCS-1402-5	057900	B5.70	31"
011	29"-RCS-1405-1	058700	B5.10	29"
011	29"-RCS-1405-4	059000	B5.70	29
012	27.5"-RCS-1406-14	059600	B5.10	27.5"
013	31"-RCS-1403-5	060100	B5.70	31"
014	29"-RCS-1408-1	060900	B5.10	29"
014	29"-RCS-1408-4	061200	B5.70	29"
015	27.5"-RCS-1409-14	061700	B5.10	27.5"
016	14"-RC-1401-8A	063200	B5.40	14"
017	4"-RC-1401-1A	063300	B5.40	4"
018	4"-RC-1402-1A	064400	B5.40	4"
019	4"-RC-1403-1A	065500	B5.40	4"
020	4"-RC-1404-31	069600	B5.40	4"
022	4"-RC-1406-1A	076600	B5.40	4"

Appendix B
Table B-1

Turkey Point Unit 3
Class 1 Pump Grouping Table

Zone Number	Pump Number	B-L-1 Weld ID	B-L-2 ID	B-G-1 Identification	Selected for Exams
056	RCP-A	3-RCP-A-A 3-RCP-A-B 3-RCP-A-C	3-RCP-A	3-RCP-FSA-1 - 24 3-RCP-FNA-1 - 24 3-RCP-FLA-1 - 24	See Notes Below
057	RCP-B	3-RCP-B-A 3-RCP-B-B 3-RCP-B-C	3-RCP-B	3-RCP-FSB-1 - 24 3-RCP-FNB-1 - 24 3-RCP-FLB-1 - 24	See Notes Below
058	RCP-C	3-RCP-C-A 3-RCP-C-B 3-RCP-C-C	3-RCP-C	3-RCP-FSC-1 - 24 3-RCP-FNC-1 - 24 3-RCP-FLC-1 - 24	See Notes Below

Notes:
B-L-1 - Exams limited to one pump per group per interval.
B-L-2 - Exam required only when pump is disassembled for repair, maintenance or volumetric examination.
B-G-1 - Examinations are limited to components selected for exam under B-L-2.

Code Case N-481
Alternative Examination Requirements for Cast Austenitic Pump Casings
Section XI, Division I

Inquiry: When conducting examination of cast austenitic pump casings in accordance with Section XI, Division I, what examinations may be performed in lieu of the volumetric examinations specified in Table IWB-2500-1, Examination Category B-L-1, Item B12.10?

Reply: It is the opinion of the Committee that the following requirements shall be met in lieu of performing the volumetric examination specified in Table IWB-2500-1, Examination Category B-L-1, Item B12.10:

(a) Perform a VT-2 visual examination of the exterior of all pumps during the System Leakage test required by Table IWB-2500-1, Category B-P, and Code Case N-498.

(b) Perform a VT-1 visual examination of the external surfaces of the welds of one pump casing.

(c) Perform a VT-1 visual examination of the internal surfaces whenever a pump is disassembled for maintenance.

(d) Perform an evaluation to demonstrate the safety and serviceability of the pump casing. The evaluation shall include the following:
   (1) evaluating material properties, including fracture toughness values;
   (2) performing a stress analysis of the pump casing;
   (3) reviewing the operating history of the pump;
   (4) selecting locations for postulating flaws;
   (5) postulating one-quarter thickness reference flaw with a length six times its depth;
   (6) establishing the stability of the selected flaw under the governing stress conditions;
   (7) considering thermal aging embrittlement and any other processes that may degrade the properties of the pump casing during service.

(e) A report of this evaluation shall be submitted to the regulatory and enforcement authorities having jurisdiction at the plant site for review.

Appendix B
Table B-2

Turkey Point Unit 3
Class 1 Valve Grouping Table

Group Number	Zone Number	Valve Number	Type	Size	B-M-2 Summary Number	B-G-2 Summary Number	Selected for Exam
1	036	MOV-3-750	Gate Isol	14"	121900	122000	See Notes Below
	036	MOV-3-751	Gate Isol	14"	122900	123000	
2	037	3-875A	Check	10"	124900	125000	See Notes Below
	038	3-875B	Check	10"	126900	127000	
	039	3-875C	Check	10"	134000	134100	
	037	3-875D	Check	10"	123200	123300	
	038	3-875E	Check	10"	128600	128700	
	039	3-875F	Check	10"	131700	131800	
3	037	3-876A	Check	8"	126300	126400	See Notes Below
	038	3-876B	Check	8"	128800	128900	
	039	3-876C	Check	8"	130600	130700	
	038	3-876D	Check	8"	129500	129600	
	039	3-876E	Check	8"	130000	130100	

Notes:

B-M-2 - Examination is required only when a valve is disassembled for maintenance or repair (one valve per group per interval).

B-G-2 - For bolting, examinations are limited to valves selected for examination under Category B-M-2.

Appendix B
Table B-3

Turkey Point 4
Class 1 Pump Grouping Table

Zone Number	Pump Number	B-L-1 Weld ID	B-L-2 ID	B-G-1 Identification	Selected for Exams
056	RCP-A	4-RCP-A-A 4-RCP-A-B 4-RCP-A-C	4-RCP-A	4-RCP-FSA-1-24 4-RCP-FNA-1-24 4-RCP-FLA-1-24	See Notes Below
057	RCP-B	4-RCP-B-A 4-RCP-B-B 4-RCP-B-C	4-RCP-B	4-RCP-FSB-1-24 4-RCP-FNB-1-24 4-RCP-FLB-1-24	See Notes Below
058	RCP-C	4-RCP-C-A 4-RCP-C-B 4-RCP-C-C	4-RCP-C	4-RCP-FSC-1-24 4-RCP-FNC-1-24 4-RCP-FLC-1-24	See Notes Below

Notes: B-L-1 - Exams limited to 1 pump per group per interval.
B-L-2 - Exams required only when pump is disassembled for repair, maintenance or volumetric examination.
B-G-1 - Examinations are limited to components selected for exams under B-L-2.

Code Case N-481
Alternative Examination Requirements for
Cast Austenitic Pump Casings
Section XI, Division I

Inquiry: When conducting examination of cast austenitic pump casings in accordance with Section XI, Division I, what examinations may be performed in lieu of the volumetric examinations specified in Table IWB-2500-1, Examination Category B-L-1, Item B12.10?

Reply: It is the opinion of the Committee that the following requirements shall be met in lieu of performing the volumetric examinations specified in Table IWB-2500-1, Examination Category B-L-1, Item B12.10:

(a) Perform a VT-2 visual examination of the exterior of all pumps during the System Leakage test required by Table IWB-2500-1, Category B-P and Code Case N-498.

(b) Perform a VT-1 visual examination of the external surfaces of the weld on one casing.

(c) Perform a VT-1 visual examination of the internal surfaces whenever a pump is disassembled for maintenance.

(d) Perform an evaluation to demonstrate the safety and serviceability of the pump casing. The evaluation shall include the following:
   (1) evaluating material properties, including fracture toughness values;
   (2) performing a stress analysis of the pump casing;
   (3) reviewing the operating history of the pump;
   (4) selecting locations for postulating flaws;
   (5) postulating one-quarter thickness reference flaw with a length six times its depth;
   (6) establishing the stability of the selected flaw under the governing stress conditions;
   (7) considering thermal aging embrittlement and any other processes that may degrade the properties of the pump casing during service.

(e) A report of this evaluation shall be submitted to the regulatory and enforcement authorities having jurisdiction at the plant site for review.

Appendix B
Table B-4

Turkey Point 4
Valve Grouping Table

Group Number	Zone Number	Valve Number	Type	Size	B-M-2 Summary Number	B-G-2 Summary Number	Selected for Exam
1	036	MOV-4-750	Gate	14"	115300	115400	See Notes Below
	036	MOV-4-751	Gate	14"	116600	116700	
2	037	4-875A	Check	10"	120100	120200	See Notes Below
	038	4-875B	Check	10"	122800	122900	
	039	4-875C	Check	10"	126800	126900	
	037	4-875D	Check	10"	118600	118700	
	038	4-875E	Check	10"	121300	121400	
	039	4-875F	Check	10"	125300	125400	
3	037	4-876A	Check	8"	117100	117200	See Notes Below
	038	4-876B	Check	8"	123400	123500	
	039	4-876C	Check	8"	124700	124800	
	038	4-876D	Check	8"	124000	124100	
	037	4-876E	Check	8"	117800	117900	

Notes:

B-M-2 - Examination is required only when a valve is disassembled for maintenance or repair (one valve per group per interval).

B-G-2 - For valves, examinations are limited to valves selected for examination under B-M-2.

Appendix C
Table C-1

Turkey Point Unit 3
B-J Piping Welds Summary

Zone	Sys.	B9.11	B9.12	B9.21	B9.31	B9.32	B9.40
007	RCS	5	0	2	0	2	0
008	RCS	2	0	0	0	1	0
009	RCS	3	0	0	1	2	2
010	RCS	5	0	2	0	2	0
011	RCS	2	0	0	1	1	0
012	RCS	3	0	0	2	2	2
013	RCS	5	0	2	0	2	0
014	RCS	2	0	0	1	1	0
015	RCS	2	0	0	2	1	2
016	RCS	5	0	0	0	0	0
017	RCS	10	0	0	0	0	0
018	RCS	10	0	0	0	0	0
019	RCS	10	0	0	0	0	0
020	RCS	29	0	0	0	1	0
021	RCS	24	0	0	0	0	0
022	RCS	9	0	11	0	0	0
026	RCS	0	0	0	0	0	8
027	RCS	0	0	0	0	0	6
028	RCS	0	0	0	0	0	6
035	RCS	0	0	0	0	0	40
036	RHR	11	0	0	0	0	0
037	RHR	21	0	0	0	1	0
038	RHR	24	0	0	0	1	0
039	RHR	28	4	0	0	1	0

Appendix C
Table C-1

Turkey Point Unit 3
B-J Piping Welds Summary

Zone	Sys.	B9.11	B9.12	B9.21	B9.31	B9.32	B9.40
040	HPSI	0	0	0	0	0	34
041	HPSI	0	0	0	0	0	29
042	HPSI	0	0	0	0	0	29
043	HPSI	0	0	0	0	0	36
044	HPSI	0	0	0	0	0	37
045	CVCS	0	0	45	0	0	0
046	CVCS	0	0	29	0	0	0
047	CVCS	0	0	22	0	0	0
048	CVCS	0	0	0	0	0	18
049	CVCS	0	0	0	0	0	45
050	CVCS	0	0	0	0	0	30
051	CVCS	0	0	0	0	0	37
052	CVCS	0	0	0	0	0	29
059	CVCS	0	0	8	0	0	0
	Totals	210	4	121	7	18	390

Appendix C
Table C-2

Turkey Point Unit 3
Class 1 Non-Exempt B-J Piping Welds
by Code Item Number and Size

Size	B9.11		B9.12		B9.21		B9.31		B9.32		B9.40	
	Tot	Sch	Tot	Sch	Tot	Sch	Tot	Sch	Tot	Sch	Tot	Sch
31"	15	5	0	0	0	0	0	0	0	0	0	0
29"	6	3	0	0	0	0	0	0	0	0	0	0
27.5"	8	5	0	0	0	0	0	0	0	0	0	0
14"	12	4	0	0	0	0	2	1	0	0	0	0
12"	4	2	0	0	0	0	0	0	0	0	0	0
10"	52	17	4	4	0	0	3	2	0	0	0	0
8"	21	7	0	0	0	0	0	0	0	0	0	0
4"	92	26	0	0	0	0	2	0	0	0	0	0
3"	0	0	0	0	121	21	0	0	5	1	0	0
2"	0	0	0	0	0	0	0	0	13	8	380	84
1.5"	0	0	0	0	0	0	0	0	0	0	10	4
Total	210	69	4	4	121	21	7	3	18	9	390	88

Totals (not including B9.12, longitudinal seams)

B-J welds - 746
Scheduled - 190

% scheduled - 190/746 = 25.5%

Appendix C
Table C-3

Turkey Point Unit 3
Category B-J Welds Selected for Examination

Zone Number	Weld Identification	Code Item	Size	Examined During Second Interval	Third Interval Selection Criteria
007	31"-RCS-1301-BC-1	B9.32	2"	Yes	25%
	31"-RCS-1301-10	B9.11	31"	Yes	TE
008	29"-RCS-1304-2	B9.11	29"	Yes	25%
	29"-RCS-1304-BC-2	B9.32	2"	Yes	25%
009	27.5"-RCS-1307-11	B9.11	27.5"	Yes	TE
	27.5"-RCS-1307-BC-1	B9.32	2"	Yes	25%
	27.5"-RCS-1307-12	B9.11	27.5"	Yes	25%
	27.5"-RCS-1307-BC-2	B9.31	10"	Yes	25%
	27.5"-RCS-1307-BC-3	B9.32	3"	Yes	25%
010	31"-RCS-1302-8	B9.11	31"	Yes	25%
	31"-RCS-1302-BC-1	B9.32	2"	Yes	25%
	31"-RCS-1302-10	B9.11	31"	Yes	TE
011	29"-RCS-1305-2	B9.11	29"	Yes	25%
	29"-RCS-1305-BC-3	B9.31	14"	Yes	25%
	29"-RCS-1305-3	B9.11	29"	Yes	25%
012	27.5"-RCS-1306-11	B9.11	27.5"	Yes	TE
	27.5"-RCS-1306-BC-1	B9.32	2"	Yes	HS
	27.5"-RCS-1306-BC-3	B9.32	2"	Yes	25%
	27.5"-RCS-1306-12	B9.11	27.5"	Yes	25%
	27.5"-RCS-1306-BC-4	B9.31	10"	Yes	25%
013	31"-RCS-1303-7	B9.11	31"	Yes	25%
	31"-RCS-1303-10	B9.11	31"	No	TE
015	27.5"-RCS-1309-11	B9.11	27.5"	No	TE
016	14"-RC-1302-1A	B9.11	14"	No	TE
	12"-RC-1301-1	B9.11	12"	Yes	25%
	12"-RC-1301-8	B9.11	12"	Yes	25%
017	4"-RC-1301-1	B9.11	4"	Yes	TE
	4"-RC-1301-7	B9.11	4"	Yes	25%

TE - Terminal End
HS - High Stress
25 - 25% Additional Welds
LS - Longitudinal Weld

Appendix C
Table C-3

Turkey Point Unit 3
Category B-J Welds Selected for Examination

Zone Number	Weld Identification	Code Item	Size	Examined During Second Interval	Third Interval Selection Criteria
018	4"-RC-1302-1	B9.11	4"	Yes	TE
	4"-RC-1302-4	B9.11	4"	Yes	25%
019	4"-RC-1303-1	B9.11	4"	Yes	TE
	4"-RC-1303-5	B9.11	4"	Yes	25%
	4"-RC-1303-7	B9.11	4"	Yes	25%
020	4"-RC-1304-1	B9.11	4"	Yes	TE
	4"-RC-1304-2	B9.11	4"	Yes	25%
	4"-RC-1304-9	B9.11	4"	Yes	25%
	4"-RC-1304-FW10	B9.11	4"	Yes	25%
	4"-RC-1304-FW18	B9.11	4"	Yes	25%
	4"-RC-1304-FW20	B9.11	4"	Yes	25%
	4"-RC-1304-21	B9.32	2"	No	HS
	4-RC-1304-22	B9.11	4"	Yes	25%
	4"-RC-1304-23	B9.11	4"	Yes	25%
	4"-RC-1304-26	B9.11	4"	Yes	TE
021	4"-RC-1305-1	B9.11	4"	Yes	TE
	4"-RC-1305-2	B9.11	4"	Yes	25%
	4"-RC-1305-7	B9.11	4"	Yes	25%
	4"-RC-1305-8	B9.11	4"	Yes	25%
	4"-RC-1305-13	B9.11	4"	Yes	25%
	4"-RC-1305-19	B9.11	4"	Yes	HS
022	4"-RC-1306-1	B9.11	4"	Yes	TE
	4"-RC-1306-3	B9.11	4"	Yes	25%
	4"-RC-1306-4	B9.11	4"	Yes	25%
	4"-RC-1306-7	B9.11	4"	Yes	25%
	3"-RC-1304-1	B9.21	3"	Yes	25%
	3"-RC-1305-3	B9.21	3"	Yes	25%
026	2"-RC-1301-1	B9.40	2"	Yes	TE
	2"-RC-1301-2	B9.40	2"	Yes	25%

TE - Terminal End
HS - High Stress
25 - 25% Additional Welds
LS - Longitudinal Weld

Appendix C
Table C-3

Turkey Point Unit 3
Category B-J Welds Selected for Examination

Zone Number	Weld Identification	Code Item	Size	Examined During Second Interval	Third Interval Selection Criteria
027	2"-RC-1302-1	B9.40	2"	Yes	TE
	2"-RC-1302-5	B9.40	2"	Yes	25%
028	2"-RC-1303-1	B9.40	2"	Yes	TE
	2"-RC-1303-5	B9.40	2"	Yes	TE
035	2"-RC-1310-1	B9.40	2"	Yes	HS & TE
	2"-RC-1310-2	B9.40	2"	Yes	HS
	2"-RC-1310-3	B9.40	2"	Yes	HS
	2"-RC-1310-4	B9.40	2"	Yes	25%
	2"-RC-1310-11	B9.40	2"	Yes	25%
	2"-RC-1310-16	B9.40	2"	Yes	25%
	2"-RC-1310-31	B9.40	2"	Yes	25%
036	14"-RHR-1301-1	B9.11	14"	No	TE
	14"-RHR-1301-6	B9.11	14"	Yes	25%
	14"-RHR-1301-9	B9.11	14"	Yes	25%
037	10"-SI-1301-1	B9.11	10"	No	TE
	10"-SI-1301-2	B9.11	10"	Yes	25%
	10"-SI-1301-22-BC	B9.32	2"	Yes	25%
	10"-SI-1301-17	B9.11	10"	Yes	25%
	10"-SI-1301-18	B9.11	10"	Yes	25%
	10"-SI-1301-20	B9.11	10"	Yes	25%
	10"-SI-1301-21	B9.11	10"	Yes	25%
	8"-RHR-1301-1	B9.11	8"	Yes	TE
	8"-RHR-1301-3	B9.11	8"	Yes	TE
038	10"-SI-1302-1	B9.11	10"	Yes	TE
	10"-SI-1302-4	B9.11	10"	Yes	25%
	10"-SI-1302-5	B9.11	10"	Yes	25%
	10"-SI-1302-14	B9.11	10"	Yes	25%
	8"-RHR-1302-1	B9.11	8"	Yes	TE
	8"-RHR-1302-2	B9.11	8"	Yes	25%

TE - Terminal End
HS - High Stress
25 - 25% Additional Welds
LS - Longitudinal Weld

Appendix C
Table C-3

Turkey Point Unit 3
Category B-J Welds Selected for Examination

Zone Number	Weld Identification	Code Item	Size	Examined During Second Interval	Third Interval Selection Criteria
039	8"-RHR-1305-2A	B9.11	8"	Yes	25%
	8"-RHR-1305-3	B9.11	8"	Yes	25%
	8"-RHR-1304-8	B9.11	8"	Yes	25%
	10"-RHR-1303-16	B9.11	10"	Yes	25%
	10"-RHR-1303-5	B9.11	10"	Yes	25%
	10"-RHR-1303-8	B9.11	10"	Yes	25%
	10"-RHR-1303-8-LS1	B9.12	10"	Yes	LS
	10"-RHR-1303-8-LS2	B9.12	10"	Yes	LS
	10"-RHR-1303-10-LS1	B9.12	10"	Yes	LS
	10"-RHR-1303-10-LS2	B9.12	10"	Yes	LS
	10"-RHR-1303-FW-11	B9.11	10"	Yes	TE
	10"-RHR-1303-FW13	B9.11	10"	Yes	25%
	10"-RHR-1303-FW14	B9.11	10"	Yes	25%
	10"-RHR-1303-FW15	B9.11	10"	Yes	TE
040	2"-SI-1301-1	B9.40	2"	Yes	TE
	2"-SI-1301-2	B9.40	2"	Yes	25%
	2"-SI-1301-3	B9.40	2"	Yes	25%
	2"-SI-1301-4	B9.40	2"	Yes	25%
	2"-SI-1301-5	B9.40	2"	Yes	25%
	2"-SI-1301-16	B9.40	2"	Yes	25%
	2"-SI-1301-25	B9.40	2"	Yes	25%
	2"-SI-1301-26	B9.40	2"	Yes	25%
041	2"-SI-1302-2	B9.40	2"	Yes	25%
	2"-SI-1302-6	B9.40	2"	Yes	25%
	2"-SI-1302-7	B9.40	2"	Yes	25%
	2"-SI-1302-14	B9.40	2"	Yes	25%
	2"-SI-1302-22	B9.40	2"	Yes	25%
	2"-SI-1302-26	B9.40	2"	Yes	25%
	2"-SI-1302-28	B9.40	2"	Yes	25%

TE - Terminal End
HS - High Stress
25 - 25% Additional Welds
LS - Longitudinal Weld

Appendix C
Table C-3

Turkey Point Unit 3
Category B-J Welds Selected for Examination

Zone Number	Weld Identification	Code Item	Size	Examined During Second Interval	Third Interval Selection Criteria
042	2"-SI-1303-1	B9.40	2"	Yes	25%
	2"-SI-1303-2	B9.40	2"	Yes	25%
	2"-SI-1303-6	B9.40	2"	Yes	25%
	2"-SI-1303-7	B9.40	2"	Yes	25%
	2"-SI-1303-8	B9.40	2"	Yes	25%
	2"-SI-1303-10	B9.40	2"	Yes	25%
	2"-SI-1303-21	B9.40	2"	Yes	25%
	2"-SI-1303-26	B9.40	2"	Yes	25%
043	2"-SI-1305-4	B9.40	2"	Yes	25%
	2"-SI-1305-5	B9.40	2"	Yes	25%
	2"-SI-1305-6	B9.40	2"	Yes	25%
	2"-SI-1305-7	B9.40	2"	Yes	25%
	2"-SI-1305-8	B9.40	2"	Yes	25%
	2"-SI-1305-9	B9.40	2"	Yes	25%
	2"-SI-1305-21	B9.40	2"	Yes	25%
	2"-SI-1305-22	B9.40	2"	Yes	25%
	2"-SI-1305-23	B9.40	2"	Yes	25%
	2"-SI-1305-24	B9.40	2"	Yes	25%
	2"-SI-1305-25	B9.40	2"	Yes	25%
	2"-SI-1305-27	B9.40	2"	Yes	25%
	2"-SI-1305-28	B9.40	2"	Yes	25%
	2"-SI-1305-29	B9.40	2"	Yes	25%
044	2"-SI-1306-6	B9.40	2"	Yes	25%
	2"-SI-1306-26	B9.40	2"	Yes	25%
	2"-SI-1306-31	B9.40	2"	Yes	25%
	2"-SI-1306-34	B9.40	2"	Yes	25%

TE - Terminal End
HS - High Stress
25 - 25% Additional Welds
LS - Longitudinal Weld

Appendix C
Table C-3

Turkey Point Unit 3
Category B-J Welds Selected for Examination

Zone Number	Weld Identification	Code Item	Size	Examined During Second Interval	Third Interval Selection Criteria
045	3"-CH-1301-9	B9.21	3"	Yes	25%
	3"-CH-1301-15	B9.21	3"	Yes	HS
	3"-CH-1301-16	B9.21	3"	Yes	HS
	3"-CH-1301-18	B9.21	3"	Yes	HS
	3"-CH-1301-28	B9.21	3"	Yes	HS
	3"-CH-1301-41	B9.21	3"	Yes	TE
	3"-CH-1301-42	B9.21	3"	Yes	25%
	3"-CH-1301-43	B9.21	3"	Yes	25%
	3"-CH-1301-44	B9.21	3"	Yes	25%
	3"-CH-1301-45	B9.21	3"	Yes	TE
046	3"-CH-1302-2	B9.21	3"	Yes	HS
	3"-CH-1302-23	B9.21	3"	Yes	25%
	3"-CH-1302-24	B9.21	3"	Yes	25%
	3"-CH-1302-29	B9.21	3"	Yes	25%
047	3"-CH-1303-1	B9.21	3"	Yes	TE
	3"-CH-1303-4	B9.21	3"	Yes	25%
	3"-CH-1303-9	B9.21	3"	Yes	25%
	3"-CH-1303-10	B9.21	3"	Yes	25%
	3"-CH-1303-23	B9.21	3"	Yes	TE
048	2"-CH-1301-1	B9.40	2"	Yes	TE
	2"-CH-1301-2	B9.40	2"	Yes	25%
	2"-CH-1301-3	B9.40	2"	Yes	25%
	2"-CH-1301-4	B9.40	2"	Yes	25%
	2"-CH-1301-5	B9.40	2"	Yes	25%
	2"-CH-1301-6	B9.40	2"	Yes	TE
	2"-CH-1301-7	B9.40	2"	Yes	TE
	2"-CH-1301-18	B9.40	2"	Yes	TE

TE - Terminal End
HS - High Stress
25 - 25% Additional Welds
LS - Longitudinal Weld

Appendix C
Table C-3

Turkey Point Unit 3
Category B-J Welds Selected for Examination

Zone Number	Weld Identification	Code Item	Size	Examined During Second Interval	Third Interval Selection Criteria
049	2"-CH-1302-1	B9.40	2"	Yes	TE
	2"-CH-1302-10	B9.40	2"	Yes	25%
	2"-CH-1302-11	B9.40	2"	Yes	25%
	2"-CH-1302-14	B9.40	2"	Yes	25%
	2"-CH-1302-28	B9.40	2"	Yes	25%
	2"-CH-1302-29	B9.40	2"	Yes	25%
	2"-CH-1302-34	B9.40	2"	Yes	25%
	2"-CH-1302-35	B9.40	2"	Yes	25%
050	1.5"-CH-1301-1	B9.40	1.5"	No	TE
	1.5"-CH-1301-2	B9.40	1.5"	Yes	25%
	2"-CH-1303-1	B9.40	2"	Yes	25%
	2"-CH-1303-2	B9.40	2"	Yes	25%
	2"-CH-1303-3	B9.40	2"	Yes	25%
	2"-CH-1303-5	B9.40	2"	Yes	25%
	2"-CH-1303-6	B9.40	2"	Yes	25%
051	1.5"-CH-1302-4	B9.40	1.5"	No	TE
	2"-CH-1304-2	B9.40	2"	Yes	25%
	2"-CH-1304-3	B9.40	2"	Yes	25%
	2"-CH-1304-4	B9.40	2"	Yes	25%
	2"-CH-1304-5	B9.40	2"	Yes	25%
	2"-CH-1304-6	B9.40	2"	Yes	25%
052	1.5"-CH-1303-4	B9.40	1.5"	No	TE
	2"-CH-1305-1	B9.40	2"	Yes	25%
	2"-CH-1305-2	B9.40	2"	Yes	25%
	2"-CH-1305-3	B9.40	2"	Yes	25%
	2"-CH-1305-4	B9.40	2"	Yes	25%

TE - Terminal End
HS - High Stress

25 - 25% Additional Welds
LS - Longitudinal Weld

Appendix C
Table C-4

Turkey Point Unit 4
B-J Piping Weld Summary

Zone	Sys.	B9.11	B9.12	B9.21	B9.31	B9.32	B9.40
007	RCS	5	0	2	0	2	0
008	RCS	2	0	0	1	1	0
009	RCS	3	0	0	1	2	2
010	RCS	5	0	2	0	2	0
011	RCS	2	0	0	1	1	0
012	RCS	3	0	0	2	2	2
013	RCS	5	0	2	0	2	0
014	RCS	2	0	0	0	1	0
015	RCS	3	0	0	2	1	2
016	RCS	9	0	0	0	0	0
017	RCS	9	0	0	0	0	0
018	RCS	9	0	0	0	0	0
019	RCS	9	0	0	0	0	0
020	RCS	30	0	0	0	0	0
021	RCS	27	0	0	0	0	0
022	RCS	9	0	9	0	0	0
026	RCS	0	0	0	0	0	9
027	RCS	0	0	0	0	0	6
028	RCS	0	0	0	0	0	6
035	RCS	0	0	4	0	0	30
036	RHR	16	0	0	0	0	0
037	RHR	30	0	0	0	1	0
038	RHR	24	0	0	0	1	0
039	RHR	19	0	0	0	0	0

Appendix C
Table C-4

Turkey Point Unit 4
B-J Piping Weld Summary

Zone	Sys.	B9.11	B9.12	B9.21	B9.31	B9.32	B9.40
040	HPSI	0	0	0	0	0	34
041	HPSI	0	0	0	0	0	38
042	HPSI	0	0	0	0	0	25
043	HPSI	0	0	0	0	0	38
044	HPSI	0	0	0	0	0	45
045	CVCS	0	0	38	0	0	0
046	CVCS	0	0	45	0	0	0
047	CVCS	0	0	24	0	0	0
048	CVCS	0	0	2	0	0	16
049	CVCS	0	0	1	0	0	29
050	CVCS	0	0	0	0	0	35
051	CVCS	0	0	1	0	0	39
052	CVCS	0	0	0	0	0	43
059	CVCS	0	0	8	0	0	0
	Totals	221	0	138	7	16	399

Appendix C
Table C-5

Turkey Point Unit 4
Class 1 Non-Exempt B-J Piping Welds
by Code Item Number and Size

Size	B9.11		B9.12		B9.21		B9.31		B9.32		B9.40	
	Tot	Sch	Tot	Sch	Tot	Sch	Tot	Sch	Tot	Sch	Tot	Sch
31"	15	6	0	0	0	0	0	0	0	0	0	0
29"	6	1	0	0	0	0	0	0	0	0	0	0
27.5"	9	5	0	0	0	0	0	0	0	0	0	0
14"	17	8	0	0	0	0	2	0	0	0	0	0
12"	8	4	0	0	0	0	0	0	0	0	0	0
10"	55	17	0	0	0	0	3	3	0	0	0	0
8"	21	6	0	0	0	0	0	0	0	0	0	0
4"	93	25	0	0	0	0	2	1	0	0	0	0
3"	0	0	0	0	157	35	0	0	7	0	0	0
2"	0	0	0	0	11	3	0	0	21	8	391	98
1.5"	0	0	0	0	0	0	0	0	0	0	8	3
Total	224	72	0	0	168	38	7	4	28	8	399	101

Totals (not including B9.12, longitudinal seams)

B-J welds - 782
Scheduled - 222

% scheduled - 222/782 = 28.4%

Appendix C
Table C-6

Turkey Point Unit 4
Category B-J Welds Selected for Examination

Zone Number	Weld	Code Item	Size	Examined During Second Interval	Third Interval Selection Criteria
007	31"-RCS-1401-8	B9.11	31"	Yes	25%
	31"-RCS-1401-10	B9.11	31"	No	TE
	31"-RCS-1401-16	B9.32	2"	Yes	TE
	31"-RCS-1401-23	B9.21	3"	Yes	25%
008	29"-RCS-1404-2	B9.11	29"	Yes	25%
	29"-RCS-1404-17	B9.32	2"	No	HS
009	27.5"-RCS-1407-11	B9.11	27.5"	No	TE
	27.5"-RCS-1407-12	B9.11	27.5"	Yes	25%
	27.5"-RCS-1407-20	B9.31	10"	Yes	25%
	27.5"-RCS-1407-25	B9.40	2"	Yes	25%
010	31"-RCS-1402-6	B9.11	31"	Yes	25%
	31"-RCS-1402-10	B9.11	31"	Yes	TE
	31"-RCS-1402-19	B9.32	2"	Yes	25%
	31"-RCS-1402-23	B9.21	3"	Yes	25%
	31"-RCS-1402-24	B9.21	3"	Yes	25%
012	27.5"-RCS-1406-11	B9.11	27.5"	No	TE
	27.5"-RCS-1406-BC-17	B9.32	2"	Yes	25%
	27.5"-RCS-1406-18	B9.31	10"	Yes	25%
	27.5"-RCS-1406-26	B9.40	2"	Yes	25%
013	31"-RCS-1403-8	B9.11	31"	Yes	25%
	31"-RCS-1403-10	B9.11	31"	No	TE
	31"-RCS-1403-24	B9.21	3"	Yes	25%
015	27.5"-RCS-1409-11	B9.11	27.5"	Yes	TE
	27.5"-RCS-1409-12	B9.11	27.5"	Yes	25%
	27.5"-RCS-1409-15	B9.32	2"	Yes	25%
	27.5"-RCS-1409-BC-16	B9.31	4"	Yes	25%
	27.5"-RCS-1409-BC-17	B9.31	10"	Yes	25%
	27.5"-RCS-1409-22	B9.40	2"	Yes	25%

HS - High Stress Weld
25 - 25% Additional Welds
TE - Terminal End Weld
SD - Structural Discontinuity

Appendix C
Table C-6

Turkey Point Unit 4
Category B-J Welds Selected for Examination

Zone Number	Weld	Code Item	Size	Examined During Second Interval	Third Interval Selection Criteria
016	14"-RC-1401-1A	B9.11	14"	No	TE
	12"-RC-1401-1	B9.11	12"	Yes	25%
	12"-RC-1401-2	B9.11	12"	Yes	25%
	12"-RC-1401-3	B9.11	12"	Yes	25%
	12"-RC-1401-4	B9.11	12"	Yes	25%
017	4"-RC-1401-5	B9.11	4"	Yes	25%
	4"-RC-1401-9	B9.11	4"	Yes	25%
018	4"-RC-1402-2	B9.11	4"	Yes	25%
	4"-RC-1402-5	B9.11	4"	Yes	25%
019	4"-RC-1403-2	B9.11	4"	Yes	25%
	4"-RC-1403-5	B9.11	4"	Yes	25%
020	4"-RC-1404-1	B9.11	4"	Yes	25%
	4"-RC-1404-4	B9.11	4"	Yes	25%
	4"-RC-1404-10	B9.11	4"	Yes	25%
	4"-RC-1404-FW-12	B9.11	4"	Yes	25%
	4"-RC-1404-FW-14	B9.11	4"	Yes	25%
	4"-RC-1404-19	B9.11	4"	Yes	25%
	4"-RC-1404-22	B9.11	4"	Yes	25%
	4"-RC-1404-28	B9.11	4"	Yes	25%
021	4"-RC-1405-1	B9.11	4"	Yes	25%
	4"-RC-1404-3	B9.11	4"	Yes	25%
	4"-RC-1404-4	B9.11	4"	Yes	25%
	4"-RC-1404-FW-11	B9.11	4"	Yes	25%
	4"-RC-1404-FW-15	B9.11	4"	Yes	25%
	4"-RC-1404-17	B9.11	4"	Yes	25%
	4"-Rc-1404-21	B9.11	4"	Yes	25%
	4"-RC-1404-27	B9.11	4"	Yes	25%

HS - High Stress Weld
25 - 25% Additional Welds
TE - Terminal End Weld
SD - Structural Discontinuity

Appendix C
Table C-6

Turkey Point Unit 4
Category B-J Welds Selected for Examination

Zone Number	Weld	Code Item	Size	Examined During Second Interval	Third Interval Selection Criteria
022	4"-RC-1406-1	B9.11	4"	Yes	25%
	4"-RC-1406-8	B9.11	4"	Yes	25%
	4"-RC-1406-9	B9.11	4"	Yes	HS
	3"-RC-1404-1	B9.21	3"	Yes	HS
	3"-RC-1405-4	B9.21	3"	Yes	25%
	3"-RC-1405-5	B9.21	3"	Yes	25%
026	2"-RC-1401-3	B9.40	2"	Yes	25%
	2"-RC-1401-5	B9.40	2"	Yes	25%
027	2"-RC-1402-1	B9.40	2"	Yes	25%
028	2"-RC-1403-1	B9.40	2"	Yes	25%
	2"-RC-1403-3	B9.40	2"	Yes	25%
	2"-RC-1403-4	B9.40	2"	Yes	25%
	2"-RC-1403-5	B9.40	2"	Yes	25%
035	2"-RC-1410-7	B9.40	2"	Yes	25%
	2"-RC-1410-24	B9.40	2"	Yes	25%
	2"-RC-1410-25	B9.40	2"	Yes	25%
	2"-RC-1410-33	B9.40	2"	Yes	25%
	2"-RC-1410-34	B9.40	2"	Yes	25%
036	14"-RHR-1401-1	B9.11	14"	Yes	TE
	14"-RHR-1401-5	B9.11	14"	Yes	25%
	14"-RHR-1401-6	B9.11	14"	Yes	25%
	14"-RHR-1401-7	B9.11	14"	Yes	25%
	14"-RHR-1401-9	B9.11	14"	Yes	25%
	14"-RHR-1401-13	B9.11	14"	Yes	25%
	14"-RHR-1401-16	B9.11	14"	Yes	25%

HS - High Stress Weld
25 - 25% Additional Welds
TE - Terminal End Weld
SD - Structural Discontinuity

Appendix C
Table C-6

Turkey Point Unit 4
Category B-J Welds Selected for Examination

Zone Number	Weld	Code Item	Size	Examined During Second Interval	Third Interval Selection Criteria
037	8"-RHR-1401-3	B9.11	8"	Yes	25%
	8"-RHR-1401-6	B9.11	8"	Yes	25%
	8"-RHR-1401-10	B9.11	8"	Yes	25%
	10"-RHR-1401-5	B9.11	10"	Yes	25%
	10"-RHR-1401-11	B9.11	10"	Yes	25%
	10"-RHR-1401-12-BC	B9.32	2"	Yes	HS
	10"-RHR-1401-14	B9.11	10"	Yes	25%
	10"-RHR-1401-17A	B9.11	10"	Yes	25%
	10"-RHR-1401-18	B9.11	10"	Yes	TE
038	10"-SI-1402-1	B9.11	10"	Yes	25%
	10"-SI-1402-4	B9.11	10"	Yes	25%
	10"-SI-1402-8	B9.11	10"	Yes	25%
	10"-SI-1402-BC-12	B9.32	2"	Yes	25%
	10"-SI-1402-13	B9.11	10"	Yes	25%
	10"-SI-1402-17	B9.11	10"	Yes	TE
	8"-RHR-1402-4	B9.11	8"	Yes	25%
	8"-RHR-1402-7	B9.11	8"	Yes	25%
039	8"-RHR-1404-2	B9.11	8"	Yes	25%
	10"-SI-1403-1	B9.11	10"	Yes	25%
	10"-SI-1403-4	B9.11	10"	Yes	25%
	10"-SI-1403-6	B9.11	10"	Yes	25%
	10"-SI-1403-8	B9.11	10"	Yes	25%
	10"-SI-1403-12-BC	B9.32	2"	No	HS
	10"-SI-1403-14	B9.11	10"	Yes	25%
	10"-SI-1403-15	B9.11	10"	Yes	25%
	10"-SI-1403-17	B9.11	10"	Yes	TE

HS - High Stress Weld
25 - 25% Additional Welds
TE - Terminal End Weld
SD - Structural Discontinuity

Appendix C
Table C-6

Turkey Point Unit 4
Category B-J Welds Selected for Examination

Zone Number	Weld	Code Item	Size	Examined During Second Interval	Third Interval Selection Criteria
040	2"-SI-1401-3	B9.40	2"	Yes	25%
	2"-SI-1401-6	B9.40	2"	Yes	25%
	2"-SI-1401-14	B9.40	2"	Yes	25%
	2"-SI-1401-22	B9.40	2"	Yes	25%
	2"-SI-1401-25	B9.40	2"	Yes	25%
	2"-SI-1401-26	B9.40	2"	Yes	25%
	2"-SI-1401-30	B9.40	2"	Yes	25%
	2"-SI-1401-31	B9.40	2"	No	HS & TE
041	2"-SI-1402-8	B9.40	2"	Yes	25%
	2"-SI-1402-11	B9.40	2"	Yes	25%
	2"-SI-1402-20	B9.40	2"	Yes	25%
	2"-SI-1402-29	B9.40	2"	Yes	25%
	2"-SI-1402-32	B9.40	2"	Yes	25%
	2"-SI-1402-35	B9.40	2"	Yes	25%
	2"-SI-1402-37	B9.40	2"	Yes	TE
042	2"-SI-1403-2	B9.40	2"	Yes	25%
	2"-SI-1403-8	B9.40	2"	Yes	25%
	2"-SI-1403-9	B9.40	2"	Yes	25%
	2"-SI-1403-12	B9.40	2"	Yes	25%
	2"-SI-1403-16	B9.40	2"	Yes	25%
	2"-SI-1403-17	B9.40	2"	Yes	25%
	2"-SI-1403-23	B9.40	2"	Yes	25%
	2"-SI-1403-25	B9.40	2"	No	HS
043	2"-SI-1405-4	B9.40	2"	Yes	25%
	2"-SI-1405-6	B9.40	2"	Yes	25%
	2"-SI-1405-20	B9.40	2"	Yes	25%
	2"-SI-1404-2	B9.40	2"	Yes	25%
	2"-SI-1404-6	B9.40	2"	Yes	25%
	2"-SI-1404-10	B9.40	2"	Yes	HS & TE

HS - High Stress Weld
25 - 25% Additional Welds
TE - Terminal End Weld
SD - Structural Discontinuity

Appendix C
Table C-6

Turkey Point Unit 4
Category B-J Welds Selected for Examination

Zone Number	Weld	Code Item	Size	Examined During Second Interval	Third Interval Selection Criteria
044	2"-SI-1406-3	b9.40	2"	Yes	25%
	2"-SI-1406-9	B9.40	2"	Yes	25%
	2"-SI-1406-10	B9.40	2"	Yes	25%
	2"-SI-1406-16	B9.40	2"	Yes	25%
	2"-SI-1406-17	B9.40	2"	Yes	25%
	2"-SI-1406-21	B9.40	2"	Yes	25%
	2"-SI-1406-25	B9.40	2"	Yes	25%
	2"-SI-1406-33	B9.40	2"	Yes	25%
	2"-SI-1406-39	B9.40	2"	Yes	25%
	2"-SI-1406-40	B9.40	2"	Yes	25%
	2"-SI-1406-48	B9.40	2"	Yes	TE
045	3"-CH-1401-4	B9.21	3"	Yes	25%
	3"-CH-1401-14	B9.21	3"	Yes	25%
	3"-CH-1401-15	B9.21	3"	Yes	25%
	3"-CH-1401-31	B9.21	3"	Yes	25%
	3"-CH-1401-32	B9.21	3"	Yes	25%
	3"-CH-1401-33	B9.21	3"	Yes	25%
	3"-CH-1401-34	B9.21	3"	Yes	25%
	3"-CH-1401-35	B9.21	3"	Yes	25%
	3"-CH-1401-36	B9.21	3"	Yes	25%
	3"-CH-1401-37	B9.21	3"	Yes	TE
046	3"-CH-1402-11	B9.21	3"	Yes	25%
	3"-CH-1402-15	B9.21	3"	Yes	25%
	3"-CH-1402-16	B9.21	3"	Yes	25%
	3"-CH-1402-34	B9.21	3"	Yes	25%
	3"-CH-1402-35	B9.21	3"	Yes	25%
	3"-CH-1402-38	B9.21	3"	Yes	25%
	3"-CH-1402-39	B9.21	3"	Yes	25%
	3"-CH-1402-40	B9.21	3"	Yes	25%
	3"-CH-1402-41	B9.21	3"	Yes	25%
	3"-CH-1402-42	B9.21	3"	Yes	25%
	3"-CH-1402-45	B9.21	3"	Yes	TE

HS - High Stress Weld
25 - 25% Additional Welds
TE - Terminal End Weld
SD - Structural Discontinuity

Appendix C
Table C-6

Turkey Point Unit 4
Category B-J Welds Selected for Examination

Zone Number	Weld	Code Item	Size	Examined During Second Interval	Third Interval Selection Criteria
047	3"-CH-1403-1	B9.21	3"	Yes	25%
	3"-CH-1403-5	B9.21	3"	Yes	25%
	3"-CH-1403-7	B9.21	3"	Yes	25%
	3"-CH-1403-9	B9.21	3"	Yes	25%
	3"-CH-1403-10	B9.21	3"	Yes	25%
	3"-CH-1403-11	B9.21	3"	Yes	25%
	3"-CH-1403-12	B9.21	3"	Yes	25%
048	2"-CH-1401-1	B9.21	2"	Yes	TE
	2"-CH-1401-4	B9.40	2"	Yes	25%
	2"-CH-1401-5	B9.40	2"	Yes	25%
049	2"-CH-1402-15	B9.40	2"	Yes	25%
	2"-CH-1402-20	B9.40	2"	Yes	25%
	2"-CH-1402-21	B9.40	2"	Yes	25%
	2"-CH-1402-22	B9.40	2"	Yes	25%
	2"-CH-1402-25	B9.40	2"	Yes	25%
	2"-CH-1402-26	B9.40	2"	Yes	25%
	2"-CH-1402-27	B9.40	2"	Yes	25%
	2"-CH-1402-28	B9.40	2"	Yes	25%
050	2"-CH-1403-4	B9.40	2"	Yes	25%
	2"-CH-1403-5	B9.40	2"	Yes	25%
	2"-CH-1403-6	B9.40	2"	Yes	25%
	2"-CH-1403-14	B9.40	2"	Yes	25%
	2"-CH-1403-26	B9.40	2"	Yes	25%
	2"-CH-1403-27	B9.40	2"	Yes	25%
	2"-CH-1403-28	B9.40	2"	Yes	25%
	2"-CH-1403-29	B9.40	2"	Yes	25%
	1.5"-CH-1401-4	B9.40	1.5"	Yes	25%

HS - High Stress Weld
25 - 25% Additional Welds
TE - Terminal End Weld
SD - Structural Discontinuity

Appendix C
Table C-6

Turkey Point Unit 4
Category B-J Welds Selected for Examination

Zone Number	Weld	Code Item	Size	Examined During Second Interval	Third Interval Selection Criteria
051	2"-CH-1404-18	B9.40	2"	Yes	25%
	2"-CH-1404-28	B9.40	2"	Yes	25%
	2"-CH-1404-30	B9.40	2"	Yes	25%
	2"-CH-1404-31	B9.40	2"	Yes	25%
	2"-CH-1404-32	B9.40	2"	Yes	25%
	2"-CH-1404-33	B9.40	2"	Yes	25%
	2"-CH-1404-34	B9.40	2"	Yes	25%
	2"-CH-1404-35	B9.40	2"	Yes	25%
	2"-CH-1404-36	B9.40	2"	Yes	25%
	2"-CH-1404-37	B9.40	2"	Yes	25%
	2"-CH-1404-37A	B9.40	2"	Yes	25%
	1.5"-CH-1402-1	B9.40	1.5"	Yes	25%
052	2"-CH-1405-9	B9.40	2"	Yes	25%
	2"-CH-1405-28	B9.40	2"	Yes	25%
	2"-CH-1405-30	B9.40	2"	Yes	25%
	2"-CH-1405-31	B9.40	2"	Yes	25%
	2"-CH-1405-32	B9.40	2"	Yes	25%
	2"-CH-1405-34	B9.40	2"	Yes	25%
	2"-CH-1405-36	B9.40	2"	Yes	25%
	2"-CH-1405-40	B9.40	2"	Yes	25%
	1.5"-CH-1403-2	B9.40	1.5"	Yes	25%

HS - High Stress Weld
25 - 25% Additional Welds
TE - Terminal End Weld
SD - Structural Discontinuity

Appendix D
Table D-1

Turkey Point Unit 3
C-F-1 Non-exempt Piping Welds Summary
by Zone, System, and Code Item Number

Zone	System	C5.11	C5.12	C5.21	C5.30	C5.41
063	RHR	24	18	0	0	0
064	RHR	12	4	0	0	0
065	RHR	17	0	0	0	0
066	RHR	13	0	0	0	0
067	RHR	18	0	0	0	0
068	RHR	15	2	0	0	0
069	RHR	37	2	0	0	0
081	RHR	18	2	0	0	0
084	RHR	11	0	0	0	0
085	RHR	13	0	0	0	0
086	RHR	3	0	0	0	0
089	RHR	21	0	0	0	0
090	SI	4	0	0	0	0
095	HPSI	4	0	70	49	3
096	HPSI	0	0	70	48	4
	Totals	210	28	140	97	7

Appendix D
Table D-2

Turkey Point Unit 3
C-F-1 Non-exempt Piping Welds
by Code Item Number and Size

NPS	C5.11		C5.12		C5.21		C5.30		C5.41	
	Tot	Sch	Tot	Sch	Tot	Sch	Tot	Sch	Tot	Sch
14"	84	25	22	18	0	0	0	0	0	0
12"	52	6	4	2	0	0	0	0	0	0
10"	18	2	2	1	0	0	0	0	0	0
8"	52	7	0	0	0	0	0	0	0	0
6"	4	2	0	0	0	0	0	0	0	0
4"	0	0	0	0	86	10	0	0	0	0
3"	0	0	0	0	54	8	0	0	0	0
2"	0	0	0	0	0	0	97	8	7	3
Totals	210	42	28	21	140	18	97	8	7	3

Note: Total Welds selected for Examination is based on adding non-exempt circumferential welds in this table to the exempt circumferential welds and multiplying by 7.5%.

Non-Ex 454 (Not counting C5.12)
Exempt + 231
Total = 685 x 7.5% = 52 welds minimum

Appendix D
Table D-3

Turkey Point Unit 3
C-F-1 Non-Exempt Piping Examination Distribution

Zone	Term End	Struct Dis.	% Non-Exempt Welds in Zone	Number to be Exam'd	Branch Conn.	% Non-Exempt in Zone	Number to be Exam'd
63	1-14"	23-14"	5.5%	3-14"	0	0	0
64	1-14"	10-14"	2.5%	1-14"	0	0	0
65	0	17-14"	3.9%	0-14"	0	0	0
66	0	11-14"	2.5%	3-14"	0	0	0
67	0	18-14"	4.1%	2-14"	0	0	0
68	0	14-12"	3.2%	2-12"	0	0	0
69	0	2-6" 34-12"	8.3%	4-12"	0	0	0
81	0	18-10"	4.1%	2-10"	0	0	0
84	0	6-8"	1.4%	1-8"	0	0	0
85	0	10-8"	2.3%	1-8"	0	0	0
86	0	3-8"	0.7%	0-8"	0	0	0
89	0	21-8"	4.8%	4-8"	0	0	0
90	0	4-8"	0.9%	1-8"	0	0	0
95	2-6" 3-2"	2-6" 64-4" 52-2"	28.3%	2-6" 8-4" 5-2"	1-2"	25%	0
96	3-3"	16-4" 47-3" 52-2"	27.1%	2-4" 8-3" 6-2"	3-2"	75%	2
Tot	10	425	---	54	4	---	2

Note: Totals do not include pipe to pipe welds or those selected under SRP 6.6.

Appendix D
Table D-4

Turkey Point Unit 3
C-F-1 Non-Exempt Welds Selected for Examination

Zone	Weld Identification	Code Item	Size	Selected During Second Interval	Third Interval Selection Criteria
63	14"-RHR-2301-1	C5.11	14"	Yes	SRP 6.6
	14"-RHR-2301-1LS1	C5.12	14"	Yes	SRP 6.6
	14"-RHR-2301-1LS2	C5.12	14"	Yes	SRP 6.6
	14"-RHR-2301-2	C5.11	14"	Yes	SRP 6.6
	14"-RHR-2301-2LS1	C5.12	14"	Yes	SRP 6.6
	14"-RHR-2301-2LS2	C5.12	14"	Yes	SRP 6.6
	14"-RHR-2301-3	C5.11	14"	Yes	SRP 6.6
	14"-2301-RHR-3LS1	C5.12	14"	Yes	SRP 6.6
	14"-RHR-2301-3LS2	C5.12	14"	Yes	SRP 6.6
	14"-RHR-2301-4	C5.11	14"	Yes	SRP 6.6
	14"-RHR-2301-4LS1	C5.12	14"	Yes	SRP 6.6
	14"-RHR-2301-4LS2	C5.12	14"	Yes	SRP 6.6
	14"-RHR-2301-4LS1	C5.12	14"	Yes	SRP 6.6
	14"-RHR-2301-4LS2	C5.12	14"	Yes	SRP 6.6
	14"-RHR-2301-5	C5.11	14"	Yes	SRP 6.6
	14"-RHR-2301-5LS1	C5.12	14"	Yes	SRP 6.6
	14"-RHR-2301-5LS2	C5.12	14"	Yes	SRP 6.6
	14"-RHR-2301-6	C5.11	14"	Yes	SRP 6.6
	14"-RHR-2301-6LS1	C5.12	14"	Yes	SRP 6.6
	14"-RHR-2301-6LS2	C5.12	14"	Yes	SRP 6.6
	14"-RHR-2301-7	C5.11	14"	Yes	SRP 6.6
	14"-RHR-2301-8	C5.11	14"	Yes	SRP 6.6
	14"-RHR-2301-9	C5.11	14"	Yes	SRP 6.6
	14"-RHR-2301-9LS	C5.12	14"	Yes	SRP 6.6
	14"-RHR-2301-10	C5.11	14"	Yes	SRP 6.6
	14"-RHR-2301-11	C5.11	14"	Yes	SRP 6.6
	14"-RHR-2301-11LS	C5.12	14"	Yes	SRP 6.6
	14"-RHR-2301-12	C5.11	14"	Yes	SRP 6.6 & HS
	14"-RHR-2302-18	C5.11	14"	Yes	SD
	14"-RHR-2302-19	C5.11	14"	Yes	SD
	14"-RHR-2302-24	C5.11	14"	Yes	SD

TE - Terminal End
HS - High Stress Weld
LS - Longitudinal Seam
25 - 25% Additional Welds
SD - Structural Discontinuity

Appendix D
Table D-4

Turkey Point Unit 3
C-F-1 Non-Exempt Welds Selected for Examination

Zone	Weld Identification	Code Item	Size	Selected During Second Interval	Third Interval Selection Criteria
64	14"-RHR-2303-1	C5.11	14"	Yes	SRP 6.6
	14"-RHR-2303-1LS	C5.12	14"	Yes	SRP 6.6
	14"-RHR-2303-2	C5.11	14"	Yes	SRP 6.6
	14"-RHR-2302-2A	C5.11	14"	Yes	SRP 6.6
	14"-RHR-2303-3LS	C5.12	14"	Yes	SRP 6.6
	14"-RHR-2303-4	C5.11	14"	Yes	SRP 6.6
	14"-RHR-2303-11	C5.11	14"	Yes	SD
66	14"-RHR-2305-3	C5.11	14"	Yes	SD
	14"-RHR-2305-10	C5.11	14"	Yes	SD
	14"-RHR-2305-11	C5.11	14"	Yes	SD
67	14"-RHR-2306-1	C5.11	14"	Yes	TE
	14"-RHR-2306-4	C5.11	14"	Yes	SD
68	12"-RHR-2301-1	C5.11	12"	Yes	SD
	12"-RHR-2301-10	C5.11	12"	Yes	SD
69	12"-RHR-2302-1	C5.11	12"	Yes	SD
	12"-RHR-2302-4	C5.11	12"	Yes	SD
	12"-RHR-2302-8	C5.11	12"	Yes	SD
	12"-RHR-2302-23LS	C5.12	12"	Yes	LS
	12"-RHR-2302-24	C5.11	12"	Yes	SD
	12"-RHR-2302-24LS	C5.12	12"	Yes	LS
81	10"-SI-2304-1LS	C5.12	10"	Yes	LS
	10"-SI-2304-2	C5.11	10"	Yes	SD
	10"-SI-2304-3	C5.11	10"	Yes	SD
84	8"-SI-2302-6	C5.11	8"	Yes	SD
85	8"-SI-2303-1	C5.11	8"	Yes	SD

TE - Terminal End
HS - High Stress Weld
LS - Longitudinal Seam
25 - 25% Additional Welds
SD - Structural Discontinuity

Appendix D
Table D-4

Turkey Point Unit 3
C-F-1 Non-Exempt Welds Selected for Examination

Zone	Weld Identification	Code Item	Size	Selected During Second Interval	Third Interval Selection Criteria
89	8"-SI-2309-20	C5.11	8"	Yes	SD
	8"-SI-2309-21	C5.11	8"	Yes	SD
	8"-SI-2309-22	C5.11	8"	Yes	SD
	8"-SI-2309-24	C5.11	8"	Yes	SD
90	8"-SI-2308-19	C5.11	8"	Yes	TE
95	6"-SI-2307-1	C5.11	6"	Yes	TE
	6"-SI-2307-2	C5.11	6"	Yes	SD
	4"-SI-2303-27	C5.21	4"	No	SD
	4"-SI-2303-32	C5.21	4"	No	SD
	4"-SI-2303-38	C5.21	4"	No	SD
	4"-SI-2303-48	C5.21	4"	No	SD
	4"-SI-2305-1	C5.21	4"	No	SD
	4"-SI-2305-3	C5.21	4"	No	SD
	4"-SI-2305-6	C5.21	4"	No	SD
	4"-SI-2305-24	C5.21	4"	No	SD
	2"-SI-2306-12	C5.30	2"	No	TE
	2"-SI-2307-1	C5.30	2"	No	SD
	2"-SI-2309-1	C5.30	2"	No	TE
	2"-SI-2309-5	C5.30	2"	No	SD

TE - Terminal End
HS - High Stress Weld
LS - Longitudinal Seam
25 - 25% Additional Welds
SD - Structural Discontinuity

Appendix D
Table D-4

Turkey Point Unit 3
C-F-1 Non-Exempt Welds Selected for Examination

Zone	Weld Identification	Code Item	Size	Selected During Second Interval	Third Interval Selection Criteria
96	4"-SI-2302-13	C5.21	4"	No	SD
	4"-SI-2302-14	C5.21	4"	No	SD
	4"-SI-2302-10	C5.41	2"	No	TE
	3"-SI-2301-1	C5.21	3"	No	TE
	3"-SI-2301-4	C5.21	3"	No	SD
	3"-SI-2301-13	C5.21	3"	No	SD
	3"-SI-2303-21	C5.21	3"	No	SD
	3"-SI-2303-23	C5.21	3"	No	SD
	3"-SI-2303-24	C5.21	3"	No	SD
	3"-SI-2303-28	C5.21	3"	No	TE
	3"-SI-2304-3	C5.21	3"	No	SD
	2"-SI-2302-1	C5.41	2"	No	TE
	2"-SI-2302-2	C5.30	2"	No	SD
	2"-SI-2304-1	C5.30	2"	No	SD
	2"-SI-2304-3	C5.30	2"	No	SD
	2"-SI-2304-10	C5.30	2"	No	SD

TE - Terminal End
HS - High Stress Weld
LS - Longitudinal Seam
25 - 25% Additional Welds
SD - Structural Discontinuity

Appendix D
Table D-5

Turkey Point Unit 4
C-F-1 Non Exempt Piping Weld Summary
by Zone, System, and Code Item Number

Zone	System	C5.11	C5.12	C5.21	C5.30	C5.41
063	RHR	25	10	0	0	0
064	RHR	13	0	0	0	0
065	RHR	16	0	0	0	0
066	RHR	11	1	0	0	0
067	RHR	17	0	0	0	0
068	RHR	15	0	0	0	0
069	RHR	39	4	0	0	0
081	RHR	17	0	0	0	0
084	RHR	19	0	0	0	0
085	RHR	17	0	0	0	0
086	RHR	2	0	0	0	0
087	SIS	3	0	0	0	0
089	RHR	23	0	0	0	0
090	RHR	4	0	0	0	0
097	HPSI	4	0	139	34	6
098	HPSI	0	0	0	54	0
	Totals	225	15	139	88	6

Appendix D
Table D-6

Turkey Point Unit 4
C-F-1 Non Exempt Piping Welds
by Code Item Number and Size

NPS	C5.11		C5.12		C5.21		C5.30		C5.41	
	Tot	Sch	Tot	Sch	Tot	Sch	Tot	Sch	Tot	Sch
14"	82	27	10	10	0	0	0	0	0	0
12"	54	6	4	1	0	0	0	0	0	0
10"	17	2	0	0	0	0	0	0	0	0
8"	68	10	0	0	0	0	0	0	0	0
6"	4	2	0	0	0	0	0	0	0	0
4"	0	0	0	0	80	4	0	0	4	0
3"	0	0	0	0	59	2	0	0	2	1
2"	0	0	0	0	0	0	88	5	0	0
Total	225	47	14	11	139	6	88	5	6	1

Note: Total Welds Selected for Examination is based on adding non-exempt circumferential welds in Table D-6 to the number of exempt circumferential welds and multiplying by 7.5%.

Non Ex.= 458 (Does not include C5.12 welds)
Ex. = 235
Total = 693 x 7.5% = 52 welds minimum

Appendix D
Table D-7

Turkey Point Unit 4
C-F-1 Non-Exempt Piping Exam Distribution

Zone	Term End	Struct Dis.	% Non-Exempt in Zone	Number to be Exam'd	Branch Conn.	% Non Exempt in Zone	Number to be Exam'd
063	1-14"	21-14"	5.3%	18-14"	0	0	0
064	1-14"	12-14"	2.8%	3-14"	0	0	0
065	0	16-14"	3.9%	3-14"	0	0	0
066	0	10-14"	2.4%	1-14"	0	0	0
067	0	16-14"	3.9%	1-14"	0	0	0
068	0	15-12"	3.6%	1-12"	0	0	0
069	0	37-12"	8.9%	5-12"	0	0	0
081	0	17-10"	4.1%	2-10"	0	0	0
084	0	11-8"	2.7%	2-8"	0	0	0
085	0	14-8"	3.4%	2-8"	0	0	0
086	0	2-8"	<1%	1-8"	0	0	0
087	0	3-8"	<1%	0-8"	0	0	0
089	0	19-8"	4.6%	4-8"	0	0	0
090	0	4-8"	1.0%	1-8"	0	0	0
097	2-6" 4-3" 3-2"	2-6" 84-4" 55-3" 31-2"	43.6%	2-6" 2-4" 2-3" 2-2"	6-2"	100%	2-2"
098	6-2"	48-2"	13.0%	4-2"	0	0	0
Tot	17	417	---	56	6	---	2

Note: Pipe to Pipe welds are not counted.

Appendix D
Table D-8

Turkey Point Unit 4
C-F-1 Non-Exempt Welds Selected for Examination

Zone	Weld Identification	Code Item	Size	Selected During Second Interval	Third Interval Selection Criteria
063	14"-RHR-2401-1	C5.11	14"	Yes	6.6
	14"-RHR-2401-1LS	C5.12	14"	Yes	6.6
	14"-RHR-2401-2	C5.11	14"	Yes	6.6
	14"-RHR-2401-3	C5.11	14"	Yes	6.6
	14"-RHR-2401-3LS1	C5.12	14"	Yes	6.6
	14"-RHR-2401-3LS2	C5.12	14"	Yes	6.6
	14"-RHR-2401-4	C5.11	14"	Yes	6.6
	14"-RHR-2401-4LS	C5.12	14"	Yes	6.6
	14"-RHR-2401-5	C5.11	14"	Yes	6.6
	14"-RHR-2401-5LS	C5.12	14"	Yes	6.6
	14"-RHR-2401-5A	C5.11	14"	Yes	6.6
	14"-RHR-2401-5B	C5.11	14"	Yes	6.6
	14"-RHR-2401-5BLS	C5.12	14"	Yes	6.6
	14"-RHR-2401-6	C5.11	14"	Yes	6.6
	14"-RHR-2401-6LS	C5.12	14"	Yes	6.6
	14"-RHR-2401-7	C5.11	14"	Yes	6.6
	14"-RHR-2401-8	C5.11	14"	Yes	6.6
	14"-RHR-2401-8LS	C5.12	14"	Yes	6.6
	14"-RHR-2401-9	C5.11	14"	Yes	6.6
	14"-RHR-2401-9LS	C5.12	14"	Yes	6.6
	14"-RHR-2401-10	C5.11	14"	Yes	6.6
	14"-RHR-2401-10LS	C5.12	14"	Yes	6.6
	14"-RHR-2401-11	C5.11	14"	Yes	6.6
	14"-RHR-2401-12	C5.11	14"	Yes	6.6
	14"-RHR-2401-13	C5.11	14"	Yes	6.6
	14"-RHR-2401-14	C5.11	14"	Yes	6.6
	14"-RHR-2401-15	C5.11	14"	Yes	6.6
063	14"-RHR-2402-8	C5.11	14"	Yes	SD
064	14"-RHR-2403-1	C5.11	14"	Yes	SD/6.6
	14"-RHR-2403-2	C5.11	14"	Yes	SD/6.6
	14"-RHR-2403-4	C5.11	14"	Yes	SD/6.6

TE - Terminal End
HS - High Stress
LS - Longitudinal Seam

25 - 25% Additional Welds
SD - Structural Discontinuity
6.6 - Standard Review Plan 6.6

Appendix D
Table D-8

Turkey Point Unit 4
C-F-1 Non-Exempt Welds Selected for Examination

Zone	Weld Identification	Code Item	Size	Selected During Second Interval	Third Interval Selection Criteria
065	14"-RHR-2404-15	C5.11	14"	Yes	6.6
	14"-RHR-2404-16	C5.11	14"	Yes	6.6
	14"-RHR-2404-17	C5.11	14"	Yes	6.6
066	14"-RHR-2405-10LS	C5.12	14"	Yes	LS
	14"-RHR-2405-11	C5.11	14"	Yes	SD
067	14"-RHR-2406-4	C5.11	14"	Yes	SD
068	12"-RHR-2401-2	C5.11	12"	Yes	SD
069	12"-RHR-2402-1	C5.11	12"	Yes	SD
	12"-RHR-2402-15	C5.11	12"	Yes	SD
	12"-RHR-2402-FW26	C5.11	12"	Yes	SD
	12"-RHR-2402-26LS	C5.12	12"	Yes	LS
	12"-RHR-2402-34	C5.11	12"	Yes	SD
	10"-RHR-2402-35	C5.11	12"	Yes	SD
081	10"-SI-2407-4	C5.11	10"	Yes	SD
	10"-SI-2407-5	C5.11	10"	Yes	SD
084	8"-SI-2402-14	C5.11	8"	Yes	SD
	8"-SI-2402-17	C5.11	8"	Yes	SD
085	8"-SI-2403-16	C5.11	8"	Yes	SD
	8"-SI-2403-17	C5.11	8"	Yes	SD
086	8"-SI-2404-2	C5.11	8"	Yes	SD
089	8"-SI-2407-1	C5.11	8"	Yes	SD
	8"-SI-2407-1A	C5.11	8"	Yes	SD
	8"-SI-2407-2	C5.11	8"	Yes	SD
	8"-SI-2407-8	C5.11	8"	Yes	SD
090	8"-SI-2408-17	C5.11	8"	Yes	SD

TE - Terminal End
HS - High Stress
LS - Longitudinal Seam
25 - 25% Additional Welds
SD - Structural Discontinuity
6.6 - Standard Review Plan 6.6

Appendix D
Table D-8

Turkey Point Unit 4
C-F-1 Non-Exempt Welds Selected for Examination

Zone	Weld Identification	Code Item	Size	Selected During Second Interval	Third Interval Selection Criteria
097	3"-SI-2401-1	C5.21	3"	No	TE
	3"-SI-2401-3	C5.41	2"	No	BC
	4"-SI-2401-4	C5.21	4"	No	SD
	4"-SI-2401-5	C5.21	4"	No	SD
	2"-SI-2401-1	C5.30	2"	No	TE
	4"-SI-2401-52	C5.21	4"	No	SD
	4"-SI-2401-53	C5.21	4"	No	SD
	6"-SI-2403-2	C5.11	6"	Yes	TE
	6"-SI-2404-1	C5.11	6"	Yes	TE
	3"-SI-2404-3	C5.21	3"	No	SD
098	2"-SI-2406-1	C5.30	2"	No	TE
	2"-SI-2406-2	C5.30	2"	No	SD
	2"-SI-2406-11	C5.30	2"	No	SD
	2"-SI-2406-13	C5.30	2"	No	TE

TE - Terminal End
HS - High Stress
LS - Longitudinal Seam

25 - 25% Additional Welds
SD - Structural Discontinuity
6.6 - Standard Review Plan 6.6

Appendix E
Table E-1

Turkey Point Unit 3
C-F-2 Non-Exempt Piping Weld Summary

Zone Number	System	C5.51	C5.52	C5.81	C5.82
097	MS	12	21	0	0
098	MS	11	19	0	0
099	MS	15	28	0	0
100	MS	17	3	3	0
101	MS	18	5	3	0
102	MS	18	5	3	0
103	SGBD	22	0	0	0
104	SGBD	18	0	0	0
105	SGBD	29	0	0	0
106	SGBD	4	0	0	0
107	SGBD	8	0	0	0
108	SGBD	5	0	0	0
109	FW	29	0	1	0
110	FW	27	0	1	0
111	FW	30	0	1	0
112	FW	7	0	0	0
113	FW	7	0	0	0
114	FW	8	0	0	0
Totals		285	81	12	0

Note: There are 9 exempt 6" welds (t<.375") included in this summary, three each in Zones 101, 102, and 103.

Appendix E
Table E-2

Turkey Point Unit 3
C-F-2 Non Exempt Piping Weld Summary
by Code Item Number and Size

Nominal Pipe Size	C5.51 Total	C5.51 Sch	C5.52 Total	C5.52 Sch	C5.81 Total	C5.81 Sch
31"	3	1	0	0	0	0
26"	46	6	81	10	0	0
18"	7	2	0	0	0	0
14"	112	13	0	0	0	0
12"	0	0	0	0	6	2
8"	0	0	0	0	0	0
6"	117	15	0	0	6	2
Totals	285	37	81	10	12	4

Totals (not including C5.52, longitudinal seams)

Non-Ex	298
Exempt	+ 9
Total	+ 307 x 7.5% = 23

Category C-F-2 requires a minimum of 28 welds. The total welds scheduled is greater than the minimum required due to augmented exams as well as size distribution criteria.

Appendix E
Table E-3

Turkey Point Unit 3
C-F-2 Non-Exempt Piping Examination Distribution

Zone	Term End	Struct Dis.	% Non-Exempt Welds in Zone	Number to be Exam'd	Branch Conn.	% Non-Exempt in Zone	Number to be Exam'd
097	1-31" 1-26"	0 7-26"	3.9%	1-31" 1-26"	0	0	0
098	1-31" 1-26"	0 6-26"	3.4%	0 1-26"	0	0	0
099	1-31" 1-26"	0 10-26"	5.2%	0 1-26"	0	0	0
100	1-26"	1-26" 7-14" 4-8" 3-6"	6.9%	2-26" 1-14" 1-8" 0-6"	2-12" 1-6"	25%	0
101	1-26"	2-26" 7-14" 4-8" 3-6"	7.3%	0	2-12" 1-6"	25%	2-12" 1-6"
102	1-26"	2-26" 7-14" 4-8" 3-6"	7.3%	0 2-14" 1-8" 0	2-12" 1-6"	25%	0
103	0	22-6"	9.4%	4-6"	0	0	0
104	0	18-6"	7.7%	3-6"	0	0	0
105	0	16-6"	6.9%	3-6"	0	0	0
106	0	4-6"	1.7%	0	0	0	0
107	0	8-6"	3.4%	1-6"	0	0	0
108	0	4-6"	1.7%	1-6"	0	0	0
109	1-18" 2-14"	2-18" 21-14"	11.2%	1-18" 2-14"	1-6"	8.3%	1-6"
110	1-18" 2-14"	1-18" 21-14"	10.7%	4-14"	1-6"	8.3%	0

Appendix E
Table E-3

Turkey Point Unit 3
C-F-2 Non-Exempt Piping Examination Distribution

Zone	Term End	Struct Dis.	% Non-Exempt Welds in Zone	Number to be Exam'd	Branch Conn.	% Non-Exempt in Zone	Number to be Exam'd
111	1-18" 2-14"	1-18" 24-14"	11.6%	1-18" 2-14"	1-6"	8.3%	0
112	0	7-6"	3.0%	1-6"	0	0	0
113	0	7-6"	3.0%	1-6"	0	0	0
114	0	8-6"	3.0%	1-6"	0	0	0
Tot	18	233	---	36	12	---	4

Note: Pipe to pipe welds are not counted.

Appendix E
Table E-4

Turkey Point Unit 3
C-F-2 Non-Exempt Piping Welds Selected for Exam

Zone Number	Weld Identification	Code Item	Size	Selected During Second Interval	Third Interval Select Criteria
097	31"-MSA-2301-1A	C5.51	31"	Yes	TE
	26"-MSA-2301-FW1	C5.51	26"	Yes	SD
	26"-MSA-2301-1LSD	C5.52	26"	Yes	LS
098	26"-MSB-2302-10	C5.51	26"	Yes	SD
	26"-MSB-2302-10LSU	C5.52	26"	Yes	LS
	26"-MSB-2302-10LSD	C5.52	26"	Yes	LS
	26"-MSB-2302-11	C5.51	26"	Yes	SD
	26"-MSB-2302-11LSU	C5.52	26"	Yes	LS
	26"-MSB-2302-11LSD	C5.52	26"	Yes	LS
099	26"-MSC-2303-9LSU	C5.52	26"	Yes	LS
	26"-MSC-2303-9	C5.51	26"	Yes	SD
	26"-MSC-2303-9LSD	C5.52	26"	Yes	LS
100	26"-MSA-2304-13	C5.51	26"	Yes	TE
	26"-MSA-2304-13LSU	C5.52	26"	Yes	LS
	26"-MSA-2304-13LSD	C5.52	26"	Yes	LS
	26"-MSA-2304-17	C5.51	26"	Yes	SD
	26"-MSA-2304-17LSU	C5.52	26"	Yes	LS
	14"-MSA-2301-1	C5.51	14"	Yes	SD
	14"-MSA-2302-2	C5.51	8"	Yes	SD
101	26"-MSB-2305-12	C5.81	6"	Yes	SD
	26"-MSB-2305-13	C5.81	12"	Yes	SD
	26"-MSB-2305-14	C5.81	12"	Yes	SD
102	14"-MSC-2305-1	C5.51	14"	Yes	SD
	14"-MSC-2305-5	C5.51	8"	No	SD
	14"-MSC-2306-1	C5.51	14"	Yes	SD
103	6"-BDA-2301-FW1	C5.51	6"	Yes	SD
	6"-BDA-2301-FW6	C5.51	6"	Yes	SD
	6"-BDA-2301-FW8	C5.51	6"	Yes	SD
	6"-BDA-2301-FW18	C5.51	6"	Yes	SD

TE - Terminal End 25 - 25% Additional Welds
HS - High Stress SD - Structural Discontinuity
LS - Longitudinal seam

Appendix E
Table E-4

Turkey Point Unit 3
C-F-2 Non-Exempt Piping Welds Selected for Exam

Zone Number	Weld Identification	Code Item	Size	Selected During Second Interval	Third Interval Select Criteria
104	6"-BDB-2302-FW1	C5.51	6"	Yes	SD
	6"-BDB-2302-FW12	C5.51	6"	Yes	SD
	6"-BDB-2302-FW18	C5.51	6"	Yes	SD
105	6"-BDC-2303-FW6	C5.51	6"	Yes	SD
	6"-BDC-2303-FW24	C5.51	6"	Yes	SD
	6"-BDC-2303-FW29	C5.51	6"	Yes	SD
107	6"-BDB-2305-FW24	C5.51	6"	Yes	SD
108	6"-BDC-2306-FW30	C5.51	6"	Yes	SD
109	14"-FWA-2301-2A	C5.81	6"	Yes	SD
	14"-FWA-2301-20	C5.51	14"	Yes	SD
	14"-FWA-2301-21A	C5.51	18"	Yes	SD
	18"-FWA-2301-FW2	C5.51	14"	Yes	SD
110	14"-FWB-2304-1	C5.51	14"	Yes	SD
	14"-FWB-2304-3	C5.51	14"	Yes	SD
	14"-FWB-2303-9	C5.51	14"	Yes	SD
	14"-FWB-2303-17	C5.51	14"	Yes	HS
111	14"-FWC-2306-1	C5.51	14"	Yes	SD
	14"-FWC-2305-6	C5.51	14"	Yes	SD
	18"-FWC-2305-24	C5.51	18"	Yes	SD
112	6"-FWA-2301-2	C5.51	6"	Yes	SD
113	6"-FWB-2302-2	C5.51	6"	Yes	SD
114	6"-FWC-2303-7	C5.51	6"	Yes	SD

TE - Terminal End 25 - 25% Additional Welds
HS - High Stress SD - Structural Discontinuity
LS - Longitudinal seam

Appendix E
Table E-5

Turkey Point Unit 4
C-F-2 Non-Exempt Piping Welds Summary

Zone Number	System	C5.51	C5.52	C5.81	C5.82
099	MS	10	9	0	0
100	MS	8	7	0	0
101	MS	11	9	0	0
102	MS	14	3	5	0
103	MS	14	3	5	0
104	MS	14	3	5	0
105	MS	28	0	0	0
106	MS	19	0	0	0
107	MS	21	0	0	0
108	MS	5	0	0	0
109	MS	4	0	0	0
110	MS	4	0	0	0
111	FW	27	0	1	0
112	FW	20	0	1	0
113	FW	18	0	1	0
114	FW	7	0	0	0
115	FW	7	0	0	0
116	FW	7	0	0	0
	Totals	238	34	18	0

Exempt items (<.375") in these Zones total 18. Owing to this limited number, these items have been included in the C-F-2 selection. Since 7.5% of the welds is not greater than 28, the minimum number has been selected.

Appendix E
Table E-6

Turkey Point Unit 4
C-F-2 Non-Exempt Piping Welds Summary by Code Item and Size

Nominal Pipe Size	C5.51		C5.52		C5.81	
	Total	Select	Total	Select	Total	Select
31"	3	1	0	0	0	0
26"	35	6	34	9	0	0
18"	6	0	0	0	0	0
14"	80	4	0	0	0	0
12"	12	2	0	0	6	3
6"	98	10	0	0	12	3
Totals	234	23	34	9	18	6

Appendix E
Table E-7

Turkey Point Unit 4
C-F-2 Non-Exempt Piping Exam Distribution

Zone	Term End	Struct Dis.	% Non-Exempt Welds in Zone	Number to be Exam'd	Branch Conn.	% Non-Exempt in Zone	Number to be Exam'd
099	1-31" 1-26"	0 6-26"	3.5%	1-31" 1-26"	0	0	0
100	1-31" 1-26"	0 5-26"	3.1%	0-31" 1-26"	0	0	0
101	1-31" 1-26"	0 5-26"	3.1%	0-31" 1-26"	0	0	0
102	1-26"	2-26" 6-14" 4-8" 5-6"	8.0%	1-26" 1-14" 0-8" 0-6"	2-12" 3-6"	27.83%	2-12" 1-6"
103	1-26"	2-26" 7-14" 4-8" 5-6"	8.3%	1-26" 0-14" 0-8" 0-6"	2-12" 3-6"	27.83%	1-12" 1-6"
104	1-26"	2-26" 7-14" 4-8" 5-6"	8.3%	0-26" 0-14" 0-8" 0-6"	2-12" 3-6"	27.83%	0-12" 0-6"
105	1-6"	25-6"	11.3%	4-6"	0	0	0
106	1-6"	18-6"	8.3%	1-6"	0	0	0
107	1-6"	15-6"	7.0%	2-6"	0	0	0
108	0	5-6"	2.1%	1-6"	0	0	0
109	0	4-6"	1.7%	1-6"	0	0	0
110	0	4-6"	1.7%	1-6"	0	0	0
111	1-18"	1-18" 22-14"	10.0%	0-18" 2-14"	1-6"	5.5%	1-6"
112	1-18"	1-18" 16-14"	7.4%	0-18" 1-14"	1-6"	5.5%	0-6"

Appendix E
Table E-7

Turkey Point Unit 4
C-F-2 Non-Exempt Piping Exam Distribution

Zone	Term End	Struct Dis.	% Non-Exempt Welds in Zone	Number to be Exam'd	Branch Conn.	% Non-Exempt in Zone	Number to be Exam'd
113	1-18"	1-18" 16-14"	7.4%	0-18" 1-14"	1-6"	5.5%	0-6"
114	0	6-6"	2.6%	0-6"	0	0	0
115	0	6-6"	2.6%	0-6"	0	0	0
116	0	7-6"	3.1%	1-6"	0	0	0
Tot	15	217	---	22	18	---	6

Note: Pipe to Pipe welds are not counted.

Appendix E
Table E-8

Turkey Point Unit 4
C-F-2 Non Exempt Piping Welds Selected for Exam

Zone Number	Weld Identification	Code Item	Size	Selected During Second Interval	Third Interval Selection Criteria
099	31"-MSA-2401-1A	C5.51	31"	Yes	TE
	26"-MSA-2401-8LS	C5.52	26"	Yes	LS
	26"-MSA-2401-9	C5.51	26"	Yes	TE
	26"-MSA-2401-9LS	C5.52	26"	Yes	LS
100	26"-MSB-2402-7	C5.51	26"	Yes	TE
	26"-MSB-2402-7LS	C5.52	26"	Yes	LS
101	26"-MSC-2403-9LS	C5.52	26"	Yes	LS
	26"-MSC-2403-10	C5.51	26"	Yes	TE
102	26"-MSA-2404-1LU	C5.52	26"	No	LS
	26"-MSA-2404-1	C5.51	26"	Yes	SD
	26"-MSA-2404-1LD	C5.52	26"	Yes	LS
	26"-MSA-2404-2	C5.81	6"	Yes	BC
	26"-MSA-2404-3	C5.81	12"	Yes	SD
	26"-MSA-2404-4	C5.81	12"	Yes	SD
	26"-MSA-2404-5LU	C5.52	26"	Yes	LS
	26"-MSA-2404-5	C5.51	26"	Yes	SD
	14"-MSA-2402-1	C5.51	14"	Yes	BC
103	26"-MSB-2405-1LU	C5.52	26"	No	LS
	26"-MSB-2405-1	C5.51	26"	Yes	TE
	26"-MSB-2405-1LD	C5.52	26"	Yes	LS
	26"-MSB-2405-2	C5.81	6"	Yes	BC
	26"-MSB-2405-3	C5.81	12"	Yes	BC
105	6"-BDA-2401-2	C5.51	6"	Yes	SD
	6"-BDA-2401-6	C5.51	6"	Yes	LS
	6"-BDA-2401-9	C5.51	6"	Yes	SD
	6"-BDA-2401-15	C5.51	6"	Yes	LS
106	6"-BDB-2402-19	C5.51	6"	Yes	TE
107	6"-BDC-2403-2	C5.51	6"	Yes	SD
	6"-BDC-2403-6	C5.51	6"	Yes	SD
108	6"-BDA-2404-FW45	C5.51	6"	Yes	SD

HS - High Stress Weld
25 - 25% Additional Welds
TE - Terminal End Weld
SD - Structural Discontinuity

Appendix E
Table E-8

Turkey Point Unit 4
C-F-2 Non Exempt Piping Welds Selected for Exam

Zone Number	Weld Identification	Code Item	Size	Selected During Second Interval	Third Interval Selection Criteria
109	6"-BDB-2405-FW42B	C5.51	6"	Yes	SD
110	6"-BDC-2406-FW35C	C5.51	6"	Yes	SD
111	14"-FWA-2401-8	C5.81	6"	Yes	BC
	14"-FWA-2401-21	C5.51	14"	Yes	SD
	14"-FWA-2401-FW3A	C5.51	14"	Yes	SD
	14"-FWA-2401-28	C5.51	14"	Yes	SD
	14"-FWA-2401-29	C5.51	18"	Yes	TE
112	14"-FWB-2402-3	C5.51	14"	Yes	SD
113	14"-FWC-2403-3	C5.51	14"	Yes	SD
116	6"-FW-2303-1A	C5.51	4"	Yes	SD

HS - High Stress Weld
25 - 25% Additional Welds
TE - Terminal End Weld
SD - Structural Discontinuity

Appendix F
Table F-1

Turkey Point Unit 3
Class 1 Supports

Zone	Total Supports	Number Selected		
		Per 1	Per 2	Per 3
003	1	0	0	0
004	1	0	0	0
005	1	0	1	0
006	1	0	0	1
016	1	1	0	0
020	8	1	0	0
021	17	0	2	0
022	2	1	0	0
027	1	0	0	0
035	14	1	1	1
036	3	0	2	1
037	2	0	0	0
038	1	0	0	0
039	3	0	3	0
040	15	1	0	2
041	10	1	2	1
042	7	0	0	0
043	13	1	0	1
044	11	3	0	0
045	11	2	4	0
046	12	2	0	0
047	7	0	1	2
048	2	0	0	1

Appendix F
Table F-1

Turkey Point Unit 3
Class 1 Supports

Zone	Total Supports	Number Selected		
		Per 1	Per 2	Per 3
049	6	2	0	0
050	11	0	0	1
051	5	0	1	0
052	11	1	0	0
056	1	0	0	1
057	1	0	0	0
058	1	0	0	0
059	3	0	0	0
Totals	183	17	17	12

Piping	176
Components	7
Total	183
Piping Schd	43
Component Schd	3

Percentage Scheduled - 46/183 = 25%

Note: Supports that contain more than one classified line are counted only once.

Only one of multiple components within a system are examined. This has the effect of lowering the percentage examined. Over 25% of the piping supports are examined.

Appendix F
Table F-2

Turkey Point Unit 3
Class 2 Supports

Zone Number	Total Supports	Number Selected		
		Per 1	Per 2	Per 3
063	8	2	2	1
064	2	0	0	1
065	3	0	0	0
066	1	0	0	0
067	6	2	0	0
068	1	0	0	0
069	10	0	0	0
070	0	0	0	0
071	0	0	0	0
072	0	0	0	0
073	0	0	0	0
074	0	0	0	0
075	0	0	0	0
076	0	0	0	0
077	0	0	0	0
078	0	0	0	0
079	0	0	0	0
080	0	0	0	0
081	1	0	0	0
082	0	0	0	0
083	0	0	0	0
084	8	1	2	2
085	4	1	0	1

Appendix F
Table F-2

Turkey Point Unit 3
Class 2 Supports

Zone Number	Total Supports	Number Selected		
		Per 1	Per 2	Per 3
086	0	0	0	0
087	0	0	0	0
088	0	0	0	0
089	7	1	0	3
090	1	0	0	0
091	0	0	0	0
092	0	0	0	0
093	0	0	0	0
094	0	0	0	0
095	38	2	3	4
096	32	2	3	1
097	2	0	0	1
098	2	0	0	0
099	3	0	0	0
100	2	0	0	1
101	2	0	0	0
102	2	0	0	0
103	10	1	0	0
104	4	0	0	1
105	10	2	0	1
106	0	0	0	0
107	1	0	0	0

Appendix F
Table F-2

Turkey Point Unit 3
Class 2 Supports

Zone Number	Total Supports	Number Selected		
		Per 1	Per 2	Per 3
108	1	0	0	0
109	8	1	0	1
110	5	0	0	1
111	11	0	0	1
112	1	0	0	0
113	1	0	1	0
114	1	0	0	1
115	2	0	2	0
116	2	0	0	0
120	1	0	0	1
121	1	0	0	0
122	1	0	0	0
Totals	195	15	13	22

Piping	189
Components	6
Total	195
Piping Schd	47
Component Schd	3

Percentage scheduled - 47/189 = 25%

Note: Supports that contain more than one classified line are counted only once.

Only one of multiple components within a system are examined.

Appendix F
Table F-3

Turkey Point Unit 3
Class 3 Supports and Integral Attachments

Zone	Total Supports	Number Selected by Period			Total Integral Attachments	Number Selected by Period		
		1	2	3		1	2	3
118	3	1	0	2	3(D-A)	1	0	0
119	4	0	0	2	4(D-A)	0	0	0
120	4	1	0	2	3(D-B)	1	0	1
121	5	2	0	1	2(D-B)	0	0	0
122	3	1	0	0	1(D-B)	0	0	0
123	12	0	0	2	2(D-B)	0	0	0
124	1	0	0	1	0	0	0	0
125	3	0	0	1	1(D-B)	0	0	0
126	3	0	1	0	1(D-B)	0	1	0
127	7	0	2	0	2(D-B)	0	2	0
128	11	0	0	0	2(D-B)	0	0	0
129	14	2	0	0	2(D-B)	0	0	0
130	5	0	0	2	2(D-B)	0	0	0
131	3	0	1	0	1(D-B)	0	0	0
132	5	0	0	2	2(D-B)	0	0	0
133	9	0	0	3	3(D-B)	0	0	0
134	9	0	0	1	2(D-B)	0	0	0
135	5	0	0	2	1(D-B)	0	0	1
136	5	0	0	0	3(D-A)	0	0	0
137	4	0	0	0	2(D-B)	0	0	0
138	4	1	0	0	3(D-B)	1	0	0
139	5	0	0	1	3(D-B)	0	0	0

Appendix F
Table F-3

Turkey Point Unit 3
Class 3 Supports and Integral Attachments

Zone	Total Supports	Number Selected by Period			Total Integral Attachments	Number Selected by Period		
		1	2	3		1	2	3
140	6	2	0	0	0	0	0	0
141	5	0	0	1	0	0	0	0
142	6	0	0	0	1(D-B)	0	0	0
143	8	0	4	0	3(D-B)	0	0	0
144	3	0	1	0	1(D-B)	0	0	0
145	4	0	1	1	3(D-B)	0	0	1
146	6	0	0	1	4(D-B)	0	0	1
147	2	1	0	0	2(D-B)	1	0	0
148	3	0	0	1	0	0	0	0
149	7	4	0	0	4(D-B)	0	0	0
150	3	0	0	2	3(D-B)	0	0	0
151	4	2	0	0	7(D-B)	0	0	0
152	7	0	2	1	1(D-B)	0	0	0
153	9	2	0	3	6(D-B)	0	0	0
154	4	0	0	0	2(D-B)	0	0	0
155	2	0	0	0	2(D-B)	0	0	0
156	2	2	0	0	1(D-B)	0	0	0
157	5	2	0	0	2(D-B)	0	0	0
158	5	2	0	0	4(D-B)	0	0	0
159	5	1	0	0	1(D-B)	0	0	0
160	9	0	0	0	0	0	0	0

Appendix F
Table F-3

Turkey Point Unit 3
Class 3 Supports and Integral Attachments

Zone	Total Supports	Number Selected by Period			Total Integral Attachments	Number Selected by Period		
		1	2	3		1	2	3
161	2	0	1	0	1(D-B)	0	0	0
162	15	2	0	3	7(D-A)	0	0	0
163	13	0	1	4	5(D-A)	0	2	0
164	12	0	2	0	5(D-B)	0	0	0
165	3	0	0	0	0	0	0	0
166	4	0	1	0	0	0	0	0
167	9	0	3	0	0	0	0	0
168	11	0	0	1	2(D-A)	0	0	1
169	12	1	0	0	0	0	0	0
170	12	0	1	0	0	0	0	0
171	7	0	0	1	0	0	0	0
Total	329	29	21	41	112	4	5	5

Supports:

Piping	176
Components	7
Total	183
Piping Schd	43
Component Schd	3

Scheduled - 91
Total - 329
Percentage - 91/329 = 27.7%

Appendix F
Table F-3

Turkey Point Unit 3
Class 3 Supports and Integral Attachments

Note: Supports that contain more than one classified line are counted only once.

Integral Attachments:
Scheduled - 14
Total - 112

Percentage - 14/112 = 12.5%

Appendix F
Table F-4

Turkey Point Unit 4
Class 1 Support Summary

Zone	Total Supports	Supports Examined		
		Per 1	Per 2	Per 3
016	1	0	1	0
017	0	0	0	0
018	0	0	0	0
019	0	0	0	0
020	14	0	2	0
021	21	0	2	1
022	2	0	1	1
035	17	0	3	0
036	3	2	0	0
037	3	2	1	0
038	4	0	1	0
039	4	0	2	1
040	12	1	0	2
041	12	0	2	1
042	8	1	0	1
043	4	1	0	0
044	7	0	1	2
045	7	0	1	0
046	9	1	0	3
047	14	1	2	2
048	2	0	0	0
049	5	0	1	0

Appendix F
Table F-4

Turkey Point Unit 4
Class 1 Support Summary

Zone	Total Supports	Supports Examined		
		Per 1	Per 2	Per 3
050	5	1	0	0
051	12	0	1	0
052	9	0	0	1
Totals	175	10	21	15

Scheduled - 46
Total - 175

Percentage - 46/175 = 26.3%

Note: Supports that contain more than one classified line are counted only once.

Appendix F
Table F-5

Turkey Point Unit 4
Class 2 Supports

Zone	Total Supports	Supports Examined		
		Per 1	Per 2	Per 3
063	9	1	3	0
064	2	0	0	0
065	3	0	0	1
066	1	0	0	0
067	4	0	0	2
068	2	0	2	0
069	11	2	1	0
070	0	0	0	0
071	0	0	0	0
072	0	0	0	0
073	0	0	0	0
074	0	0	0	0
075	0	0	0	0
076	0	0	0	0
077	1	0	0	0
081	2	0	0	0
082	1	0	0	0
083	0	0	0	0
084	13	3	1	0
085	2	0	1	0
086	0	0	0	0
087	1	0	1	0
088	0	0	0	0

Appendix F
Table F-5

Turkey Point Unit 4
Class 2 Supports

Zone	Total Supports	Supports Examined		
		Per 1	Per 2	Per 3
089	3	1	0	0
090	1	0	0	0
091	0	0	0	0
092	0	0	0	0
093	0	0	0	0
094	0	0	0	0
095	0	0	0	0
096	0	0	0	0
097	48	0	1	0
098	21	0	0	0
099	2	0	1	1
100	2	0	0	1
101	3	0	1	1
102	2	0	0	0
103	2	0	1	0
104	2	0	0	0
105	11	1	1	2
106	6	0	0	2
107	8	0	2	1
108	2	0	0	2
109	0	0	0	0
110	1	0	0	1

Appendix F
Table F-5

Turkey Point Unit 4
Class 2 Supports

Zone	Total Supports	Supports Examined		
		Per 1	Per 2	Per 3
111	11	1	1	1
112	5	0	1	1
113	4	1	0	2
114	7	1	0	0
115	3	2	0	0
116	3	1	0	0
Totals	199	14	18	18

Scheduled - 50
Total - 199

Percentage - 50/199 = 25.1%

Note: Supports that contain more than one classified line are counted only once.

Appendix F
Table F-6

Turkey Point Unit 4
Class 3 Supports and Integral Attachments

Zone	Total Supports	Number Examined by Period			Total Integral Attachments	Number Examined by Period		
		1	2	3		1	2	3
120	3	3	0	0	3(D-A)	1	0	0
121	5	0	0	3	3(D-A)	0	0	0
122	7	2	0	1	2(D-B)	0	0	1
123	7	0	1	0	3(D-B)	0	1	0
124	1	0	0	1	0	0	0	0
125	8	1	0	0	3(D-A)	0	0	0
126	6	2	2	0	5(D-B)	0	2	0
127	6	0	0	1	3(D-B)	0	0	1
128	2	1	0	0	0	0	0	0
129	5	4	0	0	2(D-B)	0	0	0
130	6	4	0	0	3(D-B)	0	0	0
131	5	0	1	1	2(D-B)	0	0	0
132	5	0	0	2	2(D-B)	0	0	0
133	10	0	1	3	7(D-B)	0	0	0
134	3	0	0	1	2(D-B)	0	0	1
135	5	0	1	0	2(D-B)	0	0	0
136	2	0	0	0	1(D-B)	0	0	0
137	5	0	1	1	2(D-B)	0	0	0
138	2	0	0	0	0	0	0	0
139	10	0	1	0	4(D-A)	0	0	0
140	4	0	0	1	1(D-B)	0	0	0

Appendix F
Table F-6

Turkey Point Unit 4
Class 3 Supports and Integral Attachments

Zone	Total Supports	Number Examined by Period			Total Integral Attachments	Number Examined by Period		
		1	2	3		1	2	3
141	10	2	1	2	2(D-B)	0	0	0
142	5	2	0	0	3(D-B)	1	0	0
143	4	0	0	0	2(D-B)	0	0	0
144	11	2	2	0	2(D-B)	0	0	0
145	9	0	0	2	2(D-B)	0	0	0
146	4	1	0	0	0	0	0	0
147	5	0	0	0	1(D-B)	0	0	0
148	4	1	0	0	3(D-B)	1	0	0
149	9	0	2	0	2(D-B)	0	0	0
150	8	1	1	0	1(D-B)	0	0	0
151	6	0	0	1	4(D-B)	0	0	0
152	6	0	1	0	4(D-B)	0	0	0
153	9	0	1	0	4(D-B)	0	0	0
154	4	0	0	0	2(D-B)	0	0	0
155	4	0	1	0	4(D-B)	0	0	0
156	8	2	1	0	4(D-B)	0	0	0
157	6	1	0	0	0	0	0	0
158	16	2	2	1	1(D-B)	0	0	0
159	6	2	0	0	0	0	0	0
160	11	0	0	1	3(D-B)	0	0	0
161	7	2	0	0	2(D-B)	0	0	0

Appendix F
Table F-6

Turkey Point Unit 4
Class 3 Supports and Integral Attachments

Zone	Total Supports	Number Examined by Period			Total Integral Attachments	Number Examined by Period		
		1	2	3		1	2	3
162	11	0	1	0	1(D-B)	0	1	0
163	25	1	1	3	6(D-A)	0	0	1
164	3	1	0	0	0	0	0	0
165	9	0	3	0	0	0	0	0
166	11	0	1	1	0	0	0	0
167	11	0	1	0	0	0	0	0
Total	329	37	27	26	103	3	4	4

Supports:

Scheduled 90
Total 329
Percentage 90/329 = 27.6%

Note: Supports that contain more than one classified line are counted only once.

Integral Attachments:

Scheduled 11
Total 103
Percentage 11/103 = 10.7%

Appendix G
Relief Requests

Relief Request	Description
1	Incomplete Coverage - Reactor Pressure Vessel Welds
2	Incomplete Coverage - RPV Safe End Welds
3	Relief from Exams - Regenerative Heat Exchanger
4	Inservice Test Requirements for Snubbers
5	Relief from Exams - Reactor Pressure Vessel
6	Alternate NIS-1 and NIS-2 forms
7	Alternate Examinations of Longitudinal Seam welds on Piping
8	Alternative Rules for the Selection and Examination of Class 1, 2, and 3 Integrally Welded Attachments
9	Alternative Scheduling of Examinations
10	Alternative Examination of Class 1 and 2 Borated Bolted Connections Subject to VT-2 Examination

Relief Request No. 1

A. Component Identification:

Turkey Point Units 3 and 4
Class 1 - Reactor Pressure Vessel

B. Examination Requirements:

Rules for Inservice Inspection of Nuclear Power Plant Components, 1989 Edition

Exam Category	Item No.	Description
B-A	B1.30	Volumetric examination of shell to flange weld, includes essentially 100% of weld length.
B-D	B3.90	Volumetric examination of full penetration welds in vessels (includes nozzle to vessel weld and adjacent areas of nozzle and vessel).

C. Relief Requested:

Relief is requested from examining the Code required volume during the performance of ultrasonic examinations of the following vessel outlet nozzle and flange to shell weld.

Item No.	Turkey Pt. 3	Turkey Pt. 4
B1.30	3-WR-18	4-WR-18
B3.90	3-DO-A 3-DO-B 3-DO-C	4-DO-A 4-DO-B 4-DO-C

D. Basis for Relief:

Configuration of the outlet nozzles and flange to shell welds prohibit 100% ultrasonic examination coverage of the required code examination volume.

1. Nozzle to Shell Weld Limitations

When performing computerized Ultrasonic examinations of the Nozzle to Shell Welds from the vessel wall, several areas were described as having limited examination scans. These limitations were restricted to the last several scans of the nozzle to shell examination and were due to the physical limitations imposed by the adjacent nozzles. The limitations all occurred in the vicinity of the 90° and 180° nozzle azimuth relative to nozzle orientation.

2. Reactor Pressure Vessel Shell to Flange Weld

There are areas that did not receive 0 degree, 45 degree transverse, or 60 degree transverse weld coverage due to the geometric configuration of the flange radius located just above the weld.

Examinations performed from the shell side of the weld provided essentially 100 percent coverage of the weld and 1/2t of the base material on the shell side.

RPV Nozzle to Shell Weld Limitations		
Examination Type	Percentage of Coverage Achieved	Remarks
Parallel Scans	100%	None
Transverse Scans	88.79%	Exams from the shell were limited due to interference from the integral attachment

Reactor Pressure Vessel Shell to Flange Weld		
Examination Type	Percentage of Coverage Achieved	Remarks
Parallel Scans	77.22%	Exams from the shell surface were limited due to the flange inside taper
Transverse Scans	54.87%	Exams from the shell surface were limited due to the flange inside taper
Total Weld Length = 488.51"		

Reactor Pressure Vessel Bottom Head to Lower Head Ring		
Examination Type	Percentage of Coverage Achieved	Remarks
Parallel Scans	UP 90.00% DN 98.00%	Exams were limited due to the close proximity of the instrumentation tubes
Transverse Scans	CW 91.73% CCW 88.00%	Exams were limited due to the close proximity of the instrumentation tubes
Total Weld Length = 488.51"		

E. Alternative Examinations:

Periodic System Leakage Tests per Category B-P and the achievable ultrasonic testing. The extent of examination volume achieved ultrasonically and the alternative system pressure tests provide assurance of an acceptable level of quality and safety.

F. Implementation Schedule:

Third Period of the Third Interval.

G. Attachments

Upper Shell to Flange limitation drawing
Head to Lower Head Ring limitation drawing
Lower Head Ring to Lower Shell limitation drawing
Inlet Nozzle to Shell Limitations
Outlet Nozzle to Shell Limitations

Upper Shell to Flange Limitations

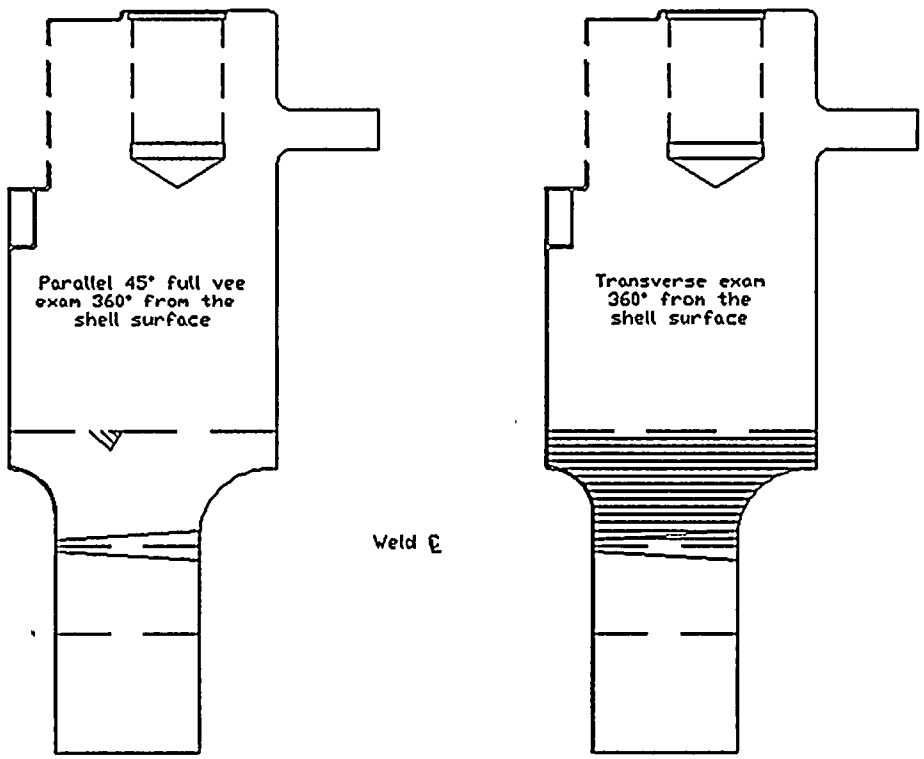

Note: Limited Examination due to inside surface taper.

Upper Shell to Flange

Head to Lower Head Ring Limitations

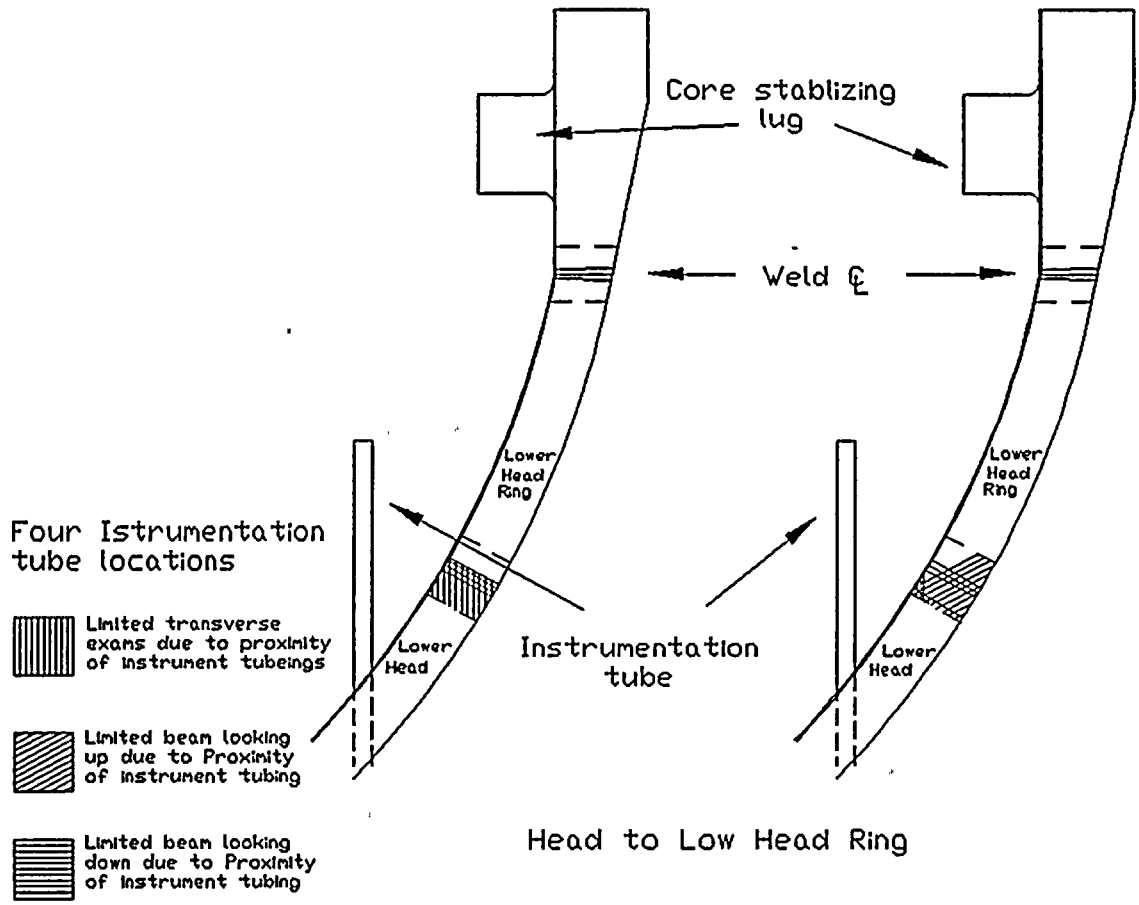

Lower Head Ring to Lower Shell Limitations

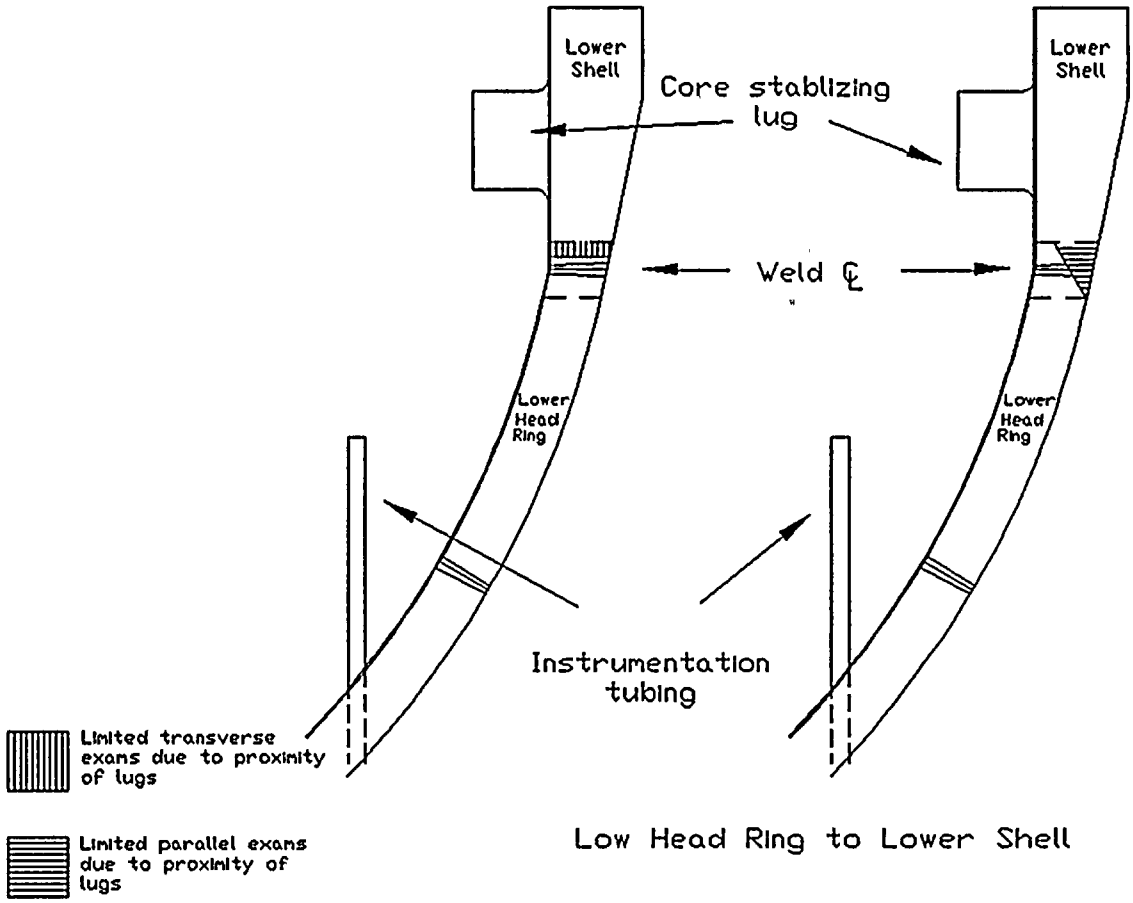

Low Head Ring to Lower Shell

Inlet Nozzle to Shell Limitations

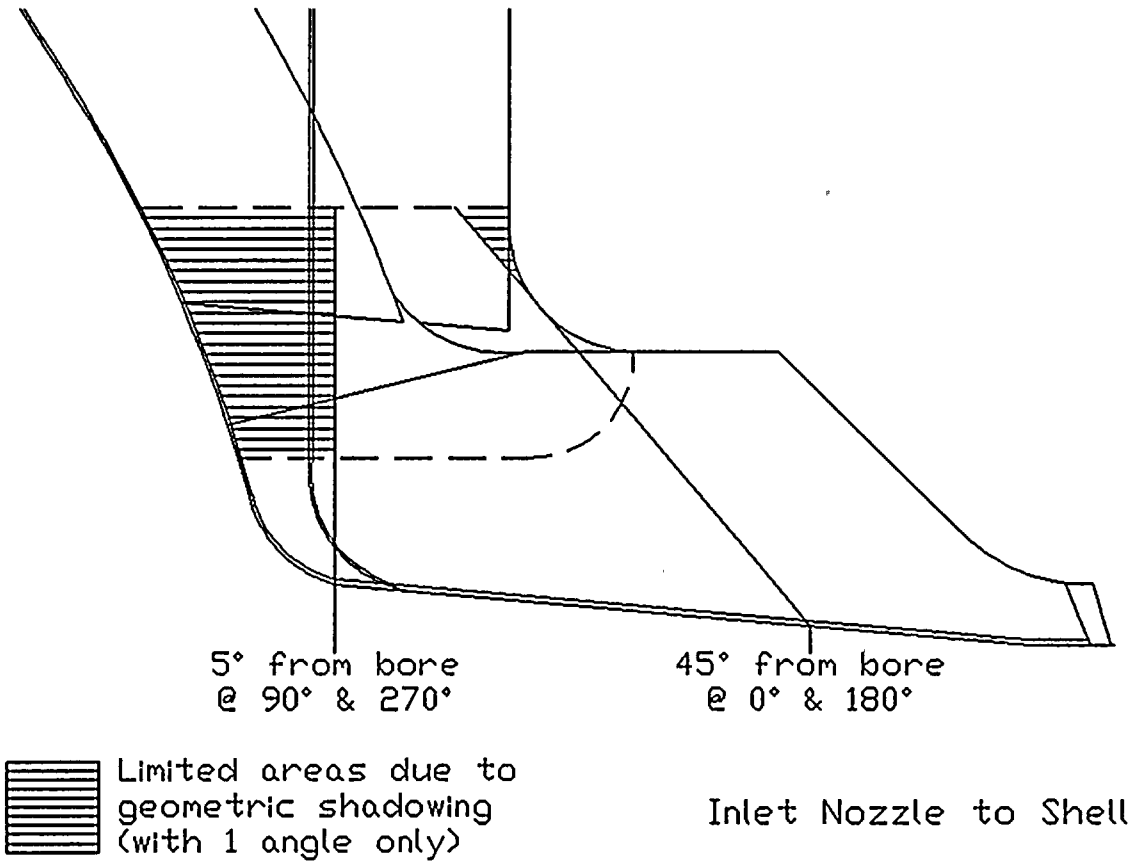

Outlet Nozzle to Shell Limitations - Parallel

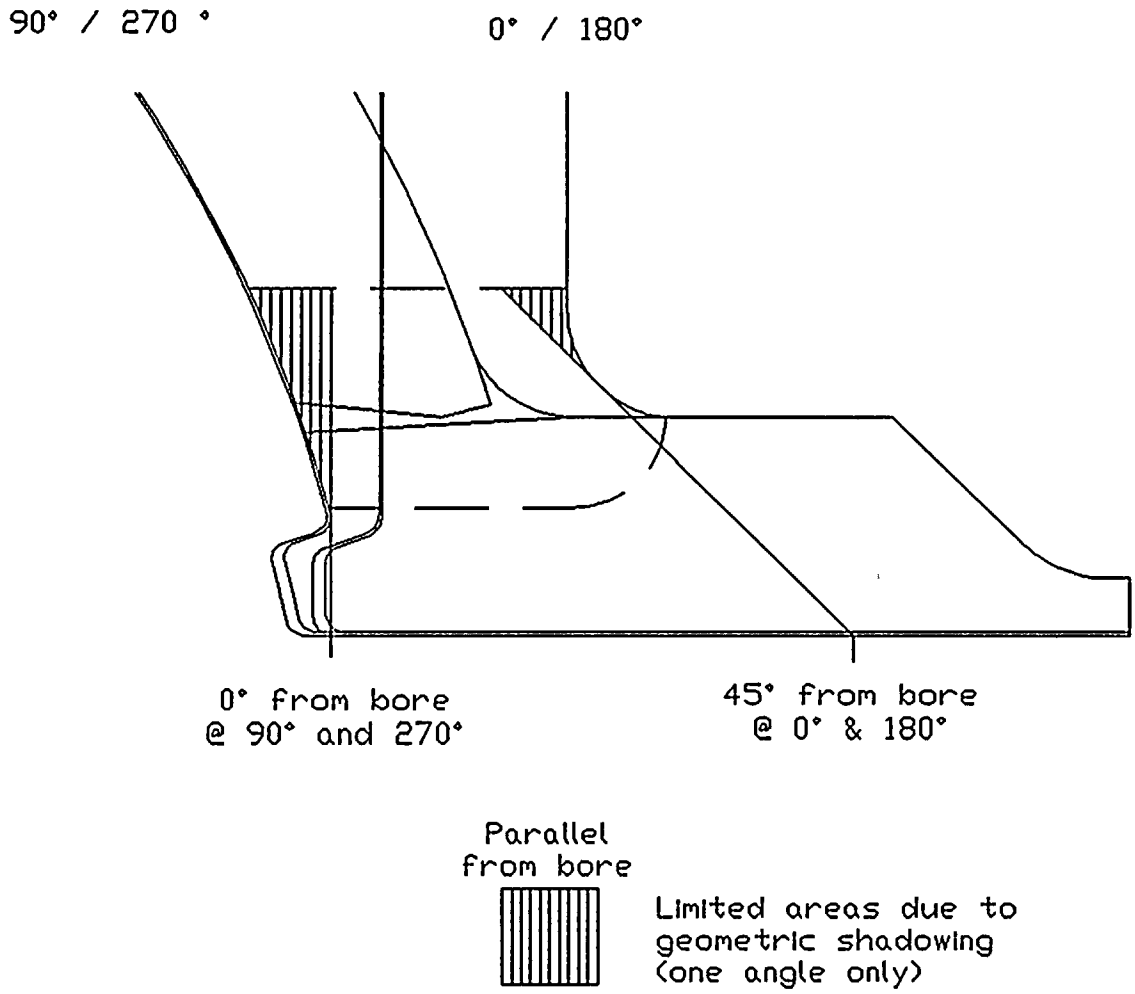

Outlet Nozzle to Shell Limitations - Transverse

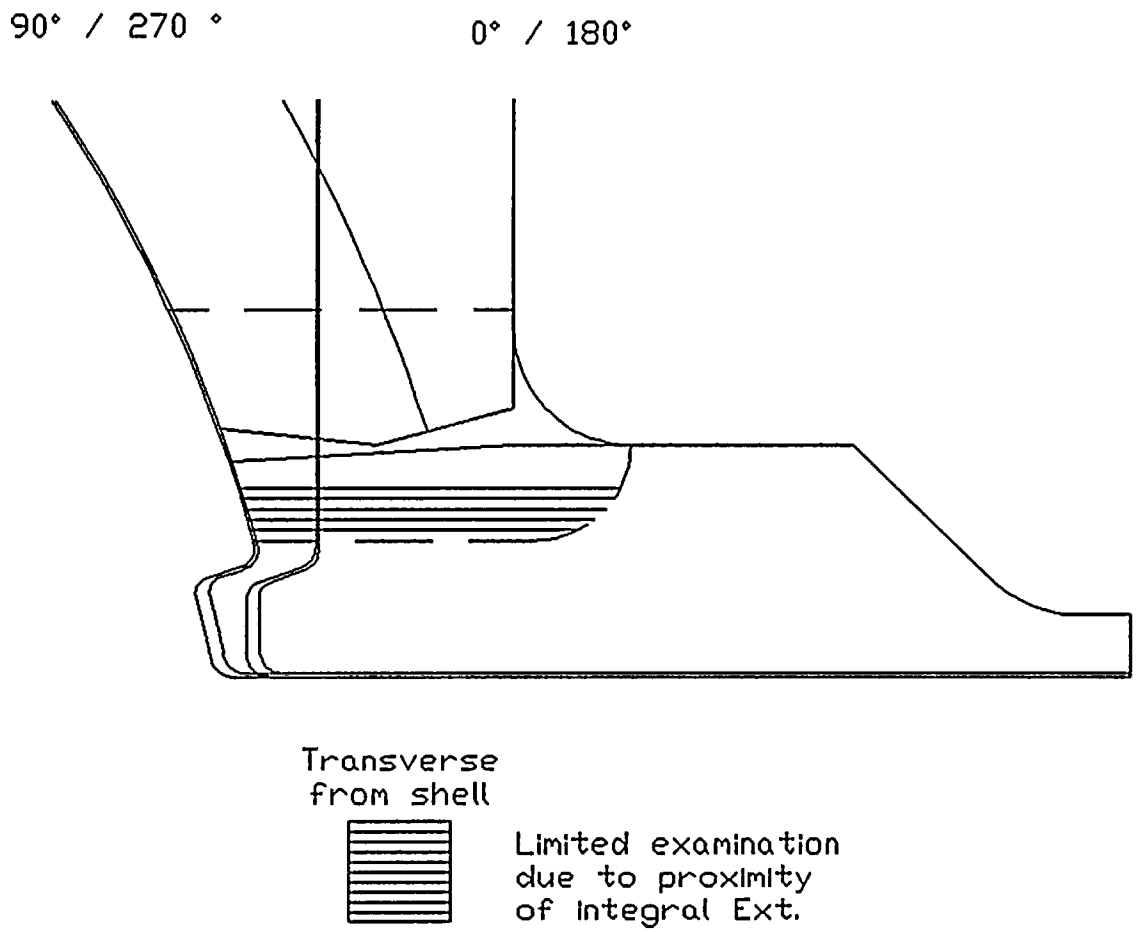

Relief Request No. 2

A. Component Identification:

Turkey Point Units 3 and 4

Class 1 - Reactor Pressure Vessel Safe-End Pressure Retaining Dissimilar Metal Welds,

B. Examination Requirements:

Rules for Inservice Inspection of Nuclear Power Plant Components, 1989 Edition

Code Category: B-F
Code Item Number: B5.10

Volumetric and surface examinations shall be performed during each inspection interval.

C. Relief Requested:

Relief is requested from the required code examination area during ultrasonic and liquid penetrant examinations.

D. Basis for Relief:

1. Portions of the required volumetric and surface area are inaccessible due to permanent physical obstructions in the Reactor Pressure Vessel.

2. In order to conduct these examinations at Turkey Point, access is from the refuel pool, which requires seal ring and sand plug cover removal.

3. Non-removable vessel and piping insulation and limited space in the sand plug area restricts access to the exterior surface. 100% of the surface area can not be effectively examined.

Surface Examination Coverage				
Weld No.	CW Coverage from TDC	CCW Coverage from TDC	Weld Length	Percentage Covered
27.5"-RCS-1306-14	10"	17"	86.4"	31.3%
27.5"-RCS-1307-14	21"	23"	86.4"	50.9%
27.5"-RCS-1309-14	21"	21"	86.4"	48.6%
27.5"-RCS-1406-14	3"	4"	86.4"	8.1%
27.5"-RCS-1407-14	3"	4"	86.4"	8.1%
27.5"-RCS-1409-14	3"	3"	86.4"	6.9%

4. Performance of these examinations on the nozzles involves excessive cost, manhours, and radiation exposure with little or no compensating increase in the level of quality and safety.

5. The examinations conducted provide assurance of an acceptable level of quality and safety.

E. Alternative Examinations:

1. Conduct volumetric and surface examinations to the extent possible on the Inlet Reactor Pressure Vessel Nozzle Safe-End Welds.

PTN-3	PTN-4
27.5"-RCS-1307-14	27.5"-RCS-1407-14
27.5"-RCS-1306-14	27.5"-RCS-1406-14
27.5"-RCS-1309-14	27.5"-RCS-1409-14

2. Conduct a full volume ultrasonic examination including the outside surface of the Reactor Pressure Vessel outlet nozzle safe end welds in lieu of the surface examinations.

PTN-3	PTN-4
29"-RCS-1304-1	29"-RCS-1404-1
29"-RCS-1305-1	29"-RCS-1405-1
29"-RCS-1308-1	29"-RCS-1408-1

3. The volumetric examination technique utilized will cover the entire volume of the weld and 1/2" of the base metal from the edge of the weld. This examination will interrogate the outside surface of the weld from two different directions circumferentially and axially. This technique was used for previous examinations on these welds with satisfactory results in accordance with the previous Relief Request.

4. Conduct system pressure tests as required by the Turkey Point Inservice Pressure Test Program.

5. The examination volume achieved by surface and/or ultrasonic examination, combined with the system pressure tests, provide an acceptable level of quality and safety.

F. Implementation Schedule:

Third Inservice Inspection Interval

The nozzle safe-ends will be examined in conjunction with the Reactor Pressure Vessel examinations at or near the end of the inspection interval.

G. Attachments

None

Relief Request No. 3

A. Component Identification:

Turkey Point Units 3 and 4

Class 1 - Regenerative Heat Exchangers and connecting piping at Turkey Point Nuclear Plants, Units 3 and 4.

B. Examination Requirements:

Rules for Inservice Inspection of Nuclear Power Plant Components, 1989 Edition

IWB-2500 Examination and Pressure Test Requirements

Exam Catgy	Item No.	Examination requirements
B-B	B2.51 B2.80	Volumetric examination, to include 100% of the length of circumferential tube sheet to shell welds and head to shell welds
B-D	B3.150 B3.160	Volumetric examination, to include 100% of each nozzle to vessel weld and nozzle inside radius area.
B-H	B8.40	Volumetric or surface examination to include 100% of each integrally welded support of one exchanger.
B-J	B9.21	Surface examination to include 100% of weld surface on approximately 25% of the total interconnecting piping joints.
B-J	B9.40	Surface examination of essentially 100% of the weld length of selected welds during each interval.
B-J	Footnote 1	Examinations shall include the following: (a)All terminal ends in each pipe or branch run connected to vessels.
F-A	All Code Item Numbers as Applicable	Examine welds, mechanical connections, clearances, alignment, sliding surfaces, and assembly of the supports.

Exam Catgy	Item No.	Examination requirements
N/A	Terminal Ends	The extremities of piping runs that connect to structures, components, or pipe anchors, each of which acts as a rigid restraint or provides at least 2 degrees of restraint to piping thermal movement

C. Relief Requested:

Relief is requested from the Code required examinations on the Regenerative Heat Exchanger shell welds, interconnecting piping welds, support welds, connecting terminal end piping welds, and the component supports.

Item No.	Examination Areas	Turkey Point Unit 3	Turkey Point Unit 4
B2.51	Head to Shell Circ Welds	6 welds	6 welds
B2.80	Shell to Tubesheet welds	6 welds	6 welds
B3.150	Nozzle to Shell welds	12 welds	12 welds
B3.160	Nozzle Inside Radius Section	12 areas	12 areas
B8.40	Welded Support	3 welds	3 welds
B9.21	Interstage Piping	10 welds	10 welds
B9.40	Socket Welds	2 welds	2 welds
All Code Item Numbers as Applicable	Supports	1 support	1 support
See Tables 1 and 2 for detailed listings of welds.			

D. Basis for Relief:

The Regenerative Heat Exchanger is located in a locked high radiation area. This area has a general field of 2 Rem/hr with contact dose rates of up to 10 Rem/hr, is highly contaminated,

and requires the use of a full face respirator. Turkey Point Health Physics (HP) rules require the constant presence of an HP technician during entry to this area. Other conditions include limited accessibility to the examination areas due to the close proximity of the adjacent wall and floor, limited work area due to cubicle walls built to shield personnel in adjacent areas, and interference from other lines and supports in the immediate area.

During construction of Turkey Points Units 3 and 4, asbestos insulation was used extensively. Asbestos insulation is present in the area of the Regenerative Heat Exchanger. Additional protection is required for personnel entering this area to avoid possible spreading and ingestion of this hazardous material (i.e. an extra layer of protective clothing, tenting, HEPA filters.)

Performing Code required examinations would require large expenditures of man-hours and accumulated Man-Rem dose. The welds must be de-insulated for examination and temporary shielding and scaffold installed. Effective shielding reduces accessibility to the examination areas. Proper surface conditioning will add to the time and exposure required to perform valid surface and volumetric examinations. The area must be tented to avoid spreading of asbestos fibers found in the insulation. The design and arrangement of the Regenerative Heat Exchanger are not conducive to meaningful examinations.

FPL has performed examinations on the Regenerative Heat Exchangers for both Turkey Point Units 3 and 4 during the first inspection interval (approximately early 1972 through late 1983) before the original relief request was approved. This experience showed that the design arrangement and accessibility are not conducive to meaningful examinations. The configuration, limited accessibility, high radiation levels, and interference from supports, walls, and the floor do not allow the Code required 100% volumetric and/or surface examinations.

Terminal ends in Category B-J, welds are to receive surface and/or volumetric examinations. FPL has performed examinations on terminal end welds on other components in the Chemical and Volume Control system. Since 1985, VT-2 and VT-3 examinations have been performed on the terminal end welds listed in this relief. These were performed in accordance with the previous approved relief request, which required FPL to look for evidence of leakage around the Regenerative Heat Exchanger just

after shutdown for a refueling outage, and a second time during the system pressure test at plant startup.

During the 1991 outages of both units, the system hydrostatic tests were performed on the affected systems. No leakage was detected. No evidence of leakage from the Regenerative Heat Exchanger or its attached piping has been noted in either unit during any of the previous examinations.

Performing the alternative examinations will not increase the health and safety risk to the public.

Estimated Time and Man-REM for Regenerative Heat Exchanger Weld Examinations

Job Description	Dose Rate	Man hours	Estimated Man-REM
Tenting and HEPA Filter Installation	0.5	8.0	4.00
Insulation Removal (Asbestos)	2.0	8.0	16.00
Scaffold Installation	0.5	3.0	1.50
Lead Installation	2.0	5.0	10.00
Surface Preparation for Exam	2.5	16.0	40.00
ISI Examination	2.5	5.5	13.75
Install Insulation	2.0	12.5	25.00
Remove Scaffold	0.5	1.5	0.75
Remove Tent and HEPA Filter	0.5	2.5	1.25
Temporary Services	0.5	0.5	0.25
Lead Removal	2.0	2.0	4.00
Clean Up	1.0	2.0	2.00
Totals		66.50	118.50

Note: These estimates are valid for both units.

E. Alternative Examinations:

Florida Power and Light will perform a VT-3 at the beginning of the outage for leakage and boric acid accumulation, and a VT-2 during the system leakage test. These examinations are currently performed in accordance with the previous approved relief request on the Regenerative Heat Exchangers.

F. Implementation Schedule:

The alternative examinations will be performed during each refuel outage.

G. Attachments

Table 1 - Terminal End Piping Welds
Table 2 - Regenerative Heat Exchanger Weld Identification
Sketch of Coverage Achieved
Sketch of Unit 3 Regenerative Heat Exchanger
Sketch of Unit 3 Terminal End Welds
Sketch of Unit 4 Regenerative Heat Exchanger
Sketch of Unit 4 Terminal End Welds

H. References

USNRC letter to Mr. J. W. Williams, Jr., Vice President, Florida Power and Light, dated February 4, 1985 granting relief from ASME Section XI requirements

TAC Nos. 49133, 49936, 54677, 54678, 54973, and 54974

Table 1
Terminal End Piping Welds

Unit 3	Unit 4
3"-CH-1301-1	3"-CH-1402-1
3"-CH-1303-23	3"-CH-1403-24
2"-CH-1301-18	2"-CH-1401-18
2"-CH-1302-1	2"-CH-1402-1

Table 2 - Regenerative Heat Exchanger Weld Identification

Weld Description	Weld Numbers *
Head to Shell	RGX-I-1 RGX-II-1 RGX-III-1
Shell to Tube Sheet - Primary	RGX-I-2 RGX-II-2 RGX-III-2
Tube Sheet to Shell - Secondary	RGX-I-3 RGX-II-3 RGX-III-3
Channel Head Weld Secondary	RGX-I-4 RGX-II-4 RGX-III-4
Shell I Nozzle Welds	RGX-I-9 RGX-I-10 RGX-I-11 RGX-I-12
Shell II Nozzle Welds	RGX-II-9 RGX-II-10 RGX-II-11 RGX-II-12
Shell III Nozzle Welds	RGX-III-9 RGX-III-10 RGX-III-11 RGX-III-12
Shell I Nozzle to Pipe Interstage Piping	RGX-I-7 RGX-I-8
Shell II Nozzle to Pipe Interstage Piping	RGX-II-5 RGX-II-6 RGX-II-7 RGX-II-8
Shell III Nozzle to Pipe Interstage Piping	RGX-III-5 RGX-III-6
Integrally Welded Supports	RGX-I-LUG RGX-II-LUG RGX-III-LUG
* The weld numbers are the same for both units.	

Examination Area Coverage

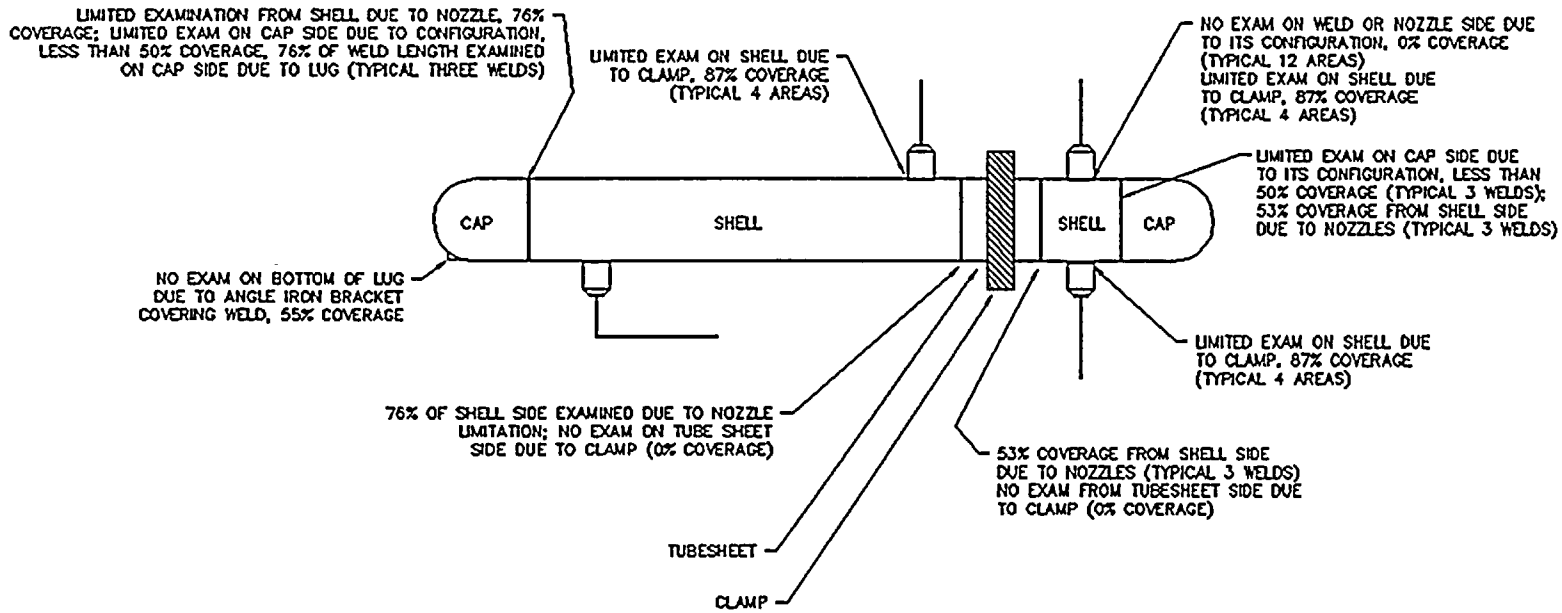

Unit 3 Regenerative Heat Exchanger

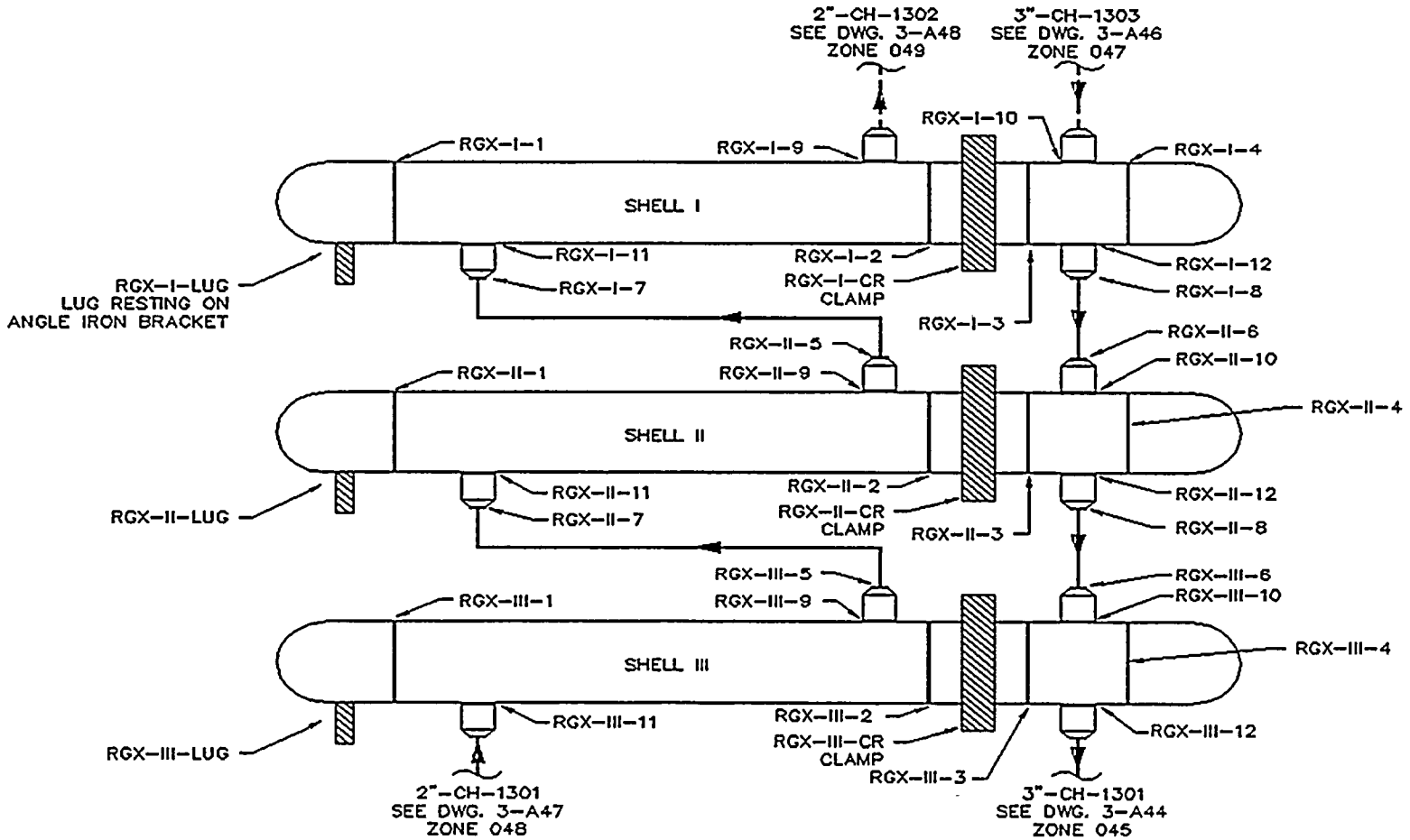

Unit 3 Regenerative Heat Exchanger Terminal End Welds

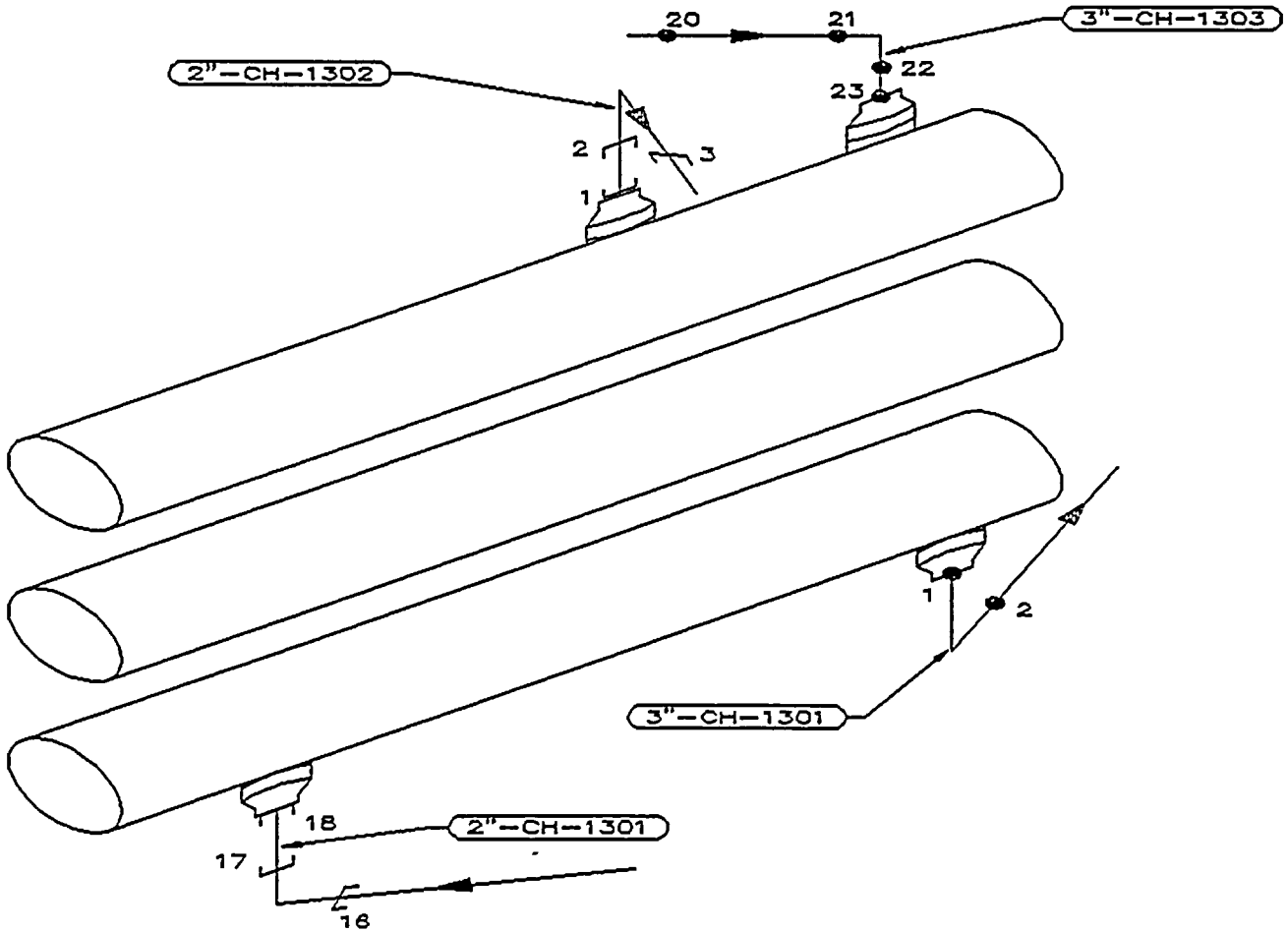

Unit 4 Regenerative Heat Exchanger

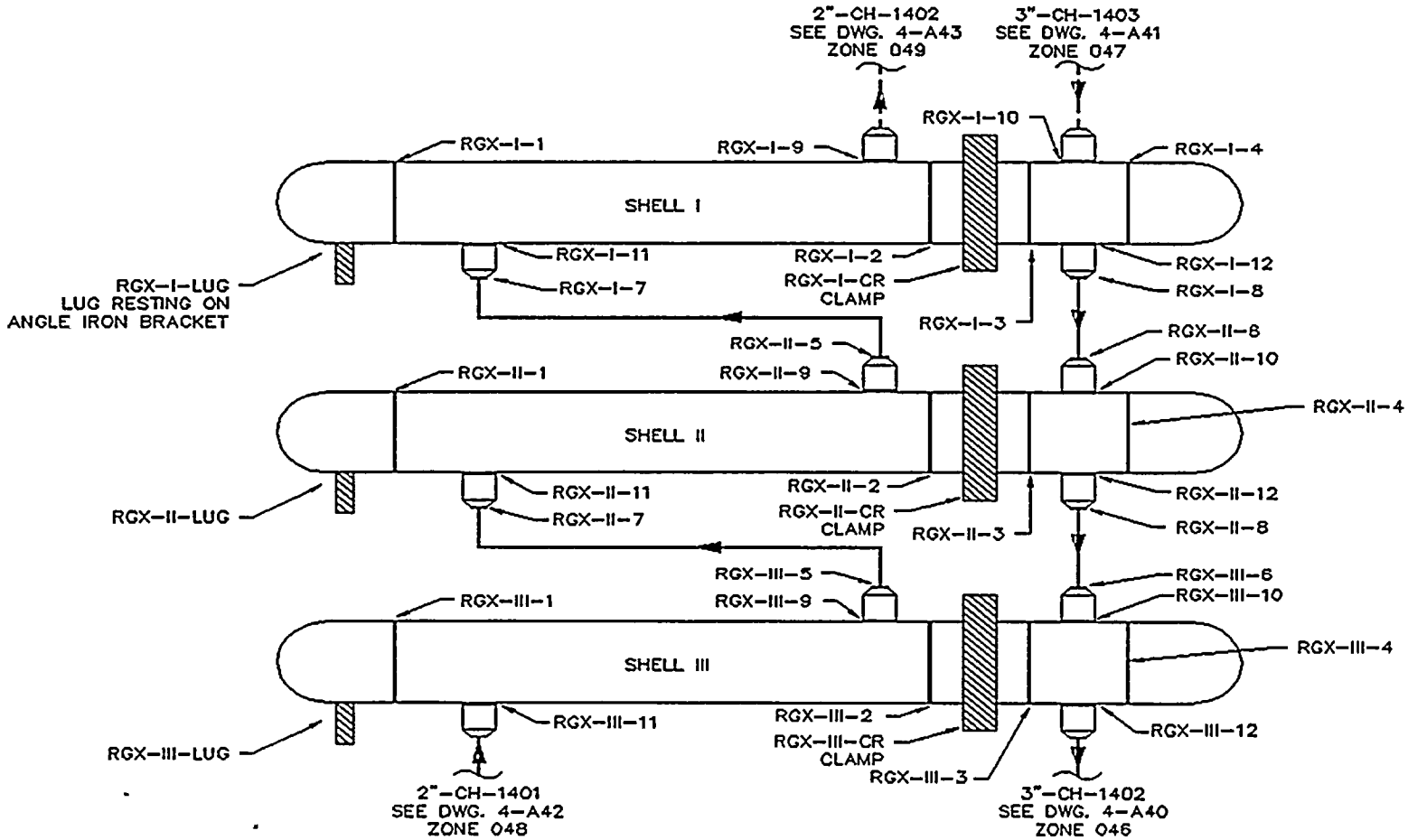

Unit 4 Regenerative Heat Exchanger Terminal End Welds

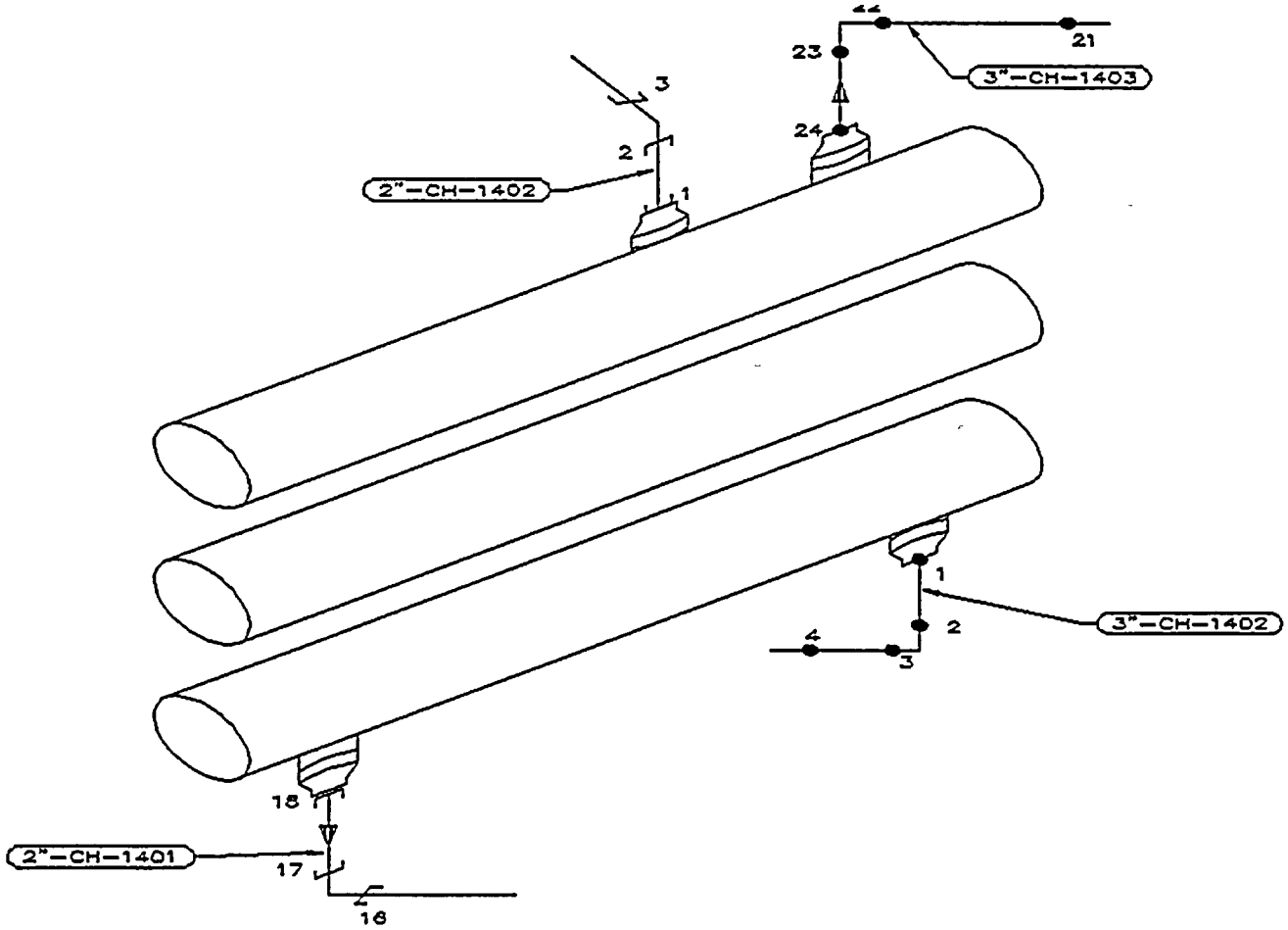

Relief Request No. 4

A. Component Identification:

Turkey Point Units 3 and 4

- ASME Section XI, 1989 Edition
- IWF-5000 Inservice Test Requirements
- ASME Class 1, 2, and 3
- Snubbers

B. Examination Requirements:

Rules for Inservice Inspection of Nuclear Power Plant Components, 1989 Edition

IWF-5300 - Inservice Examination and Tests

(a) Inservice examination shall be performed in accordance with the first Addenda to ASME/ANSI OM-1987, Part 4 (published in 1988), using the VT-3 visual examination method described in IWA-2213.

(b) Inservice tests shall be performed in accordance with the first Addenda to ASME/ANSI OM-1987, Part 4 (published in 1988).

C. Relief Requested:

Relief is requested from the requirements of ASME/ANSI OM-1987, Part 4 (OM Part 4).

D. Basis for Relief:

1. Table 6.5.2-1 of OM Part 4 has been incorporated into the Turkey Point plant technical specifications and is currently implemented.

2. The functional test plan and sample expansion plans identified in OM Part 4 are engineering manpower intensive. It results in hardships for Turkey Point with its relatively small snubber population. There would be additional time, expense, and an accompanying increase in radiation exposure without a compensating increase in the level of quality or safety.

3. FPL has very successful snubber functional and visual testing programs at Turkey Point. Both programs follow the plant technical specifications which is more stringent than OM Part 4. The functional test program utilizes the 10% sample plan and a 10% expansion criteria based on design type. The visual examination program includes a "limited operability test" by hand stroking all snubbers each refueling outage during the VT-3 examination.

E. Alternative Examinations:

FPL will utilize the Snubber Functional and Visual Testing Program currently in place as described in the Basis this Relief Request. These examinations and tests exceed the requirements of OM Part 4 and provide an acceptable level of quality and safety.

F. Implementation Schedule:

Third Inspection Interval

G. Attachments:

none

Relief Request No. 5

A. Component Identification:

- ASME Class 1
- Reactor Pressure Vessel
- Examination Category B-D - Full Penetration Welds of Nozzles in Vessels - Inspection Program B

B. Testing Requirements:

Rules for Inservice Inspection of Nuclear Power Plant Components, 1989 Edition

Category	Item No.	Description
B-D	B3.90	Nozzle to Vessel Welds
B-D	B3.100	Nozzle Inside Radius Sections
Note (2)	At least 25% but not more than 50% (credited) of the nozzles shall be examined by the end of the first inspection period, and the remainder by the end of the inspection interval.	

C. Relief Requested

Relief is requested from examining at least 25% of the Category B-D welds and inside radius sections in the Reactor Pressure Vessels of Turkey Point Units 3 and 4 by the end of the first inspection period.

D. Basis for Relief

During the 1990-1991 Outages for both Turkey Point Units 3 and 4, 100% of the Reactor Pressure Vessel welds were examined (categories B-A, B-D, and B-F). The examinations consisted of using the Enhanced Data Acquisition System from Southwest Research Institute (SwRI), which captures essentially 100% of the Ultrasonic signal for processing. Several of the SwRI personnel had qualified for certification with this equipment through an internal program. The Electric Power Research Institute Nondestructive Examination Center had qualified several of these SwRI personnel in IGSCC detection. Every

recorded indication was evaluated to determine its nature. No reportable indications were found. This was the third Inservice Inspection of these nozzles and inside radius sections.

These examinations met the requirements of 10 CFR 50.55a (g)(6)(ii)(A), Augmented Examination of Reactor Vessels.

E. Alternative Examinations

Florida Power and Light will perform 100% of the Category B-D nozzle welds and inside radius sections in the Reactor Pressure Vessels approximately 10 years after the previous examination.

F. Implementation Schedule

Third Period of the Third Ten-Year Interval

G. Attachments

none

Relief Request No. 6

A. Article Identification:

Article IWA-4000 Repair Procedures
Article IWA-6000 Records and Reports
Article IWA-7000 Replacement

B. Article Requirements:

IWA-4800 The records required by IWA-6000 shall be completed for all repairs.

IWA-7520 (a)(8) Completed Owner's Report for Repairs or Replacements, Form NIS-2

IWA-6210 (c) The Owner shall prepare inservice inspection summary report for Class 1 and 2 pressure retaining components and their supports.

IWA-6220 (c) Inservice inspection summary reports shall be required at the completion of each inspection conducted during a refueling outage. Examinations, tests, replacements, and repairs conducted since the preceding summary report shall be concluded.

IWA-6220 (d) Each summary report shall contain the following:

(2) Owner's Report for Inservice Inspections, Form NIS-1

(3) Owner's Report for Repair or Replacement, Form NIS-2

IWA-6230 Within 90 days of the completion of the inservice inspection conducted during each refueling outage, the Owner shall file inservice inspection summary reports with the enforcement and regulatory authorities having jurisdiction at the plant site.

C. Relief Requested:

Relief is requested from the following:

1. Preparation of the Owner's Report for Inservice Inspection, Form NIS-1.

2. Preparation of the Owner's Report for Repair or Replacement, Form NIS-2.

3. Submittal of the summary report within 90 days following completion of the inservice inspection conducted during each refueling outage.

D. Basis for Relief:

Florida Power and Light Company considers the summary report required by IWA-6000 does not contain the information necessary to assure compliance with Code requirements, and therefore does not provide a compensating increase in the quality and/or safety of Turkey Point.

The summary report does not furnish evidence of compliance with the ASME Boiler and Pressure Vessel Code, Section XI, Inspection Program B, percentage requirements as mandated by IWB-2412, IWC-2412, and IWD-2412.

Class 3 components are not required to be included in the summary report submittal.

Both a Final Report and Summary Report must be prepared, reviewed, and approved in order to comply with IWA-6220 and IWA-6310.

The preparation, review, approval, and certification of each record and report within the time frame of 90 days following completion of each refueling outage substantially increases the costs associated with inservice inspection activities. This puts an unreasonable time constraint on FPL without increasing assurance of Code compliance.

E. Alternative Examinations or Tests:

As an alternate to the requirements of IWA-6000, Florida Power and Light Company proposes the following:

1) Repair/Replacement Plan

Repair/Replacement plans shall meet the requirements of IWA-4140 (1992 Edition), to the extent required, for all Code Classes.

Each Repair/Replacement Plan shall be given a unique identification number. The unique identification number may be the number of the document utilized for the repair and/or replacement as required by FPL procedures or instructions (i.e., CR, CNR, P/CM, MEP, CWO, PWO, etc.).

All other applicable requirements of IWA-4000, 1989 Edition, shall be met.

2) Repair/Replacement Certification Record

As an alternate to the NIS-2 Report, FPL shall prepare and certify the Repair/Replacement Plan Certification Records, form NIS-2A (or similar), following completion of repairs or replacements.

The completed Form NIS-2A shall become part of the Repair/Replacement Plan and shall be maintained in accordance with IWA-6300. FPL shall maintain an index and update regularly the status of an index of Repairs/ Replacement Plans for all Code Classes. The index shall identify the unique identification number and the interval and period during which the repair or replacement was completed.

The index shall be maintained in accordance with IWA-6300. It will be made available upon request for review by the enforcement and regulatory authorities having jurisdiction at the plant site.

3) Summary Report

A Summary Report shall be prepared and submitted to the regulatory and enforcement authorities having jurisdiction at the plant site within 120 days following the end of the Inspection Period as identified in Program B.

The Summary Report shall include examinations, tests, repairs and replacements results for all ASME Class items which have been completed since the previously submitted Summary Report. The Summary Report shall contain the following:

a. Summary Report Cover Sheet, Form NIS-1A (or similar).

b. Abstract of examination and tests information, Form NIS-1B (or similar).

c. Listing of examinations, Form NIS-1C (or similar), that were not performed and were identified in the inspection plan for the inspection period, and when or if they are planned for a later date. Any alternate examinations (IWA-2240) that were performed.

d. A listing of flaws that required analytical evaluation, Form NIS-1D (or similar).

e. A Repair/Replacement Plan Certification Record, form NIS-2A (or similar).

e. Abstract of repairs and replacements, Form NIS-2B (or similar), which were required due to an item having exceeded the acceptance criteria.

F. Implementation Schedule:

The Third Inservice Inspection Interval.

G. Attachments to the Relief:

Form NIS-1A	Owner's ASME Section XI Summary Report
Form NIS-1B	Abstract of Examination and Tests
Form NIS-1C	Examinations Not Performed as Identified in the Inspection Plan
Form NIS-1D	Identification of Items with Flaws Which Required Analytical Evaluation for Continued Acceptability
Form NIS-2A	Repair/Replacement Plan Certification Record
Form NIS-2B	Abstract of Repairs and Replacements

Form NIS-1A
OWNER'S ASME SECTION XI SUMMARY REPORT

Page ____ of ____

Report Identification Number _____ Rev. _____ Date _____

Owner _____
(Name and Address of Owner)

Plant _____
(Name and Address of Plant)

Plant Unit _____ Refueling Outage Number _____ Commercial Service Date _____

Current Inspection Interval: _____

Inspection Interval Date: From _____ to _____

Inspection Period: [] First [] Second [] Third

Inspection Period Date: From _____ to _____

Applicable Edition of Section XI: _____ Addenda _____

Date/Revision of Inspection Plan _____

Edition and Addenda of ASME Section XI applicable to Repairs and Replacements, if different than the Inspection Plan: _____

CERTIFICATE OF COMPLIANCE

We certify that the statements made in this Summary Report are correct, and that the examinations, tests, repairs, replacements, and corrective measures represented by this report conform to the rules of the ASME Code, Section XI.

Certificate of Authorization No. _____ Expiration Date _____

Date _____, _____ Signed _____
Owner's Representative and Title

CERTIFICATE OF INSERVICE INSPECTION

I, the undersigned, holding a valid commission issued by the National Board of Boiler and Pressure Vessel Inspectors and the State or Province of _____ and employed by _____ of _____ have inspected the components described in this Owner's Data Report during the period _____ to _____, and state that to the best of my knowledge and belief, the Owner has performed all activities represented by this report in accordance with the rules of ASME Section XI.

By signing this certificate neither the Inspector nor his employer makes any warranty, expressed or implied, concerning the examinations, tests, repairs, replacements, or corrective measures described in this report. Furthermore, neither the Inspector nor his employer shall be liable in any manner for any personal injury or property damage or loss of any kind arising from or connected with this inspection.

_____ Commissions _____
Inspector's Signature National Board, State, Province, and Endorsements

Date _____, _____

FORM NIS-1B
ABSTRACT OF EXAMINATION AND TESTS

Page ____ of ____

Code Examination Category	Total Items Subject to Examination	Total Examinations Required for Interval	Total Examinations Required for this Period	Total % Exams Credited for Interval	Exclusions or Deferrals
B-A					
B-B					
B-D					
B-F					
B-G-1					
B-G-2					
B-H					
B-J					
B-K-1					
B-L-1					
B-L-2					
B-M-2					
B-N-1 B-N-2 B-N-3					
C-A					
C-B					
C-C					
C-F-1					
C-F-2					
D-A					
D-B					
F-A					

Form NIS-1C
Examinations not Performed as Identified in the Inspection Plan

Page ____ of ____

Examination Category	Item Number	Item Description	Date of Rescheduled Examination	Method of Alternate Exam Performed

Form NIS-1D
Identification of Items with Flaws Which Required Analytical Evaluation for Continued Acceptability

Page ____ of ____

Examination Category	Item Number	Item Description	Flaw Characterization (IWA-3300)	Flaw Found During Scheduled XI Exam/ Test (Yes or No)

Form NIS-2A
Repair/Replacement Plan Certification Record

Page ____ of ____

Repair/Replacement Plan Number _____

Owner's Certificate of Compliance

We certify that the _____ represented by Repair/replacement Plan Number _____ conforms to the rules of the ASME Code, Section XI.

Type Code Symbol Stamp _____

Certificate of Authorization No. _____ Expiration Date _____

Signed _____ Date _____, _____
Owner or Owner's Designee, Title

Certificate of Inservice Inspection

I, the undersigned, holding a valid commission issued by the National Board of Boiler and Pressure Vessel Inspectors and the State or Province of _____ and employed by _____ of _____ have inspected the components described in Repair/Replacement Plan No. _____ during the period _____ to _____, and state that to the best of my knowledge and belief, the Owner has performed all the activities described in the Repair/Replacement Plan in accordance with the requirements of the ASME Code, Section XI.

By signing this certificate, neither the Inspector nor his employer makes any warranty, expressed or implied, concerning the activities described in the Repair/Replacement Plan. Furthermore, neither the Inspector nor his employer shall be liable in any manner for any personal injury or property damage or loss of any kind arising from or connected with this inspection.

_____ Commissions _____
Inspector's Signature National Board, State, Province, and Endorsements

Date_____, _____

Form NIS-2B
Abstract of Repairs and Replacements

Page ____ of ____

ASME Class	Repair or Replacement	Item Description	Description of Work	Flaw Found During Scheduled Section XI Exam/Test (Yes/No)	Date Complete	Repair/ Replace Plan Number

Relief Request No. 7

A. Component Identification:

- ASME Class 1
  - Examination Category B-J - Pressure Retaining Welds in Piping
- ASME Class 2
  - Examination Category C-F-1 - Pressure Retaining Welds in Austenitic Stainless Steel or High Alloy Piping
  - Examination Category C-F-2 - Pressure Retaining Welds in Carbon Steel or Low Alloy Piping

B. Testing Requirements:

Exam Category	Item No.	Description
B-J	B9.12	Longitudinal welds NPS 4 or larger
	B9.22	Longitudinal welds less than NPS 4
C-F-1	C5.12	Longitudinal Welds in Piping ≥3/8" Nominal Wall for Piping > NPS 4
	C5.22	Longitudinal Welds in Piping >1/5" Nominal Wall Thickness for Piping ≥ NPS 2 and ≤ NPS 4
	C5.42	Longitudinal welds in Pipe Branch Connections of Branch Piping ≥ NPS 2
C-F-2	C5.52	Longitudinal Welds in Piping ≥3/8" Nominal Wall for Piping > NPS 4
	C5.62	Longitudinal Welds in Piping >1/5" Nominal Wall Thickness for Piping ≥ NPS 2 and ≤ NPS 4
	C5.82	Longitudinal welds in Pipe Branch Connections of Branch Piping ≥ NPS 2

C. Relief Requested

Relief is requested from the Required Surface and/or Volumetric examination requirements for the following:

1. Class 1 - at least a pipe diameter length but no more than 12" of each longitudinal weld intersecting a circumferential weld required to be examined by Categories B-F and B-J.

2. Class 2 - 2.5t at the intersecting circumferential weld required to be examined under Categories C-F-1 and C-F-2.

D. Basis for Relief

Longitudinal welds are fabricated under controlled shop conditions, which produce higher quality and more uniform residual stress patterns. They undergo heat treatment in the shop, which enhances the material properties of the weld and reduces the residual stresses created by welding.

Intergranular stress corrosion cracking (IGSCC) or other corrosion problems have not occurred in PWR austenitic stainless steel or carbon steel piping longitudinal welds to any significant extent due to the non-oxygenated environment.

Results of previous weld inspections throughout the industry indicate that longitudinal welds have not been a safety concern, nor has there been any evidence of longitudinal weld defects compromising safety at nuclear power plants.

Longitudinal welds have not been shown to be susceptible to any particular degradation mechanism. The only area of a longitudinal weld which may be considered suspect are the ends of the weld where it is adjacent to the field fabricated circumferential welds. These areas fall within the volumetric examination boundaries of the adjacent circumferential welds.

The man-rem exposure and cost associated with the inspection of longitudinal welds is dependent on the time it would take to remove/reinstall insulation and interferences, locate the weld, prepare the weld for examination, and perform the examination.

Based on the above arguments, there is little technical benefit to performing inservice inspections on longitudinal piping welds. Radiation exposure and costs associated with these inspections would be reduced.

E. Alternative Examinations

Florida Power and Light will perform the required examinations on the length of longitudinal weld that is normally examined with the intersecting circumferential weld.

The volumetric examinations at the intersection of circumferential and longitudinal welds will include both transverse and parallel scans within the length of longitudinal weld which falls within the circumferential weld examination volume. The examination of intersecting longitudinal welds will be noted to documented as to the extent of the examination.

F. Implementation Schedule

Third Inspection Interval

G. Attachments

None

Relief Request No. 8

A. Component Identification:

Turkey Point Units 3 and 4

Class 1, 2, and 3 Integrally Welded Attachments

B. Examination Requirements:

Rules for Inservice Inspection of Nuclear Power Plant Components, 1989 Edition

Code Category	Code Item Number	Description
B-K-1	B10.10	Piping
	B10.20	Pumps
	B10.30	Valves
C-C	C3.10	Pressure Vessels
	C3.20	Piping
	C3.30	Pumps
	C3.40	Valves
D-A	D1.20 thru D1.60	Systems in Support of Reactor Shutdown Function
D-B	D2.20 thru D2.60	Systems in Support of Emergency Core Cooling, Containment Heat Removal, Atmosphere Cleanup, and Reactor Residual Heat Removal
D-C	D3.20 thru D3.60	Systems in Support of Residual Heat Removal from Spent Fuel Storage Pool

C. Relief Requested:

Relief is requested from performing examinations on Class 2, Code Category C-C Integral Attachments, and Class 3, Code

Categories D-A, D-B, and D-C Integral Attachments in accordance with the 1989 Edition of Section XI requirements.

D. Basis for Relief:

Florida Power and Light has not experienced any significant problems with Integral Attachments in Class 1, 2, and 3 systems in over 40 years of operating experience at Turkey Point.

Turkey Point still has numerous areas that have asbestos insulation. These areas must be tented and special precautions must be observed during the insulation removal.

Many of the integral attachments are within radiation areas. The additional exposure required to prepare the areas for examination is significant. If the examination area is covered with asbestos insulation, the additional time required for its removal increase radiation exposure.

Based on the above arguments, there is little technical benefit to performing inservice inspections on the number of integral attachments required by the Code. Reducing the number of integral attachments examined would lower the radiation exposure and costs associated with these examinations.

Code Case N-509 was approved on November 25, 1992. This Code Case reflects the direction Section XI is taking with regard to examinations of Integral Attachments.

E. Alternative Examinations:

Florida Power and Light will perform Surface examinations on 10% of the Integral Attachments of Class 1 and Class 2 vessels, piping, pumps, and valves in accordance with the guidelines of Code Case N-509.

VT-1 examinations will be performed on 10% of the Integral Attachments of Class 3 piping, pumps, and valves.

In the case of multiple vessels of similar design, function, and service, only one integral attachment of only one of the multiple vessels will be examined.

Examinations will be performed on integral attachments when a component support member deformation (e.g., broken, bent, or

pulled out parts) is identified during operation, refueling, maintenance, examination, inservice inspection, or testing.

F. Implementation Schedule:

Third Inservice Inspection Interval

G. Attachments

None.

Relief Request No. 9

Alternative Scheduling of Examinations

A. Component Identification:

Turkey Point Units 3 and 4

Class 1, 2, and 3 Components and Supports

B. Examination Requirements:

Rules for Inservice Inspection of Nuclear Power Plant Components, 1989 Edition

IWB-2420 Successive Inspections
IWC-2420 Successive Inspections
IWF-2420 Successive Inspections

(a) The sequence of component examinations established during the first inspection interval shall be repeated during each successive inspection interval, to the extent practical.

C. Relief Requested:

Florida Power and Light requests relief from repeating the sequence of examinations established during the first interval.

D. Basis for Relief:

Florida Power and Light performed examinations on only Class 1 systems during the first two Periods of the First Interval (1970 Edition of Section XI). During the Third Period, the examinations performed on Class 2 and 3 components and supports were pro-rated for the Interval (1974 Edition with Addenda through Summer 1975).

The sequence of examinations for the majority of the Class 2 and 3 components and supports was established during the Second Interval. The Second Interval examinations covered all Code Classes, unlike the First Interval.

Optimizing the sequence of examinations reduces the need for personnel to prepare and examine components in essentially the same area several times. The reduction in time and manpower

required to perform these tasks can be significantly reduced by changing the sequence of examinations.

The problem areas that FPL has identified at Turkey Point receive augmented examinations that exceed Code requirements. These areas will continue to be monitored on a more frequent basis. The majority of the examination areas at Turkey Point have not demonstrated any flaws.

Changing the sequence of examinations will not affect the safety of the Plants. Reduced activity due to changing the sequence of examinations will lower the number of problems created by the examination activities, preparation, and recovery.

E. Alternative Examination Schedule

Florida Power and Light will schedule the same areas for examination that were performed during the Second Interval to the extent practical. The sequence of examinations will be altered to reduce radiation exposure and cost, and allow the examinations, preparation of areas, and the recovery process to be minimized.

F. Implementation Schedule

Third Inservice Inspection Interval

G. Attachments
None

Relief Request No. 10

A. Component Identification:

Turkey Point Units 3 and 4

Class 1 and 2 Borated Bolted Connections Subject to VT-2 Examination

B. Examination Requirements:

Rules for Inservice Inspection of Nuclear Power Plant Components, 1989 Edition

IWA-5242 Insulated Components

(a) For systems borated for the purpose of controlling reactivity, insulation shall be removed from pressure retaining bolted connections for visual examination VT-2.

C. Relief Requested:

Florida Power and Light requests relief from removing the insulation from pressure retaining borated bolted connections during VT-2 examinations.

D. Basis for Relief:

Removing the insulation on bolted borated connections will required significant manpower (insulation removal, scaffold, and recovery) and radiation exposure. The System Engineers and others who perform routine surveillance examinations check the entire lines for leakage, movement, or other conditions that would indicate a problem has occured. These surveillance checks are performed, to a large extent, when the system is in service. This means the lines are checked on a more frequent basis than required by Code and during a period when system pressure has typically been present for a longer period of time. The ability to detect a leak is greatly enhanced as water, insulation discoloration, or Boron crystals would be evident, since no drying of the area would have occured. This is the same condition being sought during VT-2 examinations that would only take place on a scheduled and less frequent basis.

Looking for system leakage during routine system examinations is more cost effective, performs the desired Code examinations, and requires far less radiation dose.

E. Alternative Examinations

Florida Power and Light will check bolted connections for leakage when performing routine system examinations:

During the monthly flow path verification by the System Engineer

When the unit is offline, a leak inspection is performed inside the containment per the plant surveillance program (required by Technical Specifications)

These routine surveillances will include looking for the following conditions:

Pooling of water directly under the bolted connections

Water leaking from the lowest elevation section of vertical lines containing bolted connections

Examining insulation around bolted connections for discoloration or boric acid residue

Examination of leakage collection systems to insure their operability

When repairs or replacements are made, the examination will be limited to that area of the system

Florida Power and Light will perform required and scheduled VT-2 examinations on systems per Code requirements without removal of insulation.

F. Implementation Schedule

Third Inservice Inspection Interval

G. Attachments

None

Appendix H
Piping and Instrumentation Drawings

Drawing Number	Sheet Numbers	Drawing Title
5613-M-3018 5614-M-3018	1 1	Condensate Storage System Condensate Storage System
5613-M-3019 5614-M-3019	1 thru 4 1 thru 3	Intake Cooling Water System Intake Cooling Water System
5613-M-3030 5614-M-3030	1 thru 5 1 thru 4	Component Cooling Water System Component Cooling Water System
5613-M-3033	1	Spent Fuel Pool Cooling System
5613-M-3041 5614-M-3041	1 thru 4 1 thru 4	Reactor Coolant System Reactor Coolant System
5610-M-3046	1	Chemical and Volume Control System
5613-M-3047 5614-M-3047	1 thru 3 1 thru 3	CVCS - Charging, Letdown & RCP seal CVCS - Charging, Letdown & RCP Seal
5613-M-3050 5614-M-3050	1 1	Residual Heat Removal System Residual Heat Removal System
5613-M-3056 5614-M-3056	1 1	Containment Emergency Filter System Containment Emergency Filter System
5613-M-3057 5614-M-3057	1 1	CTMT Normal & Emergency Coolers CTMT Normal & Emergency Coolers
5613-M-3062 5614-M-3062	1,2 1,2	Safety Injection System Safety Injection System
5613-M-3064 5614-M-3064	1 1	Safety Injection Acc. Sys (CTMT) Safety Injection Acc. Sys (CTMT)
5613-M-3068 5614-M-3068	1 1	Containment Spray System Containment Spray System
5613-M-3072 5614-M-3072	1, 3 1, 3	Main Steam System Main Steam System
5613-M-3074 5614-M-3074	3, 4 3, 4	Feedwater System Feedwater System
5613-M-3075 5614-M-3075	1,2 1,2	Auxiliary Feedwater System Auxiliary Feedwater System

Drawing Number	Sheet Numbers	Drawing Title
5610-M-3075	1	Auxiliary Feedwater System - Turbine Drive for Auxiliary Feedwater Pumps
5610-M-3075	2	Auxiliary Feedwater System - Turbine Drive for Auxiliary Feedwater Pumps

Note: 5610 series denotes both Unit 3 and 4
5613 series denotes Unit 3
5614 series denotes Unit 4