REGULATORY INFORMATION DISTRIBUTION SYSTEM (RIDS)

ACCESSION NBR: 8711240199 DOC. DATE: 87/11/19 NOTARIZED: NO DOCKET #
FACIL: 50-250 Turkey Point Plant, Unit 3, Florida Power and Light C 05000250
50-251 Turkey Point Plant, Unit 4, Florida Power and Light C 05000251
AUTH. NAME AUTHOR AFFILIATION
WOODY, C. O. Florida Power & Light Co.
RECIP. NAME RECIPIENT AFFILIATION
Document Control Branch (Document Control Desk)

SUBJECT: Forwards response to NRC questions raised in 870922 telcon re util ATWS submittal. Issues discussed include conceptual design, isolators, uninterruptible power supply & frequency of end-to-end testing.

DISTRIBUTION CODE: A055D COPIES RECEIVED: LTR 1 ENCL 1 SIZE: 4
TITLE: OR/Licensing Submittal: Salem ATWS Events GL-83-28

NOTES:

	RECIPIENT ID CODE/NAME	COPIES LTTR	COPIES ENCL	RECIPIENT ID CODE/NAME	COPIES LTTR	COPIES ENCL
	PD2-2 LA	1	0	PD2-2 PD	3	3
	McDONALD, D	1	1			
INTERNAL:	ARM/DAF/LFMB	1	0	NRR LASHER, D	1	1
	NRR/DEST/ESB	1	1	NRR/DEST/ICSB	1	1
	NRR/DEST/PSB	1	0	NRR/DEST/RSB	1	1
	NRR/DLPQ/QAB	1	0	NRR/DOEA/GCB	1	0
	NRR/PMAS/ILRB	1	0	OGC/HDS2	1	0
	REG FILE 01	1	1	RES/DE/EIB	1	1
EXTERNAL:	LPDR	1	1	NRC PDR	1	1
	NSIC	1	1			

TOTAL NUMBER OF COPIES REQUIRED: LTTR 20 ENCL 13

P. O. BOX 14000, JUNO BEACH, FL 33408-0420

FPL

NOVEMBER 1 9 1987

L-87-476

U. S. Nuclear Regulatory Commission
Attn: Document Control Desk
Washington, D. C. 20555

Gentlemen:

Re: Turkey Point Units 3 and 4
Docket Nos. 50-250 and 50-251
Anticipated Transient Without Scram (ATWS)

On September 22, 1987 Florida Power & Light Company (FPL) and members of the NRC Staff held a teleconference discussion concerning FPL's ATWS submittal. At the conclusion of the discussion, FPL agreed to provide the response to several questions raised by the Staff. Attached are the responses to those questions.

Should there be any further questions concerning our ATWS submittal, please contact us.

Very truly yours,

for C. O. Woody
Executive Vice President

COW/RG/gp

Attachments

cc: Dr. J. Nelson Grace, Regional Administrator, Region II, USNRC
Senior Resident Inspector, USNRC, Turkey Point Plant

A055
1/1

RG3/055/1

Re: Turkey Point Units 3 and 4
Docket Nos. 50-250 and 50-251
Anticipated Transient Without Scram (ATWS)

QUESTION 1: What is meant by a "conceptual design"?

RESPONSE:

The "conceptual design" approach was selected by FPL in order to receive NRC approval of the AMSAC plant specific design prior to procurement of the AMSAC hardware. This approach will allow FPL to solicit proposals from several equipment manufacturers. The final AMSAC design will not deviate from the design concept (isolation, inputs, logic, trip circuits, bypasses, etc.) specified in the conceptural design document. However, slight deviations in hardware and terminology may be necessary to accommodate the actual manufacturer's equipment.

QUESTION 2: Who makes the isolators and what model are they?

RESPONSE:

As stated above, FPL also intends to solicit proposals from several isolator manufacturers prior to actual isolator procurement. A detailed equipment specification will be prepared by engineering to ensure the isolators meet the requirements of Appendix A of the NRC's safety evaluation of Topical Report WCAP-10858.

FPL requests that the NRC provide a listing of those isolators that are known to meet the requirements of Appendix A. If FPL selects an isolator different from those previously accepted by the NRC, specific design details can be provided to the NRC prior to procurement, if requested.

QUESTION 3: What is meant by an "uninterruptable" power supply?

RESPONSE

The power sources specified for AMSAC, 3P25, 4P25, 3P31 and 4P31 are considered uninterruptable because the power feeds are normally from battery backed static inverters and automatically transfer on loss of the normal power feed to an alternate AC supply. This arrangement allows for a continuous power supply in case of a loss of offsite power or failure of a single piece of equipment. A simplified one line diagram for the power supplies is shown in the Attachment.

QUESTION 4: What is meant by "For those non-safety related portions of the AMSAC, it is Florida Power & Light's intent to implement a QA program which meets the intent of Generic Letter 85-06"?

RESPONSE:

The wording shall be changed to read; "For those non-safety related portions of the AMSAC, Florida Power & Light shall implement a QA program which meets the intent of Generic Letter 85-06".

QUESTION 5: Describe the interaction of the cabinets that house the AMSAC.

RESPONSE:

The AMSAC hardware will be located and mounted in a separate, dedicated cabinet for each unit. The AMSAC cabinet will be seismically mounted to preclude interaction with safety-related equipment.

QUESTION 6: How does Revision 1 to WCAP-10858P-A affect the Turkey Point Units 3 and 4 AMSAC conceptual design?

RESPONSE:

For Logic 1 (AMSAC actuation on low steam generator level), the C-20 permissive signal has been changed from a value of 90-180 seconds to a value of 180-420 seconds. Per discussions with Westinghouse, this change was made to ensure that AMSAC would remain armed long enough to actuate at power levels below 100%. Accordingly, the Turkey Point Units 3 and 4 AMSAC conceptual design will be revised to include a C-20 permissive delay time between the values of 180-420 seconds.

QUESTION 7: What will be the testing frequency for end-to-end testing.

RESPONSE

FPL will perform end-to-end testing at each refueling which is consistent with the Westinghouse Owners Group Guidelines.

ATTACHMEN

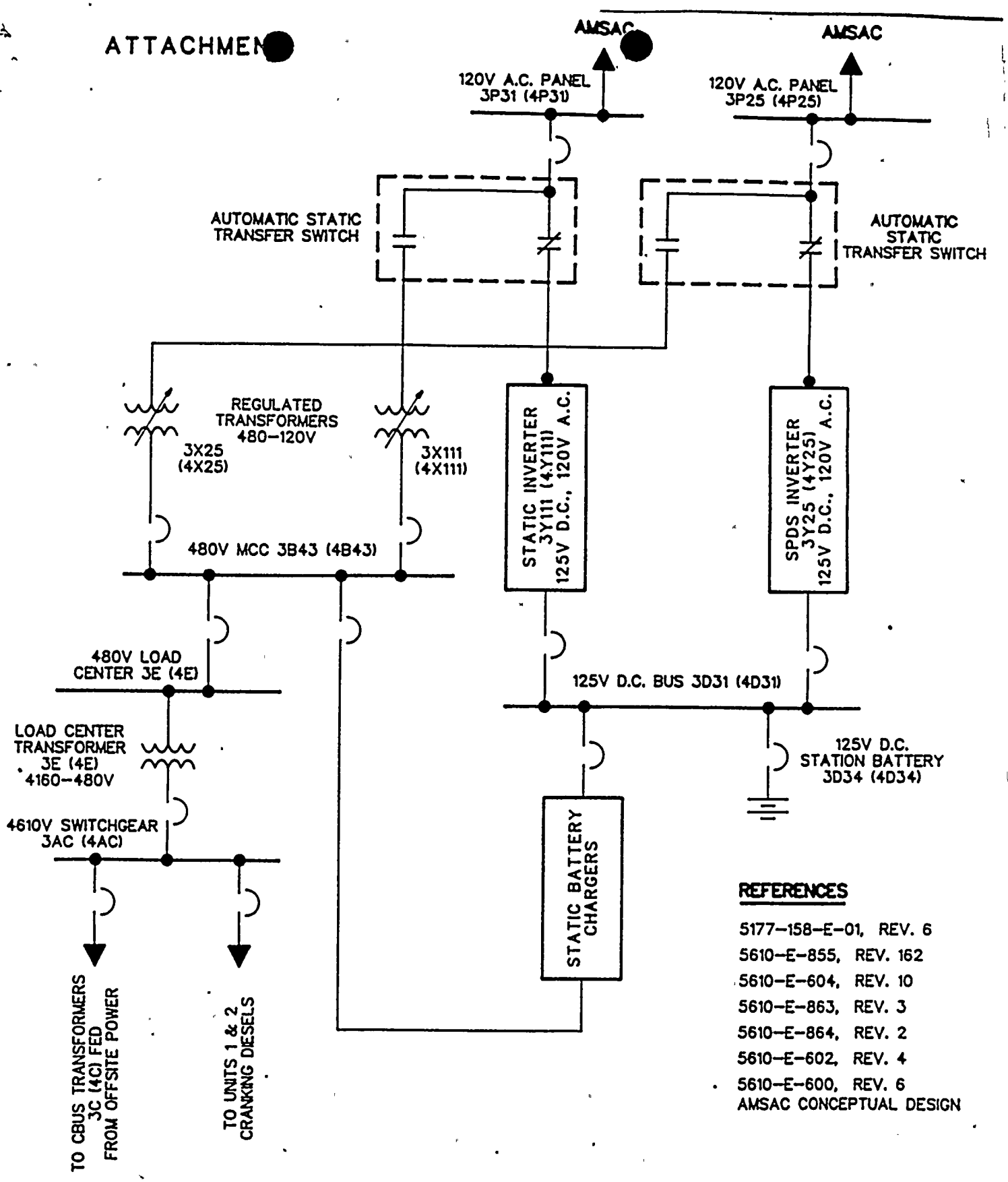

REFERENCES

5177–158–E–01, REV. 6
5610–E–855, REV. 162
5610–E–604, REV. 10
5610–E–863, REV. 3
5610–E–864, REV. 2
5610–E–602, REV. 4
5610–E–600, REV. 6
AMSAC CONCEPTUAL DESIGN

TURKEY POINT UNITS 3 & 4
AMSAC CONCEPTUAL DESIGN
LOGIC POWER SUPPLIES
SIMPLIFIED ONE LINE DIAGRAM

FLORIDA POWER & LIGHT COMPANY

DATE:
SCALE:

NO.	DATE	REVISION	BY	CH	CORR.	APP.

JPE/ESS/CAD
FILE NAME: TN1087E002

DIVISION ENGINEER

APPROVED:

DRAWN BY	JKA	
CHECKED		10/27/87
CORRECT		10/27/87

FORM 1343 REV. 10/80