REGULATORY INFORMATION DISTRIBUTION SYSTEM (RIDS)

ACCESSION NBR:7906250349 DOC.DATE: 79/06/21 NOTARIZED: NO DOCKET #
FACIL:50-250 Turkey Point Plant, Unit 3, Florida Power and Light C 05000250
AUTH.NAME AUTHOR AFFILIATION
UHRIG,R.E. Florida Power & Light Co.
RECIP.NAME RECIPIENT AFFILIATION
DENTON,H.R. Office of Nuclear Reactor Regulation

SUBJECT: Forwards "Reactor Containment Bldg Integrated Leak Rate Test." dtd 3.20.79 See lpt

DISTRIBUTION CODE: A016S COPIES RECEIVED:LTR 3 ENCL 12 SIZE: 1+176
TITLE: CONTAINMENT LEAK RATE TESTING - APPENDIX J (WITH DRAWING

NOTES:

	RECIPIENT ID CODE/NAME	COPIES LTTR	COPIES ENCL	RECIPIENT ID CODE/NAME	COPIES LTTR	COPIES ENCL
ACTION:	04 PM M GROTENHUIS	2	2	BC ORB #1	7	0
	LA ORB #1	1	0			
INTERNAL:	01 ~~REG FILE~~	1	1	02 NRC PDR	1	1
	06 HUANG,Y	1	1	07 I&E	2	2
	09 CONTMNT SYS	1	1	10 PLANT SYS BR	1	1
	AD SYS/PROJ	1	0	EEB	1	0
	EFLNT TREAT SYS	1	0	ENGR BR	1	0
	OELD	1	0	REACTOR SFTY BR	1	0
	TA/EDO	1	0			
EXTERNAL:	03 LPDR	1	1	ACRS	16	0
	NSIC	1	0			

EXTRA CYS SENT TO M. GROTENHUIS

JUN 27 1979

INO RPT: 7906250350

TTA2
CCP

TOTAL NUMBER OF COPIES REQUIRED: LTTR 42 ENCL 10

P.O. BOX 529100, MIAMI, FL 33152

FLORIDA POWER & LIGHT COMPANY

June 20, 1979
L-79-171

REGULATORY DOCKET FILE COPY

Mr. Harold R. Denton, Director
Office of Nuclear Reactor Regulation
U. S. Nuclear Regulatory Commission
Washington, D. C. 20555

Dear Mr. Denton:

Re: Turkey Point Unit 3
Docket No. 50-250
Integrated Leak Rate Test Report

In accordance with Technical Specification 4.4.3 and Regulatory Guide 10.1, 12 copies of the subject report are enclosed for use by your office.

Very truly yours,

J S De Mastry
for
Robert E. Uhrig
Vice President
Advanced Systems & Technology

REU/MAS/cph

cc: Robert Lowenstein, Esquire (w/o enclosures)
Mr. J. P. O'Reilly, Region II

A016
S
3/12

7906250349

Florida Power and Light Company
Turkey Point Plant
Unit No. 3
Docket Number 50-250

REACTOR CONTAINMENT BUILDING

INTEGRATED LEAKAGE RATE TEST

MARCH 20, 1979

Submitted to

The United States Nuclear Regulatory Commission

Pursuant to

Facility Operating License No. DPR-31

50-250
Ltr 6-21-79
7906250349

TABLE OF CONTENTS

I. INTRODUCTION

The reactor containment building Integrated Leakage Rate, Type A, Test, is performed to demonstrate that leakage through the primary reactor containment and systems and components penetrating primary containment does not exceed the allowable leakage rate specified in the Plant Technical Specifications.

The successful periodic Type A and supplemental verification tests were performed according to the requirements of the Turkey Point Plant, Unit 3, Technical Specifications and 10CFR50, Appendix J. The Turkey Point Plant Type A test method is the absolute method described in ANSI N45.4-1972, "Leakage Rate Testing of Containment Structures for Nuclear Reactors" and ANSI N274, "Containment System Leakage Testing Requirements", Draft No. 2, Rev. 3 - November 15, 1978. The leakage rate was calculated using formulas from ANSI N45.4-1972 and BN-TOP-1, Rev. 1. "Testing Criteria for Integrated Leakage Rate Testing of Primary Containment Structures for Nuclear Power Plants" (Total-Time) and ANSI N274 (Mass-Point). Type A and verification test durations were according to the criteria of BN-TOP-1.

The test results are reported in accordance with the requirements of 10CFR50, Appendix J, Section V.B.3.

II. TEST SYNOPSIS

After initial pressurization to test pressure, a leak was discovered through the 3A Steam Generator steam line vent valve. The containment was depressurized to repair the valve, then the containment was repressurized to test pressure. A leak was discovered at the Personnel Airlock equalizing valve shaft seal (inner door). This leak was repaired, and no other leak paths were discovered.

The Type A test was started at 2245 on 3/19/79. At 1045 on 3/20/79, the Type A test was terminated with a calculated leakage rate of 0.034% per day, with an upper 95% confidence limit of 0.060% per day (Total-Time Method) and 0.031% per day, with an upper 95% confidence limit of 0.033% per day (Mass-Point Method). At 1245 on 3/20/79 a verification flow rate of 0.103% per day was established. The verification test was successfully completed at 1815 on 3/20/79.

[illegible]

III. TEST DATA SUMMARY

A. Plant Information

Owner	Florida Power and Light Company
Plant	Turkey Point Plant, Unit 3
Location	Homestead, Florida
Containment Type	Prestressed, post-tensioned concrete
NSSS Supplier, Type	Westinghouse, PWR
Date Test Completed	March 20, 1979

B. Technical Data

1.	Containment Net Free Air Volume	1,550,000 cu. ft.
2.	Design Pressure	50 psig
3.	Design Temperature	276°F
4.	Calculated Peak Accident Pressure, Pa	50 psig
5.	Containment ILRT Average Temperature Limits	80 - 90°F
6.	Calculated Peak Accident Temperature	283°F

C. Test Results - Type A Test

1.	Test Method	Absolute
2.	Data Analysis Techniques	Mass Point (per ANSI N274) and Total-Time (per BN-TOP-1)
3.	Test Pressure	25 psig
4.	Maximum Allowable Leakage Rate, L_t	0.1029%/day
5.	75% of L_t	0.0772%/day

6. Integrated Leakage Rate Test Results

	Leakage Rate, %/day	
	From Regression Line (L_{tm})	At Upper 95% Confidence Limit
a. Mass point analysis	0.031	0.033
b. Total-Time analysis	0.034	0.060

7.	Verification Test Imposed Leakage Rate, L_o, %/day	0.103

8. Verification Test Results — Leakage Rate, %/day

a. Mass Point Analysis	0.117
b. Total-Time Analysis	0.118

9. Verification Test Limits — Test Limits, %/day

a. Mass Point Analysis	
1) Upper Limit ($L_o+L_{tm}+0.25L_a$)	0.160
2) Lower Limit ($L_o+L_{tm}-0.25L_a$)	0.108
b. Total-Time Analysis	
1) Upper Limit ($L_o+L_{tm}+0.25L_a$)	0.163
2) Lower Limit ($L_o+L_{tm}-0.25L_a$)	0.111

10. Report Printouts

The Report Printouts of the Type A and verification test calculations are provided for the Mass Point and Total-Time Analyses. (Tables 2 through 7) Stabilization data is also provided. (Table 9)

D. Test Results - Type B and C Tests

Test results for local leak rate tests performed since the previous 1976 Integrated Leak Rate Test are provided. (Table 9)

E. Integrated Leakage Rate Measurement System

1. Absolute Pressure (1 channel)

Range:	0-100,000 counts
Accuracy:	0.015% of reading
Resolution:	0.001% F.S.
Range:	0-49 psi

Texas Instrument Model 145-02 Precision Pressure Instrument No. 1940

Bourdon Capsule #4433 Calibration Date: 12-15-78

Texas Instrument Model 145-02 Precision Pressure Instrument No. 1941

Bourdon Capsule #4434 Calibration Date: 12-15-78

[illegible]

[illegible]

[illegible]

2. Drybulb Temperature (22 sensors)

Resistance Temperature Detectors - Leeds and Northrup Thermohm Model 8187-10-S, 3-lead, 100-ohm copper and Numatron numeric display model 900-9999-9999-1-5.

Limit of error: 0.2°F
Static resistance: 100 ohms

Read out - Leeds & Northrup Numatron

Calibration Date: 2-14-79

Calibration Standard Thermometer -

Taylor Total Immersion Thermometers 18°F to 89°F .20°F Divisions
S/N 63F3484 Calibration Date: 12-18-78
S/N 63F3640 Calibration Date: 12-18-78

RTD - Leeds & Northrup

100 ohm copper thermohms Catalog 8187-10-S
Catalog No. 900-9999-9999-1-S
Calibration Date: 3-10-79

3. Dewpoint Temperature (4 sensors)

Dewpoint Temperature Systems - EG&G Inc. Dewpoint Hygrometer with 4 sensors.

Accuracy: 0.54°F
Sensitivity: 0.18°F

Read out - Keithley Model 173 Auto Range DVM
Calibration Date: 3-16-79

System Model 660-C1	Sensor Model 660-S2	Calibration Date
S/N 391	S/N 423	12-14-78
S/N 400	S/N 378	12-14-78
S/N 405	S/N 406	12-20-78
S/N 397	S/N 484	3-14-79

4. Verification Flow (1 channel)

Flowmeter-Brooks Hi-accuracy full view rotameter, Model 1110.

Range: 1.24-12.4 scfm
Accuracy: ±0.1 scfm
Repeatability: ±0.01 scfm
Calibration date: 1-12-79

5. Gauge Pressure (1 channel) - Not used directly in calculations.

Wallace & Tiernan Model 61A-1A-0100

Range:	0-100 psig
Accuracy:	0.1% F.S.
Sensitivity:	0.01% F.S.
Calibration Date:	3-13-79

6. Overall Instrumentation Selection Guideline (ISG) Value (from ANSI N274) based on ILRT instrumentation and an eleven hour minimum test duration:

   ±0.0257%/day

7. Drybulb and Dewpoint Temperature Sensor Volume Fractions - See Table 1.

F. Permanent Plant Instrumentation Used During Test

None.

G. Information Retained at Plant

The following information shall be retained by the owner and shall be made available for review at the Facility:

1. Access Procedure

   Included in test procedure Section V.

2. Containment Penetrations

   A listing of all containment penetrations, including the total number of like penetrations, penetration size and function.

3. Operating Instrument Status

   No normal operating instrumentation was used for the leakage rate test.

4. Systems Status (at time of test)

   A system line-up, showing required valve positions and status of piping systems, is contained in Section V, OP 13100.1.

5. Event Log

   A continuous, sequential log of events from initial survey of containment to the Post Containment ILRT Final Inspection.

6. Instrumentation Validation

Documentation of instrumentation calibrations and standards. Included with the documentation is an error analysis of instrumentation.

7. Temperature Stabilization

Data to verify temperature stabilization criteria as established by test procedure is contained in Table 8.

8. Test Procedure

The working copy of test procedure including signature sign-off of procedural steps, is contained in Section V OP 13100.1.

9. Local Leak Rate Tests

The procedure and all data that verifies completion of penetrations and valve testing (B&C type tests) including as found leak rates - corrective action taken, and final leak rate.

10. Integrated Leak Rate Data

Computer printouts, manual data accumulation along with summary description of computer program.

11. Quality Assurance

The Quality Assurance audit plan and checklist that was used to monitor ILRT with proper sign-offs is contained in Section V, OP 13100.1.

12. Test Exceptions

A listing of all test exceptions including changes in containment system boundaries instituted by licensee to conclude successful testing is contained in Section V, OP 13100.1.

13. Instrumentation Malfunctions

There was no sensor malfunction, repairs, or methods used to redistribute volume fractions to operating instrumentation.

14. Confidence Limits

A review of confidence limits of test results with accompanying computer printouts where applicable.

15. Verification Leak Rates

Descriptions of methods used, superimposed leakage, with calibration information on totalizers and flowmeters along with calculations that were used to measure the verification leakage rate is contained in Section V, OP 13100.1

16. Graphs

Plots presenting data obtained during the test.

17. P&ID's

The P&ID's of systems readily available.

IV. ANALYSIS AND INTERPRETATION

The Integrated Leakage Rate Test results at the upper 95% confidence level, L_{tm}, 0.033%/day (Mass Point analysis) and 0.060 (Total Time analysis), satisfy the acceptance criteria. The acceptance criterion is $L_{tm} \leq 0.75L_t = 0.0772\%$/day @ $P_t \geq 25$ psig.

TABLE 1

Dewpoint #	Volume Fraction
1.	0.268
2.	0.267
3.	0.267
4.	0.198
	1.000

RTD #	
1.	0.1600
2.	0.3620
3.	0.0200
4.	0.0200
5.	0.0200
6.	0.0200
7.	0.0200
8.	0.0200
9.	0.0165
10.	0.0165
11.	0.0165
12.	0.0165
13.	0.0165
14.	0.0165
15.	0.0165
16.	0.0165
17.	0.0165
18.	0.0165
19.	0.0165
20.	0.0165
21.	0.1600
	1.0000

TABLE 2

SUMMARY DATA

TURKEY POINT UNIT 3 ILRT

ALMAX = 0.102 VOL = 1550000.00

TIME	DATE	TEMP.	PRESSURE
2245	319	538.888	41.9658
2300	319	538.877	41.9647
2315	319	538.868	41.9640
2330	319	538.851	41.9635
2345	319	538.848	41.9625
0	320	538.848	41.9619
15	320	538.839	41.9618
30	320	538.828	41.9605
45	320	538.823	41.9602
100	320	538.814	41.9592
115	320	538.806	41.9584
130	320	538.801	41.9578
145	320	538.796	41.9569
200	320	538.785	41.9568
215	320	538.787	41.9558
230	320	538.781	41.9553
245	320	538.776	41.9555
300	320	538.770	41.9544
315	320	538.764	41.9532
330	320	538.758	41.9528
345	320	538.748	41.9524
400	320	538.746	41.9517
415	320	538.737	41.9510
430	320	538.738	41.9510
445	320	538.731	41.9507
500	320	538.730	41.9495
515	320	538.723	41.9492
530	320	538.716	41.9490
545	320	538.707	41.9483
600	320	538.707	41.9474
615	320	538.704	41.9475
630	320	538.695	41.9467
645	320	538.695	41.9462
700	320	538.690	41.9458
715	320	538.687	41.9456
730	320	538.679	41.9450
745	320	538.679	41.9444
800	320	538.675	41.9446
815	320	538.667	41.9436
830	320	538.665	41.9433
845	320	538.660	41.9429
900	320	538.658	41.9431
915	320	538.656	41.9417
930	320	538.651	41.9420
945	320	538.650	41.9419
1000	320	538.645	41.9415
1015	320	538.650	41.9407
1030	320	538.648	41.9412
1045	320	538.651	41.9408
0	0	0.0	0.0

TABLE 3

TURKEY POINT UNIT 3 ILRT

TREND REPORT
LEAKAGE RATES (WEIGHT PERCENT/DAY)
TOTAL-TIME ANALYSIS

TIME AND DATE AT START OF TEST: 2245 0319
ELAPSED TIME: 12.00 HOURS

NO. DATA POINTS	ELAPSED TIME	MEAN MEASURED LEAKAGE RATE	CALCULATED LEAKAGE RATE	CHG IN CALC L/R FROM LAST POINT	UPPER 95% CONF LEVEL
10	2.25	0.017	0.013		0.093
11	2.50	0.017	0.016	0.003	0.089
12	2.75	0.018	0.019	0.003	0.086
13	3.00	0.019	0.023	0.004	0.086
14	3.25	0.019	0.022	-0.001	0.081
15	3.50	0.020	0.026	0.004	0.082
16	3.75	0.021	0.028	0.002	0.081
17	4.00	0.021	0.028	-0.001	0.078
18	4.25	0.022	0.029	0.001	0.077
19	4.50	0.023	0.031	0.002	0.078
20	4.75	0.023	0.033	0.001	0.077
21	5.00	0.023	0.033	0.000	0.076
22	5.25	0.024	0.034	0.001	0.075
23	5.50	0.024	0.034	0.000	0.075
24	5.75	0.025	0.034	0.000	0.074
25	6.00	0.025	0.034	-0.000	0.072
26	6.25	0.025	0.035	0.001	0.072
27	6.50	0.025	0.036	0.000	0.072
28	6.75	0.026	0.035	-0.000	0.071
29	7.00	0.026	0.035	-0.000	0.070
30	7.25	0.026	0.035	0.000	0.070
31	7.50	0.026	0.035	-0.000	0.069
32	7.75	0.026	0.035	-0.000	0.068
33	8.00	0.026	0.035	0.000	0.068
34	8.25	0.027	0.036	0.000	0.067
35	8.50	0.027	0.036	-0.000	0.067
36	8.75	0.027	0.035	-0.000	0.066
37	9.00	0.027	0.036	0.000	0.066
38	9.25	0.027	0.035	-0.000	0.065
39	9.50	0.027	0.035	-0.000	0.064
40	9.75	0.027	0.035	-0.000	0.064
41	10.00	0.027	0.035	-0.000	0.063
42	10.25	0.027	0.034	-0.000	0.063
43	10.50	0.027	0.035	0.000	0.063
44	10.75	0.027	0.034	-0.000	0.062
45	11.00	0.027	0.034	-0.000	0.061
46	11.25	0.027	0.034	-0.000	0.061
47	11.50	0.027	0.034	0.000	0.061
48	11.75	0.028	0.034	-0.000	0.060
49	12.00	0.028	0.034	0.000	0.060

THE CALCULATED LEAKAGE RATE = 0.034

TABLE 4

TURKEY POINT UNIT 3 ILRT

LEAKAGE RATE (WEIGHT PERCENT/DAY)
TOTAL-TIME ANALYSIS

TIME AND DATE AT START OF TEST: 2245 0319
ELAPSED TIME: 12.00 HOURS

TIME	TEMP. (R)	PRESSURE (PSIA)	MEASURED LEAKAGE RATE
2245	538.888	41.9658	
2300	538.877	41.9647	0.056
2315	538.868	41.9640	0.028
2330	538.851	41.9635	-0.044
2345	538.848	41.9625	0.011
0	538.848	41.9619	0.036
15	538.839	41.9618	0.007
30	538.828	41.9605	0.021
45	538.823	41.9602	0.015
100	538.814	41.9592	0.021
115	538.806	41.9584	0.023
130	538.801	41.9578	0.025
145	538.796	41.9569	0.033
200	538.785	41.9568	0.017
215	538.787	41.9558	0.035
230	538.781	41.9553	0.033
245	538.776	41.9555	0.023
300	538.770	41.9544	0.030
315	538.764	41.9532	0.037
330	538.758	41.9528	0.035
345	538.748	41.9524	0.029
400	538.746	41.9517	0.033
415	538.737	41.9510	0.032
430	538.738	41.9510	0.031
445	538.731	41.9507	0.027
500	538.730	41.9495	0.037
515	538.723	41.9492	0.033
530	538.716	41.9490	0.029
545	538.707	41.9483	0.028
600	538.707	41.9474	0.034
615	538.704	41.9475	0.030
630	538.695	41.9467	0.030
645	538.695	41.9462	0.033
700	538.690	41.9458	0.032
715	538.687	41.9456	0.031
730	538.679	41.9450	0.030
745	538.679	41.9444	0.033

[illegible]

[illegible]

[illegible]

[illegible]

[illegible]	[illegible]	[illegible]	[illegible]
[illegible]	[illegible]	[illegible]	[illegible]
[illegible]	[illegible]	[illegible]	[illegible]
[illegible]	[illegible]	[illegible]	[illegible]
[illegible]	[illegible]	[illegible]	[illegible]
[illegible]	[illegible]	[illegible]	[illegible]
[illegible]	[illegible]	[illegible]	[illegible]
[illegible]	[illegible]	[illegible]	[illegible]
[illegible]	[illegible]	[illegible]	[illegible]
[illegible]	[illegible]	[illegible]	[illegible]
[illegible]	[illegible]	[illegible]	[illegible]
[illegible]	[illegible]	[illegible]	[illegible]
[illegible]	[illegible]	[illegible]	[illegible]

[illegible]

[illegible]

TABLE 4 (cont.)

TURKEY POINT UNIT 3 ILRT

LEAKAGE RATE (WEIGHT PERCENT/DAY)
TOTAL-TIME ANALYSIS

TIME AND DATE AT START OF TEST: 2245 0319
ELAPSED TIME: 12.00 HOURS

TIME	TEMP. (R)	PRESSURE (PSIA)	MEASURED LEAKAGE RATE
800	538.675	41.9446	0.029
815	538.667	41.9436	0.030
830	538.665	41.9433	0.030
845	538.660	41.9429	0.029
900	538.658	41.9431	0.027
915	538.656	41.9417	0.033
930	538.651	41.9420	0.028
945	538.650	41.9419	0.028
1000	538.645	41.9415	0.027
1015	538.650	41.9407	0.033
1030	538.648	41.9412	0.029
1045	538.651	41.9408	0.031

MEAN OF MEASURED LEAKAGE RATES	=	0.028
STD. DEVIATION OF MEASURED LEAKAGE RATES	=	0.013
MAXIMUM ALLOWABLE LEAKAGE RATE	=	0.102
75 % OF MAXIMUM ALLOWABLE LEAKAGE RATE	=	0.077
THE UPPER 95% CONFIDENCE LIMIT	=	0.060
THE CALCULATED LEAKAGE RATE	=	0.034

[illegible]

[illegible]

[illegible]

[illegible]

[illegible]	[illegible]	[illegible]	[illegible]	[illegible]	[illegible]
[illegible]	[illegible]	[illegible]	[illegible]	[illegible]	[illegible]

TABLE 5

TURKEY POINT UNIT 3 ILRT

LEAKAGE RATE (WEIGHT PERCENT/DAY)
MASS-POINT ANALYSIS

TIME AND DATE AT START OF TEST: 2245 0219
ELAPSED TIME: 12.00 HOURS

TIME	TEMP (R)	PRESSURE (PSIA)	CTMT. AIR MASS (LBM)	MASS LOSS (LBM)	TOT.AVG. MASS LOSS (LBM/HR)
2245	538.888	41.9658	325804		
2300	538.877	41.9647	325802	1.9	7.5
2315	538.868	41.9640	325802	-0.0	3.8
2330	538.851	41.9635	325809	-6.4	-6.0
2345	538.848	41.9625	325803	5.9	1.4
0	538.846	41.9619	325798	4.7	4.9
15	538.839	41.9618	325803	-4.7	1.0
30	538.828	41.9605	325799	3.4	2.8
45	538.823	41.9602	325800	-0.7	2.1
100	538.814	41.9592	325798	2.3	2.9
115	538.806	41.9584	325796	1.4	3.2
130	538.801	41.9578	325795	1.6	3.5
145	538.796	41.9569	325791	4.0	4.5
200	538.785	41.9568	325797	-5.9	2.3
215	538.787	41.9558	325788	9.0	4.7
230	538.781	41.9553	325787	0.2	4.5
245	538.776	41.9555	325792	-4.6	3.1
300	538.770	41.9544	325787	4.9	4.0
315	538.764	41.9532	325781	5.7	5.1
330	538.758	41.9528	325782	-0.5	4.7
345	538.748	41.9524	325785	-2.9	3.9
400	538.746	41.9517	325781	4.2	4.5
415	538.737	41.9510	325781	-0.0	4.3
430	538.738	41.9510	325780	0.6	4.2
445	538.731	41.9507	325782	-1.9	3.7
500	538.730	41.9495	325773	8.7	5.0
515	538.723	41.9492	325775	-1.9	4.5
530	538.716	41.9490	325778	-2.7	3.9
545	538.707	41.9483	325778	-0.0	3.8
600	538.707	41.9474	325771	7.0	4.6
615	538.704	41.9475	325773	-2.6	4.1
630	538.695	41.9467	325773	0.8	4.1
645	538.695	41.9462	325769	3.9	4.4
700	538.690	41.9458	325769	0.1	4.3
715	538.687	41.9456	325769	-0.3	4.2
730	538.679	41.9450	325769	-0.2	4.0
745	538.679	41.9444	325764	4.7	4.4

TABLE 5 (cont.)

TURKEY POINT UNIT 3 ILRT

LEAKAGE RATE (WEIGHT PERCENT/DAY)
MASS-POINT ANALYSIS

TIME AND DATE AT START OF TEST: 2245 0319
ELAPSED TIME: 12.00 HOURS

TIME	TEMP (R)	PRESSURE (PSIA)	CTMT. AIR MASS (LBM)	MASS LOSS (LBM)	TOT.AVG. MASS LOSS (LBM/HR)
800	538.675	41.9446	325768	-4.0	3.9
815	538.667	41.9436	325766	2.9	4.1
830	538.665	41.9433	325764	1.1	4.1
845	538.660	41.9429	325764	0.1	4.0
900	538.658	41.9431	325767	-2.8	3.6
915	538.656	41.9417	325757	9.7	4.5
930	538.651	41.9420	325763	-5.4	3.9
945	538.650	41.9419	325763	0.2	3.8
1000	538.645	41.9415	325763	0.1	3.7
1015	538.650	41.9407	325753	9.2	4.4
1030	538.648	41.9412	325758	-5.1	3.9
1045	538.651	41.9408	325753	4.9	4.2

FREE AIR VOLUME USED (MILLIONS OF CU. FT.) = 1.550

REGRESSION LINE
INTERCEPT (LBM) = 325806
SLOPE (LBM/HR) = -4.2

MAXIMUM ALLOWABLE LEAKAGE RATE = 0.102
75 % OF MAXIMUM ALLOWABLE LEAKAGE RATE = 0.077
THE UPPER 95% CONFIDENCE LIMIT = 0.033
THE CALCULATED LEAKAGE RATE = 0.031

[illegible]

[illegible]

[illegible]

TABLE 6

TURKEY POINT UNIT 3 VERIFICATION

LEAKAGE RATE (WEIGHT PERCENT/DAY)
TOTAL-TIME ANALYSIS

TIME AND DATE AT START OF TEST: 1245 0320
ELAPSED TIME: 5.50 HOURS

TIME	TEMP. (R)	PRESSURE (PSIA)	MEASURED LEAKAGE RATE
1245	538.638	41.9358	
1300	538.640	41.9355	0.104
1315	538.642	41.9353	0.093
1330	538.636	41.9346	0.080
1345	538.633	41.9333	0.121
1400	538.628	41.9326	0.111
1415	538.630	41.9321	0.117
1430	538.619	41.9312	0.102
1445	538.614	41.9309	0.087
1500	538.615	41.9301	0.099
1515	538.616	41.9288	0.121
1530	538.611	41.9282	0.114
1545	538.613	41.9277	0.117
1600	538.610	41.9269	0.118
1615	538.606	41.9261	0.118
1630	538.600	41.9259	0.106
1645	538.600	41.9252	0.109
1700	538.599	41.9247	0.109
1715	538.598	41.9236	0.116
1730	538.595	41.9230	0.114
1745	538.595	41.9221	0.119
1800	538.589	41.9213	0.116
1815	538.586	41.9207	0.115

MEAN OF MEASURED LEAKAGE RATES = 0.109
STD. DEVIATION OF MEASURED LEAKAGE RATES = 0.011

VERIFICATION TEST LEAKAGE RATE UPPER LIMIT = 0.163
VERIFICATION TEST LEAKAGE RATE LOWER LIMIT = 0.111
THE CALCULATED LEAKAGE RATE = 0.118

TABLE 7

TURKEY POINT UNIT 3 VERIFICATION

LEAKAGE RATE (WEIGHT PERCENT/DAY)
MASS-POINT ANALYSIS

TIME AND DATE AT START OF TEST: 1245 0320
ELAPSED TIME: 5.50 HOURS

TIME	TEMP (R)	PRESSURE (PSIA)	CTMT. AIR MASS (LBM)	MASS LOSS (LBM)	TOT.AVG. MASS LOSS (LBM/HR)
1245	538.638	41.9358	325722		
1300	538.640	41.9355	325719	3.5	14.2
1315	538.642	41.9353	325716	2.8	12.6
1330	538.636	41.9346	325714	1.8	10.8
1345	538.633	41.9333	325706	8.3	16.4
1400	538.628	41.9326	325704	2.4	15.0
1415	538.630	41.9321	325699	5.1	15.9
1430	538.619	41.9312	325698	0.3	13.9
1445	538.614	41.9309	325699	-0.7	11.8
1500	538.615	41.9301	325692	6.8	13.5
1515	538.616	41.9288	325681	10.7	16.4
1530	538.611	41.9282	325680	1.6	15.5
1545	538.613	41.9277	325675	5.1	15.9
1600	538.610	41.9269	325670	4.4	16.1
1615	538.606	41.9261	325666	3.8	16.0
1630	538.600	41.9259	325669	-2.1	14.4
1645	538.600	41.9252	325663	5.4	14.8
1700	538.599	41.9247	325660	3.3	14.7
1715	538.598	41.9236	325652	7.9	15.7
1730	538.595	41.9230	325649	2.9	15.5
1745	538.595	41.9221	325642	7.0	16.1
1800	538.589	41.9213	325639	2.6	15.8
1815	538.586	41.9207	325637	2.9	15.6

FREE AIR VOLUME USED (MILLIONS OF CU. FT.) = 1.550

REGRESSION LINE
INTERCEPT (LBM) = 325724
SLOPE (LBM/HR) = -15.9

VERIFICATION TEST LEAKAGE RATE UPPER LIMIT = 0.160
VERIFICATION TEST LEAKAGE RATE LOWER LIMIT = 0.108
THE CALCULATED LEAKAGE RATE = 0.117

TABLE 8

TURKEY POINT UNIT 3 STABILIZATION DATA

TIME	DATE	TEMP	PRESSURE
1845	319	539.062	41.9828
1900	319	539.050	41.9813
1915	319	539.040	41.9798
1930	319	539.026	41.9788
1945	319	539.016	41.9771
2000	319	539.012	41.9765
2015	319	539.001	41.9753
2030	319	538.987	41.9742
2045	319	538.971	41.9734
2100	319	538.964	41.9721
2115	319	538.952	41.9710
2130	319	538.934	41.9701
2146	319	538.910	41.9686
2200	319	538.918	41.9683
2215	319	538.909	41.9685
2230	319	538.905	41.9661

TABLE 9

CONTAINMENT LEAK RATE TESTS
(TYPE B AND C TESTS)

The following routine local leak rate tests were performed during the reporting period on Unit 3; i.e., since the Unit 3, 1976 operational ILRT (Type A test).

The following procedures were used:

Operating Procedure 13404.1 - Containment Boundary Isolation Valves Local Leak Rate Test
Operating Procedure 13514.1 - Personnel/Emergency Air Locks
Operating Procedure 13531.1 - Equipment Access Hatches
Operating Procedure 13104.1 - Containment Purge Valves
Operating Procedure 13404.2 - Electrical Penetration Canisters
Operating Procedure 13404.1 - Containment Isolation Valves
Operating Procedure 16004.1 - Fuel Transfer Tube Flange

Penetration Tested

1. Personnel Air Lock (entire air lock test)

TEST DATE	"AS LEFT" LEAK RATE (cc/min)	TEST DATE	"AS LEFT" LEAK RATE (cc/min)
12/19/75	0	7/27/77	10
3/17/76	0	12/15/77	15
7/13/76	0	1/29/78	30
11/08/76	0	5/17/78	0
3/30/77	0	8/31/78	5
		3/02/79	40

2. Emergency Air Lock (entire air lock test)

12/08/75	0	12/05/77	0
3/18/76	10	1/23/78	0
7/14/76	19.0	5/05/78	0
11/09/76	0	8/29/78	20
3/31/77	40	2/21/79	20
7/25/77	0		

3. Fuel Transfer Flange

11/27/75	78.9	3/03/79	335
1/10/77	80	3/07/79	100
1/27/78	40		

4. Equipment Hatch

12/11/75	0	2/06/78	0
12/16/76	0	2/10/78	0
1/13/77	20	8/05/78	0
11/09/77	0	2/09/79	0
1/03/78	60	3/13/79	0
1/29/78	0	3/25/79	0

FLORIDA POWER & LIGHT COMPANY
TURKEY POINT UNIT #3
November 1976 to January 1977
#3 REFUELING

PEN	VALVE	DATE TESTED	AS FOUND PRESSURE P.S.I.A.	AS FOUND LEAK RATE CC/MIN	AS LEFT PRESSURE P.S.I.A.	AS LEFT LEAK RATE CC/MIN
1	MOV-750/751	12/28/76	66	2,500		2,500
2	MOV-744A & B, MOV-734	12/28/76	65.2	160		160
3	MOV-716A	11/24/76	65.5	75.46		75.46
	MOV-716B	11/24/76	65.7	51.45		51.45
	CV-717	11/25/76	70	330		330
4	MOV-730/732	11/25/76	68	13.72		13.72
5	CV-516/552	11/19/76	72.3	0		0
6	550	11/19/76	71.6	0		0
	518	11/19/76	69.5	0		0
7	CV-519A CV-522A, B, C	12/02/76	75.5	0		0
8	CV-951/956A	12/30/76	66	140		140
	989A	12/30/76	66	220		220
9	989B	11/17/76	71	0		0
	CV-953, CV-956B	11/17/76	71	0		0
10	CV-4658A, B	11/20/76	72.7	0		0
	CV-4657		66	110		110
11	MOV-872	11/22/76	70.9	0		0
12	737A	11/25/76	70	0		0
	738	11/25/76	70	0		0
13	737B	11/25/76	70	0		0
	739	11/25/76	70	0		0
14	CV-200A, B, C	11/30/76	66	8,000		
		12/29/76			67.7	100
	CV-204	11/27/79	74.8	0		0
15	HCV-121/333	11/27/76	74.75	10.29		10.29
	CV-312C	11/27/76	75.2	0		0
16	HV-3-1/2	11/15/76	67.1	0		0
17	895V	11/16/76	67.6	37.33		37.33
18	MOV-866A, B CV-869	11/16/76	64.8	102.9		102.9
19A	CV-890A	11/16/76	69.9	34.30		34.30
	MOV-880A, 891A 883M	11/16/76	70.0	0		0
19B	CV-890B	11/16/76	68.0	68.6		68.6
	880B, 891B, 883N	11/16/76	70.0	0		0

#3 REFUELING, PTP UNIT #3
November 1976 to January 1977

PEN	VALVE	DATE TESTED	AS FOUND PRESSURE P.S.I.A.	AS FOUND LEAK RATE CC/MIN	AS LEFT PRESSURE P.S.I.A.	AS LEFT LEAK RATE CC/MIN
20	989C	11/23/76	77.7	0		0
	CV-955A, B	11/23/76	73.9	20		20
	CV-956C					
21/22	MOV-1417	11/24/76	65.5	264		264
	MOV-1418					
23	CV-2821, 2822	11/26/76	72.7	34.3		34.3
24A	297A	11/15/76	71.2	0		0
	298A	11/17/76	70	0		0
24B	297B	11/18/76	72.8	0		0
	298B	11/17/76	66	0		0
24C	297C	11/18/76	70.7	0		0
	298C	11/17/76	69.0	17.2		17.2
25	MOV-3817, CV-307	11/17/76	72.9	0		0
28A	MOV-1410	11/19/76	66	12,000		
		12/17/76			72.0	0
28B	MOV-1411	11/19/76	66	21,000		
		12/17/76			69.6	50
28C	MOV-1412	11/19/76	66	31,000		
		12/17/76			71.5	35
29	CV-2803	1/03/77	69	30		30
	CV-336	1/03/77	68.1	30		30
31	CV-4659A, B	11/20/76	71.7	0		0
32	CV "B"	11/19/76	70	0		0
	SV-2912	11/20/76	71	0		0
33	SV-2913	11/20/76	72	0		0
	SV-2911	11/20/76	71.5	0		0
34	203, 205	11/26/76	68.9	51.45		51.45
35	2600, 2601	11/24/76	69.3	50		50
36	POV-2602, 2603	12/23/76	68.5	400		400
39	Trans Tub Flange	1/10/77	69.3	80		80
40	Equip Hatch	1/13/77	67.3	20		20
		12/16/76	75	0		0
41	Pers Air Lock	11/08/76	67.0	0		0
	(out)	3/30/77	65.9	0		0
	(in)	11/08/76	70	0		0
		3/30/77	71.8	0		0
42	CV-855	11/21/76	67.6	400		400
43	MOV-626	11/24/76	67.4	20.58		20.58
	736	11/24/76	68.0	6.86		6.86
47	CV "A"	12/02/76	66.4	110		110

#3 REFUELING, PTP UNIT #3
November 1976 to January 1977

PEN	VALVE	DATE TESTED	AS FOUND PRESSURE P.S.I.A.	AS FOUND LEAK RATE CC/MIN	AS LEFT PRESSURE P.S.I.A.	AS LEFT LEAK RATE CC/MIN
49	Emerg Air Lock	11/09/76	70	0		0
	Inner	3/31/77	69.2	0		0
	Out	11/09/76	68	0		0
		3/31/77	66	0		0
52	CV-4668A, B	11/23/76	--	>40,000		--
		1/11/77			71.7	0
53	H-V-3-3, 3-4	11/15/76	70	0		0
54A	860A, 861A	11/20/76	70	0		0
54B	MOV-860B, 861B	11/18/76	71.6	0		0
55	CV-955C, D, E CV-956	12/30/76	70	5		5
58	CV-873A	11/22/76	70	0		0
59	CV-873B	11/22/76	68	65		65
60	CV-873C	11/22/76	68	150		150
58/59/60	MOV-843A, B	11/22/76	75.7	0		0
61	Valve "C"	12/08/76	70	0		0
63	CV-2819/2826	11/21/76	66	6,000		
		1/11/77			66	8,000
64A	MOV-1425	12/08/76	70.4	30		30
64B	MOV-1426	12/07/76	71.5	30		30
64C	MOV-1427	12/07/76	67.8	50		50
65A	Valve "E"	11/20/76	67.5	0		0
65B	Valve "F"	1/11/76	66.9	1,000		1,000
65C	Valve "G"	11/22/76	68	0		0
		TOTAL		>124,718.44		14,903

All electrical canisters were tested and the "as found" leakage was "0" cc/min.

FLORIDA POWER & LIGHT COMPANY
TURKEY POINT UNIT #3
November 1976 to February 1978
#4 REFUELING

PEN	VALVE	DATE TESTED	AS FOUND PRESSURE P.S.I.A.	AS FOUND LEAK RATE CC/MIN	AS LEFT PRESSURE P.S.I.A.	AS LEFT LEAK RATE CC/MIN
1	MOV-750/751	1/15/78	66.1	730		730
2	MOV-744A, B HCV-3-758 FCV-3-605	1/15/78	67.4	55		55
3	CV-717	12/09/77	70.81	0		0
	MOV-716B	12/05/77	74.4	0		0
	MOV-716A	12/05/77	74	58.8		58.8
4	MOV-730, 732	12/06/77	69.5	0		0
5	CV-516, 552	11/30/77	70.1	0		0
6	CV-518	12/13/77	73.8	75		75
7	CV-519A, B CV-552, A, B, C	12/01/77	69.9	5		5
8	CV-951, 956A	11/30/77	69.7	0		0
	989A	12/01/77	70.4	0		0
9	CV-953, 956A	12/01/77	70	0		0
	989B	12/01/77	69.2	0		0
10	CV-4658A, B	12/13/77	70	50		50
	CV-4657	12/13/77	71.3	71		71
11	MOV-872	12/05/77	70.1	0		0
12	737A, CV-739	12/07/77	69.8	0		0
13	737B, CV-738	12/07/77	68.4	0		0
14	CV-200A, B, C	1/16/78	66	13,500		
		2/03/78			69.9	359
	CV-204	12/08/77	65.9	1,900		
		1/16/78			69.0	0
15	CV-312C	12/07/77	69.62	15		15
	HCV-121, 333	12/07/77	71.08	28		28
16	HV-3-1 & 2	11/29/77	69.5	0		0
17	895V	12/02/77	70.1	0		0
18	MOV-866A, B CV-869	12/01/77	69.5	0		0
19A	891A, CV-890A	11/30/77	67.6	60		60
	MOV-880A	11/30/77	69.7	0		0

#4 REFUELING, PTP UNIT #3
November 1976 to February 1978

PEN	VALVE	DATE TESTED	AS FOUND PRESSURE P.S.I.A.	AS FOUND LEAK RATE CC/MIN	AS LEFT PRESSURE P.S.I.A.	AS LEFT LEAK RATE CC/MIN
19B	891B, CV-890B	11/30/77	69.7	0		0
	MOV-880B	11/30/77	69.9	0		0
20	955A, B, 956C	11/30/77	69.95	0		0
	989C	11/30/77	69.7	0		0
21/22	MOV-1417, 1418	12/06/77	68.7	56		56
23	CV-2821, 2822	12/18/77	72.6	0		0
24A	298A	12/05/77	70.1	0		0
24B	298B	12/05/77	69.52	10		10
24C	298C	12/05/77	69.7	0		0
25	MOV-381	12/01/77	70.2	0		0
28A	MOV-1410, 127	12/05/77	67.3	4,800		
	MOV-1410, 127	12/29/77			65.9	14
28B	MOV-1411, 327	12/05/77	67.6	0		0
28C	MOV-1412, 327	12/13/77	68.2	0		0
29	CV-336	1/24/77	68	30		30
	CV-2803	1/24/77	76.8	30		30
31	CV-4659A, B	11/30/77	69.8	0		0
32	SV-2912	12/13/77	66.1	2,000		
	SV-2912	1/27/77			66.2	98
	CV "B"	12/09/77	68.64	28		28
33	SV-2911, 2913	11/29/77	65.38	126		126
	SV-2913 & Iso Va	11/28/77	65.21	148		148
34	203, 205	12/22/77	69.5	85		85
35	PV-2600, 2601	12/12/77	67	210		210
36	PV-2602, 2603	1/24/78	66.1	9,423		9,423
42	PCV-846	12/14/77	66.9	779		779
	CV-855	12/14/77	66.4	3,500		
	CV-855	1/26/78			66	1,000
43	MOV-626, 736	12/07/77	70.3	0		0
47	CV "A"	12/01/77	67.9	59		59
52	CV-4668A, B	11/30/77	70.2	0		0
53	HV-3-3 & 4	11/29/77	69.1	23		23
54A	MOV-860A 861A	12/09/77	70.7	0		0
54B	MOV-860B 861B	12/09/77	70.5	0		0
55	CV-955C, D, E CV-956D	12/08/77	70.4	0		0

#4 REFUELING, PTP UNIT #3
November 1976 to February 1978

PEN	VALVE	DATE TESTED	AS FOUND PRESSURE P.S.I.A.	AS FOUND LEAK RATE CC/MIN	AS LEFT PRESSURE P.S.I.A.	AS LEFT LEAK RATE CC/MIN
58	CV-873A	12/06/77	69.05	0		0
59	CV-873B	12/06/77	65	190		190
60	CV-873C	12/05/77	64.91	210		210
58/59/60	MOV-843A, B	12/02/77	66.4	2,100		
	MOV-843A, B	1/26/78			66	1,600
61B	Test Valve "C"	11/28/77	66	0		0
64A	MOV-1425	12/02/77	68.8			10
64B	MOV-1426	12/02/77	70.5	0		0
64C	MOV-1427	12/02/77	69.2	6		6
65A	Valve "E"	1/27/78	69.6	0		0
65B	Valve "F"	1/04/78	69.5	0		0
65C	Valve "G"	1/04/78	69.7	0		0
63	CV-2819/2826	1/24/78	66.7	6,200		
	CV-2819/2826	1/27/78			66.2	3,538
29	Blind Flange	1/27/78	70.7	40		40
40	Inner Annulus	1/29/78	69.0	0		0
		2/10/78	67.2	0		0
41	Inner Annulus	1/29/78	69.9	0		0
	Entire Air Lock	1/29/78	66.1	30		30
49	Inner Annulus	1/23/78	67.6	0		0
	Entire Air Lock	1/23/78	68.0	0		0
		TOTAL		46,580.8		19,249.8

All electrical canisters were leak rate tested all had "0" leakage except for

1) South 5KV "A" RCP electrical canister had a cracked insulator. "As found" leak rate was >50,000 cc/min. The insulator was replaced and the electrical canister was retested, the leakage was "0" cc/min.

2) North 5KV "A" RCP electrical canister had a leaking seal and a crack in it. "As found" leakage was 510 cc/min. The insulator was replaced and the electrical canister was retested, the leak rate was "0" cc/min.

FLORIDA POWER & LIGHT COMPANY
TURKEY POINT UNIT #3
1979
#5 REFUELING

PEN	VALVE	DATE TESTED	AS FOUND PRESSURE P.S.I.A.	AS FOUND LEAK RATE CC/MIN	AS LEFT PRESSURE P.S.I.A.	AS LEFT LEAK RATE CC/MIN
1	MOV-3-751	2/15/79	66.5	2,500		2,500
5	CV-3-516	1/05/79	68.4	0		0
6	Check Valve 518	1/24/79	66.5	820		--
		2/15/79			66.5	620
7	CV-3-519A, B	1/9/79	68.7	0		0
	CV-3-522A, B, C					
8	CV-3-951	2/26/79	65.8	30		30
	CV-3-956A	1/05/79	68.6	0		0
	989A	1/05/79	66.7	600		--
		1/09/79			67.5	
9	CV-3-953	2/26/79	67.0	0		0
	CV-3-956B	1/05/79	68.9	0		0
	989B	1/05/79	68.6	0		0
10	CV-3-4658B	1/16/79	70.4	0		0
	PCV-3-1014	1/16/79	69.9	0		0
11	MOV-3-872	2/21/79	68.6	0		0
14	CV-3-200A, B, C	1/17/79	66.3	20,000		--
		2/16/79			68.7	0
	CV-3-204	1/17/79	66.9	70		70
15	Check Valve 312C	2/12/79	68.7	0		0
	HCV-3-121, 333	2/08/79	68.8	0		0
16	HV-3-2	1/10/79	66.4	85		85
17	895V	1/11/79	70.2	0		0.
19A	MOV-3-880A	1/03/79	69.2	15		15
	Check Valve 890A	1/03/79	67.7	220		220
19B	MOV-3-880B	1/03/79	70.7	0		0
	Check Valve 890B	1/03/79	72.5	0		0
20	CV-3-955A	2/26/79	67.9	30		30
	CV-3-955B	2/26/79	67.0	0		0
	CV-3-956C	1/11/79	70.7	0		0
23	CV-3-2821	1/15/79	66.2	8,000		8,000
	CV-3-2822	1/12/79	72.0	0		0
		3/07/79	66.0	51,000		--
		3/09/79			66.5	0
24A	Check Valve 298A	1/11/79	69.0	0		0

#5 REFUELING, PTP UNIT #3
1979

PEN	VALVE	DATE TESTED	AS FOUND PRESSURE P.S.I.A.	AS FOUND LEAK RATE CC/MIN	AS LEFT PRESSURE P.S.I.A.	AS LEFT LEAK RATE CC/MIN
24B	Check Valve 298B	1/11/79	69.5	0		0
24C	Check Valve 298C	1/11/79	69.2	0		0
25	MOV-3-381	1/11/79	69.9	0		0
29	Check Valve 336	1/04/79	67.2	90		90
	CV-3-2803	1/04/79	68.6	0		0
31	CV-3-4695B	1/12/79	69.4	0		0
32	Check Valve 11-003	1/19/79	69.0	>50,000		--
		2/27/79			68.8	0
	SV-2912	1/18/79	66.0	>50,000		--
		2/26/79	66.7	1,700		--
		2/26/79	66.7	580		--
		3/11/79			66.1	560
33	SV-2911	1/18/79	66.5	195		195
	SV-2913	1/18/79	66.4	140		140
34	Check Valve 205	1/04/79	66.0	>50,000		--
		1/05/79	66.0	16,000		--
		1/08/79	66.3	11,000		--
		3/02/79			66.1	10,000
	204	1/04/79	67.6	0		0
35	PV-2601, PV-2600	1/10/79	68.6	35		--
	PV-2601, PV-2600	1/10/79			69.6	10
36	PV-2602, PV-2603	1/10/79	67.8	30		--
		3/12/79			66.5	50
39	Fuel Trans Flange	3/03/79	67.0	335		--
		3/07/79			67.2	100
40	Equip Hatch	2/09/79	84.8	0		--
		3/13/79	81.8	0		0
41	Personnel Air Lock	3/02/79	66.3/71.7	40/0		40/0
42	CV-3-855	1/16/79	66.5	>50,000		--
		2/09/79			65.8	3,000
47	Check Valve 10-567	1/09/79	67.9	85		85
52	CV-3-4668B	1/12/79	69.8	0		0
53	HV-3-4	1/10/79	69.1	60		60
54A	MOV-3-861A	1/15/79	69.4	0		0
54B	MOV-3-861B	1/12/79	69.9	0		0
55	CV-3-955C	2/27/79	69.0	0		0
	CV-3-955D	2/27/79	68.0	0		0
	CV-3-955E	2/27/79	67.0	0		0
	CV-3-956D	1/12/79	69.7	0		0
61B	Valve "C"	1/19/79	69.2	0		0

#5 REFUELING, PTP UNIT #3
1979

PEN	VALVE	DATE TESTED	AS FOUND PRESSURE P.S.I.A.	AS FOUND LEAK RATE CC/MIN	AS LEFT PRESSURE P.S.I.A.	AS LEFT LEAK RATE CC/MIN
63	CV-3-2819	1/17/79	66.2	820		--
		2/27/79			66.9	50
	CV-3-2826	1/17/79	66.0	>50,000		--
		2/28/79	67.7	4,000		--
		3/06/79			65.9	460
65A	Flange "E"	3/25/79	68.5	0		0
65B	Valve "F"	2/20/79	66.7	0		--
		3/05/79	66.6	0		--
		3/25/79	66.2	3,400		--
		3/26/79			65.9	150
65C	Valve "G"	2/20/79	66.6	0		--
		3/25/79	66.2	4,000		--
		3/26/79			67.2	0
		TOTAL		>342,600		26,560

All electrical canisters were leak rate tested the as found leakage was "0" cc/min.

APPENDIX A

FAILED TEST REPORT - TYPE A TEST

INTRODUCTION

Section V.B.3. of 10CFR50, Appendix J requires a summary report of Type A test leakage rate results that failed to meet test acceptance criteria, which includes an analysis and interpretation of test data, the instrumentation system error analysis and a description of containment conditions causing test failure. The following information is reported in response to this requirement.

DISCUSSION

The initial Type A test failed because of excessive leakage at the Personnel Airlock equalizing valve shaft seal (inner door). This leak was repaired, and the Containment Leakage Rate Test was successfully conducted.

Prior to beginning the ILRT, the airlock had been local leakage rate tested and the leakage rate found to be essentially zero, i.e., approximately 0.0006%/day. After reaching ILRT test pressure, several hours of data yielded a leakage rate that was out of acceptable limits and was stable as indicated by the Trend Report (see attached Reports). Leak search teams found a leak at the airlock inner door equalizing valve shaft seal. The cavity in the shaft seal was then filled with grease and the leak stopped. A successful ILRT was then performed.

New components for the shaft seal have been ordered from the Pittsburgh-Des Moines Steel Co. (the airlock manufacturer) to effect permanent repairs. Appropriate local leakage rate tests will be performed.

The Type A test data and data analysis showing the excessive leakage rate prior to finding and stopping the leak follow.

The instrumentation system error analysis is based on the Instrumentation Selection Guide (ISG) formula from ANSI N274, Draft No. 2, Revision 3 - November 15, 1978 "Containment System Leakage Testing Requirements". The formula is

$$ISG = \pm \frac{2400}{t} \left[2\left(\frac{e_P}{P}\right)^2 + 2\left(\frac{e_T}{T}\right)^2 + 2\left(\frac{e_{PV}}{P}\right)^2 \right]^{\frac{1}{2}}$$

The symbols are defined in Appendix G of ANSI N274. Based on the following test conditions:

Test duration:	8 hours
Containment total pressure:	42 psia
Containment water vapor pressure:	0.239 psia
Containment temperature:	538°R

The error associated with the instrumentation system, ISG, is ±0.035% per day.

ANSI N274 requires that the ISG shall not exceed 0.25 Lt, or 0.25 (0.1029), or 0.0257. While the ISG is greater than this value, the unacceptable leakage rate can be considered to be accurate based on the stability of the leakage rate as shown by the accompanying Trend Report. The ISG is dependent on test duration. Had the test been continued for three more hours as the final successful ILRT was, the ISG would have been satisfactory. However, this would have been strictly a data gathering exercise and would have served no useful purpose.

As stated in ANSI N274 the ISG formula is not based on a statistical analysis of the actual leakage rate data and is not added to the leakage rate value. The ISG value is used only for instrument selection and loss of sensor criteria. It is reported per the specific requirements of 10CFR50, Appendix J, Section V.B.3.

SUMMARY DATA

TURKEY POINT UNIT 3 ILRT
ALMAX = 0.102 VOL = 1550000.00

TIME	DATE	TEMP	PRESSURE
1300	319	539.463	42.0219
1315	319	539.443	42.0196
1330	319	539.420	42.0175
1345	319	539.396	42.0157
1400	319	539.377	42.0130
1415	319	539.347	42.0115
1430	319	539.334	42.0096
1445	319	539.315	42.0078
1500	319	539.292	42.0061
1515	319	539.273	42.0036
1530	319	539.257	42.0023
1545	319	539.239	42.0005
1600	319	539.226	41.9990
1615	319	539.213	41.9974
1630	319	539.203	41.9959
1645	319	539.180	41.9942
1700	319	539.160	41.9923
1715	319	539.153	41.9906
1730	319	539.140	41.9896
1745	319	539.131	41.9879
1800	319	539.110	41.9866
1815	319	539.096	41.9851
1830	319	539.083	41.9840
1845	319	539.062	41.9828
1900	319	539.050	41.9813
1915	319	539.040	41.9798
1930	319	539.026	41.9788
1945	319	539.016	41.9771
2000	319	539.012	41.9765
2015	319	539.001	41.9753
2030	319	538.987	41.9742
2045	319	538.971	41.9734
2100	319	538.964	41.9721
0	0	0.0	0.0

TURKEY POINT UNIT 3 ILRT

TREND REPORT
LEAKAGE RATES (WEIGHT PERCENT/DAY)
TOTAL-TIME ANALYSIS

TIME AND DATE AT START OF TEST: 1300 0319
ELAPSED TIME: 8.00 HOURS

NO. DATA POINTS	ELAPSED TIME	MEAN MEASURED LEAKAGE RATE	CALCULATED LEAKAGE RATE	CHG IN CALC L/R FROM LAST POINT	UPPER 95% CONF LEVEL
10	2.25	0.098	0.065		0.141
11	2.50	0.096	0.065	0.000	0.137
12	2.75	0.095	0.066	0.001	0.133
13	3.00	0.094	0.067	0.001	0.132
14	3.25	0.094	0.070	0.002	0.132
15	3.50	0.094	0.073	0.003	0.134
16	3.75	0.093	0.074	0.001	0.133
17	4.00	0.093	0.074	0.001	0.131
18	4.25	0.093	0.077	0.003	0.133
19	4.50	0.093	0.078	0.001	0.132
20	4.75	0.093	0.081	0.002	0.134
21	5.00	0.093	0.081	0.000	0.133
22	5.25	0.093	0.082	0.000	0.131
23	5.50	0.092	0.081	-0.000	0.130
24	5.75	0.092	0.080	-0.001	0.127
25	6.00	0.091	0.079	-0.001	0.125
26	6.25	0.091	0.079	-0.000	0.123
27	6.50	0.091	0.078	-0.001	0.121
28	6.75	0.090	0.078	0.000	0.121
29	7.00	0.090	0.078	-0.000	0.120
30	7.25	0.090	0.078	-0.000	0.119
31	7.50	0.090	0.078	-0.000	0.117
32	7.75	0.089	0.077	-0.001	0.116
33	8.00	0.089	0.076	-0.001	0.114

THE CALCULATED LEAKAGE RATE = 0.076

TURKEY POINT UNIT 3 ILRT

LEAKAGE RATE (WEIGHT PERCENT/DAY)
TOTAL-TIME ANALYSIS

TIME AND DATE AT START OF TEST: 1300 0319
ELAPSED TIME: 8.00 HOURS

TIME	TEMP. (R)	PRESSURE (PSIA)	MEASURED LEAKAGE RATE
1300	539.463	42.0219	
1315	539.443	42.0196	0.170
1330	539.420	42.0175	0.120
1345	539.396	42.0157	0.075
1400	539.377	42.0130	0.126
1415	539.347	42.0115	0.062
1430	539.334	42.0096	0.086
1445	539.315	42.0078	0.084
1500	539.292	42.0061	0.071
1515	539.273	42.0036	0.089
1530	539.257	42.0023	0.081
1545	539.239	42.0005	0.082
1600	539.226	41.9990	0.085
1615	539.213	41.9974	0.088
1630	539.203	41.9959	0.094
1645	539.180	41.9942	0.086
1700	539.160	41.9923	0.086
1715	539.153	41.9906	0.096
1730	539.140	41.9896	0.091
1745	539.131	41.9879	0.098
1800	539.110	41.9866	0.089
1815	539.096	41.9851	0.089
1830	539.083	41.9840	0.086
1845	539.062	41.9828	0.078
1900	539.050	41.9813	0.080
1915	539.040	41.9798	0.084
1930	539.026	41.9788	0.080
1945	539.016	41.9771	0.085
2000	539.012	41.9765	0.084
2015	539.001	41.9753	0.084
2030	538.987	41.9742	0.081
2045	538.971	41.9734	0.075
2100	538.964	41.9721	0.078

MEAN OF MEASURED LEAKAGE RATES	=	0.089
STD. DEVIATION OF MEASURED LEAKAGE RATES	=	0.019
MAXIMUM ALLOWABLE LEAKAGE RATE	=	0.102
75 % OF MAXIMUM ALLOWABLE LEAKAGE RATE	=	0.077
THE UPPER 95% CONFIDENCE LIMIT	=	0.114
THE CALCULATED LEAKAGE RATE	=	0.076

TURKEY POINT UNIT 3 ILRT

LEAKAGE RATE (WEIGHT PERCENT/DAY)
MASS-POINT ANALYSIS

TIME AND DATE AT START OF TEST: 1300 0319
ELAPSED TIME: 8.00 HOURS

TIME	TEMP (R)	PRESSURE (PSIA)	CTMT. AIR MASS (LBM)	MASS LOSS (LBM)	TOT.AVG. MASS LOSS (LBM/HR)
1300	539.463	42.0219	325892		
1315	539.443	42.0196	325886	5.8	23.0
1330	539.420	42.0175	325884	2.4	16.3
1345	539.396	42.0157	325884	-0.5	10.2
1400	539.377	42.0130	325875	9.5	17.1
1415	539.347	42.0115	325881	-6.5	8.5
1430	539.334	42.0096	325875	6.9	11.6
1445	539.315	42.0078	325872	2.5	11.4
1500	539.292	42.0061	325873	-0.7	9.6
1515	539.273	42.0036	325865	7.9	12.1
1530	539.257	42.0023	325864	0.4	11.0
1545	539.239	42.0005	325861	3.1	11.1
1600	539.226	41.9990	325858	3.8	11.5
1615	539.213	41.9974	325853	4.6	12.0
1630	539.203	41.9959	325847	5.6	12.7
1645	539.180	41.9942	325848	-0.7	11.7
1700	539.160	41.9923	325846	2.7	11.6
1715	539.153	41.9906	325837	9.0	13.1
1730	539.140	41.9896	325837	-0.1	12.3
1745	539.131	41.9879	325829	7.8	13.3
1800	539.110	41.9866	325832	-2.6	12.1
1815	539.096	41.9851	325828	3.2	12.1
1830	539.083	41.9840	325828	0.7	11.7
1845	539.062	41.9828	325831	-3.4	10.6
1900	539.050	41.9813	325827	4.4	10.9
1915	539.040	41.9798	325821	5.6	11.4
1930	539.026	41.9788	325822	-0.7	10.8
1945	539.016	41.9771	325815	7.1	11.5
2000	539.012	41.9765	325812	2.2	11.4
2015	539.001	41.9753	325810	2.7	11.4
2030	538.987	41.9742	325810	0.1	11.0
2045	538.971	41.9734	325813	-3.5	10.2
2100	538.964	41.9721	325807	5.9	10.6

FREE AIR VOLUME USED (MILLIONS OF CU. FT.) = 1.550

REGRESSION LINE
INTERCEPT (LBM) = 325890
SLOPE (LBM/HR) = -10.9

MAXIMUM ALLOWABLE LEAKAGE RATE = 0.102
75 % OF MAXIMUM ALLOWABLE LEAKAGE RATE = 0.077
THE UPPER 95% CONFIDENCE LIMIT = 0.094
THE CALCULATED LEAKAGE RATE = 0.080

V

Operating Procedure 13,100.1

#3 Integrated Leak Rate Test

Master Copy

Florida Power & Light Company
Turkey Point Units 3 & 4
REQUEST FOR PROCEDURE CHANGE/PERIODIC PROCEDURE REVIEW/OTSC

OTSC NO. 470

SEE INSTRUCTIONS ON REVERSE SIDE.

1. Reason for Request: ☒ OTSC ☐ Request for Proc. Change ☐ Periodic Proc. Review

2. Procedure Number OP 13100.1 Date of procedure

Procedure Title: ILRT

3. Describe Details of Change: (If no changes are recommended as a result of a periodic review, write none)

Valve # 4658A, is normally closed during an ILRT, OP 13100.1 shows it open. (Appendix A, page 14, penetration 10 and Appendix B, page 28, penetration 10)

ORIGINATOR

4. Reason for Change Described Above:

Valve #4658A closes on a trip signal (SI) and thus should be closed for the ILRT.

5. Submitted by Paul H Bennett Date 3/19/79

6. Approved by D K Hague Date 3/19/79

7. Approved by Chas Baker (SRO) Date 3/19/79

8. Would this change be a change in the procedures described in the FSAR? Yes ___ No ___
If yes, a Procedure Change Safety Evaluation such as in Administrative Procedure 0109.1 is required to be completed.

P.C. DEPT.

9. Completed by Date

10. Reviewed by Date

11. Change Reviewed by PNSC on or PNSC review not required ☐

12. Change Approved by Plant Supt. Date

Florida Power & Light Company
Turkey Point Units 3 & 4
REQUEST FOR PROCEDURE CHANGE/PERIODIC PROCEDURE REVIEW/OTSC

OTSC NO. 469

NOTE: SEE INSTRUCTIONS ON REVERSE SIDE.

ORIGINATOR

1. Reason for Request: ☑ OTSC ☐ Request for Proc. Change ☐ Periodic Proc. Review

2. Procedure Number 13100.1 Date of procedure MARCH 16, 1979

Procedure Title: INTEGRATED LEAK RATE TEST - TURKEY POINT #3

3. Describe Details of Change: (If no changes are recommended as a result of a periodic review, write none)

PAGE 4 SEC 4.5 DELETE "PRIOR TO", ADD "ABOVE" TO MAKE SENTENCE READ "IF A CONTAINMENT ENTRY IS REQUIRED ABOVE 14.3 PSIG, COMPETANT MEDICAL PERSONNEL SHALL BE AVAILABLE."

4. Reason for Change Described Above:

PARAGRAPH AS ORIGINALLY WRITTEN IS IN ERROR. ACCORDING TO U.S. NAVY DIVING MANUAL, NAVSHIPS 250-538, DIVING FOR NAVY STANDARD DIVING TABLES, STAY TIME (BOTTOM TIME) AT 33 FEET IS ~~INDEFINITE~~ UNLIMITED, MEANING THAT A DIVER CAN OPERATE AT THAT DEPTH WITH NO DANGER OF SUFFERING SYMPTOMS OF THE BENDS OR NITROGEN NARCOSSIS. THIS DEPTH IS EQUAL TO 14.7 PSIG. NO MEDICAL COVERAGE IS NECESSARY UNDER THESE CIRCUMSTANCES.

5. Submitted by R W Kincaid Date 3-18-79

6. Approved by J. A. Olivenstein Date 3-18-79

7. Approved by C.H. Cohen (SRO) Date 3-18-79

8. Would this change be a change in the procedures described in the FSAR? Yes ____ No ____
If yes, a Procedure Change Safety Evaluation such as in Administrative Procedure 0109.1 is required to be completed.

S.C. DEPT.

9. Completed by Date

10. Reviewed by Date

11. Change Reviewed by PNSC on or PNSC review not required ☐

12. Change Approved by Plant Supt, Date

FORM 5714 REV. 1/79

Florida Power & Light Company
Turkey Point Units 3 & 4
REQUEST FOR PROCEDURE CHANGE/PERIODIC PROCEDURE REVIEW/OTSC

OTSC NO. 467

SHEET 1 OF 5

NOTE: SEE INSTRUCTIONS ON REVERSE SIDE.

ORIGINATOR

1. Reason for Request: [1] OTSC ☐ Request for Proc. Change ☐ Periodic Proc. Review

2. Procedure Number OP 13100.1 Date of procedure MARCH 9, 1979

Procedure Title: INTEGRATED LEAK-RATE TEST - TURKEY POINT UNIT 3

3. Describe Details of Change: (If no changes are recommended as a result of a periodic review, write none)

(1) Pg 13 - PEN 1 - ADD "741E", ADD "CLOSED", ADD SIGN-OFF LINE.
ADD "TC100", ADD "CLOSED", ADD SIGN-OFF LINE.
DELETE "750A" & "750B", DELETE "CLOSED" FOR BOTH, DELETE SIGN-OFF LINES
ADD "741D", ADD "CLOSED", ADD SIGN-OFF LINE.

(2) Pg. 24 PEN 1. - DELETE "750B", DELETE "75CA", ADD VLV. "TC100."

(3) Pg 13 PEN 5 - ADD "517A", ADD "OPEN", ADD SIGN-OFF LINE.
ADD "549", ADD "CLOSED", ADD SIGN-OFF LINE

~~(4) Pg 24 PEN 5 - SHOW PICK~~

4. Reason for Change Described Above:

(1) Pg 13 - PEN 1 - REFLECT "AS-IS" CONFIGURATION, CORRECT TYPING OMISSIONS.
(2) Pg 24 PEN 1 - REFLECT "AS-IS" CONFIGURATION.
(3) Pg 13 PEN 5 - REFLECT "AS-IS" CONFIGURATION.

5. Submitted by P W Weyrich Date 3-16-79

Approved by J. A. Olsonoski Date 3-16-79

7. Approved by [illegible] (SRO) Date 3-16-79

C. DEPT.

8. Would this change be a change in the procedures described in the FSAR? Yes____ No____
If yes, a Procedure Change Safety Evaluation such as in Administrative Procedure 0109.1 is required to be completed.

9. Completed by Date

10. Reviewed by Date

11. Change Reviewed by PNSC on or PNSC review not required ☐

12. Change Approved by Plant Supt, Date

FORM 5714 REV. 1/78

Florida Power & Light Company
Turkey Point Units 3 & 4
REQUEST FOR PROCEDURE CHANGE/PERIODIC PROCEDURE REVIEW/OTSC

OTSC NO. 4-67

SHEET 2 OF 5

SEE INSTRUCTIONS ON REVERSE SIDE.

ORIGINATOR

1. Reason for Request: ☐ OTSC ☐ Request for Proc. Change ☐ Periodic Proc. Review

2. Procedure Number _____ Date of procedure _____

Procedure Title:

3. Describe Details of Change: (If no changes are recommended as a result of a periodic review, write none)

(4) Pg 14, PEN 6 - DELETE SIGN-OFF LINE FOR VLV. 518
(5) Pg 14, PEN 10 - DELETE "TC-87", DELETE "CLOSED", DELETE SIGN-OFF LINE
ADD "549", ADD "CLOSED", ADD SIGN-OFF LINE.
(6) Pg 28, PEN 10 - DELETE VLV. TC-87, ADD CAP ON PIPE STUB
(7) Pg 15 PEN 14 - CHANGE "201F" TO "201E"
(8) Pg 15 PEN 15 - ~~CV-310B~~ ADD "CV-310B", ADD "~~CLOSED~~" "OPEN", ADD SIGN-OFF LINE
ADD "CV-311", ADD "CLOSED", ADD SIGN-OFF LINE.
(9) Pg 18 PEN 29 - ADD "VALVE", ADD "FAILS OPEN", OPPOSITE 310B, ADD "CLOSED", ADD "IN PARALLEL TC-58
(10) Pg 36 PEN 29 - ADD "VALVE"

4. Reason for Change Described Above:

(4) Pg 14 PEN 6 - NOT APPLICABLE
(5) Pg 14, PEN 10 - REFLECT "AS-IS" CONFIGURATION, CORRECT TYPING OMISSION
(6) Pg 28, PEN 10 - REFLECT "AS-IS" CONFIGURATION
(7) Pg 15 PEN 14 - CORRECT TYPO
(8) Pg 15 PEN 15 - CORRECT OMISSIONS
(9) Pg 18 PEN 29 - CORRECT OMISSION
(10) Pg 36 PEN 29 - CORRECT OMISSION

5. Submitted by Date

Approved by J. A. Olson Date 3-16-79

7. Approved by (SRO) Date

Q.C. DEPT.

8. Would this change be a change in the procedures described in the FSAR? Yes____ No____
If yes, a Procedure Change Safety Evaluation such as in Administrative Procedure 0109.1 is required to be completed.

9. Completed by Date

10. Reviewed by Date

11. Change Reviewed by PNSC on or PNSC review not required ☐

12. Change Approved by Plant Supt, Date

FORM 5714 REV. 1/78

Florida Power & Light Company
Turkey Point Units 3 & 4
REQUEST FOR PROCEDURE CHANGE/PERIODIC PROCEDURE REVIEW/OTSC

OTSC NO. 467
SHEET 3 OF 5

SEE INSTRUCTIONS ON REVERSE SIDE.

ORIGINATOR

1. Reason for Request: ☐ OTSC ☐ Request for Proc. Change ☐ Periodic Proc. Review

2. Procedure Number _____ Date of procedure _____

Procedure Title:

3. Describe Details of Change: (If no changes are recommended as a result of a periodic review, write none)

(11) Pg. 36 PEN. 31 – CHANGE "4665B" TO "4655B"
(12) Pg 19 PEN 32 - ADD "VALVE", ADD "CLOSED", ADD SIGN-OFF LINE
(13) Pg 37 PEN 32 - ADD "VALVE"
(14) Pg 19 PEN 34 - ADD "206", ADD "CLOSED", ADD SIGN-OFF LINE
(15) Pg ~~36~~ 19 PEN 36 – CHANGE "OPPOSITE" TO "PARALLEL"
(16) Pg 20 PEN 42 – ADD "4619L", ADD "CLOSED", ADD SIGN-OFF LINE
ADD "BALL VLV. TO HCV-936", ADD "OPEN", ADD SIGN-OFF LINE
(17) Pg 39 PEN 42 – ADD OPEN VLV. DOWNSTREAM FROM HCV936, ADD WORDS "BALL VLV."

4. Reason for Change Described Above:

(11) Pg 36 PEN 31 - CORRECT TYPO
(12) Pg 19 PEN 32 – CORRECT OMISSION
(13) Pg 37 PEN 32 – CORRECT OMISSION
(14) Pg 19 PEN 34 – CORRECT OMISSION
(15) Pg ~~36~~ 19 PEN 36 – CORRECT ERROR
(16) Pg 20 PEN 42 – CORRECT OMISSIONS
(17) Pg 39 PEN 42 – CORRECT OMISSION

5. Submitted by Date

6. Approved by J. A. Olsonovski Date 3-16-79

7. Approved by (SRO) Date

C. DEPT.

8. Would this change be a change in the procedures described in the FSAR? Yes____ No____
If yes, a Procedure Change Safety Evaluation such as in Administrative Procedure 0109.1 is required to be completed.

9. Completed by Date

10. Reviewed by Date

11. Change Reviewed by PNSC on or PNSC review not required ☐

12. Change Approved by Plant Supt, Date

FORM 5714 REV. 1/70

Florida Power & Light Company
Turkey Point Units 3 & 4
REQUEST FOR PROCEDURE CHANGE/PERIODIC PROCEDURE REVIEW/OTSC

OTSC NO. 167

SHEET 4 OF 5

SEE INSTRUCTIONS ON REVERSE SIDE.

ORIGINATOR

1. Reason for Request: ☐ OTSC ☐ Request for Proc. Change ☐ Periodic Proc. Review

2. Procedure Number _____ Date of procedure _____

Procedure Title:

3. Describe Details of Change: (If no changes are recommended as a result of a periodic review, write none)

(18) Pg 21 Pen 61B – CHANGE PENETRATION # FROM 61B TO 37
~~DELETE "VALVE P", DELETE "OPEN", DELETE SIGN-OFF LINE~~ PLUG

(19) Pg 43 PEN 61B – CHANGE PENETRATION # FROM 61B TO 37
~~DELETE "VALVE P"~~ ADD DESCRIPTIVE SKETCH PER ATTACHED SHEET

(20) Pg 22 PEN 65B – DELETE "ILRT A", DELETE "OPEN," DELETE SIGN-OFF LINE
ADD "FLANGE A"; ADD "OPEN," ADD SIGN-OFF LINE

(21) Pg 22 PEN 65C DELETE "ILRT B", DELETE "OPEN," DELETE SIGN-OFF LINE
ADD "FLANGE B", ADD "OPEN," ADD SIGN-OFF LINE

4. Reason for Change Described Above:

(18) Pg 21 PEN 61B – REFLECT "AS-IS" CONFIGURATION
(19) Pg 43 PEN 61B – REFLECT "AS-IS" CONFIGURATION
(20) Pg 22 PEN 65B – REFLECT "AS-IS" CONFIGURATION
(21) Pg 22 PEN 65C – REFLECT "AS-IS" CONFIGURATION

5. Submitted by Date

6. Approved by J. A. Olson Date 3-16-79

7. Approved by (SRO) Date

C. DEPT.

8. Would this change be a change in the procedures described in the FSAR? Yes____ No____
If yes, a Procedure Change Safety Evaluation such as in Administrative Procedure 0109.1 is required to be completed.

9. Completed by Date

10. Reviewed by Date

11. Change Reviewed by PNSC on or PNSC review not required ☐

12. Change Approved by Plant Supt, Date

FORM 5714 REV. 1/78

Florida Power & Light Company
Turkey Point Units 3 & 4
REQUEST FOR PROCEDURE CHANGE/PERIODIC PROCEDURE REVIEW/OTSC

OTSC NO. 467

SHEET 5 OF 5

NOTE: SEE INSTRUCTIONS ON REVERSE SIDE.

ORIGINATOR

1. Reason for Request: ☐ OTSC ☐ Request for Proc. Change ☐ Periodic Proc. Review

2. Procedure Number _____ Date of procedure _____

Procedure Title:

3. Describe Details of Change: (If no changes are recommended as a result of a periodic review, write none)

(22) Pg 44 PEN. 65B – DELETE VALVE "ILRT A", ADD WORDS "FLANGE A (OPEN)"
(23) Pg 44 PEN 65C – DELETE VALVE "ILRT B", ADD WORDS "FLANGE B (OPEN)"
~~(24) Pg 21 PEN 60 – DELETE VLV "CSG", DELETE "CLOSED", DELETE SIGN-OFF LINE~~
~~(25) Pg 43 PEN 60 – DELETE VLV CSG~~ PLUS
(26) Pg 18 PEN. 29 – ADD "3B4", ADD "CLOSED", ADD SIGN-OFF LINE
ADD NOTE IN REMARKS "INSTALL HAND LOADER"
(27) Pg 30 PEN 15 – SHOW 310B OPEN

4. Reason for Change Described Above:

(22) Pg 44 PEN. 65B – REFLECT "AS-IS" CONFIGURATION
(23) Pg 44 PEN 65C – REFLECT "AS-IS" CONFIGURATION
~~(24) Pg 21 PEN 60 – REFLECT "AS-IS" CONFIGURATION~~ PLUS
~~(25) Pg 43 PEN. 60 – REFLECT "AS-IS" CONFIGURATION~~ PLUS
(26) Pg 18 PEN 29 – CORRECT OMISSION
(27) Pg 30 PEN 15 – REFLECT "AS-IS" CONFIGURATION (VALVE FAILS OPEN)

5. Submitted by Date

Approved by J. A. Olshouse Date 3-16-79

7. Approved by (SRO) Date

Q. C. DEPT.

8. Would this change be a change in the procedures described in the FSAR? Yes____ No____
If yes, a Procedure Change Safety Evaluation such as in Administrative Procedure 0109.1 is required to be completed.

9. Completed by Date

10. Reviewed by Date

11. Change Reviewed by PNSC on or PNSC review not required ☐

12. Change Approved by Plant Supt, Date

FORM 5714 REV. 1/78

Florida Power & Light Company
Turkey Point Units 3 & 4
REQUEST FOR PROCEDURE CHANGE/PERIODIC PROCEDURE REVIEW/OTSC

OTSC NO. 466
SHEET 1 OF 3

NOTE: SEE INSTRUCTIONS ON REVERSE SIDE.

ORIGINATOR

1. Reason for Request: [x] OTSC [ ] Request for Proc. Change [ ] Periodic Proc. Review

2. Procedure Number 13100.1 Date of procedure MARCH 9, 1979

Procedure Title: INTEGRATED LEAK RATE TEST - TURKEY POINT UNIT 3

3. Describe Details of Change: (If no changes are recommended as a result of a periodic review, write none)

(1) Pg. 26 - PEN 6 - DELETE VLV. AT TC81. ADD NOTE "REMOVE PLUG".
(2) Pg. 30 - PEN 15 - CHANGE VLV. # FROM 201F TO 120D
(3) Pg 30 - PEN 16 - DELETE VLV. & LINE FROM HV-9. ADD NOTE "REMOVE CAP".
(4) Pg. 38 - PEN 35 - DELETE VLV. 11-004. ADD PIPE CAP.
(5) Pg 39 - PEN 36 - CHANGE VLV. # 11-005 TO 11-004. ADD ANOTHER CLOSED VLV SAME AS 11-004 BETWEEN PV 2603 AND PEN. # 36
(6) Pg 39 - PEN 42 - DELETE VLV AT 7050. ADD NOTE "REMOVE PLUG"
~~(7) Pg 41 PEN 52 - ADD NOTE "CLEAN [illegible] PUMP INTERNALS. DO NOT DRAIN ITEM" PLCH~~

(CONTINUED ON ATTACHED SHEET)

4. Reason for Change Described Above:

(1) Pg. 26 - PEN. 6 - CORRECT DRAWING TO REFLECT "AS-IS" CONDITION.
(2) Pg 30 - PEN 15 - CORRECT FORCE
(3) Pg 30 - PEN 16. - CORRECT DRAWING TO REFLECT "AS-IS" CONDITION.
(4) Pg 38 - PEN 35 - CORRECT DRAWING TO REFLECT "AS-IS" CONDITION.
(5) Pg 39 - PEN. 36 - CORRECT DRAWING TO REFLECT "AS-IS" CONDITION.
(6) Pg 39 - PEN. 42 CORRECT DRAWING TO REFLECT "AS-IS" CONDITION.
~~(7) Pg 41 PEN. 52 - TYPEWRITER NOTE~~ PLCH

(CONTINUED ON ATTACHED SHEET)

5. Submitted by P W Hayeck Date 3-15-79

6. Approved by [signature] Date 3-15-79

7. Approved by [signature] (SRO) Date 3-15-79

Q. C. DEPT.

8. Would this change be a change in the procedures described in the FSAR? Yes____ No____
If yes, a Procedure Change Safety Evaluation such as in Administrative Procedure 0109.1 is required to be completed.

9. Completed by Date

10. Reviewed by Date

11. Change Reviewed by PNSC on or PNSC review not required [ ]

12. Change Approved by Plant Supt, Date

FORM 5714 REV. 1/78

7

Florida Power & Light Company
Turkey Point Units 3 & 4
REQUEST FOR PROCEDURE CHANGE/PERIODIC PROCEDURE REVIEW/OTSC

OTSC No.

INSTRUCTIONS ON REVERSE SIDE.

ORIGINATOR

1. Reason for Request: ☐ OTSC ☐ Request for Proc. Change ☐ Periodic Proc. Review

2. Procedure Number _____ Date of procedure _____

Procedure Title.

3. Describe Details of Change: (If no changes are recommended as a result of a periodic review, write none)

(a) Pg 14 PEN 6 - Delete "10 [illegible]" [illegible] PUR [illegible] STUB BETWEEN [illegible] AND [illegible]

(b) Pg 15 PEN 15 Change [illegible] to [illegible]

(c) Pg 16 - PEN 16 - Delete "VLV 8 HV-9," Delete "OPEN", Add Note "Remove cap from stub downstream from HV-7."

(d) Pg 19 - PEN 35 - Delete "11-004", Delete "CLOSED". Add note "Ensure that pipe stub between pressurizer and PZR [illegible] is capped"

(e) Pg 19 - PEN 36 - Change 11-005 to 11-004. Add "VALVE" in VALVE column, Add "CLOSED" in POSITION column, Add Note "OPPOSITE 11-004" in REMARKS column.

4. Reason for Change Described Above:

(a) Pg 14 - PEN 6 - Reflect "AS IS" configuration

(b) Pg 15 - PEN 15 Correct typo

(c) Pg 16 PEN 16 - Reflect "AS IS" configuration

(d) Pg 19 - PEN 35 Reflect "AS IS" configuration

(e) Pg 19 - PEN 36 - Reflect "AS IS" configuration

Continued on attached sheet

5. Submitted by Date

6. Approved by Date

7. Approved by (SRO) Date

Q. C. DEPT.

8. Would this change be a change in the procedures described in the FSAR? Yes____ No____
If yes, a Procedure Change Safety Evaluation such as in Administrative Procedure 0109.1 is required to be completed

9. Completed by Date

10. Reviewed by Date

11. Change Reviewed by PNSC on or PNSC review not required ☐

12. Change Approved by Plant Supt, Date

FORM 5714 REV. 1/78

Florida Power & Light Company
Turkey Point Units 3 & 4
REQUEST FOR PROCEDURE CHANGE/PERIODIC PROCEDURE REVIEW/OTSC

OTSC NO

NOTE: INSTRUCTIONS ON REVERSE SIDE.

ORIGINATOR

1. Reason for Request: ☐ OTSC ☐ Request for Proc. Change ☐ Periodic Proc. Review

2. Procedure Number _____ Date of procedure _____

Procedure Title:

3. Describe Details of Change: (If no changes are recommended as a result of a periodic review, write none)

(13) Pg 20 - PEN 42 - DELETE "TC-50", DELETE "OPEN", ADD NOTE "REMOVE CAP FROM PIPE STUB BETWEEN VLV. 4619 AND RV 846."

(14) Pg 34 - PEN. 24C - CHANGE VLV. # 298 I TO 298 J

(15) Pg 18 - PEN. 24C - CHANGE VLV # 298 L TO 298 J

4. Reason for Change Described Above:

(13) Pg 20 - PEN. 42 - REFLECT "AS-IS" CONFIGURATION

(14) Pg 34 - PEN 24C - VALVE INCORRECTLY IDENTIFIED

(15) Pg 18 - PEN. 24C - VALVE INCORRECTLY IDENTIFIED.

5. Submitted by Date

6. Approved by Date

7. Approved by (SRO) Date

Q. C. DEPT.

8. Would this change be a change in the procedures described in the FSAR? Yes____ No____
If yes, a Procedure Change Safety Evaluation such as in Administrative Procedure 0109.1 is required to be completed.

9. Completed by Date

10. Reviewed by Date

11. Change Reviewed by PNSC on or PNSC review not required ☐

12. Change Approved by Plant Supt, Date

FORM 5714 REV. 1/78

Florida Power & Light Company
Turkey Point Units 3 & 4
REQUEST FOR PROCEDURE CHANGE/PERIODIC PROCEDURE REVIEW/OTSC

OTSC NO. 465

SEE INSTRUCTIONS ON REVERSE SIDE.

1. Reason for Request: [✓] OTSC [ ] Request for Proc. Change [ ] Periodic Proc. Review

2. Procedure Number OP13100.1 Date of procedure 3-9-79

Procedure Title: INTEGRATED LEAK RATE TEST

3. Describe Details of Change: (If no changes are recommended as a result of a periodic review, write none)

a.) PAGE 58 - STEP 6 - DELETE - CONTAINMENT SUMP FLOATS.
.) PAGE 59 - CV # 456A, 455D & 522 DO NOT EXIST. - DELETE.
LINE 13 SHOULD READ CV-455B INSTEAD OF CV-455A.
c.) PAGE 6 - 4.19 Delete - CAN'T be used for ACS LEAKAGE EVALUATION
d.) PAGE 58 - STEP 9 Delete containment sump level operable

ORIGINATOR

4. Reason for Change Described Above:

a.) ON PREVIOUS REF. ILRT TEST FLOAT WERE NOT REQUIRED TO BE REMOVED AS PER OUR CONVERSATION WITH MANUFACTURER'S REP.
b.) TYPO ERROR. ON LINE 13
IMPROPER IDENTIFICATION OF EXISTING VALVES.
c.) instrument air secured by this op - level indication requires instrument air for operation
D. containment sump level OOS due to securing instrument air for ILRT op. 13100.1

5. Submitted by [signature] Date 3-15-79

Approved by [signature] Date 3-15-79

7. Approved by [signature] (SRO) Date 3-15-79

8. Would this change be a change in the procedures described in the FSAR? Yes ____ No ____
If yes, a Procedure Change Safety Evaluation such as in Administrative Procedure 0109.1 is required to be completed.

Q.C. DEPT.

9. Completed by Date

10. Reviewed by Date

11. Change Reviewed by PNSC on or PNSC review not required [ ]

Change Approved by Plant Supt, Date

FORM 5714 REV. 1/79

To: Don Jones

Florida Power & Light Company
Turkey Point Units 3 & 4
REQUEST FOR PROCEDURE CHANGE/PERIODIC PROCEDURE REVIEW/OTSC

OTSC NO. 464

TE: SEE INSTRUCTIONS ON REVERSE SIDE.

ORIGINATOR

1. Reason for Request: ☒ OTSC ☐ Request for Proc. Change ☐ Periodic Proc. Review

2. Procedure Number 13100.1 Date of procedure 3/9/79

Procedure Title: INTEGRATED LEAK RATE TEST

3. Describe Details of Change: (If no changes are recommended as a result of a periodic review, write none)

Delete (SPARE) on RTD #21 and RTD #22
Delete (SPARE) on RHD #7 and RHD #8
ADD RHD #9 and RHD #10

4. Reason for Change Described Above:

Revised Data sheet to accomodate 22 RTD's and 10 RHD's.

5. Submitted by W. P. Haley Date 3/13/79

6. Approved by J. A. O'Grimalde Date 3/13/79

7. Approved by [illegible] (SRO) Date 3/13/79

8. Would this change be a change in the procedures described in the FSAR? Yes____ No____
If yes, a Procedure Change Safety Evaluation such as in Administrative Procedure 0109.1 is required to be completed.

C. DEPT.

9. Completed by Date

10. Reviewed by Date

11. Change Reviewed by PNSC on or PNSC review not required ☐

12. Change Approved by Plant Supt, Date

FORM 5714 REV. 1/78

Florida Power & Light Company
Turkey Point Units 3 & 4
REQUEST FOR PROCEDURE CHANGE/PERIODIC PROCEDURE REVIEW/OTSC

OTSC NO. 463

SEE INSTRUCTIONS ON REVERSE SIDE.

1. Reason for Request: ☒ OTSC ☐ Request for Proc. Change ☐ Periodic Proc. Review

2. Procedure Number 13100.1 Date of procedure 3/9/79

Procedure Title: #3 ILRT

3. Describe Details of Change: (If no changes are recommended as a result of a periodic review, write none)

① Page 26 Pen. 5 open valve 517A ✓
② Page 29 Pen. 14 Change valve 201F to 201E ✓
③ Page 28 Pen. 11 Close 940L ✓
④ Page 28 Pen 10 Change valve 4668 A to 4666 A ✓
⑤ Page 52 RTD #21+22 RHD #7+8 Delete (spare)
⑥ Page 6 5.1.3 Change "accuracy +2.5" to accuracy ±1.25 ← Changed this
⑦ PAGE 28 PEN. 11 CHANGE VALVE 887 to "AS IS" - DO NOT TAG.

Procedure Change ~~OTSC~~ 3/16/79

ORIGINATOR

4. Reason for Change Described Above:

① allow a better vent path for the PRT
② Misprint
③ Valve 887 leaks through, must secure the RWST to isolate, RWST needed for SIS pumps can't isolate. Local Leak Rate Test on MOV-3-872 "0" cc/min
④ Misprint
⑤ RTD's + RHD's are used in the system, they are no longer "spares"
⑥ To increase accuracy of RHD's, callibration sheet + manual allow for this
⑦ Valve is not modified butterfly valve - we need to get rid excessive [illegible]

5. Submitted by H. C. Simmons Date 3/13/79

Approved by R. G. Campbell Date 3/13/79

7. Approved by J. Digiovanny (SRO) Date 3/13/79

8. Would this change be a change in the procedures described in the FSAR? Yes ____ No ____
If yes, a Procedure Change Safety Evaluation such as in Administrative Procedure 0109.1 is required to be completed.

Q. C. DEPT.

9. Completed by Date

10. Reviewed by Date

11. Change Reviewed by PNSC on or PNSC review not required ☐

12. Change Approved by Plant Supt, Date

FORM 5714 REV. 1/78

FOR DOCUMENT CONTROL USE ONLY
T OPS
T DATE
T YM
T DEPT
T DOCT
T DOCN
T SYS
T COMP
T ITM
T RET

FLORIDA POWER & LIGHT COMPANY
TURKEY POINT UNIT 3
OPERATING PROCEDURE 13100.1
MARCH 16, 1979

ADVANCE COPY

1.0 Title:

INTEGRATED LEAK RATE TEST

2.0 Approval and List of Effective Pages:

2.1 Approval:

Change dated 3/16/79 Reviewed by PNSC March 16, 1979

Approved by J.K. Hayes Plant Supt., March 16, 1979

2.2 List of Effective Pages:

Page	Date	Page	Date	Page	Date	Page	Date
1	3/16/79	17	2/15/79	33	2/15/79	49	3/16/79
2	2/15/79	18	2/15/79	34	2/15/79	50	3/16/79
3	3/16/79	19	2/15/79	35	2/15/79	51	3/16/79
4	2/15/79	20	2/15/79	36	2/15/79	52	3/16/79
5	2/15/79	21	2/15/79	37	2/15/79	53	3/16/79
6	3/16/79	22	2/15/79	38	2/15/79	54	3/16/79
7	2/15/79	23	2/15/79	39	2/15/79	55	3/16/79
8	3/9/79	24	2/15/79	40	2/15/79	56	3/16/79
9	2/15/79	25	2/15/79	41	2/15/79	57	3/16/79
10	3/16/79	26	2/15/79	42	2/15/79	58	3/16/79
11	2/15/79	27	2/15/79	43	2/15/79	59	3/16/79
12	2/15/79	28	2/15/79	44	2/15/79	60	3/16/79
13	2/15/79	29	2/15/79	45	2/15/79	61	3/16/79
14	3/9/79	30	2/15/79	46	2/15/79	62	3/16/79
15	2/15/79	31	2/15/79	47	3/16/79	63	3/16/79
16	2/15/79	32	2/15/79	48	3/16/79	64	3/16/79
						65	3/16/79
						66	3/16/79
						67	3/16/79
						68	3/16/79
						69	3/16/79

3.0 Purpose:

The purpose of this test is to assure that leakage through the primary reactor containment, and systems and components penetrating the primary containment does not exceed the allowable leakage rate values as specified in Technical Specification, section 4.4.1 and 10CFR50, Appendix J.

3.1 Method and Discussion of Test Techniques

The Integrated Leak Rate Test shall be performed by the absolute method by which the actual mass of contained air is calculated as a function of time.

3.1.1 Corroboration of Measurement

Provisions shall be made within this test whereby the leak rate measurements shall be validated independently by the use of a Controlled Leakage Rate Test (CLRT). This validation shall be performed for a sufficient duration to accurately establish validation following the measurements at the test pressure. At the end of the overall test, a statistical analysis of the total time leak rate shall be performed.

3.1.2 Test Computations

The equations used in this test procedure may be found in ORNL - NSIC - 26, "Testing of Containment Systems used with Light-Water-Cooled Power Reactors" (Frank C. Zapp) as well as in the "Proposed Standard for Leakage Rate Testing of Containment Structures," ANS Standards Committee, October 1970. Basically the leak rate of a volume may be computed by watching the test pressure decay, while at the same time, compensating for any changes in temperature and humidity. Thus the leak-rate (L) becomes:

$$L\% = \frac{24}{\text{Delta } t} \cdot \left(1 - \frac{T_1 [P_2 - W_2]}{T_2 [P_1 - W_1]}\right) (100). \text{ Where}$$

T_1 = Temperature (Rankine) at t_0, weighted average,

T_2 = Temperature (Rankine) at t, weighted average,

P_1 = Pressure, psia, at t_0,

P_2 = Pressure, psia, at t_1,

W_1 = Water vapor partial pressure at t_0, psia

W_2 = Water vapor partial pressure at t_1, psia and

Delta t = $(t_1 - t_0)$ hours of test duration

L (%) = Percent mass leak rate computed over the duration of the test

A sample sheet marked FOR INFORMATION ONLY may be used for manual calculations and is attached to this procedure. Refer to Appendix E.

Discrete temperature and humidity elements shall be placed throughout the containment, each placed spatially within a calculated fractional volume. The temperature, $\overline{T}$, therefore, will be weighted average:

$$\overline{T} = \sum_{i=1}^{n} \frac{V_1 \quad T_i}{V_{total}}, \text{ where}$$

V_i = Incremental volume at $\overline{T}$, and

V_{tot} = Total containment volume

In practice it is usual to represent V_i as a fraction, so that V_{tot} = 1.000, though V_{tot} in net cubic feet = 1,550,000. Water vapor pressures shall be handled similarly.

The tabulated volume fractions for these sensors shall be as follows:

T_1 and T_{21} = 0.1600 each, where $\frac{VT_1}{V_{totT}} + \frac{VT_{21}}{V_{totT}} = \frac{495,800}{1,550,000} = 0.320$

T_2 and T_{22} = 0.1810 each, where $\frac{VT_2}{V_{tot}T} + \frac{VT_{22}}{V_{tot}T} = \frac{559,786}{1,550,000} = 0.362$

T_3 thru T_8 = 0.0200 each, where $\frac{VT3 \text{ thru } V8}{V_{tot}T} = \frac{187,553}{1,550,000} = 0.120$

T9 thru T20 = 0.0165 each, where $\frac{VT9 \text{ thru } VT20}{V_{tot}T} = \frac{306,861}{1,550,000} = 0.198$

V_{Total} = 1.0000

VP_1 = 0.268, where $\frac{V_{vp1}}{V_{tot}T} = \frac{415,400}{1,550,000} = 0.268$

VP_2 and VP_3 = 0.267 each, where $\frac{V_{vp2} + V_{vp3}}{V_{tot}T} = \frac{827,739}{1,550,000} = 0.534$

VP_4 = 0.198 , where $\frac{V_{vp4}}{V_{tot}T} = \frac{306,861}{1,550,000} = 0.198$

V_{Total} = 1.0000

3.1.3 Statistical Handling of Test Data

Least squares analysis of the leak rate calculations will provide the best linear regression fit to the data for the duration of the test period. The effect of instrument error on total-time leak rate and statistical leak rate shall be computed such that the resultant leak rate including this possible error shall have a confidence level of 95%.

4.0 Precautions and Limits:

✓ 4.1 The primary containment must be pressurized with air of such quality (oil and humidity) that it can be done safely with the least negative influence on the progress of the test. The air should be oil-free and should be cooled with an aftercooler to approximately 80° F to 85° F.

4.2 The air in the containment should be circulated such that the presence of absolutely stagnant air can be prevented. Here it is important that the energy given to the circulating air is minimal. A few horsepower are all that are required, no more than three horsepower shall suffice. The reason for this is to maintain a nearly adiabatic condition of the containment environment once the test is started. The less energy introduced, therefore, the smaller the uncertainty in the resulting measurements. An uncontrolled increase in temperature (such as could be produced by large fans) masks the leak rate.

NOTE: Any fan placed in the containment must pump air of density up to approximately three times greater than standard conditions; modifications, either in supply voltage or blade size/pitch may be required.

4.3 Once the test pressure is achieved, approximately four (4) hours should be allotted for stabilization of temperature. Conditions would normally be considered stable when the average temperature does not vary by more than 1.0° F per hour for the last two (2) hours.

4.4 Access around the periphery of the containment should be limited to approximately 100 feet during periods of pressurization. These areas should be posted during these periods and limited to authorized personnel only as determined by the Lead Test Engineer. These areas do not include the Fuel Handling Building, Reactor Auxiliary Building (except electrical and mechanical penetration rooms), and any elevation above ground level.

4.5 If a containment entry is OTSC-469 required ~~prior to~~ above 14.3 psig, competent medical personnel shall be available. No personnel shall be allowed to enter the containment above 14.3 psig without conforming to U. S. Navy Diving Manual, NAVSHIPS 250-538, January 1959, stipulations.

4.6 All systems associated with the containment must be aligned as required by the Containment Isolation Signal (CIS). All boundary valves shall be closed. Any block valve which could prevent a containment isolation valve from being subjected to containment air pressure shall be left open. The position of the valves shall be per Appendix A. Closure of containment isolation valves shall be accomplished by normal operation and without any preliminary exercising or adjustments (e.g., no tightening of valves after closure by valve motor).

4.7 All pressure - damageable equipment should be removed from the containment or vented. NOT included is any instrumentation associated with containment isolation or monitoring of accident conditions. Removed equipment shall be properly stored. Included would be the following:

EQUIPMENT	PROTECTION	
Reactor	Vent to Containment	
Pressurizer	Vent to Containment	Refer to
Pressurizer Relief Tank	Vent. to Containment	Appendix A
Reactor Coolant Drain Tank	Vent to Containment	
Accumulators	Vent to Containment	

EQUIPMENT	PROTECTION
Steam Generator Snubber Oil Reservoir	Vent to Containment (if required)
Polar Crane Hydraulic Reservoir and Gear Boxes	Vent to Containment (if required)
Manipulator Crane Gear Boxes	Vent to Containment (if required)
Nitrogen, Argon, Oxygen/ Acetylene, (etc) Bottles	Remove from Containment
Fire Extinguishers	Remove from Containment
Wooden Scaffolding	Remove from Containment
Refueling Machine Equipment	
TV Monitor	Remove from Containment (if required)
Position Readout Units	Remove from Containment (if required)
Dillon Load Meters and Power Supply	Remove from Containment (if required)

✓ 4.7.1 All instruments located inside the containment should be checked and properly vented, if necessary, in order to prevent damage. Refer to Appendix F.

✓ 4.8 All wood platforms and wood scaffolding should be removed. The porous nature of wood will complicate the test and may abort it.

✓ 4.9 Any water standing on floors, in low spots, in open piping and in tankage should be removed as required and the areas left dry. The success of the test depends also on the changes in humidity during the test. These efforts will tend to stabilize the relative humidity.

✓ 4.10 Open vents or drains as shown in Appendix B to simulate those conditions that would be expected during a LOCA. All vented systems shall be drained of water to assure exposure of the containment isolation valves to containment air pressure.

✓ 4.11 Check proper installation of pressurizing system and blowdown piping without opening inlet valve at penetration.

✓ 4.12 Check that the oil and moisture content of the air downstream of the filters and temperature are satisfactory. Air quality may be checked by discharging a quantity of air on a piece of white cloth or paper at a convenient vent or drain connection.

✓ 4.13 Check that installation and calibration of instrumentation for the ILRT is completed and properly documented.

✓ 4.14 Inspect, close, and seal personnel and emergency air lock inner and outer doors.

4.15 All electrical equipment should be de-energized within the containment except for those services required and power requirements for circulating fans. Refer to Appendix G.

✓4.16 A general inspection of the accessible interior and exterior surfaces of the containment structures and components has been satisfactorily performed with no evidence of structural deterioration that may affect containment structural integrity or leak-tightness.

✓4.17 A desk calculator or equivalent instrument shall be available in the unlikely event that the computers, phone connections or terminals are inoperable. Use the data sheet in Appendix E.

✓4.18 The Local Leak Rate Tests should be completed. DELETE OTSC 465 OAR

4.19 RCS leakage evaluation per Operating Procedure 0204.2, Schedule of Periodic Tests, Checks, Calibration and Operating Evolutions, Appendix B, cannot be performed during the ILRT. In lieu of this, the containment sump level shall be used to evaluate RCS leakage and this shall be so noted on the daily calculation sheet.

5.0 Related System Status:

✓5.1 The following instrumentation or equivalent are required for the Integrated Leak Rate Test and are recently calibrated and properly documented:

✓5.1.1 Temperature Monitoring & Indicating System

Consisting of 22 sensors, selector switches, constant current supply and digital indicator system accuracy of 0.2° F. Leeds & Northrup instrumentation utilizing 100 ohm copper thermohms, Catalog 8187-10-S. Catalog No. 900-9999-9999-1-S numatron numeric display.

✓5.1.2 Flow Meter

Brooks Hi-accuracy full view rotameter, Model 1110.

RANGE: 0-12.4 scfm at 25 psig, 70° F
OR
0-28 scfm at 5 psig, 70° F

✓5.1.3 Dew Point

E G & G Inc. Dew Point Hygrometers Model 660C1-S2, (4 each)

RANGE: -50° C to + 100° C, accuracy ± 0.3° C, repeatability ± 0.1° C.

✓5.1.4 Precision Pressure Gauge

1. Readout unit, calibration accuracy of 0.015% of reading, resolution 0.001% full scale, readout 100,000 counts = full scale.

2. Absolute pressure capsule -

(1) Range 0-49 psi

(2) Range 0-100 psi

Texas Instrument Model 145

5.1.5 Pressure Gauge

Range 0-100 psia, graduation -0.1 psia, accuracy 0.1% full scale, sensitivity 0.01% full scale. Wallace & Tiernan Model #61A-1A-0100.

5.2 The data for this test shall be manually acquired from the ILRT cabinet containing the instrumentation listed above. These data shall be entered into the ILRT computer program utilizing a Texas Instrument 700 terminal or equivalent. The computer generated report and associated data shall be appended to and form a part of this procedure.

5.3 Throughout the test, temperatures, pressure and vapor pressure are monitored. These data are used to compute the leak rate from the perfect gas law, PV=nRT, using either the point-to-point method or the total-time method. Leak rate predictions and estimates of error are provided by first order linear regression over the test duration nominally of 24 hours. Further, the sensitivity to sensor inaccuracy is computed and the final NRC report should demonstrate that the test has met the minimum allowable NRC leakage rates within statistical error bounds.

5.4 Containment HVAC system should be available to maintain a temperature of not higher than 90° F or lower than 80° F within the containment. This temperature range should be maintained, if possible, for a matter of days before the beginning of the ILRT. A purge period may be performed whereby the initial volume of "moist" containment air is replaced with "drier" air prior to actual ILRT pressurization.

5.5 Shortly before the ILRT, the Containment HVAC system is to be shutdown and isolated from its electrical and cooling water supply.

5.6 The reactor shall be in a cold shutdown condition.

5.7 The following pressurization and support equipment or equivalent are required for the Integrated Leak Rate Test:

Equipment	Quantity	Capacity	Model No.
Aftercooler (American Std)	2	5000 SCFM/ea.	GT A200
Centrifugal Moisture Separator (Wright-Austin)	2	5000 SCFM/ea.	Type T
Centrifugal - Coalescent Oil Separator (General/Zurn)	2	6500 SCFM/ea.	S10 A30

Equipment	Quantity	Capacity	Model No.
Refrigerated Air Drier	1	3200 SCFM	WC-3200
A. E. C. (General/Zurn)	1	4800 SCFM	R-960W
Air Filter (General/Zurn)	1	11,000 SCFM	77111
Air Compressors (Atlas-Copco)	8	900 SCFM/ea.	PIS-900
Blowers (Coppus)	6	1500 SCFM/ea.	HIT-3050-18

5.8 Valve line-up, as delineated in Appendix A, shall be completed.

5.9 Steam generators are closed to the containment atmosphere; i.e., manways installed, vents and drains closed, level and flow instruments installed and/or root valves closed. Install Pressure gauge on steam side of each steam generator outside of containment.

6.0 References:

The principal guides for the preparation of this test procedure were the 10 CFR part 50 and the American National Standard document outlining the methods for leak-rate testing. Others were consulted, in addition:

6.1 Leakage Rate Testing of Containment Structures for Nuclear Reactors, American National Standard ANSI N45.4 - 1972.

6.2 Primary Reactor Containment Leakage Testing for Water-Cooled Power Reactors, Appendix J. Title 10, CFR Part 50.

6.3 Testing Containment Systems used with Light-Water-Cooled Power Reactors, Frank Zapp, et al, ORNL - NSIC - 26 UC - 80 Reactor Technology.

6.4 Turkey Point Plant Technical Specifications.

6.5 Bechtel Corporation preoperational test procedure and final report for Initial Integrated Leak Rate Test of the Reactor Containment Building.

6.6 Bechtel Corporation Testing Criteria BN-TOP-1, Revision 1, 11/1/72

7.0 Records Required:

7.1 Current I & C calibration sheets for all instrumentation listed in Section 5.1.

7.2 A dated log of events and pertinent observations shall be maintained during the test.

7.3 Completed ILRT procedure, test log and data sheets constitute quality assurance records and, therefore, shall be routed to the Technical Supervisor for review and routing to the Quality Control Surveillance Technician in accordance with Administrative Procedure 0190.16, Scheduling and Surveillance of Periodic Tests and Checks Required by Technical Sepcifications, and shall be retained in accordance with Administrative Procedure 0190.14, Document Control and Quality Assurance Records.

.0 Instructions:

8.1 Precautions and Limits and Related System Status (sections 4.0 and 5.0, respectively) have been satisfactorily completed.

Verified by H. Simmons Date 3/16/79

Q. C. Accepted by R. H. Bennett Date 3/16/79

8.2 Start pressurization and continue to pressurize until containment air pressure reaches 25.0 psig + 3 psig, -0 psig (alternately the test may be conducted at peak test pressure (Pp) of 50 psig + 5 psig, -0 pisg). Monitor every half hour physical parameters as outlined in "ILRT Data Sheet". Maximum pressurization rate should be 4 to 6 psi/hr. During pressurization:

8.2.1 Maintain moisture and oil content as low as possible.

8.2.2 Maintain containment temperature above 60° F and below 120° F.

8.2.3 Check for leaks.

NOTE: In any case, the pressure should not fall below 25.0 psig (50 psig for the alternate test) for the duration of this test.

Verified by _____ Date _____

8.3 The following shall be monitored during the pressurization phase of the test.

8.3.1 Containment inlet air temperature.

Verified by _____ Date _____

8.4 When desired pressure is achieved, isolate containment pressurizing system and leak check the pressurizing system valves.

Verified by _____ Date _____

8.5 Using ultrasonic leak detectors and/or soap solution, check the condition of each suspect local exterior leak area. Perform local leak test measurement for suspect leaks if required and record.

Verified by _____ Date _____

Q. C. Accepted by _____ Date _____

8.6 Record data as outlined below in Appendix D a minimum of once every one (1) hour. No repairs are allowed once the ILRT commences without returning to this point.

8.6.1 Sample number

8.6.2 Date and time

8.6.3 Data Logger's name

H. Simmons 3/18/79

8.6.4 Containment temperature - 22

8.6.5 Containment dewpoint temperature - 4.

8.6.6 Containment pressure - 1

8.6.7 Outside atmospheric temperature - 1

8.6.8 Outside atmospheric pressure - 1

8.7 From the data gathered on at least an hourly basis, determine that:

8.7.1 The containment conditions are stablized and trends are predictable. Stabilization should take approximately four hours.

Verified by_____Date_____Time_____

8.7.2 Forecasted leak rate is significantly better than allowable limits. Perform local leak survey.

Verified by_____Date_____Time_____

8.8 Continue ILRT measurements until interpreted data indicates that the ILRT criterion is met for a minimum period of eight (8) hours in accordance with Appendix C.

Verified by_____Date_____Time_____

Q. C. Accepted by_____Date_____Time_____

8.9 Once predictable and allowable trends have been established, verify the test results by superimposing a leakage approximately equivalent to L_t (L_a for the alternate test). Test duration shall be approximately four (4) hours in length to verify the ability to measure the leak.

Verified by_____Date_____Time_____

The following additional data shall be recorded during this phase of the test.

8.9.1 Containment air flow (rotameter), SCFM.

8.10 Compare the ILRT leak rate and verification leak rates. If the comparison above indicated that the ILRT leak rate is not substantiated by the verification test (difference within 0.25 L_t, alternately 0.25 L_a), continue the ILRT leak rate and recheck. At the end of the extended test period, repeat the verification test, if required.

Verified by_____Date_____Time_____

Q. C. Accepted by_____Date_____Time_____

8.11 Sample containment atmosphere prior to blowdown. Upon permission from Lead Test Engineer, open blowdown valve and release air from containment utilizing a maximum depressurization rate of approximately 4 to 6 psi/hr.

Verified by H. Simmons Date 3/20/79 Time 1840

8.12 When atmospheric pressure is achieved, containment atmosphere shall be sampled followed by containment entry and inspection.

Verified by [illegible] Date 3-21-79 Time 1015

Q. C. Accepted by [illegible] Date 3-21-79 Time 10:15 Am

8.13 Inform Nuclear Plant Supervisor that ILRT is complete and affected systems and equipment are turned-over to Operations Department.

Verified by [illegible] Date 3-21-79 Time 1015

8.14 Procedure completed by [illegible] Date 3-21-79

8.15 Procedure reviewed by
Technical Department Supv. [illegible] Date 4-4-79

.0. Instructions:

8.1. Precautions and Limits and Related System Status (sections 4.0 and 5.0, respectively) have been satisfactorily completed.

Verified by H. Simmonson Date 3/18/79

Q. C. Accepted by P W Heynoch Date 3-18-79

8.2 Start pressurization and continue to pressurize until containment air pressure reaches 25.0 psig + 3 psig, -0 psig (alternately the test may be conducted at peak test pressure (Pp) of 50 psig + 5 psig, -0 pisg). Monitor every half hour physical parameters as outlined in "ILRT Data Sheet". Maximum pressurization rate should be 4 to 6 psi/hr. During pressurization:

8.2.1 Maintain moisture and oil content as low as possible.

8.2.2 Maintain containment temperature above 60° F and below 120° F.

8.2.3 Check for leaks.

NOTE: In any case, the pressure should not fall below 25.0 psig (50 psig for the alternate test) for the duration of this test.

Verified by [illegible] Date 3-19-79

8.3 The following shall be monitored during the pressurization phase of the test.

8.3.1 Containment inlet air temperature.

Verified by [illegible] Date 3-19-79

8.4 When desired pressure is achieved, isolate containment pressurizing system and leak check the pressurizing system valves.

Verified by [illegible] Date 3-19-79

8.5 Using ultrasonic leak detectors and/or soap solution, check the condition of each suspect local exterior leak area. Perform local leak test measurement for suspect leaks if required and record.

Verified by [illegible] Date 3-19-79

Q. C. Accepted by O. G. R[illegible] Date 3-19-79

8.6 Record data as outlined below in Appendix D a minimum of once every one (1) hour. No repairs are allowed once the ILRT commences without returning to this point.

8.6.1 Sample number

8.6.2 Date and time

8.6.3 Data Logger's name

8.6.4 Containment temperature - 22

8.6.5 Containment dewpoint temperature - 4.

8.6.6 Containment pressure - 1

8.6.7 Outside atmospheric temperature - 1

8.6.8 Outside atmospheric pressure - 1

8.7. From the data gathered on at least an hourly basis, determine that:

8.7.1 The containment conditions are stablized and trends are predictable. Stabilization should take approximately four hours.

Verified by H. Simmons Date 3-19-79 Time 1000

8.7.2 Forecasted leak rate is significantly better than allowable limits. Perform local leak survey.

Verified by H. Simmons Date 3-19-79 Time 2200

8.8 Continue ILRT measurements until interpreted data indicates that the ILRT criterion is met for a minimum period of eight (8) hours in accordance with Appendix C.

Verified by H. Simmons Date 3/20/79 Time 10:55

Q. C. Accepted by Pl Hayock Date 3-20-79 Time 11:02

8.9 Once predictable and allowable trends have been established, verify the test results by superimposing a leakage approximately equivalent to L_t (L_a for the alternate test). Test duration shall be approximately four (4) hours in length to verify the ability to measure the leak.

Verified by H. Simmons Date 3/20/79 Time [illegible]

The following additional data shall be recorded during this phase of the test.

8.9.1 Containment air flow (rotameter), SCFM.

8.10 Compare the ILRT leak rate and verification leak rates. If the comparison above indicated that the ILRT leak rate is not substantiated by the verification test (difference within 0.25 L_t, alternately 0.25 L_a), continue the ILRT leak rate and recheck. At the end of the extended test period, repeat the verification test, if required.

Verified by H. Simmons Date 3/20/79 Time 18.35

Q. C. Accepted by Paul H. Bennett Date 3/20/79 Time 18.35

8.11 Sample containment atmosphere prior to blowdown. Upon permission from Lead Test Engineer, open blowdown valve and release air from containment utilizing a maximum depressurization rate of approximately 4 to 6 psi/hr.

Verified by H. S [illegible] Date 3/20/79 Time 1840

8.12 When atmospheric pressure is achieved, containment atmosphere shall be sampled followed by containment entry and inspection.

Verified by [illegible] Date 3-21-79 Time 1015

Q. C. Accepted by [illegible] Date 3-21-79 Time 10:15 AM

8.13 Inform Nuclear Plant Supervisor that ILRT is complete and affected systems and equipment are turned-over to Operations Department.

Verified by [illegible] Date 3-21-79 Time 1015

8.14 Procedure completed by [illegible] Date 3-21-79

8.15 Procedure reviewed by
Technical Department Supv. _____ Date _____

APPENDIX A

VALVE LINE-UP

INTEGRATED LEAK RATE TEST

APPENDIX A

PEN. #	FUNCTION	VALVE NO.	POSITION	REMARKS	VERIFIED BY/DATE
1	OTSC 467 To RHR OTSC 467	VENT 741E MOV-750 MOV-751 ~~750A~~ ~~750B~~ TC100	CLOSED NA NA ~~Closed~~ ~~Closed~~ CLOSED	System in service during ILRT	PHB 3-15-79 DAD 3-15-79
1 2	OTSC 467 From RHR	741D MOV-744A MOV-744B FCV-605 HVC-758 734 734A	CLOSED NA NA NA NA Closed Closed	System in service during ILRT	PHB 3-15-79 PWH 3-15-79 PWH 3-15-79
3	CCW to RCP's	716E MOV-716A MOV-716B 716D 718A 718B 718C	Closed Closed Closed Closed Closed Closed Closed	Not to be vented and/ or drained	PHB 3-15-79 PHB 3-15-79 PHB 3-15-79 DAD 3-15-79 DAD 3-15-79 DAD 3-15-79 DAD 3-15-79
4	CCW from RCP's	MOV-730 730A 730B 727A 727B 727C	Closed Closed Closed Closed Closed Closed	Not to be vented and/ or drained	PHB 3-15-79 DAD 3-15-79 PHB 3-15-79 DAD 3-15-79 DAD 3-15-79 DAD 3-15-79
5	PRT to GA	517A CV-516 552 517B TC-2 TC-80 SV-4600M 5-79	OPEN Closed Open Open Closed Open Closed CLOSED	OTSC ~~465~~ 467 OTSC 467	GT 3-16-79 PHB 3-15-79 PHB 3-15-79 DAD 3-15-79 PHB 3-15-79 PHB 3-15-79 PHB 3-15-79 GT 3-16-79

INTEGRATED LEAK RATE TEST

APPENDIX A

PEN. #	FUNCTION	VALVE NO.	POSITION	REMARKS	VERIFIED BY/DATE
6	N_2 to PRT	550	Closed		PHB 3-15-79
		518	NA	Check Valve	OTSC-467
		TC-3	Open		[illegible]
		~~TC-81~~	~~Open~~		[illegible]
	OTSC 466	511	Open		[illegible] 3-15-79
7	PW to Standpipes	CV-519A	Closed		PHB 3-15-79
		CV-519B	Closed		[illegible] 3-15-79
		CV-522A	Closed		[illegible] 3-15-79
		CV-552B	Closed		[illegible] 3-15-79
		CV-552C	Closed		[illegible] 3-15-79
		10-532	Closed		PHB 3-15-79
		10-531	Open		PHB 3-15-79
		10-543	Closed		PHB 3-15-79
		10-563	Closed		KPA 3-16-79
8	Prz. Stm. Sample	CV-951	Closed		[illegible] 3-15-79
		CV-956A	Closed		PHB 3-15-79
		989A	Closed		[illegible] 3-16-79
		New TC	Open		[illegible] 3-15-79
		991	Closed		PHB 3-15-79
		TC-5	Open		PHB 3-15-79
		New Iso.Vlv.	Closed		[illegible] 3-15-79
9	Prz. Liquid Sample	CV-953	Closed		[illegible] 3-15-79
		CV-956B	Closed		PHB 3-15-79
		989B	Closed		[illegible] 3-16-79
		New TC	Open		[illegible] 3-15-79
		992	Closed		PHB 3-15-79
		TC-6	Open		PHB 3-15-79
		New Iso.Vlv.	Closed		[illegible] 3-15-79
10	RCDT & PRT Vent; N_2 to RCDT	4608	Closed	~~[illegible]~~ 3-19-79	PHB 3-15-79
		CV-4658A	~~Open~~ CLOSED	OTSC 470	PHB 3-15-79
		CV-4658B	Closed		PHB 3-15-79
		4666A	Closed		PHB 3-15-79
		TC-8	Closed		PHB 3-15-79
		4653	Open		[illegible] 3-15-79
		4656	Open		[illegible] 3-15-79
	OTSC 467	~~TC-87~~	~~Closed~~ → NONE		
	OTSC 467	4657	Bonnet Removed		PHB 3-15-79
		549	CLOSED		[illegible]

INTEGRATED LEAK RATE TEST

APPENDIX A

PEN. #	FUNCTION	VALVE NO.	POSITION	REMARKS	VERIFIED BY/DATE
11	Alt. Lohead SIS	887	~~Closed~~ As Is	Do Not Tag	
		MOV-863A	Closed		JRD 3-16-79
		MOV-863B	Closed		JRD 3-16-79
		MOV-872	Closed		PHB 3-15-79
		940N	Closed		PHB 3-15-79
		~~940L~~ 940L	~~Open~~ CLOSED		PHB 3-15-79
12	CCW to Excess LTDN. HX.	737A	Closed	Not to be vented and/ or drained	PHB 3-15-79
		737G	Closed		PHB 3-15-79
13	CCW from Excess LTDN. HX.	CV-379	Closed	Not to be vented and/ drained	PHB 3-15-79
14	Letdown to Regen HX	309D	Closed		JRD 3-15-79
		LCV-460	Open		JRD 3-15-79
		CV-200A	Closed		JRD 3-15-79
		CV-200B	Closed		JRD 3-15-79
		CV-200C	Closed		JRD 3-15-79
		CV-204	Closed		PHB 3-15-79
		201A	Open		JRD 3-15-79
		201C	Closed		JRD 3-15-79
		201	Closed		PHB 3-15-79
	OTSC 467	201F E	Open		PHB 3-15-79
		205A	Closed		WHH 3-16-79
		205B	Closed		PHB 3-15-79
15	CVCS to Regen. HX	290	Closed	Check Valve With Fuel in the vessel, 121 should be closed, but operable, 120A should be closed, one Ch. pp Disch. (290,289,or 286) should be open.	WHH 3-16-79
		289	Closed		WHH 3-16-79
		286	Closed		WHH 3-16-79
		120B	Closed		PHB 3-15-79
		312C	NA		
		HCV-121	Closed		PHB 3-15-79
		333	Closed		WHH 3-16-79
	OTSC 466	~~120F~~ 120D	Closed		JRD 3-15-79
		202A	Open		WHH 3-16-79
		120A	Open		PHB 3-15-79
		202B	Open		WHH 3-16-79
		CV-310A	Open		[illegible]
	OTSC 467	CV-310B	~~CLOSED~~		[illegible]
		CV-311	CLOSED		JRD 3-15-79

INTEGRATED LEAK RATE TEST

APPENDIX A

PEN. #	FUNCTION	VALVE NO.	POSITION	REMARKS	VERIFIED BY/DATE
16	PACVS	HV-3-1	Closed		DHB 3-15-79
		HV-3-2	Closed		DHB 3-15-79
		HV-3-8	Closed		DHB 3-15-79
		HV-1	Closed		WHH 3-16-79
		HV-2	Open		WHH 3-16-79
		HV-7	Open		WHH 3-16-79
	GTSOP-446	HV=9	Open		
17	SIS Test Line	850A	Closed		GTZ 3-16-79
		850B	Closed		GTZ 3-16-79
		850C	Closed		GTZ 3-16-79
		850D	Closed		GTZ 3-16-79
		850E	Closed		JAD 3-15-79
		850F	Closed		JAD 3-15-79
		837	Closed		WHH 3-16-79
		895U	Closed		WHH 3-16-79
		895K	Closed		WHH 3-16-79
		895P	Closed		WHH 3-16-79
		849A	Closed		JAD 3-15-79
		895V	Closed		WHH 3-16-79
		940M	Open		JAD 3-15-79
		942E	Closed		WHH 3-16-79
		942F	Open		WHH 3-16-79
18	SIS	MOV-866A	Closed	Not to be vented and/ or drained	GTZ 3-16-79
		MOV-866B	Closed		GTZ 3-16-79
		MOV-869	Closed		DHB 3-15-79
		942G	Closed		DHB 3-15-79
		883R	Closed		JAD 3-15-79
19A	Cont't. Spray A	890A	NA	Check Valve	JAD 3-16-79
		MOV-880A	Closed		KDA 3-16-79
		942W	Closed		KDA 3-16-79
		896C	Closed		KDA 3-16-79
		883M	Closed		KDA 3-16-79
		883K	Closed		KDA 3-16-79
		844A	Closed		KDA 3-16-79
		891A	Open		KDA 3-16-79
		940U	Open		KDA 3-16-79

INTEGRATED LEAK RATE TEST

APPENDIX A

PEN. #	FUNCTION	VALVE NO.	POSITION	REMARKS	VERIFIED BY/DATE
19B	Cont't. Spray B	890B	NA	Check Valve	[illegible] 3-16-79
		MOV-880B	Closed		WHH 3-16-79
		942V	Closed		WHH 3-16-79
		896D	Closed		WHH 3-16-79
		883N	Closed		WHH 3-16-79
		883L	Closed		WHH 3-16-79
		844B	Closed		WHH 3-16-79
		891B	Open		WHH 3-16-79
		940T	Open		WHH 3-16-79
20	A&B Hot Leg Sample	CV-955A	Closed		[illegible] 3-15-79
		CV-955B	Closed		[illegible] 3-15-79
		CV-956C	Closed		PHB 3-15-79
		989C	Closed		[illegible] 3-15-79
		New TC A	Open		[illegible] 3-15-79
		New TC B	Open		[illegible] 3-15-79
		993	Closed		PHB 3-15-79
		20	Open		PHB 3-15-79
		New Iso Vlv A	Closed		[illegible] 3-15-79
		New Iso Vlv B	Closed		[illegible] 3-15-79
21	CCW to Coolers	MOV-1417	Closed	Not to be vented and/ or drained	[illegible] 3-16-79
		10-871	Closed		PHB 3-15-79
22	CCW from Coolers	MOV-1418	Closed	Not to be vented and/ or drained	PHB 3-15-79
		10-872	Closed		PHB 3-15-79
23	Cont't Sump	4671	Closed		WHH 3-16-79
		CV-2821	Closed		PHB 3-15-79
		CV-2822	Closed		PHB 3-15-79
		TC-22	Closed		PHB 3-15-79
		TC-102	Open		PHB 3-15-79
		4693A	Open		[illegible] 3-16-79
		4693B	Open		[illegible] 3-16-79

INTEGRATED LEAK RATE TEST

APPENDIX A

PEN. #	FUNCTION	VALVE NO.	POSITION	REMARKS	VERIFIED BY/DATE
24A	Seal Water to RCP-A	297A 298G 298A 285D 285A	Closed Closed NA Open Open	Check Valve	PHB 3-15-79 JAD 3-15-79 JAD 3-15-79 PHB 3-15-79
24B	Seal Water to RCP-B	297B 298H 298B 285E 285B	Closed Closed NA Open Open	Check Valve	PHB 3-15-79 JAD 3-15-79 JAD 3-15-79 PHB 3-15-79
24C	Seal Water to RCP-C	297C ~~298I~~ 298J 298C 285F 285C	Closed Closed NA Open Open	Check Valve	PHB 3-15-79 JAD 3-15-79 JAD 3-15-79 PHB 3-15-79
25	RCP S.W. Return	318 380 CV-307 HCV-137 304B 304F 304K 306A 306B CV-389 MOV-381 384A 384B 306C	Closed Closed Closed Closed Closed Closed Closed Closed Closed Normal Closed Closed Open Open		WHH 3-16-79 WHH 3-16-79 [illegible] 3-16-79 [illegible] 3-16-79 JAD 3-15-79 JAD 3-15-79 JAD 3-15-79 JAD 3-15-79 JAD 3-15-79 [illegible] 3-16-79 PHB 3-15-79 PHB 3-15-79 PHB 3-15-79 JAD 3-15-79
29	Inst. Air Supply	336 CV-2803 TC-58 TC-59 TC-107 337A	NA Closed Open Closed Open Closed	Check Valve See Note on App. B, Page 36	JAD 3-16-79 JAD 3-16-79 [illegible] JAD 3-16-79 JAD 3-16-79 JAD 3-16-79

INTEGRATED LEAK RATE TEST

APPENDIX A

PEN. #	FUNCTION	VALVE NO.	POSITION	REMARKS	VERIFIED BY/DATE
31	RCDT to GA	CV-4659A	Open		PAB 3-15-79
		CV-4659B	Closed		PAB 3-15-79
		4654	Open		JAD 3-15-79
		4667A	Closed		PAB 3-15-79
		4667B	Open		KDA 3-16-79
		SV-4600E	Closed		JAD 3-16-79
		4655A	Open		JAD 3-15-79
		4655B	Open		RTZ 3-16-79
32	Cont't. Air Sample Return	TC-30	Open		JAD 3-15-79
		11-003	NA	Check Valve	
		11-002	Open		JAD 3-16-79
		TC-31	Closed		JAD 3-16-79
		SV-2912	Closed		JAD 3-16-79
		TC-109	Open		JAD 3-16-79
		SV-3713	Closed		JAD 3-16-79
		VALVE	CLOSED	CTSC 467	[illegible]
33	Cont't. Air Sample	11-001	Open		JAD 3-16-79
		SV-2913	Closed		JAD 3-16-79
		SV-2911	Closed		JAD 3-16-79
		TC-32	Closed		JAD 3-16-79
		TC-33	Closed		JAD 3-16-79
		TC-110	Open		JAD 3-16-79
		SV-3709	Closed		JAD 3-16-79
34	Service Air	204	Closed		KDA 3-15-79
		205	NA	Check Valve	
		203	Closed		KDA 3-15-79
		TC-34A	Closed		KDA 3-15-79
		TC-34	Open		KDA 3-15-79
		216	Open		JAD 3-15-79
		206	CLOSED	CTSC 467	[illegible]
35	Cont't. Purge	PV-2601	Closed		RTZ 3-16-79
	CTSC 466	PV-2600	Closed		RTZ 3-16-79
		~~11~~-004	~~Closed~~	PV2601 IS CAPPED	JAD 3-15-79
36	Cont't. Purge	PV-2603	Closed		JAD 3-16-79
		PV-2602	Closed		JAD 3-16-79
	CTSC 466	~~11~~-005 11-004	Closed		[illegible]

CTS - 467

INTEGRATED LEAK RATE TEST

APPENDIX A

PEN. #	FUNCTION	VALVE NO.	POSITION	REMARKS	VERIFIED BY/DATE
42	OTSC ~~4619~~	4619L	Closed		KDA 3-15-79
	N_2 to	4618 V	Closed		[illegible] 3-16-79
	Accum.	4618 X	Closed		[illegible] 3-16-79
		847C	Closed		[illegible] 3-16-79
		HCV-936	Closed		[illegible] 3-15-79
		CV-853A	Closed		[illegible] 3-15-79
		CV-853B	Closed		[illegible] 3-15-79
		CV-853C	Closed		[illegible] 3-15-79
	OTSC # ~~4~~	CV-855	Closed		KDA 3-15-79
	4616	940R	Closed		KDA 3-15-79
	DCN	~~TC-50~~	Open		[illegible]
	OTSC 467 —	4619M	Open	VLV 4619M AND PCV 546	KDA 3-15-79
		BALL VALVE ⊥ TO HCV-936	OPEN		OPEN [illegible] 3-15-79
43	CCW from RCP Thermal	FCV-626	Closed	Not to be vented and/	KDA 3-15-79
		626A	Closed		KDA 3-15-79
		728A	Closed		[illegible] 3-15-79
		728B	Closed		[illegible] 3-15-79
		728C	Closed		[illegible] 3-15-79
47	Primary Water to Wash Header	10-006	Open		[illegible] 3-15-79
		TC-40	Closed		KDA 3-15-79
		10-567	NA	Check Valve	
		TC-113	Open		WHH 3-16-79
52	From RCDT Pumps	4669	Closed		WHH 3-16-79
		4671	Closed		WHH 3-16-79
		1101	Closed		WHH 3-16-79
		CV-4668A	Open		KDA 3-15-79
		CV-4668B	Closed		KDA 3-15-79
		4663A	Open		[illegible] 3-15-79
		4663B	Open		[illegible] 3-15-79
		4668C	Closed		KDA 3-15-79
		4668D	Open		KDA 3-15-79
53	PACVS	HV-3-3	Closed	Refer to Pen #16	KDA 3-15-79
		HV-3-4	Closed		KDA 3-15-79
		HV-3-7	Closed		KDA 3-15-79

INTEGRATED LEAK RATE TEST

APPENDIX A

PEN. #	FUNCTION	VALVE NO.	POSITION	REMARKS	VERIFIED BY/DATE
54A	Recirc. Sump	MOV-860A	Open	Not to be vented and/ or drained	[illegible] 3-16-79
		MOV-861A	Closed		[illegible] 3-16-79
		899C	Closed		[illegible]
54B		MOV-860B	Open		[illegible] 3-16-79
		MOV-861B	Closed		[illegible] 3-16-79
		899E	Closed		[illegible]
		899D	Closed		[illegible]
		899F	Closed		[illegible]
		898P	Closed		[illegible]
		898N	Closed		[illegible] ✓
55	Accumulator	New TC A	Open		PWH 3-15-79
		New TC B	Open		PWH 3-15-79
		New TC C	Open		PWH 3-15-79
		CV-955C	Closed		PWH 3-15-79
		CV-955D	Closed		PWH 3-15-79
		CV-955E	Closed		PWH 3-15-79
		CV-956D	Closed		[illegible] 3-16-79
		994	Closed		[illegible] 3-15-79
		989E	Open		[illegible] 3-16-79
		TC-117	Open		[illegible] 3-16-79
		970A	Closed		[illegible] 3-16-79
		Valve E	Closed		[illegible] 3-16-79
		New Iso Vlv A	Closed		PWH 3-15-79
		New Iso Vlv B	Closed		PWH 3-15-79
		New Iso Vlv C	Closed		PWH 3-15-79
58	SIS	MOV-843A	Closed	Not to be vented and/ or drained	[illegible] 3-16-79
59		MOV-843B	Closed		[illegible] 3-16-79
60		941E	Closed		KDA 3-15-79
		941F	Closed		KDA 3-15-79
		941G	Closed		KDA 3-15-79
		895T	Closed		[illegible] 3-16-79
		~~836~~	~~Closed~~		[illegible]
					WHH 3-16-79
~~61B~~ 37	Deadweight Tester	Valve C	Closed		[illegible] 3-16-79
		~~Valve P~~	~~Open~~		[illegible]
		TC-51	Closed		[illegible] 3-16-79
		TC-120	Open		[illegible] 3-16-79
					[illegible]

INTEGRATED LEAK RATE TEST

APPENDIX A

PEN. #	FUNCTION	VALVE NO.	POSITION	REMARKS	VERIFIED BY/DATE
65A	From ILRT Compressor	Valve E TC-55	Closed	As Required	JD 3-16-79
65B	ILRT Press. Sensor Line	~~ILRT-A~~ Valve F TC-56 FLANGE "A"	~~Open~~ CTSC 4E1 Open Closed OPEN CTSC 4E1	In service during ILRT & CLRT	JD 3-16-79 JD 3-16-79 [illegible] 3-16-79
65C	CLRT Flow Line	~~ILRT-B~~ TC-57 Valve G FLANGE "B"	~~Open~~ CTSC 4E1 Closed Open OPEN CTSC 4E1	In service during CLRT	JD 3-16-79 JD 3-16-79 [illegible] 3-16-79
63	Instrument Air Bleed	CV-2819 11-006 CV-2826	Closed Closed Closed		GTZ 3-16-79 [illegible] 3-15-79 DA 3-15-79
NA	Reactor Vessel Vent	500	Open		H.S. 3-16-79 H.S. 3-16-79
NA	Pressurizer Vents	545 546 547	Open Open Open		H.S. 3-16-79 H.S. 3-16-79 H.S. 3-16-79 H.S. 3-16-79
NA	Accumulators Vents	883A 883D 883G	Open Open Open		H.S. 3-16-79 H.S. 3-16-79 H.S. 3-16-79

APPENDIX B

VALVE DRAWINGS

APPENDIX B

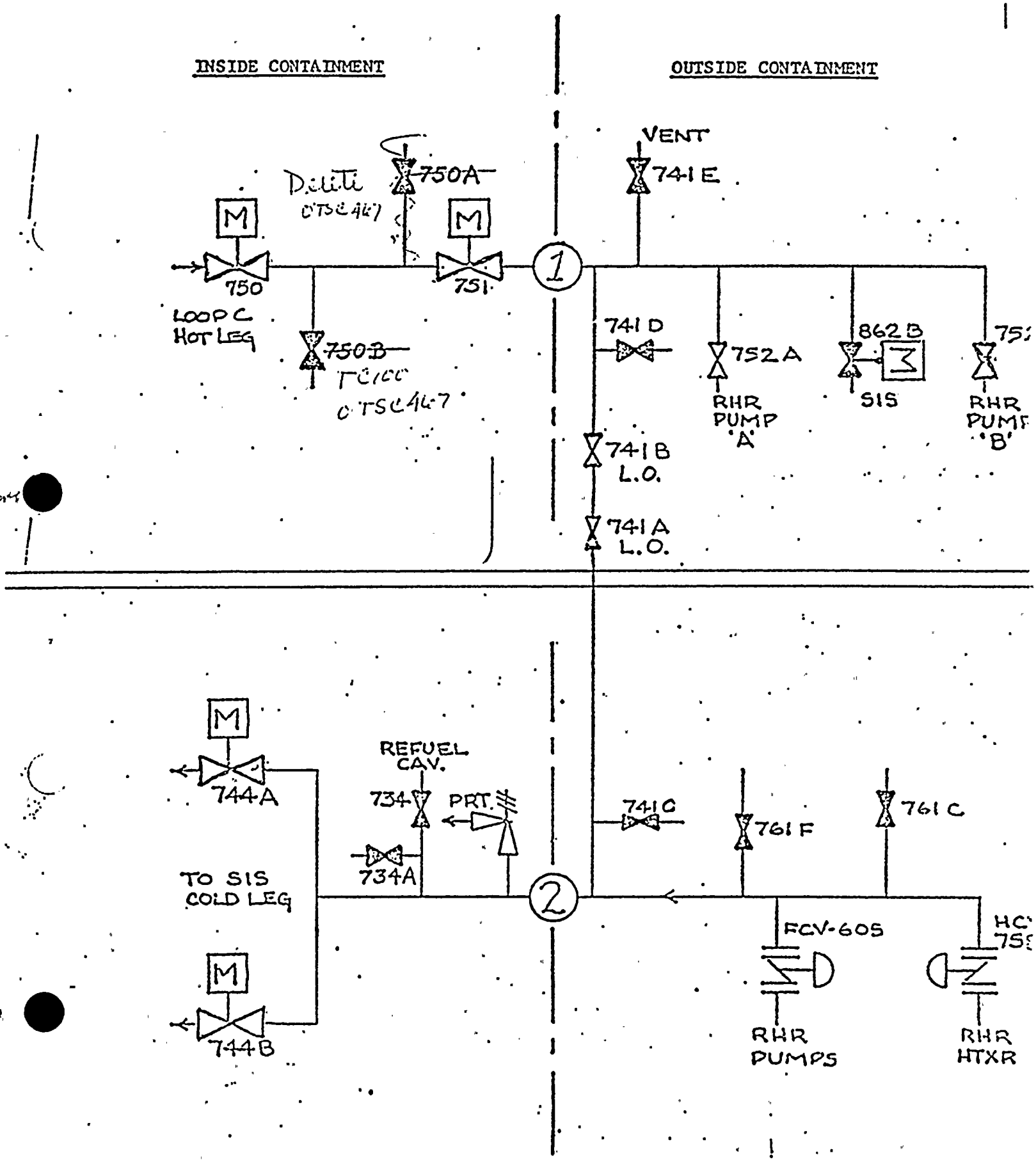
INSIDE CONTAINMENT
OUTSIDE CONTAINMENT
VENT
741 E
750A
M
750
751
1
LOOP C
HOT LEG
750B
741 D
752 A
862 B
3
SIS
RHR
PUMP
'A'
RHR
PUMP
'B'
741 B
L.O.
741 A
L.O.
M
744A
REFUEL
CAV.
734
PRT.
741 C
761 F
761 C
734A
TO SIS
COLD LEG
2
FCV-605
M
744B
RHR
PUMPS
RHR
HTXR

APPENDIX B

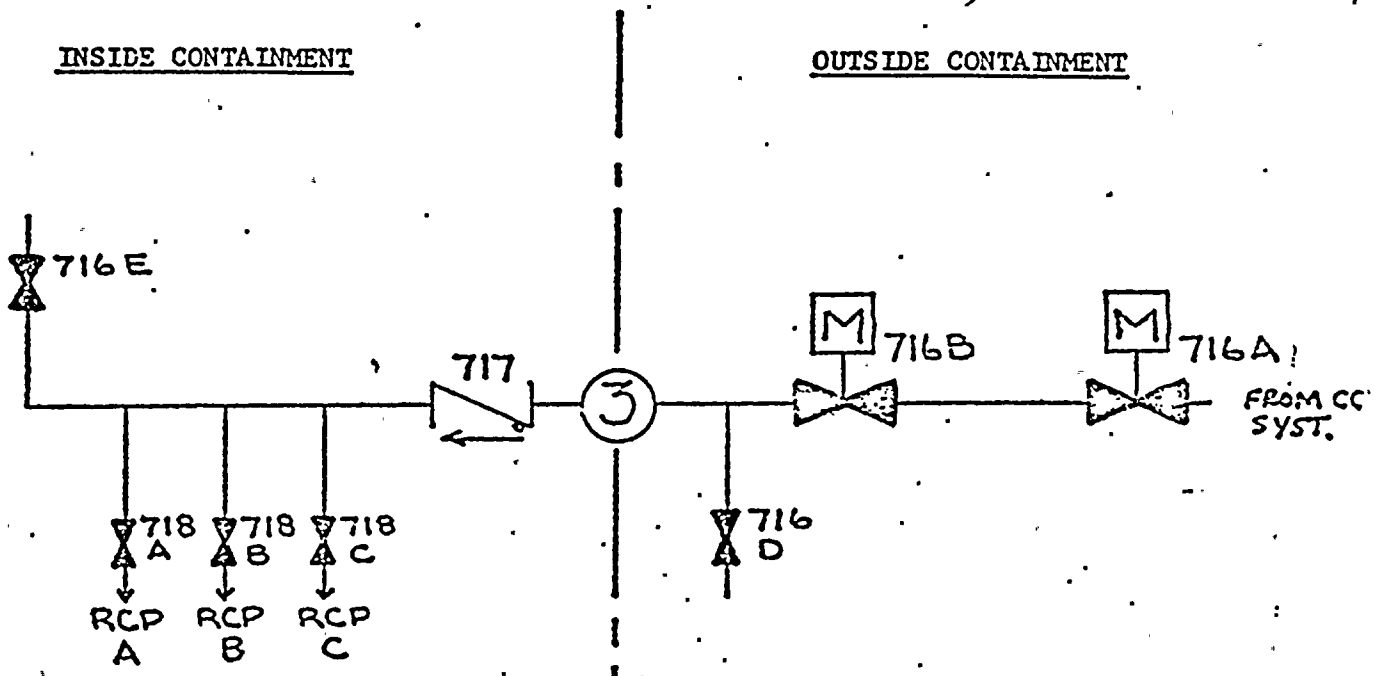
INSIDE CONTAINMENT
OUTSIDE CONTAINMENT
716E
717
3
M
716B
M
716A
FROM CC SYST.
718 A
718 B
718 C
716 D
RCP A
RCP B
RCP C

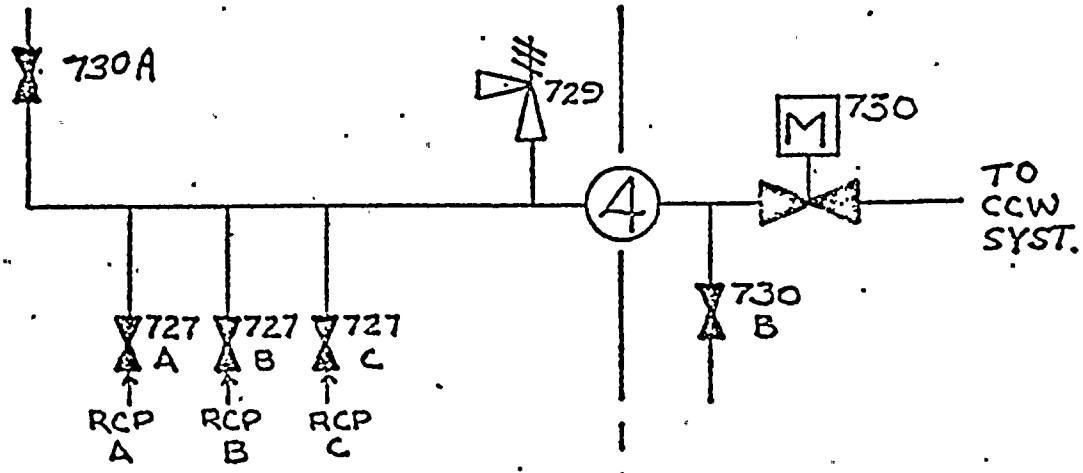
730A
729
4
M
730
TO CCW SYST.
727 A
727 B
727 C
730 B
RCP A
RCP B
RCP C

APPENDIX B

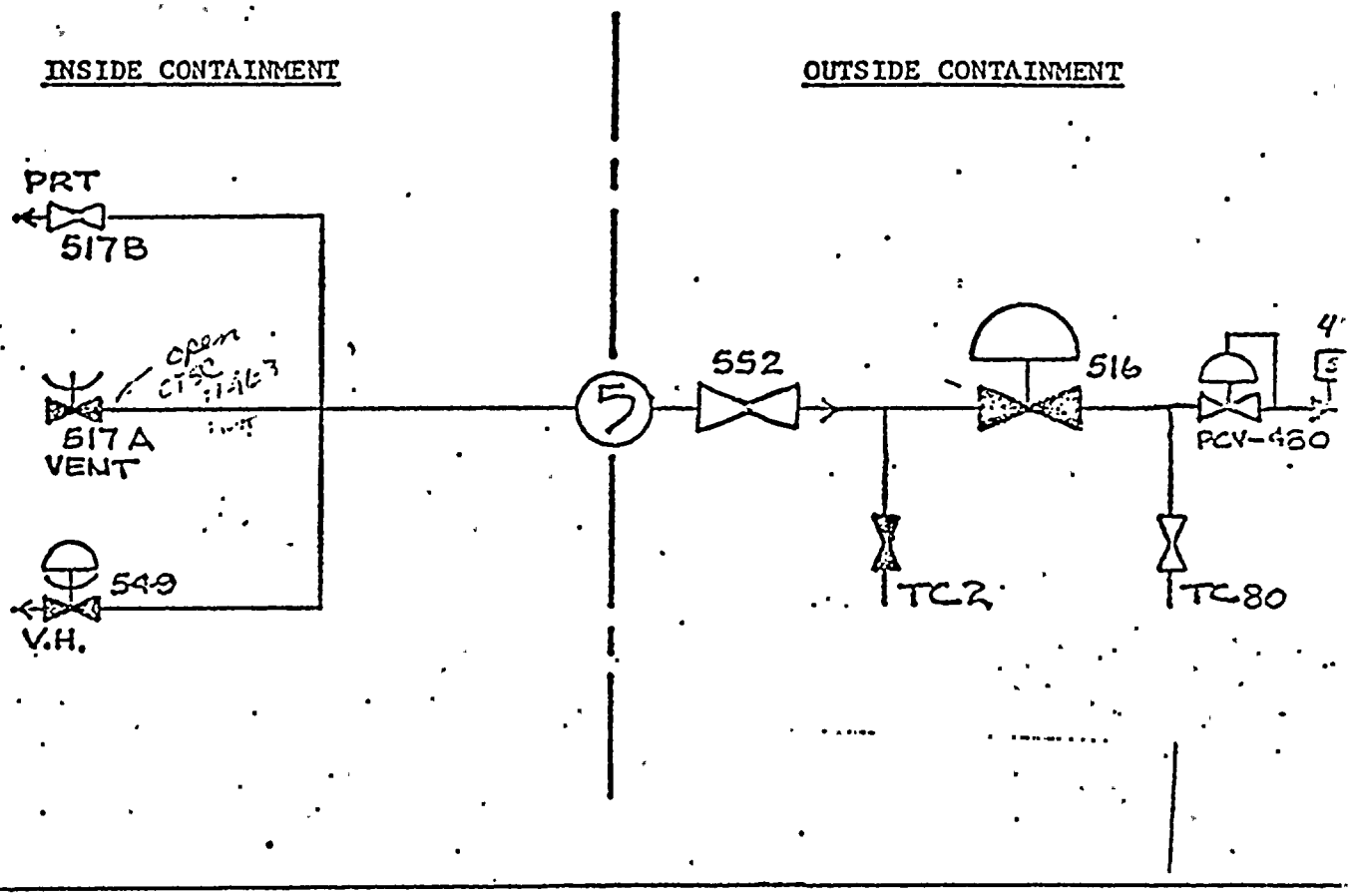
INSIDE CONTAINMENT
OUTSIDE CONTAINMENT
PRT
517B
open
517A
VENT
549
V.H.
5
552
516
4"
PCV-480
TC2
TC80

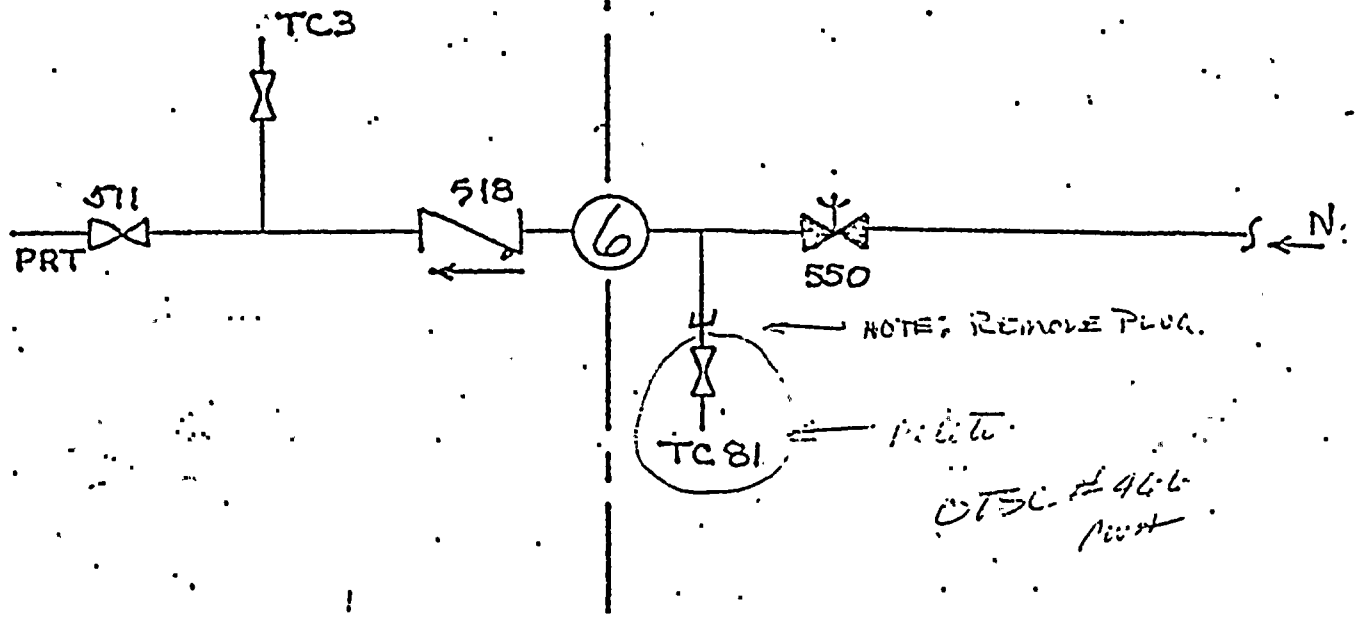
TC3
511
PRT
518
6
550
N.
NOTE: REMOVE PLUG.
TC81

APPENDIX B

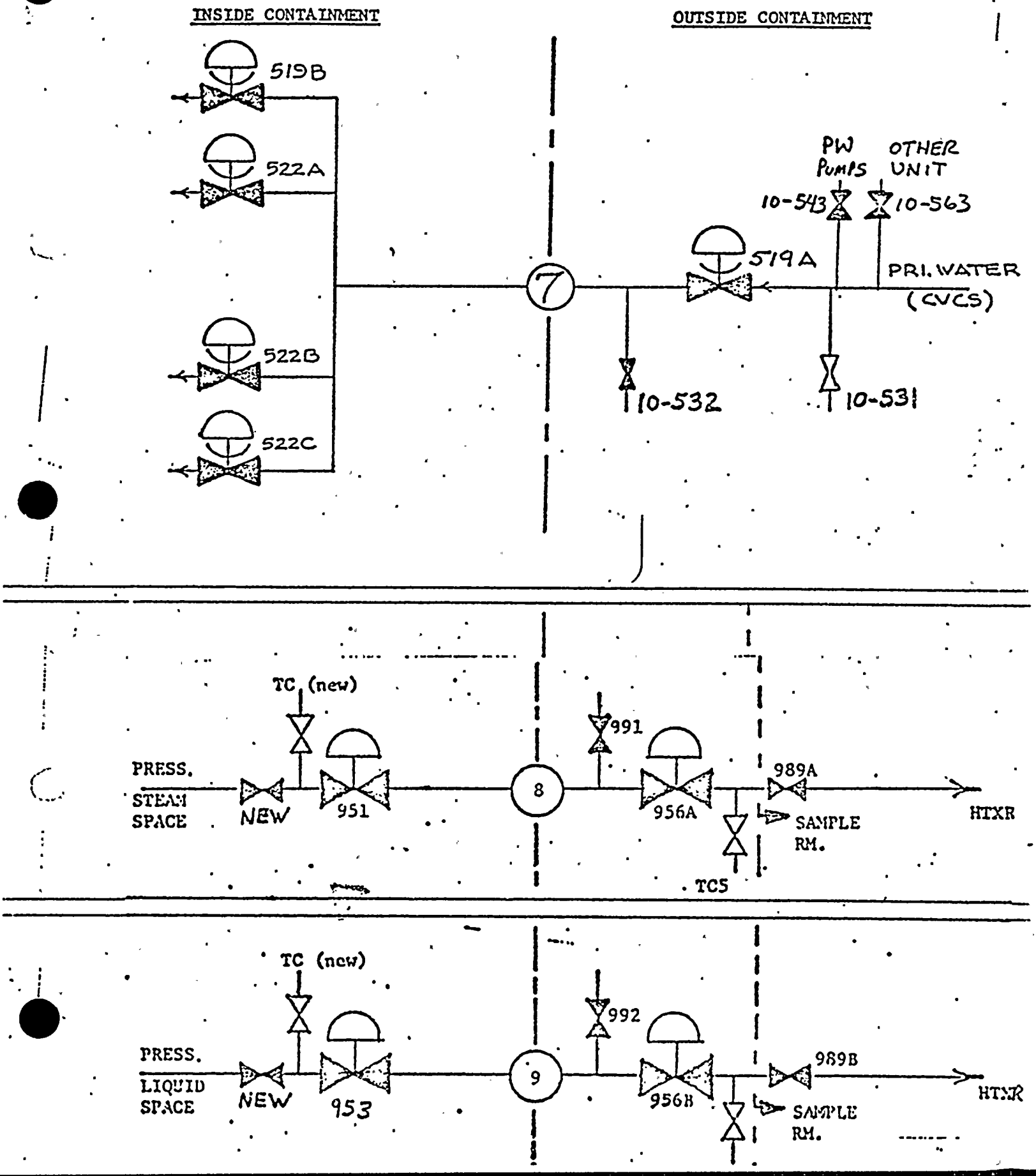
INSIDE CONTAINMENT
OUTSIDE CONTAINMENT
519B
522A
522B
522C
7
519A
PW PUMPS
OTHER UNIT
10-543
10-563
PRI. WATER (CVCS)
10-532
10-531
TC (new)
PRESS. STEAM SPACE
NEW
951
8
991
956A
989A
SAMPLE RM.
HTXR
TC5
TC (new)
PRESS. LIQUID SPACE
NEW
953
9
992
956B
989B
SAMPLE RM.
HTXR

APPENDIX B

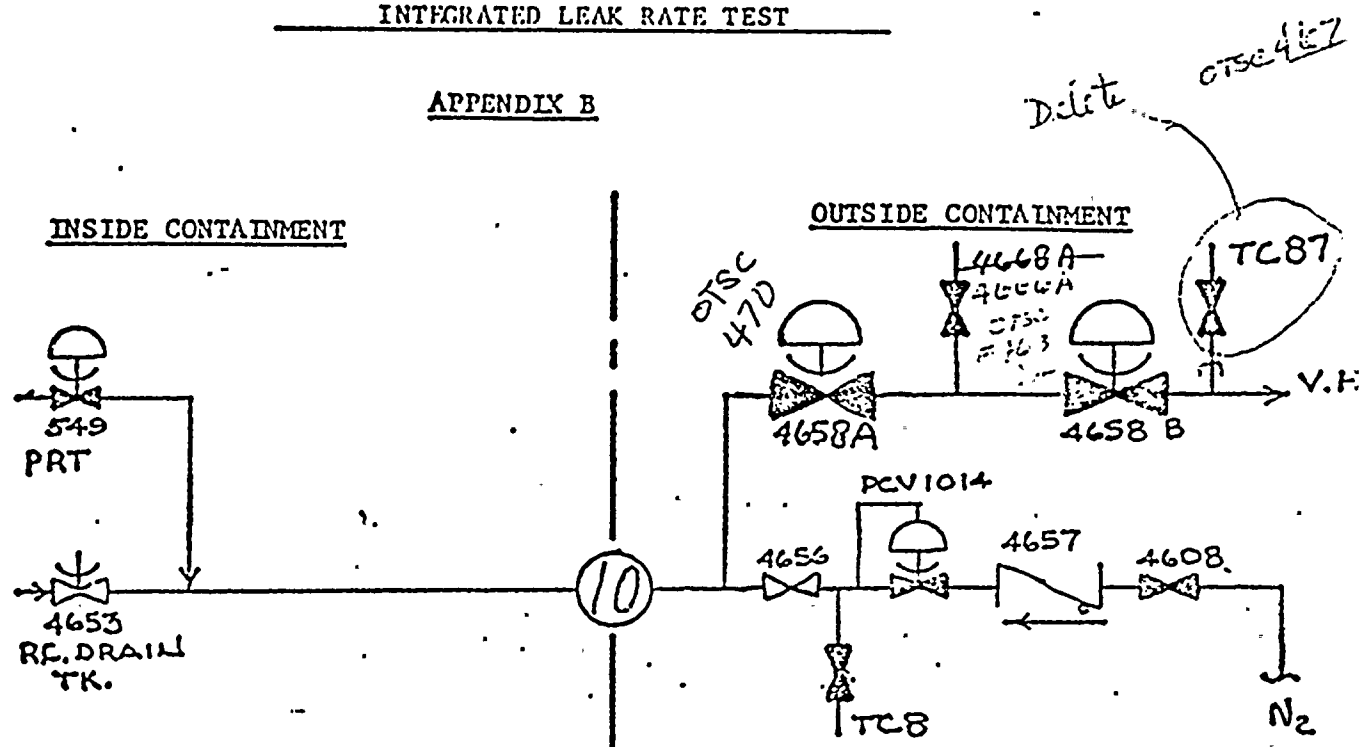

NOTE: Remove bonnet from 4657 to vent.

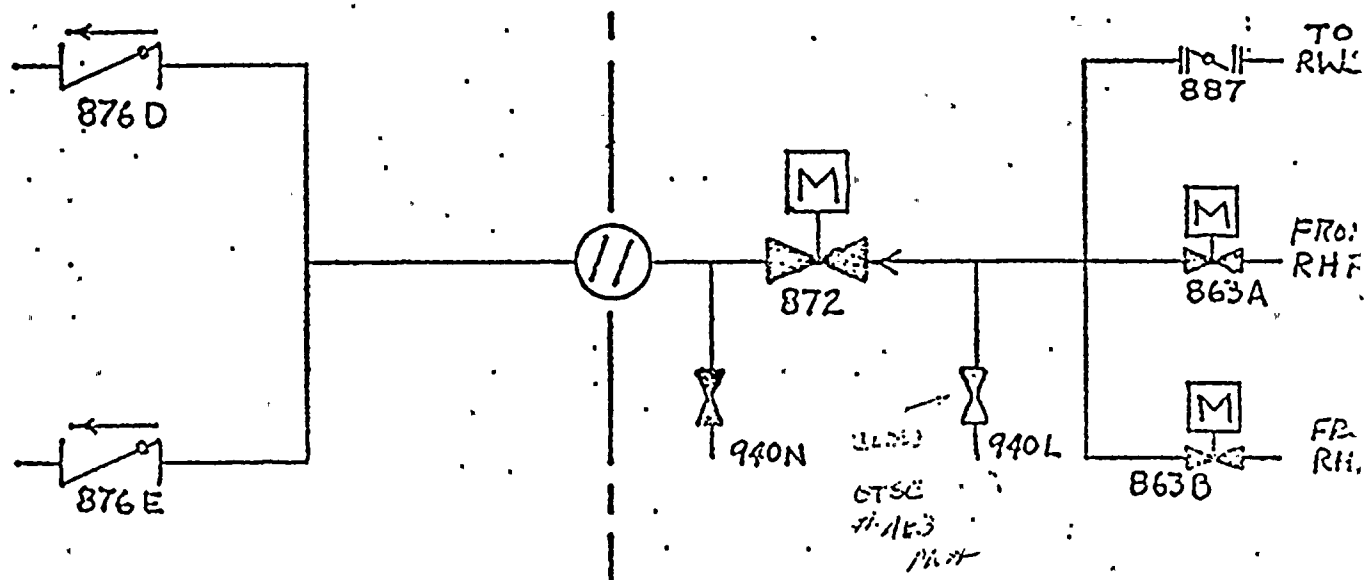

APPENDIX B

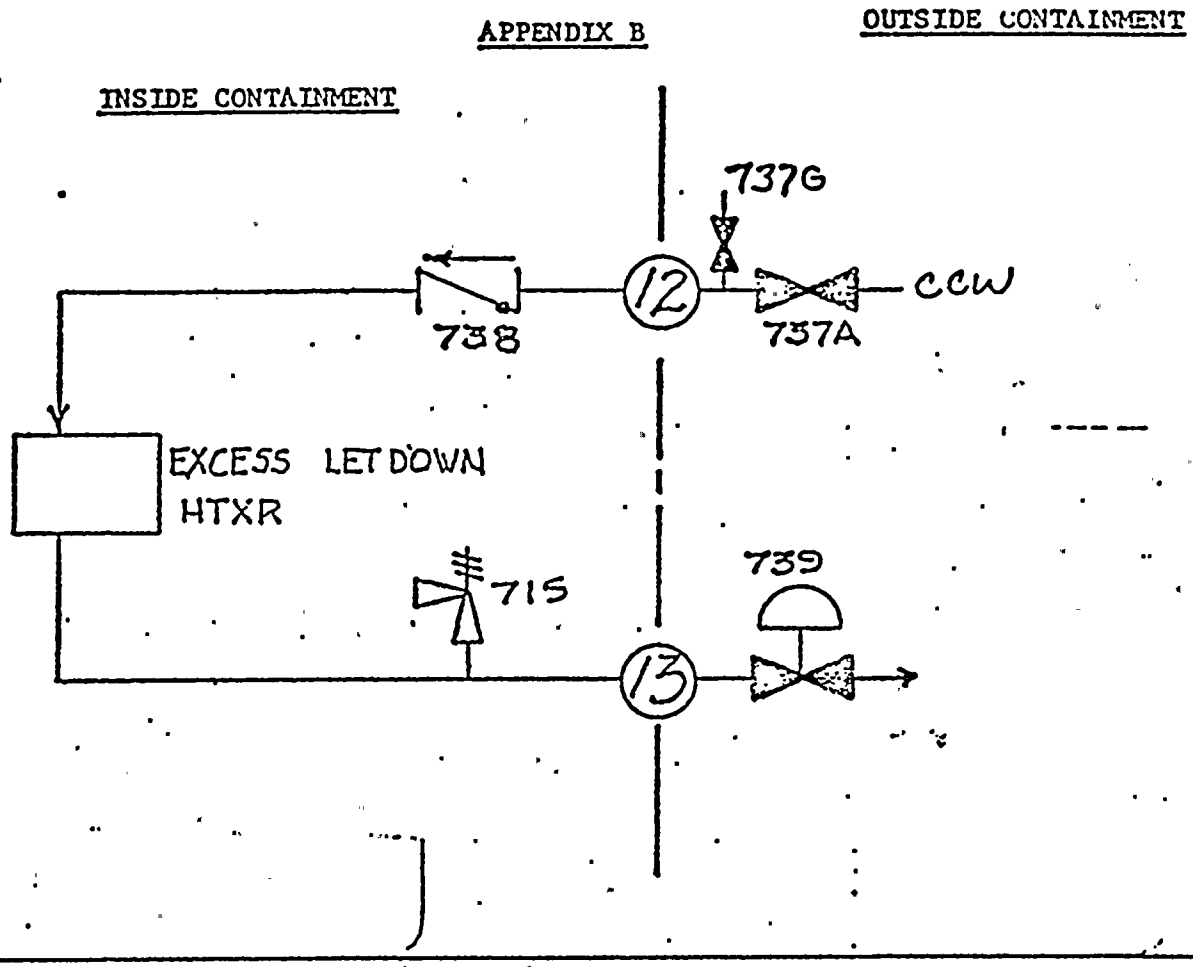
INSIDE CONTAINMENT
OUTSIDE CONTAINMENT
737G
12
CCW
738
737A
EXCESS LET DOWN
HTXR
715
739
13

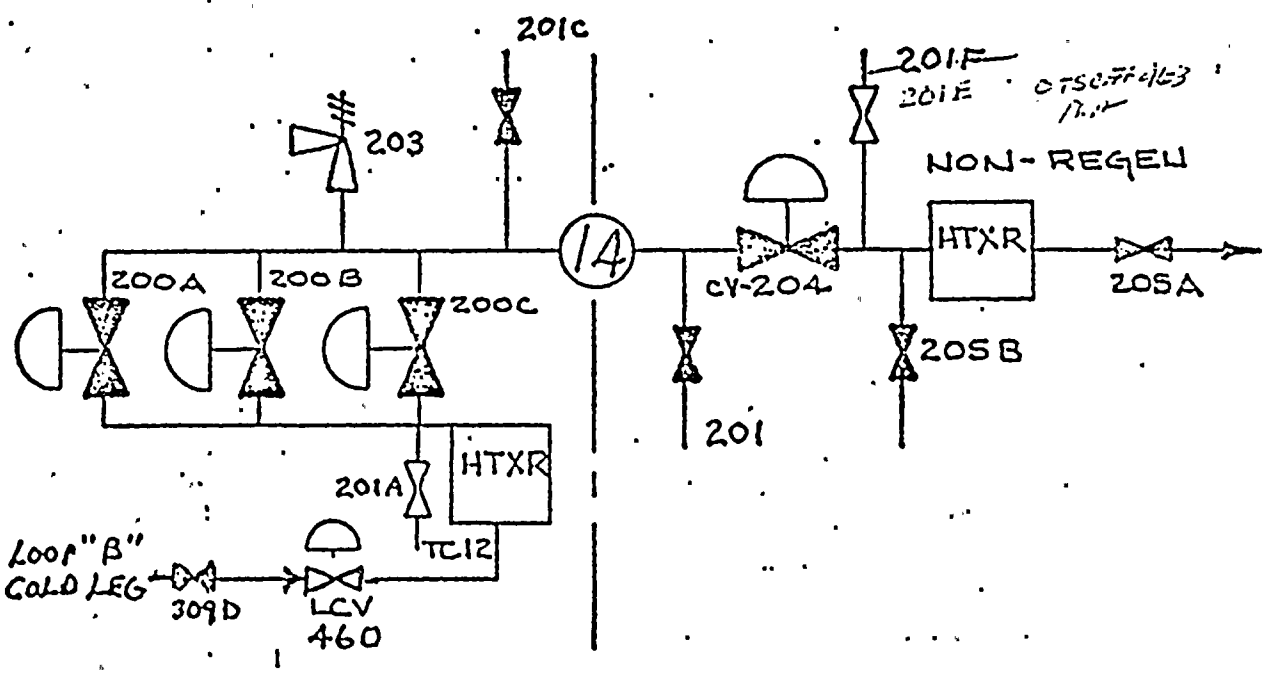
201C
201F
201E
203
NON-REGEN
14
HTXR
200A
200B
200C
CV-204
205A
205B
201
HTXR
201A
TC12
LOOP "B"
COLD LEG
309D
LCV
460

APPENDIX B

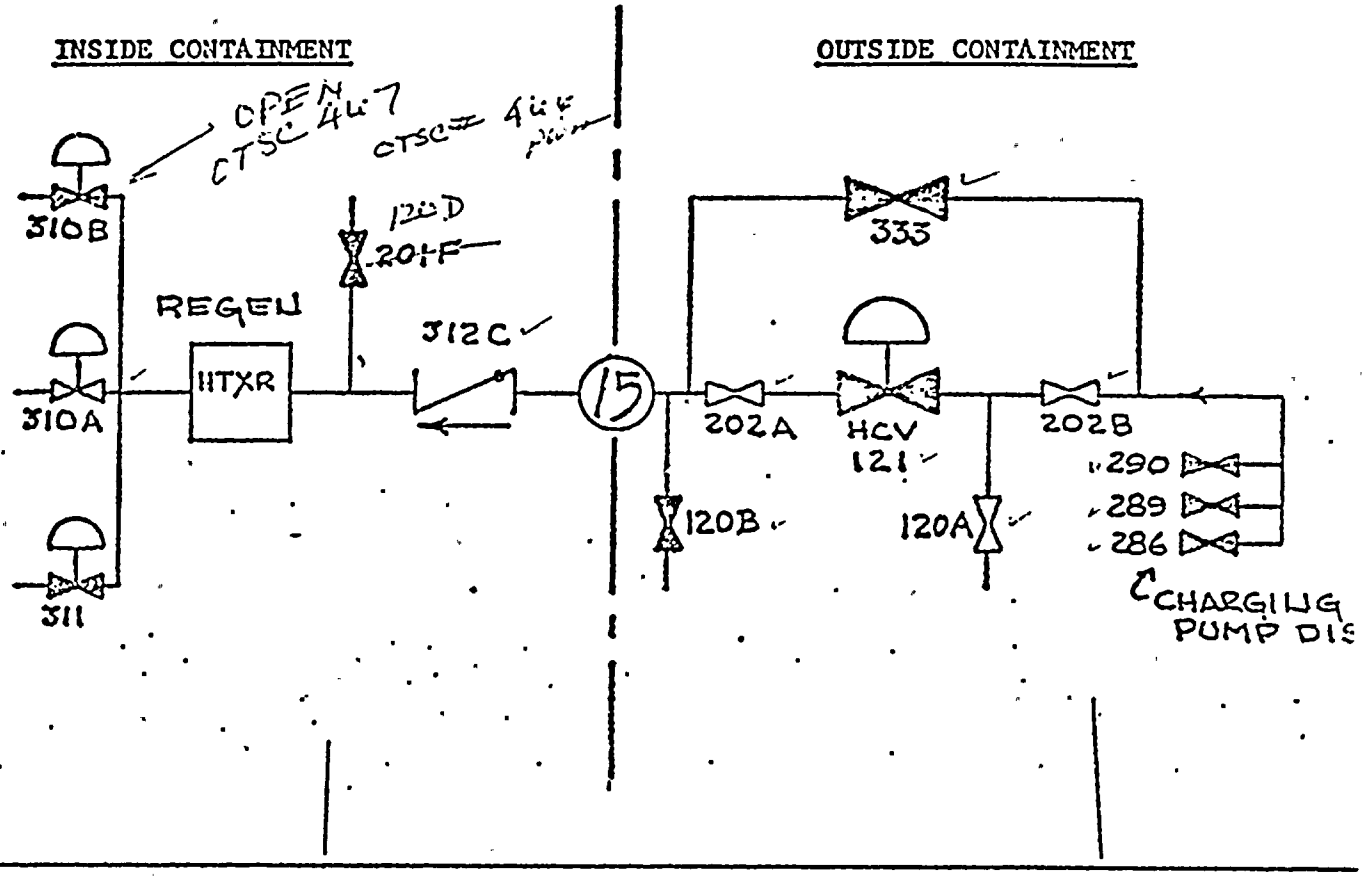
INSIDE CONTAINMENT
OUTSIDE CONTAINMENT
OPEN
OTSC 447
OTSC # 446
310B
120D
201F
REGEN
HTXR
312C
15
310A
311
333
202A
HCV
121
202B
120B
120A
290
289
286
CHARGING
PUMP DIS

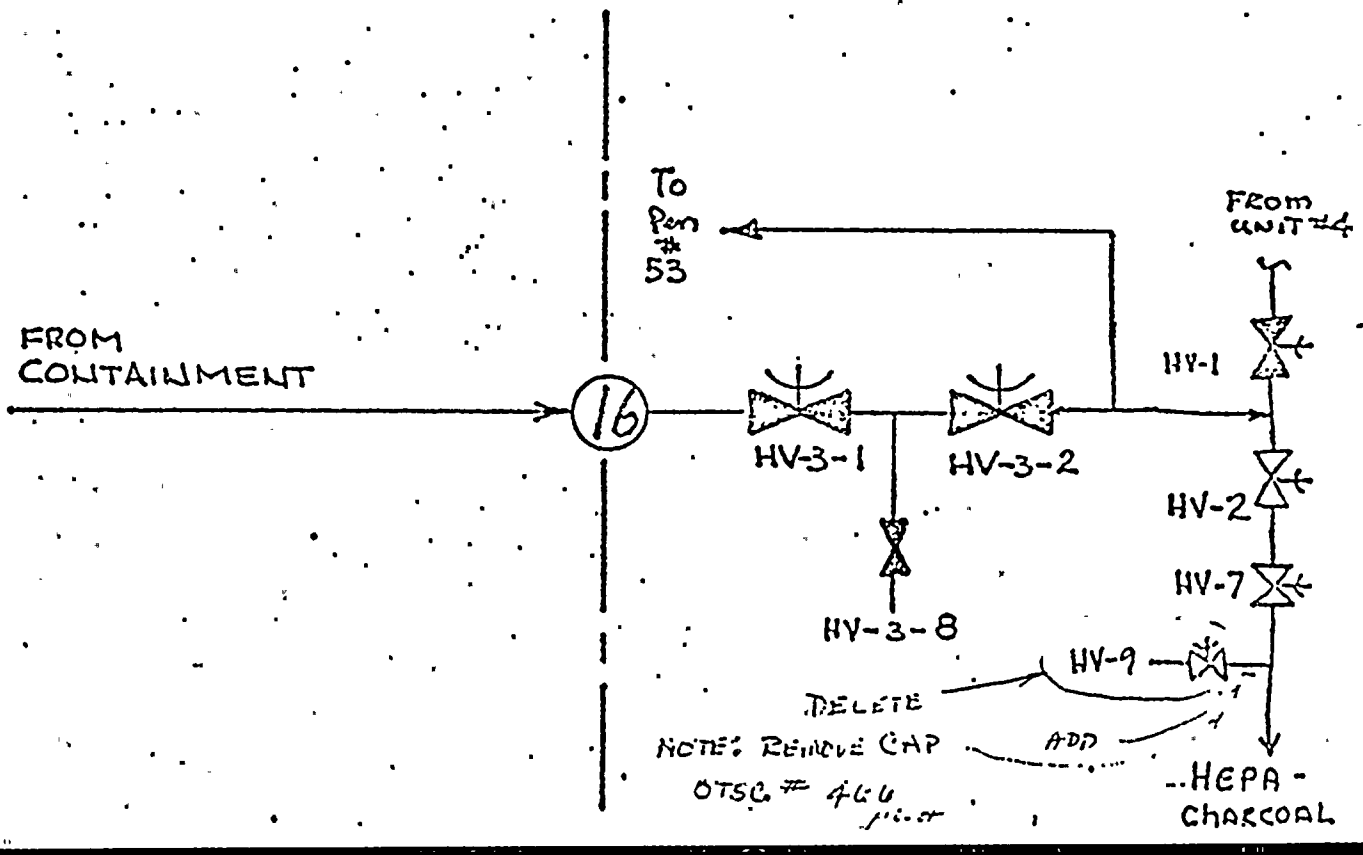
To
Pen
#
53
FROM
CONTAINMENT
16
HV-3-1
HV-3-2
HV-3-8
FROM
UNIT #4
HV-1
HV-2
HV-7
HV-9
DELETE
NOTE: REMOVE CAP
ADD
OTSC # 466
HEPA -
CHARCOAL

APPENDIX B

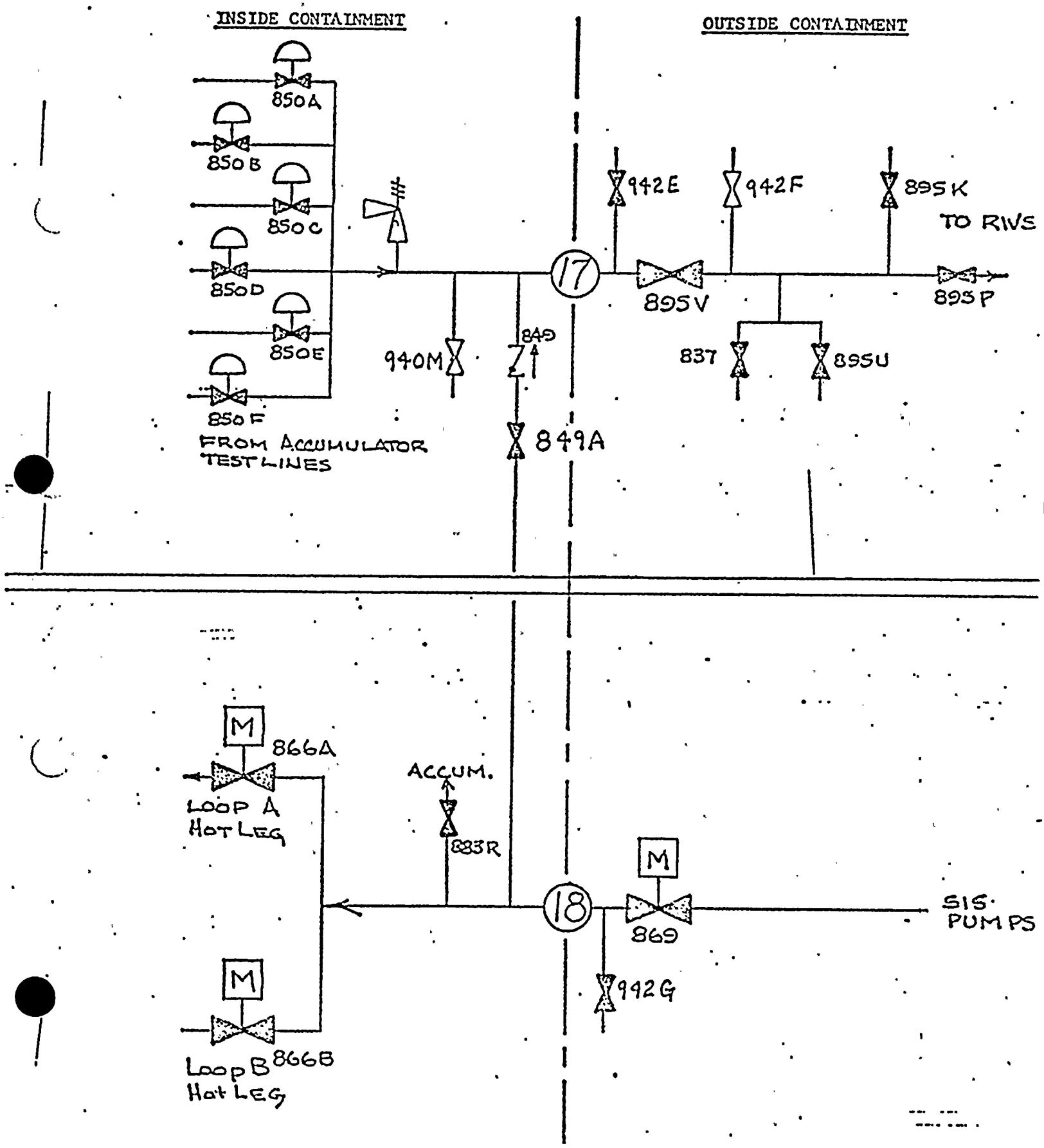
INSIDE CONTAINMENT
OUTSIDE CONTAINMENT
850A
850B
850C
850D
850E
850F
FROM ACCUMULATOR TEST LINES
17
942E
942F
895K
TO RWS
895V
895P
837
895U
940M
849
849A
M
866A
LOOP A HOT LEG
ACCUM.
883R
18
M
869
SIS PUMPS
942G
M
LOOP B HOT LEG
866B

APPENDIX B

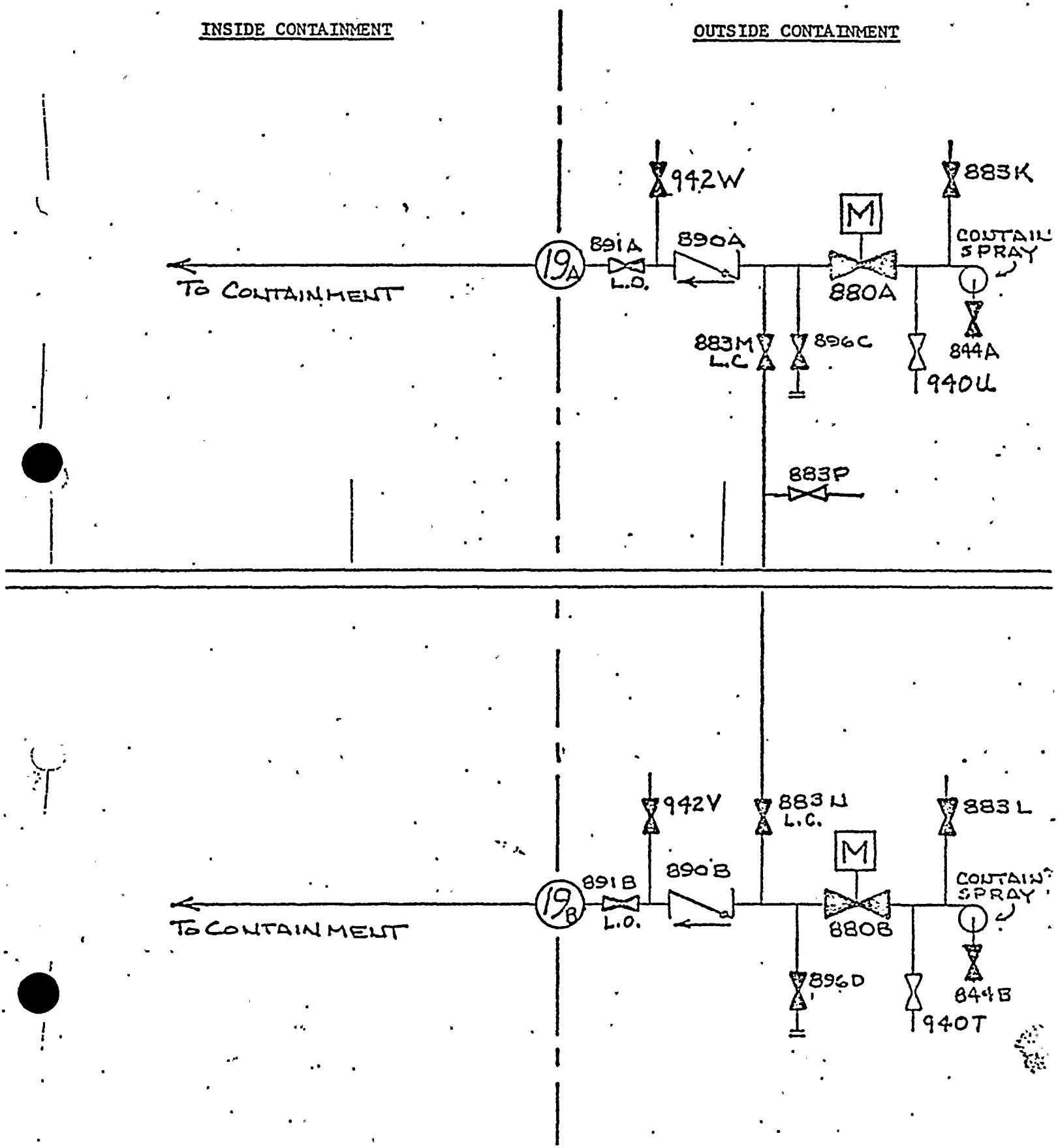
INSIDE CONTAINMENT
OUTSIDE CONTAINMENT
942W
883K
M
891A
890A
CONTAIN SPRAY
19A
L.O.
TO CONTAINMENT
880A
883M
L.C
896C
844A
940U
883P
942V
883N
L.C.
883L
M
891B
890B
CONTAIN SPRAY
19B
L.O.
TO CONTAINMENT
880B
896D
844B
940T

APPENDIX B

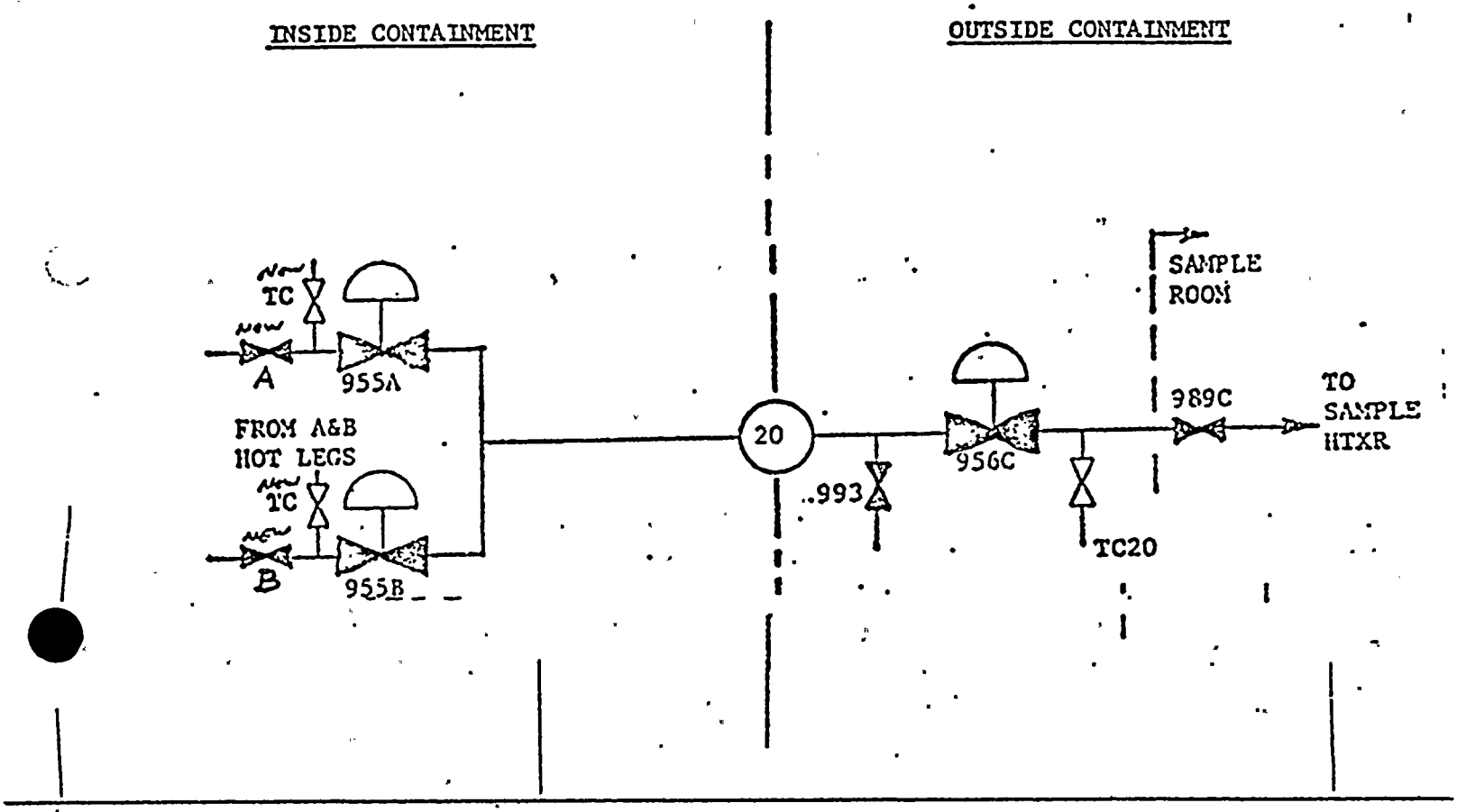
INSIDE CONTAINMENT
OUTSIDE CONTAINMENT
TC
A
955A
FROM A&B
HOT LEGS
TC
B
955B
20
993
956C
TC20
SAMPLE
ROOM
989C
TO
SAMPLE
HTXR

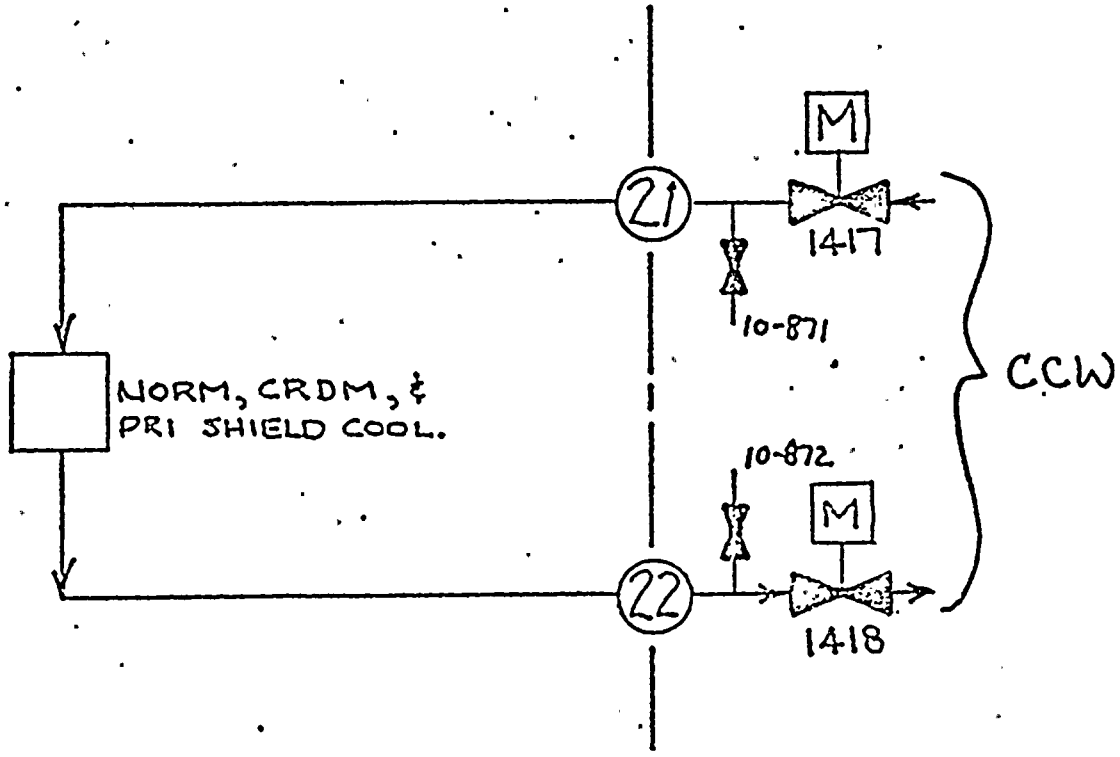
M
21
1417
10-871
NORM, CRDM, &
PRI SHIELD COOL.
CCW
10-872
M
22
1418

APPENDIX B

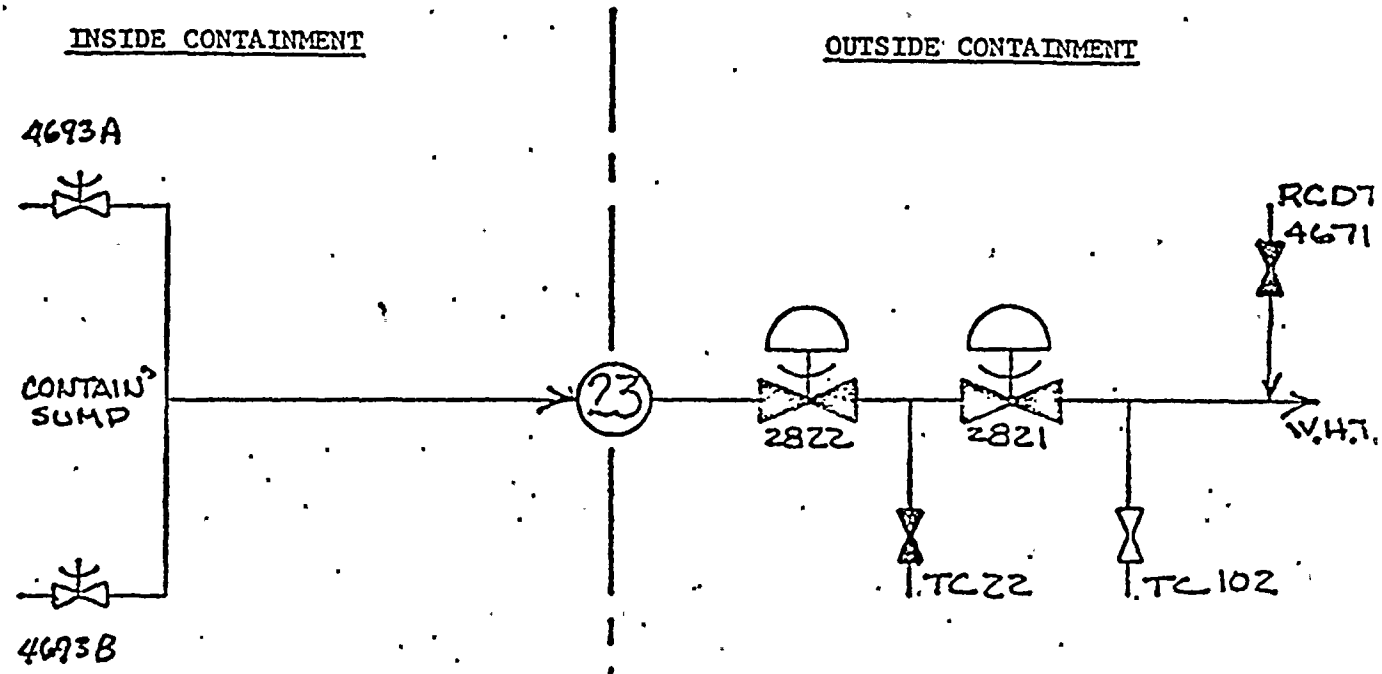
INSIDE CONTAINMENT
OUTSIDE CONTAINMENT
4693A
CONTAIN SUMP
4693B
23
2822
2821
RCDT
4671
W.H.T.
TC22
TC102

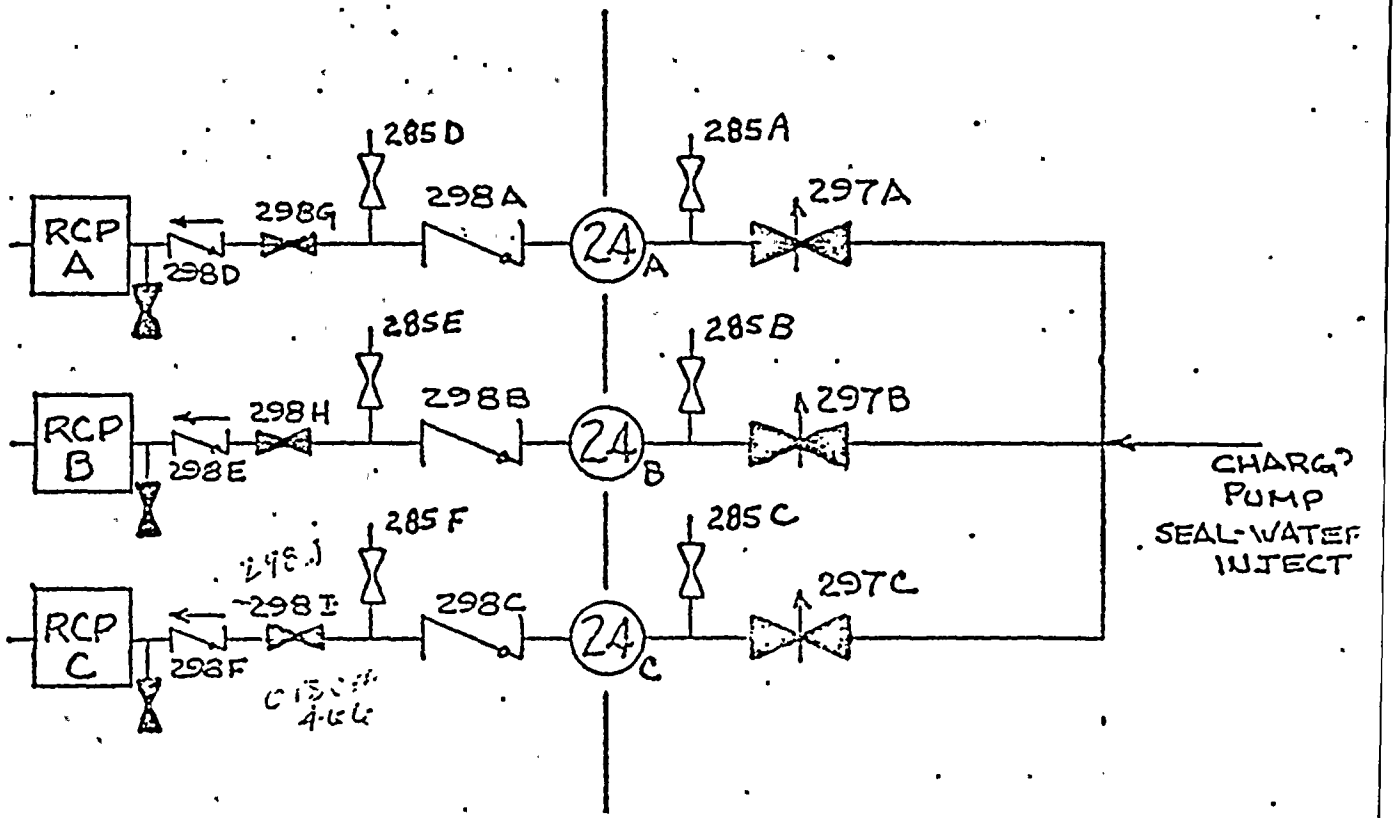
RCP A
RCP B
RCP C
298D
298E
298F
298G
298H
298I
285D
285E
285F
298A
298B
298C
24A
24B
24C
285A
285B
285C
297A
297B
297C
CHARG PUMP SEAL-WATER INJECT

APPENDIX B

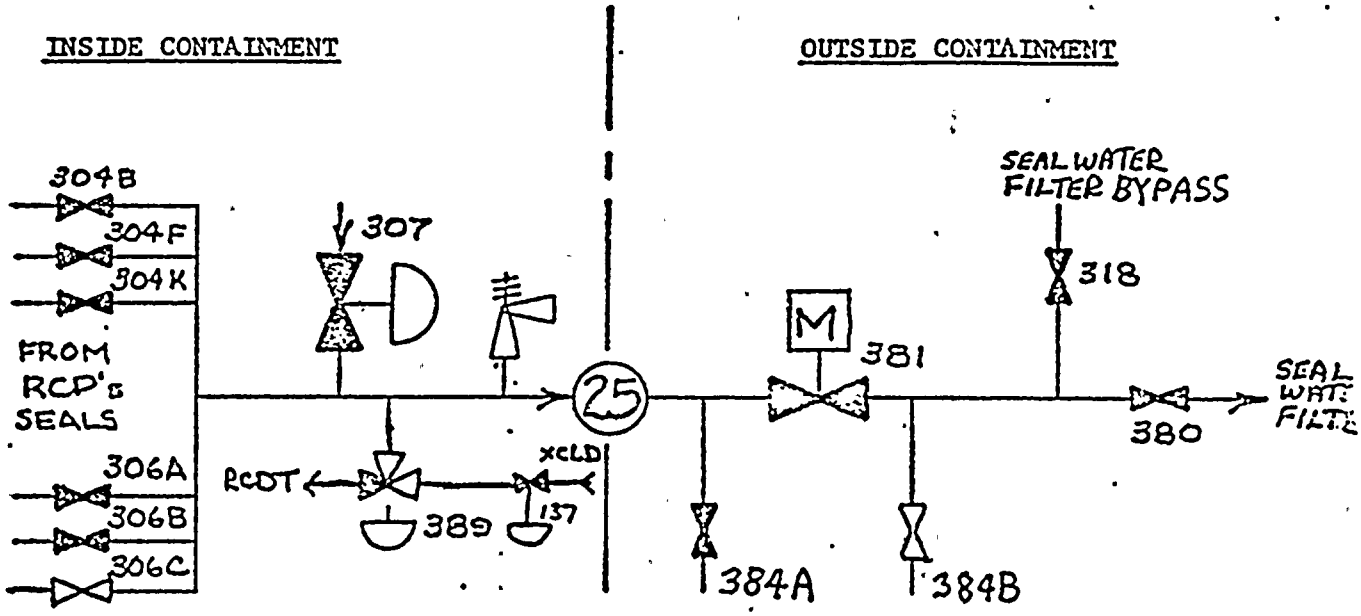
INSIDE CONTAINMENT
OUTSIDE CONTAINMENT
304B
304F
304K
FROM
RCP's
SEALS
306A
306B
306C
307
RCDT
389
XCLD
137
25
M
381
384A
384B
SEAL WATER
FILTER BYPASS
318
380

APPENDIX B

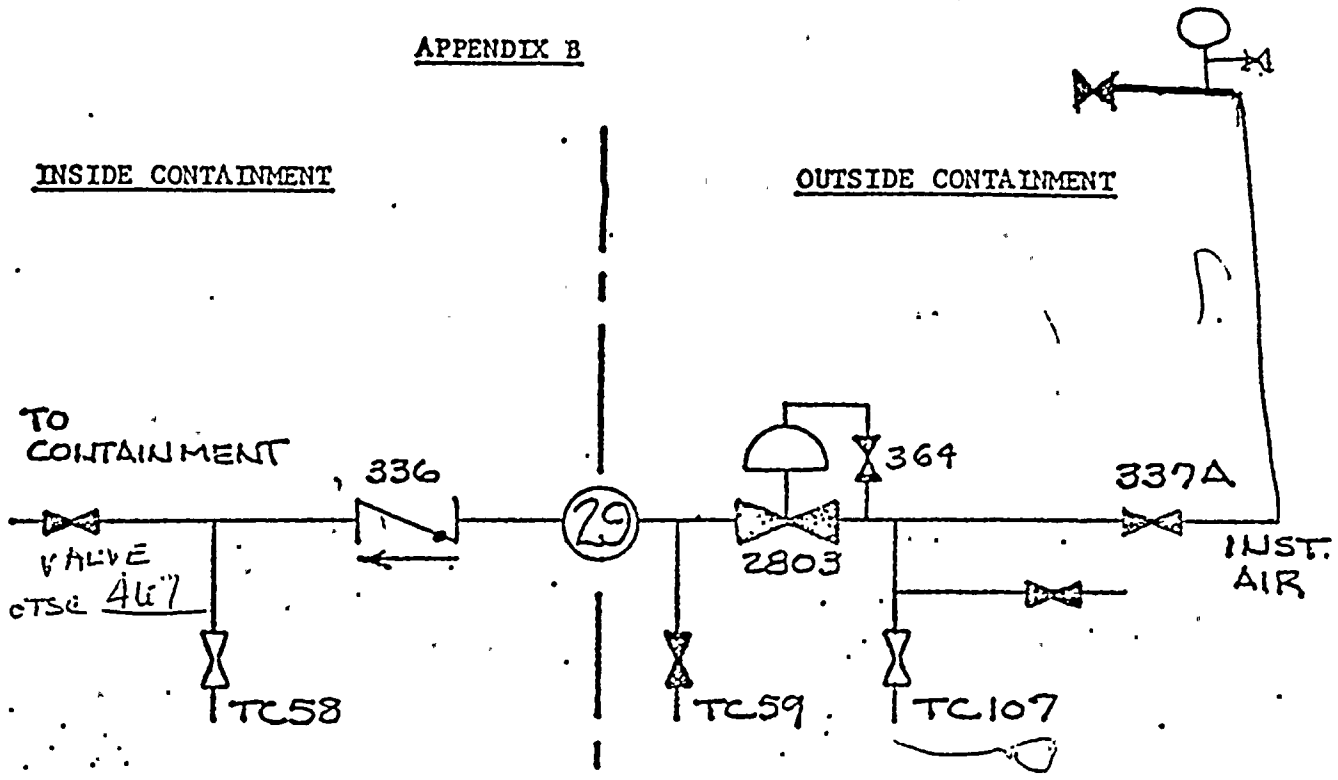

NOTE: Prior to lineup, with 337A open, open 364, close CV-2803, then perform lineup.

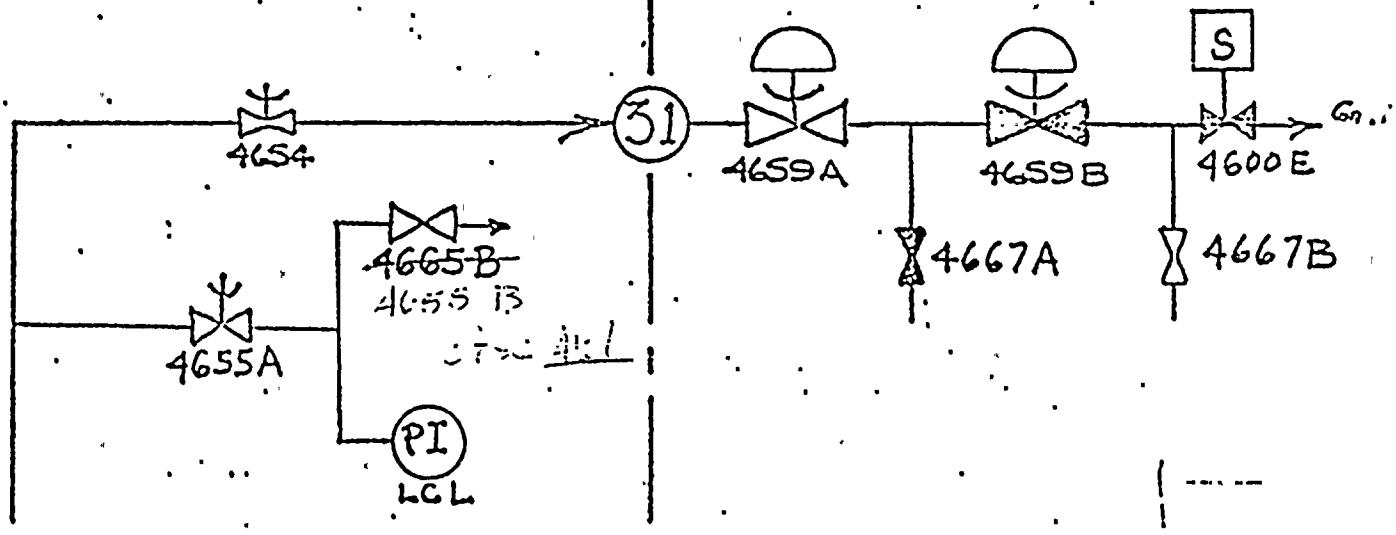

APPENDIX B

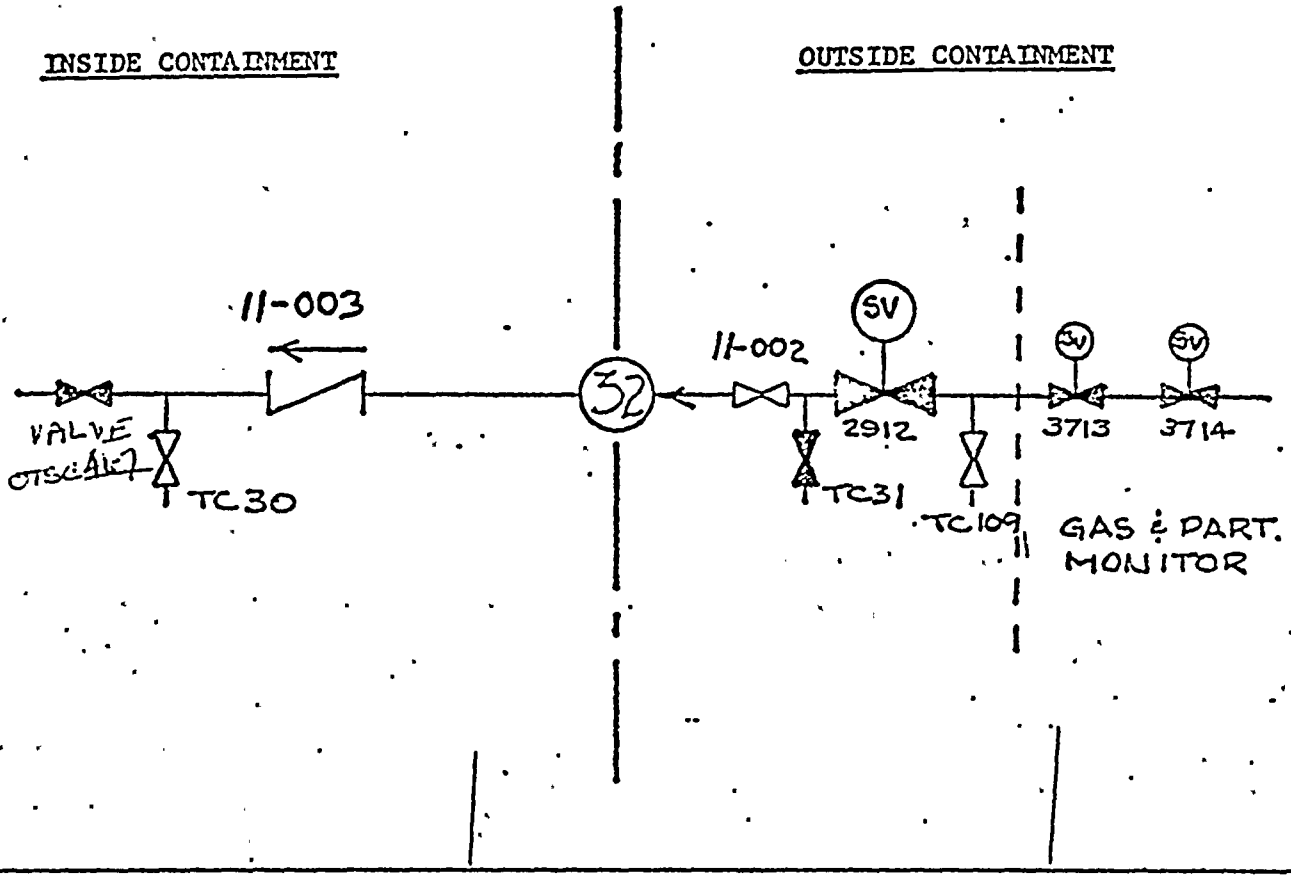
INSIDE CONTAINMENT
OUTSIDE CONTAINMENT
11-003
VALVE
OTSCALE7
TC30
32
11-002
SV
2912
TC31
TC109
SV
3713
SV
3714
GAS & PART.
MONITOR

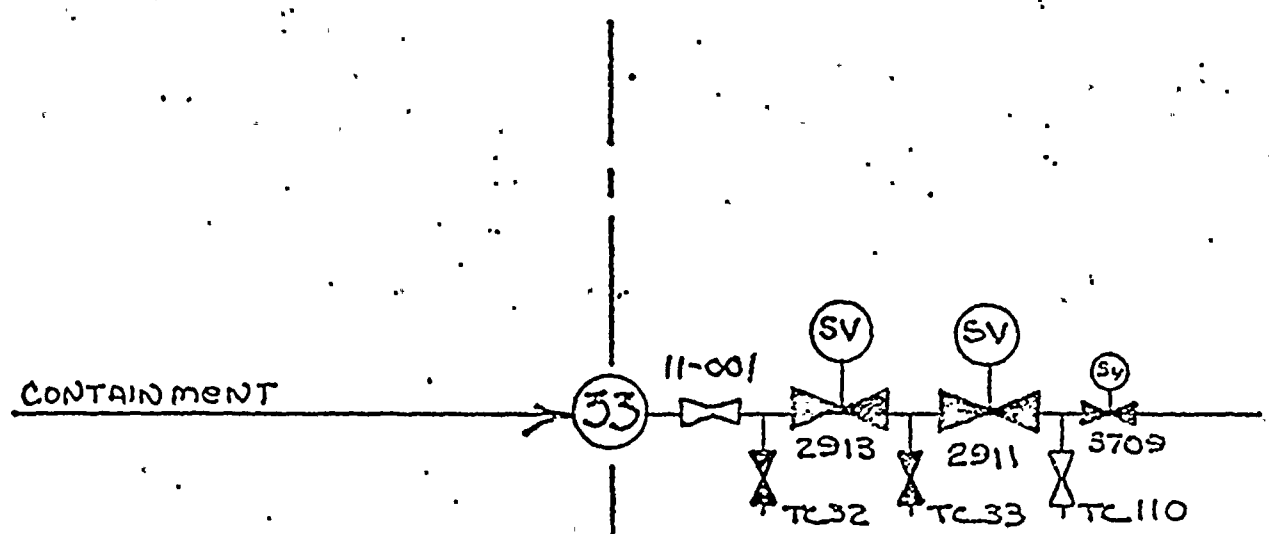
CONTAINMENT
33
11-001
SV
2913
TC32
SV
2911
TC33
SV
3709
TC110

APPENDIX B

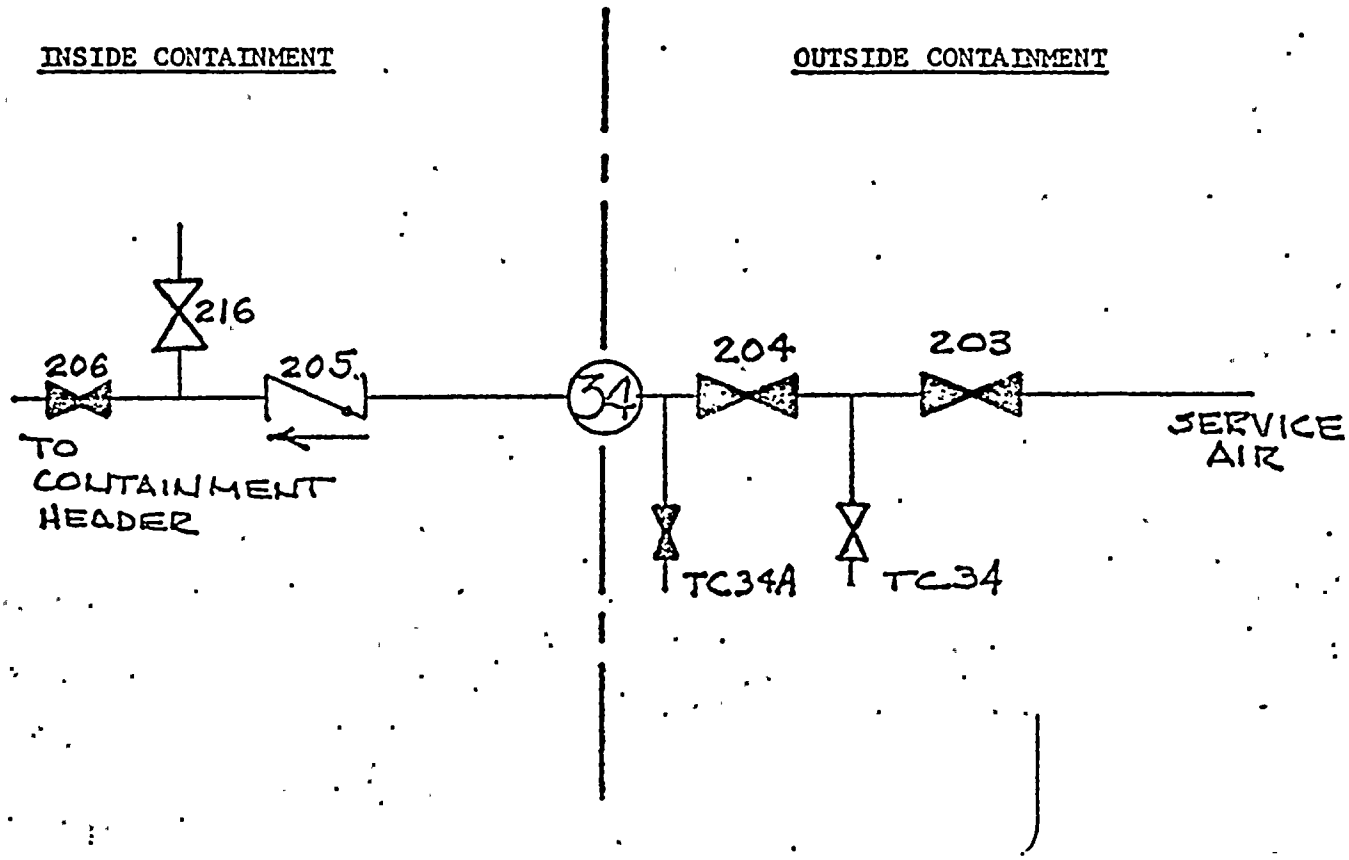
INSIDE CONTAINMENT
OUTSIDE CONTAINMENT
216
206
205
34
204
203
TO CONTAINMENT HEADER
SERVICE AIR
TC34A
TC34

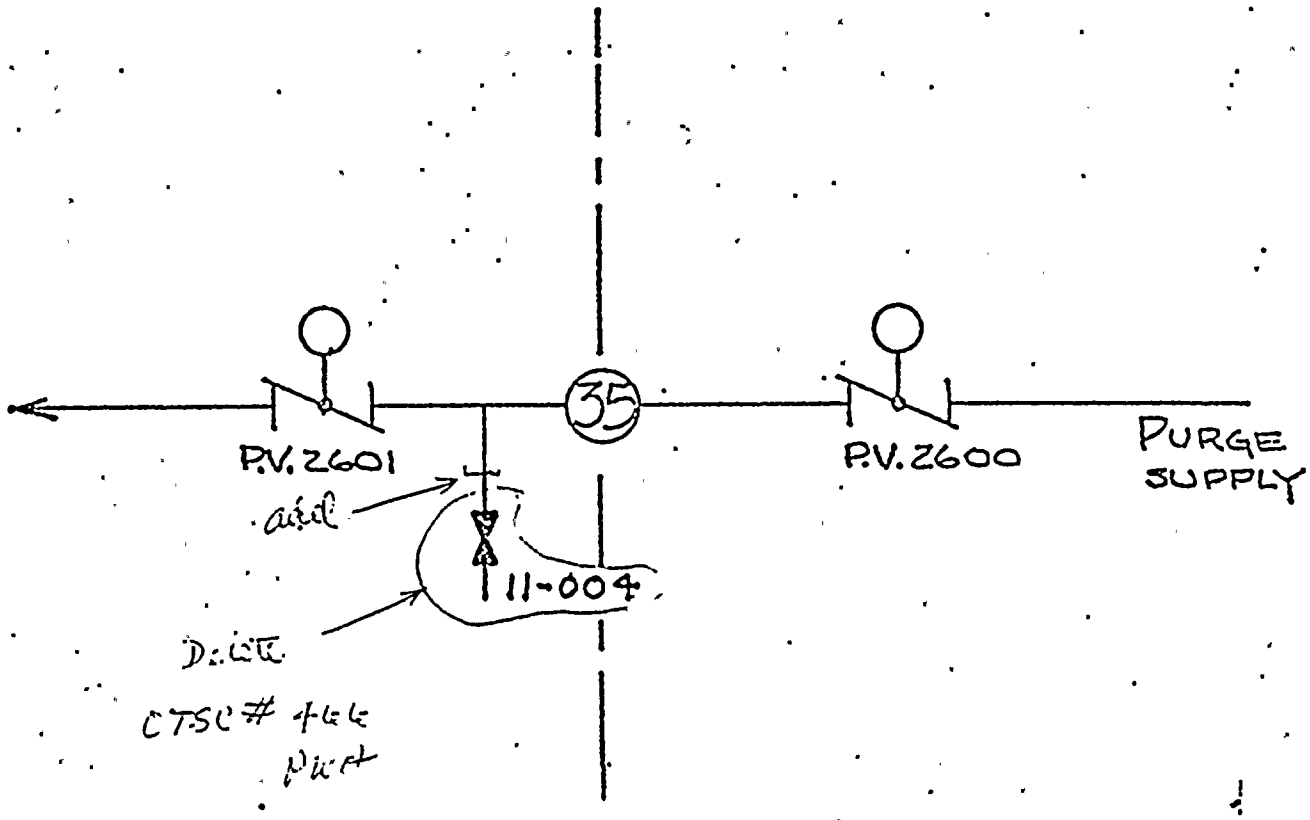
35
P.V. 2601
P.V. 2600
PURGE SUPPLY
11-004
CTSC # 466

APPENDIX B

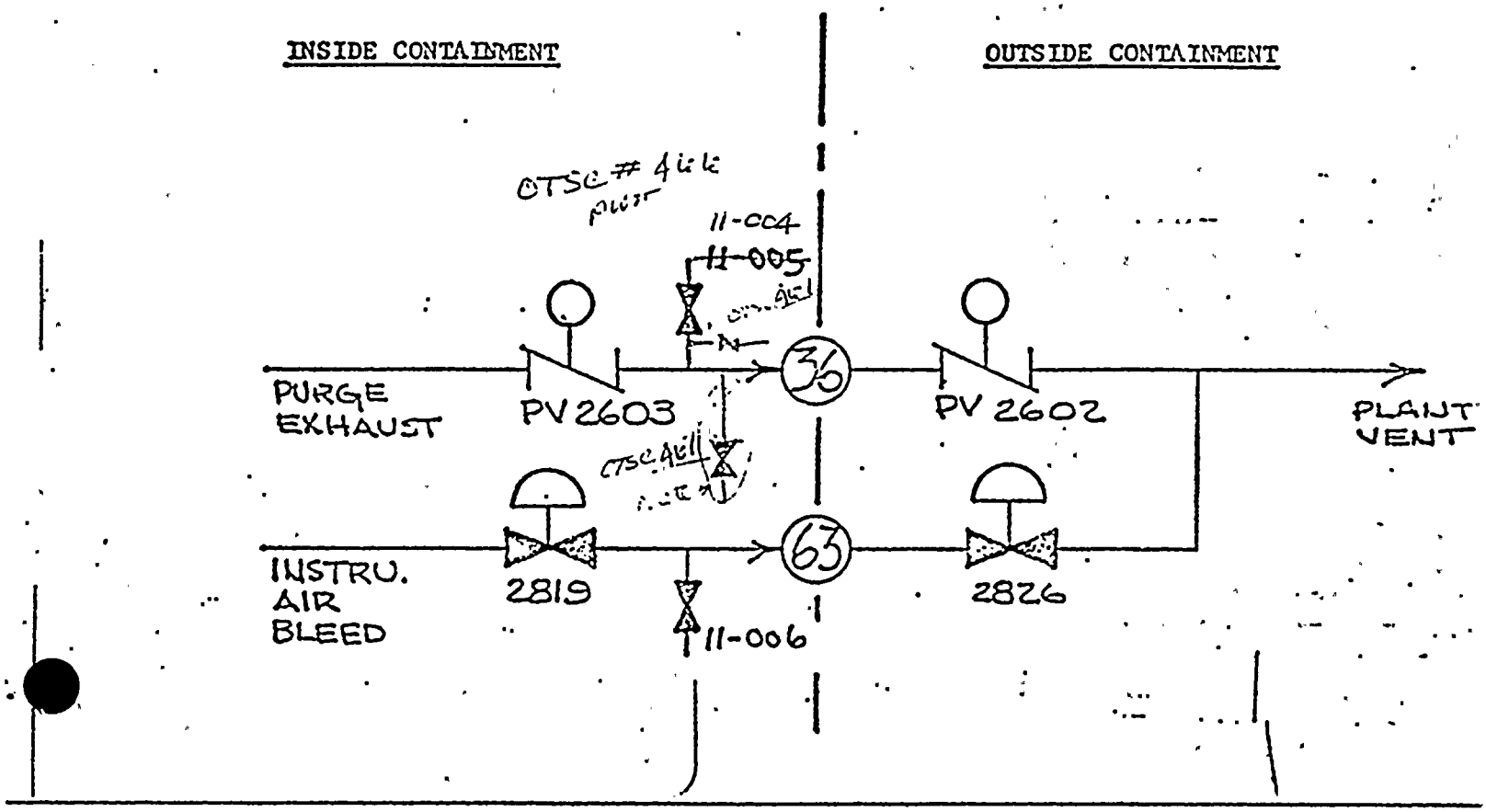
INSIDE CONTAINMENT
OUTSIDE CONTAINMENT
OTSC # 4 ck
11-004
11-005
PURGE EXHAUST
PV 2603
36
PV 2602
PLANT VENT
OTSC 4 ck
INSTRU. AIR BLEED
2819
63
2826
11-006

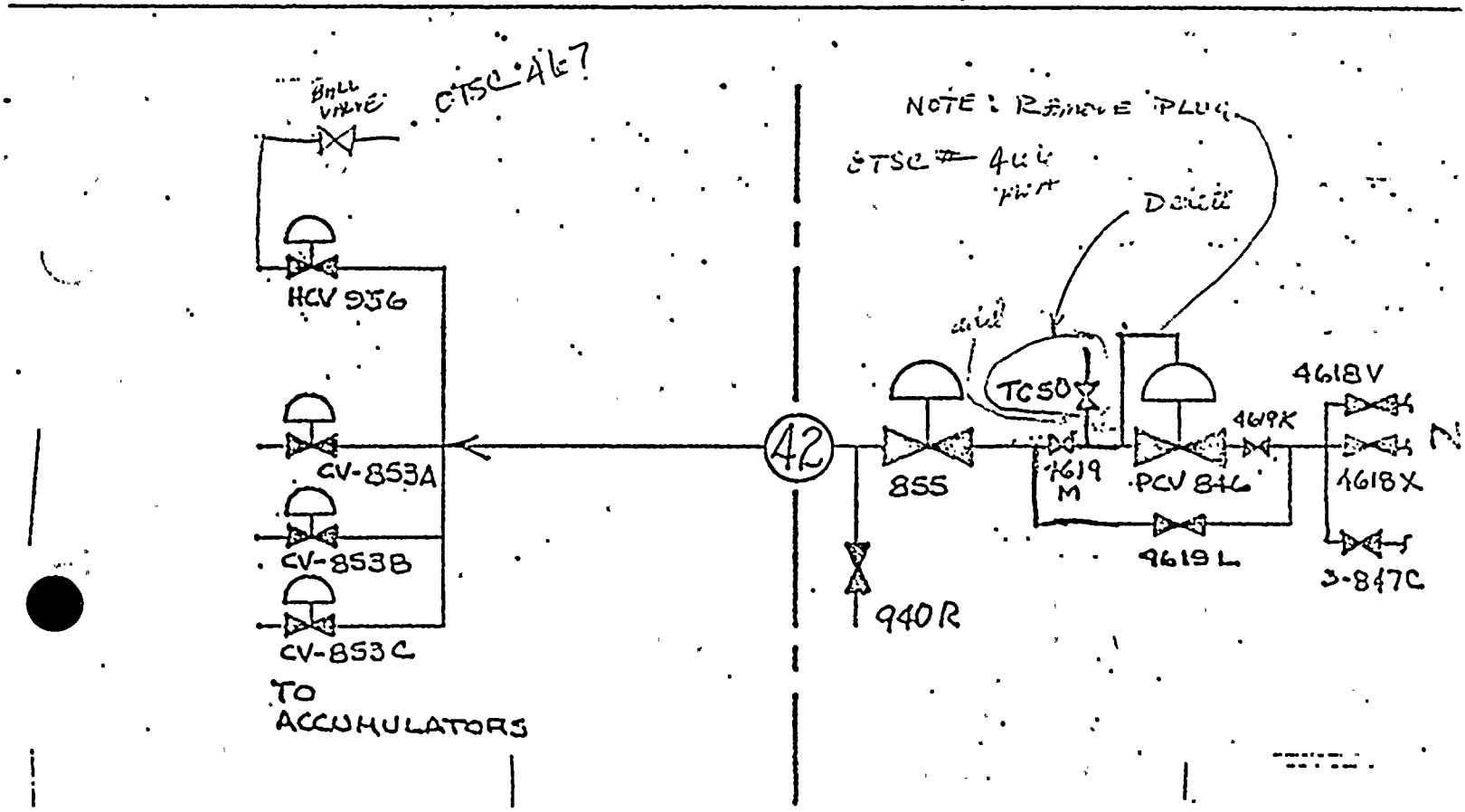
BALL VALVE
OTSC 4 ck
HCV 956
CV-853A
CV-853B
CV-853C
TO ACCUMULATORS
42
NOTE: REMOVE PLUG
OTSC # 4 ck
TC50
855
4619 M
PCV 846
4619 L
4618V
4619X
4618X
3-847C
940R

APPENDIX B

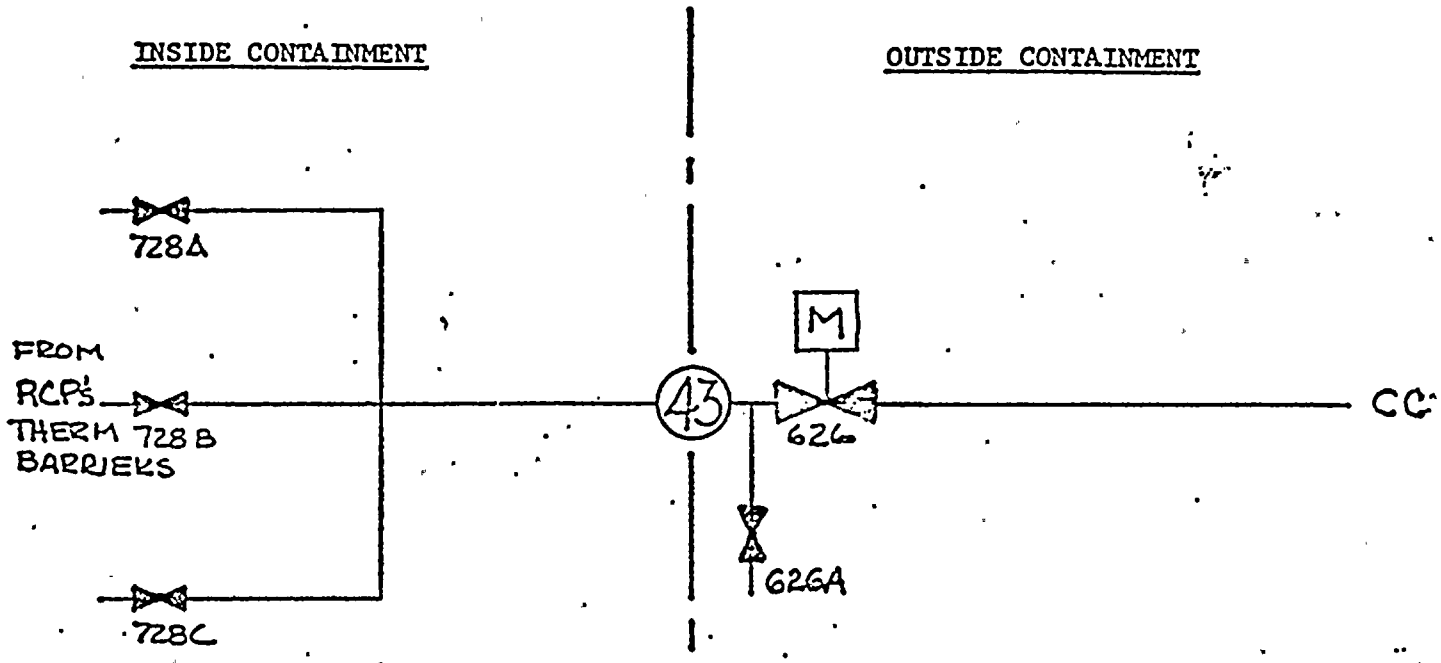

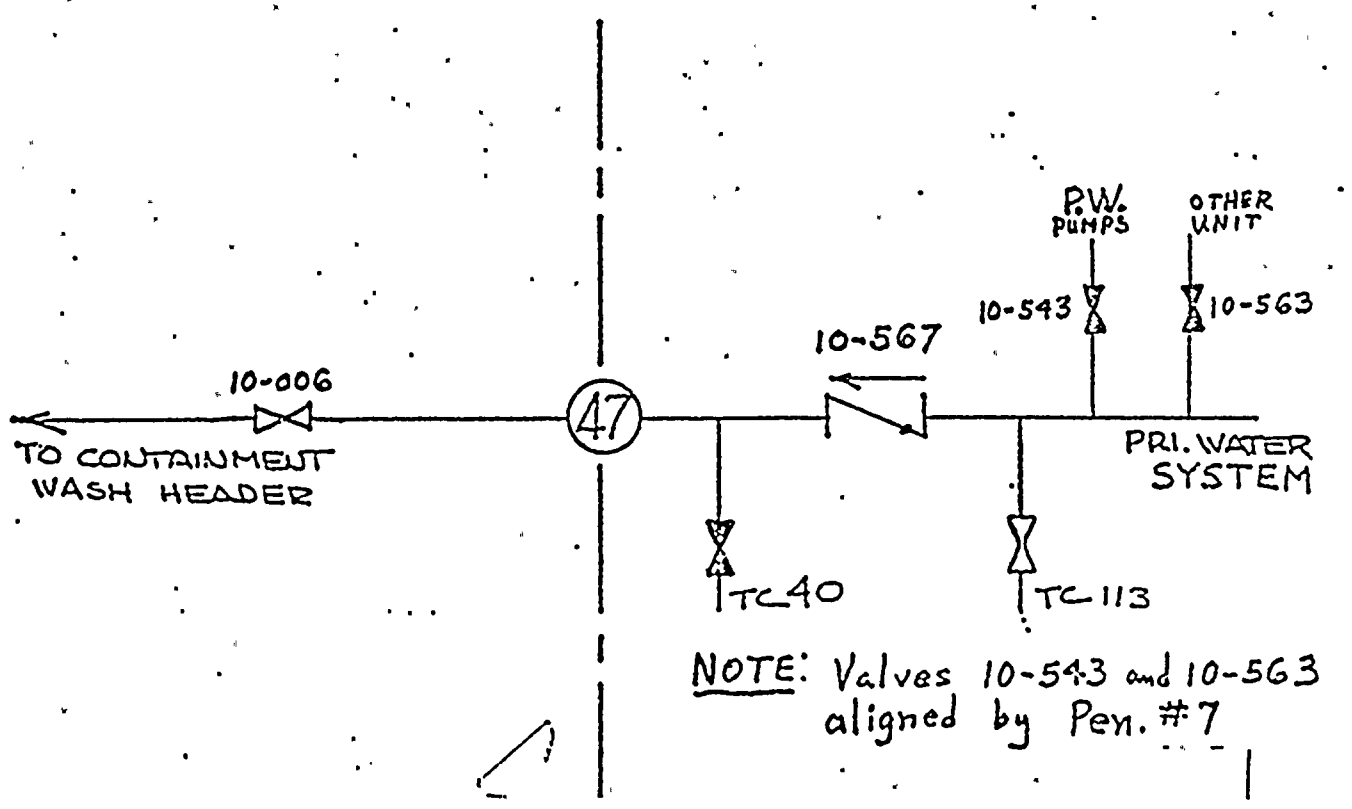

NOTE: Valves 10-543 and 10-563 aligned by Pen. #7

APPENDIX B

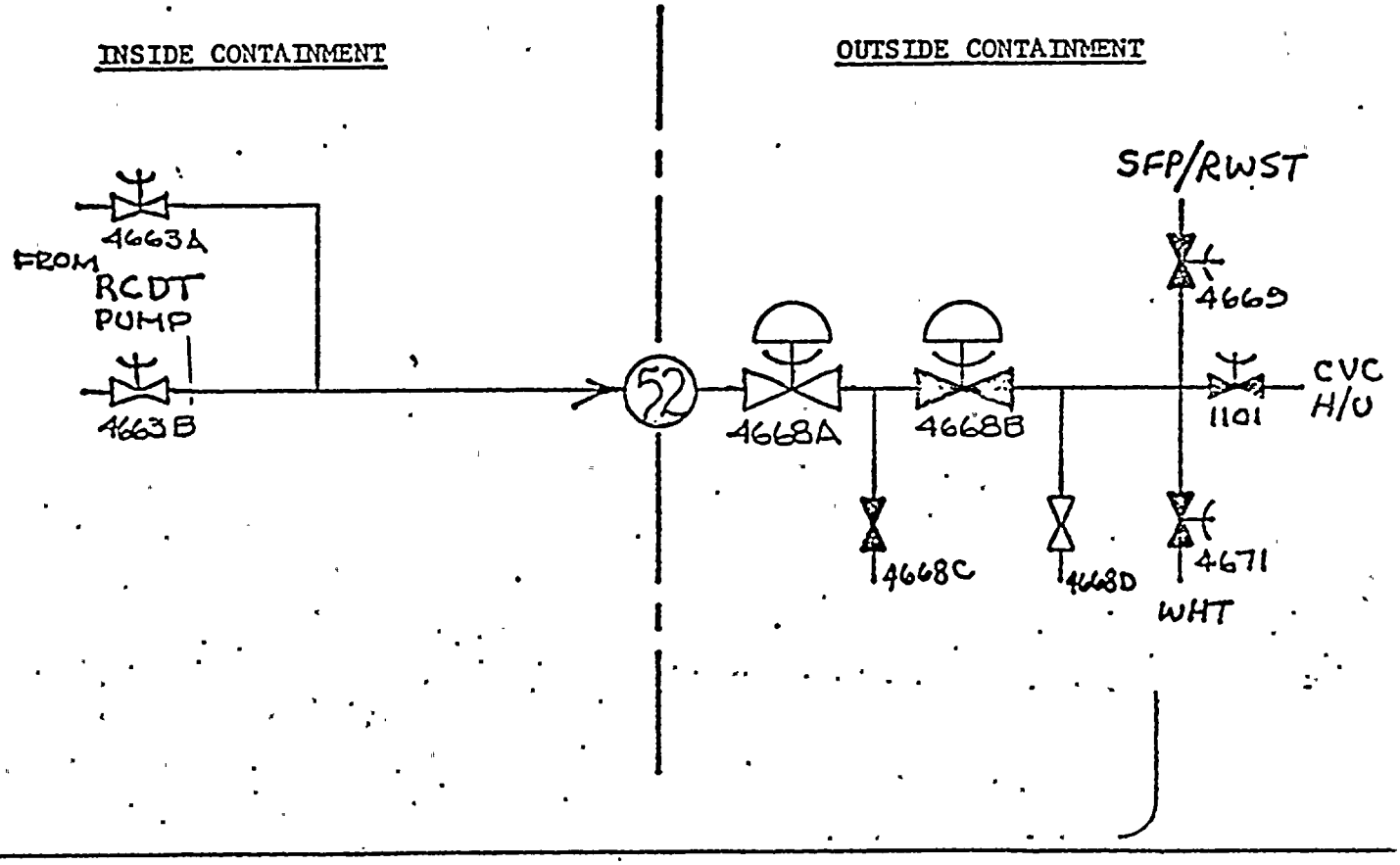
INSIDE CONTAINMENT
OUTSIDE CONTAINMENT
4663A
FROM
RCDT
PUMP
4663B
52
4668A
4668B
SFP/RWST
4669
CVC
H/U
1101
4668C
4668D
4671
WHT

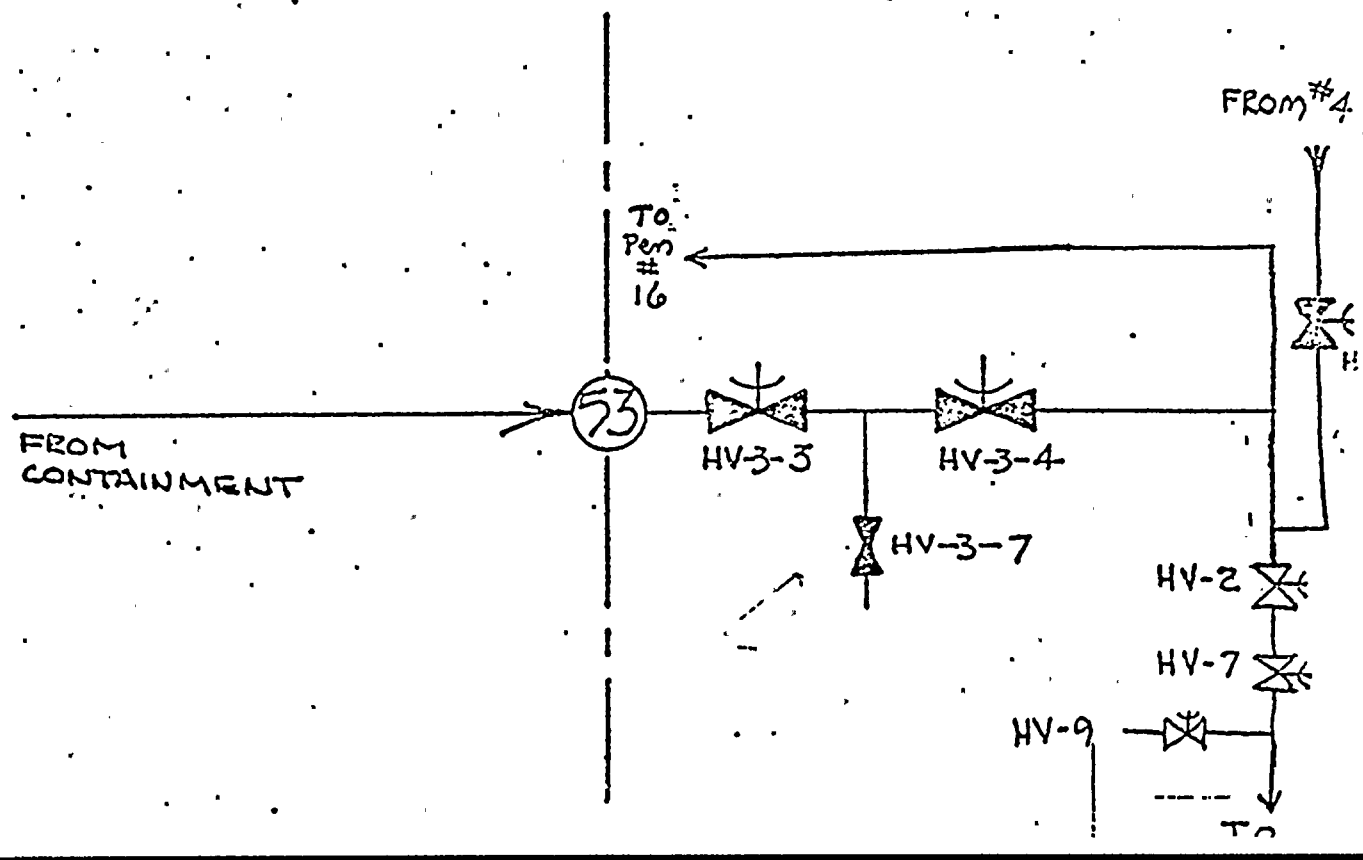
FROM #4
TO
Pen
#
16
53
FROM
CONTAINMENT
HV-3-3
HV-3-4
HV-3-7
HV-2
HV-7
HV-9

APPENDIX B

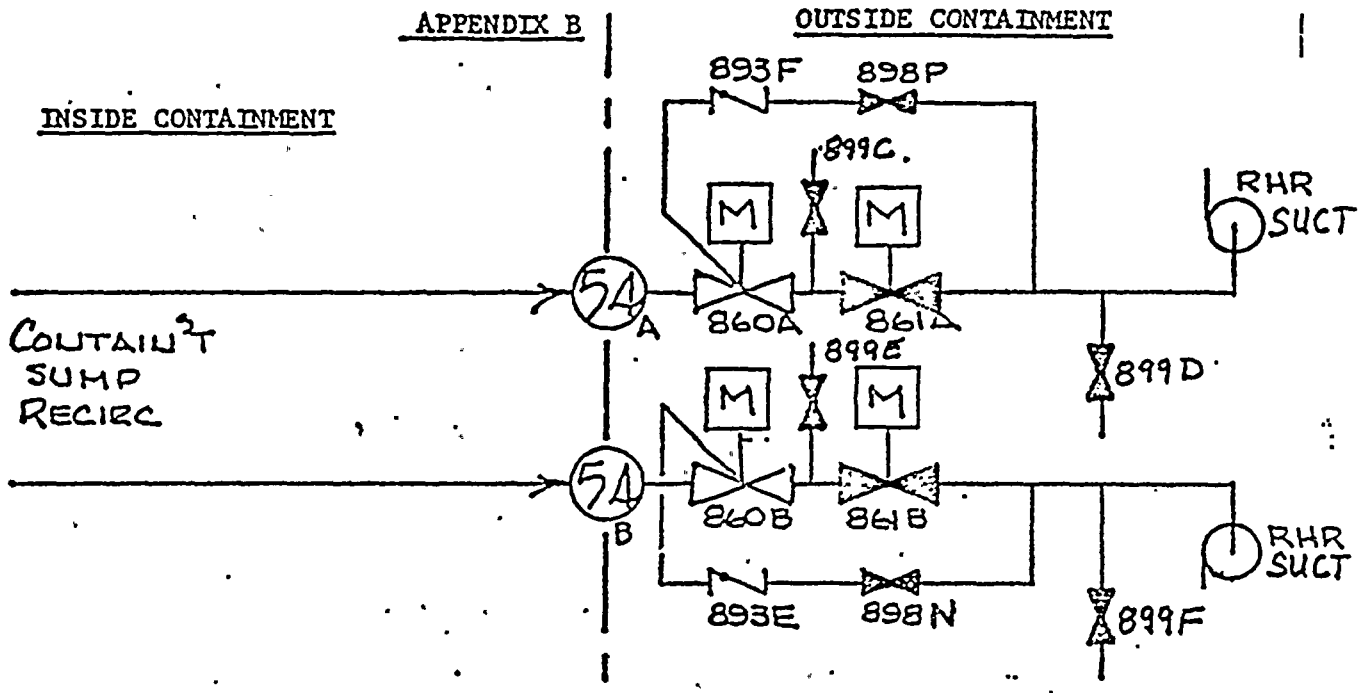
INSIDE CONTAINMENT
OUTSIDE CONTAINMENT
893F
898P
899C
M
M
RHR SUCT
54
A
860A
861A
CONTAINMT SUMP RECIRC
899E
899D
M
M
54
B
860B
861B
RHR SUCT
893E
898N
899F

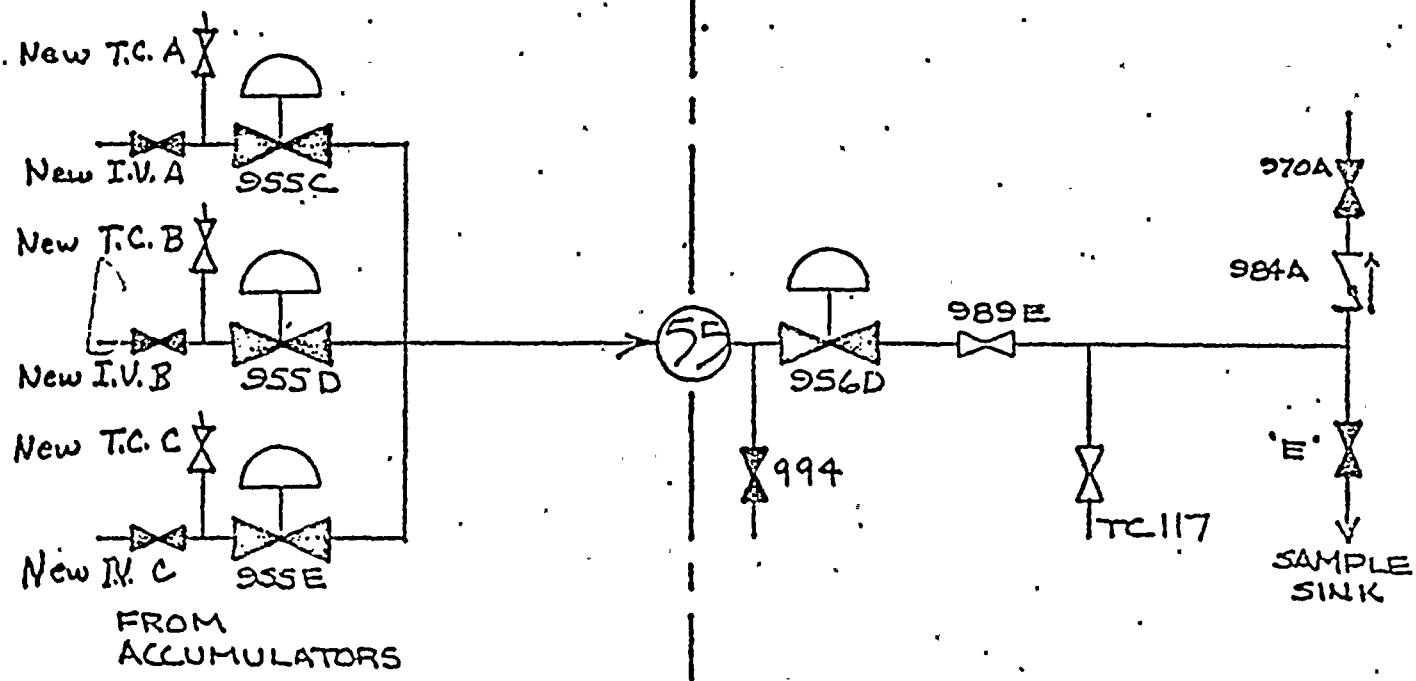
New T.C. A
New I.V. A
955C
New T.C. B
New I.V. B
955D
New T.C. C
New I.V. C
955E
FROM ACCUMULATORS
55
956D
994
989E
TC117
970A
984A
'E'
SAMPLE SINK

APPENDIX B

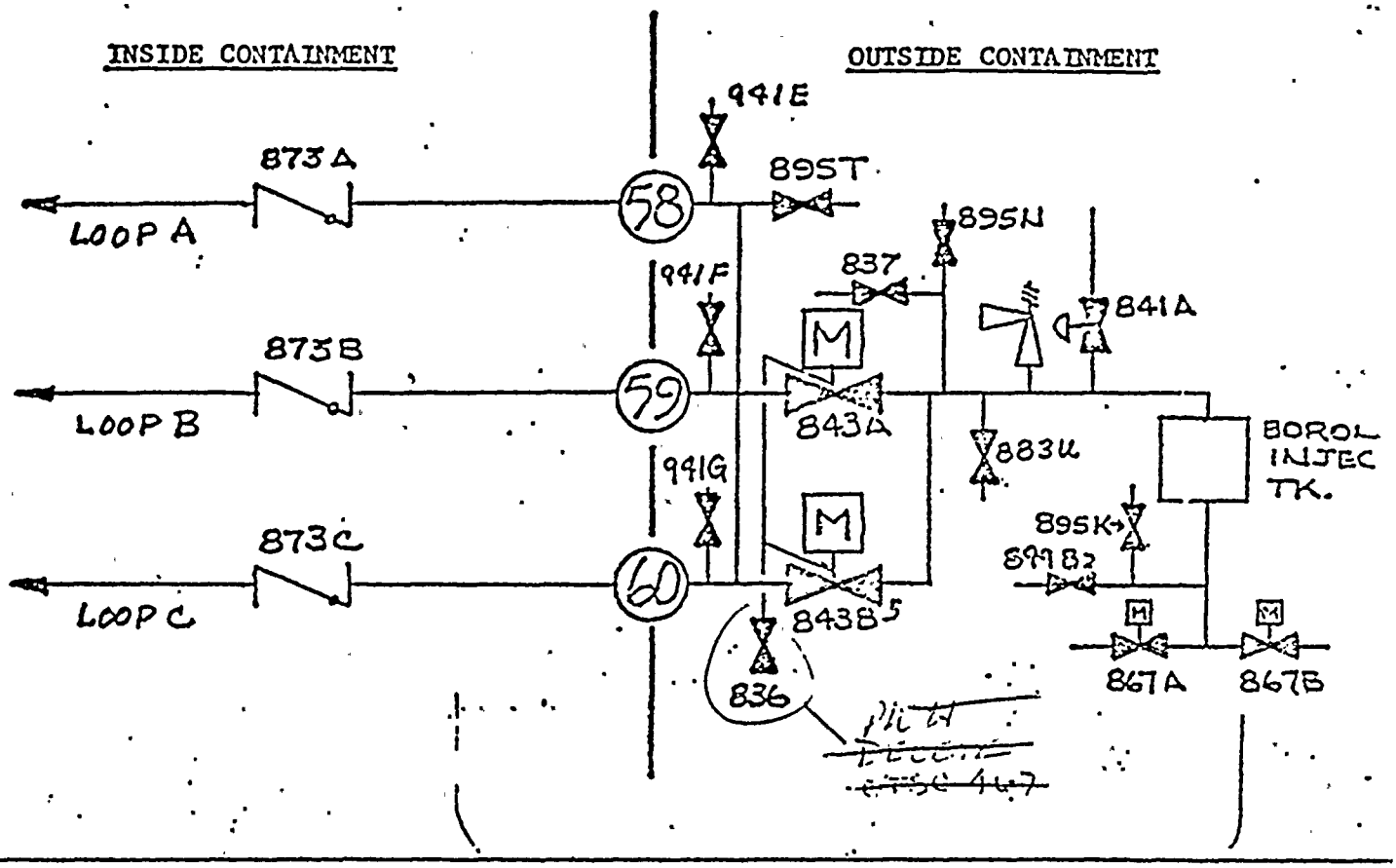
INSIDE CONTAINMENT
OUTSIDE CONTAINMENT
941E
873A
895T
LOOP A
58
895N
837
941F
841A
873B
LOOP B
59
843A
883U
BOROL INJEC TK.
941G
895K
873C
LOOP C
60
843B
836
867A
867B

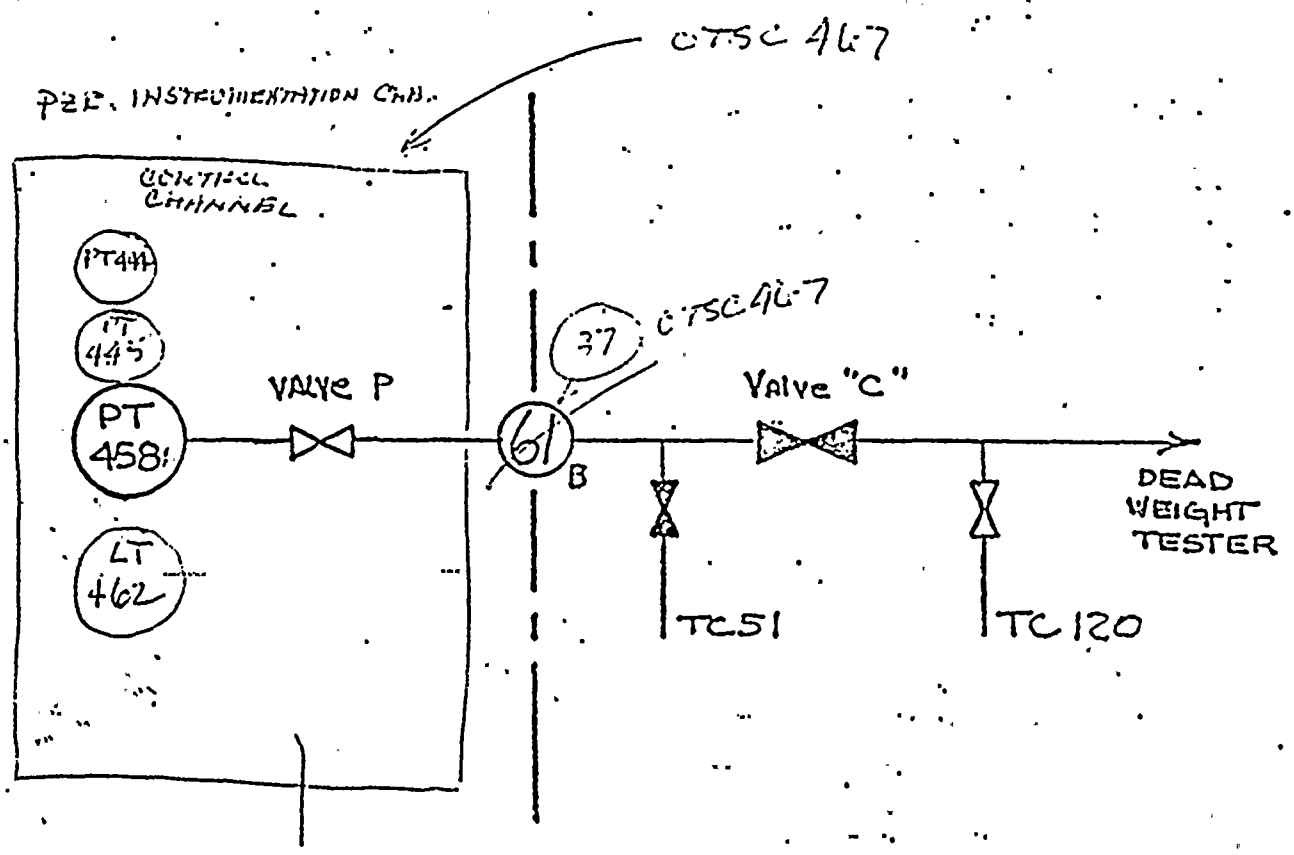
CTSC 467
PZR. INSTRUMENTATION CHN.
CONTROL CHANNEL
PT441
LT 445
PT 458
LT 462
VALVE P
37
CTSC 467
61
B
Valve "C"
DEAD WEIGHT TESTER
TC51
TC120

APPENDIX B

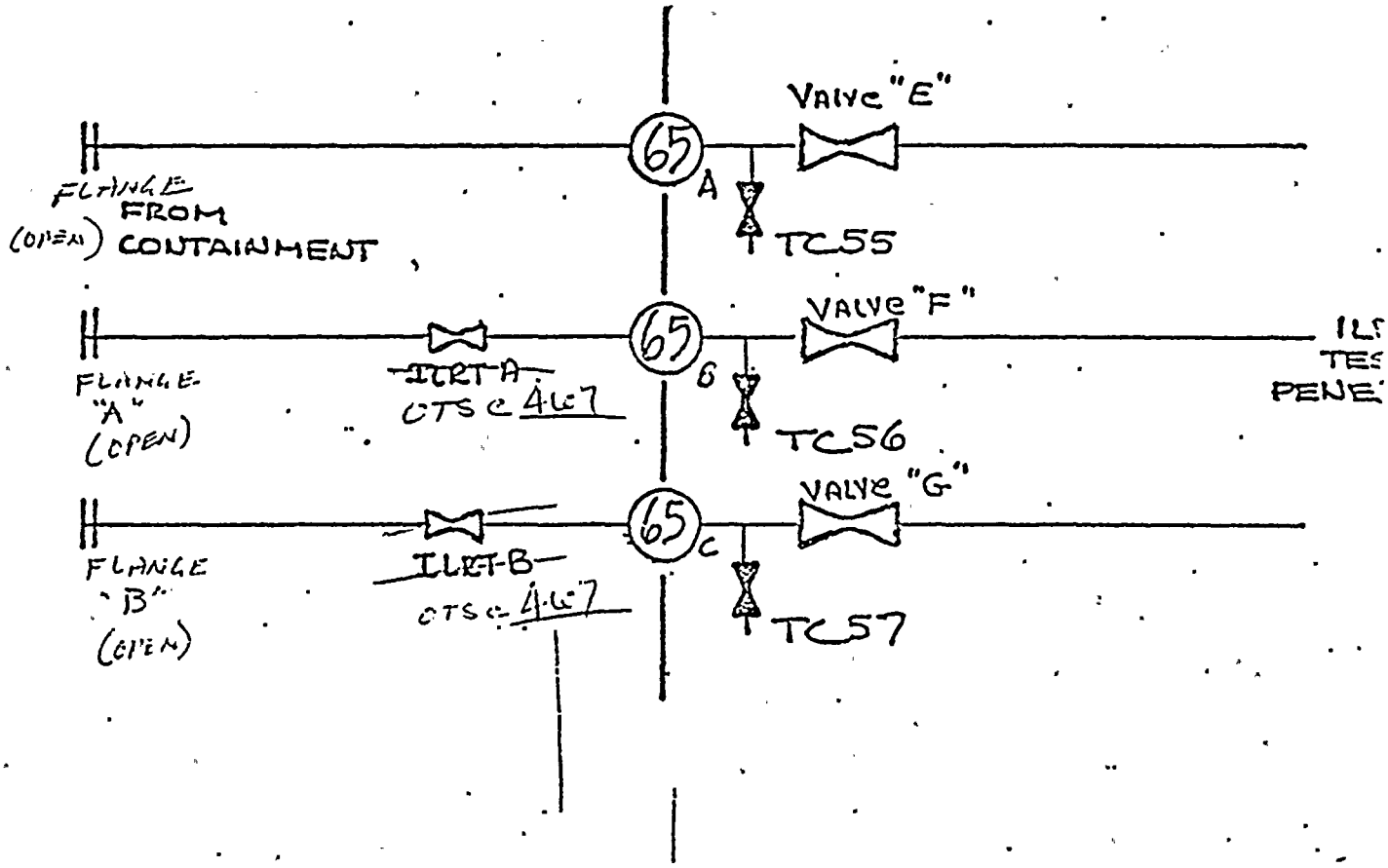
VALVE "E"
65
A
TC55
FLANGE
FROM
(OPEN) CONTAINMENT
VALVE "F"
65
B
TC56
FLANGE
"A"
(OPEN)
~~ILRT A~~
CTS c 4.6.7
VALVE "G"
65
C
TC57
FLANGE
"B"
(OPEN)
ILRT-B
CTS c 4.6.7

OUTSIDE CONTAINMENT VIEW

59 SIS to Loop B

45B, 45C, 45A — CC return from Emergency Cont. Coolers

44B, 44C, 44A — CC Supply to Emergency Cont. Coolers

22 CC from Norm. Cont. CRD & PRI. Shield coolers

23 Cont. Sump to WHT

53 PACVS H_2 Removal

24B, 24C, 24A — Charging to RCP Seals

25 RCR Seal Water Return

58 SIS to Loop A

14 Letdown to Non Reg. HX

15 Charging to Regen. HX

60 SIS to Loop C

64B "B" S.G. Sample

18 SIS to A&B Hot Legs

19A Cont. Spray

19B Cont. Spray

11 Alt. Low Head SIS

34 Service Air

43 CC from RCP Therm. Barriers

13 CC from Ex. Letdown HX

52 RCDT Pump Disch.

64C "C" S.G. Sample

10 RCDT&PRT to VH N_2 to RCDT

9 RRZ. Liqd. Samp.
20 A&B Hot Leg Sample
8 PRZ Stm Sample

42 N_2 to Acc's.

17 SIS Test Line

63 Inst. Air Bleed

16 PACVS H_2 Removal

7 PW to PRT & Stand Pipes

21 CC to Norm Cont, CRD & PRI Shield Coolers

64A "A" S.G. Sample

1 RHR out

3 CCW to AB&C RCPs

2 RHR In

47 PW Supply

12 CC to Excess Let-down HX

4 CC from RCP Oil Coolers

31 RCDT to G.A.
56 Spare
55 AB&C Acc. Samples

5 PRT to GA

6 N_2 to PRT

INSIDE CONTAINMENT VIEW

23 Cont. Sump to WHT

22 CC from Norm. Cont. CRD & PRT shield coolers

44A / 44C / 44B — CC Supply to Emergency Cont. Coolers

45A / 45C / 45B — CC Return from Emergency Cont. Coolers

59 SIS to Loop B

60 SIS to Loop C

15 Charging to Regen. HX

14 Letdown to non Regen. HX

58 SIS to Loop A

25 RCP Seal Water Return

24A / 24C / 24B — Charging to RCP Seals

53 PACVS H_2 Removal

52 RCDT Pump Dischi

13 CC from ex. Letdown HX

43 CC from RCP Therm. Barriers

34 Service Air

11 Alt. Low Head SIS

19B Cont. Spray

19A Cont. Spray

18 SIS to A & B Hot Legs

64B "B" S.G. Sample

21 CC to Norm Cont, CRD, PRT, Shield Coolers

7 PW to PRT & Stand Pipes

16 PACVS H_2 Removal

63 Inst. Air Bleed

17 SIS Test Line

42 N_2 to ACC's

9 PRZ. Liqd Samp — 8 PRZ STM Sample | 20 A&B Hot Leg Samples

10 RCDT&PRT To VH N_2 to RCDT

64C "C" S.G. Sample

6 N_2 to PRT | 5 PRT to G.A.

31 RCDT to G.A. — 55 A, B&C ACC. Samples | 56 Spare

4 CC from RCP Oil Coolers

12 CC to Excess Let down HX

47 PW Supply

2 RHR In

3 CCW to AB&C RCPs

1 RHR Out

64A "A" S.G. Sample

APPENDIX B

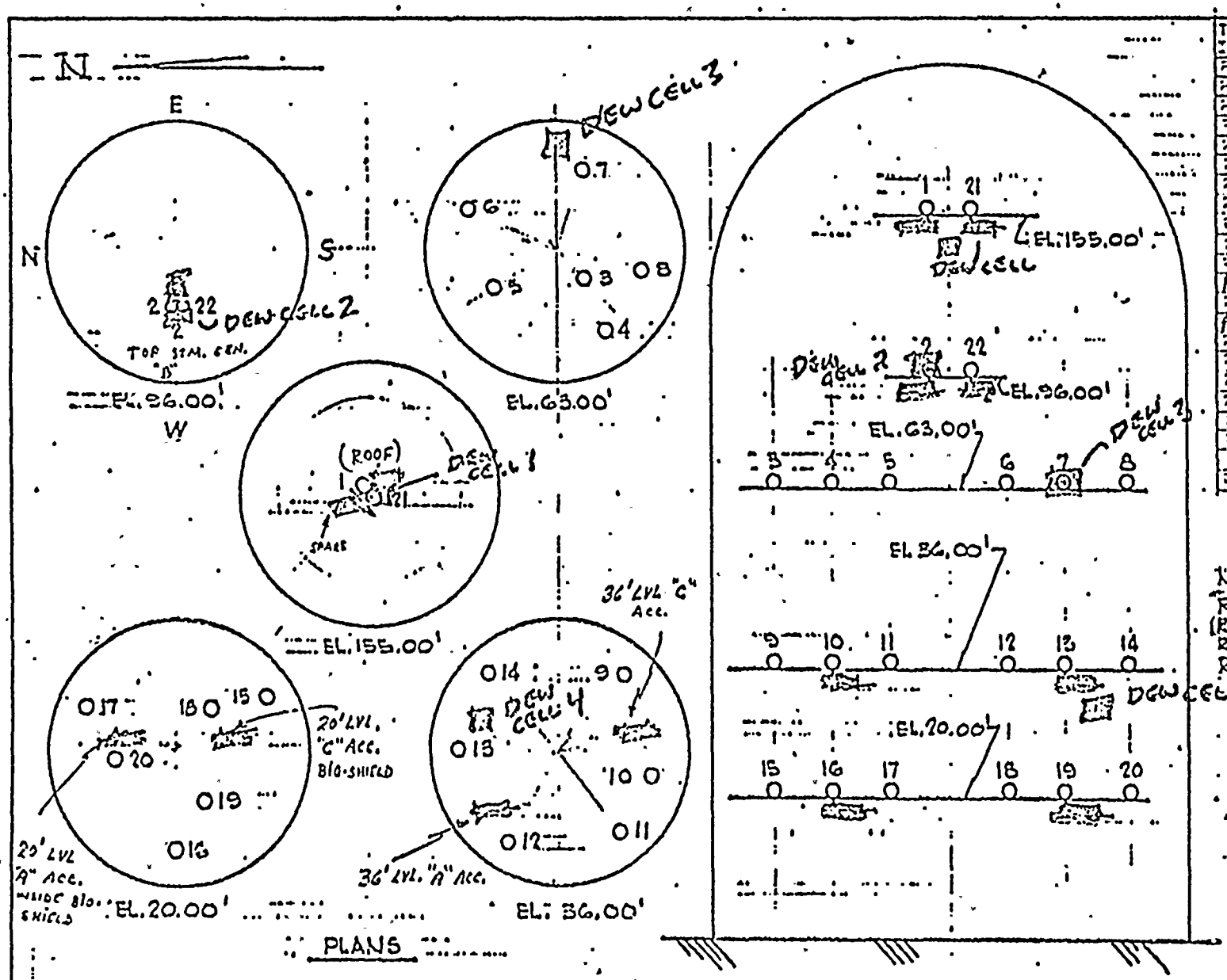

TEMP. INDICATOR	DEW. CELL	LOCATION
RTD-21	RHD-7	TOP OF GEN. B
RTD-1	RHD-1	" " "
RTD-2	RHD-2	TOP OF GEN. A
RTD-22	RHD-8	" " "
RTD-3		
RTD-4		
RTD-5		
RTD-6		
RTD-7		
RTD-8		
RTD-9		
RTD-10	RHD-1	[illegible]
RTD-11		
RTD-12	RHD-3	[illegible]
RTD-13		
RTD-14		
RTD-15	RHD-4	[illegible]
RTD-16		
RTD-17		
RTD-18		
RTD-19		
RTD-20	RHD-5	[illegible]

NOTE:
~~RHD-5 SPARE FOR RHD-3~~
~~RTD-7 SPARE FOR RHD-6~~
RTD-21 SPARE FOR RTD-1
RTD-22 SPARE FOR RTD-2

O = RTD (~~20~~ 22 ~~+ 4 SPARES~~)
~~A = RHD (6 + 2 SPARES)~~
□ = DEW CELLS (4)

Figure 1
TURKEY POINT PLANT - UNIT #3
REACTOR CONTAINMENT

APPENDIX C

DEFINITIONS AND ACCEPTANCE CRITERIA

APPENDIX C

Definitions and Acceptance Criteria:

P_a (50 psig) — The calculated peak containment internal pressure related to the design basis accident and specified in the Technical Specifications.

P_t ($\geq$ 25 psig) — The containment vessel reduced test pressure selected to measure the integrated leakage rate during periodic Type A tests.

L_{am}/L_{tm} (%/24 hrs.) — The total measured containment leakage rates by weight at P_a and P_t, respectively, obtained from testing the containment with components and systems in the state as close as practical to that which would exist under design basis accident conditions (e.g., vented, drained, flooded or pressurized).

L_a (0.25 %/day) — The maximum allowable leakage rate by weight at P_a (50 psig) as specified for preoperational tests in the Technical Specificatin and as specified for periodic tests in the operating license.

L_t (%/24 hrs.) — Maximum allowable test leakage rate by weight at P_t (25 psig) derived from the preoperational test data as follows:

$$L_t \leq L_a \frac{L_{tm}}{L_{am}}$$

where, $L_a = 0.2500$

$L_{tm} = 0.0667$

$L_{am} = 0.162$

therefore, $L_t \leq 0.2500 \dfrac{0.0667}{0.162}$

$\leq 0.2500 \quad (0.4117)$

$L_t \leq 0.1029$

L_{tm} - periodic test - For periodic Type A tests at P_t, L_{tm} shall be less than 0.75 L_t

$L_{tm} \leq 0.75 \quad (0.1029)$

$L_{tm} \leq 0.0772$ %/day by weight @ 25 psig

L_{am} - periodic test - For periodic Type A tests at P_a, L_{am} shall be less than 0.75 L_a

$L_{am} < 0.75 \quad (0.25)$

$L_{am} < 0.1875$%/day by weight @ 50 psig

The criteria listed below for either the short duration test or the twenty-four hour hour or longer duration test shall be met.

SHORT DURATION TEST ACCEPTANCE CRITERIA:

The Trend Report (BN-TOP-1 Total Time Calculations) based on total-time calculations indicates that the magnitude of the calculated leakage rate is tending to stabilize at a value less than 75% of the maximum allowable leakage rate.

Note: The magnitude of the calculated leakage rate may be increasing slightly as it tends to stabilize. In this case, the average rate of increase of the calculated leakage rate shall be determined from the accumulated data over the last 5 hours or last 20 data points, whichever provides more points. Using this average rate, the calculated leakage rate is then linearly extrapolated to the 24th hour data point. This extrapolated value of the calculated leakage rate must be less than 75% of the maximum allowable leakage rate.

The calculated leakage rate based on total-time calculations is less than 75% of the maximum allowable leakage rate.

The end-of-test upper 95% confidence limit for the calculated leakage rate, based on total-time calculations is less than the maximum allowable leakage rate.

The mean of the measured leakage rates, based on total-time calculations over the last 5 hours of test or last 20 data points (whichever provides more data), is less than the maximum allowable leakage rate.

The calculated leakage rate at the 95% confidence level, based on mass-point calculations is less than 75% of the maximum allowable leakage rate.

Data has been recorded at approximately equal intervals and in no case at intervals greater than one hour.

At least 20 data points are provided for proper statistical analysis.

The minimum test for duration is 8 hours.

At least two-thirds of the drybulb temperature sensors and the dewpoint temperature sensors, and one absolute pressure gauge are fully operational. Additionally, the ISG (See ANSI N274) shall not exceed 0.25 La.

TWENTY-FOUR-HOUR OR LONGER DURATION TEST ACCEPTANCE CRITERIA:

The calculated leakage rate and the end-of -test upper 95% confidence level, based on mass-point calculations (ANSI N274) is less than 75% of the maximum allowable leakage rate.

Data has been recorded at approximately equal intervals and in no case at intervals greater than one hour.

At least 20 data points are provided for proper statistical analysis.

The ISG (ANSI N274) does not exceed 0.25 La.

VERIFICATION TEST ACCEPTANCE CRITERIA

Imposed Leakage Rate Method

$(Lo + Ltm - 0.25\ lt) \leq Lc \leq (Lo + Ltm + 0.25\ Lt)$

where:

Lam = containment leakage rate calculated during presure ILRT.

Lt = maximum allowable leakage rate for reduced pressure ILRT.

Lc= containment leakage rate calculated during verification test.

Lo = leakage rate imposed on containment using flow measuring device.

$Lo = (1 + 0.25)\ Lt$

The verification test duration is at least four hours and at least 10 data points are used.

APPENDIX D

Data Sheets

OTSC 464

APPENDIX D

AMBIENT TEMPERATURE _____ HOUR NO. _____

BAROMETRIC PRESSURE _____ DATE _____

ROTAMETER FLOW _____ VERIFIED BY _____

	ILRT DATA SHEET			
TIME/SAMPLE NO.	/	/	/	/
RTD # 1				
RTD # 2				
RTD # 3				
RTD # 4				
RTD # 5				
RTD # 6				
RTD # 7				
RTD # 8				
RTD # 9				
RTD # 10				
RTD # 11				
RTD # 12				
RTD # 13				
RTD # 14				
RTD # 15				
RTD # 16				
RTD # 17				
RTD # 18				
RTD # 19				
RTD # 20				
RTD # 21				
RTD # 22				
RHD # 1				
RHD # 2				
RHD # 3				
RHD # 4				
RHD # 5				
RHD # 6				
RHD # 7				
RHD # 8				
RHD # 9				
RHD # 10				
Pressure # 1				
Pressure # 2 (SPARE)				

RTD - Resistance Temperature Detector, _____
RHD - Relative Humidity Detector, _____
Pressure, _____

Terminal Operator _____

APPENDIX D

AMBIENT TEMPERATURE 68° HOUR NO. _____

BAROMETRIC PRESSURE 30.14 DATE 3-18-79

ROTAMETER FLOW _____ VERIFIED BY _____

ILRT DATA SHEET				
TIME/SAMPLE NO.			20301	
RTD # 1			84.73	
RTD # 2			80.99	
RTD # 3			81.38	
RTD # 4			81.12	
RTD # 5			81.38	
RTD # 6			81.70	
RTD # 7			80.69	
RTD # 8			80.56	
RTD # 9			80.55	
RTD # 10			80.00	
RTD # 11			78.79	
RTD # 12			80.32	
RTD # 13			79.62	
RTD # 14			80.82	
RTD # 15			80.06	
RTD # 16			78.76	
RTD # 17			79.59	
RTD # 18			79.74	
RTD # 19			78.83	
RTD # 20			79.81	
RTD # 21 (SPARE)			85.03	
RTD # 22 (SPARE)			82.59	

D. Pt. # 1			.911	
D. Pt. # 2			.768	
D. Pt. # 3			.795	
D. Pt. # 4			.830	

Pressure # 1			34410	
Pressure # 2 (SPARE)			34440	

D. Pt. - Dew Point _____

RHD - Relative Humidity Detector, _____

Pressure, _____

Terminal Operator _____

APPENDIX D

AMBIENT TEMPERATURE 68°

BAROMETRIC PRESSURE 30.145

ROTAMETER FLOW

HOUR NO.

DATE 3/18/79

VERIFIED BY PBmmtt

ILRT DATA SHEET				
TIME/SAMPLE NO.	21001 2		21301 3	
RTD # 1	86.96		87.99	
RTD # 2	83.09		84.45	
RTD # 3	81.55		81.71	
RTD # 4	81.67		82.80	
RTD # 5	81.71		81.87	
RTD # 6	82.19		82.43	
RTD # 7	81.06		81.79	
RTD # 8	80.23		81.35	
RTD # 9	80.88		80.80	
RTD # 10	80.36		80.62	
RTD # 11	79.19		79.44	
RTD # 12	80.72		80.99	
RTD # 13	80.04		80.79	
RTD # 14	78.75		80.95	
RTD # 15	80.31		80.50	
RTD # 16	79.17		79.44	
RTD # 17	79.76		80.09	
RTD # 18	79.63		79.91	
RTD # 19	79.20		79.43	
RTD # 20	80.19		80.41	
RTD # 21 (SPARE)	86.76		87.62	
RTD # 22 (SPARE)	83.93		84.69	

D. Pt. # 1	.980		1.048	
D. Pt. # 2	.860		.866	
D. Pt. # 3	.793		.795	
D. Pt. # 4	.826		.806	

Pressure # 1	38532	42744	42744	
Pressure # 2 (SPARE)	38600	42780	42780	

D. Pt. - Dew Point 1. 29894 } 2140 PHB
2- 29851 } Vented T.P.S.

RHD - Relative Humidity Detector,

Pressure,

Terminal Operator

APPENDIX D

AMBIENT TEMPERATURE 68 HOUR NO. _____

BAROMETRIC PRESSURE 30.155 DATE 3/18/79

ROTAMETER FLOW _____ VERIFIED BY P Bennett

	ILRT DATA SHEET			
TIME/SAMPLE NO.	22001 4	/	22301 5	/
RTD # 1	88.66		84.22	
RTD # 2	85.54		81.25	
RTD # 3	81.84		82.14	
RTD # 4	82.31		82.49	
RTD # 5	82.04		81.88	
RTD # 6	82.53		82.42	
RTD # 7	81.46		81.57	
RTD # 8	81.55		81.73	
RTD # 9	81.21		81.34	
RTD # 10	80.76		80.42	
RTD # 11	79.63		79.75	
RTD # 12	81.07		81.21	
RTD # 13	80.41		79.94	
RTD # 14	81.19		81.30	
RTD # 15	80.~~26~~ 62 RHB		86.13	
RTD # 16	79.62		79.76	
RTD # 17	80.17		80.32	
RTD # 18	80.12		81.27	
RTD # 19	79.60		79.71	
RTD # 20	80.55		79.61	
RTD # 21 (SPARE)	88.78		88.32	
RTD # 22 (SPARE)	85.42		86.15	

D. Pt. # 1	1.108		1.156	
D. Pt. # 2	.945		1.046	
D. Pt. # 3	.804		.8170	
D. Pt. # 4	.815		.8140	

Pressure # 1	46845		51045	
Pressure # 2 (SPARE)	47025		51274	

D. Pt. - Dew Point _____

RHD - Relative Humidity Detector, _____

Pressure, _____

Terminal Operator _____

APPENDIX D

AMBIENT TEMPERATURE 67°

HOUR NO.

BAROMETRIC PRESSURE 30.130

DATE 18 MAR 79

ROTAMETER FLOW

VERIFIED BY P Bennett

ILRT DATA SHEET				
TIME/SAMPLE NO.	2300 / 6	/	2330 / 7	/
RTD # 1	89.61		89.98	/
RTD # 2	81.71		86.97	/
RTD # 3	82.27	/	82.36	/
RTD # 4	82.66		82.76	
RTD # 5	82.13		82.08	
RTD # 6	82.43		82.55	
RTD # 7	81.66		81.50	
RTD # 8	81.67		82.08	
RTD # 9	81.44		81.51	
RTD # 10	81.05		81.16	
RTD # 11	79.85		79.98	
RTD # 12	81.25		81.35	
RTD # 13	80.57		80.66	
RTD # 14	81.12		81.13	
RTD # 15	80.83		80.94	
RTD # 16	79.88		79.99	
RTD # 17	78.00		80.08	
RTD # 18	80.35		80.49	
RTD # 19	79.80		79.90	
RTD # 20	80.67		80.73	
RTD # 21 (SPARE)	89.65		89.82	
RTD # 22 (SPARE)	86.57		86.99	
D. Pt. # 1	1.207	/	1.253	/
D. Pt. # 2	1.143		1.173	
D. Pt. # 3	.832		.853	
D. Pt. # 4	.823		.839	
Pressure # 1	55145		59300	
Pressure # 2 (SPARE)	55430	59691	59620	/

D. Pt. - Dew Point

RHD - Relative Humidity Detector,

Pressure,

Terminal Operator

APPENDIX D

AMBIENT TEMPERATURE 66°

HOUR NO.

BAROMETRIC PRESSURE 30.13

DATE 3/19/79

ROTAMETER FLOW

VERIFIED BY PBennett

	ILRT DATA SHEET			
TIME/SAMPLE NO.	00001 8	00301 9	0105 ~~0601~~ 10	0130 11
RTD # 1	90.23	90.42	90.63	90.84
RTD # 2	87.28	87.55	87.83	88.06
RTD # 3	82.41	82.43	82.53	82.55
RTD # 4	82.84	82.93	82.93	82.97
RTD # 5	82.16	82.20	82.19	82.~~26~~27
RTD # 6	82.63	82.60	82.65	82.72
RTD # 7	82.01	82.01	82.32	82:37
RTD # 8	82.26	82.20	82.20	82.31
RTD # 9	81.59	81.60	81.73	81.78
RTD # 10	81.28	81.28	81.35	81.41
RTD # 11	80.05	~~81.35~~ 80.14	80.27	80.35
RTD # 12	81.40	80.72	81.41	81.45
RTD # 13	80.75	81.02	80.82	80.86
RTD # 14	81.15	81.07	81.11	81.12
RTD # 15	81.09	80.15	81.14	81.21
RTD # 16	80.68	80.49	80.24	80.32
RTD # 17	80.56	80.61	80.57	80.58
RTD # 18	80.57	79.95	80.72	80.79
RTD # 19	79.97	80.76	80.08	80.15
RTD # 20	80.75	80.42	80.83	80.86
RTD # 21 (SPARE)	90.33	87.56	90.67	90.54
RTD # 22 (SPARE)	87.32		87.77	87.99

D. Pt. # 1	1.309	1.317	1.305	1.405
D. Pt. # 2	1.187	1.162	1.304	1.230
D. Pt. # 3	.881	.878	.907	.917
D. Pt. # 4	.856	.862	.883	.906

Pressure # 1	63470	67515	72150	75675
Pressure # 2 (SPARE)	62870	67475	72660	76233

D. Pt. - Dew Point

RHD - Relative Humidity Detector,

Pressure,

Terminal Operator

APPENDIX D

AMBIENT TEMPERATURE 65°

HOUR NO.

BAROMETRIC PRESSURE 30.11

DATE 3/19/79

ROTAMETER FLOW

VERIFIED BY P Bennett

	ILRT DATA SHEET			
TIME/SAMPLE NO.	0200 / 12	0230 / 13	0300 / 14	0330 / 15
RTD # 1	91.65	91.23		
RTD # 2	88.31	88.52		
RTD # 3	82.65	82.72		
RTD # 4	83.03	83.04		
RTD # 5	82.33	82.41		
RTD # 6	82.79	82.91		
RTD # 7	82.51	82.56		
RTD # 8	82.42	82.49		
RTD # 9	81.75	81.80		
RTD # 10	81.44	81.51		
RTD # 11	80.42	80.49		
RTD # 12	81.53	81.56		
RTD # 13	80.91	80.94		
RTD # 14	81.15	81.16		
RTD # 15	81.26	81.33		
RTD # 16	80.40	80.50		
RTD # 17	80.61	80.61		
RTD # 18	80.87	80.95		
RTD # 19	80.22	80.28		
RTD # 20	80.92	81.00		
RTD # 21 (SPARE)	91.07	91.24		
RTD # 22 (SPARE)	88.15	88.47		
D. Pt. # 1	1.424	1.455		
D. Pt. # 2	1.330	1.464		
D. Pt. # 3	0.936	.454		
D. Pt. # 4	0.918	.936		
Pressure # 1	79860	83944		
Pressure # 2 (SPARE)	80426	~~[illegible]~~ 84625 PH		

D. Pt. - Dew Point

RHD - Relative Humidity Detector,

Pressure,

Terminal Operator

APPENDIX D

AMBIENT TEMPERATURE 63°

HOUR NO. 1

BAROMETRIC PRESSURE 30.095

DATE 3/19/79

ROTAMETER FLOW

VERIFIED BY P Bennett

STABILIZATION START

	ILRT DATA SHEET			
TIME/SAMPLE NO.	03001 1	03151 2	03301 3	03451 4
RTD # 1	90.64	85.48	87.06	86.68
RTD # 2	88.24	86.49	85.83	84.63
RTD # 3	82.22	81.38	81.68	80.91
RTD # 4	82.57	81.69	81.29	81.09
RTD # 5	82.23	81.54	81.24	81.04
RTD # 6	82.35	81.53	81.11	80.85
RTD # 7	82.25	81.24	80.91	80.56
RTD # 8	82.05	81.23	80.93	80.76
RTD # 9	81.93	80.60	80.44	80.30
RTD # 10	81.14	80.46	80.22	80.11
RTD # 11	80.55	80.11	79.94	79.83
RTD # 12	80.81	80.06	79.82	79.71
RTD # 13	80.34	79.81	79.64	79.53
RTD # 14	80.21	79.80	79.67	79.59
RTD # 15	80.72	80.13	80.00	79.93
RTD # 16	80.30	79.92	79.75	79.65
RTD # 17	80.65	79.59	79.40	79.32
RTD # 18	80.63	80.25	80.10	80.00
RTD # 19	79.98	79.61	79.47	79.38
RTD # 20	80.34	79.65	79.47	79.36
RTD # 21 (SPARE)	90.22	88.21	86.88	85.91
RTD # 22 (SPARE)	87.87	86.15	84.85	83.84

D. Pt. # 1	1.501	1.461	1.450	1.451
D. Pt. # 2	1.445	1.332	1.332	1.399
D. Pt. # 3	.959	.948	.944	.953
D. Pt. # 4	.957	.976	.985	1.005

Pressure # 1	87063	86864	86659	86557
Pressure # 2 (SPARE)	87773	87569	87370	87257

D. Pt. - Dew Point

RHD - Relative Humidity Detector,

Pressure,

Terminal Operator

APPENDIX D

AMBIENT TEMPERATURE 62°

HOUR NO. 2

BAROMETRIC PRESSURE 30.095

DATE 3/19/79

ROTAMETER FLOW

VERIFIED BY P Bennett

	ILRT DATA SHEET			
TIME/SAMPLE NO.	0400 1 5	0415 1 6	0430 1 7	0445 1 8
RTD # 1	85.37	84.83	84.41	84.05
RTD # 2	83.29	82.75	82.36	82.01
RTD # 3	81.74	80.69	80.53	80.45
RTD # 4	80.95	80.81	80.72	80.63
RTD # 5	80.84	80.75	80.68	80.60
RTD # 6	80.68	80.57	80.51	80.43
RTD # 7	80.45	80.34	80.24	80.15
RTD # 8	80.62	80.52 44	80.43	80.36
RTD # 9	80.23	80.18	80.17	80.12
RTD # 10	80.05	79.97	79.94	79.89
RTD # 11	79.77	79.71	79.66	79.61
RTD # 12	79.62	79.56	79.50	79.45
RTD # 13	79.47	79.39	79.33	79.27
RTD # 14	79.54	79.47	79.45	79.42
RTD # 15	79.87	79.83	79.78	79.76
RTD # 16	79.60	79.53	79.51	79.47
RTD # 17	79.24	79.20	79.13	79.08
RTD # 18	79.43	79.36	79.33	79.19
RTD # 19	79.34	79.28	79.24	79.22
RTD # 20	79.32	79.27	79.21	79.19
RTD # 21 (SPARE)	85.26	84.75	84.39	84.04
RTD # 22 (SPARE)	83.12	82.63	82.22	81.92

D. Pt. # 1	1.451	1.453	1.441	1.471
D. Pt. # 2	1.439	1.356	1.378	1.297
D. Pt. # 3	.991	1.011	1.024	1.039
D. Pt. # 4	1.021	1.042	1.060	1.075

Pressure # 1	86481	~~87481~~ 86421	86373	86332
Pressure # 2 (SPARE)	87181	87122	87073	87031

D. Pt. - Dew Point

RHD - Relative Humidity Detector,

Pressure,

Terminal Operator

APPENDIX D

AMBIENT TEMPERATURE 61°

HOUR NO. 3

BAROMETRIC PRESSURE 30.095

DATE 3/19/79

ROTAMETER FLOW

VERIFIED BY

	ILRT DATA SHEET			
TIME/SAMPLE NO.	0500 / 9	0515 / 10	0530 / 11	0545 / 12
RTD # 1	83.77	83.52	83.29	83.03
RTD # 2	81.78	81.57	81.38	81.20
RTD # 3	80.32	80.34	80.29	80.24
RTD # 4	80.55	80.48	80.43	80.38
RTD # 5	80.53	80.46	80.41	80.35
RTD # 6	80.35	80.29	80.22	80.15
RTD # 7	80.09	80.07	80.00	79.97
RTD # 8	80.29	80.24	80.18	80.13
RTD # 9	80.09	80.05	80.01	80.04
RTD # 10	79.85	79.83	79.79	79.76
RTD # 11	79.57	79.55	79.51	79.47
RTD # 12	79.43	79.40	79.36	79.31
RTD # 13	79.24	79.19	79.16	79.13
RTD # 14	79.39	79.38	79.35	79.33
RTD # 15	79.73	79.70	79.68	79.66
RTD # 16	79.45	79.42	79.41	79.37
RTD # 17	79.05	79.01	78.99	78.96
RTD # 18	79.76	79.73	79.71	79.67
RTD # 19	79.18	79.17	79.14	79.11
RTD # 20	79.15	79.12	79.10	79.05
RTD # 21 (SPARE)	83.75	83.50	83.29	83.08
RTD # 22 (SPARE)	81.66	81.45	81.26	81.09

D. Pt. # 1	1.440	1.432	1.436	1.429
D. Pt. # 2	1.314	1.358	1.326	1.316
D. Pt. # 3	1.054	1.080	1.097	1.112
D. Pt. # 4	1.099	1.118	1.135	1.152

Pressure # 1	86.299	86267	86241	86212
Pressure # 2 (SPARE)	~~87.0~~ 86997	86965	86933	86913

D. Pt. - Dew Point

RHD - Relative Humidity Detector,

Pressure,

Terminal Operator

APPENDIX D

AMBIENT TEMPERATURE 61°

HOUR NO. 4

BAROMETRIC PRESSURE 30.110

DATE 3/19/79

ROTAMETER FLOW

VERIFIED BY

	ILRT DATA SHEET			
TIME/SAMPLE NO.	06001 13	06151 14	06301 15	06451 16
RTD # 1	82.89	82.72	82.56	82.42
RTD # 2	81.07	80.95	80.85	80.76
RTD # 3	80.20	80.17	80.13	80.11
RTD # 4	80.33	80.28	80.24	80.20
RTD # 5	80.30	80.25	80.20	80.17
RTD # 6	80.11	80.07	80.02	79.99
RTD # 7	79.95	79.90	79.89	79.87
RTD # 8	80.09	80.05	80.02	79.98
RTD # 9	80.04	80.01	80.01	80.02
RTD # 10	79.74	79.72	79.70	79.70
RTD # 11	79.46	79.42	79.42	79.40
RTD # 12	79.30	79.28	79.27	79.26
RTD # 13	79.10	79.09	79.06	79.04
RTD # 14	79.32	79.30	79.30	79.29
RTD # 15	79.63	79.62	79.60	79.59
RTD # 16	79.37	79.36	79.33	79.34
RTD # 17	78.93	78.92	78.90	78.89
RTD # 18	79.65	79.64	79.62	79.60
RTD # 19	79.09	79.07	79.07	79.06
RTD # 20	79.05	79.04	79.02	79.02
RTD # 21 (SPARE)	82.90	82.73	82.58	82.43
RTD # 22 (SPARE)	80.96	80.85	80.77	80.70

D. Pt. # 1	1.429	1.425	1.422	1.422
D. Pt. # 2	1.306	1.214	1.206	1.218
D. Pt. # 3	1.131	1.147	1.164	1.178
D. Pt. # 4	1.172	1.186	1.198	1.209

Pressure # 1	86195	86175	86157	86141
Pressure # 2 (SPARE)	86891	86871	86853	86837

D. Pt. - Dew Point

RHD - Relative Humidity Detector,

Pressure,

Terminal Operator

APPENDIX D

AMBIENT TEMPERATURE 61° HOUR NO. 5

BAROMETRIC PRESSURE 30.115 DATE 3/19/79

ROTAMETER FLOW _____ VERIFIED BY _____

ILRT DATA SHEET				
TIME/SAMPLE NO.	0700 / 17	0715 / 18	07301 19	0745 / 20
RTD # 1	82.28	82.14	82.03	81.92
RTD # 2	80.66	80.57	80.49	80.43
RTD # 3	80.07	80.04	80.02	80.00
RTD # 4	80.17	80.12	80.10	80.08
RTD # 5	80.12	80.09	80.05	80.03
RTD # 6	79.94	79.91	79.87	79.85
RTD # 7	79.84	79.83	79.82	79.80
RTD # 8	79.94	79.90	79.88	79.86
RTD # 9	80.02	79.98	80.01	79.99
RTD # 10	79.70	79.66	79.62	79.64
RTD # 11	79.37	79.36	79.34	79.33
RTD # 12	79.22	79.21	79.21	79.20
RTD # 13	79.03	79.02	79.00	78.99
RTD # 14	79.26	79.26	79.26	79.25
RTD # 15	79.57	79.57	79.55	79.54
RTD # 16	79.33	79.31	79.29	79.30
RTD # 17	78.87	78.85	78.84	78.59
RTD # 18	79.57	79.56	79.53	79.52
RTD # 19	79.04	79.02	79.02	79.01
RTD # 20	79.00	78.99	78.97	78.97
RTD # 21 (SPARE)	82.29	82.16	82.05	81.95
RTD # 22 (SPARE)	80.60	80.53	80.45	80.39

D. Pt. # 1	1.420	1.418	1.415	1.414
D. Pt. # 2	1.208	1.207	1.217	1.220
D. Pt. # 3	1.185	1.201	1.210	1.216
D. Pt. # 4	1.221	1.228	1.236	1.242

Pressure # 1	86125	86110.	86107	86085
Pressure # 2 (SPARE)	86820	86805	86792	86780

D. Pt. - Dew Point _____

RHD - Relative Humidity Detector, _____

Pressure, _____

Terminal Operator _____

APPENDIX D

AMBIENT TEMPERATURE 68°

HOUR NO. 6

BAROMETRIC PRESSURE 30.14

DATE 3/19/79

ROTAMETER FLOW

VERIFIED BY

	ILRT DATA SHEET			
TIME/SAMPLE NO.	0800 / 21	0815 / 22	0830 / 23	0845 / 24
RTD # 1	81.81	81.71	81.61	81.53
RTD # 2	80.36	80.29	80.25	80.20
RTD # 3	79.98	79.97	79.94	79.93
RTD # 4	80.05	80.01	79.99	79.96
RTD # 5	80.00	79.95	79.94	79.91
RTD # 6	79.82	79.78	79.75	79.72
RTD # 7	79.79	79.77	79.75	79.74
RTD # 8	79.83	79.80	79.78	79.76
RTD # 9	79.93	79.93	79.94	79.92
RTD # 10	79.62	79.61	79.60	79.60
RTD # 11	79.31	79.29	79.28	79.26
RTD # 12	79.18	79.16	79.15	79.16
RTD # 13	78.99	78.97	78.97	78.95
RTD # 14	79.23	79.22	79.21	79.21
RTD # 15	79.54	79.51	79.51	79.50
RTD # 16	79.28	79.27	79.24	79.25
RTD # 17	78.84	78.83	78.82	78.81
RTD # 18	79.50	79.48	79.47	79.46
RTD # 19	78.99	78.97	78.96	78.96
RTD # 20	78.95	78.95	78.94	78.94
RTD # 21 (SPARE)	81.84	81.74	81.65	81.56
RTD # 22 (SPARE)	80.32	80.26	80.21	80.16

D. Pt. # 1	1.413	1.413	1.407	1.409
D. Pt. # 2	1.223	1.223	1.228	1.230
D. Pt. # 3	1.220	1.220	1.224	1.229
D. Pt. # 4	1.244	1.248	1.251	1.253

Pressure # 1	86073	86063	86052	86042
Pressure # 2 (SPARE)	86768	86757	86746	86736

D. Pt. - Dew Point

RHD - Relative Humidity Detector,

Pressure,

Terminal Operator

APPENDIX D

AMBIENT TEMPERATURE 70°

HOUR NO.

BAROMETRIC PRESSURE 30.14

DATE 19 MAR 79

ROTAMETER FLOW

VERIFIED BY

	ILRT DATA SHEET			
TIME/SAMPLE NO.	0900/ 25	0915/ 26	0930/ 27	0945/ 28
RTD # 1	81.46	81.37	81.30	81.22
RTD # 2	80.16	80.13	80.08	80.06
RTD # 3	79.91	79.89	79.88	79.87
RTD # 4	79.94	79.92	79.91	79.88
RTD # 5	79.88	79.86	79.83	79.81
RTD # 6	79.70	79.68	79.66	79.63
RTD # 7	79.74	79.72	79.71	79.70
RTD # 8	79.75	79.72	79.71	79.70
RTD # 9	79.92	79.91	79.90	79.88
RTD # 10	79.58	79.58	79.57	79.56
RTD # 11	79.25	79.24	79.24	79.23
RTD # 12	79.14	79.13	79.13	79.12
RTD # 13	78.96	78.96	78.94	78.95
RTD # 14	79.21	79.22	79.22	79.21
RTD # 15	79.50	79.49	79.49	79.48
RTD # 16	79.25	79.24	79.23	79.23
RTD # 17	78.81	78.80	78.81	78.79
RTD # 18	79.45	79.45	79.44	79.43
RTD # 19	78.95	78.94	78.95	78.94
RTD # 20	78.93	78.93	78.93	78.93
RTD # 21 (SPARE)	81.48	81.41	81.34	81.27
RTD # 22 (SPARE)	80.12	80.09	80.05	80.02

D. Pt. # 1	1.407	1.405	1.403	1.403
D. Pt. # 2	1.233	1.237	1.239	1.242
D. Pt. # 3	1.234	1.238	1.235	1.246
D. Pt. # 4	1.255	1.253	1.259	1.262

Pressure # 1	86033	86025	86017	86012
Pressure # 2 (SPARE)	86726	86718	86710	8702

D. Pt. - Dew Point

RHD - Relative Humidity Detector,

Pressure,

Terminal Operator

APPENDIX D

AMBIENT TEMPERATURE 72° HOUR NO. _____

BAROMETRIC PRESSURE 30.15 DATE 19 MAR 79

ROTAMETER FLOW _____ VERIFIED BY _____

	ILRT DATA SHEET			
TIME/SAMPLE NO.	1000 / 29	1015 / 30	1030 / 31	1045 / 32
RTD # 1	81.16	81.07	81.03	80.96
RTD # 2	80.03	79.99	79.97	79.94
RTD # 3	79.85	79.85	79.82	79.80
RTD # 4	79.87	79.85	79.85	79.84
RTD # 5	79.80	79.77	79.76	79.73
RTD # 6	79.61	79.59	79.56	79.54
RTD # 7	79.70	79.70	79.68	79.66
RTD # 8	79.68	79.67	79.65	79.64
RTD # 9	79.91	79.87	79.82	79.87
RTD # 10	79.55	79.54	79.53	79.52
RTD # 11	79.23	79.22	79.20	79.20
RTD # 12	79.12	79.12	79.11	79.11
RTD # 13	78.95	78.93	78.93	78.93
RTD # 14	79.21	79.20	79.20	79.19
RTD # 15	79.48	79.47	79.47	79.46
RTD # 16	79.23	79.23	79.23	79.20
RTD # 17	78.81	78.81	78.81	78.79
RTD # 18	79.43	79.42	79.42	79.42
RTD # 19	78.94	78.93	78.93	78.92
RTD # 20	78.93	78.92	78.92	78.92
RTD # 21 (SPARE)	81.20	81.14	81.08	81.01
RTD # 22 (SPARE)	79.99	79.96	79.93	79.90

D. Pt. # 1	1.398	1.400	1.393	1.391
D. Pt. # 2	1.248	1.247	1.249	1.253
D. Pt. # 3	1.247	1.246	1.252	1.250
D. Pt. # 4	1.259	1.263	1.265	1.268

Pressure # 1	86002	85995	85988	85980
Pressure # 2 (SPARE)	86694	86688	86680	86674

D. Pt. - Dew Point _____

RHD - Relative Humidity Detector, _____

Pressure, _____

Terminal Operator _____

APPENDIX D

AMBIENT TEMPERATURE 72° HOUR NO. _____

BAROMETRIC PRESSURE 30.15 DATE 19 MAR 79

ROTAMETER FLOW _____ VERIFIED BY _____

	ILRT DATA SHEET			
TIME/SAMPLE NO.	1100 / 33	1115 / 34	1130 / 35	1145 / 36
RTD # 1	80.90	80.84	80.79	80.75
RTD # 2	79.91	79.88	79.86	79.85
RTD # 3	79.79	79.78	79.77	79.77
RTD # 4	79.83	79.82	79.81	79.82
RTD # 5	79.72	79.70	79.69	79.69
RTD # 6	79.52	79.50	79.47	79.47
RTD # 7	79.66	79.65	79.64	79.64
RTD # 8	79.63	79.61	79.61	79.60
RTD # 9	79.83	79.88	79.84	79.86
RTD # 10	79.51	79.49	79.49	79.49
RTD # 11	79.18	79.18	79.17	79.17
RTD # 12	79.09	79.10	79.11	79.10
RTD # 13	78.93	78.94	78.98	78.96
RTD # 14	79.18	79.18	79.19	79.11
RTD # 15	79.46	79.46	79.47	79.46
RTD # 16	79.20	79.21	79.21	79.21
RTD # 17	78.80	78.81	78.80	78.82
RTD # 18	79.42	79.42	79.42	79.43
RTD # 19	78.92	78.90	78.91	78.91
RTD # 20	78.92	78.91	78.92	78.93
RTD # 21 (SPARE)	80.96	80.90	80.85	80.81
RTD # 22 (SPARE)	79.86	79.84	79.82	79.81

D. Pt. # 1	1.390	1.387	1.385	1.385
D. Pt. # 2	1.255	1.260	1.262	1.263
D. Pt. # 3	1.264	1.260	1.271	1.270
D. Pt. # 4	1.272	1.274	1.277	1.279

Pressure # 1	85974	85969	85963	85958
Pressure # 2 (SPARE)	86667	86661	86655	86650

D. Pt. - Dew Point _____

RHD - Relative Humidity Detector, _____

Pressure, _____

Terminal Operator _____

APPENDIX D

AMBIENT TEMPERATURE 72 HOUR NO. _____

BAROMETRIC PRESSURE 30.14 DATE 19 MAR 79

ROTAMETER FLOW _____ VERIFIED BY _____

	ILRT DATA SHEET			
TIME/SAMPLE NO.	1200/ 37	1215/ 38	1230/ 39	1245/ 40
RTD # 1	80.70	80.65	80.57	80.55
RTD # 2	79.82	79.80	79.79	79.76
RTD # 3	79.76	79.75	79.74	79.72
RTD # 4	79.81	79.81	79.79	79.79
RTD # 5	79.67	79.66	79.65	79.64
RTD # 6	79.45	79.43	79.41	79.41
RTD # 7	79.64	79.64	79.63	79.62
RTD # 8	79.60	79.58	79.57	79.56
RTD # 9	79.82	79.84	79.82	79.84
RTD # 10	79.48	79.49	79.48	79.47
RTD # 11	79.17	79.17	79.15	79.15
RTD # 12	79.10	79.10	79.09	79.09
RTD # 13	78.96	78.95	78.89	78.95
RTD # 14	79.19	79.19	79.18	79.18
RTD # 15	79.47	79.46	79.45	79.46
RTD # 16	79.20	79.20	79.20	79.20
RTD # 17	78.81	78.81	78.81	78.82
RTD # 18	79.43	79.43	79.44	79.45
RTD # 19	78.92	78.91	78.91	78.90
RTD # 20	78.92	78.92	78.92	78.92
RTD # 21 (SPARE)	80.71	80.71	80.67	80.67
RTD # 22 (SPARE)	79.79	79.75	79.74	79.72

D. Pt. # 1	1.383	1.378	1.380	1.375
D. Pt. # 2	1.268	1.270	1.274	1.272
D. Pt. # 3	1.269	1.277	1.276	1.281
D. Pt. # 4	1.284	1.287	1.288	1.290

Pressure # 1	85953	85948	85944	85939
Pressure # 2 (SPARE)	86645	86640	86635	86631

D. Pt. - Dew Point _____

RHD - Relative Humidity Detector, _____

Pressure, _____

Terminal Operator _____

APPENDIX D

AMBIENT TEMPERATURE 72 HOUR NO. _____

BAROMETRIC PRESSURE 30.12 DATE 19 MAR 79

ROTAMETER FLOW _____ VERIFIED BY _____

	ILRT DATA SHEET			
TIME/SAMPLE NO.	1300 / 41	1315 / 42	1330 43	1345 / 44
RTD # 1	80.50	80.47	80.42	80.38
RTD # 2	79.74	79.72	79.70	79.68
RTD # 3	79.72	79.71	79.71	79.70
RTD # 4	79.76	79.77	79.75	79.73
RTD # 5	79.62	79.61	79.60	79.58
RTD # 6	79.38	79.37	79.35	79.34
RTD # 7	79.62	79.61	79.61	79.60
RTD # 8	79.55	79.54	79.53	79.52
RTD # 9	79.78	79.80	79.79	79.70
RTD # 10	79.46	79.46	79.45	79.45
RTD # 11	79.15	79.13	79.14	79.13
RTD # 12	79.09	79.08	79.08	79.07
RTD # 13	78.95	78.93	78.93	78.94
RTD # 14	79.17	79.16	79.16	79.16
RTD # 15	79.45	79.45	79.45	79.45
RTD # 16	79.19	79.20	79.19	79.19
RTD # 17	78.80	78.81	78.80	78.00
RTD # 18	79.45	79.46	79.46	79.47
RTD # 19	78.90	78.89	78.89	78.89
RTD # 20	78.91	78.92	78.91	78.90
RTD # 21 (SPARE)	80.57	80.53	80.49	80.45
RTD # 22 (SPARE)	79.70	79.68	79.66	79.63

D. Pt. # 1	1.374	1.372	1.365	1.369
D. Pt. # 2	1.280	1.283	1.280	1.284
D. Pt. # 3	1.275	1.293	1.292	1.292
D. Pt. # 4	1.294	1.294	1.299	1.301

Pressure # 1	85935	85931	85927	85924
Pressure # 2 (SPARE)	86627	86622	86618	86613

D. Pt. - Dew Point _____

RHD - Relative Humidity Detector, _____

Pressure, _____

Terminal Operator _____

APPENDIX D

AMBIENT TEMPERATURE 72 HOUR NO. _____

BAROMETRIC PRESSURE 30.10 DATE 19 MAR 79

ROTAMETER FLOW _____ VERIFIED BY _____

	ILRT DATA SHEET			
TIME/SAMPLE NO.	45 / 1400	46 / 1415	47 / 1430	48 / 1445
RTD # 1	80.34	80.29	80.26	80.27
RTD # 2	79.66	79.64	79.63	79.67
RTD # 3	79.69	79.67	79.68	79.67
RTD # 4	79.73	79.72	79.71	79.70
RTD # 5	79.57	79.56	79.55	79.55
RTD # 6	79.33	79.31	79.30	79.28
RTD # 7	79.60	79.59	79.59	79.58
RTD # 8	79.52	79.51	79.49	79.49
RTD # 9	79.82	79.79	79.80	79.79
RTD # 10	79.45	79.44	~~78.~~ 79.44	79.43
RTD # 11	79.12	79.11	79.12	79.11
RTD # 12	79.06	79.06	79.06	79.05
RTD # 13	78.92	78.92	78.93	78.93
RTD # 14	79.16	79.16	79.15	79.15
RTD # 15	79.45	79.43	79.44	79.43
RTD # 16	79.18	79.18	79.18	79.16
RTD # 17	78.79	78.80	78.79	78.78
RTD # 18	79.47	79.47	79.49	79.48
RTD # 19	78.89	78.88	78.88	78.88
RTD # 20	78.91	78.90	78.91	78.90
RTD # 21 (SPARE)	80.41	80.35	80.33	80.29
RTD # 22 (SPARE)	79.62	79.59	79.57	79.56

D. Pt. # 1	1.364	1.361	1.359	1.354
D. Pt. # 2	1.291	1.291	1.297	1.298
D. Pt. # 3	1.294	1.296	1.303	1.302
D. Pt. # 4	1.306	1.307	1.310	1.311

Pressure # 1	85919	85916	85913	85909
Pressure # 2 (SPARE)	86609	86604	86603	86599

D. Pt. - Dew Point _____

RHD - Relative Humidity Detector, _____

Pressure, _____

Terminal Operator _____

APPENDIX D

AMBIENT TEMPERATURE 72 HOUR NO. _____

BAROMETRIC PRESSURE 30.095 DATE 19 MAR 79

ROTAMETER FLOW _____ VERIFIED BY _____

	ILRT DATA SHEET			
TIME/SAMPLE NO.	15001 49	15151 50	1530 51	15451 52
RTD # 1	80.18	80.15	80.11	80.08
RTD # 2	79.60	79.59	79.57	79.56
RTD # 3	79.66	79.65	79.62	79.63
RTD # 4	79.69	79.69	79.65	79.65
RTD # 5	79.53	79.52	79.51	79.50
RTD # 6	79.28	79.26	79.26	79.25
RTD # 7	79.58	79.57	79.57	79.56
RTD # 8	79.48	79.47	79.47	79.46
RTD # 9	79.79	79.79	79.77	79.79
RTD # 10	79.43	79.42	79.42	79.42
RTD # 11	79.10	79.09	79.09	79.09
RTD # 12	79.05	79.05	79.05	79.05
RTD # 13	78.92	78.93	78.91	78.91
RTD # 14	79.14	79.14	79.14	79.14
RTD # 15	79.43	79.42	79.41	79.42
RTD # 16	79.16	79.15	79.15	79.15
RTD # 17	78.79	78.78	78.78	78.78
RTD # 18	79.49	79.49	79.50	79.50
RTD # 19	78.88	78.86	78.87	78.87
RTD # 20	78.90	78.89	78.89	78.89
RTD # 21 (SPARE)	80.25	80.21	80.18	80.15
RTD # 22 (SPARE)	79.53	79.51	79.51	79.48

D. Pt. # 1	1.354	1.353	1.351	1.350
D. Pt. # 2	1.301	1.308	1.306	1.308
D. Pt. # 3	1.304	1.303	1.309	1.315
D. Pt. # 4	1.315	1.318	1.318	1.321

Pressure # 1	85906	85902	85899	85896
Pressure # 2 (SPARE)	86596	86592	86589	86586

D. Pt. - Dew Point _____

RHD - Relative Humidity Detector, _____

Pressure, _____

Terminal Operator _____

APPENDIX D

AMBIENT TEMPERATURE 71 HOUR NO. _____

BAROMETRIC PRESSURE 30.08 DATE 19 MAR 79

ROTAMETER FLOW _____ VERIFIED BY _____

	ILRT DATA SHEET			
TIME/SAMPLE NO.	1600/ 53	1615/ 54	1630/ 55	1645/ 56
RTD # 1	80.05	80.02	80.00	79.96
RTD # 2	79.55	79.54	79.54	79.51
RTD # 3	79.63	79.62	79.62	79.60
RTD # 4	79.66	79.66	79.65	79.65
RTD # 5	79.50	79.49	79.48	79.48
RTD # 6	79.25	79.24	79.23	79.21
RTD # 7	79.56	79.56	79.56	79.55
RTD # 8	79.45	79.45	79.45	79.44
RTD # 9	79.79	79.77	79.75	79.79
RTD # 10	79.41	79.41	79.41	79.40
RTD # 11	79.09	79.08	79.08	79.07
RTD # 12	79.04	79.04	79.05	79.03
RTD # 13	78.90	78.91	78.92	78.90
RTD # 14	79.14	79.14	79.15	79.13
RTD # 15	79.41	79.41	79.41	79.40
RTD # 16	79.15	79.16	79.13	79.13
RTD # 17	78.79	78.78	78.78	78.77
RTD # 18	79.51	79.50	79.51	79.49
RTD # 19	78.87	78.87	78.87	78.86
RTD # 20	78.89	78.90	78.89	78.89
RTD # 21 (SPARE)	80.12	80.09	80.06	80.02
RTD # 22 (SPARE)	79.47	79.47	79.46	79.45

D. Pt. # 1	1.346	1.348	1.338	1.338
D. Pt. # 2	1.314	1.300	1.316	1.320
D. Pt. # 3	1.313	1.312	1.318	1.321
D. Pt. # 4	1.324	1.326	1.329	1.330

Pressure # 1	85893	85889	85887	85884
Pressure # 2 (SPARE)	86583	86580	86577	86574

D. Pt. - Dew Point _____

RHD - Relative Humidity Detector, _____

Pressure, _____

Terminal Operator _____

APPENDIX D

AMBIENT TEMPERATURE 71 HOUR NO. _____

BAROMETRIC PRESSURE 30.075 DATE 19 MAR 79

ROTAMETER FLOW _____ VERIFIED BY _____

	ILRT DATA SHEET			
TIME/SAMPLE NO.	17001 57	17151 58	17301 59	17451 60
RTD # 1	79.93	79.90	79.88	79.84
RTD # 2	79.51	79.49	79.47	79.47
RTD # 3	79.60	79.59	79.58	79.55
RTD # 4	79.64	79.64	79.63	79.63
RTD # 5	79.47	79.46	79.45	79.45
RTD # 6	79.21	79.20	79.19	79.19
RTD # 7	79.55	79.55	79.54	79.54
RTD # 8	79.43	79.42	79.41	79.41
RTD # 9	79.79	79.78	79.77	79.76
RTD # 10	79.41	79.40	79.38	79.40
RTD # 11	79.06	79.06	79.06	79.06
RTD # 12	79.04	79.03	79.02	79.02
RTD # 13	78.90	78.89	78.89	78.89
RTD # 14	79.14	79.13	79.13	79.12
RTD # 15	79.41	79.40	79.40	79.40
RTD # 16	79.09	79.13	79.11	79.[illegible]
RTD # 17	78.77	78.77	78.77	78.77
RTD # 18	79.00	79.47	79.47	79.47
RTD # 19	78.86	78.86	78.84	78.84
RTD # 20	78.89	78.89	78.89	78.87
RTD # 21 (SPARE)	79.97	79.97	79.94	79.91
RTD # 22 (SPARE)	79.44	79.43	79.42	79.42

D. Pt. # 1	1.338	1.339	1.340	1.338
D. Pt. # 2	1.323	1.325	1.326	1.329
D. Pt. # 3	1.328	1.328	1.327	1.331
D. Pt. # 4	1.332	1.336	1.336	1.338

Pressure # 1	85881	85978	85576	85873
Pressure # 2 (SPARE)	86572	86568	86566	86564

D. Pt. - Dew Point _____

RHD - Relative Humidity Detector, _____

Pressure, _____

Terminal Operator _____

APPENDIX D

AMBIENT TEMPERATURE 69 HOUR NO. _____

BAROMETRIC PRESSURE 30.075 DATE 19 MAR 79

ROTAMETER FLOW _____ VERIFIED BY _____

	ILRT DATA SHEET			
TIME/SAMPLE NO.	18001 61	18151 62	18301 63	18451 64
RTD # 1	79.82	79.79	79.76	79.73
RTD # 2	79.46	79.45	79.44	79.42
RTD # 3	79.58	79.57	79.56	79.55
RTD # 4	79.61	79.62	79.60	79.60
RTD # 5	79.44	79.43	79.47	79.41
RTD # 6	79.17	79.18	79.16	79.15
RTD # 7	79.54	79.53	79.52	79.52
RTD # 8	79.41	79.40	79.39	79.37
RTD # 9	79.76	79.77	79.75	79.73
RTD # 10	79.39	79.39	79.38	79.37
RTD # 11	79.06	79.05	79.04	79.02
RTD # 12	79.02	79.02	79.02	79.00
RTD # 13	78.88	78.87	78.87	78.86
RTD # 14	79.12	79.12	79.11	79.11
RTD # 15	79.39	79.38	79.39	79.38
RTD # 16	79.11	79.11	79.04	79.09
RTD # 17	78.76	78.76	78.75	78.74
RTD # 18	79.43	79.43	79.41	79.34
RTD # 19	78.83	78.83	78.83	78.82
RTD # 20	78.88	78.89	78.88	78.87
RTD # 21 (SPARE)	79.88	79.85	79.83	79.80
RTD # 22 (SPARE)	79.40	79.39	79.39	79.37

D. Pt. # 1	1.337	1.335	1.335	1.336
D. Pt. # 2	1.332	1.334	1.336	1.338
D. Pt. # 3	1.332	1.332	1.332	1.333
D. Pt. # 4	1.345	1.348	1.348	1.352

Pressure # 1	85871	85868	~~85866~~ 85866 RHD	85864
Pressure # 2 (SPARE)	86562	86559	86557	86554

D. Pt. - Dew Point _____

RHD - Relative Humidity Detector, _____

Pressure, _____

Terminal Operator _____

APPENDIX D

AMBIENT TEMPERATURE 66°

HOUR NO.

BAROMETRIC PRESSURE 30.080

DATE 3/19/79

ROTAMETER FLOW

VERIFIED BY

	ILRT DATA SHEET			
TIME/SAMPLE NO.	1900 165	1915 166	1930 167	1945 168
RTD # 1	79.71	79.69	79.66	79.64
RTD # 2	79.41	79.40	79.39	79.38
RTD # 3	79.55	79.54	79.54	79.54
RTD # 4	79.58	79.59	79.58	79.58
RTD # 5	79.40	79.40	79.39	79.38
RTD # 6	79.14	79.13	79.12	79.12
RTD # 7	79.51	79.51	79.51	79.51
RTD # 8	79.36	79.36	79.34	79.33
RTD # 9	79.75	79.72	79.75	79.73
RTD # 10	79.37	79.37	79.35	79.36
RTD # 11	79.03	79.02	79.02	79.02
RTD # 12	79.00	78.99	78.99	78.99
RTD # 13	78.85	78.84	78.83	78.84
RTD # 14	79.11	79.10 DHB	79.09	79.09
RTD # 15	79.38	~~78.35~~ 79.32	79.36	79.36
RTD # 16	79.07	79.09	79.09	79.08
RTD # 17	78.74	78.74	78.73	78.73
RTD # 18	79.39	79.39	79.37	79.36
RTD # 19	78.81	78.80	78.76	78.81
RTD # 20	78.87	78.87	78.87	78.86
RTD # 21 (SPARE)	79.77	79.75	79.74	79.71
RTD # 22 (SPARE)	79.36	79.36	79.34	79.34

D. Pt. # 1	1.335	1.336	1.336	1.335
D. Pt. # 2	1.339	1.340	1.346	1.344
D. Pt. # 3	1.333	1.344	1.337	1.344
D. Pt. # 4	1.352	1.354	1.354	1.356

Pressure # 1	85861	85859	85851	85854
Pressure # 2 (SPARE)	86552	86550	86548	86546

D. Pt. - Dew Point

RHD - Relative Humidity Detector,

Pressure,

Terminal Operator

APPENDIX D

AMBIENT TEMPERATURE 66 HOUR NO. _____

BAROMETRIC PRESSURE 30.090 DATE 3/19/79

ROTAMETER FLOW _____ VERIFIED BY _____

	ILRT DATA SHEET			
TIME/SAMPLE NO.	2000 / 69	2015 / 70	2030 / 71	2045 / 72
RTD # 1	79.62	79.60	79.58	79.54
RTD # 2	79.39	79.37	79.36	79.35
RTD # 3	79.54	79.54	79.53	79.52
RTD # 4	79.58	79.56	79.55	79.55
RTD # 5	79.38	79.38	79.36	79.36
RTD # 6	79.12	79.12	79.11	79.07
RTD # 7	79.52	79.52	79.51	79.50
RTD # 8	79.33	79.32	79.31	79.31
RTD # 9	79.73	79.74	79.71	79.71
RTD # 10	79.36	79.36	79.35	79.35
RTD # 11	79.02	79.03	79.01	79.00
RTD # 12	79.00	79.00	78.99	78.98
RTD # 13	78.83	78.82	78.80	78.81
RTD # 14	79.09	79.09	79.09	79.08
RTD # 15	79.37	79.37	79.37	79.36
RTD # 16	79.07	79.08	79.06	79.07
RTD # 17	78.74	78.74	78.73	78.72
RTD # 18	79.36	79.36	79.34	79.33
RTD # 19	78.80	78.80	78.80	78.79
RTD # 20	78.87	78.87	78.86	78.86
RTD # 21 (SPARE)	79.69	79.67	79.65	79.62
RTD # 22 (SPARE)	79.34	79.34	79.33	79.32

D. Pt. # 1	1.337	1.338	1.340	1.344
D. Pt. # 2	1.347	1.350	1.351	1.343
D. Pt. # 3	1.344	1.347	1.344	1.352
D. Pt. # 4	1.356	1.359	1.358	1.346

Pressure # 1	85853	85851	85849	85847
Pressure # 2 (SPARE)	86544	86542	86540	86538

D. Pt. - Dew Point _____

RHD - Relative Humidity Detector, _____

Pressure, _____

Terminal Operator _____

APPENDIX D

AMBIENT TEMPERATURE 64°

BAROMETRIC PRESSURE 30.095

ROTAMETER FLOW

HOUR NO.

DATE 3/19/79

VERIFIED BY Paul Bennett

	ILRT DATA SHEET			
TIME/SAMPLE NO.	2100 / 73	2115 / 74	2130 / 75	2146 PHB ~~2145~~ / 76
RTD # 1	79.57	79.50	79.46	79.42
RTD # 2	79.34	79.33	79.32	79.31
RTD # 3	79.52	79.51	79.50	79.50
RTD # 4	79.54	79.54	79.53	79.53
RTD # 5	79.36	79.35	79.34	79.33
RTD # 6	79.09	79.09	79.08	79.07
RTD # 7	79.49	79.51	79.49	79.50
RTD # 8	79.30	79.30	79.28	79.29
RTD # 9	79.72	79.72	79.67	79.67
RTD # 10	79.35	79.35	79.35	79.34
RTD # 11	79.00	79.00	78.99	78.99
RTD # 12	78.99	78.98	78.97	78.98
RTD # 13	78.81	78.81	78.81	78.81
RTD # 14	79.09	79.09	79.08	79.07
RTD # 15	79.36	79.36	79.35	79.34
RTD # 16	79.06	79.06	79.04	79.05
RTD # 17	78.72	78.71	78.72	78.71
RTD # 18	79.34	79.33	79.32	79.31
RTD # 19	78.79	78.80	78.78	78.79
RTD # 20	78.86	78.87	78.86	78.86
RTD # 21 (SPARE)	79.61	79.59	79.56	79.48
RTD # 22 (SPARE)	79.32	79.30	79.29	79.28

D. Pt. # 1	1.337	1.346	1.344	1.352
D. Pt. # 2	1.352	1.357	1.356	1.359
D. Pt. # 3	1.349	1.350	1.350	1.352
D. Pt. # 4	1.358	1.360	1.362	1.363

Pressure # 1	85845	85844	85842	85840
Pressure # 2 (SPARE)	86537	86535	86534	86533

D. Pt. - Dew Point

RHD - Relative Humidity Detector,

Pressure,

Terminal Operator

APPENDIX D

AMBIENT TEMPERATURE 62 HOUR NO. 1

BAROMETRIC PRESSURE 30.095 DATE 3/19/79

ROTAMETER FLOW _____ VERIFIED BY PBennett

ILRT START

	ILRT DATA SHEET			
TIME/SAMPLE NO.	22001 77	22157 78	22301 79	22457 80 (1)
RTD # 1	79.41	79.38	79.38	79.32
RTD # 2	79.31	79.31	79.31	79.30
RTD # 3	79.51	79.50	79.50	79.49
RTD # 4	79.54	79.52	79.52	79.52
RTD # 5	79.34	79.33	79.32	79.33
RTD # 6	79.08	79.08	79.07	79.06
RTD # 7	79.50	79.51	79.50	79.49
RTD # 8	79.29	79.29	79.29	79.27
RTD # 9	79.66	79.67	79.65	79.71
RTD # 10	79.35	79.34	79.34	79.34
RTD # 11	78.98	78.98	78.99	78.99
RTD # 12	78.98	78.98	78.98	78.97
RTD # 13	78.80	78.80	78.80	78.79
RTD # 14	79.07	79.08	79.07	79.07
RTD # 15	79.36	79.35	79.36	79.35
RTD # 16	79.05	79.04	79.03	79.03
RTD # 17	78.71	78.78 with it	78.72	78.72
RTD # 18	79.31	79.32	79.31	79.30
RTD # 19	78.78	78.79	78.79	78.79
RTD # 20	78.86	78.86	~~78.87~~ 78.87	78.86
RTD # 21 (SPARE)	79.52	79.50	79.49	79.47
RTD # 22 (SPARE)	79.29	79.29	79.28	79.27

D. Pt. # 1	1.346	1.345	1.348	1.349
D. Pt. # 2	1.359	1.341	1.360	1.361
D. Pt. # 3	1.351	1.353	1.363	1.356
D. Pt. # 4	1.364	1.365	1.368	1.369

Pressure # 1	85839	85838	85836	85835
Pressure # 2 (SPARE)	86530	86529	86528	86526

D. Pt. - Dew Point _____

RHD - Relative Humidity Detector, _____

Pressure, _____

Terminal Operator J. Sicilian

ILRT - T0

APPENDIX D

AMBIENT TEMPERATURE 62 HOUR NO. 2

BAROMETRIC PRESSURE 30.100 DATE 19 MAR 79

ROTAMETER FLOW _____ VERIFIED BY [illegible]

	ILRT DATA SHEET			
TIME/SAMPLE NO.	23001 81 (2)	23151 82 (3)	23301 83 (4)	23451 84 (5)
RTD # 1	79.29	79.28	79.22	79.21
RTD # 2	79.29	79.29	79.28	79.28
RTD # 3	79.49	79.48	79.48	79.47
RTD # 4	79.52	79.51	79.51	79.51
RTD # 5	79.31	79.31	79.31	79.30
RTD # 6	79.05	79.05	79.03	79.04
RTD # 7	79.49	79.49	79.44	79.50
RTD # 8	79.27	79.27	79.27	79.27
RTD # 9	79.68	79.63	79.65	79.62
RTD # 10	79.34	79.34	79.33	79.33
RTD # 11	78.97	78.97	78.98	78.97
RTD # 12	78.97	78.97	78.96	78.97
RTD # 13	78.79	78.78	78.79	78.80
RTD # 14	79.07	79.07	79.07	79.08
RTD # 15	79.35	79.35	79.35	79.35
RTD # 16	79.03	79.02	79.02	79.01
RTD # 17	78.72	78.71	78.71	78.71
RTD # 18	79.30	79.28	79.28	79.28
RTD # 19	78.79	78.78	78.78	78.78
RTD # 20	78.86	78.86	78.85	78.85
RTD # 21 (SPARE)	79.45	79.43	79.41	79.40
RTD # 22 (SPARE)	79.27	79.26	79.25	79.25

D. Pt. # 1	1.352	1.363	1.361	1.361
D. Pt. # 2	1.366	1.362	1.364	1.364
D. Pt. # 3	1.362	1.361	1.358	1.357
D. Pt. # 4	1.371	1.371	1.375	1.372

Pressure # 1	85834 PSIA	85833	85832	85830
Pressure # 2 (SPARE)	86525 PSIA	86524 PSIA	86523	86522

D. Pt. - Dew Point _____

RHD - Relative Humidity Detector, _____

Pressure, _____

Terminal Operator [illegible]

OPERATING PROCEDURE 13100.1, PAGE 53
INTEGRATED LEAK RATE TEST

APPENDIX D

AMBIENT TEMPERATURE 62°

HOUR NO. 3

BAROMETRIC PRESSURE 30.090

DATE 20 MAR 79

ROTAMETER FLOW NA

VERIFIED BY [illegible]

	ILRT DATA SHEET			
TIME/SAMPLE NO.	(6) 00001 85	(7) 00151 86	(8) 00301 87	(9) 00451 88
RTD # 1	79.24	79.20	79.17	79.17
RTD # 2	79.27	79.27	79.27	79.26
RTD # 3	79.47	79.47	79.46	79.45
RTD # 4	79.50	79.50	79.50	79.48
RTD # 5	79.30	79.30	79.28	79.28
RTD # 6	79.03	79.03	79.02	79.02
RTD # 7	79.49	79.50	79.47	79.48
RTD # 8	79.26	79.27	79.26	79.25
RTD # 9	79.65	79.64	79.62	79.59
RTD # 10	79.33	79.33	79.33	79.32
RTD # 11	78.97	78.97	78.95	78.96
RTD # 12	78.97	78.97	78.96	78.97
RTD # 13	78.79	78.79	78.78	78.80
RTD # 14	79.07	79.07	79.06	79.07
RTD # 15	79.35	79.35	79.35	79.34
RTD # 16	79.01	79.01	79.01	79.00
RTD # 17	78.71	78.71	78.70	78.71
RTD # 18	79.28	79.27	79.25	79.25
RTD # 19	78.78	78.78	78.79	78.77
RTD # 20	78.86	78.86	78.86	78.85
RTD # 21 (SPARE)	79.40	79.38	79.36	79.35
RTD # 22 (SPARE)	79.24	79.24	79.24	79.24

D. Pt. # 1	1.364	1.366	1.361	1.363
D. Pt. # 2	1.365	1.367	1.371	1.370
D. Pt. # 3	1.358	1.349	1.363	1.355
D. Pt. # 4	1.374	1.377	1.378	1.379

Pressure # 1	85829	85828	858.27	85826
Pressure # 2 (SPARE)	36520	86518	86518	36517

D. Pt. - Dew Point

RHD - Relative Humidity Detector,

Pressure,

Terminal Operator J Becker

APPENDIX D

AMBIENT TEMPERATURE 61°

HOUR NO. 4

BAROMETRIC PRESSURE 30.08 AA

DATE 20 March 79

ROTAMETER FLOW NA

VERIFIED BY A.G. Kilady

	ILRT DATA SHEET			
TIME/SAMPLE NO.	0100 / 89 (10)	0115 / 90 (11)	0130 / 91 (12)	0145 / 92 (13)
RTD # 1	79.15	79.15	79.13	79.13
RTD # 2	79.26	79.24	79.24	79.24
RTD # 3	79.45	79.45	79.44	79.44
RTD # 4	79.47	79.47	79.47	79.45
RTD # 5	79.28	79.27	79.27	79.27
RTD # 6	79.01	79.01	79.00	79.00
RTD # 7	79.48	79.48	79.48	79.48
RTD # 8	79.25	79.25	79.25	79.24
RTD # 9	79.59	79.56	79.58	79.56
RTD # 10	79.32	79.32	79.32	79.32
RTD # 11	78.96	78.95	78.94	78.94
RTD # 12	78.96	78.96	78.96	78.95
RTD # 13	78.77	78.77	78.78	78.75
RTD # 14	79.06	79.06	79.06	79.06
RTD # 15	79.35	79.34	79.34	79.33
RTD # 16	79.01	79.00	79.00	79.00
RTD # 17	78.70	78.70	78.70	78.70
RTD # 18	79.25	79.25	79.24	79.24
RTD # 19	78.78	78.78	78.78	78.77
RTD # 20	78.85	78.86	78.85	78.85
RTD # 21 (SPARE)	79.34	79.32	79.31	79.30
RTD # 22 (SPARE)	79.22	79.22	79.22	79.21

D. Pt. # 1	1.366	1.373	1.373	1.373
D. Pt. # 2	1.374	1.374	1.374	1.377
D. Pt. # 3	1.362	1.362	1.364	1.370
D. Pt. # 4	1.380	1.381	1.382	1.384

Pressure # 1	858.25	858.24	858.23	858.22
Pressure # 2 (SPARE)	865.15	865.14	865.13	865.12

D. Pt. - Dew Point _____

RHD - Relative Humidity Detector, _____

Pressure, _____

Terminal Operator P Lecher

OPERATING PROCEDURE 13100.1, PAGE 53
INTEGRATED LEAK RATE TEST

APPENDIX D

AMBIENT TEMPERATURE 61°

HOUR NO. 5

BAROMETRIC PRESSURE 30.060

DATE 20 March 79

ROTAMETER FLOW NA

VERIFIED BY [illegible]

	ILRT DATA SHEET			
TIME/SAMPLE NO.	(14) 0200 / 93	(15) 0215 / 94	(16) 0230 / 95	(17) 0245 / 96
RTD # 1	79.11	79.11	79.11	79.10
RTD # 2	79.23	79.24	79.23	79.22
RTD # 3	79.43	79.42	79.42	79.42
RTD # 4	79.45	79.45	79.45	79.45
RTD # 5	79.26	79.26	79.26	79.26
RTD # 6	78.99	79.00	79.01	78.99
RTD # 7	79.47	79.47	79.47	79.47
RTD # 8	79.23	79.23	79.22	79.23
RTD # 9	79.56	79.56	79.56	79.57
RTD # 10	79.31	79.32	79.31	79.31
RTD # 11	78.94	78.95	78.94	78.93
RTD # 12	78.96	78.96	78.96	78.96
RTD # 13	78.78	78.78	78.78	78.79
RTD # 14	79.06	79.06	79.06	79.06
RTD # 15	79.35	79.34	79.33	79.34
RTD # 16	78.99	78.99	79.00	78.97
RTD # 17	78.70	78.70	78.70	78.71
RTD # 18	79.23	79.22	79.22	79.22
RTD # 19	78.78	78.79	78.77	78.77
RTD # 20	78.86	78.86	78.86	78.86
RTD # 21 (SPARE)	79.29	79.28	79.27	79.26
RTD # 22 (SPARE)	79.19	79.20	79.19	79.19

D. Pt. # 1	1.368	1.375	1.372	1.374
D. Pt. # 2	1.377	1.380	1.380	1.379
D. Pt. # 3	1.366	1.365	1.364	1.371
D. Pt. # 4	1.384	1.387	1.388	1.379

Pressure # 1	85821	85820	85819	85819
Pressure # 2 (SPARE)	36511	86510	86509	86508

D. Pt. - Dew Point

RHD - Relative Humidity Detector,

Pressure,

Terminal Operator [illegible]

APPENDIX D

AMBIENT TEMPERATURE 60°

HOUR NO. 6

BAROMETRIC PRESSURE 30.045

DATE 20 March 79

ROTAMETER FLOW NA

VERIFIED BY [illegible]

	ILRT DATA SHEET			
TIME/SAMPLE NO.	0300 / 97 (18)	0315 / 98 (19)	0330 / 99 (20)	0345 / 100 (21)
RTD # 1	79.09	79.08	79.08	79.07
RTD # 2	79.21	79.21	79.20	79.19
RTD # 3	79.42	79.41	79.41	79.40
RTD # 4	79.45	79.45	79.44	79.42
RTD # 5	79.24	79.24	79.24	79.23
RTD # 6	79.00	79.00	78.99	78.98
RTD # 7	79.47	79.47	79.46	79.46
RTD # 8	79.22	79.21	79.21	79.20
RTD # 9	79.58	79.54	79.55	79.54
RTD # 10	79.30	79.30	79.30	79.30
RTD # 11	78.93	78.93	78.93	78.92
RTD # 12	78.95	78.95	78.95	78.94
RTD # 13	78.78	78.78	78.76	78.76
RTD # 14	79.05	79.05	79.06	79.04
RTD # 15	79.33	79.33	79.33	79.32
RTD # 16	78.99	78.99	79.01	78.98
RTD # 17	78.70	78.69	78.69	78.68
RTD # 18	79.21	79.21	79.21	79.20
RTD # 19	78.76	78.77	78.77	78.76
RTD # 20	78.55	78.55	78.55	78.54
RTD # 21 (SPARE)	79.25	79.23	79.23	79.21
RTD # 22 (SPARE)	79.19	79.19	79.17	79.17

D. Pt. # 1	1.377	1.380	1.386	1.382
D. Pt. # 2	1.382	1.383	1.383	1.383
D. Pt. # 3	1.375	1.376	1.377	1.378
D. Pt. # 4	1.386	1.387	1.390	1.391

Pressure # 1	85.818	85.816	85.816	85.815
Pressure # 2 (SPARE)	86.508	86.506	86.506	86.505

D. Pt. - Dew Point _____

RHD - Relative Humidity Detector, _____

Pressure, _____

Terminal Operator P Butler

APPENDIX D

AMBIENT TEMPERATURE 59°

HOUR NO. 7

BAROMETRIC PRESSURE 30.045

DATE 20 March 79

ROTAMETER FLOW NA

VERIFIED BY [illegible]

	ILRT DATA SHEET			
TIME/SAMPLE NO.	(22) 0400 / 101	(23) 0415 / 102	(24) 0430 / 103	(25) 0500 / 104
RTD # 1	79.07	79.06	79.06	79.05
RTD # 2	79.19	79.18	79.18	79.18
RTD # 3	79.39	79.39	79.38	79.38
RTD # 4	79.42	79.42	79.42	79.40
RTD # 5	79.23	79.22	79.22	79.22
RTD # 6	78.98	78.97	78.98	78.96
RTD # 7	79.46	79.45	79.46	79.45
RTD # 8	79.19	79.20	79.19	79.19
RTD # 9	79.55	79.54	79.54	79.53
RTD # 10	79.29	79.29	79.29	79.28
RTD # 11	78.91	78.91	78.91	78.91
RTD # 12	78.95	78.94	78.94	78.94
RTD # 13	78.76	78.74	78.75	78.73
RTD # 14	79.05	79.05	79.03	79.05
RTD # 15	79.33	79.31	79.32	79.32
RTD # 16	79.00	78.98	78.99	78.98
RTD # 17	78.68	78.68	78.68	78.67
RTD # 18	79.20	79.19	79.19	79.19
RTD # 19	78.77	78.76	78.76	78.76
RTD # 20	78.85	78.84	78.84	78.83
RTD # 21 (SPARE)	79.20	79.19	79.19	79.19
RTD # 22 (SPARE)	79.16	79.15	79.16	79.14

D. Pt. # 1	1.388	1.382	1.377	1.384
D. Pt. # 2	1.387	1.386	1.385	1.385
D. Pt. # 3	1.375	1.385	1.378	1.379
D. Pt. # 4	1.390	1.393	1.395	1.394

Pressure # 1	85814	85813	85812	85812
Pressure # 2 (SPARE)	86504	86503	86502	86502

D. Pt. - Dew Point

RHD - Relative Humidity Detector,

Pressure,

Terminal Operator John R. Murphy

APPENDIX D

AMBIENT TEMPERATURE 58°

HOUR NO. 8

BAROMETRIC PRESSURE 30.050

DATE 20 MARCH 1979

ROTAMETER FLOW NA

VERIFIED BY [illegible]

	ILRT DATA SHEET			
TIME/SAMPLE NO.	0500 AM (26) ~~0545~~ 1 105	0515 AM (27) ~~0530~~ 1 106	(28) 05301 107	(29) 0545 1 108
RTD # 1	79.05	79.04	79.03	79.03
RTD # 2	79.18	79.17	79.16	79.15
RTD # 3	79.38	79.38	79.36	79.36
RTD # 4	79.42	79.40	79.39	79.39
RTD # 5	79.20	79.21	79.20	79.19
RTD # 6	78.95	78.95	78.96	78.95
RTD # 7	79.45	79.46	79.44	79.44
RTD # 8	79.18	79.18	79.17	79.17
RTD # 9	79.52	79.52	79.52	79.51
RTD # 10	79.27	79.28	79.27	79.26
RTD # 11	78.90	78.90	78.90	78.89
RTD # 12	78.94	78.93	78.92	78.92
RTD # 13	78.72	78.72	78.71	78.70
RTD # 14	79.03	79.02	79.02	79.02
RTD # 15	79.31	79.32	79.31	79.30
RTD # 16	78.98	78.97	78.95	78.96
RTD # 17	78.66	78.67	78.66	78.66
RTD # 18	79.18	79.18	79.18	79.18
RTD # 19	78.76	78.75	78.74	78.74
RTD # 20	78.83	78.83	78.82	78.82
RTD # 21 (SPARE)	79.18	79.17	79.16	79.14
RTD # 22 (SPARE)	79.15	79.14	79.14	79.13

D. Pt. # 1	1.385	1.387	1.388	1.386
D. Pt. # 2	1.388	1.390	1.390	1.392
D. Pt. # 3	1.379	1.380	1.385	1.391
D. Pt. # 4	1.397	1.397	1.397	1.397

Pressure # 1	85511	85810	85810	85809
Pressure # 2 (SPARE)	86501	86499	86498	86498

D. Pt. - Dew Point

RHD - Relative Humidity Detector,

Pressure,

Terminal Operator [illegible]

APPENDIX D

AMBIENT TEMPERATURE 58°

HOUR NO. 9

BAROMETRIC PRESSURE 30.065

DATE 20 March 79

ROTAMETER FLOW NA

VERIFIED BY [illegible]

	ILRT DATA SHEET			
TIME/SAMPLE NO.	(30) 0600 / 109	(31) 0615 / 110	(32) 0630 / 111	(33) 0645 / 112
RTD # 1	79.03	79.02	79.01	79.00
RTD # 2	79.15	79.15	79.14	79.14
RTD # 3	79.36	79.36	79.35	79.36
RTD # 4	79.39	79.46	79.39	79.39
RTD # 5	79.19	79.19	79.19	79.18
RTD # 6	78.94	78.94	78.94	78.94
RTD # 7	79.44	79.44	79.44	79.43
RTD # 8	79.17	79.15	79.16	79.15
RTD # 9	79.51	79.50	79.50	79.51
RTD # 10	79.27	79.26	79.26	79.26
RTD # 11	78.89	78.89	78.89	78.89
RTD # 12	78.92	78.91	78.91	78.91
RTD # 13	78.71	78.71	78.68	78.68
RTD # 14	79.02	79.02	79.01	79.01
RTD # 15	79.31	79.30	79.31	79.30
RTD # 16	78.96	78.92	78.94	78.96
RTD # 17	78.65	78.65	78.65	78.65
RTD # 18	79.18	79.18	79.17	79.17
RTD # 19	78.74	78.73	78.73	78.73
RTD # 20	78.82	78.82	78.81	78.82
RTD # 21 (SPARE)	79.14	79.14	79.13	79.12
RTD # 22 (SPARE)	79.13	79.13	79.11	79.13

D. Pt. # 1	1.390	1.388	1.393	1.393
D. Pt. # 2	1.394	1.393	1.395	1.394
D. Pt. # 3	1.392	1.391	1.389	1.391
D. Pt. # 4	1.400	1.402	1.405	1.405

Pressure # 1	85808	85807	85807	85806
Pressure # 2 (SPARE)	86447	86496	86495	86495

D. Pt. - Dew Point

RHD - Relative Humidity Detector,

Pressure,

Terminal Operator John A. Murphy

APPENDIX D

AMBIENT TEMPERATURE 59°

HOUR NO. 10

BAROMETRIC PRESSURE 30.09

DATE 20 March 79

ROTAMETER FLOW N/A

VERIFIED BY [illegible]

	ILRT DATA SHEET			
TIME/SAMPLE NO.	0700 / 113 (34)	0715 / 114 (35)	0730 / 115 (36)	0745 / 116 (37)
RTD # 1	79.01	79.01	79.00	79.00
RTD # 2	79.13	79.13	79.13	79.13
RTD # 3	79.35	79.34	79.34	79.33
RTD # 4	79.35	79.38	79.37	79.35
RTD # 5	79.18	79.18	79.17	79.15
RTD # 6	78.92	78.93	78.93	78.92
RTD # 7	79.44	79.43	79.45	79.42
RTD # 8	79.14	79.14	79.15	79.13
RTD # 9	79.49	79.49	79.49	79.49
RTD # 10	79.25	79.26	79.25	79.26
RTD # 11	78.89	78.88	78.87	78.86
RTD # 12	78.91	78.90	78.89	78.89
RTD # 13	78.70	78.69	78.69	78.70
RTD # 14	79.01	79.00	79.00	79.00
RTD # 15	79.29	79.29	79.29	79.28
RTD # 16	78.94	78.92	78.93	78.92
RTD # 17	78.65	78.65	78.64	78.64
RTD # 18	79.17	79.16	79.16	79.15
RTD # 19	78.73	78.72	78.73	78.72
RTD # 20	78.82	78.80	78.81	78.81
RTD # 21 (SPARE)	79.12	79.10	79.10	79.10
RTD # 22 (SPARE)	79.11	79.12	79.09	79.10

D. Pt. # 1	1.396	1.392	1.400	1.395
D. Pt. # 2	1.395	1.399	1.401	1.402
D. Pt. # 3	1.394	1.389	1.394	1.397
D. Pt. # 4	1.407	1.408	1.407	1.411

Pressure # 1	85806	85805	85805	85804
Pressure # 2 (SPARE)	86494	86494	86494	86493

D. Pt. - Dew Point _____

RHD - Relative Humidity Detector, _____

Pressure, _____

Terminal Operator [illegible]

APPENDIX D

AMBIENT TEMPERATURE 62°

HOUR NO. 11

BAROMETRIC PRESSURE 30.10

DATE 20 March 79

ROTAMETER FLOW NA

VERIFIED BY P.C. Heyerdf

	ILRT DATA SHEET			
TIME/SAMPLE NO.	0800 1 117 (38)	0815 1 118 (39)	0830 1 119 (40)	0845 1 120 (41)
RTD # 1	79.00	78.98	78.98	78.97
RTD # 2	79.12	79.11	79.11	79.11
RTD # 3	79.33	79.33	79.32	79.32
RTD # 4	79.35	79.36	79.35	79.35
RTD # 5	79.15	79.15	79.15	79.15
RTD # 6	78.92	78.93	78.90	78.92
RTD # 7	79.42	79.42	79.42	79.41
RTD # 8	79.12	79.12	79.13	79.11
RTD # 9	79.49	79.49	79.50	79.48
RTD # 10	79.25	79.24	79.24	79.23
RTD # 11	78.86	78.86	78.86	78.86
RTD # 12	78.89	78.89	78.88	78.86
RTD # 13	78.71	78.69	78.71	78.71
RTD # 14	78.99	78.99	79.00	79.00
RTD # 15	79.29	79.28	79.28	79.28
RTD # 16	78.92	78.92	78.91	78.90
RTD # 17	78.64	78.64	78.65	78.64
RTD # 18	79.15	79.15	79.15	79.14
RTD # 19	78.72	78.72	78.72	78.71
RTD # 20	78.80	78.82	78.81	78.81
RTD # 21 (SPARE)	79.09	79.08	79.08	79.07
RTD # 22 (SPARE)	79.10	79.09	79.08	79.08

D. Pt. # 1	1.392	1.396	1.399	1.401
D. Pt. # 2	1.403	1.403	1.404	1.405
D. Pt. # 3	1.394	1.402	1.403	1.402
D. Pt. # 4	1.412	1.413	1.415	1.410

Pressure # 1	85804	85803	85803	85802
Pressure # 2 (SPARE)	86492	86492	86491	86491

D. Pt. - Dew Point

RHD - Relative Humidity Detector,

Pressure,

Terminal Operator John R. Murphy

OPERATING PROCEDURE 13100.1, PAGE 53
INTEGRATED LEAK RATE TEST

APPENDIX D

AMBIENT TEMPERATURE 68°

HOUR NO. 12

BAROMETRIC PRESSURE 30.11

DATE 20 MARCH 79

ROTAMETER FLOW NA

VERIFIED BY [illegible]

	ILRT DATA SHEET			
	(42)	(43)	(44)	(45)
TIME/SAMPLE NO.	0900/ 121	0915/ 122	0930/ 123	0945/ 124
RTD # 1	78.97	78.96	78.96	78.95
RTD # 2	79.10	79.10	79.09	79.09
RTD # 3	79.32	79.31	79.31	79.30
RTD # 4	79.34	79.34	79.34	79.33
RTD # 5	79.14	79.14	79.14	79.13
RTD # 6	78.90	78.89	78.90	78.90
RTD # 7	79.41	79.42	79.41	79.42
RTD # 8	79.11	79.12	79.11	79.10
RTD # 9	79.49	79.49	79.50	79.49
RTD # 10	79.23	79.24	79.23	79.23
RTD # 11	78.85	78.85	78.85	78.85
RTD # 12	78.84	78.89	78.88	78.88
RTD # 13	78.72	78.74	78.74	78.75
RTD # 14	78.99	78.99	78.99	78.99
RTD # 15	79.28	79.29	79.29	79.28
RTD # 16	78.91	78.89	78.91	78.91
RTD # 17	78.64	78.66	78.66	78.66
RTD # 18	79.15	79.16	79.17	79.17
RTD # 19	78.71	78.73	78.72	78.72
RTD # 20	78.81	78.81	78.81	78.86
RTD # 21 (SPARE)	79.06	79.06	79.05	79.05
RTD # 22 (SPARE)	79.09	79.08	79.07	79.06

D. Pt. # 1	1.400	1.406	1.404	1.404
D. Pt. # 2	1.404	1.408	1.409	1.408
D. Pt. # 3	1.399	1.406	1.403	1.406
D. Pt. # 4	1.411	1.415	1.415	1.415

Pressure # 1	85802	85801	85801	85801
Pressure # 2 (SPARE)	86490	86490	86490	86490

D. Pt. - Dew Point _____

RHD - Relative Humidity Detector, _____

Pressure, _____

Terminal Operator John R. Murphy

OPERATING PROCEDURE 13100.1, PAGE 53
INTEGRATED LEAK RATE TEST

APPENDIX D

AMBIENT TEMPERATURE 73 HOUR NO. 13

BAROMETRIC PRESSURE 30.10 DATE 20 MAR 79

ROTAMETER FLOW NA VERIFIED BY P Bennett

	ILRT DATA SHEET			
TIME/SAMPLE NO.	(46) 1000/125	(47) 1015/126	(48) 1030/127	(49) 1045/128
RTD # 1	78.95	78.95	78.95	78.95
RTD # 2	79.09	79.09	79.09	79.10
RTD # 3	79.30	79.31	79.30	79.31
RTD # 4	79.33	79.33	79.33	79.33
RTD # 5	79.13	79.13	79.13	79.13
RTD # 6	78.89	78.91	78.90	78.91
RTD # 7	79.42	79.42	79.42	79.43
RTD # 8	79.11	79.11	79.11	79.10
RTD # 9	79.52	79.51	79.50	79.51
RTD # 10	79.22	79.22	79.23	79.24
RTD # 11	78.84	78.85	78.84	78.86
RTD # 12	78.85	78.88	78.88	78.85
RTD # 13	78.75	78.75	78.76	78.77
RTD # 14	78.99	78.99	79.00	78.95
RTD # 15	79.29	79.29	79.29	79.23
RTD # 16	78.91	78.91	78.90	78.88
RTD # 17	78.65	78.67	78.66	78.67
RTD # 18	79.18	79.19	79.21	79.21
RTD # 19	78.72	78.72	78.72	78.73
RTD # 20	78.81	78.82	78.83	78.85
RTD # 21 (SPARE)	79.03	79.04	79.04	79.05
RTD # 22 (SPARE)	79.07	79.08	79.07	79.07

D. Pt. # 1	1.408	1.408	1.399	1.408
D. Pt. # 2	1.412	1.413	1.411	1.414
D. Pt. # 3	1.406	1.41	1.409	1.407
D. Pt. # 4	1.418	1.420	1.420	1.420

Pressure # 1	85801	85800	85800	85800
Pressure # 2 (SPARE)	86489	86489	86489	86489

D. Pt. - Dew Point

RHD - Relative Humidity Detector,

Pressure,

Terminal Operator Joel R. Murphy

END ILRT

NOTE: 1045 END OF ILRT.

OPERATING PROCEDURE 13100.1, PAGE 53
INTEGRATED LEAK RATE TEST

CLRT

APPENDIX D

AMBIENT TEMPERATURE 74 HOUR NO.

BAROMETRIC PRESSURE 30.10 DATE 3-20-79

ROTAMETER FLOW 3.2 VERIFIED BY Dwttgood

	ILRT DATA SHEET			
TIME/SAMPLE NO.	/	/	11301	11451
RTD # 1			78.95	78.96
RTD # 2			79.09	79.11
RTD # 3			79.31	79.32
RTD # 4			79.32	79.32
RTD # 5			79.13	79.14
RTD # 6			78.90	78.91
RTD # 7			79.41	79.44
RTD # 8			79.11	79.12
RTD # 9			79.52	79.54
RTD # 10			79.23	79.25
RTD # 11			78.86	78.87
RTD # 12			78.89	78.90
RTD # 13			78.79	78.80
RTD # 14			78.99	79.01
RTD # 15			79.32	79.33
RTD # 16			78.91	78.92
RTD # 17			78.68	78.70
RTD # 18			79.28	79.29
RTD # 19			78.74	78.75
RTD # 20			78.84	78.86
RTD # 21 (SPARE)			79.04	79.05
RTD # 22 (SPARE)			79.07	79.08
ROTAMETER FLOW			3.2 SCFM	3.2 SCFM
D. Pt. # 1			1.420	1.414
D. Pt. # 2			1.418	1.418
D. Pt. # 3			1.411	1.415
D. Pt. # 4			1.422	1.424
				27 PSIG
Pressure # 1			85799	85797
Pressure # 2 (SPARE)			86456	86485

D. Pt. - Dew Point

RHD - Relative Humidity Detector,

Pressure, 27.4

Terminal Operator PM Beatie

OPERATING PROCEDURE 13100.1, PAGE 53
INTEGRATED LEAK RATE TEST

CLRT

APPENDIX D

AMBIENT TEMPERATURE 74°

HOUR NO.

BAROMETRIC PRESSURE 30.08

DATE 20 MAR 79

ROTAMETER FLOW 3.2

VERIFIED BY [illegible]

	ILRT DATA SHEET			
TIME/SAMPLE NO.	1200/	1215/	1230/	1245/
RTD # 1	78.94	78.95	78.93	78.93
RTD # 2	79.01	79.08	79.07	79.07
RTD # 3	79.30	79.30	79.29	79.30
RTD # 4	79.32	79.32	79.31	79.31
RTD # 5	79.12	79.12	79.10	79.11
RTD # 6	78.90	78.90	78.87	78.87
RTD # 7	79.42	79.42	79.41	79.40
RTD # 8	79.10	79.11	79.09	79.10 WR
RTD # 9	79.52	79.56	79.52	79.52
RTD # 10	79.23	79.24	79.23	79.23
RTD # 11	78.86	78.86	78.85	78.85
RTD # 12	78.89	78.88	78.87	78.88
RTD # 13	78.78	78.80	78.80	78.80
RTD # 14	79.00	79.00	78.99	79.00 WR
RTD # 15	79.30	79.32	79.31	79.30
RTD # 16	78.91	78.91	78.90	78.90
RTD # 17	78.68	78.69	78.68	78.68
RTD # 18	79.28	79.31	79.30	79.31
RTD # 19	78.73	78.75	78.73	78.73
RTD # 20	78.85	78.86	78.85	78.85
RTD # 21 (SPARE)	79.03	79.03	79.02	79.02
RTD # 22 (SPARE)	79.07	79.07	79.06	79.06
ROTAMETER FLOW	3.2 SCFM	3.2 SCFM	3.2	3.2
D. Pt. # 1	1.410	1.415	1.422	1.419
D. Pt. # 2	1.420	1.422	1.423	1.423
D. Pt. # 3	1.418	1.416	1.413	1.420
D. Pt. # 4	1.425	1.425	1.427	1.428
	27	27	27	27
Pressure # 1	85796	85795	85794	85793
Pressure # 2 (SPARE)	86484	86483	86481	86480

D. Pt. - Dew Point

RHD - Relative Humidity Detector,

Pressure,

Terminal Operator DM Becker

OPERATING PROCEDURE 13100.1, PAGE 53
INTEGRATED LEAK RATE TEST

CLRT

APPENDIX D

AMBIENT TEMPERATURE 75

HOUR NO.

BAROMETRIC PRESSURE 30.07

DATE 20 MAR 79

ROTAMETER FLOW 3.2

VERIFIED BY P.W. Heywood

ILRT DATA SHEET				
TIME/SAMPLE NO.	1300/	1315/	1330/	1345/
RTD # 1	78.92	78.92	78.92	78.92
RTD # 2	79.08	79.08	79.07	79.06
RTD # 3	79.29	79.30	79.29	79.28
RTD # 4	79.30	79.31	79.30	79.31
RTD # 5	79.12	79.11	79.10	79.10
RTD # 6	78.89	78.88	78.89	78.89
RTD # 7	79.42	79.41	79.44	79.43
RTD # 8	79.10	79.10	79.10	79.09
RTD # 9	79.56	79.56	79.55	79.56
RTD # 10	79.22	79.24	79.24	79.22
RTD # 11	78.86	78.86	78.85	78.85
RTD # 12	78.88	78.89	78.88	78.87
RTD # 13	78.79	78.80	78.80	78.81
RTD # 14	79.01	79.01	78.99	78.99
RTD # 15	79.31	79.31	79.30	79.31
RTD # 16	78.91	78.92	78.91	78.90
RTD # 17	78.69	78.69	78.69	78.69
RTD # 18	79.33	79.35	79.36	79.37
RTD # 19	78.74	78.75	78.75	78.75
RTD # 20	78.86	78.86	78.86	78.86
RTD # 21 (SPARE)	79.02	79.02	79.01	79.01
RTD # 22 (SPARE)	79.06	79.06	79.05	79.05
ROTAMETER FLOW	3.2	3.2	3.2	3.2
D. Pt. # 1	1.419	1.421	1.426	1.422
D. Pt. # 2	1.424	1.426	1.425	1.428
D. Pt. # 3	1.415	1.416	1.416	1.424
D. Pt. # 4	1.428	1.429	1.429	1.430
	27	27	27	27
Pressure # 1	85792	85792	85791	85789
Pressure # 2 (SPARE)	86480	86479	86478	86472

D. Pt. - Dew Point

RHD - Relative Humidity Detector,

Pressure,

Terminal Operator D.M. Richm

OPERATING PROCEDURE 13100.1, PAGE 53
INTEGRATED LEAK RATE TEST

CLRT

APPENDIX D

AMBIENT TEMPERATURE 75 HOUR NO.

BAROMETRIC PRESSURE 30.05 DATE 20 MAR 79

ROTAMETER FLOW 3.2 VERIFIED BY [illegible]

	ILRT DATA SHEET			
TIME/SAMPLE NO.	1400/	1415/	1430/	1445/
RTD # 1	78.91	~~78.93~~ 78.90	78.90	78.90
RTD # 2	79.05	79.02	79.05	79.04
RTD # 3	79.20	79.26	79.27	79.27
RTD # 4	79.29	79.28	79.28	79.27
RTD # 5	79.10	79.08	79.09	79.09
RTD # 6	78.87	78.87	78.85	78.86
RTD # 7	79.41	79.42	79.41	79.40
RTD # 8	79.08	79.08	79.08	79.07
RTD # 9	79.53	79.51	79.54	79.52
RTD # 10	79.22	79.21	79.21	79.23
RTD # 11	78.84	78.84	78.84	78.84
RTD # 12	78.88	78.87	78.87	78.87
RTD # 13	78.79	78.79	78.81	78.80
RTD # 14	78.79	78.79	78.76	78.79
RTD # 15	79.31	79.30	79.30	79.30
RTD # 16	78.90	78.89	78.91	78.91
RTD # 17	78.67	78.68	78.67	78.68
RTD # 18	79.33	79.36	79.37	79.35
RTD # 19	78.74	78.73	78.73	78.74
RTD # 20	78.86	78.85	78.86	78.85
RTD # 21 (SPARE)	79.00	78.99	78.99	78.98
RTD # 22 (SPARE)	79.06	79.04	79.04	79.03
ROTAMETER FLOW	3.2	3.2	3.2	3.2
D. Pt. # 1	1.423	1.422	~~1.432~~ 1.423	~~1.432~~ 1.424 with
D. Pt. # 2	1.429	1.430	~~1.432~~ 1.432	~~1.432~~ 1.432 with
D. Pt. # 3	1.426	1.426	~~1.434~~ 1.432	~~1.434~~ 1.432 with
D. Pt. # 4	1.434	1.433	~~1.436~~ 1.434	~~1.436~~ 1.431 with
	27	27	27	27
Pressure # 1	85788	85787	85786	85785
Pressure # 2 (SPARE)	86475	86474	86473	86472

D. Pt. - Dew Point

RHD - Relative Humidity Detector,

Pressure,

Terminal Operator DM Bielow

OPERATING PROCEDURE 13100.1, PAGE 53
INTEGRATED LEAK RATE TEST

CLRT

APPENDIX D

AMBIENT TEMPERATURE 76°

HOUR NO.

BAROMETRIC PRESSURE 30.04

DATE 3/20/79

ROTAMETER FLOW 3.2

VERIFIED BY PBennitt

	ILRT DATA SHEET			
TIME/SAMPLE NO.	15001	15151	15301	15451
RTD # 1	78.89	78.89	78.88	78.89
RTD # 2	79.04	79.04	79.03	79.04
RTD # 3	79.27	79.26	79.26	79.26
RTD # 4	79.27	79.27	79.26	79.27
RTD # 5	79.08	79.08	79.08	79.08
RTD # 6	78.84	78.86	78.85	78.86
RTD # 7	79.41	79.41	79.40	79.40
RTD # 8	79.07	79.08	79.07	79.09
RTD # 9	79.55	79.55	79.53	79.5[illegible]
RTD # 10	79.22	79.22	79.22	79.21
RTD # 11	78.84	78.84	78.87	78.85
RTD # 12	78.87	78.87	78.87	78.87
RTD # 13	78.80	78.81	78.81	78.81
RTD # 14	78.44	78.44	78.48	78.48
RTD # 15	79.31	79.30	79.30	79.24
RTD # 16	78.91	78.90	78.89	78.90
RTD # 17	78.68	78.69	78.69	78.68
RTD # 18	79.40	79.39	79.39	79.41
RTD # 19	78.73	78.74	78.74	78.73
RTD # 20	78.85	78.87	78.87	78.86
RTD # 21 (SPARE)	78.98	78.98	78.98	78.98
RTD # 22 (SPARE)	79.04	79.04	79.04	79.03
ROTAMETER FLOW	3.2	3.2	3.2	3.2
D. Pt. # 1	1.428	1.429	1.433	1.430
D. Pt. # 2	1.433	1.435	1.435	1.437
D. Pt. # 3	1.428	1.433	1.430	1.430
D. Pt. # 4	1.435	1.436	1.438	1.441
	27	27	27	27
Pressure # 1	85784	85782	85781	85780
Pressure # 2 (SPARE)	80479	80470	80469	80467

D. Pt. - Dew Point

RHD - Relative Humidity Detector,

Pressure,

Terminal Operator Joe R. Murphy

APPENDIX D

AMBIENT TEMPERATURE 75°

HOUR NO.

BAROMETRIC PRESSURE 30.03

DATE 3/20/79

ROTAMETER FLOW 3.2

VERIFIED BY [illegible]

	ILRT DATA SHEET			
TIME/SAMPLE NO.	1600 /	1615 /	1630 /	1645 /
RTD # 1	78.89	78.88	78.86	78.87
RTD # 2	79.04	79.03	79.02	79.02
RTD # 3	79.26	79.26	79.26	79.26
RTD # 4	79.27	79.27	79.27	79.27
RTD # 5	79.07	79.07	79.07	79.07
RTD # 6	78.84	78.83	78.85	78.84
RTD # 7	79.40	79.41	79.39	79.39
RTD # 8	79.07	79.07	79.09	79.08
RTD # 9	79.55	79.53	79.53	79.52
RTD # 10	79.21	79.20	79.21	79.21
RTD # 11	78.85	78.84	78.84	78.84
RTD # 12	78.87	78.86	78.86	78.86
RTD # 13	78.81	78.81	78.81	78.81
RTD # 14	78.99	78.98	78.97	78.96
RTD # 15	79.31	79.32	79.30	79.31
RTD # 16	78.91	78.90	78.90	78.90
RTD # 17	78.69	78.69	78.68	78.69
RTD # 18	79.41	79.40	79.39	79.41
RTD # 19	78.74	78.75	78.74	78.75
RTD # 20	78.85	78.86	78.86	78.87
RTD # 21 (SPARE)	78.47	78.47	78.47	78.46
RTD # 22 (SPARE)	79.02	79.02	79.02	79.02
ROTAMETER FLOW	3.2	3.2	3.2	3.2
D. Pt. # 1	1.433	1.436	1.435	1.432
D. Pt. # 2	1.437	1.439	1.431	1.439
D. Pt. # 3	1.435	1.437	1.435	1.437
D. Pt. # 4	1.443	1.441	1.443	1.445
	27	27	27	27
Pressure # 1	85779	85778	85777	85776
Pressure # 2 (SPARE)	86466	86465	86464	86463

D. Pt. - Dew Point

RHD - Relative Humidity Detector,

Pressure,

Terminal Operator [illegible]

INTEGRATED LEAK RATE TEST

APPENDIX D

AMBIENT TEMPERATURE 73°

HOUR NO.

BAROMETRIC PRESSURE 30.02

DATE 3/20/79

ROTAMETER FLOW 3.2

VERIFIED BY P Bennett

	ILRT DATA SHEET			
TIME/SAMPLE NO.	1700 1	1715 1	1730 1	1745 1
RTD # 1	78.87	78.87	78.87	78.86
RTD # 2	79.03	79.02	79.02	79.02
RTD # 3	79.25	79.26	79.25	79.25
RTD # 4	79.26	79.26	79.27	79.26
RTD # 5	79.07	79.06	79.06	79.05
RTD # 6	78.83	78.82	78.84	78.84
RTD # 7	79.38	79.40	79.38	79.38
RTD # 8	79.07	79.07	79.07	79.07
RTD # 9	79.54	79.52	79.52	79.53
RTD # 10	79.21	79.21	79.21	79.21
RTD # 11	78.83	78.83	78.83	78.83
RTD # 12	78.85	78.86	78.85	78.85
RTD # 13	78.80	78.81	78.75	78.79
RTD # 14	78.97	78.97	78.97	78.95
RTD # 15	79.30	79.30	79.30	79.30
RTD # 16	78.89	78.90	78.90	78.91
RTD # 17	78.69	78.70	78.69	78.69
RTD # 18	79.41	79.41	79.41	79.41
RTD # 19	78.76	78.75	78.75	78.75
RTD # 20	78.96	78.97	78.97	78.96
RTD # 21 (SPARE)	78.96	78.96	78.95	~~78.78~~ 78.96
RTD # 22 (SPARE)	79.01	79.01	79.01	79.01
ROTAMETER FLOW	3.2	3.2	3.2	3.2
D. Pt. # 1	1.435	1.441	1.440	1.436
D. Pt. # 2	1.440	1.441	1.443	1.444
D. Pt. # 3	1.435	1.439	1.443	1.440
D. Pt. # 4	1.446	1.447	1.446	1.449
	27	27	27	27
Pressure # 1	85775	85774	85773	85771
Pressure # 2 (SPARE)	86462	86461	86460	86459

D. Pt. - Dew Point

RHD - Relative Humidity Detector,

Pressure,

Terminal Operator

OPERATING PROCEDURE 13100.1, PAGE 53
INTEGRATED LEAK RATE TEST

APPENDIX D END OF CLRT

AMBIENT TEMPERATURE 72°

BAROMETRIC PRESSURE 30.02

ROTAMETER FLOW 3.2

HOUR NO.

DATE 3/20/79

VERIFIED BY P Bennett

	ILRT DATA SHEET			
TIME/SAMPLE NO.	1800 1	1	1	1
RTD # 1	78.86	78.86		
RTD # 2	79.02	~~79.01~~ 79.01		
RTD # 3	79.25	79.24		
RTD # 4	79.26	79.26		
RTD # 5	79.05	79.05		
RTD # 6	78.84	78.84		
RTD # 7	79.38	79.37		
RTD # 8	79.07	79.06		
RTD # 9	79.54	79.52		
RTD # 10	79.20	79.20		
RTD # 11	78.83	78.83		
RTD # 12	78.85	78.84		
RTD # 13	78.79	78.78		
RTD # 14	78.95	78.95		
RTD # 15	79.30	79.30		
RTD # 16	78.88	78.90		
RTD # 17	78.68	78.67		
RTD # 18	79.40	79.40		
RTD # 19	78.75	78.74		
RTD # 20	78.86	78.85		
RTD # 21 (SPARE)	78.94	78.94		
RTD # 22 (SPARE)	79.00	79.00		

D. Pt. # 1	1.440	1.442		
D. Pt. # 2	1.446	1.445		
D. Pt. # 3	1.442	1.441		
D. Pt. # 4	1.450	1.454		

Pressure # 1	85770	85769		
Pressure # 2 (SPARE)	86458	86457		

D. Pt. - Dew Point

RHD - Relative Humidity Detector,

Pressure,

Terminal Operator M Berku

OPERATING PROCEDURE 13100.1, PAGE 53
INTEGRATED LEAK RATE TEST

STARTED BLOWDOWN OF UNIT 3 CONTAINMENT

APPENDIX D

AMBIENT TEMPERATURE _____ HOUR NO. 1—

BAROMETRIC PRESSURE _____ DATE 3/20/79

ROTAMETER FLOW _____ VERIFIED BY P Bennett

	ILRT DATA SHEET			
TIME/SAMPLE NO.	11852	1 1930	1 2000	2030 PHB ~~1 2030~~
RTD # 1				
RTD # 2				
RTD # 3				
RTD # 4				
RTD # 5				
RTD # 6				
RTD # 7				
RTD # 8				
RTD # 9				
RTD # 10				
RTD # 11				
RTD # 12				
RTD # 13				
RTD # 14				
RTD # 15				
RTD # 16				
RTD # 17				
RTD # 18				
RTD # 19				
RTD # 20				
RTD # 21 (SPARE)				
RTD # 22 (SPARE)				
PSIA	42.0			
D. Pt. # 1				
D. Pt. # 2				
D. Pt. # 3				
D. Pt. # 4				

Pressure # 1	85768	82820	80420	78490
Pressure # 2 (SPARE)	86455	83550	81507	79300

D. Pt. - Dew Point _____

RHD - Relative Humidity Detector, _____

Pressure, PSIA 42.0 LBS @ start of Blowdown.

Terminal Operator _____

Blowdown.

APPENDIX D

AMBIENT TEMPERATURE _____ HOUR NO. _____

BAROMETRIC PRESSURE _____ DATE 3/20/79

ROTAMETER FLOW _____ VERIFIED BY P Bennett

	ILRT DATA SHEET			
TIME/SAMPLE NO.	21001	21301	21601	2230
RTD # 1				
RTD # 2				
RTD # 3				
RTD # 4				
RTD # 5				
RTD # 6				
RTD # 7				
RTD # 8				
RTD # 9				
RTD # 10				
RTD # 11				
RTD # 12				
RTD # 13				
RTD # 14				
RTD # 15				
RTD # 16				
RTD # 17				
RTD # 18				
RTD # 19				
RTD # 20				
RTD # 21 (SPARE)				
RTD # 22 (SPARE)				
ABSOLUTE PRESS	36.7	34.6	32.7	31.9
D. Pt. # 1				
D. Pt. # 2				
D. Pt. # 3				
D. Pt. # 4				

Pressure # 1	74610	70410	66490	62730
Pressure # 2 (SPARE)	75130	70880	66910	63100

D. Pt. - Dew Point _____

RHD - Relative Humidity Detector, _____

Pressure, 36.7 PSIA

Terminal Operator _____

3/16/79

Blowdown

APPENDIX D

AMBIENT TEMPERATURE _____ HOUR NO. _____

BAROMETRIC PRESSURE _____ DATE 3/20 - 3/21/79

ROTAMETER FLOW _____ VERIFIED BY _____

	ILRT DATA SHEET			
TIME/SAMPLE NO.	23:01	23301	0001	0030
RTD # 1				
RTD # 2				
RTD # 3				
RTD # 4				
RTD # 5				
RTD # 6				
RTD # 7				
RTD # 8				
RTD # 9				
RTD # 10				
RTD # 11				
RTD # 12				
RTD # 13				
RTD # 14				
RTD # 15				
RTD # 16				
RTD # 17				
RTD # 18				
RTD # 19				
RTD # 20				
RTD # 21 (SPARE)				
RTD # 22 (SPARE)				
PSIA	29.15	27.50	26.12	24.65
D. Pt. # 1				
D. Pt. # 2				
D. Pt. # 3				
D. Pt. # 4				
P				
Pressure # 1	59180	55680	52755	49860
Pressure # 2 (SPARE)	59480	55980	52990	50062

D. Pt. - Dew Point _____

RHD - Relative Humidity Detector, _____

Pressure, 29.15 PSIA

Terminal Operator _____

APPENDIX D

AMBIENT TEMPERATURE _____ HOUR NO. _____

BAROMETRIC PRESSURE _____ DATE 3/21/79

ROTAMETER FLOW _____ VERIFIED BY _____

	ILRT DATA SHEET			
TIME/SAMPLE NO.	0100 /	0130 /	0200 /	0230 /
RTD # 1				
RTD # 2				
RTD # 3				
RTD # 4				
RTD # 5				
RTD # 6				
RTD # 7				
RTD # 8				
RTD # 9				
RTD # 10				
RTD # 11				
RTD # 12				
RTD # 13				
RTD # 14				
RTD # 15				
RTD # 16				
RTD # 17				
RTD # 18				
RTD # 19				
RTD # 20				
RTD # 21 (SPARE)				
RTD # 22 (SPARE)				
PSIA	23.32	22.12	21.00	19.9
D. Pt. # 1				
D. Pt. # 2				
D. Pt. # 3				
D. Pt. # 4				

Pressure # 1	47175	44690	42408	40325
Pressure # 2 (SPARE)	47340	44820	42575	40422

D. Pt. - Dew Point _____

RHD - Relative Humidity Detector, _____

Pressure, _____

Terminal Operator _____

APPENDIX D

AMBIENT TEMPERATURE _____ HOUR NO. _____

BAROMETRIC PRESSURE _____ DATE 3/21/79

ROTAMETER FLOW _____ VERIFIED BY _____

	ILRT DATA SHEET			
TIME/SAMPLE NO.	03001	03301	04001	04301
RTD # 1				
RTD # 2				
RTD # 3				
RTD # 4				
RTD # 5				
RTD # 6				
RTD # 7				
RTD # 8				
RTD # 9				
RTD # 10				
RTD # 11				
RTD # 12				
RTD # 13				
RTD # 14				
RTD # 15				
RTD # 16				
RTD # 17				
RTD # 18				
RTD # 19				
RTD # 20				
RTD # 21 (SPARE)				
RTD # 22 (SPARE)				
PSIA	18.98	18.18	17.45	16.30
D. Pt. # 1				
D. Pt. # 2				
D. Pt. # 3				
D. Pt. # 4				

Pressure # 1	38448	36764	35267	33961
Pressure # 2 (SPARE)	38506	36800	35232	33961

D. Pt. - Dew Point _____ Avg temp. 72.38 @ 0300

RHD - Relative Humidity Detector, _____

Pressure, _____

Terminal Operator _____

APPENDIX D

AMBIENT TEMPERATURE _____ HOUR NO. _____

BAROMETRIC PRESSURE _____ DATE 3-21-79

ROTAMETER FLOW _____ VERIFIED BY _____

	ILRT DATA SHEET			
TIME/SAMPLE NO.	0500 /	0530 /	0600 /	0630 /
RTD # 1				
RTD # 2				
RTD # 3				
RTD # 4				
RTD # 5				
RTD # 6				
RTD # 7				
RTD # 8				
RTD # 9				
RTD # 10				
RTD # 11				
RTD # 12				
RTD # 13				
RTD # 14				
RTD # 15				
RTD # 16				
RTD # 17				
RTD # 18				
RTD # 19				
RTD # 20				
RTD # 21 (SPARE)				
RTD # 22 (SPARE)				
PSIA	16.24	15.75	15.38	15.10
D. Pt. # 1				
D. Pt. # 2				
D. Pt. # 3				
D. Pt. # 4				

Pressure # 1	32840	31905.	31152	30575
Pressure # 2 (SPARE)	32930	31883.	31124	30539

D. Pt. - Dew Point _____ Avg Temp - 73.32 @ 0500

RHD - Relative Humidity Detector, _____

Pressure, _____

Terminal Operator _____

[illegible]

APPENDIX D

AMBIENT TEMPERATURE _____ HOUR NO. _____

BAROMETRIC PRESSURE _____ DATE 3-21-79

ROTAMETER FLOW _____ VERIFIED BY _____

ILRT DATA SHEET				
TIME/SAMPLE NO.	0700 /	0730 /	- /	/
RTD # 1		75.18		
RTD # 2		75.41		
RTD # 3		75.71		
RTD # 4		75.81		
RTD # 5		75.32		
RTD # 6		74.95		
RTD # 7		75.49		
RTD # 8		75.37		
RTD # 9		76.97		
RTD # 10		76.53		
RTD # 11		75.60		
RTD # 12		75.04		
RTD # 13		75.37		
RTD # 14		75.47		
RTD # 15		76.69		
RTD # 16		75.65		
RTD # 17		75.49		
RTD # 18		76.51		
RTD # 19		75.34		
RTD # 20		76.08		
RTD # 21 (SPARE)		~~75.39~~ 15.39		
RTD # 22 (SPARE)		75.40		
PSIA	14.89	14.75		
D. Pt. # 1		.378		
D. Pt. # 2		.375		
D. Pt. # 3		.454		
D. Pt. # 4		.468		

Pressure # 1	30166	29890		
Pressure # 2 (SPARE)	30126	29841		

D. Pt. - Dew Point _____

RHD - Relative Humidity Detector, _____

Pressure, _____

Terminal Operator _____

APPENDIX E

Data Sheet for Manual Calculations

FOR INFORMATION ONLY
INTEGRATED LEAK RATE TEST DATA SHEET

I. CALCULATIONS

$$L = \left(\frac{100 \times 24}{\Delta t}\right)\left[\frac{\left(\frac{P_i - W_i}{T_i}\right) - \left(\frac{P_f - W_f}{T_f}\right)}{\left(\frac{P_i - W_i}{T_i}\right)}\right]$$

or

$$L = \left(\frac{100 \times 24}{\Delta t}\right)\left[1 - \frac{(P_f - W_f)\ T_i}{(P_i - W_i)\ T_f}\right] \quad \text{\% per day}$$

A. Δt = Duration of test = _____ hours

B. $P_i - W_i$ = _____ psia

C. T_i = _____ F + 459.69 = _____ R

D. $P_f - W_f$ = _____ psia = _____

E. T_f = _____ F + 459.69 = _____ R

In the unlikely event that the computer is lost, a desk calculator or similar unit may be utilized and shall be available for this purpose.

II. RESULTS

$$L = \frac{2400}{(24)}\left[1 - \frac{(\quad - \quad)\ (\quad)}{(\quad - \quad)\ (\quad)}\right] = \quad \text{\% per day}$$

All parameters to be recorded for all test phases except pressurizatio. and depressurization. All readings taken at one (1) hour intervals, maximum.

Verified by: _____
Date: _____

[illegible]

[illegible]

APPENDIX F

I & C Instrument List

[illegible]

[illegible]

[illegible]

[illegible]

[illegible]

R. Cook RC
JOSE M. AMEZAGA

CONTAINMENT EQUIPMENT CHECK LIST

1. Fischer Porter/Hagan Transmitters - On all below listed transmitters, insure cover o-rings are installed and in good repair. Tighten cover hand-tight.

Transmitter #	Function	Performed By		Restored-QC	
PT-3-138	Excess Ltdn Line Press	3-15-79	JMA	3-26-79	RC
FT-3-436	RC Flow Loop C		JMA		RC
FT-3-435	RC Flow Loop C.		JMA		RC
FT-3-932	Safety Inj. Line Flow Loop A		JMA		RC
FT-3-933	Safety Inj. Line Flow Loop B		JMA		RC
FT-3-434	RC Flow Loop C		JMA		RC
FT-3-424	RC Flow Loop B		JMA		RC
FT-3-425	RC Flow Loop B		JMA		RC
FT-3-426	RC Flow Loop B		JMA		RC
PT-3-402	RCS Wide Range Press.		JMA		RC
PT-3-403	RCS N.R. Press.		JMA		RC
PT-3-405	RCS W.R. Press.		JMA		RC
FT-3-416	RC Flow Loop A		JMA		RC
FT-3-415	RC Flow Loop A		JMA		RC
FT-3-414	RC Flow Loop A		JMA		RC
PT-3-1004	RCS Drain Tank Press.		JMA		RC
PT-3-155	RCP "B" Seal Delta P		JMA		RC
PT-3-128	RCP "B" Thermal Barrier Delta P		JMA		RC
LT-3-484	Stm Gen "B" N.R. Level Ch. 1		JMA		RC
LT-3-485	Stm Gen "B" N.R. Level Ch. 2		JMA		RC
LT-3-486	Stm Gen "B" N.R. Level Ch. 3		JMA		RC
LT-3-487	Stm Gen "B" W.R. Level		JMA		RC
PT-3-455	Przr Press. Prot. Ch. I		JMA		RC
PT-3-456	Przr Press. Prot. Ch. II		JMA		RC
PT-3-457	Przr Press. Prot. Ch. III		JMA		RC
PT-3-445	Przr Press. Control		JMA		RC
LT-3-462	Przr Level Control		JMA		RC
PT-3-444	Przr Press. Control		JMA		RC
PT-3-458B	Przr Press. Cal.		JMA		RC
PT-3-923	Acc. Tank A Press.		JMA		RC
PT-3-131	RCP C Thermal Barrier		JMA		RC
PT-3-156	RCP A Seal Delta P		JMA		RC
PT-3-472	PRT Pressure		JMA		RC
LT-3-474	Stm Gen A N.R. Level Ch. 1		JMA		RC
LT-3-475	Stm Gen A N.R. Level Ch. 2		JMA		RC
LT-3-476	Stm Gen A N.R. Level Ch. 3		JMA		RC
LT-3-477	Stm Gen A N.R. Level		JMA		RC
PT-3-921	Acc A Press.		JMA		RC
PT-3-925	Acc B Press.		JMA		RC
PT-3-927	Acc B Press.		JMA		RC
PT-3-929	Acc C Press.		JMA		RC
LT-3-494	Stm Gen C N.R. Level Ch. I		JMA		RC
LT-3-495	Stm Gen C N.R. Level Ch. II		JMA		RC
LT-3-496	Stm Gen C N.R. Level		JMA		RC
LT-3-497	Stm Gen C W.R. Level		JMA		RC
PT-3-931	Acc C Press		JMA		RC
PT-3-154	RCP 3C Seal Water Delta P		JMA		RC
PT-3-125	RCP Loop C Shaft Seal Delta P		JMA		RC
FT-3-494	Stm Gen C Stm Flow Ch. I		JMA		RC
FT-3-495	Stm Gen C Stm Flow Ch. II		JMA		RC

INTEGRATED LEAK RATE TEST

3/19/79
R. Cook RC
Jose M. Amezaga

Transmitter #	Function	Performed By	Restored-QC
FT-3-485	Stm Gen B Stm Flow Ch. II		3-26-79 RC
FT-3-484	Stm Gen B Stm Flow Ch. I		RC
FT-3-474	Stm Gen A Stm Flow Ch. I		RC
FT-3-475	Stm Gen A Stm Flow Ch. II		RC

2. Barton Level Transmitters - On all below listed transmitters, insure cover o-rings are installed and in good repair. Tighten covers.

Transmitter #	Function	Performed By	Restored-QC
LT-3-459	Press. Level Prot. Ch. I		3-26-79 RC
LT-3-460	Press. Level Prot. Ch. II		RC
LT-3-461	Press. Level Prot. Ch. III		RC

3. Barton Flow Indicating Switches - Loosen the covers on all of the below listed equipment.

Transmitter #	Function	Performed By	Restored-QC
FIC-3-490	RTD Bypass Flow A		3-26-79 RC
FIC-3-491	RTD Bypass Flow B		RC
FIC-3-492	RTD Bypass Flow C		RC

4. Brooks Flow Indicator/Transmitters - Loosen the covers on all of the below listed equipment.

Transmitter #	Function		Performed By		Restored-QC
FT-3-156A	RCP A Seal Leak Off (Hi)	3-15-79		3-26-79	RC
FT-3-156B	RCP A Seal Leak Off (Lo)				RC
FT-3-155A	RCP B Seal Leak Off (Hi)				RC
FT-3-155B	RCP B Seal Leak Off (Lo)				RC
FT-3-154A	RCP C Seal Leak Off (Hi)				RC
FT-3-154B	RCP C Seal Leak Off (Lo)				RC
FIC-3-154	Low Flow RCP C Seal Water				RC
FIC-3-635	RCP C Low Flow CCW				RC
FIC-3-629	RCP A Low Flow CCW				RC
FIC-3-632	RCP B Low Flow CCW				RC
FIC-3-155	Low Flow RCP B Seal Water				RC
FIC-3-156	Low Flow RCP A Seal Water				RC

5. Pressurizer Instrument Cabinet Heaters - De-energize heaters by performing the following.

Transmitter #	Function	Performed By	Restored-QC
TC-3-440A	B/S switch to test (Rack 2)	3-15-79	3-26-79 RC
TC-3-441A	B/S switch to test (Rack 12)	3-15-79	RC
TC-3-442A	B/S switch to test (Rack 15)	3-15-79	RC
TC-3-443A	Remove output fuse (Rack 7)	3-15-79	RC

R. Cook RC
JOSE M. ANEZIRA

6. Remove the following equipment from the Containment.

Equipment	Performed By	Restored-QC
Flux mapper Gas Bottles	3-15-79	3-26-79 RC
~~Containment Sump Floats~~ SEE OTSC # 465	—	—
ARMS G.M. Tubes	3-15-79	3-26-79 RC
Dillion Load meters (manipulator & polar crane)	3-15-79	3-26-79 RC

7. Install the following jumpers, with Temporary jumper tags.

Rack	Terminals	Performed By	Restored-QC
3Q R 51	P1 to 5	3-15-79	3-26-79 RC
3Q R 51	33 to 35		RC
3Q R 51	23 to 25		RC
3Q R 50	9 to 11		RC
3Q R 50	39 to 41		RC
3Q R 50	373 to 377		RC

8. Conduct inspection of all levels in Containment and ensure

	Performed By	Restored-QC
All Local Gauges (Pressure and Temp) faces are removed	3-15-79	3-26-79 RC
All Local flowrators have at least one glass face removed	3-15-79	3-26-79 RC

9. ~~Verify Containment Sump Level System is operable.~~ OTSC # 465

~~Performed by~~ J. Menduita 3-15-79

NOTE: Column 1 of Pages 56, 57, 58 and 59 were filled out on or before 3/15/79 using the 3/1/79 version of the procedure. On 3/16/79, the procedure was revised to reflect the use of dewcells instead of relative humidity detectors. This change necessitated renumbering of pages 47-69 of the procedure. The only change on pages 56-59 was the page number & date.

O. W. Jones 3/16/79

AIR OPERATED CONTAINMENT VALVE FAILURE MODE

VALVE	FAILURE MODE	
CV-3-200 A	3-15-79 Closed	
CV-3-200 B	Closed	
CV-3-200 C	Closed	
CV-3-307	Closed	
CV-3-310 A	Open	
CV-3-310 B	Open	
CV-3-311	Closed	
CV-3-387	Closed	
CV-3-460	Open	
CV-3-455 A	Closed	
CV-3-456	Closed	
~~CV-3-456 A~~ DELETE	~~Closed~~ (DELETE)	SEE OTSC 465
CV-3-455 ~~A~~ B	Closed	SEE OTSC 465
CV-3-455 C	Closed	
~~CV-3-455 D~~ DELETE	~~Closed~~ (DELETE)	SEE OTSC 465
CV-3-519 A	Closed	
~~CV-3-522~~ DELETE	~~Closed~~ (DELETE)	SEE OTSC 465
CV-3-519 B	Closed	
CV-3-522 A	Closed	
CV-3-522 B	Closed	
CV-3-522 C	Closed	
CV-3-523	Closed	
CV-3-549	Closed	
CV-3-544	Open	
CV-3-389	Divert	
CV-3-853 A	Closed	
CV-3-851 A	Closed	
CV-3-852 A	Closed	
CV-3-850 A	Closed	
CV-3-850 B	Closed	
CV-3-853 B	Closed	
CV-3-851 B	Closed	
CV-3-852 B	Closed	
CV-3-850 C	Closed	
CV-3-850 D	Closed	
CV-3-850 E	Closed	
CV-3-850 F	Closed	
CV-3-852 C	Closed	
CV-3-853 C	Closed	
CV-3-851 C	Closed	
CV-3-936	Closed	
CV-3-951	Closed	
CV-3-953	Closed	
CV-3-955 B	Closed	
CV-3-955 C	Closed	
CV-3-955 D	Closed	
CV-3-955 E	Closed	
LCV-3-1003 A	Closed	
LCV-3-1003 B	Closed	

APPENDIX G

Breaker List

ELECTRICAL EQUIPMENT INSIDE UNIT #3 CONTAINMENT

Canister No. T3C21

Containment Cooling Fan A	3B0518
MOV-3-865A Accumulator A Discharge to a Cold Leg	3B0532
RCP #3A Oil Lift Pump	3B0554
Containment Sump Pump 3A	3B0667

Canister No. T3C22

Containment Cooling Fan B	3B0642
Control Rod Drive Mechanisms Cooler 3A	3B0629
MOV-3-750 Loop C Hot Leg to RHR	3B0615
MOV-3-744B RHR Return to Cold Legs	3B0613
MOV-3-866B Delayed HH SI to Loop B Hot Leg	3B0621
MOV-3-865B Accumulator B Discharge to B Cold Leg	3B0631
MOV-3-535 Pressurizer Power Relief Isolation	3B0606
Reactor Coolant Pump 3B Oil Lift Pump	3B0679
Reactor Coolant Drain Tank Pump 3A Thermal Cut-Out	3B0662

Canister No. T3C13

Containment Cooling Fan 3D	B0829

Canister No. T3C23

Containment Cooling Fan 3C	3B0742
Control Rod Drive Mechanism Cooler Fan #3B	3B0727
Reactor Coolant Pump 3C Oil Lift Pump	3B0762
MOV-3-865C Accumulator 3C Discharge to Loop C Cold Leg	3B07[illegible]
MOV-3-536 Pressurizer Power Relief Valve Isolation	3B0713

ELECTRICAL EQUIPMENT INSIDE UNIT #3 CONTAINMENT

Canister No. T3C21

Containment Cooling Fan A	3B0518
MOV-3-865A Accumulator A Discharge to a Cold Leg	3B0532
RCP #3A Oil Lift Pump	3B0554
Containment Sump Pump 3A	3B0667

Canister No. T3C22

Containment Cooling Fan B	3B0642
Control Rod Drive Mechanisms Cooler 3A	3B0629
MOV-3-750 Loop C Hot Leg to RHR	3B0615
MOV-3-744B RHR Return to Cold Legs	3B0613
MOV-3-866B Delayed HH SI to Loop B Hot Leg	3B0621
MOV-3-865B Accumulator B Discharge to B Cold Leg	3B0631
MOV-3-535 Pressurizer Power Relief Isolation	3B0606
Reactor Coolant Pump 3B Oil Lift Pump	3B0679
Reactor Coolant Drain Tank Pump 3A Thermal Cut-Out	3B0662

Canister No. T3C13

Containment Cooling Fan 3D	B0829

Canister No. T3C23

Containment Cooling Fan 3C	3B0742
Control Rod Drive Mechanism Cooler Fan #3B	3B0727
Reactor Coolant Pump 3C Oil Lift Pump	3B0762
MOV-3-865C Accumulator 3C Discharge to Loop C Cold Leg	3B0733
MOV-3-536 Pressurizer Power Relief Valve Isolation	3B0713

[illegible]

Canister No. T3C23 (continued)

MOV-3-751 Loop C Hot Leg to RHR Pump Suction	3B0731
MOV-3-744A RHR Return to Cold Legs	3B0722
MOV-3-866A Delayed High Head SI to Loop A Hot Leg	3B0732
Reactor Coolant Drain Tank Pump 3B Thermal Cut-Out	3B0787

Canister No. T3P11

Emergency Containment Filter Fan 3A	3B0611
Normal Containment Cooler Fan 3B	3B0642
Control Rod Drive Mechanisms Cooling Fan 3A	3B0629
Lighting Transformer 36	3B0658
Containment Elevator #3	3B0619

Canister No. T3P21

Reactor Crane 3	3B0104
Normal Containment Cooler Fan 3A	3B0518
Lighting Panel D.C. Feed	3Y0605

Canister No. T3P32

480 Volt Receptacle #17 and #17A	3B0653
Reactor Coolant Drain Tank Pump 3A	3B0662

Canister No. T3P33

480 Volt Misc Containment Distribution Panel (3P11)	3B0673

[illegible]

[illegible]

[illegible]

Canister No. T3P12

Emergency Containment Filter Fan 3C	3B0719
Normal Containment Cooler Fan 3C	3B0742
Control Rod Drive Mechanism Cooler Fan 3B	3B0727
Lighting Transformer #37 3X07 Containment Entrance	3B0768

Canister No. T3P22

Emergency Containment Filter Fan 3B	B0806
Normal Containment Cooler Fan 3D	B0829

Canister No. T3P35

480 Volt Misc Containment Distribution Panel #1 (3P10)	3B0771
Reactor Coolant Drain Tank Pump 3B	3B0787

Canister No. T3P41

Pressurizer Heaters 2, 23, and 50	3B1101
Pressurizer Heaters 26, 53, and 54	3B1103
Pressurizer Heaters 7, 29, and 57	3B1105
Pressurizer Heaters 10, 32, and 60	3B1107
Pressurizer Heaters 12, 35, and 64	3B1102
Pressurizer Heaters 38, 67, and 68	3B1104
Pressurizer Heaters 17, 41, and 71	3B1106
Pressurizer Heaters 19, 44, and 75	3B1108
Emergency Containment Cooler Fan 3A	3B0650

[illegible]

[illegible]

[illegible]

[illegible]

[illegible]

[illegible]

[illegible]

[illegible]

[illegible]

[illegible]

[illegible]

[illegible]

[illegible]

[illegible]

[illegible]

[illegible]

[illegible]

[illegible]

[illegible]

[illegible]

[illegible]

[illegible]

[illegible]

[illegible]

Canister No. T3P51

Misc AC Instruments	3P0610
Space Heaters	3Y0439
Space Heaters	3Y0521
MOV-3-865B Accumulator B Discharge to B Cold Leg	3B0631
Reactor Coolant Pump 3B Oil Lift Pump	3B0679
MOV-3-866B Delayed HH SI to Loop B Hot Leg	3B0621
MOV-3-535 Pressurizer Power Relief Isolation	3B0606
Containment Sump Pump 3A	3B0667
MOV-3-744B RHR Return to Cold Legs	3B0613
MOV-3-750 Loop C Hot Leg to RHR (IMB)	3B0615

Canister No. T3P42

Pressurizer Heaters 21, 47, and 48	3B1201
Pressurizer Heaters 3, 24, and 51	3B1203
Pressurizer Heaters 5, 27, and 55	3B1205
Pressurizer Heaters 8, 30, and 58	3B1207
Pressurizer Heaters 33, 61, and 62	3B1209
Pressurizer Heaters 13, 36, and 65	3B1202
Pressurizer Heaters 15, 39, and 69	3B1204
Pressurizer Heaters 18, 42, and 72	3B1206
Pressurizer Heaters 20, 45, and 76	3B1208
Emergency Containment Cooler Fan 3B	B0820

[illegible]

[illegible]

[illegible]

[illegible]

Canister No. T3P53

Space Heaters	3Y0467
Space Heaters	3Y0501
Space Heaters	3Y0502
Space Heaters	3Y0504
Space Heaters	3Y0503
Space Heaters	3Y0505
Space Heaters	3Y0506
Space Heaters	3Y0507
Space Heaters	3Y0508
Misc AC Instruments	3P0814
MOV-3-865C Accumulator 3C Discharge to Loop C Cold Leg.	3B0733
Reactor Coolant Pump 3C Oil Lift Pump	3B0762
MOV-3-866A Delayed high Head SI to Loop A Hot Leg	3B0732
MOV-3-536 Pressurizer Power Relief Valve Isolation	3B0713
MOV-3-744A RHR Return to Cold Legs	3B0722
MOV-3-751 Loop C Hot Leg to RHR Pump Suction	3B0731
Containment Sump Pump #3B	3B0778
Fuel Tilting Winch Panel 3B (IC)	3B0763

Canister No. T3P43

Pressurizer Heaters 1, 22, and 49	3B1301
Pressurizer Heaters 4, 25, and 52	3B1303
Pressurizer Heaters 6, 28, and 56	3B1305
Pressurizer Heaters 9, 31, and 59	3B1307
Pressurizer Heaters 11, 34, and 63	3B1309
Pressurizer Heaters 14, 37, and 66	3B1302

[illegible]

[illegible]

[illegible]

Canister No. T3P43 (continued)

Pressurizer Heaters 16, 40, and 70	3B1304
Pressurizer Heaters 43, 73, and 74	3B1306
Pressurizer Heaters 46, 77, and 78	3B1308
Emergency Containment Cooler Fan 3C	3B0729

Canister No. T3P52

Misc AC Instruments	3P0917
Space Heaters	3Y0439
Space Heaters	3Y0521
Misc A.C. Instruments	3P0714
MOV-3-865A Accumulator A Discharge to a Cold Leg	3B0532
RCP #3A Oil Lift Pump	3B0554
Space Heaters	3Y0403
Space Heaters	3Y0404
Space Heaters	3Y0410

Canister No. 5KV "A" RCP

Reactor Coolant Pump A	152-3AA01

Canister No. 5KV "B" RCP

Reactor Coolant Pump B	152-3AB01

Canister No. 5KV "C" RCP

Reactor Coolant Pump C	152-3AB06

MISC

RCP 3A Heater Breaker	3AA01
RCP 3B Heater Breaker	3AB01
RCP 3C Heater Breaker	3AB06

Canister No. T3C12

Fuel Tilting Wench	3FTS/3C08-T3C12/1
Fuel Tilting Wench	3FTS/3C08-T3C12/2
Code Call & Fire Alarm W6	Canister Wire ref. 26
Spare	Canister Wire ref. 6 & 8

Canister No. T3C31

Spare	Canister Wire ref. 7 & 12
Public Address Communication System	Canister Wire ref. 11
PAX Telephone W3	Canister Wire ref. 9

Canister No. T3C41

Spare	Canister Wire ref. 12
Telephone Circuit for Maintenance W7	Canister Wire ref. 11
Public Address Communication System	Canister Wire ref. 7

Canister No. T3C11

Spare	Canister Wire ref. 5, 6, 8, 18 & 22
Remote Control LP 37	Canister Wire ref. 2

Canister No. T3P31

Spare	Canister Wire ref. 25 & 26