WCAP-15302

Donald C. Cook Nuclear Plant Units 1 and 2 Modifications of the Containment Systems Westinghouse Safety Evaluation

(SECL-99-076, Revision 3)

9910060110 991001
PDR ADOCK 05000315
P PDR

September, 1999

Westinghouse Electric Company LLC
P.O. Box 355
Pittsburgh, PA 15230-0355

©1999 Westinghouse Electric Company LLC
All Rights Reserved

WESTINGHOUSE NUCLEAR SAFETY

SAFETY EVALUATION CHECK LIST (SECL)

1) NUCLEAR PLANT(S): Donald C. Cook Nuclear Plant Units 1 & 2

2) SUBJECT: MODIFICATIONS TO THE CONTAINMENT SYSTEM TO ENSURE ADEQUATE POST-ACCIDENT WATER INVENTORY IN THE ECCS RECIRCULATION SUMP

3) The written safety evaluation of the revised procedure, design change or modification required by 10CFR50.59 (b) has been prepared to the extent required and is attached. Parts A and B of this Safety Evaluation Check List have been completed only on the basis of the safety evaluation performed.

CHECK LIST I PART A 10CFR50.59(a)(I)

- Yes ☒ No ☐ A change to the plant as described in the FSAR?
- Yes ☒ No ☐ A change to procedures as described in the FSAR?
- Yes ☐ No ☒ A test or experiment not described in the FSAR?
- Yes ☒ No ☐ A change to the plant Technical Specifications? (See Note on Page 2.)

4) CHECK LIST - PART B 10CFR50.59(a)(2) (Justification for answers to Part B is included on Page 2.)

4.1 Yes ☐ No ☒ Will the probability of an accident previously evaluated in the FSAR be increased?

4.2 Yes ☐ No ☒ Will the consequences of an accident previously evaluated in the FSAR be increased?

4.3 Yes ☐ No ☒ May the possibility of an accident which is different than any already evaluated in the FSAR be created?

4.4 Yes ☐ No ☒ Will the probability of a malfunction of equipment important to safety previously evaluated in the FSAR be increased?

4.5 Yes ☐ No ☒ Will the consequences of a malfunction of equipment important to safety previously evaluated in the FSAR be increased?

4.6 Yes ☐ No ☒ May the possibility of a malfunction of equipment important to safety different than any already evaluated in the FSAR be created?

4.7 Yes ☐ No ☒ Will the margin of safety as defined in the Bases to any Technical Specification be reduced?

NOTES:

If the answer to any of the above questions is unknown, indicate under Section 5.0, REMARKS and explain below.

Based on the written Safety Evaluation, all of the above questions in Part A (3.4) cannot be answered in the negative, the change review therefore requires

an application for license amendment as required by 10CFR50.59(c), be submitted to the NRC pursuant to 10CFR50.90.

5) REMARKS:

The answers given in Section 3, Part A, and Section 4, Part B, of the Safety Evaluation Checklist, are based on the attached Safety Evaluation.

FOR FSAR UPDATE

Section: N/A Pages: N/A Tables: N/A Figures: N/A

Reason for/Description of Change:

N/A

6) SAFETY EVALUATION APPROVAL LADDER:

Prepared by: _____ Date: 9/22/99

Reviewed by: _____ 9/22/99

Westinghouse Safety Evaluation

(SECL 99-076, Revision 3)

Donald C. Cook Nuclear Plant Units 1 & 2

Modifications To The Containment Systems

This Westinghouse Safety Evaluation of the modifications to the containment systems of Donald C. Cook Nuclear Plants Units 1 & 2 has been performed in support of the attendant application for license amendment, as required by 10CFR50.59(c) to be submitted to the NRC pursuant to 10CFR50.90.

WESTINGHOUSE SAFETY EVALUATION

DONALD C. COOK PLANT UNITS 1 & 2

MODIFICATIONS TO THE CONTAINMENT SYSTEM

Table of Contents

1. BACKGROUND 5

2. LICENSING BASIS 6
   2.1 Technical Specifications 7

3. SAFETY EVALUATIONS 7
   3.1 Non-LOCA Related Evaluation 7
   3.2 Mechanical Components and Systems Evaluation 8
      3.2.1 Structural and Mechanical Systems 8
      3.2.2 NSSS Component, and Control Systems Evaluation, ... 8
   3.3 Fluid Systems Evaluation 8
      3.3.1 RWST Drain-Down Calculation 8
   3.4 Containment Integrity Evaluation 20
      3.4.1 Short Term LOCA M&E / Subcompartment: Loop Compartment Analyses, Reactor Cavity, Pressurizer Enclosure; and, Short Term MSLB M&E / Subcompartment: Steam Generator Enclosure and Fan Accumulator Room Analyses 22
      3.4.2 Containment Integrity (Long Term LOCA) 23
      3.4.3 Post-LOCA Hydrogen Generation Evaluation 27
      3.4.4 Main Steamline Break (MSLB) Mass and Energy Release 27
      3.4.5 Conclusions Of Containment Integrity Evaluation 29
   3.5 LOCA and LOCA-Related Analyses 29
      3.5.1 Introduction 29
      3.5.2 Evaluation of the Post-LOCA Subcriticality Calculation 31
      3.5.3 Evaluation of the Post-LOCA Long Term Core Cooling Analysis 33
      3.5.4 Changes which Impact the Small Break and Large Break LOCA Analysis ... 35
      3.5.5 LOCA Evaluation Summary and Conclusions 36
   3.6 Emergency Operating Procedures Evaluation 43
   3.7 Steam Generator Tube Rupture Evaluation 43
   3.8 Radiological Consequences Evaluation 43

4. DETERMINATION OF NO SIGNIFICANT HAZARDS 45

5. REFERENCES 48

SAFETY EVALUATION OF CONTAINMENT SYSTEM MODIFICATIONS

1. BACKGROUND

The Donald C. Cook Nuclear Plant Units 1 and 2 Containment/ECCS design is based on the assumption that water will accumulate in the recirculation sump following an accident. The sources of water include the Refueling Water Storage Tank (RWST) volume (from RCS leakage and/or containment spray (CTS) actuation), condensate from the ice condenser, RCS inventory, and inventory from the ECCS accumulators. However, the amount of water available from these sources is time-dependent based on the specific accident scenario. It is assumed that sufficient water is available to assure satisfactory containment spray / ECCS pump operation in recirculation mode.

The current design of the Donald C. Cook containment and safety systems includes features that can result in a portion of the water injected into containment being diverted away from the recirculation sump and not being returned. Thus, depending on the accident scenario, there may not be sufficient water in the sump to assure satisfactory pump operation during recirculation mode, i.e., sufficient water to preclude vortex formation. This possibility was not identified during the original design and construction of the plants because the postulated events that can lead to insufficient inventory are small break LOCAs, and the emphasis during construction regarding the containment and safety system design was focused on large break LOCAs.

AEP is now proposing design changes, described in Reference 1 to address this issue. As discussed in Reference 1, the design changes are intended to ensure the availability of sufficient post-accident containment water inventory to meet the established NPSH requirements for the ECCS and CTS pumps, and to prevent vortex formation in the containment ECCS recirculation sump. The Licensing Bases requirements for the ECCS recirculation sump are that the sump level must be at, or above the 602'10" elevation at the time of switch-over to the recirculation mode, and that the level must remain above 602'10" while in recirculation mode. This level was demonstrated by testing to be adequate for satisfactory ECCS pump performance (i.e., adequate NPSH and no vortexing). Because satisfactory operation of the ECCS systems requires proper function of the sump (i.e., minimum water level must be maintained), the sump must satisfy all design requirements for the same limiting conditions as the ECCS systems. These include all postulated licensing basis events and postulated single failures. The plant modifications determined to meet these objectives are described briefly below:

a) Partition Wall Penetration

In order to insure that water which enters the annulus area after a LOCA can return to the sump, penetrations will be added to the partition wall which forms the "chimney" area inside the crane wall behind the Pressurizer Relief Tank (PRT). This will require a design change to add these penetrations and other design features necessary to insure water level will equalize between the annulus and the active sump area.

b) CEQ Fan Room Drains

The CEQ fan room has drains to preclude the accumulation of water after containment spray actuation. Since a separate design change is replacing the check valves in the drain lines with safety related components to resolve a condition report, the drains will be rerouted to the reactor coolant system loop compartment for convenience.

c) Increase RWST Overflow Height

Addition of elbows and a vertical section to the RWST overflow line to allow a higher water level, that combined with a re-spanning of the tank instrumentation will result in an increase in the total amount of water which can be delivered from the tank.

d) Containment Sump Level Instrumentation Upgrade

The sump level instrumentation will be upgraded to improve the accuracy of the sump level information available to the operators for execution of the plant emergency operating procedures (EOPs).

e) CEQ Fan Start Logic

The CEQ fans currently start on the High-2 containment pressure signal with a delay of 9 ± 1 minutes, resulting in fan actuation after the containment spray starts. For smaller break sizes, containment spray severely limits the rate of ice melt from the ice condenser because much of the energy released into containment from the RCS is removed by the containment spray, rather than the ice condenser. To increase the rate of ice melt, and thus, increase the amount of water in the containment sump at the time of switch-over from the RWST, the CEQ fans will be started on a High-1 containment pressure signal with a minimal delay (120 ± 12 seconds).

f) Reduced Ice Mass in the Ice Condenser

To comply with the current ice mass technical specification (TS 3/4.6.5.1) would require significant maintenance of the ice bed during each plant outage. With this new containment integrity analysis presented herein, the ice weight required by the Technical Specifications may be reduced, resulting in greater operational flexibility for the ice condenser.

This Safety Evaluation considers these design changes as well as other plant changes that have resulted from related Condition Reports, with the purpose of determining the impact of the modifications on the licensing bases of the units, and demonstrating that the modifications will not adversely affect the subsequent safe operation of the Donald C. Cook Nuclear Plant Units 1 and 2.

2. LICENSING BASIS

This document provides the Containment Integrity and LOCA and LOCA-related safety analyses required for implementation of the modifications to the containment system as described herein, and the related changes to the input assumptions of affected safety analyses that are, in turn, required for the restart of the Donald C. Cook Units . It is the

purpose of this document to support the attendant application for license amendment as required by 10CFR50.59(c), to be submitted to the NRC pursuant to 10CFR50.90, and the determination that no significant hazards consideration is involved per 10CFR50.92. This document also presents the results of the revised analyses and supporting information necessary to update the UFSARs of Donald C. Cook Nuclear Plant Units 1 & 2.

2.1 Technical Specifications

The current Technical Specifications (Reference 2) must be revised to incorporate the relevant containment modifications evaluated herein. The potentially affected sections of the Donald C. Cook Nuclear Plant Units 1 & 2 Technical Specifications are listed below.

Technical Specification Number	Technical Specification Title
3.1.2.7	Borated Water Sources - Shutdown
3.1.2.8	Borated Water Sources - Operating
B 3/4.1	Bases for Reactivity Control Systems (Boration)
3.5.5	Refueling Water Storage Tank
B 3/4.5.5	Bases for Refueling Water Storage Tank
3.6.5.1	Ice Bed
B 3/4.6.5.1	Bases for Ice Bed

3. SAFETY EVALUATIONS

Westinghouse has reviewed the following areas with respect to the modifications to the containment systems and the related changes to the accident analyses input assumptions identified in Reference 3:

LOCA and LOCA- Related Analyses	Containment Analyses
Non-LOCA Analyses	Emergency Operating Procedures
NSSS Component and Control Systems	Technical Specifications
Fluid Systems	

The only areas found to be potentially affected by these modifications and referenced changes to the accident analysis input assumptions were the Emergency Operating Procedures, Mechanical and Fluid Systems, Containment Integrity Analysis, LOCA Analyses and the Radiological Analysis. It should be noted that while the subject changes affect the EOPs and Radiological Analyses, the effect in those areas will be addressed by AEP and/or Westinghouse in a separate Safety Evaluation.

3.1 Non-LOCA Related Evaluation

The non-LOCA Safety Analyses presented in Chapter 14 of the UFSAR(s) are not adversely affected by the modifications to the containment systems described herein. Further, this activity does not affect normal plant operating parameters, accident

mitigation capabilities, nor the assumptions used in the non-LOCA transients, and no conditions more limiting than those enveloped by the current non-LOCA analyses are created. Thus, the conclusions presented in the FSAR for the non-LOCA Safety Analyses will remain valid given implementation of these modifications.

3.2 *Mechanical Components and Systems Evaluation*

3.2.1 Structural and Mechanical Systems

The proposed modifications may impact the Structural and Mechanical Systems of the plant including:

1. Penetrations added to partition wall,
2. replacement of check valves in, and rerouting drain lines in the CEQ fan room, and
3. adding elbows and a vertical section to the line to increase RWST overflow height.

Structural and mechanical evaluations of the containment structures, the drain lines from the CEQ fan room, or the RWST that are necessary to assess the impacts of these changes are not included as part of this evaluation and are being addressed by AEP design engineering.

Westinghouse has reviewed the potential effect of these modifications on the RCS Components' Design Transients and has determined that there is none.

3.2.2 NSSS Component, and Control Systems Evaluation,

Westinghouse has determined that these modifications as described herein have no effect on the RCS Component design transients, margin to trip or cold/low temperature over pressure protection system (COMS/LTOP) (Condition 1 operability analyses), and the NSSS control system design, setpoints, and performance.

3.3 *Fluid Systems Evaluation*

3.3.1 RWST Drain-Down Calculation

One of the principal modifications being evaluated is to the Refueling Water Storage Tank (RWST) to allow an increase in the deliverable volume of borated water from the tank. This modification stems from the need to increase the level and volume of water contained in the recirculation sump at the time that the suctions of the Emergency Core Cooling System (ECCS) pumps, and the Containment Spray System (CTS) pumps are transferred from the RWST to the sump. The recirculation sump provides a water inventory to support the operation of the ECCS and CTS for long term cooling of the reactor core and containment, and for removing radioactive particulate from the containment atmosphere.

This increase in the deliverable volume from the RWST affects various plant safety analyses, as follows:

- The net positive suction head available (NPSHA) for the ECCS and CTS pumps is dependent on the minimum water levels in the RWST, as well as the minimum water levels in the recirculation sump. The verification of adequate NPSHA for the safeguard pumps is being performed by AEP in a separate evaluation. Accordingly, the analyses performed by Westinghouse assume that there is adequate NPSH for the Charging, Safety Injection, Residual Heat Removal (RHR), and CTS pumps over the range of levels encountered when taking suction from the RWST or the sump.
- The increase in RWST volume will increase the time period after a LOCA following which recirculation is initiated and completed. The core decay heat load will, therefore, be lower for longer times following the accident during the recirculation phase. The lower decay heat load at the time that recirculation is initiated will, therefore, provide a benefit for long term core cooling, as well as for hot leg recirculation and for boron concentration/precipitation in the reactor vessel.
- The longer time required to drain the RWST to the switch-over setpoint will also increase the amount of ice that will melt in the ice condenser and mix with the other water sources in the recirculation sump. This increased ice bed melt-out will potentially reduce the sump water temperature at the onset of recirculation, providing benefit for both core cooling and heat removal via the containment sprays. Because the ice is borated, the concentration of boron in the recirculated sump water will increase because of the larger mass of melted ice in the sump, providing a benefit for post-LOCA subcriticality calculations.
- For the containment integrity analysis, the sequence of operations used for switching the safeguard systems from the RWST to the recirculation sump involves a period of time during which all containment spray flow is stopped while the CTS pump suctions are re-aligned from the RWST to the sump. With a larger RWST, this interruption in spray flow occurs further out in time following the accident, which affects the containment pressure calculations.
- Changes to RWST volume and ice bed mass have been evaluated for their effect on long-term sump pH. These changes were small in magnitude, and therefore, were determined to have a negligible affect on the calculation of record on sump pH. In fact, in some cases, the changes were offsetting. In summary, there is no net effect on the calculated sump pH values, and the current Technical Specification pH limits of 7.6 to 9.5 (TS Bases 3/4.5.5) for the post-LOCA containment sump recirculation water will be maintained.

3.3.1.1 AEP Supplied Inputs to RWST Drain-Down Calculation

The following key inputs to the RWST Drain-Down calculations have been received from AEP:

1) Reference 3 gives the minimum delivered volume prior to initiating switch-over operations as at least 280,000 gallons, and the minimum total delivered volume at the completion of switch-over as at least 314,000 gallons. A key interpretation then used in this RWST Drain-Down calculation is that the 314,000 minimum total deliverable volume corresponds to the point in the switch-over procedure where the safety injection and charging pumps cease taking suction from the RWST. Due to the discharge pressure developed by the RHR pumps, this occurs when the RHR

heat exchanger outlet valves supplying the suctions of the charging and safety injection pumps are opened, causing the check valves in the RWST suction lines to these pumps to close, thereby stopping all suction flow from the RWST.

2) The sequence for loading the safeguards pumps onto the emergency power supply buses following an accident are as provided in Reference 4. Specifically, the starting times for the charging pump, safety injection pump, RHR pump, and spray pump are 3, 7, 11, and 31 seconds, respectively, after the diesel delay time. (Note that the times in Reference 4 include a ten second diesel delay time.) Even though it is conservative to empty the RWST as rapidly as possible for the LOCA and Containment analyses, the worst cases for the LOCA and Containment transients occur with a simultaneous loss of off-site power. Therefore, to be consistent with those accident analyses, the RWST drain-down analyses were performed using pump starting times that include the diesel startup delay and loading sequence to reflect a Loss of Offsite Power.

3) This RWST Drain-Down calculation by Westinghouse also assumes that Reference 5 is an accurate representation of the switch-over procedure, and that any later revisions to ES-1.3 are similar to Reference 5 in the areas critical to the calculation.

4) The sequence of operator actions during the switch-over procedure, and the times required to accomplish those actions, are described below for two alternative scenarios. The simplest scenario stops both trains of RHR/spray at the beginning of switch-over, and re-starts both trains of RHR/spray five minutes later. This scenario was used when calculating the RWST Drain-Down to support containment integrity and radiological dose analyses because it maximizes the time duration during which containment cooling and the scrubbing action of the containment sprays for removing iodine from the containment atmosphere are suspended. This switch-over scenario is also used for the LOCA analysis because it interrupts the flow from the RHR pump. However, for LOCA, an additional, more complicated switch-over scenario is provided in Reference 6. The Reference 6 sequence provides for a three minute interruption in RHR flow during switch-over from the time period beginning 120 seconds after the initiation of switch-over when the second train of RHR/CTS pumps are stopped, and extending to 300 seconds after switch-over when the first train of RHR/CTS pumps are re-started. Additionally, flow from the RWST is finally terminated at 660 seconds after the initiation of switch-over, when the RHR heat exchanger outlet valves are opened to supply the suctions of the charging and safety injection pumps. The RHR pump discharge pressure then causes the check valves in the RWST suction lines to the charging and safety injection pumps to close, effectively terminating suction flow from the tank.

5) The maximum containment spray flow per train is 3700 gpm (Reference 7), and 7400 gpm when both trains are in operation.

6) The minimum containment spray flow rate is 2932 gpm per train (Reference 3).

Because the RWST Drain-Down calculations are utilized in different accident analyses, they have been biased to conservatively affect these different analyses. The results of

the various cases are summarized in Tables 3.4-1 through 3.4-6, wherein the time values are in terms of time after the accident. The time t_s is the time after the accident required to generate the safeguards actuation signal. A loss of off-site power (LOOP) is assumed to occur simultaneously with the generation of the "S" signal. The time t_d is the time delay required to accelerate the diesel and prepare the emergency buses for loading after the diesel is signaled to start at time t_s. The starting times for the charging pump, safety injection pump, RHR pump, and spray pump are 3, 7, 11, and 31 seconds, respectively, after the diesel delay time. Outflow from the RWST does not begin until the charging pump is running at time $t_s + t_d + 3$ seconds. In this fashion, the RWST Drain-Down time can be related to a particular accident time by considering the appropriate values for variables t_s and t_d.

3.3.1.2 Descriptions Of The Drain-Down Cases Analyzed:

3.3.1.2.1 Two Train, Maximum Rate of Drain-Down Case

The assumptions for this Drain-Down case have been chosen to drain the RWST in the shortest time possible. This particular case was developed specifically to support the post-blowdown LOCA analyses. However, it is also one of several cases used for evaluating the sensitivity of the containment radiological dose calculations. This case is conservative for the LOCA analysis for several reasons. First, decay heat loading from the core is higher during sump recirculation for shorter times following the accident. Also, the shorter Drain-Down time means that a lesser amount of ice will have melted by the time that switch-over is initiated. Because the ice is borated, the lower mass of ice melt will minimize the mixed mean boron concentration, which biases the post-blowdown subcriticality requirement in a conservative direction. Consequently, the suction flow drawn from the RWST by the ECCS and CTS pumps have been conservatively maximized. In addition, both trains of ECCS and CTS safeguards equipment have been assumed to be operation.

The results of the Drain-Down calculation are summarized in Tables 3.3-1 and 3.3-2 which present two different models of the switch-over procedure. These tables provide a schedule of safety injection flow to the core, spray flow to the containment, RWST outflow, and RWST volume discharged, as a function of time for two trains of safeguards operation. The table also addresses the possible sources of suction, the RWST or the sump.

Switch-over begins when the volume delivered from the RWST reaches 280,000 gallons, (Reference 3), which occurs at time $t_s + t_d + 1088.4$ seconds. This is substantially larger than the time computed in the previous analysis of record, principally because of the increased RWST volume.

Six hundred sixty seconds after the initiation of switch-over at time $t_s + t_d + 1748.4$ seconds, in Table 3.3-1, the safety injection and charging pumps shift their suctions from the RWST to the sump. At this time, the total delivered volume drawn from the RWST is 321,862.5 gallons. Note that AEP specified in reference 3 that the completion of switch-over should ensure that at least 314,000 gallons be delivered from the RWST. This minimum delivery requirement is, therefore, satisfied.

Table 3.3-1 shows a three minute interruption in RHR flow during switch-over from the time that the second train of RHR/CTS pumps are stopped at 120 seconds after the initiation of switch-over, (time $t_s + t_d + 1208.4$ seconds), until 300 seconds after the initiation of switch-over, (time $t_s + t_d + 1388.4$ seconds), when the first train of RHR/CTS pumps is re-started with their suctions aligned to the sump.

Table 3.3-2 shows a five minute interruption in RHR and CTS flow during the switch-over. The RHR and CTS pumps are stopped at the beginning of recirculation when 280,000 gallons have been delivered from the RWST, and are re-started five minutes later. The charging and safety injection pumps cease taking suction from the RWST when the total delivered volume from the RWST reaches 314,000 gallons at time $t_s + t_d$ +2266.4 seconds after the accident.

The calculation and transmittal of results for these cases are documented by References 8 and 9.

3.3.1.2.2 Single Train, Maximum Rate of Drain-Down Case

The assumptions for this case have been chosen to drain the RWST as rapidly as possible, consistent with the assumption that only one train of safeguards equipment is in operation. The calculation and transmittal of results, respectively, is documented by References 10 and 11. This particular case was developed specifically to support the containment integrity analysis. However, it is also one of several used for evaluating the sensitivity of the containment radiological dose calculations. This case is conservative for the purposes of containment integrity analysis, because the intent of the integrity analysis is to conservatively bound the maximum containment pressure post-LOCA. Due to the effectiveness of containment sprays in minimizing containment pressure, it is therefore, consistent to assume only one train of safeguards equipment in operation for the Drain-Down calculation. Additionally, the suction flows for the single train of safeguards pumps taking suction from the RWST have been conservatively maximized. The degree of conservatism has been reduced from the previous analysis of record wherein the pump flows were based on mechanical component limits. For this re-analysis, the flows are based on maximum allowable flows permitted by Technical Specification SR4.5.2.h for the Charging and the Safety Injection pumps.

The results of the Drain-Down calculations are summarized in Tables 3.3-3 through 3.3-6. These tables provide schedules of safety injection flow rate to the core, spray flow rate to the containment, RWST outflow, and RWST volume discharged, as a function of time for a single train of safeguards operation. The tables also address the possible sources of suction—RWST or sump, and they represent different cases, depending on variations in the assumptions for RHR system configuration and containment spray flow, which are discussed in more detail below.

The RHR system configuration analyzed heretofore has assumed the cross-tie header to be open for the Drain-Down calculation. With the cross-tie open, the single RHR pump delivers to all four loops instead of just two. The suction flow from the RWST is, therefore, substantially larger when the cross-tie is open, than when it is closed. This assumption is conservative because it results in draining the RWST faster, causing the switch to hotter sump water at an earlier time in the transient. This hotter sump water

reduces the heat removed from the containment by the sprays. The calculations have considered the possibility that the RHR cross-tie could be either opened or closed.

The containment spray flow rates have been provided to Westinghouse by AEP in References 3 and 7. Heretofore, the containment pressure transient has been analyzed using the minimum spray rate, while the RWST Drain-Down time was calculated using the maximum spray rate. This is conservative, because both the heat removal by the sprays, and also the duration of the cold water spray from the RWST are intentionally minimized. For these calculations, therefore, the RWST Drain-Down time was determined using both a minimum spray value of 3100 gpm per train, and a maximum spray flow of 3700 gpm per train. The resulting Drain-Down times can, therefore, be matched if desired, to the spray flows assumed in the containment integrity analysis.

Tables 3.3-3 through 3.3-6 cover all four possible combinations of ECCS flows from the RHR pumps, and spray flows from the CTS pumps. Minimum RHR and minimum spray flows obviously result in the slowest Drain-Down time in Table 3.3-3. Maximum RHR flow and maximum containment spray flow result in the fastest single-train Drain-Down time in Table 3.3-6. (Note that Table 3.3-6 corresponds to the previous RWST Drain-Down calculation of record). Table 3.3-6 is the case that has been used for the re-analysis of the containment pressure transient.

Switch-over begins when the volume delivered from the RWST reaches 280,000 gallons per Reference 3. In Table 3.3-6, the corresponding switch-over time is $t_s + t_d + 1769$ seconds following the accident.

The RHR and spray pumps are stopped at the beginning of the switch-over operation. They are re-started 300 seconds later with suction from the sump. There is, therefore, a five minute period without RHR or spray flow. This five minute interruption in flow is reflected in each table during the switch-over.

While the RHR and spray pump suctions are transferred to the sump, the charging and the safety injection pumps continue to draw from the RWST, until the volume delivered from the RWST reaches 314,000 gallons. This occurs at 1707 seconds after the initiation of switch-over in all four cases. In Table 3.3-6, the completion of switch-over corresponds to time $t_s + t_d + 3476$ seconds after the accident. At this time the safety injection and charging pump suctions are supplied from the outlet of the RHR heat exchanger, and the RHR pump discharge pressure causes the check valves in the RWST suction lines to these pumps to close.

Table-3.3-1 Switch-over Involving A 3-Minute Interruption In RHR/CTS Flow

Time After Accident (sec)	Event	ECCS Flow To RCS From RWST/Sump (GPM)	Spray Flow To Containment From RWST /Sump (GPM)	Suction Flow from RWST (GPM)	Volume Delivered From RWST (Gallons)
t_s	"S" & LOOP	0/0	0/0	0	0
$t_s + t_d$	Diesel Available	0/0	0/0	0	0
$t_s + t_d + 3$	Charging Pump Start	790.8/0	0/0	790.8	0
$t_s + t_d + 7$	SI Pump Start	790.8 + 953.1 = 1743.9/0	0/0	790.8 + 953.1 = 1743.9/0	52.72
$t_s + t_d + 11$	RHR Pump Start	790.8 + 936.8 + 6594.1 = 8321.7/0	0/0	790.8 + 936.8 + 6594.1 = 8321.7/0	168.98
$t_s + t_d + 31$	CTS Pump Start	790.8 + 936.8 + 6594.1 = 8321.7/0	7400/0	790.8 + 936.8 + 6594.1 + 7400 = 15,721.7	2942.88
$t_s + t_d + 1088.4$	Begin Switch-over	790.8 + 936.8 + 6594.1 = 8321.7/0	7400/0	790.8 + 936.8 + 6594.1 + 7400 = 15,721.7	280,000
$t_s + t_d + 1148.4$	Stop East RHR/CTS Pump	790.8 + 939.8 + 5109.9 = 6840.5	3700/0	790.8 + 939.8 + 5109.9 + 3700 = 10,540.5	295,721.7
$t_s + t_d + 1208.4$	Stop West RHR/CTS Pump	790.8 + 953.1 = 1743.9	0/0	790.8 + 953.1 = 1743.9	306,262.2
$t_s + t_d + 1388.4$	Re-start East RHR/CTS Pump	790.8 + 939.8 = 1730.6/4436	0/3700	790.8 + 939.8 = 1730.6	311,493.9
$t_s + t_d + 1448.4$	Re-start West RHR/CTS Pump	790.8 + 936.8 = 1727.6/6609.6	0/7400	790.8 + 936.8 = 1727.6	313,224.5
$t_s + t_d + 1748.4$	Open RHR Hx valves To Chg/SI Pumps	0/7630	0/7400	0	321,862.5

Notes to Table 3.3-1:

t_s: time after accident required to generate safeguards actuation signal in seconds. A coincident loss of off-site power occurs at this time.

t_d: time delay in seconds required to accelerate diesel before loading of safeguards components on emergency buses can begin.

Table 3.3-2. For Switch-over Involving A 5-Minute Interruption In RHR/CTS Flow

Time After Accident (sec)	Event	ECCS Flow To RCS From RWST/Sump (GPM)	Spray Flow To Containment From RWST /Sump (GPM)	Suction Flow from RWST (GPM)	Volume Delivered From RWST (Gallons)
t_s	"S" & LOOP	0/0	0/0	0	0
$t_s + t_d$	Diesel Available	0/0	0/0	0	0
$t_s + t_d + 3$	Charging Pump Start	790.8/0	0/0	790.8	0
$t_s + t_d + 7$	SI Pump Start	790.8 + 953.1 = 1743.9/0	0/0	790.8 + 953.1 = 1743.9/0	52.72
$t_s + t_d + 11$	RHR Pump Start	790.8 + 936.8 + 6594.1 = 8321.7/0	0/0	790.8 + 936.8 + 6594.1 = 8321.7/0	168.98
$t_s + t_d + 31$	CTS Pump Start	790.8 + 936.8 + 6594.1 = 8321.7/0	7400/0	790.8 + 936.8 + 6594.1 + 7400 = 15,721.7	2942.88
$t_s + t_d + 1088.4$	Begin Switch-over Stop East/West RHR/CTS Pumps	790.8 + 953.1 = 1743.9/0	0/0	790.8 + 953.1 = 1743.9	280,000
$t_s + t_d + 1388.4$	Re-start East/West RHR/CTS Pumps	790.8 + 936.8 = 1727.6/6609.6	0/7400	790.8 + 936.8 = 1727.6	288,719.5
$t_s + t_d + 2266.4$	Open RHR Hx valves To Chg/SI Pumps	0/7630	0/7400	0	314,000

Note:

t_s: time after accident required to generate safeguards actuation signal in seconds. A coincident loss of off-site power occurs at this time.

t_d: time delay in seconds required to accelerate diesel before loading of safeguards components on emergency buses can begin.

Table 3.3-3 - Single Train RWST Drain-down With Minimum RHR Flow (Cross-tie Closed) and Minimum Spray Flow

Time After Accident (sec)	Event	Analysis Flow To RCS From RWST/Sump (GPM)	Spray Flow To Containment From RWST /Sump (GPM)	RWST Outflow (GPM)	RWST Delivered Volume (Gallons)
t_s	"S" & LOOP	0 / 0	0 / 0	0	0
$t_s + t_d$	Diesel Available	0 / 0	0 / 0	0	0
$t_s + t_d + 3$	Charging Pump Start	379 / 0	0 / 0	555	0
$t_s + t_d + 7$	SI Pump Start	379 + 544.4= 923.4 / 0	0 / 0	555 + 640 = 1195	37
$t_s + t_d + 11$	RHR Pump Start	923.4 + 2543.3 = 3466.7 / 0	0 / 0	1195 + 3408.6 = 4603.6	116.67
$t_s + t_d + 31$	CTS Pump Start	3466.7 / 0	2932 / 0	4603.6 + 3100 = 7703.6	1651.2
$t_s + t_d + 2199$	Earliest Switch-over Setpoint Reached	3466.7 / 0	2932 / 0	7703.6	280,000
$t_s + t_d + 2199$	Stop RHR/CTS Pumps	923.4 / 0	0 / 0	1195	280,000
$t_s + t_d + 2499$	Start RHR/CTS	923.4 / 2563.2	0 / 2932	1195	285,975
$t_s + t_d + 3906$	Lowest RWST Level at which Chg & SI pumps still draw suction from RWST	923.4 / 2563.2	0 / 2932	1195	314,000

Note: t_s : time after accident required to reach safeguards actuation signal "S", causing simultaneous loss of off-site power "LOOP"

t_d: time delay after safeguards actuation signal and LOOP required to prepare diesel for loading

Table 3.3-4. Single Train RWST Drain-Down With Maximum RHR Flow (Cross-tie Open) and Minimum Spray Flow

Time After Accident (sec)	Event	Analysis Flow To RCS From RWST/Sump (GPM)	Spray Flow To Containment From RWST /Sump (GPM)	RWST Outflow (GPM)	RWST Delivered Volume (Gallons)
t_s	"S" & LOOP	0 / 0	0 / 0	0	0
$t_s + t_d$	Diesel Available	0 / 0	0./ 0	0	0
$t_s + t_d + 3$	Charging Pump Start	379/0	0 / 0	555	0
$t_s + t_d + 7$	SI Pump Start	379 + 544.4= 923.4 / 0	0 / 0	555 + 640 = 1195	37
$t_s + t_d + 11$	RHR Pump Start	923.4 + 2543.3 = 3466.7 / 0	0 / 0	1195 + 4700 = 5895	116.67
$t_s + t_d + 31$	CTS Pump Start	3466.7 / 0	2932 / 0	5895 + 3100 = 8995	2081.7
$t_s + t_d + 1885$	Earliest Switch-over Setpoint Reached	3466.7 / 0	2932 / 0	8995	280,000
$t_s + t_d + 1885$	Stop RHR/CTS Pumps	923.4 / 0	0 / 0	1195	280,000
$t_s + t_d + 2185$	Start RHR/CTS Pumps	923.4 / 2563.2	0 / 2932	1195	285,975
$t_s + t_d + 3592$	Lowest RWST Level at which Chg & SI pumps still draw suction from RWST	923.4 / 2563.2	0 / 2932	1195	314,000

Note: t_s : time required after accident to reach safeguards actuation signal "S", causing simultaneous loss of off-site power (LOOP)
t_d : time delay after safeguards actuation signal and LOOP required to prepare diesel for loading

Table 3.3-5. Single Train RWST Drain-Down With Minimum RHR Flow (Cross-tie Closed) and Maximum Spray Flow

Time After Accident (sec)	Event	Analysis Flow To RCS From RWST/Sump (GPM)	Spray Flow To Containment From RWST /Sump (GPM)	RWST Outflow (GPM)	RWST Delivered Volume (Gallons)
t_s	"S" & LOOP	0 / 0	0 / 0	0	0
$t_s + t_d$	Diesel Available	0 / 0	0 / 0	0	0
$t_s + t_d + 3$	Charging Pump Start	379 / 0	0 / 0	555	0
ts + td + 7	SI Pump Start	379 + 544.4= 923.4 / 0	0 / 0	555 + 640 = 1195	37
ts + td + 11	RHR Pump Start	923.4 + 2543.3 = 3466.7 / 0	0 / 0	1195 + 3408.6 = 4603.6	116.67
ts + td + 31	CTS Pump Start	3466.7 / 0	3700 / 0	4603.6 + 3700 = 8303.6	1651.2
ts + td + 2042	Earliest Switch-over Setpoint Reached	3466.7 / 0	3700 / 0	8303.6	280,000
ts + td + 2042	Stop RHR/CTS Pumps	923.4 / 0	0 / 0	1195	280,000
ts + td + 2342	Start RHR/CTS Pumps	923.4 / 2563.2	0 / 3700	1195	285,975
ts + td + 3749	Lowest RWST Level at which Chg & SI pumps still draw suction from RWST	923.4 / 2563.	0/3700	1195	314,000

Note:

t_s: time required after accident to reach safeguards actuation signal "S", causing simultaneous loss of off-site power "LOOP"

t_d: time delay after safeguards actuation signal and LOOP required to prepare diesel for loading

Table 3.3-6. Single Train RWST Drain-Down With Maximum RHR Flow (Cross-tie Open) and Maximum Spray Flow

Time After Accident (sec)	Event	Analysis Flow To RCS From RWST/Sump (GPM)	Spray Flow To Containment From RWST /Sump (GPM)	RWST Outflow (GPM)	RWST Delivered Volume (Gallons)
t_s	"S" & LOOP	0 / 0	0 / 0	0	0
$t_s + t_d$	Diesel Available	0 / 0	0 / 0	0	0
$t_s + t_d + 3$	Charging Pump Start	379 / 0	0 / 0	555	0
$t_s + t_d + 7$	SI Pump Start	379 + 544.4= 923.4 / 0	0 / 0	555 + 640 = 1195	37
$t_s + t_d + 11$	RHR Pump Start	923.4 + 2543.3 = 3466.7 / 0	0 / 0	1195 + 4700 = 5895	116.67
$t_s + t_d + 31$	CTS Pump Start	3466.7 / 0	3700 / 0	5895 + 3700 = 9595	2081.7
$t_s + t_d + 1769$	Earliest Switch-over Setpoint Reached	3466.7 / 0	3700 / 0	9595	280,000
$t_s + t_d + 1769$	Stop RHR/CTS Pumps	923.4 / 0	0 / 0	1195	280,000
$t_s + t_d + 2069$	Start RHR/CTS Pumps	923.4/2563.2	0/3700	1195	285,975
$t_s + t_d + 3476$	Lowest RWST Level at which Chg & SI pumps still draw suction from RWST	923.4/2563.2	0/3700	1195	314,000

Note: ts: time required after accident to reach safeguards actuation signal "S", causing simultaneous loss of off-site power "LOOP"

t_d: time delay after safeguards actuation signal and LOOP required to prepare diesel for loading

3.4 Containment Integrity Evaluation

An evaluation has been performed for continued operation of the Donald C. Cook Nuclear Plant Units 1 & 2 with respect to the effect of current and revised data for containment safeguards system performance on the licensing basis containment integrity analysis of record (Reference 12).

The following are exceptions taken to Accident Analysis of Record Input Assumptions:

1. Revised single train RWST drain-down sequence times, including the effect of the modified RWST design to increase deliverable volume, and reduced conservatism in assumed suction flow rates from RWST based upon Technical Specifications. The RHR pump core flow recirculation switch-over sequence was revised to address a five minute delay in RHR pump core flow at the time of recirculation switch-over.
    a) Revised Containment Spray (CTS) recirculation switch-over sequence: Addresses a five minute flow interruption at the time of recirculation switch-over: (from 4 minutes)
2. Containment Spray System Performance
    a) Total containment spray flow rate aligned with RWST: 2673 gpm (No change)
    b) Total containment spray flow rate aligned with sump (ignoring flow to the annular regions): 2673 gpm (from 3081 gpm)
    c) Reduced RHR containment spray flow rate from 2000 gpm to 1890 gpm
    d) Containment spray heat exchanger UA: 2.3 MBTU/hr-°F (from 3.1 MBTU/hr-°F)
    e) Essential service water (ESW) flow to CTS heat exchanger: 2400 gpm (from 2000 gpm)
    f) ESW temperature: 86°F (from 87.5°F)
3. Component Cooling Water (CCW) System Performance
    a) CCW heat exchanger UA: 3.433 MBTU/hr-°F (from 2.626 MBTU/hr-°F)
4. Containment Air Recirculation
    a) Actuation signal: High-1 containment pressure signal (1.5 psig) (from High-2 containment pressure)
    b) Start time: 132 seconds after High-1 pressure signal (from 600 seconds after a High-2 pressure signal); the 132 second delay time conservatively bounds the 120 ± 12 seconds delay specified above in Section 1, item e.
5. Active sump volume: 80000 ft^3 (from 30858 ft^3)
6. Initial ice bed mass: 2.2 Mlbm (from 2.11 Mlbm)

    Note that although section 1 item (f) describes that this safety evaluation assesses the impact of reducing the ice mass in the ice condenser from the current technical specification value, the previous containment integrity analysis of record conservatively assumed an initial ice mass of 2.11 Mlbm.

7. Revised Ice Bed Temperature: An ice bed temperature range of 10 °F to 27 °F was appropriately addressed.
8. Revised Containment Structural Heat Sink model based upon the Donald C. Cook Unit 2 Uprating Program (Reference 16), modified per Condition Report CR 99-17460, which is supported by ALTRAN calculation number 99219-C-02 (References 3 and 33).
9. Residual Heat Removal Containment Spray performance: placing RHR spray in service with respect to equipment delays and response times, operators establish RHR spray no later than 1.25 hours following the start of the accident, if the following conditions exist: 1) The Containment Spray System is in operation (implying that the containment pressure has exceeded the analysis setpoint of 3.5 psig; 2) Less than both (2) CTS pumps are operating; and, 3) The plant RHR system has been transferred to cold leg recirculation.
10. RHR heat exchanger UA: 2.2 MBTU/hr-°F (from 2.22 MBTU/hr-°F)
11. Containment net free volumes as provided:
    - Upper compartment: 734,978 ft^3 (from 734,829 ft^3)
    - Lower compartment: 296,769 ft^3 (from 304,629 ft^3)
    - Lower compartment (dead-ended): 61,928 ft^3 (from 61,340 ft^3)
12. Steam generator metal mass: based upon SG dry weight of 714,000 lbm (from 620,562 lbm)
13. Effects due to Hydrogen Mitigation System
    a) A reduction in ice mass due to hydrogen combustion was assumed in the previous analysis to account for the hydrogen subcompartment analysis that identified the hydrogen flammability limit would be exceeded in the ice condenser following the limiting large break LOCA event. However, for the limiting large break LOCA with respect to containment integrity (i.e. the RCS pump suction line break), core-wide clad oxidation is significantly less when compared with the limiting large break LOCA with respect to peak containment hydrogen. Therefore, for the RCS pump suction break, the ice mass penalty was not assumed.
    b) The energization of the hydrogen recombiners is delayed for six hours to prevent influencing the calculated peak containment pressure analysis. Operation of the Hydrogen recombiners after this time will not result in a higher calculated peak containment pressure.
    c) Heat load due to Distributive Ignition System (DIS) of 10kw was addressed.
14. Additional pressure penalties:
    a) Pressure penalty due to non-condensable hydrogen gas generated during DBA LOCA event: 0.1 psi (from 0 psi)
    b) Pressure penalty due to leakage from the control air system during a DBA LOCA event: 0.1 psi (from 0 psi)

The limiting single failure for containment integrity is the loss of an emergency diesel generator, which results in the loss of one train of safety injection, the failure of one containment safeguards train (i.e., one containment spray pump), and the failure of one air return fan. Loss of off-site power is assumed at event initiation.

The following accident analyses related to the Containment Integrity were evaluated:

1. Short Term LOCA M&E/Subcompartment

The loop subcompartment analysis is performed to ensure that the walls of the loop subcompartments, including the lower crane wall, upper crane wall, operating deck, and the containment shell, can maintain their structural integrity during the short pressure pulse (generally less than 3 seconds) which accompanies a high energy line pipe rupture (LOCA) within the subcompartment. Also, this analysis verifies the adequacy of the ice condenser performance.

The reactor cavity analysis is performed to ensure that the walls in the immediate proximity of the reactor vessel can maintain their structural integrity during the short pressure pulse which accompanies a high energy line pipe rupture within the reactor cavity region. Loads on the reactor vessel are also determined.

The pressurizer enclosure analysis is performed to ensure that the walls in the immediate proximity of the pressurizer enclosure can maintain their structural integrity. Loads acting across the pressurizer are also determined.

2. Short Term MSLB Subcompartment

This subcompartment analysis is performed to ensure the walls of the steam generator enclosure and fan accumulator room can maintain their structural integrity during the short pulse which accompanies a high energy line pipe rupture within the enclosure.

3. Long Term LOCA/Containment Integrity

The LOCA Containment Integrity Analysis demonstrates the acceptability of the containment safeguards systems to mitigate the consequences of a hypothetical large break LOCA. The containment safeguards systems must be capable of limiting the peak containment pressure to less than the design pressure. Analysis results are also used to support environmental temperature qualification.

4. Long Term MSLB/Containment Integrity

This analysis is performed to verify that containment and equipment are adequate for the containment temperature conditions following a postulated MSLB.

3.4.1 Short Term LOCA M&E / Subcompartment: Loop Compartment Analyses, Reactor Cavity, Pressurizer Enclosure; and, Short Term MSLB M&E / Subcompartment: Steam Generator Enclosure and Fan Accumulator Room Analyses

Based upon a review of References 3, 11, 13, 14, and 15 it can be concluded that the analysis assumptions used for the Containment Integrity Analysis of Record (Reference 12) are acceptable/bounding for continued operation. The exceptions listed above do not factor into the short term analyses because the affected equipment is not relied upon in the analysis during the short duration of the transient (<3 seconds). In summary, the current licensing basis for the short term LOCA and MSLB mass and energy release and subcompartment analyses are bounding with respect to future operation.

3.4.2 Containment Integrity (Long Term LOCA)

The long-term LOCA mass and energy release and containment integrity analysis demonstrates the acceptability of the containment safeguards systems to mitigate the containment consequences of a hypothetical design basis pipe break. The analysis ensures that the containment heat removal capability is sufficient to remove the maximum possible discharge of mass and energy release to containment from the Nuclear Steam Supply System without exceeding the acceptance criteria peak design pressure of 12 psig (Technical Specification Bases, 3 /4.6.1.4 Internal Pressure).

The current licensing basis long-term LOCA mass and energy release and containment integrity analysis is documented and discussed in Reference 12. The containment peak pressure documented in Reference 12 is 11.49 psig.

Again, by review of the References 3, 11, 13 14 and 15, it was concluded that the analysis assumptions used for the Containment Integrity Analysis of Record (Reference 12) are applicable and bounding for analyzing continued operation with the exception of the changes listed in this evaluation.

Detailed system alignments were modeled with respect to the RHR CCW, Essential Service Water (ESW), and Containment Spray system (CTS) in conjunction with the emergency operating procedures used for switch-over of the ECCS and CTS pump suction flow from the refueling water storage tank (RWST) to the containment sump.

Detailed analyses were performed addressing LOCA mass and energy release and containment response following a postulated LOCA mass and energy release. Although some of the accident analysis input assumptions used to support the Reference 12 licensing basis analysis of record have been revised, resulting in reduced conservatism or improved system performance, there are a few issues which have affected the analysis negatively, and potentially tend to increase the containment pressure. These issues are:

1. Reduced containment spray flow rate during the recirculation phase.
2. Increased active sump volume.
3. Early actuation of containment recirculation fans.
4. Increased steam generator metal mass.
5. Evolved hydrogen mass partial pressure penalty.
6. Decreased initial ice bed mass from the current Technical Specification value.
7. Increased compression pressure.
8. Decreased containment spray heat exchanger performance (reduced UA value).

In contrast, in several areas plant operating conditions have been improved in terms of heat removal capability, as follows:

1. The ESW flow to the CTS heat exchanger was increased.
2. The calculated CCW heat exchanger UA was increased.
3. The ESW temperature was decreased.
4. The calculated RHR heat exchanger UA was increased.
5. The CCW flow to the RHR heat exchanger was increased.

6. The duration of the Lower Compartment CTS on injection was increased due to revised RWST drain-down calculation.
7. A revised Structural Heat Sink model was used that provides for improved structural heat removal capacity as compared to the older containment structural heat sink model utilized in the previous analysis of record (Reference 12).

The new containment analysis was completed addressing the redefined plant operating conditions. In addition to the above, improvements in the Westinghouse LOCA mass and energy release calculation technique were implemented. These improvements include the use of additional data points to increase accuracy with regard to LOCA mass and energy releases and a refined process to better represent the ECCS and containment spray recirculation switch-over procedure, and are acceptable within the applicable NRC-approved methodology. The current licensing model (Reference 12) utilizes a revised structural heat sink model developed for the Donald C. Cook Unit 2 3600 MWt Uprating Program, (Reference 16). This model was incorporated into this reanalysis effort, as well, although the model was modified with respect to References 3 and 32.

With respect to the potential penalties and benefits identified above, a comprehensive composite analysis was performed. The potential penalties identified adversely affect (increase) the mass and energy release available to containment through reducing the steam condensation and also by reducing heat removal capability of the containment safeguard systems. Thus, earlier ice bed melt-out would be experienced, and in turn a possible increase in containment peak pressure. The effects of the penalties are compensated, however, by margins derived from the incorporation of the enhanced Unit 2 Uprating Program's structural heat sink model, a revised RWST drain-down for containment spray operation, an increased initial total ice mass (2.2 Mlbsm), and the improved LOCA mass and energy release calculation process.

The results of this analysis show that accounting for the plant modifications and subject changes to the accident analysis input assumptions, the calculated peak containment pressure following a postulated LOCA long term mass and energy release is 11.5 psig.

For the limiting design basis LOCA event, with regards to maximum peak pressure (i.e. the double ended rupture of a cross-over leg), non-condensable hydrogen gas is generated by several sources. These sources include hydrogen that is dissolved in the RCS, hydrogen generated through clad oxidation, hydrogen from radiolysis in the core or by core material which has relocated to the containment sump, and hydrogen generated by corrosion of metal surfaces inside containment. The total hydrogen produced was calculated, then used to calculate a partial pressure, which is then added to the peak containment pressure. The results of this analysis indicate that the pressure increase due to the non-condensable hydrogen is 0.1 psi.

Therefore, when considering the calculated peak containment pressure for the design basis LOCA mass and energy release and the contribution due to non-condensable hydrogen the total calculated peak containment pressure is 11.6 psig.

Condition Report 99-3048 identified that following a design basis LOCA event, the operators use the control air system to perform certain recovery and monitoring operations. Given the potential for in-leakage from the system, a portion of the

containment pressure margin has been allotted to address in-leakage. Per Reference 17, the control air system leakage will be limited by operator action such that the effect on containment pressure will be less than 0.1 psi.

In summary, the analyses conclude that plant modifications and subject changes to the accident analysis input assumptions do not result in exceeding the acceptance criterion, peak design pressure of 12 psig (Technical Specification Bases, 3/4.6.1.4 Internal Pressure). In addition, when considering the allowance of 0.1 psi due to control air system leakage post-LOCA, the calculated peak containment pressure is less than an equivalent acceptance criterion of 11.9 psig. Figure 3.4-1 presents the LOCA containment pressure response.

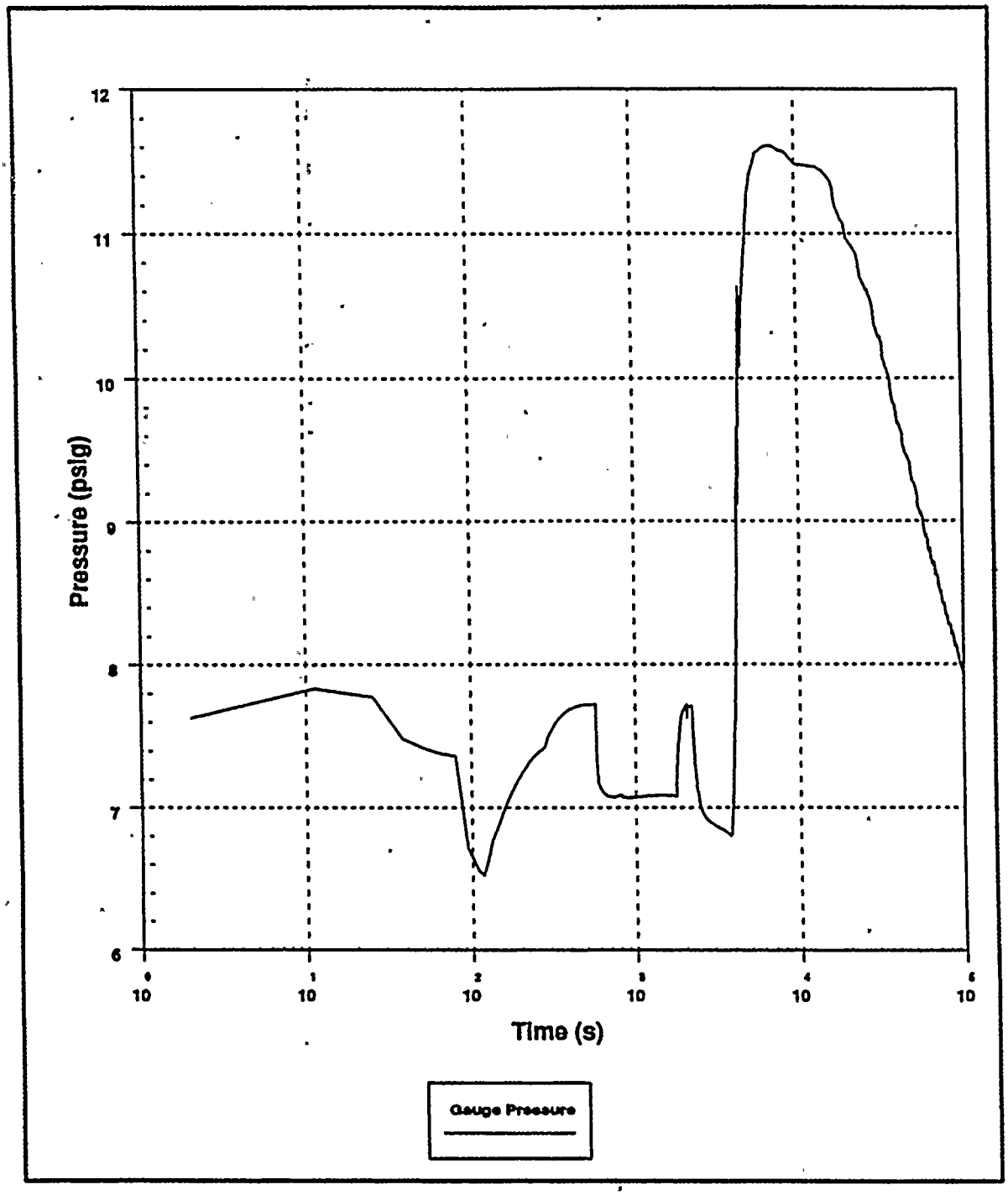

Figure 3.4-1 LOCA Containment Pressure Response

3.4.3 Post-LOCA Hydrogen Generation Evaluation

A review of the post-LOCA containment pressures and temperatures associated with the containment integrity analyses indicates that the previous analysis of record is not affected by the updated pressure information that results from the modifications to the containment systems considered in this evaluation. The updated containment temperatures, however, result in a slight increase in hydrogen production from corrosion of materials. The additional hydrogen that is generated from this source increases the total hydrogen generated from all sources by approximately 0.5-1.5 percent during the first 100 hours after a LOCA.

Thus, to maintain the containment concentration less than the Regulatory Guide 1.7 limit of four volume percent, the updated analysis of record (Reference 18) indicates that it is necessary to initiate operation of the Hydrogen Recombiners at 22 hours after a LOCA. The previous analysis of record indicated that for initiation of operation of the Hydrogen Recombiner at 24 hours, the maximum concentration in the containment would be 4.0 volume percent. Hence, the impact of the updated containment integrity analysis is to reduce the time by which the Hydrogen Recombiners should be operational after a LOCA by 2 hours, i.e., from 24 hours to 22 hours.

3.4.4 Main Steamline Break (MSLB) Mass and Energy Release

Containment response calculations for postulated steam line break mass and energy releases inside containment are performed to ensure that containment pressure and temperature do not exceed acceptable limits used for equipment qualification. The current licensing basis for main steam line break containment integrity is documented and discussed in Reference 12. The limiting case among the double-ended ruptures, which yielded a calculated peak temperature of 298.9°F, is the 1.4 ft^2 double-ended rupture, 102% power, MSIV failure case. The most limiting case in terms of peak calculated temperature for the small split breaks is the 0.942 ft^2 split break, 30% power, with an MSIV failure. This case resulted in a calculated peak temperature of 325.3 °F.

With respect to the licensing-basis analysis for the steamline break (SLB) mass and energy releases into containment, this analysis makes no assumption regarding the availability of long-term recirculation water towards event mitigation. The SLB transient is a short-term event compared to a LOCA event, and containment recirculation is not assumed to occur within the duration for which the transient is analyzed. Therefore, there is no affect from these modifications on the SLB mass and energy releases inside containment. Because a postulated main steamline break event is of such short duration (i.e., ~1000 seconds), it would be over prior to the use of the heat exchangers or emergency procedure for cold leg recirculation or accounting for active sump volume impact of the containment response transient or ice mass bed melt-out. And, with respect to containment spray flow, the reduction in spray flow has no effect because recirculation is not assumed for the SLB transient.

Thus the items from the exceptions listed above which are germane to the SLB containment response analysis are the containment air recirculation fans (air return fans) and the net free volumes of the containment compartments, and the revised containment structural heat sink model, as specified in Section 3.4, item 8, above. The change in containment compartment net free volume has a primary influence on

containment peak pressure, although the change in compartment volume was considered in the SLB containment response. The containment air recirculation fans are required to provide a continuous mixing of the containment compartment atmosphere for the long-term post blowdown accident environment. For accident analysis conditions, only one fan is modeled based upon the limiting single failure of a train of containment safeguards equipment. The capacity of one fan is 39000 cfm from the upper compartment into the lower compartment. The air recirculation fans have sufficient head to overcome the compartment pressure differentials that occur after the SLB. The fans will discharge air from the upper compartment to the lower compartment, thereby returning the air to the lower compartment which was displaced by the blowdown.

Although the fans are modeled during both the containment response transient following a LOCA and MSLB, the greatest impact resulting from their actuation and operation is seen during the LOCA transient response due to the long term transient scenario. The air return fans are modeled to operate upon reaching the High-1 containment pressure setpoint, and a 132 second delay. During the LOCA response transient the fans provide a flow path early in the transient. Therefore, their function plays an important role (before the time of peak pressure) in the containment response calculation. During the MSLB containment response calculation, the fans function in a similar manner. However, the time that the fans actuate follows the time when the containment peak pressure and temperature occur. The MSLB peak containment pressure and temperature are driven by mass and energy release. The peak pressure and temperature occurs prior to containment spray or recirculation air return fan actuation. Therefore, their impact on the containment response transient is minimal. Their primary effect is on the rate of containment depressurization and cool down after 132 seconds into the MSLB containment response transient, by which time the peak containment lower compartment temperature would have already occurred.

The containment peak pressure and temperature occur within 110 seconds of the event initiation. The containment sprays are modeled to actuate upon a 115 second delay from when the containment High-2 pressure setpoint is reached. Thus, the operation of the recirculation air return fan has no impact on the peak containment temperature, nor the containment spray operation.

As it was for the LOCA basis with respect to the containment structural heat sink model, the revised structural heat sink model specified in Section 3.4, item 8 was utilized here.

The Donald C. Cook Units 1 & 2 containment response following a postulated main steamline break has been reanalyzed for conditions reflecting the current plant design. For the new analysis, the limiting double-ended rupture case which yielded a calculated peak temperature of 323.3 °F, was the 1.4 ft^2 double-ended rupture, 100% power, MSIV failure case. The most limiting case in terms of peak calculated temperature for the small split breaks is the 0.86 ft^2 split break, at 100% power, with an Auxiliary Feedwater Runout Protection (AFWRP) failure. This case resulted in a calculated peak temperature of 324.7 °F.

3.4.5 Conclusions Of Containment Integrity Evaluation

Based upon the results of the preceding LOCA and MSLB evaluations, it can be concluded that Long-term LOCA and MSLB analyses have been performed in conformance with the relevant requirements of the Standard Review Plan (SRP) Sections 6.2.1.1.B and 6.2.1.3. Compliance with the relevant requirements of 10CFR 50 Appendix A, General Design Criteria (GDC) 16, 38, and 50, and 10CFR 50 Appendix K is demonstrated by showing that the containment design pressure is not exceeded at any time in the transient, and because all available sources of energy have been included, which is more restrictive than the GDC criteria in Appendix H of the original FSAR, to which the Cook plants are licensed. These sources include reactor power, decay heat, core stored energy, energy stored in the reactor vessel and internals, metal-water reaction energy, and stored energy in the secondary system. The results of these evaluations also show that these modifications do not compromise the conclusions, or the pressure and temperature margins demonstrated in the current Donald C. Cook Nuclear Plant Units 1 & 2 Containment Integrity Safety Analyses.

3.5 LOCA and LOCA-Related Analyses

The following evaluations address the Peak Clad Temperature (PCT) post-LOCA subcriticality and Long Term Core Cooling (LTTC) analyses for the impact of the proposed containment systems modifications and associated changes to the accident analysis input assumptions.

3.5.1 Introduction

Several issues have been identified for the Donald C. Cook Nuclear Plant Units 1 and 2 in the safety analyses and plant layout which affect the post-LOCA subcriticality analysis performed by Westinghouse to support plant operation. Plant specific post-LOCA subcriticality calculations are performed each core reload cycle to ensure that the core will remain subcritical after a Reactor Coolant System (RCS) pipe break of 1.0 ft^2 or larger. Clearly, in performing the above analyses, it is critical that the input assumptions made regarding equipment availability and performance are consistent with the plant layout and operation, and post-accident Emergency Operating Procedures (EOPs). Furthermore, several other licensing issues related to the LOCA analyses for Donald C. Cook Units 1 & 2 are being resolved to support plant restart.

A revised, comprehensive set of input assumptions have been defined to support post-LOCA analyses for the Donald C. Cook Nuclear Plant Units 1 and 2 (Reference 19). The changes covered by these new LOCA analyses are:

1. Removal of any reliance on flow through the hot leg nozzle gap for both large break LOCA and post-LOCA sump boron dilution.
2. Revised Refueling Water Storage Tank (RWST) deliverable water volume at the initiation of recirculation (volume increased to 280,000 gals).
3. Revised maximum containment spray flow (Changed from 3600 gpm to 3700 gpm per pump).
4. Revised sump geometry assumptions to account for the sump and reactor cavity water volume.

5. Decreased minimum, and increased maximum ice bed mass.
6. Decreased minimum RWST temperature, from 75°F to 70°F.
7. Interruption of RHR flow of up to five minutes during switch-over to recirculation mode cooling.
8. Asymmetric Safety Injection Evaluations, Small Break LOCA (SBLOCA)
9. Boron Depletion of 3.1 % in the RWST and accumulators.
10. Earlier actuation of the CEQ fans.

The above list covers plant changes, and/or changes in input assumptions that affect the LOCA analyses since the shutdown of Donald C. Cook Units 1 & 2 in September 1997. The impact of all of the above issues on the large and small break LOCA, the post-LOCA subcriticality, and long term core cooling analysis is addressed below.

The post-LOCA subcriticality confirmation refers to the calculations performed every core reload cycle to determine if the water contained in the sump after a large break LOCA contains sufficient boron to ensure that the core will remain subcritical for the long term post-LOCA, assuming that no control rods insert. The methodology specifically considers the boron concentration of the active sump at switchover to sump recirculation mode cooling with cold leg injection. At the switchover to recirculation, control rod insertion is credited to address subcriticality. This is addressed in a separate AEP submittal to the NRC.

The post-LOCA Long Term Core Cooling (LTCC) analyses refer to calculations performed to:

- preclude boron precipitation in the core post-LOCA; and,
- determine the required post-LOCA safety injection performance in both cold and hot leg recirculation mode cooling to ensure that the core does not reheat significantly.

The post-LOCA LTCC analysis performed to preclude boron precipitation in the core is referred to as the Hot Leg Switch-over Analysis. In the mid-1970's the NRC postulated that for all possible locations in the RCS piping for a large break LOCA, except hot leg breaks, while in cold leg recirculation mode cooling, the boiling in the core will cause a buildup of boron. Eventually, the boron could become so concentrated that boron would begin to precipitate blocking the flow of safety injection to the core, thereby reducing the ability to continue to cool the core. To prevent this, the safety injection is switched to the hot leg to flush the core, via flow reversal, of the concentrated boron before boron precipitation would occur. A conservative boron precipitation limit of 23.5% is applied. The maximum hot leg switchover time is computed based on this boron precipitation limit. This calculation is redone only when there are changes to the limiting volume or boron concentration for the various sources of water available to cool the core, post-LOCA (i.e., Accumulators, RWST, Boron Injection Tank, ice bed, and RCS volume).

The other part of the LTCC analysis involves computing the safety injection system performance required to exceed core boil-off based on conservative core decay heat at the time of switchover to cold leg and hot leg recirculation mode cooling. These flows

are reconfirmed only when there are changes to the safety injection system performance, alignment, or pump availability, or when the timing changes for cold leg or hot leg recirculation mode cooling.

3.5.2 Evaluation of the Post-LOCA Subcriticality Calculation

Although some of the input assumptions used to perform initial beginning-of-cycle (BOC) subcriticality calculations for Donald C. Cook Unit 1 Cycle 16, and Unit 2 Cycle 12 have been revised for the restart calculations performed for this safety evaluation, there are two new issues which affect the methods used to perform the post-LOCA subcriticality calculation:

1. The potential for diversion of the break flow into regions of the containment other than the active sump, i.e. the reactor cavity; and,
2. Explicit modeling of the active sump volume, and the subsequent effect on the subcriticality calculations.

3.5.2.1 Diversion of Borated Water Sources

A more dilute mixture than previously calculated may exist in the active sump if the RWST and/or Accumulator water are assumed to fill the reactor cavity first. This phenomenon is partially precluded because breaks equal to or greater than 1 ft^2 cannot occur in the reactor cavity because no penetration is larger than 1 ft^2. The following discussion will examine the potential for loss of RWST and accumulator water into the reactor cavity:

Large ruptures of the reactor vessel are not required to be considered in the evaluation of the ECCS for PWRs. Section c(1) of Appendix K to 10CFR50.46, and supporting NRC opinions state clearly that a spectrum of pipe breaks need to be considered (vessel integrity is covered by other regulations and criteria). In fact, leaks in the vessel penetrations, such as the instrumentation thimbles, have been considered in the ECCS design.

In a large break LOCA, the initial break flow is RCS mass in the form of a steam-water mixture. Because of the initial high stored energy, the RCS water flashes and generates large amounts of steam. After the RCS pressure falls below 600 psia, accumulators begin to inject. The injected water is bypassed out of the break until the RCS has depressurized. After reflood has begun and the downcomer has been filled, some of the water injected from accumulators and pumped safety injection spills out of the break on the vessel side, along with vented steam. The evaluation below examines the potential for the borated water injected into the vessel from the accumulators and RWST reaching the reactor cavity, and thereby not being available for pumped injection from the sump.

3.5.2.1.1 Double Ended Guillotine Break:

A break can be postulated at the weld between the reactor vessel inlet (or outlet) nozzle and the reactor coolant piping, which would place the break about 2 to 3 feet away from the reactor cavity, and within the penetration through the biological shield. In a double ended guillotine break, to create sufficient area for the double ended break

which must be assumed in the ECCS analysis, the piping on the loop side of the break must be postulated to move backward away from the reactor vessel nozzle and out of the biological shield tunnel. To allow this type of movement, a loop support must be assumed to fail. It can, therefore, be assumed that large double ended guillotine breaks cannot occur within the biological shield.

3.5.2.1.2 Split Breaks:

Longitudinal and circumferential split breaks must also be postulated in the LOCA analysis. A limited displacement double ended guillotine break (i.e., a guillotine break in which the loop supports do not fail) can be postulated with a resulting break area of about 1 ft^2 (150 in^2, Reference 20). Longitudinal split breaks must also be postulated. For this case, the water flowing from the break would be directed radially around the pipe. Previous analyses using the TMD subcompartment computer code (Reference 21) indicated that approximately 28 percent of the break flow will initially flow towards the vessel and into the reactor cavity. The post-LOCA subcriticality calculations performed prior to the September 1997 shutdown of the Donald C. Cook plants did not require an assumption regarding the split in break flow since the calculation assumed complete mixing of all sources of boron and water. New supporting calculations have been performed which model the flow of water and boron to the different containment compartments to determine the importance of the potential for flow into the reactor cavity with respect to boron concentration.

3.5.2.2 Active Sump Volume

Depending on the assumptions made for containment spray flow rate, SI system performance, and spillage location from the broken loop, the potential for the active sump to fill prior to switchover to cold leg recirculation mode cooling must be considered. Therefore, the calculations performed for computing the active sump boron concentration were modified to track the volume of water entering the active sump. At the time the active sump is filled, the calculation then considers the active sump spilling to the reactor cavity, while spray and break flow continue to enter the active sump, and the subsequent effect this has on the boron concentration in the sump.

3.5.2.2.1 D. C Cook Units 1 & 2 Post-LOCA Subcriticality Analysis:

The original subcriticality calculations performed to support Unit 1 Cycle 16 operation identified 221 ppm of margin to the post-LOCA subcriticality limit at the beginning of the cycle (BOC). This calculation was redone to update the limit for:

1. Revised Refueling Water Storage Tank (RWST) deliverable water volume at the initiation of recirculation (volume increased to 280,000 gals).
2. Revised maximum containment spray flow (Changed from 3600 gpm to 3700 gpm per pump).
3. Revised sump geometry assumptions to account for the sump and reactor cavity water volume.
4. Boron Depletion of 3.1 % in the RWST and accumulators.

The revised calculations treat the active sump and the piping annulus as one large sump. This treatment is conservative for cold leg recirculation mode switch-over subcriticality calculations, as it results in the lowest possible sump boron concentration. The revised calculations were based on Donald C. Cook Unit 2 BOC 12 which bound both Units.

Parametric studies of the inputs to the revised subcriticality calculation were performed to determine the sensitivity of the calculation to the ranges of the quantities used. Table 3.5-1 lists the various quantities studied. The values of the quantities used in the parametric studies are defined in detail in Table 3.5-1A. Table 3.5-2 lists the results of the parametric studies. The limiting results are produced by Case 6 and Case 8, and form a composite limit curve for the post-LOCA subcriticality. Based on the Unit 1 Cycle 16 boron requirements, the pre-trip RCS boron concentration of 1381 ppm requires 1530 ppm of boron in the post-LOCA active sump to assure that the core remains subcritical at the time that safety injection is switched to cold leg injection recirculation mode cooling (References 22, and 23). The calculation demonstrates that the active sump will have a minimum of 1940 ppm of boron at the time of switch-over to cold leg injection recirculation mode cooling. Therefore, there is 410 ppm (1940 - 1530) of margin to the subcriticality limit at switch-over to cold leg injection recirculation mode cooling.

Based on Unit 2 Cycle 12 boron requirements, the pre-trip RCS boron concentration of 1691 ppm requires 1776 ppm of boron in the post-LOCA active sump in order to assure that the core remains subcritical at the time that safety injection is switched to cold leg injection recirculation mode cooling (Reference 24). The calculation demonstrates that the active sump will have a minimum of 2012 ppm of boron at the time of switch-over to cold leg injection recirculation mode cooling. Therefore, there is 236 ppm (2012 - 1776) of margin to the subcriticality limit at switchover to cold leg injection recirculation mode cooling.

In past analyses, the subcriticality was required to be confirmed at switchover to hot leg injection recirculation mode cooling since the boron concentration in the sump dilutes as it is building up in the core due to boiling. However, control rod insertion has been demonstrated to occur following the large cold leg loss of coolant accident (Reference 25). Therefore, post-LOCA subcriticality can be demonstrated for restart of Donald C. Cook Unit 1 Cycle 16 and Unit 2 Cycle 12 with no credit taken for the hot leg nozzle gap.

3.5.3 Evaluation of the Post-LOCA Long Term Core Cooling Analysis

3.5.3.1 Long Term Cooling Evaluation Assumptions

3.5.3.1.1 Long Term Core Cooling (LTCC) Flow:

Both the large break and the small break LOCA are evaluated to ensure that the safety injection flows in the cold leg injection recirculation mode and the hot leg injection recirculation mode are sufficient to keep the core covered (minimum hot leg switchover time), and preclude the precipitation of boron (maximum hot leg switchover time). Other than the bounding assumptions made in determining the performance of the

safety injection system (Reference 19), the assumptions made in the LTCC analysis are:

1. No flow reduction or penalty due to obstructions or other conditions upstream of the pumps.
2. Continuous flow from the pumps must be sufficient to remove decay heat. It is assumed that Appendix K requirements apply (1971 decay heat plus 20%). Typically, additional design factors are applied to the computed boil-off rate to account for entrained liquid leaving the break with the vapor.
3. If the flow is interrupted, sufficient flow must be re-established to remove decay heat and replenish RCS mass, within a time period before core re-uncovery occurs. Interruption of RHR flow at the time of transfer to recirculation is an example of the type of interruption that must be evaluated.

3.5.3.1.2 Hot Leg Switch-over:

The revised input assumptions which affect the Long Term Core Cooling (LTCC) analysis, specifically the Hot Leg Switchover (HLSO) analysis performed to preclude boron precipitation in the core post-LOCA, are:

1. Revised Refueling Water Storage Tank (RWST) deliverable water volume
2. Explicit accounting for the sump water volume.
3. Decreased minimum, and increased maximum ice bed mass.
4. Decreased minimum RWST temperature, from 75°F to 70°F.

These new inputs have been incorporated in a revised analysis, for both Donald C. Cook Units, of the core boron build-up to determine the time at which the safety injection must be switched to the hot leg to preclude precipitation of boron in the post-LOCA core. It is noteworthy that the post-LOCA LTCC analysis, unlike the subcriticality analysis, is independent of the reload cycle of operation. Therefore, the post-LOCA LTCC analyses presented herein will remain applicable to both Donald C. Cook Units 1 & 2, so long as the performance of their respective safety injection systems, and their respective boron concentrations and volumes of the sources of boron remain unchanged.

3.5.3.1.3 Donald C. Cook Units 1 & 2 Post-LOCA LTCC Analysis:

New post-LOCA LTCC analyses performed for Donald C. Cook Units 1 & 2 indicate that switchover to hot leg injection recirculation mode cooling, post-LOCA must occur between 2.5 and 7.5 hours after a LOCA. Switchover cannot occur prior to 2.5 hours after a LOCA due to insufficient safety injection flows to ensure that the core will not uncover post-LOCA for all break sizes and locations in the reactor coolant piping. The switchover to hot leg injection cannot occur after 7.5 hours in order to preclude precipitation of boron in the core. Furthermore, an additional evaluation has been performed to demonstrate that the RHR flow can be interrupted for up to five minutes during the switchover to recirculation mode cooling without causing the core to re-uncover post-LOCA at the earliest possible initiation of recirculation mode cooling of 1089 seconds (1089 ÷ 60 = 18.15 minutes). The evaluation of this interruption is an addition to the requirement, specified in Reference 26, of fifty minutes as the earliest

time that the RHR pumps can be diverted to RHR spray for both the Donald C. Cook Nuclear Plants. Provided all the timing criteria are met, adequate cooling will be provided to both the Donald C. Cook Unit 1 & 2 cores.

It is further noted that after fifty minutes the Charging and safety injection pumps, which take their suction from the discharge of the RHR pumps, can provide sufficient flow to maintain core cooling. So, direct injection into the RCS from the RHRS is not required for hot leg recirculation because a safety injection pump can provide adequate flow to back flush the core for mitigation of boron precipitation.

3.5.4 Changes which Impact the Small Break and Large Break LOCA Analysis

Some of the changes listed affect the short-term large and small break LOCA analyses performed to compute Peak Clad Temperature as per the requirements of 10CFR50.46. The revised short-term LOCA analyses have been addressed separately, in Reference 27.

Further to these above mentioned changes treated in Reference 27, and as described previously, a reduction in the CEQ fan start time is being considered to increase the rate of ice melt for smaller break sizes, and thus, increase the amount of water in the containment sump at the time of switch-over from the RWST. The current large break LOCA analyses models a 480 second (8 minute) CEQ fan start time, consistent with the minimum value for a 9 ±1 minute setpoint. This evaluation considers reducing that value to 108 seconds, consistent with the minimum value for a 120 ±12 second setpoint.

Because the CEQ fans facilitate heat removal during the large break LOCA containment pressure transient; and, because minimum containment pressure is limiting for large break LOCA, 10 CFR 50.46 Appendix K requires modeling active containment heat removal systems at their maximum performance. It is, therefore, necessary to examine the impact of this proposed reduction in the CEQ fan start time on the large break LOCA analysis. (Note that the reduction in the CEQ fan start time will have no impact on any other LOCA analysis within the Donald C. Cook Unit 1 & 2 licensing bases, because containment active heat removal systems are not modeled for small break LOCA or post-LOCA analyses).

The current licensing basis large break LOCA analyses for the Donald C. Cook Units 1 & 2 (References 12 and 16, respectively) assume a 480 second CEQ fan start time. Although modeled at their maximum performance in the containment backpressure analysis performed for the ECCS performance analysis, the CEQ fans remove an order of magnitude less heat than the containment spray or heat sinks. So, the CEQ fans account for only a small part of the heat removal. In fact, at 480 seconds, the CEQ fans are shown to have no effect on the large break LOCA analysis, because the transient is terminated prior to 480 seconds.

The proposed start time of 108 seconds, however, does lie within the analyzed range of the current large break LOCA analyses for both Donald C. Cook Units. So, this earlier start time has been evaluated, and determined to have a negligible impact on containment pressure response, i.e., <0.2 psi at a time in the transient when the containment pressure is already very low (<2.5 psig). Therefore, it is concluded that

the reduction in the CEQ fan start time from 480 to 108 seconds would, likewise, have a negligible effect on the computed Peak Clad Temperature (PCT) for the Donald C. Cook Units 1 & 2.

3.5.5 LOCA Evaluation Summary and Conclusions

LOCA analyses have been performed to support restart of Donald C. Cook Nuclear Plant Units 1 & 2. These analyses were performed considering the following revised assumptions:

1. Removal of any reliance on flow through the hot leg nozzle gap for both large break LOCA PCT calculations, as well as the post-LOCA sump boron dilution analysis.
2. Revised Refueling Water Storage Tank (RWST) deliverable water volume at the initiation of recirculation (volume increased to 280,000 gals).
3. Revised maximum containment spray flow (Changed from 3600 gpm to 3700 gpm per pump).
4. Revised sump geometry assumptions to account for the sump and reactor cavity water volume.
5. Decreased minimum, and increased maximum ice bed mass.
6. Decreased minimum RWST temperature, from 75°F to 70°F.
7. An interruption of RHR flow of up to five minutes during switchover to recirculation mode cooling.
8. Asymmetric Safety Injection Evaluations.
9. Boron depletion of 3.1% in the RWST and accumulators.
10. Reduced delay in CEQ fan start time.

10CFR50.46 (Reference 28) requires that core cooling be provided for the long term after a LOCA. Calculations confirming that the core remains subcritical, post-LOCA are performed by Westinghouse to support each core reload. The subcriticality of the core must be assured at the time of switchover to cold leg recirculation mode cooling. Because the reactivity of the core varies for each reload cycle, the assurance of subcriticality must be reaffirmed for each core reload.

As discussed herein, it was concluded that large break LOCA subcriticality can be assured for restart of Donald C. Cook Units 1 & 2. Also, plant specific evaluations for asymmetric safety injection, and removal of the hot leg nozzle gap dependence for LBLOCA have been analyzed. Therefore, it can be demonstrated that operation of Donald C. Cook Units 1 & 2 meets all the requirements of 10CFR50.46 for a LOCA.

Table 3.5-1. Parametric Studies Performed to Identify Limiting Subcriticality Analysis Inputs

Case #	Split %	EOB (sec)	ECCS Press. (psig)	Ice Rate (gpm)	Spray (gpm)	ECCS Flow	BIT	Spray Diversion (gpm)	RWST Temperature (°F)	RWST/ACC CB (ppm)
1	28	100	30	2955	7400	Min	Inactive	0	70°F	2325/2228
2	40*	100	30	2955	7400	Min	Inactive	0	70°F	2325/2228
3	28	50*	30	2955	7400	Min	Inactive	0	70°F	2325/2228
4	28	100	0*	2955	7400	Min	Inactive	0	70°F	2325/2228
5	28	100	30	5258*	7400	Min	Inactive	0	70°F	2325/2228
6	0*	100	30	2955	7400	Min	Inactive	0	70°F	2325/2228
7	28	100	30	2955	3700*	Min	Inactive	0	70°F	2325/2228
8	0*	100	0*	5258*	7400	Min	Inactive	0	70°F	2325/2228
9	28	100	30	2955	7400	Min	Inactive	0	120°F*	2325/2228

* - Inputs varied from Case 1.

Table 3.5-1 Nomenclature:

- **Split %** refers to the percent of break flow that enters the reactor cavity instead of the active sump.
- **EOB** is End-Of-Bypass time, the time when ECCS will no longer be bypassed around the downcomer and out the break.
- **ECCS Press.** is the assumed Reactor Coolant System pressure during the post-LOCA Long Term Core Cooling (LTCC).
- **Ice Rate** is the average ice melting rate due to the large break LOCA.
- **Spray** is the total assumed containment spray system flow rate.
- **ECCS Flow** indicates if minimum or maximum ECCS system performance is assumed.
- **BIT** indicates the status of the Boron Injection Tank that was assumed throughout these case studies. Inactive implies no boron in the BIT; active implies a high concentration of boron in the BIT (20,000 ppm).
- **Spray Diversion** refers to the rate at which containment spray enters the piping annulus region of the containment.
- **RWST Temperature** is the temperature assumed in computing the density for converting the water volume to a mass.
- **RWST/ACC CB** is the boron concentration assumed for the Refueling Water Storage-Tank and Accumulator for each case.

Table 3.5-1A. References for Table 3.5-1

Case #	Split %	EOB (sec)	ECCS Press. (psig)	Ice Rate (gpm)	Spray (gpm)	ECCS Flow	BIT	Spray Diversion (gpm)	RWST Temperature (°F)	RWST/ACC CB (ppm)
1	(1)	(4)	(6)	(8)	(10)	(12)	(13)	(15)	(16)	(14)
2	(2)	(4)	(6)	(8)	(10)	(12)	(13)	(15)	(16)	(14)
3	(1)	(5)	(6)	(8)	(10)	(12)	(13)	(15)	(16)	(14)
4	(1)	(4)	(7)	(8)	(10)	(12)	(13)	(15)	(16)	(14)
5	(1)	(4)	(6)	(9)	(10)	(12)	(13)	(15)	(16)	(14)
6	(3)	(4)	(6)	(8)	(10)	(12)	(13)	(15)	(16)	(14)
7	(1)	(4)	(6)	(8)	(11)	(12)	(13)	(15)	(16)	(14)
8	(3)	(4)	(7)	(9)	(10)	(12)	(13)	(15)	(16)	(14)
9	(1)	(4)	(7)	(8)	(10)	(12)	(13)	(15)	(16)	(14)

Key to Table 3.5-1A:

(1) Reference 21 justifies a value of 28% of break flow into the reactor cavity for a large break LOCA.

(2) 40% assumption is arbitrary and is for the purpose of providing an upper bound to the portion of break flow that would enter the reactor cavity for a large break LOCA.

(3) 0% assumption is arbitrary and is for the purpose of providing an lower bound to the portion of break flow that would enter the reactor cavity for a large break LOCA.

(4) The assumption of a 100 second End-Of-Bypass (EOB) time is a conservatively high estimate of the EOB time for a 1.0 ft^2 break. This assumption was documented in Westinghouse Calculation Note (CN) Reference 29.

(5) The assumption of a 50 second EOB time is arbitrary, providing a sufficiently large range for assessing direction of conservatism for this parameter.

(6) The pressure of the reactor coolant system approximately 13 minutes (earliest possible draindown time documented in Reference 30) or later after a LOCA of 1.0 ft^2 or larger. This pressure affects the ECCS system performance. A value of 30 psig is judged to be a conservatively high estimate of the RCS pressure for an ice condenser containment plant.

(7) See Item (6). 0.0 psig is an arbitrary assumption used to provide a lower bound for RCS pressure and the subsequent ECCS system performance.

(8) A lower bound estimate of ice melt rate is documented in Westinghouse CN Reference 29.

(9) An upper bound estimate of ice melt rate is documented in Westinghouse CN Reference 29.

(10) The maximum containment spray flow rate from two pumps as provided by AEP in Reference 19.

(11) The maximum containment spray flow rate from one pump as provided by AEP in Reference 19. Value chosen to provide a suitable range for assessing a bounding value for the containment spray flow rate.

Key to Table 3.5-1A:

(12) In addition to assessing the ECCS system performance for changes in the RCS pressure (Items 6 and 7), ECCS pump performance can be modeled at minimum and maximum injection rates. AEP specific pump performance as described in Reference 31 was used to obtain minimum and maximum ECCS performance data.

(13) The status of the Boron Injection Tank (BIT) can be verified via the plant technical specifications. Initially each Cook unit had an active BIT in the sense that the tank was required to have a boron concentration of no less than 20,000 ppm (Reference 2). BIT removal timing documented in FAX sent to Westinghouse from AEP October 10, 1997. As stated therein: Unit 1 BIT Removal - EOC 12 6/22/92, BOC 13 10/28/92; Unit 2 BIT Removal - EOC 8 2/20/92, BOC 9 12/17/92. Inactive implies that there is no requirement regarding a minimum boron concentration for the BIT. For the purpose of subcriticality calculations the BIT is assumed to have 0 (zero) ppm for those cycles of operation deemed inactive.

(14) The current Refueling Water Storage Tank (RWST) and accumulator technical specification minimum boron concentration as provided by AEP in Reference 19.

(15) 0 gpm is the diversion rate as provided in Reference 19.

(16) Maximum and minimum RWST temperature as provided in Reference 19.

Table 3.5-2. Results of Donald C. Cook Units 1 & 2 Subcriticality Parametric Studies

Case No.	Active Sump C_B (ppm) for Pre-Trip RCS C_B of:		Pre-Trip to Active Sump Boron Conc. Relationship	Unit 1 Cycle 16 Active Sump Boron Conc.		Unit 2 Cycle 12 Active Sump Boron Conc.	
	0 ppm	2000 ppm	y = mx + b	@ 1381 ppm	Margin	@ 1691 ppm	Margin
1	1694.98	2120.16	0.21259x + 1694.98	1988.57	458.568	2054.47	278.471
2	1733.71	2121.62	0.19396x + 1733.71	2001.56	471.564	2061.69	285.691
3	1696.08	2120.25	0.21208x + 1696.08	1988.97	458.97	2054.72	278.715
4	1694.35	2120.79	0.21322x + 1694.35	1988.81	458.807	2054.91	278.906
5	1700.4	2083	0.19130x + 1700.40	1964.59	434.587	2023.89	247.891
6	1611.94	2116.44	0.25225x + 1611.94	1960.3	430.3	2038.5	262.498
7	1695.31	2093.53	0.19911x + 1695.31	1970.28	440.281	2032.01	256.006
8	1623.08	2082.67	0.22979x + 1623.08	1940.42	410.424	2011.66	235.66
9	1698.41	2121.28	0.21143x + 1698.41	1990.4	460.401	2055.95	279.945

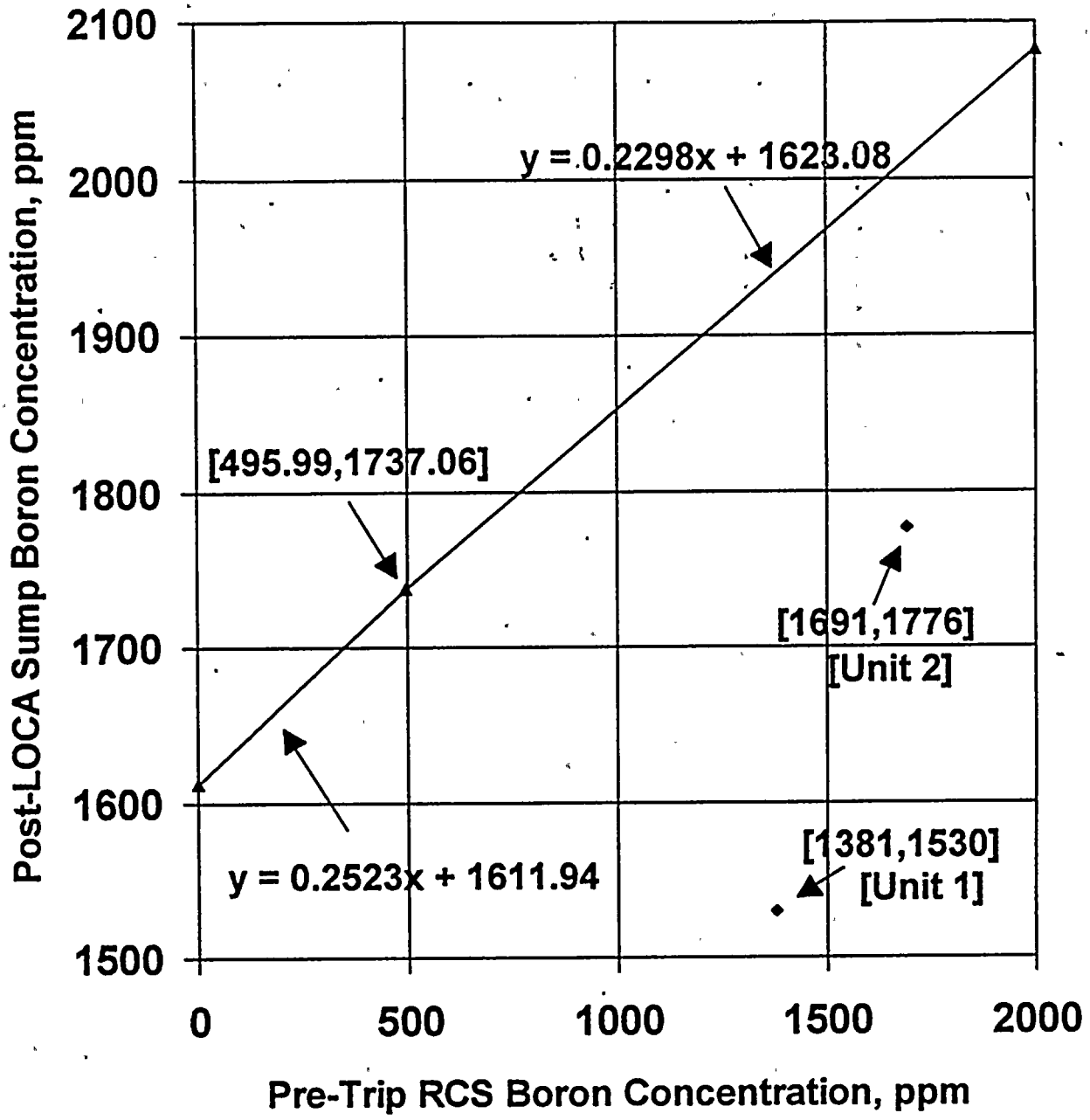

FIGURE 3.5-1. Donald C. Cook Units 1 & 2 Post-LOCA Subcriticality Results

3.6 *Emergency Operating Procedures Evaluation*

In the current version of the Donald C. Cook Nuclear Plants Emergency Operating Procedures (EOPs) as well as the Westinghouse Owners Group Emergency Response Guidelines (ERGs), upon which the EOPs are based, the plant operator uses the RWST switch-over level as the primary indication for performing the actions associated with re-aligning the safety injection system to the containment sump. These actions are prescribed in the EOP / ERG ES-1.3, "Transfer to Cold Leg Recirculation". The operator is directed to ECA-1.1, "Transfer to Emergency Coolant Recirculation", if the actions in ES-1.3 cannot be performed. The actions prescribed in ECA-1.1 would be performed for situations considered beyond design basis, including multiple pump and/or valve failures, and an inadequate level in the containment sump. Because the modifications proposed (specifically the containment sump level instrumentation upgrade) will improve the uncertainties associated with the sump level indication, the operator would be more likely to remain in ES-1.3 for a design basis large or small LOCA, than be required to transition to ECA-1.1.

It is, therefore, concluded that by reducing the sump level uncertainties, the change is a beneficial one, and does not adversely impact the probability or consequences of the LOCA. Once the revised uncertainties are determined, they could be factored into the plant EOPs.

3.7 *Steam Generator Tube Rupture Evaluation*

Because the Steam Generator Tube Rupture analysis methodology does not model containment response nor the RWST, the proposed containment system modifications would not impact the Westinghouse SGTR analysis methodology or assumptions, and would, therefore, not alter the results of the analysis of record for the SGTR event.

3.8 *Radiological Consequences Evaluation*

The proposed modifications have been evaluated to determine the impact on the LOCA Radiological Consequences Analysis. It was concluded that the changes would either provide a benefit for, or have no impact on the analysis. A discussion of each of the modifications follows:

Partition Wall Penetration: This modification is intended to insure that water that enters the annulus area after a LOCA can return to the sump. The LOCA radiological consequences analysis includes an ECCS leakage case that considers leakage outside containment of the water being recirculated. The concentration of iodine in this water is calculated using the amount of iodine assumed to be deposited in the sump and the sump water volume. A higher sump water volume reduces the concentration of iodine in the recirculating water, and consequently, reduces the activity released due to ECCS water leakage. The additional penetrations therefore provide a benefit for this analysis. No other cases include sump modeling and are, therefore, not impacted by the change.

CEQ Fan Room Drains: This modification is intended to insure that water which enters the CEQ fan rooms area after a LOCA can return to the sump. As discussed above, a modification which results in increased sump water volume is a benefit for the ECCS

leakage case. The modification, therefore, provides a benefit for the radiological consequences analysis.

Increased RWST Overflow Height: This modification is intended to increase the amount of water that is injected into the RCS from the RWST, that in turn, increases the amount of water that will end up in the sump. As discussed above, a modification that results in increased sump water volume is a benefit for the ECCS leakage case. This modification will also result in an increased period of injection spray. The injection spray has a higher capability for iodine removal. Thus, increasing the duration of injection provides a benefit for the case which considers the release of iodine from the containment gas space. This modification, therefore, provides a benefit for the radiological consequences analysis.

Containment Sump Level Instrumentation Upgrade: This modification is intended solely to improve the accuracy of the sump level information available to the operators. It has no impact on the radiological consequences analysis.

CEQ Fan Start Logic: This modification is intended to increase the rate of ice melt, and thus, the amount of water contained in the sump at the time of switch-over from RWST injection. As discussed above, a modification which results in increased sump water volume is a benefit for the ECCS leakage case. In addition, starting the fans earlier provides for better removal of the iodine released to the containment atmosphere, providing a benefit for the case that considers the release of iodine from the containment gas space.

Reduced Ice Mass in the Ice Condenser: A lower ice mass would reduce the amount of water in the sump, which would be a penalty for the ECCS leakage case, as explained above. However, the analysis conservatively models the sump volume as remaining constant from the start of recirculation, rather than increasing the volume as additional ice is melted. The amount of ice melted at the start of recirculation is not appreciably affected by the total ice weight. Therefore, the reduced ice mass would not adversely impact the analysis.

4. DETERMINATION OF NO SIGNIFICANT HAZARDS

The modifications proposed to be made to the Donald C. Cook Units 1 & 2 Containment Systems to ensure adequate long term post-accident core cooling have been evaluated using the guidance of NEI 96-07. On the basis, then, of the safety assessments presented above, the following arguments may be used in the determination that the proposed modifications and the attendant Technical Specification changes involve no significant hazards consideration per the criteria of 50.92(c)

4.1 Will the probability of an accident previously evaluated in the FSAR be increased?

The proposed modifications to the Containment Systems, and the attendant changes to input assumptions of related safety analyses evaluated herein do not result in a condition where the material and construction standards which were applicable prior to the change are altered. System integrity is maintained. The modifications do not cause the initiation of any accident nor create any new credible limiting single failure nor result in any event previously deemed incredible being made credible. The existing separation of the control and protection functions are not adversely impacted. In addition, the functional requirements of safety related systems and components, which are related to accident mitigation, have not been altered.

It has been demonstrated in this Safety Evaluation that the conclusions of the design basis analyses assessed herein do not change. The Containment System modifications are intended to mitigate the consequences of an accident by further ensuring proper operation of the recirculation sump and related equipment. Again, all design basis accident analyses addressed in this safety evaluation remain valid with the incorporation of the revised the accident analysis input assumptions. Therefore, the probability of an accident previously evaluated in the FSAR will not be increased by this change.

4.2 Will the consequences of an accident previously evaluated in the FSAR be increased?

The proposed modifications to the Containment Systems, and the attendant changes to input assumptions of related safety analyses evaluated herein, do not affect the integrity of the fuel assembly or reactor internals or any fission product barrier such that their function in the control of radiological consequences is affected. Nor would the response of safety related mitigation systems to accident scenarios, as described in the FSAR be in any way changed, degraded, or prevented. In addition, there is no effect on any assumption previously made in the radiological consequence evaluations nor effect on the mitigation of the radiological consequences of an accident described in the FSAR. The Post-LOCA analyses discussed in this safety evaluation demonstrate that decay heat is removed and that long term cooling is assured. Therefore, the consequences of an accident previously evaluated in the FSAR will not be increased.

4.3 May the possibility of an accident which is different than any previously evaluated in the FSAR be created?

The proposed modifications to the Containment Systems, and the attendant changes to input assumptions of related safety analyses evaluated herein do not cause the initiation of any accident nor create any new credible limiting single failure. Nor do they result in any event previously deemed incredible being made credible. In addition, the functional requirements of safety related systems and components, which are related to accident mitigation, have not been altered. As such, it does not create the possibility of an accident different than any evaluated in the FSAR.

4.4 Will the probability of a malfunction of equipment important to safety previously evaluated in the FSAR be increased?

The proposed modifications to the Containment Systems, and the attendant changes to input assumptions of related safety analyses evaluated herein do not result in an increased probability of scenarios previously deemed improbable. Nor do they create any new failure modes for the safety-related equipment. The proposed modifications, furthermore, result in no original design specification, such as seismic requirements, electrical separation requirements and environmental qualification, being altered. In addition, they result in no equipment used in accident mitigation being exposed to an adverse environment. No new performance requirements are imposed on any equipment important to safety. Therefore, the modifications will not increase the probability of a malfunction of equipment important to safety previously evaluated in the FSAR.

4.5 Will the consequences of a malfunction of equipment important to safety previously evaluated in the FSAR be increased?

The proposed modifications to the Containment Systems, and the attendant changes to input assumptions of related safety analyses evaluated herein do not result in a different response of safety-related systems and components to accident scenarios than that postulated in the FSAR. No new equipment malfunctions have been introduced that will affect fission product barrier integrity. In addition, there is no effect on any assumption previously made in the radiological consequence evaluations nor effect on the mitigation of the radiological consequences of an accident described in the FSAR. No new performance requirements are imposed on any equipment important to safety. Nor is the response of safety related mitigation systems to accident scenarios, as described in the FSAR, in any way degraded or prevented. Limiting single failures of the ECCS pumps, CTS pumps and CEQ fans have already been considered in the accident analyses. The Post-LOCA analyses discussed in this safety evaluation demonstrate that decay heat is removed and that long term cooling is assured. Therefore, the proposed modifications will not increase the consequences of a malfunction of equipment important to safety previously evaluated in the FSAR.

4.6 May the possibility of a malfunction of equipment important to safety different than any already evaluated in the FSAR be created?

The proposed modifications to the Containment Systems, and the attendant changes to input assumptions of related safety analyses evaluated herein do not result in a different response of safety-related systems and components to accident scenarios than that postulated in the FSAR. No new equipment malfunctions have been introduced that will affect fission product barrier integrity. In addition, there is no effect on any assumption previously made in the radiological consequence evaluations nor effect on the mitigation of the radiological consequences of an accident described in the FSAR. No new performance requirements are imposed on the equipment important to safety. Therefore, the proposed modification will not increase the consequences of a malfunction of equipment important to safety previously evaluated in the FSAR.

4.7 Will the margin of safety as defined in the Bases to any Technical Specifications be reduced?

The modification will have no affect on the availability, operability or performance of the safety-related systems and components. In fact, it is the intent of these proposed modifications to the Containment Systems to ensure the proper function of such equipment. The proposed modifications do, however, require changes to the Technical Specifications as discussed in the safety evaluation, but they do not prevent any inspections or surveillances required by the Technical Specifications. Therefore, the modifications will not reduce the margin of safety, as described in the bases to any Technical Specification.

The Bases of the Technical Specifications are founded in part on the ability of the regulatory criteria being satisfied assuming the limiting conditions for operation (LCO) for various systems. Conformance to the regulatory criteria for operation of the Donald C. Cook Units with the proposed modifications is demonstrated by the analyses and assessments discussed herein, and the regulatory limits are shown not to be exceeded, the margin of safety as defined in the Technical Specifications is not reduced.

4.8 CONCLUSION

This evaluation of the proposed modifications to the Donald C. Cook Units 1 & 2 Containment Systems, the attendant changes to input assumptions of related safety analyses, and the resulting changes to the plants' Technical Specifications concludes that no significant hazards consideration per the criteria of 10CFR50.92 is involved. This conclusion is based on the fact that it has been demonstrated that these modifications do not increase the probability of occurrence or the consequences of an accident previously evaluated in the FSAR. Nor has any mechanism for an accident or malfunction, which has not been previously evaluated in the FSAR, been identified. Also, the change does not decrease the margin of safety as identified in the basis for any Technical Specification.

5. REFERENCES

1. AEP Letter to Westinghouse (Messrs. Bass & Hawley to Corletti) dated July 8, 1999 - Request for Integrated Safety Evaluation
2. Donald C. Cook Technical Specifications, Unit 1 Amendment 226, December 1998; and Unit 2 Amendment 211, December 1998
3. AEP Design Input Transmittal (DIT)-B-00003-01, Transmitted to Westinghouse by AEP letter (Messrs Hafer and Bass to Corletti) dated July 2, 1999, and attachments, including DIT-B-00003-00, Transmitted to Westinghouse by AEP letter dated June 15, 1999; and, the Analysis Input Assumptions for the post-LOCA Analyses/Evaluations, Transmitted to Westinghouse by AEP letter dated June 18, 1999.
4. AEP Letter to Westinghouse AEP/W SGTP-22, December 14, 1994, Donald C. Cook Nuclear Plant Steam Generator Tube Plugging Analysis Technical Documentation Transmittal
5. AEP Procedure Number 02-OHP 4023 ES-1.3, Rev. 6, Transfer To Cold Leg Recirculation, 6/22/99
6. AEP Letter to Westinghouse (Vanderburg to Peck) dated September 18, 1998
7. AEP letter from Vance VanderBurg to Don Peck of Westinghouse, August 19, 1998
8. Westinghouse Calculation CN-FSE-99-98, Rev. 1, Two Train RWST Draindown For LOCA - Donald C. Cook Units 1 & 2
9. Westinghouse memorandum SAE/FSE-AEP/AMP-0806, Two Train RWST Draindown Transient for Donald C. Cook Units 1 & 2 for LOCA
10. Westinghouse Calculation CN-FSE-99-95, Revision 1 Single Train RWST Draindown Containment Integrity Case - Donald C. Cook Units 1 & 2
11. Westinghouse memorandum SAE/FSE-AEP/AMP-0758, 7/6/99, Single Train RWST Draindown Transient for Donald C. Cook Units 1 & 2
12. WCAP-14285, Revision 1, "Donald C. Cook Nuclear Plant Unit 1 Steam Generator Tube Plugging Program Licensing Report," May 1995.
13. FAX from Jim Hawley to M. Corletti, transmitting DIT No. DIT-B-00005-03, (Subject: Containment Volumes and Containment Spray UA, ESW Flow, and Temperature), 7/9/99.
14. FAX from Jim Hawley to John Kolano, transmitting DIT No. DIT-B-00003-03, (Subject: Containment Integrity Analysis; Containment Spray UA and ESW Flow to CTS Hx), 7/10/99.
15. FAX form Jim Hawley to John Kolano, transmitting DIT No. DIT-B-00003-04, (Subject: Containment Integrity Analysis; Sump Volume and ESW Maximum Temperature), 7/10/99.
16. WCAP-14488, "Donald C. Cook Nuclear Plant Unit 2 3600 MWt Uprating Program Licensing Report," December 1996.
17 AEP Design Input Transmittal (DIT)-B-00003-05, transmitted to Westinghouse by AEP letter (Messrs Hafer and Bass to Corletti) dated September 22, 1999
18. AEP-99-267, "Donald C. Cook Units 1 and 2 , Post-LOCA Hydrogen Evaluation Report - Revision 3", August 20, 1999.
19. AEP Letter to W (Brassart to Corletti), "Units 1 and 2 Analysis Input Assumptions for the post-LOCA Analyses/Evaluations", dated June 18, 1999.
20. WCAP-8951 (Non-Proprietary), Mendler, O. J., "Method of Analysis and Evaluation of Jet Impingement Loads from Postulated Pipe Breaks".
21. WCAP-7833 Supplement 1, "Supplementary Information to WCAP-7833, Design and Performance Evaluations of the Ice Condenser Reactor Containment System for the Donald C. Cook Nuclear Plant."
22. SEC-LIS-5123-C8, "Cook Unit 1 and 2 (AEP/AMP) Post-LOCA Analyses to Support Plant Restart," December 11, 1998.
23. CAA-98-272, "Donald C. Cook Unit 1 Cycle 16 Revised Post-LOCA Data for Restart at 4,736 MWD/MTU", November 30, 1998.
24. CN-AM12-089, "Cook Unit 2 Cycle 12 - New Calcs for Xe Credit, Options A and B," May 21, 1999.
25. Westinghouse memorandum SAE-LIS-99-191, "Transmittal of Report on Donald C. Cook Control Rod Insertion," dated April 13, 1999.

26. AEP-95-200 (NSAL-95-001), "American Electric Power Service Corporation Donald C. Cook Nuclear Plant Units 1 and 2 Minimum Cold Leg Recirculation Flow", January 19, 1995.
27. AEP-99-059, "10 CFR 50.46 Annual Notification and Reporting for 1998/SBLOCA Asymmetric HHSI Report," July 12, 1999.
28. "Acceptance Criteria for Emergency Core Cooling Systems for Water Cooled Nuclear Power Reactors" 10 CFR 50.46 and Appendix K of 10 CFR 50, Federal Register, Volume 39, Number 3, January 4, 1974, Amended September 16, 1988.
29. W Calculation Note #SEC-LIS-5123-C3, "Donald C. Cook Unit 1 and 2 (AEP/AMP) Justification for Past Operation for Unit 1 Cycle 16 and Unit 2 Cycle 11 for Post-LOCA Subcriticality", November 5, 1997.
30. SEC-LIS-98-481, "Revised LOCA Input to the Donald C. Cook Nuclear Plant Unit 1 and 2 (AEP/AMP) LOCA Review of EOP E-0, E-1, ES-1.2, and FR-Z.1", September 11, 1998.
31. WCAP-14286, "American Electric Power Service Corporation Donald C. Cook Nuclear Plant Unit 1 Steam Generator Tube Plugging Program Engineering Report", December 1995, Volume 2, Appendix A - Analysis Input Assumptions.
32. Email from AEP to Westinghouse (Messrs. Jim Hawley and Jeff Bass to M. Corletti), "Containment Spray Heat Exchanger and CEQ Fan Start Logic", August 20, 1999
33. AEP Letter to Westinghouse (Messrs. D. R. Hafer and J. C. Bass to M. Corletti), "Transmittal of Accident Analysis Input Assumptions - DIT-B-00003-02, DIT-B-00003-03, DIT-B-00003-04", July 19,1999.
34. AEP Letter to Westinghouse (V. Vanderburg to D.Peck), "Ice Bed Temperature", October 7, 1998.
35. Technical Manual No. 1440-c352: "Vertical Steam Generator Instructions for Indiana Michigan Power Company, Donald C. Cook Nuclear Plant Unit 2.

26.0 LER No. 315/97-017-01 and 316/97-005-01

Event Description: Vortexing in Containment Sump Leading to the Failure of RHR Pumps

Date of Event: October 8, 1997

Plant: D.C. Cook Units 1 and 2

26.1 Summary of Issue

Several conditions identified at D.C. Cook (Ref. 1) indicated the possibility of reducing the amount of water available in the containment sump. A reduced water level in the sump can lead to either net positive suction head (NPSH) problems or air entrainment problems (due to vortexing) for the residual heat removal (RHR) pumps. Figure 1 shows the different elevations that are referred to in the text and the relative location of the RHR suction pipe with respect to those elevations. Note that the sump level required by design basis to ensure against NPSH problems as well as the vortexing problems is 602'-10."

Issues related to premature termination of injection from RWST

Several issues discovered at Cook showed the possibility for premature termination of injection from the refueling water storage system (RWST) to the reactor coolant system (RCS) during a loss-of-coolant accident (LOCA). During the injection phase, water in the RWST is transferred from the RWST to the containment via the RCS. At D.C. Cook, when the RWST level decreases to the low alarm setpoint (nominally 32.23% of span), the operators start transferring from injection to containment sump recirculation. Therefore, at least 68% of the RWST inventory of 350,000 gallons will be available in the containment sump when the RHR pumps start taking suction from the containment. However, four issues associated with the RWST level indication can result in termination of injection at a point much higher that 32.23%. They are: (a) an error made in the setpoint calculation (friction loss calculation that did not incorporate the entrance loss factor); (b) a second error made in the setpoint calculation that did not correct for the velocity head loss correction factor in the Bernoulli equation; (c) failure to adequately consider the uncertainties; and (d) a drip catch installed in the 10-inch RWST overflow line that could result in an additional negative 8% level error due to the vacuum created inside the RWST at high flow rates. Preliminary investigations performed by the licensee indicated that application of errors (a), (b), and (c) could cause the actual RWST water level to be higher than the indicated level by approximately 20% of instrument span (about 6 feet of level) when the flow rates from both RHR and containment spray (CTS) pumps are at their maximum. When combined with issue (d), the total error could be as high as 28%. As a result, inventory transferred from the RWST to the containment could be nearly 98,000 gallons (28% of 350,000 gallons) less than the amount anticipated to be present in the containment sump when sump recirculation starts. The reduction in the amount of water in the sump, can reduce the containment sump water level and lead to air entrainment of RHR pumps. Since all of the above errors are dependent upon the flow velocity, for small break LOCAs (especially those that do not require CTS), this issue is irrelevant.

Issues related to diversion of water from the containment sump to the inactive containment sump

LER 315-97-017 (Ref. 3) reported a design flaw at Cook which results in diversion of water from the active sump volume to inactive sump volumes. Water in the inactive volumes will not be available for recirculation. Figure 2 shows the location of the reactor relative to the active and the inactive containment sumps. Figure 3 shows how the containment spray pumps can transfer the inventory from the active sump to the inactive sump. Figure 4 shows the volumes in the inactive and active sumps. The magnitude and the nature of flow diversion paths are as follows: (a) The CTS system is designed to provide a flow of 300 gpm per train to spray nozzles in the accumulator/fan rooms of the containment. The accumulator/fan rooms are directly above the drain to the pipe annulus. (b) Inventory is lost from CTS to the inactive sump not only through the lower containment nozzles to the fan accumulator rooms but also through the upper containment nozzles down the stairwells. (c) Unsealed penetrations in the crane wall allow water to flow from the active sump to the passive sump. Reference 8 provides the elevations and effective areas of each of the penetrations. The total area of the penetrations is estimated to be approximately 143 square inches. The lowest penetration is at 600'-7" and has a magnitude of 6.231 square inches. The two major penetrations are 35.579 and 57.617 square inches and they are located at 602'-4" and 600'-10", respectively. Diversion of water from the active sump to the inactive sump can reduce the containment sump water level and lead to vortexing and air entrainment in RHR pumps.

Issues related to containment water level and containment sump level indications

Step 1 of Revision 4 to the emergency operating procedure, (EOP) O1-OHP 4023.ES-1.3 (Ref. 4), instructs the operator to check whether the containment water level is greater than 15% prior to establishing sump recirculation. The 15% containment water level equates to an elevation of 601'-6". According to Reference 1, while this water level is adequate for NPSH considerations, it does not assure the prevention of emergency core cooling system (ECCS) pump vortex formation and air entrainment. A minimum containment level of 602'-10" is necessary to eliminate the likelihood of vortex formation and air entrainment. The 602'-10" level is named the "minimum safe level" and it was established using scale model testing in 1977, when both RHR and CTS pumps were operated at run out flows. After including instrument uncertainties, this relates to a 29% containment water level. If the containment water level has not reached 15%, the procedure mentioned above would allow the operators to start establishing sump recirculation if the containment sump level was greater than 97%. This equates to an approximate elevation of 599'-4", which is nearly 3' below the level required to prevent vortexing and air entrainment. As a result, during an event, the operators may start the RHR pumps prematurely and create vortexing and air entrainment. Therefore, at large RHR and CTS flows, this cautionary statement in the EOP cannot be credited as a defense against vortexing in the containment sump. For small break LOCAs, since the combined RHR and CTS flows are much less than the total pump run out flows, this issue is irrelevant.

The Froude number is indicative of the potential for vortexing. This number is proportional to the flow velocity and inversely proportional to the square root of the elevation difference between the pump suction and the free surface. For example, if the flow velocity is reduced by a factor of two, the elevation

difference needed to avoid vortexing can be reduced by a factor of 4. Therefore, for small (or even most medium) breaks, this issue is irrelevant.

Issues related to the ice mass

The inspections at Cook revealed a large number of issues related to the mass of ice in the ice condensers. If there was a significant reduction in the mass of ice in the ice condensers in the "as-found" condition, that could have impacted the sump water level after a LOCA. However, based on communications with the licensee (Paul Schoepf, August 9, 1999), it was found that the ice mass in the as-found condition was not significantly less than the technical specification requirement. Note that non-QA/crude estimates of ice weights were 2.71E6 lbs for Unit 1 and 2.83E6 lbs for Unit2. The technical specification requirement in the as-found condition was 2.37E6 lbs. Even if the absolute values were significantly (e.g., 10%) lower than these crude estimates, the risk analysis would still be unaffected. Therefore, the issues relating to ice mass are ignored in the risk analysis in all LOCA and feed-and-bleed sequences.

The changes to the core damage frequency (CDF) associated with the issues discussed above depend on the impact of other issues on the RHR cooling and auxiliary feedwater (AFW) capabilities. The CDF associated with the issues discussed above is summarized in Table 1. Table 1 summarizes the initiating event frequencies of initiators that are affected by the debris in the sump, products of known probabilities and the frequency for each initiator, summary of qualitative assessment of the unknown probability, and the expected change in CDF for each initiator. Overall, the total CDF change associated with the issues identified above is less than 1×10^{-6}/Year and therefore, they are not risk-significant.

26.2 Modeling and Affected Sequences

The RHR pumps may vortex and entrain air if they are started when the sump inventory is inadequate. Even if the pumps are successfully started, if the event requires containment spray, that spray pump may gradually divert flow from the active sump to the inactive sump. As a result, air entrainment may occur during late stages of sump recirculation. Any LOCA or feed-and-bleed scenario may require sump recirculation. Therefore, the following core damage sequences are considered:

Sequence 1 - Small LOCA (Stuck open PORVs or SRVs, RCP seal LOCAs, Small pipe breaks) or Feed-and-bleed cooling - Early failure of sump recirculation

- Small LOCA or feed-and-bleed cooling occurs;
- Sump recirculation is required due to inability to depressurize RCS and establish RHR cooling;
- Operator starts RHR pump even if the sump level is less than 15% of containment water level or 97% of containment sump level;
- RHR pumps entrain air due to vortexing when pumps start; and
- RHR pumps fail due to vortexing

Sequence 2 - Small LOCA (Stuck open PORVs or SRVs, RCP seal LOCAs, Small pipe breaks) or Feed-and-bleed cooling- Late failure of sump recirculation

- Small LOCA or feed-and-bleed cooling occurs;
- Sump recirculation is required due to inability to depressurize RCS and establish RHR cooling;
- RHR pumps entrain air due to vortexing during long term operation; and
- RHR pumps fail due to vortexing.

Sequence 3 - Medium LOCA - Early failure of sump recirculation

- Medium LOCA occurs;
- Operator starts RHR pump even if the sump level is less than 15% of containment water level or 97% of containment sump level;
- RHR pumps entrain air due to vortexing when the pumps start; and
- RHR pumps fail due to vortexing

Sequence 4 - Medium LOCA - Late failure of sump recirculation

- Medium LOCA occurs;
- RHR pumps entrain air due to vortexing during long term operation; and
- RHR pumps fail due to vortexing.

Sequence 5 - Large LOCA - Early failure of sump recirculation

- Large LOCA occurs;
- Operator starts RHR pump even if the sump level is less than 15% of containment water level or 97% of containment sump level;
- RHR pumps entrain air due to vortexing when the pumps start; and
- RHR pumps fail due to vortexing.

Sequence 6 - Large LOCA - Late failure of sump recirculation

- Large LOCA occurs;
- RHR pumps entrain air due to vortexing during long term operation; and
- RHR pumps fail due to vortexing.

26.3 Frequencies, Probabilities, and Assumptions

Three analyses, two of which were performed by vendors sponsored by the licensee (Ref. 8, 9) and the third analysis paid for by NRC (Ref. 10), provide the basis for many of the probabilities discussed in this section.

Reference 8 is a MAAP4 analysis performed to determine the active sump conditions during a cold leg recirculation following a double ended cold leg LOCA. Using an RWST inventory of 350,000 gallons and an initial ice mass of 2.43E6 lbs, and factoring in communications between the active and the inactive sumps below the 602'-10" level, the active sump level was determined to be 9.5 feet at the beginning of

the switchover to recirculation. The calculation showed that the level would increase to 11 feet by the time switchover is complete. The long term equilibrium level in the active sump is 7.8 feet. The elevation 598'-9 3/8" is treated as the zero level. Therefore, the design basis required level (602'-10") equates to approximately 4 feet. This calculation used the original sump recirculation procedure that had errors which could result in premature termination of injection from RWST during a design basis LOCA. In conclusion, the analysis demonstrated that in spite of the several errors in the RWST level setpoints, during a design basis LOCA, the active sump water level would have been well above the required limit of 602'-10" during the early and late phases of a large LOCA.

Reference 9 is a Fauske & Associates (FAI) calculation. This study showed that under design basis large break LOCA and a spectrum of small break LOCAs, a proposed increase in total mass together with other existing water sources would provide sufficient water in the sump. Even though the calculations were performed with a proposed increase in the mass of ice rather than the mass of ice required by current technical specifications, the calculations can be applicable to the "as-found" condition due to the following. At the time of plant shutdown, the technical specifications required the ice weight to be 2,371,451 lbs. The proposed increase would require 2,590,000 lbs of ice. However, note that a non-QA crude estimate of the weight of ice in the condenser showed 2.71E6 lbs of ice in Unit 1 and 2.85E6 lbs of ice in Unit 2. Since the weight of ice in the "as-found" condition exceeds the proposed ice mass, calculations in Reference 9 have applicability to the "as-found" condition.

Reference 10 is a calculation performed by Science and Engineering Associates (SEA) for NRC. This report provides results for two analyses; a 2 inch pipe break and a 6 inch pipe break. The 6-inch scenarios showed that the containment water level would stay well above the minimum safe level, even in the calculation that assumed the most conservative ice melt parameters. The limiting 2 inch break showed that under conservative assumptions (no accumulator injection, break is in the annulus, CTS sprays operate continuously, and ice dissolves slowly), the sump level could drop 3' below the minimum safe level. However, the analyses concluded that this may be safe since (a) the minimum safe level was established for run out flows rather than the 2-inch break flows, and (b) very conservative assumptions were used.

<u>Sequence 1 - Small LOCA (Stuck open PORVs or SRVs, RCP seal LOCAs, Small pipe breaks) or Feed-and-bleed cooling- Early failure of sump recirculation</u>

- Small LOCA or feed-and-bleed cooling occurs - *Rates of Initiating Events at U.S. Nuclear Power Plants: 1987-1995* (Ref. 4) indicates that the frequency of small LOCAs (includes stuck open PORVs and SRVs, RCP seal LOCAs, and small pipe breaks) is 9×10^{-3}/year. Assuming the AFW reliability at Cook was not significantly affected by other Cook issues related to AFW, the frequency of feed-and-bleed cooling scenario at Cook is negligible compared to the small LOCA frequency. Therefore, the total frequency of small LOCAs and feed-and bleed cooling sequences is approximately 9×10^{-3}/year.

- Sump recirculation is required due to inability to depressurize and establish RHR cooling - Operating experience shows that during most small LOCAs, the loss of coolant rates and the condition of the

RCS allows the operators to depressurize and use RHR cooling. During the time period 1987-1995, there were two stuck open SRV events (classified as small LOCAs in Ref. 4), and during both these events, sump recirculation was not needed (Ref. 5, 6). During the event that occurred at Fort Calhoun, approximately 21,500 gallons of RCS water was discharged from the RCS to the containment. This is much less than the discharge required to demand ECCS sump recirculation. During the event that occurred at Calvert Cliffs, only 5000 gallons of reactor coolant discharged to the containment floor. During the TMI-2 event (March 28, 1979), a stuck open PORV released 271,000 gallons of RCS water to the sump. However, during the TAI-2 event, sump recirculation was not demanded.

Two RCP seal LOCA events are discussed in Reference 4. During the 1975 May event at Robinson Unit 2 (no LER, page I-3 of Ref. 4), a total of 132,500 gallons of RCS water was released to the containment sump before RHR cooling was established. The maximum leak rate was 500 gpm. During this event, the sump recirculation function was not needed. During the event at Arkansas Nuclear One Unit 1 (Ref. 7), approximately 60,000 gallons of water collected in the containment before RHR cooling was established. The maximum leak rate was 300 gpm. The containment pressure increased by 0.5 psi, at which time the reactor building containment coolers were put into service. During this event, sump recirculation was not needed.

There have been no small pipe break LOCAs or feed-and-bleed cooling events in the industry. Feed-and-bleed cooling uses the pressurizer PORVs or SRVs to bleed RCS while injecting RCS with high pressure injection. At D.C. Cook, the pressurize is equipped with three PORVs that are capable of bleeding the RCS. Based on discussions with operations at D.C. Cook (Richard Stressed, June 30, 1999), using simulator exercises, the feed-and-bleed cooling can depressurize the reactor prior to depleting the RWST. Therefore, the likelihood of cooling down the reactor with feed-and-bleed cooling prior to requiring sump recirculation is assumed to be equal to the likelihood during a small LOCA.

Using the Bays method and zero demands for sump recirculation during 5 small LOCAs, the probability of requiring sump recirculation during a small LOCA is calculated to be 0.08 (½ events on 6 demands).

- Operator starts the RHR pump even if the sump level is less than 15% of containment water level or 97% of containment sump level - Step 1 of the EOP requires that the operators verify that the containment water level is greater than 15% or containment sump level is greater than 97% prior to transferring to sump recirculation. This assures at least a 599'-4" level of water in the sump. Even though this level is lower than the minimum safe level for RHR and CTS pump run out flows, it is adequate for low flow rates experienced during small break LOCAs. Therefore, for small LOCAs, this procedural step can be credited as a defense.

  Assuring adequate water level in the sump is the Step 1 of the EOP. Missing Step 1 of an EOP is not likely. Reference 12 (Table 20-5) suggests 0.003 as the probability of failure to execute a step in the procedure.

- RHR pumps entrain air due to vortexing when the pumps start - Break sizes less than 2 inches are considered under small LOCAs. For small breaks this probability is negligible due to the following reasons:

  Reference 10 points out that for breaks less than 2" (Ref. 10 analyzed 1" and ½ " breaks) the sprays will not initiate until the ice depletes adding to the sump inventory. Without CTS, the flow rates could be a few 100 gpm, and, at these flow rates, the velocity dependent RWST errors are essentially absent. (A 2" break where the sprays initiate is discussed under medium LOCA).

  As pointed out earlier, the minimum safe level was established for the condition in which both RHR and CTS pumps incur run out flows. The total combined RHR and CTS flow is 15,600 gpm. Following a small break without CTS, the total ECCS flow rate may be a few 100 gpm (Assume 1000 gpm). The Froude number, which is indicative of the potential for vortexing, can be used to explain how the flow level required to prevent vortexing varies with the flow rate (or flow velocity). The Froude number is proportional to the velocity and inversely proportional to the square root of the level difference between the pump suction and water level. At 602'-10", the pump suction is approximately 6' below the minimum water level of 602'-10". When the flow rate reduces from 15,600 to 1000 (nearly 1/16th), the level difference can reduce by a factor of 1/256 before the identical Froude number (and thereby the same vortexing potential) is achieved. That is, at a few 100 gpm, having the suction pipe fully immersed may be adequate to prevent vortexing.

- RHR pumps fail due to vortexing - If the RHR pumps entrain air as a result of vortexing, they will not immediately fail. The pumps can run for a limited period with air entrained, and indications in the control room (e.g., fluctuating pump currents) may allow the operator to intervene (stop the pumps) and avoid pump failure. Tripping of one of two pumps may cut down the flow rate and end vortexing and air entrainment. This capability to recover is not credited, and it is conservatively assumed that the failure probability is 1.0.

<u>Sequence 2 - Small LOCA (Stuck open PORVs or SRVs, RCP seal LOCAs, Small pipe breaks) or Feed-and-bleed cooling- Late failure of sump recirculation</u>

- Small LOCA or feed-and-bleed cooling occurs - *Rates of Initiating Events at U.S. Nuclear Power Plants: 1987-1995* (Ref. 5) indicates that the frequency of small LOCAs (includes stuck open PORVs and SRVs, RCP seal LOCAs, small pipe breaks) is 9×10^{-3}/year. Assuming, the AFW at Cook reliability was not significantly affected by other Cook issues related to AFW, the frequency of feed-and-bleed cooling scenario at Cook is negligible compared to the small LOCA frequency. Therefore, the total frequency of small LOCAs and feed-and bleed cooling sequences is 9×10^{-3}/year.

- Sump recirculation is required due to inability to depressurize and establish RHR cooling - This probability is estimated to be 0.08. The basis for this probability is discussed under Sequence 1.

- RHR pumps entrain air due to vortexing during long term operation - Sequence 1 showed why the probability of this event is negligible for a small break LOCA at the time when RHR pumps need to

be started to support sump recirculation. However, there is a potential for vortexing to occur in the long-term operation since CTS will initiate after ice depletes and start transferring water from the active sump to the inactive sump. Analysis of two small breaks (1" and ½ ") documented in Reference 9 shows that under both these breaks, the long-term equilibrium levels will provide adequate sump levels to prevent vortexing. Reference 9 did not credit the penetrations in the crane wall that tend to equalize the water levels in the active and passive sumps when the level exceeds 600'-7". Crediting these penetrations will make it even less likely that the active sump level fall below 600'-7" in the long-term. As discussed in Sequence 1, this probability is negligible, especially given the fact that at the low flow rates encountered, containment sump levels that are much lower than minimum safe level are acceptable.

The total CTS and RHR flow can be higher during long-term since CTS may be in operation due to depletion of all the ice. Even if both CTS sprays operate, the total flow will be about 8000 gpm (about ½ of total pump run out flows). At half of the flow velocity, the Froude number would indicate an allowance to drop the elevation (difference between free surface and pump suction) by a factor of 4. Since at 602'-10", the elevation is approximately 6', half of the flow will allow an elevation of 1'-6", which equates to roughly 598'-4" as the minimum safe level.

- RHR pumps fail due to vortexing - If the RHR pumps entrain air as a result of vortexing, they will not immediately fail. The pumps can run for a limited period with air entrained, and indications in the control room (e.g., fluctuating pump currents) may allow the operator to intervene (stop the pumps) and avoid pump failure. Tripping of one of two pumps may cut down the flow rate and end vortexing and air entrainment. This capability to recover is not credited, and it is conservatively assumed that the failure probability is 1.0.

Sequence 3 - Medium LOCA - Early failure of sump recirculation

- Medium LOCA occurs - *Rates of Initiating Events at U.S. Nuclear Power Plants: 1987-1995* (Ref. 4) indicates that the frequency of medium LOCAs is 4×10^{-5}/year.

- Operator starts the RHR pump even if the sump level is less than 15% of containment water level or 97% of containment sump level - Step 1 of the EOP requires that the operators verify that the containment water level is greater than 15% or containment sump level is greater than 97% prior to transferring to sump recirculation. This assures at least a 599'-4" level of water in the sump. Even though this level is lower than the minimum safe level for RHR and CTS pump run out flows, it may be adequate for most medium break LOCAs. However, for medium LOCAs, this step in the EOP is not credited, and the failure probability is conservatively assumed to be 1.0.

- RHR pumps entrain air due to vortexing when the pumps start - Medium break LOCAs include breaks ranging from 2" to 6". Findings from References 9 and 10 on the 6" break analysis are discussed under large LOCA. Further, detailed analysis on this issue has shown that the 2" break is more limiting since a 2" break can occur in the annulus, and, as a result, break flow is discharged into

the annulus or the reactor cavity rather than to the active sump. Therefore, the likelihood of this event for a 2" break (limiting case of a medium break LOCA) is discussed below.

Reference 9 analyzed a 2" break LOCA in which RCS water was assumed to flow into the reactor cavity rather than to the active sump. The accumulators were assumed to inject for this 2" break. CTS was assumed to actuate and divert some flow to the inactive sump from the active sump. Under this postulated scenario, the ice melt rate exceeded the water removal rate from the containment, and, as result, active sump level continued to increase. After all the ice melted, the active sump level decreased until the inactive sump filled and began to spill over to the active sump. The final active sump equilibrium level was 604', which is 14" above the required minimum safe level.

Reference 10 analyzed a 2" break in the annular compartment. The accumulators were assumed to not dump and the CTS sprays ran continuously, diverting flow from the active sump to the inactive sump. The CTS sprays were not turned off, since the containment pressure remained slightly above the 1.5 psig turnoff setpoint. Conservative ice melt parameters were used in this calculation (10% of ice remaining even after 40 hours after the break). Under these assumptions, Figure 15 of Reference 10 shows that the water level in the sump would have been above the minimum safe level when the RHR pumps needed to start taking suction from the containment sump (During this postulated event, later on in the accident, the sump water level fell below the minimum safe level. This is discussed in the next sequence). (It should also be noted here that the RWST level errors, which depend on the flow velocity, are negligible for a 2" break.)

Based on the results of analyses of 6" break LOCAs (discussed under large LOCAs) and 2" break LOCAs (discussed above), the probability of having a water level less than 602'-10" at the time RHR pumps must be started is negligible. Therefore, for a medium break LOCA the probability of this event is negligible.

- RHR pumps fail due to vortexing - If the RHR pumps entrain air as a result of vortexing, they will not immediately fail. The pumps can run for a limited period with air entrained, and indications in the control room (e.g., fluctuating pump currents) may allow the operator to intervene (stop the pumps) and avoid pump failure. Tripping of one of two pumps may cut down the flow rate and end vortexing and air entrainment. This capability to recover is not credited, and it is conservatively assumed that the failure probability is 1.0.

<u>Sequence 4 - Medium LOCA - Late failure of sump recirculation</u>

- Medium LOCA occurs - *Rates of Initiating Events at U.S. Nuclear Power Plants: 1987-1995* (Ref. 4) indicates that the frequency of medium LOCAs is 4×10^{-5}/year.

- RHR pumps entrain air due to vortexing during long-term operation -The probability of this event is negligible.

The limiting 2" break in the annulus analyzed in Reference 10 is summarized here to support the above conclusion.

For a 2" break LOCA, under conservative assumptions on ice melt rates (10% of ice remains even after 40 hours) and CTS sprays (sprays operate continuously, diverting flow from the active sump to the inactive sump for 40 hours), the sump level can fall as much as 3' below the minimum safe level. That is, the level may fall to approximately 599'-10" (See Figure 15 of Reference 10). However, Reference 10 concludes that the probability of vortexing during this scenario is very low since the minimum safe level was established for run-out flow from CTS and RHR. Even though Reference 10 did not provide a basis for this conclusion, the following paragraph offers the possible explanation.

The total combined RHR and CTS flow is 15,600 gpm. Following a 2-inch break, the total ECCS (CTS and RHR) flow rate is less than 8000 gpm. The Froude number is proportional to the velocity and inversely proportional to the square root of the level difference between the pump suction and water level. At 602'-10", the free water surface is approximately 6' above the pump suction water level. When the flow rate reduces from 15,600 to 8000 (nearly half), the level difference can reduce by a factor of 4 before the identical Froude number (and thereby the same vortexing potential) is achieved. That is, even if the water elevation is 1'-6" (i.e., the elevation is 598'-4"), vortexing is not anticipated.

In addition to many of the conservatisms in the analysis that concluded the level could be 3' below the minimum safe level, it ignored the holes in the crane wall (total area approximately 142 square inches) that would allow water to flow back from the inactive sump to the active sump. These holes (unless they get plugged up by debris) will allow water to return to the active sump and keep the active sump level higher than the calculated value.

- RHR pumps fail due to vortexing - If the RHR pumps entrain air as a result of vortexing, they will not immediately fail. The pumps can run for a limited period with air entrained, and indications in the control room (e.g., fluctuating pump currents) may allow the operator to intervene (stop the pumps) and avoid pump failure. Tripping of one of two pumps may cut down the flow rate and end vortexing and air entrainment. This capability to recover is not credited, and it is conservatively assumed that the failure probability is 1.0.

<u>Sequence 5 - Large LOCA - Early failure of sump recirculation</u>

- Large LOCA occurs - *Rates of Initiating Events at U.S. Nuclear Power Plants: 1987-1995* (Ref. 4) indicates that the frequency of large LOCAs is 5×10^{-6}/year.

- Operator starts the RHR pump even if the sump level is less than 15% of containment water level or 97% of containment sump level - Step 1 of the EOP requires that the operators verify that the containment water level is greater than 15% or containment sump level is greater than 97% prior to transferring to sump recirculation. This assures at least a 599'-4" level of water in the sump. This level is lower than the minimum safe level for RHR and CTS pump run out flows. Therefore, for

large LOCAs, this procedural step in the EOP is not credited, and the failure probability is conservatively assumed to be 1.0.

- RHR pumps entrain air due to vortexing when the pumps start - Based on information provided in References 8, 9, 10, and 11 the probability of this event is negligible. The probability of this event for breaks ranging from 6" to design basis LOCA is discussed here.

  Reference 8 has shown that during a design basis LOCA, in spite of RWST level errors, the active sump level will be several feet above the design basis level. References 9 and 10 show that even during other large LOCAs (greater or equal to 6"), even under conservative assumptions, the active sump level will exceed 602'-10". For these LOCAs, the rate of ice dissolution is sufficient to offset any reduction in inventory from the RWST and diversions via the containment spray.

- RHR pumps fail due to vortexing - If the RHR pumps entrain air as a result of vortexing, they will not immediately fail. The pumps can run for a limited period with air entrained, and indications in the control room (e.g., fluctuating pump currents) may allow the operator to intervene (stop the pumps) and avoid pump failure. Tripping of one of two pumps may cut down the flow rate and end vortexing and air entrainment. This capability to recover is not credited, and it is conservatively assumed that the failure probability is 1.0.

Sequence 6 - Large LOCA - Late failure of sump recirculation

- Large LOCA occurs - *Rates of Initiating Events at U.S. Nuclear Power Plants: 1987-1995* (Ref. 4) indicates that the frequency of large LOCAs is 5×10^{-6}/year.

- RHR pumps entrain air due to vortexing during long term operation - There is a possibility that even if the sump level was above 602'-10" when the sump recirculation begins, due to CTS operation or the penetrations between the active sump and the inactive sump, the sump level may go below that level after a period of time. The following discussions show that for large LOCAs this probability is negligible.

Reference 8 shows that for a design basis LOCA, during the injection phase, the sump level continues to increase during injection in spite of the penetrations and flow diversions via CTS since the injection flow and the rate of inventory addition from ice dissolution exceed the rate of flow diversion. After, the level peaks at 11 feet, the continuous flow diversion causes the level to reduce and stabilize at 7.8 feet. Since the minimum required level for RHR and CTS run out flows (602'-10") equates to approximately 4 feet, 7.8 feet allows adequate margin to prevent vortexing throughout the long term sump recirculation.

Figure 10 of Reference 10 shows how the containment sump level remains several feet above the minimum safe level many hours after the accident. This reference states that even for a calculation that assumes the most conservative ice melt parameters (30% ice remained when the calculation was terminated at 40 hours), the calculated water level was three feet above the minimum safe level. This calculation benefitted from the two realistic assumptions that (a) the break is in the lower containment

since the annulus region does not contain 6" RCS piping, and (b) CTS was turned off 5.6 hours into the accident when the containment pressure dropped below 1.5 psig.

- RHR pumps fail due to vortexing - If the RHR pumps entrain air as a result of vortexing, they will not immediately fail. The pumps can run for a limited period with air entrained, and indications in the control room (e.g., fluctuating pump currents) may allow the operator to intervene (stop the pumps) and avoid pump failure. Tripping of one of two pumps may cut down the flow rate and end vortexing and air entrainment. This capability to recover is not credited, and it is conservatively assumed that the failure probability is 1.0.

26.4 Core Damage Frequency Calculation or the Bounding Calculation

The frequency associated with the feed-and-bleed sequences depend on the resolution of other issues affecting AFW and RHR cooling. To provide perspective on these sequences the following information is provided.

If the resolution of issues results in no significant changes to AFW or RHR cooling failure probabilities, the change in core damage frequency would be the sum of the following:

<u>Sequence 1 - Small LOCA (Stuck open PORVs or SRVs, RCP seal LOCAs, Small pipe breaks) or Feed-and-bleed cooling- Early failure of sump recirculation</u>

(Frequency of small LOCA: 9×10^{-3}/critical year) x
(Criticality factor for Cook Unit 1: 0.79 critical years/calendar year) x
(Probability sump cooling is required due to inability to depressurize and establish RHR cooling: 0.08) x
(Probability of operator omitting Step 1 of EOP: 0.003) x
(Probability of RHR pumps entraining air due to vortexing when pumps start: negligible) x
(Probability of RHR pumps failing due to vortexing: 1.0) = 1.7×10^{-6}/year x probability of RHR pumps entraining air. Since the unknown probability is negligible, the change in CDF is negligible.

<u>Sequence 2 - Small LOCA (Stuck open PORVs or SRVs, RCP seal LOCAs, Small pipe breaks) or Feed-and-bleed cooling- Late failure of sump recirculation</u>

(Frequency of small LOCA: 9×10^{-3}/critical year) x
(Criticality factor for Cook Unit 1: 0.79 critical years/calendar year) x
(Probability sump cooling is required due to inability to depressurize and establish RHR cooling: 0.08) x
(Probability of RHR pumps entraining air due to vortexing during long term operation: negligible) x
(Probability of RHR pumps failing due to vortexing: 1.0) = 5.8×10^{-4}/year x probability of RHR pumps entraining air. Since the unknown probability is negligible, the change in CDF is negligible.

<u>Sequence 3 - Medium LOCA - Early failure of sump recirculation</u>

(Frequency of medium LOCA: 4×10^{-5}/critical year) x

(Criticality factor for Cook Unit 1: 0.79 critical years/calendar year) x
(Probability of RHR pumps entraining air due to vortexing when pumps start: negligible) x
(Probability of RHR pumps failing due to vortexing: 1.0) = 3.2 x 10^{-5}/year x probability of RHR pumps entraining air. Since the unknown probability is negligible, the change in CDF is negligible.

Sequence 4 - Medium LOCA - Late failure of sump recirculation

(Frequency of medium LOCA: 4 x 10^{-5}/critical year) x
(Criticality factor for Cook Unit 1: 0.79 critical years/calendar year) x
(Probability of RHR pumps entraining air due to vortexing during long term operation: negligible) x
(Probability of RHR pumps failing due to vortexing: 1.0) = 3.2 x 10^{-5}/year x probability of RHR pumps entraining air. Since the unknown probability is negligible, the change in CDF is negligible.

Sequence 5 - Large LOCA - Early failure of sump recirculation

(Frequency of large LOCA: 5 x 10^{-6}/critical year) x
(Criticality factor for Cook Unit 1: 0.79 critical years/calendar year) x
(Probability of RHR pumps entraining air due to vortexing when pumps start: negligible) x
(Probability of RHR pumps failing due to vortexing: 1.0) = 4.0 x 10^{-6}/year x probability of RHR pumps entraining air. Since the unknown probability is negligible, the change in CDF is negligible.

Sequence 6 - Large LOCA - Late failure of sump recirculation

Frequency of large LOCA: 5 x 10^{-6}/critical year) x
(Criticality factor for Cook Unit 1: 0.79 critical years/calendar year) x
(Probability of RHR pumps entraining air due to vortexing during long term operation: negligible) x
(Probability of RHR pumps failing due to vortexing: 1.0) = 4.0 x 10^{-6}/year x probability of RHR pumps entraining air. Since the unknown probability is negligible, the change in CDF is negligible.

The summary of these sequences is provided in Table 1. As shown in Table 1, the change to the core damage frequency associated with these issues, on their own, would not be risk-significant.

26.5 References

1. Donald C. Cook, Units 1 & 2 Design Inspection (NRC Inspection Report No 50-315, 316/97-201) November 26, 1997.

2. LER 315/97-011, Rev. 2, "Operation Outside Design Basis for ECCS and Containment Spray Pumps for Switchover to Recirculation Sump Suction," December 2, 1998.

3. LER 315/97-017, Rev. 1, "Condition Outside Design Basis Results in Technical Specification Required Shutdown," October 8, 1997.

4. J. P. Poloski, et. al., *Rates of Initiating Events at U.S. Nuclear Power Plants: 1987-1995*, NUREG/CR-5750, February 1999.

5. LER 285/92-023, Rev. 0, "Reactor Trip Due to Inverter Malfunction and Subsequent Pressurizer Safety Valve Leak," August 3, 1992.

6. LER 317/94-007, Rev. 1, "Reactor Trip Caused by Closure of Turbine Stop Valves," June 16, 1995.

7. LER 313/80-015, Rev. 2, "Reactor Coolant Pump 'C' Seal Cartridge Failure," April 13, 1981.

8. Letter from Tom Elicson (Fauske & Associates, Inc.) to Ray Sartor (American Electric Power),. "MAAP 4 Analysis to Determine Active Sump Conditions During Cold Leg Recirculation Following a Double Ended Cold Leg LOCA," October 14, 1997.

9. R. E. Henry, T. Elicson, C. Henry, C. Y. Paik, "MAAP4 Small Break LOCA Analysis for the D.C. Cook Plant," FAI/97-104, Revision 0, October 1997.

10. C.J. Shaffer and D.V. Rao, "Confirmatory Calculations of the D.C. Cook Sump Water Level," SEA 97-3703-A: 5, January 5, 1997.

11. Letter from John B. Hickman (NRC) to E. E. Fitzpatrick (Indiana Michigan Power Company), "Donald C. Cook Nuclear Plant, Units 1 and 2 - Issuance of Amendments Re: Ice Weight and Surveillance Requirement (TAC NOs, M99742 and M99743), " January 2, 1998.

12. A.D. Swain, and H.E. Guttmann, *Handbook of Human Reliability Analysis with Emphasis on Nuclear Power Plant Applications*, NUREG/CR - 1278, August 1983.

Table 1

Sequence	Initiating Event Frequency (IEF)	Product of IEF & calculated probabilities(3)	Unknown probabilities (1)	Unknown probabilities (2)	Contribution to change in CDF
1. Small LOCA - early recirculation failure	9×10^{-3}/year	1.7×10^{-6}/year	negligible*	n/a	less than 1×10^{-6}
2. Small LOCA - late recirculation failure	9×10^{-3}/year	5.8×10^{-4}/year	n/a	negligible*	less than 1×10^{-6}
3. Medium LOCA - early recirculation failure	4×10^{-5}/year	3.2×10^{-5}/year	negligible*	n/a	less than 1×10^{-6}
4. Medium LOCA - late recirculation failure	4×10^{-5}/year	3.2×10^{-5}/year	n/a	negligible*	less than 1×10^{-6}
5. Large LOCA - early recirculation failure	5×10^{-6}/year	4×10^{-6}/year	negligible*	n/a	less than 1×10^{-6}
6. Large LOCA - late recirculation failure	5×10^{-6}/year	4×10^{-6}/year	n/a	negligible*	less than 1×10^{-6}

(1) RHR pumps entrain air due to vortexing when pumps start
(2) RHR pumps entrain air due to vortexing during long-term operation
(3) Sequence frequency excluding (1) and (2) above.
* For the purposes of this analysis, all available information (operating experience or deterministic analysis) leads to the conclusion that the event can not occur. The basis of this conclusion is provided in the discussion of the event.

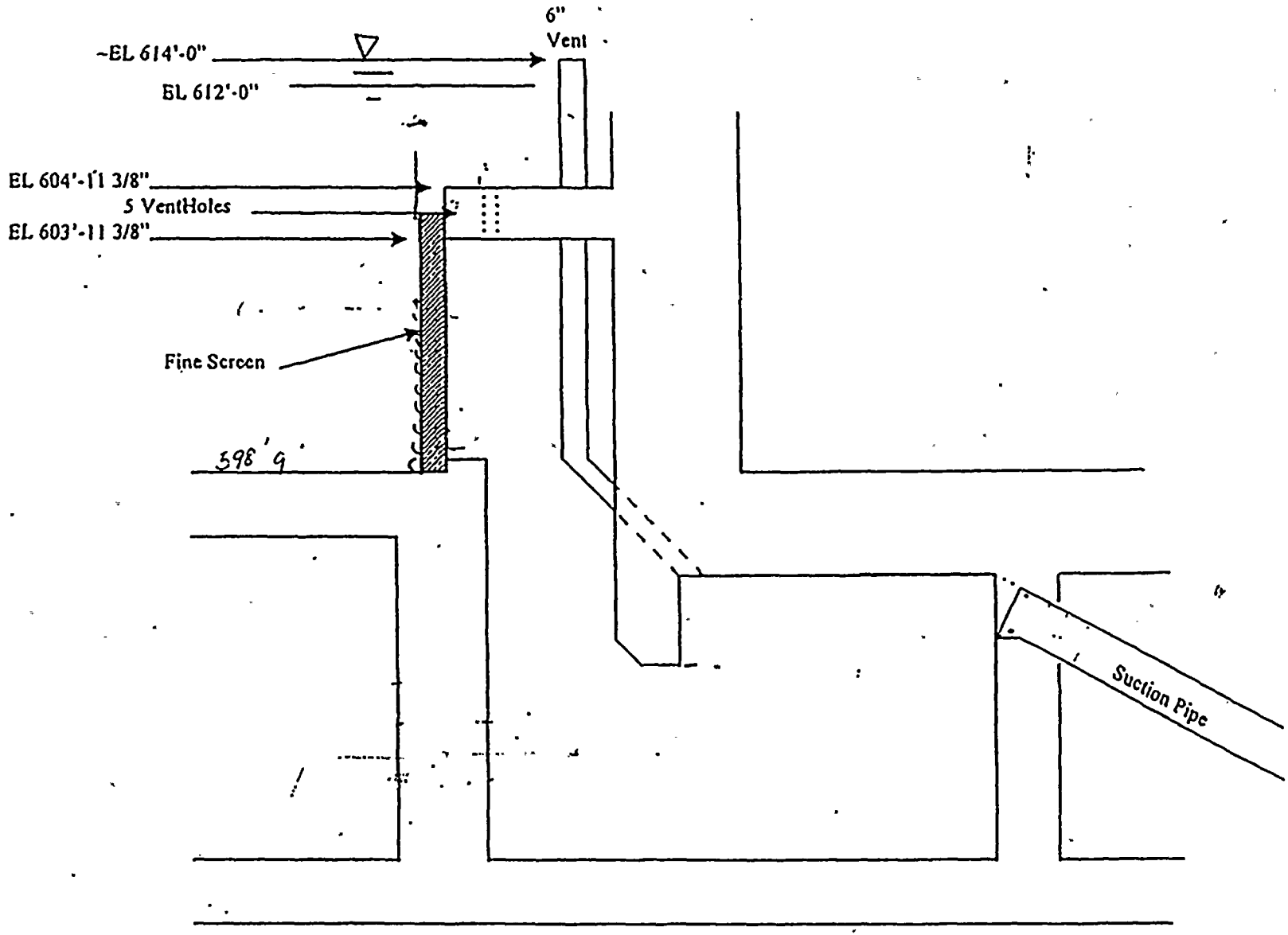

Post-Modification

FIGURE 1: ISSUE 2b

Floor 598' 9"

Vortex Limit - 602' 10" (4' deep)

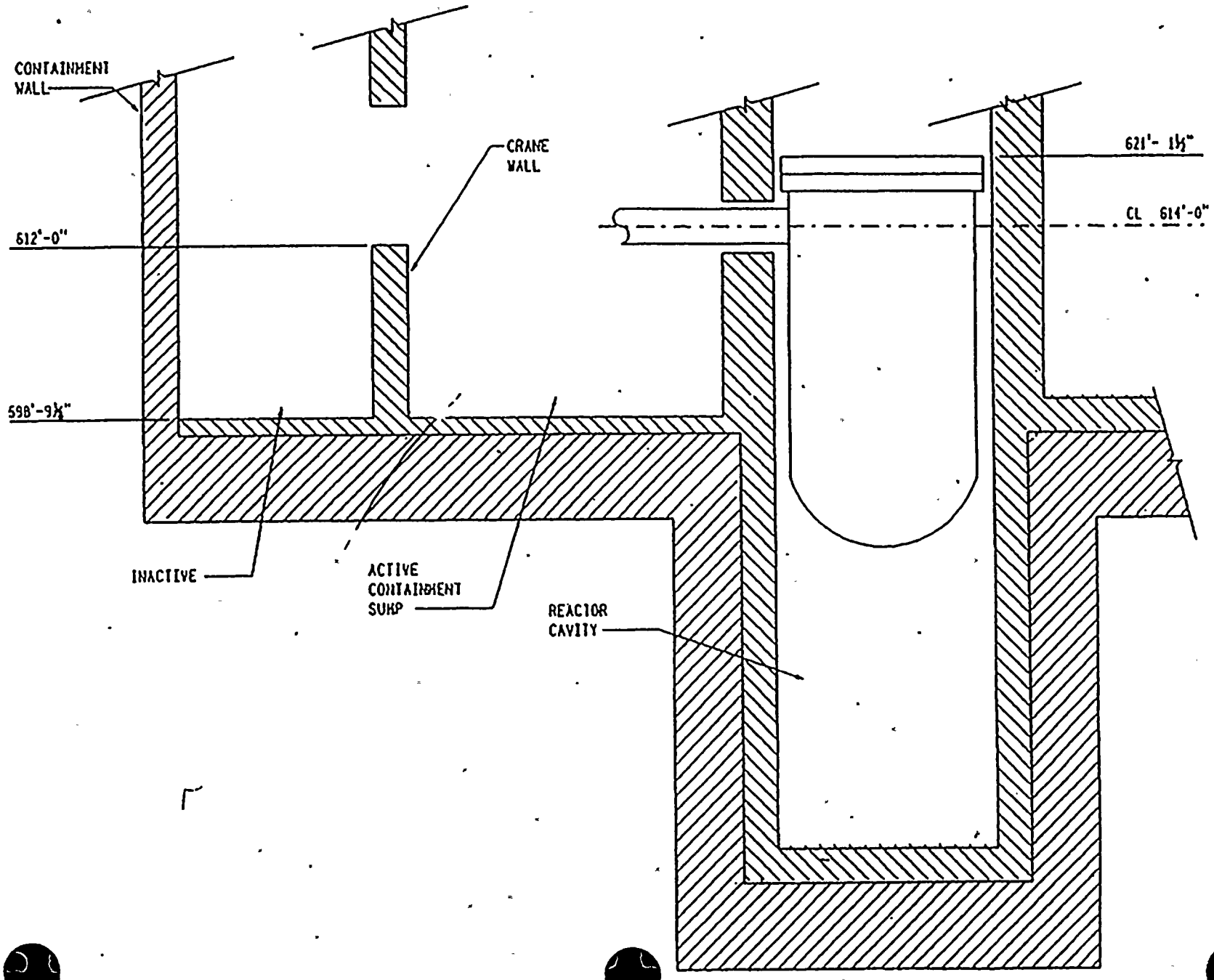

FIGURE 2 : 7 [illegible] 21.

Preliminary Figure 3

Containment Spray & ECCS Simplified Flow Schematic

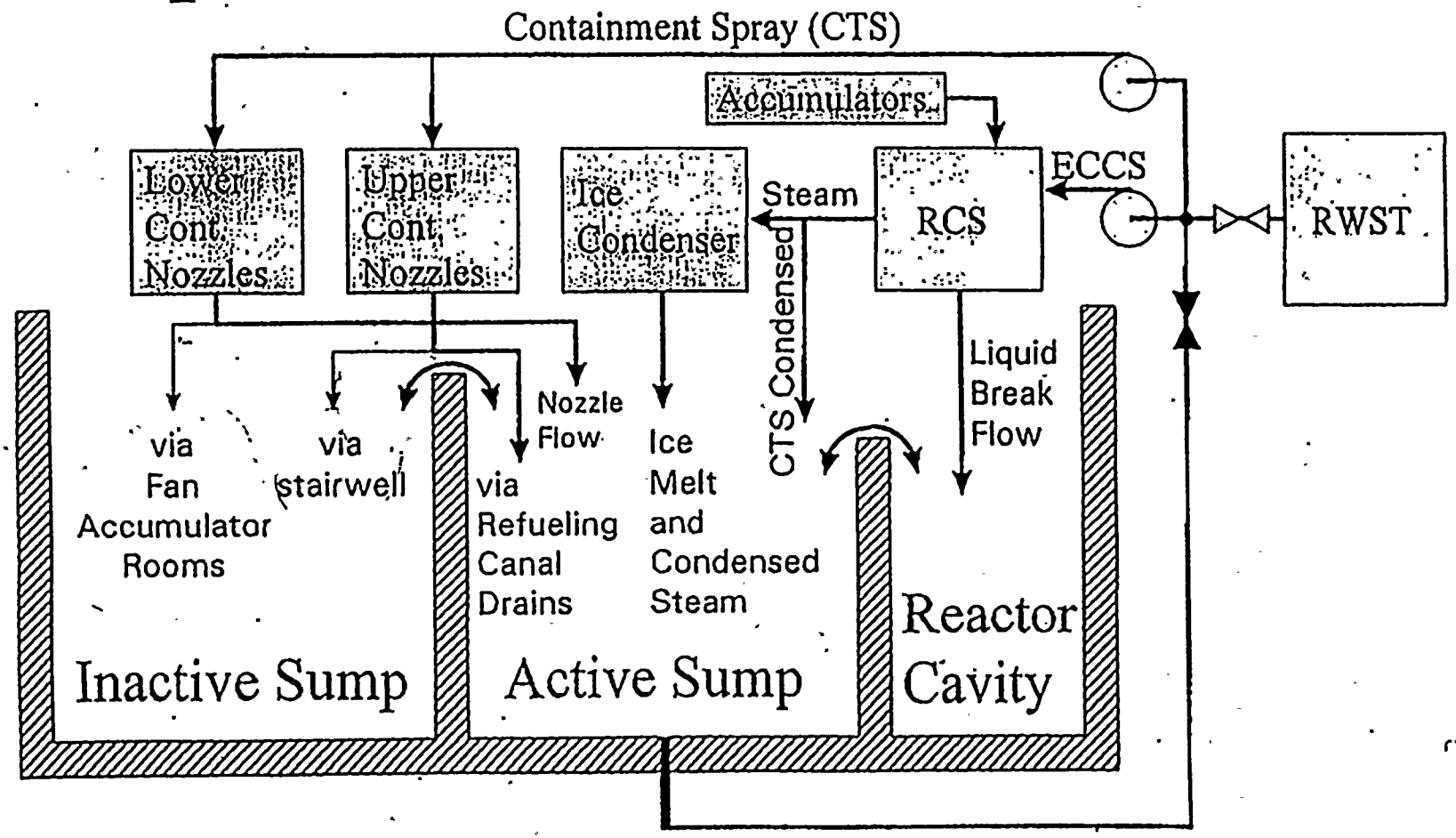

FIGURE 2 · ISSUE 26

Lower Containment Simplified Schematic

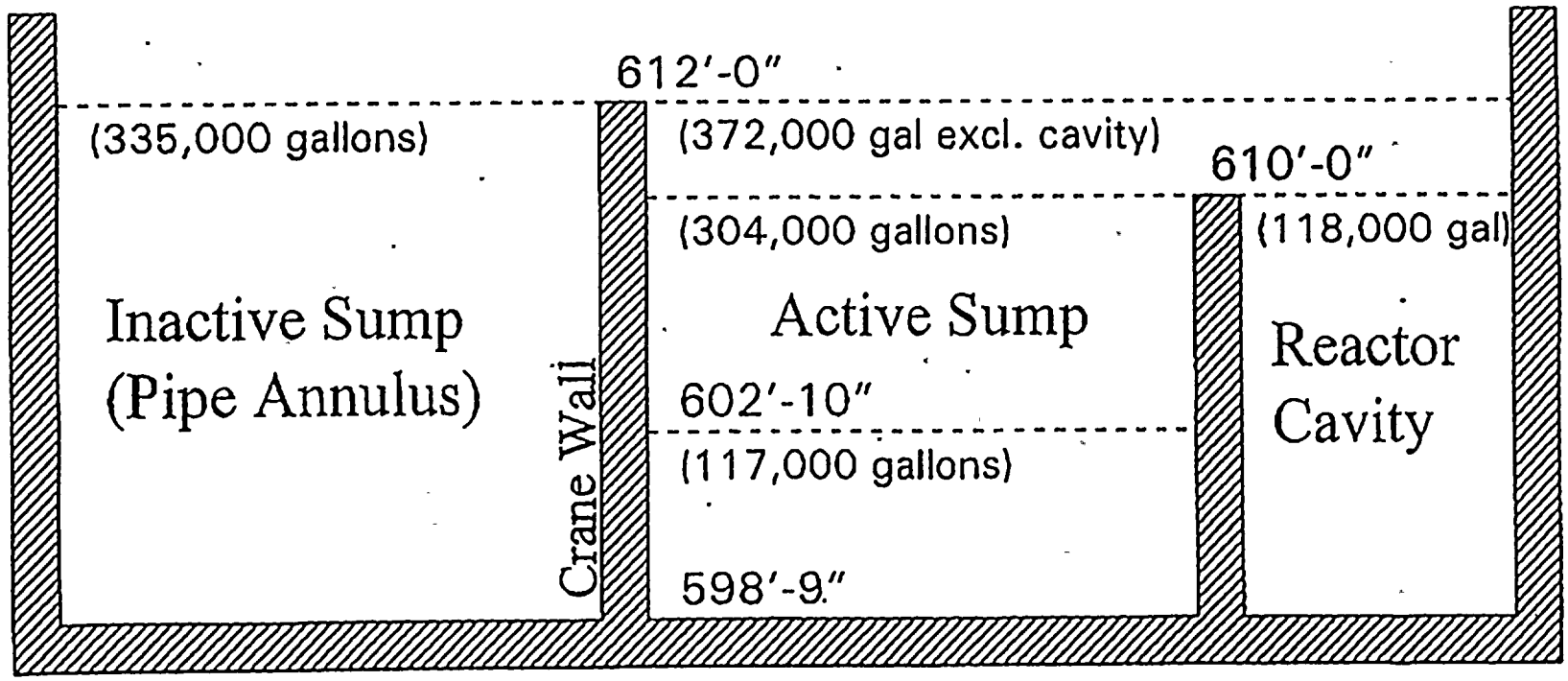

Preliminary Figure 2

OCT-24-1997 16:32
TOTAL P.05

27.0 LER Nos. 315/97-018, 315/97-024, 315/98-012

Event Description: 1/4 Inch Particulate Requirement Not Maintained in Containment Recirculation Sump

Date of Event: March 5, 1998

Plant: D.C. Cook, Units 1and 2

27.1 Summary of Issue

This issue addresses the cumulative impact of several conditions that had increased the likelihood of failing the high pressure injection (HPI) system during the sump recirculation phase at D.C. Cook. The impact of these conditions on the likelihood of failing the containment spray (CTS) system is also addressed.

According to Reference 1, on September 5, 1997, it was determined that the 1/4 inch particulate retention requirement for the containment recirculation sump was violated in 1978 due to an improper design change. The 1/4 inch requirement ensures that debris which may be large enough to plug the CTS (size 3/8 inch) is not swept into the CTS header through the recirculation sump. The 1/4 inch requirement also protects ECCS from foreign material during the sump recirculation phase. The safety injection and centrifugal charging pumps are vulnerable to large debris due to tight clearances. Other components that are vulnerable are safety injection needle valves and check valves throughout ECCS and CTS.

As shown in Figure 1, prior to the design change, a perforated plate installed inside the recirculation sump and grating installed at the opening of the recirculation sump prevented debris from entering the suction pipes for the residual heat removal (RHR) (during sump recirculation) and CTS. During the design change, as shown in Figure 2, the perforated plate was moved. The particle retention capability was retained only at the entrance to the recirculation sump. As shown in Figure 2, when the perforated plate was removed, several pathways that could bypass the screens were created: (a) five 3/4 inch holes in the upper roof of the recirculation sump, (b) gaps greater than 1/4 inch between the curb opening around the recirculation sump entrance, (c) gaps greater than 1/4 inch in the lower containment sump cover (particles larger than 1/4 inch may enter the lower containment sump which in turn could enter the recirculation sump via the connecting 8" drain line), and (d) the 3" drain line from the ice condenser to the containment sump. Figure 3 shows the communication paths between the recirculation sump, containment sump, and the ice condenser.

The safety significance associated with these screen bypass paths exacerbated due to two other conditions discovered at D.C. Cook. They are: (a) discovery of debris in the containment sump (Ref. 2), and (b) discovery of debris in the ice condenser (Ref. 3, 4).

The changes to the core damage frequency (CDF) associated with this issue depends on the impact of other issues on the RHR cooling and auxiliary feedwater (AFW) capabilities. The CDF associated with

this issue, on its own, is summarized in Table 1. Table 1 summarizes the initiating event frequencies of initiators that are affected by the debris in the sump, products of known probabilities and the frequency for each initiator, summary of qualitative assessment of the unknown probability, and the expected change in CDF for each initiator. Overall, the total CDF change associated with this issue is less than 1 x 10^{-6}/Year and therefore, on its own, this issue is not risk-significant.

27.2 Modeling and Affected Sequences

During the design change, when the perforated plate was removed, four pathways that could bypass the screens were created. They are: (a) the pathway through the five 3/4 inch holes in the upper roof of the recirculation sump, (b) gaps greater than 1/4 inch between the curb opening around the recirculation sump entrance, (c) gaps greater than 1/4 inch in the lower containment sump cover (particles larger than 1/4 inch may enter the lower containment sump which in turn could enter the recirculation sump via the connecting 8" drain line), and (d) 3" drain line from the ice condenser to the containment sump. If debris of large size (greater than 1/4 inch) bypasses the screen and enters the recirculation sump, during the sump recirculation phase of a LOCA or feed-and-bleed cooling scenario, the debris may get ingested by RHR pumps. Since RHR pumps are used with HPI pumps in piggy-back mode, the debris that passes through the RHR pumps enters the HPI system. If large debris (greater than 1/4 inch) enters the HPI system, then the HPI system may fail.

Therefore, for debris in the sump or the ice condenser to affect core damage sequences, an accident that requires the sump recirculation function must occur. LOCAs of different sizes, and feed-bleed-cooling sequences subsequent to transients or accidents require sump recirculation. For the ease of presenting results of the analysis, multiple initiators (large LOCAs, medium LOCAs, small LOCAs, feed-and-bleed cooling after transients, feed-and-bleed cooling after main steam line breaks inside containment, etc.) were grouped into three classes: (a) large LOCAs, (b) medium LOCAs, and (b) small LOCAs and feed and bleed sequences. These three groups were selected since the critical parameters such as ice dissolution rates and the likelihood of the need to enter the sump recirculation vary between these three classes.

Unlike small LOCAs, sump recirculation phase is essential for large and medium LOCAs, in order to prevent core damage. In addition, for large and medium break LOCAs, the cross-tie capability cannot be credited due to large uncertainties associated with time available to establish the cross-tie capability, and the low probability of achieving success with the additional inventory of water available from the second refueling water storage tank (RWST).

If large debris enters the recirculation sump, the CTS pumps may ingest that debris and fail that system by clogging the spray nozzles. If CTS fails, the containment integrity can fail. Failure of the containment integrity in turn could lead to sump recirculation failure.

Therefore, the six accident sequences considered in this analysis are:

<u>Sequence 1 - Large LOCA and loss of HPI</u>

- Large LOCA occurs;
- Sufficient amount of debris in containment or ice condenser enters RHR pumps; and
- Debris enters HPI system and fails HPI system.

Sequence 2 - Large LOCA and loss of CTS

- LOCA occurs;
- Sufficient amount of debris in containment or ice condenser enters CTS; and
- Debris clogs CTS nozzles and fails CTS function.

Sequence 3 - Medium LOCA and loss of HPI

- Medium LOCA occurs;
- Sufficient amount of debris in containment or ice condenser enters RHR pumps; and
- Debris enters HPI system and fails HPI system.

Sequence 4 - Medium LOCA and loss of CTS

- Medium LOCA occurs;
- Sufficient amount of debris in containment or ice condenser enters CTS; and
- Debris clogs CTS nozzles and fails CTS function.

Sequence 5 - Small LOCA (stuck open PORV or SRV, RCP seal LOCA, small pipe break or feed-and-bleed cooling) and loss of HPI

- Small LOCA or feed-and-bleed cooling occurs;
- Sump recirculation is required due to inability to depressurize and establish RHR cooling;
- Sufficient amount of debris in containment or ice condenser enters RHR pumps;
- Debris enters HPI system and fails HPI system; and
- HPI cross-tie from Unit 2 fails.

Sequence 6 - Small LOCA (stuck open PORV or SRV, RCP seal LOCA, small pipe break or feed-and-bleed cooling) and loss of CTS

- Small LOCA or feed-and-bleed cooling occurs;
- Sump recirculation is required due to inability to depressurize and establish RHR cooling;
- Long-term containment heat removal is required to mitigate an accident;
- Sufficient amount of debris in containment or ice condenser enters CTS pumps; and
- Debris clogs CTS nozzles and fails CTS function.

27.3 Frequencies, Probabilities, and Assumptions

Sequence 1 - Large LOCA and loss of HPI

- Large LOCA occurs - *Rates of Initiating Events at U.S. Nuclear Power Plants: 1987-1995* (Ref. 5) indicates that the frequency of large LOCAs is 5 x 10^{-6}/critical year.

- Sufficient amount of debris in containment or ice condenser enters RHR pumps - The likelihood of generation and transport of debris from the containment or the ice condenser to the RHR or the CTS pump suction is considered under this event. The likelihood of debris transport to the RHR pump suction from two sources (sump and ice condenser) via four pathways (five 3/4" holes on recirculation sump roof, gaps greater than 1/4 inch between the curb opening around the recirculation sump entrance, lower containment sump cover gaps greater than 1/4 inch, and debris that may enter the containment sump from the ice condenser via the 3" through the 8" line connecting the containment sump and the recirculation sump) during a LOCA must be considered. The probability of debris in containment or ice condenser entering the RHR or CTS pump suction cannot be quantified. However, for reasons discussed below, it can be shown that only a small quantity of soft, relatively small (less than 1") can arrive at the CTS or RHR pumps. Therefore, for large LOCAs this probability is low. The bases of this conclusion are discussed below:

  - Debris from containment: The mechanisms associated with debris generation, transport, and deposition are described below. Even if the debris is delivered to the screens, they must find their way into the sumps through gaps around the screen. The probability of this is low except for debris that is small and soft (buoyant). The roof of the recirculation sump that contains the five 3/4 inch holes is at an elevation of 604'-11 3/8." Only buoyant debris (since there is at least 10 minutes available for heavy debris to deposit) of small size (less than 3/4 inch) can enter through these holes. Given the very small size (only 3/4 inches in diameter and there are only 5 holes), the probability of debris entering through these holes is low.

    - Debris Generation: Debris is generated in three phases of a large LOCA; initial blast effect during pipe rupture, erosion during jet impingement, and pre-existing debris such as dirt, dust, rust flakes, and failed coatings. All of these phases are applicable to a large LOCA.

    - Debris Transport: Debris is transported by (a) blast forces within the containment, (b) steam and air flows during the blow down phase, and finally (c) "washdown." All of these transport methods will be available during a large LOCA. However, there are many barriers that would prevent transport of debris to the suction of the pumps.

    - Debris deposition: During a large LOCA, approximately 10 minutes may elapse before sump recirculation is established. During this time, any heavy large debris will deposit on the containment floor. Once debris is settled, unless high flow rates

occur, the debris will not be transported. Therefore, the debris that is suspended and available to block sump screens will be minimal.

- Likelihood of debris depositing on screens versus passing through gaps: The soft buoyant debris that arrives at the sump can either deposit on screens (and be held there due to approach flow velocity) or go through one of the bypass paths. The first bypass path, the five 3/4" holes on the roof of the recirculation sump, has a total area of approximately 2 square inches. The size of the gaps around the screens is unknown. Assuming a ½" all around the sump screen, the total area of the gap would be 240 square inches (assuming a 480" periphery). Therefore, in consideration of the size of the recirculation sump screen (the area of the 1/4" mesh screen at the entrance to the containment sump is ignored in comparison to the recirculation sump screen area), the probability of debris of undesirable size (greater than 1/4 inch and less than size of gap around screen) is approximately 0.02.

o Debris from the ice condenser: An additional source of debris was found in the ice condenser. The nature and the volume of debris present were such that, if the debris could be transported to the RHR or CTS pump suction, they may have capability to be ingested and fail HPI or CTS. Material such as tape, gloves, coat wrap, plastic banding cloth, ice basket coupling screws and screw heads, nuts and bolts, ice basket cruciform wire, rope, rags, wood paper, small and large tools were found in the Unit 1 ice condenser. There were approximately three 55-gallon drums in the Unit 1 ice condenser. In order for the debris described above to arrive at the RHR or CTS screens, the following events must occur:

- The ice condenser baskets have 1" holes. The above debris must go through the 1" holes. Therefore, debris (tools, tape rolls, plastic wraps etc.) that is greater than 1" size will be trapped inside the ice condenser baskets (When the Unit 1 ice condenser was thawed, most material that was considered as transportable to the sump stayed inside ice baskets). Only the debris that was between ice baskets may go into the containment sump.

- The debris that escapes the ice baskets must go through the floor grating (1.75" opening).

- Debris that passes through the above obstacles enters 12" drain line. From here, debris must go through a 12" flapper valve in order to enter the lower containment or enter a 3" drain line that has low points. All heavy small items (e.g., bolts) will deposit along low points during this transport. As a result of the above described tortuous path only light (less density than water) small (less than 1") debris can be transported to the entrance of the RHR or CTS pumps.

- If any debris enters the lower containment, it must find the way into the RHR or CTS pumps suctions via the 3/4" holes either on the sump roof or through the gaps

around screens. Both these are unlikely unless the debris is very small in size and buoyant.

- If any debris enters the containment sump via the 3" drain line, that debris must move through an 8" line connecting the recirculation sump and containment sump. This line is above the bottom of the containment sump. Then the debris must move approximately 4' up in order to be ingested by the pumps.

- Debris enters HPI system and fails HPI system - If debris enters the RHR suction, several events must occur in order to fail the HPI system. The discussion above on the probability of debris entering the RHR or CTS suction showed that (a) it is not credible for heavy large size debris to enter the RHR pump suction, and (b) the probability of soft, small size debris entering the RHR or CTS pump suction during a large LOCA is low. If soft debris enters the RHR pumps, they will pass through the RHR pump impellers that are capable of grinding them to even smaller pieces. In order to fail the HPI, the debris must escape this grinding activity while passing through the RHR pumps. Then, the soft debris must deposit in valves. At the high flow rates and high discharge pressure, it is difficult for soft debris of small size to clog valves. Since the debris is small in size and soft, and broken into even smaller pieces by the RHR pumps, the HPI pumps will not fail. In consideration of all of the above, the above probability is considered low.

Sequence 2 - Large LOCA and loss of CTS

- Large LOCA occurs - *Rates of Initiating Events at U.S. Nuclear Power Plants: 1987-1995* (Ref. 5) indicates that the frequency of a large LOCAs is 5×10^{-6}/critical year.

- Sufficient amount of debris in containment or ice condenser enters CTS - This probability is low. The bases of this conclusion are discussed under Sequence 1.

- Debris clogs CTS nozzles and fails CTS function - This probability is negligible due to the following reasons:

  - CTS at Cook has two 100% capacity trains. That is, with both trains operating, even if 50% of the spray nozzles plugged, design pressure during the design basis LOCA (12 psig) will not be exceeded.

  - The design basis pressure for the containment is 12 psig. However, the containment failure is significantly greater than 12 psig. According to the Cook IPE, the high confidence (greater than 95%) low probability (less than 5%) failure pressure is 36 psig.

  - It is already established that soft, buoyant, and small (small enough to pass through either the 3/4" holes or 1" strainers, or gaps around the sump screen) would enter the CTS pumps. The CTS pumps are vertical centrifugal pumps with 600 HP. Therefore, they can handle this debris without failing. In addition, when this debris passes through the CTS pump they will

be grinded to small pieces. Given that the ramp bottom spray nozzles are 3/8", the soft debris, after they pass through the CTS pumps will most likely be able to pass through the CTS nozzles.

Sequence 3 - Medium LOCA and loss of HPI

- Medium LOCA occurs - *Rates of Initiating Events at U.S. Nuclear Power Plants: 1987-1995* (Ref. 5) indicates that the frequency of a medium LOCAs is 4×10^{-5}/critical year.

- Sufficient amount of debris in containment or ice condenser enters RHR pumps - In Sequence 1, a basis was provided to conclude that this probability is low. For medium LOCAs, the probability will be even lower due to the following:

  - In comparison to a large LOCA, a longer time would elapse before establishing sump recirculation. The longer time would permit additional debris deposition.

  - In comparison to a large LOCA, a medium LOCA would generate less debris during the break.

  - Compared to a large LOCA, the relatively lower flow rates inside containment would reduce the likelihood of debris transport.

- Debris enters HPI system and fails HPI system - Due to reasons discussed under Sequence 1, this probability is low.

Sequence 4 - Medium LOCA and loss of CTS

- Medium LOCA occurs - *Rates of Initiating Events at U.S. Nuclear Power Plants: 1987-1995* (Ref. 5) indicates that the frequency of medium LOCAs is 4×10^{-5}/Year.

- Sufficient amount of debris in containment or ice condenser enters CTS - Due to the reasons discussed under Sequence 3, this probability is considered low.

- Debris clogs CTS nozzles and fails CTS function - For a medium LOCA also, this probability is determined to be negligible. See discussion under Sequence 2 for the basis for this conclusion.

Sequence 5 - Small LOCA (stuck open PORV or SRV, RCP seal LOCA, small pipe break or feed-and-bleed cooling) and loss of HPI

- Small LOCA or feed-and-bleed cooling occurs - *Rates of Initiating Events at U.S. Nuclear Power Plants: 1987-1995* (Ref. 5) indicates that the frequency of small LOCAs (includes stuck open PORVs or SRVs, RCP seal LOCAs, small pipe breaks) is 9×10^{-3}/critical year. Assuming, the AFW at D.C. Cook reliability was not significantly affected by other D.C. Cook issues related to auxiliary feed

water (AFW), the frequency of feed-and-bleed cooling scenarios at D.C. Cook is negligible compared to the small LOCA frequency. Therefore, the total frequency of small LOCAs and feed-and bleed cooling sequences is 9 x 10^{-3}/critical year.

- Sump recirculation is required due to inability to depressurize and establish RHR cooling - Operating experience shows that during most small LOCAs, the loss of coolant rates and the condition of the reactor coolant system (RCS) allows the operators to depressurize and use RHR cooling. During the time period 1987-1995, there were two stuck open SRV events (classified as small LOCAs in Ref. 5) and during both these events, sump recirculation was not needed (Ref. 6, 7). During the event that occurred at Fort Calhoun (1992), approximately 21,500 gallons of RCS water was discharged from the RCS to the containment. This is much less than the discharge required to demand ECCS sump recirculation. During the event that occurred at Calvert Cliffs (1994), only 5000 gallons of reactor coolant discharged to the containment floor. During the TMI-2 event (1979), 271,000 gallons of RCS water was released to the sump. However, during the TMI-2 event sump recirculation was not demanded.

  Two RCP seal LOCA events are discussed in Reference 5. During the May 1975 event at Robinson Unit 2 (no LER, page I-3 of Ref. 5), a total of 132,500 gallons of RCS water was released to the containment sump before RHR cooling was established. The maximum leak rate was 500 gpm. During this event, the sump recirculation function was not needed. During the event at Arkansas Nuclear One (Ref. 8), approximately 60,000 gallons of water collected in the containment before RHR cooling was established. The maximum leak rate was 300 gpm. The containment pressure increased by 0.5 psi at which time the reactor building containment coolers were put into service. During this event, sump recirculation was not needed.

  There have been no small pipe break LOCAs or feed-and-bleed cooling events in the U.S. operating experience. Feed-and-bleed cooling uses the pressurizer PORVs or SRVs to bleed RCS while injecting RCS with high pressure injection. At D.C. Cook, the pressurizer is equipped with three PORVs that are capable of bleeding the RCS. Based on simulator exercises, the feed-and-bleed cooling can depressurize the reactor prior to depleting the RWST[1]. Therefore, the likelihood of cooling down the reactor with feed-and-bleed cooling prior to requiring sump recirculation is assumed to be equal to the likelihood during a small LOCA.

  Using the Bayes method and a Jeffery's non-informative prior, zero demands for sump recirculation during 5 small LOCAs, the probability of requiring sump recirculation during a small LOCA is calculated to be 0.08 (½ event on 6 demands).

- Sufficient amount of debris in containment or ice condenser enters RHR pumps - Under Sequence 1, this probability was concluded to be low and a basis was given for that conclusion. For a small LOCA, the following additional factors make the probability of this event negligible:

[1]Based on discussions with operations at D.C. Cook (Richard Strasser 6/30/99)

- Debris Generation: Debris is generated in three phases of a LOCA; initial blast effect during pipe rupture, erosion during jet impingement, and pre-existing debris such as dirt, dust, rust flakes, and failed coatings. During a stuck open PORV or SRV or a feed-and-bleed cooling scenario, the liquid enters the quench tank and release from the ruptured disk. During an RCP seal LOCA, the primary coolant exits through RCP seals. Small breaks are breaks less than 2" and the zone of influence (area in which the break causes debris generation) for such breaks are relatively small. Therefore, for small LOCAs, the initial shock waves, and jet impingement effects are absent or minimal. As a result, the amount of debris created during a small LOCA would be much less than that created during a medium LOCA or a large LOCA. That is, the probability of creating a significant amount of debris is low.

- Debris Transport Debris is transported by (i) blast forces within the containment, (ii) steam and air flows during the blow down phase, (iii) and finally transported by water or "washdown." Since for most LOCAs, primary water is released from the quench tank, or RCP seal LOCAs, the amount of debris transported by the first two mechanisms is low. For most LOCAs, CTS spray may not be demanded. This reduces the amount of debris transported by "wash down."

- Debris deposition: During a small LOCA, the rate at which the loss of coolant occurs is low. During the Fort Calhoun event, the leak rate was 200 gpm. A total of approximately 21,500 gallons was released to the containment sump. The Calvert Cliffs event resulted in a maximum leak rate of 25 gpm and a total of approximately 5000 gallons was released to the containment. The Tech Spec required inventory of RWST inventory at Cook is 350,000 gallons. Therefore, during a small LOCA event at D.C. Cook, many hours may elapse before recirculation is required. If any debris was generated and transported, there would be ample time for debris to settle. Once debris is settled, the debris will not be transported. During a small LOCA, the flow rates inside the containment will be low (except in locations where there are flow restrictions). Therefore, the debris that is suspended and available to block sump screens will be minimal.

- Debris enters HPI system and fails HPI system - Due to reasons discussed under Sequence 1, this probability is low.

- Cross-tie from Unit 2 fails - The D.C. Cook station has two RWSTs (One RWST dedicated to each unit). The RWSTs have cross-tie capability. In the event of sump recirculation failure during a small LOCA, the cross-tie can be aligned to add borated water to RCS. The additional RCS inventory of 350,000 gallons will provide additional time to continue depressurizing and cooling down the RCS. In order to cross-tie the RWSTs, the following actions must be performed: (a) recognize need to cross-tie (sump recirculation failure and failure to recover by securing and restarting the pump that cavitates), and (b) change valve alignments to inject from the other unit's RWST. Both of the above actions must be accomplished prior to core uncovery. The time available to core uncovery is significantly impacted by the decay heat levels when the sump recirculation function is demanded and failed due to debris ingestion.

Based on the Cook IPE (Ref. 9), 100 minutes elapse before sump recirculation is needed. Therefore, if the sump recirculation fails during a small LOCA, it will happen a few hours into the accident, and the decay heat levels would be relatively low. At low decay heat level, there will be adequate time to cross-tie the other unit's RWST. In the absence of significant details on the steps that the operators would follow to align the second unit's RWST, a probability of 0.34 is used for failure probability. In the accident sequence precursor (ASP) analysis, a 0.34 recovery probability is used for those failures that appears recoverable in the period at the failed equipment rather than from the control room, given that the equipment was accessible (Ref. 10). Even though the Cook IPE does not provide a failure probability for the cross-tie of RWST, it does provide failure probabilities for several other cross-ties. For example, cross-tie of CVCS is assigned a failure probability of 2.2×10^{-2} for a loss of component cooling water scenario and failure probability of 0.29 for the loss of emergency service water (ESW) scenario. In comparison to these numbers, use of 0.34 for the RWST cross-tie is reasonable.

Sequence 6 - Small LOCA (Stuck Open PORV or SRV, RCP seal LOCA, small pipe break or feed-and-bleed cooling) and loss of CTS

- Small LOCA or feed-and-bleed cooling occurs - *Rates of Initiating Events at U.S. Nuclear Power Plants: 1987-1995* (Ref. 5) indicates that the frequency of small LOCAs (includes stuck open PORVs or SRVs, RCP seal LOCAs, or small pipe breaks) is 9×10^{-3}/critical year. Assuming, the AFW reliability at Cook was not significantly affected by other Cook issues related to AFW, the frequency of a feed-and-bleed cooling scenario at Cook is negligible compared to the small LOCA frequency. Therefore, the total frequency of small LOCAs and feed-and bleed cooling sequences is 9×10^{-3}/critical year.

- Sump recirculation is required due to inability to depressurize and establish RHR cooling - This probability is 0.08. The basis for this probability is discussed under Sequence 1 above.

- Long-term containment heat removal is required to mitigate an accident - It is assumed that any accident that requires sump recirculation will require CTS for long-term containment heat removal. Therefore, this probability is assumed to be 1.0.

- Sufficient amount of debris in containment or ice condenser enters CTS pumps - For reasons discussed in Sequence 5, this probability is negligible for a small LOCA.

- Debris clogs CTS nozzles and fails CTS function - This probability is negligible. The basis for this conclusion is discussed under Sequence 2 (large LOCA). The probability of this event will be lower for a small LOCA compared to large LOCA since the likelihood of demanding CTS spray during small LOCAs is low. (At Cook, the ice condenser starts providing cooling after the containment pressure reaches 0.5 psig. Also, the auto start pressure of the CTS sprays at Cook is 2.9 psig.).

27.4 Core Damage Frequency Calculation or the Bounding Calculation

The frequency associated with the feed-and-bleed sequences depend on the resolution of other issues affecting AFW and RHR cooling. To provide perspective on these sequences the following information is provided.

If the resolution of issues results in no significant changes to AFW or RHR cooling failure probabilities, the change in core damage frequency would be the sum of the following:

Sequence 1 - Large LOCA and loss of HPI

(Frequency of large LOCA: 5×10^{-6}/critical year) x
(Criticality factor for Cook Unit 1: 0.79 critical years/calendar year) x
(Probability that sufficient amounts of debris in containment or ice condenser enters RHR pumps: low) x
(Probability of debris entering the RHR system and failing the RHR system: low) = 4.0×10^{-6}/Year x (a low probability) x (another low probability). Since the unknown probabilities are low, the change in CDF is less than 1×10^{-6}.

Sequence 2 - Large LOCA and loss of CTS

(Frequency of large LOCA: 5×10^{-6}/critical year) x
(Criticality factor for Cook Unit 1: 0.79 critical years/calendar year) x
(Probability that sufficient amounts of debris in containment or ice condenser enters CTS pumps: low) x
(Probability of debris entering the CTS system and failing the CTS system: negligible) = 4.0×10^{-6}/Year x (a low probability) x (a negligible low probability). Since the unknown probabilities are low or negligible, the change in CDF is less than 1×10^{-6}.

Sequence 3 - Medium LOCA and loss of HPI

(Frequency of medium LOCA: 4×10^{-5}/critical year) x
(Criticality factor for Cook Unit 1: 0.79 critical years/calendar year) x
(Probability that sufficient amounts of debris in containment or ice condenser enters RHR pumps: low) x
(Probability of debris entering the RHR system and failing the RHR system: low) = 3.2×10^{-5}/Year x (a low probability) x (another low probability). Since the unknown probabilities are low, the change in CDF is less than 1×10^{-6}.

Sequence 4 - Medium LOCA and loss of CTS

(Frequency of medium LOCA: 4×10^{-5}/critical year) x
(Criticality factor for Cook Unit 1: 0.79 critical years/calendar year) x
(Probability that sufficient amounts of debris in containment or ice condenser enters CTS pumps: low) x

(Probability of debris entering the CTS system and failing the CTS system: negligible) = 3.2 x 10^{-5}/Year x (a low probability) x (a negligible probability). Since the unknown probabilities are low or negligible, the change in CDF is less than 1 x 10^{-6}.

Sequence 5 - Small LOCA (stuck open PORV or SRV, RCP seal LOCA, small pipe break or feed-and-bleed cooling) and loss of HPI

(Frequency of small LOCA or feed and bleed cooling event: 9 x 10^{-3}/critical year) x
(Criticality factor for Cook Unit 1: 0.79 critical years/calendar year) x
(Probability of sump cooling is required due to inability to depressurize and establish RHR cooling: .08) x
(Probability that sufficient amounts of debris in containment or ice condenser enters RHR pumps: negligible)
(Probability of debris entering the HPI system and failing the HPI system: low) x
(Probability of cross-tie from Unit 2 fails: 0.34) = 1.9 x 10^{-4}/Year x (a low probability) x (a negligible probability). Since the unknown probabilities are low or negligible, the change in CDF is less than 1 x 10^{-6}.

Sequence 6 - Small LOCA (stuck open PORV or SRV, RCP seal LOCA, small pipe break or feed-and-bleed cooling) and loss of CTS

(Frequency of small LOCA or feed and bleed cooling event: 9 x 10^{-3}/critical year) x
(Criticality factor for Cook Unit 1: 0.79 critical years/calendar year) x
(Probability of sump cooling is required due to inability to depressurize and establish RHR cooling: .08) x
(Probability that long term heat removal requires CTS pumps: 1.0) x
(Probability that sufficient amounts of debris in containment or ice condenser enters RHR pumps: negligible)
(Probability of debris entering the CTS system and failing the CTS system: negligible) x
(Probability of cross-tie from Unit 2 fails: 0.34) = 1.9 x 10^{-4}/Year x (a negligible probability) x (another negligible probability). Since the unknown probabilities are negligible, the change in CDF is less than 1 x 10^{-6}.

The summary of these sequences is provided in Table 1. As shown in Table 1, the change to the core damage frequency associated with this issue, on its own, would not be risk-significant.

27.5 References

1. LER 315/97-018, Rev. 1, "Failure to Maintain 1/ 4 Inch Particulate Retention Requirement for the Containment Recirculation Sump Results in a Condition Outside the Design Basis," event date September 5, 1997.

2. LER 315/97-024, "Material Discovered in Containment Degrades Containment Recirculation Sump and Results in Condition Outside Design Basis," September 17, 1997.

3. LER 315/98-012, Rev. 1, "1/4 Inch Particulate Requirement Not Maintained in Containment Recirculation Sump," March 5, 1998.

4. LER 315/98-017, Rev. 1, "Debris Recovered from the Ice Condenser Represents Unanalyzed Condition," March 27, 1998.

5. J. P. Poloski, et. al., *Rates of Initiating Events at U.S. Nuclear Power Plants: 1987-1995*, NUREG/CR-5750, February 1999.

6. LER 285/92-023, Rev. 0, "Reactor Trip Due to Inverter Malfunction and Subsequent Pressurizer Safety Valve Leak," August 3, 1992.

7. LER 317/94-007, Rev. 1, "Reactor Trip Caused by Closure of Turbine Stop Valves," June 16, 1995.

8. LER 313/80-015, Rev. 2, "Reactor Coolant Pump 'C' Seal Cartridge Failure," April 13, 1981.

9. *Donald C. Cook Nuclear Plant, Units 1 and 2, Individual Plant Examination, Revision 1*, October 1995.

10. NUREG/CR-4674, Vol. 25, "Precursors to Potential Severe Core Damage Accidents: 1996," December 1997.

Table 1

Sequence	Initiating Event Frequency (IEF)	Product of IEF & calculated probabilities (6)	Unknown probabilities (1)	(2)	(3)	Contribution to change in CDF
1. Large LOCA & HPI	5×10^{-6}/Year	4×10^{-6}/Year	low**[4]	low**[4]	n/a	less than 1×10^{-6}
2. Large LOCA & CTS	5×10^{-6}/Year	4×10^{-6}/Year	low**	n/a	negligible*	less than 1×10^{-6}
3. Medium LOCA & HPI	4×10^{-5}/Year	3.2×10^{-5}/Year	low**[5]	low**[5]	n/a	less than 1×10^{-6}
4. Medium LOCA & CTS	4×10^{-5}/Year	3.2×10^{-5}/Year	low**	n/a	negligible*	less than 1×10^{-6}
5. Small LOCA & HPI	9×10^{-3}/Year	1.9×10^{-4}/Year	negligible*	low**	n/a	less than 1×10^{-6}
6. Small LOCA & CTS	9×10^{-3}/Year	1.9×10^{-4}/Year	negligible*	n/a	negligible*	less than 1×10^{-6}

(1) Sufficient amount of debris in containment or ice condenser enters RHR or CTS pump suction
(2) Debris enters HPI system and fails HPI system
(3) Debris clogs CTS nozzles and fails CTS function
(4) The product of these two low probabilities is assumed to be less than 0.25
(5) The product of these two low probabilities is assumed to be less than 0.03
(6) Sequence frequency excluding (1), (2), and (3) above

* For the purposes of this analysis, "negligible" implies that all available information (operating experience or deterministic analysis) leads to the conclusion that the event can not occur. The basis of this conclusion is provided in the discussion of the event.

** For the purposes of this analysis, "low" probability implies that available information (operating experience or deterministic analysis) can not rule out occurrence of the event. However, several low probability barriers must be overcome for the event to occur. The basis of this conclusion is provided in the discussion of the event.

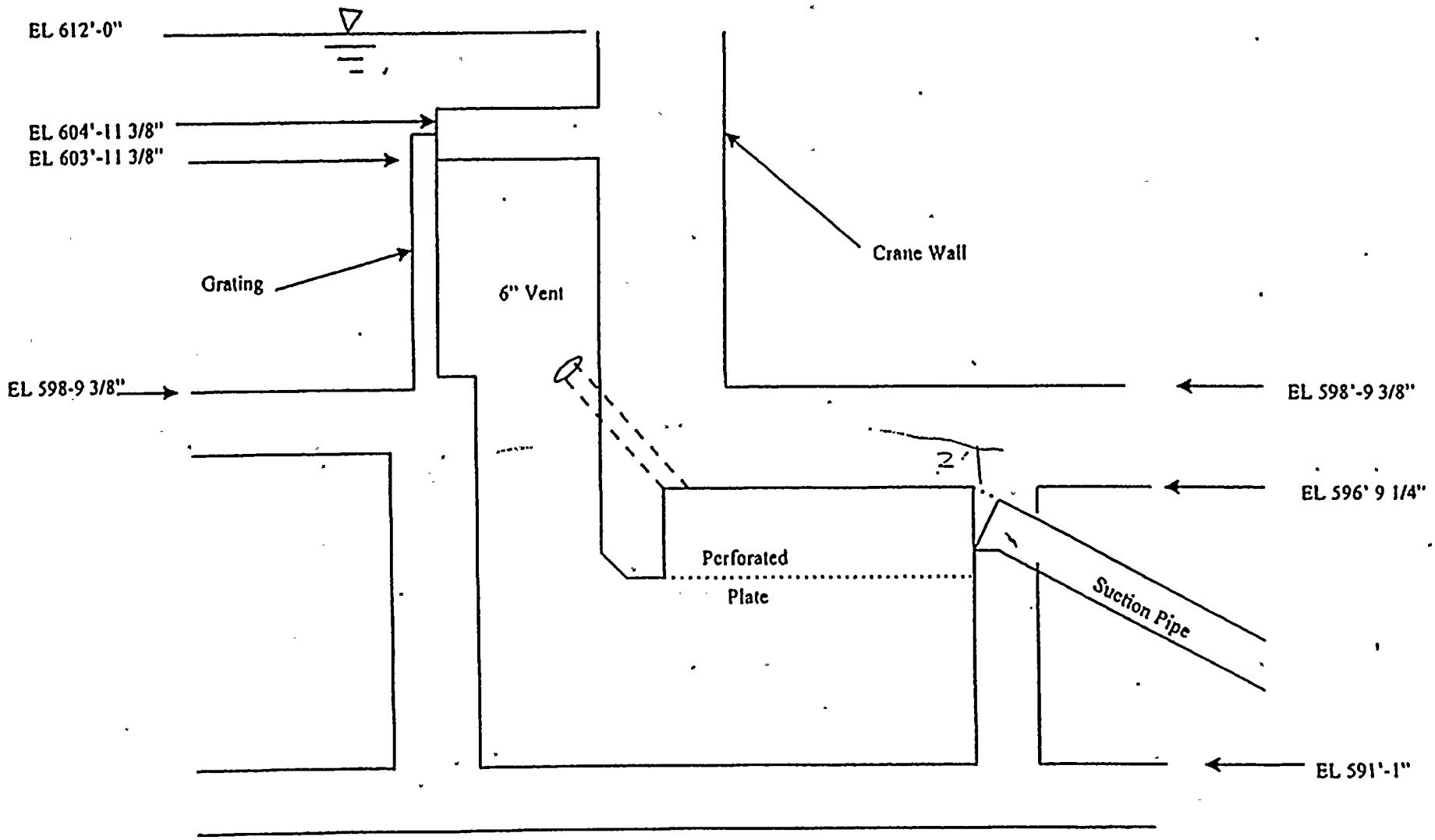

Pre-Modification

FIGURE 1 : ISSUE 27.

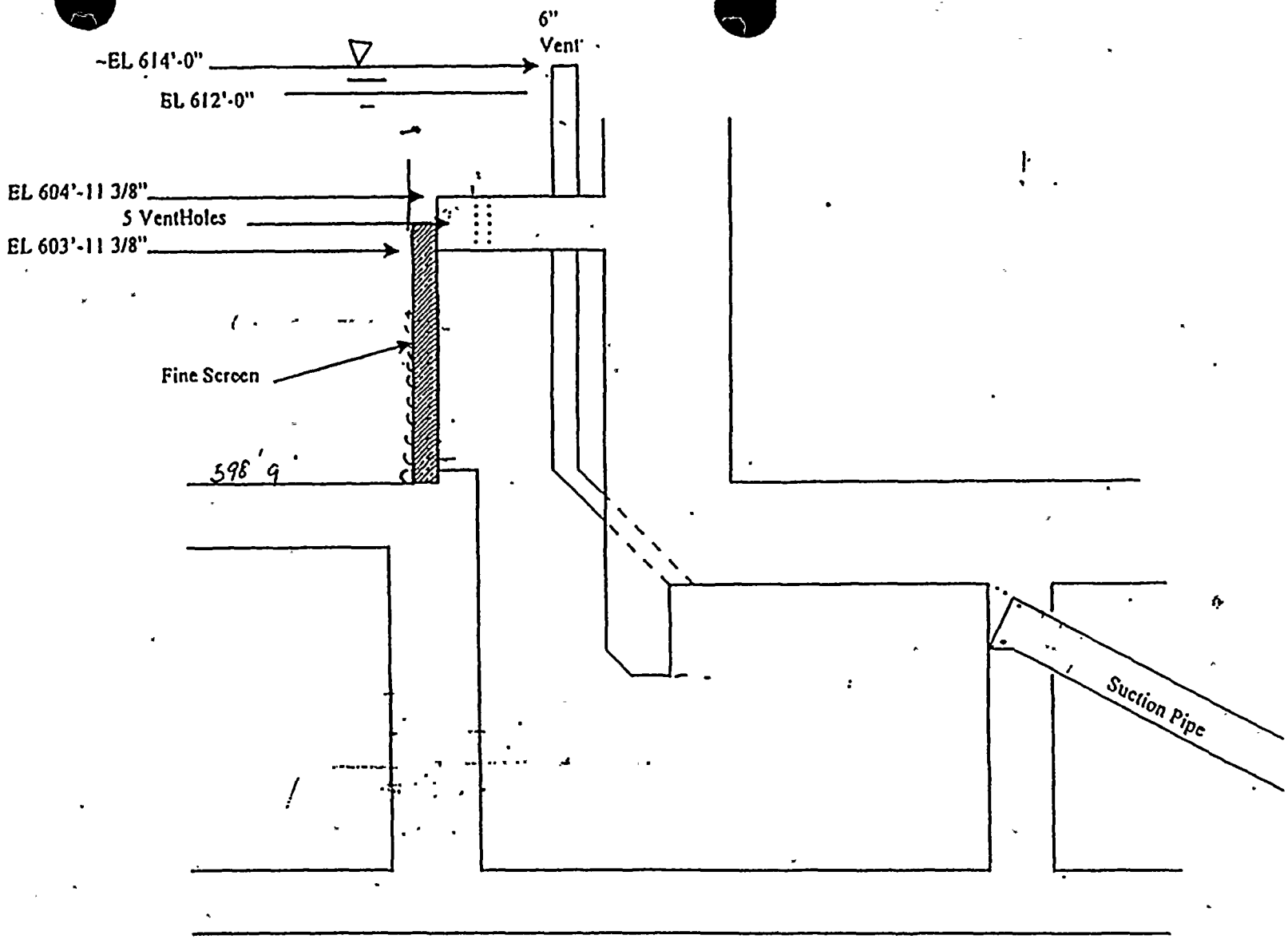

Post-Modification

Floor - 598' 9"

Vortex Limit - 602' 10" (4' deep)

FIGURE 2 - ISSUE 27

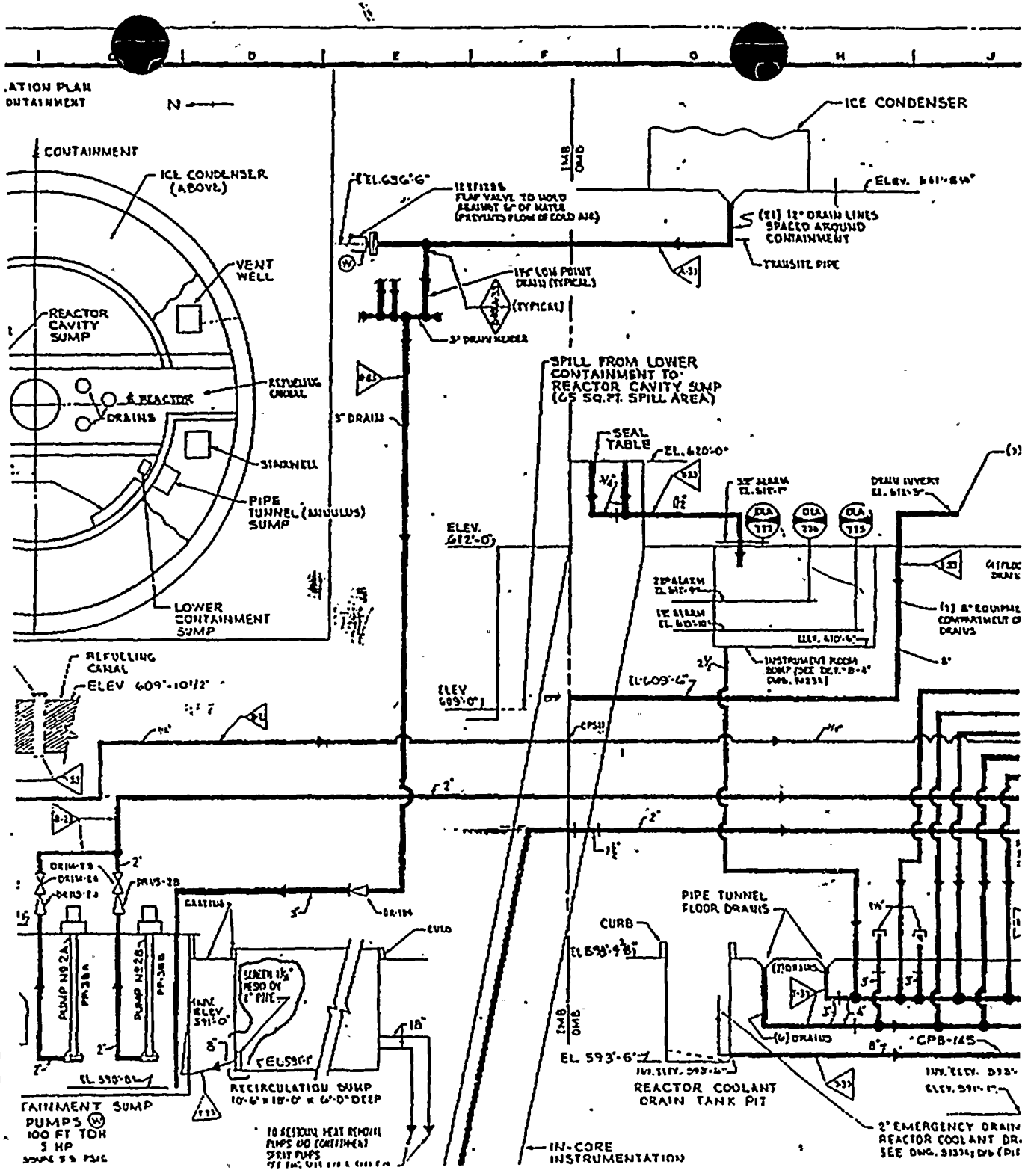

FIGURE 3:
ISSUE 27

TOTAL P.04

28.0 LER No. 315/97-024-04

Event Description: Material Discovered in Containment Degrades Containment Recirculation Sump and Results in Condition Outside Design Basis

Date of Event: September 17, 1997

Plant: D.C. Cook, Units 1and 2

28.1 Summary of Issue

LER 315/97-024-04 (Ref. 1) reported the discovery of a fibrous material known as Fiberfrax in an electrical cable tray inside the Unit 2 containment. Subsequent investigations revealed the existence of this material in Unit 1 containment as well. It was determined that quantity of material present in Unit 1 and Unit 2 containments had the potential to cause excessive blockage of the containment recirculation sump screen during the recirculation phase of an accident rendering the sump inoperable. Investigations determined that the fibrous material resulted from design changes that installed fire stops in 12 cable trays in the Unit 1 containment and 15 cable trays in the Unit 2 containment. The installation procedure used during the design implementation did not require removal of the fibrous material from the containment after completion of the change. Walkdowns identified other material which could block the sump screen during sump recirculation. A fibrous insulation material known as Temp-Mat was identified in several areas in the containment annulus (inactive sump) and the lower volume (active sump). Miscellaneous materials such as tape, labels and equipment stored in the containments were also identified as potential contributors to the sump clogging. In addition, a limited amount of unqualified coatings was identified as well as some coatings that lacked suitable adhesion. Section b.1 and b.2 of Reference 2 (NRC Inspection Report on fibrous material in containment) provide details on the quantity of debris found inside the Unit 1 and Unit 2 containments.

Both Unit 1 and Unit 2 containments have ice condensers. Reference 3 reported the discovery of additional debris inside these ice condensers. According to Reference 3, debris was found in a sample of ice from the ice condenser system. When the whole Unit 1 ice condenser was thawed, three 55-gallon drums of debris were collected. Since ice dissolves during a loss-of-coolant accident (LOCA), the debris trapped in the ice could have exacerbated the fibrous material condition.

The changes to the core damage frequency (CDF) associated with this issue, on its own, are summarized in Table 1 (See page 18). Table 1 summarizes the initiating event frequencies of initiators that are affected by the debris in sump, product of known probabilities and the frequency associated with each initiator, summary of qualitative assessment of the unknown probability, and the expected change in the CDF for each initiator. Overall, unless the issues associated with the residual heat removal (RHR) system or the auxiliary feedwater (AFW) system significantly affects the functionality of those systems (which would increase the feed-and-bleed scenario frequency), the total CDF change associated with this issue, on its own, is less than 1×10^{-6}/year. Therefore, on its own, this issue is not risk significant.

28.2 Modeling and Affected Sequences

During a LOCA, fibrous material and other debris is generated initially during the blast effects and the initial shock wave resulting from the pipe rupture. Additional debris will be generated during blowdown, due to jet impingement. Particles of corrosion products may also be released as a result of the LOCA or they may exist in the sump as "sludge." Furthermore, loose materials that are present in the containment such as loose paint coatings are a possible source of debris. The debris generated during a LOCA is transported in three phases. Initially, the debris will be distributed by blast forces within the containment. During blowdown, the debris will be transported by steam and air flow. Finally debris will be transported by water as "washdown" occurs. During washdown, the transport depends on whether the containment spray system is activated or not.

Any accident sequence that demands sump recirculation will be affected by the potential to clog the sump screen by material in the containment. Large, medium, and small LOCAs can generate sump debris and transport them to the sump. In order to recognize the difference in the debris generation potential for reactor coolant system (RCS) inventory losses via the quench tank and also to differentiate between the location of the break with respect to the RCS hot legs, the three types of small LOCAs [stuck open safety relief valves (SRVs) or power-operated relief valves (PORVs), reactor coolant pump (RCP) seal LOCAs, and small pipe breaks] are treated separately.

Depending upon the break location and size, a small LOCA may be mitigated by cooling down and using residual heat removal (RHR) cooling before the depletion of the refueling water storage tank (RWST). In fact, past operating events show that during small LOCAs, reactors can be depressurized and cooled down without entering the sump recirculation phase. This capability is credited in the small LOCA and feed-and-bleed accident sequences. Due to rapid loss of the RWST and low likelihood of re-filling the RCS, the large and medium LOCAs will always require sump recirculation after successful injection.

Clogging of suction strainers does not always lead to non-recoverable pump failures. Even though no actual experience is available on Pressurized Water Reactors (PWRs), past events at Boiling Water Reactors (BWRs) provide insights to the behavior of RHR pumps when the screens are clogged up by debris. Therefore, a recovery factor will be added to the sequences. Based on past experience, the recovery actions include (a) securing and re-starting pumps, or (b) continuing to run pumps with debris.

At D.C. Cook, the RWST of one unit can be cross tied and used to feed the RCS of the second unit. This additional source of borated water would provide additional time to cool down and depressurize the reactor for small LOCA sequences. Since the RCS cannot be refilled in a timely manner to establish RHR cooling, medium LOCAs and large LOCAs cannot credit the cross-tie capability.

Transient events where the steam generator cooling function is failed and feed-and-bleed cooling is used to remove decay heat may eventually need sump recirculation when the sump debris depletes. Feed-and-bleed cooling sequences resulting from main steam line breaks (MSLBs) and feed line breaks (MFLBs) inside the containment needs to be considered separately from other feed-and-bleed sequences since the

initiating event (steam line or feed line break) can result in increased debris generation compared to the feed-and-bleed sequences associated with other transients.

Clogging of the sump screens can cause net positive suction head (NPSH) problems for containment spray (CTS) pumps as well as for the RHR pumps. CTS pumps are used to remove heat from the containment in the long-term operation (ice condensers complement the CTS sprays until all ice is melted). Failure of the CTS pumps could lead to overpressurizing the containment, and this in turn could challenge containment integrity and sump recirculation capability. However, CTS pumps are not considered in the accident sequences since the CTS pumps have much higher margins compared to the RHR pumps. At the design flow rate of 4600 gpm, assuming a pool 4' deep, the RHR pumps have a NPSH margin of 9'. At its design flow rate of 3200 gpm, the CTS pumps have a NPSH margin of 20'. (Ref. 12). Therefore, when head losses occur as a result of debris clogging up the screens, the RHR pumps will fail before the CTS pumps. There can be situations where during some small LOCA or feed-and-bleed sequences where only CTS pumps rather than RHR pumps are needed. For example, during small LOCAs, the CTS pumps may be demanded before the RHR pumps since the containment pressure can reach the CTS automatic actuation set point (2.9 psig) before the RWST level drops to a level that requires establishing sump recirculation. However, the discussion of small LOCA sequences shows that debris generation, and transport during these sequences do not allow adequate debris buildups and head losses to challenge the 20' NPSH margin available to CTS pumps (Ref. 12).

Therefore, the sequences of interest are as follows:

<u>Sequence 1 - Stuck Open PORVs or SRVs</u>

- Stuck open PORV or SRV occurs;
- Sump cooling is required due to inability to depressurize and establish RHR cooling;
- Screen clogs up during recirc and causes a head loss across screen resulting RHR pump cavitation;
- Operator fails to recover RHR pumps or continue flow in degraded condition; and
- Cross-tie from Unit 2 fails.

<u>Sequence 2 - Feed-and-bleed cooling (except those resulting from MSLB & MFLB inside containment)</u>

- Feed-and-bleed cooling occurs;
- Sump cooling is required due to inability to depressurize and establish RHR cooling;
- Screen clogs up during recirc and causes a head loss across screen resulting RHR pump cavitation;
- Operator fails to recover RHR pumps or continue flow in degraded condition; and
- Cross-tie from Unit 2 fails.

<u>Sequence 3 - Feed-and-bleed cooling associated with MSLB & MFLB inside containment</u>

- Following a MSLB & MFLB inside containment event, feed-and-bleed cooling occurs;
- Sump cooling is required due to inability to depressurize and establish RHR cooling;
- Screen clogs up during recirc and causes a head loss across screen resulting RHR pump cavitation;

- Operator fails to recover RHR pumps or continue flow in degraded condition; and
- Cross-tie from Unit 2 fails.

Sequence 4 - RCP seal LOCAs

- RCP seal LOCA occurs;
- Sump cooling is required due to inability to depressurize and establish RHR cooling;
- Screen clogs up during recirc and causes a head loss across screen resulting RHR pump cavitation;
- Operator fails to recover RHR pumps or continue flow in degraded condition; and
- Cross-tie from Unit 2 fails.

Sequence 5 - Small pipe break LOCA

- Small pipe break LOCA occurs;
- Sump cooling is required due to inability to depressurize and establish RHR cooling;
- Screen clogs up during recirc and causes a head loss across screen resulting RHR pump cavitation;
- Operator fails to recover RHR pumps or continue flow in degraded condition; and
- Cross-tie from Unit 2 fails.

Sequence 6 - Medium or large LOCA

- Medium or Large LOCA occurs;
- Screen clogs up during recirc and causes a head loss across screen resulting RHR pump cavitation; and
- Operator fails to recover RHR pumps or continue flow in degraded condition.

28.3 Frequencies, Probabilities, and Assumptions

Sequence 1 - Stuck Open PORVs or SRVs

- Stuck open PORV or SRV occurs - *Rates of Initiating Events at U.S. Nuclear Power Plants: 1987-1995* (Ref. 14) indicates that the frequency of stuck open PORVs and SRVs at PWRs is 6×10^{-3}/ critical year.

- Sump cooling is required due to inability to depressurize and establish RHR cooling - Operating experience shows that during a stuck open SRV or a PORV the leak rates and the condition of the RCS allows the operators to depressurize and use RHR cooling. During the time period 1987-1995, there were two stuck open SRV events and during both these events, sump recirculation was not needed (Ref. 4, 5). During the event that occurred at Fort Calhoun, approximately 21,500 gallons of RCS water was discharged from the RCS to the containment. This is much less than the discharge required to demand emergency core cooling system (ECCS) sump recirculation. During the event that occurred at Calvert Cliffs only 5000 gallons of reactor coolant discharged to the containment floor. During the TMI-2 event (3/28/79), a stuck open PORV released 271,000 gallons of RCS water

to the sump. However, even during the TMI-2 event sump recirculation was not demanded. In addition to these events, during 2 RCP seal LOCA events (see sequence 4 for the details of the RCP seal LOCAs), the operators were able to successfully depressurize the RCS and establish RHR cooling. Since there were zero needs for sump recirculation during five occasions, using the Bayesian method the probability of requiring ECCS sump recirculation is estimated at 0.08 (½ sump recirculation events during 6 events).

- Screen clogs up during recirc and causes a head loss across screen resulting RHR pump cavitation - Whether the screen can clog up during sump recirculation depends on (a) the amount of debris generated during this small LOCA, (b) the amount of debris transported to the recirculation sump, and (c) the amount of debris that would eventually deposit on the sump screen.

  - Debris Generation Debris is generated in three phases of a LOCA; initial blast effect during pipe rupture, erosion during jet impingement, and pre-existing debris such as dirt, dust, rust flakes, and failed coatings. During a stuck open PORV or SRV, the liquid enters the quench tank and releases from there. The initial shock waves and jet impingement effects are absent. As a result, there is consensus (Ref. 6, 7, 8) that the amount of debris created by this small LOCA is much less than that created during a medium LOCA or a large LOCA. Therefore, the probability of creating a significant amount of debris is negligible.

  - Debris Transport Debris is transported by (i) blast forces within the containment, (ii) steam and air flows during the blowdown phase, (iii) and finally transport by water or "washdown." Since RCS water is released from the quench tank, the amount of debris transported by the first two mechanisms is low. At D.C. Cook, the containment spray actuates at 2.9 psig. Therefore, the possibility of spray actuation cannot be ruled out for breaks classified under stuck open SRVs and stuck open PORVs, even though during the actual two events at Fort Calhoun and Calvert Cliffs (Ref. 4 and 5) that form the basis for this initiating event frequency, spray actuation did not occur. If the sprays actuate, that would enhance transport of debris.

  - Debris from the ice condenser At Cook, an additional source of debris was present since there was debris trapped in the ice condenser. The nature and the volume of debris present were such that, if the debris could be transported to the sump screens, it had the potential to block the screens. Material such as tape, gloves, coat wrap, plastic banding cloth, ice basket coupling screws and screw heads, nuts and bolts, ice basket cruciform wire, rope, rags, wood, paper, and small and large tools were found in the Unit 1 ice condenser. There were approximately three 55-gallon drums of debris in the Unit 1 ice condenser. In order for the debris described above to deposit on the screen the following events must occur:
    - The ice condenser baskets have 1" holes. The above debris must go through the 1" holes. Therefore, debris (tools, tape rolls, plastic wrap, etc.) that is greater than 1" in size will be trapped inside the ice condenser baskets (When the Unit 1 ice condenser was thawed, most of the material that was considered as transportable to the sump stayed inside ice baskets). Only during a large LOCA can one postulate blowdown

forces large enough to send the material trapped inside ice baskets up the 48' tall ice baskets. Even if material travels up the 48' ice baskets, it must go through upper deck grating, and over to and down the refueling cavity drains.

- Debris that escaped the ice baskets and the debris outside of the ice condenser must go through the floor grating (1.75" opening).
- Debris that passes through the above obstacles enters a 12" drain line. From here, debris must go through a 12" flapper valve in order to enter the lower containment or enter a 3" drain line that has low points. Any debris that enters the 3" line will bypass the screens. All heavy small items (e.g., bolts) will deposit along low points during this transport.
- As a result of the above described tortuous path only light (less density than water) small (less than 1") debris can be transported from the ice condenser to the sump, and the contribution from this material to the sump clogging is negligible.

o Debris deposition During a stuck open PORV or SRV, the rate at which the loss of coolant occurs is relatively low. During the two events at Fort Calhoun and Calvert Cliffs, the flow rates were as follows: During the Fort Calhoun event, the leak rate was 200 gpm. A total of approximately 21,500 gallons was released to the containment sump. The Calvert Cliffs event resulted in a maximum leak rate of 25 gpm and a total of approximately 5000 gpm was released to the containment. The Tech Spec required RWST inventory at Cook is 350,000 gallons. Even though RWST depletion may occur due to CTS (CTS starts when the containment pressure reaches 2.9 psig) CTS will be turned off when the pressure reaches 1.5 psig. Furthermore, an ice condenser door will open at 0.5 psig. The overall impact is low likelihood of CTS demand during small breaks. In fact, for breaks smaller than 2", the sprays may not actuate until all of the ice in the ice condensers melt. Therefore, during a stuck open PORV or an SRV event at D.C. Cook, many hours will elapse before recirculation is required. If any debris was generated and transported, there would be ample time for the debris to settle. Once debris is settled, unless high flow rates occur, the debris will not be transported. During small LOCAs, the flow rates inside the containment will be low (except in locations where there are flow restrictions). Therefore, the debris that is suspended and available to block sump screens will be minimal.

o Head Loss at sump The NPSH required for the RHR pumps depend upon many parameters that include the following: Design characteristics of pump, Pump speed (NPSH required increases with speed), Pump flow rate (NPSH required increases with flow rate), and Liquid temperature (NPSH required decreases with increasing temperature). During a stuck open PORV or an SRV event, even if the sump recirculation function was demanded, it would occur late in the accident (hours or days after the event) when the decay heat levels are low. Therefore, the flow rates required to cool the core would be relatively low. As a result, the NPSH required at pump suction will be low during a small LOCA. In addition, since the flow rates across the screen are low, the head loss across the screen would be smaller than what is required during a large LOCA. For example, based on analysis performed and documented by the licensee in Reference 12, the head loss across the sump screen is 9 ft-

water at 15,600 gpm (maximum flow rates during a large LOCA from both RHR and CTS trains). At about 2000 gpm, the head loss for the same debris loading is less than 1 ft-water. The net effect is increased NPSH margin at the pump suction during a small LOCA compared to a large or medium LOCA. As a result, during small LOCAs, the likelihood of cavitation will be low even if debris deposits on the screen.

As the discussion above shows, (a) the low like likelihood of generating debris during a RCS release that occurs through the quench tank, (b) low flows that do not support debris transport to the sump, (c) considerable time elapsed before sump recirculation starts that allows debris and fibrous material to deposit, and (d) the low NPSH requirement and low head losses associated with low flow rates, the probability of the screen clogging up leading to the cavitation of sump pumps during the stuck open PORV or SRV event is negligible.

- Operator fails to recover RHR pumps or continue flow - Operating experience from BWRs and engineering analysis can be used to estimate an upper bound for this probability. Even if the RHR pumps incur cavitating conditions, both operating experience and pump vendor data has shown that the pumps will not immediately fail. Rather, operating experience supports the notion that cavitating conditions will annunciate their existence in the control room via fluctuating motor currents or alarms for the high differential pressure across a sump screen and prompt the operators to take remedial actions.

  The following two events show that during stuck open relief valves, the strainers may continue to operate in a degraded condition, even though sump debris deposits on them. These two operating experiences are related BWRs. (There are no actual events from PWRs). During the suction strainer plugging event at Limerick Unit 1 (Ref. 9), which is a BWR, when the suction strainer plugged, operators detected that abnormal condition by observing the fluctuating motor current and flow on the "A" loop of suppression pool cooling. The operator believed the cause to be cavitation and secured the loop. After it was checked, the "A" pump was successfully restarted and no further problems were observed. During the event at Perry, following an unexpected shutdown on March 26, 1993 (Ref. 13), safety relief valves were utilized for reactor pressure control, and RHR A and B pumps were operated simultaneously in the suppression pool cooling mode for two hours. Following the shift of RHR A loop to the shutdown cooling mode, RHR B was operated for an additional 5 hours. An inspection performed on April 14, 1993, showed that the RHR B strainer was fouled and deformed. Without disturbing the debris on the strainer, a test run of the RHR B pump was performed with suction pressure monitored. With a static suction pressure of 9.25 psig, pump suction pressure decreased to an indicated 0 psig after 8 hours of operation, and although the pump flow remained adequate, the pump was secured.

  Even though the above two conditions relate to BWRs whose strainers are different from those of PWRs, in terms of the propensity to be plugged, the vertical strainer at Cook is less likely to plug compared to the cylindrical strainer at BWRs (Ref. 18). Therefore, the Bayesian method is used to calculate the probability of not failing the RHR due to clogging after a small LOCA event. Given that there were no failures of pumps during two demands, using the Bayesian update the likelihood of

failing RHR pumps given debris deposits on the strainers can be estimated to be 0.16 (½ failures in 3 demands). In addition to this operating experience, other information available suggests that RHR pumps do not fail immediately upon clogging. In its regulatory analysis section, Reference 8 points out that the ECCS would be able to continue operating for some period of time under cavitation conditions. It goes on to state that some licensees have vendor data demonstrating this capability.

- Cross-tie from Unit 2 fails - The D.C. Cook plant has two RWSTs, one dedicated to each of its units, and these RWSTs have cross-tie capability. During a stuck open PORV or SRV, in the event the suction strainer clogs due to fibrous material and other debris, and that eventually leads to the failure of RHR pumps, the cross-tie can be aligned to add borated water to the RCS. The additional RCS inventory of 350,000 gallons will provide ample time to continue depressurizing and cooling down during flows that are typically encountered during stuck open PORVs or SRVs.

  In order to cross-tie the RWSTs given that sump recirculation has failed, the following actions must be performed: (a) recognize need to cross-tie (sump recirculation failure and failure to recover by securing and restarting the pump that cavitates), and (b) change valve alignments to inject from the other unit's RWST. Both of the above actions must be accomplished prior to core uncovery. The time available to core uncovery is significantly impacted by the decay heat levels when the sump recirculation function is demanded and failed due to debris ingestion. Based on the Cook IPE (Ref. 11) 100 minutes elapse before sump recirculation is needed. This is conservative since it is assumed that a significant amount of RWST depletes due to containment spray. After sump recirculation is established (approximately 100 minutes after the LOCA), additional time will be expended for the screens to clog up. Based on the past BWR related events, screens do not clog immediately due to debris. During the event at Limerick, the screen clogged in 30 minutes. During the Swedish Barseback event, the screens plugged up in 70 minutes. Therefore, if the sump recirculation fails due to debris clogging during a small LOCA, it will happen a few hours into the accident, and the decay heat levels would be relatively low. At low decay heat level, there will be adequate time to cross-tie the other unit's RWST. In the absence of significant details on the steps that the operators would follow to align the second unit's RWST, a probability of 0.34 is used for failure probability. In the Accident Sequence Precursor (ASP) analysis, 0.34 recovery probability is used for those failures that appear recoverable in the period at the failed equipment, rather than from the control room, given that the equipment was accessible (Ref. 10). Even though the Cook IPE (Ref. 11) does not provide a failure probability for the cross-tie of RWSTs, it does provide failure probabilities for several other cross-ties. For example, cross-tie of chemical and volume control system (CVCS) is assigned a failure probability of 2.2×10^{-2} for a loss of component cooling water scenario and a failure probability of 0.29 for the loss of emergency service water (ESW) scenario. In comparison to these numbers, use of 0.34 for the RWST cross-tie failure probability is reasonable.

<u>Sequence 2 - Feed-and-bleed cooling (except those resulting from MSLB & MFLB inside containment)</u>

- Feed-and-bleed scenario occurs - *Rates of Initiating Events at U.S. Nuclear Power Plants 1987-1995* (Ref. 14, Table 3.3) indicates that the frequency of a loss of offsite power is 0.046/critical year; the frequency of a total loss of feedwater flow is 0.085/critical year; and the frequency of a total loss of

condenser heat sink events (power conversion system) is 0.12/critical year. This adds up to a total frequency of 0.25/critical year. For Cook Unit 1, the criticality factor is 0.79 critical year/reactor calendar year (Ref. 14, Table H-3). Therefore, the frequency of a reactor trip with a loss of feedwater, offsite power, or the power conversion system is about 0.2/year (0.79 x 0.25). From the Cook standardized plant analysis risk (SPAR) model, the failure probability of the auxiliary feedwater (AFW) system is 1.1×10^{-4}. Therefore, the frequency of feed-and-bleed events requiring recirculation is 1.1×10^{-4} times 0.2, or about 2×10^{-5}/year.

- Sump cooling is required due to inability to depressurize and establish RHR cooling - Feed-and-bleed cooling uses the pressurizer PORVs or SRVs to bleed RCS while injecting RCS with high pressure injection. At D.C. Cook, the pressurizer is equipped with three PORVs that are capable of bleeding the RCS. Based on discussions with operations at D.C. Cook (Richard Strasser 6/30/99, Cook Operations), simulator exercises have shown that the feed-and-bleed cooling can depressurize the reactor prior to depleting the RWST. Therefore, the probability that was calculated for the stuck open PORV or SRV case (0.08) is reasonable for the Cook feed-and-bleed cooling scenario.

- Screen clogs up during recirc and causes a head loss across screen resulting RHR pump cavitation - The debris generation, transport, and deposition mechanisms, and the factors affecting head loss across the sump screen during a feed-and-bleed cooling scenario are similar to those encountered during a stuck open PORV or SRV scenario. Therefore, due to the reasons identical to those discussed in Sequence 1, this probability is negligible.

- Operator fails to recover RHR pumps or continue flow - Due to the reasons discussed under this event in Sequence 1 a probability of 0.16 is used.

- Cross-tie from Unit 2 fails - Due to the reasons discussed under this event in Sequence 1, a probability of 0.34 is used.

<u>Sequence 3 - Feed-and-bleed cooling associated with MSLB & MFLB inside containment</u>

- Following a MSLB & MFLB inside containment event, feed-and-bleed cooling occurs - *Rates of Initiating Events at U.S. Nuclear Power Plants 1987-1995* (Ref. 14, Table 3.1) indicates that the frequency of a steam line break/leak event inside containment is 1×10^{-3}/critical year. The frequency of feed line break/leak events is 3.4×10^{-3}/critical year. Conservatively assuming that all feed line breaks occur inside containment, the total frequency of steam and feed line breaks/leaks inside containment is 4.4×10^{-3}/critical year. For Cook Unit 1, the criticality factor is 0.79 critical year/reactor calendar year (Ref. 14, Table H-3). From the Cook standardized plant analysis risk (SPAR) model, the failure probability of the AFW system is 1.1×10^{-4}. Therefore, the frequency of feed-and-bleed events requiring recirculation after a steam line break or a feed line break event is 3.8×10^{-7}/calendar year.

- Sump cooling is required due to inability to depressurize and establish RHR cooling -Feed-and-bleed cooling uses the pressurizer PORVs or SRVs to bleed RCS while injecting RCS with high pressure injection. At D.C. Cook, the pressurizer is equipped with three PORVs that are capable of bleeding

the RCS. Based on discussions with operations at D.C. Cook (Richard Strasser 6/30/99, Cook Operations), simulator exercises have shown that the feed-and-bleed cooling can depressurize the reactor prior to depleting the RWST. Therefore, the probability that was calculated for the stuck open PORV or SRV case (0.08) is reasonable for the Cook feed-and-bleed cooling scenario.

- Screen clogs up during recirc and causes a head loss across screen resulting RHR pump cavitation - The debris transport, and deposition mechanisms, and the factors affecting the head loss across the sump screen during a feed-and-bleed cooling scenario are similar to those encountered during other feed-and-bleed cooling scenarios in which no pipe break occurred inside the containment. The main difference between this scenario and the other scenarios is the potential to generate significant amounts of debris due to the break inside containment. However, other factors (transport and deposition mechanisms) associated with feed-and-bleed cooling will keep this probability negligible.

- Operator fails to recover RHR pumps or continue flow in degraded condition - Due to the reasons discussed under this event in Sequence 1 a probability of 0.16 is used.

- Cross-tie from Unit 2 fails - Due to the reasons discussed under this event in Sequence 1, a probability of 0.34 is used.

Sequence 4 - RCP seal LOCAs

- RCP seal LOCA occurs - *Rates of Initiating Events at U.S. Nuclear Power Plants 1987-1995* (Ref. 14, Table 3.1) indicates that the frequency of an RCP seal LOCA is 2.5 x 10^{-3}/critical year. This frequency results from two actual events that resulted in a significant loss of coolant through the RCS seals. In the May 1975 event at Robinson Unit 2 (no LER, page I-3 of Ref. 14), a total of 132,500 gallons of RCS water was released to the containment sump before RHR cooling was established. The maximum leak rate was 500 gpm. During the event at Arkansas Nuclear One Unit 1 (Ref. 15), approximately 60,000 gallons of water collected in the containment before RHR cooling was established. The maximum leak rate was 300 gpm. The containment pressure increased by 0.5 psi, at which time the reactor building containment coolers were put into service.

- Sump cooling is required due to inability to depressurize and establish RHR cooling - Even though there have been many RCP seal degraded events, only the two events discussed above were used to calculate the initiating event frequency since the leak rates associated with the others did not exceed 40 gpm. In both these events, the operators were able to establish RHR cooling prior to requiring sump recirculation. In addition to these, the operators were able to establish RHR cooling during 3 stuck open PORV/SRV events (See sequence 1 for details). Using the Bayesian method, the probability of requiring sump recirculation during a small LOCA event is calculated to be 0.08 (½ events on 5 demands).

- Screen clogs up during recirc and causes a head loss across screen resulting RHR pump cavitation - As pointed out under the discussion on the RCP seal LOCA initiating event frequency, the flow rates encountered during RCP seal LOCAs are relatively low. The maximum flow rate encountered during an RCP seal LOCA was 500 gpm (May 1975 event at Robinson 2, Ref. 14). Therefore, the debris

generation, transport, and deposition mechanisms, and the factors affecting head loss across the sump screen during an RCP seal LOCA scenario are similar to those encountered during stuck open PORV or SRV scenarios. During the stuck open PORV or SRV scenario, the RCS water is released through the quench tank. Therefore, initial blast effects or the blowdown forces that generate debris are absent. Similarly, during an RCP seal LOCA events, such forces that generate debris are absent. As a result, this probability is negligible.

- Operator fails to recover RHR pumps or continue flow in degraded condition - Due to the reasons discussed under this event in Sequence 1 a probability of 0.16 is used.

- Cross-tie from Unit 2 fails - Due to the reasons discussed under this event in Sequence 1, a probability of 0.34 is used.

Sequence 5 - Small pipe break LOCA

- Small pipe break LOCA occurs; - *Rates of Initiating Events at U.S. Nuclear Power Plants 1987-1995* (Ref. 14, Table 3.3) indicates that the frequency of a small pipe break LOCA is 5.0×10^{-4}/critical year. This frequency results from zero events since WASH-1400 (Ref. 16) in both PWR and BWR history.

- Sump cooling is required due to inability to depressurize and establish RHR cooling - There is no operating experience to estimate the probability of the capability to establish RHR cooling following a small LOCA. Unlike a stuck open pressurizer PORV or an SRV, the break may not be at a high location. Unlike an RCP seal LOCA, the break may not be via a seal which can be stopped after cooling down RCS. In the absence of data, experience related to RCP seals and stuck open SRVs/PORVs is used to estimate this probability at 0.08.

- Screen clogs up during recirc and causes a head loss across screen resulting RHR pump cavitation - The debris generation, transport, and deposition mechanisms, and the factors affecting head loss across the sump screen during a small LOCA scenario are similar to those encountered during a stuck open PORV or an RCP seal LOCA since the flow rates are low. The main difference between this scenario and the stuck open PORV scenarios is the potential to generate more debris since there is a pipe break. However, since the pipe break is small (less than 2" in diameter), the area of impact is relatively small. Therefore, the amount of debris generated will be much less compared to a medium or a large break LOCA. In addition, other factors (time available for debris deposition, low flows that do not support debris transport, relatively low NPSH required due to low flows combined with high NPSH margin available due to reduced head loss across screens as a result of low flow rates) make this probability negligible.

- Operator fails to recover RHR pumps or continue flow in degraded condition - Due to the reasons discussed under this event in Sequence 1 a probability of 0.16 is used.

- Cross-tie from Unit 2 fails - Due to lack of operating experience, this probability is conservatively assumed to be 1.0.

Sequence 6 - Medium or large LOCA

- Medium or large LOCA occurs - *Rates of Initiating Events at U.S. Nuclear Power Plants 1987-1995* (Ref. 14, Table 3.3) indicates that the frequency of a medium or large LOCA is 4.5 x 10^{-5}/critical year.

- Screen clogs up during recirc and causes a head loss across screen resulting RHR pump cavitation - Based on the discussion below under medium or large LOCAs, the probability of this event is assumed to be low (low enough so that the product of the medium LOCA frequency and this event is less than 1 x 10^{-6}/year.) The issue of sump debris potentially clogging up the sump screen such that the head losses across the screen fails the recirculation pumps, has been a generic issue that has received both regulatory and industry attention over many years (Ref. 8). For BWRs, considerable research has been carried out to investigate this area. However, for PWRs, the research program has just begun (with D.C. Cook as a pilot plant)(Ref. 8). A plant specific analysis performed to assess the "as found" condition (Ref. 12) and the independent review of that analysis (Ref. 17), lead to the conclusion that for the "as found" condition the probability of clogging the sump during a medium or a large LOCA is low (low enough so that the product of the large LOCA frequency of 5.0 x 10^{-6} and the probability of this event is less than 1 x 10^{-6}/year.). The bases for this conclusion, in summary are as follows:

  - A plant specific analysis performed by Innovative Technology Solutions (ITS) (a vendor contracted by licensee) concluded that the "as found" conditions would not have blocked the sump screen to a degree that would have prevented effective functioning of the sump in the recirculation mode for the full spectrum of LOCAs (Ref. 12).

  - An NRC inspection report agreed that the assumptions used in the ITS analysis are acceptable (Ref. 2). (Note that NRC did not review and concur with the final analysis. NRC simply agreed that the assumptions of the analysis are acceptable).

  - An independent review performed by Scientech (Ref. 17) agreed with the ITS findings.

  - ITS has made a conservative (extremely conservative for medium LOCAs) assumption in a parametric input that has a significant impact on head loss (flow rate through sump was assumed to be 15,600 gallons).

    The summary of analysis and key assumptions of the analysis documented in Reference 12 is as follows. The analysis used models developed by the USNRC, as reported in NUREG/CR-6224 (Ref. 19) for BWR ECCS suction strainers. Selected guidance was also adopted from the BWR Owner's Group (BWROG) resolution guidance. Consistent with the analysis in BWRs, large breaks were postulated to occur at weld locations of RCS pipes. Hence, the analysis assumed only insulation in the lower containment will be available as sump debris. Even though only insulation near the actual location of a postulated break is expected to be damaged, the analysis conservatively assumed that all insulation below the

614' level will act as debris (Note that for medium LOCAs, whose size is limited to breaks less than 6" in diameter, the zone-of-influence or the area affected by the break is much less than that for large breaks. Therefore, for a medium LOCA, the actual amount of debris generated will be less than that for a large LOCA). Based on the two-dimensional computational fluid dynamics of the flow field of water on the containment and based on other engineering analysis, 50% of the debris is expected to be carried to the sump screens. Since Fiberfrax insulation was found only outside of the crane wall, it was assumed that Fiberfrax will not impact the large LOCAs. However, some of the Fiberfrax (5 lbs.) was assumed to enter the lower containment from the containment annulus. Assuming a 4' deep pool, the NPSH margin for RHR pumps at a flow rate of 4600 gpm was estimated at 9'. For the CTS pumps, the NPSH margin at 3200 gpm was 20 ft. Therefore, RHR pumps are limiting for NPSH. These NPSH margins are for the large break LOCAs for which the flow rates are at the maximum. (For medium and small LOCAs, flow rates are lower and therefore, the NPSH margin will be greater than 9'.) The analysis used an effective sump screen area of 76 square feet. Head losses were calculated using a total flow rate of 15,600 gpm (both RHR and CTS pumps running at maximum flow). Based on BWROG resolution guidance, head loss due to reflective metallic insulation (RMI) was neglected. Two LOCA scenarios (large and small) were analyzed. Since large LOCAs can only occur in RCS piping, this break was assumed to occur in the lower portion of the containment building. In comparison, the small LOCA was assumed to occur in the containment annulus. The quantities of dirt/dust and rust flakes listed in the BWROG Utility Resolution Guidance (URG) were assumed to be applicable to D.C. Cook. The debris bed that develops on the sump screen was assumed to be uniform. Based on discussions with Michael Marshall (Ref. 18), many of the above assumptions were determined to be conservative. The bases of some assumptions (e.g., the assumption that composition of Fiberfrax is similar to Min-K for the purposes of this analysis) were unknown.

This analysis identifies the two major contributors to the head loss across sump screens to be the debris quantity and the screen approach velocity. The analysis made conservative assumptions for both those parameters. For the debris, the analysis assumed that the total quantity of Temp-Mat insulation below 614' in the containment would be destroyed. No credit was taken for the spatial separation between the location of the break and the location of the insulation. For the approach velocity, the analysis assumed the maximum approach velocity by assuming total flow from both RHR and CTS pumps, even though the actual flows required during the recirc phase would be much lower. The analysis showed that the head loss across the screen will be less than 9 ft. It concluded that the "as found" conditions would not have blocked to a degree that would have prevented effective functioning of the sump in the recirculation mode for the full spectrum of LOCAs.

Reference 2 (the NRC inspection report) did not agree with the initial analysis that was performed by ITS on the sump operability in 1997. However, it did agree with revised assumptions and models used in the analysis. The licensee used Scientech (Ref. 17) to perform an independent review of the safety implications of the "as found" conditions at D.C. Cook. One analysis reviewed by Scientech engineers was the ITS analysis of sump

debris. Scientech's independent review team considered two additional sources of debris that were not included in the ITS analysis (foreign material found in the ice beds and charcoal paper in the containment auxiliary clean-up ventilation units) and concluded that neither of them would have contributed significantly to the debris generated during a LOCA. In summary, Scientech concluded that the ITS analyses are acceptable.

- Operator fails to recover RHR pumps or continue flow in degraded condition - Due to the reasons discussed under this event in Sequence 1 a probability of 0.16 is used.

- Operator fails to recover RHR pumps or continue flow in degraded condition - Due to lack of operating experience, this probability is conservatively assumed to be 1.0.

28.4 Core Damage Frequency Calculation or the Bounding Calculation

The frequency associated with the feed-and-bleed sequences depend on the resolution of other issues affecting AFW and RHR cooling. To provide perspective on these sequences the following information is provided.

If the resolution of issues results in no significant changes to AFW or RHR cooling failure probabilities, the change in core damage frequency would be the sum of the following:

<u>Sequence 1 - Stuck Open PORVs or SRVs</u>

(Frequency of stuck open PORV or SRV: 6×10^{-3}/critical year) x
(Criticality factor for Cook Unit 1: 0.79 critical years/calendar year) x
(Probability sump cooling is required due to inability to depressurize and establish RHR cooling: 0.08) x
(Probability screen clogs up during recirc and causes adequate head loss to cavitate RHR pumps: negligible)
(Probability of operator failing to recover RHR pumps or continue flow: 0.16) x
(Probability cross-tie from Unit 2 fails: 0.34) = 2.1×10^{-5}/year x probability screen clogging up during recirculation causing adequate head losses to cavitate RHR pumps. Since the unknown probability is negligible, the change in CDF is negligible.

<u>Sequence 2 - Feed-and-bleed cooling (except those resulting from MSLB & MFLB inside containment)</u>

(Frequency of feed-and-bleed cooling: 2×10^{-5}/critical year) x
(Probability sump cooling is required due to inability to depressurize and establish RHR cooling: 0.08) x
(Probability screen clogs up during recirc and causes adequate head loss to cavitate RHR pumps: negligible)
(Probability of operator failing to recover RHR pumps or continue flow: 0.16) x
(Probability cross-tie from Unit 2 fails: 0.34) = 8.6×10^{-8}/year x probability screen clogging up during recirculation causing adequate head losses to cavitate RHR pumps. Since the unknown probability is negligible, the change in CDF is negligible.

Sequence 3 - Feed-and-bleed cooling associated with MSLB & MFLB inside containment

(Frequency of feed-and-bleed cooling: 3.8×10^{-7}/critical year) x
(Probability sump cooling is required due to inability to depressurize and establish RHR cooling: 0.08) x
(Probability screen clogs up during recirc and causes adequate head loss to cavitate RHR pumps: low)
(Probability of operator failing to recover RHR pumps or continue flow: 0.16) x
(Probability cross-tie from Unit 2 fails: 0.34) = 1.7×10^{-9}/year x probability screen clogging up during recirculation causing adequate head losses to cavitate RHR pumps. Since the unknown probability is low, the change in CDF is negligible.

Sequence 4 - RCP Seal LOCAs

(Frequency of RCP seal LOCAs: 2.5×10^{-3}/critical year) x
(Criticality factor for Cook Unit 1: 0.79 critical years/calendar year) x
(Probability sump cooling is required due to inability to depressurize and establish RHR cooling: 0.08) x
(Probability screen clogs up during recirc and causes adequate head loss to cavitate RHR pumps: negligible)
(Probability of operator failing to recover RHR pumps or continue flow: 0.16) x
(Probability cross-tie from Unit 2 fails: 0.34) = 8.6×10^{-6}/year x probability screen clogging up during recirculation causing adequate head losses to cavitate RHR pumps. Since the unknown probability is negligible, the change in CDF is negligible.

Sequence 5 - Small pipe break LOCA

(Frequency of small LOCAs: 5.0×10^{-4}/critical year) x
(Criticality factor for Cook Unit 1: 0.79 critical years/calendar year) x
(Probability sump cooling is required due to inability to depressurize and establish RHR cooling: 0.08) x
(Probability screen clogs up during recirc and causes adequate head loss to cavitate RHR pumps: negligible) x
(Probability of operator failing to recover RHR pumps or continue flow: 0.16) x
(Probability cross-tie from Unit 2 fails: 1.0) = 5.1×10^{-6}/year x probability screen clogging up during recirculation causing adequate head losses to cavitate RHR pumps. Since the unknown probability is negligible, the change in CDF is negligible.

Sequence 6- Medium or large LOCA

(Frequency of medium or large break LOCAs: 4.5×10^{-5}/critical year) x
(Criticality factor for Cook Unit 1: 0.79 critical years/calendar year) x
(Probability screen clogs up during recirc and causes adequate head loss to cavitate RHR pumps: low) x
(Probability of operator failing to recover RHR pumps or continue flow: 0.16) x
(Probability of operator failing to recover RHR pumps or continue flow: 1.0) = 5.8×10^{-6}/year x probability screen clogging up during recirculation causing adequate head losses to cavitate RHR pumps. Since the unknown probability is low, the change in CDF is negligible.

The summary of these sequences are provided in Table 1. As shown in Table 1, the change to the core damage frequency associated with this issue, on its own, would not be risk significant.

28.5 References

1. LER 315/97-024, Rev. 4, "Material Discovered in Containment Degrades Containment Recirculation Sump and Results in Condition Outside Design Basis," April 30, 1998.

2 NRC Inspection Report No. 50-315/97017 (DRP), 50-316/97017 (DRP), April 9, 1998.

3. LER 315/98-017, Rev. 1, "Debris Recovered from the Ice Condenser Represents Unanalyzed Condition," July 1, 1998.

4. LER 285/92-023, Rev. 0, "Reactor Trip Due to Inverter Malfunction and Subsequent Pressurizer Safety Valve Leak," August 3, 1992.

5. LER 317/94-007, Rev. 1, "Reactor Trip Caused by Closure of Turbine Stop Valves," August 18, 1994.

6. Los Alamos National Laboratory, "Selection of PWR Accident Sequences for Evaluation of the Effects of Debris in the Sump," Draft Report, April 30, 1999.

7. Memorandum from Richard J. Barrett (Chief, NRR PSAB) to John N. Hannon (Chief, Plant Systems Branch), "Preliminary Risk Assessment of PWR Sump Screen Blockage Issue," Report, April 1, 1999

8. Memorandum from John N. Hannon, (draft)(Chief, Plant Systems Branch) to Brian W. Sheron (Associate Director for Project Licensing and Technical Analysis), "Draft Action Plan for Emergency Core Cooling System (ECCS) Suction Blockage," June 23, 1999.

9. LER 352/95-008, "Unusual Event and RPS Actuation When the Reactor was Manually Shutdown due to the Inadvertent Opening of a Main Steam Safety Relief Valve caused by Pilot Valve Seat Leakage. Material Discovered in Containment Degrades Containment Recirculation Sump and Results in Condition Outside Design Basis," October 10, 1995.

10. NUREG/CR-4674, Vol. 25, "Precursors to Potential Severe Core Damage Accidents: 1996," December 1997

11. *Donald C. Cook Nuclear Units 1 and 2, Individual Plant Examination Revision 1*, October 1995.

12. ITS/AEP-98-03, Rev. 0, "D.C. Cook Nuclear Plant Recirculation Sump Head Loss Analysis 'As found' Conditions," September 30, 1998.

13. LER 440/93-011, Rev. 0, "Excessive Strainer Differential Pressure Across the RHR Suction Strainer Could have Compromised Long Term Cooling During Post-LOCA Operation," May 19, 1993.

14. J. P. Poloski, et. al., *Rates of Initiating Events at U.S. Nuclear Power Plants: 1987-1995*, NUREG/CR-5750, February 1999.

15. LER 313/80-015, Rev. 2, "RCP Seal of RCP C Failure," April 13, 1981.

16. WASH-1400, Reactor Safety Study, 1975.

17. Letter report from Scientech Inc. (Roger J. Mattson to Robert P. Powers) on "Safety Assessment of DC Cook Units 1 and 2 "As Found" Condition Prior to Plant Shutdown," February 22, 1999.

18. Personal Communications between Sunil D. Weerakkody, and M. Marshall (NRC-Research).

19. "Parametric Study of the Potentila for BWR ECCS Strainer Blockage Due to LOCA Generated Debris, " NUREG/CR-6224, October 1995.

Table 1 - Changes to Core Damage Frequency (CDF) for LER No. 315/97-024-04

Initiator	Initiating Event Frequency (IEF)	Product of IEF & calculated probabilities (1)	Probability of screen clogging up during recirculation and causing adequate head loss to cavitate RHR pumps	Contribution to change in CDF
Stuck open PORVs or SRVs	6×10^{-3}/critical year	2.1×10^{-5}/year	negligible*	less than 1×10^{-6}/year
Feed-and-Bleed cooling sequences (except MSLB & MFLB)	2×10^{-5}/critical year	8.6×10^{-8}/year	negligible*	less than 1×10^{-6}/year
Feed-and-Bleed cooling sequences (after a MSLB & MFLB)	3.8×10^{-7}/critical year	1.7×10^{-9}/year	negligible*	less than 1×10^{-6}/year
RCP Seal LOCAs	2.5×10^{-3}/critical year	8.6×10^{-6}/year	negligible*	less than 1×10^{-6}/year
Small LOCAs	5×10^{-4}/critical year	5.1×10^{-6}/year	negligible*	less than 1×10^{-6}/year
Medium or Large LOCAs	4.5×10^{-5}/critical year	3.6×10^{-5}/year	low**	less than 1×10^{-6}/year

* For the purposes of this analysis, all available information (operating experience or deterministic analysis) leads to the conclusion that the event can not occur. The basis of this conclusion is provided in the discussion of the event.

** For the purposes of this analysis, available information (operating experience or deterministic analysis) can not rule out occurrence of the event. However, several low probability barriers must be overcome for the event to occur. The basis of this conclusion is provided in the discussion of the event. For this sequence, it is assumed that the probability of this event is less than 0.027.

(1) Sequence frequency excluding the probability of screen clogging up during recirculation and causing adequate head loss to cavitate RHR pumps.

36.0 NRC Inspection Report No. 50-315/97-201, Finding E1.1.1.2.A(1) and LER 315/97-011 Rev. 2

Event Description: Failure to Account for RWST Level Setpoint Errors Caused by Flow-Induced Effects and the Potential for RHR Pump Failure due to Vortexing

Date of Event: November 1997, August 1997

Plant: D.C. Cook, Units 1 and 2

36.1 Summary of Issue

This issue addresses several Refueling Water Storage Tank (RWST) level errors that had not been accounted for in the RWST level instrumentation uncertainty (error) analysis when calculating the setpoints related to transfer of the post-loss-of-coolant accident (LOCA) injection source from the RWST to the containment sump, as well as the potential for residual heat removal (RHR) pump damage due to vortexing while the pump suction was being supplied from the RWST (Refs. 1, 2).

Procedure 01-OHP 4023.ES-1.3, "Transfer to Cold Leg Recirculation," Rev. 4 (Ref. 3), is entered from procedure 01-OHP 4023.E-1, "Loss of Reactor or Secondary Coolant," Rev. 7 (Ref. 4), when indicated RWST level is less than 32%. Provided both RHR pumps are available following a LOCA and either the containment water level is greater than 15% or the containment sump level is greater than 97%[1], the West RHR and containment spray (CTS) pumps are stopped if they are running (large- and medium-break LOCA), aligned for recirculation, and restarted. Both safety injection (SI) and charging pump suction pathways are then aligned to take suction from the West RHR train, after which the SI and charging pump suctions are isolated from the RWST (the SI and charging pumps continue to run during the transfer to the sump).

If both RHR trains are operating and after the West RHR and CTS pump suctions are aligned to the containment sump, the East RHR and CTS pumps will continue to take suction from the RWST until an indicated RWST level of 10% reached, when operators realign the East trains to the containment sump. The SI and charging pump suctions are then configured such that either the East or West RHR trains can provide flow to these pumps. If the East train transfer is delayed, the East RHR pump will automatically trip when the RWST low-low level setpoint is reached (nominally 9.09% of span). Any other pumps that are still taking suction from the RWST when the low-low level trip setpoint is reached are placed in pull-to-lock by the operators.

If either the East or West RHR train is unavailable, Ref. 3 instructs the operators to align the operable RHR train for sump recirculation at the time the procedure is entered, i.e., not to wait until the RWST

[1] A containment water level of 602' 10" provides adequate NPSH and protection against vortexing during cold leg recirculation for all LOCA scenarios (Ref. 1). However, an indicated containment water level of 15% (601' 6"), while acceptable from an NPSH and vortexing standpoint, provides no margin of protection against vortexing for limiting breaks. An indicated containment sump level of 97% does not prevent pump damage due to vortexing (Refs. 1, 5).

level is less than 10% if the East train is the only operable train.

Ref. 1 determined that a potential for vortexing and air entrainment existed prior to reaching the RHR pump automatic trip setpoint. Vortexing and air entrainment, if severe, could damage the pumps that were still taking suction from the RWST. A draft licensee calculation, available at the time that the Ref. 1 inspections were performed, indicated that incipient RHR pump vortexing could occur at an RWST level 12 inches above the low-low level setpoint, and that 2% air entrainment [the limit of pump operability defined in *Loss of RHR Cooling While the RCS is Partially Filled*, WCAP-11916, July 1988 (Ref. 6)] could be experienced at a level 2.5 inches below the low-low level setpoint.

However, the draft licensee calculation did not consider RWST level instrument uncertainties. When these are taken into account, Ref. 1 concluded that an actual water level that was below the top of the ECCS suction pipe could exist when the RWST low-low level trip occurs. Instrument error could increase the vortexing duration and potentially result in RHR and CTS pump failure before the pumps were transferred to the containment sump.

The potential for RHR and CTS pump vortexing was offset by RWST level setpoint errors identified during the Ref. 1 inspection and in Ref. 2. These errors were caused by flow-induced effects:

a. RWST level transmitters 1LS-950 and -951, which cue the operators to initiate transfer to sump recirculation, are located in the ECCS suction pipe connected to the RWST. The flow rate through the suction pipe results in entrance and velocity head losses which negatively bias the static pressure sensed by the transmitters and results in an indicated RWST water level that is lower than the actual level. Preliminary licensee investigations reported in Ref. 1 indicated that the combined effect from flow-induced errors and instrument uncertainty would be approximately 20% of instrument span at the time the low level alarm setpoint is reached following a large-break LOCA.

b. Ref. 2 identified a further condition that could result in an additional negative 8% level error when the low level setpoint was reached. This condition involved the installation of drip catches on the 10-in RWST overflow lines at Units 1 and 2. The overflow lines provide RWST venting if the normal 8-in vent line becomes plugged. A 1976 calculation estimated a tank-to–atmosphere maximum differential pressure of 0.2 psi following a large-break LOCA if the overflow line was blocked. A revised calculation performed prior to the submittal of Ref. 2, which corrected several discrepancies in the original calculation, estimated instead a differential pressure of 1.03 psi, with a corresponding RWST level error of 2.4 ft.

The RWST level setpoint errors also potentially impact the RHR pumps following transfer to the containment sump, because the decreased inventory transferred to the sump as a result of the level errors increases the likelihood of air entrainment due to vortexing during recirculation. The potential for vortexing in the containment sump is addressed under Issue 26, together with other concerns that also affect vortexing in the sump (e.g., the impact of water diversion from the active to the inactive sump).

The change in core damage frequency associated with this issue is dependent upon resolution of the

issues affecting auxiliary feedwater (AFW) and RHR cooling capabilities. If AFW failure probability or RHR cooling capability are not significantly affected by other issues, the change in core damage frequency associated with the potential for RWST vortexing, offset by the negative error in indicated RWST level caused by flow-induced effects, is less than 1×10^{-6}. This issue, on its own, is therefore considered to be non-risk significant.

36.2 Modeling and Affected Sequences

Ref. 4 instructs the operators to begin transferring to cold leg recirculation when the indicated RWST level decreases to 32%. The RWST level errors caused by flow-induced effects and installation of the RWST overflow drip catch would result, following a maximally-sized large-break LOCA (double-ended cold leg break), in approximately 40% of the RWST volume being injected prior to initiating sump recirculation instead of the expected 68%. The additional water remaining in the RWST when sump switchover was complete, due to the same level errors, would reduce the probability that the RHR pumps would be damaged by vortexing before sump recirculation is completely established (the potential for vortexing in the containment sump because of the reduced amount of water injected from the RWST is addressed in Issue 26).

The RWST level errors and potential for RHR pump vortexing affects large- and medium-break LOCA sequences, which require RHR pump success for core cooling success and which always require cold leg recirculation. In addition, small-break LOCA and feed and bleed sequences that are not recovered before cold leg recirculation is required are potentially affected if the HPI and charging pumps are also vulnerable to vortexing. The following sequences are predominately affected:

<u>Sequence 1- Large-break LOCA</u>:

- Large-break LOCA; and
- Failure to establish sump recirculation resulting in part from failure of the RHR pumps due to vortexing because of inadequate RWST level caused by RWST level instrument errors.

<u>Sequence 2- Medium-break LOCA</u>

- Medium-break LOCA; and
- Failure to establish sump recirculation resulting in part from failure of the RHR pumps due to vortexing because of inadequate RWST level caused by RWST level instrument errors.

<u>Sequence 3 - Small LOCA or feed and bleed cooling situation</u>

- Small-break LOCA;
- Failure to place the unit on RHR cooling prior to RWST depletion; and

- Failure to establish sump recirculation resulting in part from failure of the HPI and charging pumps due to vortexing (if applicable) because of inadequate RWST level caused by RWST level instrument errors.

Sequence 4 - Feed and Bleed following a loss of all feedwater

- Feed and bleed following a loss of all feedwater;
- Failure to recover secondary-side cooling prior to RWST depletion; and
- Failure to establish sump recirculation resulting in part from failure of the HPI and charging pumps due to vortexing (if applicable) because of inadequate RWST level caused by RWST level instrument errors.

36.3 Frequencies, Probabilities and Assumptions

Sequence 1- Large-break LOCA:

- Large-break LOCA - The frequency of a large-break LOCA is assumed to be 5×10^{-6}/yr (Ref. 7).
- Failure to establish sump recirculation resulting in part from failure of the RHR pumps due to vortexing because of inadequate RWST level caused by RWST level instrument errors. The flow-induced RWST level errors during a large-break LOCA negatively bias indicated level by up to approximately 28% of span, including instrument error. Subtracting a positive instrument error of 3.07% (Ref. 1) results in an RWST level bias of approximately 25%. Therefore, even if the West RHR pump transfer to cold leg recirculation failed and the East RHR train transfer was delayed until an indicated RWST level of 9.09% (where an automatic RHR pump trip is actuated), substantial RWST inventory would still exist. An RWST level error of at least 6.3% would exist throughout the large-break LOCA size range (see the discussion for Sequence 2). Such inventories would prevent vortexing. The probability of RHR pump failure due to vortexing in the RWST is therefore negligible.

Combining the large-break LOCA initiating event frequency (5.0×10^{-6}/yr) with the probability of RHR pump failure due to RWST vortexing (negligible) results in a negligible significance estimate for large-break LOCA.

Sequence 2 - Medium-break LOCA:

- Medium-break LOCA - The frequency of a medium-break LOCA is assumed to be 4×10^{-5}/yr (Ref. 7).
- Failure to establish sump recirculation resulting in part from failure of the RHR pumps due to vortexing because of inadequate RWST level caused by RWST level instrument errors. The flow-induced RWST level errors during a medium-break LOCA would negatively bias indicated level

to a lesser extent than for a large-break LOCA. The effect of ECCS flow on RWST level error is not precisely known, but is a sum of velocity (v) and velocity-squared (v^2) terms. Minimum RWST level error due to flow-induced effects, which would increase the likelihood of RWST vortexing, would occur if the error was dominated by v^2-terms. Since containment spray is actuated following a medium-break LOCA, the ECCS flow rate would be expected to be no less than 50% of that for a large-break LOCA (Ref. 5, Table B-1). Assuming the RWST level error is a function of v^2, an RWST level error of 25% of the large-break LOCA error, or 6.3%, can be estimated. This again would result in a significant RWST inventory at the point that the East RHR pump would trip. This inventory would eliminate the potential for East RHR pump damage due to vortexing in the RWST if transfer of the West RHR pump were to fail. The probability of RHR pump failure due to vortexing in the RWST is therefore negligible.

Combining the medium-break LOCA initiating event frequency (4.0×10^{-5}/yr) with the probability of RHR pump failure due to RWST vortexing (negligible) results in a negligible significance estimate for medium-break LOCA.

Sequence 3 - Small-Break LOCA

- Small-break LOCA; and
- Failure to place the unit on RHR cooling prior to RWST depletion.

The frequency of a small-break LOCA with failure to place the unit on RHR cooling prior to depleting the RWST and transferring to cold leg recirculation is 9.5×10^{-5}/yr, based on the model documented in Ref. 8.

- Failure to establish sump recirculation resulting in part from failure of the HPI and charging pumps due to vortexing as a result of inadequate RWST level caused by RWST level instrument errors. As described in the Summary, provided both RHR pumps are available, the HPI and charging pumps are aligned for sump recirculation in conjunction with the alignment of the West RHR train at 32% indicated RWST level.

For the purposes of this analysis a small-break LOCA is assumed to result in a peak containment pressure that does not demand containment spray. The ECCS flow rate is therefore substantially smaller than for a medium- or large-break LOCA, on the order of 500 - 1000 gpm. This low flow rate would result in little flow-induced RWST level error to offset the potential for pump damage due to vortexing if transfer of the HPI and charging pumps in conjunction with alignment of the West RHR train to the containment sump were to fail.

Using the same approach as for a medium-break LOCA, the flow-induced RWST error can be bounded. Assuming the flow-induced error is dominated by v^2-terms (which minimizes the level bias), a flow rate of 1000 gpm results in a level bias of 0.2%. This is much smaller than the nominal RWST level instrument uncertainty described in Ref. 1 (-3.75%, +3.07%). In this case, the potential may exist for vortexing-induced failure of the HPI and charging pumps if they are vulnerable to vortexing and if their realignment with the West RHR train fails.

Based on Ref. 1, air entrainment at a 2% operational limit is estimated to occur for the RHR pumps at 2.5 inches below the RHR pump trip setpoint (RWST low-low level setpoint of 9.09%). Assuming the RWST instrument error described in Ref. 1 represents $\pm 2\sigma$ of an approximately normal distribution[2], a probability of 0.4 of unacceptable RHR pump vortexing prior to RHR pump trip is estimated. Assuming the operators delay East train alignment until the ~10% indicated RWST level is reached when vortexing becomes a potential problem (this is conservative since Ref. 3 instructs the operators to transfer the operable train at 32% level if one of the trains is inoperable) and that the 0.4 probability is also applicable to the HPI and charging pumps (this is most likely conservative, considering the HPI and charging pump flow rates) and combining it with the probability of failing to align the West RHR train to the containment sump, 1.3×10^{-2} [West RHR pump suction valve IMO-320 fails to close (3.0×10^{-3}), West recirculation sump isolation valve IMO-306 fails to open (3.0×10^{-3}), West RHR pump fails to start and run (3.7×10^{-3}), HPI pump suction valve IMO-350 from West RHR heat exchanger fails to open (3.0×10^{-3}), or HPI pump suction cross-tie valves IMO-361 or -362 fail to open (2.7×10^{-4})], results in an overall failure probability of $0.4 \times 1.3 \times 10^{-2}$, or 5.2×10^{-3}.

However, for a small LOCA without containment spray, the flow rates are relatively low (less than 1000 gpm). Therefore, between initiation of sump recirculation to reaching a RWST level that could introduce vortexing, significant amount of time is available (at least 1 hour). This long time period minimizes the chance that the East RHR train transfer will be delayed until the ~10% RWST level is reached when vortexing becomes a potential problem.

Combining the frequency of a small-break LOCA with failure to place the unit on RHR cooling prior to depleting the RWST (9.5×10^{-5}/yr) with the failure probability estimated in the previous paragraph results in a most-likely conservative significance estimate for small-break LOCA of 4.9×10^{-7}/yr. When combined with the likelihood of failing to establish East RHR train recirculation before ~10% RWST level (assumed to be 0.1), the sequence frequency becomes 4.9×10^{-8}/yr.

The above frequency assumes containment spray is not actuated for a small-break LOCA. If containment spray is actuated and is not terminated by the operators, then the ECCS flow rate from the RWST would approximate that for a medium-break LOCA in the 2+-in range. In this case, the flow-induced RWST level instrument errors would offset the potential impact of vortexing (as described for a medium-break LOCA under Sequence 2) and result in a negligible significance estimate.

<u>Sequence 4 - Feed and Bleed following a loss of all feedwater</u>

- Feed and bleed following a loss of all feedwater;
- Failure to recover secondary-side cooling prior to RWST depletion.

The frequency of feed and bleed with failure to recover secondary-side cooling prior to depleting the RWST is 1.6×10^{-6}/yr, based on the model documented in Ref. 8.

---

[2] See the precursor analysis of LER 269/98-004.

- Failure to establish sump recirculation resulting in part from failure of the HPI and charging pumps due to vortexing as a result of inadequate RWST level caused by RWST level instrument errors.

  This probability is the same as developed for a small-break LOCA, 5.2×10^{-3}. See Sequence 3 - Small-Break LOCA for a description of this development.

Combining the frequency of feed and bleed with failure to recover secondary-side cooling prior to depleting the RWST (1.6×10^{-6}/yr) with the probability of failing to transfer to sump recirculation (5.2×10^{-3}) results in a significance estimate for feed and bleed of 8.3×10^{-9}/yr. When combined with the likelihood of failing to establish East RHR train before ~10% RWST level when vortexing becomes a potential problem (0.1), the sequence frequency becomes negligible.

36.4 Core Damage Frequency Calculation or the Bounding Calculation

The frequency associated with the feed-and-bleed sequence depends on the resolution of other issues affecting AFW and RHR cooling capabilities.

The change in core damage frequency associated with the potential for vortexing, offset by the negative error in indicated RWST level caused by flow-induced effects, is less than 1×10^{-6}. Therefore, if resolution of issues affecting AFW and RHR cooling do not significantly affect AFW or RHR failure probabilities, this issue, on its own, is non-risk significant.

36.5 References

1. Donald C. Cook, Units 1 & 2 Design Inspection (NRC Inspection Report No. 50-315, 316/97-201) November 26, 1997.

2. Licensee Event Report 315/97-011, Rev. 2, "Operation Outside Design Basis for ECCS and Containment Spray Pumps for Switchover to Recirculation Sump Suction," December 2, 1998.

3. Procedure 01-OHP 4023.ES-1.3, "Transfer to Cold Leg Recirculation," Rev. 4.

4. Procedure 01-OHP 4023.E-1, "Loss of Reactor or Secondary Coolant," Rev. 7.

5. Donald C. Cook, Units 1 and 2, "Justification for Past Operation," AEP-99-80, March 4, 1999. This document summarizes the results of Fauske and Associates MAAP analyses concerning sump recirculation.

6. *Loss of RHR Cooling While the RCS is Partially Filled*, WCAP-11916, July 1988.

7. J. P. Poloski, et. al., *Rates of Initiating Events at U.S. Nuclear Power Plants: 1987 - 1995*, NUREG/CR-5750, February 1999.

8. Idaho National Engineering Laboratory, *Simplified Plant Analysis Risk Model for Cook Units 1 and 2 (ASP PWR B)*, Revision 2QA, March 1998.

38.0 NRC Inspection Report No. 50-315, 316/97-201, Finding E1.2.1.2.H(b)

Event Description: Licensee's GL 89-13 Performance Trending of EDG Water Jacket Cooler Degradation Found to be Ineffective

Date of Event: August 1997

Plant: D. C. Cook, Units 1 and 2

38.1 Summary of Issue

The NRC staff conducted a design and performance review of the heat exchangers associated with the EDG water jacket coolers, lube oil, and aftercoolers at D. C. Cook, Units 1 and 2 (Cook 1 and 2) from August 4 through September 11, 1997 (Ref. 1). This review was performed based on the preliminary team findings associated with the elevated lake temperatures. Its purpose was to determine the adequacy of the testing performed by the licensee and the associated acceptance criteria contained in the licensee's program guidance for complying with Generic Letter (GL) 89-13, "Service Water System Problems Affecting Safety-Related Equipment."

The inspection team found that the licensee's GL 89-13 performance trending of EDG water jacket cooler degradation was ineffective. Performance trending of the EDG water jacket coolers consisted of flowing CCW/ESW cooling in-series through the EDG water jacket, lube oil, and aftercoolers. ESW outlet temperatures were recorded and trends were charted over several tests. Results of the temperature profile from the heat exchangers, which was used as a measure of heat exchanger degradation, indicated that temperature values were relatively constant over the several testing periods monitored by the licensee. However, the inspection team identified that the heat exchanger outlet temperature was controlled by temperature valves, which automatically regulate temperature by changing the flow rate through the heat exchangers. Therefore, the data collected by the licensee was only an indication that the temperature control valves were functioning, and not an indication of whether there was any heat exchanger degradation.

The core damage frequency associated with this issue is less than 1×10^{-6}/year, making the issue non-risk significant.

38.2 Modeling and Affected Sequences

Results of a review of operating experience at Cook do not support the increase in the failure probability of the EDG water jacket coolers due to excessive fouling beyond the nominal failure probability that is implied by this finding, for the following reasons (Note that both Cook units report EDG problems in accordance with Regulatory Guide 1.108):

- AEOD's report on EDG reliability (Ref. 2) identified only two LERs (2/92 and 9/92) submitted by Cook 1 and 2 that reported EDG train failures - neither involved problems with EDG cooling or the EDG water jacket coolers.

- A search of the SCSS database (Ref. 3) for the years 1990-98 yielded only one LER reporting problems with the emergency ac power system (including the EDG water jacket coolers) at the Cook units other than the two LERs identified in the first bullet item above. This LER reported a problem with an EDG auxiliary system that was unrelated to the EDG water jacket coolers.

- A search of NPRDS (Ref. 4) for failure records regarding the EDG cooling water system at the Cook plant for the period 1985-1995 yielded no reported failures involving the EDG water jacket coolers.

Therefore, no core damage sequences increased in frequency as a result of this condition.

38.3 Frequencies, Probabilities, and Assumptions

Since no core damage sequences increased in frequency, frequencies and probabilities were not calculated.

38.4 Core Damage Frequency Calculation or the Bounding Calculation

No core damage sequences increased in frequency as a result of this condition. Therefore, the change in core damage frequency was determined to be zero.

38.5 References

1. Donald C. Cook, Units 1 & 2 Design Inspection (NRC Inspection Report No. 50-315, 316/97-201). November 26, 1997.

2. "Emergency Diesel Generator Power System Reliability: 1987-1993," AEOD/S96-03, Idaho National Engineering Laboratory, Idaho Falls, Idaho, February 1996.

3. "Sequence Coding and Search System for Licensee Event Reports: User's Guide," NUREG/CR-3905, Nuclear Operations Analysis Center, Oak Ridge National Laboratory, Oak Ridge Tennessee 37831, August 1984.

4. Nuclear Plant Reliability Data System, Institute of Nuclear Power Operations, Atlanta, Georgia.

41.0 Improper Splice Configurations for Pressurizer Power-Operated Relief Valve Limit Switches

Event Description: Improper Splice Configurations for Pressurizer Power-Operated Relief Valve Position Indication Limit Switches

Date of Event: March 6, 1998

Plant: D.C. Cook, Units 1 and 2

41.1 Summary of Issue

On March 6, 1998, it was determined that the splices for the limit switches on the Unit 1 power-operated relief valves (PORVs) were installed without the "breakout boot" required for Environmental Qualification (EQ). A single Raychem splice was used instead of the required EQ breakout boot, which is used to splice a pair of leads to a single field cable. Although the breakout boot was installed on the Unit 2 PORV limit switches, a problem with the length of the splice overlap existed at a different splice location, resulting in the PORVs for both units being declared inoperable. The Unit 2 splice did not have the required overlap length of 2 inches and therefore did not meet EQ requirements; the root cause could not be determined. The event is described in LER 315/98-013-01 (Ref. 1).

The change in core damage frequency associated with this issue is negligible and the issue has negligible synergistic effects with other issues. Therefore, this issue will be screened out from the integrated analysis.

41.2 Modeling and Affected Sequences

Affected sequences are those that result in steam in the containment and require pressurizer PORVs for mitigation. Loss-of-coolant accidents (LOCAs) of all sizes, high energy line breaks (HELBs) inside containment, and feed and bleed sequences result in steam in the containment, but not all require pressurizer PORVs for mitigation. The sequences of interest therefore include medium LOCAs (in the event of high pressure injection failure), which require opening of 2 of 3 pressurizer PORVs for depressurization, and small LOCAs, transients, and large steamline/feedline breaks inside containment, all of which require opening of 2 of 3 pressurizer PORVs for primary bleed and feed (Ref. 2).

41.3 Frequencies, Probabilities, and Assumptions

The licensee conducted an engineering evaluation of the installed configurations. The first issue was the lack of a breakout boot, which is designed to provide a seal where two conductors leave a single conductor. The three individual Unit 1 conductors were insulated with Raychem WCSF heat shrink tubing instead of a breakout boot. The entire assembly was then covered with the same tubing. The

tubing has pre-coated adhesive whose function is to provide an environmental seal for isolating the component from moisture. The entire sleeve is then heat shrunk to seal against the conductor. The adhesive flows to provide the sealing normally provided by the breakout boot.

Raychem had qualified the breakout boots for installations exposed to direct steam impingement on a splice for a 1000 volt circuit. The existing circuits do not require protection against direct impingement because the splices are inside terminal boxes, and, because the possibility of a short circuit is a function of circuit voltage, it is considered less likely the moisture would penetrate the 250 volt circuit instead of the 1000 volt circuit. Moisture intrusion into the splices is therefore unlikely (Ref. 1).

The second issue was the Unit 2 overlap used for conductor to conductor splices. The current Raychem installation practice requires a 2-inch overlap for LOCA installations. However, overlap lengths as short as one-eighth inches have been qualified by industry testing. In addition, the application is for a 250-volt DC circuit inside terminal boxes, as opposed to a 1000 volt configuration exposed to direct steam impingement.

Although this event resulted in an unanalyzed condition and the installed configuration not meeting EQ requirements, the licensee determined that the configuration would have functioned adequately during accident and post-accident conditions.

41.4 Core Damage Frequency Calculation or the Bounding Calculation

Since no core damage sequences increase in frequency, frequencies and probabilities are not calculated. Therefore, the change in core damage frequency is determined to be zero.

41.5 References

1. LER 315/98-013-01, "Improper Splice Configurations for Power Operated Relief Valve Limit Switches Results in Unanalyzed Condition," April 17, 1998.

2. Donald C. Cook Nuclear Plant, Units 1 and 2, *Individual Plant Examination, Revision 1*, October 1995

44.0 Two Pressurizer Safety Valves Fail to Lift Within Setpoint Tolerance

Event Description: Two of three pressurizer safety valves failed to lift within TS set point tolerance of 1 percent.

Date of Event: March 4, 1998

Plant: D.C. Cook, Unit 2

44.1 Summary of Issue

On March 4, 1998, two of three Unit 2 pressurizer safety valves were found to have lift points that exceeded their Technical Specification (TS) value by more than the 1 percent tolerance allowed. The event was reported as an unanalyzed condition and as an operation prohibited by the plant's TS (Ref. 1). One valve lifted at 1.52 percent above the TS value, and the other at 3.42 percent above the TS value. The valves failed to lift due to set point drift; no cause of the set point drift was identified.

The change in core damage frequency associated with this issue is negligible and the issue has negligible synergistic effects with other issues. Therefore, this issue will be screened out from the integrated analysis.

44.2 Modeling and Affected Sequences

Affected sequences are those that require pressurizer safety valves for accident mitigation. The sequences of interest therefore include anticipated transient without scram (ATWS) events (if the transient is initiated from 40 percent power or greater), which require opening of three of three pressurizer safety valves (in addition to opening of pressurizer PORVs) for primary pressure relief, and transients, which may require opening of safety valves as backups for pressurizer PORVs for primary bleed and feed (Ref. 2).

44.3 Frequencies, Probabilities, and Assumptions

The reactor vessel and pressurizer were designed to Section III of the ASME Boiler and Pressure Vessel code which allows a maximum transient pressure of 2735 psig, 110 percent of the design pressure (2485 psig). The highest found lift point, 2570 psig, would not have allowed the reactor coolant system to exceed 110 percent of the design pressure. Based on Updated Final Safety Analysis Report (UFSAR) Table 4.1-2 (Ref. 3), the hydrostatic test pressure (cold) is 3106 psig. Therefore, the minor deviation in the lift point does not increase the reactor coolant system (RCS) failure probability due to overpressure. The licensee intends to submit a TS revision for Unit 2 to change the se tpoint tolerance to plus or minus 3 percent. This revision will make the Unit 2 TS consistent with the Unit 1 TS.

According to the UFSAR, the charging pumps at Cook have a maximum discharge pressure of 2740 psig (Ref. 3). Therefore, even at the highest lift point of 2570 psig, the charging pumps are capable of performing feed and bleed using the pressurizer safety valves.

According to the Cook IPE (Ref. 2), ATWS sequences that initiate at power levels grater than 40 percent, require three out of three pressurizer safety valves to control RCS pressure. Setpoint drift could cause a small delay in opening of two of the three as-found safety valves, but would not impact their functionality. Considering that the RCS hydrostatic test pressure is 3106 psig and the highest as-found safety valve lift point was 2570 psig, and the very low frequency of ATWS events, the potential increase in core damage frequency due to the ATWS sequence is negligible.

Although this event resulted in an unanalyzed condition and operation prohibited by the plant's TS, maximum RCS pressure would not have been exceeded. Therefore, no core damage sequences were affected

44.4 Core Damage Frequency Calculation or the Bounding Calculation

Since no core damage sequences increase in frequency, frequencies and probabilities are not calculated. Therefore, the change in core damage frequency is determined to be zero.

44.5 References

1. LER 316/98-003, "Two Pressurizer Safety Valves Fail to Lift Within Setpoint Tolerance" April 1, 1998.

2. Donald C. Cook Nuclear Plant, Units 1 and 2, *Individual Plant Examination, Revision 1,* October 1995

3 Donald C. Cook Nuclear Plant, Units 1 and 2, *Updated Final Safety Analysis Report.*

53.0 LER No. 316/98-005

Event Description: Potential for High Energy Line Break to Degrade Component Cooling Water System

Date of Event: July 1998

Plant: Donald C. Cook Nuclear Plant, Units 1 and 2

53.1 Event Summary

On July 15, 1998, with Donald C. Cook Nuclear Plant, Units 1 and 2 (Cook 1 and 2) in cold shutdown, it was determined that a postulated crack in a D.C. Cook Unit 2 main steam line could degrade the ability of the component cooling water (CCW) pumps to perform their design function (Ref. 1). The CCW pumps for both units are adjacent to one another in a semi-enclosed area in the Auxiliary Building. Next to the area where the pumps are located is a pipe chase enclosing two Unit 2 main steam lines and a main feedwater line. This pipe chase can be accessed through any one of three doors. Although the pipe chase walls provide a qualified high energy line break (HELB) barrier, the licensee could find no calculations which show that the doors would withstand the energy released from a postulated critical crack. The CCW pump motors and other equipment are not qualified for a high temperature/high humidity environment. As a result, if the postulated HELB were to occur, the potential would exist for both units to suffer a total loss of CCW.

The estimated conditional core damage probability (CCDP) associated with this condition is 6.9×10^{-5}. This is an increase (importance) of 1.3×10^{-5} over the nominal core damage probability (CDP) for a one-year period for Cook 1 of 5.6×10^{-5}. The same results apply to Unit 2 as well.

53.2 Event Description

On July 15, 1998, with both units in Operating Mode 5, cold shutdown, the licensee determined that a postulated crack in a Unit 2 main steam line could degrade the ability of adjacent CCW pumps for both units to perform their design function. The condition was reported on August 14, 1998, as an unanalyzed condition in Interim LER 316/98-005, Rev. 0, (Ref. 1).

The CCW pumps for both units are adjacent to one another in a semi-enclosed area in the Auxiliary Building. Next to the area where the CCW pumps are located is a pipe chase enclosing two Unit 2 main steam lines and a main feedwater line, which can be accessed through any one of three access doors. Although the walls of the pipe chase provide a qualified HELB barrier, the licensee was unable to find any calculations which show that these access doors would withstand the energy released from a postulated critical crack in a high energy line. The CCW pump motors and other equipment are not qualified for the high temperature/high humidity environment that would exist following a HELB.

53.3 Additional Event-Related Information

As stated above, there are two main steam lines and one main feedwater line running through the pipe chase of interest. This pipe chase contains only main steam and main feedwater (large bore) piping. There are no small bore high energy branch lines in this area. The licensee's preliminary investigation found that there are no high stress pipe segments in this area which are vulnerable to cracks or breaks. There are three access doors between the pipe chase and CCW room, which open into the CCW room. The length of piping adjacent to each of the doors is about 20 to 30 feet, which means a total of about 60 to 90 feet are situated near the doors. This represents an estimated five percent of all of the high energy piping in the plant (Ref. 2).

References 2 and 3 provides the following information: The pipe chase in question communicates with a steam tunnel, which is a large area. Roughly 50 percent of the total high energy piping in the plant is located in this area. A postulated failure of the high energy piping in this large area could send steam into the pipe chase adjoining the CCW rooms. If the pressure increase due to the postulated piping failure is high enough, then the doors from the pipe chase to the CCW pump room may open, and allow steam to enter that room. No calculations were available which showed whether a break in a location in the steam tunnel could create a pressure increase large enough to open doors to the CCW pump room. However, based on References 2 and 3, it is known that one end of the steam tunnel is open to the turbine building. Therefore, the turbine building provides a large, potential escape path for steam generated from postulated breaks in the piping in the steam tunnel. The other end of the steam tunnel is also open to a very large, potential steam escape volume. Due to the existence of these potential escape paths, only those postulated pipe breaks that occur close to the doors leading from the pipe chase to the CCW rooms are likely to send steam into the room that houses the CCW pumps.

53.4 Modeling Assumptions

The frequency of HELBs in main steam lines and main feedwater lines used in this analysis was derived from data in NUREG/CR-5750 (Ref. 5). In this report, the mean frequency per critical year for steam line breaks/leaks outside containment, based on seven events in 729 critical years, is estimated to be 1.0×10^{-2} per year. The frequency for feedwater breaks/leaks, based on two events in 729 critical years, is 3.4×10^{-3} per year.

Of the seven steam line events that contributed to the 1.0×10^{-2} per year frequency, only one occurred in a main steam line. Since the area next to the CCW rooms contains only main steam lines (i.e., no small bore piping or branch lines), only this event was considered applicable to the issue being analyzed. However, this event was also dismissed from further consideration, since it consisted of a sample probe failure in a main steam line that would not have been large enough to pressurize the large area and cause a door to open. The frequency for steam line breaks/leaks was therefore estimated to be 7×10^{-4} per year, using Bayesian update methods with 0 events in 729 critical years.

Based on Reference 5, the two events that contribute to the main feed line break frequency occurred at Millstone Point Units 2 and 3. The root causes of both these breaks were erosion and corrosion. Therefore,

these two failures may be applicable to the area under consideration. (Reference 6, the mechanical engineering branch technical position, MEB 3-1, does not provide a basis to exclude these failures from the initiating event frequency calculation for this area, since it does not require postulation of failures attributed to erosion and corrosion.) As a result, the estimated frequency remained at 3.4×10^{-3} per year.

The criticality factor for Cook Unit 2 is 0.68 (Ref. 5). The criticality factor for Unit 2 was used in this analysis to calculate the initiating event frequency rather than the factor for Unit 1 because the piping in the pipe chase of concern is associated with Unit 2. As a result, the frequency is 4.7×10^{-4} per year ($0.68 \times 7 \times 10^{-4}$) for steam line breaks/leaks, and 2.3×10^{-3} per year ($0.68 \times 3.4 \times 10^{-3}$) for feedwater breaks/leaks. The frequency of HELBs is therefore the sum of the two frequencies, or 2.8×10^{-3} per year.

The above estimate applies to HELBs in main steam lines or main feedwater lines anywhere in the plant. To determine the initiating event frequency in the specific area of interest, the above frequency is multiplied by 0.05, the percentage of the piping in the pipe chase that is located in the vicinity of the doors. Steam from a pipe break anywhere in the tunnel could potentially enter the pipe chase. However, due to the large potential escape paths, it was assumed that only breaks which occurred in the piping in the vicinity of the doors to the room that houses the CCW pumps would be capable of opening any one of the three doors. Since approximately 5% of the piping is in the vicinity of the doors, the estimated frequency of HELBs in the area of interest is therefore $0.05 \times 2.8 \times 10^{-3}$, or 1.4×10^{-4} per year.

As stated in Reference 1, the CCW pump motors and associated equipment are not qualified for the high temperature/high humidity environment. Operating experience was reviewed to investigate the response of pumps that are not qualified to high humidity to events that impose those environmental conditions on these pumps. First, approximately 80 LERs that reported water spray, cascade, flood, or high humidity problems affecting pumps were identified using the sequence coding and search system (SCSS). Of these, a sample of approximately 50% were reviewed and 4 were identified for detailed review, since they contained information on pumps impacted by steam environments. The review identified whether the pumps failed when subjected to high humidity or temperature environment. If a failure did occur, the nature of the failure was examined to determine the recoverability. Some observations from this review are as follows. Of the four events that were reviewed in detail (LER 302/91-003 and 251/90-008), during two events, pumps failed when exposed to steam environment due to moisture intrusion in to the motor winding. These did not appear to be recoverable. There was one event where the pumps continuously ran even when water had collected in the lower motor bearings (LER 285/92-031). The forth event (LER 272/90-033) appeared to be a recoverable pump failure. Exact count of failures and demands could not be used to estimate a failure probability due to biases in reporting failed versus successful pumps exposed to moisture. However, in light of these observations, a probability of 0.5 appears to be a reasonable estimate for the probability of failing both CCW pumps and the spare CCW pump when exposed to the steam environment. Considering the nature of the failures (e.g., shorts in motor windings), it was assumed that for recovery is not credible.

If the CCW pumps failed due to the postulated steam environment, cooling to the reactor coolant pump (RCP) seals would be lost. Even though the RCP seals can also be cooled by seal injection, since the charging pumps require CCW for charging pump seal cooling, the seal injection function would also be lost. With no seal cooling, the Westinghouse type RCP seals would degrade rapidly. The D. C. Cook Nuclear Plant Individual Plant Examination (IPE) (Ref. 4) assumes that the RCP seals will fail with a probability of 1.0 if

seal cooling is unavailable for one hour. This assumption is overly conservative since all 8 RCPs at D.C. Cook Units 1 and 2 have newer high temperature seals. Based on the RCP seal failure models suggested NUREG/CR-4550 (Ref. 7), for new high temperature seals, the failure probability when seal cooling is lost for an extended period is 0.19.

If an RCP seal LOCA were to occur, according to the modeling discussed in the Cook IPE (Ref. 4), and based on actual RCP seal LOCA events, high pressure injection (high pressure, low volume) is needed to mitigate the accident. However, all four high pressure injection pumps at the D. C. Cook plant are cooled by CCW, so a loss of CCW would lead to a loss of high pressure injection. According to the D.C. Cook FSAR (Ref. 3), all high pressure injection (HPI) pumps at Cook are highly dependent on CCW. The seal and lube oil heat exchangers of the two safety injection pumps are cooled by CCW. In addition, the pump gear, lube oil, and seal exchangers of the centrifugal charging pumps are also cooled by CCW. Even if the HPI pumps could inject for a short duration, in order to terminate the RCP seal LOCA and stabilize the reactor coolant system (RCS), the RCS must be cooled down and depressurized. With CCW unavailable, the operator would be expected to trip the RCPs. Therefore, forced circulation would be unavailable. With only natural circulation in the RCS and auxiliary feedwater (AFW) available, it is unlikely that the RCS would be stabilized before the HPI pump seals would be damaged due to loss of cooling. Therefore, the probability of failure of all HPI pumps, given that CCW was unavailable, was assumed to be 1.0.

Since the CCW for both units would have failed due to the steam environment, cross-tie capability was not credited in this analysis.

53.5 Analysis Results

Figure 1 shows the accident sequence that leads to core damage. This sequence consists of the following:

- A main steam line break occurs in the high energy pipe chase in the vicinity of one of the three doors leading to the CCW pump room
- Failure of running and standby CCW pumps and the spare CCW pump due to high humidity and high temperature environment
- Failure of RCP seals given failure to recover any CCW pump and restore seal cooling to the RCPs
- Failure to recover HPI pumps prior to core uncovery

The results of this analysis is based on one key assumption. Since there are no calculations showing the capability of the CCW pump room pipe chase access doors to withstand the pressures created by steam line or main feed line breaks, at least one of them would open during a break, allowing steam to enter the CCW pump room.

Since failure of the CCW pumps would cause an RCP seal LOCA and would also fail the mitigating capability (i.e., the HPI pumps), a steam line break or a main feedwater line break in the vicinity of these doors will lead to core damage. Thus the conditional core damage frequency (CCDF - conditional frequency

of subsequent core damage given the failures observed during an operational event) associated with this condition becomes the is 1.3×10^{-5} ($1.4 \times 10^{-4} \times 0.5 \times .19$) per year. The overall nominal core damage frequency is 5.6×10^{-5} per year [estimated using the NRC's standardized plant risk analysis (SPAR) model for the D. C. Cook plant]. Therefore, the conditional core damage frequency (CCDF) is $1.3 \times 10^{-5} + 5.6 \times 10^{-5} = 6.9 \times 10^{-5}$ per year. For a one year period, the associated CCDP is $1 - \exp[(6.9 \times 10^{-5}/\text{year}) \times (1 \text{ year})] = 6.9 \times 10^{-5}$. The nominal CDP for the same period is $1 - \exp[(5.6 \times 10^{-5}/\text{year}) \times (1 \text{ year})] = 5.6 \times 10^{-5}$. Using these two values, an increase in CDP (importance) of $6.9 \times 10^{-5} - 5.6 \times 10^{-5} = 1.3 \times 10^{-5}$ is estimated.

53.6 Acronyms

AFW	auxiliary feedwater
CCDF	conditional core damage frequency
CCDP	conditional core damage probability
CDF	core damage frequency
CDP	core damage probability
CCW	component cooling water
HELB	high energy line break
HPI	high pressure injection
IPE	individual plant examination
LOCA	loss-of-coolant accident
RCP	reactor coolant pumps
RCS	reactor coolant system

53.7 References

1. LER 316/98-005, "Potential for High Energy Line Break to Degrade Component Cooling Water System," August 14, 1998.

2. Personal communications, R. J. Stakenborghs (American Electric Power) and S. Weerakkody (U. S. Nuclear Regulatory Commission), July 13 and 15, 1999.

3. *Donald C. Cook Nuclear Plant, Units 1 and 2, Updated Final Safety Analysis Report.*

4. *Donald C. Cook Nuclear Plant, Units 1 and 2, Individual Plant Examination Revision 1*, October 1995.

5. J. P. Poloski, et. al., *Rates of Initiating Events at U.S. Nuclear Power Plants: 1987 - 1995*, NUREG/CR-5750, December 1998.

6. Relaxation in Arbitrary Intermediate Pipe Rupture Requirements (Generic Letter 87-11), Branch Technical Position MEB 3-1, "Postulated Rupture Locations in Fluid System Piping Inside and Outside Containment," Rev. 2, June 1987.

7. "Analysis of Core Damage Frequency for Internal Events: Expert Judgement Elicitation," NUREG/CR-4550, Vol. 2, April 1989.

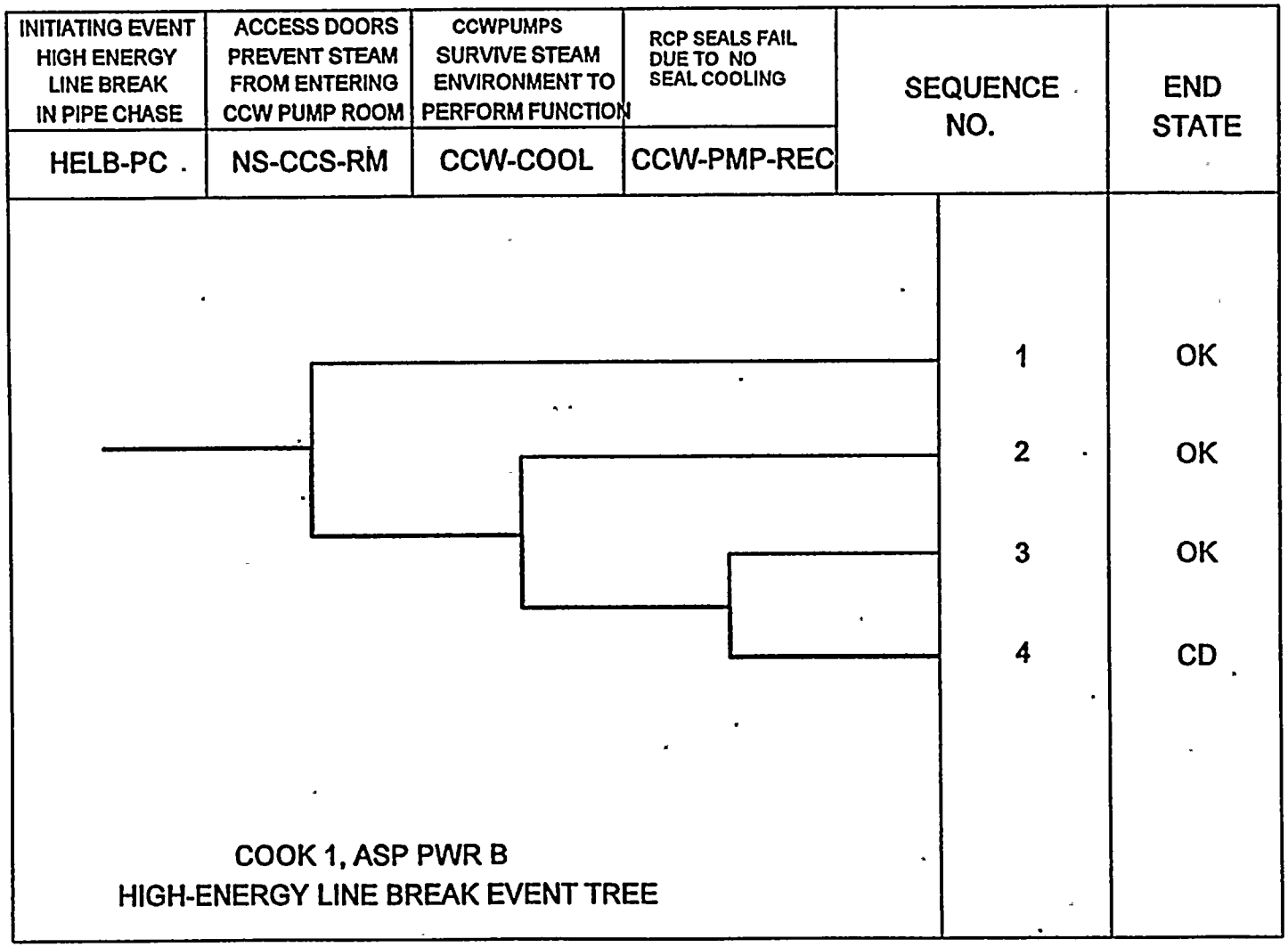

FIGURE 1 : ISSUE - 53

Fig. 1 Dominant core damage sequence for LER No. 316/98-005.

65.0 LER Nos. 315/98-01, 04, 05, 06, 07, 10, 15, 17, 24, 26, 32, 37; 316/98-04

Event Description: "As Found" Conditions in the Ice Condenser Containment Not in Accordance with Design Basis

Date of Events: January 4- August 30, 1998

Plant: D. C. Cook, Units 1 and 2

65.1 Summary of Issue

The issues considered in this risk assessment are associated with the performance of the ice condenser containment. Thirteen Licensee Event Reports (LERs) were issued by D. C. Cook as the result of questions raised by an NRC inspection in 1998 (Ref. 1). The inspection identified several degraded conditions of the ice baskets. An assessment of the "as found" conditions in the ice condenser was made by the licensee with assistance from Westinghouse (Ref. 2). SCIENTECH was contracted by the licensee to conduct an independent review of the analyses and evaluation conducted by the licensee and Westinghouse (Ref. 3).

The 13 LERs that describe "as found" containment performance conditions can be grouped into three safety functions: (1) ice condenser bypass, (2) ice basket structural integrity, and (3) ice condenser performance. These three safety functions maintain the peak containment pressure within its design capability during a postulated loss-of-coolant accident (LOCA) or main steam line breaks (MSLB) inside containment. The LERs are listed in References 4-16. These issues are summarized below.

The synergistic effects of all ice condenser issues except those associated with postulated earthquakes are included in this assessment. The aggregated impact of issues 6, 8, 52, 65, 67, 68, 69, 71, 72, 73, 74, and 75 are considered here. This assessment addresses the aggregate of the 12 issues on the containment overpressure failure and the associated core damage sequence. The impact on core damage sequences due to debris in the containment sump and the ice condenser are addressed under issues 26 and 28, respectively.

The change in core damage frequency associated with the aggregate impact of all conditions is less than 1×10^{-6}/year, making these issues non-risk significant. In addition, the increase in the probability of containment failure due to overpressure, as a result of the aggregate impact of all ice condenser issues considered in this assessment, is negligible. Therefore, the synergistic effects of the 12 issues have no impact on containment performance.

Ice condenser bypass. Ice condenser bypass is a condition where steam released from a pipe break LOCA can flow directly from the lower compartment into the upper deck area without being condensed in the ice condenser. According to the D. C. Cook Updated Final Safety Analysis Report (UFSAR), the design basis (maximum) bypass flow area around the ice bed is five square feet (Ref. 17, Section 5.2.2.4).

Three LERs (LERs: 315/98-001-2, 316/98-004-1, 315/98-037-1) reported that the accumulative area of potential ice condenser bypass in the "as found" condition was about 36.5 square feet for Unit 1 and 35.0 square feet for Unit 2.

The safety issue concerning the "as found" increase area of ice condenser bypass is the potential for the peak containment pressure exceeding design limits, thereby potentially impacting containment integrity.

Ice basket damage. The D. C. Cook containment contains 1,944 ice baskets in 24 bays (81 baskets per bay). Each ice basket is approximately 48 feet in length and 12 inches in diameter. Plant technical specifications require that a sample of 144 buckets be weighed every 18 months. The technical specifications also provide requirements on the sampling and additional testing when an ice basket fails to meet the minimum weight requirement. Damage to the ice baskets was found to have occurred during ice-weighing in which the ice baskets must be slightly picked up. Damage included buckled bottoms, broken ligaments, bent rims, dents, damaged weldments, basket deformation, unpinned baskets, and missing or broken connecting screws from vertical ice basket sections (LERs: 315/98-005-3, 315/98-006-2, 315/98-032-0).

The safety issue concerning the "as found" condition of the ice baskets is the potential ejection of loosened and broken baskets from the ice bed during an accident. A displaced ice basket could affect the ice bed geometry during an accident, thereby creating bypass flow routes. Also, ejected ice baskets could impact structures or equipment located in the upper containment compartment.

Ice condenser performance. Several LERs were issued that identified "as found" conditions in the ice condenser containment relating to ice mal-distribution and steam flow mal-distribution conditions. The ice mal-distribution conditions were due to unweighed, under- and over-weight ice baskets caused by non-conservative assumptions in surveillance procedures and supporting software programs (LERs: 315/98-007-1, 315/98-015-1, 315/98-024-0, 315/98-026-0); and ice displacement caused by three barrel loads of debris found in the ice baskets during ice melt/replacement (LER 315/98-017-1). The steam flow mal-distribution conditions were caused by partially blocked ice channels between ice baskets caused by flow blockage due to excessive frost build-up in the channels between ice baskets (LER 315/98-004-2).

The minimum technical specifications weight requirement for an ice basket is 1,333 pounds. An NRC inspection report (Ref. 1) reports that out of 1,944 ice baskets, the licensee determined that 221 baskets in Unit 1 and 171 baskets in Unit 2 have never been weighed. In addition, a sample of 54 of these baskets in Unit 2 was weighed. About 75% of the baskets sampled were less than the technical specifications minimum weight. The lightest ice basket weighed 800 pounds. Several baskets had missing ice in segments ranging from 6 to 18 feet in height.

Based on a 100% inspection, the flow passage blockage was estimated to be 6.7% to 18.8% per bay in Unit 1 and 4.1% to 17.4% per bay in Unit 2. Ten of the 24 bays were found with blockages greater than 15%. The flow passages in between the ice baskets must be kept clear of obstruction to assure even steam

flow through the ice beds during a post-accident period. The technical specifications do not state what amount of blockage in flow passages renders the ice condenser inoperable. However, LER 315/98-004-2 stated that in response to previous instances of flow passage blockages, a blockage limit of 15% of the total upward flow area was determined based on the analysis performed for the Unit 1 Reduced Temperature and Pressure program.

65.2 Affected Containment Failure Modes and Core Damage Sequence

Any accident that releases energy to containment relies on the ice condenser for heat removal from the containment. Containment heat removal is essential to keep the peak containment pressure below the design value. At the D. C. Cook plant, the containment pressure is controlled by two systems. In the short-term, the ice condenser and the containment spray remove heat from the containment atmosphere by condensing steam. In the long-term, the containment spray system, which is equipped with a heat exchanger, recirculates water from the containment recirculation sump and removes heat from the containment.

Conditions that bypass steam flow routes around ice baskets (due to ejected ice baskets and bypass openings greater than analysis assumptions) or limit pressure suppression performance of the ice condenser (due to mal-distributed ice and steam flow through the baskets) will result in the reduction in steam condensation. If steam does not adequately condense, the pressure rise in the containment will not be arrested and the peak pressure may be exceeded. If the peak pressure exceeds the design value, there is a probability that the containment will fail due to overpressure. As a result, the sump recirculation capability may be affected since a breached containment has the potential to reduce the available net positive suction head for the residual heat removal pumps. In addition, a cracked containment may allow water to bypass the recirculation sump.

The following accidents release energy to the containment: (1) a LOCA of any size, (2) MSLB inside containment, and (3) an accident condition which relies on the feed and bleed cooling capability. Of these accidents, only LOCAs and feed and bleed sequences resulting from MSLBs are considered since other systems or actions required to mitigate MSLBs (isolation of the break and cooldown with intact loops) are unaffected by loss of containment integrity.

Therefore, the sequence of interest is as follows:

- Any size LOCA, or feed and bleed cooling scenario; and
- Sump recirculation failure due to inadequate inventory for sump recirculation. Inadequate containment performance causes containment failure due to excessive containment overpressure. A ruptured containment boundary results in excessive steam bypass and loss of sump inventory.

65.3 Frequencies, Probabilities, and Assumptions

The D. C. Cook containment design basis criterion is 12 psig. The UFSAR states that the maximum calculated pressure for various postulated design basis accident scenarios is 11.49 psig (Ref. 17, Section 14.3.4.1.3.1). The failure pressure of the containment is much greater than the design pressure of 12 psig, based on the D. C. Cook Individual Plant Examination (Ref. 18, Section 4.2.1). The Individual Plant Examination (IPE) reports that the high condition low probability failure limit for the containment is 36 psig. That is, there is 95% confidence that at 36 psig the probability containment failure is less than 5%. As shown in the attached figure (from Ref. 18, Figure 4.2-1), the containment failure probability is near zero at peak pressures less than about 30 psig. Further, the licensee reported in a letter to the former Atomic Energy Commission dated July 24, 1973, that the containment for Unit 1 was subjected to an internal pressure of 16.1 psig during a containment integrity check in 1973 with no evidence of damage to the integrity of the containment.

65.4 Effect on Containment Failure and Core Damage Sequence

The three issue groups relating to the performance to the ice condenser containment are assessed qualitatively to determine the change in containment performance using realistic (rather than design basis) failure limits, redundancies, and the magnitude of degradations. The assessment of containment performance based on "as found" conditions is discussed in three parts. First, the effect on the peak containment pressure due to the ice condenser bypass issue is discussed. Second, the synergistic effect on the peak containment pressure due to ice condenser performance (mal-distributions) and ice basket damage issues is presented. Finally, the synergistic effect of all three issue groups concludes this assessment.

Ice condenser bypass. The cumulative effect of the "as found" bypass flow paths was 36.5 square feet for Unit 1 and 35.0 square feet for Unit 2. The UFSAR states that the design basis bypass area is 5 square feet (Ref. 17, Section 5.2.2.4). The UFSAR describes the accident analyses for different size pipe breaks and the allowable ice condenser bypass flow for each case. Analysis results indicate a value of 35 square feet as the allowable deck leakage area for the entire spectrum of break sizes (Ref. 17, Table 14.3.4-2). The limiting case is an 8-inch break with one spray pump operating at 2000 gpm (80 degrees F), which results in a peak containment pressure of 12.0 psig. The design flow rate of one containment spray pump is 3200 gpm (Ref 17, Table 6.3-1). An 8-inch break with two spray pumps operating (4000 gpm at 80 degrees F) results in a peak containment pressure of 12.2 psig with a 56 square foot bypass area. Thus, the identified historical value of bypass of about 36 square feet for Unit 1 and about 35 square feet for Unit 2 is bounded by UFSAR analysis when assuming the operation of both containment spray pumps, but is outside of the ice condenser design basis value of 5 square feet.

Ice basket damage. The safety issue concerning the "as found" conditions of the ice baskets is the potential ejection of loosened and broken baskets from the ice bed during an accident. An ejected ice basket affects the ice bed geometry during an accident, thereby creating bypass flow routes. All of the "as found" ice basket damage conditions are bounded by the potential degraded ice basket condition reported in LER 315/98-006-2. This LER reported a deficiency in the surveillance procedure for

weighing ice baskets. The procedure contained a step which potentially allowed the unpinning of up to 60 ice baskets during Modes 3 and 4.

The LER reported that the safety significance of 60 baskets ejecting during a postulated accident has been evaluated by Westinghouse for two cases: unobstructed baskets and obstructed baskets. During a postulated accident, if unobstructed baskets are not secured at the bottom rim, they could eject 13 feet 5 inches upward into the upper plenum area of the ice condenser due to blowdown forces. Unobstructed baskets are those baskets that are not impeded by an intermediate deck frame. The upward displacement of these baskets would not be enough to open steam bypass flow routes around the ice condenser.

For the obstructed baskets that are located below the intermediate deck frames, multiple unsecured baskets ejecting simultaneously and impacting an intermediate deck frame in one bay may cause the frame to plastically deform. However, this scenario was judged by Westinghouse to be extremely unlikely for the following reasons: (1) basket columns would need to be of identical weight and exert identical frictional forces on the lattice steel framework; (2) no lateral forces could be exerted against the basket columns during the blowdown, and (3) basket columns would need to have exactly the same net uplift force transient. Further, it was judged that the current calculated subcompartment loadings for the peak differential pressure across the shell, the operating deck, the lower crane wall, and the upper crane wall will essentially be unaffected whenever the effects of the 60 unpinned baskets is considered.

The LER concluded that the possibility of the unpinned ice baskets or ice basket columns ejecting from the ice bed is extremely remote. If an ejection were to occur, the resultant configuration would not prevent the ice condenser from performing its intended function. A recent evaluation by Westinghouse reported in Reference 2 supported this earlier conclusion.

Ice condenser performance. The safety issue concerning the performance of the ice condenser involves the mal-distribution of steam flow through the ice baskets due to partially blocked ice channels between baskets, and mal-distribution of ice the baskets due to underweight or missing ice. Reference 2 reports the results of the licensee's analysis to determine the peak containment pressures for design basis LOCAs and MSLBs for the "as found" condition of the ice condenser containment. The results of an earlier analysis that was performed by Westinghouse for the licensee in May 1998 are referenced in this document.

The analysis used the NRC-approved LOTIC containment response computer code. Models were developed to include the varying weights of ice in the baskets, the partially blocked ice channels between ice baskets, and the effects of a steam flow bypass through the ice condenser due to postulated ice basket displacement caused by blowdown forces. In addition, the models included an increase in the total ice mass that closely represents the actual mass of the ice in the ice condenser. The total mass of ice used in the analysis was 2.53E+6 pounds. The "as found" weight of the ice was estimated by the licensee[1] to be

[1] Rough estimates of ice weights in the Units 1 and 2 ice condensers were provided by the licensee. The ice weights were estimated from ice melt volumes as the result of ice replacement operations in 1998. The estimates factored the volume of ice melt in the temporary ice melt tanks, the volume of water spilled in the containment, and specific gravity. These estimates are not design verified calculations.

2.7E+6 pounds in Unit 1 and 2.8E+6 pounds in Unit 2. The minimum technical specification for the total ice weight at the time of plant shutdown was 2.37E+6 pounds. The total mass assumed in the UFSAR analysis was 2.11E+6 pounds.

From Reference 2, the increased ice mass resulted in a calculated peak containment pressure of 11.2 psig, which is below the current UFSAR analysis of 11.49 psig. The slight reduction in the calculated peak pressures is attributed to the utilization of enhanced heat sink modeling and increased initial ice mass (420,000 pounds more or a 20% increase). This shows that even a 12% decrease in the minimum mass of ice as required by the technical specifications (at the time plant shut down) has little effect on the peak pressure.

Reference 2 further reports the results of an earlier analysis that considered the increase in ice mass (2.53E+6 pounds) and three synergistic conditions discussed above: (1) mal-distribution of ice weight in the baskets, (2) mal-distribution of steam flow through the baskets, and (3) effects of flow bypass due to ice basket displacement during an accident. The peak containment pressure calculated under these conditions is 11.92 psig or 0.71 psig higher than the identical LOTIC analysis that assumed only the increase in ice mass (i.e., 11.2 psig).

Synergistic effects of all three safety issues. From the assessment of the synergistic effect of "as found" ice and steam flow mal-distributions, and flow bypass from postulated partially ejected ice baskets, the peak containment pressure calculated by Westinghouse is 11.92 psig. The increase in the peak pressure as the result of this synergistic effect is less than 1 psig for a large break LOCA or MSLB.

From a UFSAR sensitivity analysis that calculated peak containment pressures for varying sizes of LOCAs and bypass flows areas, the worst case break size resulted in a peak containment pressure of 12.2 psig for a 35 square foot bypass area. This analysis assumes one-third the total design flow rate of both containment spray pumps.

The combined effects of a 36 square foot bypass flow area and slight reduction in ice condenser performance will be well below the 35 psig containment failure pressure assumed in the IPE.

In light of this information, the probability of the peak pressure exceeding the containment failure pressure leading to sump recirculation failure due to these "as found" ice condenser containment conditions is negligible. Therefore, the change in core damage frequency associated with the affected sequence is zero.

65.5 References

1. U.S. Nuclear Regulatory Commission Inspection Report No. 50-315/98005(D.S.); 50-316/98005 (D.S.), April 10, 1998

2. Westinghouse Electric Company, "Donald C. Cook Nuclear Plant Units 1 and 2, Justification for Past Operation," EP-99-080, Pittsburgh, PA., March 4, 1999.

3. SCIENTECH, Inc. "Safety Assessment of D. C. Cook Units 1 and 2 "As Found" Condition Prior to Plant Shutdown," Golden CO., February 22, 1999.

4. LER 315/98-001, Revision 2, "Containment Air Recirculation System Flow Testing Results Indicate Condition Outside the Design Basis," event date January 4, 1998.

5. LER 315/98-004, Revision 2, "Inadequate Maintenance and Surveillance Practices Results in Restricted Ice Condenser Flow Passages," event date January 22, 1998.

6. LER 315/98-005, Revision 3, "Screws Missing from Ice Condenser Ice Basket Coupling Rings Results in Potential Unanalyzed Condition," event date January 22, 1998.

7. LER 315/98-006, Revision 2, "Ice Basket Weighing Option Results in Potential Unanalyzed Condition Due to Lack of Technical Basis for Option," event date February 25, 1998.

8. LER 315/98-007, Revision 1, "Ice Condenser Weights Used to Determine Technical Specification Compliance Not Representative," event date February 11, 1998.

9. LER 315/98-010, Revision 1, "Ice Condenser Intermediate Deck Doors Structural Discrepancies Result From Failure to Follow Procedures, " event date March 3, 1998.

10. LER 315/98-015, Revision 1, "Ice Weight Requirements Potentially Not Met Due to Nonconservative Assumption in Software Program, " event date March 12, 1998.

11. LER 315/98-017, Revision 1, "Debris Recovered from Ice Condenser Represents Unanalyzed Condition," event date March 27, 1998.

12. LER 315/98-024, Revision 0, "Allegation Concerning Accuracy of Ice Basket Weights," event date April 17, 1998.

13. LER 315/98-026, Revision 0, "Technical Specification Surveillance Requirement 4.6.5.1.b.2 Not Met Due to failure to Accurately Transfer Requirements into Plant Procedure," event date April 30, 1998.

14. LER 315/98-032, Revision 0, "Defective and Missing Ice Condenser Basket Welds Represents Unanalyzed Condition and 10 CFR Part 21 Report," event date June 6, 1998.

15. LER 315/98-037, Revision 1, "Ice Condenser Bypass Leakage Exceeds Design Basis Limit of Five Square Feet," event date August 12, 1998.

16. LER 316/98-004, Revision 1, "Ice Condenser Bypass Potentially in Excess of Design Basis Limit," event date March 19, 1998.

17 Donald C. Cook Nuclear Plant, Units 1 and 2, Updated Final Safety Analysis Report.

18. Donald C. Cook Nuclear Plant, Units 1 and 2, Individual Plant Examination, Revision 1, October 1995.

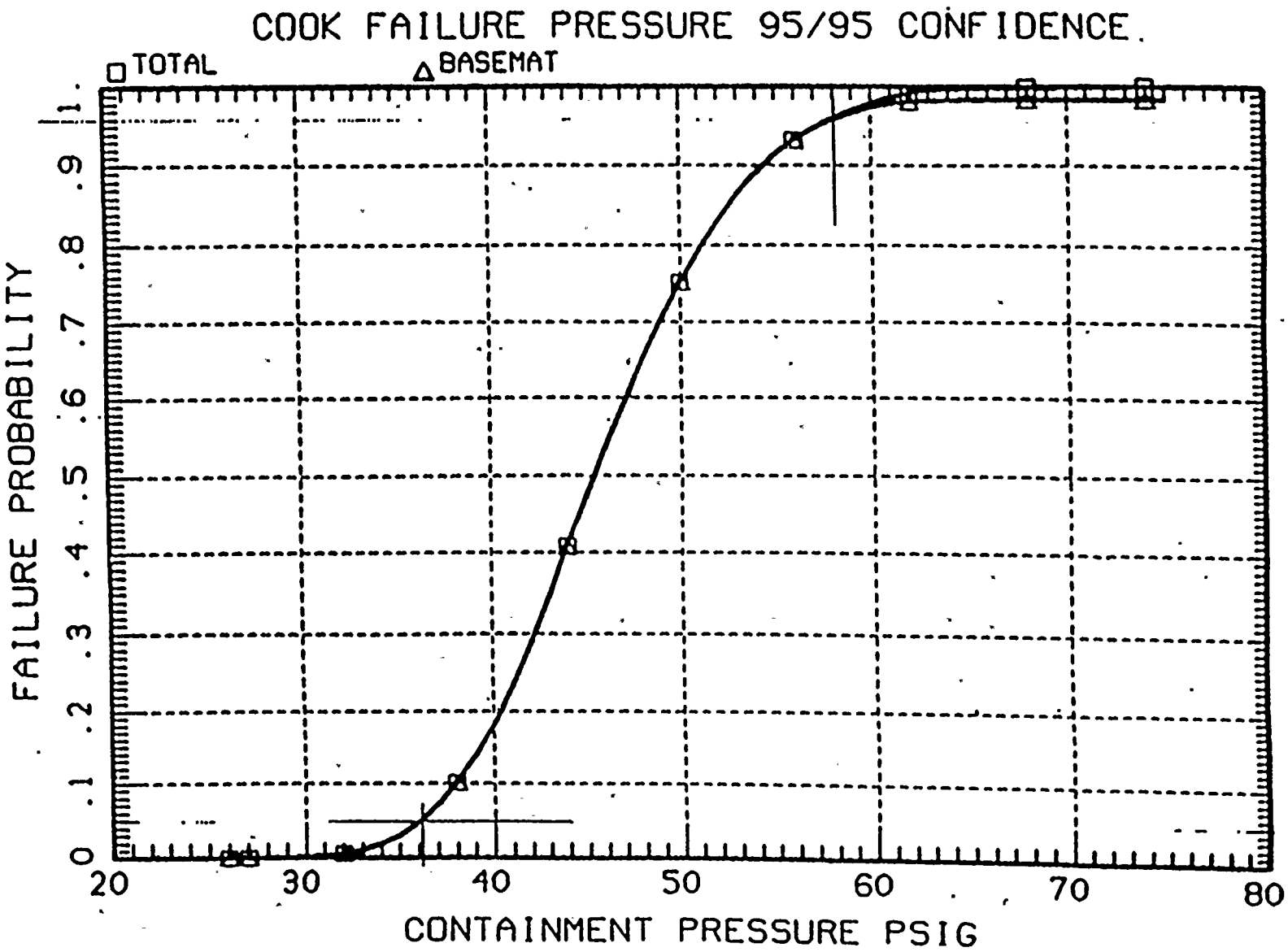

Figure 4.2-1 D. C. Cook containment fragility curve for basemat failure.

FIGURE 1: TSSUE-65

80.0 LER Nos. 315/98-001-02; 315/98-009-01; 315/98-019-02; 315/98-033; Inspection Report 50-315/98007(DRP)

Event Description: Hydrogen recombiner issues

Date of Event: January 4, 1998; February 17, 1998; April 7, 1998; June 1, 1998

Plant: D.C. Cook, Units 1 and 2

80.1 Summary of Issues

This writeup addresses the synergistic effects of issues #80, #82, #83, and #84.

Low Air Flow in at Least One Localized Portion of the Containment (Issue #80)
During follow-up to a licensee identified blockage of a containment hydrogen mixing line in January 1998, airflow testing of the containment air recirculation/hydrogen skimmer system was performed. The hydrogen skimmer system is designed to control the hydrogen concentration in the compartments below 4 percent. This is accomplished by purging the compartments using a portion of the atmosphere in the lower containment. This flow mixes the atmosphere from the lower containment with the atmosphere in the compartment, diluting any hydrogen that is generated in the compartment. The test demonstrated that as-found flows in certain steam generator and pressurizer compartments, fan-accumulator rooms, and instrument rooms were less than the flows stated in Updated Final Safety Analysis Report (UFSAR) Section 5.5.3. The lower flows could reduce the effectiveness of mixing effect of the system. In addition, an incorrectly installed valve actuator in the system created a flow path that bypassed the ice condenser, creating the potential for increased peak pressure in the upper containment following an accident. The event was reported as a condition outside the design basis (Ref. 1). An apparent violation was identified for the failure to comply with 10 CFR 50.59 (Ref. 2).

Hydrogen Recombiner Resistance to Ground Surveillance Requirement Not Met (Issue #82)
On February 17, 1998, it was determined that the Unit 1 hydrogen recombiner surveillance requirement 4.6.4.2.b.4 was not met on June 17, 1997 (Ref. 3). This requirement verifies the integrity of all heater electrical circuits associated with the electric hydrogen recombiners by performing a continuity and resistance to ground test immediately following a system functional test and achieving a minimum resistance of 10,000 ohms. On June 17, 1997, the timing of the resistance measurement was not in accordance with the Technical Specification (TS) requirement to immediately perform the resistance to ground test. In addition, resistance to ground was found to be 6,000 ohms instead of the 10,000 TS minimum. A second test about one-half hour later produced acceptable results.

Hydrogen Recombiner Temperature Circuit Technical Specification Surveillance Requirement Not Met (Issue #83)

On April 7, 1998, it was determined that the electric hydrogen recombiner (EHR) Technical Specification (TS) surveillance requirement 4.6.4.2.b.1 was not met. The licensee's procedure for calibrating temperature measurement circuitry directed the technician to calibrate only the control room readout device instead of all instrumentation and control circuits in the loop. EHR temperature is used to prove operability of the recombiners. In addition, a design deficiency existed in the temperature circuit, resulting in the plant being in an unanalyzed condition. Details of the event are provided in LER 315/98-019-02 (Ref. 4). A related issue on an inadequate.

Hydrogen Recombiner Wattmeter Circuit Technical Specification Surveillance Requirement Not Met (Issue #84)
On June 11, 1998, it was determined that the electric hydrogen recombiner technical specification (TS) surveillance requirement 4.6.4.2.b.1 was not met. This requirement calls for a channel calibration of all recombiner instrumentation and control circuits. However, the procedure used directs the technician to calibrate only the control room readout device. Calibration of the recombiner wattmeter logic converter, which controls electrical power to the heater elements, was not included in the calibration procedure. Details of the event are provided in LER 315/98-033 (Ref. 5).

The effect on containment performance associated with these issues (#80, #82, #83, and #84) is negligible and the issues have negligible synergistic effects with other issues. Therefore, these issues are screened out from the integrated analysis (except for the potential impact of issue #80 on the ice condenser performance). That impact has been combined with all other ice condenser related issues (see issue #65).

80.2 Affected Containment Failure Modes

These issues have the potential to affect the containment failure mode of overpressure due to hydrogen combustion.

With respect to issue #80, the pressurizer and steam generator compartments were analyzed for hydrogen generation by the licensee. The results showed that hydrogen remained below the 4 percent volume limit even with the low flow condition. In addition, the licensee analyzed post-LOCA ice condenser performance with the flow path in the system that bypassed the ice condenser. Containment performance was not affected by the bypass flow path. Therefore, Although the event resulted in a condition outside the design basis for an extended period of time, containment failure modes were not affected by this condition.

With respect to issue #82 above, this Unit 1 TS violation was reviewed against Unit 2 TS requirements. The Unit 2 TSs, which are based on the standard Westinghouse TSs, do not have the requirement to perform the resistance test immediately after the functional test, and no basis for performing the test could be found. After discussions between the licensee and Westinghouse, it was determined that the requirement for testing immediately was an error (Ref. 3). Moreover, a review of past surveillance test data between 1989 and 1998 by the licensee showed no instances where hydrogen recombiners were

returned to service with resistance values less than the required TS minimum. In addition, no other instances were found where it was necessary to perform a second test. Therefore, although the plant was operated in a condition prohibited by TS, there is reasonable assurance that the recombiners would have performed their intended function if called upon.

With respect to issue #83, actual plant data showed that errors associated with the EHR temperature circuits to be minimal, and that the recombiners would have performed their function in the event of a postulated accident.

With respect to issue #84, the hydrogen recombiner wattmeter controller circuit is used to control electrical power to the recombiner electrical heater elements. The controller circuit did not receive a proper channel calibration. Even though this lack of a calibration resulted in a condition prohibited by the plant's TSs, licensee's TS surveillances have shown no degradation, based on the actual time for the hydrogen recombiners to reach the TS required temperature, given an initial power setting on the wattmeter controller.

80.3 Effect on Containment Failure

In all of the above issues, the "as-found" condition plant showed no degraded or failed components. Therefore, hydrogen recombiners would have functioned successfully if demanded. The increase in the likelihood of containment overpressure failure due to hydrogen combustion was negligible. Therefore, these issues have is essentially no impact on containment performance.

80.4 References

1. LER 315/98-001-02, "Containment Air Recirculation System Flow Testing Results Indicate Condition Outside the Design Basis," May 8, 1998.

2. Donald C. Cook, Units 1 & 2, NRC Inspection Report No. 50-315, 316/98-007 (DRP), June 3, 1998.

3 LER 315/98-009-01, "Hydrogen Recombiner Surveillance Requirement Not Being Met Results in a Condition Prohibited by Technical Specifications," April 20, 1998.

4 LER 315/98-019-02, "Hydrogen Recombiner Temperature Circuit Technical Specification Surveillance Requirement Not Met," July 31, 1998.

5 LER 315/98-033, "Hydrogen Recombiner Wattmeter Circuit Technical Specification Surveillance Requirement Not Met," July 13, 1998.

9.0 LERs No. 315/97-026-01 and 315/98-052-01

Event Description: Potential for Overpressurization of Control Air Headers Could Have Resulted in Degradation of Safety-Related Equipment

Date of Event: LER 315/97-026 - September 1997
LER 315/98-052 - November 1998

Plant: D.C. Cook, Units 1 and 2

9.1 Summary of Issue

This writeup addresses the synergistic effects of issues #9 and #63 when they aggregate.

Failure of a single pressure regulator in open position leading to the failure of both safety-related trains (Issue #9)

At D.C. Cook, the main control air header is at a pressure of 100 psig. It feeds three headers which are at 20, 50, and 85 psig. In each of the low pressure headers, two pressure regulator that are in parallel lines maintain the pressure boundary between main header and low pressure header. Normally, one of the parallel paths are left closed while the regulator on the other parallel line will open or close to regulate pressure in the low pressure header. Failure of this regulators in the open position can lead to overpressurization of the low pressure headers and subject redundant safety-related relief valves on the 20, 50, and 85 psig control air headers to 100 psig (Ref. 1).

Overpressurization of the 85 psig header does not affect core damage mitigating systems. Overpressurization of the 50 psig header can cause a reactor trip with some containment isolation valves (CIVs) going to "fail safe" positions. Overpressurization of the 20 psig header could result in the degradation of the residual heat removal (RHR) system. In LER 97-026, it was assumed that both RHR heat exchanger outlet valves assume a partially closed position while high pressure lasts. However, the licensee is re-evaluating that assumption. In this analysis, therefore, to be conservative, it is assumed that the RHR heat exchanger outlet valves assume a closed position. As a result, both trains of RHR are assumed to be unavailable for mitigating any size loss-of-coolant accident (LOCA) or feed and bleed situation. In addition, over pressurizing the 20 psig header could lead to a reactor trip (Ref. 1).

Failure of the turbine-driven AFW pump manual loader (Issue #63)

During a safety system functional inspection self-assessment of the auxiliary feedwater (AFW) system in the fall of 1998, it was concluded that a potential failure mode for an air operated component, the turbine-driven AFW pump (TDAFP) speed control manual loader, could result in the AFW system failing to produce the flow rates assumed in accident analyses (Ref. 2). The pneumatic input to the speed control manual loader is supplied from the 20 psig compressed air header. When the input to the speed control manual loader is 20 psig, the loader output can vary from 3 psig to 15 psig (a loader output of 3 psig corresponds to the maximum pump speed of 4350 rpm and a loader output of 15 psig corresponds to the

minimum pump speed of 1900 rpm.) If the pressure regulator in the 20 psig header fails open, the input to the speed control manual loader will be 100 psig rather than 20 psig. At a 100 psig input, the speed control manual loader could fail such that the AFW flow is minimum. Assuming an additional single active failure of a motor-driven AFW pump, the AFW system would not be able to produce the AFW flow rates assumed in the accident analyses. Additional instances of the same failure mode may also exist; in January 1999 it was identified that the Centrifugal Charging Pumps discharge flow control valve was also susceptible to this failure mode.

The change in core damage frequency (CDF) associated with these two issues is dependent upon resolution of the other issues affecting the core-damage frequency. If other issues do not significantly affect the functionality of the motor driven auxiliary feedwater (AFW) trains, feed-and-bleed cooling, or the high pressure injection systems, the change in CDF associated with these two issues, on their own, is less than 1×10^{-6}/year. Therefore, on their own, these two issues are not risk significant.

9.2 Modeling and Affected Sequences

Six different cases were considered for modeling the issues reported in LERs 315/97-026 and 315/98-052: (a) failure of the regulator in the open position in the 85 psig, 50 psig, or the 20 psig header followed by an accident; or (b) an accident or reactor trip followed by a pressure regulator failure.

According to Ref. 1, if the pressure regulator in the 85 psig header fails open, it does not affect core damage mitigating systems or cause a reactor trip or an accident. Therefore, this scenario is not modeled.

Failure of the pressure regulator in the 50 psig header in the open position trips the reactor and causes some CIVs to go to their fail-safe position (Ref. 1). This scenario is modeled as Sequence 1.

Failure of the pressure regulator in the 20 psig header in the open position degrades the performance of the RHR, AFW, and charging systems. According to Ref. 1, the RHR heat exchanger outlet valves go partially closed. According to Ref. 2, the TDAFP goes to its minimum speed of 1900 rpm, and the charging pumps could be degraded. A controlled manual shutdown may be needed after this event. This scenario is modeled as Sequence 2.

If the pressure regulator in the 85 psig header fails open after an accident, according to Ref. 1, no core damage mitigating systems are affected. Therefore, this scenario will not be modeled.

The impact of a failure of the pressure regulator in the 50 psig header in the open position subsequent to an accident is limited to a reactor trip. Therefore, if this regulator fails open after an accident, the additional impact on the scenario is negligible since the accident would already have tripped the reactor.

If the pressure regulator in the 20 psig header fails open after an accident or reactor trip, the following systems will be degraded: (a) RHR; (b) AFW; and (c) charging. The following initiators will be considered: (i) large or medium LOCA (Sequence 3); (ii) small LOCA or feed-and-bleed cooling

(Sequence 4); (iii) loss of offsite power, including station blackout (Sequence 5); and (iv) reactor trip (Sequence 6).

In consideration of the above, the six sequences of interest are as follows:

Sequence 1 - Reactor trip as a result of pressure regulator failure in open position in 50 psig header:

- Reactor trip (as a result of pressure regulator failure in the open position in the 50 psig header); and
- Core damage probability given a reactor trip.

Sequence 2 - Pressure regulator failure in the open position in the 20 psig header:

- Pressure regulator fails open in the 20 psig header;
- Controlled manual shutdown, given pressure regulator failure;
- Reactor trip during controlled manual shutdown; and
- Core damage probability given RT and degraded RHR system, TDAFW pump, and charging system.

Sequence 3 - Large or medium LOCA:

- Large or medium LOCA;
- Pressure regulator fails in the open position in the 20 psig header; and
- Both trains of RHR fail to inject or recirculate, given the pressure regulator failure.

Sequence 4 - Small LOCA or feed-and-bleed cooling:

- Small LOCA or feed-and-bleed cooling;
- Sump cooling is required due to inability to depressurize and establish RHR cooling;
- Pressure regulator fails in the open position in the 20 psig header; and .
- Both trains of RHR fail to recirculate, given the pressure regulator failure.

Sequence 5 - Loss of offsite power, including station blackout:

- Loss of offsite power, including station blackout;

- Pressure regulator fails in the open position in the 20 psig header; and
- Core damage probability given degraded TDAFPs, RHR system, and charging system.

Sequence 6 - Reactor trip:

- Reactor trip; and
- Pressure regulator fails in the open position in the 20 psig header.
- Core damage probability given degraded TDAFPs, RHR system, and charging system.

9.3 Frequencies, Probabilities, and Assumptions

Sequence 1 - Reactor trip as a result of pressure regulator failure in open position in 50 psig header :

- Reactor trip - A review of Cook operating experience using Reference 3 revealed no reactor trips due to pressure regulator failures in 22 reactor years. Using the criticality factor of 0.79 for Cook 1 and a Bayesian update, the frequency of a reactor trip due to a pressure regulator failure is 1.7×10^{-2}.
- Core damage probability given a reactor trip - From the Cook standardized plant risk analysis (SPAR) model, the conditional probability of core damage given a reactor trip is 1.3×10^{-6}.

Sequence 2 - Pressure regulator failure in the open position in the 20 psig header:

- Pressure regulator failure in the open position in the 20 psig header - Based on IEEE-500, page 1038, one-inch 150 psi pressure regulator valve failure rate is 3.3×10^{-6} per hour. For a two- to six-inch line, the failure rate is 2.9×10^{-6} per hour. In order to determine whether the use of these generic failure rates for Cook is justifiable, a discussion was held with the control air system manager at Cook (Ref. 6). Based on this discussion, the failure rate of the pressure regulators at Cook in the open position was calculated as follows. There are 20 pressure regulators at both Cook units (10 per unit). Six of these regulators are valved in ½ the time since they have parallel paths. Therefore, at any given time, effectively, only 7 regulators are in service. To the best recollection of the control air system manager, there was only 1 regulator failure in the open position during the approximately 20 years of operation of both Cook units. Using Bayes method, one failure in approximately 40 years of operation at an average criticality factor of .74 (The criticality factor for Unit 1 is 0.79. For Unit 2, the criticality factor is 0.68) results in a failure rate of 1.5/(14 x 20 x 8760 x .74). This is approximately equal to 8×10^{-7} per hour. Even though the plant specific rate is less than the generic rates by approximately a factor of 4, conservatively, the generic rates are used. Using the higher of the two generic failure rates and assuming a uniform pressure regulator failure rate, and using a 24-hour mission time, the pressure regulator failure probability within a 24 hour mission time is 8×10^{-5}.

- Controlled manual shutdown, given pressure regulator failure - Assume 1.0 to be conservative.

- Reactor trip during controlled manual shutdown - Based on Ref. 5, (page 8-12), there were 10 reactor trips during 148 controlled plant shutdowns. Therefore, the probability of reactor trip during the event is approximated by a value of .068.

- Core damage probability given reactor trip and degraded RHR system, TDAFW pump, and charging system - Based on the SPAR model, core damage probability (CDP) is 2×10^{-5}. The CDP was calculated assuming that both RHR trains, the TDAFW pump, and the charging system are failed due to the pressure regulator failure.

Sequence 3 - Large or medium LOCA:

- Large or medium LOCA occurs - The frequency of a large break LOCA is 5×10^{-6} per year, and the frequency of medium LOCA is 4×10^{-5} per year (Ref. 3). The sum of the above frequencies is therefore 4.5×10^{-5} per year.

- Pressure regulator failure in the open position in the 20 psig header - A probability of 8×10^{-5} is used. The basis for this probability is discussed under sequence 2.

- Both trains of RHR fail to inject or recirculate - Since it is conservatively assumed that both trains of RHR are unavailable, the probability of both RHR trains failing to inject or recirculate is assumed to be 1.0.

Sequence 4 - Small LOCA or feed-and-bleed cooling:

- Small LOCA or feed-and-bleed cooling - The frequency of a small LOCA is the sum of the frequency of a small pipe break LOCA, 5×10^{-4}, a stuck open pressurizer PORV, 1×10^{-3}, a stuck open safety/relief valve, 5×10^{-3}, and a reactor coolant pump seal LOCA, 2.5×10^{-3} per year, or a total of 9×10^{-3} per year (Ref. 3). Feed-and-bleed can be disregarded since two motor-driven AFW pumps are unaffected.

- Pressure regulator failure in the open position in the 20 psig header - A probability of 8×10^{-5} is used. The basis for this probability is discussed under sequence 2.

- Sump cooling is required due to inability to depressurize and establish RHR cooling - Since the RHR is affected due the pressure regulator failure, it is conservatively assumed that the RHR cooling cannot be established. Therefore, this probability is assumed to be 1.0.

- Both trains of RHR fail to inject or recirculate - Since it is conservatively assumed that both trains of RHR are unavailable, the probability of both RHR trains failing to inject or recirculate is assumed to be 1.0.

Sequence 5 - Loss of offsite power, including station blackout:

- Loss of offsite power, including station blackout - The frequency of a loss of offsite power is 4.6 x 10^{-2} per critical year (Ref. 3).

- Pressure regulator failure in the open position in the 20 psig header - A probability of 8 x 10^{-5} is used. The basis for this probability is discussed under sequence 2.

- Core damage probability given a loss of offsite power, degraded TDAFPs, RHR system, and charging system - The core damage probability is 1.1 x 10^{-4} (SPAR model).

Sequence 6 - Reactor trip:

- Reactor trip - Ref. 3 indicates that the average industry frequency of any event that requires a reactor trip from all causes is 1.4 trips per critical year. When adjusted by the average criticality factor of 0.79 for Cook Unit 1 (Ref. 3, Table H-3), the initiating event frequency is 1.1 per reactor calendar year (1.4 x 0.79).

- Pressure regulator failure in the open position in the 20 psig header - A probability of 8 x 10^{-5} is used. The basis for this probability is discussed under sequence 2.

- Core damage probability given reactor trip and degraded TDAFPs, RHR system, and charging system - 2 x 10^{-5} (SPAR model).

9.4 Core Damage Frequency Calculation or the Bounding Calculation

The frequencies associated with the sequences depend on the resolution of other issues affecting the core damage frequency. To provide perspective on these sequences the following information is provided.

If the resolution of issues results in no significant changes to the high pressure injection system, motor driven AFW trains, and RHR cooling failure probabilities, the change in core damage frequency would be the sum of the following frequencies:

Sequence 1 - Reactor trip as a result of pressure regulator failure in open position in 50 psig header:

The change in core damage frequency for Sequence 1 is:

(Frequency of reactor trip given pressure regulator fails open in 50 psig header): 1.7 x 10^{-2}) x

(Core damage probability given a reactor trip: 1.3×10^{-6}) = 2.2×10^{-8} per year.

Sequence 2 - Pressure regulator failure in the open position in the 20 psig header:

The change in core damage frequency for Sequence 2 is:

(Frequency of pressure regulator failure in the open position in the 20 psig header: 2.9×10^{-2} per year) x
(Controlled manual shutdown, given pressure regulator failure: 1.0) x
(Reactor trip during controlled manual shutdown: 0.068) x
(Criticality factor: 0.79 critical year/reactor calendar year) x
(CDP given RT and degraded RHR, TDAFP, and charging system: 2×10^{-5}) = 3.1×10^{-8} per year.

Sequence 3 - Large or medium LOCA:

The change in core damage frequency for Sequence 3 is:

(Frequency of a large or medium LOCA: 4.5×10^{-5} per year) x
(Pressure regulator failure rate in the open position in the 20 psig header: 8×10^{-5}) x
(Probability of failure of both trains of RHR during injection or recirculation: 1.0) x
(Criticality factor: 0.79 critical year/reactor calendar year) = 2.8×10^{-9} per year.

Sequence 4 - Small LOCA:

The change in core damage frequency for Sequence 4 is:

(Frequency of small LOCA: 9×10^{-3} per year) x

(Sump cooling is required due to inability to depressurize and establish RHR cooling: 1.0) x
(Pressure regulator failure in the open position in the 20 psig header: 8×10^{-5}) x
(Criticality factor: 0.79 critical year/reactor calendar year) = 5.8×10^{-7} per year.

Sequence 5 - Loss of offsite power, including station blackout:

The change in core damage frequency for Sequence 5 is:

(Frequency of loss of offsite power, including station blackout: 4.6×10^{-2} per critical year) x
(Criticality factor: 0.79 critical year/reactor calendar year) x
(Pressure regulator failure in the open position in the 20 psig header: 8×10^{-5}) x
(CDP given degraded TDAFPs, RHR, and charging system: 1.1×10^{-4} per year) = 3.2×10^{-10} per year.

Sequence 6 - Reactor trip:

The change in core damage frequency for Sequence 6 is:

(Frequency of reactor trip: 1.1 per calendar year) x
(Pressure regulator failure in the open position in the 20 psig header: 8×10^{-5}) x
(CDP given degraded TDAFPs, RHR system, and charging system: 2×10^{-5}) = 1.8×10^{-9} per year.

The sum of all of the above sequence frequencies is less than 1×10^{-6} per year. Therefore, synergistic effect of these two issues, on their own, are not risk-significant.

9.5 References

1. LER 315/97-026, Rev. 1, "Potential for Overpressurization of the Control Air Headers Determined to be Unanalyzed Condition," November 17, 1997.

2. LER 315/98-052, Rev. 1, "Potential Failure Mode for Air Operated Components Not Considered in Original Design," January 19, 1999.

3. J. P. Poloski, et. al., *Rates of Initiating Events at U.S. Nuclear Power Plants: 1987 - 1995*, NUREG/CR-5750, December 1998.

4. *Donald C. Cook Nuclear Units 1 and 2, Individual Plant Examination Revision 1*, October 1995.

5. J.D. Andrachek, et. al., "Probabilistic Risk Analysis of the RPS and ESFAS Test Times and Completion Times," WCAP-14334-NP-A, Rev. 1, May 1995.

6. Personal communications with Mr. M.R. Michaelson (Cook station control air system manager), July 26, 1999.

ATTACHMENT 2 TO C1199-16

WESTINGHOUSE ELECTRIC COMPANY
WCAP-15131, REVISION 1 (PROPRIETARY)

9930308 42

WCAP-15131
Revision 1

Technical Justification for Eliminating Large Primary Loop Pipe Rupture as the Structural Design Basis for the D. C. Cook Units 1 and 2 Nuclear Power Plants

D. C. Bhowmick
C. K. Ng
A. T. Paterson

October 1999

Reviewer: J. F. Petsche
J. F. Petsche

Approved: S. A. Swamy
S. A. Swamy, Manager
Structural Mechanics Technology

This document contains information proprietary to Westinghouse Electric Company LLC, and Nuclear Services Division; it is submitted in confidence and is to be used solely for the purpose for which it is furnished, then returned upon request. This document and such information is not to be reproduced, transmitted, disclosed or used otherwise in whole or in part without prior written authorization of Westinghouse Electric Company LLC, and Nuclear Services Division.

Westinghouse Electric Company LLC
P.O. Box 355
Pittsburgh, PA 15230-0355

©1999 Westinghouse Electric Company LLC
All Rights Reserved

FOREWORD

This document contains Westinghouse Electric Company LLC proprietary information and data which has been identified by brackets. Coding[a,c,e] associated with the brackets sets forth the basis on which the information is considered proprietary. These codes are listed with their meanings in WCAP-7211 (Reference 1-1).

The proprietary information and data contained in this report were obtained at considerable Westinghouse expense and its release could seriously affect our competitive position. This information is to be withheld from public disclosure in accordance with the Rules of Practice 10CFR2.790 and the information presented herein be safeguarded in accordance with 10CFR2.903. Withholding of this information does not adversely affect the public interest.

This information has been provided for your internal use only and should not be released to persons or organizations outside the Directorate of Regulation and the ACRS without the express written approval of Westinghouse Electric Company LLC. Should it become necessary to release this information to such persons as part of the review procedure, please contact Westinghouse Electric Company LLC, which will make the necessary arrangements required to protect the Corporation's proprietary interests.

The proprietary information is deleted in the unclassified version of this report (WCAP-15132).

TABLE OF CONTENTS

EXECUTIVE SUMMARY xi

1.0 INTRODUCTION 1-1
- 1.1 PURPOSE 1-1
- 1.2 BACKGROUND INFORMATION 1-1
- 1.3 SCOPE AND OBJECTIVES 1-2
- 1.4 REFERENCES 1-3

2.0 OPERATION AND STABILITY OF THE REACTOR COOLANT SYSTEM 2-1
- 2.1 STRESS CORROSION CRACKING 2-1
- 2.2 WATER HAMMER 2-2
- 2.3 LOW CYCLE AND HIGH CYCLE FATIGUE 2-2
- 2.4 REFERENCES 2-3

3.0 PIPE GEOMETRY AND LOADING 3-1
- 3.1 INTRODUCTION TO METHODOLOGY 3-1
- 3.2 CALCULATION OF LOADS AND STRESSES 3-1
- 3.3 LOADS FOR LEAK RATE EVALUATION 3-2
- 3.4 LOAD COMBINATION FOR CRACK STABILITY ANALYSES 3-2
- 3.5 REFERENCES 3-3

4.0 MATERIAL CHARACTERIZATION 4-1
- 4.1 PRIMARY LOOP PIPE AND FITTINGS MATERIALS 4-1
- 4.2 TENSILE PROPERTIES 4-1
- 4.3 FRACTURE TOUGHNESS PROPERTIES 4-1
- 4.4 REFERENCES 4-4

5.0 CRITICAL LOCATIONS AND EVALUATION CRITERIA 5-1
- 5.1 CRITICAL LOCATIONS 5-1
- 5.2 FRACTURE CRITERIA 5-1

6.0 LEAK RATE PREDICTIONS 6-1
- 6.1 INTRODUCTION 6-1
- 6.2 GENERAL CONSIDERATIONS 6-1
- 6.3 CALCULATION METHOD 6-1
- 6.4 LEAK RATE CALCULATIONS 6-2
- 6.5 REFERENCES 6-2

7.0 FRACTURE MECHANICS EVALUATION 7-1
- 7.1 LOCAL FAILURE MECHANISM 7-1
- 7.2 GLOBAL FAILURE MECHANISM 7-1
- 7.3 RESULTS OF CRACK STABILITY EVALUATION 7-3
- 7.4 REFERENCES 7-3

8.0 FATIGUE CRACK GROWTH ANALYSIS 8-1
- 8.1 REFERENCES 8-2

9.0 ASSESSMENT OF MARGINS 9-1

10.0 CONCLUSIONS 10-1

APPENDIX A LIMIT MOMENT A-1

LIST OF TABLES

Table	Title	Page
Table 3-1	Dimensions, Normal Loads and Normal Stresses for D. C. Cook Units 1 and 2	3-4
Table 3-2	Faulted Loads and Stresses for D. C. Cook Units 1 and 2	3-5
Table 4-1	Measured Tensile Properties for D. C. Cook Unit 1 Primary Loop Piping System	4-6
Table 4-2	Measured Tensile Properties for D. C. Cook Unit 2 Primary Loop Piping System	4-8
Table 4-3	Mechanical Properties for D. C. Cook Units 1 and 2 Materials at Operating Temperatures	4-10
Table 4-4	Chemistry and Fracture Toughness Properties of the Material Heats of D. C. Cook Unit 1	4-11
Table 4-5	Chemistry and Fracture Toughness Properties of the Material Heats of D. C. Cook Unit 2	4-14
Table 4-6	Fracture Toughness Properties for D. C. Cook Units 1 and 2 Primary Loops for Leak-Before-Break Evaluation at Critical Locations	4-16
Table 6-1	Flaw Sizes Yielding a Leak Rate of 10 gpm at the Governing Locations	6-3
Table 7-1	Stability Results for D. C. Cook Units 1 and 2 Based on Elastic-Plastic J-Integral Evaluations	7-4
Table 7-2	Stability Results for D. C. Cook Units 1 and 2 Based on Limit Load	7-4
Table 8-1	Summary of Reactor Vessel Transients	8-3
Table 8-2	Typical Fatigue Crack Growth at [Nozzle Safe-End Region][a,c,e] (40 years)	8-4
Table 9-1	Leakage Flaw Sizes, Critical Flaw Sizes and Margins for D. C. Cook Units 1 and 2	9-2

LIST OF FIGURES

Figure	Title	Page
3-1	Hot Leg Coolant Pipe	3-6
3-2	Schematic Diagram of D. C. Cook Units 1 and 2 Primary Loop Showing Weld Locations	3-7
4-1	Representative Lower Bound True Stress - True Strain Curve for A351 CF8M at 620°F	4-17
4-2	Representative Lower Bound True Stress - True Strain Curve for A351 CF8M at 548°F	4-18
4-3	Pre-Service J. vs. Δa for SA351 CF8M Cast Stainless Steel at 600°F	4-19
6-1	Analytical Predictions of Critical Flow Rates of Steam-Water Mixtures	6-4
6-2	[Critical or Choked][a,c,e] Pressure Ration as a Function of L/D	6-5
6-3	Idealized Pressure Drop Profile Through a Postulated Crack	6-6
7-1	[Fully Plastic][a,c,e] Stress Distribution	7-5
7-2	Critical Flaw Size Prediction - Hot Leg at Location 1	7-6
7-3	Critical Flaw Size Prediction - Cross-over Leg at Location 10	7-7
7-4	Critical Flaw Size Prediction - Cold Leg at Location 11	7-8
8-1	Typical Cross-Section of [RPV Inlet Nozzle Safe-End][a,c,e]	8-5
8-2	Reference Fatigue Crack Growth Curves for [Carbon and Low Alloy Ferritic Steels][a,c,e]	8-6
8-3	Reference Fatigue Crack Growth Law for [Inconel 600][a,c,e] in a Water Environment at 600°F	8-7
A-1	Pipe with a Through-Wall Crack in Bending	A-2

EXECUTIVE SUMMARY

The original structural design basis of the reactor coolant system for the American Electric Power Company D. C. Cook Units 1 and 2 Nuclear Power Plants required consideration of dynamic effects resulting from pipe break and that protective measures for such breaks be incorporated into the design. Subsequent to the original D. C. Cook design, an additional concern of asymmetric blowdown loads was raised as described in Unresolved Safety Issue A-2 (Asymmetric Blowdown Loads on the Reactor Coolant System). D. C. Cook Units 1 and 2 Nuclear Power Plants were part of the utilities which sponsored Westinghouse to resolve the A-2 issue. Generic analyses by Westinghouse to resolve the A-2 issue were approved by the NRC and documented in Generic Letter 84-04 (reference 1-2).

The approved Westinghouse Generic Analyses were indicated to be directly applicable to D. C. Cook Units 1 and 2 in NRC letter dated November 22, 1985 (reference 1-10). In that letter, which addressed removal of the A-2 issue as a license condition for D. C. Cook Unit 2, the NRC stated that:

"...This license amendment is related to the ongoing review for protection against postulated pipe rupture. On February 1, 1984, the NRC issued Generic Letter 84-04 to all operating PWR licensees on the subject of "Safety Evaluation of Westinghouse Topical Reports Dealing with Elimination of Postulated Pipe Breaks in PWR Primary Main Loops." We have completed our review of your Generic Letter 84-04 responses and have found them acceptable...

Generic Letter 84-04 was issued to form a basis for the issuance of partial exemptions to GDC-4. These exemptions would allow licensees to remove or not to install protection against asymmetric dynamic loads in the primary main coolant loop. Our Safety Evaluation also concludes that our submissions as part of the Westinghouse Owners Group and your letter dated September 10, 1984 would satisfy the requirements of the proposed rule, if adopted without modification...."

Research by the NRC and industry coupled with operating experience determined that safety could be negatively impacted by placement of pipe whip restraints on certain systems. As a result, NRC and industry initiatives resulted in demonstrating that Leak-before-break (LBB) criteria can be applied to reactor coolant system piping based on fracture mechanics technology and material toughness.

Subsequently, the NRC modified 10CFR50 General Design Criterion 4, and published in the Federal Register (Vol. 52, No. 207) on October 27, 1987 its final rule, "Modification of General Design Criterion 4 Requirements for Protection Against Dynamic Effects of Postulated Pipe Ruptures (Reference 1-3)." This change to the rule allows use of leak-before-break technology for excluding from the design basis the dynamic effects of postulated ruptures in primary coolant loop piping in pressurized water reactors (PWRs).

This report demonstrates compliance with LBB technology for the D. C. Cook reactor coolant system piping based on a plant specific analysis. The report documents the plant specific geometry, loading, and material properties used in the fracture mechanics evaluation.

include cast stainless steel, fracture toughness considering thermal aging were determined for each heat of material.

This Report includes the temperature, pressure and loadings generated as a result of the D. C. Cook Unit 2 uprating program and changes in component weight due to Units 1 and 2 replacement Steam Generator conditions.

Based on loading, pipe geometry and fracture toughness considerations, enveloping critical locations were determined at which leak-before-break crack stability evaluations were made. Through-wall flaw sizes were found which would cause a leak at a rate of ten (10) times the leakage detection system capability of the plant. Large margins for such flaw sizes were demonstrated against flaw instability. Finally, fatigue crack growth was shown not to be an issue for the primary loops.

It is concluded that LBB criterion is valid for the stated loading conditions and dynamic effects of reactor coolant system primary loop pipe breaks need not be considered in the structural design basis of the D. C. Cook Nuclear Power Plants for the Unit 2 uprating and Units 1 and 2 replacement steam generator conditions.

Revision 1 Identification

Revision 1 is to modify first and second paragraphs of executive summary, Section 3.1, Section 6.4 and to add Reference 6.3 and Page xiii.

The revisions are identified by vertical lines in the right column.

1.0 INTRODUCTION

1.1 PURPOSE

This report applies to the D. C. Cook Units 1 and 2 Reactor Coolant System (RCS) primary loop piping. It is intended to demonstrate that for the specific parameters of the D. C. Cook Units 1 and 2 Nuclear Power Plants, RCS primary loop pipe breaks need not be considered in the structural design basis. The approach taken has been accepted by the Nuclear Regulatory Commission (NRC) (Reference 1-3).

1.2 BACKGROUND INFORMATION

Westinghouse has performed considerable testing and analysis to demonstrate that RCS primary loop pipe breaks can be eliminated from the structural design basis of all Westinghouse plants. The concept of eliminating pipe breaks in the RCS primary loop was first presented to the NRC in 1978 in WCAP-9283 (Reference 1-4). That topical report employed a deterministic fracture mechanics evaluation and a probabilistic analysis to support the elimination of RCS primary loop pipe breaks. That approach was then used as a means of addressing Generic Issue A-2 and Asymmetric LOCA Loads.

Westinghouse performed additional testing and analysis to justify the elimination of RCS primary loop pipe breaks. This material was provided to the NRC along with Letter Report NS-EPR-2519 (Reference 1-5).

The NRC funded research through Lawrence Livermore National Laboratory (LLNL) to address this same issue using a probabilistic approach. As part of the LLNL research effort, Westinghouse performed extensive evaluations of specific plant loads, material properties, transients, and system geometries to demonstrate that the analysis and testing previously performed by Westinghouse and the research performed by LLNL applied to all Westinghouse plants (References 1-6 and 1-7). The results from the LLNL study were released at a March 28, 1983, ACRS Subcommittee meeting. These studies, which are applicable to all Westinghouse plants east of the Rocky Mountains, determined the mean probability of a direct LOCA (RCS primary loop pipe break) to be 4.4×10^{-12} per reactor year and the mean probability of an indirect LOCA to be 10^{-7} per reactor year. Thus, the results previously obtained by Westinghouse (Reference 1-4) were confirmed by an independent NRC research study.

Based on the studies by Westinghouse, LLNL, the ACRS, and the AIF, the NRC completed a safety review of the Westinghouse reports submitted to address asymmetric blowdown loads that result from a number of discrete break locations on the PWR primary systems. The NRC Staff evaluation (Reference 1-2) concludes that an acceptable technical basis has been provided so that asymmetric blowdown loads need not be considered for those plants that can demonstrate the applicability of the modeling and conclusions contained in the Westinghouse response or can provide an equivalent fracture mechanics demonstration of the primary coolant loop integrity. In a more formal recognition of Leak-Before-Break (LBB) methodology applicability for PWRs, the NRC appropriately modified 10 CFR 50, General Design Criterion 4,

"Requirements for Protection Against Dynamic Effects for Postulated Pipe Rupture" (Reference 1-3).

1.3 SCOPE AND OBJECTIVES

The general purpose of this investigation is to demonstrate leak-before-break for the primary loops in D. C. Cook Units 1 and 2 on a plant specific basis. The recommendations and criteria proposed in Reference 1-8 are used in this evaluation. These criteria and resulting steps of the evaluation procedure can be briefly summarized as follows:

1. Calculate the applied loads. Identify the locations at which the highest stress occurs.

2. Identify the materials and the associated material properties.

3. Postulate a surface flaw at the governing locations. Determine fatigue crack growth. Show that a through-wall crack will not result.

4. Postulate a through-wall flaw at the governing locations. The size of the flaw should be large enough so that the leakage is assured of detection with margin using the installed leak detection equipment when the pipe is subjected to normal operating loads. A margin of 10 is demonstrated between the calculated leak rate and the leak detection capability.

5. Using faulted loads, demonstrate that there is a margin of at least 2 between the leakage flaw size and the critical flaw size.

6. Review the operating history to ascertain that operating experience has indicated no particular susceptibility to failure from the effects of corrosion, water hammer or low and high cycle fatigue.

7. For the materials actually used in the plant provide the properties including toughness and tensile test data. Evaluate long term effects such as thermal aging.

8. Demonstrate margin on applied load.

This report provides a fracture mechanics demonstration of primary loop integrity for the D. C. Cook Units 1 and 2 Plants consistent with the NRC position for exemption from consideration of dynamic effects.

Several computer codes are used in the evaluations. The computer programs are under Configuration Control which has requirements conforming to NRC's Standard Review Plan 3.9.1 (Reference 1-9). The fracture mechanics calculations are independently verified (benchmarked).

1.4 REFERENCES

1-1 WCAP-7211, Revision 3, "Energy Systems Business Unit Policy and Procedures for Management, Classification, and Release of Information," March, 1994.

1-2 USNRC Generic Letter 84-04, Subject: "Safety Evaluation of Westinghouse Topical Reports Dealing with Elimination of Postulated Pipe Breaks in PWR Primary Main Loops," February 1, 1984.

1-3 Nuclear Regulatory Commission, 10 CFR 50, Modification of General Design Criteria 4 Requirements for Protection Against Dynamic Effects of Postulated Pipe Ruptures, Final Rule, Federal Register/Vol. 52, No. 207/Tuesday, October 27, 1987/Rules and Regulations, pp. 41288-41295.

1-4 WCAP-9283, "The Integrity of Primary Piping Systems of Westinghouse Nuclear Power Plants During Postulated Seismic Events," March, 1978.

1-5 Letter Report NS-EPR-2519, Westinghouse (E. P. Rahe) to NRC (D. G. Eisenhut), Westinghouse Proprietary Class 2, November 10, 1981.

1-6 Letter from Westinghouse (E. P. Rahe) to NRC (W. V. Johnston) dated April 25, 1983.

1-7 Letter from Westinghouse (E. P. Rahe) to NRC (W. V. Johnston) dated July 25, 1983.

1-8 Standard Review Plan: Public Comments Solicited; 3.6.3 Leak-Before-Break Evaluation Procedures; Federal Register/Vol. 52, No. 167/Friday August 28, 1987/Notices, pp. 32626-32633.

1-9 Nuclear Regulatory Commission, Standard Review Plan Section 3.9.1, "Special Topics for Mechanical Component," NUREG-0800, Revision 2, July 1981.

1-10 Nuclear Regulatory Commission Docket #'s 50-315 and 50-316 Letter from Steven A. Varga, Chief Operating Reactor Branch #1, Division of Licensing, to Mr. John Dolan, Vice President, Indiana and Michigan Electric Company, dated November 22, 1985.

2.0 OPERATION AND STABILITY OF THE REACTOR COOLANT SYSTEM

2.1 STRESS CORROSION CRACKING

The Westinghouse reactor coolant system primary loops have an operating history that demonstrates the inherent operating stability characteristics of the design. This includes a low susceptibility to cracking failure from the effects of corrosion (e.g., intergranular stress corrosion cracking (IGSCC)). This operating history totals over 950 reactor-years, including 13 plants each having over 25 years of operation, 12 other plants each with over 20 years of operation and 8 plants each over 15 years of operation.

In 1978, the United States Nuclear Regulatory Commission (USNRC) formed the second Pipe Crack Study Group. (The first Pipe Crack Study Group (PCSG) established in 1975 addressed cracking in boiling water reactors only.) One of the objectives of the second PCSG was to include a review of the potential for stress corrosion cracking in Pressurized Water Reactors (PWR's). The results of the study performed by the PCSG were presented in NUREG-0531 (Reference 2-1) entitled "Investigation and Evaluation of Stress Corrosion Cracking in Piping of Light Water Reactor Plants." In that report the PCSG stated:

> "The PCSG has determined that the potential for stress-corrosion cracking in PWR primary system piping is extremely low because the ingredients that produce IGSCC are not all present. The use of hydrazine additives and a hydrogen overpressure limit the oxygen in the coolant to very low levels. Other impurities that might cause stress-corrosion cracking, such as halides or caustic, are also rigidly controlled. Only for brief periods during reactor shutdown when the coolant is exposed to the air and during the subsequent startup are conditions even marginally capable of producing stress-corrosion cracking in the primary systems of PWRs. Operating experience in PWRs supports this determination. To date, no stress corrosion cracking has been reported in the primary piping or safe ends of any PWR."

During 1979, several instances of cracking in PWR feedwater piping led to the establishment of the third PCSG. The investigations of the PCSG reported in NUREG-0691 (Reference 2-2) further confirmed that no occurrences of IGSCC have been reported for PWR primary coolant systems.

As stated above, for the Westinghouse plants there is no history of cracking failure in the reactor coolant system loop. The discussion below further qualifies the PCSG's findings.

For stress corrosion cracking (SCC) to occur in piping, the following three conditions must exist simultaneously: high tensile stresses, susceptible material, and a corrosive environment. Since some residual stresses and some degree of material susceptibility exist in any stainless steel piping, the potential for stress corrosion is minimized by properly selecting a material immune to SCC as well as preventing the occurrence of a corrosive environment. The material specifications consider compatibility with the system's operating environment (both internal and

external) as well as other material in the system, applicable ASME Code rules, fracture toughness, welding, fabrication, and processing.

The elements of a water environment known to increase the susceptibility of austenitic stainless steel to stress corrosion are: oxygen, fluorides, chlorides, hydroxides, hydrogen peroxide, and reduced forms of sulfur (e.g., sulfides, sulfites, and thionates). Strict pipe cleaning standards prior to operation and careful control of water chemistry during plant operation are used to prevent the occurrence of a corrosive environment. Prior to being put into service, the piping is cleaned internally and externally. During flushes and preoperational testing, water chemistry is controlled in accordance with written specifications. Requirements on chlorides, fluorides, conductivity, and Ph are included in the acceptance criteria for the piping.

During plant operation, the reactor coolant water chemistry is monitored and maintained within very specific limits. Contaminant concentrations are kept below the thresholds known to be conducive to stress corrosion cracking with the major water chemistry control standards being included in the plant operating procedures as a condition for plant operation. For example, during normal power operation, oxygen concentration in the RCS is expected to be in the ppb range by controlling charging flow chemistry and maintaining hydrogen in the reactor coolant at specified concentrations. Halogen concentrations are also stringently controlled by maintaining concentrations of chlorides and fluorides within the specified limits. Thus during plant operation, the likelihood of stress corrosion cracking is minimized.

2.2 WATER HAMMER

Overall, there is a low potential for water hammer in the RCS since it is designed and operated to preclude the voiding condition in normally filled lines. The reactor coolant system, including piping and primary components, is designed for normal, upset, emergency, and faulted condition transients. The design requirements are conservative relative to both the number of transients and their severity. Relief valve actuation and the associated hydraulic transients following valve opening are considered in the system design. Other valve and pump actuations are relatively slow transients with no significant effect on the system dynamic loads. To ensure dynamic system stability, reactor coolant parameters are stringently controlled. Temperature during normal operation is maintained within a narrow range by control rod position; pressure is controlled by pressurizer heaters and pressurizer spray also within a narrow range for steady-state conditions. The flow characteristics of the system remain constant during a fuel cycle because the only governing parameters, namely system resistance and the reactor coolant pump characteristics, are controlled in the design process. Additionally, Westinghouse has instrumented typical reactor coolant systems to verify the flow and vibration characteristics of the system. Preoperational testing and operating experience have verified the Westinghouse approach. The operating transients of the RCS primary piping are such that no significant water hammer can occur.

2.3 LOW CYCLE AND HIGH CYCLE FATIGUE

Low cycle fatigue considerations are accounted for in the design of the piping system through the fatigue usage factor evaluation to show compliance with the rules of Section III of the ASME

Code. A further evaluation of the low cycle fatigue loadings was carried out as part of this study in the form of a fatigue crack growth analysis, as discussed in Section 8.0.

High cycle fatigue loads in the system would result primarily from pump vibrations. These are minimized by restrictions placed on shaft vibrations during hot functional testing and operation. During operation, an alarm signals the exceedence of the vibration limits. Field measurements have been made on a number of plants during hot functional testing, including plants similar to D. C. Cook Units 1 and 2. Stresses in the elbow below the reactor coolant pump resulting from system vibration have been found to be very small, between 2 and 3 ksi at the highest. These stresses are well below the fatigue endurance limit for the material and would also result in an applied stress intensity factor below the threshold for fatigue crack growth.

2.4 REFERENCES

2-1 Investigation and Evaluation of Stress-Corrosion Cracking in Piping of Light Water Reactor Plants, NUREG-0531, U.S. Nuclear Regulatory Commission, February 1979.

2-2 Investigation and Evaluation of Cracking Incidents in Piping in Pressurized Water Reactors, NUREG-0691, U.S. Nuclear Regulatory Commission, September 1980.

3.0 PIPE GEOMETRY AND LOADING

3.1 INTRODUCTION TO METHODOLOGY

The general approach is discussed first. As an example a segment of the primary coolant hot leg pipe is shown in Figure 3-1. The as-built outside diameter and minimum wall thickness of the pipe are 34.68 in. and 2.74 in., respectively, as shown in the figure. The normal stresses at the weld locations are from the load combination procedure discussed in Section 3.3 whereas the faulted loads are as described in Section 3.4. The components for normal loads are pressure, dead weight and thermal expansion. An additional component, Safe Shutdown Earthquake (SSE), is considered for faulted loads. Tables 3-1 and 3-2 show the enveloping loads for D.C. Cook Units 1 and 2. As seen from Table 3-2, the highest stressed location in the entire loop is at Location 1 at the reactor vessel outlet nozzle to pipe weld. This is one of the locations at which, as an enveloping location, leak-before-break is to be established. Essentially a circumferential flaw is postulated to exist at this location which is subjected to both the normal loads and faulted loads to assess leakage and stability, respectively. The loads (developed below) at this location are also given in Figure 3-1.

Since the geometry and operating temperature of the cross-over leg and the cold leg are different than the hot leg, locations other than highest stressed location were examined taking into consideration both fracture toughness and stress. The three most critical locations are identified after the full analysis is completed. Once loads (this section) and fracture toughnesses (Section 4.0) are obtained, the critical locations are determined (Section 5.0). At these locations, leak rate evaluations (Section 6.0) and fracture mechanics evaluations (Section 7.0) are performed per the guidance of Reference 3-1. Fatigue crack growth (Section 8.0) and stability margins are also evaluated (Section 9.0).

All the weld locations for evaluation are those shown in Figure 3-2.

3.2 CALCULATION OF LOADS AND STRESSES

The stresses due to axial loads and bending moments are calculated by the following equation:

$$\sigma = \frac{F}{A} + \frac{M}{Z} \qquad (3\text{-}1)$$

where,

σ	=	stress
F	=	axial load
M	=	bending moment
A	=	pipe cross-sectional area
Z	=	section modulus

The bending moments for the desired loading combinations are calculated by the following equation:

$$M=\sqrt{M_Y^2+M_Z^2} \tag{3-2}$$

where,

M = bending moment for required loading

M_Y = Y component of bending moment

M_Z = Z component of bending moment

The axial load and bending moments for leak rate predictions and crack stability analyses are computed by the methods to be explained in Sections 3.3 and 3.4.

3.3 LOADS FOR LEAK RATE EVALUATION

The normal operating loads for leak rate predictions are calculated by the following equations:

$$F = F_{DW} + F_{TH} + F_P \tag{3-3}$$

$$M_Y = (M_Y)_{DW} + (M_Y)_{TH} + (M_Y)_P \tag{3-4}$$

$$M_Z = (M_Z)_{DW} + (M_Z)_{TH} + (M_Z)_P \tag{3-5}$$

The subscripts of the above equations represent the following loading cases:

DW = deadweight

TH = normal thermal expansion

P = load due to internal pressure

This method of combining loads is often referred as the <u>algebraic sum method</u> (Reference 3-1).

The loads based on this method of combination are provided in Table 3-1 at all the locations identified in Figure 3-2. The as-built dimensions are also given.

3.4 LOAD COMBINATION FOR CRACK STABILITY ANALYSES

In accordance with Standard Review Plan 3.6.3 (Reference 3-1), the <u>absolute sum</u> of loading components can be applied which results in higher magnitude of combined loads. If crack stability is demonstrated using these loads, the LBB margin on loads can be reduced from $\sqrt{2}$ to 1.0. The absolute summation of loads are shown in the following equations:

$$F = |F_{DW}| + |F_{TH}| + |F_P| + |F_{SSEINERTIA}| + |F_{SSEAM}| \tag{3-6}$$

$$M_Y = |(M_Y)_{DW}| + |(M_Y)_{TH}| + |(M_Y)_P| + |(M_Y)_{SSEINERTIA}| + |(M_Y)_{SSEAM}| \quad (3\text{-}7)$$

$$M_Z = |(M_Z)_{DW}| + |(M_Z)_{TH}| + |(M_Z)_P| + |(M_Z)_{SSEINERTIA}| + |(M_Z)_{SSEAM}| \quad (3\text{-}8)$$

where subscripts SSE, INERTIA and AM mean safe shutdown earthquake, inertia and anchor motion, respectively.

The loads so determined are used in the fracture mechanics evaluations (Section 7.0) to demonstrate the LBB margins at the locations established to be the governing locations. These loads at all the locations of interest (see Figure 3-2) are given in Table 3-2.

3.5 REFERENCES

3-1 Standard Review Plan: Public Comments Solicited; 3.6.3 Leak-Before-Break Evaluation Procedures; Federal Register/Vol. 52, No. 167/Friday, August 28, 1987/Notices, pp. 32626-32633.

Table 3-1 Dimensions, Normal Loads and Normal Stresses for D. C. Cook Units 1 & 2

Location[a]	Outside Diameter (in)	Minimum Thickness (in)	Axial Load[b] (kips)	Bending Moment (in-kips)	Total Stress (ksi)
1	34.68	2.74	1529	28495	19.58
2	34.68	2.74	1476	1315	6.02
3	34.68	2.74	1476	6238	8.44
4	37.75	3.27	1534	14649	9.54
5	37.62	3.21	1664	4557	6.46
6	37.04	2.92	1761	3281	6.96
7	37.04	2.92	1767	3505	7.07
8	37.04	2.92	1707	1014	5.87
9	37.04	2.92	1707	2894	6.63
10	37.62	3.21	1796	7313	7.84
11	32.90	2.60	1372	5116	8.50
12	32.90	2.60	1365	934	6.06
13	32.90	2.60	1365	5106	8.46
14	33.56	2.93	1364	5536	7.63

a. See Figure 3-2
b. Included Pressure

Table 3-2 Faulted Loads and Stresses for D. C. Cook Units 1 & 2

Location[a,b]	Axial Load[c] (kips)	Bending Moment (in-kips)	Total Stress (ksi)
1	1766	30007	21.19
2	1755	2279	7.51
3	1755	7678	10.17
4	2059	17914	12.18
5	1891	10493	9.27
6	1868	7144	8.86
7	1862	5162	8.04
8	1799	2919	6.94
9	1799	4739	7.67
10	1866	16583	11.41
11	1492	13977	14.09
12	1485	3847	8.22
13	1488	8109	10.69
14	1479	9303	9.94

a. See Figure 3-2

b. See Table 3-1 for dimensions

c. Includes Pressure

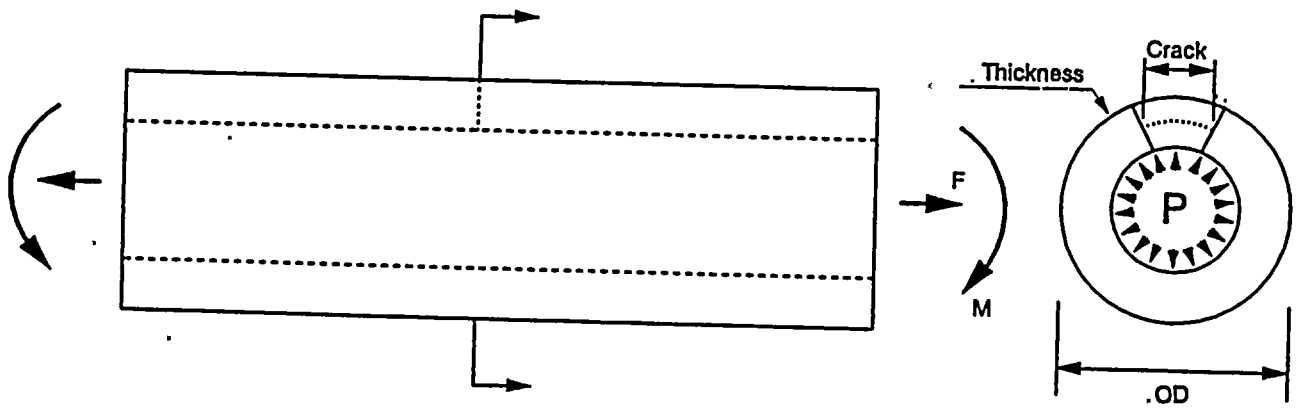

OD[a] = 34.68 in
t[a] = 2.74

Normal Loads[a]		Faulted Loads[b]	
force[c]:	1529 kips	force[c]:	1766 kips
bending moment:	28495 in-kips	bending moment:	30007 in-kips

[a] See Table 3-1
[b] See Table 3-3
[c] Includes the force due to a pressure of 2250 psia

Figure 3-1 Hot Leg Coolant Pipe

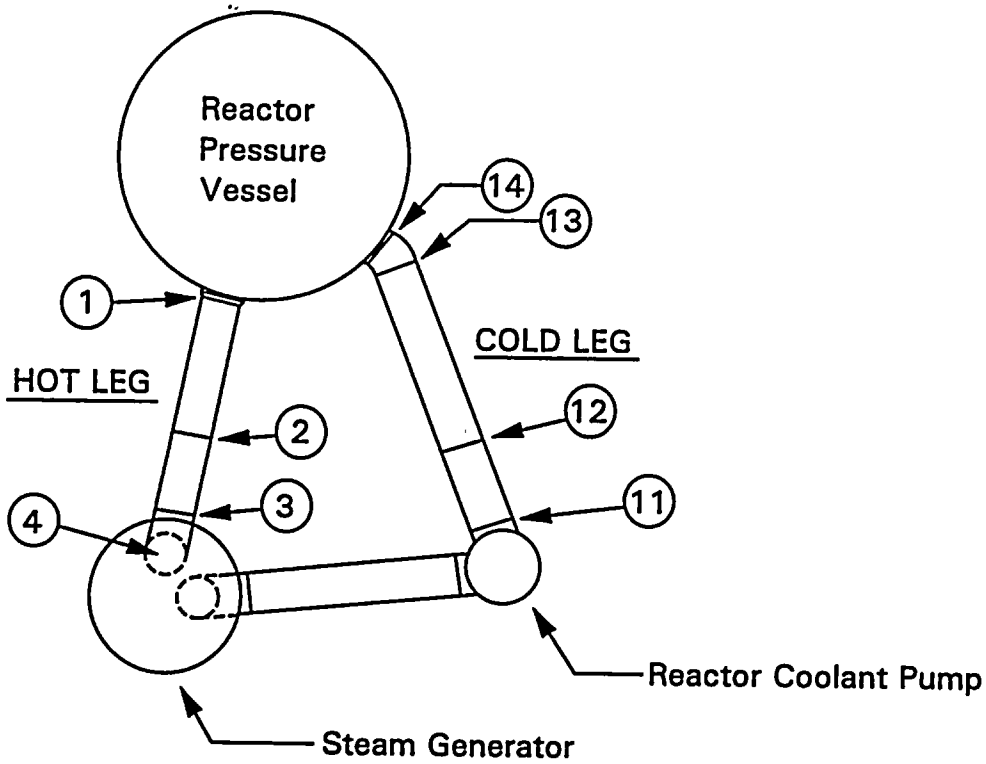

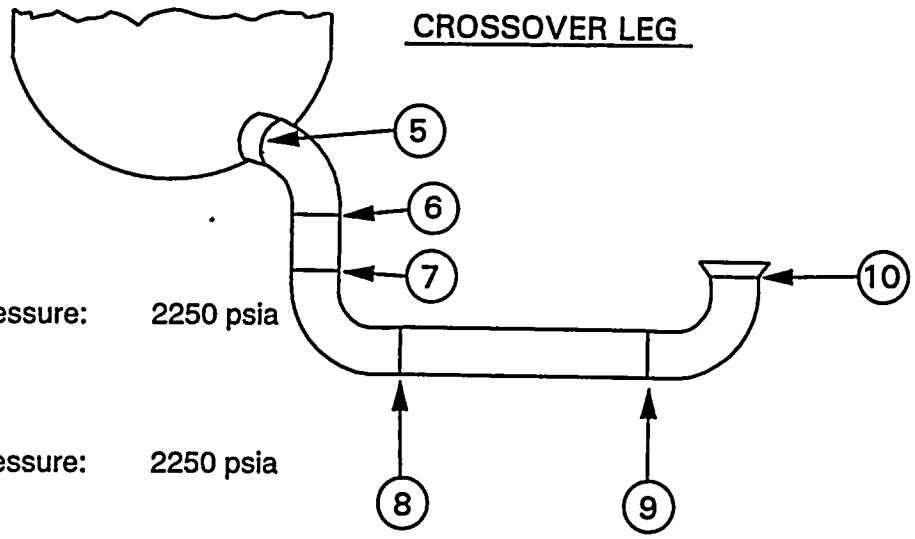

HOT LEG

Temperature 620°F, Pressure: 2250 psia

CROSSOVER LEG

Temperature 548°F, Pressure: 2250 psia

COLD LEG

Temperature 548°F, Pressure: 2250 psia

Figure 3-2 Schematic Diagram of D. C. Cook Units 1 and 2 Primary Loop Showing Weld Locations

4.0 MATERIAL CHARACTERIZATION

4.1 PRIMARY LOOP PIPE AND FITTINGS MATERIALS

The primary loop pipe and the elbow fittings for the D. C. Cook Units 1 and 2 are A351 CF8M.

4.2 TENSILE PROPERTIES

The Pipe Certified Materials Test Reports (CMTRs) for D. C. Cook Units 1 and 2 were used to establish the tensile properties for the leak-before-break analyses. The CMTRs include tensile properties at room temperature and/or at 650°F for each of the heats of material. These properties are given in Table 4-1 for Unit 1 and in Table 4-2 for Unit 2.

The representative properties at 620°F and 548°F were established from the tensile properties at 650°F given in Tables 4-1 and 4-2 by utilizing Section III of the 1989 ASME Boiler and Pressure Vessel Code (Reference 4-1). Code tensile properties at 620°F and 548°F were obtained by interpolating between the 500°F, 600°F and 650°F tensile properties. Ratios of the code tensile properties at 620°F and 548°F to the corresponding tensile properties at 650°F were then applied to the 650°F tensile properties given in Tables 4-1 and 4-2 to obtain the plant specific properties for A351 CF8M at 620°F and 548°F.

The average and lower bound yield strengths and ultimate strengths are given in Table 4-3. The ASME Code moduli of elasticity values are also given, and Poisson's ratio was taken as 0.3.

For leak-before-break fracture evaluations at the critical locations the true stress-true strain curves for A351 CF8M at 620°F and 548°F must be available. These curves were obtained using the Nuclear Systems Materials Handbook (Reference 4-2). The lower bound true stress-true strain curves are given in Figures 4-1 and 4-2.

4.3 FRACTURE TOUGHNESS PROPERTIES

The pre-service fracture toughnesses of cast stainless steels in terms of J_{Ic} have been found to be very high at 600°F. Typical results for a cast material are given in Figure 4-3. J_{Ic} is observed to be over 2500 in-lbs/in^2. However, cast stainless steel is susceptible to thermal aging at the reactor operating temperature, that is, about 290°C (550°F). Thermal aging of cast stainless steel results in embrittlement, that is, a decrease in the ductility, impact strength, and fracture toughness, of the material. Depending on the material composition, the Charpy impact energy of a cast stainless steel component could decrease to a small fraction of its original value after exposure to reactor temperatures during service.

The susceptibility of the material to thermal aging increases with increasing ferrite contents. The molybdenum bearing CF8M shows increased susceptibility to thermal aging.

In 1994, the Argonne National Laboratory (ANL) completed an extensive research program in assessing the extent of thermal aging of cast stainless steel materials. The ANL research program measured mechanical properties of cast stainless steel materials after they have been heated in controlled ovens for long periods of time. ANL compiled a data base, both from data within ANL and from international sources, of about 85 compositions of cast stainless steel exposed to a temperature range of 290-400°C (550-750°F) for up to 58,000 hours (6.5 years). From this data base, ANL developed correlations for estimating the extent of thermal aging of cast stainless steel (References 4-3 and 4-4).

ANL developed the fracture toughness estimation procedures by correlating data in the data base conservatively. After developing the correlations, ANL validated the estimation procedures by comparing the estimated fracture toughness with the measured value for several cast stainless steel plant components removed from actual plant service. The ANL procedures produced conservative estimates that were about 30 to 50 percent less than actual measured values. The procedure developed by ANL in Reference 4-4 was used to calculate the fracture toughness values for this analysis. ANL research program was sponsored and the procedure was accepted (Reference 4-5) by the NRC.

[The chemical composition is available from CMTR and is provided in Tables 4-4 and 4-5. The Schoeffer equation given in ASTM A-800 (Reference 4-6) was used to determine the ferrite content. The composition ratio used in determining the ferrite is a function of chromium, silicon, molybdenum, columbium, carbon, manganese, and nitrogen. The equation given in ASTM A-800 (Reference 4-6) for calculating ferrite is:

$$CR = 0.9 + 3.38883 \times 10^{-2}F - 5.58175 \times 10^{-4} F^2 + 4.22861 \times 10^{-6} F^3 \qquad (4\text{-}1)$$

where CR is the composition ratio as given by: $CR = (Cr)_e/(Ni)_e$

$$(Cr)_e = Cr + 1.5\ Si + 1.4\ Mo + Cb - 4.99 = \text{chromium equivalent} \qquad (4\text{-}2)$$

$$(Ni)_e = Ni + 30C + 0.5\ Mn + 26\ (N-0.02) + 2.77 = \text{nickel equivalent} \qquad (4\text{-}3)$$

where the elements are in percent weight and F (or δc) is ferrite in percent volume.

The following equations are taken from Reference 4-4.

The saturation room temperature (RT) impact energy of cast stainless steel was determined from the chemical composition available from CMTR and provided in Tables 4-4 and 4-5.

For CF 8M steel with <10% Ni the saturation value of RT impact energy C_{vsat} (J/cm^2) is the lower value determined from

$$\log_{10}C_{vsat} = 1.10 + 2.12 \exp(-0.041\phi) \qquad (4\text{-}4)]^{a,c,e}$$

[where the material parameter ϕ is expressed as

$$\phi = \delta_c (Ni + Si + Mn)^2 (C + 0.4N)/5; \quad (4\text{-}5)$$

and from

$$\log_{10}C_{vsat} = 7.28 - 0.011\delta_c - 0.185Cr - 0.369Mo - 0.451Si - 0.007Ni - 4.71(C + 0.4N) \quad (4\text{-}6)$$

For CF 8M steel with >10% Ni, the saturation value of RT impact energy C_{vsat} (J/cm^2) is the lower value determined from

$$\log_{10}C_{vsat} = 1.10 + 2.64 \exp(-0.064\phi) \quad (4\text{-}7)$$

where the material parameter ϕ is expressed as

$$\phi = \delta_c (Ni + Si + Mn)^2 (C + 0.4N)/5 \quad (4\text{-}8)$$

and from

$$\log_{10}C_{vsat} = 7.28 - 0.011\delta_c - 0.185Cr - 0.369Mo - 0.451Si - 0.007Ni - 4.71(C + 0.4N) \quad (4\text{-}9)$$

The saturation J-R curve at 290°C (554°F), for static-cast CF 8M steel is given by

$$J_d = 49 [C_{vsat}]^{0.41} [\Delta a]^n \quad (4\text{-}10)$$

and for centrifugally cast CF 8M steel, by

$$J_d = 57 [C_{vsat}]^{0.41} [\Delta a]^n \quad (4\text{-}11)$$

where the exponent n is expressed as

$$n = 0.23 + 0.06 \log_{10} [C_{vsat}] \quad (4\text{-}12)$$

where J_d is the "deformation J" in kJ/M^2 and Δa is the crack extension in mm.

For the D. C. Cook primary loop equation 4-10 was used conservatively to calculate the J value for both pipes and elbows. The crack extension for "J_d" at initiation was calculated using the ASTM E813-85 procedures, "J_d" at initiation (J_{IC}) was defined on the 0.2mm offset line. The chemical composition and fracture toughness values calculated for D. C. Units 1 and 2 primary loop piping systems are given in Table 4-4 and 4-5. J_{IC} values are converted to in-lb/in^2 and shown in Tables 4-4 and 4-5.] [a,c,e]

[The critical heats for the hot leg, crossover leg and cold leg, from Tables 4-4 and 4-5 are as follows.

Hot Leg: Heat number A355123456B (Unit 1),

Cross-over Leg: Heat number 39344 (Unit 1)

Cold Leg: Heat number C1856 (Unit 2)

T (Tearing Material modulus) and J_{MAX} (maximum J value of the material at 5 mm crack extension) are also calculated for the three (3) critical heats and are shown in Table 4-6. J_{IC} values for these critical heats are also shown in Table 4-6 and are taken from Tables 4-4 and 4-5.][a,c,e]

The results from the ANL Research Program indicate that the lower-bound fracture toughness of thermally aged cast stainless steel is similar to that of submerged arc welds (SAWs). The applied value of the J-integral for a flaw in the weld regions will be lower than that in the base metal because the yield stress for the weld materials is much higher at the temperature[a]. Therefore, weld regions are less limiting than the cast material.

In fracture mechanics analyses that follow, the fracture toughness properties given in Table 4-6 will be used as the criteria against which the applied fracture toughness values will be compared.

4.4 REFERENCES

4-1 ASME Boiler and Pressure Vessel Code Section III, "Rules for Construction of Nuclear Power Plant Components; Division 1 - Appendices." 1989 Edition, July 1, 1989.

4-2 Nuclear Systems Materials Handbook, Part 1 - Structural Materials, Group 1 - High Alloy Steels, Section 2, ERDA Report TID 26666, November, 1975.

4-3 O. K. Chopra and W. J. Shack, "Assessment of Thermal Embrittlement of Cast Stainless Steels," NUREG/CR-6177, U. S. Nuclear Regulatory Commission, Washington, DC, May 1994.

4-4 O. K. Chopra, "Estimation of Fracture Toughness of Cast Stainless Steels During Thermal Aging in LWR Systems," NUREG-CR-4513, Revision 1, U. S. Nuclear Regulatory Commission, Washington, DC, August 1994.

[a] In the report all the applied J values were conservatively determined by using base metal strength properties.

4-5 "Flaw Evaluation of Thermally aged Cast Stainless Steel in Light-Water Reactor Applications," Lee, S.; Kuo, P. T.; Wichman, K.; Chopra, O.; Published in International Journal of Pressure Vessel and Piping, June 1997.

4-6 ASTM A800M-84 - Standard Practice for Steel Casting, Austenitic Alloy, Estimating Ferrite Content Thereof, Section 1 - Iron and Steel Products, Vol. 01.02, Ferrous Castings; Ferroalloys; Shipbuilding.

Table 4-1 Measured Tensile Properties for D. C. Cook Unit 1 Primary Loop Piping System

		At Room Temperature	
		YIELD	ULTIMATE
Heat Number	Location	(PSI)	(PSI)
39405-1	X-over Leg	40200	79900
39125-2	X-over Leg	43300	85600
36668-3	Cold Leg	43800	85600
36806-2	X-over Leg	42900	87200
35222-2	X-over Leg	48000	87600
35366-2	X-over Leg	42100	84200
38929-2	X-over Leg	47400	89400
38875-3	X-over Leg	41350	83950
34027-2	X-over Leg	33900	73600
36106-2	X-over Leg	37900	76300
48833-1	X-over Leg	39100	81100
49083-2	X-over Leg	41925	86700
39344-2	X-over Leg	54000	95000
38992-2	X-over Leg	48500	86900
35366-2	X-over Leg	42100	84200
36348-1	X-over Leg	43800	81800
36106-1	X-over Leg	42000	83900
36668-2	X-over Leg	44700	85400
37034-3	Cold Leg	55500	96000
38408-2	Cold Leg	46200	86380
38636-3	Cold Leg	42300	84000
33975-2	X-over Leg	44400	86000
35794-1	X-over Leg	43800	86600

Table 4-1 Measured Tensile Properties for D. C. Cook Unit 1 Primary Loop Piping System (cont.)

		At Room Temperature		At 650°F	
		YIELD	ULTIMATE	YIELD	ULTIMATE
Heat number	Location	(PSI)	(PSI)	(PSI)	(PSI)
34158-2	X-over Leg	48905	85075	N/A	N/A
36348-2	Hot Leg	40800	81800	N/A	N/A
37034-2	Hot Leg	41430	85950	N/A	N/A
37758-1	Hot Leg	43785	85300	N/A	N/A
38408-1	Hot Leg	45100	85200	N/A	N/A
37941-2	X-over Leg	45650	85225	N/A	N/A
A355123456B	Hot Leg	43950	88100	26200	73500
A367123456A	Hot Leg	45950	83720	25900	65000
A382456789	Hot Leg	39960	78520	24600	67000
A383890123A	Hot Leg	38095	79090	26500	66000
A367123456B	Hot Leg	45950	83720	25900	65000
B102901234A	Hot Leg	35965	77920	23600	65000
A3857890	Cold Leg	38960	82920	26900	68000
A3869012	Cold Leg	39000	80100	24800	66750
A3831234	Cold Leg	36960	79420	25400	63750
A3845678	Cold Leg	40950	79220	24900	66500
A3677890	Cold Leg	41960	78520	24300	67500
B102012345	Hot Leg	39460	79220	25900	65000
A3809012	Cold Leg	34465	76523	25300	62500
A3879012	Cold Leg	38960	79420	25500	67500
A3893456	Cold Leg	38300	82100	24700	64750
A383890123B	Hot Leg	38095	79090	26500	66000
A352123456B	X-over Leg	43000	88750	30400	72750
B2670A	X-over Leg	41950	84900	28400	70000
B2670B	X-over Leg	41950	84900	28400	70000
B2737A&B	X-over Leg	39300	80590	23600	64000
C1494A	X-over Leg	40790	79700	25900	64500
C1550A&B	X-over Leg	38960	82310	24800	63900

Note:
N/A = Not Applicable

Table 4-2 Measured Tensile Properties for D. C. Cook Unit 2 Primary Loop Piping System

		At Room Temperature		At 650°F	
		YIELD	ULTIMATE	YIELD	ULTIMATE
Heat number	Location	(PSI)	(PSI)	(PSI)	(PSI)
55186	Cold Leg	41000	84200	N/A	N/A
55186	Cold Leg	48800	86500	30900	65700
55186	Cold Leg	48800	86500	21500	55000
57370	X-over Leg	44900	76900	N/A	N/A
55158	X-over Leg	47700	79700	N/A	N/A
55158	X-over Leg	50000	82000	30900	62900
56445	X-over Leg	47200	75500	25300	58400
56844	X-over Leg	46100	76300	N/A	N/A
56844	X-over Leg	50500	80800	30300	63400
56877	X-over Leg	42700	75200	24700	59500
57370	X-over Leg	44800	76900	N/A	N/A
57412	X-over Leg	44400	78600	28100	59500
56913	X-over Leg	43800	75800	24700	56100
56869	X-over Leg	50000	83100	N/A	N/A
56869	X-over Leg	49400	85300	31400	67400
56445	X-over Leg	47200	85500	25300	58400
57452	X-over Leg	47700	76300	28000	59500
56949	X-over Leg	41600	74100	25300	58400
57123	X-over Leg	47200	78600	31400	62900
56525	Hot Leg	47200	79700	23600	61200
55228	Hot Leg	34800	79200	N/A	N/A
55228	Hot Leg	38200	80800	27000	64600
56445	Hot Leg	47200	75500	25300	58400
56445	Hot Leg	47200	75500	25300	58400

Note:
N/A = Not Applicable

Table 4-2 Measured Tensile Properties for D. C. Cook Unit 2 Primary Loop Piping System (cont.)

		At Room Temperature		At 650°F	
		YIELD	ULTIMATE	YIELD	ULTIMATE
Heat number	Location	(PSI)	(PSI)	(PSI)	(PSI)
56525	Hot Leg	47200	79700	23600	61200
C2285A&B	Hot Leg	40834	80519	23800	63750
C1686A-1&A-2	X-over Leg	40300	77750	23400	62500
C2254	Hot Leg	42200	82500	22700	64000
C2145	Hot Leg	39960	82010	23300	66250
C1618	Hot Leg	31960	78920	24400	63750
C1982C&D	Hot Leg	39460	77922	21400	60250
C1913	Hot Leg	42950	81618	24800	68500
B1931	Cold Leg	37000	75800	22300	64000
B2591	Cold Leg	48450	81918	23200	66250
C2110	Cold Leg	39460	79920	21500	65500
C1941	Cold Leg	40960	81420	23300	67000
C1967A&B	X-over Leg	43950	78220	21400	63750
C2092A&B	X-over Leg	37460	76523	23900	63000
C1875A&B	X-over Leg	41950	81610	23300	68000
C1845	Cold Leg	39460	80920	22000	65500
C1856	Cold Leg	48000	88250	28300	73750
C1881	Cold Leg	42450	80910	23600	68000
C1974	Cold Leg	37960	78420	20900	61500

Table 4-3 Mechanical Properties for D. C. Cook Units 1 and 2 Materials at Operating Temperatures

Material	Temperature (°F)	Average Yield Strength (psi)	Lower Bound	
			Yield Stress (psi)	Ultimate Strength (psi)
A351 CF8M	620	25667	21103	55000
	548	26590	21860	55000
Modulus of Elasticity				
$E = 25.20 \times 10^6$ psi, at 620°F				
$E = 25.56 \times 10^6$ psi, at 548°F				
Poisson's ratio: 0.3				

a,c,e

Table 4-4 Chemistry and Fracture Toughness Properties of the Material Heats of D. C. Cook Unit 1

Heat Number	% Ni	% C	% Mn	% Cr	% Si	% Mo	% N	(Cr)e	(Ni)e	F(=δc)	ϕ	C_{Vsat}[1]	C_{Vsat}[2]	C_{Vsat}[3]	n	J_{IC} (in/lb/in^2)
35222-2	9.57	0.06	0.76	20.67	0.62	2.47	0.04	20.07	15.30	15.74	28.69	56.75	46.44	46.44	0.33	794
39344-2	9.11	0.06	0.72	20.69	1.41	2.46	0.04	21.26	14.82	22.92	44.01	28.11	17.17	17.17	0.30	550
38992-2	9.30	0.04	0.52	20.00	0.90	2.40	0.04	19.72	14.31	19.39	24.96	72.78	55.76	55.76	0.33	849
B102901234A	9.75	0.05	1.02	20.17	0.75	2.62	0.04	19.97	15.31	15.38	26.94	63.45	49.57	49.57	0.33	813
*A355123456B	10.06	0.06	0.93	20.92	0.73	2.73	0.04	20.81	15.88	15.69	32.76	26.57	29.66	26.57	0.32	646
*A367123456A	9.80	0.06	0.68	20.70	0.67	2.76	0.04	20.58	15.61	16.11	30.44	51.11	33.58	33.58	0.32	704
*A382456789	9.40	0.06	0.72	20.70	0.67	2.80	0.04	20.64	15.11	18.67	33.04	44.37	30.62	30.62	0.32	681
**A3857890	9.55	0.04	0.83	20.60	0.76	2.67	0.04	20.49	14.72	20.24	28.13	58.75	38.70	38.70	0.33	742
A3869012	9.74	0.04	0.91	20.10	0.74	2.76	0.04	20.08	14.94	17.45	25.35	70.74	48.47	48.47	0.33	806
**A3845678	10.25	0.06	0.96	20.40	0.78	2.62	0.04	20.25	16.08	13.17	28.78	33.00	41.01	33.00	0.32	700
*B102012345	9.75	0.05	0.96	20.20	0.79	2.78	0.04	20.29	15.28	16.58	28.94	55.86	39.76	39.76	0.33	749
**A3893456	9.81	0.05	0.98	20.52	0.78	2.79	0.04	20.61	15.35	17.37	30.69	50.38	34.03	34.03	0.32	708
A352123456B	9.86	0.04	0.09	21.00	0.69	2.70	0.04	20.83	15.06	19.67	24.94	72.86	34.54	34.54	0.32	712
B2670A	9.86	0.06	0.84	20.55	0.80	2.96	0.04	20.90	15.63	17.10	34.37	41.49	25.71	25.71	0.31	638
B2670B	9.86	0.06	0.84	20.55	0.80	2.96	0.04	20.90	15.63	17.10	34.37	41.49	25.71	25.71	0.31	638
B2737A&B	9.81	0.06	0.90	20.27	0.75	2.80	0.04	20.33	15.61	15.25	30.44	51.11	36.66	36.66	0.32	727
39405-1	9.31	0.06	0.73	18.36	0.96	2.03	0.04	17.65	15.03	9.49	17.45	136.91	149.23	136.91	0.36	1181

a,c,e

Table 4-4 Chemistry and Fracture Toughness Properties of the Material Heats of D. C. Cook Unit 1 (cont.)

Heat Number	% Ni	% C	% Mn	% Cr	% Si	% Mo	% N	(Cr)e	(Ni)e	F(=δc)	ϕ	C_{Vsat}[1]	C_{Vsat}[2]	C_{Vsat}[3]	n	J_{IC} (in/lb/in^2)
39125-2	9.92	0.05	0.63	19.46	0.96	2.39	0.04	19.26	15.28	13.20	23.08	83.72	69.11	69.11	0.34	919
**36668-3	9.42	0.06	0.63	19.61	0.90	2.24	0.04	19.11	15.09	13.52	24.64	74.46	70.32	70.32	0.34	924
36806-2	9.35	0.06	0.68	18.77	1.12	2.03	0.04	18.30	15.04	11.26	21.28	96.84	101.41	96.84	0.35	1040
35366-2	9.26	0.06	1.12	18.45	0.82	2.20	0.04	17.77	15.17	9.34	17.81	132.28	144.41	132.28	0.36	1167
38929-2	9.71	0.06	0.91	19.63	1.31	2.08	0.04	19.52	15.52	13.11	28.36	57.91	52.48	52.48	0.33	830
38875-3	9.35	0.05	0.70	19.10	1.04	2.11	0.04	18.62	14.75	13.33	21.64	93.97	94.61	93.97	0.35	1029
34027-2	9.69	0.06	0.74	18.65	0.86	2.14	0.04	17.95	15.41	9.07	17.57	135.34	133.87	133.87	0.36	1172
36106-2	9.65	0.05	0.62	19.49	0.94	2.20	0.04	18.99	15.01	13.45	22.31	88.99	81.71	81.71	0.34	977
48833-1	9.04	0.08	0.92	18.96	0.86	2.15	0.04	18.27	15.45	9.80	22.03	91.03	92.89	91.03	0.35	1017
49083-2	9.25	0.05	0.63	18.52	1.14	2.08	0.04	18.15	14.61	12.38	19.85	109.56	114.91	109.56	0.35	1088
35366-2	9.26	0.06	1.12	18.45	0.82	2.20	0.04	17.77	15.17	9.34	17.81	132.28	144.41	132.28	0.36	1167
36348-1	9.62	0.07	1.10	19.57	1.00	2.15	0.04	19.09	15.82	10.82	25.56	69.71	66.65	66.65	0.34	906
36106-1	9.65	0.05	0.62	19.49	0.94	2.20	0.04	18.99	15.01	13.45	22.31	88.99	81.71	81.71	0.34	977
36668-2	9.42	0.06	0.63	19.61	0.90	2.24	0.04	19.11	15.09	13.52	24.64	74.46	70.32	70.32	0.34	924
**37034-3	9.29	0.06	0.70	18.87	1.12	2.08	0.04	18.47	14.99	11.94	22.40	88.34	91.64	88.34	0.35	1005
**38408-2	9.36	0.08	1.18	19.14	1.38	2.10	0.04	19.16	15.90	10.75	29.33	54.58	50.80	50.80	0.33	820
**38636-3	9.57	0.08	0.84	19.63	1.24	2.08	0.04	19.41	15.94	11.30	29.45	54.19	47.67	47.67	0.33	801
33975-2	9.54	0.07	0.92	19.60	1.02	2.30	0.04	19.36	15.65	12.16	27.56	60.92	54.91	54.91	0.33	844

Table 4-4 Chemistry and Fracture Toughness Properties of the Material Heats of D. C. Cook Unit 1 (cont.) a,c,e

Heat Number	% Ni	% C	% Mn	% Cr	% Si	% Mo	% N	(Cr)e	(Ni)e	F(=δc)	φ	C_{Vsat}[1]	C_{Vsat}[2]	C_{Vsat}[3]	n	J_{IC} (in/lb/in^2)
35794-1	9.49	0.05	0.58	19.98	0.76	2.07	0.04	19.03	14.83	14.31	22.15	90.11	87.58	87.58	0.35	1002
34158-2	9.20	0.06	0.79	19.22	0.88	2.18	0.04	18.60	14.94	12.50	22.45	88.00	91.86	88.00	0.35	1004
*36348-2	9.62	0.07	1.10	19.57	1.00	2.15	0.04	19.09	15.82	10.82	25.56	69.71	66.65	66.65	0.34	906
*37034-2	9.29	0.06	0.70	18.87	1.12	2.08	0.04	18.47	14.99	11.94	22.40	88.34	91.64	88.34	0.35	1005
*37758-1	9.59	0.04	0.07	19.31	1.08	2.16	0.04	18.96	14.38	16.13	20.84	100.50	82.26	82.26	0.34	979
*38408-1	9.36	0.08	1.18	19.14	1.38	2.10	0.04	19.16	15.90	10.75	29.33	54.58	50.80	50.80	0.33	820
37941-2	9.57	0.04	0.96	19.80	0.96	2.08	0.04	19.16	14.80	14.89	22.02	91.12	83.56	83.56	0.35	985
*A383890123A	9.50	0.07	0.98	20.00	0.75	2.66	0.04	19.86	15.64	13.67	29.65	53.53	43.48	43.48	0.33	775
*A367123456B	9.80	0.06	0.68	20.70	0.67	2.76	0.04	20.58	15.49	16.62	31.41	48.41	33.15	33.15	0.32	701
**A3831234	9.90	0.05	0.96	19.57	0.78	2.84	0.04	19.73	15.43	14.09	25.20	71.52	53.05	53.05	0.33	833
**A3677890	9.85	0.03	1.01	19.35	0.76	2.60	0.04	19.14	14.81	14.79	18.37	125.36	89.08	89.08	0.35	1009
**A3809012	9.80	0.04	0.90	19.55	0.69	2.66	0.04	19.32	15.00	14.55	21.14	97.96	75.53	75.53	0.34	949
**A3879012	9.61	0.06	0.96	19.80	0.78	2.73	0.04	19.80	15.44	14.28	27.96	59.38	47.37	47.37	0.33	799
*A383890123B	9.50	0.07	0.98	20.00	0.75	2.66	0.04	19.86	15.64	13.67	29.65	53.53	43.48	43.48	0.33	775
C1494A	9.66	0.05	0.92	19.99	0.79	2.57	0.04	19.78	15.17	15.36	26.21	66.65	53.68	53.68	0.33	837
C1550A&B	9.80	0.07	0.86	19.65	0.70	2.66	0.04	19.43	15.88	11.56	25.66	69.24	55.81	55.81	0.33	849

* Heats for the Hot Leg
** Heats for the Cold Leg

All other heats are in cross-over leg.
N is assúmed as 0.04
C_b (Columbium) = 0

[1]From Equations 4-4 or 4-7
[2]From Equations 4-6 or 4-9
[3]Minimum of C_{Vsat}[1] and C_{Vsat}[2]

Table 4-5 Chemistry and Fracture Toughness Properties of the Material Heats of D. C. Cook Unit 2 a,c,e

Heat Number	% Ni	% C	% Mn	% Cr	% Si	% Mo	% N	(Cr)e	(Ni)e	F(=δc)	ϕ	C_{Vsat}[1]	C_{Vsat}[2]	C_{Vsat}[3]	n	J_{IC} (in/lb/in^2)
C2285A&B	9.71	0.05	0.89	20.95	0.72	2.67	0.04	20.78	15.09	19.35	32.73	45.09	31.81	31.81	0.32	690
57370	10.10	0.08	1.01	20.30	0.83	2.79	0.04	20.46	16.56	12.11	33.15	26.09	29.15	26.09	0.32	642
57412	9.33	0.07	0.87	20.70	0.90	2.75	0.04	20.91	15.41	18.15	38.46	34.51	22.90	22.90	0.31	612
57452	10.76	0.07	0.92	20.70	0.95	2.70	0.04	20.92	16.87	12.28	33.69	25.44	25.72	25.44	0.31	636
*C2254	9.76	0.04	0.93	20.95	0.73	2.65	0.04	20.77	14.98	19.90	29.07	55.44	35.17	35.17	0.32	716
*C1913	9.71	0.05	0.87	20.11	0.78	2.75	0.04	20.14	15.19	16.46	28.04	59.09	42.98	42.98	0.33	771
**B2591	9.66	0.05	1.05	20.68	0.73	2.96	0.04	20.93	15.39	18.37	31.73	47.55	28.33	28.33	0.32	662
**C2110	9.91	0.04	0.94	20.21	0.77	2.71	0.04	20.17	15.13	16.86	25.50	70.03	47.35	47.35	0.33	799
**C1941	9.71	0.05	0.94	20.45	0.72	2.65	0.04	20.25	15.23	16.68	28.46	57.54	42.84	42.84	0.33	770
C1967A&B	9.61	0.05	0.91	20.67	0.80	2.67	0.04	20.62	15.11	18.58	31.43	48.35	33.69	33.69	0.32	705
55158	9.01	0.07	0.92	20.00	1.14	2.50	0.04	20.22	15.12	17.09	36.02	38.38	30.71	30.71	0.32	681
C1875A&B	9.56	0.06	1.02	20.67	0.76	2.75	0.04	20.67	15.42	17.27	33.76	42.78	30.46	30.46	0.32	679
**C1845	9.80	0.05	0.97	20.31	0.84	2.82	0.04	20.53	15.34	17.17	30.55	50.80	34.27	34.27	0.32	710
**C1856	9.66	0.08	0.98	20.89	0.90	2.85	0.04	21.24	16.10	16.14	41.27	30.93	18.22	18.22	0.31	562
**C1881	9.66	0.05	0.95	20.67	0.72	2.77	0.04	20.64	15.18	18.30	31.01	49.49	33.84	33.84	0.32	706
*C1686A-1 & A-2	9.76	0.05	0.90	19.91	0.73	2.71	0.04	19.81	15.26	15.05	25.77	68.70	52.81	52.81	0.33	832

a,c,e

Table 4-5 Chemistry and Fracture Toughness Properties of the Material Heats of D. C. Cook Unit 2 (cont.)

Heat Number	% Ni	% C	% Mn	% Cr	% Si	% Mo	% N	(Cr)e	(Ni)e	F(=δc)	ϕ	C_{Vsat}[1]	C_{Vsat}[2]	C_{Vsat}[3]	n	J_{IC} (in/lb/in^2)
*C2145	9.46	0.06	0.89	19.71	0.75	2.65	0.04	19.56	15.26	14.25	26.69	64.54	54.53	54.53	0.33	842
*C1618	9.81	0.06	0.90	20.03	0.69	2.75	0.04	19.93	15.61	13.99	27.64	60.64	46.56	46.56	0.33	794
*C1982C&D	9.81	0.06	0.88	19.89	0.71	2.61	0.04	19.62	15.60	13.10	25.88	68.20	55.76	55.76	0.33	849
**B1931	9.76	0.07	0.95	19.52	0.69	2.63	0.04	19.25	15.89	11.03	24.66	74.38	62.01	62.01	0.34	883
C2092A&B	9.61	0.07	0.93	19.89	0.72	2.65	0.04	19.69	15.72	12.84	28.00	59.24	48.33	48.33	0.33	805
**C1974	10.26	0.06	0.93	20.23	0.78	2.71	0.04	20.20	16.08	13.06	28.44	33.70	40.95	33.70	0.32	705
**55186	9.14	0.05	0.88	19.60	0.90	2.70	0.04	19.74	14.63	17.75	27.94	59.47	48.05	48.05	0.33	804
*56445[a]	10.82	0.08	0.95	19.68	1.13	2.34	0.04	19.66	17.24	8.10	25.88	40.16	44.58	40.16	0.33	752
56844	9.62	0.06	0.91	19.54	1.08	2.48	0.04	19.64	15.43	13.84	28.36	57.93	48.46	48.46	0.33	806
56877	10.22	0.06	0.84	19.54	1.11	2.65	0.04	19.93	15.99	12.57	28.30	34.01	41.58	34.01	0.32	708
56913	10.68	0.08	0.88	20.05	1.00	2.15	0.04	19.57	17.07	8.35	25.29	41.99	51.01	41.99	0.33	765
56869	10.82	0.07	0.94	19.93	1.01	2.75	0.04	20.31	16.94	10.48	29.39	31.79	33.62	31.79	0.32	690
56949	10.35	0.07	0.88	18.25	1.23	2.89	0.04	19.15	16.44	9.08	24.25	45.64	50.72	45.64	0.33	789
57123	10.35	0.07	0.82	18.25	1.16	2.67	0.04	18.74	16.41	8.17	21.36	59.25	67.29	59.25	0.34	868
*56525[a]	9.50	0.08	0.97	18.12	0.99	2.20	0.04	17.70	15.94	6.97	17.58	135.30	118.63	118.63	0.35	1121
*55228	9.05	0.06	0.88	18.10	0.86	2.25	0.04	17.55	14.84	9.81	17.36	138.18	152.82	138.18	0.36	1185

* Heats for the Hot Leg
** Heats for the Cold Leg

All other heats are in cross-over leg.
N is assumed as 0.04
C_b (Columbium) = 0

[1]From Equations 4-4 or 4-7
[2]From Equations 4-6 or 4-9
[3]Minimum of C_{Vsat}[1] and C_{Vsat}[2]

Table 4-6 Fracture Toughness Properties for D. C. Cook Units 1 and 2 Primary Loops for Leak-Before-Break Evaluation at Critical Locations

Heat No.	J_{IC} (in-lb/in^2)	T_{mat} (non-dim)	J_{MAX} (in-lb/in^2)	Comments
A355123456B	646	52	1784	Hot Leg
39344	550	41	1464	Cross-over Leg
C1856	562	42	1505	Cold Leg

a,c,e

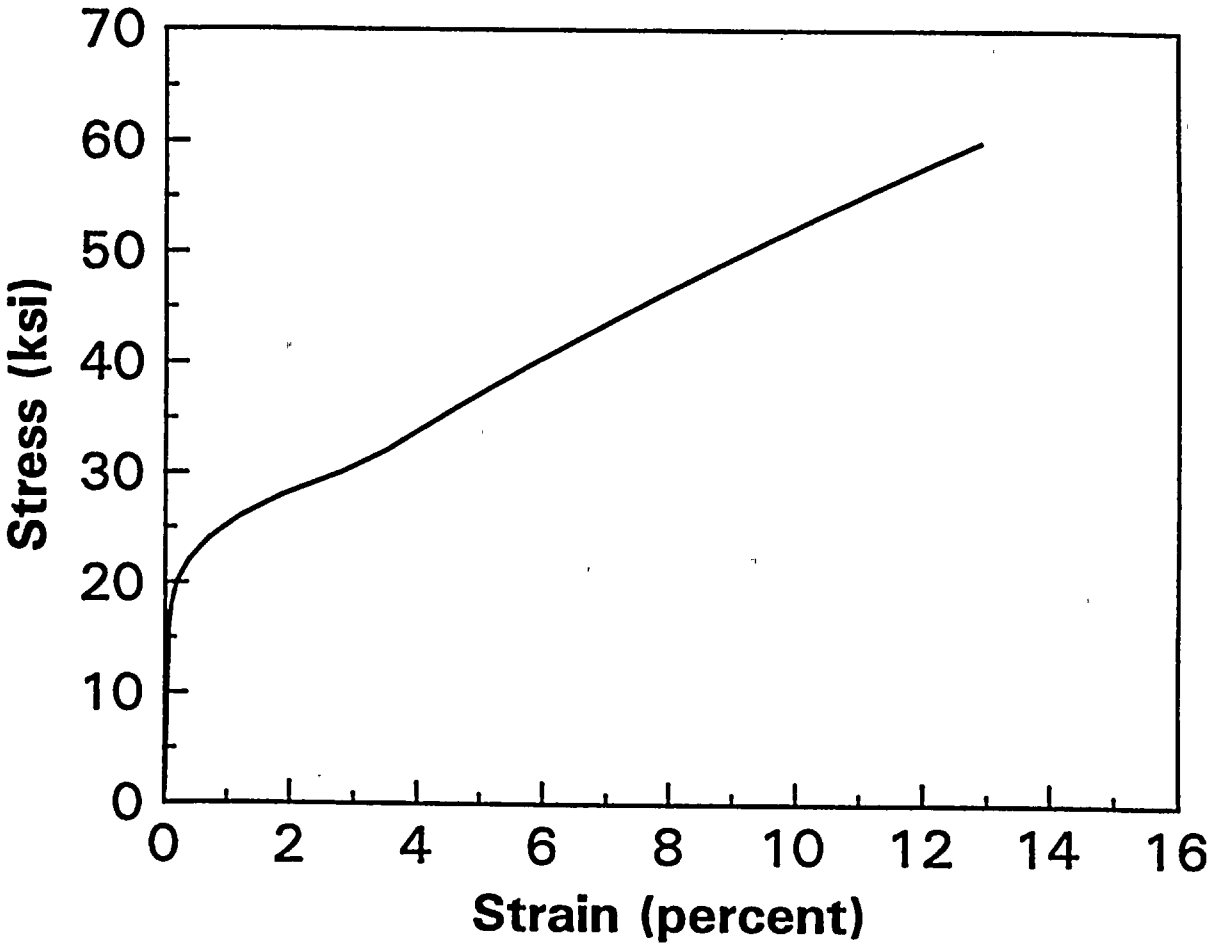

Figure 4-1 Representative Lower Bound True Stress - True Strain Curve for A351 CF8M at 620°F

a,c,e

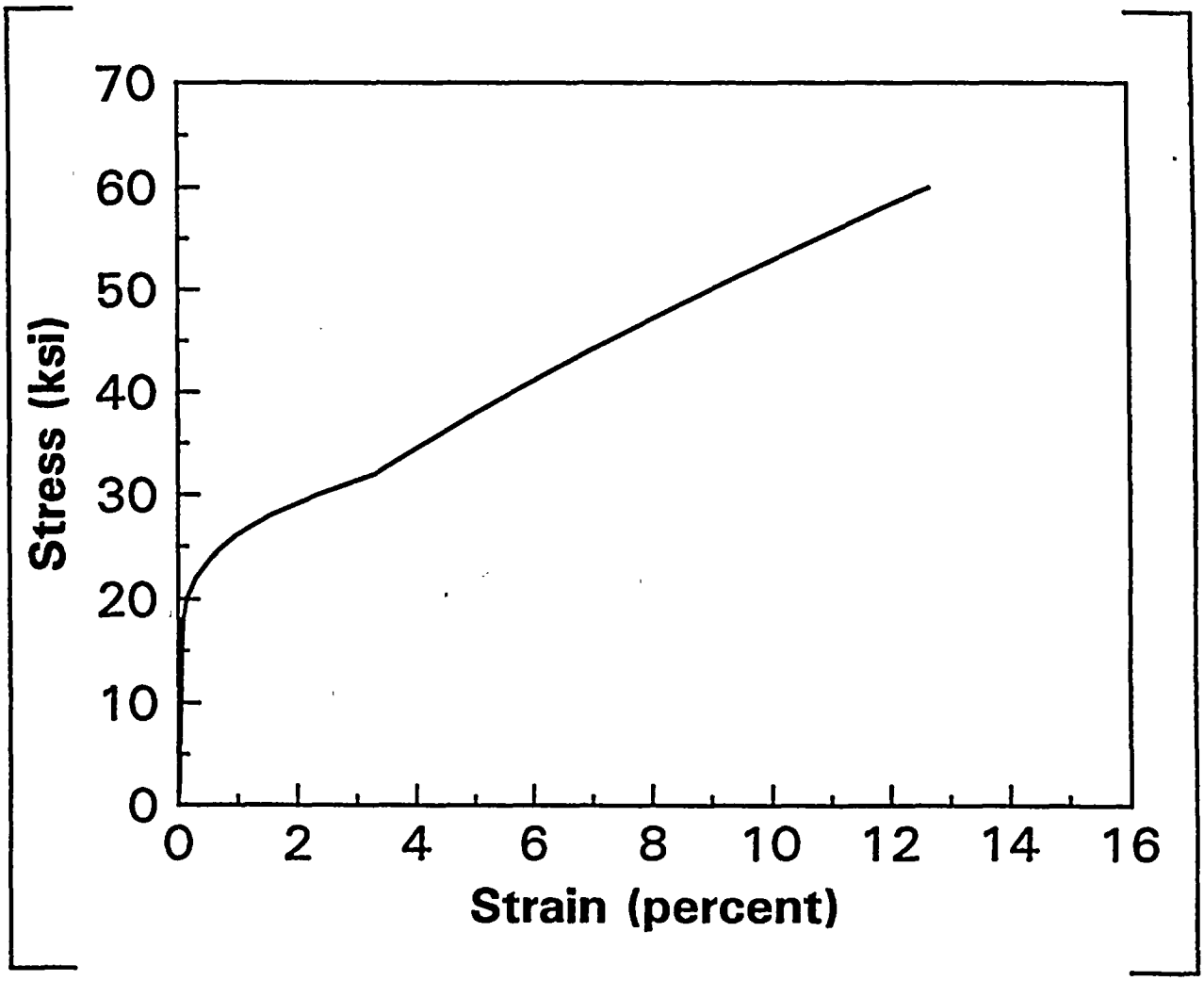

Figure 4-2 Representative Lower Bound True Stress - True Strain Curve for A351 CF8M at 548°F

a,c,e

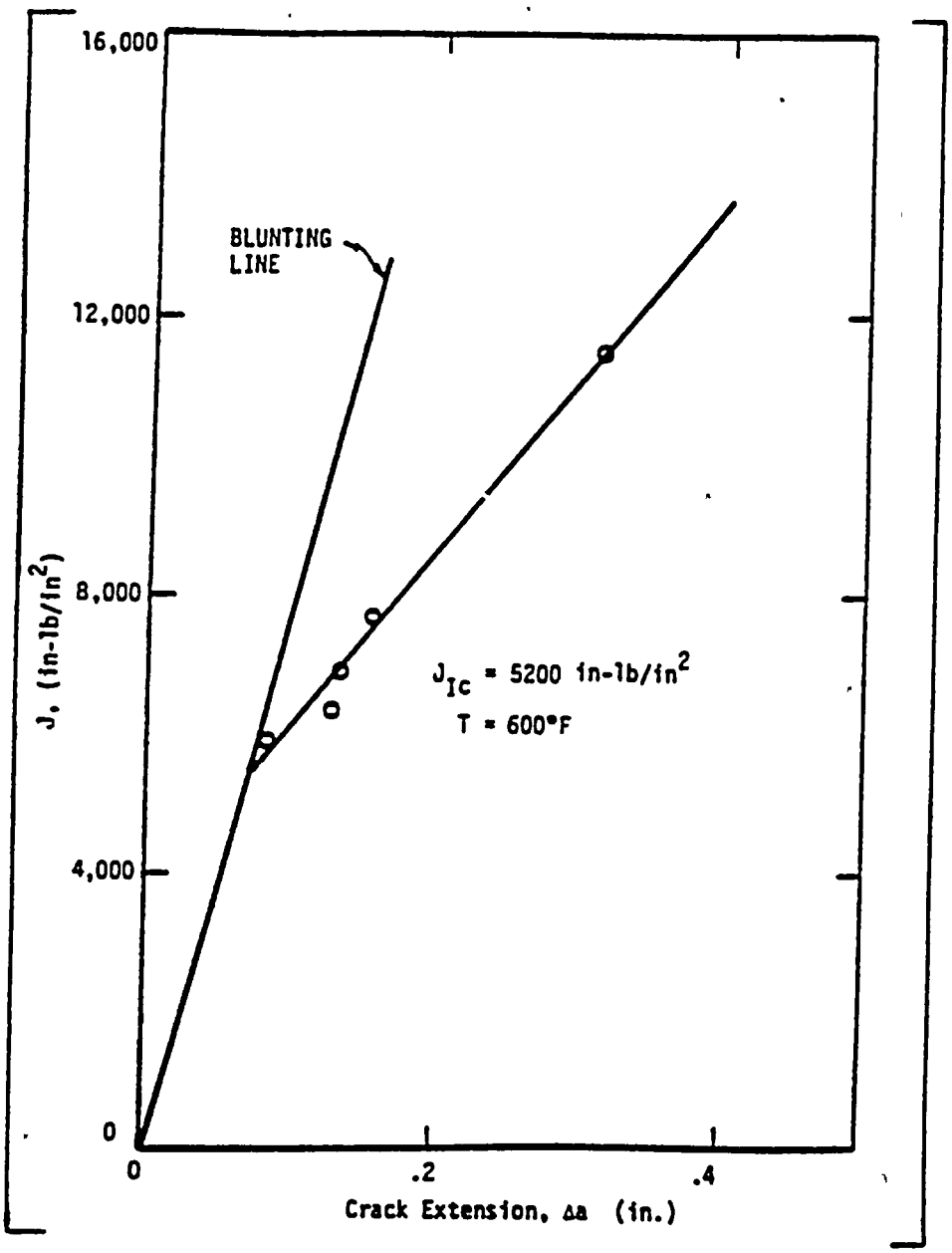

Figure 4-3 Pre-Service J vs. Δa for SA351 CF8M Cast Stainless Steel at 600°F

5.0 CRITICAL LOCATIONS AND EVALUATION CRITERIA

5.1 CRITICAL LOCATIONS

The leak-before-break (LBB) evaluation margins are to be demonstrated for the limiting locations (governing locations). Such locations are established based on the loads (Section 3.0) and the material properties established in Section 4.0. These locations are defined below for D. C. Cook Units 1 and 2. Table 3-2 as well as Figure 3-2 are used for this evaluation.

Critical Locations

The highest stressed location for the entire primary loop is at Location 1 (in the Hot Leg) (See Figure 3-2) at the reactor vessel outlet nozzle to pipe weld. Since the pipe Geometry and operating temperature at the cross-over leg and Cold Leg are different additional critical locations are also identified. The highest stressed location for the cross-over leg is at location 10 at the pump inlet nozzle to pipe weld. The highest stressed location for the cold leg is at location 11 at the pump outlet nozzle to pipe weld. It is thus concluded that the enveloping locations in D. C. Cook Units 1 and 2 for which LBB methodology is to be applied are locations 1, 10 and 11. The tensile properties and the allowable toughness for the critical locations are shown in Tables 4-3 and 4-6.

5.2 FRACTURE CRITERIA

As will be discussed later, fracture mechanics analyses are made based on loads and postulated flaw sizes related to leakage. The stability criteria against which the calculated J and tearing modulus are compared are:

(1) If $J_{app} < J_{IC}$, then the crack will not initiate;

(2) If $J_{app} \geq J_{IC}$, but, if $T_{app} < T_{mat}$ and $J_{app} < J_{max}$, then the crack is stable.

Where:

J_{app} = Applied J

J_{IC} = J at Crack Initiation

T_{app} = Applied Tearing Modulus

T_{mat} = Material Tearing Modulus

J_{max} = Maximum J value of the material

For critical locations, the limit load method discussed in Section 7.0 was also used.

6.0 LEAK RATE PREDICTIONS

6.1 INTRODUCTION

The purpose of this section is to discuss the method which is used to predict the flow through postulated through-wall cracks and present the leak rate calculation results for through-wall circumferential cracks.

6.2 GENERAL CONSIDERATIONS

The flow of hot pressurized water through an opening to a lower back pressure causes flashing which can result in choking. For long channels where the ratio of the channel length, L, to hydraulic diameter, D_H, (L/D_H) is greater than [40, both choking and frictional effects must be considered. In this situation the flow can be described as being single-phase through the channel until the local pressure equals the saturation pressure of the fluid. At this point, the flow begins to flash and choking occurs. Pressure losses due to momentum changes will dominate for L/DH<40. However, for large L/DH values, friction pressure drop will become important and must be considered along with the momentum losses due to flashing]^{a,c,e}.

6.3 CALCULATION METHOD

The basic method used in the leak rate calculations is the method developed by [Fauske (Reference 6-1) for the two-phase choked flow, and then adding to it the additional frictional pressure loss upstream of the choked exit plane.]^{a,c,e}

The flow rate through a crack was calculated in the following manner. Figure 6-1 from Reference 6-1 was used to estimate the critical pressure, Pc, for the primary loop enthalpy condition and an assumed flow. Once Pc was found for a given mass flow, the [stagnation pressure upstream of the choked plane]^{a,c,e} was found from Figure 6-2 (taken from Reference 6-1). For all cases considered, since [L/DH >40, Pc/Po is equal to 0.55.]^{a,c,e} Therefore, this method will yield the two-phase pressure drop due to momentum effects as illustrated in Figure 6-3, where Po is the operating pressure. Now using the assumed flow rate, G, the frictional pressure drop can be calculated using

$$\Delta P_f = [f\frac{(L/D_H - 40)G^2}{\rho 2g_c(144)}]^{a,c,e} \qquad (6\text{-}1)$$

where the friction factor f is determined using the [Moody diagram.]^{a,c,e} The crack relative roughness, ε, was obtained from fatigue crack data on stainless steel samples. The relative roughness value used in these calculations was [300 micro-inches RMS.]^{a,c,e}

The frictional pressure drop using equation 6-1 is then calculated for the assumed flow rate and added to the [momentum pressure drop calculated using the Fauske model]^{a,c,e} to obtain the total pressure drop from the primary system to the atmosphere. That is, for the primary loop

$$\text{Absolute Pressure} - 14.7 = [\Delta P_T = (\Delta P_f + \Delta P_{2\varphi}\ \text{choked flow})]^{a,c,e} \quad (6\text{-}2)$$

for a given assumed flow rate G. If the right-hand side of equation 6-2 does not agree with the pressure difference between the primary loop and the atmosphere, then the procedure is repeated until equation 6-2 is satisfied to within an acceptable tolerance which in turn leads to correct flow rate value for a given crack size.

6.4 LEAK RATE CALCULATIONS

Leak rate calculations were made as a function of crack length at the governing locations previously identified in Section 5.1. The normal operating loads of Table 3-1 were applied, in these calculations. The crack opening areas were estimated using the method of Reference 6-2 and the leak rates were calculated using the two-phase flow formulation described above. The average material properties of Section 4.0 (see Table 4-3) were used for these calculations.

The flaw sizes to yield a leak rate of 10 gpm were calculated at the governing locations and are given in Table 6-1. The flaw sizes so determined are called leakage flaw sizes.

In reference 6-3, the D. C. Cook Units 1 and 2 RCS pressure boundary leak detection system was determined to meet the criteria previously established for leak detection systems (1 gpm in four hours) when utilizing leak-before-break. Thus, to satisfy the margin of 10 on the leak rate, the flaw sizes (leakage flaw sizes) are determined which yield a leak rate of 10 gpm.

6.5 REFERENCES

6-1 [Faust, H. K., "Critical Two-Phase, Steam Water Flows," Proceedings of the Heat Transfer and Fluid Mechanics Institute, Stanford, California, Stanford University Press, 1961][a,c,e].

6-2 Tada, H., "The Effects of Shell Corrections on Stress Intensity Factors and the Crack Opening Area of Circumferential and a Longitudinal Through-Crack in a Pipe," Section II-1, NUREG/CR-3464, September 1983.

6-3 Nuclear Regulatory Commission Docket #'s 50-315 and 50-316 Letter from Steven A. Varga, Chief Operating Reactor Branch #1, Division of Licensing, to Mr. John Dolan, Vice President, Indiana and Michigan Electric Company, dated November 22, 1985.

a,c,e

Table 6-1 Flaw Sizes Yielding a Leak Rate of 10 gpm at the Governing Locations

Location	Leakage Flaw Size (in)
1	3.87
10	7.79
11	7.04

a,c,e

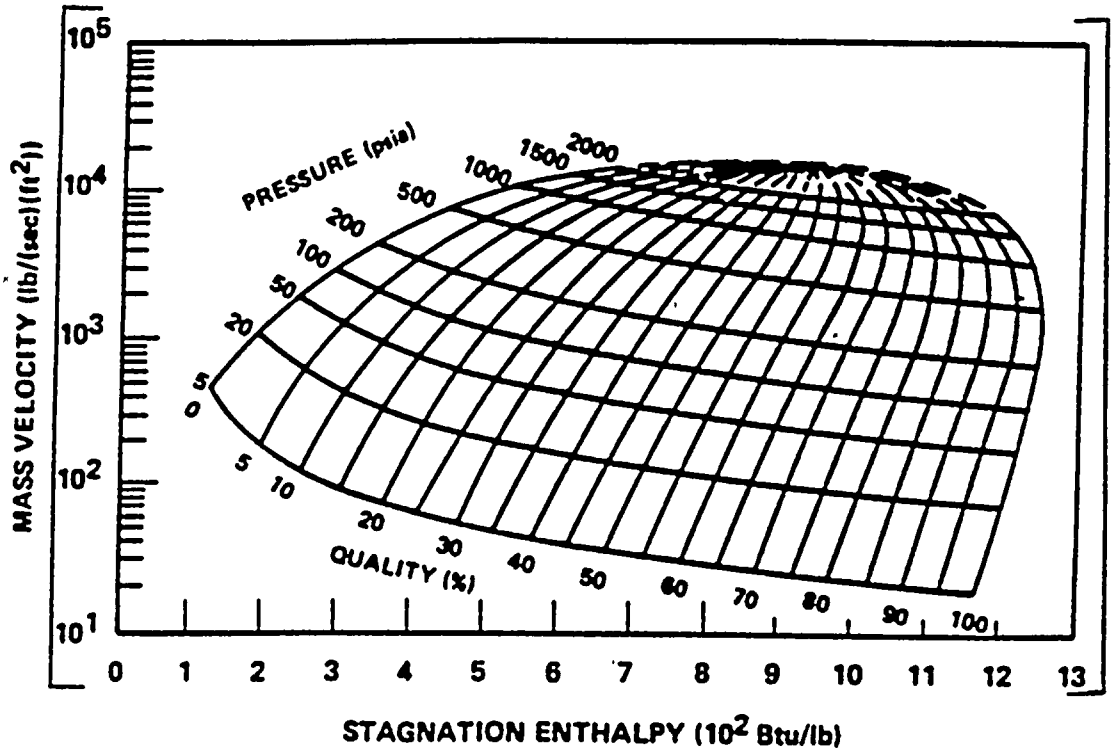

Figure 6-1 Analytical Predictions of Critical Flow Rates of Steam-Water Mixtures

a,c,e

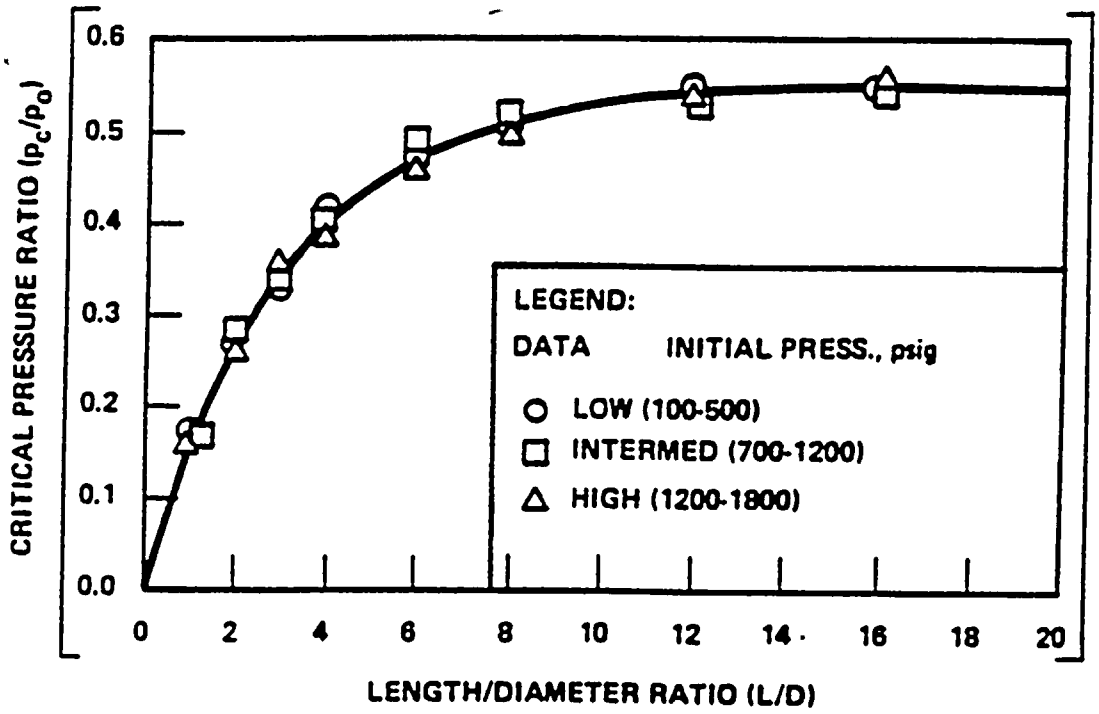

Figure 6-2 [Critical or Choked][a,c,e] Pressure Ratio as a Function of L/D

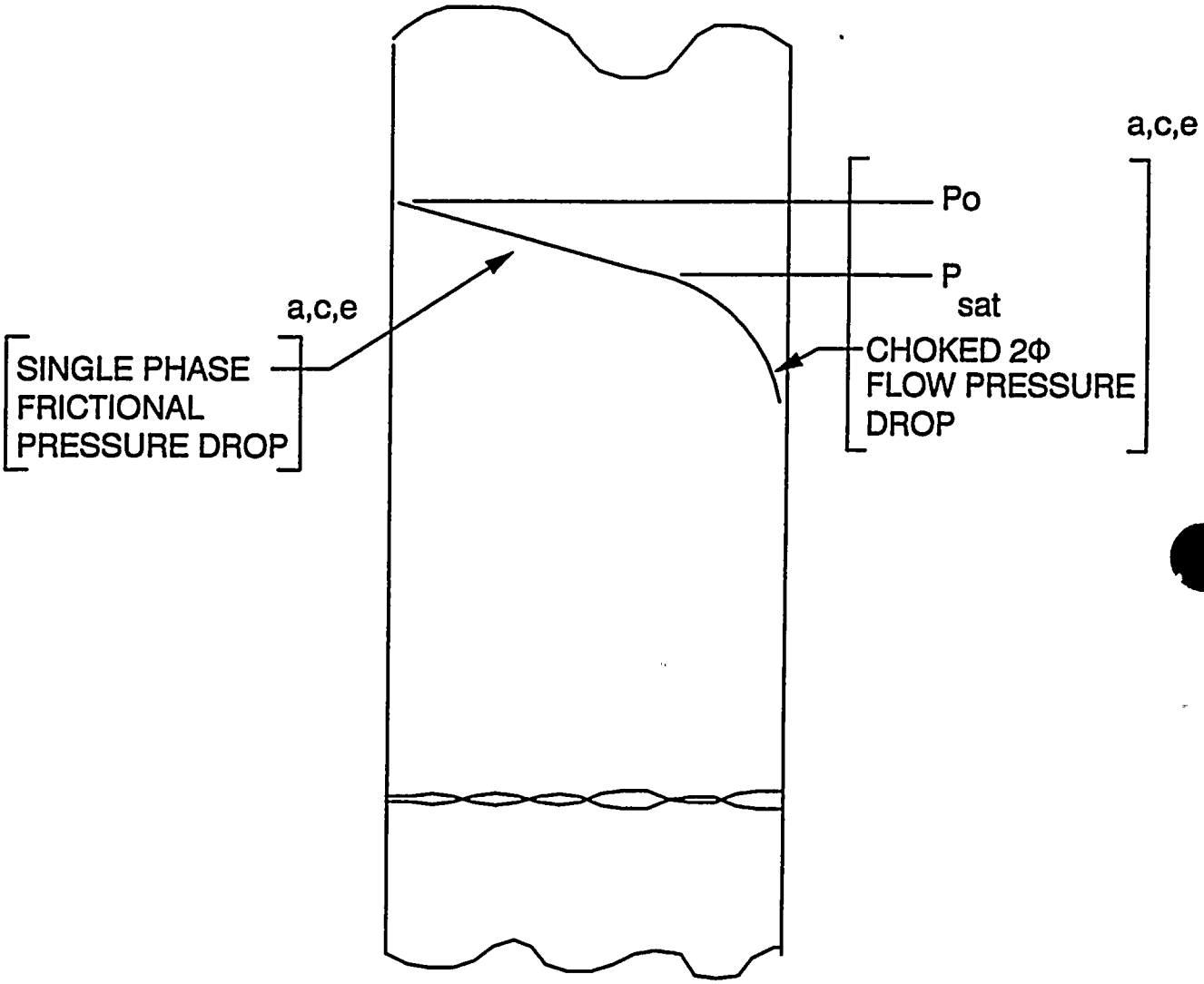

Figure 6-3 Idealized Pressure Drop Profile Through a Postulated Crack

7.0 FRACTURE MECHANICS EVALUATION

7.1 LOCAL FAILURE MECHANISM

The local mechanism of failure is primarily dominated by the crack tip behavior in terms of crack-tip blunting, initiation, extension and finally crack instability. The local stability will be assumed if the crack does not initiate at all. It has been accepted that the initiation toughness measured in terms of J_{Ic} from a J-integral resistance curve is a material parameter defining the crack initiation. If, for a given load, the calculated J-integral value is shown to be less than the J_{Ic} of the material, then the crack will not initiate. If the initiation criterion is not met, one can calculate the tearing modulus as defined by the following relation:

$$T_{app} = \frac{dJ}{da}\frac{E}{\sigma_f^2}$$

where:

T_{app}	=	applied tearing modulus
E	=	modulus of elasticity
σ_f	=	$0.5\ (\sigma_y + \sigma_u)$ (flow stress)
a	=	crack length
σ_y, σ_u	=	yield and ultimate strength of the material, respectively

Stability is said to exist when ductile tearing occurs if T_{app} is less than T_{mat}, the experimentally determined tearing modulus. Since a constant T_{mat} is assumed a further restriction is placed in J_{app}. J_{app} must be less than J_{max} where J_{max} is the maximum value of J for which the experimental T_{mat} is greater than T_{app} used.

As discussed in Section 5.2 the local crack stability criteria is a two-step process:

(1) If $J_{app} < J_{Ic}$, then the crack will not initiate.

(2) If $J_{app} > J_{Ic}$, but, if $T_{app} < T_{mat}$

and $J_{app} < J_{max}$, then the crack is stable.

7.2 GLOBAL FAILURE MECHANISM

Determination of the conditions which lead to failure in stainless steel should be done with plastic fracture methodology because of the large amount of deformation accompanying fracture. One method for predicting the failure of ductile material is the plastic instability

method, based on traditional plastic limit load concepts, but accounting for strain hardening and taking into account the presence of a flaw. The flawed pipe is predicted to fail when the remaining net section reaches a stress level at which a plastic hinge is formed. The stress level at which this occurs is termed as the flow stress. The flow stress is generally taken as the average of the yield and ultimate tensile strength of the material at the temperature of interest. This methodology has been shown to be applicable to ductile piping through a large number of experiments and will be used here to predict the critical flaw size in the primary coolant piping. The failure criterion has been obtained by requiring equilibrium of the section containing the flaw (Figure 7-1) when loads are applied. The detailed development is provided in appendix A for a through-wall circumferential flaw in a pipe with internal pressure, axial force, and imposed bending moments. The limit moment for such a pipe is given by:

$$[M_b = 2\sigma_f R_m^2 t(2\cos\beta - \sin\alpha)]^{a,c,e}$$

where:

$[\alpha$ = half-angle of crack in radians (refer to Figure A-1, appendix A)

P = internal pressure, psi

R_m = mean pipe radius, inches

t = pipe thickness, inches]^{a,c,e}

σ_f = 0.5 (σy + σu) (flow stress), psi

$[\sigma_y$ = yield stress, psi]^{a,c,e}

$[\sigma_u$ = ultimate tensile strength, psi

F = axial force, pounds

β = angular location in radians of neutral axis (refer to Figure A-1)

R_i = inside radius, in inches

$$\beta = \frac{\alpha}{2} + \frac{(\pi R_i^2 P + F)}{4\sigma_f R_m t}]^{a,c,e}$$

The analytical model described above accurately accounts for the piping internal pressure as well as imposed axial force as they affect the limit moment. Good agreement was found between the analytical predictions and the experimental results (Reference 7-1).

For application of the limit load methodology, the material, including consideration of the configuration, must have a sufficient ductility and ductile tearing resistance to sustain the limit load.

7.3 RESULTS OF CRACK STABILITY EVALUATION

Stability analyses were performed at the governing locations established in Section 5.1. The elastic-plastic fracture mechanics (EPFM) J-integral analyses for through-wall circumferential cracks in a cylinder were performed using the procedure in the EPRI fracture mechanics handbook (Reference 7-2).

The lower-bound material properties of Section 4.0 were applied (see Table 4-3). The fracture toughness properties established in Section 4.3 and the normal plus SSE loads given in Table 3-2 were used for the EPFM calculations. Evaluations were performed at the critical locations identified in Section 5.1. The results of the elastic-plastic fracture mechanics J-integral evaluations are given in Table 7-1.

A stability analysis based on limit load was performed for these locations as described in Section 7.2. The welds, at these locations, are assumed conservatively as GTAW and SMAW combination weld. The "Z" factor correction for SMAW was applied (Reference 7-3) as follows:

$$Z = 1.15\,[1.0 + 0.013\,(OD-4)]$$

where OD is the outer diameter of the pipe in inches.

The Z-factors were calculated for the critical locations, using the dimensions given in Table 3-1. The Z factor was 1.61 for location 1. The Z factor was 1.65 for location 10. The Z factor was 1.58 for location 11. The applied loads were increased by the Z factors and plots of limit load versus crack length were generated as shown in Figures 7-2, 7-3 and 7-4. Table 7-2 summarizes the results of the stability analyses based on limit load. The leakage flaw sizes are also presented on the same table.

7.4 REFERENCES

7-1 Kanninen, M. F., et. al., "Mechanical Fracture Predictions for Sensitized Stainless Steel Piping with Circumferential Cracks," EPRI NP-192, September 1976.

7-2 Kumar, V., German, M. D. and Shih, C. P., "An Engineering Approach for Elastic-Plastic Fracture Analysis," EPRI Report NP-1931, Project 1237-1, Electric Power Research Institute, July 1981.

7-3 Standard Review Plan; Public Comment Solicited; 3.6.3 Leak-Before-Break Evaluation Procedures; Federal Register/Vol. 52, No. 167/Friday, August 28, 1987/Notices, pp. 32626-32633.

Table 7-1 Stability Results for D. C. Cook Units 1 and 2 Based on Elastic-Plastic J-Integral Evaluations

		Fracture Criteria			Calculated Values
Location	Flaw Size (in)	J_{Ic} (in-lb/in^2)	T_{mat}	J_{MAX} (in-lb/in^2)	J_{app} (in-lb/in^2)
1	7.74	646	52	1784	474
10	15.58	550	41	1464	188
11	14.08	562	42	1505	305

Note: T_{app} is not applicable since $J_{app} < J_{IC}$

a,c,e

Table 7-2 Stability Results for D. C. Cook Units 1 and 2 Based on Limit Load

Location	Critical Flaw Size (in)	Leakage Flaw Size
1	19.60	3.87
10	36.66	7.79
11	28.83	7.04

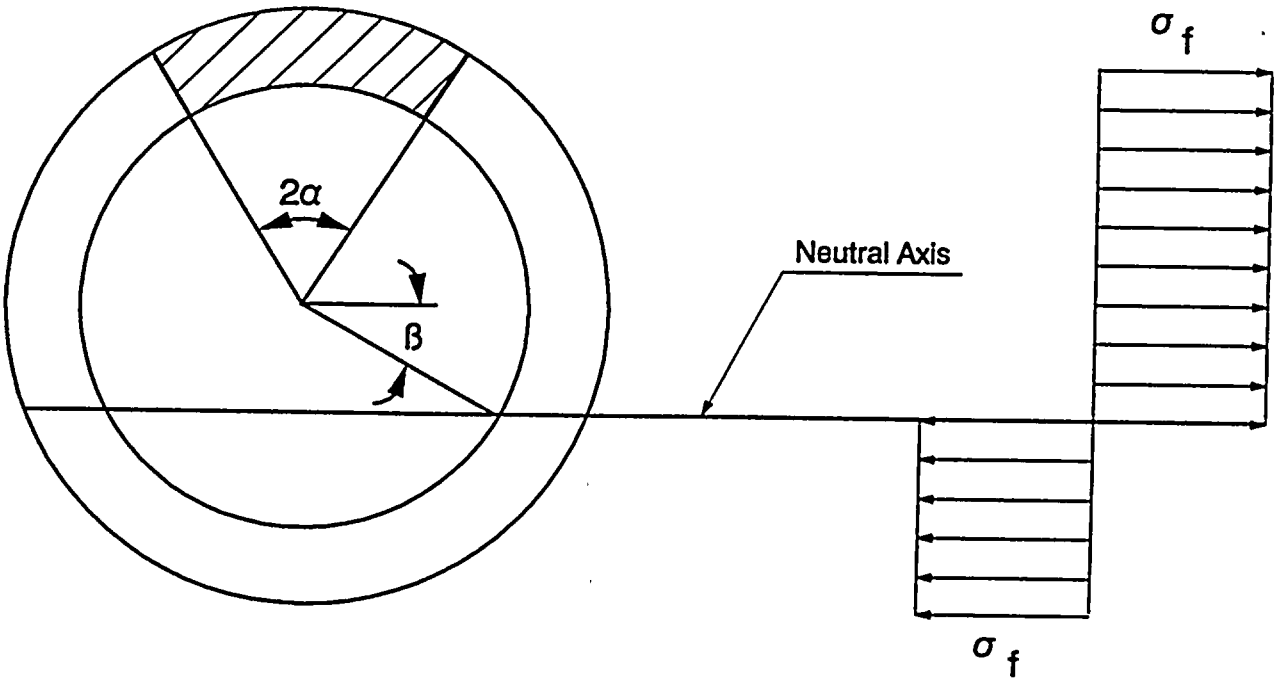

Figure 7-1 [Fully Plastic][a,c,e] Stress Distribution

a,c,e

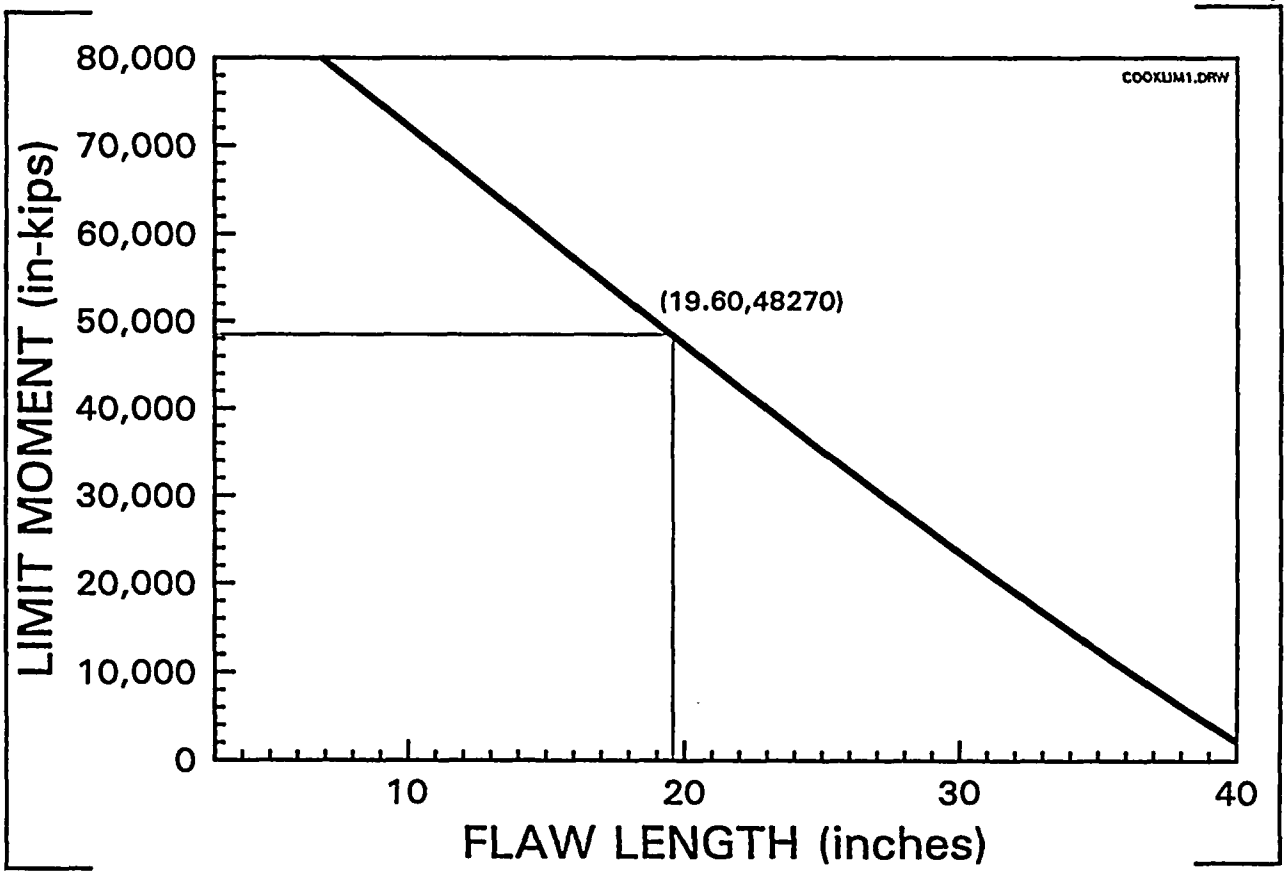

OD = 34.68 in. σ_y = 21.10 ksi F = 1766.0 kips

t = 2.74 in. σ_u = 55.00 ksi M = 30007 in-kips

A351-CF8M with SMAW weld

Figure 7-2 Critical Flaw Size Prediction - Hot Leg at Location 1

a,c,e

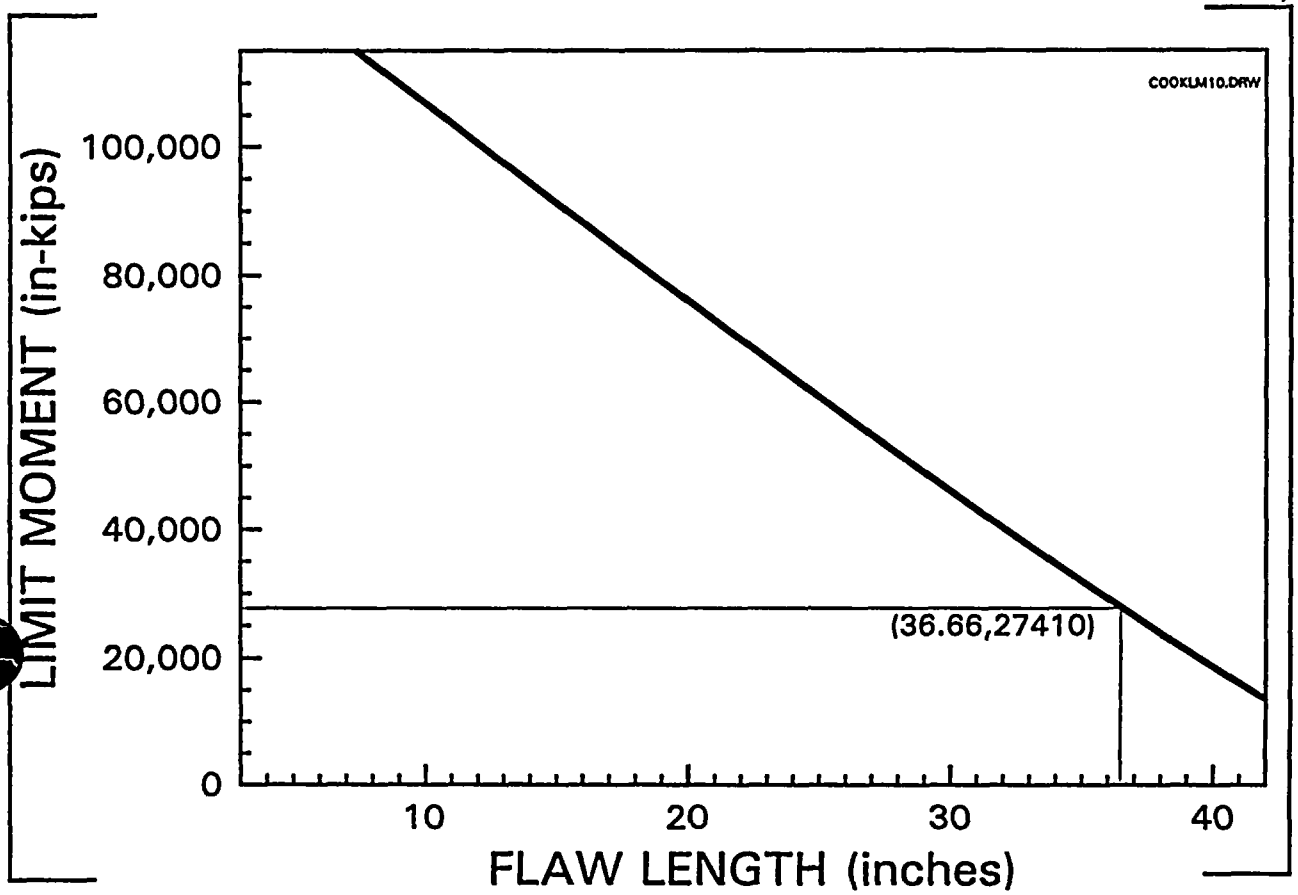

OD = 37.62 in. σ_y = 21.86 ksi F = 1866.0 kips

t = 3.21 in. σ_u = 55.00 ksi M = 16583 in-kips

A351-CF8M with SMAW weld

Figure 7-3 Critical Flaw Size Prediction - Cross Over Leg at Location 10

a,c,e

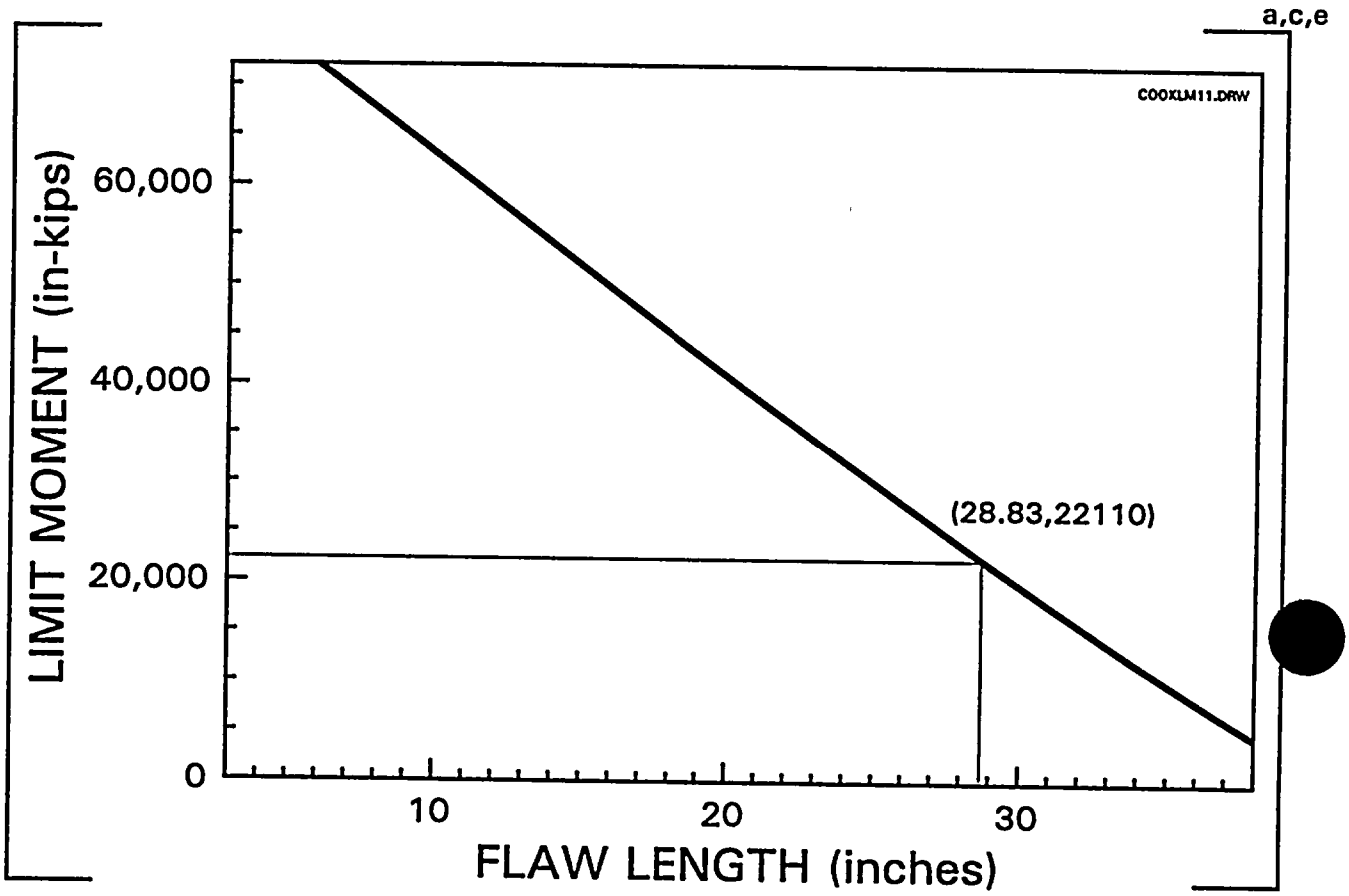

OD = 32.90 in. σ_y = 21.86 ksi F = 1492.0 kips

t = 2.60 in. σ_u = 55.00 ksi M = 13977 in-kips

A351-CF8M with SMAW weld

Figure 7-4 Critical Flaw Size Prediction - Cold Leg at Location 11

8.0 FATIGUE CRACK GROWTH ANALYSIS

To determine the sensitivity of the primary coolant system to the presence of small cracks, a fatigue crack growth analysis was carried out for the [vessel inlet nozzle safe-end][a,c,e] region of a typical system (see Location [14][a,c,e] of Figure 3-2). This region was selected because crack growth calculated here will be typical of that in the entire primary loop. Crack growths calculated at other locations can be expected to show less than 10% variation.

A [finite element stress analysis was carried out for the inlet nozzle safe end region][a,c,e] of a plant typical in geometry and operational characteristics to any Westinghouse PWR System. [The specific system was a plant with piping outside diameter 33 inches in diameter, and 2.75 inches wall thickness. The corresponding dimensions for D. C. Cook Units 1 and 2 are 33.56 inches in diameter and 2.93 inches wall thickness. These differences are insignificant as far as fatigue crack growth analysis is concerned.][a,c,e] All normal, upset, and test conditions were considered. A summary of generic applied transients is provided in Table 8-1. Circumferentially oriented surface flaws were postulated in the region, assuming the flaw was located in three different locations, as shown in Figure 8-1. Specifically, these were:

Cross Section A: [Inconel][a,c,e]

Cross Section B: [SA 508 Cl. 2 or 3 Low Alloy Steel][a,c,e]

Cross Section C: [Stainless Steel][a,c,e]

Fatigue crack growth rate laws were used [from the ASME Code Section XI for the carbon steel, shown in Figure 8-2, and developed from the literature for the other two materials. The laws were all structured for applicability to pressurized water reactor environments.][a,c,e] The law for stainless steel was derived from Reference 8-1, a compilation of data for austenitic stainless steel in a PWR water environment was presented in Reference 8-4, and it was found that the effect of the environment on the crack growth rate was very small. From this information it was estimated that the environmental factor should be conservatively set at [2.0][a,c,e] in the crack growth rate equation from Reference 8-1.

For stainless steel, the fatigue crack growth formula is:

[$da/dn = CFSE\ \Delta K^{3.3}$

where:

C	=	2.42×10^{-20}
F	=	frequency factor (F=1.0 for temperature below 800°F)
S	=	R ratio correction (S=1.0 for R=0; S=1+1.8R for 0 ⟨ R ⟨ 0.8, and
S	=	43.75 +57.79 R for R ⟩ 0.8)
E	=	environmental factor (E=2.0 for PWR environment, E=1.0 for air)
ΔK	=	range of stress intensity factor, in psi$\sqrt{in}$
R	=	K_{min}/K_{max}
da/dn	=	crack growth rate in micro-inches/cycle][a,c,e]

[The fatigue crack growth rate for Inconel 600 in a water environment was derived from a collection of data from two different sources. A relatively large body of data is available for inconel 600 in an air environment of 600°F (Reference 8-2) and these data were used to establish the slope of the reference curve, as shown in Figure 8-3. The environmental enhancement of crack growth for this material is characterized by the data available in Reference 8-3, and these points were used to set the location of the water curve at a growth rate of approximately a factor of five above the air curve. The resulting equation is:]^{a,c,e}

$$[\frac{da}{dn} = (2.23 \times 10^{-13})\ K_{eff}^{5.66}]^{a,c,e}$$

where: $[K_{eff} = \Delta K/(1.0-0.5R)]^{a,c,e}$
The unit for crack growth rate da/dn is in equation is inches per cycle, and the unit for K_{eff} is ksi$\sqrt{in}$

where: ΔK is the stress intensity factor range.

The calculated fatigue crack growth for semi-elliptic surface flaws of circumferential orientation and various depths is summarized in Table 8-2, and shows that the crack growth is very small, [regardless of which material is assumed.]^{a,c,e}

8.1 REFERENCES

8-1 James, L. A. and Jones, D. P., "Fatigue Crack Growth Correlations for Austenitic Stainless Steel in Air, Predictive Capabilities in Environmentally Assisted Cracking," ASME publication PVP-99, December 1985.

8-2 [James, L. A., "Fatigue Crack Propagation Behavior of Inconel 600," in Hanford Engineering Development Labs Report HEDL-TME-76-43, May 1976.]^{a,c,e}

8-3 [Hale, D. A., et al., "Fatigue Crack Growth in Piping and RPV Steels in Simulated BWR Water Environment," Report GEAP 24098/NUREG CR-0390, Jan. 1978.]^{a,c,e}

8-4 Bamford, W. H., "Fatigue Crack Growth of Stainless Steel Piping in a Pressurized Water Reactor Environment," Trans. ASME Journal of Pressure Vessel Technology, Vol. 101, Feb. 1979.

Table 8-1 Summary of Reactor Vessel Transients

Number	Typical Transient Identification	Number of Cycles
1	TURBINE ROLL	20
2	COLD HYDRO	10
3	HEATUP/COOLDOWN	200
4	LOADING AND UNLOADING	14500
5	REDUCED TEMPERATURE RETURN TO POWER	2000
6	STEP LOAD DECREASE/INCREASE	2000
7	LARGE STEP LOAD DECREASE WITH STEAM DUMP	200
8	INITIAL S. S. FLUCTUATION	150000
9	RANDOM S. S. FLUCTUATION	3000000
10	FEEDWATER CYCLING	2000
11	LOOP OUT OF SERVICE SHUTDOWN & STARTUP	80
12	LOSS OF LOAD	80
13	LOSS OF POWER	40
14	PARTIAL LOSS OF FLOW	80
15	REACTOR TRIP WITH NO COOLDOWN	230
16	REACTOR TRIP WITH COOLDOWN NO SI	160
17	REACTOR TRIP WITH COOLDOWN AND SI	10
18	INADVERTANT DEPRESSURIZATION	60
19	INADVERTANT STARTUP OF AN INACTIVE LOOP	60
20	INADVERTANT SAFETY INJECTION ACTUATION	80
21	CONTROL ROD DROP	80
22	EXCESSIVE FEEDWATER FLOW	30
23	BORON CONCENTRATION	26400
24	REFUELING	80
25	HOT HYDRO	280

Table 8-2 Typical Fatigue Crack Growth at [Nozzle Safe-End Region][a,c,e] (40 years)			
	FINAL FLAW (in.)		
Initial Flaw (in.)	[Ferritic Steel][a,c,e]	[Stainless][a,c,e]	[Inconel][a,c,e]
0.292	0.3120	0.2977	0.2973
0.300	0.3207	0.3057	0.3056
0.375	0.4020	0.3825	0.3833
0.425	0.4568	0.4336	0.4353

a,c,e

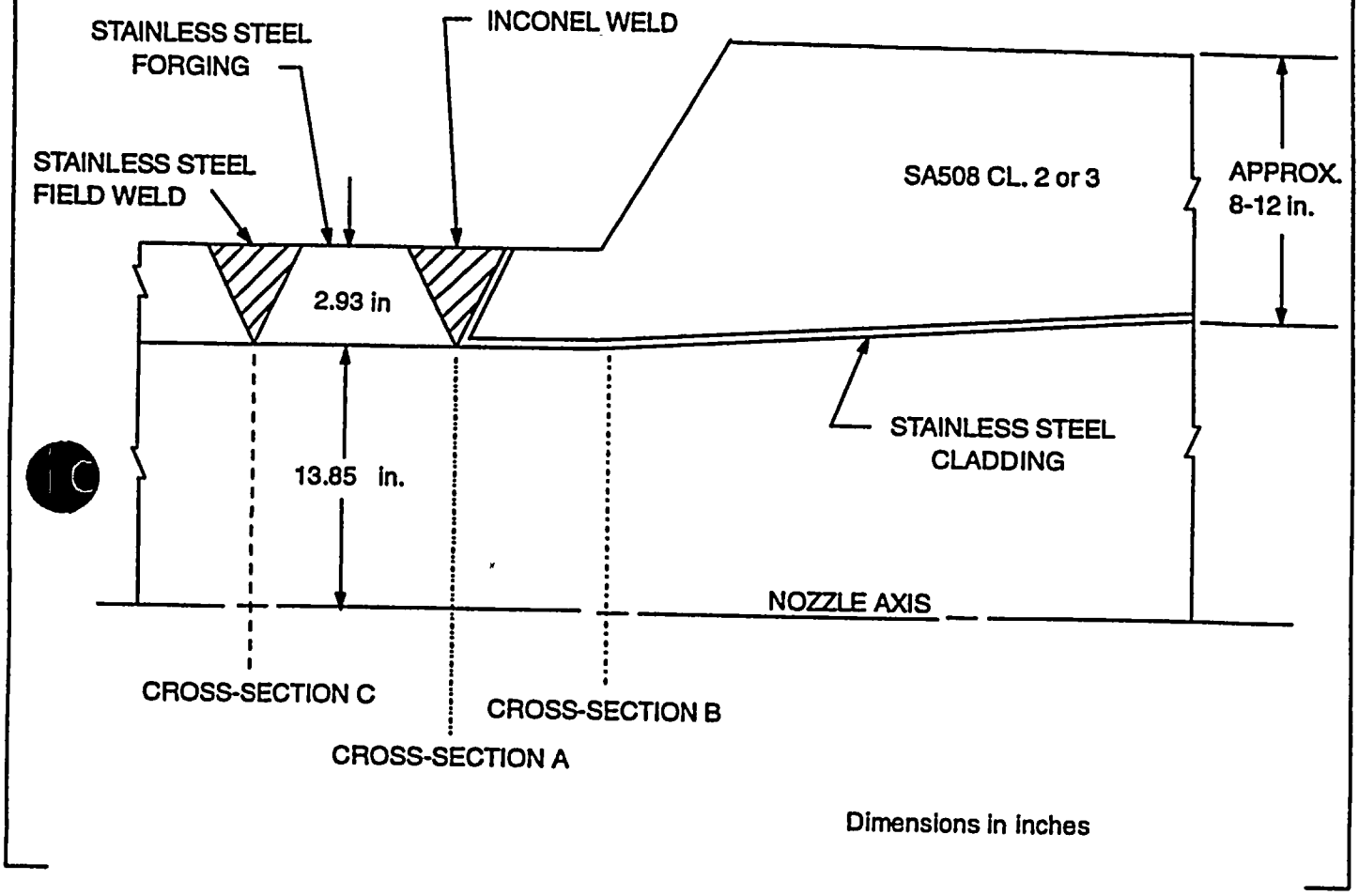

Figure 8-1 Typical Cross-Section of [RPV Inlet Nozzle Safe-End]a,c,e

a,c,e

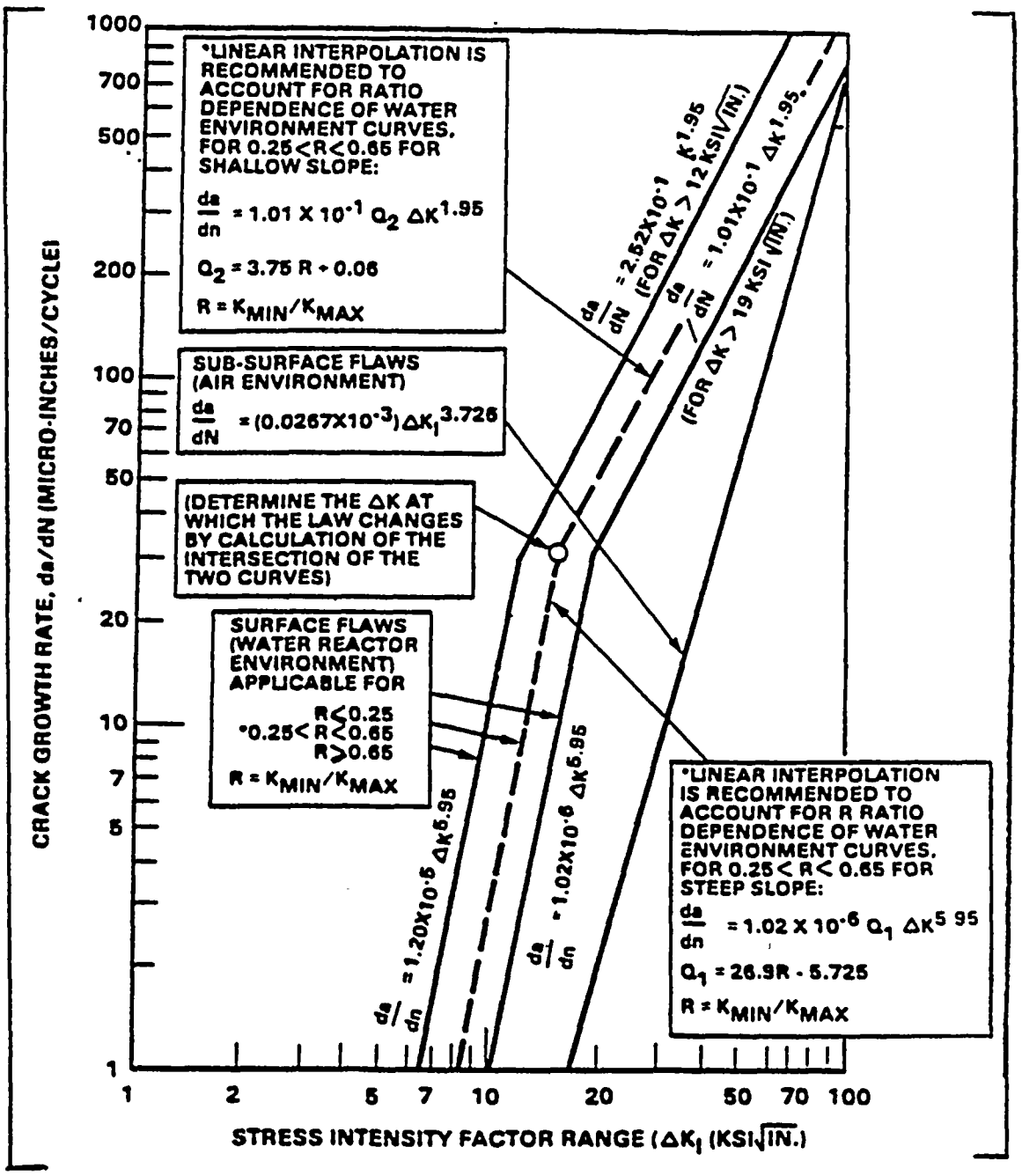

Figure 8-2 Reference Fatigue Crack Growth Curves for [Carbon and Low Alloy Ferritic Steels][a,c,e]

a,c,e

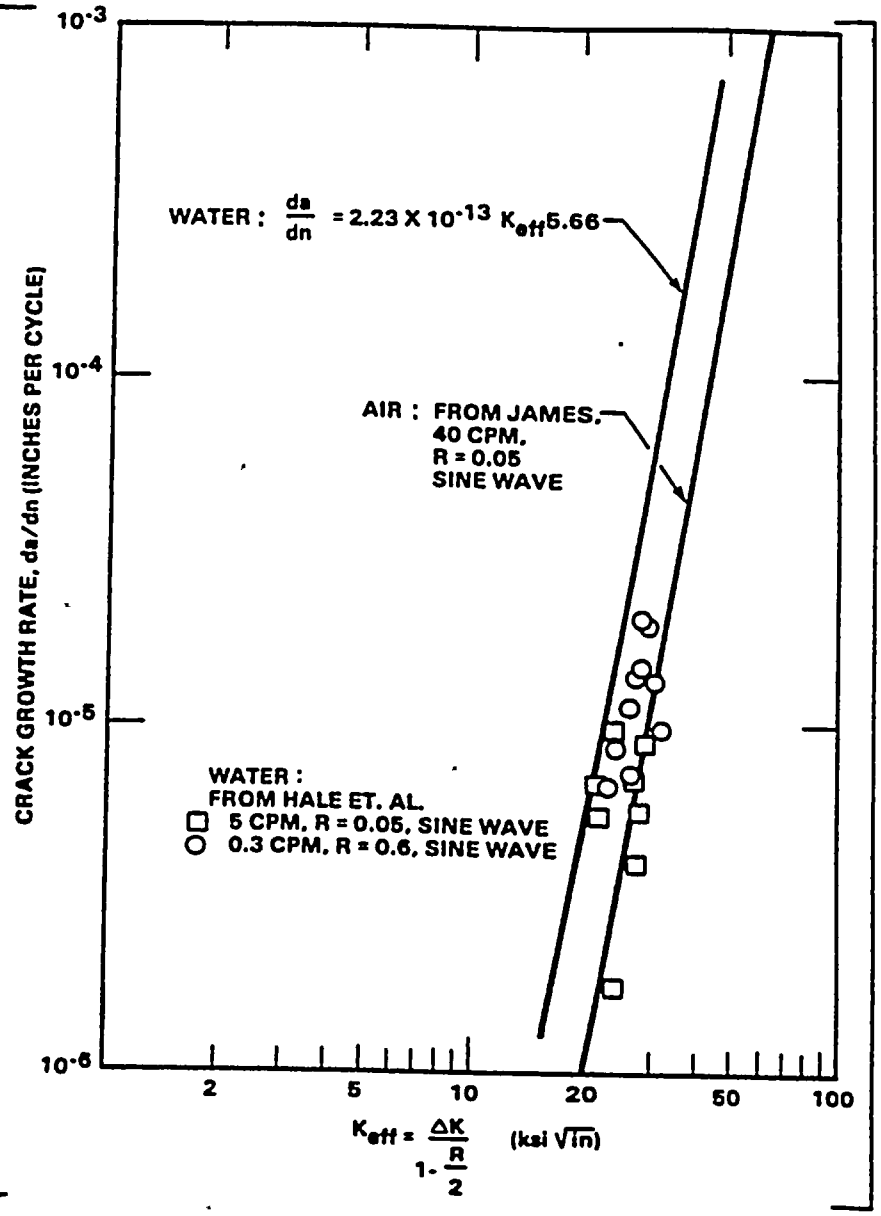

Figure 8-3 Reference Fatigue Crack Growth Law for [Inconel 600]^{a,c,e} in a Water Environment at 600°F

9.0 ASSESSMENT OF MARGINS

The results of the leak rates of Section 6.4 and the corresponding stability and fracture toughness evaluations of Sections 7.1, 7.2 and 7.3 are used in performing the assessment of margins. Margins are shown in Table 9-1.

In summary, at all the critical locations relative to:

1. Flaw Size - Using faulted loads obtained by the absolute sum method, a margin of 2 or more exists between the critical flaw and the flaw having a leak rate of 10 gpm (the leakage flaw).

2. Leak Rate - A margin of 10 exists between the calculated leak rate from the leakage flaw and the leak detection capability of 1 gpm.

3. Loads - At the critical locations the leakage flaw was shown to be stable using the faulted loads obtained by the absolute sum method (i.e., a flaw twice the leakage flaw size is shown to be stable; hence the leakage flaw size is stable). A margin of 1 on loads using the absolute summation of faulted load combinations is satisfied.

a,c,e

Table 9-1 Leakage Flaw Sizes, Critical Flaw Sizes and Margins for D. C. Cook Units 1 and 2

Location	Leakage Flaw Size	Critical Flaw Size	Margin
1	3.87 in.	19.60[a] in.	5.1[a]
	3.87 in.	7.74[b] in.	>2.0[b]
10	7.79 in.	36.66[a] in.	4.7[a]
	7.79 in.	15.58[b] in.	>2.0[b]
11	7.04 in.	28.83[a] in.	4.1[a]
	7.04 in.	14.08[b] in.	>2.0[b]

[a]based on limit load

[b]based on J integral evaluation

10.0 CONCLUSIONS

This report justifies the elimination of RCS primary loop pipe breaks from the structural design basis for the D. C. Cook Units 1 and 2 as follows:

a. Stress corrosion cracking is precluded by use of fracture resistant materials in the piping system and controls on reactor coolant chemistry, temperature, pressure, and flow during normal operation.

b. Water hammer should not occur in the RCS piping because of system design, testing, and operational considerations.

c. The effects of low and high cycle fatigue on the integrity of the primary piping are negligible.

d. Ample margin exists between the leak rate of small stable flaws and the capability of the D. C. Cook Units 1 and 2 reactor coolant system pressure boundary Leakage Detection System.

e. Ample margin exists between the small stable flaw sizes of item d and larger stable flaws.

f. Ample margin exists in the material properties used to demonstrate end-of-service life (relative to aging) stability of the critical flaws.

For the critical locations, flaws are identified that will be stable because of the ample margins described in d, e, and f above.

Based on the above, the Leak-Before-Break conditions are satisfied for the D.C. Cook Units 1 and 2 primary loop piping. All the recommended margins are satisfied. It is therefore concluded that dynamic effects of RCS primary loop pipe breaks need not be considered in the structural design basis of the D.C. Cook Units 1 and 2 Nuclear Power Plants for the uprating of Unit 2 and for Units 1 and 2 replacement Steam Generator conditions.

APPENDIX A

LIMIT MOMENT

[The internal stress system at the crack plane has to be in equilibrium with the applied loading, i.e., the hydrostatic pressure P, axial force F, and the bending moment M_b. The angle β which identifies the point of stress inversion follows from the equilibrium of horizontal forces (See Figure A-1). That is:

$$(\frac{\pi}{2}-\alpha+\beta)R_m t\sigma_f-(\frac{\pi}{2}-\beta)R_m t\sigma_f=\frac{\pi}{2}R_i^2 P+F/2$$

Solving for β,

$$\beta=\frac{\alpha}{2}+\frac{\pi R_i^2 P+F}{4R_m t\sigma_f}$$

The external bending moment at the instant of failure follows from the equilibrium of moments, which is most easily taken around the 1-1 axis. Thus M_b can be determined from

$$M_b=2\sigma_f R\frac{2}{m}t\left(\int_{\alpha}^{\frac{\pi}{2}+\beta}\cos\phi d\phi \int_{o}^{\frac{\pi}{2}-\beta}\cos\phi d\phi\right)$$

or

$$M_b=2\sigma_f R_m^2\ t(2\cos\beta-\sin\alpha)]^{a,c,e}$$

a,c,e

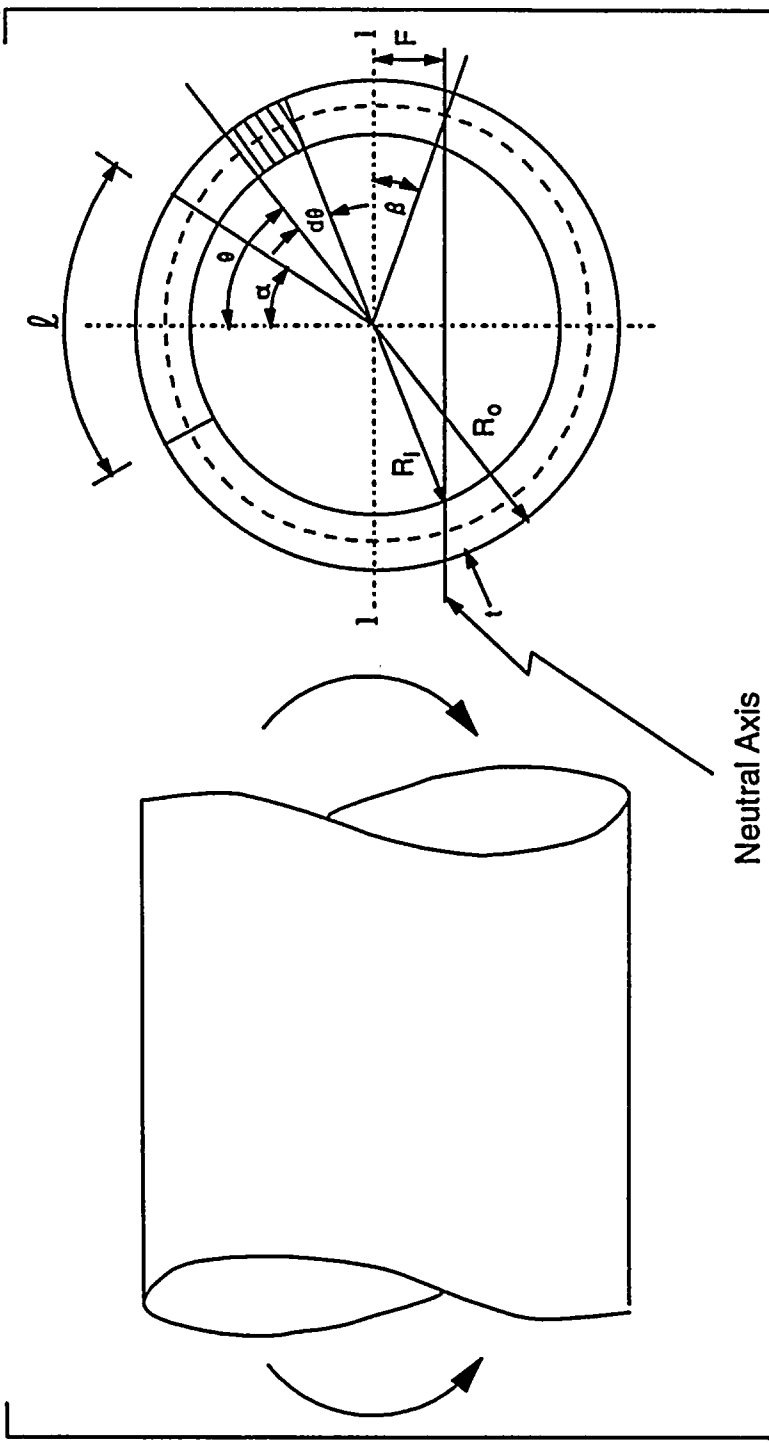

Figure A-1 Pipe with a Through-Wall Crack in Bending

WCAP-15132
Revision 1

Technical Justification for Eliminating Large Primary Loop Pipe Rupture as the Structural Design Basis for the D. C. Cook Units 1 and 2 Nuclear Power Plants

D. C. Bhowmick
C. K. Ng
A. T. Paterson

October 1999

Reviewer: J. F. Petsche
J. F. Petsche

Approved: S. A. Swamy
S. A. Swamy, Manager
Structural Mechanics Technology

Westinghouse Electric Company LLC
P.O. Box 355
Pittsburgh, PA 15230-0355

©1999 Westinghouse Electric Company LLC
All Rights Reserved

TABLE OF CONTENTS

EXECUTIVE SUMMARY ix

1.0 INTRODUCTION 1-1
- 1.1 PURPOSE 1-1
- 1.2 BACKGROUND INFORMATION 1-1
- 1.3 SCOPE AND OBJECTIVES 1-2
- 1.4 REFERENCES 1-3

2.0 OPERATION AND STABILITY OF THE REACTOR COOLANT SYSTEM 2-1
- 2.1 STRESS CORROSION CRACKING 2-1
- 2.2 WATER HAMMER 2-2
- 2.3 LOW CYCLE AND HIGH CYCLE FATIGUE 2-2
- 2.4 REFERENCES 2-3

3.0 PIPE GEOMETRY AND LOADING 3-1
- 3.1 INTRODUCTION TO METHODOLOGY 3-1
- 3.2 CALCULATION OF LOADS AND STRESSES 3-1
- 3.3 LOADS FOR LEAK RATE EVALUATION 3-2
- 3.4 LOAD COMBINATION FOR CRACK STABILITY ANALYSES 3-2
- 3.5 REFERENCES 3-3

4.0 MATERIAL CHARACTERIZATION 4-1
- 4.1 PRIMARY LOOP PIPE AND FITTINGS MATERIALS 4-1
- 4.2 TENSILE PROPERTIES 4-1
- 4.3 FRACTURE TOUGHNESS PROPERTIES 4-1
- 4.4 REFERENCES 4-4

5.0 CRITICAL LOCATIONS AND EVALUATION CRITERIA 5-1
- 5.1 CRITICAL LOCATIONS 5-1
- 5.2 FRACTURE CRITERIA 5-1

6.0 LEAK RATE PREDICTIONS 6-1
- 6.1 INTRODUCTION 6-1
- 6.2 GENERAL CONSIDERATIONS 6-1
- 6.3 CALCULATION METHOD 6-1
- 6.4 LEAK RATE CALCULATIONS 6-2
- 6.5 REFERENCES 6-2

7.0 FRACTURE MECHANICS EVALUATION 7-1
- 7.1 LOCAL FAILURE MECHANISM 7-1
- 7.2 GLOBAL FAILURE MECHANISM 7-1
- 7.3 RESULTS OF CRACK STABILITY EVALUATION 7-3
- 7.4 REFERENCES 7-3

8.0 FATIGUE CRACK GROWTH ANALYSIS 8-1
- 8.1 REFERENCES 8-2

9.0 ASSESSMENT OF MARGINS 9-1

10.0 CONCLUSIONS 10-1

APPENDIX A LIMIT MOMENT A-1

LIST OF TABLES

Table	Title	Page
Table 3-1	Dimensions, Normal Loads and Normal Stresses for D. C. Cook Units 1 and 2	3-4
Table 3-2	Faulted Loads and Stresses for D. C. Cook Units 1 and 2	3-5
Table 4-1	Measured Tensile Properties for D. C. Cook Unit 1 Primary Loop Piping System	4-6
Table 4-2	Measured Tensile Properties for D. C. Cook Unit 2 Primary Loop Piping System	4-8
Table 4-3	Mechanical Properties for D. C. Cook Units 1 and 2 Materials at Operating Temperatures	4-10
Table 4-4	Chemistry and Fracture Toughness Properties of the Material Heats of D. C. Cook Unit 1	4-11
Table 4-5	Chemistry and Fracture Toughness Properties of the Material Heats of D. C. Cook Unit 2	4-14
Table 4-6	Fracture Toughness Properties for D. C. Cook Units 1 and 2 Primary Loops for Leak-Before-Break Evaluation at Critical Locations	4-16
Table 6-1	Flaw Sizes Yielding a Leak Rate of 10 gpm at the Governing Locations	6-3
Table 7-1	Stability Results for D. C. Cook Units 1 and 2 Based on Elastic-Plastic J-Integral Evaluations	7-4
Table 7-2	Stability Results for D. C. Cook Units 1 and 2 Based on Limit Load	7-4
Table 8-1	Summary of Reactor Vessel Transients	8-3
Table 8-2	Typical Fatigue Crack Growth at [ ]^{a,c,e} (40 years)	8-4
Table 9-1	Leakage Flaw Sizes, Critical Flaw Sizes and Margins for D. C. Cook Units 1 and 2	9-2

LIST OF FIGURES

Figure	Title	Page
3-1	Hot Leg Coolant Pipe	3-6
3-2	Schematic Diagram of D. C. Cook Units 1 and 2 Primary Loop Showing Weld Locations	3-7
4-1	Representative Lower Bound True Stress - True Strain Curve for A351 CF8M at 620°F	4-17
4-2	Representative Lower Bound True Stress - True Strain Curve for A351 CF8M at 548°F	4-18
4-3	Pre-Service J. vs. Δa for SA351 CF8M Cast Stainless Steel at 600°F	4-19
6-1	Analytical Predictions of Critical Flow Rates of Steam-Water Mixtures	6-4
6-2	[ ]^{a,c,e} Pressure Ration as a Function of L/D	6-5
6-3	Idealized Pressure Drop Profile Through a Postulated Crack	6-6
7-1	[ ]^{a,c,e} Stress Distribution	7-5
7-2	Critical Flaw Size Prediction - Hot Leg at Location 1	7-6
7-3	Critical Flaw Size Prediction - Cross-over Leg at Location 10	7-7
7-4	Critical Flaw Size Prediction - Cold Leg at Location 11	7-8
8-1	Typical Cross-Section of [ ]^{a,c,e}	8-5
8-2	Reference Fatigue Crack Growth Curves for [ ]^{a,c,e}	8-6
8-3	Reference Fatigue Crack Growth Law for [ ]^{a,c,e} in a Water Environment at 600°F	8-7
A-1	Pipe with a Through-Wall Crack in Bending	A-2

EXECUTIVE SUMMARY

The original structural design basis of the reactor coolant system for the American Electric Power Company D. C. Cook Units 1 and 2 Nuclear Power Plants required consideration of dynamic effects resulting from pipe break and that protective measures for such breaks be incorporated into the design. Subsequent to the original D. C. Cook design, an additional concern of asymmetric blowdown loads was raised as described in Unresolved Safety Issue A-2 (Asymmetric Blowdown Loads on the Reactor Coolant System). D. C. Cook Units 1 and 2 Nuclear Power Plants were part of the utilities which sponsored Westinghouse to resolve the A-2 issue. Generic analyses by Westinghouse to resolve the A-2 issue were approved by the NRC and documented in Generic Letter 84-04 (Reference 1-2).

The approved Westinghouse Generic Analyses were indicated to be directly applicable to D. C. Cook Units 1 & 2 in NRC letter dated November 22, 1985 (Reference 1-10). In that letter, which addressed removal of the A-2 issue as a license condition for D. C. Cook Unit 2, the NRC stated that:

"...This license amendment is related to the ongoing review for protection against postulated pipe rupture. On February 1, 1984, the NRC issued Generic Letter 84-04 to all operating PWR licensees on the subject of "Safety Evaluation of Westinghouse Topical Reports Dealing with Elimination of Postulated Pipe Breaks in PWR Primary Main Loops." We have completed our review of your Generic Letter 84-04 responses and have found them acceptable...

Generic Letter 84-04 was issued to form a basis for the issuance of partial exemptions to GDC-4. These exemptions would allow licensees to remove or not to install protection against asymmetric dynamic loads in the primary main coolant loop. Our Safety Evaluation also concludes that our submissions as part of the Westinghouse Owners Group and your letter dated September 10, 1984 would satisfy the requirements of the proposed rule, if adopted without modification...."

Research by the NRC and industry coupled with operating experience determined that safety could be negatively impacted by placement of pipe whip restraints on certain systems. As a result, NRC and industry initiatives resulted in demonstrating that Leak-before-break (LBB) criteria can be applied to reactor coolant system piping based on fracture mechanics technology and material toughness.

Subsequently, the NRC modified 10CFR50 General Design Criterion 4, and published in the Federal Register (Vol. 52, No. 207) on October 27, 1987 its final rule, "Modification of General Design Criterion 4 Requirements for Protection Against Dynamic Effects of Postulated Pipe Ruptures (Reference 1-3)." This change to the rule allows use of leak-before-break technology for excluding from the design basis the dynamic effects of postulated ruptures in primary coolant loop piping in pressurized water reactors (PWRs).

This report demonstrates compliance with LBB technology for the D. C. Cook reactor coolant system piping based on a plant specific analysis. The report documents the plant specific geometry, loading, and material properties used in the fracture mechanics evaluation.

include cast stainless steel, fracture toughness considering thermal aging were determined for each heat of material.

This Report includes the temperature, pressure and loadings generated as a result of the D. C. Cook Unit 2 uprating program and changes in component weight due to Units 1 and 2 replacement Steam Generator conditions.

Based on loading, pipe geometry and fracture toughness considerations, enveloping critical locations were determined at which leak-before-break crack stability evaluations were made. Through-wall flaw sizes were found which would cause a leak at a rate of ten (10) times the leakage detection system capability of the plant. Large margins for such flaw sizes were demonstrated against flaw instability. Finally, fatigue crack growth was shown not to be an issue for the primary loops.

It is concluded that LBB criterion is valid for the stated loading conditions and dynamic effects of reactor coolant system primary loop pipe breaks need not be considered in the structural design basis of the D. C. Cook Nuclear Power Plants for the Unit 2 uprating and Units 1 and 2 replacement steam generator conditions.

REVISION 1 IDENTIFICATION

Revision 1 is to modify first and second paragraphs of executive summary, Section 3.1, Section 6.4 and to add Reference 6.3 and Page xi.

The revisions are identified by vertical lines in the right column.

1.0 INTRODUCTION

1.1 PURPOSE

This report applies to the D. C. Cook Units 1 and 2 Reactor Coolant System (RCS) primary loop piping. It is intended to demonstrate that for the specific parameters of the D. C. Cook Units 1 and 2 Nuclear Power Plants, RCS primary loop pipe breaks need not be considered in the structural design basis. The approach taken has been accepted by the Nuclear Regulatory Commission (NRC) (Reference 1-3).

1.2 BACKGROUND INFORMATION

Westinghouse has performed considerable testing and analysis to demonstrate that RCS primary loop pipe breaks can be eliminated from the structural design basis of all Westinghouse plants. The concept of eliminating pipe breaks in the RCS primary loop was first presented to the NRC in 1978 in WCAP-9283 (Reference 1-4). That topical report employed a deterministic fracture mechanics evaluation and a probabilistic analysis to support the elimination of RCS primary loop pipe breaks. That approach was then used as a means of addressing Generic Issue A-2 and Asymmetric LOCA Loads.

Westinghouse performed additional testing and analysis to justify the elimination of RCS primary loop pipe breaks. This material was provided to the NRC along with Letter Report NS-EPR-2519 (Reference 1-5).

The NRC funded research through Lawrence Livermore National Laboratory (LLNL) to address this same issue using a probabilistic approach. As part of the LLNL research effort, Westinghouse performed extensive evaluations of specific plant loads, material properties, transients, and system geometries to demonstrate that the analysis and testing previously performed by Westinghouse and the research performed by LLNL applied to all Westinghouse plants (References 1-6 and 1-7). The results from the LLNL study were released at a March 28, 1983, ACRS Subcommittee meeting. These studies, which are applicable to all Westinghouse plants east of the Rocky Mountains, determined the mean probability of a direct LOCA (RCS primary loop pipe break) to be 4.4×10^{-12} per reactor year and the mean probability of an indirect LOCA to be 10^{-7} per reactor year. Thus, the results previously obtained by Westinghouse (Reference 1-4) were confirmed by an independent NRC research study.

Based on the studies by Westinghouse, LLNL, the ACRS, and the AIF, the NRC completed a safety review of the Westinghouse reports submitted to address asymmetric blowdown loads that result from a number of discrete break locations on the PWR primary systems. The NRC Staff evaluation (Reference 1-2) concludes that an acceptable technical basis has been provided so that asymmetric blowdown loads need not be considered for those plants that can demonstrate the applicability of the modeling and conclusions contained in the Westinghouse response or can provide an equivalent fracture mechanics demonstration of the primary coolant loop integrity. In a more formal recognition of Leak-Before-Break (LBB) methodology applicability for PWRs, the NRC appropriately modified 10 CFR 50, General Design Criterion 4,

"Requirements for Protection Against Dynamic Effects for Postulated Pipe Rupture" (Reference 1-3).

1.3 SCOPE AND OBJECTIVES

The general purpose of this investigation is to demonstrate leak-before-break for the primary loops in D. C. Cook Units 1 and 2 on a plant specific basis. The recommendations and criteria proposed in Reference 1-8 are used in this evaluation. These criteria and resulting steps of the evaluation procedure can be briefly summarized as follows:

1. Calculate the applied loads. Identify the locations at which the highest stress occurs.

2. Identify the materials and the associated material properties.

3. Postulate a surface flaw at the governing locations. Determine fatigue crack growth. Show that a through-wall crack will not result.

4. Postulate a through-wall flaw at the governing locations. The size of the flaw should be large enough so that the leakage is assured of detection with margin using the installed leak detection equipment when the pipe is subjected to normal operating loads. A margin of 10 is demonstrated between the calculated leak rate and the leak detection capability.

5. Using faulted loads, demonstrate that there is a margin of at least 2 between the leakage flaw size and the critical flaw size.

6. Review the operating history to ascertain that operating experience has indicated no particular susceptibility to failure from the effects of corrosion, water hammer or low and high cycle fatigue.

7. For the materials actually used in the plant provide the properties including toughness and tensile test data. Evaluate long term effects such as thermal aging.

8. Demonstrate margin on applied load.

This report provides a fracture mechanics demonstration of primary loop integrity for the D. C. Cook Units 1 and 2 Plants consistent with the NRC position for exemption from consideration of dynamic effects.

Several computer codes are used in the evaluations. The computer programs are under Configuration Control which has requirements conforming to NRC's Standard Review Plan 3.9.1 (Reference 1-9). The fracture mechanics calculations are independently verified (benchmarked).

1.4 REFERENCES

1-1 WCAP-7211, Revision 3, "Energy Systems Business Unit Policy and Procedures for Management, Classification, and Release of Information," March, 1994.

1-2 USNRC Generic Letter 84-04, Subject: "Safety Evaluation of Westinghouse Topical Reports Dealing with Elimination of Postulated Pipe Breaks in PWR Primary Main Loops," February 1, 1984.

1-3 Nuclear Regulatory Commission, 10 CFR 50, Modification of General Design Criteria 4 Requirements for Protection Against Dynamic Effects of Postulated Pipe Ruptures, Final Rule, Federal Register/Vol. 52, No. 207/Tuesday, October 27, 1987/Rules and Regulations, pp. 41288-41295.

1-4 WCAP-9283, "The Integrity of Primary Piping Systems of Westinghouse Nuclear Power Plants During Postulated Seismic Events," March, 1978.

1-5 Letter Report NS-EPR-2519, Westinghouse (E. P. Rahe) to NRC (D. G. Eisenhut), Westinghouse Proprietary Class 2, November 10, 1981.

1-6 Letter from Westinghouse (E. P. Rahe) to NRC (W. V. Johnston) dated April 25, 1983.

1-7 Letter from Westinghouse (E. P. Rahe) to NRC (W. V. Johnston) dated July 25, 1983.

1-8 Standard Review Plan: Public Comments Solicited; 3.6.3 Leak-Before-Break Evaluation Procedures; Federal Register/Vol. 52, No. 167/Friday August 28, 1987/Notices, pp. 32626-32633.

1-9 Nuclear Regulatory Commission, Standard Review Plan Section 3.9.1, "Special Topics for Mechanical Component," NUREG-0800, Revision 2, July 1981.

1-10 Nuclear Regulatory Commission Docket #'s 50-315 and 50-316 Letter from Steven A. Varga, Chief Operating Reactor Branch #1, Division of Licensing, to Mr. John Dolan, Vice President, Indiana and Michigan Electric Company, dated November 22, 1985.

2.0 OPERATION AND STABILITY OF THE REACTOR COOLANT SYSTEM

2.1 STRESS CORROSION CRACKING

The Westinghouse reactor coolant system primary loops have an operating history that demonstrates the inherent operating stability characteristics of the design. This includes a low susceptibility to cracking failure from the effects of corrosion (e.g., intergranular stress corrosion cracking (IGSCC)). This operating history totals over 950 reactor-years, including 13 plants each having over 25 years of operation, 12 other plants each with over 20 years of operation and 8 plants each over 15 years of operation.

In 1978, the United States Nuclear Regulatory Commission (USNRC) formed the second Pipe Crack Study Group. (The first Pipe Crack Study Group (PCSG) established in 1975 addressed cracking in boiling water reactors only.) One of the objectives of the second PCSG was to include a review of the potential for stress corrosion cracking in Pressurized Water Reactors (PWR's). The results of the study performed by the PCSG were presented in NUREG-0531 (Reference 2-1) entitled "Investigation and Evaluation of Stress Corrosion Cracking in Piping of Light Water Reactor Plants." In that report the PCSG stated:

> "The PCSG has determined that the potential for stress-corrosion cracking in PWR primary system piping is extremely low because the ingredients that produce IGSCC are not all present. The use of hydrazine additives and a hydrogen overpressure limit the oxygen in the coolant to very low levels. Other impurities that might cause stress-corrosion cracking, such as halides or caustic, are also rigidly controlled. Only for brief periods during reactor shutdown when the coolant is exposed to the air and during the subsequent startup are conditions even marginally capable of producing stress-corrosion cracking in the primary systems of PWRs. Operating experience in PWRs supports this determination. To date, no stress corrosion cracking has been reported in the primary piping or safe ends of any PWR."

During 1979, several instances of cracking in PWR feedwater piping led to the establishment of the third PCSG. The investigations of the PCSG reported in NUREG-0691 (Reference 2-2) further confirmed that no occurrences of IGSCC have been reported for PWR primary coolant systems.

As stated above, for the Westinghouse plants there is no history of cracking failure in the reactor coolant system loop. The discussion below further qualifies the PCSG's findings.

For stress corrosion cracking (SCC) to occur in piping, the following three conditions must exist simultaneously: high tensile stresses, susceptible material, and a corrosive environment. Since some residual stresses and some degree of material susceptibility exist in any stainless steel piping, the potential for stress corrosion is minimized by properly selecting a material immune to SCC as well as preventing the occurrence of a corrosive environment. The material specifications consider compatibility with the system's operating environment (both internal and

external) as well as other material in the system, applicable ASME Code rules, fracture toughness, welding, fabrication, and processing.

The elements of a water environment known to increase the susceptibility of austenitic stainless steel to stress corrosion are: oxygen, fluorides, chlorides, hydroxides, hydrogen peroxide, and reduced forms of sulfur (e.g., sulfides, sulfites, and thionates). Strict pipe cleaning standards prior to operation and careful control of water chemistry during plant operation are used to prevent the occurrence of a corrosive environment. Prior to being put into service, the piping is cleaned internally and externally. During flushes and preoperational testing, water chemistry is controlled in accordance with written specifications. Requirements on chlorides, fluorides, conductivity, and Ph are included in the acceptance criteria for the piping.

During plant operation, the reactor coolant water chemistry is monitored and maintained within very specific limits. Contaminant concentrations are kept below the thresholds known to be conducive to stress corrosion cracking with the major water chemistry control standards being included in the plant operating procedures as a condition for plant operation. For example, during normal power operation, oxygen concentration in the RCS is expected to be in the ppb range by controlling charging flow chemistry and maintaining hydrogen in the reactor coolant at specified concentrations. Halogen concentrations are also stringently controlled by maintaining concentrations of chlorides and fluorides within the specified limits. Thus during plant operation, the likelihood of stress corrosion cracking is minimized.

2.2 WATER HAMMER

Overall, there is a low potential for water hammer in the RCS since it is designed and operated to preclude the voiding condition in normally filled lines. The reactor coolant system, including piping and primary components, is designed for normal, upset, emergency, and faulted condition transients. The design requirements are conservative relative to both the number of transients and their severity. Relief valve actuation and the associated hydraulic transients following valve opening are considered in the system design. Other valve and pump actuations are relatively slow transients with no significant effect on the system dynamic loads. To ensure dynamic system stability, reactor coolant parameters are stringently controlled. Temperature during normal operation is maintained within a narrow range by control rod position; pressure is controlled by pressurizer heaters and pressurizer spray also within a narrow range for steady-state conditions. The flow characteristics of the system remain constant during a fuel cycle because the only governing parameters, namely system resistance and the reactor coolant pump characteristics, are controlled in the design process. Additionally, Westinghouse has instrumented typical reactor coolant systems to verify the flow and vibration characteristics of the system. Preoperational testing and operating experience have verified the Westinghouse approach. The operating transients of the RCS primary piping are such that no significant water hammer can occur.

2.3 LOW CYCLE AND HIGH CYCLE FATIGUE

Low cycle fatigue considerations are accounted for in the design of the piping system through the fatigue usage factor evaluation to show compliance with the rules of Section III of the ASME

Code. A further evaluation of the low cycle fatigue loadings was carried out as part of this study in the form of a fatigue crack growth analysis, as discussed in Section 8.0.

High cycle fatigue loads in the system would result primarily from pump vibrations. These are minimized by restrictions placed on shaft vibrations during hot functional testing and operation. During operation, an alarm signals the exceedence of the vibration limits. Field measurements have been made on a number of plants during hot functional testing, including plants similar to D. C. Cook Units 1 and 2. Stresses in the elbow below the reactor coolant pump resulting from system vibration have been found to be very small, between 2 and 3 ksi at the highest. These stresses are well below the fatigue endurance limit for the material and would also result in an applied stress intensity factor below the threshold for fatigue crack growth.

2.4 REFERENCES

2-1 Investigation and Evaluation of Stress-Corrosion Cracking in Piping of Light Water Reactor Plants, NUREG-0531, U.S. Nuclear Regulatory Commission, February 1979.

2-2 Investigation and Evaluation of Cracking Incidents in Piping in Pressurized Water Reactors, NUREG-0691, U.S. Nuclear Regulatory Commission, September 1980.

3.0 PIPE GEOMETRY AND LOADING

3.1 INTRODUCTION TO METHODOLOGY

The general approach is discussed first. As an example a segment of the primary coolant hot leg pipe is shown in Figure 3-1. The as-built outside diameter and minimum wall thickness of the pipe are 34.68 in. and 2.74 in., respectively, as shown in the figure. The normal stresses at the weld locations are from the load combination procedure discussed in Section 3.3 whereas the faulted loads are as described in Section 3.4. The components for normal loads are pressure, dead weight and thermal expansion. An additional component, Safe Shutdown Earthquake (SSE), is considered for faulted loads. Tables 3-1 and 3-2 show the enveloping loads for D. C. Cook Units 1 and 2. As seen from Table 3-2, the highest stressed location in the entire loop is at Location 1 at the reactor vessel outlet nozzle to pipe weld. This is one of the locations at which, as an enveloping location, leak-before-break is to be established. Essentially a circumferential flaw is postulated to exist at this location which is subjected to both the normal loads and faulted loads to assess leakage and stability, respectively. The loads (developed below) at this location are also given in Figure 3-1.

Since the geometry and operating temperature of the cross-over leg and the cold leg are different than the hot leg, locations other than highest stressed location were examined taking into consideration both fracture toughness and stress. The three most critical locations are identified after the full analysis is completed. Once loads (this section) and fracture toughnesses (Section 4.0) are obtained, the critical locations are determined (Section 5.0). At these locations, leak rate evaluations (Section 6.0) and fracture mechanics evaluations (Section 7.0) are performed per the guidance of Reference 3-1. Fatigue crack growth (Section 8.0) and stability margins are also evaluated (Section 9.0).

All the weld locations for evaluation are those shown in Figure 3-2.

3.2 CALCULATION OF LOADS AND STRESSES

The stresses due to axial loads and bending moments are calculated by the following equation:

$$\sigma = \frac{F}{A} + \frac{M}{Z} \qquad (3\text{-}1)$$

where,

σ	=	stress
F	=	axial load
M	=	bending moment
A	=	pipe cross-sectional area
Z	=	section modulus

The bending moments for the desired loading combinations are calculated by the following equation:

$$M=\sqrt{M_Y^2+M_Z^2} \tag{3-2}$$

where,

M	=	bending moment for required loading
M_Y	=	Y component of bending moment
M_Z	=	Z component of bending moment

The axial load and bending moments for leak rate predictions and crack stability analyses are computed by the methods to be explained in Sections 3.3 and 3.4.

3.3 LOADS FOR LEAK RATE EVALUATION

The normal operating loads for leak rate predictions are calculated by the following equations:

$$F = F_{DW} + F_{TH} + F_P \tag{3-3}$$

$$M_Y = (M_Y)_{DW} + (M_Y)_{TH} + (M_Y)_P \tag{3-4}$$

$$M_Z = (M_Z)_{DW} + (M_Z)_{TH} + (M_Z)_P \tag{3-5}$$

The subscripts of the above equations represent the following loading cases:

DW	=	deadweight
TH	=	normal thermal expansion
P	=	load due to internal pressure

This method of combining loads is often referred as the <u>algebraic sum method</u> (Reference 3-1).

The loads based on this method of combination are provided in Table 3-1 at all the locations identified in Figure 3-2. The as-built dimensions are also given.

3.4 LOAD COMBINATION FOR CRACK STABILITY ANALYSES

In accordance with Standard Review Plan 3.6.3 (Reference 3-1), the <u>absolute sum</u> of loading components can be applied which results in higher magnitude of combined loads. If crack stability is demonstrated using these loads, the LBB margin on loads can be reduced from $\sqrt{2}$ to 1.0. The absolute summation of loads are shown in the following equations:

$$F = |F_{DW}| + |F_{TH}| + |F_P| + |F_{SSEINERTIA}| + |F_{SSEAM}| \tag{3-6}$$

$$M_Y = |(M_Y)_{DW}| + |(M_Y)_{TH}| + |(M_Y)_P| + |(M_Y)_{SSEINERTIA}| + |(M_Y)_{SSEAM}| \quad (3\text{-}7)$$

$$M_Z = |(M_Z)_{DW}| + |(M_Z)_{TH}| + |(M_Z)_P| + |(M_Z)_{SSEINERTIA}| + |(M_Z)_{SSEAM}| \quad (3\text{-}8)$$

where subscripts SSE, INERTIA and AM mean safe shutdown earthquake, inertia and anchor motion, respectively.

The loads so determined are used in the fracture mechanics evaluations (Section 7.0) to demonstrate the LBB margins at the locations established to be the governing locations. These loads at all the locations of interest (see Figure 3-2) are given in Table 3-2.

3.5 REFERENCES

3-1 Standard Review Plan: Public Comments Solicited; 3.6.3 Leak-Before-Break Evaluation Procedures; Federal Register/Vol. 52, No. 167/Friday, August 28, 1987/Notices, pp. 32626-32633.

Table 3-1 Dimensions, Normal Loads and Normal Stresses for D. C. Cook Units 1 & 2					
Location[a]	Outside Diameter (in)	Minimum Thickness (in)	Axial Load[b] (kips)	Bending Moment (in-kips)	Total Stress (ksi)
1	34.68	2.74	1529	28495	19.58
2	34.68	2.74	1476	1315	6.02
3	34.68	2.74	1476	6238	8.44
4	37.75	3.27	1534	14649	9.54
5	37.62	3.21	1664	4557	6.46
6	37.04	2.92	1761	3281	6.96
7	37.04	2.92	1767	3505	7.07
8	37.04	2.92	1707	1014	5.87
9	37.04	2.92	1707	2894	6.63
10	37.62	3.21	1796	7313	7.84
11	32.90	2.60	1372	5116	8.50
12	32.90	2.60	1365	934	6.06
13	32.90	2.60	1365	5106	8.46
14	33.56	2.93	1364	5536	7.63

a. See Figure 3-2
b. Included Pressure

Table 3-2 Faulted Loads and Stresses for D. C. Cook Units 1 & 2			
Location[a,b]	Axial Load[c] (kips)	Bending Moment (in-kips)	Total Stress (ksi)
1	1766	30007	21.19
2	1755	2279	7.51
3	1755	7678	10.17
4	2059	17914	12.18
5	1891	10493	9.27
6	1868	7144	8.86
7	1862	5162	8.04
8	1799	2919	6.94
9	1799	4739	7.67
10	1866	16583	11.41
11	1492	13977	14.09
12	1485	3847	8.22
13	1488	8109	10.69
14	1479	9303	9.94

a. See Figure 3-2

b. See Table 3-1 for dimensions

c. Includes Pressure

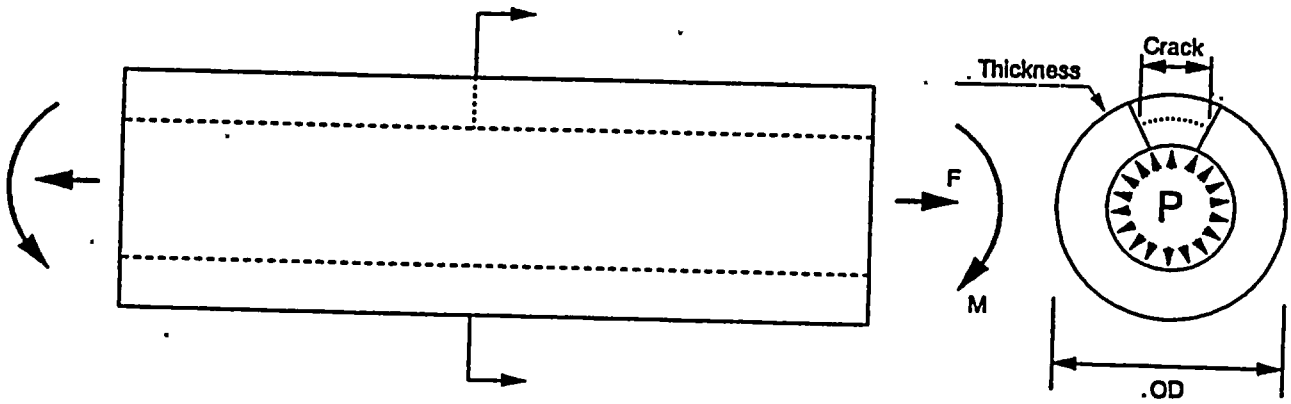

OD[a] = 34.68 in
t[a] = 2.74

Normal Loads[a]		Faulted Loads[b]	
force[c]:	1529 kips	force[c]:	1766 kips
bending moment:	28495 in-kips	bending moment:	30007 in-kips

[a] See Table 3-1
[b] See Table 3-3
[c] Includes the force due to a pressure of 2250 psia

Figure 3-1 Hot Leg Coolant Pipe

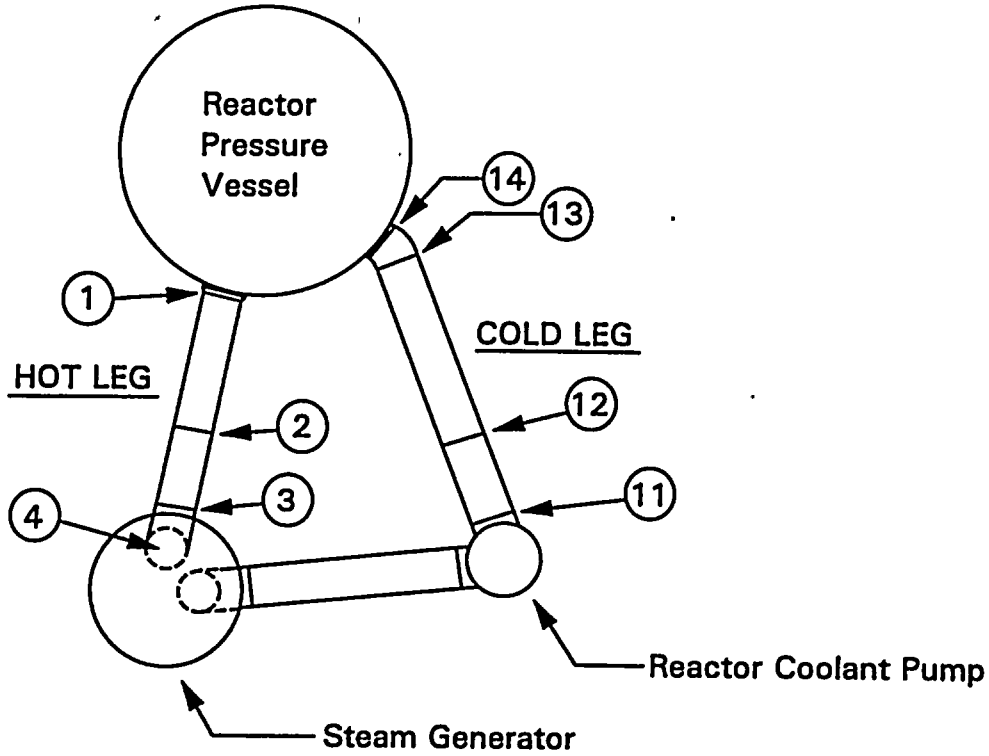

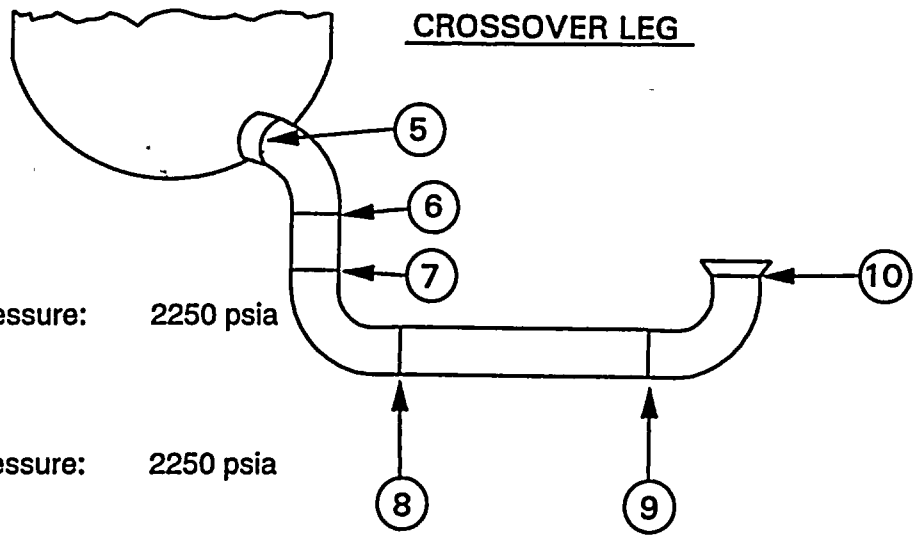

HOT LEG

Temperature 620°F, Pressure: 2250 psia

CROSSOVER LEG

Temperature 548°F, Pressure: 2250 psia

COLD LEG

Temperature 548°F, Pressure: 2250 psia

Figure 3-2 Schematic Diagram of D. C. Cook Units 1 and 2 Primary Loop Showing Weld Locations

4.0 MATERIAL CHARACTERIZATION

4.1 PRIMARY LOOP PIPE AND FITTINGS MATERIALS

The primary loop pipe and the elbow fittings for the D. C. Cook Units 1 and 2 are A351 CF8M.

4.2 TENSILE PROPERTIES

The Pipe Certified Materials Test Reports (CMTRs) for D. C. Cook Units 1 and 2 were used to establish the tensile properties for the leak-before-break analyses. The CMTRs include tensile properties at room temperature and/or at 650°F for each of the heats of material. These properties are given in Table 4-1 for Unit 1 and in Table 4-2 for Unit 2.

The representative properties at 620°F and 548°F were established from the tensile properties at 650°F given in Tables 4-1 and 4-2 by utilizing Section III of the 1989 ASME Boiler and Pressure Vessel Code (Reference 4-1). Code tensile properties at 620°F and 548°F were obtained by interpolating between the 500°F, 600°F and 650°F tensile properties. Ratios of the code tensile properties at 620°F and 548°F to the corresponding tensile properties at 650°F were then applied to the 650°F tensile properties given in Tables 4-1 and 4-2 to obtain the plant specific properties for A351 CF8M at 620°F and 548°F.

The average and lower bound yield strengths and ultimate strengths are given in Table 4-3. The ASME Code moduli of elasticity values are also given, and Poisson's ratio was taken as 0.3.

For leak-before-break fracture evaluations at the critical locations the true stress-true strain curves for A351 CF8M at 620°F and 548°F must be available. These curves were obtained using the Nuclear Systems Materials Handbook (Reference 4-2). The lower bound true stress-true strain curves are given in Figures 4-1 and 4-2.

4.3 FRACTURE TOUGHNESS PROPERTIES

The pre-service fracture toughnesses of cast stainless steels in terms of J_{Ic} have been found to be very high at 600°F. Typical results for a cast material are given in Figure 4-3. J_{Ic} is observed to be over 2500 in-lbs/in^2. However, cast stainless steel is susceptible to thermal aging at the reactor operating temperature, that is, about 290°C (550°F). Thermal aging of cast stainless steel results in embrittlement, that is, a decrease in the ductility, impact strength, and fracture toughness, of the material. Depending on the material composition, the Charpy impact energy of a cast stainless steel component could decrease to a small fraction of its original value after exposure to reactor temperatures during service.

The susceptibility of the material to thermal aging increases with increasing ferrite contents. The molybdenum bearing CF8M shows increased susceptibility to thermal aging.

In 1994, the Argonne National Laboratory (ANL) completed an extensive research program in assessing the extent of thermal aging of cast stainless steel materials. The ANL research program measured mechanical properties of cast stainless steel materials after they have been heated in controlled ovens for long periods of time. ANL compiled a data base, both from data within ANL and from international sources, of about 85 compositions of cast stainless steel exposed to a temperature range of 290-400°C (550-750°F) for up to 58,000 hours (6.5 years). From this data base, ANL developed correlations for estimating the extent of thermal aging of cast stainless steel (References 4-3 and 4-4).

ANL developed the fracture toughness estimation procedures by correlating data in the data base conservatively. After developing the correlations, ANL validated the estimation procedures by comparing the estimated fracture toughness with the measured value for several cast stainless steel plant components removed from actual plant service. The ANL procedures produced conservative estimates that were about 30 to 50 percent less than actual measured values. The procedure developed by ANL in Reference 4-4 was used to calculate the fracture toughness values for this analysis. ANL research program was sponsored and the procedure was accepted (Reference 4-5) by the NRC.

[

]a,c,e

[

]a,c,e

[

]a,c,e

The results from the ANL Research Program indicate that the lower-bound fracture toughness of thermally aged cast stainless steel is similar to that of submerged arc welds (SAWs). The applied value of the J-integral for a flaw in the weld regions will be lower than that in the base metal because the yield stress for the weld materials is much higher at the temperature[a]. Therefore, weld regions are less limiting than the cast material.

In fracture mechanics analyses that follow, the fracture toughness properties given in Table 4-6 will be used as the criteria against which the applied fracture toughness values will be compared.

4.4 REFERENCES

4-1 ASME Boiler and Pressure Vessel Code Section III, "Rules for Construction of Nuclear Power Plant Components; Division 1 - Appendices." 1989 Edition, July 1, 1989.

4-2 Nuclear Systems Materials Handbook, Part 1 - Structural Materials, Group 1 - High Alloy Steels, Section 2, ERDA Report TID 26666, November, 1975.

4-3 O. K. Chopra and W. J. Shack, "Assessment of Thermal Embrittlement of Cast Stainless Steels," NUREG/CR-6177, U. S. Nuclear Regulatory Commission, Washington, DC, May 1994.

4-4 O. K. Chopra, "Estimation of Fracture Toughness of Cast Stainless Steels During Thermal Aging in LWR Systems," NUREG-CR-4513, Revision 1, U. S. Nuclear Regulatory Commission, Washington, DC, August 1994.

[a] In the report all the applied J values were conservatively determined by using base metal strength properties.

4-5 "Flaw Evaluation of Thermally aged Cast Stainless Steel in Light-Water Reactor Applications," Lee, S.; Kuo, P. T.; Wichman, K.; Chopra, O.; Published in International Journal of Pressure Vessel and Piping, June 1997.

4-6 ASTM A800M-84 - Standard Practice for Steel Casting, Austenitic Alloy, Estimating Ferrite Content Thereof, Section 1 - Iron and Steel Products, Vol. 01.02, Ferrous Castings; Ferroalloys; Shipbuilding.

Table 4-1 Measured Tensile Properties for D. C. Cook Unit 1 Primary Loop Piping System

		At Room Temperature	
		YIELD	ULTIMATE
Heat Number	Location	(PSI)	(PSI)
39405-1	X-over Leg	40200	79900
39125-2	X-over Leg	43300	85600
36668-3	Cold Leg	43800	85600
36806-2	X-over Leg	42900	87200
35222-2	X-over Leg	48000	87600
35366-2	X-over Leg	42100	84200
38929-2	X-over Leg	47400	89400
38875-3	X-over Leg	41350	83950
34027-2	X-over Leg	33900	73600
36106-2	X-over Leg	37900	76300
48833-1	X-over Leg	39100	81100
49083-2	X-over Leg	41925	86700
39344-2	X-over Leg	54000	95000
38992-2	X-over Leg	48500	86900
35366-2	X-over Leg	42100	84200
36348-1	X-over Leg	43800	81800
36106-1	X-over Leg	42000	83900
36668-2	X-over Leg	44700	85400
37034-3	Cold Leg	55500	96000
38408-2	Cold Leg	46200	86380
38636-3	Cold Leg	42300	84000
33975-2	X-over Leg	44400	86000
35794-1	X-over Leg	43800	86600

Table 4-1 Measured Tensile Properties for D. C. Cook Unit 1 Primary Loop Piping System (cont.)

		At Room Temperature		At 650°F	
		YIELD	ULTIMATE	YIELD	ULTIMATE
Heat number	Location	(PSI)	(PSI)	(PSI)	(PSI)
34158-2	X-over Leg	48905	85075	N/A	N/A
36348-2	Hot Leg	40800	81800	N/A	N/A
37034-2	Hot Leg	41430	85950	N/A	N/A
37758-1	Hot Leg	43785	85300	N/A	N/A
38408-1	Hot Leg	45100	85200	N/A	N/A
37941-2	X-over Leg	45650	85225	N/A	N/A
A355123456B	Hot Leg	43950	88100	26200	73500
A367123456A	Hot Leg	45950	83720	25900	65000
A382456789	Hot Leg	39960	78520	24600	67000
A383890123A	Hot Leg	38095	79090	26500	66000
A367123456B	Hot Leg	45950	83720	25900	65000
B102901234A	Hot Leg	35965	77920	23600	65000
A3857890	Cold Leg	38960	82920	26900	68000
A3869012	Cold Leg	39000	80100	24800	66750
A3831234	Cold Leg	36960	79420	25400	63750
A3845678	Cold Leg	40950	79220	24900	66500
A3677890	Cold Leg	41960	78520	24300	67500
B102012345	Hot Leg	39460	79220	25900	65000
A3809012	Cold Leg	34465	76523	25300	62500
A3879012	Cold Leg	38960	79420	25500	67500
A3893456	Cold Leg	38300	82100	24700	64750
A383890123B	Hot Leg	38095	79090	26500	66000
A352123456B	X-over Leg	43000	88750	30400	72750
B2670A	X-over Leg	41950	84900	28400	70000
B2670B	X-over Leg	41950	84900	28400	70000
B2737A&B	X-over Leg	39300	80590	23600	64000
C1494A	X-over Leg	40790	79700	25900	64500
C1550A&B	X-over Leg	38960	82310	24800	63900

Note:
N/A = Not Applicable

Table 4-2 Measured Tensile Properties for D. C. Cook Unit 2 Primary Loop Piping System

		At Room Temperature		At 650°F	
		YIELD	ULTIMATE	YIELD	ULTIMATE
Heat number	Location	(PSI)	(PSI)	(PSI)	(PSI)
55186	Cold Leg	41000	84200	N/A	N/A
55186	Cold Leg	48800	86500	30900	65700
55186	Cold Leg	48800	86500	21500	55000
57370	X-over Leg	44900	76900	N/A	N/A
55158	X-over Leg	47700	79700	N/A	N/A
55158	X-over Leg	50000	82000	30900	62900
56445	X-over Leg	47200	75500	25300	58400
56844	X-over Leg	46100	76300	N/A	N/A
56844	X-over Leg	50500	80800	30300	63400
56877	X-over Leg	42700	75200	24700	59500
57370	X-over Leg	44800	76900	N/A	N/A
57412	X-over Leg	44400	78600	28100	59500
56913	X-over Leg	43800	75800	24700	56100
56869	X-over Leg	50000	83100	N/A	N/A
56869	X-over Leg	49400	85300	31400	67400
56445	X-over Leg	47200	85500	25300	58400
57452	X-over Leg	47700	76300	28000	59500
56949	X-over Leg	41600	74100	25300	58400
57123	X-over Leg	47200	78600	31400	62900
56525	Hot Leg	47200	79700	23600	61200
55228	Hot Leg	34800	79200	N/A	N/A
55228	Hot Leg	38200	80800	27000	64600
56445	Hot Leg	47200	75500	25300	58400
56445	Hot Leg	47200	75500	25300	58400

Note:
N/A = Not Applicable

Table 4-2 Measured Tensile Properties for D. C. Cook Unit 2 Primary Loop Piping System (cont.)

		At Room Temperature		At 650°F	
		YIELD	ULTIMATE	YIELD	ULTIMATE
Heat number	Location	(PSI)	(PSI)	(PSI)	(PSI)
56525	Hot Leg	47200	79700	23600	61200
C2285A&B	Hot Leg	40834	80519	23800	63750
C1686A-1&A-2	X-over Leg	40300	77750	23400	62500
C2254	Hot Leg	42200	82500	22700	64000
C2145	Hot Leg	39960	82010	23300*	66250
C1618	Hot Leg	31960	78920	24400	63750
C1982C&D	Hot Leg	39460	77922	21400	60250
C1913	Hot Leg	42950	81618	24800	68500
B1931	Cold Leg	37000	75800	22300	64000
B2591	Cold Leg	48450	81918	23200	66250
C2110	Cold Leg	39460	79920	21500	65500
C1941	Cold Leg	40960	81420	23300	67000
C1967A&B	X-over Leg	43950	78220	21400	63750
C2092A&B	X-over Leg	37460	76523	23900	63000
C1875A&B	X-over Leg	41950	81610	23300	68000
C1845	Cold Leg	39460	80920	22000	65500
C1856	Cold Leg	48000	88250	28300	73750
C1881	Cold Leg	42450	80910	23600	68000
C1974	Cold Leg	37960	78420	20900	61500

Table 4-3 Mechanical Properties for D. C. Cook Units 1 and 2 Materials at Operating Temperatures

Material	Temperature (°F)	Average Yield Strength (psi)	Lower Bound	
			Yield Stress (psi)	Ultimate Strength (psi)
A351 CF8M	620	25667	21103	55000
	548	26590	21860	55000
Modulus of Elasticity				
$E = 25.20 \times 10^6$ psi, at 620°F				
$E = 25.56 \times 10^6$ psi, at 548°F				
Poisson's ratio: 0.3				

Table 4-4 Chemistry and Fracture Toughness Properties of the Material Heats of D. C. Cook Unit 1 a,c,e

Table 4-4 Chemistry and Fracture Toughness Properties of the Material Heats of D. C. Cook Unit 1 (cont.) a,c,e.

Table 4-4 Chemistry and Fracture Toughness Properties of the Material Heats of D. C. Cook Unit 1 (cont.) a,c,e

Table 4-5 Chemistry and Fracture Toughness Properties of the Material Heats of D. C. Cook Unit 2 a,c,e

Table 4-5 Chemistry and Fracture Toughness Properties of the Material Heats of D. C. Cook Unit 2 (cont.) a,c,e

[ ]a,c,e

a,c,e

Figure 4-1 Representative Lower Bound True Stress - True Strain Curve for A351 CF8M at 620°F

a,c,e

Figure 4-2 Representative Lower Bound True Stress - True Strain Curve for A351 CF8M at 548°F

a,c,e

Figure 4-3 Pre-Service J vs. Δa for SA351 CF8M Cast Stainless Steel at 600°F

5.0 CRITICAL LOCATIONS AND EVALUATION CRITERIA

5.1 CRITICAL LOCATIONS

The leak-before-break (LBB) evaluation margins are to be demonstrated for the limiting locations (governing locations). Such locations are established based on the loads (Section 3.0) and the material properties established in Section 4.0. These locations are defined below for D. C. Cook Units 1 and 2. Table 3-2 as well as Figure 3-2 are used for this evaluation.

Critical Locations

The highest stressed location for the entire primary loop is at Location 1 (in the Hot Leg) (See Figure 3-2) at the reactor vessel outlet nozzle to pipe weld. Since the pipe Geometry and operating temperature at the cross-over leg and Cold Leg are different additional critical locations are also identified. The highest stressed location for the cross-over leg is at location 10 at the pump inlet nozzle to pipe weld. The highest stressed location for the cold leg is at location 11 at the pump outlet nozzle to pipe weld. It is thus concluded that the enveloping locations in D. C. Cook Units 1 and 2 for which LBB methodology is to be applied are locations 1, 10 and 11. The tensile properties and the allowable toughness for the critical locations are shown in Tables 4-3 and 4-6.

5.2 FRACTURE CRITERIA

As will be discussed later, fracture mechanics analyses are made based on loads and postulated flaw sizes related to leakage. The stability criteria against which the calculated J and tearing modulus are compared are:

(1) If $J_{app} < J_{IC}$, then the crack will not initiate;

(2) If $J_{app} \geq J_{IC}$, but, if $T_{app} < T_{mat}$ and $J_{app} < J_{max}$, then the crack is stable.

Where:

J_{app} = Applied J

J_{IC} = J at Crack Initiation

T_{app} = Applied Tearing Modulus

T_{mat} = Material Tearing Modulus

J_{max} = Maximum J value of the material

For critical locations, the limit load method discussed in Section 7.0 was also used.

6.0 LEAK RATE PREDICTIONS

6.1 INTRODUCTION

The purpose of this section is to discuss the method which is used to predict the flow through postulated through-wall cracks and present the leak rate calculation results for through-wall circumferential cracks.

6.2 GENERAL CONSIDERATIONS

The flow of hot pressurized water through an opening to a lower back pressure causes flashing which can result in choking. For long channels where the ratio of the channel length, L, to hydraulic diameter, D_H, (L/D_H) is greater than [

]^{a,c,e}.

6.3 CALCULATION METHOD

The basic method used in the leak rate calculations is the method developed by [

]^{a,c,e}

The flow rate through a crack was calculated in the following manner. Figure 6-1 from Reference 6-1 was used to estimate the critical pressure, Pc, for the primary loop enthalpy condition and an assumed flow. Once Pc was found for a given mass flow, the [ ]^{a,c,e} was found from Figure 6-2 (taken from Reference 6-1). For all cases considered, since [ ]^{a,c,e} Therefore, this method will yield the two-phase pressure drop due to momentum effects as illustrated in Figure 6-3, where Po is the operating pressure. Now using the assumed flow rate, G, the frictional pressure drop can be calculated using

$$\Delta P_f = [\qquad]^{a,c,e} \tag{6-1}$$

where the friction factor f is determined using the [ ]^{a,c,e} The crack relative roughness, ε, was obtained from fatigue crack data on stainless steel samples. The relative roughness value used in these calculations was [ ]^{a,c,e}

The frictional pressure drop using equation 6-1 is then calculated for the assumed flow rate and added to the [ ]^{a,c,e} to obtain the total pressure drop from the primary system to the atmosphere. That is, for the primary loop

Absolute Pressure - 14.7 = [ ]a,c,e (6-2)

for a given assumed flow rate G. If the right-hand side of equation 6-2 does not agree with the pressure difference between the primary loop and the atmosphere, then the procedure is repeated until equation 6-2 is satisfied to within an acceptable tolerance which in turn leads to correct flow rate value for a given crack size.

6.4 LEAK RATE CALCULATIONS

Leak rate calculations were made as a function of crack length at the governing locations previously identified in Section 5.1. The normal operating loads of Table 3-1 were applied, in these calculations. The crack opening areas were estimated using the method of Reference 6-2 and the leak rates were calculated using the two-phase flow formulation described above. The average material properties of Section 4.0 (see Table 4-3) were used for these calculations.

The flaw sizes to yield a leak rate of 10 gpm were calculated at the governing locations and are given in Table 6-1. The flaw sizes so determined are called leakage flaw sizes.

In Reference 6-3, the D. C. Cook Units 1 and 2 RCS pressure boundary leak detection system was determined to meet the criteria previously established for leak detection systems (1 gpm in four hours) when utilizing leak-before-break. Thus, to satisfy the margin of 10 on the leak rate, the flaw sizes (leakage flaw sizes) are determined which yield a leak rate of 10 gpm.

6.5 REFERENCES

6-1 [

]a,c,e.

6-2 Tada, H., "The Effects of Shell Corrections on Stress Intensity Factors and the Crack Opening Area of Circumferential and a Longitudinal Through-Crack in a Pipe," Section II-1, NUREG/CR-3464, September 1983.

6-3 Nuclear Regulatory Commission Docket #'s 50-315 and 50-316 Letter from Steven A. Varga, Chief Operating Reactor Branch #1, Division of Licensing, to Mr. John Dolan, Vice President, Indiana and Michigan Electric Company, dated November 22, 1985.

[ ] a,c,e

a,c,e

Figure 6-1 Analytical Predictions of Critical Flow Rates of Steam-Water Mixtures

a,c,e

Figure 6-2 [ ]a,c,e Pressure Ratio as a Function of L/D

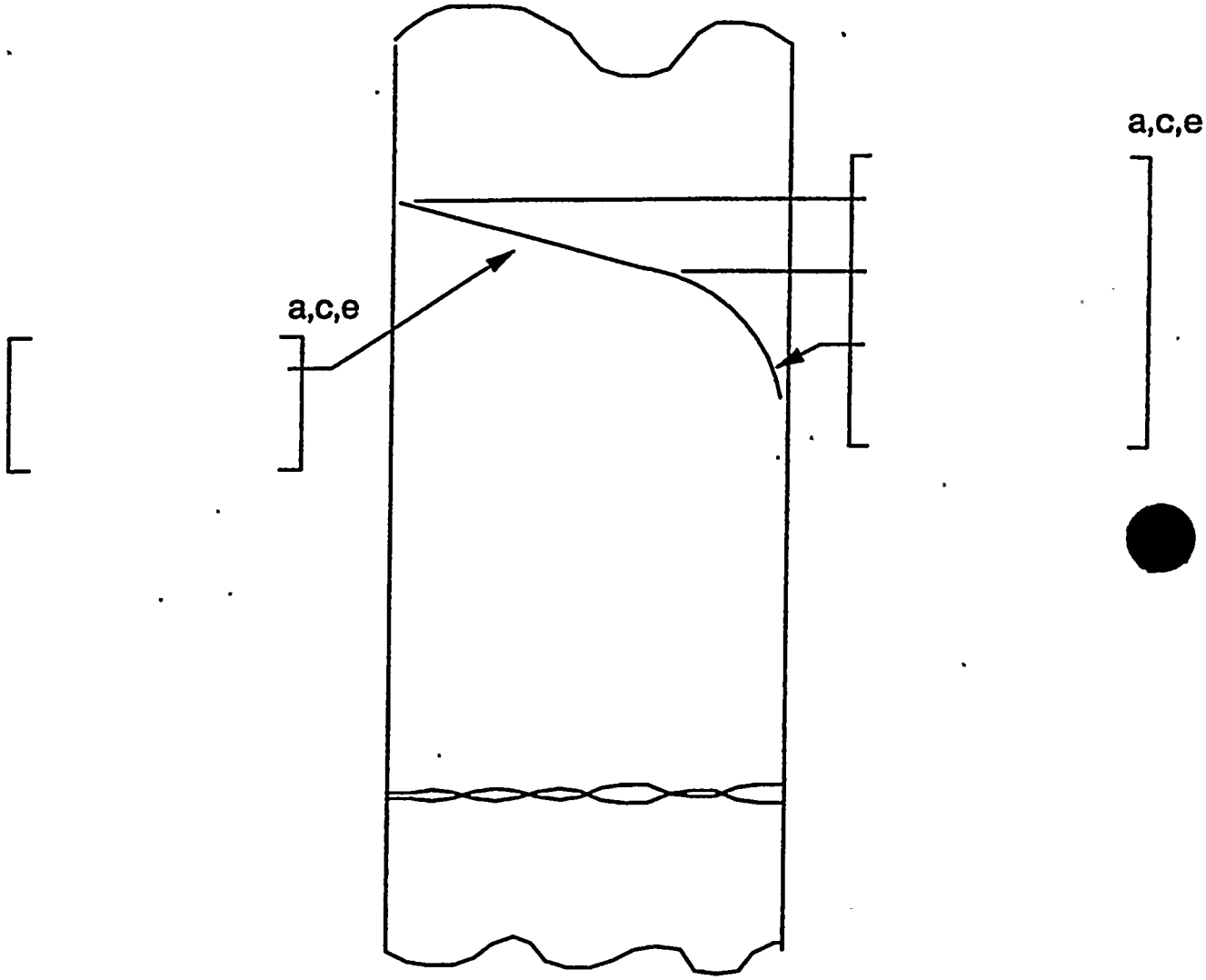

Figure 6-3 Idealized Pressure Drop Profile Through a Postulated Crack

7.0 FRACTURE MECHANICS EVALUATION

7.1 LOCAL FAILURE MECHANISM

The local mechanism of failure is primarily dominated by the crack tip behavior in terms of crack-tip blunting, initiation, extension and finally crack instability. The local stability will be assumed if the crack does not initiate at all. It has been accepted that the initiation toughness measured in terms of J_{Ic} from a J-integral resistance curve is a material parameter defining the crack initiation. If, for a given load, the calculated J-integral value is shown to be less than the J_{Ic} of the material, then the crack will not initiate. If the initiation criterion is not met, one can calculate the tearing modulus as defined by the following relation:

$$T_{app} = \frac{dJ}{da}\frac{E}{\sigma_f^2}$$

where:

T_{app}	=	applied tearing modulus
E	=	modulus of elasticity
σ_f	=	$0.5\ (\sigma_y + \sigma_u)$ (flow stress)
a	=	crack length
σ_y, σ_u	=	yield and ultimate strength of the material, respectively

Stability is said to exist when ductile tearing occurs if T_{app} is less than T_{mat}, the experimentally determined tearing modulus. Since a constant T_{mat} is assumed a further restriction is placed in J_{app}. J_{app} must be less than J_{max} where J_{max} is the maximum value of J for which the experimental T_{mat} is greater than T_{app} used.

As discussed in Section 5.2 the local crack stability criteria is a two-step process:

(1) If $J_{app} < J_{Ic}$, then the crack will not initiate.

(2) If $J_{app} > J_{Ic}$, but, if $T_{app} < T_{mat}$

and $J_{app} < J_{max}$, then the crack is stable.

7.2 GLOBAL FAILURE MECHANISM

Determination of the conditions which lead to failure in stainless steel should be done with plastic fracture methodology because of the large amount of deformation accompanying fracture. One method for predicting the failure of ductile material is the plastic instability

method, based on traditional plastic limit load concepts, but accounting for strain hardening and taking into account the presence of a flaw. The flawed pipe is predicted to fail when the remaining net section reaches a stress level at which a plastic hinge is formed. The stress level at which this occurs is termed as the flow stress. The flow stress is generally taken as the average of the yield and ultimate tensile strength of the material at the temperature of interest. This methodology has been shown to be applicable to ductile piping through a large number of experiments and will be used here to predict the critical flaw size in the primary coolant piping. The failure criterion has been obtained by requiring equilibrium of the section containing the flaw (Figure 7-1) when loads are applied. The detailed development is provided in appendix A for a through-wall circumferential flaw in a pipe with internal pressure, axial force, and imposed bending moments. The limit moment for such a pipe is given by:

[ ]a,c,e

where:

[

]a,c,e

σ_f = 0.5 (σy + σu) (flow stress), psi

[ ]a,c,e

[

]a,c,e

The analytical model described above accurately accounts for the piping internal pressure as well as imposed axial force as they affect the limit moment. Good agreement was found between the analytical predictions and the experimental results (Reference 7-1).

For application of the limit load methodology, the material, including consideration of the configuration, must have a sufficient ductility and ductile tearing resistance to sustain the limit load.

7.3 RESULTS OF CRACK STABILITY EVALUATION

Stability analyses were performed at the governing locations established in Section 5.1. The elastic-plastic fracture mechanics (EPFM) J-integral analyses for through-wall circumferential cracks in a cylinder were performed using the procedure in the EPRI fracture mechanics handbook (Reference 7-2).

The lower-bound material properties of Section 4.0 were applied (see Table 4-3). The fracture toughness properties established in Section 4.3 and the normal plus SSE loads given in Table 3-2 were used for the EPFM calculations. Evaluations were performed at the critical locations identified in Section 5.1. The results of the elastic-plastic fracture mechanics J-integral evaluations are given in Table 7-1.

A stability analysis based on limit load was performed for these locations as described in Section 7.2. The welds, at these locations, are assumed conservatively as GTAW and SMAW combination weld. The "Z" factor correction for SMAW was applied (Reference 7-3) as follows:

$$Z = 1.15\,[1.0 + 0.013\,(OD-4)]$$

where OD is the outer diameter of the pipe in inches.

The Z-factors were calculated for the critical locations, using the dimensions given in Table 3-1. The Z factor was 1.61 for location 1. The Z factor was 1.65 for location 10. The Z factor was 1.58 for location 11. The applied loads were increased by the Z factors and plots of limit load versus crack length were generated as shown in Figures 7-2, 7-3 and 7-4. Table 7-2 summarizes the results of the stability analyses based on limit load. The leakage flaw sizes are also presented on the same table.

7.4 REFERENCES

7-1 Kanninen, M. F., et. al., "Mechanical Fracture Predictions for Sensitized Stainless Steel Piping with Circumferential Cracks," EPRI NP-192, September 1976.

7-2 Kumar, V., German, M. D. and Shih, C. P., "An Engineering Approach for Elastic-Plastic Fracture Analysis," EPRI Report NP-1931, Project 1237-1, Electric Power Research Institute, July 1981.

7-3 Standard Review Plan; Public Comment Solicited; 3.6.3 Leak-Before-Break Evaluation Procedures; Federal Register/Vol. 52, No. 167/Friday, August 28, 1987/Notices, pp. 32626-32633.

[ ] a,c,e

Note: T_{app} is not applicable since $J_{app} < J_{IC}$

[ ] a,c,e

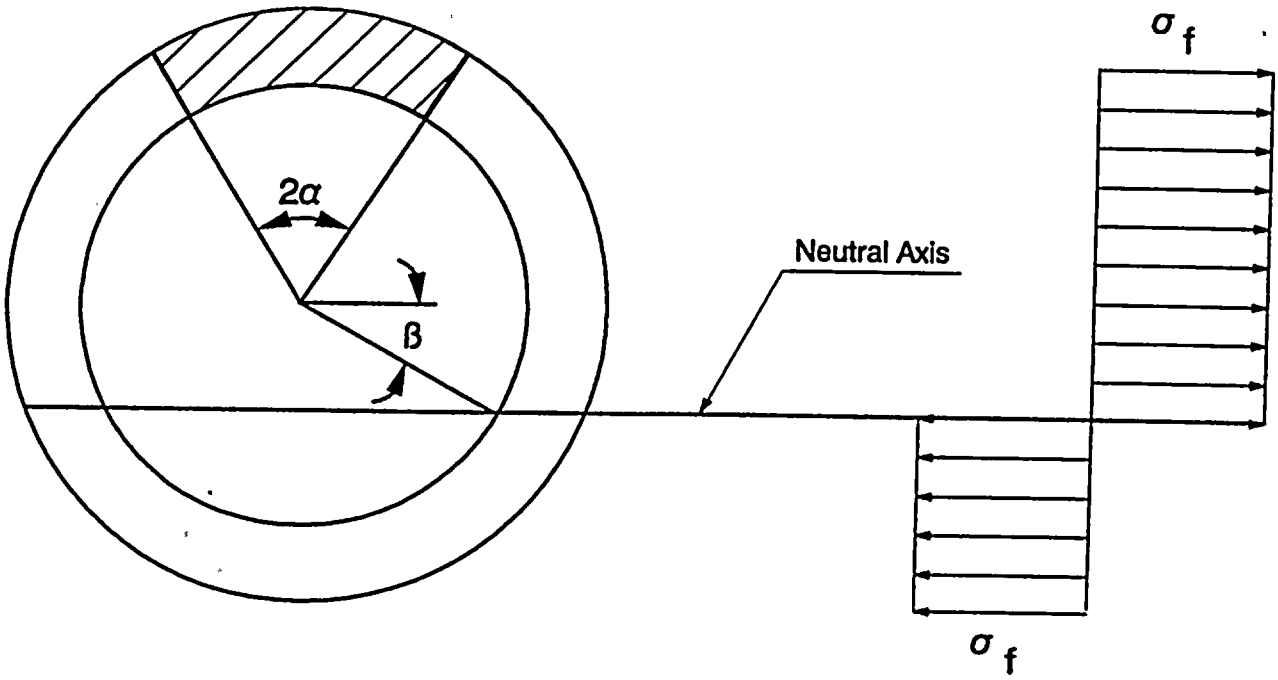

Figure 7-1 [ ]^{a,c,e} Stress Distribution

a,c,e

[ ]

OD = 34.68 in. σ_y = 21.10 ksi F = 1766.0 kips

t = 2.74 in. σ_u = 55.00 ksi M = 30007 in-kips

A351-CF8M with SMAW weld

Figure 7-2 Critical Flaw Size Prediction - Hot Leg at Location 1

a,c,e

[ ]

OD = 37.62 in. σ_y = 21.86 ksi F = 1866.0 kips

t = 3.21 in. σ_u = 55.00 ksi M = 16583 in-kips

A351-CF8M with SMAW weld

Figure 7-3 Critical Flaw Size Prediction - Cross Over Leg at Location 10

a,c,e

[ ]

OD = 32.90 in. σ_y = 21.86 ksi F = 1492.0 kips

t = 2.60 in. σ_u = 55.00 ksi M = 13977 in-kips

A351-CF8M with SMAW weld

Figure 7-4 Critical Flaw Size Prediction - Cold Leg at Location 11

8.0 FATIGUE CRACK GROWTH ANALYSIS

To determine the sensitivity of the primary coolant system to the presence of small cracks, a fatigue crack growth analysis was carried out for the [ ]a,c,e region of a typical system (see Location [ ]a,c,e of Figure 3-2). This region was selected because crack growth calculated here will be typical of that in the entire primary loop. Crack growths calculated at other locations can be expected to show less than 10% variation.

A [ ]a,c,e of a plant typical in geometry and operational characteristics to any Westinghouse PWR System. [

]a,c,e All normal, upset, and test conditions were considered. A summary of generic applied transients is provided in Table 8-1. Circumferentially oriented surface flaws were postulated in the region, assuming the flaw was located in three different locations, as shown in Figure 8-1. Specifically, these were:

Cross Section A: [ ]a,c,e

Cross Section B: [ ]a,c,e

Cross Section C: [ ]a,c,e

Fatigue crack growth rate laws were used [

]a,c,e The law for stainless steel was derived from Reference 8-1, a compilation of data for austenitic stainless steel in a PWR water environment was presented in Reference 8-4, and it was found that the effect of the environment on the crack growth rate was very small. From this information it was estimated that the environmental factor should be conservatively set at [ ]a,c,e in the crack growth rate equation from Reference 8-1.

For stainless steel, the fatigue crack growth formula is:

[

]a,c,e

[

]a,c,e

[ ]a,c,e

where: [ ]a,c,e
The unit for crack growth rate da/dn is in equation is inches per cycle, and the unit for K_{eff} is ksi√in

where: ΔK is the stress intensity factor range.

The calculated fatigue crack growth for semi-elliptic surface flaws of circumferential orientation and various depths is summarized in Table 8-2, and shows that the crack growth is very small, [ ]a,c,e

8.1 REFERENCES

8-1 James, L. A. and Jones, D. P., "Fatigue Crack Growth Correlations for Austenitic Stainless Steel in Air, Predictive Capabilities in Environmentally Assisted Cracking," ASME publication PVP-99, December 1985.

8-2 [ ]a,c,e

8-3 [ ]a,c,e

8-4 Bamford, W. H., "Fatigue Crack Growth of Stainless Steel Piping in a Pressurized Water Reactor Environment," Trans. ASME Journal of Pressure Vessel Technology, Vol. 101, Feb. 1979.

Table 8-1 Summary of Reactor Vessel Transients

Number	Typical Transient Identification	Number of Cycles
1	TURBINE ROLL	20
2	COLD HYDRO	10
3	HEATUP/COOLDOWN	200
4	LOADING AND UNLOADING	14500
5	REDUCED TEMPERATURE RETURN TO POWER	2000
6	STEP LOAD DECREASE/INCREASE	2000
7	LARGE STEP LOAD DECREASE WITH STEAM DUMP	200
8	INITIAL S. S. FLUCTUATION	150000
9	RANDOM S. S. FLUCTUATION	3000000
10	FEEDWATER CYCLING	2000
11	LOOP OUT OF SERVICE SHUTDOWN & STARTUP	80
12	LOSS OF LOAD	80
13	LOSS OF POWER	40
14	PARTIAL LOSS OF FLOW	80
15	REACTOR TRIP WITH NO COOLDOWN	230
16	REACTOR TRIP WITH COOLDOWN NO SI	160
17	REACTOR TRIP WITH COOLDOWN AND SI	10
18	INADVERTANT DEPRESSURIZATION	60
19	INADVERTANT STARTUP OF AN INACTIVE LOOP	60
20	INADVERTANT SAFETY INJECTION ACTUATION	80
21	CONTROL ROD DROP	80
22	EXCESSIVE FEEDWATER FLOW	30
23	BORON CONCENTRATION	26400
24	REFUELING	80
25	HOT HYDRO	280

Table 8-2 Typical Fatigue Crack Growth at [ ]a,c,e (40 years)			
	FINAL FLAW (in.)		
Initial Flaw (in.)	[ ]a,c,e	[ ]a,c,e	[ ]a,c,e
0.292	0.3120	0.2977	0.2973
0.300	0.3207	0.3057	0.3056
0.375	0.4020	0.3825	0.3833
0.425	0.4568	0.4336	0.4353

a,c,e

[ ]

Figure 8-1 Typical Cross-Section of [ ]a,c,e

a,c,e

[ ]

Figure 8-2 Reference Fatigue Crack Growth Curves for [ ]a,c,e

a,c,e

[ ]

Figure 8-3 Reference Fatigue Crack Growth Law for [ ]^{a,c,e} in a Water Environment at 600°F

9.0 ASSESSMENT OF MARGINS

The results of the leak rates of Section 6.4 and the corresponding stability and fracture toughness evaluations of Sections 7.1, 7.2 and 7.3 are used in performing the assessment of margins. Margins are shown in Table 9-1.

In summary, at all the critical locations relative to:

1. Flaw Size - Using faulted loads obtained by the absolute sum method, a margin of 2 or more exists between the critical flaw and the flaw having a leak rate of 10 gpm (the leakage flaw).

2. Leak Rate - A margin of 10 exists between the calculated leak rate from the leakage flaw and the leak detection capability of 1 gpm.

3. Loads - At the critical locations the leakage flaw was shown to be stable using the faulted loads obtained by the absolute sum method (i.e., a flaw twice the leakage flaw size is shown to be stable; hence the leakage flaw size is stable). A margin of 1 on loads using the absolute summation of faulted load combinations is satisfied.

a,c,

[a]based on limit load

[b]based on J integral evaluation

10.0 CONCLUSIONS

This report justifies the elimination of RCS primary loop pipe breaks from the structural design basis for the D. C. Cook Units 1 and 2 as follows:

a. Stress corrosion cracking is precluded by use of fracture resistant materials in the piping system and controls on reactor coolant chemistry, temperature, pressure, and flow during normal operation.

b. Water hammer should not occur in the RCS piping because of system design, testing, and operational considerations.

c. The effects of low and high cycle fatigue on the integrity of the primary piping are negligible.

d. Ample margin exists between the leak rate of small stable flaws and the capability of the D. C. Cook Units 1 and 2 reactor coolant system pressure boundary Leakage Detection System.

e. Ample margin exists between the small stable flaw sizes of item d and larger stable flaws.

f. Ample margin exists in the material properties used to demonstrate end-of-service life (relative to aging) stability of the critical flaws.

For the critical locations, flaws are identified that will be stable because of the ample margins described in d, e, and f above.

Based on the above, the Leak-Before-Break conditions are satisfied for the D.C. Cook Units 1 and 2 primary loop piping. All the recommended margins are satisfied. It is therefore concluded that dynamic effects of RCS primary loop pipe breaks need not be considered in the structural design basis of the D.C. Cook Units 1 and 2 Nuclear Power Plants for the uprating of Unit 2 and for Units 1 and 2 replacement Steam Generator conditions.

APPENDIX A

LIMIT MOMENT

[

]a,c,e

a,c,e

Figure A-1 Pipe with a Through-Wall Crack in Bending

ORIGINAL

UNITED STATES OF AMERICA

NUCLEAR REGULATORY COMMISSION

Title: BRIEFING ON THE D.C. COOK PLANT PUBLIC MEETING

Location: Rockville, Maryland

Date: Monday, January 10, 2000

Pages: 1 - 115

ANN RILEY & ASSOCIATES, LTD.
1025 Connecticut Avenue, NW, Suite 1014
Washington, D.C. 20036
(202) 842-0034

PDR ADOCK

DF03

DISCLAIMER

This is an unofficial transcript of a meeting of the United States Nuclear Regulatory Commission held on January 10, 2000, in the Commission's office at One White Flint North, Rockville, Maryland. The meeting was open to public attendance and observation. This transcript has not been reviewed, corrected or edited, and it may contain inaccuracies.

The transcript is intended solely for general informational purposes. As provided by 10 CFR 9.103, it is not part of the formal or informal record of decision of the matters discussed. Expressions of opinion in this transcript do not necessarily reflect final determination or beliefs. No pleading or other paper may be filed with the Commission in any proceeding as the result of, or addressed to, any statement or argument contained herein, except as the Commission may authorize.

1 UNITED STATES OF AMERICA

2 NUCLEAR REGULATORY COMMISSION

3 OFFICE OF THE SECRETARY

4 ***

5 BRIEFING ON THE D.C. COOK PLANT

6 ***

7 PUBLIC MEETING

8

9 Nuclear Regulatory Commission

10 Commissioners' Conference Room

11 Building 1

12 One White Flint North

13 11555 Rockville Pike

14 Rockville, Maryland

15 Monday, January 10, 2000

16 The Commission met in open session, pursuant to

17 notice, at 10:05 a.m., the Honorable RICHARD MESERVE,

18 Chairman of the Commission, presiding.

19 COMMISSIONERS PRESENT:

20 RICHARD A. MESERVE, Chairman

21 GRETA J. DICUS, Commissioner

22 NILS J. DIAZ, Commissioner

23 EDWARD McGAFFIGAN, JR., Commissioner

24 JEFFREY S. MERRIFIELD, Commissioner

25

1 STAFF AND PRESENTERS SEATED AT THE COMMISSIONER'S TABLE:
2 WILLIAM TRAVERS, Executive Director for Operations
3 E. LINN DRAPER, Chairman & CEO, AEP
4 JOE POLLOCK, Plant Manager, D.C. Cook
5 ROBERT P. POWERS, Sr. Vice President, Nuclear
6 Generation and Chief Nuclear Office, AEP
7 CHRIS BAKKEN, Site Vice President, AEP
8 MIKE RENCHECK, Vice President, Nuclear
9 Engineering, AEP
10 DAVID LOCHBAUM, Nuclear Safety Engineer, Union of
11 Concerned Scientists
12 JIM DYER, Administrator, Region III
13 JOHN GROBE, Director, Division of Reactor Safety,
14 Region III
15 SAMUEL COLLINS, Director, NRR
16 JOHN ZWOLINSKI, Director, Division of Licensing
17 and Project Management, NRC
18 SCOTT GREENLEE
19 ROBERT GODLEE
20 DON NAUGHTON
21 BILL SCHALK
22 WAYNE KROPP
23 MIKE FINISSI
24 SAM BARTON
25 DAVID KUNSEMILLER

1 P R O C E E D I N G S

2 [10:05 a.m.]

3 CHAIRMAN MESERVE: Good morning. On behalf of the
4 Commission I would like to welcome you to today's briefing
5 on the D.C. Cook plant.

6 The Commission will hear from representatives of
7 American Electric Power, the licensee for D.C. Cook, the
8 NRC's Region III office, and Mr. David Lochbaum of the Union
9 of Concerned Scientists.

10 The D.C. Cook plant was shut down in September,
11 1997, following an Architect and Engineering inspection that
12 identified significant problems with safety systems.
13 Subsequent inspections identified additional safety system
14 deficiencies, most notably with the ice condensers. The NRC
15 issued a confirmatory action letter in September, 1997,
16 requiring the licensee to address issues discovered during
17 the AE inspection and to perform further assessments and
18 take appropriate corrective actions prior to restarting the
19 plant.

20 After a slow start AEP has made substantial
21 progress in discovering, evaluating and correcting a large
22 number of issues, and after more than two years of effort is
23 within sight of achieving restart.

24 I visited the D.C. Cook plant in December, 1999,
25 and was impressed with the frank discussion by AEP of past

1 problems and deficiencies and of the steps that it had been
2 taking to ensure that these problems and deficiencies are
3 corrected and do not recur.
4 I was also impressed by the magnitude and quality
5 of the NRC Staff's oversight activities.
6 I understand that copies of the handouts are
7 available at the entrances. Unless my colleagues have any
8 comments they would like to make, you may proceed.
9 COMMISSIONER MERRIFIELD: Well, actually, Mr.
10 Chairman, just to make a note, since our last meeting I,
11 too, have had the opportunity to travel to Michigan and
12 visit at the D.C. Cook facility and meet with the
13 individuals at this table as well as the staff of the
14 facility and our Staff up there, and I would share the
15 Chairman's comments about the work being done by the
16 licensee and equally as well the hard work being done by our
17 Staff to resolve these issues and move forward, and so thank
18 you very much for your additional consideration.
19 CHAIRMAN MESERVE: Any other opening statements?
20 [No response.]
21 CHAIRMAN MESERVE: If not, Dr. Draper, you may
22 proceed.
23 DR. DRAPER: Thank you, Chairman Meserve, and
24 thank you, Commissioners, for taking the time to be with us
25 today.

1 I am Linn Draper, Chairman and Chief Executive of
2 American Electric Power. With me today are Bob Powers,
3 Senior Vice President, Nuclear Generation, who is
4 responsible for all aspects of our D.C. Cook operations;
5 Chris Bakken, D.C. Cook Site Vice President; Mike Rencheck,
6 Vice President of Nuclear Engineering; and Joe Pollock, the
7 D.C. Cook Plant Manager.
8 Bob is our Chief Nuclear Officer. He will lead
9 the presentation today to review the progress made towards
10 the restart of the Cook plant.
11 Chris Bakken joined AEP from Public Service
12 Electric & Gas Company, where he was Plant Manager for the
13 two Salem units. Chris was a key manager responsible for
14 returning those units for operation, and instilling the high
15 standards of safety, reliability and accountability that
16 enabled that organization to continue to perform well.
17 Mike Rencheck joined AEP from Florida Power
18 Corporation, where he was Director of Engineering. He was
19 part of the successful Crystal River 3 restart as well as
20 the Salem restarts at PSE&G.
21 Joe Pollock also joined us from Public Service
22 Electric & Gas Company, where he was the Maintenance Manager
23 and previously the Quality Assurance Manager.
24 This has been a long and costly outage to AEP. It
25 has been necessary to make improvements to our systems, our

1 components, material condition, processes, personnel
2 training and our organizational culture. It has also been
3 an important outage because it marks a renewed commitment by
4 AEP to safety returning the D.C. Cook units to full power
5 operation.
6 As the Chairman mentioned, the outage began in
7 September of 1997. We shut down both units to address
8 concerns raised by the NRC regarding the ability of the
9 emergency core cooling system and the containment system to
10 function properly in the unlikely event of a loss of coolant
11 accident.
12 In early 1998, after we clearly saw the magnitude
13 and the nature of the ice condensers issues, we decided to
14 melt the ice and rebuild the ice condensers to a superior
15 condition. This was the first of many similar and tough
16 decisions to do the right thing when confronted with a
17 problem involving the capability of a safety system or a
18 component to perform its intended function. In fact, doing
19 the right thing every step of the way has become the major
20 theme for all of the work done at the Cook plant.
21 It was clearly demonstrated in our decision a year
22 ago to stop the outage work and take the extra time to
23 complete the expanded system's readiness reviews that both
24 Mike and Bob will discuss. It was reinforced as we
25 authorized the resources to begin the necessary repairs and

1 modifications to the plant and to revamp engineering
2 programs, surveillance programs, and the Corrective Action
3 Program and other areas in need of improvement that you will
4 more about in just a few minutes.
5 Under the direction of Bob Powers, we have made
6 significant changes to the D.C. Cook management team. We
7 have a number of the members of the Cook team here today.
8 Bob, Chris and Mike will discuss some of the cultural
9 changes we have made to strengthen our management team and
10 prepare for the restart of the Cook units.
11 Many of the Cook team men and women have assisted
12 in the restart of other nuclear plants across the country.
13 They further demonstrate AEP's commitment to provide the
14 resources necessary to restart this important generation
15 resource for our system.
16 When we met last with the Commission in November,
17 1998, I said it was clear to me that one factor that led to
18 our present situation was an insular and complacent attitude
19 that had developed over many years within the Nuclear
20 Generation Department. We were not identifying our own
21 problems. We were not aggressive in correcting the problems
22 that we did identify. We did not question conditions that
23 had existed for many years and our oversight of the Cook
24 operations was not adequate.
25 AEP has made a commitment to provide the resources

1 necessary to correct these conditions to restart the Cook
2 units and to return our Nuclear Generation Division to an
3 industry leadership position.
4 As I mentioned in the beginning, this outage has
5 been very expensive to AEP. We have lost the entire output
6 of one of our largest generation plants for over two years.
7 We have spent considerable additional resources rebuilding
8 the ice condensers and making other necessary modifications
9 and repairs to the plant.
10 With the progress we will report today, we can now
11 see the end to this outage, basically on the schedule that
12 we announced in the middle of last year. We are confident
13 that the investment in D.C. Cook will result in a safer,
14 more reliable and more efficient operating plant. We
15 clearly understand that excellence in nuclear plant
16 performance will return economic dividends to AEP by
17 enabling Cook to achieve higher capacity factors, lower
18 operating and maintenance costs, and shortened refuelling
19 and maintenance outages.
20 We are also preparing Cook for license renewal.
21 We think that extension of its useful life beyond the
22 current limits of the NRC operating licenses will be
23 valuable to us. In fact, it will be a key to our economic
24 recovery.
25 We look forward to the D.C. Cook's plant's

1 resumption of its critical role in meeting the electricity
2 supply needs in Michigan and Indiana. AEP's commitment to
3 nuclear power also extends beyond the Cook plant to the
4 acquisition of a 25 percent interest in the South Texas
5 Project through our merger with the Central and Southwest
6 Corporation. The approval process is moving forward on a
7 definitive timeline and we expect to complete the merger in
8 the spring.
9 Nuclear power will be a long-term and significant
10 component of the AEP generation mix. In order to ensure the
11 success of Cook and the nuclear generation business sector
12 in both the near and long-term futures, AEP has taken steps
13 to improve its oversight. I am personally continuing my
14 active oversight of Cook through periodic meetings with Bob
15 Powers and the independent safety review group. This group
16 is made up of six well-respected nuclear consultants who
17 report to Bob as Chief Nuclear Officer and to me as CEO.
18 In our reorganization following the merger with
19 CSW, nuclear generation will continue to report directly to
20 me. I will continue to devote a significant segment of my
21 time to ensure nuclear safety and the effectiveness of our
22 nuclear power operations.
23 Bob and I meet essentially monthly with the AEP
24 Board of Directors or with our Nuclear Oversight Committee
25 of that Board that was formed in April of 1999. The Nuclear

1 Oversight Committee is made up of five outside Directors of
2 our corporation. Its purpose is to provide long-term,
3 focused oversight of this important sector of the company.
4 It has met four times -- once at the Cook plant -- to review
5 Cook restart work and plans. The committee will continue to
6 meet periodically to review the Cook status.
7 In sum, as you will hear from Bob and his team, we
8 have made significant progress this past year, and have the
9 end of this long outage in sight. We have assembled a
10 talented and experienced management team which is instilling
11 the right kind of safety consciousness and standards for
12 excellence. AEP has given its full support and commitment
13 of resources to Bob and the Cook team to do the job right,
14 and they are doing just that.
15 If there are not questions, we will commence with
16 the formal presentation. There is an agenda slide which I
17 believe has come up. Bob will begin with an overview or
18 perspective of what we found needed to be changed, the
19 process we are using to make those changes, and a snapshot
20 of where we currently stand, then Mike will discuss the
21 extensive discovery effort completed by the Cook team, its
22 results and some of our more important accomplishments.
23 Chris will cover the implementation phase of our
24 restart plan, discussing the preparations being made to
25 ensure a safe restart of the Cook units, and finally Bob

1 will provide some closing remarks, and we would be delighted
2 to entertain questions either now or along the way, however
3 you prefer.
4 CHAIRMAN MESERVE: Why don't we proceed, and we'll
5 come back to questions at the end of the presentation.
6 DR. DRAPER: Bob?
7 MR. POWERS: Thank you, Linn.
8 When I came to Cook in August of 1998, restart
9 efforts had been underway for about a year. I arrived with
10 a background of what a well-run plant looked like, and based
11 on my understanding of the situation at Cook I knew that a
12 substantial challenge lay ahead for the employees and for
13 me.
14 To help define that challenge and determine the
15 best course of action in response, I had to access what the
16 differences were between performance at Cook and the
17 performance we would need to successfully restart and for
18 long-term operations.
19 As a starting point for this comparison I compared
20 what I saw at Cook with four essential cultural attributes
21 found at successful nuclear plants. I believe the
22 fundamentals of a healthy nuclear safety culture include the
23 characteristic that people must be first and foremost
24 focused on safety. There must be capable leadership within
25 the organizations and at the senior management level. The

1 organizations must also be self-critical, and the Corrective
2 Action Program must operate effectively. Finally, people
3 must be adequately trained and prepared for their jobs.
4 As you might imagine, I used a number of sources
5 to gather data for my assessment and how the culture at D.C.
6 Cook compared with these fundamentals. I received numerous
7 briefings from my direct reports and their staffs and I
8 talked with many of our employees. I physically observed
9 ongoing work, toured critical plant areas, and reviewed key
10 documentation related to the work and problems that had been
11 identified up to that point.
12 I also sponsored assessments by our Quality
13 Assurance Department and chartered other independent
14 assessments.
15 The principal findings of my assessments are
16 listed on the right hand side of the slide. Basically I
17 determined that the people at Cook had become insular in
18 their focus and approach to managing the power plant. This
19 led to gaps between how Cook did business and how many in
20 the industry were doing business, particularly in the
21 engineering disciplines.
22 While the organization at Cook had been dedicated
23 over the years to ensuring that the plant ran well, I
24 believe Cook's good operating history had a substantial
25 influence on how people viewed problems when they arose.

1 For example, even when technical issues were identified by
2 the NRC's Architect-Engineering Inspection Team, I believe
3 many people at Cook didn't fully appreciate what these and
4 other identified problems meant in terms of breakdowns and
5 design control and compliance with the licensing basis.
6 I found that change management was not effective.
7 This was probably best seen in the move of the Engineering
8 organization in two stages from New York City to Columbus,
9 Ohio, and then to our near-site offices. Large numbers of
10 experienced engineers were lost because of the moves and the
11 impact on the organization led to a lack of understanding
12 and focus on certain areas such as design and licensing
13 bases
14 I also confirmed that there were deficient
15 processes and programs. This was particularly notable in
16 the areas of design control, safety evaluations, corrective
17 actions, and training.
18 In the area of corrective actions, problems were
19 not being found or documented in some cases, but in
20 addition, when they were identified there too often was
21 little or no follow-up. This left a backlog of unresolved
22 issues. Besides the problems with the ice condenser these
23 technical issues reduced assurance that certain systems were
24 capable of meeting their safety and accident mitigation
25 functions.

My assessment also revealed that our training programs were in poor shape. This situation enabled the insular perspective found at the site, rather than serving as a platform to enhance human performance and help assure that industry standards were being met.

In retrospect, and having had the benefit now of our expanded discovery efforts, I can understand why we couldn't answer a number of fundamental design and licensing basis questions raised by the Architect-Engineering Team and other NRC inspectors. Simply stated, as an organization Cook had lost focus on maintaining the design basis and in providing strong configuration management, which are both vital to preserving safety margins.

Overall, it was clear to me that the fundamentals were missing.

Faced with the gaps I mentioned, and the missing fundamentals, I had re-establish a foundation for successful restart and beyond. This required setting the overall direction for the organization. It also required putting some stakes in the ground to help guide our people along the way.

I came to Cook with high standards, as did my management team. We all recognized that to achieve successful cultural change we must communicate our standards effectively and provide continual reinforcement.

1 This next slide summarizes my standards as key
2 management expectations. It is through the implementation
3 of these expectations that we are changing the culture at
4 Cook.
5 These management expectations are placed
6 throughout the plant and our engineering offices. When I
7 rolled them out, I met with my managers and supervisors to
8 discuss the expectations. I indicated that it was my goal
9 for each manager to internalize the expectations, pass them
10 on to the staffs, and begin to use them in the conduct of
11 work.
12 I don't intend to go over each of these with you
13 this morning. However, I would like to make a few points
14 about them.
15 First, I would like you to note that the
16 expectations are behavior-based. I believe that to sustain
17 change people must learn repeatable behaviors that support
18 the nuclear safety fundamentals I previously mentioned.
19 The second point I want to make is that the end
20 results of these expectations are the same ones demonstrated
21 by personnel at well-performing plants. For example,
22 promptly identifying and correcting problems leads to a
23 questioning attitude. Doing what we say we will do leads to
24 ownership. Accepting accountability for yourself and your
25 coworkers builds teamwork and an entire organization

1 grounded on the principle of accountability.

2 Each of these expectations focuses on people.
3 Although the plant and our processes are very, very
4 important, ultimately people make all the difference. When
5 the units and the processes are completely fixed, the
6 strength of our people will be the way we reach our ultimate
7 goal of world class performance.

8 In the end, what we are doing at Cook is nothing
9 fancy. We are concentrating on the fundamentals like clear
10 management expectations, and I believe if we do the
11 fundamentals right, we will be successful in restarting the
12 plants and long-term safe and efficient operation.

13 At this point in our change efforts my management
14 team and I are still providing strong top-down direction for
15 the organization. However, we are seeing signs that our
16 management expectations are taking hold. In fact, some of
17 the performance improvements that Mike and Chris will
18 discuss later are a direct result of this.

19 I fully expect that as our staff matures and
20 becomes more self-sustaining they will be able to take on
21 more responsibility for determining the successful direction
22 of our efforts. This will allow my senior management staff
23 and me to concentrate our attention on other long-term
24 issues such as business process redesign and license
25 renewal.

However, setting expectations and getting our people moving in the right direction was just part of what was needed to restart the plants. This next slide provides an overview of our restart plan.

This slide gives you an overview of the major steps in our restart process. The process involves four basic phases.

First, discovery of issues; then implementation of corrective actions; third, verification our corrective actions were effective, ultimately leading to restart by the units. This is the process we have been following since early of last year.

However, as I alluded to earlier, the initial discovery efforts at Cook were limited in focus. When I first arrived at Cook, the information I was receiving from my staff indicated that in their minds the recovery effort was nearing completion. As much as I hoped the Cook staff was correct, I pulled the string on this information and the more I pulled the more the message was mixed.

As I looked harder, it became clear that the initial discovery efforts had not been conducted using effective procedures, nor had effective training been given to the engineers performing the reviews. Consequently, the results were inconsistent and only a limited number of issues were identified.

1 Because of this limited focus, we didn't have a
2 full understanding of the causes and thus we didn't really
3 know where else to look. In addition, it seemed like every
4 time the NRC looked at an area more issues were uncovered.
5 It was obvious that we needed to broaden our
6 review. To start us down this path in September of 1998 I
7 helped assure that we did a thorough and comprehensive job
8 while conducting a safety system functional inspection of
9 the auxiliary feedwater system at the Cook plants.
10 Now since this system had supposedly been scrubbed
11 by our -- cleaned by our previous reviews, it would serve as
12 a bellwether of the accuracy of our previous efforts. Later
13 in the fall of 1998 I also initiated a Blue Ribbon expert
14 panel review of our engineering programs. Both of these
15 efforts turned up substantive issues requiring further
16 evaluation and by late 1998 it was clear to me that
17 something bold needed to be done if the facility was to
18 restart.
19 It was in this same timeframe that I hired Mike
20 Rencheck and subsequently directed a more thorough discovery
21 effort take place. Under Mike's leadership, our initial
22 discovery process was expanded to include a more
23 comprehensive review of our plant systems and also the
24 performance of our departments and of our key processes.
25 Mike will give you more detail about the discovery process

in his presentation.

During the initial period of our expanded discovery early last year, it became clear that I would need to further rebuild the management team as well. Chris and Joe and Mike represent important elements of that rebuilding process. It also became clear that we would have to re-establish the Engineering organization, improve our oversight capability and work to restore our credibility with the NRC.

We believe we have made substantial progress in each of these areas. Chris and Mike will give you more detail about our implementation efforts later on.

So where does this leave us today? As the icon illustrates, we are currently putting all the pieces together that are necessary for the Cook organization to not only safety restart the units but support our longer term goal of excellence. We have not completed all the remediation work yet, but we do know what else needs to be done. We have a schedule to perform the remaining work and we are committed to safety and quality along the way as we have been throughout our restart efforts.

We have accomplished a great deal over the last year. For example, we have submitted the items in our confirmatory action letter to you for closure. We have submitted all of our license amendment requests for Unit 2

1 restart. We have undergone numerous NRC inspections,
2 including several major inspections such as the recent
3 Engineering Corrective Action Team Inspection, ECATI, and
4 these inspections support our belief that the Engineering
5 organization has improved and that our Corrective Action
6 Program, our self-evaluation process, and our training at
7 the Cook facility are effective.
8 From an organizational standpoint, we are turning
9 our attention to human performance, and Chris will discuss
10 that later.
11 In addition, I have personally devoted time to
12 ensuring that there is a strong management team for restart
13 and beyond. On this latter point, we have assembled a
14 strong leadership team here at Cook, and I expect it to
15 provide a guiding and stabilizing force for our future
16 efforts.
17 The individuals seated behind me are a few of the
18 people -- introduce yourself, guys.
19 MR. FINISSI: Mike Finissi, Director of Plant
20 Engineering.
21 MR. GODLEE: Robert Godlee, Director of Regulatory
22 Affairs.
23 MR. KROPP: Wayne Kropp, Director of Performance
24 Assurance.
25 MR. GREENLEE: Scott Greenlee, Design Engineering

1 Director.

2 MR. BARTON: Sam Barton, Site Senior License.

3 MR. NAUGHTON: Don Naughton, Senior Systems

4 Engineer.

5 MR. SCHALK: Bill Schalk, Communications.

6 MR. KUNSEMILLER: Dave Kunsemiller, Technical

7 Assistance.

8 MR. POWERS: Thanks, guys.

9 These and other individuals represent the

10 management and technical depth of our current team.

11 Although we may experience some turnovers in moves toward

12 normal staffing levels, we intend to keep high-performing

13 people by providing them with a challenging and rewarding

14 environment.

15 Now with regards to the physical work of fixing

16 the plant we also have accomplished a great deal but by far

17 the singlemost man-hour intensive effort we have underway is

18 the repair and reload of our ice condensers. I would like

19 to give you a brief description of this work and provide an

20 update of where we are today with their refurbishment.

21 Next slide, please.

22 MR. POWERS: Approximately 3,800 bags of ice, like

23 the one shown here, were filled using the Cook Plant ice-

24 making machine in 1998. Each bag contains approximately

25 1,200 pounds of ice and it has been stored in an off-site

cold storage facility since that time. We have periodically sampled the ice while it has been in storage to ensure its quality.

As the first step in reloading, the ice is transported by refrigerated tractor-trailers to the station. After removal, it is brought to an ice crusher, which is shown in the next slide. Each bag is brought in and a crusher forklift is used to perform an initial breakup of the ice. The workers on the platform that you see in the slide then begin the process of breaking the ice into smaller chunks to feed into a pulverizer-crusher.

The ice then travels by auger and by blowers to the ice condensers, during which time it is conditioned with refrigerated air. This conditioning minimizes moisture intrusion into the ice condenser, limiting frost accumulation and sublimation of the ice.

The next slide shows the actual loading of the ice into the ice condenser baskets.

The ice piping from the blowers is connected to a cyclone separator in the ice condenser. The cyclone separates the forced refrigerated air from the ice itself and then the ice then falls into the baskets. The green air flow passage bags that you see in the slide are installed prior to the ice being loaded in order to limit the amount of ice which falls out of the baskets.

1 Reviewing some of the numbers. There are 1,944
2 ice baskets in the condenser, and each basket is
3 approximately 12 inches in diameter and 48 feet long.
4 Technical specifications require a total ice weight of
5 2,590,000 pounds and we expect to loan about 3 million
6 pounds in the Unit 2 ice condenser. At the present time we
7 have loaded half of the Unit 2 ice condenser and are just
8 initiating the process of weighing the first baskets.
9 Reloading ice is a major milestone for the people
10 at D.C. Cook. I hope the short overview I just provided
11 with you of the ice load helps you appreciate that we have
12 not only accomplished a great deal in discovering and
13 resolving issues, but we have made significant progress in
14 restoring the physical plant since I last spoke to the
15 Commission in November of 1998. True to our key management
16 expectations, we are doing what we said we would do.
17 Let me quickly summarize the key points of my
18 opening remarks. The picture that best describes where we
19 are today is that we know what our problems are. We have
20 identified the necessary corrective actions and we are
21 nearing completion of our restart efforts. Frankly, where
22 we are now feels more and more like a refueling outage.
23 What faces us in the near term is simply to complete the
24 remaining work with quality and with safety.
25 For the longer term, we intend to continue to

1 focus on the fundamentals. As we improve there, our
2 leadership team will turn more attention to the challenges
3 of deregulation, license renewal and more efficient
4 operating cycles.
5 With this overview, let me turn the presentation
6 over to Mike Rencheck.
7 MR. RENCHECK: Thank you, Bob. As Bob indicated,
8 you can categorize areas, our areas of focus into plant,
9 processes and people. Today I am going to concentrate on
10 how we set about identifying our issues and some of the
11 results that we have achieved.
12 One of the first things that I did when I came to
13 Cook was to establish a solid processing -- process for
14 discovering our problems, and I did that by utilizing
15 processes that I had found effective in the past.
16 The next slide shows the key elements of this
17 process. Discovery was the first of four phases in our
18 restart process. Discovery was designed to identify
19 problems that could adversely affect the safe and reliable
20 operation of the Cook units. It contained the following
21 attributes to ensure that problems were thoroughly evaluated
22 consistent with their safety importance.
23 As the first bullet on the slide indicates,
24 discovery was an industry-proven process used in the
25 recovery and restart of other nuclear plants. It is

1 described in our restart plan and has been implemented
2 through formal procedures.
3 Second, discovery utilized personnel with the
4 broad-based experience in the recovery and restart of
5 nuclear units, combined with Cook experienced personnel. We
6 also used industry peer reviews and visited other nuclear
7 utilities to ensure that lessons learned were incorporated
8 into our process.
9 Third, discovery applied comprehensive and
10 intrusive methods, and we did this through three principal
11 efforts. One of these was our expanded system readiness
12 reviews. These reviews provided a detailed and disciplined
13 assessment of essentially all safety and risk-significant
14 systems. Non-risk-significant systems were also reviewed
15 but to a lesser degree. We also conducted programmatic
16 assessments that were designed to evaluate whether processes
17 critical to restart were in place and functioning properly.
18 125 per REM baseline assessments were performed. This
19 resulted in 94 detailed self-assessments of the programs
20 being conducted.
21 The last effort involved our functional area
22 assessments, which included 18 departmental reviews. These
23 reviews were conducted to determine whether department
24 practices, as well as personnel and management capabilities
25 were adequate to support start-up and safe plant operation.

1 The fourth bullet on the slide focuses on our
2 corrective action program. Early in our discovery process,
3 we completely revamped our corrective action program to make
4 it consistent with other well-designed industry processes.
5 We utilized our new program to document, understand the
6 extent of condition, and then to promptly fix the identified
7 problems that came out of discovery.
8 Finally, we subjected our discovery effort, scope,
9 approach, results and proposed corrective actions to a
10 demanding oversight by our various oversight groups such as
11 our System Readiness Review Board and our Plant Operations
12 Review Committee. These efforts were also audited and
13 assessed in detail by our performance assurance department.
14 We believe that our discovery process utilized
15 industry best practices, techniques, and experienced people
16 to assure rigorous and comprehensive evaluation of the
17 problems at D.C. Cook.
18 Let me now discuss what we found. As the left
19 side of this slide indicates, our discovery efforts
20 identified issues in three areas -- people issues, process
21 issues and plant issues. In the area of people issues, the
22 problems generally included an organization that had become
23 insular in its approach to change. This resulted in the
24 inability to raise standards and keep pace with industry
25 changes, to consistently identify conditions adverse to

1 quality, determine root causes and implement corrective
2 actions in a timely manner, to adequately train and qualify
3 personnel in important areas such as our design and
4 licensing basis, and, finally, to effectively establish,
5 communicate and implement standards and management
6 expectations.
7 Regarding process issues, a number of our
8 processes had become deficient and ineffective, resulting in
9 problems such as inconsistent design control, inadequate
10 safety evaluations, inadequate operability determinations,
11 deficient post-maintenance and post-modification testing,
12 and insufficient work management programs and associated
13 processes.
14 Many of the plant or technical issues arose from
15 the process issues I just mentioned. This generally
16 resulted in eroded safety margins, missing documentation and
17 inoperable plant equipment. Some specific examples include
18 missing or deficient design documentation, deficiencies in
19 the areas of material condition, for example, our ice
20 condensers, deficiencies in the design of some systems or
21 components, examples are motor-operated valves.
22 Throughout the discovery effort, issues were
23 documented in our corrective action program. The issues
24 were categorized as restart or post-restart required using
25 an industry-proven screen criteria. Management then

1 analyzed the restart issues and developed a list of
2 approximately 40 items that required additional management
3 attention due to their potential safety significance. To
4 date, we have been resolving these issues and have found
5 that several have had some safety significance, namely, our
6 ice condensers, our high energy line break program, and our
7 motor-operated valves. Although we have determined how to
8 solve these issues, we are continuing in our efforts to do
9 so.
10 In summary, these issues generally represent the
11 fundamental reasons for our shutdown. Our processes and
12 people skills, fundamental to sound engineering practices,
13 were ineffective. Alignment among our license, our design
14 basis documentation and the plant's hardware in some
15 instances was at best unknown, and, at worst, varied
16 substantially.
17 Clearly, we faced a significant challenge at Cook.
18 However, let me give you some perspective on this challenge.
19 Cook represents the third recovery effort that I have been
20 associated with. In general, the problems at Cook are not
21 unique. With the possible exception of the ice condenser
22 and the extent of our documentation deficiencies, the
23 problems at Cook have been seen throughout the industry in
24 one form or another.
25 We have been utilizing industry-proven corrective

1 actions to address many of our identified problems. I have
2 personal experience with many of these such as our expanded
3 system readiness review, resolution of our high energy line
4 break issues and other industry operating experience, and,
5 therefore, I have confidence in their effectiveness.
6 The right side of the slide identifies the
7 corrective action focus areas we used to reestablish and
8 strengthen our engineering capabilities. In the engineering
9 department, we specifically focused on the capabilities of
10 our people, that is, their skills and knowledge, and the
11 processes we use to do our work.
12 First, we had to assure that our management and
13 oversight were sound. To accomplish this, we hired several
14 new management individuals that understood the need for
15 setting high expectations and following through with
16 coaching and direction of both our AEP employees and the
17 contractors that we were utilizing.
18 We understand that the level of engineering
19 performance is directly proportional to the knowledge and
20 skills possessed by our personnel, as well as the quality of
21 the supporting training program. In this regard, we
22 conducted an assessment of personnel competence. Two areas
23 were considered, engineering judgment and problem-solving
24 knowledge. The assessment indicated that engineering
25 judgment was adequate, but problem-solving skills needed

1 enhancement.

2 Our assessment also found that many engineers
3 lacked the full understanding of configuration control,
4 design and licensing basis, safety evaluations and
5 operability. Consequently, we initiated a comprehensive
6 remedial training program. In some cases all engineering
7 personnel, including contractors received the training. In
8 other cases, we targeted training to a specific engineering
9 group.

10 I will give you an example. The population of AEP
11 and contractor personnel received training in management
12 expectations, responsibilities, safety focus, conservative
13 decision-making, design and licensing basis, operability
14 determination, 10 CFR 50.59 safety evaluation fundamentals,
15 configuration management, design control, calculations and
16 the development of solutions. And some of the specific
17 targeted training was applied to AEP engineering personnel
18 in areas such as effective problem-solving and human error
19 reduction techniques.

20 An 80 percent passing score was required on tests,
21 and when personnel did not achieve this grade, remediation
22 training was performed. Academic review boards were also
23 conducted for those personnel not meeting standards.

24 We have since performed several follow-up
25 assessments to evaluate the effectiveness of our efforts.

1 Based on the quality of work products and root cause
2 analyses, engineering personnel are showing an overall
3 improvement such as an increased understanding of the design
4 and licensing basis, and they are demonstrating a greater
5 questioning attitude toward their work.
6 For the longer term, to ensure that improvements
7 seen to date are maintained and increased, we have revamped
8 our engineering support personnel training program. The
9 program includes establishing position-specific guides for
10 engineering personnel to achieve and then maintain their
11 qualifications.
12 In summary, we are challenging our people to meet
13 higher standards. We believe this focus will help us reach
14 our goal of excellence in the future.
15 Now, in addition to the skills and knowledge
16 training, we have also been improving our practices and
17 procedures used by our people. As part of the programmatic
18 assessment effort that I mentioned earlier, engineering
19 processes and programs were thoroughly evaluated.
20 For example, we performed detailed reviews
21 involving safety evaluations, design control, engineering
22 calculations, the design change process and configuration
23 management. And not only the programs, we also took a look
24 at the documentation associated with these programs such as
25 our updated Final Safety Analysis Report, our calculations

1 and our safety evaluations.

2 Issues identified for corrective action during

3 these reviews were documented as condition reports in our

4 corrective action program for disposition. Some of the

5 corrective actions we took in response to these reviews

6 included incorporating best industry practices into our

7 programs, establishing the design engineering organization

8 as the design authority, developing a station-wide

9 configuration management policy and associated procedures,

10 and completing a comprehensive revision of our design

11 control processes, and, last, establishing oversight of our

12 engineering products through our engineering effectiveness

13 department and formal review committees such as our Design

14 Review Board.

15 In summary, we have improved our skills, practices

16 and procedures, and I am seeing the results from our

17 efforts. The documentation for our design and licensing

18 basis is being rebaselined were appropriate. Approximately

19 190 modifications are being installed at D.C. Cook to

20 improve the safety and reliability of our plant.

21 Our performance indicators such as root cause

22 quality, safety evaluation quality and calculation quality

23 also show me that we are on an improving trend and meeting

24 management expectations for restart.

25 These next two slides illustrate our performance

in these two areas. This slide shows the percentage of acceptance by the Plant Operations Review Committee for 50.59 safety screenings and evaluations going back to February of last year. This team set high standards and, as you can see, back in February of last year, 50.59 screens were being rejected and sent back for further analysis. This ultimately resulted in higher quality evaluations that are consistently meeting our expectations today.

Another key indicator that directly relates to our corrective action program and the ability of the organization to find problems and develop effective corrective actions is the quality of our root causes. This next slide shows our most recent performance. The quality of our root cause evaluations is measured by the corrective actions department and is scored using a variety of factors such as safety significance, did we achieve the root cause, and extent of condition. These factors are weighted into a composite score that is applied against a management standard or a goal. Although we expect the quality to continue to increase in the future, root cause evaluations are meeting management's higher expectations and are on a generally improving trend.

The improvements in these and other fundamental areas, along with the new processes, and the development of design changes, the control of documentation, and

1 configuration management, among others, have resulted in
2 rebaselining our design and license basis documentation and
3 plant modifications, where appropriate. This provides us
4 with reasonable assurance and gives us a sound foundation
5 for safe and reliable plant operation.
6 These improvements also indicate the beginning of
7 a longer term cultural change in the engineering department.
8 With our continued leadership and oversight with the safety
9 first focus, we will not repeat past mistakes.
10 I am encouraged with our progress, however, our
11 work in the engineering department is not complete. We
12 still have challenges ahead and I would like to highlight
13 these for you in the next slide.
14 Although the current quality of our engineering
15 products, such as design change packages and safety
16 evaluations are at an acceptable level for restart, we must
17 continue to improve. Our improvements must reduce our
18 reliance on multiple review processes and increase our
19 engineers' knowledge and skills. Our goal is for the
20 engineers to produce products that continually meet our
21 higher standards. This will be achieved in part by
22 enhancing our organizational capabilities, and we will do
23 this through our training programs, and through the use of
24 personnel performance techniques such as human error
25 reduction and performance assessments.

1 Another focus area is on contractor reliance.
2 During this restart period, we have relied heavily on
3 outside help. These contracts have been under the
4 management and direction of AEP employees doing this effort
5 and we appreciate their contributions. Quite frankly, we
6 could not have tackled this restart effort without them.
7 Having said that, however, we must now continue reducing our
8 reliance on them to ensure that we have the internal
9 knowledge and capabilities for the longer term journey to
10 excellence.
11 Finally, we recognize that to be successful, the
12 D.C. Cook Station must be an operations-led organization.
13 Engineering, of course, plays a critical part in supporting
14 the safe and reliable operation of the units. We have
15 substantially improved, but we must continue to improve the
16 quality and timeliness of our products delivered to
17 operations.
18 These are the challenges ahead for the engineering
19 department. I would now like to turn the presentation over
20 to Chris Bakken.
21 MR. BAKKEN: Thank you, Mike. To pick up on Bob's
22 earlier discussion of desired behaviors, we believe that
23 being self-critical and developing sound corrective actions
24 requires that we focus on effective oversight. At Cook, we
25 believe that oversight is fundamental to the success of our

1 restart work, as well as to our long-term goals.
2 Oversight is a broad concept and involves
3 activities such as monitoring, assessing, coaching and
4 providing feedback. It is demonstrated by individual
5 behavior, as well as through structured processes and
6 programs.
7 On an individual basis, Joe, Mike and I all
8 incorporate oversight into our everyday activities. For
9 example, during daily team meetings, we carefully evaluate
10 the information provided by our staffs. We provide feedback
11 and we encourage people to take a broader view of problems,
12 and to voice their opinions. We believe that this approach
13 promotes openness and better teamwork, and it also results
14 in more comprehensive solutions.
15 This example shows you how we provide oversight on
16 a personal level. But oversight is also built into our
17 restart plan as a structured process. As the next slide
18 shows, our restart effort was designed to provide several
19 layers of oversight. This slide was first shown to the NRC
20 staff during an 0350 meeting last fall. This slide breaks
21 our restart process down into three basis parts, discovery,
22 implementation, and verification, which then lead to restart
23 of the units through the final phase, start-up and power
24 ascension, which is not shown on this slide.
25 The boxes are color-coded with blue representing

1 work activities, yellow representing assessment and
2 oversight activities, and green representing approval or
3 concurrence of successfully completed activities. The slide
4 highlights the yellow boxes. As you can see, oversight, in
5 one form or another, occurs in each major step of our
6 restart process.
7 We did not move from discovery without an
8 evaluation of the effectiveness of our efforts to identify
9 problems. A third party panel of experts, the System
10 Readiness Review Board, or SRRB, principally performed this
11 evaluation. As we move towards the completion of our
12 implementation efforts, you can see that, once again, we are
13 using oversight as an important element of our process.
14 Again, SRRB, along with our Plant Operations Review
15 Committee, is providing oversight.
16 In our final phase of the restart, we again will
17 be utilizing several oversight reviews. This consists
18 mainly of department self-assessments and final affirmation
19 reviews by senior management and the Plant Operations Review
20 Committee.
21 Throughout the entire restart process, oversight
22 is also provided by quality assurance. As your staff has
23 noted during several inspections, quality assurance has
24 provided intrusive and insightful review of our restart
25 activities. Line management now sees the benefit of these

1 insights and is actively seeking quality assurance's
2 feedback.
3 We believe the structured use of oversight, along
4 with our personal efforts to oversee activities at the site,
5 has ensured that we are doing a quality job. It is a major
6 reason why we have confidence in the effectiveness of our
7 efforts to date.
8 Two other major reasons why we have this
9 confidence is that our discovery effort was thorough and
10 comprehensive, and we are being successful in our transition
11 from an engineering-led organization to an operations-led
12 organization. This next slide illustrates this transition.
13 As mentioned earlier, our restart plan began with
14 the discovery phase. This intensive and time-consuming
15 effort was headed up by engineering for several reasons.
16 First, many of the problems at Cook were centered on design
17 and license basis issues, as well as technical issues.
18 Second, Mike Rencheck had extensive personal experience in
19 leading such an effort.
20 The left side of this slide identifies the key
21 activities performed under Mike's direction. In addition to
22 discovering our problems, Mike and his organization were
23 responsible for developing the solutions to our problems, as
24 well as reestablishing the safety margins and the design
25 bases of our plant and processes.

1 Through these efforts, we also began the process
2 of changing the culture of all of our people. Together,
3 these activities have helped ready us for the transition to
4 power operations. In particular, they have given us
5 confidence that when our plant modifications are complete,
6 the operators will have safe and reliable plant equipment,
7 as well as effective procedures. These activities have also
8 provided momentum for our longer term journey to excellence.
9 As we move through this transition period, I can
10 tell you as an operator myself, that the operations
11 organization is anxious to resume control of the plant.
12 Since my arrival in the spring of 1999, I have been hard at
13 work with my organization to reshape the culture among our
14 staff.
15 As the right side of the slide indicates, I
16 believe there are four fundamentals that define an
17 operations-led organization. First and foremost, the
18 operations organization is responsible for operating the
19 plant in a safe and reliable manner. In order to do this,
20 the operators must be trained, maintain their qualifications
21 and be knowledgeable of their license responsibilities.
22 Second, an operations-led organization must be a
23 competent and demanding customer. The proper maintenance of
24 the plant and the processes are critical to an operator's
25 job. This means that operators must work well with

1 engineering, maintenance and other support organizations to
2 assure that plant and processes are well maintained.
3 However, the operators must also hold those responsible for
4 maintenance accountable, both in terms of their product and
5 their services. Without quality services and products, the
6 operators are more likely to be unnecessarily challenged in
7 the form of equipment failures or malfunctions.
8 Third, an operations-led organization must be
9 constantly assessing itself and those supporting it. Unless
10 an organization is self-critical, it cannot be assured of
11 growth or continuous improvement.
12 Finally, as the leader of plant operations, the
13 operations department must be among the first to demonstrate
14 the behaviors embodied in the management expectations that
15 Bob discussed earlier.
16 We are well into our transition to an operations-
17 led organization. This has involved instilling higher
18 standards, reshaping the leadership within my various
19 organizations and improving our work processes. To help us
20 complete our transition, we in operations have been
21 concentrating on improving our skills and capabilities. We
22 also have been focusing on enhancing the processes we rely
23 upon to do our jobs.
24 MR. BAKKEN: We have accomplished a great deal
25 over the past year. However, since our time is limited, I

1 will only highlight some of the activities that are
2 preparing us to return the power operation.
3 First, let me talk about operator training. We
4 believe that a strong training program is key to our long-
5 term success.
6 In October of 1998, our training programs for
7 operations were placed on probation by NPO. We gave this
8 training program top priority, and in April of 1999, we
9 achieved accreditation renewal of the operations training
10 programs.
11 Subsequent NRC inspections have also noted our
12 training improvements. Concerning operational skills, one
13 area we've been focusing on is human error reduction.
14 We have established human performance goals, and
15 we trimmed the performance of each crew. We utilized this
16 information in our training program and during periodic crew
17 briefings.
18 We have provided our operators with a variety of
19 training opportunities on this subject. For example,
20 operators have attended a human errors reduction training
21 course, they have attended the NPO Team-building Workshop.
22 They have participated in our shift manager mentoring
23 program, and they have participated in our Hop Hallet Crew
24 Training.
25 For those of you not familiar with Mr. Hallet,

1 he's the author of the Industrial Operators Handbook, and is
2 a recognized authority on individual and crew human
3 performance.
4 Because human error reduction is such an important
5 element of our long-term success, we recently hired a site
6 human performance manager. Although her efforts are
7 directed to all of our organizations, I have specifically
8 asked her to focus her near-term efforts on error reduction
9 within operations and maintenance departments.
10 We have also focused on the ability of our staff
11 to perform effect root-cause analysis. Training courses
12 have been provided, and this has increased the number of
13 operations staff members who are now qualified root-cause
14 investigators.
15 In-field operations by operations management have
16 been increased. The expectation is to provide oversight of
17 the actual work at the job site, providing support and/or
18 coaching where necessary.
19 Peer checking has been incorporated into the day-
20 to-day conduct of the operations staff, and more time is
21 being devoted to interfaces between managers and their
22 crews, as well as between the Operations and the Quality
23 Assurance Departments.
24 An operations-led organization cannot stand on its
25 own. It is supported by Engineering, which Mike has spoken

of earlier, as well as other organizations such as Maintenance.

I want to briefly mention what we have accomplished in our Maintenance Department: We continue to focus on augmenting our staffing ranks. Over the past several months, we have nearly doubled the permanent AEP staffing levels in supervision and craft available for plant maintenance.

At the same time, we continue to reduce our reliance on contractors. While we need contractor support to help us complete the work on Unit II, and for the restart of Unit I, it is my intent to carefully eliminate the majority of our contractors by the end of this year.

Another area of continuing focus in maintenance is training. The plans we are currently developing will achieve sufficient skills and qualifications in mechanical, electrical, and instrumentation and controls, to support the contractor reductions at the conclusion of the Unit I restart.

I'd like to also mention that the health of our maintenance training programs and instructional staff were reviewed in November of last year by an NPO accreditation team. I believe these programs will receive accreditation renewal in March of this year.

The last area I will talk about concerns a few of

1 the processes that we have upgraded that are key to safe
2 operations. One of these involves operability
3 determinations under Generic Letter 91-18.
4 We revised the governing procedure to provide
5 better guidance to personnel when performing these
6 determinations. We provided training on those procedural
7 changes.
8 We established the Operations Department as the
9 clear owner of the program. We also implemented, on a
10 temporary basis, a shift operating review team, and on a
11 long-term basis, a cross functional event screening
12 committee, both of which are designed to reduce the burden
13 on the control of operators for reviewing Condition Reports
14 and performing prompt operability determinations.
15 These were some of the measures we put in place to
16 handle the large volume of issues encountered during our
17 discovery efforts.
18 In addition, as part of our new electronic
19 corrective action reporting system, we enhanced the data
20 available to the operators. The data screens now include
21 information on operability, reportability, and mode
22 constraint requirements.
23 The other process I would like to briefly discuss
24 is our emergency operating procedures or EOPs. Early in our
25 restart effort, we recognized that our EOPs needed to be

1 substantially revised.

2 We have largely completed this effort, bringing
3 them up to current industry standards. At this time, the
4 procedures themselves have been fully revised. Review and
5 approval by our Plant Operating Review Committee is
6 complete.

7 Now, operators are currently being trained on the
8 new procedures in the simulator. As you can see on this
9 slide, on this important area, we've made steady progress,
10 and, in general, adhered to our schedule, and completed this
11 effort last Friday, not in time to update the slides.

12 I have only highlighted some of the many
13 initiatives that we have implemented to help us transition
14 to an operations-led organization.

15 We have made tremendous progress, and overall, I
16 believe we are demonstrating an improving trend. Of course,
17 as in any restart situation, the startup and testing phase
18 is where everything comes together, and where the quality of
19 our efforts can be measured.

20 If you will turn to the next slide, I would like
21 to discuss our restart and power ascension testing program.

22 As we complete the implementation phase of our
23 restart efforts, the Operations Department is resuming
24 control of the plant systems through the system turnover
25 process.

1 To date, 17 of 86 systems have been turned over to
2 Operations. This means that the systems have been tested,
3 as allowed by current plant conditions, and Operations has
4 found that they meet their standards for safety and
5 reliability. This turnover process is an initial step in
6 the startup and power ascension program.
7 I would like to point out that from the beginning
8 of this discussion, that the modifications that are being
9 performed on the Cook Units are limited in scope and, in
10 general, are not significantly changing any of the
11 operational capabilities of the plant.
12 This is unlike other restart efforts. As an
13 example of what I'm referring to, during the Salem restart,
14 we installed a digital feedwater control system, and rebuilt
15 the entire process control system to improve the plant's
16 capabilities.
17 This required extensive testing such as several
18 load rejection tests to confirm its effectiveness. In
19 general, the modifications at Cook involve equipment
20 compliance upgrades, such as the motor-operated valve and
21 high-energy line break work.
22 We are not installing modifications that will
23 cause the plant to respond significantly differently from
24 when it was shut down, and, therefore, the testing programs
25 are much more modest in scope.

With the turnover of systems complete, and concurrence of AEP management and the NRC, we will take the reactor critical and ultimately proceed to 100-percent power. This chain of events will be under the control of the Operations Department, utilizing what we call a Startup and Power Ascension Program.

Before I describe the program itself, I would like to discuss its basis priorities. mplementing these priorities is essential to achieving an event-free restart of the plant.

Safety is our top priority during this critical phase of restarting the units. We are committed to proceeding only in a controlled and deliberate manner. By control, I mean that the startup is conducted by a strong, operations-led organization with full responsibility to direct actions and events safely at all times.

By deliberate, I mean that we will have a high degree of certainty, that is, the outcome of next actions are well known, are safe, and are in accordance with our overall plans.

If we have a problem, we will stop, assess, and implement appropriate corrective actions before proceeding.

As to the program itself, we have a plan document that is the Startup and Power Ascension Testing Program Procedure. This procedure describes the key steps in our

program, and has been reviewed by the System Readiness Review Board.

The program is divided into four phases: Component testing, system testing, integral functional testing, and power ascension testing. This building-block approach assures that the plant equipment, both independently and as an integrated system, can be relied upon to perform its intended function.

The program itself is nearly identical to the one used during the Salem restart. System test plans have been developed in accordance with the scope of the work performed during this outage.

The plans are owned by the system manager, and are thoroughly reviewed by a system engineering supervisor, an operations senior reactor operator, and a test review board. Plans are updated as necessary on a continuing basis.

As we execute our plan and perform the various tests, there will be oversight on-shift to assure that proper expertise and management attention is available to address both routine and emergent situations.

The around-the-clock oversight includes a shift plant manager, a shift engineering manager, and a shift test engineer.

As startup proceeds, the test results will be reviewed by the Test Review Board to ensure that the test

1 achieved its intended function, and that the results meet
2 the defined acceptance criteria.
3 We anticipate that we will face some emerging
4 issues as we proceed with the startup and testing. But as I
5 have previously stated, we have skilled individuals and
6 processes to resolve problems as they emerge.
7 Once again, the Cook organization is committed to
8 restarting the plant in a safe, controlled, and deliberate
9 manner. It is only by doing so that we can have an adequate
10 level of assurance that the restart will meet our goal of
11 being even-free.
12 There are two final topics I would like to cover
13 briefly: First, if you will turn to the next slide, I want
14 to go over where we are from a schedule standpoint.
15 This slides shows the total person-hours that we
16 have expended, and, more importantly, the black line shows
17 the person-hours remaining to be completed.
18 As you can see, the lines have crossed, which
19 means that we are well past the halfway point of the outage
20 work. Additionally, little emergent work is being added,
21 which means that if we do what is scheduled and do it on
22 time, we should be close to our scheduled completion date of
23 April 1st for Unit II.
24 I want to again point out that challenges
25 occasionally do arise, and we will take the time to do the

job right. If called for, we will not hesitate to stop work, reassess, and assure safety and quality are met before resuming our work.

The final topic I would like to discuss concerns the focus areas that I see ahead for my organization, which I have listed on the next slide.

The first focus area is to ensure that the restart and operation of Unit II is not affected by the continuing outage efforts on Unit I. To accomplish this, we are dedicating portions of our staff to these separate activities.

Specifically, the Unit II staff will focus on the critical functions of reactor restart, testing, and power ascension activities.

The Unit I staff will focus on the ongoing steam generator replacement and completion of the Unit I outage.

The shift plant manager and operations shift manager have overall responsibility for both plants, and they have both the resources and guidance from senior management to assure both the event-free restart and operation of Unit II and the adequate control of work at Unit I.

I can assure you that I fully understand the demands that will be placed on these crews. The situation is very similar to when I was at Salem, including the steam

generator replacement.

We were successful at Salem, and are employing the same techniques here to ensure success at Cook.

In the area of human performance, I spoke about this previously, and as I indicated, our long-term success will greatly depend on the efforts in this area. It is my intention to initiate a sitewide human performance strategy consistent with the best-performing plants in the industry to continue our improvements in this area.

In addition, we continue to be committed to an open environment for personnel to raise concerns. As with other restart situations, we have and will continue to face some issues in this area.

To date, however, I believe that we have been successful in addressing these matters. We significantly upgraded our Employee Concerns Program last year, and we have conducted training for supervisors and employees on how to maintain an effective, safety-conscious work environment.

These efforts, combined with our upgraded corrective action program, provide a multifaceted approach to assure a healthy work environment at Cook.

The third focus area is control of work. During an outage such as this one, our goal is to control work in a systematic and deliberate manner. This is critical to our safety-first fundamental, and is the ultimate responsibility

1 of the Operations Department.

2 Operators and management are taking control of the
3 day-to-day activities, and ensuring that they do not let
4 situations control them, minimizing challenges to the
5 control room. This is consistent with our top priority of
6 safety first.

7 The fourth focus area is our backlogs. These are
8 being monitored and evaluated to assure minimal impact on
9 plant operations. This effort is from both an individual,
10 as well as an aggregate effect point of view.

11 Only those items that management believes can be
12 safely deferred to online maintenance or the next outage
13 will be moved past restart.

14 Obviously there is still work ahead of us, and as
15 we proceed, there will be emerging issues that the
16 organization must address. However, we are ready for them.

17 As the site Vice President, I'm committed to
18 stopping and assessing when necessary, and proceeding only
19 when we have the confidence that we can do so safely.

20 We will use our new skills effectively, exhibit a
21 questioning attitude, and demand quality from ourselves and
22 others to assure safe and reliable operations.

23 This concludes my part of the presentation. Bob?

24 MR. POWERS: Thanks, Chris. I'll take just a few
25 minutes to wrap up what we presented today, and give you a

1 brief sense of where I see us heading for the future.

2 Could I have the next slide, please? This slide

3 captures the key points that we'd like to leave you with

4 today.

5 During the restart process, we have learned some

6 key lessons: First, we understand the aspects of our past

7 performance that contributed to the shutdown of the Units.

8 The discovery process and the associated results

9 have caused all of us at Cook to reflect on where we were

10 two years ago, and we've made a commitment not to repeat the

11 past.

12 We've learned how to find and how to fix our

13 problems. We now have the disciplined processes and the

14 questioning attitude to assure that root causes are

15 effectively identified, and that corrective actions are

16 effectively implemented.

17 We've learned that it takes a sound plan to

18 achieve our goals. Our restart plan has provided the

19 necessary guidance and flexibility to both address our

20 initial problems and to make the necessary adjustments as

21 emerging issues reveal themselves.

22 As most of you recall, I spoke to the Commission

23 in November of 1998. I described my vision for world class

24 performance and how we would go about achieving it.

25 We developed a comprehensive restart plan, and we

1 are doing what we said we would do; we are nearing
2 completion. We believe the restart of Unit II is in sight,
3 and should occur in the Spring of this year.
4 Unit I should follow in the Fall, with its steam
5 generators replaced as well.
6 We have learned that even with good planning,
7 we'll have challenges ahead. Not everything is going to go
8 smoothly, but we have developed the skills to effectively
9 address emergent problems.
10 Thee is more work to be done with our people and
11 processes to reach our goals. However, we do know how to
12 evaluate these challenges and plan for their resolution.
13 Most of all, we've learned not to rush the work of
14 restart. We have and will stop work when necessary to
15 reinforce our higher expectations and achieve the results of
16 doing the job right the first time.
17 Our efforts in terms of time and resources,
18 especially over the past 12 months, have been both difficult
19 and enlightening, but there are definite rewards.
20 They are manifested in a more robust plant that
21 will respond properly when called upon by our operators.
22 They also show up in changes to our culture and processes
23 which are grounded in our higher management expectations.
24 Through our restart efforts, we've built a
25 foundation based on four fundamentals: A safety-first

1 culture, capable leadership, self-critical organizations
2 supported by an effective corrective action program, and
3 trained, well-prepared people.
4 These foundational elements are allowing us to
5 build the infrastructure that will support world class
6 performance. They are also helping us as an organization to
7 modify behaviors and make a fundamental change in our
8 culture.
9 Those changes include improvement in our
10 questioning attitude, accountability, teamwork, and
11 ownership.
12 As I mentioned, we are seeing signs of changes in
13 these areas, but we still have a ways to go. With continued
14 attention to our management expectations, we will achieve
15 our goal of safe, reliable, and event-free operation and
16 ultimately world class performance.
17 On behalf of all of us at Cook, I want to thank
18 you for the opportunity to address the Commission today, and
19 this concludes our formal presentation.
20 CHAIRMAN MESERVE: Good. Thank you very much.
21 I'd like to express my appreciation to all of you for what
22 was really a remarkably candid appraisal of the situation
23 that you have confronted. It's clear that you made very
24 aggressive efforts to deal with the situation.
25 Could you say something about the work that

1 remains to be completed? You indicated that the ice
2 condenser was about half filled, and so what other things of
3 major significance are before you, before you're ready to
4 commence the restart?
5 MR. POWERS: There are about 200,000 hours of
6 physical work remaining in the outage. Half the ice
7 condenser remains to be filled.
8 That work involves refurbishment of approximately
9 80 or 90 of our motor-operated valves. It includes the
10 physical work to implement the 190 some odd design changes,
11 although some are complete and underway.
12 There are some of the design changes that remain
13 to be resolved. And it involves the work associated with
14 our system turnover windows, where we've gone through and
15 taken a comprehensive scrub of the corrective action
16 documents that have been identified on each system, and any
17 physical work that needs to be done in terms of maintenance,
18 repair, it includes that as well.
19 There is attendant work that is not showing up in
20 that 200,00 man-hours, and that would be some paperwork
21 issues, analytical work, closure work that's associated
22 principally in the engineering and supporting organization.
23 I think that gives you a pretty good assessment on
24 what remains to be done.
25 COMMISSIONER MERRIFIELD: Mr. Chairman, I have

1 just a clarifying question, if I can?

2 What's the split between Unit II and Unit I in

3 that 200,000 hours?

4 MR. BAKKEN: That doesn't account for Unit I.

5 COMMISSIONER MERRIFIELD: That's only for Unit II?

6 MR. BAKKEN: Yes, we're treating Unit I as a

7 separate entity, and really the only substantive work that's

8 going on now in Unit I is steam generator placement, because

9 we don't want to distract the organization on Unit II.

10 That project will go through the end of March, and

11 that point then we'll make an assessment, depending on the

12 condition of Unit II, on what work we then pick up and do on

13 Unit I. And we'll look at that very carefully to make sure

14 they don't adversely impact each other. Clearly, Unit II

15 will take precedence.

16 MR. POWERS: The 200 man-hours of work represents

17 about eight weeks worth of work at the rate we are working

18 it down. I think this outage is going to be time-dependent,

19 both on our continued ability to work that 200,000 man-

20 hours down, but it's also become like a refueling outage, a

21 process of appropriately managing the critical path

22 activities where certain key lead items, whether it be

23 associated with the design or the procurement of parts,

24 really will determine the ultimate length of the outage.

25 COMMISSIONER DICUS: Okay, I have a couple of

1 quick questions, if I could. One of them is on what you
2 just said, the critical path issues.
3 To what extent is the NRC -- I mean, where are we
4 in the critical path? Is there something that you need from
5 us?
6 MR. POWERS: No, Commissioner. The support from
7 the staff has included critical questioning; it's included a
8 thorough review. But the from the standpoint of support of
9 the project, that questioning and review has been timely.
10 It's been scheduled to support our restart activities.
11 The licensing support, again, has involved
12 critical questioning, tough standards, high standards, but
13 the license products for the Cook Unit II restart are coming
14 at a pace that will support the schedule, and I don't -- in
15 any of my internal documents, I don't see the words, NRC in
16 terms of critical path between us and getting the Units
17 restarted.
18 COMMISSIONER DICUS: And then my second question
19 is going to go to the issue of the new reactor oversight
20 program that we're going to implement later on this year.
21 The first part of this question is probably
22 somewhat philosophical, and you can get into it if you like,
23 or if you want to defer, that's okay, too.
24 But if we had had the new oversight process in
25 place a year or two or three or four ago, would it have

given you a greater signal early on that you had problems at D.C. Cook, and that those problems needed to be addressed? Would it have given you a heads-up on that? That's the philosophical part of that question.

But the second part of it, in light of the fact that we are going to a new oversight process program, in the activities that you have ongoing, which you have so carefully and thoroughly reviewed for us, have you incorporated this new oversight process in your thinking, in your going forward, as you said on some of your slides, to look at and to operate the plant under a new oversight process, such as it is.

And I guess the third part of the question is, are you ready to go under a new oversight process?

MR. POWERS: Okay, there are three parts to the question.

COMMISSIONER DICUS: Yes. It's a three-part question.

MR. POWERS: Let me philosophize first. Going forward, I think the NRC has developed a good oversight process for the nuclear industry. I do believe, if I can answer the question by way of looking forward first, then I'll go back in time, we will have a sound corrective action program.

In the conduct of that corrective action program,

1 we will identify issues, and they will be scrubbed for their
2 safety significance. This will be a key element and a key
3 input into the oversight process, and you will have a
4 dataset that indicates what types of issues are being
5 identified at the Cook plant.
6 In addition, you have engineered as part of your
7 oversight process, some cross-cutting inspection activities
8 that will take a look at the corrective action program for
9 its health, and continue to take a look at the engineering
10 organization in terms of doing some cross -- some vertical
11 reviews to take a look at the health of the engineering
12 organization.
13 With all of those elements in place, I think the
14 new assessment program will find problems like we've talked
15 about, earlier.
16 Now, looking back in retrospect, the Cook plant
17 did not have a healthy corrective action program, nor was it
18 doing a particularly in-depth review and look at its
19 engineering activities.
20 So I'm not sure the feeding, the initial process
21 of getting issues out on the table would have fed the
22 oversight process. So, from my own personal philosophical
23 standpoint, looking at it now as a senior member of industry
24 management, a healthy corrective action process is very,
25 very critical to ensuring that the oversight process will

1 work.

2 And second question, related to whether our
3 thoughts about the new oversight process and staring up,
4 with Unit II having been shut down now for getting close to
5 two and a half years, a lot of critical data that goes into
6 the performance metrics is either old or not available.

7 Several of the performance indicators require
8 7,000 critical hours of the reactor to effectively establish
9 the denominator on some of the indicators.

10 As a result, we have talked with your staff and
11 suggested that a transition program from the old oversight
12 effort would be most appropriate for the startup of Cook.

13 So we have a meeting scheduled in February to talk
14 to the staff about what that transitional plan would look
15 like. It certainly would include the continued utilization
16 of the restart metrics that we have established, and they
17 are numerous ones, and they cover a broad gambit of safety-
18 related issues at the plant.

19 The 03.50 panel, in some form or fashion, will
20 probably stay in place to oversee this transition, and we
21 would move aggressively to move and transition to the new
22 oversight program within about a year of restarting the
23 first unit.

24 COMMISSIONER DICUS: All right, thank you.

25 MR. POWERS: Did I answer the third part?

1 COMMISSIONER DICUS: You just answered the third
2 one, yes. You just go into the third one. You're not quite
3 ready to do it yet, the transition?
4 MR. POWERS: Yes, that's our perspective.
5 COMMISSIONER DICUS: Right.
6 CHAIRMAN MESERVE: Commissioner Diaz?
7 COMMISSIONER DIAZ: Yes, I want to echo the
8 Chairman's comments regarding the ability to self-criticize
9 yourselves and go forward. There obviously has been a major
10 effort, and your discovery efforts, I guess, have all been
11 major steps.
12 I've got a couple of questions, both of them
13 really related, and I will state them first.
14 When you looked through your present to the
15 supporting material, there's some programmatic items, you
16 know, in the case of the specific list that have high
17 priority, which I will tend to qualify them, but you can see
18 them safety-significant or risk-significant.
19 And then when you get to the restart issues or
20 probability questions, those same items take place with low
21 priority. A case in question is the ice condenser which
22 most -- leads me to my second part of the question.
23 There is some discrepancy, at least to me, at
24 first sight, in the way you prioritize these issues for
25 whether they are case-specific or whether they are

operational issues.

And the second part of the question is, as you know, we went through -- I wouldn't call it traumatic, but a very, very stressful period with Millstone in trying to determine what were the Millstone issues. You know, Millstones has had thousands of issues, and we keep being hammered with how you're going to resolve thousands of issues.

And it happens that really practically any power plant or any industry has thousands of issues to resolve. However, the Commission is always concerned with those issues that are safety issues, or lately, we might be even calling them risk-significant, ambivalent, or use them both ways. We don't ever know which way to use them. But we use them in a way that confuses everybody, including ourselves.

[Laughter.]

COMMISSIONER DIAZ: So, you mentioned, when you -- and Mike Rencheck was the only one to talk about specifically what were some of the safety issues. You talk about the ice condenser and the high-energy lines and the motor-operated valves.

Are those the only real safety and risk-significant issues that your discovery showed up, or are those are the only ones you highlighted?

If so, okay; if not, what other safety and risk-

1 significant issues had to be not only analyzed, but
2 resolved? And what is the status of both?
3 So, first, the discrepancy, and second, what are
4 they?
5 MR. RENCHECK: Let me back up. I think I might
6 provide you with some insight on how we went about
7 establishing the items we have been paying increased
8 attention to, to give you some background, and then I'll
9 answer the question specifically.
10 We used an industry-proven process that we had
11 used at Salem for screening issues as they came up and we
12 entered them into our Corrective Action Program, so we would
13 call restart issues issues that were safety issues,
14 operability issues, design and licensing basis issues,
15 configuration management issues, a gamut of regulatory
16 compliance as well.
17 When we took a look at those issues that we were
18 calling "restart required" we had a very experienced
19 management team and we went through all of those items,
20 identifying what issues and general issues could result in
21 something that was safety significant. That is the list of
22 40 that I had talked about.
23 After we scrubbed through all of the issues we
24 found, we had about 40 on our list that we knew that we had
25 to pay increased attention to because they could have some

1 safety significance to them.

2 Now as we have been resolving them to date we have

3 only identified those three that truly had safety

4 significance to them, although we are continuing to work

5 through the issues and we continue to look through the

6 issues --

7 COMMISSIONER DIAZ: Excuse me -- have high safety

8 significance? Obviously the other 40 have some safety

9 significance. You want to prioritize them in a level of

10 requiring major attention from you and also have regulatory

11 significance. Is that --

12 MR. RENCHECK: That is correct.

13 COMMISSIONER DIAZ: That is correct, okay.

14 MR. RENCHECK: That is how we came up with the

15 list. We are still working on them. We have three to date:

16 the ice condenser, motor-operated valves, and high energy

17 line break.

18 Now I believe you asked about the inconsistency.

19 I believe if you look at those issues they are each in

20 themselves have -- play a different role in the plant, so we

21 do not intend to communicate an inconsistency with the

22 priority on them. They all are being looked at at the same

23 level.

24 COMMISSIONER DIAZ: Okay, but it clearly says it

25 is high priority in here, it's low priority in there, and,

1 you know, if I am a layman, which I, you know, tend to be,
2 some of the time I look at it and say wait a minute, you
3 know, you are placing different priorities at different
4 times.
5 On issues of safety significance, I just really
6 focusing on safety significant issue, shouldn't the clear
7 priority on safety significant issues be maintained
8 throughout or is the process you are establishing, you know,
9 culls them some time and say they are no longer high
10 priority? I don't understand.
11 MR. RENCHECK: I guess to answer that question we
12 have placed again increased management attention on those 40
13 issues, placing them in a higher realm of management
14 attention and a higher priority than the other issues that
15 we have had for restart. We have periodically reviewed them
16 internally as well as with the Staff.
17 COMMISSIONER DIAZ: The question is should some of
18 those that are very important like the ice containment or
19 the high energy lines or the motor operated valves, should
20 they carry that same priority into the operation?
21 MR. RENCHECK: We are correcting those issues for
22 restart so as we restart our facility, we will be restoring
23 our plant back to its design licensing basis or having new
24 licensing actions that we have already worked with your
25 Staff on.

1 CHAIRMAN MESERVE: Commissioner McGaffigan?

2 COMMISSIONER McGAFFIGAN: Thank you. I want to
3 join the Chairman in commending this group of folks for
4 their straightforwardness, not only today but over the last
5 year or so in tackling the problems of restart.

6 One issue that comes to mind, since the plant has
7 been down for so long, how are you stocked for licenced
8 reactor operators, senior reactor operators and I assume you
9 probably have some classes ready to do their manipulations
10 and whatever once you have a plant to manipulate -- where do
11 you stand in trained people?

12 MR. POLLOCK: We are in a little different
13 position with the restart at Cook than some of the other
14 plants. We are actually going to be restarting Cook
15 primarily with operators that had operated the plant prior
16 to the shutdown.

17 In fact, it is pretty well -- I believe it's
18 actually 95 percent SROs and 80 percent ROs and of that 95
19 percent SROs some of those are ROs who have been upgraded
20 through the licensing process to SROs, so basically we are
21 restarting Cook plant with operators who had operated Cook
22 prior to the shutdown.

23 COMMISSIONER McGAFFIGAN: You didn't lose people?

24 MR. POLLOCK: We didn't lose people from that
25 standpoint, although there's some changes, some people who

1 were in different positions and were relicensed. We haven't
2 lost people.
3 Additionally, we have 24 SROs slated for training
4 classes that we have brought in that were previously
5 licensed from other plants to augment this and go into a
6 training program starting this spring -- actually, two
7 training programs we will have going this spring.
8 That is on the licensed side, and then we have
9 brought in nearly 40 equipment operators to augment our
10 staff also going through the training program.
11 COMMISSIONER McGAFFIGAN: This is a philosophical
12 question that Commissioner Dicus asked. You have one set of
13 standards for restart, and we have heard that from other
14 plants that some of these folks have worked at, and I know
15 they are going forward to achieve excellence, first
16 quartile, whatever. How do you see -- how long do you see
17 that period taking to achieve the higher standards that you
18 hope to achieve?
19 MR. POWERS: Well, we would love to be able to
20 tell you that it could happen over a short period of time,
21 but realistically the cultural change and making sure that
22 it is embedded in the fabric of our culture in our
23 estimation will take from three to five years to see its
24 full fruition demonstrate itself.
25 In the short-term, let's say over the first year

1 or so following restart we still see us in a mode of
2 providing a lot of directive top-down management as the
3 cultural attributes get further and further developed
4 throughout the organization.
5 We have a business plan that is being put together
6 to carry our efforts of continuing that change past restart.
7 There will be 10 strategic initiatives that we'll go to work
8 on some of the human performance issues that Chris alluded
9 to, some of the strategic performance initiative that we
10 need to tackle in terms of enhanced reliability for the
11 units, improved refueling outage performance and the like,
12 and we have included resources to support that business plan
13 as part of our going forward effort but overall I would say
14 you are looking at a couple refueling cycles to really see
15 the results of that cultural change.
16 COMMISSIONER McGAFFIGAN: And then one final
17 question. This may be for Dr. Draper. The Corbin MacNeills
18 of the world and Don Hinzes say you are either a shark or
19 you are going to be eaten.
20 [Laughter.]
21 COMMISSIONER McGAFFIGAN: And one of the issues is
22 insularity. I mean the reason I bring it up -- there is a
23 safety nexus. You know, some of the plants -- once Mike
24 worked at Crystal River and it's now been purchased by
25 Carolina Power & Light, I believe, or merged -- there is a

1 trend in the industry towards in that case it was a single
2 unit. You have a two-unit plant so you have more personnel,
3 but the notion that, the philosophical notion that some
4 people in the industry put forward is that you need a group
5 of plants to help provide people with career path
6 opportunities to retain them and that sort of thing, so do
7 you see -- how will you deal with the insularity issue on a
8 more global scale?
9 DR. DRAPER: Well, we think restarting the units
10 gives us a variety of options. The options are relatively
11 obvious, I suppose.
12 One has been suggested -- that you could either
13 sell or buy and become either larger or nonexistent. There
14 are intermediate possibilities, we think. The fact that we
15 will have the relationship with the South Texas Project
16 means that there are really four units that have some
17 relationship one to another.
18 There is also the possibility that we would form
19 some sort of an operational alliance of the type that has
20 been formed by the Wisconsin companies. Those companies are
21 nearby. Some of the units at least have similarities to our
22 own plant, so it is a bridge we have not yet crossed. We
23 recognize that it is something that is certainly worthy of
24 attention, but I wouldn't say it is as obvious as perhaps
25 Corbin thinks it is, that a two-unit, substantial sized

1 plant couldn't be successful. I think it probably could be,
2 but that is not necessarily the optimum situation.
3 We will just as we go forward evaluate what those
4 options are.
5 COMMISSIONER McGAFFIGAN: Thank you.
6 CHAIRMAN MESERVE: Commissioner Merrifield.
7 COMMISSIONER MERRIFIELD: Obviously, you know, a
8 lot of the success here is due to the fact that you brought
9 in the strong management team. In fact, you have so many of
10 them here it makes me wonder who is left at the plant today
11 but --
12 [Laughter.]
13 COMMISSIONER MERRIFIELD: I guess my question is
14 institutionalization of changes so that when this group of
15 folks leaves down the line you will still have the right
16 kind of results, that this is not a person-driven process,
17 that it has become institutionalized within the system, and
18 I wonder if you could just touch a little bit on how you are
19 going about doing that.
20 DR. DRAPER: Let me make a comment and then ask
21 Bob to comment as well. I think you are absolutely right.
22 One of the things that we believe we had done is
23 to put together an absolutely top notch team of people who
24 have had experiences at a variety of successful operating
25 plants as well as the restart plants, and so we think we

1 have a top layer organization that is second to none.
2 The trick is to, as you suggest, institutionalize
3 that, be sure that the people who are in the succession plan
4 have equally good skills and we'll be working very hard to
5 be sure that we don't have a team that is the All Star team
6 leading off, with nobody else sitting on the bench, and that
7 is a challenge for us. We believe that we have capabilities
8 within our own organization for developing people who have
9 been there, and we will doubtless continue to look around as
10 needed to fill in behind these guys.
11 MR. POWERS: Let me answer the question on a
12 personal level. I came to help this plant achieve world
13 class performance and my job is not done, so I plan to stick
14 it out and make sure that happens.
15 Now having said that, the plan that I am
16 implementing is twofold for about the next year or so. It
17 will be a top-down effort to ensure that the cultural
18 attributes that I mentioned are in fact demonstrated on a
19 day to day basis, and I plan to make sure that the
20 management team that is in place is motivated and
21 appropriately compensated to stick it through as well.
22 In the longer term, the pre-eminent, the first
23 strategic initiative in our business plan will be the human
24 performance initiative. It includes a vision that says to
25 achieve the operating focus that Chris Bakken described we

1 will license people throughout the facility to get an
2 operational perspective or certify them. Those will be
3 engineers and maintenance people and radiation protection
4 and chemistry people who will get a sense of what it is like
5 to operate the facility so that they can carry that spirit
6 of what it takes to truly have operational focus forward.
7 Those will be the types of actionable items we
8 will have to accomplish over the next three, four, five
9 years to really make sure that this is self-sustaining, and
10 be less susceptible to the senior management team deciding
11 to go off and pursue other adventures, and that is what we
12 are committed to do.
13 CHAIRMAN MESERVE: Thank you very much.
14 COMMISSIONER MERRIFIELD: Mr. Chairman -- I'm
15 sorry, that wasn't my only question.
16 CHAIRMAN MESERVE: Could you make it brief now,
17 Jeff?
18 COMMISSIONER MERRIFIELD: Can you estimate the
19 size of the backlogs you expect at restart and how you are
20 going to deal with that given the fact that you may have
21 emerging issues under power?
22 MR. BAKKEN: Yes. The specific size of the
23 backlog, Commissioner, is a little bit too early to tell.
24 We do have a meeting planned with the Staff to discuss the
25 backlogs in detail and our plans for addressing them in

1 March. In general, the backlog are scrubbed carefully using
2 the restart criteria that we have with the same process that
3 has been used elsewhere.
4 We will be very careful going through it to look
5 to make sure that the individual component as well as
6 potentially aggregate impact is adequately reviewed to make
7 sure that there is no safety issue and that we don't miss a
8 design or license basis issue or a reliability issue.
9 All of that review is being done by the system
10 manager as well as the senior reactor operator and
11 ultimately comes to our plant operating review committee for
12 review and approval. It is a pretty rigorous review process
13 to make sure it is okay.
14 COMMISSIONER MERRIFIELD: One final brief
15 question. Commissioner Dicus asked about readiness renewal
16 oversight process, but I am interested in whether you have
17 any insights at this point on how we might integrate the
18 03.50 process into that new program as well?
19 MR. POWERS: The 03.50 process, Commissioner?
20 I think that deserves some thought. There is a
21 big difference -- the 03.50 process is really a process to
22 drive discovery. The oversight process is one that really
23 needs to have programs in a healthy status to work as I
24 mentioned. Beyond that, we really haven't thought through
25 any --

COMMISSIONER MERRIFIELD: Okay, perhaps it's for another day. You brought us some insight on that. Thank you.

CHAIRMAN MESERVE: Good. I would like to thank you all very much. It's been a very helpful presentation.

I would like to turn now to Mr. David Lochbaum, who, as most of you know, is a Nuclear Safety Engineer with the Union of Concerned Scientists. He has been following the situation at this plant carefully over the years. Welcome.

MR. LOCHBAUM: Good morning. Thank you for soliciting our views on this matter.

Nineteen months ago I sat at this table to discuss the proposed restart of Millstone Unit 3. My presentation at that time ended with these two conclusions, quote, "NU's future performance cannot be predicted, but it is known that the NRC Staff lacks the ability to reliably shut down plants with regulatory performance problems. Millstone Unit 3 should not start without that adequate protection standard being met."

There are many similarities between D.C. Cook Unit 2 today and the Millstone Unit 3 facility in June of 1998. Both had been closed for more than two years while their owners made numerous corrections to both the physical plant and to its procedures.

1 We believe that the extent of these changes
2 strongly suggests failure by the plant owners and also by
3 the NRC to have properly focused on safety. D.C. Cook's
4 owners have provided today a lengthy listing of plant
5 modifications, equipment upgrades, and procedure changes
6 that they have made to support their assertion that the
7 facility is preparing to restart.
8 Millstone's owners provided a comparable listing
9 in June of 1998 and similar time and effort has gone into
10 examining these lists in an attempt to ensure that the
11 necessary safety margins have been restored.
12 The compilation and scrutiny of D.C. Cook's list
13 is as important now as it was for Millstone in 1998. The
14 long length of these lists demonstrates that substantial
15 erosion of safety margins occurred. I will try to avoid my
16 usual exchange with Commissioner Diaz over this subject by
17 not stating that this meant that the plants crossed the line
18 between safe and unsafe. Instead, I will say that this
19 meant the plants crossed the line from acceptable
20 performance into unacceptable performance.
21 The key difference between Millstone in 1998 and
22 D.C. Cook today has nothing to do with their respective
23 laundry lists. The key difference is that the NRC Staff now
24 has a list of what it has corrected. At the top of that
25 list is the revised reactor oversight process. In 1998 the

1 NRC Staff did not have such a list. At best it had an IOU
2 slip.
3 In effectively implemented reactor oversight
4 process is vital for D.C. Cook, for Millstone, and for all
5 operating nuclear plants. If performance declines an
6 effectively implemented oversight program wills step in and
7 prevent safety margins from being eroded to the point where
8 the line between acceptable and unacceptable performance is
9 crossed.
10 In 1998 we lacked confidence that the NRC Staff
11 had the means to detect and correct declining performance at
12 Millstone should that occur following restart. After all,
13 the Staff was using the same policies and procedures that
14 had been used unsuccessfully prior to Millstone's extended
15 outage.
16 Today we have confidence that the revised reactor
17 oversight process, if implemented effectively, can provide
18 the Staff with the means to detect unacceptable operation at
19 D.C. Cook if its performance declines following restart.
20 The qualifier in that statement, "if implemented
21 effectively," should not be discounted. The old reactor
22 oversight process could have been successful if it had been
23 implemented effectively.
24 We are encouraged that the Staff's plans for
25 implementing the new process include monitoring and follow-

1 up checks to increase the chances of successful
2 implementation.
3 We recommend that the revised reactor oversight
4 process be applied to all operating nuclear plants as soon
5 as practical. It is the adequate protection standard that
6 we felt was lacking in June of 1998.
7 Thank you for listening to our views.
8 CHAIRMAN MESERVE: Thank you very much, Mr.
9 Lochbaum.
10 You would agree, would you not, that there has to
11 be some sort of a transition in the case of D.C. Cook
12 because they don't have the critical data available to go
13 full-fledged into the new oversight program.
14 MR. LOCHBAUM: Right. An earlier draft of my
15 written statement suggested that we apply it to D.C. Cook at
16 restart, after discussions with Mr. Grobe and others that,
17 your point is well taken, the plant is not ready to allow
18 that to happen. It is going to take some time for something
19 to happen, so that I agree that that needs to happen.
20 CHAIRMAN MESERVE: Thank you. Any questions from
21 my colleagues?
22 COMMISSIONER MERRIFIELD: Yes.
23 COMMISSIONER McGAFFIGAN: Yes.
24 CHAIRMAN MESERVE: Others?
25 COMMISSIONER DICUS: Go ahead.

1 COMMISSIONER McGAFFIGAN: On the oversight
2 process, you heard earlier that -- what was broken at D.C.
3 Cook.
4 Are you confident -- I mean you have sat on this
5 Board -- that if implemented effectively that we would have
6 found the corrective action program problems and the design
7 problems at D.C. Cook with the revised inspection program?
8 COMMISSIONER DICUS: And if I could, also the
9 people problems as well, if I could tag that on.
10 MR. LOCHBAUM: I think it would have been, and the
11 evidence that I used to base that guess is the -- and I
12 don't have it today, I wish I did -- we plotted the NRC
13 inspection findings for a two year period before September
14 of 1997 and a nine-month period afterwards, and they
15 averaged roughly eight or nine findings, which included
16 Level 1, 2, 3 and 4 noncited violations.
17 They averaged eight or nine of those before
18 September, 1997, and they jumped to like 75 in a peak month
19 afterwards. They went up. There was a dramatic sea change.
20 We felt that D.C. Cook's performance didn't change
21 overnight. The perception changed overnight.
22 I don't know that the director of the oversight
23 process would have found it at the exact earliest
24 opportunity but I think it would have found it earlier than
25 September of '97.

1 COMMISSIONER McGAFFIGAN: Would the PIs have found
2 it or would it have been in inspection findings?
3 MR. LOCHBAUM: I think it was a race, because most
4 of the data comes through the PI format. My guess would be
5 PIs would have found it first. I think some of the back-
6 testing that is done in SECY 99.07 or 7(a), I forget which
7 one, indicates that some of the findings PIs did go other
8 than green at D.C. Cook so I think that would have been an
9 indication. Whether the NRC's supplemental inspections then
10 fully explain what the problems were and pointed out the
11 people problems Commissioner Dicus pointed out, I suspect
12 that would have happened or that there was an opportunity
13 for that to have happened.
14 COMMISSIONER McGAFFIGAN: I would like to
15 continue. I don't want to turn this into a new inspection
16 program. We will have another opportunity on that, but the
17 significance determination process for inspection findings,
18 do you think some of the inspection findings that were there
19 to be found would have triggered a white or yellow, they
20 wouldn't have all been green inspection findings if you had
21 a properly implemented new oversight process?
22 I mean these are all theoretical questions.
23 MR. LOCHBAUM: Right. I hope they would have. If
24 not, at least it would have prompted a debate, which would
25 have given groups like ours an opportunity to have a voice

1 in the debate, but I think it would have -- absent --
2 absent -- I really do --
3 COMMISSIONER McGAFFIGAN: Okay.
4 MR. LOCHBAUM: I have no data to prove that, but I
5 do believe it would have.
6 COMMISSIONER McGAFFIGAN: Thank you.
7 COMMISSIONER DIAZ: Well, I'm sorry we are not
8 disagreeing a lot today. That makes me wonder whether I am
9 getting old.
10 [Laughter.]
11 COMMISSIONER DIAZ: David, but I just wanted to
12 say that I personally, I believe the Commission appreciates,
13 you know, your comments early in the process with this, how
14 you brought things out, and I am glad we pay attention, and
15 you have been very valuable to us in this process, and we --
16 I just want to say thank you.
17 MR. LOCHBAUM: I appreciate that. Thank you.
18 COMMISSIONER MERRIFIELD: Commissioner Diaz,
19 beating me to the punch, I agree. I think your assistance
20 in the D.C. Cook oversight, the new oversight process and
21 the 2.06 process have all been valuable and I hope our
22 positive comments don't take away from your constituency's
23 respect for what you do, because certainly I have respect
24 for it.
25 COMMISSIONER DIAZ: He will disagree soon. Don't

1 worry about it.

2 [Laughter.]

3 MR. LOCHBAUM: Not yet though.

4 COMMISSIONER MERRIFIELD: I want to say we have
5 been dealing with the issues relative to Millstone and D.C.
6 Cook within the time that I have been a Commissioner, and
7 even dissatisfaction with the way in which we were doing
8 some things at D.C. Cook and at Millstone and have not had
9 quite the same level of concern about what we have been
10 doing at D.C. Cook.

11 At both we used the 03.50 process, and so my
12 question for you is do we have an issue here in terms of a
13 different way of implementing the 03.50 process? Is it a
14 different way that the regions have acted in their oversight
15 efforts? Is there some inconsistency within how we were
16 acting here at Headquarters? Do we have some other
17 programmatic weaknesses?

18 Where is it that is the source of a difference, in
19 your opinion, in terms of how we acted relative to Millstone
20 and how we have been acting relative to D.C. Cook?

21 MR. LOCHBAUM: Well, I think the 03.50 process is
22 intentionally broad-based and they can cover a number of
23 applications. Therefore, that allows a lot of flexibility
24 on level of detail, what is within the scope, what is out of
25 the scope.

1 Even with that issue, I think it was more in how
2 it was implemented at Millstone versus how it was
3 implemented at D.C. Cook, so I don't think it is a specific
4 problem with the procedure. It seemed to me to be the way
5 it was implemented.
6 When I attended or monitored Millstone meetings,
7 there were -- the Staff asked questions, but there was no
8 follow-up. There were no strings pulled. It seemed to be
9 accepted on faith what Millstone was doing. I am not saying
10 Millstone was doing a bad job, just when I look at how
11 Region III has handled D.C. Cook, there have been probing
12 questions. It is not adversarial so it is not a different
13 approach, but there is a greater public confidence. At
14 Millstone it didn't look like -- when I came away from a
15 Millstone meeting I usually had questions that I would have
16 asked had I been allowed to speak.
17 At the D.C. Cook meetings it was very seldom that
18 the region didn't ask the questions first. That led me to
19 greater confidence that they were doing a thorough job
20 asking the questions that I would ask if I could speak, so I
21 think that is the difference that I observed.
22 COMMISSIONER MERRIFIELD: Thank you.
23 CHAIRMAN MESERVE: Thank you. We very much
24 appreciate --
25 MR. LOCHBAUM: Thank you.

1 CHAIRMAN MESERVE: -- your participation this
2 morning.
3 Our final panel will consist of various members of
4 the Staff. Good morning.
5 DR. TRAVERS: Well, I think we're settled, Mr.
6 Chairman.
7 CHAIRMAN MESERVE: Why don't you proceed?
8 DR. TRAVERS: Thank you very much. Good morning.
9 As you pointed out earlier, Chairman, in your comments, the
10 Agency has certainly been significantly involved in
11 evaluating the corrective actions at D.C. Cook.
12 Today we plan to provide you with our perspective
13 on a number of issues, including the status of the
14 licensee's corrective actions, and our own Manual Chapter
15 0350 restart assessment process.
16 Joining me at the table this morning are Jim Dyer,
17 the Regional Administrator, Region III, Jack Grobe, who is
18 Jim's Director of the Division of Reactor Safety; Sam
19 Collins, the Director of the Office of Nuclear Reactor
20 Regulation; John Zwolinski, who is Sam's Director of the
21 Division of Licensing and Project Management.
22 Other members of the NRC staff who have been key
23 to our activities at D.C. Cook will be identified in a few
24 moments by both Jim Dyer and John Zwolinski.
25 This is the fourth time in the past two years that

1 we've had the opportunity to discuss the performance at D.C.
2 Cook with the Commission. In July of 1998, we discussed
3 D.C. Cook performance at the annual briefing on operating
4 reactors.
5 As a result of that meeting, we concluded that the
6 performance at D.C. Cook was declining. In November of
7 1998, we met with the Commission to discuss D.C. Cook
8 performance in detail, with the particular focus on
9 engineering performance issues.
10 In May of 199, we discussed D.C. Cook performance
11 again at the annual briefing, and we informed the Commission
12 that D.C. Cook had been categorized as an Agency-focus
13 plant. This was done in recognition that the issues at D.C.
14 Cook had for some time been the focus of senior NRC
15 management attention.
16 D.C. Cook remains an Agency-focus plant, and the
17 staff intends to utilize the senior management meeting
18 schedule for this Spring as the vehicle for making the
19 determination of whether the Agency-focus classification
20 should be retained or changed.
21 This determination would include our assessment of
22 the power operations subsequent to any restart
23 authorization. Restart authorization will occur after the
24 Manual Chapter 0350 restart panel has determined that
25 actions have been satisfactorily completed for safe restart

at Unit II.

Jim Dyer, in coordination with Sam Collins and myself, will make a final determination regarding the restart of the D.C. Cook plant.

Importantly, the 035 panel will continue to evaluate Unit II performance following restart to ensure that American Electric Power actions to improve performance are sustained.

I would like to now to turn it over to Jim Dyer who is going to begin our formal presentation.

MR. DYER: Thank you, Bill. May I have Slide 1, please.

Mr. Chairman, Commissioners, here with me today is Jack Grobe, who in addition to being the Director of the Division of Reactor Safety in Region III, is also the 0350 panel chairman. John Zwolinski is the Vice Chairman for the 0350 panel for D.C. Cook restart.

Additionally, Region III staff who are also here involved with the D.C. Cook project are Tony Vagel, the DRP Branch Chief, Bruce Bartlett, his Senior Resident Inspector for D.C. Cook, Gary Shear, the DRS Branch Chief, lead Branch Chief for D.C. Cook, and Mel Holmberg, the lead engineer for the D.C. Cook restart activities.

Can I have the second slide, please? For today's presentation, our plan is that I will first summarize NRC

1 oversight activities since the shutdown of the D.C. Cook
2 Units, and focusing on those activities since our last
3 briefing in May, 1999.
4 And then John Zwolinski will present the status of
5 licensing activities that are in progress or have been
6 completed to support the D.C. Cook restart. And then,
7 finally, we will address the staff oversight activities
8 planned for the restart and the operation.
9 Overall, the NRC has expended approximately 20,000
10 hours of direct inspection effort at the D.C. Cook plant
11 since 1997, in the past three years.
12 COMMISSIONER DIAZ: Excuse me, how many?
13 MR. DYER: About 20,000 hours since 1997, 1998 and
14 1999. And of those, about half of them, or 10,000 hours of
15 direct inspection effort, have been focused on what I will
16 call the recovery and discovery efforts of the licensee.
17 Slide 3, please. For a little history, in
18 September, 1997, in followup to the architect engineering
19 inspections and subsequent plant shutdown, dual-unit
20 shutdown of both D.C. Cook Units, Region III issued a
21 confirmatory action letter documenting the actions that
22 American Electric Power would take prior to their restart.
23 Those actions included resolution of nine specific
24 issues identified during the NRC inspection, as well as our
25 understanding that American Electric Power would determine

1 whether similar engineering problems existed in other safety
2 systems.
3 Subsequently, additional problems were discovered,
4 and as a result, the NRC issued a Severity Level II problem
5 violation -- issued violations that constituted a Severity
6 Level II problem, and issued a $500,000 civil penalty in the
7 latter part of 1998.
8 And in March, 1998, American Electric Power
9 developed a restart plan that expanded and included system
10 readiness reviews of those risk-significant systems to bound
11 the problems found by the inspection.
12 At that same time, the NRC commenced its 0350
13 restart panel, formed its 0350 restart panel, and issued its
14 initial case-specific checklist for D.C. Cook restart.
15 Later in 1998, American Electric Power completed
16 their plant system readiness reviews that were intended to
17 bound the significant issues, and in September, the NRC
18 observed American Electric Power's contracted safety system
19 functional inspection of the auxiliary feedwater system.
20 That inspection identified significant operability
21 issues that had been missed by these system readiness
22 reviews. Also in September, NRC inspectors identified
23 operability concerns with motor-operated valves that further
24 questioned the effectiveness of their system readiness
25 reviews.

1 At the November 30th, 1998 Commission meeting,
2 briefing on D.C. Cook, American Electric Power was bringing
3 in their outside engineering and management talent,
4 performing self-assessments, and revising their approach to
5 restart, and in March, 1999, they revised their restart plan
6 to include the expanded system readiness reviews and
7 assessment of programs and functional areas.
8 Overall, up until March of 1999, from the
9 September 1997 date until March 1999, the NRC expended
10 approximately 4,000 hours of direct inspection effort to
11 identify the scope of their problems to the licensee, and
12 have them initiate their expanded system readiness reviews.
13 Next Slide 4, please. The expanded system
14 readiness reviews, programmatic assessments, and the
15 functional reviews conducted by American Electric Power
16 staff, augmented by experienced contractors, the process
17 identified numerous deficiencies, some of which required
18 repair, system modifications, and license amendments, as we
19 heard earlier from the licensee.
20 This was the status of the activities at the time
21 we last briefed the Commission in May of 1999. This past
22 Summer, the Manual Chapter 0350 restart panel focused
23 several inspections on the American Electric Power problem
24 discovery efforts, using our own experienced inspectors and
25 contractor personnel.

1 Our inspections evaluated the conduct of
2 licensee's problem discovery efforts, reviewed the resultant
3 input to their corrective action process, and assessed the
4 adequacy of the licensee's oversight of this discovery
5 process.
6 We also conducted a safety system functional
7 inspection of two safety systems as an independent
8 validation of their efforts. We found the expanded system
9 readiness reviews to be effective in identifying the
10 deficiencies impacting safety system functions that
11 confirmed that American Electric Power had conducted
12 sufficiently self-critical reviews of their programs and
13 functional areas, and that the performance assessment
14 organization of D.C. Cook provided critical oversight of
15 plant activities.
16 This effort ended up and was completed in
17 September of 1999, and the NRC expended approximately 3,000
18 hours of direct inspection effort to review their discovery
19 efforts.
20 Following this validation of the discovery
21 efforts, the case-specific checklist was expanded to capture
22 the necessary licensee corrective actions to support the
23 safe restart.
24 Slide 5, please. This past Fall, inspections have
25 been conducted to review the effectiveness of American

1 Electric Power's efforts to correct the deficiencies
2 identified during their discovery efforts.
3 To date, we have spent approximately 2500 hours of
4 direct inspection effort, reviewing such areas as operator
5 training, corrective actions program, safety evaluations,
6 preventive maintenance, operability determinations, ice
7 condenser corrections, and incorporating instrument
8 uncertainties into equipment design testing and plant
9 procedures, as well as some of the engineering corrective
10 actions activities that were discussed earlier by Mr.
11 Rencheck.
12 The inspections confirm progress in resolving many
13 of the restart issues. Our inspections and NRR staff
14 reviews have confirmed adequate resolutions of the issues
15 identified in the confirmatory action letter and the nine
16 issues in the bounding concern.
17 We are currently considering the staff's
18 recommendation to close out this confirmatory action letter.
19 The remaining restart activities would then be managed
20 through a case-specific checklist in the 0350 process.
21 Slide 6, please. At this point, I'd like to turn
22 the discussion of the licensing activities over to John
23 Zwolinski.
24 MR. ZWOLINSKI: Good morning. I would like to
25 recognize members of the NRR staff, our Project Manager,

1 sitting behind me, is John Stang, who has had the
2 responsibility for Cook for the last couple of years. His
3 Section Chief is Claudia Craig, who has also been deeply
4 involved with the facility.
5 I'd also like to note that there are others on the
6 NRR staff that have been deeply involved with technical
7 reviews under the Division of Engineering and Division of
8 System Safety and who supported the work.
9 As compared to other extended shutdown plants,
10 D.C. Cook did not require the processing of a large number
11 of license amendments as Cook has undertaken an effort to
12 restore the original design basis of the plant.
13 The licensee chose to make modifications at the
14 plant, in lieu of trying to use analysis to justify the
15 conditions found during the enhanced system readiness
16 review.
17 Examples include the repair and restoration of the
18 ice condenser to its original design and licensing basis,
19 removal of foreign material, and repair of ice baskets, for
20 example; removal of fibrous material.
21 They also cut holes in the containment crane wall
22 to allow reactor coolant to flow back to the recirculation
23 sump to maintain levels in the sump.
24 Thus, our technical staff focused on questions and
25 concerns raised regarding licensing basis of the plant, and

1 trying to maintain a schedule to support licensee
2 submittals.
3 This has been especially true over the past year.
4 Two major issues resolved by the technical staff were
5 unreviewed safety questions concerning sump pump
6 performance, ice rates, also credit for control rod
7 insertion following a large break loca.
8 We have monitored licensee design and licensee
9 initiatives that were identified as a result of the
10 licensee's enhanced system readiness review process and our
11 own inspection process.
12 In order to facilitate the licensing process, we
13 not only interact with the licensee on a daily basis; we
14 conduct a senior management-level phone call on a weekly
15 basis. Typically, NRR, the Region, residents, and the
16 licensee, participate on this important call.
17 We've taken steps to ensure surprises have been
18 minimized, and use the concept of over-communication to
19 ensure any and all issues are raised promptly, thus trying
20 to attain or maintain our ability to stay out in front of
21 any critical licensing issues.
22 Remaining issues before the staff that require our
23 approval prior to restart: Changes to containment spray
24 pump surveillance, deletion of a reference to reactor
25 coolant pump volume as referenced in the technical

1 specification, and issuance of an order against NUREG 0737
2 to modify hydrogen monitoring. These are all scheduled to
3 be completed before the end of January.
4 To put in context, the staff's efforts, we've
5 compared our efforts to a few plants that have been in
6 extended outages, specifically Salem and Crystal River. For
7 Cook, in 1999, our staff has spent approximately 1600 hours
8 resolving 13 issues. For Salem, the staff spent
9 considerable time in the early stages of that plant
10 shutdown, but in the following year, resources spent were
11 considerably less than Cook.
12 Whereas, with Crystal River in the last year, we
13 spent about 3500 hours on 34 issues, so Crystal River was
14 very heavily into the licensing side of the house, Cook
15 being far less.
16 That concludes my remarks.
17 MR. DYER: Slide 7, please. As we heard earlier,
18 American Electric Power plans to restart D.C. Cook Unit II
19 in March of this year, and Unit I later this Summer, after
20 steam generator replacement.
21 The NRC Manual Chapter 0350 restart panel has
22 effectively focused NRC activities to accomplish the
23 necessary regulatory actions to meet this schedule. As John
24 said, licensing activities have been well coordinated, as
25 well as the inspection activities in working with the AEP

1 staff.

2 We've held frequent meetings onsite, in the
3 Region, and here at headquarters to solicit stakeholder
4 input, and to give them the opportunity to observe the
5 regulatory process.

6 The restart panel continues to review plant
7 issues, emerging issues within the station, and to
8 coordinate our inspection schedules, and review and assess
9 the overall work environment for individuals to raise safety
10 concerns.

11 Currently, we have some remaining inspections to
12 complete prior to restart. As part of our continued
13 validation of the corrective action program, we will inspect
14 the motor-operated valve program, electrical protection
15 coordination, return to service of safety systems, and the
16 surveillance testing program.

17 Just prior to restart, we will also conduct an
18 operational readiness inspection with continuous control
19 room observation, and our senior reactor analysts will also
20 assess the risk impact of any deferred work after restart.

21 Overall, we expect to expend approximately 1200
22 hours of direct inspection effort in this restart effort,
23 going forward from today.

24 Restart approval will follow the existing 0350
25 manual process. The 0350 panel will continue to evaluate

1 the Unit II performance, following restart, to ensure that
2 improved performance is sustained.
3 We'll also provide oversight for the Unit I
4 restart, after steam generator replacement, and we'll
5 support transition of D.C. Cook to the new oversight panel.
6 The implementation of the risk-informed baseline
7 inspection program and the revised assessment process will
8 be delayed beyond April 1st. To minimize the impact during
9 the restart of the units and until D.C. Cook has been
10 operated in sufficient time to develop the valid performance
11 indicators, the NRC, as we heard earlier, the NRC and D.C.
12 Cook will meet in February to discuss the transition plan.
13 We'll have a plan put together before April 1st to handle
14 the transition.
15 That concludes my prepared remarks.
16 CHAIRMAN MESERVE: Thank you very much. I think
17 the staff should be commended for their efforts, and we
18 appear to be headed towards a successful conclusion with
19 what is a very obviously major effort. That reflects very
20 well on all of you.
21 I don't really have any questions for you about
22 the specifics of the restart process, but I wonder if having
23 been in the middle of this, there are some observations you
24 make or lessons we should learn about when we confront this
25 situation again.

1 Hopefully we won't, but the possibility exists.
2 Are there things that we should learn from this whole
3 process that you've been under that have to do with our own
4 way of dealing with these situations, things we should
5 undertake that would improve the way we approach the kinds
6 of problems that you've been dealing with for the last few
7 years?
8 MR. DYER: Mr. Chairman, I think that the biggest
9 lesson that I have learned -- and we talked about this, and
10 I think Commissioner Dicus and the other Commissioners have
11 raised the issue -- about looking with 20/20 hindsight, what
12 would we have done with the new assessment process and Cook?
13 Sam Collins and I have had several discussions
14 about this. It's the importance of, we have to make the new
15 process discover the D.C. Cook's before they get this bad.
16 And I don't know whether the performance indicators would
17 have discovered it, but focusing on the inspection program,
18 it is -- we need to make sure that the tools are there.
19 I look at it now -- I believe that the new
20 assessment program with the inspection that's currently
21 provided, could find, can find. The challenge that is on me
22 as a Regional Administrator, and Jack as the DRS Director
23 and our team, is to make sure that we put the right kinds of
24 people and have the right kind of inspection effort and
25 talent to identify some of the design basis issues that

1 wouldn't lend themselves to performance indicators.

2 And that we ensure that the performance indicators

3 that do come forward are properly categorized so that we get

4 the true picture of performance at the site.

5 CHAIRMAN MESERVE: Thank you. Commissioner Dicus,

6 do you have any questions?

7 COMMISSIONER DICUS: Just a quick one. I'll ask

8 Commissioner Merrifield's question for him.

9 On the 350 process, he's brought this up with the

10 other presenters, and to what extent the 350 process might

11 have to change under the new oversight -- new reactor

12 oversight program that we're going to. I'm just asking it

13 to you, what you think, because it is going to require some

14 modification, but it has also been a very successful

15 program, particularly with D.C. Cook.

16 Do you want to jump on that one?

17 MR. DYER: I'm not sure how the new -- what we're

18 looking at to go -- to tie it to the 350 process to go

19 forward. I anticipate that it will be somewhat like we have

20 right now.

21 There are some critical parts of the 0350 process

22 that I think have to be there. I think the communications

23 channels that it opens up at the point where we make the

24 decision to dedicate the resources, and to manage and to a

25 structured approach, to manage the resources that we're

1 focusing on a problem plant, are critical. That still has
2 to be there.
3 Jack is much more familiar with it, so I'll let
4 him talk, if he has anything he wants to add.
5 MR. GROBE: I've studied the new draft procedure
6 for the new 0350 process, and Sam Collins's staff and I
7 considered whether we should implement the new process, once
8 April 1 comes around. We concluded that we should not,
9 because it is predicated upon valid performance indicators
10 and other things that we didn't do under the old process.
11 But there are a couple of things that I have
12 learned through this process. I believe this outage could
13 have been shorter, had we been more intrusive earlier in the
14 0350 process.
15 Behaviors that we've learned in the Regions over
16 the years have shown we have to provide findings. If a
17 licensee doesn't listen to those findings, we make new
18 inspections and provide more findings.
19 But we weren't very -- I don't want to say
20 directive, but severely intrusive early in the discovery
21 efforts that occurred in 1998. Consequently, it wasn't
22 until later in '98 when we were going to do an aux feedwater
23 SSFI and the licensee requested that they be permitted to do
24 that with our oversight, that it truly came to the surface,
25 that the early system reviews were not being effective.

1 We had indications of that earlier, and I believe
2 we should have become more intrusive earlier, and done a
3 more thorough engineering inspection earlier in that
4 process.
5 With respect to the new, risk-informed baseline
6 inspection program, for that program to be effective, the
7 licensee has to have a robust corrective action program. So
8 it's somewhat of a guess, whether or not the new program
9 could have been effective with Cook in its, as Bob Powers
10 described, insular, nonfunctional from the standpoint of
11 corrective action, mode that it was in.
12 The new inspection program has corrective action
13 program inspection modules; the old program had those. As
14 Jim indicated, our challenge is to be more effective in
15 implementing those new inspection modules.
16 In addition, the new program includes a much more
17 intense design focus, once every other year, which was not
18 included in the old program.
19 So, from that standpoint, those are the lessons
20 learned from Cook and Millstone.
21 COMMISSIONER DICUS: Okay, thank you.
22 MR. COLLINS: I think we're going to go forward
23 since -- speaking for the Program Office -- we track the
24 oversight process improvements through the tasking
25 memorandum, and as you know, they go to level of detail.

1 We have moved improvement initiatives in both the
2 old 350 process, the oversight process, obviously, and also
3 the confirmatory action letter process, into our operating
4 plan as an organization for NRR.
5 Our regulatory effectiveness matrix includes an
6 initiatives area that includes all of these areas.
7 The application of the program, specifically the
8 CAL and the 0350 process at Cook was more of a hybrid than
9 we might have seen at a Salem or a South Texas, for that
10 matter.
11 The hybrid aspect of it was that we had a tendency
12 to be more in-process than confirmatory, once a licensee has
13 come to a conclusion or has completed a program.
14 That's a credit to Jim and Jack and the resources
15 in Region III, in that in the area of changed management,
16 the staff was able to move for a back-end review, once all
17 the answers were there, to an in-process review wherein they
18 look at the process by which the licensee comes to
19 conclusions, take a sample of the application of those
20 processes, and then move on and only sample the subsequent
21 applications.
22 The 0350 process is the same way. The discipline
23 having to do with the restart items is very focused towards
24 those specific regulatory risk-significant issues which need
25 to be confirmed by the Region, rather than go back and

1 recouping all of the items on the outstanding list and
2 ensuring that they're complete before plant restart.
3 So these initiatives are in process as a result of
4 lessons learned, not only from Cook, but as a learning
5 organization from the past three cases. We have already
6 revised the confirmatory action letter procedure; that's
7 been done.
8 The 0350 process procedure is in draft, so we're
9 moving down the road as a result of these.
10 CHAIRMAN MESERVE: Commissioner Diaz?
11 COMMISSIONER DIAZ: Yes, obviously practice makes
12 perfect, and you guys have so much practice in Millstone and
13 Crystal River and so forth, that, you know, you were able to
14 use better processing.
15 I have a two-part question, one directed to John
16 and one to Jim. It's the same question.
17 We all realize, you know, what happened when you
18 got into the discovery of the auxiliary feedwater and the
19 MOVs and the significance of those issues, and how, you
20 know, you it was -- by the licensee, and you -- and now
21 almost at the end of the process, John, what is the
22 confidence level that you have that all major safety-
23 significant issues have been discovered or have been
24 discovered and already remedied?
25 MR. ZWOLINSKI: I'll go ahead and start.

1 COMMISSIONER DIAZ: I'm talking about your part,
2 the licensee design, and then I'm going to turn to Jim and
3 ask him the same question on the rest of the issues.
4 MR. ZWOLINSKI: The licensee did the expanded
5 system readiness reviews and identified a myriad of issues.
6 It was then incumbent on us to run it through a process in
7 which the staff was satisfied that the licensee had
8 identified significant issues, risk-significant issues,
9 unresolved safety questions, or were they issues that were
10 less significant that could be deferred?
11 So there restart checklist became a very important
12 vehicle for the licensee to use and for us to look at also.
13 So that went in parallel.
14 The licensee -- and, by the way, this was all done
15 through our 0350 panel. The licensee presented the results
16 of many of these reviews. We independently checked that,
17 verified the licensee was making proper use of 91.18, the
18 degraded nonconforming conditions, and ultimately was
19 satisfied that the restart checklist that they were using
20 was defensible and critical safety concerns had been
21 resolved.
22 The licensee did mention that they are still
23 addressing high-energy line break issues, and they have a
24 process in place that we have been looking at. And they're
25 also looking at their motor-operated valve program, and

1 making changes there.

2 Should a USQ arise, then perhaps there would be

3 the need for an amendment, but we are monitoring those two

4 areas very closely. And right now, we don't see the need to

5 perform an independent technical review.

6 COMMISSIONER DIAZ: Okay, so you're pretty

7 confident that process worked sufficiently, so that there

8 will be no surprise. You know we got a surprise with

9 Millstone at almost the very end.

10 MR. ZWOLINSKI: Commissioner, I had the

11 opportunity to work on Salem, to work on Crystal River.

12 COMMISSIONER DIAZ: That's right.

13 MR. ZWOLINSKI: And now Cook, and I see the same

14 process being implemented three times, so I'm becoming

15 fairly familiar with it.

16 I want to retain that arm's-length, and

17 questioning the attitude, but it appears that this facility

18 has quite a bit of design margin. They share this with ius,

19 and we verify that.

20 Our analysis during licensing reviews shows

21 margin. So, yes, I feel that we're certainly on the right

22 track and have handled the licensing amendments

23 appropriately.

24 As far as the licensee's activities, their

25 discovery programs seem to be very extensive, and our

1 inspectors were ultimately able to conclude that the program
2 was, indeed, aggressive.
3 So the summary of the headquarters look, as well
4 as the inspection look, appears to have given this licensee
5 the marks that they've requested as far as mimicking the
6 other licensees.
7 COMMISSIONER DIAZ: Okay, and now the same
8 question on the rest of the issues, Jim?
9 MR. DYER: Well, from the inspection standpoint,
10 Commissioner, I think --
11 COMMISSIONER DIAZ: Including human performance,
12 if you please.
13 MR. DYER: I think from the inspection standpoint
14 certainly in the discovery phase when we invested 3000 hours
15 of direct inspection, that is five FTE that we delivered
16 when observing their inspection -- excuse me, observing
17 their discovery phase, independently validating it, and then
18 watching their process for making sure that those actions
19 got into the corrective action process.
20 That is a phenomenal amount of inspection and we
21 used again, and I'll echo the presentation, we used our very
22 best inspectors. We went through and identified ahead of
23 time our best senior resident inspectors. I worked with the
24 other regions to get talent from the other regions as well
25 as from Headquarters. We paid top dollar to get the top

1 contractors to come out and support our inspection effort,
2 and so that 3000 hours of inspection effort really wrung out
3 their overall processes and did our own independent
4 validation to identify it.
5 Jack can correct me if I'm wrong, but there was
6 essentially no surprises during our inspections. There was
7 a couple of more minor issues and that, but there was
8 nothing that was a show-stopper or anything that would jump
9 up on our radar screen through the discovery phase.
10 The human performance was part of that. We had
11 done an operator training inspection. Earlier some of the
12 EOPs and the procedure issues or concerns we found that the
13 licensee has essentially set standards higher than ours and
14 is out trying to implement them, and we haven't -- we have
15 gone in in very much a confirmatory role.
16 MR. GROBE: Just to echo and expand on a couple
17 things that Sam and Jim have said, we took a different
18 approach at Cook, and that was to be more in process to
19 avoid, as Jim said, shooting any air balls at the last
20 minute. We didn't want to have a repeat where they finish
21 their discovery phase and we came in and did some
22 inspections and concluded it was inadequate. That would
23 have been a failure obviously on Cook's part but also on our
24 part, so we performed oversight in process, first as they
25 developed their programs, as soon as they had a program

developed we provided immediate comment on that, and we did provide comments that enhanced the quality of the program.

It was a good program. The program included as a starting point identifying the key functions that each safety system served, so it started from that as a foundation, then going to identify what design documents existed, and in approximately 40 percent of the cases they couldn't find the documents, and then they had to reconstitute those.

I had three Staff that were onsite supplementing the resident team essentially full time for about three months. As each step was taken by the licensee, we would provide critical oversight and feedback.

As Jim indicated there were no show-stoppers in our inspection findings. We made findings, had good folks out there looking, and then at the end confirmed with two independent SSFIs of two safety systems to ensure that we had thorough oversight.

COMMISSIONER DIAZ: Okay, Mr. Chairman, one tiny question with a very short answer, and it is directed to the licensee.

We sometimes, you know, the Staff gets between a rock and a hard place. They are too intrusive or they are not intrusive enough and it appears by getting in process that some improvements were made to the process.

1 Do you agree or disagree with the Staff assessment
2 that being in process was helpful?
3 DR. DRAPER: Oh, we absolutely agree that that was
4 a helpful move.
5 COMMISSIONER DIAZ: Thank you.
6 CHAIRMAN MESERVE: Commissioner McGaffigan.
7 COMMISSIONER McGAFFIGAN: One quick question, and
8 then perhaps one slightly longer.
9 Mr. Dyer, you said that you have a Staff
10 recommendation to lift the CAL under consideration. How
11 long is that review going to take, or is that imminent, your
12 decision on that?
13 MR. DYER: I believe it will happen -- we get back
14 this week --
15 [Laughter.]
16 COMMISSIONER McGAFFIGAN: If we let you guys do
17 your work --
18 MR. DYER: Well, yes. The Staff's recommendation
19 is the inspectors that were inspecting all the individual
20 items have agreed that the nine items and we closed out the
21 bounding issue as part of the discovery inspections, then we
22 had the nine specific issues.
23 There was one for NRR evaluation, which I believe
24 was the last one in NRR inspections that exited last week,
25 closed out all the issues.

1 COMMISSIONER McGAFFIGAN: The more philosophical
2 issue, just to go back to this oversight issue, all the
3 hypotheticals we are asking about oversight which may be
4 more appropriate to our March Commission meeting than today,
5 but since D.C. Cook is in front of us, the new oversight
6 process, would the PIs have caught D.C. Cook?
7 If you have a broken Corrective Action Program,
8 will our Corrective Action Program inspections catch D.C.
9 Cook, would they have, or is it the design inspections?
10 By having the PIs, we are freeing up resources to
11 do modules that we didn't do before. Is it the design
12 inspection that would have caught D.C. Cook? Just
13 hypothetically, you know, David says, Mr. Lochbaum says if
14 properly implemented we will catch the D.C. Cooks next time.
15 I am not as sure, because I am not sure how the significance
16 determination process gets you white and yellow findings on
17 things like broken Corrective Action Programs and broken
18 design bases, and so that is my question.
19 MR. DYER: From my perspective, it can, and we
20 need to make it. That's my mindset.
21 COMMISSIONER McGAFFIGAN: My mindset too, but you
22 have to be able to analytically be able to show that at some
23 point.
24 MR. DYER: And I think the question we are still
25 wrestling with too, and Sam probably could speak to this, is

1 the cross-cutting issues, and how we find those things.
2 I don't know whether or not the PIs would have led
3 the Corrective Action Program or the design inspection. We
4 have all three of those tools. When we get to our PPR
5 process, we need to be able to put it together and come up
6 with the conclusions much sooner.
7 MR. GROBE: If I could just correct some
8 information that was alluded to earlier.
9 The benchmarking that was done earlier this
10 year -- excuse me, last year -- of the new safety
11 determination process, significance determination process,
12 utilized the findings that came from Cook following
13 shutdown, looked at all of those findings and concluded
14 there would have been actually several red findings had
15 those issues been identified.
16 Cook was a well operating plant prior to the
17 shutdown. It operated reliably and they were a middle-of-
18 the-road performer as far as our inspection findings were
19 concerned.
20 DR. TRAVERS: But I think the sorts of findings
21 you are talking about are not performance indicators as much
22 as they are design basis issues that have subsequently --
23 COMMISSIONER McGAFFIGAN: So it's really design
24 basis --
25 DR. TRAVERS: So I think corrective actions and

1 design basis issues are the ones that I think of the Cook
2 experience as the ones embodied in the oversight program in
3 addition to the PIs.
4 COMMISSIONER McGAFFIGAN: And the SDP did pump out
5 even red findings?
6 DR. TRAVERS: Yes.
7 COMMISSIONER McGAFFIGAN: Once you got them?
8 Okay.
9 MR. COLLINS: I am very careful with absolutes,
10 and I am perhaps not quite as optimistic as maybe some of
11 our other stakeholders who have been at the table, because I
12 think some of this has yet to play out, as well as the
13 licensee's involvement.
14 We have to realize that the licensee plays a major
15 role it --
16 COMMISSIONER DICUS: It's critical.
17 MR. COLLINS: -- in ensuring that their internal
18 Corrective Action Program, which I believe NEI would
19 acknowledge has to be sharpened up in order for the
20 oversight process to work appropriately, the self-
21 assessments, the peer reviews, there is a dual burden here.
22 Our process needs to drive it. We need to
23 understand licensees' capability and their processes, but
24 there are also obligations on the licensees' end.
25 The same for those remaining issues before plant

1 restart. This is a status briefing. The plant is not ready
2 to restart. The process has to play out. We do have an ASP
3 finding, high energy line break, that the Office of Research
4 is providing support as they have throughout the restart
5 process, and discovery will continue in some important areas
6 by licensees -- not in new areas, but as far as the extent
7 of condition.
8 What we have to be comfortable with is that the
9 NRC processes in place, 03.50 oversight process and
10 inspection and licensing, will be able to respond to those
11 licensees' findings through the remainder of the restart
12 process and come to appropriate regulatory decision. I am
13 confident in that.
14 CHAIRMAN MESERVE: Commissioner Merrifield.
15 COMMISSIONER MERRIFIELD: Yes, I have three quick
16 questions, I think. They probably all can be answered with
17 a yes or no.
18 During your presentation you discussed a variety
19 of the problems that were identified at D.C. Cook and the
20 efforts underway by the licensee to resolve those as part of
21 its corrective action.
22 Are you confident the licensee has taken the steps
23 necessary to address the root causes of the problems
24 identified in the plant so that they do not, these problems
25 of this nature don't reoccur in the future?

1 MR. DYER: Yes, sir.

2 COMMISSIONER MERRIFIELD: We at this point have
3 had a lot of focus on Unit 1. My sense is at least from
4 what I have heard so far is many of the performance and
5 programmatic problems at the plant were common to both
6 units.

7 Are we taking steps necessary to review our
8 inspection efforts relative to Unit 2 so we can reduce our
9 inspection efforts as it results to Unit 1 going forward?

10 MR. DYER: Jack, I'll let you --

11 MR. GROBE: Yes. The first unit is actually Unit
12 2. It is backwards this time, but the programmatic issues
13 that are corrected for Unit 2 restart are also going to be
14 valid for Unit 1 restart.

15 We have already started mapping out the inspection
16 that we believe is necessary for Unit 1 restart. It will be
17 substantially less than what we have done in Unit 2 and we
18 will primarily focus on the more significant engineering
19 modifications and verification that those were performed
20 correctly and then the similar inspections to what we are
21 doing now going forward on system return to service and
22 preparation of the operators for operating two units
23 simultaneously safely.

24 COMMISSIONER MERRIFIELD: My final one is do we
25 have any NRR or Region III resources dedicated to restart or

1 on the licensing efforts so that these efforts can be
2 carried out in a timely manner?
3 MR. DYER: The answer to that is no, but we do
4 have sufficient resources within the agency, and that is the
5 way -- I view as the agency focus effort for D.C. Cook to
6 get resources from the other regions as well as NRR, so
7 collectively as an agency we do have the resources for
8 restart but we are beyond the regional level.
9 MR. COLLINS: I think this is a good example of
10 the teaming aspect where Region II I think in particular, as
11 a result of the performance of their plants in that region,
12 has provided a significant amount of resources, the other
13 regions also, but Region II particularly.
14 MR. DYER: Yes, sir.
15 COMMISSIONER MERRIFIELD: Thank you.
16 CHAIRMAN MESERVE: Thank you very much.
17 On behalf of the Commission, I would like to thank
18 American Electric Power, Mr. Lochbaum, and the NRC Staff for
19 providing a very thoughtful and helpful briefing.
20 It is clear that AEP faced a daunting challenge at
21 D.C. Cook and hopefully they are well on their path to its
22 resolution. It is also clear that the NRC Staff, and I am
23 referring here to resident, regional and Headquarters staff,
24 have played an integral part in reaching a solution here,
25 and I would like to thank you all.

[Whereupon, at 12:33 p.m., the briefing was concluded.]

CERTIFICATE

This is to certify that the attached description of a meeting of the U.S. Nuclear Regulatory Commission entitled:

TITLE OF MEETING: BRIEFING ON THE D.C. COOK PLANT PUBLIC MEETING

PLACE OF MEETING: Rockville, Maryland

DATE OF MEETING: Monday, January 10, 2000

was held as herein appears, is a true and accurate record of the meeting, and that this is the original transcript thereof taken stenographically by me, thereafter reduced to typewriting by me or under the direction of the court reporting company

Transcriber: Rose Gershon

Reporter: Doug Swift

AMERICAN® ELECTRIC POWER

Presentation to the Nuclear Regulatory Commission

January 10, 2000

Dr. E. Linn Draper, Jr.

Chairman, CEO, &
President - AEP

Agenda

Introduction	Linn Draper
Overview	Bob Powers
Discovery, Results & Corrective Actions	Mike Rencheck & Chris Bakken
Closing Remarks	Bob Powers

Bob Powers

Senior Vice President &
Chief Nuclear Officer

Gap Analysis

Desired Attributes	Symptoms at Cook
■ Safety First Culture	■ Insular People
■ Capable Leadership	■ Ineffective Change Management
■ Self-Critical / Effective Corrective Actions	■ Deficient Processes
■ Trained & Prepared People	■ Missing Documentation
	■ Eroded Safety Margins
	■ Inoperable Equipment

The Fundamentals Were Missing

Key Management Expectations

- Remove them and they ... replace with us and we
- Communicate effectively
- Promptly identify and correct problems
- Plan Plan Plan - then execute, check, adjust
- Do what we say we will do
- Have "mutual" accountability
- Line management owns quality
- Have passion!
- Pass it on

Rebuilding The Fundamentals Through Behavior Change

Restart Process

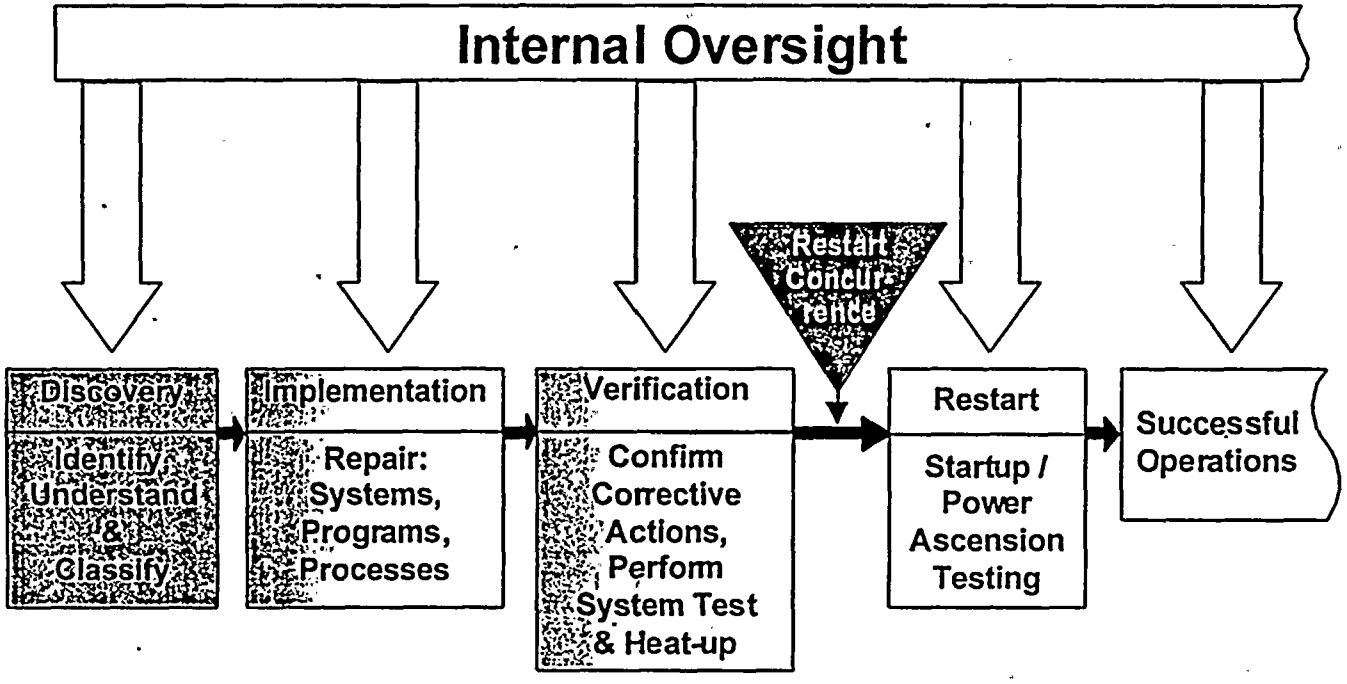

We Know How to Find and Fix Our Problems

Present State

- *Problems Are Known*
- *Corrective Actions Identified*
- *Implementation Nearing Completion*

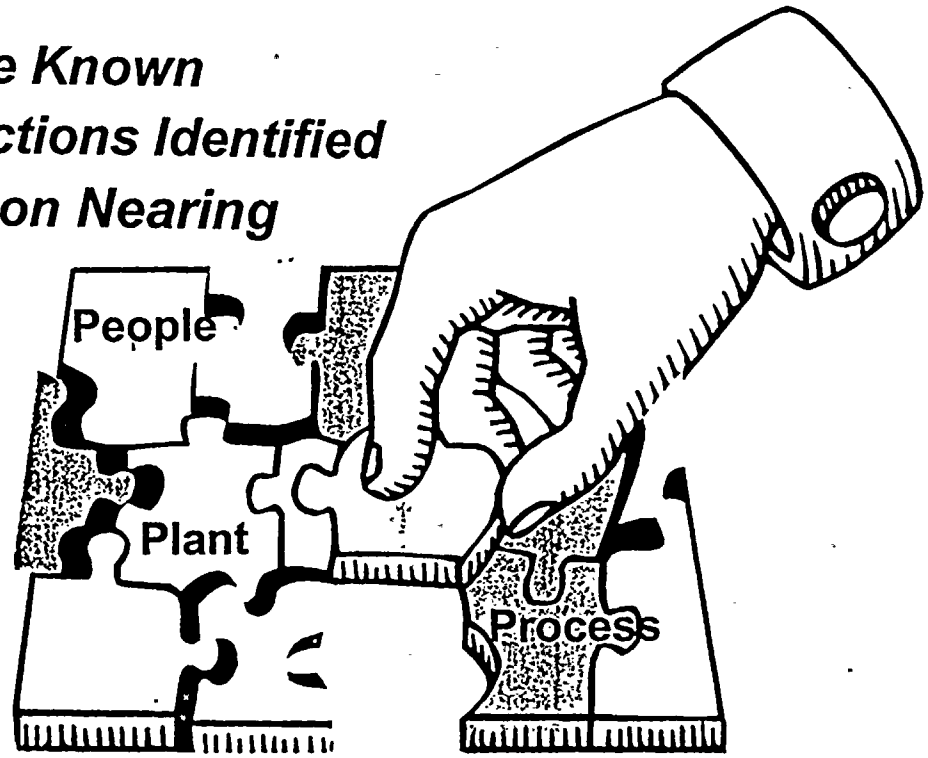

Ice Being Delivered

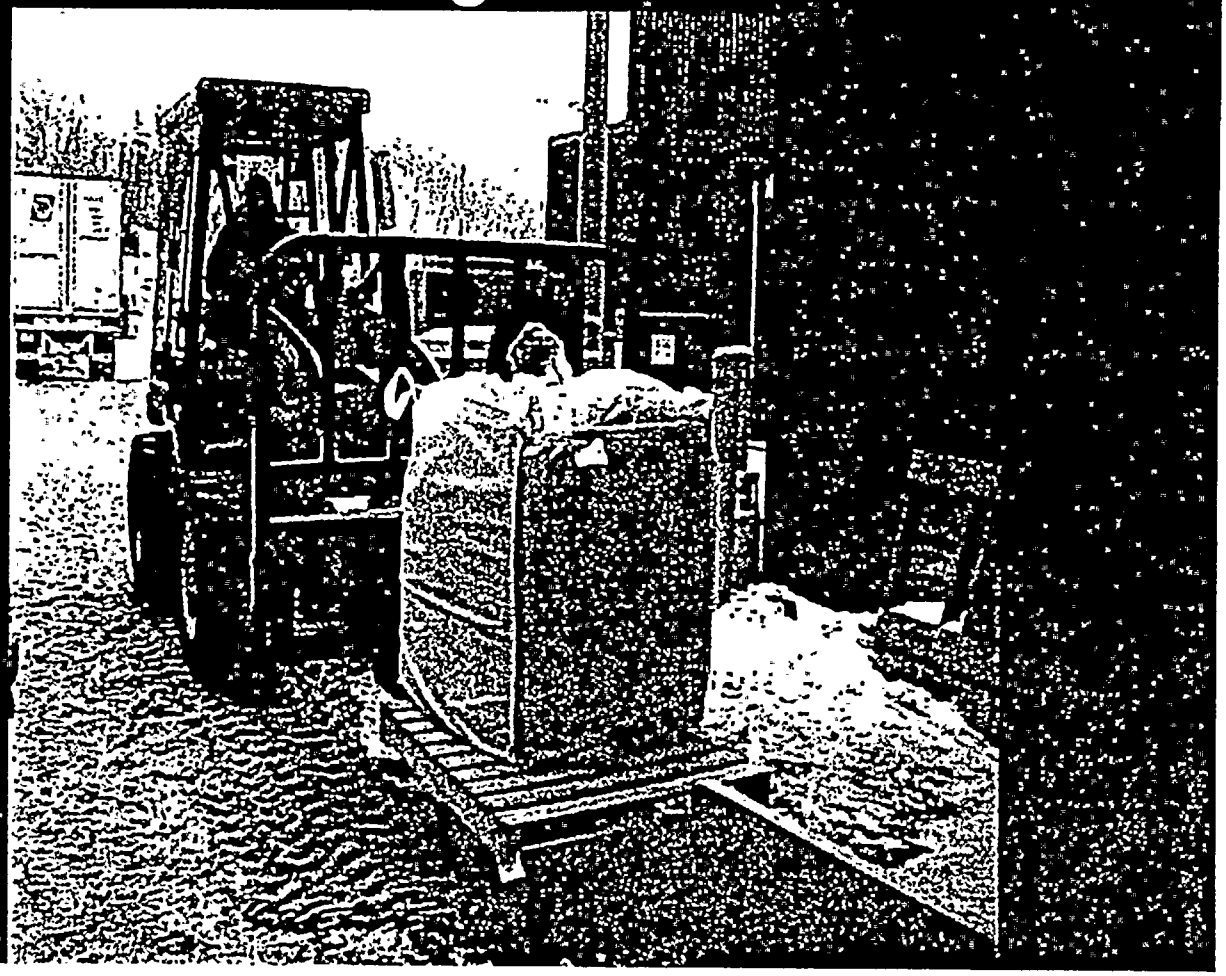

Preparing Ice for Loading

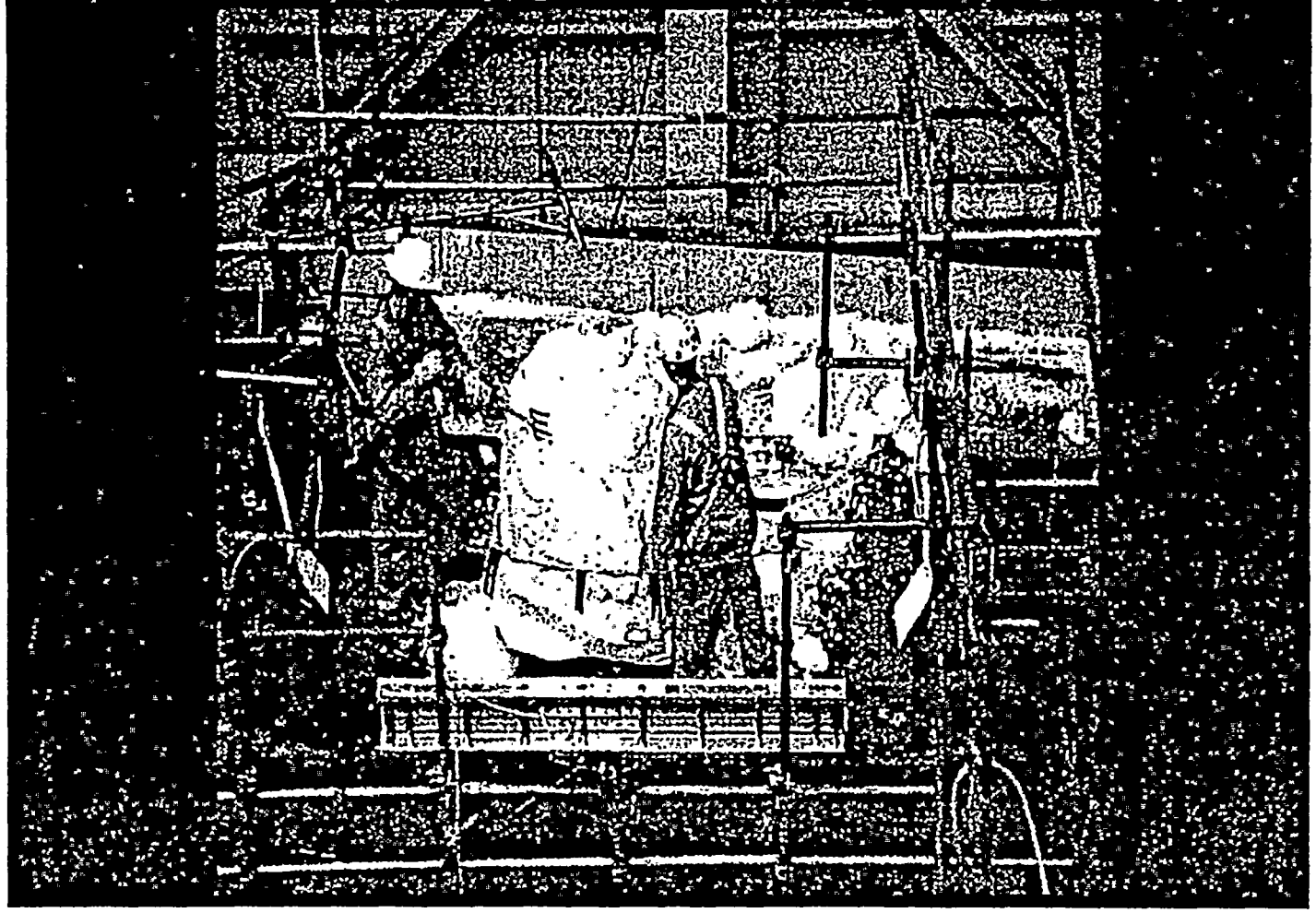

Loading Ice into Baskets

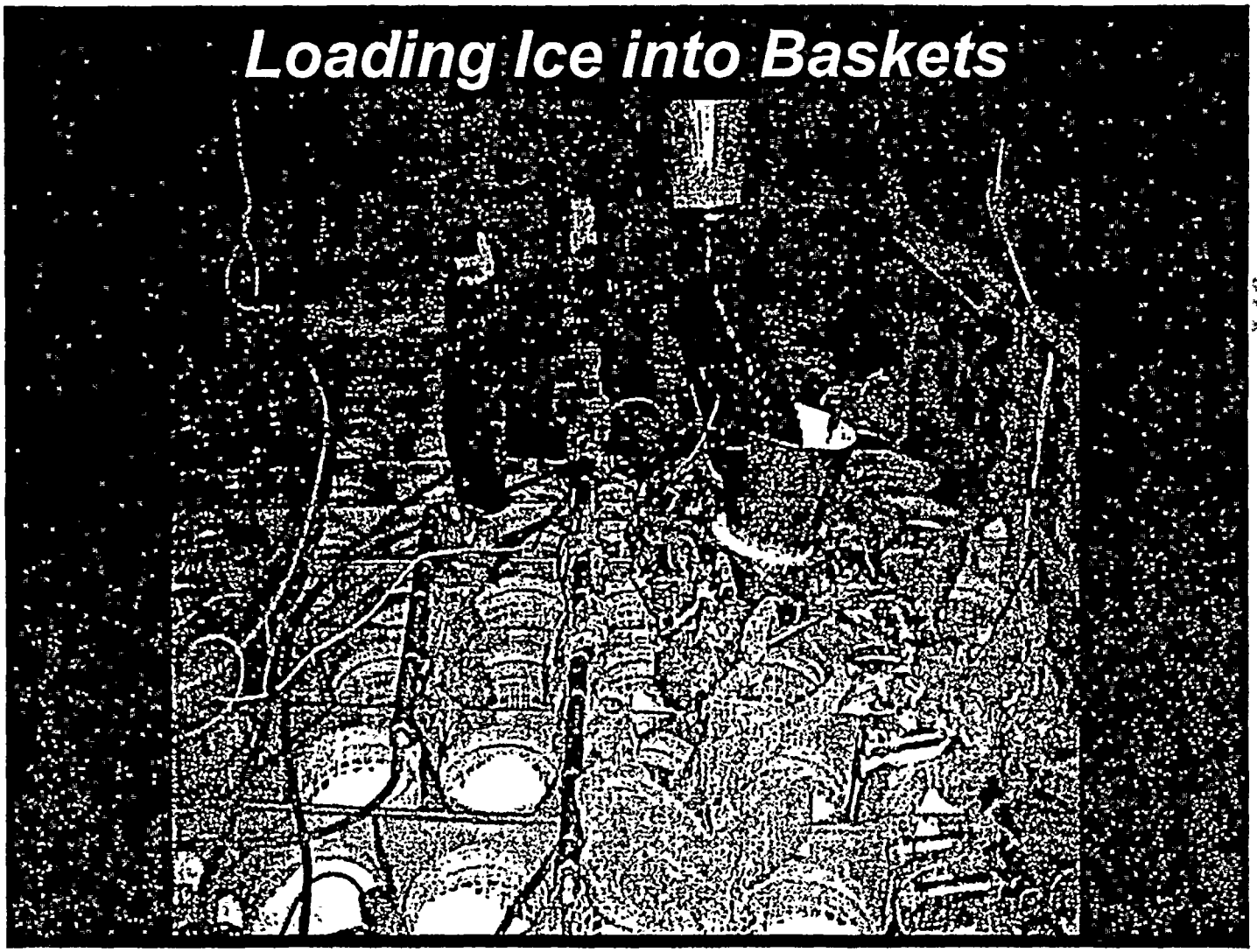

Present State

- *Problems Are Known*
- *Corrective Actions Identified*
- *Implementation Nearing Completion*

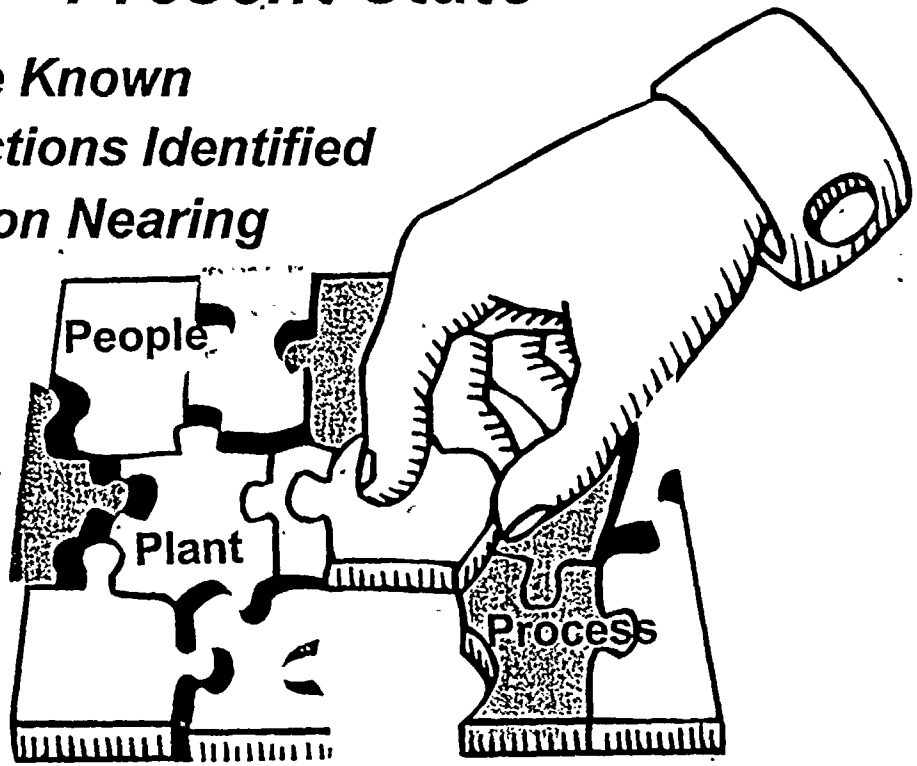

We are Working Our Plan & Schedule

Mike Rencheck

Vice President
Nuclear Engineering

Key Elements of Discovery

- ***Industry Proven Process***
- ***Experienced People***
- ***Comprehensive / Intrusive Methods***
- ***Use of Corrective Action Program***
- ***Rigorous Review***

Discovery Process was Rigorous and Comprehensive

What We Found

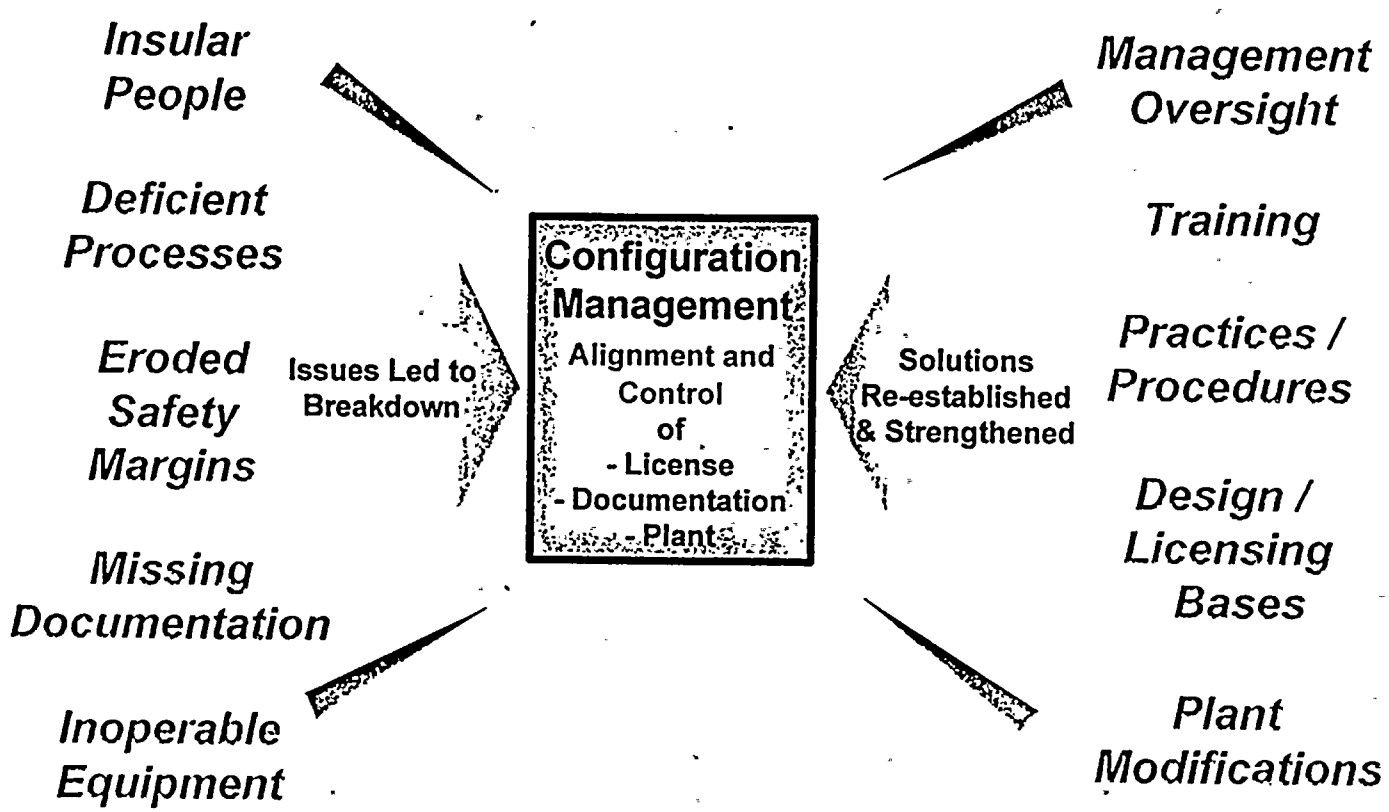

Safety Screenings & Evaluations: Quality Improving

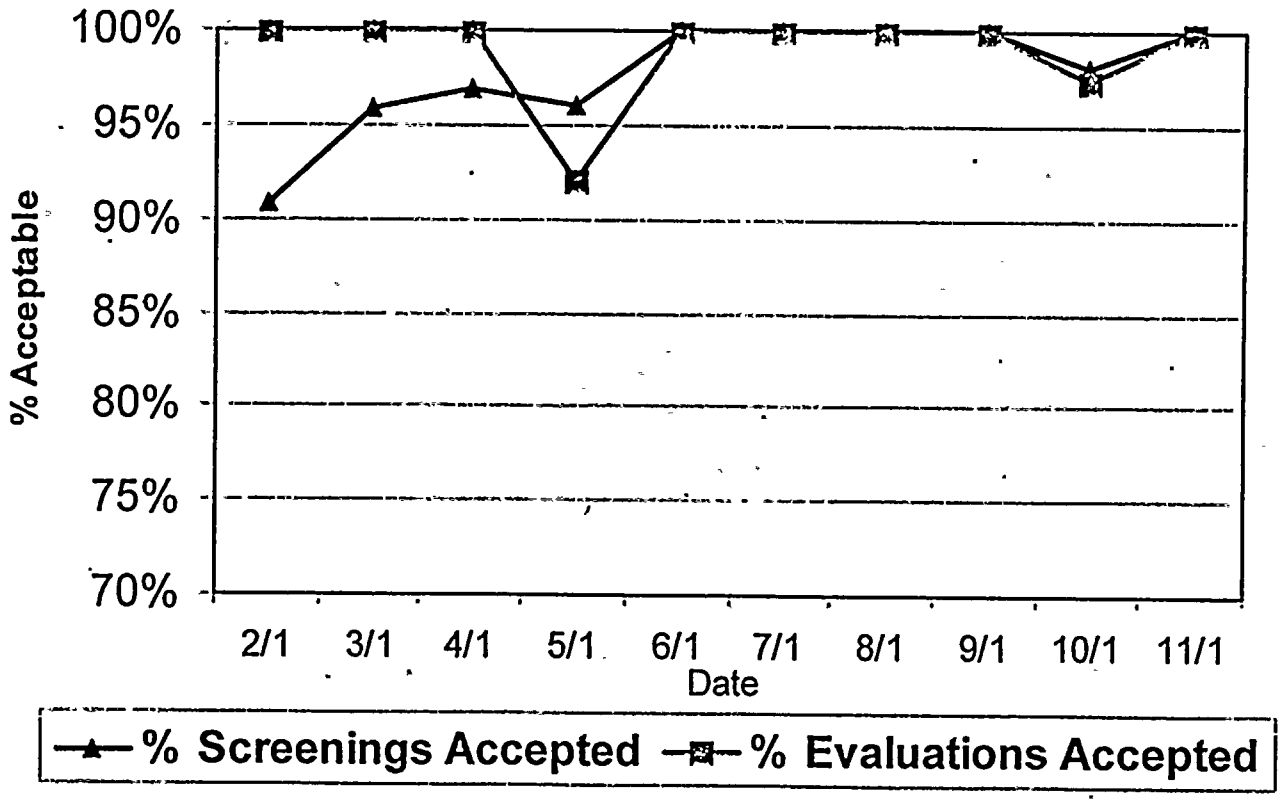

Root Cause Quality (Units 1 & 2)

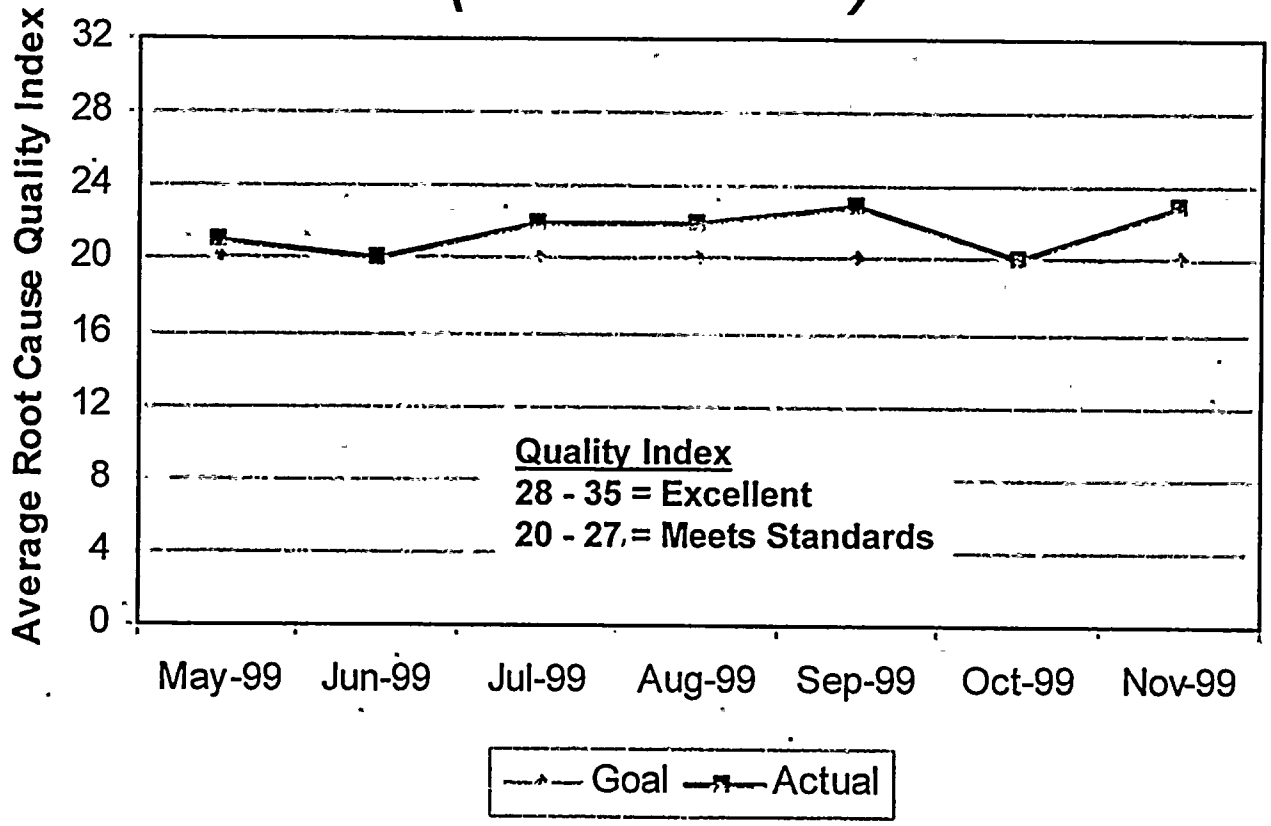

Focus Going Forward

- ***Further Improve Product Quality***
- ***Enhance Organizational Capabilities***
- ***Decrease Reliance on Contractors***
- ***Transition to Plant Operations***

We Are Prepared for the Challenges Ahead

Chris Bakken

Site Vice President

Oversight Integrated Into Process

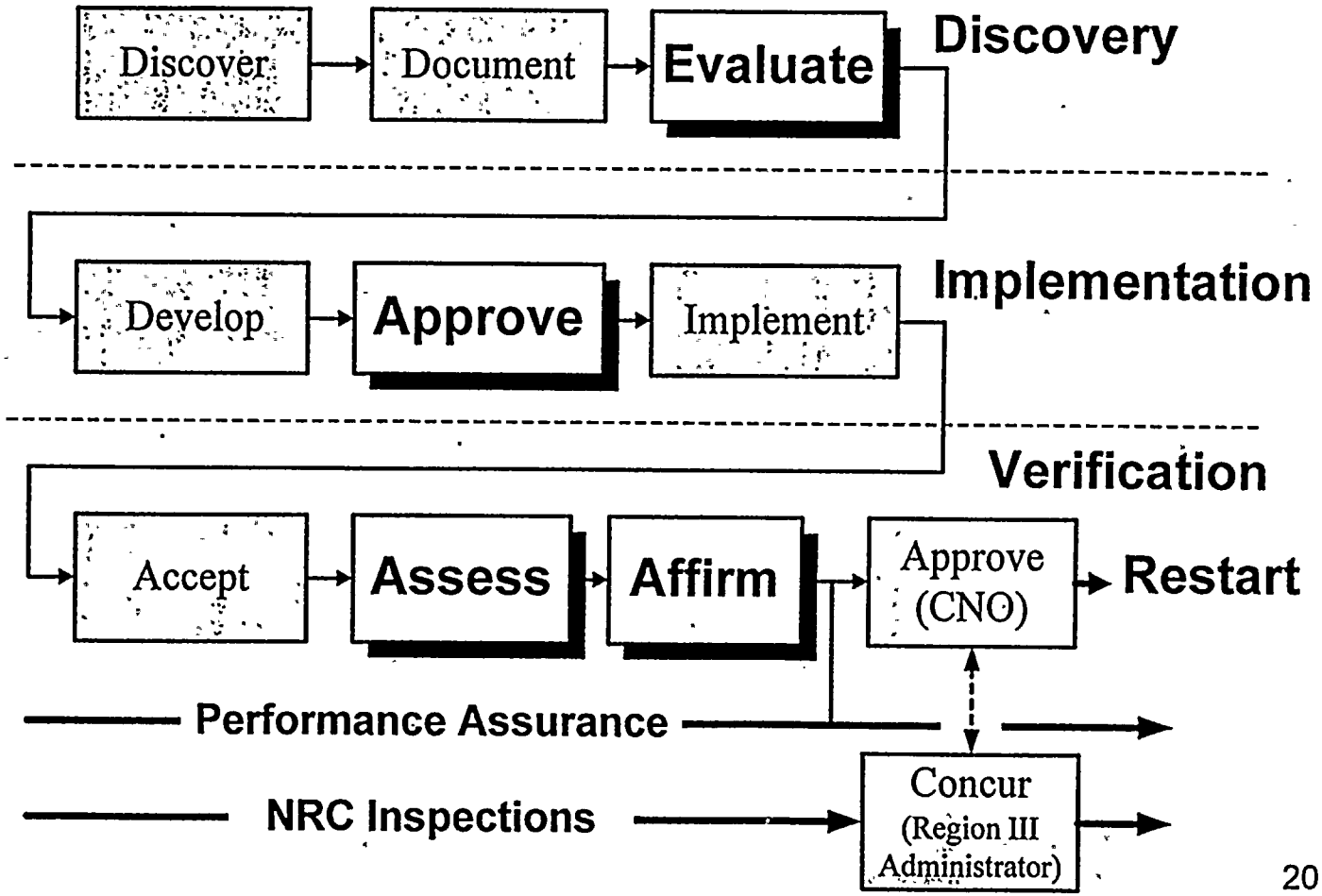

Transitioning From Restart to Operation

Engineering-Led		*Operations-Led*
Discover Problems		Operate the Plant
Develop Solutions	***Return to Power Operations***	Maintain the Equipment
Re-establish Margins & Bases		Assess & Improve Safety & Reliability
Promote Culture Change		Enhance Teamwork

Emergency Procedure Upgrade Project (Unit 2 & Common)

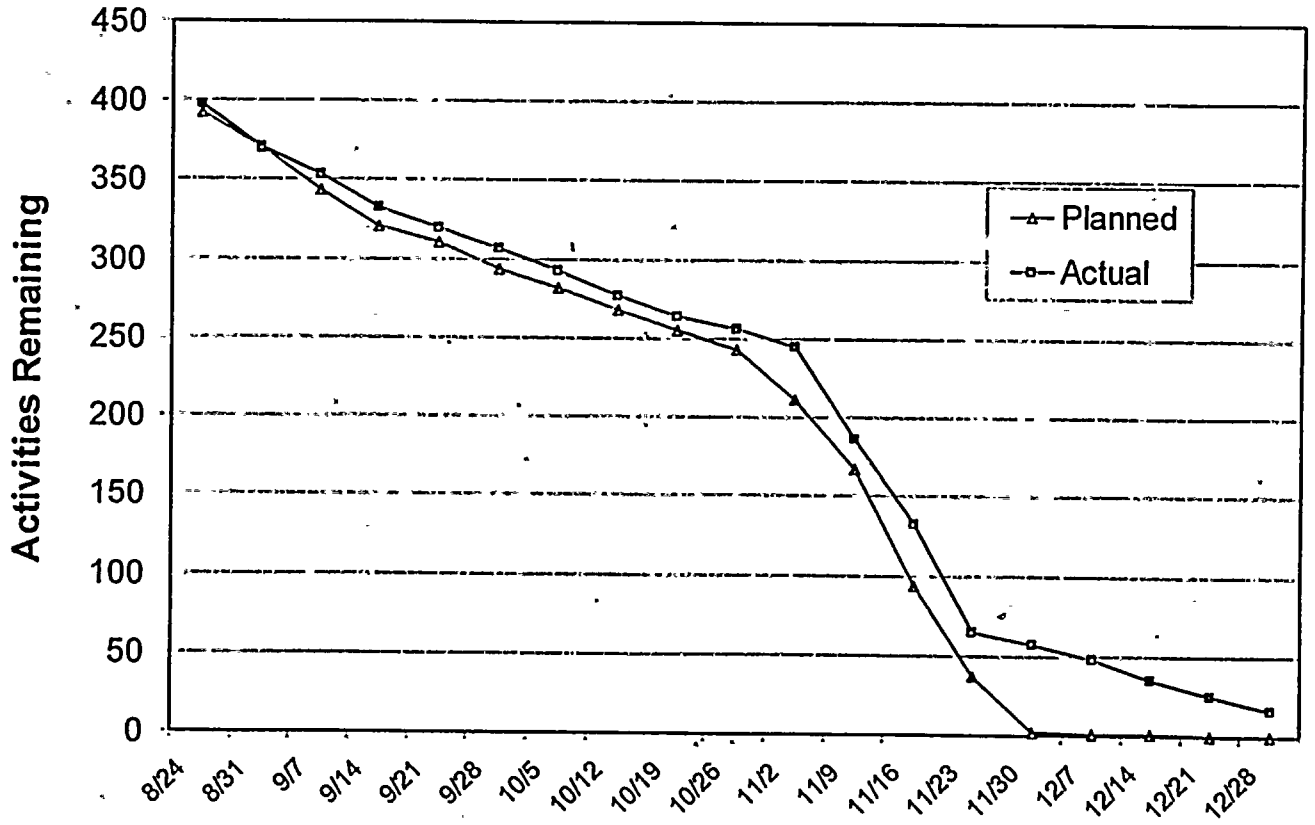

Startup & Power Ascension Testing Program

Safe Operations

Review Results

Execute Plan

Review Plan

Develop Plan

Safe & Deliberate Restart of the Cook Units

Schedule Progress

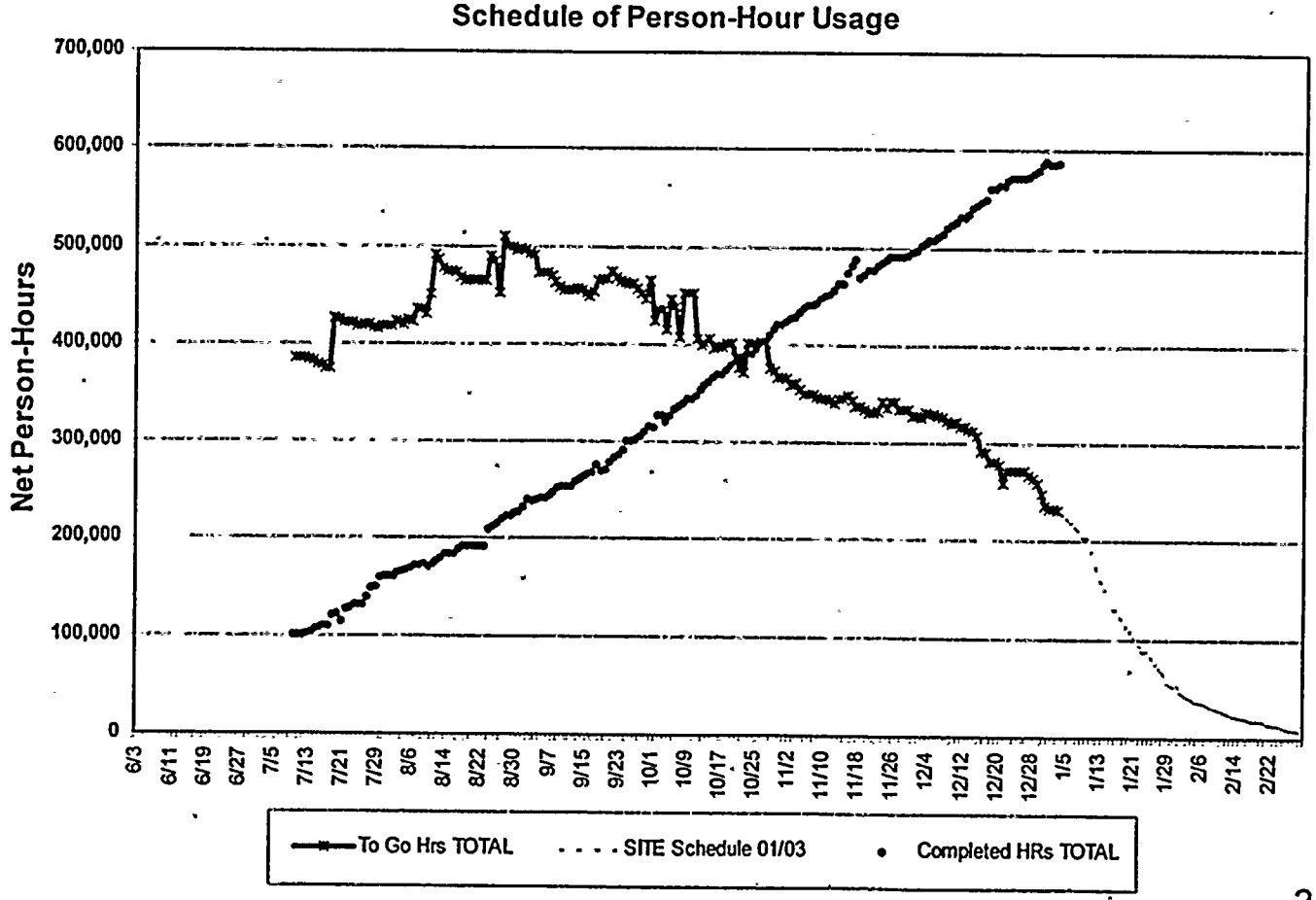

Focus Going Forward

- ***Unit 2 / Unit 1***
- ***Human Performance***
- ***Control of Work***
- ***Backlogs***

We Are Prepared for the Challenges Ahead

Bob Powers

Senior Vice President &
Chief Nuclear Officer

Summary

- *We Understand the Past*
- *We Know How to Find and Fix Our Problems*
- *We Are Working Our Plan & Schedule*
- *We Are Prepared for the Challenges Ahead*

We Are Taking the Time to Do the Job Right

Doing it right ...
Every step of the way.

COOK NUCLEAR PLANT

UNION OF
CONCERNED
SCIENTISTS

January 10, 2000

Chairman Richard Meserve
Commissioner Nils J. Diaz
Commissioner Greta J. Dicus
Commissioner Edward McGaffigan, Jr.
Commissioner Jeffrey S. Merrifield
United States Nuclear Regulatory Commission
Washington, DC 20555-0001

SUBJECT: RESTART OF DONALD C. COOK NUCLEAR PLANT

Dear Chairman and Commissioners:

On June 2, 1998, I participated in the Commission briefing on the proposed restart of Millstone Unit 3. My presentation ended with these two conclusions:

- NU's future performance cannot be predicted, but it is known that the NRC staff lacks the ability to reliably shut down plants with regulatory performance problems.
- Millstone Unit 3 should not restart without that adequate protection standard being met.

There are many similarities between D C Cook Unit 2 today and the Millstone Unit 3 facility in June 1998. Both had been closed for more than two years while their owner made numerous corrections to the physical plant and to procedures. To UCS, the extent of these changes strongly suggests failure by the plant owners – and by the NRC – to have properly focused on safety.

There are also key differences. Based on evidence such as the orifices installed in the recirculation spray system piping which caused the almost immediate common-mode failure of the expansion bellows in all lines and the unexpectedly large number of Level 4 discrepancy reports, we had zero confidence that the NRC's Special Projects Office was doing an adequate job of ensuring Millstone was ready to restart. Based on evidence such as the addition of the Generic Letter 89-10 MOV program to the Manual Chapter 0350 scope, we have sufficient confidence that the NRC's Region III staff is doing an adequate job of determining when D C Cook is ready for restart. UCS provided additional commentary on the differences between Millstone and D C Cook in our letter of December 4, 1998.

The most important difference between June 1998 and today is the change in the NRC's regulatory oversight process. We opposed the Millstone restart because we felt that the NRC staff lacked the ability to take appropriate, timely actions for operating nuclear plants with performance problems. The revised reactor oversight process is precisely the type of "adequate protection standard" that we felt needed to be in place before Millstone Unit 3 was restarted.

Washington Office: 1616 P Street NW Suite 310 • Washington DC 20036-1495 • 202-332-0900 • FAX: 202-332-0905
Cambridge Headquarters: Two Brattle Square • Cambridge MA 02238-9105 • 617-547-5552 • FAX: 617-864-9405
California Office: 2397 Shattuck Avenue Suite 203 • Berkeley CA 94704-1567 • 510-843-1872 • FAX: 510-843-3785

The extensive work by the D C Cook and NRC staffs since the reactors shut down in September 1997 may suggest that the facility is ready to resume operation. Effective oversight by the NRC is absolutely necessary to protect the public in case these efforts have missed something or if everything is okay but safety performance declines after restart. We feel it is imperative that the revised reactor oversight process be applied to all operating nuclear plants as expeditiously as possible. It is the best protection available against safety threats whether they are posed by plant aging, by overly aggressive cost-cutting measures, by plant ownership changes, or by other means.

Sincerely,

David A. Lochbaum
Nuclear Safety Engineer
Union of Concerned Scientists

UNION OF
CONCERNED
SCIENTISTS

December 4, 1998

Chairman Shirley A. Jackson
Commissioner Nils J. Diaz
Commissioner Greta J. Dicus
Commissioner Edward McGaffigan, Jr.
Commissioner Jeffrey S. Merrifield
United States Nuclear Regulatory Commission
Washington, DC 20555-0001

SUBJECT: NRC Regulatory Performance in the D C Cook Matter

Dear Chairman and Commissioners:

Thank you for the opportunity to comment during the November 30th Commission briefing on D C Cook. At the time, we had not finalized our perspectives on D C Cook so I was unable to accept the invitation. I am providing our comments, which were updated to address issues raised during the briefing.

We divide our D C Cook experience into two portions. The NRC's regulatory performance prior to mid-January 1998 was mostly bad although there were some positives. Since mid-January 1998, the regulatory performance has been satisfactory with one notable exception.

Background

We had not been monitoring conditions at D C Cook prior to September 1997. But we had been closely monitoring the NRC's architect/engineer inspections because we were interested in the adequacy of design bases information. Millstone demonstrated that configuration management problems had the potential for adversely affecting safety margins. Through the issuance of Information Notice 96-17 in March 1996 and the 50.54(f) letters in October 1996, the NRC communicated Millstone's design bases/configuration management problems to the nuclear industry with its expectations in this area.

The NRC complemented the 50.54(f) effort with the architect/engineer inspections. These inspections verified the 50.54(f) responses. In addition, they assessed the original designs.

These NRC actions were the appropriate response to the Millstone findings. A problem was identified at Millstone, but it was only one data point. Rather than simply correcting the known problems at Millstone, the NRC's actions provided the means to understand the extent of the industry's design bases problems.

Washington Office: 1616 P Street NW Suite 310 • Washington DC 20036-1495 • 202-332-0900 • FAX: 202-332-0905
Cambridge Headquarters: Two Brattle Square • Cambridge MA 02238-9105 • 617-547-5552 • FAX: 617-864-9405
California Office: 2397 Shattuck Avenue Suite 203 • Berkeley CA 94704-1567 • 510-843-1872 • FAX: 510-843-3785

Pre-January 1998 Experience

D C Cook's shutdown due to problems identified during the NRC's architect/engineer inspection attracted our attention. The NRC's Confirmatory Action Letter along with information in the NRC's Daily Event Reports indicated that there were serious problems in both of the high-risk safety systems examined by the NRC team. Some of these problems dated back to the plant's construction while others had been recently introduced.

There was some discussion during the November 30th briefing about these findings in light of D C Cook's prior SALP history. We never considered looking at the SALP history when we sought to put the findings in context. Instead, we reviewed the licensee's February 1997 response to the 50.54(f) letter. We learned that the licensee was in the middle of a design bases document (DBD) development effort. The DBDs for some systems had already been issued while several others were to be developed. According to the licensee, DBDs were not issued until a verification/validation effort provided reasonable assurance that their information accurately represented the as-built plant configuration.

The DBDs for the systems examined during the NRC's A/E inspection had been issued before February 1997. In our view, that fact eliminated any excuse for these systems having so many serious, undetected problems. The development, verification, and validation efforts for the DBDs on these two systems should have identified these problems. Had the DBDs for these systems not been completed, we would have given the licensee benefit of the doubt and assumed that many, if not all, of the problems would have been self-identified by that effort.

In our view, the CAL did two important things. First, it ensured that the specific hardware problems identified by the NRC team were corrected prior to restart. And second, it ensured that the programmatic deficiencies that caused the hardware problems were corrected prior to restart. We fully agreed that these steps were necessary.

However, we felt that another step was also warranted. The licensee's programmatic deficiencies, which were responsible for many of the problems identified during the A/E inspection, could have caused hardware problems in systems other than the two examined by the NRC. There was no evidence or other reason to suspect, yet alone believe, that the problems were confined to just these two systems. Furthermore, there was ample reason to believe that any problems would remain undetected. After all, the licensee's best self-assessment efforts had been plainly demonstrated to be less than adequate. Yet the NRC was not taking any steps to verify that the sixty-plus other safety systems were reasonably problem-free prior to restart.

The purpose of our 2.206 petition was to fill the hole in the NRC's CAL. We asked that the plant not be permitted to restart until there was reasonable assurance that there were undetected problems in other systems. We submitted the petition on October 9, 1997, because I had been informed by Mr. Jan Strasma of Region III and Mr. John Hickman of NRR-HQ that the licensee expected to restart D C Cook by late October 1997. I had also been told by Mr. Hickman that the A/E inspection report might not be issued until after restart. We felt compelled to submit the petition based on the available information. We requested a public hearing to present our concerns to the NRC staff.

Throughout October and November, the restart date repeatedly slipped a couple weeks at a time. By letter dated December 2, 1997, the licensee informed the NRC that the CAL items had been resolved and the plant was ready to restart. By letter dated December 9, 1997, the NRC acknowledged receiving our petition submitted two months earlier and indicated that it was under consideration.

During the first week of January 1998, I called Mr. John Hickman, who had been assigned as Petition Manager. He informed me about a upcoming NRC meeting with the licensee to review the CAL items and indicated that the NRC might lift the CAL shortly thereafter. Having heard nothing from the NRC regarding our petition other than the December 9th receipt acknowledgement, I asked Mr. Hickman about its status. He told me that the NRC had decided not to grant our request for a public hearing and planned to issue a Director's Decision after the plant restarted. I asked why the NRC had denied our petition. Mr. Hickman explained that the NRC staff had not yet rendered a decision on the petition, but would do so after restart. To us, deferring the decision until after restart was essentially denying the petition since we sought actions which could only be performed before restart.

We responded to this totally absurd NRC position by going to battle stations. We immediately initiated a media campaign to alert every newspaper, TV station, and radio station near the plant to the cavalier attitude being taken by the NRC staff. We also contacted activists and UCS members living near the plant and encouraged them to contact their state and local government officials about the problems at D C Cook.

After a few headlines and Congressional inquiries, the NRC staff reversed its decision and decided it could spare a few minutes to listen to our concerns. On January 12, 1998, I read a prepared statement[1] listing our concerns during a public meeting. This meeting marked the end of the first portion of our D C Cook experience. For us, the worst was over.

UCS submitted our petition on October 9, 1997, based on a thorough evaluation of information available at that time. To our dismay, the issues raised in our petition were virtually ignored by the NRC staff in their haste to get the CAL items closed out so the plant could be restarted. We feel this reflects a pervasive attitude by the NRC staff that safety concerns raised by the public, whether via allegations, 2.206 petitions, or questions, are merely distractions to be handled as time allows rather than as input which might have any consequence.

Post-January 1998 Experience

The second phase began on a positive note. NRC inspectors arrived at the D C Cook site within the next day or so to look into the ice condenser concerns. We did not raise these ice condenser concerns – we merely reminded the NRC staff about them. Mr. Curtis Overall had expressed these same concerns to the NRC Region II staff during 1996 and to the NRC Inspector General's office during March 1997. Mr. Overall met with me the day before going to the IG. The NRC Region II staff handled Mr. Overall's concerns by merely calling the licensees for the Watts Bar, Sequoyah, Catawba, and McGuire nuclear plants and asking if they had any ice condenser problems. This 'tele-regulating' was the extent of Region II's efforts to examine Mr. Overall's concerns.

NRC Region III handled the concerns in an entirely different manner. They sent inspectors to look at the D C Cook ice condensers. These inspectors contacted me, and then Mr. Overall, to ensure that they had a thorough understanding of the concerns. They confirmed suspected problems with the metal screws and identified other problems. The NRC staff invoked its Manual Chapter 0350 process for D C Cook in April 1998 after the licensee opted to melt out both ice condensers for inspections and repairs.

---

[1] The prepared statement had been toned down – twice – by UCS management in Cambridge.

I have attended all of the D C Cook public meetings held in Rockville during 1998 and reviewed all of the NRC correspondence to the licensee this year. Based on this information, it is apparent that our role is to stay out of the way and let the NRC staff do its job. It is doing a very fine job.

The NRC staff's actions since mid-January 1998 are even more impressive when contrasted with the Millstone Unit 3 restart process. At D C Cook, the NRC staff has expanded the scope when warranted as evidenced by adding the Generic Letter 89-10 MOV issues to the restart list and by following up on the AFW system SSFI findings. At Millstone, the NRC staff was unwilling to expand the scope for any reason. At D C Cook, the NRC staff backed probing questions with rigorous onsite inspections. At Millstone, the NRC staff essentially asked 'true/false' questions and performed cursory inspections. At D C Cook, the NRC staff gave careful consideration to public input. At Millstone, the NRC staff dressed well for public meetings.

The Millstone Unit 3 and D C Cook situations are very similar. Both plants remained shut down for an extended period while numerous hardware and programmatic problems were corrected. The NRC staff implemented Manual Chapter 0350 in both cases. The same process yielded exactly opposite results. I cannot suggest a single change to improve the 0350 process for D C Cook and have confidence that the plant will not be restarted until it has the necessary safety margins. If Millstone Unit 3 had adequate safety margins at restart, it was in spite of the NRC staff, not because of them. I halfway believe that the Millstone Special Projects Office would have dismissed a report that the reactor head was fastened with Velcro with some lame excuse like, "well, are you aware of any reactor accident that has been caused by Velcro?"

The only fault that we can find with the NRC's regulatory performance for D C Cook since mid-January 1998 involves the proposed $500,000 civil penalty. As we pointed out during the August 1998 informal hearing on our petition, the NRC could have imposed a civil penalty of at least $4.627 billion. We did not advocate such a severe fine, but thought that a Millstone-sized fine was warranted. That D C Cook received the 'volume discount' did not surprise us because the NRC's current enforcement policy is extremely subjective and inconsistent. We call it the "Wheel of Misfortune."

Noteworthy Performances

During the November 13 1998, stakeholder meeting, several people commented on the talent and dedication of the NRC staff. UCS shares these views and would like to take this opportunity to identify what we consider to be stellar performance by NRC staff related to the D C Cook issues:

- Mr. John Thompson led the NRC's A/E inspection team. While the team found numerous serious problems, it was not like shooting fish in a barrel. The dead-end portions of the containment had eluded detection for nearly thirty years. It was a subtle finding of high safety significance. The other findings, such as the containment sump cover problem, were also very commendable catches. Mr. Thompson deserves credit for leading this team to such important findings.

- Mr. Edward Schweibinz participated in the fibrous material inspection and follow-up activities. During a public meeting in Rockville, Mr. Schweibinz resisted several attempts by the licensee to dismiss the extent and severity of the fibrous material problems based on half-truths and false promises. Mr. Schweibinz deserves credit for having prepared so well for this encounter.

- Mr. Melvin Holmberg participated in the ice condenser inspection and follow-up activities. During a Manual Chapter 0350 meeting in Rockville, Mr. Holmberg displayed a thorough understanding of

the design and licensing bases for the D C Cook ice condensers. During that meeting, both NRC and licensee staff deferred to Mr. Holmberg's knowledge of the subject. Mr. Holmberg deserves credit for having mastered this complex information and applying it so effectively.

- Mr. John Grobe chaired the Manual Chapter 0350 panel for D C Cook. During two public meetings in Rockville and the pre-decisional enforcement conference, Mr. Grobe repeatedly asked probing questions with substantive follow-ups. He insisted that the licensee show the NRC staff that things were okay and did not rely solely on the licensee's unsubstantiated positive responses. Mr. Grobe deserves credit for conducting the Manual Chapter 0350 process in a fair and effective manner.

- Mr. John Stang was the Petition Manager for our petition beginning in February 1998. Mr. Stang ensured that he fully understood the issues raised in our petition, its supplement, and related allegations. Mr. Stang notified me promptly of any developments regarding our petition. Mr. Stang deserves credit for very capable administration of our petition.

UCS realizes that there are many other individuals as capable and dedicated as these five gentlemen. At the risk of slighting others, we felt their performance merited recognition.

Unresolved Issues

UCS feels confident that D C Cook will be restart until the necessary safety margins have been restored. The bad news is that the following issues remain unresolved:

1. We cannot understand why D C Cook was shut down in September 1997. The reason stated for the shut down, reiterated at least twice during the November 30, 1998, Commission briefing, was that the dead-end compartment issue raised doubt about the plant's ability to cope with a small-break loss of coolant accident (LOCA). For a large-break LOCA, sufficient water inventory would be available. The risk factor appears comparable to that from the BWR suction strainer issue. Yet, no BWR had to shut down. The NRC allowed these BWRs to operate until modifications could be made at the next refueling outage. It seems either unnecessary for D C Cook to shut down or improper for the BWRs to continue operating. We believe that the only reason that D C Cook was shut down was because the NRC identified its problems while the BWR suction strainer problems were identified by the licensees. The NRC's charter is to protect the public – not the feelings or finances of the licensees.

2. We cannot understand why the NRC staff's reaction to the D C Cook findings did not address possible undetected hardware problems in the other sixty-plus safety systems. Hindsight shows that our call for an examination into these other systems was warranted. However, we feel that such an examination was warranted even if no other problems had been identified. The problems identified by the NRC A/E team were serious. The plant should not have been restarted without a determination if these were its only problems.

3. We cannot understand how the NRC staff could even think about deferring its decision on our petition until after restart. There's something profoundly wrong with the 2.206 process because safety concerns are not being addressed in good faith by the NRC staff. We sincerely feel, but will never be able to prove, that D C Cook would have restarted in early 1998 with its ice condenser broken had we not launched a media campaign. We still believe that the NRC staff evaluates safety issues based on their Neilson ratings instead of on their safety merits.

4. We cannot understand why the NRC's Manual Chapter 0350 process allows such widespread results as experienced at D C Cook and Millstone Unit 3. The D C Cook experience suggests that the process, when implemented properly, is effective. The Millstone experience suggests that the NRC lacks the ability to ensure this process is properly implemented.

5. We cannot understand why the NRC staff 'buried' safety concerns that Mr. Overall raised during 1996 and 1997. There's something profoundly wrong in Region II. We feel, but fortunately will never be able to prove, that the ice condenser concerns would still be buried if D C Cook were in Region II. Had the NRC Region II staff done the right thing in 1996, then the D C Cook and Catawba problems would have been identified and corrected before 1998.

UCS is not seeking a direct response on these unresolved issues. Instead, we respectfully request that you kept these issues in mind as you review the NRC staff's proposed changes to the inspection, enforcement, and assessment processes. I agree with Commissioner Diaz's comment that the enemy of good is better, but many of these issues can and should be corrected by good processes.

Sincerely,

David A. Lochbaum
Nuclear Safety Engineer
Union of Concerned Scientists

cc: Mr. John Thompson
Mr. Edward Schweibinz
Mr. Melvin Holmberg
Mr. John Grobe
Mr. John Stang

D.C. COOK RESTART OVERSIGHT

UNITED STATES NUCLEAR REGULATORY COMMISSION

January 10, 2000

D.C. COOK RESTART OVERSIGHT

A. BRIEF OUTAGE HISTORY

B. ASSESSMENT OF D.C. COOK PROBLEM DISCOVERY

C. ASSESSMENT OF D.C. COOK CORRECTIVE ACTIONS

D. STATUS OF LICENSING ACTIVITIES

E. NRC RESTART ACTIONS

A. BRIEF OUTAGE HISTORY

- PLANT SHUTDOWN IN SEPTEMBER 1997
- NRC IMPLEMENTS MC 0350 RESTART OVERSIGHT PROCESS
- 1998 DISCOVERY EFFORTS
- RESTART PLAN MODIFIED IN MARCH 1999

B. ASSESSMENT OF D.C. COOK PROBLEM DISCOVERY

- D.C. COOK REASSESSES SYSTEMS, PROGRAMS AND FUNCTIONS
- NRC CONDUCTS CONFIRMATORY INSPECTIONS

C. ASSESSMENT OF D.C. COOK CORRECTIVE ACTIONS

- CASE SPECIFIC CHECKLIST RESTART ISSUE RESOLUTION
- CONFIRMATORY ACTION LETTER STATUS

D. STATUS OF LICENSING ACTIVITIES

- LICENSING ISSUES RESOLUTION
- REMAINING LICENSING ACTIONS FOR RESTART

E. NRC RESTART ACTIONS

- REMAINING INSPECTIONS FOR RESTART
- RESTART APPROVAL PROCESS
- POST-RESTART OVERSIGHT
- TRANSITION TO REVISED INSPECTION AND ASSESSMENT PROCESS

JAN 11 2020