CATEGORY 1

REGULATORY INFORMATION DISTRIBUTION SYSTEM (RIDS)

ACCESSION NBR:9703270052 DOC.DATE: ~~96/12/31~~ NOTARIZED: NO DOCKET #
FACIL:50-315 Donald C. Cook Nuclear Power Plant, Unit 1, Indiana M 05000315
50-316 Donald C. Cook Nuclear Power Plant, Unit 2, Indiana M 05000316
AUTH.NAME AUTHOR AFFILIATION
FITZPATRICK,E. Indiana Michigan Power Co. (formerly Indiana & Michigan Ele
RECIP.NAME RECIPIENT AFFILIATION

see Environmental Report

SUBJECT: "Annual Radioactive Effluent Release Rept for period of 960101-1231." W/970320 ltr.

DISTRIBUTION CODE: IE48D COPIES RECEIVED:LTR 1 ENCL 6 SIZE: 220
TITLE: 50.36a(a)(2) Semiannual Effluent Release Reports

NOTES:

	RECIPIENT ID CODE/NAME	COPIES LTTR	COPIES ENCL	RECIPIENT ID CODE/NAME	COPIES LTTR	COPIES ENCL
	PD3-3 LA	1	1	PD3-3 PD	1	1
	HICKMAN,J	1	1			
INTERNAL:	FILE CENTER 01	1	1	NRR/DRPM/PERB/A	1	1
	RGN3 DRS/RSB	1	1	RGN3 FILE	1	1
EXTERNAL:	NRC PDR	1	1			

C A T E G O R Y 1 D O C U M E N T

NOTE TO ALL "RIDS" RECIPIENTS:
PLEASE HELP US TO REDUCE WASTE. TO HAVE YOUR NAME OR ORGANIZATION REMOVED FROM DISTRIBUTION LISTS OR REDUCE THE NUMBER OF COPIES RECEIVED BY YOU OR YOUR ORGANIZATION, CONTACT THE DOCUMENT CONTROL DESK (DCD) ON EXTENSION 415-2083

TOTAL NUMBER OF COPIES REQUIRED: LTTR 8 ENCL 8

Indiana Michigan
Power Company
500 Circle Drive
Buchanan, MI 49107 1395

INDIANA
MICHIGAN
POWER

March 20, 1997

AEP:NRC:0842AA
10 CFR 50.36(a)(2)

Docket Nos. 50-315
50-316

U.S. Nuclear Regulatory Commission
ATTN: Document Control Desk
Washington, D.C. 20555

Gentlemen:

Donald C. Cook Nuclear Plant Units 1 and 2
ANNUAL RADIOACTIVE EFFLUENT RELEASE REPORT
JANUARY 1, 1996 TO DECEMBER 31, 1996

Attached are six copies of the Annual Radioactive Effluent Release report for Donald C. Cook Nuclear Plant Units 1 and 2, for the period January 1, 1996 through December 31, 1996. This report was prepared in accordance with Section 6.9.1.7 of the plant's "Appendix A Technical Specification".

Sincerely,

A. Alan Blind for

E. E. Fitzpatrick
Vice President

vlb

Attachment (6)

cc: A. A. Blind
A. B. Beach
MDEQ DW & RPD
NRC Resident Inspector
J. R. Padgett

270015

9703270052 961231
PDR ADOCK 05000315
R PDR

Donald C. Cook Nuclear Plant Units • 1 & 2

Annual Radioactive Effluent Release Report

January 1 through December 31, 1996

Indiana Michigan Power Company
Bridgman, Michigan

Docket Nos. 50-315 & 50-316
License Nos. DPR-58 & DPR-74

9703270052

TABLE OF CONTENTS

		Page
	Table of Contents	i
	List of Appendices	ii
I.	Introduction	1
II.	Radioactive Releases and Radiological Impact on Man	2
	Liquid Releases	2
	Gaseous Releases	2
	Solid Waste Disposition	2
III.	Meteorological	2
IV.	Offsite Dose Calculation Manual (ODCM) Changes	3
V.	Total Dose	3
VI.	Conclusion	3

LIST OF APPENDICES

Appendix	Title
A1.1	Radioactive release Data: January 1 - December 31, 1996
A1.2	Summary of Maximum Individual Doses: First Quarter, 1996
A1.3	Summary of Maximum Individual Doses: Second Quarter, 1996
A1.4	Summary of Maximum Individual Doses: Third Quarter, 1996
A1.5	Summary of Maximum Individual Doses: Fourth Quarter, 1996
A2.1	Summary of Hourly Meteorological Data: First Quarter, 1996
A2.2	Summary of Hourly Meteorological Data: Second Quarter, 1996
A2.3	Summary of Hourly Meteorological Data: Third Quarter, 1996
A2.4	Summary of Hourly Meteorological Data: Fourth Quarter, 1996
3.0	Offsite Dose Calculation Manual (ODCM) Changes

I. INTRODUCTION

This report discusses the radioactive discharges from Unit 1 and Unit 2 of the Donald C. Cook Nuclear Plant during 1996. This is in accordance with the requirements of Cook Nuclear Plant Technical Specification 6.9.1.7.

The table below summarizes the pertinent statistics concerning the Plant's operation during the period from January 1, to December 31, 1996. The data in this table and the descriptive information on plant operation are based upon the respective Unit's Monthly Operating Reports for 1996.

Parameter	Unit 1	Unit 2
Gross Electrical Energy Generation (MWH)	8,687,540	8,298,030
Unit Service Factor (%)	97.6	87.0
Unit Capacity Factor - MDC* Net (%)	95.3	86.2

Unit 1 entered the reporting period in Mode 1 at 100% rated thermal power (RTP); however, at times reactor power was limited by the temporary Main Transformer thermal limits. Small power adjustments were routinely made to accommodate this limitation during this reporting period. On March 17, 1995 the reactor tripped as a result of a Main Feed Pump differential pressure controller failure. Following investigation and repairs, the reactor was taken critical on March 18, 1996 and by March 20, 1996 reactor power stabilized at 100% RTP. An Unusual Event was voluntarily declared April 14, 1996 when both Unit 2 Emergency Diesel Generators were electively removed from service for maintenance activities. The Unusual Event was terminated on April 21, 1996. On April 23, 1996 power was reduced to 55% RTP for Main Feed Pump condenser waterbox cleaning following high differential pressures experienced in the Screenwash system caused by a large influx of fish (alewifes). Reactor power was stabilized at 100% RTP April 25, 1996. On June 6, 1996 reactor power was decreased to 57% RTP to remove the West Main Feed Pump from service to facilitate steam supply leak repairs. On June 8, 1996 power was stabilized at 100% RTP. On 13 July, 1996 power was reduced to 58% RTP to remove the East Main Feed Pump to facilitate condenser leak checks. On July 14, 1996 power was stabilized at 100% RTP. On September 21, 1996 a reactor trip occurred as a result of a spurious Main Transformer Sudden Over-Pressure signal most probably induced by a lightening strike. On September 24, 1996 Mode 5 was entered to facilitate two Source Range Detector replacements. Following the detector maintenance, the reactor was taken critical on September 28, 1996 and power was stabilized at 88.5% RTP on September 30, 1996. On October 15, 1996 reactor power was reduced to 78.5% RTP to facilitate Circulating Water Pump #12 removal from service for maintenance. The unit was returned to 88% RTP the same day. The unit exited this reporting period in Mode 1 at 94% RTP.

Unit 2 entered the reporting period in Mode 1 at 100% RTP. On March 13, 1996 reactor power coastdown was initiated. The unit was removed from service on March 23, 1996 for the cycle 10 to 11 refueling/maintenance outage. An Unusual Event was voluntarily declared April 14, 1996 when both Unit 2 Emergency Diesel Generators were electively removed from service for maintenance activities. Unit 2 was in Mode 6 and the core unloaded for the duration of the event. The Unusual Event was terminated on April 21, 1996. The reactor was taken critical on May 7, 1996 and a reactor trip occurred May 8, 1996 during Main Turbine Overspeed testing. The automatic scram from 7% RTP resulted when the anticipated trip of the Main Turbine was coincident with one channel of Main Turbine impulse pressure indicating greater than 10%. On May 9, 1996 the reactor was taken critical and 100% RTP was reached on May 16, 1996. On July 6, 1996 reactor power was reduced to 94% RTP to clear a phase two Main Transformer coil high temperature alarm. Reactor power was stabilized at 100% RTP on July 7, 1996. On November 23, 1996 reactor power was reduced to 30% RTP for a planned oil addition to #3 Reactor Coolant Pump. Reactor power was stabilized at 100% RTP on November 24, 1996. The unit exited this reporting period in Mode 1 at 100% RTP.

II. RADIOACTIVE RELEASES AND RADIOLOGICAL IMPACT ON MAN

Since a number of release points are common to both units, the release data from both units are combined to form this two-unit, Annual Radioactive Effluent Release Report. Appendix 1 of this report presents the information in accordance with section 6.9.1.9 of Appendix A to the Facility Operating Licenses, as specified in the Technical Specification and 10 CFR Part 50, Appendix I.

The "MIDAS System" by PLG, Inc., is a computer code that calculates doses due to radionuclides that were released by the Donald C. Cook Nuclear Plant.

All liquid and gaseous releases were well within Offsite Dose Calculation Manual limits.

There were no abnormal liquid or gaseous releases during 1996.

Liquid Releases

During the first quarter of 1996 there were 23 liquid batch releases. During the second quarter there were 17. During the third quarter there were 33. During the fourth quarter there were 18.

Estimated doses (in millirem) to maximally exposed individuals via the liquid release pathways are given in appendices 1.2, 1.3, 1.4, and 1.5 of this report.

Gaseous Releases

During the first quarter of 1996 there were 188 gaseous batch releases. During the second quarter there were 112. During the third quarter there were 113. During the fourth quarter there were 194.

Containment pressure reliefs (CPRs) are listed as batch releases in accordance with NRC inspections 50-315/89016 (DRSS) and 50-316/89017 DRSS. There were 588 CPRs during 1996. For the purpose of dose assessment, CPR batch releases were treated as continuous releases.

There were 15 wasted gas decay tank releases and two releases from CVCS HUTs during 1996.

In calculat ng the dose consequences for continuous and batch gaseous releases during 1996, the meteorological data measured at the time of the release were used.

The estimated doses (in millirem) to maximally exposed individuals via the gaseous release pathways are given in appendices 1.2, 1.3, 1.4, and 1.5 of this report.

Solid Waste Disposition

There were 26 shipments of radioactive waste made during 1996. 11 shipments were made from the site and the remainder were made from various radioactive waste processors.

III. METEOROLOGICAL

Appendices 2.1, 2.2, 2.3, and 2.4 of this report contain the cumulative joint frequency distribution tables of wind speed and wind direction, corresponding to the various atmospheric stability classes for the first, second, third and fourth quarters of 1996. Hourly meteorological data is available for review and/or inspection upon request.

IV. OFFSITE DOSE CALCULATION MANUAL (ODCM) CHANGES

The Offsite Dose Calculation Manual, 12 PMP 6010 OSD.001, was changed during the report period. The reasons for the changes and the PNSRC approval are documented on the procedure change sheet and procedure cover sheet. These changes did not reduce the accuracy or reliability of dose calculations or setpoint determinations. Appendix 3.0 contains the revised ODCM with changes indicated by marginal bars.

V. TOTAL DOSE

Section 4.2.5 of the ODCM requires that the dose or dose commitment to a real individual from uranium fuel cycle sources in Berrien County be limited to no more than twenty-five (25) millirem to the total body or any organ (excluding the thyroid, which is limited to no more than seventy-five (75) millirem) over a period of twelve (12) consecutive months to show conformance with the requirements of 40 CFR Part 190. The maximum cumulative dose to an individual from liquid and gaseous effluents during 1996 was well within the ODCM limits. Measurements using thermoluminescent dosimeters at eleven (11) offsite background stations indicate that the dose due to direct radiation is negligible.

An assessment showed that radiation doses from radioactive liquid and gaseous effluents to members of the public due to their activities inside the site boundary are also negligible.

VI. CONCLUSION

Based on the information presented in this report, it is concluded that the Donald C. Cook Nuclear Plant Units 1 and 2 performed their intended design function with no demonstratable adverse affect on the health and safety of the general public.

1996 EFFLUENT AND WASTE DISPOSAL ANNUAL REPORT

Supplemental Information

Facility: Donald C. Cook Plant
Licensee: Indiana Michigan Power Company

1. Regulatory Limits

   A. Noble Gases

   The air dose in unrestricted areas due to noble gases released in gaseous effluents shall be limited to the following:

   1. During any calendar quarter, to ≤ 5 mrad for gamma radiation and ≤ 10 mrad for beta radiation;

   2. During any calendar year, to ≤ 10 mrad for gamma radiation and ≤ 20 mrad for beta radiation.

   B. Iodines - Particulates

   The dose to a member of the public from radioiodines, radioactive materials in particulate form, and radionuclides other than noble gases with half-lives greater than 8 days in gaseous effluents released to unrestricted areas shall be limited to the following:

   1. During any calendar quarter to ≤ 7.5 mrem to any organ;

   2. During any calendar year to ≤ 15 mrem to any organ.

   C. Liquid Effluents

   The dose or dose commitment to an individual from radioactive material in liquid effluents released to unrestricted areas shall be limited:

   1. During any calendar quarter to ≤ 1.5 mrem to the total body and to ≤ 5 mrem to any organ;

   2. During any calendar year to ≤ 3 mrem to the total body and to ≤ 10 mrem to any organ.

D. Total Dose

The dose or dose commitment to a real individual from all uranium fuel cycle sources is limited to ≤ 25 mrem to the total body or any organ (except the thyroid, which is limited to ≤ 75 mrem) over a period of 12 consecutive months.

2. Maximum Permissible Concentrations

A. Gaseous Effluents
The dose rate due to radioactive materials released in gaseous effluents from the site shall be limited to the following:

1. For noble gases: ≤ 500 mrem/yr to the total body and ≤ 3000 mrem/yr to the skin;

2. For all radioiodines and for all radioactive materials in particulate form and radionuclides (other than noble gases) with half-lives greater than 8 days: ≤ 1500 mrem/yr to any organ.

The above limits are provided to insure that radioactive material discharged in gaseous effluents will not result in the exposure of an individual in an unrestricted area to annual average concentrations exceeding the limits in 10 CFR Part 20, Appendix B, Table 2.

B. Liquid Effluents

The concentration of radioactive material released at any time from the site to unrestricted areas shall be limited to the concentrations specified in 10 CFR Part 20, Appendix B, Table 2, Column 2, for radionuclides other than dissolved or entrained noble gases. For dissolved or entrained noble gases, the concentration shall be limited to 2×10^{-4} μCi/ml total activity.

3. Average Energy

The average energy ($\bar{E}$) of the radionuclide mixture in releases of fission and activation gases as defined in Regulatory Guide 1.21 Appendix B Section A.3 is not applicable because the limits used for gaseous releases are based on calculated dose to members of the public.

4. Measurements and Approximations of Total Radioactivity

A. Fission and Activation Gases

Sampled and analyzed on a 4096 channel analyzer and HpGe detector.

B. Iodines

Sampled on iodine adsorbing media and analyzed on a 4096 channel analyzer and HpGe detector.

C. Particulates

Sampled on a glass filter and analyzed on a 4096 channel analyzer and HpGe detector.

D. Liquid Effluents

Sampled and analyzed on a 4096 channel analyzer and HpGe detector.

5. Batch Releases

A. Liquid

1. Number of batch releases:

23 releases in the 1st quarter, 1996
17 releases in the 2nd quarter, 1996
33 releases in the 3rd quarter, 1996
18 releases in the 4th quarter, 1996

2. Total time period for batch releases:

16,100 minutes

3. Maximum time for a batch release:

224 minutes

4. Average time period for batch release:

177 minutes

5. Minimum time period for a batch release:

124 minutes

6. Average stream flow during periods of release of effluent into a flowing stream:

900,000 gpm circulating water

B. Gaseous

1. Number of batch releases:

188 in the 1st quarter, 1996
112 in the 2nd quarter, 1996
113 in the 3rd quarter, 1996
194 in the 4th quarter, 1996

2. Total time period of batch releases:

14,130 minutes

3. Maximum time period for a batch release:

762 minutes

4. Average time period for batch releases:

23.3 minutes

5. Minimum time period for a batch release:

11.0 minutes

6. Abnormal Releases

A. Liquid

1. Number of Releases:

1st Quarter	2nd Quarter	3rd Quarter	4th Quarter
0	0	0	0

2. Total activity released (Ci):

1st Quarter	2nd Quarter	3rd Quarter	4th Quarter
0	0	0	0

B. Gaseous

1. Number of Releases:

1st Quarter	2nd Quarter	3rd Quarter	4th Quarter
0	0	0	0

2. Total activity released (Ci):

1st Quarter	2nd Quarter	3rd Quarter	4th Quarter
0	0	0	0

1996 EFFLUENT AND WASTE DISPOSAL ANNUAL REPORT
GASEOUS EFFLUENTS-GROUND LEVEL RELEASES

CONTINUOUS MODE

	Nuclides released	Unit	1st Quarter	2nd Quarter	3rd Quarter	4th Quarter
1. FISSION GASES	AR41	Ci	1.71E-02	1.86E-02	1.16E-02	2.48E-01
	KR85m	Ci	2.37E-03	4.97E-03	3.65E-03	4.42E-02
	KR87	Ci	5.40E-03	1.05E-02	7.16E-03	8.38E-02
	KR88	Ci	6.25E-03	1.24E-02	8.61E-03	9.91E-02
	XE131m	Ci	0.00E+00	0.00E+00	1.86E-04	8.00E-04
	XE133m	Ci	0.00E+00	3.95E-04	1.03E-03	1.72E-02
	XE133	Ci	4.21E+00	4.26E+00	3.32E+01	1.86E+01
	XE135m	Ci	3.77E-02	6.78E-02	3.94E-02	5.09E-01
	XE135	Ci	2.60E-01	5.12E-02	3.26E-02	6.11E-01
	XE137	Ci	0.00E+00	0.00E+00	0.00E+00	6.95E-02
	XE138	Ci	1.73E-02	3.45E-02	2.19E-02	2.90E-01
	Total for Period	Ci	4.55E+00	4.46E+00	3.33E+01	3.32E+01
2. IODINES	I131	Ci	5.18E-04	4.07E-04	2.08E-03	5.75E-05
	I133	Ci	5.45E-04	6.71E-05	1.25E-03	4.23E-03
	I135	Ci	1.94E-04	1.89E-05	5.31E-07	1.87E-03
	I132	Ci	2.39E-04	2.40E-04	1.27E-04	2.75E-03
	I134	Ci	1.78E-06	1.00E-06	5.25E-05	8.85E-04
	Total for Period	Ci	1.50E-03	7.34E-04	3.51E-03	9.79E-03
3. PARTICULATES	MN54	Ci	2.54E-08	0.00E+00	0.00E+00	0.00E+00
	CO58	Ci	1.28E-06	2.19E-08	0.00E+00	2.33E-09
	CO60	Ci	2.25E-06	1.30E-07	6.75E-08	1.07E-07
	CS134	Ci	1.67E-04	2.58E-06	4.77E-03	3.66E-03
	CS136	Ci	2.41E-05	0.00E+00	5.72E-04	0.00E+00
	CS137	Ci	1.93E-04	4.09E-06	2.97E-03	2.41E-03
	NB95	Ci	1.06E-08	5.75E-08	0.00E+00	0.00E+00
	CS138	Ci	0.00E+00	1.54E-05	1.51E-05	1.06E-04
	AG110m	Ci	3.96E-08	1.97E-07	2.46E-08	3.31E-08
	NA24	Ci	6.34E-05	4.00E-06	0.00E+00	4.77E-05
	SB125	Ci	1.13E-07	0.00E+00	0.00E+00	0.00E+00
	F18	Ci	2.52E-04	7.18E-05	1.07E-03	7.02E-03
	SB122	Ci	1.33E-05	0.00E+00	0.00E+00	2.16E-05
	RB88	Ci	0.00E+00	2.65E-07	0.00E+00	1.89E-06
	RB89	Ci	0.00E+00	6.27E-06	2.67E-06	4.33E-05
	BA139	Ci	0.00E+00	1.64E-05	0.00E+00	4.37E-06
	Total for Period	Ci	7.17E-04	1.21E-04	9.40E-03	1.33E-02

1996 EFFLUENT AND WASTE DISPOSAL ANNUAL REPORT
GASEOUS EFFLUENTS-GROUND LEVEL RELEASES

BATCH MODE

Nuclides released	Unit	1st Quarter	2nd Quarter	3rd Quarter	4th Quarter
1. FISSION GASES					
AR41	Ci	1.43E+00	1.43E+00	1.13E+00	9.71E-01
KR85m	Ci	4.32E-03	3.50E-03	1.84E-04	5.10E-04
KR85	Ci	2.35E+00	2.18E+00	3.57E+00	5.56E+00
KR88	Ci	0.00E+00	1.22E-04	0.00E+00	0.00E+00
XE131m	Ci	2.85E-03	3.58E-03	6.43E-02	1.02E-01
XE133m	Ci	3.50E-03	1.22E-04	1.45E-02	1.63E-02
XE133	Ci	1.23E+00	2.05E+00	2.18E+00	3.58E+00
XE135	Ci	1.66E-01	1.34E-01	1.94E-02	2.76E-02
Total for Period	Ci	5.25E+00	5.80E+00	7.33E+00	1.03E+01
2. IODINES					
I131	Ci	1.24E-06	4.48E-08	7.58E-05	0.00E+00
I133	Ci	1.17E-06	0.00E+00	3.25E-05	0.00E+00
I132	Ci	1.06E-07	0.00E+00	9.38E-06	0.00E+00
I130	Ci	0.00E+00	0.00E+00	1.39E-06	0.00E+00
Total for Period	Ci	2.52E-06	4.48E-08	1.19E-04	0.00E+00
3. PARTICULATES					
CO58	Ci	0.00E+00	5.94E-08	0.00E+00	0.00E+00
CO60	Ci	1.08E-05	0.00E+00	0.00E+00	0.00E+00
CS137	Ci	0.00E+00	0.00E+00	1.49E-07	0.00E+00
Total for Period	Ci	1.08E-05	5.94E-08	1.49E-07	0.00E+00

1996 EFFLUENT AND WASTE DISPOSAL ANNUAL REPORT
GASEOUS EFFLUENTS-SUMMATION OF ALL RELEASES

		Units	1st Quarter	2nd Quarter	3rd Quarter	4th Quarter	Est. Total Error,%
A.	FISSION AND ACTIVATION GASES						
1.	Total Release	Ci	9.74E+00	1.03E+01	4.03E+01	3.08E+01	14.9
2.	Average release rate for period	uCi/sec	1.24E+00	1.31E+00	5.07E+00	3.88E+00	
3.	Percent of applicable limit	% Gamma Beta	5.62E-02 2.87E-02	7.34E-02 2.84E-02	4.82E-01 5.37E-01	1.28E-01 8.97E-02	
B.	IODINES						
1.	Total I-131	Ci	5.20E-04	4.07E-04	2.15E-03	5.75E-05	14.7
2.	Average release rate for period	uCi/sec	6.61E-05	5.17E-05	2.71E-04	7.23E-06	
3.	Percent of applicable limit	%	3.32E-01	2.11E-01	1.63E+00	2.24E+00	
C.	PARTICULATES						
1.	Particulates with half lives>8 days	Ci	3.99E-04	7.14E-06	8.31E-03	6.09E-03	13.2
2.	Average release rate for period	uCi/sec	5.07E-05	9.08E-07	1.05E-03	7.66E-04	
3.	Percent of applicable limit	%	3.32E-01	2.11E-01	1.63E+00	2.24E+00	
4.	Gross alpha radioactivity	Ci	<3.98E-06	<3.55E-06	<2.31E-06	<1.99E-06	N/A
D.	Tritium						
1.	Total Release	Ci	1.07E+01	6.39E+00	9.20E+00	1.83E+01	10.5
2.	Average release rate for period	uCi/sec	1.36E+00	8.13E-01	1.16E+00	2.31E+00	
3.	Percent of applicable limit	%	1.66E+01	1.14E+01	1.56E+01	3.32E+01	

1996 EFFLUENT AND WASTE DISPOSAL ANNUAL REPORT
LIQUID EFFLUENTS

CONTINUOUS MODE

Nuclides released	Unit	1st Quarter	2nd Quarter	3rd Quarter	4th Quarter
NA24	Ci	4.12E-04	8.30E-04	2.63E-04	8.35E-04
CO58	Ci	1.90E-05	7.50E-04	0.00E+00	0.00E+00
NI65	Ci	0.00E+00	0.00E+00	1.28E-03	2.04E-03
I131	Ci	1.73E-03	1.36E-03	5.39E-03	2.25E-03
I132	Ci	2.17E-03	3.61E-03	2.40E-03	2.73E-02
I133	Ci	4.84E-03	7.57E-03	1.21E-02	4.37E-02
I134	Ci	4.64E-04	1.71E-03	8.44E-04	1.97E-02
I135	Ci	2.02E-03	6.52E-03	1.42E-03	4.29E-02
CS134	Ci	3.95E-04	5.44E-04	1.18E-02	3.83E-02
CS136	Ci	5.62E-05	0.00E+00	1.38E-03	0.00E+00
CS137	Ci	6.76E-04	4.93E-04	7.34E-03	2.39E-02
CS138	Ci	0.00E+00	3.01E-04	5.16E-04	7.22E-04
SB122	Ci	3.10E-05	0.00E+00	0.00E+00	5.05E-05
F18	Ci	1.46E-02	1.88E-02	2.00E-02	6.68E-02
	Ci				
	Ci				
	Ci				
	Ci				
	Ci				
	Ci				
	Ci				
	Ci				
	Ci				
	Ci				
	Ci				
	Ci				
	Ci				
	Ci				
XE-133	Ci	3.60E-04	0.00E+00	1.16E-03	0.00E+00
XE-135	Ci	1.51E-04	1.34E-04	0.00E+00	0.00E+00
XE135m	Ci	5.01E-04	6.74E-04	0.00E+00	0.00E+00

1996 EFFLUENT AND WASTE DISPOSAL ANNUAL REPORT
LIQUID EFFLUENTS

BATCH MODE

Nuclides released	Unit	1st Quarter	2nd Quarter	3rd Quarter	4th Quarter
NA24	Ci	1.59E-04	1.82E-03	9.07E-03	0.00E+00
CR51	Ci	1.59E-03	9.47E-03	4.16E-04	0.00E+00
MN54	Ci	5.24E-03	2.26E-03	6.42E-04	3.20E-03
FE55	Ci	1.93E-02	1.21E-02	1.96E-02	2.20E-03
FE59	Ci	0.00E+00	7.92E-05	0.00E+00	0.00E+00
CO58	Ci	3.83E-02	1.36E-01	1.16E-02	6.85E-03
CO60	Ci	2.81E-02	3.16E-02	1.51E-02	1.50E-02
ZN65	Ci	1.17E-04	3.02E-03	1.04E-03	0.00E+00
SR90	Ci	0.00E+00	2.01E-05	3.92E-05	0.00E+00
ZR95/NB95	Ci	1.23E-03	3.07E-03	7.71E-04	3.13E-04
AG110m	Ci	7.68E-02	4.67E-02	1.34E-02	2.01E-02
CO57	Ci	4.43E-04	4.50E-04	6.30E-05	4.50E-05
SB124	Ci	6.96E-03	6.82E-02	4.94E-04	3.54E-04
SB125	Ci	6.65E-03	2.82E-02	2.32E-03	1.75E-03
I131	Ci	0.00E+00	0.00E+00	0.00E+00	1.36E-05
CS134	Ci	9.48E-05	0.00E+00	0.00E+00	0.00E+00
CS137	Ci	1.38E-04	0.00E+00	1.49E-04	0.00E+00
LA140	Ci	0.00E+00	0.00E+00	0.00E+00	5.83E-06
CE144	Ci	1.58E-03	2.60E-04	0.00E+00	0.00E+00
SN113	Ci	3.16E-04	4.01E-04	6.34E-05	0.00E+00
SB122	Ci	1.12E-03	2.31E-03	0.00E+00	0.00E+00
AG108m	Ci	2.38E-04	1.43E-04	2.27E-05	1.24E-04
SB126	Ci	0.00E+00	4.57E-04	0.00E+00	0.00E+00
SN117m	Ci	0.00E+00	5.42E-05	0.00E+00	0.00E+00
	Ci				
	Ci				
XE-133	Ci	3.27E-03	8.47E-05	4.45E-03	1.54E-04
XE-135	Ci	4.59E-06	0.00E+00	1.03E-06	0.00E+00
KR85	Ci	0.00E+00	1.83E-05	9.45E-07	0.00E+00
XE131m	Ci	0.00E+00	0.00E+00	3.53E-05	0.00E+00
XE133m	Ci	7.70E-06	0.00E+00	2.90E-05	0.00E+00

1996 EFFLUENT AND WASTE DISPOSAL ANNUAL REPORT
LIQUID EFFLUENTS-SUMMATION OF ALL RELEASES

CONTINUOUS

		Units	1st Quarter	2nd Quarter	3rd Quarter	4th Quarter	Est. Total Error,%
A.	FISSION AND ACTIVATION PRODUCTS						
1.	Total Release	Ci	2.74E-02	4.24E-02	6.47E-02	2.68E-01	17.2
2.	Average diluted concentration during period	uCi/ml	3.69E-11	6.53E-11	7.00E-11	3.18E-10	
3.	Percent of applicable limit	%	4.90E-04	5.93E-04	3.02E-03	9.08E-03	
B.	TRITIUM						
1.	Total Release	Ci	2.79E+00	4.68E+00	5.47E+00	1.47E+01	10.4
2.	Average diluted concentration during period	uCi/ml	3.75E-09	7.20E-09	5.92E-09	1.73E-08	
3.	Percent of applicable limit	%	3.75E-04	7.20E-04	5.92E-04	1.73E-03	
C.	DISSOLVED AND ENTRAINED GASES						
1.	Total Release	Ci	1.01E-03	8.08E-04	1.16E-03	0.00E+00	26.7
2.	Average diluted concentration during period	uCi/ml	1.36E-12	1.24E-12	1.26E-12	0.00E+00	
3.	Percent of applicable limit	%	6.81E-07	6.22E-07	6.28E-07	0.00E+00	
D.	Gross Alpha Radioactivity Total Release	Ci	<1.54E-02	<1.46E-02	<1.54E-02	<1.42E-02	N/A
E.	Volume of Waste Released	Liters	1.70E+08	1.61E+08	1.77E+08	1.65E+08	2.00
F.	Volume of Dilution Water used During Period	Liters	7.43E+11	6.50E+11	9.24E+11	8.45E+11	3.48

1996 EFFLUENT AND WASTE DISPOSAL ANNUAL REPORT
LIQUID EFFLUENTS-SUMMATION OF ALL RELEASES

BATCH

		Units	1st Quarter	2nd Quarter	3rd Quarter	4th Quarter	Est. Total Error,%
A.	FISSION AND ACTIVATION PRODUCTS						
1.	Total Release	Ci	1.88E-01	3.47E-01	7.47E-02	5.00E-02	12.0
2.	Average diluted concentration during period	uCi/ml	1.41E-08	3.87E-08	3.48E-09	4.80E-09	
3.	Percent of applicable limit	%	1.99E-01	4.12E-01	4.12E-02	8.62E-02	
B.	TRITIUM						
1.	Total Release	Ci	3.37E+02	1.26E+02	3.29E+02	1.87E+02	10.1
2.	Average diluted concentration during period	uCi/ml	2.52E-05	1.41E-05	1.53E-05	1.80E-05	
3.	Percent of applicable limit	%	2.52E+00	1.41E+00	1.53E+00	1.80E+00	
C.	DISSOLVED AND ENTRAINED GASES						
1.	Total Release	Ci	3.28E-03	1.03E-04	4.52E-03	1.54E-04	13.3
2.	Average diluted concentration during period	uCi/ml	2.46E-10	1.15E-11	2.11E-10	1.47E-11	
3.	Percent of applicable limit	%	1.23E-04	5.74E-06	1.05E-04	7.37E-06	
D.	Gross Alpha Radioactivity Total Release	Ci	<8.50E-05	<1.10E-04	<1.66E-04	<8.99E-05	N/A
E.	Volume of Waste Released	Liters	1.38E+06	1.00E+06	1.90E+06	1.05E+06	2.00
F.	Volume of Dilution Water used During Period	Liters	1.34E+10	8.97E+09	2.15E+10	1.04E+10	3.48

1996 EFFLUENT AND WASTE DISPOSAL ANNUAL REPORT

SOLID WASTE AND IRRADIATED FUEL SHIPMENTS

Solid Waste Shipped Offsite for Burial or Disposal

1. Type of Waste	Unit	Estimated Amount	Estimated Total Error, %
a. Spent resins, filter sludges, evaporator bottoms, etc.	m^3 Ci		
b. Dry compressible waste, contaminated equipment, etc.	m^3 Ci	2.68E+2 1.06E+1	1.00 6.73
c. Irradiated components, control rods, etc.	m^3 Ci		
d. Other	m^3 Ci		

	2. Estimate of Principle Radionuclide Composition			
a.	Cs-137	%		%
	Cs-134	%		%
	Co-58	%		%
	Co-60	%		%
b.	Cs-137	10.8 %	Fe-55	46.6 %
	Cs-134	1.30 %	H-3	1.40 %
	Co-60	10.5 %	Ni-63	21.6 %
	C-14	2.50 %	Pu-241	1.30 %
	Sr-90	1.00 %	I-129	1.00 %

3. Solid Waste Disposition		
No. of Shipments	Mode of Transportation	Destination
26	Truck	Barnwell, SC

4. Type of Containers Used for Shipment

Containers used are strong, tight metal boxes and metal drums.

5. Solidification Agent

There were no solidifications done during this report period.

1996 EFFLUENT AND WASTE DISPOSAL ANNUAL REPORT

YEARLY RELEASE RATES

Gases		
Fission and Activation Gases	Total Release	9.11E+1 Ci
	Average Release Rate	2.88E+0 μCi/sec
	% of Applicable Limits γ β	3.70E-1 % 3.42E-1 %
Iodines	Total Iodine-131 Release	3.13E-3 Ci
	Average Release Rate	9.91E-5 μCi/sec
	% of Applicable Limit	2.20E+0 %
Particulates	Total Release	1.48E-2 Ci
	Average Release Rate	4.68E-4 μCi/sec
	% of Applicable Limit	2.20E+0 %
Liquid		
Fission and Activation Products	Total Release	1.06E+0 Ci
	Average Diluted Concentration	1.96E-8 μCi/ml
	% of Applicable Limits Organ Total Body	1.76E+0 % 4.14E+0 %

The following distances were used in the calculation of the maximum individual doses:

Sector	Direction	Boundary (Meters)	Nearest Residence (Meters)
A	N	651	659
B	NNE	617	660
C	NE	789	943
D	ENE	1497	1747
E	E	1274	1716
F	ESE	972	1643
G	SE	629	1136
H	SSE	594	1507
J	S	594	1026
K	SSW	629	942

Release Number	Start/Stop date	Start/Stop Time	Xe131m	Xe133	Xe135	Ar41	Xe133m	Kr85	I132	I131	I133	H3	Co58	Co60
*G-96-1	21 Feb - 21 Feb	0215 - 0256		4.26E-04				6.71E-01				3.07E-05		
*G-96-2	25 Feb - 25 Feb	0128 - 0222						5.03E-01				1.73E-05		
G-96-3	24 Mar - 24 Mar	2100 - 2243		1.92E-01	1.50E-03	1.47E-02	2.45E-03	1.05E-01		1.09E-06	1.17E-06	6.14E-02		1.08E-05
*G-96-4	25 Mar - 25 Mar	0254 - 0340		6.36E-05				9.77E-01				2.85E-05		
#G-96-5	30 Mar - 30 Mar	0534 - 1036	2.85E-03	1.23E-01			1.05E-03	9.27E-02	1.06E-07	1.44E-07		8.15E-04		
#G-96-6	13 Apr - 14 Apr	1954 - 0836	2.92E-03	5.10E-02	1.74E-03	1.36E-04	*Kr88 1.22E-04*	1.54E-01	*Kr85m 1.06E-04*	4.47E-08		1.78E-03	5.93E-08	
*G-96-7	4 May - 4 May	1240 - 1320		4.87E-05				1.12E+00				3.78E-05		
*G-96-8	8 May - 8 May	1525 - 1600	6.59E-04	1.63E-02	5.29E-05			8.89E-01				3.68E-05		
*G-96-9	4 Jul - 4 Jul	1405 - 1433						4.87E-01				2.74E-05		
*G-96-10	19 Jul - 19 Jul	0201 - 0241						5.91E-01				5.64E-05		
*G-96-11	27 Aug - 27 Aug	0000 - 0040						8.65E-01				1.93E-04	*Cs137 1.48E-07*	
G-96-12	24 Sep - 24 Sep	1642 - 1825	2.57E-02	6.91E-01	4.49E-03	*I130 1.39E-06*	7.16E-03	1.25E+00	9.37E-06	7.58E-05	3.25E-05	3.72E-01		
*G-96-14	1 Oct -1 Oct	1435 - 1519						7.45E-01				1.81E-04		
*G-96-15	2 Oct -2 Oct	1239 - 1320						6.24E-01				1.19E-02		
*G-96-16	18 Oct -18 Oct	2137 - 2226						6.46E-01				3.42E-05		
*G-96-17	26 Oct - 27 Oct	2332 - 0011		1.41E-03				5.09E-01				4.03E-06		
*G-96-18	15 Nov - 16 Nov	2322 - 0005	3.58E-04	1.52E-03	1.73E-05			1.84E-01				2.30E-05		
*G-96-19	12 Dec - 12 Dec	0130 - 0209		1.84E-04				5.81E-01				3.29E-05		
*G-96-20	15 Dec - 15 Dec	1731 - 1805		5.56E-05				8.73E-01				7.17E-05		
	* Gas Decay Tank		# Chemical Volume Control System Holdup Tank											

Release Number	Start/Stop Date	Start/Stop Time	Xe131m	Xe133	Xe135	Ar41	Xe133m	Kr85	Kr85m
1-CPR-96-1	2 Jan - 2 Jan	0300 - 0318		6.68E-03	2.61E-03	1.89E-02			9.35E-05
1-CPR-96-2	3 Jan - 3 Jan	0130 - 0145		5.69E-03	2.22E-03	1.61E-02			7.96E-05
1-CPR-96-3	6 Jan - 6 Jan	1226 - 1245		5.07E-03	1.98E-03	1.44E-02			7.09E-05
1-CPR-96-4	7 Jan - 7 Jan	0835 - 0850		3.15E-03	1.23E-03	8.92E-03			4.40E-05
1-CPR-96-5	8 Jan - 8 Jan	0437 - 0452		5.71E-03	2.23E-03	1.62E-02			7.98E-05
1-CPR-96-6	8 Jan - 8 Jan	1625 - 1641		5.28E-03	2.06E-03	1.50E-02			7.39E-05
1-CPR-96-7	9 Jan - 9 Jan	0605 - 0620		6.16E-03	2.41E-03	1.75E-02			8.62E-05
1-CPR-96-8	11 Jan - 11 Jan	0116 - 0132		6.56E-03	2.56E-03	1.86E-02			9.18E-05
1-CPR-96-9	11 Jan - 11 Jan	1226 - 1246		7.36E-03	2.87E-03	2.09E-02			1.03E-04
1-CPR-96-10	12 Jan - 12 Jan	1928 - 1942		4.09E-03	1.60E-03	1.16E-02			5.72E-05
1-CPR-96-11	13 Jan - 13 Jan	2255 - 2309		5.25E-03	2.05E-03	1.49E-02			7.35E-05
1-CPR-96-12	16 Jan - 16 Jan	0019 - 0034		4.46E-03	1.74E-03	1.26E-02			6.24E-05
1-CPR-96-13	16 Jan - 16 Jan	1116 - 1131		4.89E-03	1.91E-03	1.39E-02			6.85E-05
1-CPR-96-14	17 Jan - 17 Jan	1155 - 1214		7.39E-03	2.88E-03	2.09E-02			1.03E-04
1-CPR-96-15	18 Jan - 18 Jan	0223 - 0239		6.08E-03	2.37E-03	1.72E-02			8.51E-05
1-CPR-96-16	18 Jan - 18 Jan	1225 - 1240		5.19E-03	2.03E-03	1.47E-02			7.26E-05
1-CPR-96-17	21 Jan - 21 Jan	0800 - 0903		2.05E-02	8.00E-03	5.81E-02			2.87E-04
1-CPR-96-18	22 Jan - 22 Jan	0531 - 0549		7.34E-03	2.87E-03	2.08E-02			1.03E-04
1-CPR-96-19	23 Jan - 23 Jan	0420 - 0438		6.63E-03	2.59E-03	1.88E-02			9.27E-05
1-CPR-96-20	23 Jan - 23 Jan	1425 - 1441		6.38E-03	2.49E-03	1.81E-02			8.93E-05
1-CPR-96-21	23 Jan - 23 Jan	2200 - 2221		8.10E-03	3.16E-03	2.30E-02			1.13E-04
1-CPR-96-22	26 Jan - 26 Jan	1202 - 1223		7.03E-03	2.74E-03	1.99E-02			9.83E-05
1-CPR-96-23	26 Jan - 26 Jan	1829 - 1846		6.33E-03	2.47E-03	1.80E-02			8.86E-05
1-CPR-96-24	29 Jan - 29 Jan	0136 - 0154		6.65E-03	2.60E-03	1.89E-02			9.30E-05
1-CPR-96-25	29 Jan - 29 Jan	0723 - 0739		5.85E-03	2.28E-03	1.66E-02			8.18E-05
1-CPR-96-26	1 Feb - 1 Feb	1355 - 1413		9.19E-03	3.59E-03	2.61E-02			1.29E-04
1-CPR-96-27	3 Feb - 3 Feb	1622 - 1636		5.95E-03	2.32E-03	1.69E-02			8.32E-05
1-CPR-96-28	4 Feb - 4 Feb	2143 - 2157		5.38E-03	2.10E-03	1.52E-02			7.52E-05
1-CPR-96-29	5 Feb - 5 Feb	0800 - 0816		4.64E-03	1.81E-03	1.32E-02			6.49E-05
1-CPR-96-30	6 Feb - 6 Feb	1506 - 1526		6.68E-03	2.61E-03	1.89E-02			9.34E-05
1-CPR-96-31	7 Feb - 7 Feb	0259 - 0321		7.78E-03	3.04E-03	2.21E-02			1.09E-04
1-CPR-96-32	7 Feb - 7 Feb	2157 - 2219		8.75E-03	3.41E-03	2.48E-02			1.22E-04
1-CPR-96-33	9 Feb - 9 Feb	2025 - 2041		6.60E-03	2.58E-03	1.87E-02			9.24E-05
1-CPR-96-34	10 Feb - 10 Feb	0808 - 0830		7.52E-03	2.94E-03	2.13E-02			1.05E-04
1-CPR-96-35	13 Feb - 13 Feb	0505 - 0526		5.14E-03	2.01E-03	1.46E-02			7.19E-05

Release Number	Start/Stop Date	Start/Stop Time	Xe131m	Xe133	Xe135	Ar41	Xe133m	Kr85	Kr85m
1-CPR-96-36	13 Feb - 13 Feb	1437 - 1454		4.91E-03	1.92E-03	1.39E-02			6.87E-05
1-CPR-96-37	16 Feb - 16 Feb	1705 - 1720		5.19E-03	2.03E-03	1.47E-02			7.26E-05
1-CPR-96-38	17 Feb - 17 Feb	0323 - 0340		6.29E-03	2.46E-03	1.78E-02			8.80E-05
1-CPR-96-39	18 Feb - 18 Feb	1251 - 1310		7.01E-03	2.74E-03	1.99E-02			9.80E-05
1-CPR-96-40	19 Feb - 19 Feb	1522 - 1539		7.40E-03	2.89E-03	2.10E-02			1.04E-04
1-CPR-96-41	22 Feb - 22 Feb	0323 - 0350		9.69E-03	3.78E-03	2.75E-02			1.35E-04
1-CPR-96-42	23 Feb - 23 Feb	0307 - 0325		7.02E-03	2.74E-03	1.99E-02			9.83E-05
1-CPR-96-43	23 Feb - 23 Feb	1048 - 1105		5.94E-03	2.32E-03	1.68E-02			8.30E-05
1-CPR-96-44	25 Feb - 25 Feb	1020 - 1035		5.87E-03	2.29E-03	1.66E-02			8.21E-05
1-CPR-96-45	26 Feb - 26 Feb	0235 - 0254		9.04E-03	3.53E-03	2.56E-02			1.26E-04
1-CPR-96-46	27 Feb - 27 Feb	0003 - 0022		7.05E-03	2.75E-03	2.00E-02			9.86E-05
1-CPR-96-47	29 Feb - 29 Feb	1623 - 1638		5.91E-03	2.31E-03	1.68E-02			8.27E-05
1-CPR-96-48	1 Mar - 1 Mar	0528 - 0544		5.18E-03	2.02E-03	1.47E-02			7.25E-05
1-CPR-96-49	1 Mar - 1 Mar	1535 - 1551		6.94E-03	2.71E-03	1.97E-02			9.71E-05
1-CPR-96-50	2 Mar - 2 Mar	1425 - 1440		5.20E-03	2.03E-03	1.47E-02			7.28E-05
1-CPR-96-51	4 Mar - 4 Mar	1647 - 1710		9.25E-03	3.61E-03	2.62E-02			1.29E-04
1-CPR-96-52	5 Mar - 5 Mar	0430 - 0447		8.80E-03	3.44E-03	2.50E-02			1.23E-04
1-CPR-96-53	8 Mar - 8 Mar	1644 - 1702		5.96E-03	2.33E-03	1.69E-02			8.34E-05
1-CPR-96-54	10 Mar - 10 Mar	2248 - 2303		5.95E-03	2.32E-03	1.69E-02			8.32E-05
1-CPR-96-55	11 Mar - 11 Mar	1436 - 1453		5.08E-03	1.98E-03	1.44E-02			7.10E-05
1-CPR-96-56	12 Mar - 12 Mar	0250 - 0308		7.61E-03	2.97E-03	2.16E-02			1.06E-04
1-CPR-96-57	12 Mar - 12 Mar	1852 - 1910		7.62E-03	2.97E-03	2.16E-02			1.07E-04
1-CPR-96-58	13 Mar - 13 Mar	1329 - 1350		9.37E-03	3.66E-03	2.66E-02			1.31E-04
1-CPR-96-59	14 Mar - 14 Mar	2047 - 2102		6.40E-03	2.50E-03	1.81E-02			8.95E-05
1-CPR-96-60	16 Mar - 16 Mar	1451 - 1512		1.04E-02	4.06E-03	2.95E-02			1.45E-04
1-CPR-96-61	17 Mar - 17 Mar	1343 - 1357		6.60E-03	2.58E-03	1.87E-02			9.24E-05
1-CPR-96-62	18 Mar - 18 Mar	2326 - 2342		7.10E-03	2.77E-03	2.01E-02			9.94E-05
1-CPR-96-63	22 Mar - 22 Mar	0347 - 0406		7.85E-03	3.07E-03	2.23E-02			1.10E-04
1-CPR-96-64	24 Mar - 24 Mar	0152 - 0213		1.05E-02	4.10E-03	2.98E-02			1.47E-04
1-CPR-96-65	24 Mar - 24 Mar	1304 - 1331		1.03E-02	4.02E-03	2.92E-02			1.44E-04
1-CPR-96-66	25 Mar - 25 Mar	0600 - 0623		1.02E-02	3.98E-03	2.89E-02			1.42E-04
1-CPR-96-67	28 Mar - 28 Mar	1214 - 1231		8.03E-03	3.13E-03	2.28E-02			1.12E-04
1-CPR-96-68	30 Mar - 30 Mar	0230 - 0252		1.04E-02	4.06E-03	2.95E-02			1.46E-04
1-CPR-96-69	30 Mar - 30 Mar	2116 - 2134		8.91E-03	3.48E-03	2.53E-02			1.25E-04
1-CPR-96-70	2 Apr - 2 Apr	0546 - 0605		1.98E-02	1.35E-03	1.45E-02			3.57E-05

Release Number	Start/Stop Date	Start/Stop Time	Xe131m	Xe133	Xe135	Ar41	Xe133m	Kr85	Kr85m
1-CPR-96-71	2 Apr - 2 Apr	1344 - 1405		2.29E-02	1.56E-03	1.67E-02			4.12E-05
1-CPR-96-72	3 Apr - 3 Apr	1052 - 1115		2.16E-02	1.48E-03	1.58E-02			3.89E-05
1-CPR-96-73	5 Apr - 5 Apr	2304 - 2317		1.28E-02	8.75E-04	9.37E-03			2.31E-05
1-CPR-96-74	6 Apr - 6 Apr	1608 - 1622		1.29E-02	8.81E-04	9.44E-03			2.33E-05
1-CPR-96-75	8 Apr - 8 Apr	1428 - 1442		1.31E-02	8.93E-04	9.57E-03			2.36E-05
1-CPR-96-76	10 Apr - 10 Apr	1357 - 1420		2.41E-02	1.65E-03	1.76E-02			4.35E-05
1-CPR-96-77	11 Apr - 11 Apr	1131 - 1146		1.81E-02	1.23E-03	1.32E-02			3.25E-05
1-CPR-96-78	12 Apr - 12 Apr	0300 - 0315		1.64E-02	1.12E-03	1.20E-02			2.95E-05
1-CPR-96-79	12 Apr - 12 Apr	1741 - 1757		2.01E-02	1.38E-03	1.47E-02			3.63E-05
1-CPR-96-80	14 Apr - 14 Apr	2209 - 2229		4.57E-02	3.12E-03	3.34E-02			8.23E-05
1-CPR-96-81	15 Apr - 15 Apr	0536 - 0558		4.07E-02	2.78E-03	2.98E-02			7.33E-05
1-CPR-96-82	17 Apr - 17 Apr	1531 - 1549		3.41E-02	2.33E-03	2.49E-02			6.14E-05
1-CPR-96-83	18 Apr - 18 Apr	0538 - 0556		3.73E-02	2.55E-03	2.73E-02			6.72E-05
1-CPR-96-84	18 Apr - 18 Apr	1537 - 1558		4.17E-02	2.85E-03	3.05E-02			7.51E-05
1-CPR-96-85	19 Apr - 19 Apr	1625 - 1643		3.48E-02	2.37E-03	2.54E-02			6.26E-05
1-CPR-96-86	20 Apr - 20 Apr	0142 - 0204		4.28E-02	2.92E-03	3.13E-02			7.71E-05
1-CPR-96-87	22 Apr - 22 Apr	0637 - 0651		3.09E-02	2.11E-03	2.26E-02			5.57E-05
1-CPR-96-88	24 Apr - 24 Apr	0435 - 0455		4.02E-02	2.74E-03	2.94E-02			7.24E-05
1-CPR-96-89	24 Apr - 24 Apr	1615 - 1637		5.13E-02	3.50E-03	3.75E-02			9.24E-05
1-CPR-96-90	25 Apr - 25 Apr	0221 - 0241		4.79E-02	3.27E-03	3.50E-02			8.63E-05
1-CPR-96-91	25 Apr - 25 Apr	1030 - 1050		4.62E-02	3.15E-03	3.38E-02			8.32E-05
1-CPR-96-92	28 Apr - 28 Apr	1225 - 1304		4.18E-02	2.85E-03	3.06E-02			7.53E-05
1-CPR-96-93	29 Apr - 29 Apr	0110 - 0129		3.04E-02	2.08E-03	2.22E-02			5.48E-05
1-CPR-96-94	29 Apr - 29 Apr	1144 - 1203		2.59E-02	1.77E-03	1.90E-02			4.67E-05
1-CPR-96-95	30 Apr - 30 Apr	0325 - 0343		3.35E-02	2.29E-03	2.45E-02			6.04E-05
1-CPR-96-96	2 May - 2 May	1738 - 1759		2.78E-02	1.90E-03	2.03E-02			5.01E-05
1-CPR-96-97	4 May - 4 May	0128 - 0151		4.27E-02	2.91E-03	3.12E-02			7.69E-05
1-CPR-96-98	5 May - 5 May	1513 - 1530		2.67E-02	1.82E-03	1.95E-02			4.81E-05
1-CPR-96-99	7 May - 7 May	0406 - 0423		2.50E-02	1.70E-03	1.83E-02			4.50E-05
1-CPR-96-100	7 May - 7 May	1911 - 1933		3.63E-02	2.48E-03	2.66E-02			6.54E-05
1-CPR-96-101	8 May - 8 May	1641 - 1658		1.96E-02	1.34E-03	1.44E-02			3.54E-05
1-CPR-96-102	9 May - 9 May	1658 - 1717		2.27E-02	1.55E-03	1.66E-02			4.09E-05
1-CPR-96-103	12 May - 12 May	0147 - 0206		2.24E-02	1.53E-03	1.64E-02			4.03E-05
1-CPR-96-104	13 May - 13 May	0433 - 0450		2.18E-02	1.49E-03	1.59E-02			3.93E-05
1-CPR-96-105	14 May - 14 May	1349 - 1410		2.78E-02	1.90E-03	2.03E-02			5.00E-05

Release Number	Start/Stop Date	Start/Stop Time	Xe131m	Xe133	Xe135	Ar41	Xe133m	Kr85	Kr85m
1-CPR-96-106	15 May - 15 May	0446 - 0506		2.97E-02	2.03E-03	2.17E-02			5.35E-05
1-CPR-96-107	16 May - 16 May	1357 - 1418		2.45E-02	1.68E-03	1.79E-02			4.42E-05
1-CPR-96-108	17 May - 17 May	1312 - 1330		2.29E-02	1.56E-03	1.67E-02			4.13E-05
1-CPR-96-109	18 May - 18 May	1320 - 1340		2.62E-02	1.79E-03	1.92E-02			4.72E-05
1-CPR-96-110	19 May - 19 May	0238 - 0255		2.10E-02	1.43E-03	1.53E-02			3.78E-05
1-CPR-96-111	19 May - 19 May	1600 - 1621		2.67E-02	1.82E-03	1.95E-02			4.81E-05
1-CPR-96-112	20 May - 20 May	1325 - 1347		2.07E-02	1.41E-03	1.51E-02			3.72E-05
1-CPR-96-113	22 May - 22 May	1500 - 1519		2.03E-02	1.39E-03	1.49E-02			3.66E-05
1-CPR-96-114	25 May - 25 May	1458 - 1520		2.70E-02	1.84E-03	1.98E-02			4.87E-05
1-CPR-96-115	26 May - 26 May	0959 - 1027		3.22E-02	2.20E-03	2.35E-02			5.80E-05
1-CPR-96-116	28 May - 28 May	0200 - 0224		2.32E-02	1.58E-03	1.70E-02			4.18E-05
1-CPR-96-117	30 May - 30 May	1641 - 1658		1.21E-02	8.23E-04	8.82E-03			2.17E-05
1-CPR-96-118	31 May - 31 May	1450 - 1510		2.39E-02	1.63E-03	1.75E-02			4.30E-05
1-CPR-96-119	1 Jun - 1 Jun	1147 - 1206		1.71E-02	1.17E-03	1.25E-02			3.08E-05
1-CPR-96-120	2 Jun - 2 Jun	0245 - 0302		1.31E-02	8.92E-04	9.56E-03			2.35E-05
1-CPR-96-121	3 Jun - 3 Jun	0444 - 0505		2.39E-02	1.63E-03	1.75E-02			4.31E-05
1-CPR-96-122	5 Jun - 5 Jun	1706 - 1732		2.57E-02	1.76E-03	1.88E-02			4.63E-05
1-CPR-96-123	6 Jun - 6 Jun	1835 - 1855		1.79E-02	1.22E-03	1.31E-02			3.23E-05
1-CPR-96-124	9 Jun - 9 Jun	0019 - 0038		1.96E-02	1.34E-03	1.43E-02			3.53E-05
1-CPR-96-125	9 Jun - 9 Jun	1423 - 1438		1.75E-02	1.19E-03	1.28E-02			3.15E-05
1-CPR-96-126	10 Jun - 10 Jun	1748 - 1812		3.59E-02	2.45E-03	2.63E-02			6.48E-05
1-CPR-96-127	12 Jun - 12 Jun	0214 - 0231		2.25E-02	1.54E-03	1.64E-02			4.05E-05
1-CPR-96-128	13 Jun - 13 Jun	1518 - 1534		1.93E-02	1.32E-03	1.41E-02			3.48E-05
1-CPR-96-129	14 Jun - 14 Jun	2003 - 2021		2.05E-02	1.40E-03	1.50E-02			3.69E-05
1-CPR-96-130	16 Jun - 16 Jun	0323 - 0340		2.92E-02	1.99E-03	2.13E-02			5.25E-05
1-CPR-96-131	17 Jun - 17 Jun	0320 - 0344		3.24E-02	2.21E-03	2.37E-02			5.84E-05
1-CPR-96-132	17 Jun - 17 Jun	1858 - 1916		2.43E-02	1.66E-03	1.78E-02			4.37E-05
1-CPR-96-133	18 Jun - 18 Jun	1352 - 1410		1.57E-02	1.07E-03	1.15E-02			2.82E-05
1-CPR-96-134	20 Jun - 20 Jun	1917 - 1933		2.09E-02	1.43E-03	1.53E-02			3.77E-05
1-CPR-96-135	21 Jun - 21 Jun	1610 - 1628		1.98E-02	1.36E-03	1.45E-02			3.58E-05
1-CPR-96-136	23 Jun - 23 Jun	1810 - 1830		2.14E-02	1.46E-03	1.56E-02			3.85E-05
1-CPR-96-137	26 Jun - 26 Jun	2010 - 2033		1.81E-02	1.23E-03	1.32E-02			3.26E-05
1-CPR-96-138	27 Jun - 27 Jun	1804 - 1822		2.02E-02	1.38E-03	1.48E-02			3.65E-05
1-CPR-96-139	29 Jun - 29 Jun	0435 - 0458		2.55E-02	1.74E-03	1.87E-02			4.60E-05
1-CPR-96-140	29 Jun - 29 Jun	2035 - 2106		3.16E-02	2.16E-03	2.31E-02			5.69E-05

Release Number	Start/Stop Date	Start/Stop Time	Xe131m	Xe133	Xe135	Ar41	Xe133m	Kr85	Kr85m
1-CPR-96-141	1 Jul - 1 Jul	1412 - 1430	6.60E-04	2.29E-02	1.73E-04	1.01E-03	1.26E-04	6.55E-03	3.14E-06
1-CPR-96-142	2 Jul - 2 Jul	0605 - 0622	7.67E-04	2.66E-02	2.01E-04	1.17E-03	1.46E-04	7.61E-03	3.65E-06
1-CPR-96-143	5 Jul - 5 Jul	0220 - 0239	9.42E-04	3.27E-02	2.47E-04	1.43E-03	1.79E-04	9.34E-03	4.48E-06
1-CPR-96-144	6 Jul - 6 Jul	0208 - 0229	1.05E-03	3.64E-02	2.75E-04	1.60E-03	2.00E-04	1.04E-02	4.99E-06
1-CPR-96-145	6 Jul - 6 Jul	1826 - 1846	7.83E-04	2.72E-02	2.05E-04	1.19E-03	1.49E-04	7.77E-03	3.73E-06
1-CPR-96-146	7 Jul - 7 Jul	0807 - 0830	9.54E-04	3.31E-02	2.50E-04	1.45E-03	1.82E-04	9.46E-03	4.54E-06
1-CPR-96-147	8 Jul - 8 Jul	1339 - 1400	8.79E-04	3.05E-02	2.30E-04	1.34E-03	1.67E-04	8.72E-03	4.19E-06
1-CPR-96-148	11 Jul - 11 Jul	1500 - 1535	1.52E-03	5.28E-02	3.98E-04	2.32E-03	2.90E-04	1.51E-02	7.24E-06
1-CPR-96-149	12 Jul - 12 Jul	1627 - 1751	2.61E-03	9.06E-02	6.84E-04	3.98E-03	4.97E-04	2.59E-02	1.24E-05
1-CPR-96-150	13 Jul - 13 Jul	1545 - 1605	7.80E-04	2.71E-02	2.04E-04	1.19E-03	1.49E-04	7.74E-03	3.72E-06
1-CPR-96-151	14 Jul - 14 Jul	1530 - 1624	2.16E-03	7.48E-02	5.64E-04	3.28E-03	4.11E-04	2.14E-02	1.03E-05
1-CPR-96-152	17 Jul - 17 Jul	1450 - 1509	6.83E-04	2.37E-02	1.79E-04	1.04E-03	1.30E-04	6.77E-03	3.25E-06
1-CPR-96-153	18 Jul - 18 Jul	0348 - 0406	6.65E-04	2.31E-02	1.74E-04	1.01E-03	1.27E-04	6.59E-03	3.17E-06
1-CPR-96-154	18 Jul - 18 Jul	1912 - 1932	6.69E-04	2.32E-02	1.75E-04	1.02E-03	1.27E-04	6.63E-03	3.18E-06
1-CPR-96-155	20 Jul - 20 Jul	1917 - 1933	5.73E-04	1.99E-02	1.50E-04	8.73E-04	1.09E-04	5.68E-03	2.73E-06
1-CPR-96-156	22 Jul - 22 Jul	2041 - 2100	7.68E-04	2.66E-02	2.01E-04	1.17E-03	1.46E-04	7.61E-03	3.66E-06
1-CPR-96-157	23 Jul - 23 Jul	1704 - 1720	8.27E-04	2.87E-02	2.16E-04	1.26E-03	1.57E-04	8.20E-03	3.94E-06
1-CPR-96-158	24 Jul - 24 Jul	1625 - 1642	6.58E-04	2.28E-02	1.72E-04	1.00E-03	1.25E-04	6.52E-03	3.13E-06
1-CPR-96-159	28 Jul - 28 Jul	0444 - 0500	7.14E-04	2.48E-02	1.87E-04	1.09E-03	1.36E-04	7.08E-03	3.40E-06
1-CPR-96-160	29 Jul - 29 Jul	0338 - 0353	7.93E-04	2.75E-02	2.08E-04	1.21E-03	1.51E-04	7.86E-03	3.77E-06
1-CPR-96-161	30 Jul - 30 Jul	0731 - 0746	4.53E-04	1.57E-02	1.19E-04	6.90E-04	8.63E-05	4.49E-03	2.16E-06
1-CPR-96-162	2 Aug - 2 Aug	0454 - 0510	8.73E-04	3.03E-02	2.29E-04	1.33E-03	1.66E-04	8.66E-03	4.16E-06
1-CPR-96-163	4 Aug - 4 Aug	0959 - 1019	9.15E-04	3.18E-02	2.40E-04	1.39E-03	1.74E-04	9.08E-03	4.36E-06
1-CPR-96-164	5 Aug - 5 Aug	1820 - 1835	6.34E-04	2.20E-02	1.66E-04	9.66E-04	1.21E-04	6.29E-03	3.02E-06
1-CPR-96-165	7 Aug - 7 Aug	0430 - 0448	8.16E-04	2.83E-02	2.14E-04	1.24E-03	1.55E-04	8.10E-03	3.89E-06
1-CPR-96-166	12 Aug - 12 Aug	1342 - 1359	5.75E-04	2.00E-02	1.50E-04	8.76E-04	1.09E-04	5.70E-03	2.74E-06
1-CPR-96-167	13 Aug - 13 Aug	1954 - 2012	6.33E-04	2.20E-02	1.66E-04	9.65E-04	1.21E-04	6.28E-03	3.01E-06
1-CPR-96-168	14 Aug - 14 Aug	1225 - 1243	5.74E-04	1.99E-02	1.50E-04	8.75E-04	1.09E-04	5.70E-03	2.74E-06
1-CPR-96-169	17 Aug - 17 Aug	1528 - 1544	4.41E-04	1.53E-02	1.16E-04	6.72E-04	8.41E-05	4.38E-03	2.10E-06
1-CPR-96-170	19 Aug - 19 Aug	1429 - 1446	4.78E-04	1.66E-02	1.25E-04	7.28E-04	9.10E-05	4.74E-03	2.27E-06
1-CPR-96-171	21 Aug - 21 Aug	1808 - 1826	5.29E-04	1.84E-02	1.38E-04	8.06E-04	1.01E-04	5.24E-03	2.52E-06
1-CPR-96-172	25 Aug - 25 Aug	1405 - 1422	3.28E-04	1.14E-02	8.60E-05	5.00E-04	6.26E-05	3.26E-03	1.56E-06
1-CPR-96-173	26 Aug - 26 Aug	1138 - 1155	5.35E-04	1.86E-02	1.40E-04	8.15E-04	1.02E-04	5.31E-03	2.55E-06
1-CPR-96-174	28 Aug - 28 Aug	2046 - 2105	6.18E-04	2.14E-02	1.62E-04	9.41E-04	1.18E-04	6.13E-03	2.94E-06
1-CPR-96-175	30 Aug - 30 Aug	1909 - 1924	5.47E-04	1.90E-02	1.43E-04	8.34E-04	1.04E-04	5.43E-03	2.61E-06

Release Number	Start/Stop Date	Start/Stop Time	Xe131m	Xe133	Xe135	Ar41	Xe133m	Kr85	Kr85m
1-CPR-96-176	1 Sep - 1 Sep	1330 - 1343	2.65E-04	9.22E-03	6.95E-05	4.04E-04	5.06E-05	2.63E-03	1.26E-06
1-CPR-96-177	2 Sep - 2 Sep	1905 - 1922	4.83E-04	1.68E-02	1.27E-04	7.36E-04	9.20E-05	4.79E-03	2.30E-06
1-CPR-96-178	5 Sep - 5 Sep	1628 - 1644	3.44E-04	1.20E-02	9.01E-05	5.25E-04	6.56E-05	3.41E-03	1.64E-06
1-CPR-96-179	7 Sep - 7 Sep	0800 - 0817	4.07E-04	1.41E-02	1.07E-04	6.20E-04	7.75E-05	4.04E-03	1.94E-06
1-CPR-96-180	8 Sep - 8 Sep	0731 - 0754	7.11E-04	2.47E-02	1.86E-04	1.08E-03	1.35E-04	7.05E-03	3.39E-06
1-CPR-96-181	11 Sep - 11 Sep	0412 - 0434	5.84E-04	2.03E-02	1.53E-04	8.90E-04	1.11E-04	5.79E-03	2.78E-06
1-CPR-96-182	14 Sep - 14 Sep	1916 - 1932	5.02E-04	1.74E-02	1.32E-04	7.66E-04	9.57E-05	4.98E-03	2.39E-06
1-CPR-96-183	19 Sep - 19 Sep	1638 - 1700	8.34E-04	2.89E-02	2.18E-04	1.27E-03	1.59E-04	8.27E-03	3.97E-06
1-CPR-96-184	21 Sep - 21 Sep	0532 - 0551	6.50E-04	2.26E-02	1.70E-04	9.90E-04	1.24E-04	6.45E-03	3.09E-06
1-CPR-96-185	22 Sep - 22 Sep	1632 - 1649	3.78E-04	1.31E-02	9.90E-05	5.76E-04	7.20E-05	3.75E-03	1.80E-06
1-CPR-96-186	26 Sep - 26 Sep	1623 - 1641	5.26E-04	1.83E-02	1.38E-04	8.02E-04	1.00E-04	5.22E-03	2.51E-06
1-CPR-96-187	27 Sep - 27 Sep	0354 - 0410	5.28E-04	1.83E-02	1.38E-04	8.05E-04	1.01E-04	5.24E-03	2.52E-06
1-CPR-96-188	27 Sep - 27 Sep	2134 - 2149	5.72E-04	1.99E-02	1.50E-04	8.72E-04	1.09E-04	5.68E-03	2.73E-06
1-CPR-96-189	28 Sep - 28 Sep	1529 - 1546	9.33E-04	3.24E-02	2.44E-04	1.42E-03	1.78E-04	9.25E-03	4.44E-06
1-CPR-96-190	29 Sep - 29 Sep	2209 - 2224	1.12E-03	3.87E-02	2.92E-04	1.70E-03	2.12E-04	1.11E-02	5.31E-06
1-CPR-96-191	30 Sep - 30 Sep	1642 - 1702	1.37E-03	4.77E-02	3.60E-04	2.09E-03	2.62E-04	1.36E-02	6.54E-06
1-CPR-96-192	1 Oct - 1 Oct	0758 - 0817	1.20E-03	4.08E-02	2.40E-04	1.36E-03	1.92E-04	1.63E-02	6.01E-06
1-CPR-96-193	1 Oct - 1 Oct	1848 - 1906	1.11E-03	3.76E-02	2.22E-04	1.26E-03	1.77E-04	1.51E-02	5.55E-06
1-CPR-96 194	3 Oct - 3 Oct	1509 - 1528	1.31E-03	4.43E-02	2.61E-04	1.48E-03	2.09E-04	1.77E-02	6.53E-06
1-CPR-96-195	4 Oct - 4 Oct	1259 - 1317	1.02E-03	3.46E-02	2.04E-04	1.16E-03	1.63E-04	1.38E-02	5.10E-06
1-CPR-96-196	5 Oct - 5 Oct	0117 - 0214	3.53E-03	1.20E-01	7.05E-04	4.00E-03	5.64E-04	4.78E-02	1.76E-05
1-CPR-96-197	6 Oct - 6 Oct	0248 - 0314	1.74E-03	5.89E-02	3.47E-04	1.97E-03	2.78E-04	2.36E-02	8.68E-06
1-CPR-96-198	6 Oct - 6 Oct	1800 - 1824	1.42E-03	4.82E-02	2.84E-04	1.61E-03	2.27E-04	1.93E-02	7.11E-06
1-CPR-96-199	7 Oct - 7 Oct	1505 - 1522	8.06E-04	2.73E-02	1.61E-04	9.15E-04	1.29E-04	1.09E-02	4.03E-06
1-CPR-96-200	8 Oct - 8 Oct	0434 - 0455	1.31E-03	4.45E-02	2.62E-04	1.49E-03	2.10E-04	1.78E-02	6.56E-06
1-CPR-96-201	8 Oct - 8 Oct	2020 - 2040	1.05E-03	3.56E-02	2.10E-04	1.19E-03	1.68E-04	1.42E-02	5.24E-06
1-CPR-96-202	10 Oct - 10 Oct	0216 - 0232	1.14E-03	3.86E-02	2.27E-04	1.29E-03	1.82E-04	1.54E-02	5.69E-06
1-CPR-96-203	11 Oct - 11 Oct	1023 - 1041	1.20E-03	4.07E-02	2.40E-04	1.36E-03	1.92E-04	1.63E-02	5.99E-06
1-CPR-96-204	11 Oct - 11 Oct	2058 - 2118	1.36E-03	4.60E-02	2.71E-04	1.54E-03	2.17E-04	1.84E-02	6.78E-06
1-CPR-96-205	12 Oct - 12 Oct	1407 - 1425	8.15E-04	2.77E-02	1.63E-04	9.25E-04	1.30E-04	1.11E-02	4.08E-06
1-CPR-96-206	13 Oct - 13 Oct	0904 - 0921	1.02E-03	3.45E-02	2.04E-04	1.16E-03	1.63E-04	1.38E-02	5.09E-06
1-CPR-96-207	14 Oct - 14 Oct	1458 - 1513	7.89E-04	2.68E-02	1.58E-04	8.95E-04	1.26E-04	1.07E-02	3.94E-06
1-CPR-96-208	15 Oct - 15 Oct	0307 - 0320	7.08E-04	2.40E-02	1.42E-04	8.04E-04	1.13E-04	9.61E-03	3.54E-06
1-CPR-96-209	15 Oct - 15 Oct	1424 - 1441	8.74E-04	2.96E-02	1.75E-04	9.92E-04	1.40E-04	1.19E-02	4.37E-06
1-CPR-96-210	16 Oct - 16 Oct	0441 - 0456	6.50E-04	2.20E-02	1.30E-04	7.37E-04	1.04E-04	8.82E-03	3.25E-06

Release Number	Start/Stop Date	Start/Stop Time	Xe131m	Xe133	Xe135	Ar41	Xe133m	Kr85	Kr85m
1-CPR-96-211	16 Oct - 16 Oct	1745 - 1801	6.55E-04	2.22E-02	1.31E-04	7.44E-04	1.05E-04	8.89E-03	3.28E-06
1-CPR-96-212	17 Oct - 17 Oct	0842 - 0905	8.95E-04	3.04E-02	1.79E-04	1.02E-03	1.43E-04	1.21E-02	4.47E-06
1-CPR-96-213	18 Oct - 18 Oct	0458 - 0516	1.02E-03	3.46E-02	2.04E-04	1.16E-03	1.63E-04	1.38E-02	5.10E-06
1-CPR-96-214	19 Oct - 19 Oct	1427 - 1457	1.60E-03	5.42E-02	3.19E-04	1.81E-03	2.56E-04	2.17E-02	7.99E-06
1-CPR-96-215	20 Oct - 20 Oct	0810 - 0831	9.23E-04	3.13E-02	1.85E-04	1.05E-03	1.48E-04	1.25E-02	4.61E-06
1-CPR-96-216	21 Oct - 21 Oct	0725 - 0740	6.74E-04	2.29E-02	1.35E-04	7.65E-04	1.08E-04	9.15E-03	3.37E-06
1-CPR-96-217	21 Oct - 21 Oct	2258 - 2315	5.29E-04	1.80E-02	1.06E-04	6.01E-04	8.47E-05	7.18E-03	2.65E-06
1-CPR-96-218	22 Oct - 22 Oct	1137 - 1155	1.29E-03	4.38E-02	2.58E-04	1.47E-03	2.07E-04	1.75E-02	6.46E-06
1-CPR-96-219	22 Oct - 22 Oct	2041 - 2056	4.29E-04	1.46E-02	8.58E-05	4.87E-04	6.86E-05	5.82E-03	2.14E-06
1-CPR-96-220	23 Oct - 23 Oct	1233 - 1249	8.36E-04	2.84E-02	1.67E-04	9.49E-04	1.34E-04	1.13E-02	4.18E-06
1-CPR-96-221	25 Oct - 25 Oct	0225 - 0247	1.07E-03	3.62E-02	2.14E-04	1.21E-03	1.71E-04	1.45E-02	5.34E-06
1-CPR-96-222	25 Oct - 25 Oct	2335 - 2350	7.18E-04	2.44E-02	1.44E-04	8.15E-04	1.15E-04	9.74E-03	3.59E-06
1-CPR-96-223	26 Oct - 26 Oct	1655 - 1713	6.63E-04	2.25E-02	1.33E-04	7.53E-04	1.06E-04	9.00E-03	3.32E-06
1-CPR-96-224	26 Oct - 26 Oct	1018 - 1034	6.51E-04	2.21E-02	1.30E-04	7.38E-04	1.04E-04	8.83E-03	3.25E-06
1-CPR-96-225	28 Oct - 28 Oct	0048 - 0105	8.50E-04	2.88E-02	1.70E-04	9.65E-04	1.36E-04	1.15E-02	4.25E-06
1-CPR-96-226	28 Oct - 28 Oct	1552 - 1606	5.00E-04	1.70E-02	1.00E-04	5.68E-04	8.00E-05	6.79E-03	2.50E-06
1-CPR-96-227	29 Oct - 29 Oct	0159 - 0214	4.72E-04	1.60E-02	9.45E-05	5.36E-04	7.56E-05	6.41E-03	2.36E-06
1-CPR-96-228	29 Oct - 29 Oct	1036 - 1055	1.01E-03	3.43E-02	2.02E-04	1.15E-03	1.62E-04	1.37E-02	5.06E-06
1-CPR-96-229	29 Oct - 29 Oct	1659 - 1710	5.19E-04	1.76E-02	1.04E-04	5.89E-04	8.30E-05	7.04E-03	2.59E-06
1-CPR-96-230	30 Oct - 30 Oct	0148 - 0212	1.16E-03	3.94E-02	2.32E-04	1.32E-03	1.86E-04	1.58E-02	5.81E-06
1-CPR-96-231	1 Nov - 1 Nov	0457 - 0510	5.51E-04	1.87E-02	1.10E-04	6.26E-04	8.82E-05	7.48E-03	2.76E-06
1-CPR-96-232	1 Nov - 1 Nov	2335 - 2351	6.21E-04	2.11E-02	1.24E-04	7.05E-04	9.94E-05	8.43E-03	3.11E-06
1-CPR-96-233	3 Nov - 3 Nov	0543 - 0600	4.93E-04	1.67E-02	9.85E-05	5.59E-04	7.88E-05	6.68E-03	2.46E-06
1-CPR-96-234	4 Nov - 4 Nov	0123 - 0139	3.62E-04	1.23E-02	7.25E-05	4.11E-04	5.80E-05	4.92E-03	1.81E-06
1-CPR-96-235	4 Nov - 4 Nov	1501 - 1517	5.28E-04	1.79E-02	1.06E-04	5.99E-04	8.45E-05	7.17E-03	2.64E-06
1-CPR-96-236	5 Nov - 5 Nov	0332 - 0346	4.24E-04	1.44E-02	8.49E-05	4.82E-04	6.79E-05	5.76E-03	2.12E-06
1-CPR-96-237	5 Nov - 5 Nov	2044 - 2100	5.05E-04	1.71E-02	1.01E-04	5.73E-04	8.08E-05	6.85E-03	2.52E-06
1-CPR-96-238	6 Nov - 6 Nov	0900 - 0918	7.66E-04	2.60E-02	1.53E-04	8.70E-04	1.23E-04	1.04E-02	3.83E-06
1-CPR-96-239	6 Nov - 6 Nov	2012 - 2030	8.13E-04	2.76E-02	1.63E-04	9.23E-04	1.30E-04	1.10E-02	4.07E-06
1-CPR-96-240	7 Nov - 7 Nov	1243 - 1258	6.39E-04	2.17E-02	1.28E-04	7.26E-04	1.02E-04	8.67E-03	3.20E-06
1-CPR-96-241	8 Nov - 8 Nov	0324 - 0340	6.71E-04	2.28E-02	1.34E-04	7.62E-04	1.07E-04	9.11E-03	3.36E-06
1-CPR-96-242	9 Nov - 9 Nov	0029 - 0055	1.14E-03	3.88E-02	2.29E-04	1.30E-03	1.83E-04	1.55E-02	5.72E-06
1-CPR-96-243	10 Nov - 10 Nov	0343 - 0400	6.86E-04	2.33E-02	1.37E-04	7.79E-04	1.10E-04	9.31E-03	3.43E-06
1-CPR-96-244	11 Nov - 11 Nov	1452 - 1507	4.59E-04	1.56E-02	9.17E-05	5.20E-04	7.34E-05	6.22E-03	2.29E-06
1-CPR-96-245	12 Nov - 12 Nov	0748 - 0802	4.98E-04	1.69E-02	9.95E-05	5.65E-04	7.96E-05	6.75E-03	2.49E-06

Release Number	Start/Stop Date	Start/Stop Time	Xe131m	Xe133	Xe135	Ar41	Xe133m	Kr85	Kr85m
1-CPR-96-246	13 Nov - 13 Nov	0219 - 0236	5.45E-04	1.85E-02	1.09E-04	6.18E-04	8.72E-05	7.39E-03	2.72E-06
1-CPR-96-247	13 Nov - 14 Nov	2350 - 0007	6.01E-04	2.04E-02	1.20E-04	6.82E-04	9.62E-05	8.16E-03	3.01E-06
1-CPR-96-248	14 Nov - 14 Nov	2037 - 2052	5.72E-04	1.94E-02	1.14E-04	6.49E-04	9.15E-05	7.76E-03	2.86E-06
1-CPR-96-249	15 Nov - 15 Nov	1003 - 1018	4.51E-04	1.53E-02	9.02E-05	5.12E-04	7.22E-05	6.12E-03	2.26E-06
1-CPR-96-250	15 Nov - 15 Nov	1732 - 1749	5.15E-04	1.75E-02	1.03E-04	5.85E-04	8.24E-05	6.99E-03	2.58E-06
1-CPR-96-251	16 Nov - 16 Nov	1050 - 1105	5.05E-04	1.71E-02	1.01E-04	5.73E-04	8.08E-05	6.85E-03	2.52E-06
1-CPR-96-252	16 Nov - 16 Nov	2236 - 2309	1.39E-03	4.73E-02	2.79E-04	1.58E-03	2.23E-04	1.89E-02	6.96E-06
1-CPR-96-253	18 Nov - 18 Nov	0348 - 0405	6.32E-04	2.15E-02	1.26E-04	7.18E-04	1.01E-04	8.58E-03	3.16E-06
1-CPR-96-254	18 Nov - 18 Nov	1437 - 1459	9.02E-04	3.06E-02	1.80E-04	1.02E-03	1.44E-04	1.22E-02	4.51E-06
1-CPR-96-255	19 Nov - 19 Nov	1100 - 1118	7.86E-04	2.67E-02	1.57E-04	8.92E-04	1.26E-04	1.07E-02	3.93E-06
1-CPR-96-256	20 Nov - 20 Nov	0445 - 0502	6.18E-04	2.10E-02	1.24E-04	7.02E-04	9.89E-05	8.39E-03	3.09E-06
1-CPR-96-257	20 Nov - 20 Nov	1741 - 1755	4.69E-04	1.59E-02	9.38E-05	5.32E-04	7.50E-05	6.36E-03	2.34E-06
1-CPR-96-258	21 Nov - 21 Nov	0538 - 0553	5.04E-04	1.71E-02	1.01E-04	5.72E-04	8.07E-05	6.84E-03	2.52E-06
1-CPR-96-259	22 Nov - 22 Nov	0920 - 0934	4.72E-04	1.60E-02	9.44E-05	5.36E-04	7.55E-05	6.40E-03	2.36E-06
1-CPR-96-260	22 Nov - 22 Nov	2013 - 2030	7.07E-04	2.40E-02	1.41E-04	8.02E-04	1.13E-04	9.59E-03	3.53E-06
1-CPR-96-261	23 Nov - 23 Nov	0548 - 0602	5.45E-04	1.85E-02	1.09E-04	6.19E-04	8.72E-05	7.40E-03	2.72E-06
1-CPR-96-262	24 Nov - 24 Nov	0025 - 0043	6.47E-04	2.20E-02	1.29E-04	7.35E-04	1.04E-04	8.78E-03	3.24E-06
1-CPR-96-263	24 Nov - 24 Nov	2226 - 2247	8.03E-04	2.72E-02	1.61E-04	9.11E-04	1.28E-04	1.09E-02	4.01E-06
1-CPR-96-264	25 Nov - 25 Nov	1412 - 1428	6.65E-04	2.26E-02	1.33E-04	7.55E-04	1.06E-04	9.02E-03	3.32E-06
1-CPR-96-265	27 Nov - 27 Nov	0304 - 0319	2.40E-04	8.15E-03	4.80E-05	2.73E-04	3.84E-05	3.26E-03	1.20E-06
1-CPR-96-266	27 Nov - 27 Nov	1608 - 1621	5.59E-04	1.90E-02	1.12E-04	6.35E-04	8.95E-05	7.59E-03	2.80E-06
1-CPR-96-267	28 Nov - 28 Nov	0252 - 0310	6.83E-04	2.32E-02	1.37E-04	7.75E-04	1.09E-04	9.27E-03	3.42E-06
1-CPR-96-268	28 Nov - 28 Nov	1515 - 1534	8.87E-04	3.01E-02	1.77E-04	1.01E-03	1.42E-04	1.20E-02	4.43E-06
1-CPR-96-269	29 Nov - 29 Nov	0459 - 0522	9.47E-04	3.21E-02	1.89E-04	1.07E-03	1.51E-04	1.28E-02	4.73E-06
1-CPR-96-270	29 Nov - 29 Nov	1656 - 1711	6.44E-04	2.19E-02	1.29E-04	7.31E-04	1.03E-04	8.74E-03	3.22E-06
1-CPR-96-271	30 Nov - 30 Nov	0035 - 0105	1.37E-03	4.66E-02	2.74E-04	1.56E-03	2.20E-04	1.86E-02	6.86E-06
1-CPR-96-272	30 Nov - 30 Nov	2005 - 2020	5.56E-04	1.89E-02	1.11E-04	6.32E-04	8.90E-05	7.55E-03	2.78E-06
1-CPR-96-273	1 Dec - 1 Dec	0305 - 0318	5.17E-04	1.75E-02	1.03E-04	5.86E-04	8.26E-05	7.01E-03	2.58E-06
1-CPR-96-274	2 Dec - 2 Dec	1421 - 1434	5.95E-04	2.02E-02	1.19E-04	6.75E-04	9.52E-05	8.07E-03	2.97E-06
1-CPR-96-275	2 Dec - 3 Dec	2358 - 0015	5.69E-04	1.93E-02	1.14E-04	6.46E-04	9.10E-05	7.72E-03	2.84E-06
1-CPR-96-276	4 Dec - 4 Dec	1154 - 1213	6.28E-04	2.13E-02	1.26E-04	7.13E-04	1.00E-04	8.52E-03	3.14E-06
1-CPR-96-277	4 Dec - 4 Dec	2240 - 2254	5.79E-04	1.96E-02	1.16E-04	6.57E-04	9.26E-05	7.85E-03	2.89E-06
1-CPR-96-278	5 Dec - 5 Dec	0406 - 0420	6.12E-04	2.08E-02	1.22E-04	6.94E-04	9.79E-05	8.30E-03	3.06E-06
1-CPR-96-279	5 Dec - 5 Dec	1043 - 1103	7.14E-04	2.42E-02	1.43E-04	8.11E-04	1.14E-04	9.69E-03	3.57E-06
1-CPR-96-280	6 Dec - 6 Dec	0939 - 1005	9.31E-04	3.16E-02	1.86E-04	1.06E-03	1.49E-04	1.26E-02	4.65E-06

Release Number	Start/Stop Date	Start/Stop Time	Xe131m	Xe133	Xe135	Ar41	Xe133m	Kr85	Kr85m
1-CPR-96-281	7 Dec - 7 Dec	1248 - 1315	1.30E-03	4.43E-02	2.61E-04	1.48E-03	2.09E-04	1.77E-02	6.52E-06
1-CPR-96-282	8 Dec - 8 Dec	0733 - 0748	6.83E-04	2.32E-02	1.37E-04	7.76E-04	1.09E-04	9.27E-03	3.42E-06
1-CPR-96-283	9 Dec - 9 Dec	1420 - 1435	6.64E-04	2.25E-02	1.33E-04	7.53E-04	1.06E-04	9.01E-03	3.32E-06
1-CPR-96-284	9 Dec - 9 Dec	2216 - 2229	6.72E-04	2.28E-02	1.34E-04	7.63E-04	1.08E-04	9.12E-03	3.36E-06
1-CPR-96-285	10 Dec - 10 Dec	0524 - 0539	7.51E-04	2.55E-02	1.50E-04	8.52E-04	1.20E-04	1.02E-02	3.75E-06
1-CPR-96-286	10 Dec - 10 Dec	1505 - 1521	5.68E-04	1.93E-02	1.14E-04	6.45E-04	9.09E-05	7.71E-03	2.84E-06
1-CPR-96-287	11 Dec - 11 Dec	0413 - 0431	8.51E-04	2.89E-02	1.70E-04	9.66E-04	1.36E-04	1.15E-02	4.26E-06
1-CPR-96-288	12 Dec - 12 Dec	0307 - 0324	7.99E-04	2.71E-02	1.60E-04	9.07E-04	1.28E-04	1.08E-02	4.00E-06
1-CPR-96-289	12 Dec - 12 Dec	0838 - 0854	8.33E-04	2.82E-02	1.67E-04	9.45E-04	1.33E-04	1.13E-02	4.16E-06
1-CPR-96-290	13 Dec - 13 Dec	1502 - 1519	7.95E-04	2.70E-02	1.59E-04	9.02E-04	1.27E-04	1.08E-02	3.97E-06
1-CPR-96-291	14 Dec - 14 Dec	0743 - 0757	7.36E-04	2.50E-02	1.47E-04	8.35E-04	1.18E-04	9.99E-03	3.68E-06
1-CPR-96-292	14 Dec - 14 Dec	2000 - 2015	8.34E-04	2.83E-02	1.67E-04	9.46E-04	1.33E-04	1.13E-02	4.17E-06
1-CPR-96-293	15 Dec - 15 Dec	0435 - 0449	7.51E-04	2.55E-02	1.50E-04	8.52E-04	1.20E-04	1.02E-02	3.75E-06
1-CPR-96-294	15 Dec - 15 Dec	1320 - 1331	4.66E-04	1.58E-02	9.32E-05	5.29E-04	7.45E-05	6.32E-03	2.33E-06
1-CPR-96-295	16 Dec - 16 Dec	0510 - 0528	9.55E-04	3.24E-02	1.91E-04	1.08E-03	1.53E-04	1.30E-02	4.77E-06
1-CPR-96-296	16 Dec - 16 Dec	1709 - 1725	8.72E-04	2.96E-02	1.74E-04	9.90E-04	1.40E-04	1.18E-02	4.36E-06
1-CPR-96-297	17 Dec - 17 Dec	0056 - 0117	1.22E-03	4.15E-02	2.45E-04	1.39E-03	1.96E-04	1.66E-02	6.12E-06
1-CPR-96-298	18 Dec - 18 Dec	0511 - 0533	1.18E-03	4.00E-02	2.36E-04	1.34E-03	1.89E-04	1.60E-02	5.90E-06
1-CPR-96-299	19 Dec - 19 Dec	0829 - 0842	6.61E-04	2.24E-02	1.32E-04	7.50E-04	1.06E-04	8.97E-03	3.31E-06
1-CPR-96-300	20 Dec - 20 Dec	1306 - 1328	1.18E-03	4.01E-02	2.36E-04	1.34E-03	1.89E-04	1.60E-02	5.91E-06
1-CPR-96-301	21 Dec - 21 Dec	0420 - 0436	7.53E-04	2.55E-02	1.51E-04	8.54E-04	1.20E-04	1.02E-02	3.76E-06
1-CPR-96-302	21 Dec - 21 Dec	1420 - 1437	9.80E-04	3.32E-02	1.96E-04	1.11E-03	1.57E-04	1.33E-02	4.90E-06
1-CPR-96-303	22 Dec - 22 Dec	0920 - 0935	6.43E-04	2.18E-02	1.29E-04	7.30E-04	1.03E-04	8.73E-03	3.22E-06
1-CPR-96-304	22 Dec - 22 Dec	2111 - 2128	9.06E-04	3.07E-02	1.81E-04	1.03E-03	1.45E-04	1.23E-02	4.53E-06
1-CPR-96-305	23 Dec - 23 Dec	0652 - 0708	8.08E-04	2.74E-02	1.62E-04	9.17E-04	1.29E-04	1.10E-02	4.04E-06
1-CPR-96-306	23 Dec - 23 Dec	1513 - 1529	8.43E-04	2.86E-02	1.69E-04	9.57E-04	1.35E-04	1.14E-02	4.22E-06
1-CPR-96-307	25 Dec - 25 Dec	0756 - 0813	1.03E-03	3.49E-02	2.05E-04	1.17E-03	1.64E-04	1.39E-02	5.14E-06
1-CPR-96-308	26 Dec - 26 Dec	0315 - 0340	9.27E-04	3.15E-02	1.85E-04	1.05E-03	1.48E-04	1.26E-02	4.64E-06
1-CPR-96-309	26 Dec - 26 Dec	1512 - 1529	6.98E-04	2.37E-02	1.40E-04	7.92E-04	1.12E-04	9.47E-03	3.49E-06
1-CPR-96-310	27 Dec - 27 Dec	0650 - 0712	9.91E-04	3.36E-02	1.98E-04	1.12E-03	1.59E-04	1.34E-02	4.95E-06
1-CPR-96-311	27 Dec - 27 Dec	1852 - 1907	5.89E-04	2.00E-02	1.18E-04	6.69E-04	9.43E-05	8.00E-03	2.95E-06
1-CPR-96-312	28 Dec - 28 Dec	0500 - 0522	8.06E-04	2.73E-02	1.61E-04	9.15E-04	1.29E-04	1.09E-02	4.03E-06
1-CPR-96-313	29 Dec - 29 Dec	0201 - 0216	4.67E-04	1.58E-02	9.34E-05	5.30E-04	7.47E-05	6.34E-03	2.33E-06
1-CPR-96-314	30 Dec - 30 Dec	0422 - 0438	4.79E-04	1.63E-02	9.58E-05	5.44E-04	7.66E-05	6.50E-03	2.39E-06
1-CPR-96-315	30 Dec - 30 Dec	1703 - 1718	6.88E-04	2.33E-02	1.38E-04	7.81E-04	1.10E-04	9.34E-03	3.44E-06

Release Number	Start/Stop Date	Start/Stop Time	Xe131m	Xe133	Xe135	Ar41	Xe133m	Kr85	Kr85m
1-CPR-96-316	31 Dec - 31 Dec	1236 - 1253	9.32E-04	3.16E-02	1.86E-04	1.06E-03	1.49E-04	1.26E-02	4.66E-06
1-CPR-96-317	31 Dec - 31 Dec	2208 - 2223	7.35E-04	2.49E-02	1.47E-04	8.34E-04	1.18E-04	9.98E-03	3.68E-06
2-CPR-96-1	1 Jan - 1 Jan	1223 - 1246		7.24E-03	3.19E-04	5.36E-03			
2-CPR-96-2	2 Jan - 2 Jan	0736 - 0755		1.99E-03	8.79E-05	1.48E-03			
2-CPR-96-3	2 Jan - 2 Jan	2219 - 2249		1.25E-02	5.51E-04	9.25E-03			
2-CPR-96-4	3 Jan - 3 Jan	1400 - 1429		9.01E-03	3.97E-04	6.68E-03			
2-CPR-96-5	5 Jan - 5 Jan	1254 - 1314		2.74E-03	1.21E-04	2.03E-03			
2-CPR-96-6	6 Jan - 6 Jan	0720 - 0742		5.26E-03	2.32E-04	3.90E-03			
2-CPR-96-7	6 Jan - 6 Jan	2210 - 2228		2.31E-03	1.02E-04	1.71E-03			
2-CPR-96-8	7 Jan - 7 Jan	1254 - 1408		2.56E-02	1.13E-03	1.90E-02			
2-CPR-96-9	8 Jan - 8 Jan	0557 - 0617		6.63E-03	2.92E-04	4.91E-03			
2-CPR-96-10	8 Jan - 8 Jan	1639 - 1659		9.22E-03	4.06E-04	6.83E-03			
2-CPR-96-11	9 Jan - 9 Jan	0310 - 0350		1.01E-02	4.46E-04	7.49E-03			
2-CPR-96-12	9 Jan - 9 Jan	1432 - 1456		1.06E-02	4.67E-04	7.85E-03			
2-CPR-96-13	11 Jan - 11 Jan	0330 - 0350		6.22E-03	2.74E-04	4.61E-03			
2-CPR-96-14	11 Jan - 11 Jan	1216 - 1248		1.06E-02	4.66E-04	7.83E-03			
2-CPR-96-15	12 Jan - 12 Jan	1150 - 1227		7.73E-03	3.41E-04	5.73E-03			
2-CPR-96-16	13 Jan - 13 Jan	1247 - 1320		7.84E-03	3.46E-04	5.81E-03			
2-CPR-96-17	14 Jan - 14 Jan	0802 - 0839		8.00E-03	3.53E-04	5.93E-03			
2-CPR-96-18	16 Jan - 16 Jan	0336 - 0358		1.01E-02	4.44E-04	7.47E-03			
2-CPR-96-19	16 Jan - 16 Jan	1324 - 1348		7.12E-03	3.14E-04	5.27E-03			
2-CPR-96-20	17 Jan - 17 Jan	0728 - 0749		2.20E-03	9.71E-05	1.63E-03			
2-CPR-96-21	17 Jan - 17 Jan	2156 - 2220		4.70E-03	2.07E-04	3.49E-03			
2-CPR-96-22	18 Jan - 18 Jan	0950 - 1018		6.02E-03	2.66E-04	4.46E-03			
2-CPR-96-23	18 Jan - 18 Jan	1421 - 1501		9.92E-03	4.37E-04	7.35E-03			
2-CPR-96-24	19 Jan - 19 Jan	1354 - 1415		5.34E-03	2.36E-04	3.96E-03			
2-CPR-96-25	20 Jan - 20 Jan	0357 - 0435		7.61E-03	3.36E-04	5.64E-03			
2-CPR-96-26	20 Jan - 20 Jan	1313 - 1333		6.71E-03	2.96E-04	4.97E-03			
2-CPR-96-27	20 Jan - 20 Jan	1833 - 1858		5.97E-03	2.63E-04	4.42E-03			
2-CPR-96-28	21 Jan - 21 Jan	0143 - 0204		5.47E-03	2.41E-04	4.06E-03			
2-CPR-96-29	21 Jan - 21 Jan	1000 - 1105		1.46E-02	6.42E-04	1.08E-02			
2-CPR-96-30	22 Jan - 22 Jan	0432 - 0454		4.58E-03	2.02E-04	3.39E-03			
2-CPR-96-31	22 Jan - 22 Jan	0818 - 0845		5.99E-03	2.64E-04	4.44E-03			
2-CPR-96-32	23 Jan - 23 Jan	0433 - 0506		7.23E-03	3.19E-04	5.36E-03			

Release Number	Start/Stop Date	Start/Stop Time	Xe131m	Xe133	Xe135	Ar41	Xe133m	Kr85	Kr85m
2-CPR-96-33	23 Jan - 23 Jan	1523 - 1545		2.81E-03	1.24E-04	2.08E-03			
2-CPR-96-34	24 Jan - 24 Jan	0216 - 0238		4.50E-03	1.98E-04	3.34E-03			
2-CPR-96-35	25 Jan - 25 Jan	2016 - 2035		5.21E-03	2.30E-04	3.86E-03			
2-CPR-96-36	26 Jan - 26 Jan	0947 - 1011		6.81E-03	3.00E-04	5.05E-03			
2-CPR-96-37	26 Jan - 26 Jan	1652 - 1717		1.23E-02	5.41E-04	9.10E-03			
2-CPR-96-38	28 Jan - 28 Jan	1814 - 1838		1.97E-03	8.70E-05	1.46E-03			
2-CPR-96-39	29 Jan - 29 Jan	0229 - 0252		6.06E-03	2.67E-04	4.49E-03			
2-CPR-96-40	30 Jan - 30 Jan	1338 - 1358		6.74E-03	2.97E-04	4.99E-03			
2-CPR-96-41	31 Jan - 31 Jan	0924 - 0944		3.89E-03	1.72E-04	2.89E-03			
2-CPR-96-42	1 Feb - 1 Feb	0128 - 0155		8.50E-03	3.75E-04	6.30E-03			
2-CPR-96-43	2 Feb - 2 Feb	1410 - 1429		5.69E-03	2.51E-04	4.21E-03			
2-CPR-96-44	3 Feb - 3 Feb	1300 - 1322		5.70E-03	2.51E-04	4.22E-03			
2-CPR-96-45	4 Feb - 4 Feb	1435 - 1454		3.63E-03	1.60E-04	2.69E-03			
2-CPR-96-46	5 Feb - 5 Feb	0158 - 0216		5.78E-03	2.55E-04	4.28E-03			
2-CPR-96-47	5 Feb - 5 Feb	1252 - 1311		5.48E-03	2.41E-04	4.06E-03			
2-CPR-96-48	6 Feb - 6 Feb	1414 - 1435		4.49E-03	1.98E-04	3.32E-03			
2-CPR-96-49	6 Feb - 6 Feb	2316 - 2349		1.16E-02	5.13E-04	8.63E-03			
2-CPR-96-50	7 Feb - 7 Feb	1034 - 1057		1.11E-02	4.90E-04	8.23E-03			
2-CPR-96-51	7 Feb - 7 Feb	1852 - 1925		7.57E-03	3.34E-04	5.61E-03			
2-CPR-96-52	8 Feb - 8 Feb	0323 - 0355		1.14E-02	5.02E-04	8.44E-03			
2-CPR-96-53	8 Feb - 8 Feb	1140 - 1159		6.46E-03	2.85E-04	4.78E-03			
2-CPR-96-54	8 Feb - 8 Feb	2236 - 2300		9.65E-03	4.26E-04	7.15E-03			
2-CPR-96-55	9 Feb - 9 Feb	0938 - 1001		8.60E-03	3.79E-04	6.37E-03			
2-CPR-96-56	9 Feb - 9 Feb	1733 - 1801		9.59E-03	4.23E-04	7.10E-03			
2-CPR-96-57	10 Feb - 10 Feb	0127 - 0153		7.60E-03	3.35E-04	5.63E-03			
2-CPR-96-58	10 Feb - 10 Feb	0819 - 0849		8.14E-03	3.59E-04	6.03E-03			
2-CPR-96-59	10 Feb - 10 Feb	1726 - 1755		1.28E-02	5.63E-04	9.47E-03			
2-CPR-96-60	11 Feb - 11 Feb	0400 - 0427		7.83E-03	3.45E-04	5.80E-03			
2-CPR-96-61	12 Feb - 12 Feb	0215 - 0233		3.35E-03	1.48E-04	2.48E-03			
2-CPR-96-62	12 Feb - 12 Feb	1156 - 1216		5.47E-03	2.41E-04	4.06E-03			
2-CPR-96-63	12 Feb - 12 Feb	1847 - 1917		1.06E-02	4.65E-04	7.82E-03			
2-CPR-96-64	13 Feb - 13 Feb	0354 - 0428		1.09E-02	4.81E-04	8.09E-03			
2-CPR-96-65	13 Feb - 13 Feb	1138 - 1202		4.81E-03	2.12E-04	3.56E-03			
2-CPR-96-66	13 Feb - 13 Feb	1525 - 1547		6.86E-03	3.03E-04	5.08E-03			
2-CPR-96-67	13 Feb - 13 Feb	2102 - 2138		1.11E-02	4.88E-04	8.21E-03			

Release Number	Start/Stop Date	Start/Stop Time	Xe131m	Xe133	Xe135	Ar41	Xe133m	Kr85	Kr85m
2-CPR-96-68	14 Feb - 14 Feb	0808 - 0848		1.56E-02	6.87E-04	1.15E-02			
2-CPR-96-69	14 Feb - 15 Feb	2337 - 0011		1.35E-02	5.93E-04	9.97E-03			
2-CPR-96-70	15 Feb - 15 Feb	1127 - 1152		8.28E-03	3.65E-04	6.13E-03			
2-CPR-96-71	16 Feb - 16 Feb	0338 - 0400		2.61E-03	1.15E-04	1.94E-03			
2-CPR-96-72	16 Feb - 16 Feb	1121 - 1144		5.99E-03	2.64E-04	4.44E-03			
2-CPR-96-73	16 Feb - 16 Feb	1825 - 1855		5.17E-03	2.28E-04	3.83E-03			
2-CPR-96-74	17 Feb - 17 Feb	0206 - 0235		8.56E-03	3.78E-04	6.35E-03			
2-CPR-96-75	17 Feb - 17 Feb	0855 - 0930		8.49E-03	3.75E-04	6.29E-03			
2-CPR-96-76	18 Feb - 18 Feb	0145 - 0213		5.77E-03	2.54E-04	4.27E-03			
2-CPR-96-77	18 Feb - 18 Feb	1620 - 1650		1.02E-02	4.51E-04	7.58E-03			
2-CPR-96-78	19 Feb - 19 Feb	1123 - 1139		4.10E-03	1.81E-04	3.04E-03			
2-CPR-96-79	20 Feb - 20 Feb	0513 - 0536		9.38E-03	4.14E-04	6.95E-03			
2-CPR-96-80	21 Feb - 21 Feb	2313 - 2336		6.98E-03	3.08E-04	5.17E-03			
2-CPR-96-81	22 Feb - 22 Feb	1627 - 1647		5.85E-03	2.58E-04	4.33E-03			
2-CPR-96-82	23 Feb - 23 Feb	0337 - 0358		4.28E-03	1.89E-04	3.17E-03			
2-CPR-96-83	23 Feb - 23 Feb	1107 - 1128		7.23E-03	3.19E-04	5.36E-03			
2-CPR-96-84	25 Feb - 25 Feb	0805 - 0835		4.93E-03	2.17E-04	3.65E-03			
2-CPR-96-85	25 Feb - 25 Feb	2102 - 2133		6.48E-03	2.86E-04	4.80E-03			
2-CPR-96-86	26 Feb - 26 Feb	1721 - 1740		7.51E-03	3.31E-04	5.57E-03			
2-CPR-96-87	27 Feb - 27 Feb	0505 - 0524		5.42E-03	2.39E-04	4.01E-03			
2-CPR-96-88	29 Feb - 29 Feb	0414 - 0432		5.01E-03	2.21E-04	3.71E-03			
2-CPR-96-89	29 Feb - 29 Feb	2000 - 2020		6.03E-03	2.66E-04	4.47E-03			
2-CPR-96-90	1 Mar - 1 Mar	0727 - 0747		1.07E-02	4.73E-04	7.94E-03			
2-CPR-96-91	1 Mar - 1 Mar	1829 - 1851		7.17E-03	3.16E-04	5.32E-03			
2-CPR-96-92	2 Mar - 2 Mar	1310 - 1332		7.54E-03	3.32E-04	5.59E-03			
2-CPR-96-93	4 Mar - 4 Mar	1317 - 1338		7.10E-03	3.13E-04	5.26E-03			
2-CPR-96-94	4 Mar - 4 Mar	2020 - 2045		5.75E-03	2.53E-04	4.26E-03			
2-CPR-96-95	5 Mar - 5 Mar	0433 - 0454		8.92E-03	3.93E-04	6.61E-03			
2-CPR-96-96	7 Mar - 7 Mar	0121 - 0141		4.40E-03	1.94E-04	3.26E-03			
2-CPR-96-97	8 Mar - 8 Mar	0243 - 0308		4.02E-03	1.77E-04	2.98E-03			
2-CPR-96-98	9 Mar - 9 Mar	1652 - 1710		2.57E-03	1.13E-04	1.91E-03			
2-CPR-96-99	10 Mar - 10 Mar	1949 - 2017		5.96E-03	2.63E-04	4.42E-03			
2-CPR-96-100	11 Mar - 11 Mar	1345 - 1406		5.55E-03	2.45E-04	4.12E-03			
2-CPR-96-101	12 Mar - 12 Mar	0207 - 0227		4.81E-03	2.12E-04	3.57E-03			
2-CPR-96-102	12 Mar - 12 Mar	1524 - 1545		5.79E-03	2.55E-04	4.29E-03			

Release Number	Start/Stop Date	Start/Stop Time	Xe131m	Xe133	Xe135	Ar41	Xe133m	Kr85	Kr85m
2-CPR-96-103	13 Mar - 13 Mar	0750 - 0812		5.47E-03	2.41E-04	4.05E-03			
2-CPR-96-104	13 Mar - 13 Mar	2217 - 2243		4.67E-03	2.06E-04	3.46E-03			
2-CPR-96-105	14 Mar - 14 Mar	2206 - 2234		9.50E-03	4.19E-04	7.04E-03			
2-CPR-96-106	16 Mar - 16 Mar	0347 - 0416		9.60E-03	4.23E-04	7.11E-03			
2-CPR-96-107	17 Mar - 17 Mar	0427 - 0457		1.08E-02	4.77E-04	8.02E-03			
2-CPR-96-108	18 Mar - 18 Mar	1738 - 1759		6.42E-03	2.83E-04	4.76E-03			
2-CPR-96-109	19 Mar - 19 Mar	1100 - 1120		5.49E-03	2.42E-04	4.07E-03			
2-CPR-96-110	21 Mar - 21 Mar	0035 - 0057		8.81E-03	3.89E-04	6.53E-03			
2-CPR-96-111	22 Mar - 22 Mar	0450 - 0512		4.68E-03	2.06E-04	3.47E-03			
2-CPR-96-112	23 Mar - 23 Mar	1629 - 1646		6.64E-03	2.93E-04	4.92E-03			
2-CPR-96-113	24 Mar - 24 Mar	0952 - 1012		1.12E-02	4.95E-04	8.32E-03			
2-CPR-96-114	24 Mar - 24 Mar	1658 - 1720		9.27E-03	4.09E-04	6.87E-03			
2-CPR-96-115	4 May - 4 May	1847 - 1909		2.17E-03	7.30E-05	1.17E-03	2.61E-06	3.12E-04	
2-CPR-96-116	5 May - 5 May	1440 - 1502		1.50E-03	5.05E-05	8.08E-04	1.80E-06	2.16E-04	
2-CPR-96-117	7 May - 7 May	0416 - 0435		1.94E-03	6.53E-05	1.04E-03	2.33E-06	2.79E-04	
2-CPR-96-118	8 May - 8 May	0111 - 0128		2.37E-03	7.98E-05	1.28E-03	2.85E-06	3.42E-04	
2-CPR-96-119	8 May - 8 May	1545 - 1604		1.18E-03	3.98E-05	6.37E-04	1.42E-06	1.70E-04	
2-CPR-96-120	9 May - 9 May	1730 - 1750		3.78E-03	1.27E-04	2.04E-03	4.55E-06	5.45E-04	
2-CPR-96-121	11 May - 11 May	2005 - 2023		3.67E-04	1.23E-05	1.98E-04	4.41E-07	5.29E-05	
2-CPR-96-122	13 May - 13 May	0259 - 0318		1.97E-03	6.63E-05	1.06E-03	2.37E-06	2.84E-04	
2-CPR-96-123	14 May - 14 May	0552 - 0607		4.08E-04	1.37E-05	2.20E-04	4.90E-07	5.88E-05	
2-CPR-96-124	15 May - 15 May	0312 - 0331		1.46E-03	4.91E-05	7.86E-04	1.75E-06	2.10E-04	
2-CPR-96-125	16 May - 16 May	1028 - 1047		4.01E-03	1.35E-04	2.16E-03	4.83E-06	5.78E-04	
2-CPR-96-126	17 May - 17 May	1128 - 1147		1.24E-03	4.16E-05	6.66E-04	1.49E-06	1.78E-04	
2-CPR-96-127	18 May - 18 May	1923 - 1951		2.26E-03	7.61E-05	1.22E-03	2.72E-06	3.26E-04	
2-CPR-96-128	19 May - 19 May	1328 - 1346		1.27E-03	4.27E-05	6.84E-04	1.53E-06	1.83E-04	
2-CPR-96-129	22 May - 22 May	0453 - 0513		2.22E-03	7.48E-05	1.20E-03	2.67E-06	3.20E-04	
2-CPR-96-130	25 May - 25 May	1511 - 1531		1.63E-04	5.48E-06	8.78E-05	1.96E-07	2.35E-05	
2-CPR-96-131	26 May - 26 May	1323 - 1351		3.67E-03	1.24E-04	1.98E-03	4.42E-06	5.30E-04	
2-CPR-96-132	28 May - 28 May	0324 - 0343		1.52E-03	5.11E-05	8.18E-04	1.82E-06	2.19E-04	
2-CPR-96-133	30 May - 30 May	1728 - 1747		2.82E-03	9.49E-05	1.52E-03	3.39E-06	4.06E-04	
2-CPR-96-134	1 Jun - 1 Jun	0140 - 0200		2.57E-03	8.66E-05	1.39E-03	3.09E-06	3.71E-04	
2-CPR-96-135	2 Jun - 2 Jun	0228 - 0259		6.18E-03	2.08E-04	3.33E-03	7.43E-06	8.91E-04	
2-CPR-96-136	3 Jun - 3 Jun	2000 - 2020		1.46E-03	4.91E-05	7.85E-04	1.75E-06	2.10E-04	
2-CPR-96-137	5 Jun - 5 Jun	2106 - 2126		3.11E-03	1.05E-04	1.68E-03	3.74E-06	4.48E-04	

Release Number	Start/Stop Date	Start/Stop Time	Xe131m	Xe133	Xe135	Ar41	Xe133m	Kr85	Kr85m
2-CPR-96-138	6 Jun - 6 Jun	1849 - 1912		4.28E-04	1.44E-05	2.31E-04	5.15E-07	6.17E-05	
2-CPR-96-139	8 Jun - 8 Jun	2138 - 2202		3.18E-03	1.07E-04	1.72E-03	3.83E-06	4.59E-04	
2-CPR-96-140	10 Jun - 10 Jun	1743 - 1800		1.52E-03	5.11E-05	8.17E-04	1.82E-06	2.19E-04	
2-CPR-96-141	11 Jun - 11 Jun	2044 - 2104		5.59E-04	1.88E-05	3.02E-04	6.73E-07	8.06E-05	
2-CPR-96-142	13 Jun - 13 Jun	1249 - 1312		2.41E-03	8.11E-05	1.30E-03	2.90E-06	3.47E-04	
2-CPR-96-143	15 Jun - 15 Jun	1700 - 1719		2.44E-03	8.22E-05	1.32E-03	2.94E-06	3.52E-04	
2-CPR-96-144	17 Jun - 17 Jun	0138 - 0155		1.89E-03	6.37E-05	1.02E-03	2.28E-06	2.73E-04	
2-CPR-96-145	17 Jun - 17 Jun	1652 - 1711		1.25E-03	4.20E-05	6.73E-04	1.50E-06	1.80E-04	
2-CPR-96-146	18 Jun - 18 Jun	1918 - 1940		3.64E-03	1.23E-04	1.96E-03	4.38E-06	5.25E-04	
2-CPR-96-147	21 Jun - 21 Jun	1212 - 1231		3.21E-03	1.08E-04	1.73E-03	3.86E-06	4.63E-04	
2-CPR-96-148	23 Jun - 23 Jun	0830 - 0844		4.52E-03	1.52E-04	2.44E-03	5.44E-06	6.52E-04	
2-CPR-96-149	24 Jun - 24 Jun	0554 - 0615		6.27E-03	2.11E-04	3.38E-03	7.55E-06	9.05E-04	
2-CPR-96-150	27 Jun - 27 Jun	1611 - 1631		5.81E-03	1.96E-04	3.13E-03	6.99E-06	8.38E-04	
2-CPR-96-151	28 Jun - 28 Jun	2030 - 2053		6.63E-03	2.23E-04	3.58E-03	7.98E-06	9.56E-04	
2-CPR-96-152	29 Jun - 29 Jun	1847 - 1906		8.01E-03	2.70E-04	4.32E-03	9.64E-06	1.16E-03	
2-CPR-96-153	1 Jul - 1 Jul	1532 - 1552		1.21E-03	3.95E-05	8.87E-03			
2-CPR-96-154	2 Jul - 2 Jul	0956 - 1019		1.61E-03	5.26E-05	1.18E-02			
2-CPR-96-155	5 Jul - 5 Jul	0620 - 0640		1.21E-03	3.95E-05	8.87E-03			
2-CPR-96-156	6 Jul - 6 Jul	1539 - 1602		1.84E-03	5.99E-05	1.35E-02			
2-CPR-96-157	7 Jul - 7 Jul	1102 - 1124		1.48E-03	4.82E-05	1.08E-02			
2-CPR-96-158	11 Jul - 11 Jul	1355 - 1417		3.13E-03	1.02E-04	2.29E-02			
2-CPR-96-159	12 Jul - 12 Jul	1441 - 1503		2.64E-03	8.60E-05	1.93E-02			
2-CPR-96-160	13 Jul - 13 Jul	1648 - 1709		2.32E-03	7.57E-05	1.70E-02			
2-CPR-96-161	15 Jul - 15 Jul	0320 - 0342		2.76E-03	9.01E-05	2.02E-02			
2-CPR-96-162	17 Jul - 17 Jul	1756 - 1816		2.08E-03	6.78E-05	1.52E-02			
2-CPR-96-163	18 Jul - 18 Jul	1347 - 1416		3.22E-03	1.05E-04	2.36E-02			
2-CPR-96-164	20 Jul - 20 Jul	1608 - 1633		2.88E-03	9.40E-05	2.11E-02			
2-CPR-96-165	22 Jul - 22 Jul	0133 - 0155		3.38E-03	1.10E-04	2.47E-02			
2-CPR-96-166	23 Jul - 23 Jul	1356 - 1419		2.25E-03	7.35E-05	1.65E-02			
2-CPR-96-167	24 Jul - 24 Jul	1644 - 1705		2.78E-03	9.08E-05	2.04E-02			
2-CPR-96-168	27 Jul - 27 Jul	1413 - 1438		4.81E-03	1.57E-04	3.53E-02			
2-CPR-96-169	28 Jul - 28 Jul	1228 - 1251		2.73E-03	8.91E-05	2.00E-02			
2-CPR-96-170	29 Jul - 29 Jul	1622 - 1650		3.21E-03	1.05E-04	2.35E-02			
2-CPR-96-171	31 Jul - 31 Jul	1337 - 1405		2.47E-03	8.06E-05	1.81E-02			
2-CPR-96-172	2 Aug - 2 Aug	1310 - 1330		2.45E-03	8.00E-05	1.80E-02			

Release Number	Start/Stop Date	Start/Stop Time	Xe131m	Xe133	Xe135	Ar41	Xe133m	Kr85	Kr85m
2-CPR-96-173	4 Aug - 4 Aug	0937 - 0958		1.90E-03	6.21E-05	1.40E-02			
2-CPR-96-174	5 Aug - 5 Aug	1432 - 1453		2.63E-03	8.58E-05	1.93E-02			
2-CPR-96-175	6 Aug - 6 Aug	2306 - 2325		1.58E-03	5.16E-05	1.16E-02			
2-CPR-96-176	8 Aug - 8 Aug	0458 - 0518		1.89E-03	6.16E-05	1.38E-02			
2-CPR-96-177	10 Aug - 10 Aug	1241 - 1313		4.16E-03	1.36E-04	3.05E-02			
2-CPR-96-178	12 Aug - 12 Aug	1110 - 1130		2.54E-03	8.28E-05	1.86E-02			
2-CPR-96-179	13 Aug - 13 Aug	2014 - 2035		3.43E-03	1.12E-04	2.52E-02			
2-CPR-96-180	14 Aug - 14 Aug	1703 - 1721		2.35E-03	7.66E-05	1.72E-02			
2-CPR-96-181	16 Aug - 16 Aug	1855 - 1918		3.52E-03	1.15E-04	2.58E-02			
2-CPR-96-182	18 Aug - 18 Aug	1211 - 1230		2.13E-03	6.94E-05	1.56E-02			
2-CPR-96-183	19 Aug - 19 Aug	1655 - 1718		3.64E-03	1.19E-04	2.67E-02			
2-CPR-96-184	21 Aug - 21 Aug	1217 - 1235		1.97E-03	6.42E-05	1.44E-02			
2-CPR-96-185	22 Aug - 22 Aug	1306 - 1335		4.18E-03	1.36E-04	3.07E-02			
2-CPR-96-186	25 Aug - 25 Aug	0444 - 0503		2.50E-03	8.15E-05	1.83E-02			
2-CPR-96-187	26 Aug - 26 Aug	0502 - 0524		3.28E-03	1.07E-04	2.40E-02			
2-CPR-96-188	28 Aug - 28 Aug	1314 - 1336		3.08E-03	1.00E-04	2.25E-02			
2-CPR-96-189	30 Aug - 30 Aug	0554 - 0616		2.79E-03	9.09E-05	2.04E-02			
2-CPR-96-190	31 Aug - 31 Aug	1304 - 1322		2.65E-03	8.63E-05	1.94E-02			
2-CPR-96-191	1 Sep - 1 Sep	0805 - 0826		3.04E-03	9.93E-05	2.23E-02			
2-CPR-96-192	2 Sep - 2 Sep	1940 - 2001		3.84E-03	1.25E-04	2.81E-02			
2-CPR-96-193	4 Sep - 4 Sep	1314 - 1333		1.76E-03	5.74E-05	1.29E-02			
2-CPR-96-194	6 Sep - 6 Sep	0331 - 0350		2.60E-03	8.47E-05	1.90E-02			
2-CPR-96-195	7 Sep - 7 Sep	0801 - 0823		1.94E-03	6.33E-05	1.42E-02			
2-CPR-96-196	8 Sep - 8 Sep	0750 - 0808		1.59E-03	5.19E-05	1.17E-02			
2-CPR-96-197	10 Sep - 10 Sep	1623 - 1642		1.84E-03	6.01E-05	1.35E-02			
2-CPR-96-198	11 Sep - 11 Sep	1601 - 1623		2.49E-03	8.13E-05	1.83E-02			
2-CPR-96-199	12 Sep - 12 Sep	1730 - 1750		2.04E-03	6.66E-05	1.50E-02			
2-CPR-96-200	14 Sep - 14 Sep	0455 - 0519		2.57E-03	8.37E-05	1.88E-02			
2-CPR-96-201	16 Sep - 16 Sep	0252 - 0315		2.39E-03	7.79E-05	1.75E-02			
2-CPR-96-202	18 Sep - 18 Sep	2320 - 2340		1.55E-03	5.04E-05	1.13E-02			
2-CPR-96-203	19 Sep - 19 Sep	2115 - 2136		1.44E-03	4.69E-05	1.05E-02			
2-CPR-96-204	20 Sep - 20 Sep	2259 - 2325		2.78E-03	9.07E-05	2.04E-02			
2-CPR-96-205	21 Sep - 21 Sep	2252 - 2317		2.48E-03	8.08E-05	1.81E-02			
2-CPR-96-206	24 Sep - 24 Sep	0707 - 0733		2.32E-03	7.57E-05	1.70E-02			
2-CPR-96-207	26 Sep - 26 Sep	0442 - 0504		2.62E-03	8.56E-05	1.92E-02			

Release Number	Start/Stop Date	Start/Stop Time	Xe131m	Xe133	Xe135	Ar41	Xe133m	Kr85	Kr85m
2-CPR-96-208	26 Sep - 26 Sep	1836 - 1858		2.34E-03	7.63E-05	1.71E-02			
2-CPR-96-209	28 Sep - 28 Sep	1718 - 1738		1.89E-03	6.15E-05	1.38E-02			
2-CPR-96-210	30 Sep - 1 Oct	2350 - 0010		1.53E-03	4.99E-05	1.12E-02			
2-CPR-96-211	1 Oct - 1 Oct	1823 - 1842		1.61E-03	9.14E-05	1.10E-02			
2-CPR-96-212	4 Oct - 4 Oct	1447 - 1513		1.74E-03	9.87E-05	1.19E-02			
2-CPR-96-213	5 Oct - 5 Oct	1614 - 1632		1.64E-03	9.29E-05	1.12E-02			
2-CPR-96-214	6 Oct - 6 Oct	0740 - 0756		1.58E-03	8.96E-05	1.08E-02			
2-CPR-96-215	7 Oct - 7 Oct	0450 - 0509		1.47E-03	8.36E-05	1.00E-02			
2-CPR-96-216	8 Oct - 8 Oct	0738 - 0800		2.77E-03	1.57E-04	1.89E-02			
2-CPR-96-217	11 Oct - 11 Oct	1620 - 1641		2.24E-03	1.27E-04	1.53E-02			
2-CPR-96-218	12 Oct - 12 Oct	1710 - 1730		1.71E-03	9.70E-05	1.17E-02			
2-CPR-96-219	13 Oct - 13 Oct	1733 - 1750		1.65E-03	9.35E-05	1.12E-02			
2-CPR-96-220	15 Oct - 15 Oct	0200 - 0219		1.67E-03	9.48E-05	1.14E-02			
2-CPR-96-221	16 Oct - 16 Oct	0119 - 0147		3.86E-03	2.19E-04	2.63E-02			
2-CPR-96-222	17 Oct - 17 Oct	0753 - 0816		2.40E-03	1.36E-04	1.63E-02			
2-CPR-96-223	19 Oct - 19 Oct	2105 - 2123		1.56E-03	8.84E-05	1.06E-02			
2-CPR-96-224	21 Oct - 21 Oct	0345 - 0402		1.69E-03	9.61E-05	1.16E-02			
2-CPR-96-225	22 Oct - 22 Oct	0940 - 1000		2.10E-03	1.19E-04	1.43E-02			
2-CPR-96-226	22 Oct - 22 Oct	2138 - 2157		1.49E-03	8.44E-05	1.01E-02			
2-CPR-96-227	25 Oct - 25 Oct	2153 - 2212		1.98E-03	1.12E-04	1.35E-02			
2-CPR-96-228	27 Oct - 27 Oct	2312 - 2334		2.14E-03	1.21E-04	1.46E-02			
2-CPR-96-229	29 Oct - 29 Oct	0028 - 0056		2.33E-03	1.32E-04	1.59E-02			
2-CPR-96-230	29 Oct - 29 Oct	1358 - 1418		2.28E-03	1.30E-04	1.56E-02			
2-CPR-96-231	29 Oct - 29 Oct	1955 - 2026		3.45E-03	1.95E-04	2.35E-02			
2-CPR-96-232	1 Nov - 1 Nov	0630 - 0653		2.33E-03	1.32E-04	1.59E-02			
2-CPR-96-233	5 Nov - 5 Nov	1245 - 1308		2.16E-03	1.22E-04	1.47E-02			
2-CPR-96-234	6 Nov - 6 Nov	1414 - 1436		2.19E-03	1.24E-04	1.49E-02			
2-CPR-96-235	7 Nov - 7 Nov	1519 - 1542		2.91E-03	1.65E-04	1.98E-02			
2-CPR-96-236	9 Nov - 9 Nov	0102 - 0151		5.40E-03	3.06E-04	3.68E-02			
2-CPR-96-237	13 Nov - 13 Nov	2140 - 2201		1.44E-03	8.15E-05	9.80E-03			
2-CPR-96-238	15 Nov - 15 Nov	1133 - 1201		2.20E-03	1.25E-04	1.50E-02			
2-CPR-96-239	16 Nov - 16 Nov	0457 - 0520		2.21E-03	1.25E-04	1.50E-02			
2-CPR-96-240	17 Nov - 17 Nov	0042 - 0105		2.02E-03	1.15E-04	1.38E-02			
2-CPR-96-241	18 Nov - 18 Nov	1553 - 1616		3.53E-03	2.00E-04	2.41E-02			
2-CPR-96-242	19 Nov - 19 Nov	1350 - 1410		1.40E-03	7.96E-05	9.58E-03			

Release Number	Start/Stop Date	Start/Stop Time	Xe131m	Xe133	Xe135	Ar41	Xe133m	Kr85	Kr85m
2-CPR-96-243	20 Nov - 20 Nov	2110 - 2135		2.17E-03	1.23E-04	1.48E-02			
2-CPR-96-244	23 Nov - 23 Nov	0135 - 0202		2.21E-03	1.25E-04	1.51E-02			
2-CPR-96-245	24 Nov - 24 Nov	1420 - 1443		1.67E-03	9.46E-05	1.14E-02			
2-CPR-96-246	25 Nov - 25 Nov	2145 - 2206		1.52E-03	8.59E-05	1.03E-02			
2-CPR-96-247	28 Nov - 28 Nov	1154 - 1226		2.60E-03	1.48E-04	1.77E-02			
2-CPR-96-248	29 Nov - 29 Nov	1238 - 1304		2.03E-03	1.15E-04	1.39E-02			
2-CPR-96-249	30 Nov - 30 Nov	0010 - 0035		2.16E-03	1.22E-04	1.47E-02			
2-CPR-96-250	30 Nov - 1 Dec	2345 - 0007		1.84E-03	1.04E-04	1.25E-02			
2-CPR-96-251	3 Dec - 3 Dec	0156 - 0219		1.97E-03	1.11E-04	1.34E-02			
2-CPR-96-252	5 Dec - 5 Dec	0350 - 0416		2.12E-03	1.20E-04	1.45E-02			
2-CPR-96-253	5 Dec - 5 Dec	1154 - 1219		1.71E-03	9.71E-05	1.17E-02			
2-CPR-96-254	6 Dec - 6 Dec	1607 - 1628		1.43E-03	8.12E-05	9.77E-03			
2-CPR-96-255	8 Dec - 8 Dec	1543 - 1601		1.68E-03	9.53E-05	1.15E-02			
2-CPR-96-256	10 Dec - 10 Dec	0302 - 0323		1.87E-03	1.06E-04	1.28E-02			
2-CPR-96-257	11 Dec - 11 Dec	0156 - 0217		1.48E-03	8.38E-05	1.01E-02			
2-CPR-96-258	13 Dec - 13 Dec	2312 - 2331		2.07E-03	1.17E-04	1.41E-02			
2-CPR-96-259	15 Dec - 15 Dec	0128 - 0150		1.50E-03	8.48E-05	1.02E-02			
2-CPR-96-260	16 Dec - 16 Dec	0558 - 0618		1.57E-03	8.90E-05	1.07E-02			
2-CPR-96-261	16 Dec - 16 Dec	2024 - 2045		1.57E-03	8.90E-05	1.07E-02			
2-CPR-96-262	17 Dec - 17 Dec	0740 - 0758		1.56E-03	8.84E-05	1.06E-02			
2-CPR-96-263	19 Dec - 19 Dec	0941 - 1002		2.27E-03	1.29E-04	1.55E-02			
2-CPR-96-264	21 Dec - 21 Dec	0535 - 0558		2.32E-03	1.31E-04	1.58E-02			
2-CPR-96-265	22 Dec - 22 Dec	0711 - 0730		1.45E-03	8.21E-05	9.87E-03			
2-CPR-96-266	23 Dec - 23 Dec	0608 - 0630		2.16E-03	1.22E-04	1.47E-02			
2-CPR-96-267	23 Dec - 23 Dec	1735 - 1800		2.16E-03	1.22E-04	1.47E-02			
2-CPR-96-268	26 Dec - 26 Dec	1520 - 1540		1.78E-03	1.01E-04	1.21E-02			
2-CPR-96-269	27 Dec - 27 Dec	1330 - 1351		1.97E-03	1.12E-04	1.34E-02			
2-CPR-96-270	28 Dec - 28 Dec	1232 - 1256		1.74E-03	9.86E-05	1.19E-02			
2-CPR-96-271	30 Dec - 30 Dec	2110 - 2130		1.85E-03	1.05E-04	1.26E-02			

SUMMARY OF MAXIMUM INDIVIDUAL DOSES

1st Quarter 1996

EFFLUENT	APPLICABLE ORGAN	ESTIMATED DOSE (mrem)	AGE GROUP	LOCATION DIST DIR (M) (Toward)	% OF APPLICABLE LIMIT	LIMIT (mrem) QTR
Liquid	Total Body	9.16E-3	Child	Receptor 1	6.11E-1	1.5E+0
Liquid	Liver	1.12E-2	Child	Receptor 1	2.24E-1	5.0E+0
Noble Gas	Air Dose (Gamma-mrad)	2.81E-3		651 N	5.62E-2	5.0E+0
Noble Gas	Air dose (Beta-mrad)	2.87E-3		651 N	2.87E-2	1.0E+1
Iodines and Particulates	Thyroid	2.49E-2	Child	659 N	3.32E-1	7.5E+0

FOR RECEPTOR NUMBER 1

LAST LIQUID DOSE ACCUMULATIONS (MREM)
START DATE 96 1 1 1 END DATE 96 33124

	BONE	LIVER	T.BODY	THYRD	KIDNEY	LUNG	GI-LLI	SKIN
WATER								
ADULT	2.8E-05	6.0E-03	6.0E-03	6.4E-03	6.0E-03	6.0E-03	7.2E-03	0.0E+00
TEEN	2.7E-05	4.3E-03	4.2E-03	4.6E-03	4.2E-03	4.2E-03	5.0E-03	0.0E+00
CHILD	8.0E-05	8.1E-03	8.2E-03	9.0E-03	8.1E-03	8.1E-03	8.7E-03	0.0E+00
INFANT	8.0E-05	8.0E-03	8.0E-03	9.4E-03	7.9E-03	7.9E-03	8.3E-03	0.0E+00
SHORE								
ADULT	1.0E-04	1.0E-04	1.0E-04	1.0E-04	1.0E-04	1.0E-04	1.0E-04	1.2E-04
TEEN	5.6E-04	5.6E-04	5.6E-04	5.6E-04	5.6E-04	5.6E-04	5.6E-04	6.6E-04
CHILD	1.2E-04	1.2E-04	1.2E-04	1.2E-04	1.2E-04	1.2E-04	1.2E-04	1.4E-04
INFANT	0.0E+00	0.0E+00	0.0E+00	0.0E+00	0.0E+00	0.0E+00	0.0E+00	0.0E+00
FW SPT FISH								
ADULT	1.7E-03	3.4E-03	2.6E-03	8.3E-04	1.4E-03	7.3E-04	3.8E-03	0.0E+00
TEEN	1.8E-03	3.4E-03	1.6E-03	7.1E-04	1.3E-03	7.0E-04	2.7E-03	0.0E+00
CHILD	2.2E-03	3.0E-03	8.9E-04	6.9E-04	1.1E-03	5.7E-04	1.1E-03	0.0E+00
INFANT	0.0E+00	0.0E+00	0.0E+00	0.0E+00	0.0E+00	0.0E+00	0.0E+00	0.0E+00
TOTAL								
ADULT	1.8E-03	9.5E-03	8.7E-03	7.3E-03	7.5E-03	6.8E-03	1.1E-02	1.2E-04
TEEN	2.4E-03	8.2E-03	6.4E-03	5.9E-03	6.1E-03	5.5E-03	8.3E-03	6.6E-04
CHILD	2.4E-03	1.1E-02	9.2E-03	9.8E-03	9.3E-03	8.8E-03	9.9E-03	1.4E-04
INFANT	8.0E-05	8.0E-03	8.0E-03	9.4E-03	7.9E-03	7.9E-03	8.3E-03	0.0E+00

DATES OF LAST AIR DOSE ACCUMULATION ARE FROM 96 1 1 1 0 TO 96 33124 0
DOSE ACCUMULATION FOR GAMMA MRAD

FOR RELEASE POINT 1

**DIRECTION FROM N				
0.0000E+00	0.0000E+00	0.0000E+00	0.0000E+00	0.0000E+00
0.0000E+00	0.0000E+00	0.0000E+00	0.0000E+00	0.0000E+00
**DIRECTION FROM NNE				
0.0000E+00	0.0000E+00	0.0000E+00	0.0000E+00	0.0000E+00
0.0000E+00	0.0000E+00	0.0000E+00	0.0000E+00	0.0000E+00
**DIRECTION FROM NE				
0.0000E+00	0.0000E+00	0.0000E+00	0.0000E+00	0.0000E+00
0.0000E+00	0.0000E+00	0.0000E+00	0.0000E+00	0.0000E+00
**DIRECTION FROM ENE				
0.0000E+00	0.0000E+00	0.0000E+00	0.0000E+00	0.0000E+00
0.0000E+00	0.0000E+00	0.0000E+00	0.0000E+00	0.0000E+00
**DIRECTION FROM E				
3.4195E-05	4.7890E-06	2.1795E-06	1.2522E-06	8.8130E-07
4.4860E-07	1.7380E-07	8.5701E-08	5.4643E-08	3.4087E-08
**DIRECTION FROM ESE				
0.0000E+00	0.0000E+00	0.0000E+00	0.0000E+00	0.0000E+00
0.0000E+00	0.0000E+00	0.0000E+00	0.0000E+00	0.0000E+00
**DIRECTION FROM SE				
1.0591E-05	7.2890E-07	3.1867E-07	1.8694E-07	1.2780E-07
6.1505E-08	2.4251E-08	1.3589E-08	9.7065E-09	6.7903E-09
**DIRECTION FROM SSE				
1.7428E-05	2.0165E-06	8.8631E-07	5.0202E-07	3.3835E-07
1.5474E-07	5.2417E-08	2.3869E-08	1.4325E-08	8.1331E-09
**DIRECTION FROM S				
1.0943E-04	1.2662E-05	5.5652E-06	3.1522E-06	2.1245E-06
9.7164E-07	3.2913E-07	1.4987E-07	8.9946E-08	5.1068E-08
**DIRECTION FROM SSW				
0.0000E+00	0.0000E+00	0.0000E+00	0.0000E+00	0.0000E+00
0.0000E+00	0.0000E+00	0.0000E+00	0.0000E+00	0.0000E+00
**DIRECTION FROM SW				
1.0673E-05	1.4947E-06	6.8025E-07	3.9084E-07	2.7507E-07
1.4001E-07	5.4246E-08	2.6749E-08	1.7055E-08	1.0639E-08
**DIRECTION FROM WSW				
0.0000E+00	0.0000E+00	0.0000E+00	0.0000E+00	0.0000E+00
0.0000E+00	0.0000E+00	0.0000E+00	0.0000E+00	0.0000E+00
**DIRECTION FROM W				
0.0000E+00	0.0000E+00	0.0000E+00	0.0000E+00	0.0000E+00
0.0000E+00	0.0000E+00	0.0000E+00	0.0000E+00	0.0000E+00
**DIRECTION FROM WNW				
0.0000E+00	0.0000E+00	0.0000E+00	0.0000E+00	0.0000E+00
0.0000E+00	0.0000E+00	0.0000E+00	0.0000E+00	0.0000E+00
**DIRECTION FROM NW				
5.5758E-06	4.2682E-07	1.6954E-07	9.1482E-08	5.8346E-08
2.3953E-08	7.2406E-09	3.6440E-09	2.6028E-09	1.8208E-09
**DIRECTION FROM NNW				
4.0301E-06	1.3187E-07	4.8539E-08	3.0846E-08	2.3395E-08
1.4037E-08	7.0180E-09	4.2108E-09	3.0077E-09	2.1041E-09

DISTANCES USED IN CALCULATIONS

594.0	2416.0	4020.0	5630.0	7240.0
12067.0	24135.0	40225.0	56315.0	80500.0

DATES OF LAST AIR DOSE ACCUMULATION ARE FROM 96 1 1 1 0 TO 96 33124 0
DOSE ACCUMULATION FOR GAMMA MRAD

FOR RELEASE POINT 2

**DIRECTION FROM N				
1.0811E-03	1.1681E-04	5.1701E-05	2.9583E-05	2.0099E-05
9.3938E-06	3.3290E-06	1.5892E-06	9.9507E-07	6.0012E-07
**DIRECTION FROM NNE				
8.1699E-04	1.0063E-04	4.5529E-05	2.6257E-05	1.8238E-05
8.9885E-06	3.3877E-06	1.6578E-06	1.0525E-06	6.5033E-07
**DIRECTION FROM NE				
1.0432E-03	1.2800E-04	5.8956E-05	3.4482E-05	2.4092E-05
1.2005E-05	4.6324E-06	2.3063E-06	1.4833E-06	9.3132E-07
**DIRECTION FROM ENE				
1.2235E-03	1.5025E-04	7.0603E-05	4.1893E-05	2.9354E-05
1.4648E-05	5.6960E-06	2.8345E-06	1.8174E-06	1.1391E-06
**DIRECTION FROM E				
1.1945E-03	1.3973E-04	6.5962E-05	3.9330E-05	2.7663E-05
1.3907E-05	5.4553E-06	2.7223E-06	1.7474E-06	1.1020E-06
**DIRECTION FROM ESE				
1.3517E-03	1.6750E-04	7.7731E-05	4.5693E-05	3.2020E-05
1.6040E-05	6.2327E-06	3.1038E-06	1.9942E-06	1.2531E-06
**DIRECTION FROM SE				
1.9444E-03	2.2549E-04	1.0774E-04	6.4788E-05	4.5704E-05
2.3081E-05	9.1309E-06	4.5684E-06	2.9375E-06	1.8622E-06
**DIRECTION FROM SSE				
3.3437E-03	4.0496E-04	1.9913E-04	1.2190E-04	8.6333E-05
4.3775E-05	1.7575E-05	8.8632E-06	5.7241E-06	3.6400E-06
**DIRECTION FROM S				
3.1231E-03	3.5959E-04	1.7213E-04	1.0360E-04	7.2915E-05
3.6574E-05	1.4345E-05	7.1172E-06	4.5448E-06	2.8637E-06
**DIRECTION FROM SSW				
1.0372E-03	1.2328E-04	5.5984E-05	3.2481E-05	2.2307E-05
1.0657E-05	3.8973E-06	1.8747E-06	1.1748E-06	7.1095E-07
**DIRECTION FROM SW				
8.3358E-04	9.8574E-05	4.5550E-05	2.6784E-05	1.8627E-05
9.1614E-06	3.5030E-06	1.7383E-06	1.1151E-06	6.9666E-07
**DIRECTION FROM WSW				
1.2276E-03	1.3597E-04	6.2061E-05	3.6304E-05	2.5062E-05
1.2129E-05	4.5547E-06	2.2518E-06	1.4434E-06	8.9917E-07
**DIRECTION FROM W				
1.3250E-03	1.4920E-04	6.8231E-05	3.9935E-05	2.7553E-05
1.3308E-05	4.9840E-06	2.4548E-06	1.5689E-06	9.7376E-07
**DIRECTION FROM WNW				
8.9260E-04	9.3366E-05	4.1111E-05	2.3494E-05	1.6035E-05
7.5947E-06	2.7377E-06	1.3247E-06	8.3767E-07	5.1230E-07
**DIRECTION FROM NW				
9.8683E-04	1.0676E-04	4.8754E-05	2.8590E-05	1.9604E-05
9.3128E-06	3.4325E-06	1.6805E-06	1.0695E-06	6.5859E-07
**DIRECTION FROM NNW				
1.2285E-03	1.3066E-04	5.9891E-05	3.5192E-05	2.4394E-05
1.1906E-05	4.5123E-06	2.2328E-06	1.4309E-06	8.9738E-07

DISTANCES USED IN CALCULATIONS

594.0	2416.0	4020.0	5630.0	7240.0
12067.0	24135.0	40225.0	56315.0	80500.0

DATES OF LAST AIR DOSE ACCUMULATION ARE FROM 96 1 1 1 0 TO 96 33124 0
DOSE ACCUMULATION FOR BETA MRAD

FOR RELEASE POINT 1

**DIRECTION FROM N				
0.0000E+00	0.0000E+00	0.0000E+00	0.0000E+00	0.0000E+00
0.0000E+00	0.0000E+00	0.0000E+00	0.0000E+00	0.0000E+00
**DIRECTION FROM NNE				
0.0000E+00	0.0000E+00	0.0000E+00	0.0000E+00	0.0000E+00
0.0000E+00	0.0000E+00	0.0000E+00	0.0000E+00	0.0000E+00
**DIRECTION FROM NE				
0.0000E+00	0.0000E+00	0.0000E+00	0.0000E+00	0.0000E+00
0.0000E+00	0.0000E+00	0.0000E+00	0.0000E+00	0.0000E+00
**DIRECTION FROM ENE				
0.0000E+00	0.0000E+00	0.0000E+00	0.0000E+00	0.0000E+00
0.0000E+00	0.0000E+00	0.0000E+00	0.0000E+00	0.0000E+00
**DIRECTION FROM E				
2.3505E-04	3.2919E-05	1.4981E-05	8.6076E-06	6.0579E-06
3.0836E-06	1.1947E-06	5.8910E-07	3.7561E-07	2.3431E-07
**DIRECTION FROM ESE				
0.0000E+00	0.0000E+00	0.0000E+00	0.0000E+00	0.0000E+00
0.0000E+00	0.0000E+00	0.0000E+00	0.0000E+00	0.0000E+00
**DIRECTION FROM SE				
7.2800E-05	5.0103E-06	2.1905E-06	1.2850E-06	8.7851E-07
4.2278E-07	1.6670E-07	9.3410E-08	6.6721E-08	4.6676E-08
**DIRECTION FROM SSE				
3.8310E-05	4.4325E-06	1.9482E-06	1.1035E-06	7.4374E-07
3.4015E-07	1.1522E-07	5.2468E-08	3.1488E-08	1.7878E-08
**DIRECTION FROM S				
1.1497E-03	1.3302E-04	5.8468E-05	3.3117E-05	2.2320E-05
1.0208E-05	3.4578E-06	1.5746E-06	9.4498E-07	5.3652E-07
**DIRECTION FROM SSW				
0.0000E+00	0.0000E+00	0.0000E+00	0.0000E+00	0.0000E+00
0.0000E+00	0.0000E+00	0.0000E+00	0.0000E+00	0.0000E+00
**DIRECTION FROM SW				
1.2102E-03	1.6949E-04	7.7137E-05	4.4319E-05	3.1191E-05
1.5877E-05	6.1512E-06	3.0331E-06	1.9339E-06	1.2064E-06
**DIRECTION FROM WSW				
0.0000E+00	0.0000E+00	0.0000E+00	0.0000E+00	0.0000E+00
0.0000E+00	0.0000E+00	0.0000E+00	0.0000E+00	0.0000E+00
**DIRECTION FROM W				
0.0000E+00	0.0000E+00	0.0000E+00	0.0000E+00	0.0000E+00
0.0000E+00	0.0000E+00	0.0000E+00	0.0000E+00	0.0000E+00
**DIRECTION FROM WNW				
0.0000E+00	0.0000E+00	0.0000E+00	0.0000E+00	0.0000E+00
0.0000E+00	0.0000E+00	0.0000E+00	0.0000E+00	0.0000E+00
**DIRECTION FROM NW				
6.2434E-04	4.7792E-05	1.8984E-05	1.0243E-05	6.5332E-06
2.6820E-06	8.1075E-07	4.0802E-07	2.9145E-07	2.0388E-07
**DIRECTION FROM NNW				
4.5126E-04	1.4766E-05	5.4350E-06	3.4539E-06	2.6196E-06
1.5717E-06	7.8582E-07	4.7149E-07	3.3678E-07	2.3560E-07

DISTANCES USED IN CALCULATIONS

594.0	2416.0	4020.0	5630.0	7240.0
12067.0	24135.0	40225.0	56315.0	80500.0

DATES OF LAST AIR DOSE ACCUMULATION ARE FROM 96 1 1 1 0 TO 96 33124 0
DOSE ACCUMULATION FOR BETA MRAD

FOR RELEASE POINT 2

**DIRECTION FROM N				
7.5876E-04	8.1873E-05	3.6246E-05	2.0746E-05	1.4097E-05
6.5916E-06	2.3381E-06	1.1172E-06	7.0005E-07	4.2262E-07
**DIRECTION FROM NNE				
5.7351E-04	7.0752E-05	3.2031E-05	1.8480E-05	1.2842E-05
6.3359E-06	2.3913E-06	1.1711E-06	7.4386E-07	4.5993E-07
**DIRECTION FROM NE				
7.1633E-04	8.8088E-05	4.0654E-05	2.3809E-05	1.6653E-05
8.3177E-06	3.2203E-06	1.6066E-06	1.0347E-06	6.5092E-07
**DIRECTION FROM ENE				
8.4559E-04	1.0414E-04	4.9000E-05	2.9097E-05	2.0403E-05
1.0197E-05	3.9731E-06	1.9790E-06	1.2695E-06	7.9628E-07
**DIRECTION FROM E				
8.0806E-04	9.4602E-05	4.4744E-05	2.6715E-05	1.8796E-05
9.4520E-06	3.7119E-06	1.8534E-06	1.1900E-06	7.5078E-07
**DIRECTION FROM ESE				
9.0567E-04	1.1251E-04	5.2098E-05	3.0573E-05	2.1416E-05
1.0724E-05	4.1619E-06	2.0720E-06	1.3313E-06	8.3611E-07
**DIRECTION FROM SE				
1.3010E-03	1.5078E-04	7.2096E-05	4.3371E-05	3.0615E-05
1.5481E-05	6.1328E-06	3.0700E-06	1.9746E-06	1.2526E-06
**DIRECTION FROM SSE				
2.3009E-03	2.7915E-04	1.3737E-04	8.4129E-05	5.9591E-05
3.0225E-05	1.2143E-05	6.1266E-06	3.9581E-06	2.5175E-06
**DIRECTION FROM S				
2.1542E-03	2.4776E-04	1.1873E-04	7.1520E-05	5.0349E-05
2.5263E-05	9.9167E-06	4.9226E-06	3.1444E-06	1.9821E-06
**DIRECTION FROM SSW				
7.0570E-04	8.3845E-05	3.8107E-05	2.2123E-05	1.5196E-05
7.2613E-06	2.6574E-06	1.2790E-06	8.0184E-07	4.8551E-07
**DIRECTION FROM SW				
5.6724E-04	6.7222E-05	3.1144E-05	1.8346E-05	1.2770E-05
6.2921E-06	2.4134E-06	1.1998E-06	7.7061E-07	4.8214E-07
**DIRECTION FROM WSW				
8.5589E-04	9.5010E-05	4.3406E-05	2.5406E-05	1.7547E-05
8.5004E-06	3.1965E-06	1.5814E-06	1.0141E-06	6.3205E-07
**DIRECTION FROM W				
9.2907E-04	1.0469E-04	4.7929E-05	2.8075E-05	1.9378E-05
9.3671E-06	3.5132E-06	1.7319E-06	1.1075E-06	6.8789E-07
**DIRECTION FROM WNW				
6.1103E-04	6.3621E-05	2.8002E-05	1.6003E-05	1.0920E-05
5.1694E-06	1.8631E-06	9.0197E-07	5.7071E-07	3.4926E-07
**DIRECTION FROM NW				
6.8367E-04	7.4059E-05	3.3857E-05	1.9868E-05	1.3629E-05
6.4795E-06	2.3913E-06	1.1716E-06	7.4583E-07	4.5948E-07
**DIRECTION FROM NNW				
8.6395E-04	9.1911E-05	4.2176E-05	2.4801E-05	1.7199E-05
8.4012E-06	3.1884E-06	1.5786E-06	1.0120E-06	6.3506E-07

DISTANCES USED IN CALCULATIONS

594.0	2416.0	4020.0	5630.0	7240.0
12067.0	24135.0	40225.0	56315.0	80500.0

INDIVIDUAL DOSES(MREM) DUE TO GASEOUS EFFLUENT
FOR DATES 96 1 1 1 THRU 96 33124

	T.BODY	GI-TRCT	BONE	LIVER	KIDNEY	THYRD	LUNG	SKIN
PLUME PATHWAY, DIST GP= 1, 659. METERS WINDS TOWARD N								
ADULT	1.7E-03	1.7E-03	1.7E-03	1.7E-03	1.7E-03	1.7E-03	1.7E-03	3.6E-03
TEEN	1.7E-03	1.7E-03	1.7E-03	1.7E-03	1.7E-03	1.7E-03	1.7E-03	3.6E-03
CHILD	1.7E-03	1.7E-03	1.7E-03	1.7E-03	1.7E-03	1.7E-03	1.7E-03	3.6E-03
INFNT	1.7E-03	1.7E-03	1.7E-03	1.7E-03	1.7E-03	1.7E-03	1.7E-03	3.6E-03
GROUND PATHWAY, DIST GP= 1, 659. METERS WINDS TOWARD N								
ADULT	4.0E-03	4.0E-03	4.0E-03	4.0E-03	4.0E-03	4.0E-03	4.0E-03	4.6E-03
TEEN	4.0E-03	4.0E-03	4.0E-03	4.0E-03	4.0E-03	4.0E-03	4.0E-03	4.6E-03
CHILD	4.0E-03	4.0E-03	4.0E-03	4.0E-03	4.0E-03	4.0E-03	4.0E-03	4.6E-03
INFNT	4.0E-03	4.0E-03	4.0E-03	4.0E-03	4.0E-03	4.0E-03	4.0E-03	4.6E-03
VEGET PATHWAY, DIST GP= 1, 8045. METERS WINDS TOWARD N								
ADULT	1.1E-04	9.2E-05	2.1E-05	1.2E-04	1.0E-04	1.9E-04	9.1E-05	0.0E+00
TEEN	1.2E-04	1.0E-04	3.2E-05	1.6E-04	1.2E-04	1.9E-04	1.1E-04	0.0E+00
CHILD	1.7E-04	1.6E-04	7.6E-05	2.5E-04	1.8E-04	2.8E-04	1.7E-04	0.0E+00
INFNT	0.0E+00	0.0E+00	0.0E+00	0.0E+00	0.0E+00	0.0E+00	0.0E+00	0.0E+00
MEAT PATHWAY, DIST GP= 1, 8045. METERS WINDS TOWARD N								
ADULT	1.5E-05	1.4E-05	2.1E-06	1.6E-05	1.4E-05	2.5E-05	1.3E-05	0.0E+00
TEEN	8.8E-06	8.2E-06	1.7E-06	1.1E-05	8.5E-06	1.6E-05	7.9E-06	0.0E+00
CHILD	9.9E-06	9.4E-06	3.2E-06	1.3E-05	1.0E-05	2.3E-05	9.5E-06	0.0E+00
INFNT	0.0E+00	0.0E+00	0.0E+00	0.0E+00	0.0E+00	0.0E+00	0.0E+00	0.0E+00
COW PATHWAY, DIST GP= 1, 4091. METERS WINDS TOWARD N								
ADULT	1.6E-04	8.3E-05	6.5E-05	1.9E-04	1.2E-04	1.3E-03	9.1E-05	0.0E+00
TEEN	1.8E-04	1.1E-04	1.2E-04	3.0E-04	1.8E-04	2.0E-03	1.3E-04	0.0E+00
CHILD	2.3E-04	1.7E-04	2.7E-04	4.9E-04	2.8E-04	3.9E-03	2.0E-04	0.0E+00
INFNT	3.1E-04	2.5E-04	4.4E-04	8.8E-04	4.4E-04	9.2E-03	3.1E-04	0.0E+00
GOAT PATHWAY, DIST GP= 1, 4091. METERS WINDS TOWARD N								
ADULT	4.1E-04	1.7E-04	1.9E-04	4.9E-04	2.8E-04	1.6E-03	2.0E-04	0.0E+00
TEEN	4.5E-04	2.2E-04	3.4E-04	7.9E-04	4.1E-04	2.5E-03	2.8E-04	0.0E+00
CHILD	5.1E-04	3.4E-04	8.0E-04	1.3E-03	6.6E-04	4.8E-03	4.4E-04	0.0E+00
INFNT	6.8E-04	5.1E-04	1.3E-03	2.3E-03	1.0E-03	1.1E-02	7.0E-04	0.0E+00
INHAL PATHWAY, DIST GP= 1, 659. METERS WINDS TOWARD N								
ADULT	2.1E-03	2.1E-03	1.9E-05	2.1E-03	2.1E-03	2.9E-03	2.1E-03	0.0E+00
TEEN	2.1E-03	2.1E-03	2.6E-05	2.1E-03	2.1E-03	3.1E-03	2.1E-03	0.0E+00
CHILD	1.8E-03	1.8E-03	3.5E-05	1.9E-03	1.8E-03	3.0E-03	1.9E-03	0.0E+00
INFNT	1.1E-03	1.1E-03	2.2E-05	1.1E-03	1.1E-03	2.1E-03	1.1E-03	0.0E+00
SUBTOTALS (NO PLUME)								
ADULT	6.7E-03	6.4E-03	4.3E-03	6.9E-03	6.5E-03	9.9E-03	6.4E-03	4.6E-03
TEEN	6.8E-03	6.5E-03	4.5E-03	7.3E-03	6.8E-03	1.2E-02	6.6E-03	4.6E-03
CHILD	6.7E-03	6.5E-03	5.2E-03	7.9E-03	6.9E-03	1.6E-02	6.6E-03	4.6E-03
INFNT	6.0E-03	5.8E-03	5.7E-03	8.3E-03	6.5E-03	2.7E-02	6.0E-03	4.6E-03
TOTALS								
ADULT	8.4E-03	8.0E-03	5.9E-03	8.5E-03	8.2E-03	1.2E-02	8.1E-03	8.2E-03
TEEN	8.5E-03	8.1E-03	6.1E-03	9.0E-03	8.4E-03	1.3E-02	8.3E-03	8.2E-03
CHILD	8.4E-03	8.1E-03	6.8E-03	9.6E-03	8.6E-03	1.8E-02	8.3E-03	8.2E-03
INFNT	7.7E-03	7.4E-03	7.4E-03	9.9E-03	8.2E-03	2.8E-02	7.7E-03	8.2E-03

INDIVIDUAL DOSES(MREM) DUE TO GASEOUS EFFLUENT
FOR DATES 96 1 1 1 THRU 96 33124

	T.BODY	GI-TRCT	BONE	LIVER	KIDNEY	THYRD	LUNG	SKIN
PLUME PATHWAY, DIST GP= 1, 660. METERS WINDS TOWARD NNE								
ADULT	5.6E-04	5.6E-04	5.6E-04	5.6E-04	5.6E-04	5.6E-04	5.6E-04	1.0E-03
TEEN	5.6E-04	5.6E-04	5.6E-04	5.6E-04	5.6E-04	5.6E-04	5.6E-04	1.0E-03
CHILD	5.6E-04	5.6E-04	5.6E-04	5.6E-04	5.6E-04	5.6E-04	5.6E-04	1.0E-03
INFNT	5.6E-04	5.6E-04	5.6E-04	5.6E-04	5.6E-04	5.6E-04	5.6E-04	1.0E-03
GROUND PATHWAY, DIST GP= 1, 660. METERS WINDS TOWARD NNE								
ADULT	8.4E-04	8.4E-04	8.4E-04	8.4E-04	8.4E-04	8.4E-04	8.4E-04	9.8E-04
TEEN	8.4E-04	8.4E-04	8.4E-04	8.4E-04	8.4E-04	8.4E-04	8.4E-04	9.8E-04
CHILD	8.4E-04	8.4E-04	8.4E-04	8.4E-04	8.4E-04	8.4E-04	8.4E-04	9.8E-04
INFNT	8.4E-04	8.4E-04	8.4E-04	8.4E-04	8.4E-04	8.4E-04	8.4E-04	9.8E-04
VEGET PATHWAY, DIST GP= 1, 814. METERS WINDS TOWARD NNE								
ADULT	1.5E-03	1.0E-03	3.8E-04	1.7E-03	1.2E-03	2.8E-03	1.1E-03	0.0E+00
TEEN	1.6E-03	1.2E-03	5.8E-04	2.1E-03	1.5E-03	2.6E-03	1.3E-03	0.0E+00
CHILD	2.1E-03	1.8E-03	1.4E-03	3.4E-03	2.3E-03	4.0E-03	2.0E-03	0.0E+00
INFNT	0.0E+00	0.0E+00	0.0E+00	0.0E+00	0.0E+00	0.0E+00	0.0E+00	0.0E+00
MEAT PATHWAY, DIST GP= 1, 7725. METERS WINDS TOWARD NNE								
ADULT	5.6E-06	4.6E-06	8.5E-07	6.0E-06	5.1E-06	9.3E-06	4.7E-06	0.0E+00
TEEN	3.2E-06	2.7E-06	6.9E-07	3.9E-06	3.1E-06	6.1E-06	2.9E-06	0.0E+00
CHILD	3.6E-06	3.3E-06	1.3E-06	4.8E-06	3.8E-06	8.5E-06	3.4E-06	0.0E+00
INFNT	0.0E+00	0.0E+00	0.0E+00	0.0E+00	0.0E+00	0.0E+00	0.0E+00	0.0E+00
COW PATHWAY, DIST GP= 1, 4091. METERS WINDS TOWARD NNE								
ADULT	6.0E-05	3.0E-05	2.4E-05	7.1E-05	4.5E-05	4.6E-04	3.3E-05	0.0E+00
TEEN	6.8E-05	3.9E-05	4.3E-05	1.1E-04	6.5E-05	7.1E-04	4.6E-05	0.0E+00
CHILD	8.3E-05	6.0E-05	1.0E-04	1.8E-04	1.0E-04	1.4E-03	7.3E-05	0.0E+00
INFNT	1.1E-04	9.1E-05	1.6E-04	3.2E-04	1.6E-04	3.3E-03	1.1E-04	0.0E+00
GOAT PATHWAY, DIST GP= 1, 4091. METERS WINDS TOWARD NNE								
ADULT	1.5E-04	6.1E-05	7.0E-05	1.8E-04	1.0E-04	5.7E-04	7.2E-05	0.0E+00
TEEN	1.7E-04	8.0E-05	1.3E-04	2.9E-04	1.5E-04	8.9E-04	1.0E-04	0.0E+00
CHILD	1.9E-04	1.2E-04	3.0E-04	4.8E-04	2.4E-04	1.7E-03	1.6E-04	0.0E+00
INFNT	2.5E-04	1.9E-04	4.8E-04	8.7E-04	3.7E-04	4.1E-03	2.6E-04	0.0E+00
INHAL PATHWAY, DIST GP= 1, 660. METERS WINDS TOWARD NNE								
ADULT	7.8E-04	7.7E-04	4.9E-06	7.8E-04	7.8E-04	9.8E-04	7.7E-04	0.0E+00
TEEN	7.8E-04	7.8E-04	6.7E-06	7.9E-04	7.8E-04	1.0E-03	7.8E-04	0.0E+00
CHILD	6.9E-04	6.9E-04	9.0E-06	7.0E-04	6.9E-04	9.9E-04	6.9E-04	0.0E+00
INFNT	4.0E-04	3.9E-04	5.6E-06	4.0E-04	4.0E-04	6.7E-04	4.0E-04	0.0E+00
SUBTOTALS (NO PLUME)								
ADULT	3.3E-03	2.7E-03	1.3E-03	3.5E-03	3.0E-03	5.6E-03	2.8E-03	9.8E-04
TEEN	3.4E-03	2.9E-03	1.6E-03	4.2E-03	3.3E-03	6.1E-03	3.1E-03	9.8E-04
CHILD	3.9E-03	3.5E-03	2.6E-03	5.6E-03	4.2E-03	9.0E-03	3.7E-03	9.8E-04
INFNT	1.6E-03	1.5E-03	1.5E-03	2.4E-03	1.8E-03	8.9E-03	1.6E-03	9.8E-04
TOTALS								
ADULT	3.9E-03	3.3E-03	1.9E-03	4.1E-03	3.6E-03	6.2E-03	3.4E-03	2.0E-03
TEEN	4.0E-03	3.5E-03	2.2E-03	4.7E-03	3.9E-03	6.7E-03	3.6E-03	2.0E-03
CHILD	4.4E-03	4.1E-03	3.2E-03	6.2E-03	4.8E-03	9.5E-03	4.3E-03	2.0E-03
INFNT	2.2E-03	2.1E-03	2.0E-03	3.0E-03	2.3E-03	9.5E-03	2.2E-03	2.0E-03

INDIVIDUAL DOSES(MREM) DUE TO GASEOUS EFFLUENT
FOR DATES 96 1 1 1 THRU 96 33124

	T.BODY	GI-TRCT	BONE	LIVER	KIDNEY	THYRD	LUNG	SKIN
PLUME PATHWAY, DIST GP= 1, 943. METERS WINDS TOWARD NE								
ADULT	2.6E-04	2.6E-04	2.6E-04	2.6E-04	2.6E-04	2.6E-04	2.7E-04	8.9E-04
TEEN	2.6E-04	2.6E-04	2.6E-04	2.6E-04	2.6E-04	2.6E-04	2.7E-04	8.9E-04
CHILD	2.6E-04	2.6E-04	2.6E-04	2.6E-04	2.6E-04	2.6E-04	2.7E-04	8.9E-04
INFNT	2.6E-04	2.6E-04	2.6E-04	2.6E-04	2.6E-04	2.6E-04	2.7E-04	8.9E-04
GROUND PATHWAY, DIST GP= 1, 943. METERS WINDS TOWARD NE								
ADULT	4.4E-04	4.4E-04	4.4E-04	4.4E-04	4.4E-04	4.4E-04	4.4E-04	5.2E-04
TEEN	4.4E-04	4.4E-04	4.4E-04	4.4E-04	4.4E-04	4.4E-04	4.4E-04	5.2E-04
CHILD	4.4E-04	4.4E-04	4.4E-04	4.4E-04	4.4E-04	4.4E-04	4.4E-04	5.2E-04
INFNT	4.4E-04	4.4E-04	4.4E-04	4.4E-04	4.4E-04	4.4E-04	4.4E-04	5.2E-04
VEGET PATHWAY, DIST GP= 1, 1052. METERS WINDS TOWARD NE								
ADULT	8.8E-04	5.9E-04	2.4E-04	9.9E-04	7.2E-04	1.7E-03	6.3E-04	0.0E+00
TEEN	9.2E-04	6.8E-04	3.7E-04	1.3E-03	8.8E-04	1.6E-03	7.5E-04	0.0E+00
CHILD	1.2E-03	1.0E-03	8.5E-04	2.0E-03	1.4E-03	2.4E-03	1.2E-03	0.0E+00
INFNT	0.0E+00	0.0E+00	0.0E+00	0.0E+00	0.0E+00	0.0E+00	0.0E+00	0.0E+00
MEAT PATHWAY, DIST GP= 1, 7725. METERS WINDS TOWARD NE								
ADULT	5.0E-06	4.0E-06	8.1E-07	5.3E-06	4.4E-06	8.4E-06	4.1E-06	0.0E+00
TEEN	2.8E-06	2.4E-06	6.7E-07	3.5E-06	2.7E-06	5.6E-06	2.5E-06	0.0E+00
CHILD	3.1E-06	2.8E-06	1.2E-06	4.3E-06	3.3E-06	7.8E-06	3.0E-06	0.0E+00
INFNT	0.0E+00	0.0E+00	0.0E+00	0.0E+00	0.0E+00	0.0E+00	0.0E+00	0.0E+00
COW PATHWAY, DIST GP= 1, 4091. METERS WINDS TOWARD NE								
ADULT	5.4E-05	2.6E-05	2.3E-05	6.5E-05	4.0E-05	4.3E-04	2.9E-05	0.0E+00
TEEN	6.1E-05	3.3E-05	4.1E-05	1.0E-04	5.8E-05	6.7E-04	4.0E-05	0.0E+00
CHILD	7.3E-05	5.1E-05	9.8E-05	1.7E-04	9.3E-05	1.3E-03	6.3E-05	0.0E+00
INFNT	9.9E-05	7.7E-05	1.6E-04	3.0E-04	1.4E-04	3.2E-03	9.9E-05	0.0E+00
GOAT PATHWAY, DIST GP= 1, 4091. METERS WINDS TOWARD NE								
ADULT	1.4E-04	5.3E-05	6.8E-05	1.7E-04	9.1E-05	5.4E-04	6.3E-05	0.0E+00
TEEN	1.5E-04	6.8E-05	1.2E-04	2.7E-04	1.4E-04	8.4E-04	9.1E-05	0.0E+00
CHILD	1.7E-04	1.0E-04	2.9E-04	4.5E-04	2.2E-04	1.6E-03	1.4E-04	0.0E+00
INFNT	2.2E-04	1.6E-04	4.6E-04	8.1E-04	3.4E-04	3.9E-03	2.3E-04	0.0E+00
INHAL PATHWAY, DIST GP= 1, 943. METERS WINDS TOWARD NE								
ADULT	3.9E-04	3.8E-04	3.8E-06	3.9E-04	3.9E-04	5.5E-04	3.8E-04	0.0E+00
TEEN	3.9E-04	3.9E-04	5.3E-06	3.9E-04	3.9E-04	5.9E-04	3.9E-04	0.0E+00
CHILD	3.4E-04	3.4E-04	7.0E-06	3.5E-04	3.5E-04	5.8E-04	3.4E-04	0.0E+00
INFNT	2.0E-04	2.0E-04	4.4E-06	2.0E-04	2.0E-04	4.1E-04	2.0E-04	0.0E+00
SUBTOTALS (NO PLUME)								
ADULT	1.9E-03	1.5E-03	7.7E-04	2.1E-03	1.7E-03	3.7E-03	1.6E-03	5.2E-04
TEEN	2.0E-03	1.6E-03	9.8E-04	2.5E-03	1.9E-03	4.1E-03	1.7E-03	5.2E-04
CHILD	2.2E-03	2.0E-03	1.7E-03	3.5E-03	2.5E-03	6.4E-03	2.1E-03	5.2E-04
INFNT	9.6E-04	8.7E-04	1.1E-03	1.8E-03	1.1E-03	7.9E-03	9.6E-04	5.2E-04
TOTALS								
ADULT	2.2E-03	1.8E-03	1.0E-03	2.3E-03	1.9E-03	3.9E-03	1.8E-03	1.4E-03
TEEN	2.2E-03	1.9E-03	1.2E-03	2.8E-03	2.2E-03	4.4E-03	2.0E-03	1.4E-03
CHILD	2.5E-03	2.2E-03	1.9E-03	3.7E-03	2.7E-03	6.7E-03	2.4E-03	1.4E-03
INFNT	1.2E-03	1.1E-03	1.3E-03	2.0E-03	1.4E-03	8.1E-03	1.2E-03	1.4E-03

INDIVIDUAL DOSES(MREM) DUE TO GASEOUS EFFLUENT
FOR DATES 96 1 1 1 THRU 96 33124

	T.BODY	GI-TRCT	BONE	LIVER	KIDNEY	THYRD	LUNG	SKIN
PLUME PATHWAY, DIST GP= 1, 1747. METERS WINDS TOWARD ENE								
ADULT	1.3E-04	1.3E-04	1.3E-04	1.3E-04	1.3E-04	1.3E-04	1.3E-04	2.4E-04
TEEN	1.3E-04	1.3E-04	1.3E-04	1.3E-04	1.3E-04	1.3E-04	1.3E-04	2.4E-04
CHILD	1.3E-04	1.3E-04	1.3E-04	1.3E-04	1.3E-04	1.3E-04	1.3E-04	2.4E-04
INFNT	1.3E-04	1.3E-04	1.3E-04	1.3E-04	1.3E-04	1.3E-04	1.3E-04	2.4E-04
GROUND PATHWAY, DIST GP= 1, 1747. METERS WINDS TOWARD ENE								
ADULT	3.0E-04	3.0E-04	3.0E-04	3.0E-04	3.0E-04	3.0E-04	3.0E-04	3.5E-04
TEEN	3.0E-04	3.0E-04	3.0E-04	3.0E-04	3.0E-04	3.0E-04	3.0E-04	3.5E-04
CHILD	3.0E-04	3.0E-04	3.0E-04	3.0E-04	3.0E-04	3.0E-04	3.0E-04	3.5E-04
INFNT	3.0E-04	3.0E-04	3.0E-04	3.0E-04	3.0E-04	3.0E-04	3.0E-04	3.5E-04
VEGET PATHWAY, DIST GP= 1, 1852. METERS WINDS TOWARD ENE								
ADULT	4.6E-04	2.5E-04	1.8E-04	5.4E-04	3.5E-04	1.1E-03	2.7E-04	0.0E+00
TEEN	4.6E-04	2.8E-04	2.7E-04	7.4E-04	4.3E-04	9.7E-04	3.3E-04	0.0E+00
CHILD	5.6E-04	4.3E-04	6.3E-04	1.2E-03	6.7E-04	1.5E-03	5.1E-04	0.0E+00
INFNT	0.0E+00	0.0E+00	0.0E+00	0.0E+00	0.0E+00	0.0E+00	0.0E+00	0.0E+00
MEAT PATHWAY, DIST GP= 1, 3862. METERS WINDS TOWARD ENE								
ADULT	1.8E-05	1.1E-05	5.5E-06	2.1E-05	1.4E-05	4.2E-05	1.2E-05	0.0E+00
TEEN	9.7E-06	6.8E-06	4.5E-06	1.4E-05	9.2E-06	2.9E-05	7.5E-06	0.0E+00
CHILD	9.8E-06	8.0E-06	8.2E-06	1.8E-05	1.1E-05	4.2E-05	9.0E-06	0.0E+00
INFNT	0.0E+00	0.0E+00	0.0E+00	0.0E+00	0.0E+00	0.0E+00	0.0E+00	0.0E+00
COW PATHWAY, DIST GP= 1, 4091. METERS WINDS TOWARD ENE								
ADULT	8.0E-05	2.6E-05	4.4E-05	1.0E-04	5.3E-05	8.2E-04	3.2E-05	0.0E+00
TEEN	8.7E-05	3.3E-05	7.9E-05	1.7E-04	8.1E-05	1.3E-03	4.7E-05	0.0E+00
CHILD	9.2E-05	5.1E-05	1.9E-04	2.7E-04	1.3E-04	2.5E-03	7.3E-05	0.0E+00
INFNT	1.2E-04	7.6E-05	3.0E-04	5.0E-04	2.0E-04	6.1E-03	1.2E-04	0.0E+00
GOAT PATHWAY, DIST GP= 1, 4091. METERS WINDS TOWARD ENE								
ADULT	2.2E-04	5.3E-05	1.3E-04	2.8E-04	1.3E-04	1.0E-03	7.3E-05	0.0E+00
TEEN	2.3E-04	6.9E-05	2.3E-04	4.6E-04	2.0E-04	1.6E-03	1.1E-04	0.0E+00
CHILD	2.2E-04	1.0E-04	5.5E-04	7.6E-04	3.2E-04	3.1E-03	1.7E-04	0.0E+00
INFNT	2.7E-04	1.6E-04	8.8E-04	1.4E-03	5.0E-04	7.4E-03	2.8E-04	0.0E+00
INHAL PATHWAY, DIST GP= 1, 1747. METERS WINDS TOWARD ENE								
ADULT	1.5E-04	1.5E-04	1.6E-06	1.5E-04	1.5E-04	2.2E-04	1.5E-04	0.0E+00
TEEN	1.5E-04	1.5E-04	2.3E-06	1.5E-04	1.5E-04	2.3E-04	1.5E-04	0.0E+00
CHILD	1.3E-04	1.3E-04	3.0E-06	1.3E-04	1.3E-04	2.3E-04	1.3E-04	0.0E+00
INFNT	7.5E-05	7.5E-05	1.9E-06	7.7E-05	7.6E-05	1.7E-04	7.5E-05	0.0E+00
SUBTOTALS (NO PLUME)								
ADULT	1.2E-03	7.9E-04	6.6E-04	1.4E-03	9.9E-04	3.5E-03	8.4E-04	3.5E-04
TEEN	1.2E-03	8.4E-04	8.9E-04	1.8E-03	1.2E-03	4.4E-03	9.5E-04	3.5E-04
CHILD	1.3E-03	1.0E-03	1.7E-03	2.7E-03	1.6E-03	7.7E-03	1.2E-03	3.5E-04
INFNT	7.6E-04	6.1E-04	1.5E-03	2.3E-03	1.1E-03	1.4E-02	7.8E-04	3.5E-04
TOTALS								
ADULT	1.4E-03	9.2E-04	7.9E-04	1.5E-03	1.1E-03	3.6E-03	9.7E-04	5.9E-04
TEEN	1.4E-03	9.8E-04	1.0E-03	2.0E-03	1.3E-03	4.5E-03	1.1E-03	5.9E-04
CHILD	1.5E-03	1.2E-03	1.8E-03	2.8E-03	1.7E-03	7.8E-03	1.3E-03	5.9E-04
INFNT	9.0E-04	7.4E-04	1.6E-03	2.4E-03	1.2E-03	1.4E-02	9.1E-04	5.9E-04

INDIVIDUAL DOSES(MREM) DUE TO GASEOUS EFFLUENT
FOR DATES 96 1 1 1 THRU 96 33124

	T.BODY	GI-TRCT	BONE	LIVER	KIDNEY	THYRD	LUNG	SKIN
PLUME PATHWAY, DIST GP= 1, 1716. METERS WINDS TOWARD E								
ADULT	1.5E-04	1.5E-04	1.5E-04	1.5E-04	1.5E-04	1.5E-04	1.5E-04	2.6E-04
TEEN	1.5E-04	1.5E-04	1.5E-04	1.5E-04	1.5E-04	1.5E-04	1.5E-04	2.6E-04
CHILD	1.5E-04	1.5E-04	1.5E-04	1.5E-04	1.5E-04	1.5E-04	1.5E-04	2.6E-04
INFNT	1.5E-04	1.5E-04	1.5E-04	1.5E-04	1.5E-04	1.5E-04	1.5E-04	2.6E-04
GROUND PATHWAY, DIST GP= 1, 1716. METERS WINDS TOWARD E								
ADULT	4.9E-04	4.9E-04	4.9E-04	4.9E-04	4.9E-04	4.9E-04	4.9E-04	5.8E-04
TEEN	4.9E-04	4.9E-04	4.9E-04	4.9E-04	4.9E-04	4.9E-04	4.9E-04	5.8E-04
CHILD	4.9E-04	4.9E-04	4.9E-04	4.9E-04	4.9E-04	4.9E-04	4.9E-04	5.8E-04
INFNT	4.9E-04	4.9E-04	4.9E-04	4.9E-04	4.9E-04	4.9E-04	4.9E-04	5.8E-04
VEGET PATHWAY, DIST GP= 1, 1705. METERS WINDS TOWARD E								
ADULT	7.2E-04	3.2E-04	3.2E-04	8.7E-04	5.0E-04	1.9E-03	3.7E-04	0.0E+00
TEEN	7.0E-04	3.7E-04	5.0E-04	1.2E-03	6.4E-04	1.7E-03	4.6E-04	0.0E+00
CHILD	8.0E-04	5.5E-04	1.2E-03	1.9E-03	1.0E-03	2.5E-03	7.0E-04	0.0E+00
INFNT	0.0E+00	0.0E+00	0.0E+00	0.0E+00	0.0E+00	0.0E+00	0.0E+00	0.0E+00
MEAT PATHWAY, DIST GP= 1, 6810. METERS WINDS TOWARD E								
ADULT	9.2E-06	5.3E-06	3.1E-06	1.1E-05	7.0E-06	2.3E-05	5.7E-06	0.0E+00
TEEN	4.8E-06	3.1E-06	2.5E-06	7.4E-06	4.5E-06	1.6E-05	3.6E-06	0.0E+00
CHILD	4.7E-06	3.7E-06	4.6E-06	9.3E-06	5.5E-06	2.3E-05	4.3E-06	0.0E+00
INFNT	0.0E+00	0.0E+00	0.0E+00	0.0E+00	0.0E+00	0.0E+00	0.0E+00	0.0E+00
COW PATHWAY, DIST GP= 1, 4091. METERS WINDS TOWARD E								
ADULT	1.2E-04	3.0E-05	7.1E-05	1.5E-04	7.4E-05	1.3E-03	4.0E-05	0.0E+00
TEEN	1.2E-04	3.9E-05	1.3E-04	2.5E-04	1.2E-04	2.1E-03	6.1E-05	0.0E+00
CHILD	1.3E-04	5.8E-05	3.0E-04	4.2E-04	1.9E-04	4.1E-03	9.5E-05	0.0E+00
INFNT	1.5E-04	8.6E-05	4.9E-04	7.8E-04	2.9E-04	9.8E-03	1.5E-04	0.0E+00
GOAT PATHWAY, DIST GP= 1, 4091. METERS WINDS TOWARD E								
ADULT	3.3E-04	6.2E-05	2.1E-04	4.2E-04	1.8E-04	1.6E-03	9.4E-05	0.0E+00
TEEN	3.3E-04	8.1E-05	3.7E-04	7.1E-04	2.9E-04	2.5E-03	1.5E-04	0.0E+00
CHILD	3.1E-04	1.2E-04	8.8E-04	1.2E-03	4.7E-04	4.9E-03	2.3E-04	0.0E+00
INFNT	3.6E-04	1.8E-04	1.4E-03	2.2E-03	7.4E-04	1.2E-02	3.8E-04	0.0E+00
INHAL PATHWAY, DIST GP= 1, 1716. METERS WINDS TOWARD E								
ADULT	1.7E-04	1.7E-04	2.7E-06	1.7E-04	1.7E-04	2.8E-04	1.7E-04	0.0E+00
TEEN	1.7E-04	1.7E-04	3.7E-06	1.8E-04	1.7E-04	3.1E-04	1.7E-04	0.0E+00
CHILD	1.5E-04	1.5E-04	4.9E-06	1.6E-04	1.5E-04	3.1E-04	1.5E-04	0.0E+00
INFNT	8.7E-05	8.6E-05	3.1E-06	9.0E-05	8.8E-05	2.4E-04	8.7E-05	0.0E+00
SUBTOTALS (NO PLUME)								
ADULT	1.8E-03	1.1E-03	1.1E-03	2.1E-03	1.4E-03	5.6E-03	1.2E-03	5.8E-04
TEEN	1.8E-03	1.2E-03	1.5E-03	2.8E-03	1.7E-03	7.0E-03	1.3E-03	5.8E-04
CHILD	1.9E-03	1.4E-03	2.8E-03	4.2E-03	2.3E-03	1.2E-02	1.7E-03	5.8E-04
INFNT	1.1E-03	8.4E-04	2.4E-03	3.6E-03	1.6E-03	2.2E-02	1.1E-03	5.8E-04
TOTALS								
ADULT	2.0E-03	1.2E-03	1.2E-03	2.3E-03	1.6E-03	5.7E-03	1.3E-03	8.4E-04
TEEN	2.0E-03	1.3E-03	1.6E-03	3.0E-03	1.9E-03	7.2E-03	1.5E-03	8.4E-04
CHILD	2.0E-03	1.5E-03	3.0E-03	4.3E-03	2.5E-03	1.2E-02	1.8E-03	8.4E-04
INFNT	1.2E-03	9.9E-04	2.5E-03	3.7E-03	1.8E-03	2.3E-02	1.3E-03	8.4E-04

INDIVIDUAL DOSES(MREM) DUE TO GASEOUS EFFLUENT
FOR DATES 96 1 1 1 THRU 96 33124

	T.BODY	GI-TRCT	BONE	LIVER	KIDNEY	THYRD	LUNG	SKIN
PLUME PATHWAY, DIST GP= 1, 1643. METERS WINDS TOWARD ESE								
ADULT	1.0E-04	1.0E-04	1.0E-04	1.0E-04	1.0E-04	1.0E-04	1.1E-04	1.9E-04
TEEN	1.0E-04	1.0E-04	1.0E-04	1.0E-04	1.0E-04	1.0E-04	1.1E-04	1.9E-04
CHILD	1.0E-04	1.0E-04	1.0E-04	1.0E-04	1.0E-04	1.0E-04	1.1E-04	1.9E-04
INFNT	1.0E-04	1.0E-04	1.0E-04	1.0E-04	1.0E-04	1.0E-04	1.1E-04	1.9E-04
GROUND PATHWAY, DIST GP= 1, 1643. METERS WINDS TOWARD ESE								
ADULT	2.1E-04	2.1E-04	2.1E-04	2.1E-04	2.1E-04	2.1E-04	2.1E-04	2.4E-04
TEEN	2.1E-04	2.1E-04	2.1E-04	2.1E-04	2.1E-04	2.1E-04	2.1E-04	2.4E-04
CHILD	2.1E-04	2.1E-04	2.1E-04	2.1E-04	2.1E-04	2.1E-04	2.1E-04	2.4E-04
INFNT	2.1E-04	2.1E-04	2.1E-04	2.1E-04	2.1E-04	2.1E-04	2.1E-04	2.4E-04
VEGET PATHWAY, DIST GP= 1, 1628. METERS WINDS TOWARD ESE								
ADULT	4.3E-04	2.6E-04	1.3E-04	4.9E-04	3.4E-04	8.9E-04	2.8E-04	0.0E+00
TEEN	4.4E-04	3.0E-04	2.1E-04	6.4E-04	4.1E-04	8.2E-04	3.4E-04	0.0E+00
CHILD	5.6E-04	4.6E-04	4.8E-04	1.0E-03	6.4E-04	1.3E-03	5.2E-04	0.0E+00
INFNT	0.0E+00	0.0E+00	0.0E+00	0.0E+00	0.0E+00	0.0E+00	0.0E+00	0.0E+00
MEAT PATHWAY, DIST GP= 1, 2434. METERS WINDS TOWARD ESE								
ADULT	2.9E-05	2.0E-05	6.9E-06	3.2E-05	2.4E-05	5.9E-05	2.1E-05	0.0E+00
TEEN	1.6E-05	1.2E-05	5.7E-06	2.1E-05	1.5E-05	4.0E-05	1.3E-05	0.0E+00
CHILD	1.6E-05	1.4E-05	1.0E-05	2.7E-05	1.8E-05	5.7E-05	1.6E-05	0.0E+00
INFNT	0.0E+00	0.0E+00	0.0E+00	0.0E+00	0.0E+00	0.0E+00	0.0E+00	0.0E+00
COW PATHWAY, DIST GP= 1, 4091. METERS WINDS TOWARD ESE								
ADULT	5.5E-05	2.1E-05	2.7E-05	6.7E-05	3.8E-05	5.0E-04	2.5E-05	0.0E+00
TEEN	6.0E-05	2.8E-05	4.8E-05	1.1E-04	5.7E-05	7.9E-04	3.6E-05	0.0E+00
CHILD	6.8E-05	4.2E-05	1.1E-04	1.8E-04	9.1E-05	1.6E-03	5.6E-05	0.0E+00
INFNT	9.0E-05	6.4E-05	1.9E-04	3.3E-04	1.4E-04	3.7E-03	9.0E-05	0.0E+00
GOAT PATHWAY, DIST GP= 1, 4091. METERS WINDS TOWARD ESE								
ADULT	1.4E-04	4.4E-05	7.9E-05	1.8E-04	9.0E-05	6.2E-04	5.6E-05	0.0E+00
TEEN	1.5E-04	5.7E-05	1.4E-04	3.0E-04	1.4E-04	9.7E-04	8.4E-05	0.0E+00
CHILD	1.6E-04	8.7E-05	3.4E-04	4.9E-04	2.2E-04	1.9E-03	1.3E-04	0.0E+00
INFNT	2.0E-04	1.3E-04	5.4E-04	9.0E-04	3.4E-04	4.6E-03	2.1E-04	0.0E+00
INHAL PATHWAY, DIST GP= 1, 1643. METERS WINDS TOWARD ESE								
ADULT	1.4E-04	1.4E-04	5.8E-07	1.4E-04	1.4E-04	1.6E-04	1.4E-04	0.0E+00
TEEN	1.4E-04	1.4E-04	8.0E-07	1.4E-04	1.4E-04	1.7E-04	1.4E-04	0.0E+00
CHILD	1.2E-04	1.2E-04	1.1E-06	1.3E-04	1.3E-04	1.6E-04	1.2E-04	0.0E+00
INFNT	7.2E-05	7.2E-05	6.7E-07	7.2E-05	7.2E-05	1.0E-04	7.2E-05	0.0E+00
SUBTOTALS (NO PLUME)								
ADULT	1.0E-03	7.0E-04	4.5E-04	1.1E-03	8.3E-04	2.5E-03	7.3E-04	2.4E-04
TEEN	1.0E-03	7.5E-04	6.1E-04	1.4E-03	9.7E-04	3.0E-03	8.2E-04	2.4E-04
CHILD	1.1E-03	9.3E-04	1.2E-03	2.1E-03	1.3E-03	5.1E-03	1.1E-03	2.4E-04
INFNT	5.7E-04	4.7E-04	9.3E-04	1.5E-03	7.7E-04	8.6E-03	5.8E-04	2.4E-04
TOTALS								
ADULT	1.1E-03	8.0E-04	5.6E-04	1.2E-03	9.4E-04	2.6E-03	8.4E-04	4.3E-04
TEEN	1.1E-03	8.5E-04	7.2E-04	1.5E-03	1.1E-03	3.1E-03	9.2E-04	4.3E-04
CHILD	1.2E-03	1.0E-03	1.3E-03	2.2E-03	1.4E-03	5.2E-03	1.2E-03	4.3E-04
INFNT	6.7E-04	5.8E-04	1.0E-03	1.6E-03	8.7E-04	8.7E-03	6.8E-04	4.3E-04

INDIVIDUAL DOSES(MREM) DUE TO GASEOUS EFFLUENT
FOR DATES 96 1 1 1 THRU 96 33124

	T.BODY	GI-TRCT	BONE	LIVER	KIDNEY	THYRD	LUNG	SKIN
PLUME PATHWAY, DIST GP= 1, 1136. METERS WINDS TOWARD SE								
ADULT	2.1E-04	2.1E-04	2.1E-04	2.1E-04	2.1E-04	2.1E-04	2.2E-04	5.1E-04
TEEN	2.1E-04	2.1E-04	2.1E-04	2.1E-04	2.1E-04	2.1E-04	2.2E-04	5.1E-04
CHILD	2.1E-04	2.1E-04	2.1E-04	2.1E-04	2.1E-04	2.1E-04	2.2E-04	5.1E-04
INFNT	2.1E-04	2.1E-04	2.1E-04	2.1E-04	2.1E-04	2.1E-04	2.2E-04	5.1E-04
GROUND PATHWAY, DIST GP= 1, 1136. METERS WINDS TOWARD SE								
ADULT	4.1E-04	4.1E-04	4.1E-04	4.1E-04	4.1E-04	4.1E-04	4.1E-04	4.8E-04
TEEN	4.1E-04	4.1E-04	4.1E-04	4.1E-04	4.1E-04	4.1E-04	4.1E-04	4.8E-04
CHILD	4.1E-04	4.1E-04	4.1E-04	4.1E-04	4.1E-04	4.1E-04	4.1E-04	4.8E-04
INFNT	4.1E-04	4.1E-04	4.1E-04	4.1E-04	4.1E-04	4.1E-04	4.1E-04	4.8E-04
VEGET PATHWAY, DIST GP= 1, 914. METERS WINDS TOWARD SE								
ADULT	1.1E-03	6.1E-04	3.7E-04	1.2E-03	8.1E-04	2.4E-03	6.6E-04	0.0E+00
TEEN	1.1E-03	6.9E-04	5.8E-04	1.7E-03	1.0E-03	2.2E-03	8.0E-04	0.0E+00
CHILD	1.3E-03	1.1E-03	1.3E-03	2.7E-03	1.6E-03	3.3E-03	1.2E-03	0.0E+00
INFNT	0.0E+00	0.0E+00	0.0E+00	0.0E+00	0.0E+00	0.0E+00	0.0E+00	0.0E+00
MEAT PATHWAY, DIST GP= 1, 4354. METERS WINDS TOWARD SE								
ADULT	1.1E-05	7.3E-06	2.9E-06	1.2E-05	8.9E-06	2.4E-05	7.7E-06	0.0E+00
TEEN	6.0E-06	4.4E-06	2.4E-06	8.4E-06	5.7E-06	1.6E-05	4.8E-06	0.0E+00
CHILD	6.1E-06	5.2E-06	4.3E-06	1.0E-05	6.9E-06	2.3E-05	5.7E-06	0.0E+00
INFNT	0.0E+00	0.0E+00	0.0E+00	0.0E+00	0.0E+00	0.0E+00	0.0E+00	0.0E+00
COW PATHWAY, DIST GP= 1, 4091. METERS WINDS TOWARD SE								
ADULT	5.6E-05	2.0E-05	2.9E-05	6.9E-05	3.8E-05	5.4E-04	2.4E-05	0.0E+00
TEEN	6.1E-05	2.6E-05	5.2E-05	1.1E-04	5.7E-05	8.5E-04	3.5E-05	0.0E+00
CHILD	6.7E-05	4.0E-05	1.2E-04	1.9E-04	9.2E-05	1.7E-03	5.4E-05	0.0E+00
INFNT	8.7E-05	5.9E-05	2.0E-04	3.4E-04	1.4E-04	4.0E-03	8.7E-05	0.0E+00
GOAT PATHWAY, DIST GP= 1, 4091. METERS WINDS TOWARD SE								
ADULT	1.5E-04	4.1E-05	8.5E-05	1.9E-04	9.0E-05	6.6E-04	5.4E-05	0.0E+00
TEEN	1.6E-04	5.4E-05	1.5E-04	3.1E-04	1.4E-04	1.0E-03	8.2E-05	0.0E+00
CHILD	1.6E-04	8.1E-05	3.6E-04	5.1E-04	2.2E-04	2.0E-03	1.3E-04	0.0E+00
INFNT	2.0E-04	1.2E-04	5.8E-04	9.4E-04	3.5E-04	4.9E-03	2.1E-04	0.0E+00
INHAL PATHWAY, DIST GP= 1, 1136. METERS WINDS TOWARD SE								
ADULT	2.3E-04	2.3E-04	1.4E-06	2.3E-04	2.3E-04	2.9E-04	2.3E-04	0.0E+00
TEEN	2.3E-04	2.3E-04	1.9E-06	2.4E-04	2.3E-04	3.1E-04	2.3E-04	0.0E+00
CHILD	2.1E-04	2.1E-04	2.5E-06	2.1E-04	2.1E-04	2.9E-04	2.1E-04	0.0E+00
INFNT	1.2E-04	1.2E-04	1.6E-06	1.2E-04	1.2E-04	2.0E-04	1.2E-04	0.0E+00
SUBTOTALS (NO PLUME)								
ADULT	1.9E-03	1.3E-03	9.0E-04	2.2E-03	1.6E-03	4.3E-03	1.4E-03	4.8E-04
TEEN	1.9E-03	1.4E-03	1.2E-03	2.7E-03	1.9E-03	4.8E-03	1.6E-03	4.8E-04
CHILD	2.2E-03	1.8E-03	2.2E-03	4.0E-03	2.5E-03	7.7E-03	2.0E-03	4.8E-04
INFNT	8.1E-04	7.1E-04	1.2E-03	1.8E-03	1.0E-03	9.5E-03	8.2E-04	4.8E-04
TOTALS								
ADULT	2.1E-03	1.5E-03	1.1E-03	2.4E-03	1.8E-03	4.5E-03	1.6E-03	9.9E-04
TEEN	2.2E-03	1.6E-03	1.4E-03	3.0E-03	2.1E-03	5.0E-03	1.8E-03	9.9E-04
CHILD	2.4E-03	2.0E-03	2.5E-03	4.2E-03	2.7E-03	7.9E-03	2.2E-03	9.9E-04
INFNT	1.0E-03	9.2E-04	1.4E-03	2.0E-03	1.2E-03	9.7E-03	1.0E-03	9.9E-04

INDIVIDUAL DOSES(MREM) DUE TO GASEOUS EFFLUENT
FOR DATES 96 1 1 1 THRU 96 33124

	T.BODY	GI-TRCT	BONE	LIVER	KIDNEY	THYRD	LUNG	SKIN
PLUME PATHWAY, DIST GP= 1, 1507. METERS WINDS TOWARD SSE								
ADULT	1.6E-04	1.6E-04	1.6E-04	1.6E-04	1.6E-04	1.6E-04	1.7E-04	3.2E-04
TEEN	1.6E-04	1.6E-04	1.6E-04	1.6E-04	1.6E-04	1.6E-04	1.7E-04	3.2E-04
CHILD	1.6E-04	1.6E-04	1.6E-04	1.6E-04	1.6E-04	1.6E-04	1.7E-04	3.2E-04
INFNT	1.6E-04	1.6E-04	1.6E-04	1.6E-04	1.6E-04	1.6E-04	1.7E-04	3.2E-04
GROUND PATHWAY, DIST GP= 1, 1507. METERS WINDS TOWARD SSE								
ADULT	4.8E-04	4.8E-04	4.8E-04	4.8E-04	4.8E-04	4.8E-04	4.8E-04	5.6E-04
TEEN	4.8E-04	4.8E-04	4.8E-04	4.8E-04	4.8E-04	4.8E-04	4.8E-04	5.6E-04
CHILD	4.8E-04	4.8E-04	4.8E-04	4.8E-04	4.8E-04	4.8E-04	4.8E-04	5.6E-04
INFNT	4.8E-04	4.8E-04	4.8E-04	4.8E-04	4.8E-04	4.8E-04	4.8E-04	5.6E-04
VEGET PATHWAY, DIST GP= 1, 1093. METERS WINDS TOWARD SSE								
ADULT	1.3E-03	6.0E-04	5.4E-04	1.5E-03	9.0E-04	3.2E-03	6.8E-04	0.0E+00
TEEN	1.2E-03	6.9E-04	8.3E-04	2.1E-03	1.1E-03	2.8E-03	8.4E-04	0.0E+00
CHILD	1.4E-03	1.0E-03	1.9E-03	3.3E-03	1.8E-03	4.3E-03	1.3E-03	0.0E+00
INFNT	0.0E+00	0.0E+00	0.0E+00	0.0E+00	0.0E+00	0.0E+00	0.0E+00	0.0E+00
MEAT PATHWAY, DIST GP= 1, 1093. METERS WINDS TOWARD SSE								
ADULT	1.5E-04	8.6E-05	5.5E-05	1.8E-04	1.2E-04	4.0E-04	9.4E-05	0.0E+00
TEEN	8.1E-05	5.1E-05	4.5E-05	1.3E-04	7.6E-05	2.8E-04	5.9E-05	0.0E+00
CHILD	7.8E-05	6.1E-05	8.1E-05	1.6E-04	9.3E-05	4.0E-04	7.1E-05	0.0E+00
INFNT	0.0E+00	0.0E+00	0.0E+00	0.0E+00	0.0E+00	0.0E+00	0.0E+00	0.0E+00
COW PATHWAY, DIST GP= 1, 4091. METERS WINDS TOWARD SSE								
ADULT	9.7E-05	2.8E-05	5.6E-05	1.2E-04	6.2E-05	1.0E-03	3.5E-05	0.0E+00
TEEN	1.0E-04	3.6E-05	1.0E-04	2.0E-04	9.7E-05	1.6E-03	5.3E-05	0.0E+00
CHILD	1.1E-04	5.4E-05	2.4E-04	3.4E-04	1.6E-04	3.2E-03	8.3E-05	0.0E+00
INFNT	1.3E-04	8.0E-05	3.8E-04	6.3E-04	2.4E-04	7.8E-03	1.3E-04	0.0E+00
GOAT PATHWAY, DIST GP= 1, 4091. METERS WINDS TOWARD SSE								
ADULT	2.7E-04	5.7E-05	1.6E-04	3.4E-04	1.5E-04	1.3E-03	8.2E-05	0.0E+00
TEEN	2.7E-04	7.4E-05	2.9E-04	5.7E-04	2.4E-04	2.0E-03	1 3E-04	0.0E+00
CHILD	2.6E-04	1.1E-04	6.9E-04	9.5E-04	3.9E-04	3.9E-03	2.0E-04	0.0E+00
INFNT	3.1E-04	1.6E-04	1.1E-03	1.8E-03	6.1E-04	9.4E-03	3.3E-04	0.0E+00
INHAL PATHWAY, DIST GP= 1, 1507. METERS WINDS TOWARD SSE								
ADULT	2.0E-04	1.9E-04	3.9E-06	2.0E-04	2.0E-04	3.6E-04	1.9E-04	0.0E+00
TEEN	2.0E-04	1.9E-04	5.3E-06	2.0E-04	2.0E-04	4.0E-04	2.0E-04	0.0E+00
CHILD	1.7E-04	1.7E-04	7.1E-06	1.8E-04	1.8E-04	4.1E-04	1.7E-04	0.0E+00
INFNT	1.0E-04	9.9E-05	4.5E-06	1.1E-04	1.0E-04	3.2E-04	1.0E-04	0.0E+00
SUBTOTALS (NO PLUME)								
ADULT	2.5E-03	1.4E-03	1.3E-03	2.8E-03	1.9E-03	6.7E-03	1.6E-03	5.6E-04
TEEN	2.4E-03	1.5E-03	1.8E-03	3.7E-03	2.2E-03	7.6E-03	1.8E-03	5.6E-04
CHILD	2.6E-03	1.9E-03	3.4E-03	5.5E-03	3.1E-03	1.3E-02	2.3E-03	5.6E-04
INFNT	1.0E-03	8.3E-04	2.0E-03	3.0E-03	1.4E-03	1.8E-02	1.0E-03	5.6E-04
TOTALS								
ADULT	2.6E-03	1.6E-03	1.5E-03	3.0E-03	2.1E-03	6.9E-03	1.7E-03	8.9E-04
TEEN	2.5E-03	1.7E-03	1.9E-03	3.8E-03	2.4E-03	7.8E-03	1.9E-03	8.9E-04
CHILD	2.7E-03	2.1E-03	3.6E-03	5.6E-03	3.2E-03	1.3E-02	2.5E-03	8.9E-04
INFNT	1.2E-03	9.9E-04	2.2E-03	3.1E-03	1.6E-03	1.8E-02	1.2E-03	8.9E-04

INDIVIDUAL DOSES(MREM) DUE TO GASEOUS EFFLUENT
FOR DATES 96 1 1 1 THRU 96 33124

	T.BODY	GI-TRCT	BONE	LIVER	KIDNEY	THYRD	LUNG	SKIN
PLUME PATHWAY, DIST GP= 1, 1026. METERS WINDS TOWARD S								
ADULT	2.8E-04	2.8E-04	2.8E-04	2.8E-04	2.8E-04	2.8E-04	2.8E-04	5.0E-04
TEEN	2.8E-04	2.8E-04	2.8E-04	2.8E-04	2.8E-04	2.8E-04	2.8E-04	5.0E-04
CHILD	2.8E-04	2.8E-04	2.8E-04	2.8E-04	2.8E-04	2.8E-04	2.8E-04	5.0E-04
INFNT	2.8E-04	2.8E-04	2.8E-04	2.8E-04	2.8E-04	2.8E-04	2.8E-04	5.0E-04
GROUND PATHWAY, DIST GP= 1, 1026. METERS WINDS TOWARD S								
ADULT	1.7E-03	1.7E-03	1.7E-03	1.7E-03	1.7E-03	1.7E-03	1.7E-03	2.0E-03
TEEN	1.7E-03	1.7E-03	1.7E-03	1.7E-03	1.7E-03	1.7E-03	1.7E-03	2.0E-03
CHILD	1.7E-03	1.7E-03	1.7E-03	1.7E-03	1.7E-03	1.7E-03	1.7E-03	2.0E-03
INFNT	1.7E-03	1.7E-03	1.7E-03	1.7E-03	1.7E-03	1.7E-03	1.7E-03	2.0E-03
VEGET PATHWAY, DIST GP= 1, 863. METERS WINDS TOWARD S								
ADULT	2.7E-03	8.2E-04	1.5E-03	3.3E-03	1.6E-03	7.9E-03	1.0E-03	0.0E+00
TEEN	2.5E-03	9.3E-04	2.3E-03	4.8E-03	2.2E-03	6.8E-03	1.4E-03	0.0E+00
CHILD	2.5E-03	1.4E-03	5.3E-03	7.7E-03	3.4E-03	1.0E-02	2.1E-03	0.0E+00
INFNT	0.0E+00	0.0E+00	0.0E+00	0.0E+00	0.0E+00	0.0E+00	0.0E+00	0.0E+00
MEAT PATHWAY, DIST GP= 1, 6115. METERS WINDS TOWARD S								
ADULT	1.2E-05	5.1E-06	5.5E-06	1.5E-05	8.2E-06	3.7E-05	5.9E-06	0.0E+00
TEEN	6.1E-06	3.0E-06	4.5E-06	1.1E-05	5.6E-06	2.6E-05	3.9E-06	0.0E+00
CHILD	5.3E-06	3.6E-06	8.2E-06	1.3E-05	6.8E-06	3.8E-05	4.6E-06	0.0E+00
INFNT	0.0E+00	0.0E+00	0.0E+00	0.0E+00	0.0E+00	0.0E+00	0.0E+00	0.0E+00
COW PATHWAY, DIST GP= 1, 4091. METERS WINDS TOWARD S								
ADULT	1.6E-04	2.7E-05	1.0E-04	2.1E-04	9.1E-05	1.9E-03	4.1E-05	0.0E+00
TEEN	1.6E-04	3.5E-05	1.9E-04	3.5E-04	1.5E-04	3.0E-03	6.8E-05	0.0E+00
CHILD	1.5E-04	5.0E-05	4.4E-04	5.8E-04	2.4E-04	6.0E-03	1.0E-04	0.0E+00
INFNT	1.7E-04	7.3E-05	7.1E-04	1.1E-03	3.8E-04	1.4E-02	1.7E-04	0.0E+00
GOAT PATHWAY, DIST GP= 1, 4091. METERS WINDS TOWARD S								
ADULT	4.4E-04	5.7E-05	3.0E-04	5.8E-04	2.3E-04	2.3E-03	1.0E-04	0.0E+00
TEEN	4.5E-04	7.4E-05	5.4E-04	1.0E-03	3.8E-04	3.6E-03	1.8E-04	0.0E+00
CHILD	3.9E-04	1.0E-04	1.3E-03	1.7E-03	6.2E-04	7.2E-03	2.7E-04	0.0E+00
INFNT	4.2E-04	1.5E-04	2.1E-03	3.1E-03	9.7E-04	1.7E-02	4.5E-04	0.0E+00
INHAL PATHWAY, DIST GP= 1, 1026. METERS WINDS TOWARD S								
ADULT	3.3E-04	3.2E-04	6.1E-06	3.3E-04	3.3E-04	5.8E-04	3.2E-04	0.0E+00
TEEN	3.3E-04	3.2E-04	8.4E-06	3.4E-04	3.3E-04	6.5E-04	3.3E-04	0.0E+00
CHILD	2.9E-04	2.9E-04	1.1E-05	3.0E-04	2.9E-04	6.6E-04	2.9E-04	0.0E+00
INFNT	1.7E-04	1.7E-04	7.0E-06	1.7E-04	1.7E-04	5.0E-04	1.7E-04	0.0E+00
SUBTOTALS (NO PLUME)								
ADULT	5.3E-03	2.9E-03	3.6E-03	6.2E-03	4.0E-03	1.4E-02	3.2E-03	2.0E-03
TEEN	5.1E-03	3.1E-03	4.7E-03	8.2E-03	4.7E-03	1.6E-02	3.6E-03	2.0E-03
CHILD	5.0E-03	3.5E-03	8.7E-03	1.2E-02	6.3E-03	2.6E-02	4.4E-03	2.0E-03
INFNT	2.4E-03	2.1E-03	4.5E-03	6.1E-03	3.2E-03	3.4E-02	2.5E-03	2.0E-03
TOTALS								
ADULT	5.6E-03	3.2E-03	3.9E-03	6.4E-03	4.3E-03	1.5E-02	3.5E-03	2.5E-03
TEEN	5.4E-03	3.3E-03	5.0E-03	8.4E-03	5.0E-03	1.6E-02	3.9E-03	2.5E-03
CHILD	5.3E-03	3.8E-03	9.0E-03	1.2E-02	6.5E-03	2.6E-02	4.7E-03	2.5E-03
INFNT	2.7E-03	2.4E-03	4.8E-03	6.3E-03	3.5E-03	3.4E-02	2.8E-03	2.5E-03

INDIVIDUAL DOSES(MREM) DUE TO GASEOUS EFFLUENT
FOR DATES 96 1 1 1 THRU 96 33124

	T.BODY	GI-TRCT	BONE	LIVER	KIDNEY	THYRD	LUNG	SKIN
PLUME PATHWAY, DIST GP= 1, 942. METERS WINDS TOWARD SSW								
ADULT	2.5E-04	2.5E-04	2.5E-04	2.5E-04	2.5E-04	2.5E-04	2.5E-04	4.5E-04
TEEN	2.5E-04	2.5E-04	2.5E-04	2.5E-04	2.5E-04	2.5E-04	2.5E-04	4.5E-04
CHILD	2.5E-04	2.5E-04	2.5E-04	2.5E-04	2.5E-04	2.5E-04	2.5E-04	4.5E-04
INFNT	2.5E-04	2.5E-04	2.5E-04	2.5E-04	2.5E-04	2.5E-04	2.5E-04	4.5E-04
GROUND PATHWAY, DIST GP= 1, 942. METERS WINDS TOWARD SSW								
ADULT	7.5E-04	7.5E-04	7.5E-04	7.5E-04	7.5E-04	7.5E-04	7.5E-04	8.8E-04
TEEN	7.5E-04	7.5E-04	7.5E-04	7.5E-04	7.5E-04	7.5E-04	7.5E-04	8.8E-04
CHILD	7.5E-04	7.5E-04	7.5E-04	7.5E-04	7.5E-04	7.5E-04	7.5E-04	8.8E-04
INFNT	7.5E-04	7.5E-04	7.5E-04	7.5E-04	7.5E-04	7.5E-04	7.5E-04	8.8E-04
VEGET PATHWAY, DIST GP= 1, 770. METERS WINDS TOWARD SSW								
ADULT	1.6E-03	7.3E-04	6.9E-04	1.9E-03	1.1E-03	4.0E-03	8.3E-04	0.0E+00
TEEN	1.5E-03	8.3E-04	1.1E-03	2.6E-03	1.4E-03	3.6E-03	1.0E-03	0.0E+00
CHILD	1.8E-03	1.3E-03	2.5E-03	4.2E-03	2.2E-03	5.4E-03	1.6E-03	0.0E+00
INFNT	0.0E+00	0.0E+00	0.0E+00	0.0E+00	0.0E+00	0.0E+00	0.0E+00	0.0E+00
MEAT PATHWAY, DIST GP= 1, 8045. METERS WINDS TOWARD SSW								
ADULT	4.5E-06	2.8E-06	1.3E-06	5.1E-06	3.6E-06	1.0E-05	3.0E-06	0.0E+00
TEEN	2.4E-06	1.7E-06	1.1E-06	3.5E-06	2.3E-06	7.1E-06	1.9E-06	0.0E+00
CHILD	2.4E-06	2.0E-06	2.0E-06	4.4E-06	2.8E-06	1.0E-05	2.3E-06	0.0E+00
INFNT	0.0E+00	0.0E+00	0.0E+00	0.0E+00	0.0E+00	0.0E+00	0.0E+00	0.0E+00
COW PATHWAY, DIST GP= 1, 4091. METERS WINDS TOWARD SSW								
ADULT	7.0E-05	2.0E-05	4.0E-05	8.9E-05	4.5E-05	7.5E-04	2.6E-05	0.0E+00
TEEN	7.5E-05	2.7E-05	7.2E-05	1.5E-04	7.0E-05	1.2E-03	3.9E-05	0.0E+00
CHILD	7.8E-05	4.0E-05	1.7E-04	2.4E-04	1.1E-04	2.3E-03	6.1E-05	0.0E+00
INFNT	9.8E-05	6.0E-05	2.8E-04	4.5E-04	1.8E-04	5.6E-03	9.8E-05	0.0E+00
GOAT PATHWAY, DIST GP= 1, 4091. METERS WINDS TOWARD SSW								
ADULT	1.9E-04	4.2E-05	1.2E-04	2.5E-04	1.1E-04	9.1E-04	6.0E-05	0.0E+00
TEEN	2.0E-04	5.5E-05	2.1E-04	4.1E-04	1.8E-04	1.4E-03	9.4E-05	0.0E+00
CHILD	1.9E-04	8.2E-05	5.0E-04	6.8E-04	2.8E-04	2.8E-03	1.5E-04	0.0E+00
INFNT	2.3E-04	1.2E-04	8.0E-04	1.3E-03	4.4E-04	6.8E-03	2.4E-04	0.0E+00
INHAL PATHWAY, DIST GP= 1, 942. METERS WINDS TOWARD SSW								
ADULT	2.9E-04	2.9E-04	5.5E-06	3.0E-04	2.9E-04	5.2E-04	2.9E-04	0.0E+00
TEEN	2.9E-04	2.9E-04	7.6E-06	3.0E-04	2.9E-04	5.8E-04	2.9E-04	0.0E+00
CHILD	2.6E-04	2.5E-04	1.0E-05	2.7E-04	2.6E-04	5.9E-04	2.6E-04	0.0E+00
INFNT	1.5E-04	1.5E-04	6.4E-06	1.5E-04	1.5E-04	4.5E-04	1.5E-04	0.0E+00
SUBTOTALS (NO PLUME)								
ADULT	2.9E-03	1.8E-03	1.6E-03	3.3E-03	2.3E-03	7.0E-03	2.0E-03	8.8E-04
TEEN	2.9E-03	2.0E-03	2.1E-03	4.2E-03	2.7E-03	7.5E-03	2.2E-03	8.8E-04
CHILD	3.1E-03	2.4E-03	3.9E-03	6.2E-03	3.6E-03	1.2E-02	2.8E-03	8.8E-04
INFNT	1.2E-03	1.1E-03	1.8E-03	2.6E-03	1.5E-03	1.4E-02	1.2E-03	8.8E-04
TOTALS								
ADULT	3.1E-03	2.1E-03	1.9E-03	3.5E-03	2.6E-03	7.2E-03	2.2E-03	1.3E-03
TEEN	3.1E-03	2.2E-03	2.4E-03	4.5E-03	3.0E-03	7.8E-03	2.5E-03	1.3E-03
CHILD	3.3E-03	2.6E-03	4.2E-03	6.4E-03	3.9E-03	1.2E-02	3.0E-03	1.3E-03
INFNT	1.5E-03	1.3E-03	2.1E-03	2.9E-03	1.8E-03	1.4E-02	1.5E-03	1.3E-03

SUMMARY OF MAXIMUM INDIVIDUAL DOSES

2nd Quarter 1996

EFFLUENT	APPLICABLE ORGAN	ESTIMATED DOSE (mrem)	AGE GROUP	LOCATION DIST DIR (M) (Toward)	% OF APPLICABLE LIMIT	LIMIT (mrem) QTR
Liquid	Total Body	5.49E-3	Adult	Receptor 1	3.66E-1	1.5E+0
Liquid	GI-Tract	2.33E-2	Adult	Receptor 1	4.66E-1	5.0E+0
Noble Gas	Air Dose (Gamma-mrad)	3.67E-3		651 N	7.34E-2	5.0E+0
Noble Gas	Air dose (Beta-mrad)	2.84E-3		651 N	2.84E-2	1.0E+1
Iodines and Particulates	Thyroid	1.58E-2	Child	659 N	2.11E-1	7.5E+0

FOR RECEPTOR NUMBER 1

LAST LIQUID DOSE ACCUMULATIONS (MREM)
START DATE 96 4 1 1 END DATE 96 63024

	BONE	LIVER	T.BODY	THYRD	KIDNEY	LUNG	GI-LLI	SKIN
WATER								
ADULT	8.9E-05	2.5E-03	2.5E-03	3.0E-03	2.5E-03	2.5E-03	4.6E-03	0.0E+00
TEEN	8.0E-05	1.8E-03	1.8E-03	2.2E-03	1.7E-03	1.3E-03	3.2E-03	0.0E+00
CHILD	2.1E-04	3.4E-03	3.5E-03	4.5E-03	3.3E-03	3.4E-03	4.5E-03	0.0E+00
INFANT	2.2E-04	3.4E-03	3.5E-03	5.1E-03	3.3E-03	3.3E-03	4.0E-03	0.0E+00
SHORE								
ADULT	1.1E-04	1.1E-04	1.1E-04	1.1E-04	1.1E-04	1.1E-04	1.1E-04	1.3E-04
TEEN	6.3E-04	6.3E-04	6.3E-04	6.3E-04	6.3E-04	6.3E-04	6.3E-04	7.4E-04
CHILD	1.3E-04	1.3E-04	1.3E-04	1.3E-04	1.3E-04	1.3E-04	1.3E-04	1.5E-04
INFANT	0.0E+00	0.0E+00	0.0E+00	0.0E+00	0.0E+00	0.0E+00	0.0E+00	0.0E+00
FW SPT FISH								
ADULT	1.8E-03	4.0E-03	2.8E-03	6.4E-04	1.8E-03	4.5E-04	1.9E-02	0.0E+00
TEEN	1.9E-03	4.0E-03	2.0E-03	5.8E-04	1.7E-03	4.7E-04	1.3E-02	0.0E+00
CHILD	2.2E-03	3.4E-03	1.4E-03	6.1E-04	1.4E-03	3.7E-04	4.7E-03	0.0E+00
INFANT	0.0E+00	0.0E+00	0.0E+00	0.0E+00	0.0E+00	0.0E+00	0.0E+00	0.0E+00
TOTAL								
ADULT	2.0E-03	6.6E-03	5.5E-03	3.7E-03	4.4E-03	3.0E-03	2.3E-02	1.3E-04
TEEN	2.6E-03	6.4E-03	4.5E-03	3.4E-03	4.1E-03	2.9E-03	1.7E-02	7.4E-04
CHILD	2.5E-03	6.9E-03	5.1E-03	5.2E-03	4.9E-03	3.9E-03	9.3E-03	1.5E-04
INFANT	2.2E-04	3.4E-03	3.5E-03	5.1E-03	3.3E-03	3.3E-03	4.0E-03	0.0E+00

DATES OF LAST AIR DOSE ACCUMULATION ARE FROM 96 4 1 1 0 TO 96 63024 0
DOSE ACCUMULATION FOR GAMMA MRAD

FOR RELEASE POINT 1

**DIRECTION FROM N				
1.6156E-05	2.1200E-06	9.5425E-07	5.4584E-07	3.7912E-07
1.8710E-07	6.9954E-08	3.3829E-08	2.1269E-08	1.2998E-08
**DIRECTION FROM NNE				
1.1368E-05	1.5177E-06	6.8522E-07	3.9243E-07	2.7357E-07
1.3619E-07	5.1444E-08	2.5021E-08	1.5797E-08	9.7135E-09
**DIRECTION FROM NE				
3.7066E-06	4.2886E-07	1.8850E-07	1.0677E-07	7.1959E-08
3.2910E-08	1.1148E-08	5.0764E-09	3.0466E-09	1.7297E-09
**DIRECTION FROM ENE				
1.5569E-07	5.0945E-09	1.8751E-09	1.1916E-09	9.0378E-10
5.4225E-10	2.7111E-10	1.6267E-10	1.1619E-10	8.1284E-11
**DIRECTION FROM E				
0.0000E+00	0.0000E+00	0.0000E+00	0.0000E+00	0.0000E+00
0.0000E+00	0.0000E+00	0.0000E+00	0.0000E+00	0.0000E+00
**DIRECTION FROM ESE				
0.0000E+00	0.0000E+00	0.0000E+00	0.0000E+00	0.0000E+00
0.0000E+00	0.0000E+00	0.0000E+00	0.0000E+00	0.0000E+00
**DIRECTION FROM SE				
3.5211E-06	1.7143E-07	1.0303E-07	7.3565E-08	5.7206E-08
3.4322E-08	1.7161E-08	1.0296E-08	7.3545E-09	5.1450E-09
**DIRECTION FROM SSE				
6.0609E-07	2.9508E-08	1.7734E-08	1.2663E-08	9.8469E-09
5.9080E-09	2.9539E-09	1.7723E-09	1.2659E-09	8.8561E-10
**DIRECTION FROM S				
0.0000E+00	0.0000E+00	0.0000E+00	0.0000E+00	0.0000E+00
0.0000E+00	0.0000E+00	0.0000E+00	0.0000E+00	0.0000E+00
**DIRECTION FROM SSW				
0.0000E+00	0.0000E+00	0.0000E+00	0.0000E+00	0.0000E+00
0.0000E+00	0.0000E+00	0.0000E+00	0.0000E+00	0.0000E+00
**DIRECTION FROM SW				
0.0000E+00	0.0000E+00	0.0000E+00	0.0000E+00	0.0000E+00
0.0000E+00	0.0000E+00	0.0000E+00	0.0000E+00	0.0000E+00
**DIRECTION FROM WSW				
0.0000E+00	0.0000E+00	0.0000E+00	0.0000E+00	0.0000E+00
0.0000E+00	0.0000E+00	0.0000E+00	0.0000E+00	0.0000E+00
**DIRECTION FROM W				
1.0090E-05	1.1674E-06	5.1313E-07	2.9065E-07	1.9589E-07
8.9589E-08	3.0347E-08	1.3819E-08	8.2935E-09	4.7087E-09
**DIRECTION FROM WNW				
0.0000E+00	0.0000E+00	0.0000E+00	0.0000E+00	0.0000E+00
0.0000E+00	0.0000E+00	0.0000E+00	0.0000E+00	0.0000E+00
**DIRECTION FROM NW				
1.8391E-05	6.0180E-07	2.2150E-07	1.4076E-07	1.0676E-07
6.4055E-08	3.2026E-08	1.9216E-08	1.3725E-08	9.6018E-09
**DIRECTION FROM NNW				
4.0145E-06	4.6449E-07	2.0416E-07	1.1564E-07	7.7937E-08
3.5644E-08	1.2074E-08	5.4981E-09	3.2997E-09	1.8734E-09

DISTANCES USED IN CALCULATIONS

594.0	2416.0	4020.0	5630.0	7240.0
12067.0	24135.0	40225.0	56315.0	80500.0

DATES OF LAST AIR DOSE ACCUMULATION ARE FROM 96 4 1 1 0 TO 96 63024 0
DOSE ACCUMULATION FOR GAMMA MRAD

FOR RELEASE POINT 2

**DIRECTION FROM N				
2.5986E-03	2.9803E-04	1.4117E-04	8.4427E-05	5.9301E-05
2.9689E-05	1.1622E-05	5.7991E-06	3.7244E-06	2.3526E-06
**DIRECTION FROM NNE				
1.4449E-03	1.7717E-04	8.5027E-05	5.1122E-05	3.6057E-05
1.8187E-05	7.1729E-06	3.5711E-06	2.2857E-06	1.4398E-06
**DIRECTION FROM NE				
1.5715E-03	1.7054E-04	8.6160E-05	5.3676E-05	3.8505E-05
1.9973E-05	8.1850E-06	4.1189E-06	2.6487E-06	1.7063E-06
**DIRECTION FROM ENE				
2.1162E-03	2.4216E-04	1.1752E-04	7.1351E-05	5.0509E-05
2.5616E-05	1.0191E-05	5.0827E-06	3.2556E-06	2.0666E-06
**DIRECTION FROM E				
3.3298E-03	3.7366E-04	1.8544E-04	1.1427E-04	8.1382E-05
4.1675E-05	1.6848E-05	8.4617E-06	5.4409E-06	3.4805E-06
**DIRECTION FROM ESE				
4.1978E-03	4.4550E-04	2.2719E-04	1.4238E-04	1.0246E-04
5.3422E-05	2.2018E-05	1.1082E-05	7.1224E-06	4.6013E-06
**DIRECTION FROM SE				
3.1598E-03	3.4661E-04	1.7487E-04	1.0884E-04	7.8095E-05
4.0557E-05	1.6652E-05	8.4037E-06	5.4172E-06	3.4935E-06
**DIRECTION FROM SSE				
3.8726E-03	4.4521E-04	2.2441E-04	1.3965E-04	9.9727E-05
5.1285E-05	2.0968E-05	1.0622E-05	6.8712E-06	4.4130E-06
**DIRECTION FROM S				
4.2238E-03	4.8466E-04	2.4284E-04	1.5045E-04	1.0745E-04
5.5304E-05	2.2538E-05	1.1367E-05	7.3303E-06	4.7015E-06
**DIRECTION FROM SSW				
2.9919E-03	3.3511E-04	1.6650E-04	1.0254E-04	7.3216E-05
3.7695E-05	1.5259E-05	7.6296E-06	4.8874E-06	3.1279E-06
**DIRECTION FROM SW				
3.1272E-03	3.5710E-04	1.7349E-04	1.0541E-04	7.4655E-05
3.7897E-05	1.5102E-05	7.5453E-06	4.8396E-06	3.0763E-06
**DIRECTION FROM WSW				
1.6157E-03	1.7441E-04	8.2391E-05	4.9400E-05	3.4730E-05
1.7439E-05	6.8865E-06	3.4789E-06	2.2563E-06	1.4391E-06
**DIRECTION FROM W				
2.0838E-03	2.3362E-04	1.1348E-04	6.9131E-05	4.8969E-05
2.4885E-05	9.9871E-06	5.0440E-06	3.2628E-06	2.0848E-06
**DIRECTION FROM WNW				
1.2816E-03	1.3396E-04	6.4873E-05	3.9578E-05	2.7997E-05
1.4184E-05	5.6897E-06	2.8853E-06	1.8735E-06	1.2037E-06
**DIRECTION FROM NW				
1.2337E-03	1.4302E-04	6.7325E-05	4.0133E-05	2.8232E-05
1.4214E-05	5.6091E-06	2.8322E-06	1.8341E-06	1.1620E-06
**DIRECTION FROM NNW				
1.8684E-03	2.0192E-04	9.5121E-05	5.6844E-05	3.9971E-05
2.0072E-05	7.8922E-06	3.9735E-06	2.5652E-06	1.6267E-06

DISTANCES USED IN CALCULATIONS

594.0	2416.0	4020.0	5630.0	7240.0
12067.0	24135.0	40225.0	56315.0	80500.0

DATES OF LAST AIR DOSE ACCUMULATION ARE FROM 96 4 1 1 0 TO 96 63024 0
DOSE ACCUMULATION FOR BETA MRAD

FOR RELEASE POINT 1

**DIRECTION FROM N				
2.1095E-04	2.7680E-05	1.2459E-05	7.1268E-06	4.9501E-06
2.4429E-06	9.1337E-07	4.4170E-07	2.7770E-07	1.6971E-07
**DIRECTION FROM NNE				
1.4843E-04	1.9816E-05	8.9467E-06	5.1239E-06	3.5719E-06
1.7782E-06	6.7169E-07	3.2669E-07	2.0625E-07	1.2683E-07
**DIRECTION FROM NE				
4.8396E-05	5.5995E-06	2.4612E-06	1.3940E-06	9.3955E-07
4.2970E-07	1.4556E-07	6.6281E-08	3.9778E-08	2.2585E-08
**DIRECTION FROM ENE				
2.0328E-06	6.6517E-08	2.4483E-08	1.5558E-08	1.1800E-08
7.0800E-09	3.5399E-09	2.1239E-09	1.5171E-09	1.0613E-09
**DIRECTION FROM E				
0.0000E+00	0.0000E+00	0.0000E+00	0.0000E+00	0.0000E+00
0.0000E+00	0.0000E+00	0.0000E+00	0.0000E+00	0.0000E+00
**DIRECTION FROM ESE				
0.0000E+00	0.0000E+00	0.0000E+00	0.0000E+00	0.0000E+00
0.0000E+00	0.0000E+00	0.0000E+00	0.0000E+00	0.0000E+00
**DIRECTION FROM SE				
2.9179E-04	1.4206E-05	8.5380E-06	6.0964E-06	4.7407E-06
2.8443E-06	1.4221E-06	8.5327E-07	6.0948E-07	4.2637E-07
**DIRECTION FROM SSE				
5.0227E-05	2.4454E-06	1.4696E-06	1.0494E-06	8.1602E-07
4.8960E-07	2.4479E-07	1.4687E-07	1.0491E-07	7.3391E-08
**DIRECTION FROM S				
0.0000E+00	0.0000E+00	0.0000E+00	0.0000E+00	0.0000E+00
0.0000E+00	0.0000E+00	0.0000E+00	0.0000E+00	0.0000E+00
**DIRECTION FROM SSW				
0.0000E+00	0.0000E+00	0.0000E+00	0.0000E+00	0.0000E+00
0.0000E+00	0.0000E+00	0.0000E+00	0.0000E+00	0.0000E+00
**DIRECTION FROM SW				
0.0000E+00	0.0000E+00	0.0000E+00	0.0000E+00	0.0000E+00
0.0000E+00	0.0000E+00	0.0000E+00	0.0000E+00	0.0000E+00
**DIRECTION FROM WSW				
0.0000E+00	0.0000E+00	0.0000E+00	0.0000E+00	0.0000E+00
0.0000E+00	0.0000E+00	0.0000E+00	0.0000E+00	0.0000E+00
**DIRECTION FROM W				
1.3174E-04	1.5243E-05	6.6998E-06	3.7949E-06	2.5577E-06
1.1697E-06	3.9623E-07	1.8043E-07	1.0829E-07	6.1480E-08
**DIRECTION FROM WNW				
0.0000E+00	0.0000E+00	0.0000E+00	0.0000E+00	0.0000E+00
0.0000E+00	0.0000E+00	0.0000E+00	0.0000E+00	0.0000E+00
**DIRECTION FROM NW				
2.0836E-03	6.8181E-05	2.5095E-05	1.5948E-05	1.2096E-05
7.2571E-06	3.6284E-06	2.1771E-06	1.5550E-06	1.0878E-06
**DIRECTION FROM NNW				
5.2416E-05	6.0647E-06	2.6656E-06	1.5098E-06	1.0176E-06
4.6540E-07	1.5765E-07	7.1788E-08	4.3083E-08	2.4461E-08

DISTANCES USED IN CALCULATIONS

594.0	2416.0	4020.0	5630.0	7240.0
12067.0	24135.0	40225.0	56315.0	80500.0

DATES OF LAST AIR DOSE ACCUMULATION ARE FROM 96 4 1 1 0 TO 96 63024 0
DOSE ACCUMULATION FOR BETA MRAD

FOR RELEASE POINT 2

**DIRECTION FROM N				
1.8988E-03	2.1891E-04	1.0336E-04	6.1679E-05	4.3267E-05
2.1613E-05	8.4367E-06	4.2078E-06	2.7025E-06	1.7049E-06
**DIRECTION FROM NNE				
1.0262E-03	1.2594E-04	6.0228E-05	3.6109E-05	2.5469E-05
1.2856E-05	5.0626E-06	2.5159E-06	1.6083E-06	1.0124E-06
**DIRECTION FROM NE				
1.1325E-03	1.2144E-04	6.1520E-05	3.8401E-05	2.7570E-05
1.4319E-05	5.8782E-06	2.9595E-06	1.9036E-06	1.2279E-06
**DIRECTION FROM ENE				
1.4391E-03	1.6486E-04	8.0416E-05	4.8977E-05	3.4747E-05
1.7696E-05	7.0772E-06	3.5367E-06	2.2678E-06	1.4428E-06
**DIRECTION FROM E				
2.2163E-03	2.4926E-04	1.2425E-04	7.6755E-05	5.4743E-05
2.8104E-05	1.1398E-05	5.7294E-06	3.6852E-06	2.3597E-06
**DIRECTION FROM ESE				
3.1394E-03	3.3465E-04	1.7080E-04	1.0707E-04	7.7062E-05
4.0186E-05	1.6565E-05	8.3347E-06	5.3550E-06	3.4585E-06
**DIRECTION FROM SE				
2.3663E-03	2.6126E-04	1.3146E-04	8.1668E-05	5.8564E-05
3.0389E-05	1.2458E-05	6.2825E-06	4.0485E-06	2.6089E-06
**DIRECTION FROM SSE				
2.8501E-03	3.2814E-04	1.6503E-04	1.0253E-04	7.3191E-05
3.7617E-05	1.5359E-05	7.7746E-06	5.0274E-06	3.2273E-06
**DIRECTION FROM S				
3.2766E-03	3.7617E-04	1.8848E-04	1.1676E-04	8.3389E-05
4.2924E-05	1.7492E-05	8.8219E-06	5.6886E-06	3.6485E-06
**DIRECTION FROM SSW				
2.3576E-03	2.6237E-04	1.3081E-04	8.0740E-05	5.7727E-05
2.9790E-05	1.2093E-05	6.0511E-06	3.8775E-06	2.4854E-06
**DIRECTION FROM SW				
2.4548E-03	2.7858E-04	1.3553E-04	8.2426E-05	5.8425E-05
2.9706E-05	1.1856E-05	5.9230E-06	3.7983E-06	2.4168E-06
**DIRECTION FROM WSW				
1.2639E-03	1.3614E-04	6.4523E-05	3.8773E-05	2.7286E-05
1.3723E-05	5.4319E-06	2.7450E-06	1.7802E-06	1.1363E-06
**DIRECTION FROM W				
1.6673E-03	1.8598E-04	9.0537E-05	5.5238E-05	3.9159E-05
1.9925E-05	8.0076E-06	4.0432E-06	2.6143E-06	1.6715E-06
**DIRECTION FROM WNW				
9.6624E-04	1.0027E-04	4.8523E-05	2.9610E-05	2.0936E-05
1.0596E-05	4.2491E-06	2.1565E-06	1.4010E-06	9.0016E-07
**DIRECTION FROM NW				
8.7197E-04	1.0105E-04	4.7230E-05	2.8009E-05	1.9684E-05
9.9021E-06	3.8927E-06	1.9625E-06	1.2698E-06	8.0338E-07
**DIRECTION FROM NNW				
1.3548E-03	1.4698E-04	6.8741E-05	4.0884E-05	2.8683E-05
1.4349E-05	5.6125E-06	2.8244E-06	1.8235E-06	1.1536E-06

DISTANCES USED IN CALCULATIONS

594.0	2416.0	4020.0	5630.0	7240.0
12067.0	24135.0	40225.0	56315.0	80500.0

INDIVIDUAL DOSES(MREM) DUE TO GASEOUS EFFLUENT
FOR DATES 96 4 1 1 THRU 96 63024

	T.BODY	GI-TRCT	BONE	LIVER	KIDNEY	THYRD	LUNG	SKIN
PLUME PATHWAY, DIST GP= 1, 659. METERS WINDS TOWARD N								
ADULT	2.2E-03	2.2E-03	2.2E-03	2.2E-03	2.2E-03	2.2E-03	2.2E-03	3.9E-03
TEEN	2.2E-03	2.2E-03	2.2E-03	2.2E-03	2.2E-03	2.2E-03	2.2E-03	3.9E-03
CHILD	2.2E-03	2.2E-03	2.2E-03	2.2E-03	2.2E-03	2.2E-03	2.2E-03	3.9E-03
INFNT	2.2E-03	2.2E-03	2.2E-03	2.2E-03	2.2E-03	2.2E-03	2.2E-03	3.9E-03
GROUND PATHWAY, DIST GP= 1, 659. METERS WINDS TOWARD N								
ADULT	3.8E-05	3.8E-05	3.8E-05	3.8E-05	3.8E-05	3.8E-05	3.8E-05	4.5E-05
TEEN	3.8E-05	3.8E-05	3.8E-05	3.8E-05	3.8E-05	3.8E-05	3.8E-05	4.5E-05
CHILD	3.8E-05	3.8E-05	3.8E-05	3.8E-05	3.8E-05	3.8E-05	3.8E-05	4.5E-05
INFNT	3.8E-05	3.8E-05	3.8E-05	3.8E-05	3.8E-05	3.8E-05	3.8E-05	4.5E-05
VEGET PATHWAY, DIST GP= 1, 8045. METERS WINDS TOWARD N								
ADULT	5.9E-05	5.9E-05	5.0E-07	6.0E-05	6.0E-05	1.4E-04	5.9E-05	0.0E+00
TEEN	6.8E-05	6.8E-05	6.7E-07	6.9E-05	6.8E-05	1.4E-04	6.8E-05	0.0E+00
CHILD	1.0E-04	1.0E-04	1.5E-06	1.1E-04	1.1E-04	2.1E-04	1.0E-04	0.0E+00
INFNT	0.0E+00	0.0E+00	0.0E+00	0.0E+00	0.0E+00	0.0E+00	0.0E+00	0.0E+00
MEAT PATHWAY, DIST GP= 1, 8045. METERS WINDS TOWARD N								
ADULT	8.5E-06	8.5E-06	5.4E-08	8.6E-06	8.5E-06	1.9E-05	8.5E-06	0.0E+00
TEEN	5.1E-06	5.1E-06	4.4E-08	5.1E-06	5.1E-06	1.3E-05	5.1E-06	0.0E+00
CHILD	6.1E-06	6.1E-06	8.1E-08	6.2E-06	6.2E-06	1.7E-05	6.1E-06	0.0E+00
INFNT	0.0E+00	0.0E+00	0.0E+00	0.0E+00	0.0E+00	0.0E+00	0.0E+00	0.0E+00
COW PATHWAY, DIST GP= 1, 4091. METERS WINDS TOWARD N								
ADULT	5.3E-05	5.1E-05	3.0E-06	5.5E-05	5.6E-05	1.0E-03	5.0E-05	0.0E+00
TEEN	6.9E-05	6.6E-05	5.5E-06	7.3E-05	7.5E-05	1.6E-03	6.6E-05	0.0E+00
CHILD	1.1E-04	1.0E-04	1.3E-05	1.2E-04	1.2E-04	3.2E-03	1.0E-04	0.0E+00
INFNT	1.7E-04	1.6E-04	2.6E-05	1.9E-04	1.9E-04	7.7E-03	1.6E-04	0.0E+00
GOAT PATHWAY, DIST GP= 1, 4091. METERS WINDS TOWARD N								
ADULT	1.1E-04	1.0E-04	5.3E-06	1.1E-04	1.1E-04	1.3E-03	1.0E-04	0.0E+00
TEEN	1.4E-04	1.3E-04	9.6E-06	1.5E-04	1.5E-04	2.0E-03	1.3E-04	0.0E+00
CHILD	2.2E-04	2.1E-04	2.3E-05	2.3E-04	2.3E-04	3.9E-03	2.1E-04	0.0E+00
INFNT	3.3E-04	3.2E-04	4.2E-05	3.7E-04	3.6E-04	9.4E-03	3.2E-04	0.0E+00
INHAL PATHWAY, DIST GP= 1, 659. METERS WINDS TOWARD N								
ADULT	1.3E-03	1.3E-03	1.7E-06	1.3E-03	1.3E-03	1.9E-03	1.3E-03	0.0E+00
TEEN	1.3E-03	1.3E-03	2.4E-06	1.3E-03	1.3E-03	2.0E-03	1.3E-03	0.0E+00
CHILD	1.1E-03	1.1E-03	3.2E-06	1.1E-03	1.1E-03	1.9E-03	1.1E-03	0.0E+00
INFNT	6.4E-04	6.4E-04	2.4E-06	6.4E-04	6.4E-04	1.4E-03	6.4E-04	0.0E+00
SUBTOTALS (NO PLUME)								
ADULT	1.5E-03	1.5E-03	4.9E-05	1.5E-03	1.5E-03	4.4E-03	1.5E-03	4.5E-05
TEEN	1.6E-03	1.6E-03	5.6E-05	1.6E-03	1.6E-03	5.8E-03	1.6E-03	4.5E-05
CHILD	1.6E-03	1.6E-03	7.9E-05	1.6E-03	1.6E-03	9.3E-03	1.6E-03	4.5E-05
INFNT	1.2E-03	1.2E-03	1.1E-04	1.2E-03	1.2E-03	1.8E-02	1.2E-03	4.5E-05
TOTALS								
ADULT	3.7E-03	3.7E-03	2.2E-03	3.7E-03	3.7E-03	6.6E-03	3.7E-03	4.0E-03
TEEN	3.8E-03	3.7E-03	2.2E-03	3.8E-03	3.8E-03	8.0E-03	3.8E-03	4.0E-03
CHILD	3.8E-03	3.8E-03	2.3E-03	3.8E-03	3.8E-03	1.1E-02	3.8E-03	4.0E-03
INFNT	3.4E-03	3.3E-03	2.3E-03	3.4E-03	3.4E-03	2.1E-02	3.4E-03	4.0E-03

INDIVIDUAL DOSES(MREM) DUE TO GASEOUS EFFLUENT
FOR DATES 96 4 1 1 THRU 96 63024

	T.BODY	GI-TRCT	BONE	LIVER	KIDNEY	THYRD	LUNG	SKIN
PLUME PATHWAY, DIST GP= 1, 660. METERS WINDS TOWARD NNE								
ADULT	1.5E-03	1.5E-03	1.5E-03	1.5E-03	1.5E-03	1.5E-03	1.5E-03	2.8E-03
TEEN	1.5E-03	1.5E-03	1.5E-03	1.5E-03	1.5E-03	1.5E-03	1.5E-03	2.8E-03
CHILD	1.5E-03	1.5E-03	1.5E-03	1.5E-03	1.5E-03	1.5E-03	1.5E-03	2.8E-03
INFNT	1.5E-03	1.5E-03	1.5E-03	1.5E-03	1.5E-03	1.5E-03	1.5E-03	2.8E-03
GROUND PATHWAY, DIST GP= 1, 660. METERS WINDS TOWARD NNE								
ADULT	2.9E-05	2.9E-05	2.9E-05	2.9E-05	2.9E-05	2.9E-05	2.9E-05	3.4E-05
TEEN	2.9E-05	2.9E-05	2.9E-05	2.9E-05	2.9E-05	2.9E-05	2.9E-05	3.4E-05
CHILD	2.9E-05	2.9E-05	2.9E-05	2.9E-05	2.9E-05	2.9E-05	2.9E-05	3.4E-05
INFNT	2.9E-05	2.9E-05	2.9E-05	2.9E-05	2.9E-05	2.9E-05	2.9E-05	3.4E-05
VEGET PATHWAY, DIST GP= 1, 814. METERS WINDS TOWARD NNE								
ADULT	1.1E-03	1.0E-03	1.7E-05	1.1E-03	1.1E-03	3.5E-03	1.0E-03	0.0E+00
TEEN	1.2E-03	1.2E-03	2.4E-05	1.2E-03	1.2E-03	3.3E-03	1.2E-03	0.0E+00
CHILD	1.9E-03	1.8E-03	5.3E-05	1.9E-03	1.9E-03	5.0E-03	1.9E-03	0.0E+00
INFNT	0.0E+00	0.0E+00	0.0E+00	0.0E+00	0.0E+00	0.0E+00	0.0E+00	0.0E+00
MEAT PATHWAY, DIST GP= 1, 7725. METERS WINDS TOWARD NNE								
ADULT	5.5E-06	5.5E-06	4.1E-08	5.5E-06	5.5E-06	1.2E-05	5.5E-06	0.0E+00
TEEN	3.3E-06	3.3E-06	3.4E-08	3.3E-06	3.3E-06	8.2E-06	3.3E-06	0.0E+00
CHILD	4.0E-06	3.9E-06	6.2E-08	4.0E-06	4.0E-06	1.1E-05	3.9E-06	0.0E+00
INFNT	0.0E+00	0.0E+00	0.0E+00	0.0E+00	0.0E+00	0.0E+00	0.0E+00	0.0E+00
COW PATHWAY, DIST GP= 1, 4091. METERS WINDS TOWARD NNE								
ADULT	3.4E-05	3.2E-05	2.0E-06	3.5E-05	3.5E-05	6.3E-04	3.2E-05	0.0E+00
TEEN	4.4E-05	4.2E-05	3.6E-06	4.7E-05	4.8E-05	9.9E-04	4.2E-05	0.0E+00
CHILD	6.9E-05	6.6E-05	8.7E-06	7.5E-05	7.6E-05	1.9E-03	6.6E-05	0.0E+00
INFNT	1.1E-04	1.0E-04	1.7E-05	1.2E-04	1.2E-04	4.7E-03	1.0E-04	0.0E+00
GOAT PATHWAY, DIST GP= 1, 4091. METERS WINDS TOWARD NNE								
ADULT	6.9E-05	6.5E-05	3.7E-06	7.1E-05	7.0E-05	7.9E-04	6.5E-05	0.0E+00
TEEN	8.9E-05	8.5E-05	6.7E-06	9.5E-05	9.3E-05	1.2E-03	8.5E-05	0.0E+00
CHILD	1.4E-04	1.3E-04	1.6E-05	1.5E-04	1.5E-04	2.4E-03	1.3E-04	0.0E+00
INFNT	2.1E-04	2.0E-04	2.9E-05	2.4E-04	2.3E-04	5.7E-03	2.1E-04	0.0E+00
INHAL PATHWAY, DIST GP= 1, 660. METERS WINDS TOWARD NNE								
ADULT	8.0E-04	8.0E-04	1.1E-06	8.0E-04	8.0E-04	1.2E-03	8.0E-04	0.0E+00
TEEN	8.0E-04	8.0E-04	1.6E-06	8.0E-04	8.1E-04	1.3E-03	8.0E-04	0.0E+00
CHILD	7.1E-04	7.1E-04	2.1E-06	7.1E-04	7.1E-04	1.3E-03	7.1E-04	0.0E+00
INFNT	4.1E-04	4.1E-04	1.6E-06	4.1E-04	4.1E-04	9.2E-04	4.1E-04	0.0E+00
SUBTOTALS (NO PLUME)								
ADULT	2.0E-03	2.0E-03	5.3E-05	2.0E-03	2.0E-03	6.2E-03	2.0E-03	3.4E-05
TEEN	2.2E-03	2.2E-03	6.4E-05	2.2E-03	2.2E-03	6.8E-03	2.2E-03	3.4E-05
CHILD	2.8E-03	2.8E-03	1.1E-04	2.9E-03	2.8E-03	1.1E-02	2.8E-03	3.4E-05
INFNT	7.6E-04	7.4E-04	7.6E-05	8.0E-04	7.8E-04	1.1E-02	7.4E-04	3.4E-05
TOTALS								
ADULT	3.5E-03	3.5E-03	1.6E-03	3.5E-03	3.5E-03	7.7E-03	3.5E-03	2.8E-03
TEEN	3.7E-03	3.7E-03	1.6E-03	3.7E-03	3.7E-03	8.3E-03	3.7E-03	2.8E-03
CHILD	4.3E-03	4.3E-03	1.6E-03	4.4E-03	4.4E-03	1.2E-02	4.3E-03	2.8E-03
INFNT	2.3E-03	2.3E-03	1.6E-03	2.3E-03	2.3E-03	1.3E-02	2.3E-03	2.8E-03

INDIVIDUAL DOSES(MREM) DUE TO GASEOUS EFFLUENT
FOR DATES 96 4 1 1 THRU 96 63024

	T.BODY	GI-TRCT	BONE	LIVER	KIDNEY	THYRD	LUNG	SKIN
PLUME PATHWAY, DIST GP= 1, 943. METERS WINDS TOWARD NE								
ADULT	9.0E-04	9.0E-04	9.0E-04	9.0E-04	9.0E-04	9.0E-04	9.1E-04	1.6E-03
TEEN	9.0E-04	9.0E-04	9.0E-04	9.0E-04	9.0E-04	9.0E-04	9.1E-04	1.6E-03
CHILD	9.0E-04	9.0E-04	9.0E-04	9.0E-04	9.0E-04	9.0E-04	9.1E-04	1.6E-03
INFNT	9.0E-04	9.0E-04	9.0E-04	9.0E-04	9.0E-04	9.0E-04	9.1E-04	1.6E-03
GROUND PATHWAY, DIST GP= 1, 943. METERS WINDS TOWARD NE								
ADULT	2.3E-05	2.3E-05	2.3E-05	2.3E-05	2.3E-05	2.3E-05	2.3E-05	2.7E-05
TEEN	2.3E-05	2.3E-05	2.3E-05	2.3E-05	2.3E-05	2.3E-05	2.3E-05	2.7E-05
CHILD	2.3E-05	2.3E-05	2.3E-05	2.3E-05	2.3E-05	2.3E-05	2.3E-05	2.7E-05
INFNT	2.3E-05	2.3E-05	2.3E-05	2.3E-05	2.3E-05	2.3E-05	2.3E-05	2.7E-05
VEGET PATHWAY, DIST GP= 1, 1052. METERS WINDS TOWARD NE								
ADULT	7.4E-04	7.3E-04	1.6E-05	7.5E-04	7.5E-04	3.2E-03	7.3E-04	0.0E+00
TEEN	8.5E-04	8.3E-04	2.2E-05	8.7E-04	8.5E-04	2.9E-03	8.4E-04	0.0E+00
CHILD	1.3E-03	1.3E-03	5.0E-05	1.3E-03	1.3E-03	4.4E-03	1.3E-03	0.0E+00
INFNT	0.0E+00	0.0E+00	0.0E+00	0.0E+00	0.0E+00	0.0E+00	0.0E+00	0.0E+00
MEAT PATHWAY, DIST GP= 1, 7725. METERS WINDS TOWARD NE								
ADULT	5.6E-06	5.6E-06	6.0E-08	5.6E-06	5.6E-06	1.6E-05	5.6E-06	0.0E+00
TEEN	3.3E-06	3.3E-06	4.9E-08	3.4E-06	3.4E-06	1.1E-05	3.3E-06	0.0E+00
CHILD	4.0E-06	4.0E-06	9.0E-08	4.1E-06	4.1E-06	1.5E-05	4.0E-06	0.0E+00
INFNT	0.0E+00	0.0E+00	0.0E+00	0.0E+00	0.0E+00	0.0E+00	0.0E+00	0.0E+00
COW PATHWAY, DIST GP= 1, 4091. METERS WINDS TOWARD NE								
ADULT	3.6E-05	3.3E-05	3.0E-06	3.7E-05	3.8E-05	9.4E-04	3.3E-05	0.0E+00
TEEN	4.6E-05	4.4E-05	5.4E-06	5.1E-05	5.2E-05	1.5E-03	4.3E-05	0.0E+00
CHILD	7.3E-05	6.8E-05	1.3E-05	8.1E-05	8.3E-05	2.9E-03	6.8E-05	0.0E+00
INFNT	1.1E-04	1.0E-04	2.5E-05	1.3E-04	1.3E-04	7.0E-03	1.0E-04	0.0E+00
GOAT PATHWAY, DIST GP= 1, 4091. METERS WINDS TOWARD NE								
ADULT	7.2E-05	6.8E-05	5.5E-06	7.5E-05	7.4E-05	1.2E-03	6.7E-05	0.0E+00
TEEN	9.4E-05	8.8E-05	9.8E-06	1.0E-04	1.0E-04	1.8E-03	8.8E-05	0.0E+00
CHILD	1.5E-04	1.4E-04	2.4E-05	1.6E-04	1.6E-04	3.5E-03	1.4E-04	0.0E+00
INFNT	2.2E-04	2.1E-04	4.3E-05	2.6E-04	2.5E-04	8.5E-03	2.1E-04	0.0E+00
INHAL PATHWAY, DIST GP= 1, 943. METERS WINDS TOWARD NE								
ADULT	4.8E-04	4.8E-04	7.9E-07	4.8E-04	4.8E-04	7.8E-04	4.8E-04	0.0E+00
TEEN	4.8E-04	4.8E-04	1.1E-06	4.8E-04	4.8E-04	8.5E-04	4.8E-04	0.0E+00
CHILD	4.2E-04	4.2E-04	1.5E-06	4.3E-04	4.3E-04	8.4E-04	4.2E-04	0.0E+00
INFNT	2.4E-04	2.4E-04	1.1E-06	2.4E-04	2.4E-04	6.2E-04	2.4E-04	0.0E+00
SUBTOTALS (NO PLUME)								
ADULT	1.4E-03	1.3E-03	4.8E-05	1.4E-03	1.4E-03	6.1E-03	1.3E-03	2.7E-05
TEEN	1.5E-03	1.5E-03	6.2E-05	1.5E-03	1.5E-03	7.0E-03	1.5E-03	2.7E-05
CHILD	2.0E-03	1.9E-03	1.1E-04	2.0E-03	2.0E-03	1.2E-02	1.9E-03	2.7E-05
INFNT	6.0E-04	5.8E-04	9.2E-05	6.6E-04	6.4E-04	1.6E-02	5.8E-04	2.7E-05
TOTALS								
ADULT	2.3E-03	2.2E-03	9.5E-04	2.3E-03	2.3E-03	7.0E-03	2.2E-03	1.7E-03
TEEN	2.4E-03	2.4E-03	9.6E-04	2.4E-03	2.4E-03	8.0E-03	2.4E-03	1.7E-03
CHILD	2.9E-03	2.8E-03	1.0E-03	2.9E-03	2.9E-03	1.3E-02	2.9E-03	1.7E-03
INFNT	1.5E-03	1.5E-03	9.9E-04	1.6E-03	1.5E-03	1.7E-02	1.5E-03	1.7E-03

INDIVIDUAL DOSES(MREM) DUE TO GASEOUS EFFLUENT
FOR DATES 96 4 1 1 THRU 96 63024

	T.BODY	GI-TRCT	BONE	LIVER	KIDNEY	THYRD	LUNG	SKIN
PLUME PATHWAY, DIST GP= 1, 1747. METERS WINDS TOWARD ENE								
ADULT	1.6E-04	1.6E-04	1.6E-04	1.6E-04	1.6E-04	1.6E-04	1.7E-04	3.0E-04
TEEN	1.6E-04	1.6E-04	1.6E-04	1.6E-04	1.6E-04	1.6E-04	1.7E-04	3.0E-04
CHILD	1.6E-04	1.6E-04	1.6E-04	1.6E-04	1.6E-04	1.6E-04	1.7E-04	3.0E-04
INFNT	1.6E-04	1.6E-04	1.6E-04	1.6E-04	1.6E-04	1.6E-04	1.7E-04	3.0E-04
GROUND PATHWAY, DIST GP= 1, 1747. METERS WINDS TOWARD ENE								
ADULT	7.0E-06	7.0E-06	7.0E-06	7.0E-06	7.0E-06	7.0E-06	7.0E-06	8.2E-06
TEEN	7.0E-06	7.0E-06	7.0E-06	7.0E-06	7.0E-06	7.0E-06	7.0E-06	8.2E-06
CHILD	7.0E-06	7.0E-06	7.0E-06	7.0E-06	7.0E-06	7.0E-06	7.0E-06	8.2E-06
INFNT	7.0E-06	7.0E-06	7.0E-06	7.0E-06	7.0E-06	7.0E-06	7.0E-06	8.2E-06
VEGET PATHWAY, DIST GP= 1, 1852. METERS WINDS TOWARD ENE								
ADULT	1.5E-04	1.4E-04	5.8E-06	1.5E-04	1.5E-04	1.2E-03	1.4E-04	0.0E+00
TEEN	1.7E-04	1.6E-04	7.7E-06	1.7E-04	1.7E-04	1.0E-03	1.6E-04	0.0E+00
CHILD	2.6E-04	2.5E-04	1.7E-05	2.7E-04	2.6E-04	1.5E-03	2.5E-04	0.0E+00
INFNT	0.0E+00	0.0E+00	0.0E+00	0.0E+00	0.0E+00	0.0E+00	0.0E+00	0.0E+00
MEAT PATHWAY, DIST GP= 1, 3862. METERS WINDS TOWARD ENE								
ADULT	6.8E-06	6.7E-06	2.0E-07	6.9E-06	6.9E-06	4.5E-05	6.6E-06	0.0E+00
TEEN	4.1E-06	4.0E-06	1.6E-07	4.2E-06	4.2E-06	3.2E-05	4.0E-06	0.0E+00
CHILD	4.9E-06	4.8E-06	3.0E-07	5.1E-06	5.0E-06	4.7E-05	4.8E-06	0.0E+00
INFNT	0.0E+00	0.0E+00	0.0E+00	0.0E+00	0.0E+00	0.0E+00	0.0E+00	0.0E+00
COW PATHWAY, DIST GP= 1, 4091. METERS WINDS TOWARD ENE								
ADULT	1.7E-05	1.5E-05	2.9E-06	1.9E-05	2.0E-05	9.9E-04	1.4E-05	0.0E+00
TEEN	2.2E-05	2.0E-05	5.3E-06	2.6E-05	2.8E-05	1.6E-03	1.9E-05	0.0E+00
CHILD	3.5E-05	3.0E-05	1.3E-05	4.3E-05	4.6E-05	3.1E-03	3.0E-05	0.0E+00
INFNT	5.5E-05	4.5E-05	2.5E-05	7.5E-05	7.3E-05	7.4E-03	4.5E-05	0.0E+00
GOAT PATHWAY, DIST GP= 1, 4091. METERS WINDS TOWARD ENE								
ADULT	3.4E-05	3.0E-05	5.1E-06	3.7E-05	3.7E-05	1.2E-03	2.9E-05	0.0E+00
TEEN	4.4E-05	3.9E-05	9.2E-06	5.2E-05	5.1E-05	1.9E-03	3.9E-05	0.0E+00
CHILD	6.8E-05	6.0E-05	2.2E-05	8.3E-05	8.2E-05	3.7E-03	6.1E-05	0.0E+00
INFNT	1.0E-04	9.2E-05	4.1E-05	1.4E-04	1.3E-04	9.0E-03	9.3E-05	0.0E+00
INHAL PATHWAY, DIST GP= 1, 1747. METERS WINDS TOWARD ENE								
ADULT	8.7E-05	8.6E-05	1.8E-07	8.7E-05	8.7E-05	1.6E-04	8.6E-05	0.0E+00
TEEN	8.7E-05	8.7E-05	2.5E-07	8.7E-05	8.7E-05	1.7E-04	8.7E-05	0.0E+00
CHILD	7.7E-05	7.7E-05	3.3E-07	7.7E-05	7.7E-05	1.7E-04	7.7E-05	0.0E+00
INFNT	4.4E-05	4.4E-05	2.6E-07	4.4E-05	4.4E-05	1.3E-04	4.4E-05	0.0E+00
SUBTOTALS (NO PLUME)								
ADULT	3.0E-04	2.9E-04	2.1E-05	3.1E-04	3.1E-04	3.6E-03	2.9E-04	8.2E-06
TEEN	3.3E-04	3.2E-04	3.0E-05	3.5E-04	3.5E-04	4.7E-03	3.2E-04	8.2E-06
CHILD	4.5E-04	4.3E-04	6.0E-05	4.9E-04	4.8E-04	8.6E-03	4.3E-04	8.2E-06
INFNT	2.1E-04	1.9E-04	7.3E-05	2.7E-04	2.5E-04	1.7E-02	1.9E-04	8.2E-06
TOTALS								
ADULT	4.6E-04	4.5E-04	1.9E-04	4.7E-04	4.7E-04	3.7E-03	4.5E-04	3.1E-04
TEEN	5.0E-04	4.8E-04	1.9E-04	5.1E-04	5.1E-04	4.8E-03	4.8E-04	3.1E-04
CHILD	6.1E-04	6.0E-04	2.2E-04	6.5E-04	6.4E-04	8.7E-03	6.0E-04	3.1E-04
INFNT	3.7E-04	3.5E-04	2.4E-04	4.3E-04	4.2E-04	1.7E-02	3.6E-04	3.1E-04

INDIVIDUAL DOSES(MREM) DUE TO GASEOUS EFFLUENT
FOR DATES 96 4 1 1 THRU 96 63024

	T.BODY	GI-TRCT	BONE	LIVER	KIDNEY	THYRD	LUNG	SKIN
PLUME PATHWAY, DIST GP= 1, 1716. METERS WINDS TOWARD E								
ADULT	2.2E-04	2.2E-04	2.2E-04	2.2E-04	2.2E-04	2.2E-04	2.2E-04	4.2E-04
TEEN	2.2E-04	2.2E-04	2.2E-04	2.2E-04	2.2E-04	2.2E-04	2.2E-04	4.2E-04
CHILD	2.2E-04	2.2E-04	2.2E-04	2.2E-04	2.2E-04	2.2E-04	2.2E-04	4.2E-04
INFNT	2.2E-04	2.2E-04	2.2E-04	2.2E-04	2.2E-04	2.2E-04	2.2E-04	4.2E-04
GROUND PATHWAY, DIST GP= 1, 1716. METERS WINDS TOWARD E								
ADULT	4.0E-06	4.0E-06	4.0E-06	4.0E-06	4.0E-06	4.0E-06	4.0E-06	4.7E-06
TEEN	4.0E-06	4.0E-06	4.0E-06	4.0E-06	4.0E-06	4.0E-06	4.0E-06	4.7E-06
CHILD	4.0E-06	4.0E-06	4.0E-06	4.0E-06	4.0E-06	4.0E-06	4.0E-06	4.7E-06
INFNT	4.0E-06	4.0E-06	4.0E-06	4.0E-06	4.0E-06	4.0E-06	4.0E-06	4.7E-06
VEGET PATHWAY, DIST GP= 1, 1705. METERS WINDS TOWARD E								
ADULT	1.9E-04	1.9E-04	3.8E-06	2.0E-04	2.0E-04	9.3E-04	1.9E-04	0.0E+00
TEEN	2.2E-04	2.2E-04	5.0E-06	2.3E-04	2.2E-04	8.3E-04	2.2E-04	0.0E+00
CHILD	3.4E-04	3.4E-04	1.1E-05	3.5E-04	3.4E-04	1.3E-03	3.4E-04	0.0E+00
INFNT	0.0E+00	0.0E+00	0.0E+00	0.0E+00	0.0E+00	0.0E+00	0.0E+00	0.0E+00
MEAT PATHWAY, DIST GP= 1, 6810. METERS WINDS TOWARD E								
ADULT	3.6E-06	3.6E-06	4.0E-08	3.7E-06	3.7E-06	1.2E-05	3.6E-06	0.0E+00
TEEN	2.2E-06	2.2E-06	3.3E-08	2.2E-06	2.2E-06	8.3E-06	2.1E-06	0.0E+00
CHILD	2.6E-06	2.6E-06	6.0E-08	2.7E-06	2.6E-06	1.2E-05	2.6E-06	0.0E+00
INFNT	0.0E+00	0.0E+00	0.0E+00	0.0E+00	0.0E+00	0.0E+00	0.0E+00	0.0E+00
COW PATHWAY, DIST GP= 1, 4091. METERS WINDS TOWARD E								
ADULT	1.9E-05	1.8E-05	1.8E-06	2.0E-05	2.1E-05	6.3E-04	1.8E-05	0.0E+00
TEEN	2.5E-05	2.4E-05	3.2E-06	2.8E-05	2.9E-05	9.8E-04	2.3E-05	0.0E+00
CHILD	4.0E-05	3.7E-05	7.7E-06	4.4E-05	4.7E-05	1.9E-03	3.7E-05	0.0E+00
INFNT	6.2E-05	5.6E-05	1.5E-05	7.4E-05	7.3E-05	4.7E-03	5.6E-05	0.0E+00
GOAT PATHWAY, DIST GP= 1, 4091. METERS WINDS TOWARD E								
ADULT	3.9E-05	3.7E-05	3.0E-06	4.1E-05	4.1E-05	7.6E-04	3.6E-05	0.0E+00
TEEN	5.1E-05	4.8E-05	5.4E-06	5.5E-05	5.5E-05	1.2E-03	4.8E-05	0.0E+00
CHILD	7.9E-05	7.5E-05	1.3E-05	8.8E-05	8.8E-05	2.3E-03	7.5E-05	0.0E+00
INFNT	1.2E-04	1.1E-04	2.4E-05	1.4E-04	1.4E-04	5.6E-03	1.1E-04	0.0E+00
INHAL PATHWAY, DIST GP= 1, 1716. METERS WINDS TOWARD E								
ADULT	1.0E-04	1.0E-04	2.0E-07	1.0E-04	1.1E-04	1.9E-04	1.0E-04	0.0E+00
TEEN	1.1E-04	1.1E-04	2.8E-07	1.1E-04	1.1E-04	2.1E-04	1.1E-04	0.0E+00
CHILD	9.3E-05	9.3E-05	3.9E-07	9.4E-05	9.4E-05	2.1E-04	9.3E-05	0.0E+00
INFNT	5.4E-05	5.4E-05	3.0E-07	5.4E-05	5.4E-05	1.6E-04	5.4E-05	0.0E+00
SUBTOTALS (NO PLUME)								
ADULT	3.7E-04	3.6E-04	1.3E-05	3.7E-04	3.7E-04	2.5E-03	3.6E-04	4.7E-06
TEEN	4.1E-04	4.0E-04	1.8E-05	4.2E-04	4.2E-04	3.2E-03	4.0E-04	4.7E-06
CHILD	5.6E-04	5.5E-04	3.6E-05	5.8E-04	5.8E-04	5.8E-03	5.5E-04	4.7E-06
INFNT	2.4E-04	2.3E-04	4.4E-05	2.7E-04	2.7E-04	1.0E-02	2.3E-04	4.7E-06
TOTALS								
ADULT	5.9E-04	5.8E-04	2.3E-04	5.9E-04	5.9E-04	2.7E-03	5.8E-04	4.2E-04
TEEN	6.3E-04	6.2E-04	2.4E-04	6.4E-04	6.4E-04	3.4E-03	6.2E-04	4.2E-04
CHILD	7.8E-04	7.7E-04	2.6E-04	8.0E-04	8.0E-04	6.0E-03	7.7E-04	4.2E-04
INFNT	4.6E-04	4.5E-04	2.6E-04	4.9E-04	4.9E-04	1.1E-02	4.5E-04	4.2E-04

INDIVIDUAL DOSES(MREM) DUE TO GASEOUS EFFLUENT
FOR DATES 96 4 1 1 THRU 96 63024

	T.BODY	GI-TRCT	BONE	LIVER	KIDNEY	THYRD	LUNG	SKIN
PLUME PATHWAY, DIST GP= 1, 1643. METERS WINDS TOWARD ESE								
ADULT	1.3E-04	1.3E-04	1.3E-04	1.3E-04	1.3E-04	1.3E-04	1.3E-04	2.4E-04
TEEN	1.3E-04	1.3E-04	1.3E-04	1.3E-04	1.3E-04	1.3E-04	1.3E-04	2.4E-04
CHILD	1.3E-04	1.3E-04	1.3E-04	1.3E-04	1.3E-04	1.3E-04	1.3E-04	2.4E-04
INFNT	1.3E-04	1.3E-04	1.3E-04	1.3E-04	1.3E-04	1.3E-04	1.3E-04	2.4E-04
GROUND PATHWAY, DIST GP= 1, 1643. METERS WINDS TOWARD ESE								
ADULT	3.0E-06	3.0E-06	3.0E-06	3.0E-06	3.0E-06	3.0E-06	3.0E-06	3.5E-06
TEEN	3.0E-06	3.0E-06	3.0E-06	3.0E-06	3.0E-06	3.0E-06	3.0E-06	3.5E-06
CHILD	3.0E-06	3.0E-06	3.0E-06	3.0E-06	3.0E-06	3.0E-06	3.0E-06	3.5E-06
INFNT	3.0E-06	3.0E-06	3.0E-06	3.0E-06	3.0E-06	3.0E-06	3.0E-06	3.5E-06
VEGET PATHWAY, DIST GP= 1, 1628. METERS WINDS TOWARD ESE								
ADULT	1.9E-04	1.9E-04	2.7E-06	2.0E-04	1.9E-04	6.7E-04	1.9E-04	0.0E+00
TEEN	2.2E-04	2.2E-04	3.6E-06	2.2E-04	2.2E-04	6.2E-04	2.2E-04	0.0E+00
CHILD	3.4E-04	3.4E-04	8.0E-06	3.5E-04	3.4E-04	9.4E-04	3.4E-04	0.0E+00
INFNT	0.0E+00	0.0E+00	0.0E+00	0.0E+00	0.0E+00	0.0E+00	0.0E+00	0.0E+00
MEAT PATHWAY, DIST GP= 1, 2434. METERS WINDS TOWARD ESE								
ADULT	1.5E-05	1.5E-05	1.5E-07	1.5E-05	1.5E-05	4.5E-05	1.5E-05	0.0E+00
TEEN	8.8E-06	8.7E-06	1.2E-07	8.9E-06	8.9E-06	3.0E-05	8.7E-06	0.0E+00
CHILD	1.1E-05	1.1E-05	2.3E-07	1.1E-05	1.1E-05	4.3E-05	1.1E-05	0.0E+00
INFNT	0.0E+00	0.0E+00	0.0E+00	0.0E+00	0.0E+00	0.0E+00	0.0E+00	0.0E+00
COW PATHWAY, DIST GP= 1, 4091. METERS WINDS TOWARD ESE								
ADULT	1.7E-05	1.7E-05	1.1E-06	1.8E-05	1.8E-05	3.8E-04	1.6E-05	0.0E+00
TEEN	2.3E-05	2.2E-05	2.0E-06	2.4E-05	2.5E-05	6.0E-04	2.1E-05	0.0E+00
CHILD	3.6E-05	3.4E-05	4.8E-06	3.9E-05	4.0E-05	1.2E-03	3.4E-05	0.0E+00
INFNT	5.5E-05	5.1E-05	9.4E-06	6.3E-05	6.2E-05	2.8E-03	5.1E-05	0.0E+00
GOAT PATHWAY, DIST GP= 1, 4091. METERS WINDS TOWARD ESE								
ADULT	3.5E-05	3.4E-05	1.9E-06	3.6E-05	3.6E-05	4.7E-04	3.4E-05	0.0E+00
TEEN	4.6E-05	4.4E-05	3.5E-06	4.9E-05	4.9E-05	7.4E-04	4.4E-05	0.0E+00
CHILD	7.2E-05	6.9E-05	8.4E-06	7.7E-05	7.7E-05	1.4E-03	6.9E-05	0.0E+00
INFNT	1.1E-04	1.1E-04	1.5E-05	1.2E-04	1.2E-04	3.4E-03	1.1E-04	0.0E+00
INHAL PATHWAY, DIST GP= 1, 1643. METERS WINDS TOWARD ESE								
ADULT	1.0E-04	1.0E-04	1.2E-07	1.0E-04	1.0E-04	1.5E-04	1.0E-04	0.0E+00
TEEN	1.1E-04	1.1E-04	1.7E-07	1.1E-04	1.1E-04	1.6E-04	1.1E-04	0.0E+00
CHILD	9.3E-05	9.3E-05	2.3E-07	9.3E-05	9.3E-05	1.5E-04	9.3E-05	0.0E+00
INFNT	5.4E-05	5.3E-05	1.7E-07	5.4E-05	5.4E-05	1.1E-04	5.3E-05	0.0E+00
SUBTOTALS (NO PLUME)								
ADULT	3.7E-04	3.6E-04	9.0E-06	3.7E-04	3.7E-04	1.7E-03	3.6E-04	3.5E-06
TEEN	4.1E-04	4.0E-04	1.2E-05	4.1E-04	4.1E-04	2.1E-03	4.0E-04	3.5E-06
CHILD	5.6E-04	5.5E-04	2.5E-05	5.7E-04	5.7E-04	3.8E-03	5.5E-04	3.5E-06
INFNT	2.2E-04	2.1E-04	2.8E-05	2.4E-04	2.4E-04	6.4E-03	2.1E-04	3.5E-06
TOTALS								
ADULT	5.0E-04	4.9E-04	1.4E-04	5.0E-04	5.0E-04	1.8E-03	4.9E-04	2.4E-04
TEEN	5.4E-04	5.3E-04	1.4E-04	5.4E-04	5.4E-04	2.3E-03	5.3E-04	2.4E-04
CHILD	6.8E-04	6.8E-04	1.5E-04	7.0E-04	7.0E-04	3.9E-03	6.8E-04	2.4E-04
INFNT	3.5E-04	3.4E-04	1.6E-04	3.7E-04	3.7E-04	6.5E-03	3.4E-04	2.4E-04

INDIVIDUAL DOSES(MREM) DUE TO GASEOUS EFFLUENT
FOR DATES 96 4 1 1 THRU 96 63024

	T.BODY	GI-TRCT	BONE	LIVER	KIDNEY	THYRD	LUNG	SKIN
PLUME PATHWAY, DIST GP= 1, 1136. METERS WINDS TOWARD SE								
ADULT	2.6E-04	2.6E-04	2.6E-04	2.6E-04	2.6E-04	2.6E-04	2.7E-04	7.6E-04
TEEN	2.6E-04	2.6E-04	2.6E-04	2.6E-04	2.6E-04	2.6E-04	2.7E-04	7.6E-04
CHILD	2.6E-04	2.6E-04	2.6E-04	2.6E-04	2.6E-04	2.6E-04	2.7E-04	7.6E-04
INFNT	2.6E-04	2.6E-04	2.6E-04	2.6E-04	2.6E-04	2.6E-04	2.7E-04	7.6E-04
GROUND PATHWAY, DIST GP= 1, 1136. METERS WINDS TOWARD SE								
ADULT	9.4E-06	9.4E-06	9.4E-06	9.4E-06	9.4E-06	9.4E-06	9.4E-06	1.1E-05
TEEN	9.4E-06	9.4E-06	9.4E-06	9.4E-06	9.4E-06	9.4E-06	9.4E-06	1.1E-05
CHILD	9.4E-06	9.4E-06	9.4E-06	9.4E-06	9.4E-06	9.4E-06	9.4E-06	1.1E-05
INFNT	9.4E-06	9.4E-06	9.4E-06	9.4E-06	9.4E-06	9.4E-06	9.4E-06	1.1E-05
VEGET PATHWAY, DIST GP= 1, 914. METERS WINDS TOWARD SE								
ADULT	6.0E-04	5.9E-04	1.1E-05	6.1E-04	6.0E-04	2.1E-03	5.9E-04	0.0E+00
TEEN	6.9E-04	6.8E-04	1.6E-05	7.0E-04	6.9E-04	1.9E-03	6.8E-04	0.0E+00
CHILD	1.1E-03	1.0E-03	3.5E-05	1.1E-03	1.1E-03	3.0E-03	1.0E-03	0.0E+00
INFNT	0.0E+00	0.0E+00	0.0E+00	0.0E+00	0.0E+00	0.0E+00	0.0E+00	0.0E+00
MEAT PATHWAY, DIST GP= 1, 4354. METERS WINDS TOWARD SE								
ADULT	8.4E-06	8.3E-06	9.3E-08	8.4E-06	8.4E-06	2.3E-05	8.3E-06	0.0E+00
TEEN	5.0E-06	5.0E-06	7.6E-08	5.1E-06	5.0E-06	1.5E-05	5.0E-06	0.0E+00
CHILD	6.0E-06	6.0E-06	1.4E-07	6.1E-06	6.1E-06	2.2E-05	6.0E-06	0.0E+00
INFNT	0.0E+00	0.0E+00	0.0E+00	0.0E+00	0.0E+00	0.0E+00	0.0E+00	0.0E+00
COW PATHWAY, DIST GP= 1, 4091. METERS WINDS TOWARD SE								
ADULT	2.3E-05	2.2E-05	1.6E-06	2.4E-05	2.4E-05	4.7E-04	2.1E-05	0.0E+00
TEEN	3.0E-05	2.8E-05	2.8E-06	3.2E-05	3.3E-05	7.4E-04	2.8E-05	0.0E+00
CHILD	4.7E-05	4.4E-05	6.7E-06	5.1E-05	5.2E-05	1.4E-03	4.4E-05	0.0E+00
INFNT	7.2E-05	6.7E-05	1.3E-05	8.3E-05	8.0E-05	3.5E-03	6.7E-05	0.0E+00
GOAT PATHWAY, DIST GP= 1, 4091. METERS WINDS TOWARD SE								
ADULT	4.7E-05	4.4E-05	2.9E-06	4.8E-05	4.7E-05	5.8E-04	4.4E-05	0.0E+00
TEEN	6.0E-05	5.7E-05	5.3E-06	6.5E-05	6.3E-05	9.1E-04	5.7E-05	0.0E+00
CHILD	9.4E-05	9.0E-05	1.3E-05	1.0E-04	1.0E-04	1.8E-03	9.0E-05	0.0E+00
INFNT	1.4E-04	1.4E-04	2.3E-05	1.7E-04	1.6E-04	4.2E-03	1.4E-04	0.0E+00
INHAL PATHWAY, DIST GP= 1, 1136. METERS WINDS TOWARD SE								
ADULT	2.3E-04	2.3E-04	3.4E-07	2.3E-04	2.3E-04	3.6E-04	2.3E-04	0.0E+00
TEEN	2.4E-04	2.3E-04	4.8E-07	2.4E-04	2.4E-04	3.9E-04	2.3E-04	0.0E+00
CHILD	2.1E-04	2.1E-04	6.5E-07	2.1E-04	2.1E-04	3.8E-04	2.1E-04	0.0E+00
INFNT	1.2E-04	1.2E-04	4.9E-07	1.2E-04	1.2E-04	2.7E-04	1.2E-04	0.0E+00
SUBTOTALS (NO PLUME)								
ADULT	9.2E-04	9.1E-04	2.6E-05	9.3E-04	9.3E-04	3.6E-03	9.1E-04	1.1E-05
TEEN	1.0E-03	1.0E-03	3.4E-05	1.0E-03	1.0E-03	4.0E-03	1.0E-03	1.1E-05
CHILD	1.4E-03	1.4E-03	6.5E-05	1.5E-03	1.4E-03	6.6E-03	1.4E-03	1.1E-05
INFNT	3.4E-04	3.3E-04	4.5E-05	3.8E-04	3.6E-04	8.0E-03	3.3E-04	1.1E-05
TOTALS								
ADULT	1.2E-03	1.2E-03	2.9E-04	1.2E-03	1.2E-03	3.8E-03	1.2E-03	7.7E-04
TEEN	1.3E-03	1.3E-03	3.0E-04	1.3E-03	1.3E-03	4.3E-03	1.3E-03	7.7E-04
CHILD	1.7E-03	1.7E-03	3.3E-04	1.7E-03	1.7E-03	6.9E-03	1.7E-03	7.7E-04
INFNT	6.1E-04	6.0E-04	3.1E-04	6.4E-04	6.3E-04	8.2E-03	6.0E-04	7.7E-04

INDIVIDUAL DOSES(MREM) DUE TO GASEOUS EFFLUENT
FOR DATES 96 4 1 1 THRU 96 63024

	T.BODY	GI-TRCT	BONE	LIVER	KIDNEY	THYRD	LUNG	SKIN
PLUME PATHWAY, DIST GP= 1, 1507. METERS WINDS TOWARD SSE								
ADULT	2.3E-04	2.3E-04	2.3E-04	2.3E-04	2.3E-04	2.3E-04	2.3E-04	4.2E-04
TEEN	2.3E-04	2.3E-04	2.3E-04	2.3E-04	2.3E-04	2.3E-04	2.3E-04	4.2E-04
CHILD	2.3E-04	2.3E-04	2.3E-04	2.3E-04	2.3E-04	2.3E-04	2.3E-04	4.2E-04
INFNT	2.3E-04	2.3E-04	2.3E-04	2.3E-04	2.3E-04	2.3E-04	2.3E-04	4.2E-04
GROUND PATHWAY, DIST GP= 1, 1507. METERS WINDS TOWARD SSE								
ADULT	1.2E-05	1.2E-05	1.2E-05	1.2E-05	1.2E-05	1.2E-05	1.2E-05	1.4E-05
TEEN	1.2E-05	1.2E-05	1.2E-05	1.2E-05	1.2E-05	1.2E-05	1.2E-05	1.4E-05
CHILD	1.2E-05	1.2E-05	1.2E-05	1.2E-05	1.2E-05	1.2E-05	1.2E-05	1.4E-05
INFNT	1.2E-05	1.2E-05	1.2E-05	1.2E-05	1.2E-05	1.2E-05	1.2E-05	1.4E-05
VEGET PATHWAY, DIST GP= 1, 1093. METERS WINDS TOWARD SSE								
ADULT	6.2E-04	6.0E-04	1.9E-05	6.3E-04	6.2E-04	3.9E-03	6.0E-04	0.0E+00
TEEN	7.0E-04	6.9E-04	2.5E-05	7.3E-04	7.1E-04	3.4E-03	6.9E-04	0.0E+00
CHILD	1.1E-03	1.1E-03	5.6E-05	1.1E-03	1.1E-03	5.2E-03	1.1E-03	0.0E+00
INFNT	0.0E+00	0.0E+00	0.0E+00	0.0E+00	0.0E+00	0.0E+00	0.0E+00	0.0E+00
MEAT PATHWAY, DIST GP= 1, 1093. METERS WINDS TOWARD SSE								
ADULT	8.9E-05	8.7E-05	2.1E-06	9.0E-05	8.9E-05	4.9E-04	8.7E-05	0.0E+00
TEEN	5.3E-05	5.2E-05	1.7E-06	5.4E-05	5.4E-05	3.4E-04	5.2E-05	0.0E+00
CHILD	6.3E-05	6.2E-05	3.1E-06	6.6E-05	6.5E-05	5.0E-04	6.2E-05	0.0E+00
INFNT	0.0E+00	0.0E+00	0.0E+00	0.0E+00	0.0E+00	0.0E+00	0.0E+00	0.0E+00
COW PATHWAY, DIST GP= 1, 4091. METERS WINDS TOWARD SSE								
ADULT	3.1E-05	2.9E-05	4.0E-06	3.3E-05	3.5E-05	1.3E-03	2.8E-05	0.0E+00
TEEN	4.1E-05	3.7E-05	7.2E-06	4.6E-05	4.9E-05	2.1E-03	3.6E-05	0.0E+00
CHILD	6.4E-05	5.8E-05	1.7E-05	7.5E-05	7.8E-05	4.1E-03	5.7E-05	0.0E+00
INFNT	1.0E-04	8.7E-05	3.3E-05	1.3E-04	1.2E-04	9.9E-03	8.7E-05	0.0E+00
GOAT PATHWAY, DIST GP= 1, 4091. METERS WINDS TOWARD SSE								
ADULT	6.3E-05	5.7E-05	6.9E-06	6.7E-05	6.6E-05	1.6E-03	5.7E-05	0.0E+00
TEEN	8.2E-05	7.5E-05	1.2E-05	9.2E-05	9.1E-05	2.5E-03	7.4E-05	0.0E+00
CHILD	1.3E-04	1.2E-04	3.0E-05	1.5E-04	1.4E-04	5.0E-03	1.2E-04	0.0E+00
INFNT	1.9E-04	1.8E-04	5.5E-05	2.4E-04	2.3E-04	1.2E-02	1.8E-04	0.0E+00
INHAL PATHWAY, DIST GP= 1, 1507. METERS WINDS TOWARD SSE								
ADULT	2.0E-04	2.0E-04	2.2E-07	2.0E-04	2.0E-04	2.7E-04	2.0E-04	0.0E+00
TEEN	2.0E-04	2.0E-04	3.1E-07	2.0E-04	2.0E-04	2.9E-04	2.0E-04	0.0E+00
CHILD	1.8E-04	1.8E-04	4.2E-07	1.8E-04	1.8E-04	2.8E-04	1.8E-04	0.0E+00
INFNT	1.0E-04	1.0E-04	3.1E-07	1.0E-04	1.0E-04	1.9E-04	1.0E-04	0.0E+00
SUBTOTALS (NO PLUME)								
ADULT	1.0E-03	9.9E-04	4.4E-05	1.0E-03	1.0E-03	7.6E-03	9.9E-04	1.4E-05
TEEN	1.1E-03	1.1E-03	5.9E-05	1.1E-03	1.1E-03	8.7E-03	1.1E-03	1.4E-05
CHILD	1.5E-03	1.5E-03	1.2E-04	1.6E-03	1.6E-03	1.5E-02	1.5E-03	1.4E-05
INFNT	4.1E-04	3.8E-04	1.0E-04	4.9E-04	4.6E-04	2.2E-02	3.8E-04	1.4E-05
TOTALS								
ADULT	1.2E-03	1.2E-03	2.7E-04	1.3E-03	1.3E-03	7.8E-03	1.2E-03	4.4E-04
TEEN	1.3E-03	1.3E-03	2.9E-04	1.4E-03	1.4E-03	8.9E-03	1.3E-03	4.4E-04
CHILD	1.8E-03	1.7E-03	3.5E-04	1.8E-03	1.8E-03	1.5E-02	1.7E-03	4.4E-04
INFNT	6.4E-04	6.1E-04	3.3E-04	7.2E-04	6.9E-04	2.2E-02	6.1E-04	4.4E-04

INDIVIDUAL DOSES(MREM) DUE TO GASEOUS EFFLUENT
FOR DATES 96 4 1 1 THRU 96 63024

	T.BODY	GI-TRCT	BONE	LIVER	KIDNEY	THYRD	LUNG	SKIN
PLUME PATHWAY, DIST GP= 1, 1026. METERS WINDS TOWARD S								
ADULT	6.6E-04	6.6E-04	6.6E-04	6.6E-04	6.6E-04	6.6E-04	6.6E-04	1.2E-03
TEEN	6.6E-04	6.6E-04	6.6E-04	6.6E-04	6.6E-04	6.6E-04	6.6E-04	1.2E-03
CHILD	6.6E-04	6.6E-04	6.6E-04	6.6E-04	6.6E-04	6.6E-04	6.6E-04	1.2E-03
INFNT	6.6E-04	6.6E-04	6.6E-04	6.6E-04	6.6E-04	6.6E-04	6.6E-04	1.2E-03
GROUND PATHWAY, DIST GP= 1, 1026. METERS WINDS TOWARD S								
ADULT	2.4E-05	2.4E-05	2.4E-05	2.4E-05	2.4E-05	2.4E-05	2.4E-05	2.8E-05
TEEN	2.4E-05	2.4E-05	2.4E-05	2.4E-05	2.4E-05	2.4E-05	2.4E-05	2.8E-05
CHILD	2.4E-05	2.4E-05	2.4E-05	2.4E-05	2.4E-05	2.4E-05	2.4E-05	2.8E-05
INFNT	2.4E-05	2.4E-05	2.4E-05	2.4E-05	2.4E-05	2.4E-05	2.4E-05	2.8E-05
VEGET PATHWAY, DIST GP= 1, 863. METERS WINDS TOWARD S								
ADULT	1.2E-03	1.2E-03	2.8E-05	1.2E-03	1.2E-03	6.1E-03	1.2E-03	0.0E+00
TEEN	1.4E-03	1.4E-03	3.8E-05	1.4E-03	1.4E-03	5.4E-03	1.4E-03	0.0E+00
CHILD	2.1E-03	2.1E-03	8.4E-05	2.2E-03	2.2E-03	8.3E-03	2.1E-03	0.0E+00
INFNT	0.0E+00	0.0E+00	0.0E+00	0.0E+00	0.0E+00	0.0E+00	0.0E+00	0.0E+00
MEAT PATHWAY, DIST GP= 1, 6115. METERS WINDS TOWARD S								
ADULT	9.1E-06	9.1E-06	1.1E-07	9.2E-06	9.2E-06	3.1E-05	9.0E-06	0.0E+00
TEEN	5.4E-06	5.4E-06	9.4E-08	5.5E-06	5.5E-06	2.1E-05	5.4E-06	0.0E+00
CHILD	6.6E-06	6.5E-06	1.7E-07	6.7E-06	6.7E-06	3.1E-05	6.5E-06	0.0E+00
INFNT	0.0E+00	0.0E+00	0.0E+00	0.0E+00	0.0E+00	0.0E+00	0.0E+00	0.0E+00
COW PATHWAY, DIST GP= 1, 4091. METERS WINDS TOWARD S								
ADULT	4.2E-05	3.9E-05	4.0E-06	4.4E-05	4.6E-05	1.3E-03	3.8E-05	0.0E+00
TEEN	5.5E-05	5.1E-05	7.2E-06	6.0E-05	6.3E-05	2.1E-03	5.0E-05	0.0E+00
CHILD	8.6E-05	8.0E-05	1.7E-05	9.7E-05	1.0E-04	4.2E-03	7.9E-05	0.0E+00
INFNT	1.3E-04	1.2E-04	3.4E-05	1.6E-04	1.6E-04	1.0E-02	1.2E-04	0.0E+00
GOAT PATHWAY, DIST GP= 1, 4091. METERS WINDS TOWARD S								
ADULT	8.5E-05	7.9E-05	7.0E-06	8.9E-05	8.8E-05	1.6E-03	7.8E-05	0.0E+00
TEEN	1.1E-04	1.0E-04	1.3E-05	1.2E-04	1.2E-04	2.6E-03	1.[illegible]E-04	0.0E+00
CHILD	1.7E-04	1.6E-04	3.0E-05	1.9E-04	1.9E-04	5.1E-03	1.6E-04	0.0E+00
INFNT	2.6E-04	2.5E-04	5.5E-05	3.1E-04	2.9E-04	1.2E-02	2.5E-04	0.0E+00
INHAL PATHWAY, DIST GP= 1, 1026. METERS WINDS TOWARD S								
ADULT	5.0E-04	5.0E-04	7.4E-07	5.0E-04	5.1E-04	7.7E-04	5.0E-04	0.0E+00
TEEN	5.1E-04	5.1E-04	1.0E-06	5.1E-04	5.1E-04	8.3E-04	5.1E-04	0.0E+00
CHILD	4.5E-04	4.5E-04	1.4E-06	4.5E-04	4.5E-04	8.1E-04	4.5E-04	0.0E+00
INFNT	2.6E-04	2.6E-04	1.0E-06	2.6E-04	2.6E-04	5.9E-04	2.6E-04	0.0E+00
SUBTOTALS (NO PLUME)								
ADULT	1.9E-03	1.9E-03	6.4E-05	1.9E-03	1.9E-03	9.9E-03	1.8E-03	2.8E-05
TEEN	2.1E-03	2.1E-03	8.2E-05	2.1E-03	2.1E-03	1.1E-02	2.1E-03	2.8E-05
CHILD	2.9E-03	2.8E-03	1.6E-04	3.0E-03	2.9E-03	1.8E-02	2.8E-03	2.8E-05
INFNT	6.8E-04	6.5E-04	1.1E-04	7.6E-04	7.3E-04	2.3E-02	6.5E-04	2.8E-05
TOTALS								
ADULT	2.5E-03	2.5E-03	7.2E-04	2.6E-03	2.6E-03	1.1E-02	2.5E-03	1.3E-03
TEEN	2.7E-03	2.7E-03	7.4E-04	2.8E-03	2.8E-03	1.2E-02	2.7E-03	1.3E-03
CHILD	3.5E-03	3.5E-03	8.1E-04	3.6E-03	3.6E-03	1.9E-02	3.5E-03	1.3E-03
INFNT	1.3E-03	1.3E-03	7.7E-04	1.4E-03	1.4E-03	2.3E-02	1.3E-03	1.3E-03

INDIVIDUAL DOSES(MREM) DUE TO GASEOUS EFFLUENT
FOR DATES 96 4 1 1 THRU 96 63024

	T.BODY	GI-TRCT	BONE	LIVER	KIDNEY	THYRD	LUNG	SKIN
PLUME	PATHWAY,	DIST GP=	1,	942.	METERS	WINDS	TOWARD	SSW
ADULT	4.3E-04	4.3E-04	4.3E-04	4.3E-04	4.3E-04	4.3E-04	4.3E-04	8.1E-04
TEEN	4.3E-04	4.3E-04	4.3E-04	4.3E-04	4.3E-04	4.3E-04	4.3E-04	8.1E-04
CHILD	4.3E-04	4.3E-04	4.3E-04	4.3E-04	4.3E-04	4.3E-04	4.3E-04	8.1E-04
INFNT	4.3E-04	4.3E-04	4.3E-04	4.3E-04	4.3E-04	4.3E-04	4.3E-04	8.1E-04
GROUND	PATHWAY,	DIST GP=	1,	942.	METERS	WINDS	TOWARD	SSW
ADULT	9.0E-06	9.0E-06	9.0E-06	9.0E-06	9.0E-06	9.0E-06	9.0E-06	1.1E-05
TEEN	9.0E-06	9.0E-06	9.0E-06	9.0E-06	9.0E-06	9.0E-06	9.0E-06	1.1E-05
CHILD	9.0E-06	9.0E-06	9.0E-06	9.0E-06	9.0E-06	9.0E-06	9.0E-06	1.1E-05
INFNT	9.0E-06	9.0E-06	9.0E-06	9.0E-06	9.0E-06	9.0E-06	9.0E-06	1.1E-05
VEGET	PATHWAY,	DIST GP=	1,	770.	METERS	WINDS	TOWARD	SSW
ADULT	9.2E-04	9.1E-04	1.1E-05	9.2E-04	9.2E-04	2.9E-03	9.0E-04	0.0E+00
TEEN	1.0E-03	1.0E-03	1.5E-05	1.1E-03	1.1E-03	2.7E-03	1.0E-03	0.0E+00
CHILD	1.6E-03	1.6E-03	3.4E-05	1.6E-03	1.6E-03	4.1E-03	1.6E-03	0.0E+00
INFNT	0.0E+00	0.0E+00	0.0E+00	0.0E+00	0.0E+00	0.0E+00	0.0E+00	0.0E+00
MEAT	PATHWAY,	DIST GP=	1,	8045.	METERS	WINDS	TOWARD	SSW
ADULT	4.3E-06	4.3E-06	2.3E-08	4.3E-06	4.3E-06	8.9E-06	4.3E-06	0.0E+00
TEEN	2.6E-06	2.6E-06	1.9E-08	2.6E-06	2.6E-06	5.9E-06	2.6E-06	0.0E+00
CHILD	3.1E-06	3.1E-06	3.5E-08	3.1E-06	3.1E-06	8.1E-06	3.1E-06	0.0E+00
INFNT	0.0E+00	0.0E+00	0.0E+00	0.0E+00	0.0E+00	0.0E+00	0.0E+00	0.0E+00
COW	PATHWAY,	DIST GP=	1,	4091.	METERS	WINDS	TOWARD	SSW
ADULT	2.7E-05	2.6E-05	1.3E-06	2.8E-05	2.9E-05	4.7E-04	2.6E-05	0.0E+00
TEEN	3.6E-05	3.5E-05	2.4E-06	3.8E-05	3.9E-05	7.3E-04	3.4E-05	0.0E+00
CHILD	5.6E-05	5.4E-05	5.8E-06	6.0E-05	6.1E-05	1.4E-03	5.4E-05	0.0E+00
INFNT	8.6E-05	8.2E-05	1.1E-05	9.5E-05	9.4E-05	3.4E-03	8.2E-05	0.0E+00
GOAT	PATHWAY,	DIST GP=	1,	4091.	METERS	WINDS	TOWARD	SSW
ADULT	5.6E-05	5.4E-05	2.3E-06	5.7E-05	5.7E-05	5.8E-04	5.4E-05	0.0E+00
TEEN	7.2E-05	7.0E-05	4.2E-06	7.6E-05	7.6E-05	9.0E-04	7.0E-05	0.0E+00
CHILD	1.1E-04	1.1E-04	1.0E-05	1.2E-04	1.2E-04	1.8E-03	1.1E-04	0.0E+00
INFNT	1.7E-04	1.7E-04	1.9E-05	1.9E-04	1.8E-04	4.2E-03	1.7E-04	0.0E+00
INHAL	PATHWAY,	DIST GP=	1,	942.	METERS	WINDS	TOWARD	SSW
ADULT	3.7E-04	3.7E-04	5.4E-07	3.7E-04	3.7E-04	5.6E-04	3.7E-04	0.0E+00
TEEN	3.7E-04	3.7E-04	7.5E-07	3.7E-04	3.7E-04	6.1E-04	3.7E-04	0.0E+00
CHILD	3.3E-04	3.3E-04	1.0E-06	3.3E-04	3.3E-04	5.9E-04	3.3E-04	0.0E+00
INFNT	1.9E-04	1.9E-04	7.6E-07	1.9E-04	1.9E-04	4.3E-04	1.9E-04	0.0E+00
SUBTOTALS (NO PLUME)								
ADULT	1.4E-03	1.4E-03	2.5E-05	1.4E-03	1.4E-03	4.5E-03	1.4E-03	1.1E-05
TEEN	1.5E-03	1.5E-03	3.2E-05	1.6E-03	1.5E-03	5.0E-03	1.5E-03	1.1E-05
CHILD	2.1E-03	2.1E-03	6.0E-05	2.2E-03	2.1E-03	7.9E-03	2.1E-03	1.1E-05
INFNT	4.6E-04	4.5E-04	4.0E-05	4.8E-04	4.8E-04	8.0E-03	4.5E-04	1.1E-05
TOTALS								
ADULT	1.8E-03	1.8E-03	4.5E-04	1.8E-03	1.8E-03	5.0E-03	1.8E-03	8.2E-04
TEEN	2.0E-03	2.0E-03	4.6E-04	2.0E-03	2.0E-03	5.4E-03	2.0E-03	8.2E-04
CHILD	2.5E-03	2.5E-03	4.9E-04	2.6E-03	2.6E-03	8.3E-03	2.5E-03	8.2E-04
INFNT	8.9E-04	8.8E-04	4.7E-04	9.1E-04	9.1E-04	8.5E-03	8.8E-04	8.2E-04

SUMMARY OF MAXIMUM INDIVIDUAL DOSES

3rd Quarter 1996

EFFLUENT	APPLICABLE ORGAN	ESTIMATED DOSE (mrem)	AGE GROUP	LOCATION DIST DIR (M) (Toward)	% OF APPLICABLE LIMIT	LIMIT (mrem) QTR
Liquid	Total Body	2.71E-2	Adult	Receptor 1	1.81E+0	1.5E+0
Liquid	Liver	3.39E-2	Adult	Receptor 1	6.78E-1	5.0E+0
Noble Gas	Air Dose (Gamma-mrad)	2.41E-2		594 S	4.82E-1	5.0E+0
Noble Gas	Air dose (Beta-mrad)	5.37E-2		594 S	5.37E-1	1.0E+1
Iodines and Particulates	Liver	1.22E-1	Child	660 NNE	1.63E+0	7.5E+0

FOR RECEPTOR NUMBER 1

LAST LIQUID DOSE ACCUMULATIONS (MREM)
START DATE 96 7 1 1 END DATE 96 93024

	BONE	LIVER	T.BODY	THYRD	KIDNEY	LUNG	GI-LLI	SKIN
WATER								
ADULT	1.5E-04	5.3E-03	5.2E-03	6.0E-03	5.1E-03	5.1E-03	5.3E-03	0.0E+00
TEEN	1.4E-04	3.8E-03	3.7E-03	4.4E-03	3.6E-03	3.6E-03	3.7E-03	0.0E+00
CHILD	3.7E-04	7.2E-03	7.0E-03	8.9E-03	7.0E-03	6.9E-03	7.0E-03	0.0E+00
INFANT	3.6E-04	7.2E-03	6.8E-03	1.0E-02	6.9E-03	6.8E-03	6.8E-03	0.0E+00
SHORE								
ADULT	4.3E-05	4.3E-05	4.3E-05	4.3E-05	4.3E-05	4.3E-05	4.3E-05	5.0E-05
TEEN	2.4E-04	2.4E-04	2.4E-04	2.4E-04	2.4E-04	2.4E-04	2.4E-04	2.8E-04
CHILD	5.0E-05	5.0E-05	5.0E-05	5.0E-05	5.0E-05	5.0E-05	5.0E-05	5.9E-05
INFANT	0.0E+00	0.0E+00	0.0E+00	0.0E+00	0.0E+00	0.0E+00	0.0E+00	0.0E+00
FW SPT FISH								
ADULT	1.5E-02	2.9E-02	2.2E-02	1.3E-03	9.8E-03	3.4E-03	4.8E-03	0.0E+00
TEEN	1.5E-02	2.9E-02	1.3E-02	1.2E-03	9.8E-03	3.8E-03	3.4E-03	0.0E+00
CHILD	1.9E-02	2.5E-02	5.2E-03	1.2E-03	8.2E-03	3.0E-03	1.3E-03	0.0E+00
INFANT	0.0E+00	0.0E+00	0.0E+00	0.0E+00	0.0E+00	0.0E+00	0.0E+00	0.0E+00
TOTAL								
ADULT	1.5E-02	3.4E-02	2.7E-02	7.3E-03	1.5E-02	8.5E-03	1.0E-02	5.0E-05
TEEN	1.6E-02	3.3E-02	1.7E-02	5.8E-03	1.4E-02	7.7E-03	7.4E-03	2.8E-04
CHILD	1.9E-02	3.2E-02	1.2E-02	1.0E-02	1.5E-02	1.0E-02	8.4E-03	5.9E-05
INFANT	3.6E-04	7.2E-03	6.8E-03	1.0E-02	6.9E-03	6.8E-03	6.8E-03	0.0E+00

DATES OF LAST AIR DOSE ACCUMULATION ARE FROM 96 7 1 1 0 TO 96 93024 0
DOSE ACCUMULATION FOR GAMMA MRAD

FOR RELEASE POINT 1

**DIRECTION FROM N				
0.0000E+00	0.0000E+00	0.0000E+00	0.0000E+00	0.0000E+00
0.0000E+00	0.0000E+00	0.0000E+00	0.0000E+00	0.0000E+00
**DIRECTION FROM NNE				
0.0000E+00	0.0000E+00	0.0000E+00	0.0000E+00	0.0000E+00
0.0000E+00	0.0000E+00	0.0000E+00	0.0000E+00	0.0000E+00
**DIRECTION FROM NE				
5.2631E-05	7.3710E-06	3.3546E-06	1.9274E-06	1.3565E-06
6.9046E-07	2.6751E-07	1.3191E-07	8.4104E-08	5.2466E-08
**DIRECTION FROM ENE				
0.0000E+00	0.0000E+00	0.0000E+00	0.0000E+00	0.0000E+00
0.0000E+00	0.0000E+00	0.0000E+00	0.0000E+00	0.0000E+00
**DIRECTION FROM E				
0.0000E+00	0.0000E+00	0.0000E+00	0.0000E+00	0.0000E+00
0.0000E+00	0.0000E+00	0.0000E+00	0.0000E+00	0.0000E+00
**DIRECTION FROM ESE				
0.0000E+00	0.0000E+00	0.0000E+00	0.0000E+00	0.0000E+00
0.0000E+00	0.0000E+00	0.0000E+00	0.0000E+00	0.0000E+00
**DIRECTION FROM SE				
0.0000E+00	0.0000E+00	0.0000E+00	0.0000E+00	0.0000E+00
0.0000E+00	0.0000E+00	0.0000E+00	0.0000E+00	0.0000E+00
**DIRECTION FROM SSE				
0.0000E+00	0.0000E+00	0.0000E+00	0.0000E+00	0.0000E+00
0.0000E+00	0.0000E+00	0.0000E+00	0.0000E+00	0.0000E+00
**DIRECTION FROM S				
0.0000E+00	0.0000E+00	0.0000E+00	0.0000E+00	0.0000E+00
0.0000E+00	0.0000E+00	0.0000E+00	0.0000E+00	0.0000E+00
**DIRECTION FROM SSW				
0.0000E+00	0.0000E+00	0.0000E+00	0.0000E+00	0.0000E+00
0.0000E+00	0.0000E+00	0.0000E+00	0.0000E+00	0.0000E+00
**DIRECTION FROM SW				
0.0000E+00	0.0000E+00	0.0000E+00	0.0000E+00	0.0000E+00
0.0000E+00	0.0000E+00	0.0000E+00	0.0000E+00	0.0000E+00
**DIRECTION FROM WSW				
1.0026E-05	1.2899E-06	6.6369E-07	4.1899E-07	2.9696E-07
1.4978E-07	6.1300E-08	3.1479E-08	2.0576E-08	1.3129E-08
**DIRECTION FROM W				
6.5925E-06	9.0915E-07	4.1485E-07	2.3898E-07	1.6843E-07
8.5964E-08	3.3475E-08	1.6587E-08	1.0611E-08	6.6435E-09
**DIRECTION FROM WNW				
0.0000E+00	0.0000E+00	0.0000E+00	0.0000E+00	0.0000E+00
0.0000E+00	0.0000E+00	0.0000E+00	0.0000E+00	0.0000E+00
**DIRECTION FROM NW				
2.1282E-04	1.5445E-05	6.4365E-06	3.6281E-06	2.4027E-06
1.0799E-06	3.8500E-07	2.0809E-07	1.4863E-07	1.0398E-07
**DIRECTION FROM NNW				
2.4561E-05	3.4398E-06	1.5655E-06	8.9944E-07	6.3301E-07
3.2221E-07	1.2484E-07	6.1557E-08	3.9249E-08	2.4484E-08

DISTANCES USED IN CALCULATIONS

594.0	2416.0	4020.0	5630.0	7240.0
12067.0	24135.0	40225.0	56315.0	80500.0

DATES OF LAST AIR DOSE ACCUMULATION ARE FROM 96 7 1 1 0 TO 96 93024 0
DOSE ACCUMULATION FOR GAMMA MRAD

FOR RELEASE POINT 2

**DIRECTION FROM N				
2.4137E-02	2.9960E-03	1.3593E-03	7.8475E-04	5.4338E-04
2.6524E-04	9.8593E-05	4.7548E-05	2.9811E-05	1.8169E-05
**DIRECTION FROM NNE				
1.1150E-02	1.4059E-03	6.5571E-04	3.8612E-04	2.6985E-04
1.3397E-04	5.1394E-05	2.5227E-05	1.6005E-05	9.9261E-06
**DIRECTION FROM NE				
1.3678E-02	1.6613E-03	7.9712E-04	4.7924E-04	3.3763E-04
1.6977E-04	6.6657E-05	3.3027E-05	2.1060E-05	1.3231E-05
**DIRECTION FROM ENE				
2.1921E-02	2.5071E-03	1.2479E-03	7.6819E-04	5.4989E-04
2.8471E-04	1.1568E-04	5.7844E-05	3.7041E-05	2.3720E-05
**DIRECTION FROM E				
2.2922E-02	2.6409E-03	1.3174E-03	8.1217E-04	5.8144E-04
3.0108E-04	1.2256E-04	6.1424E-05	3.9404E-05	2.5252E-05
**DIRECTION FROM ESE				
1.4648E-02	1.7649E-03	8.5763E-04	5.1962E-04	3.6869E-04
1.8806E-04	7.5054E-05	3.7413E-05	2.3945E-05	1.5182E-05
**DIRECTION FROM SE				
1.2971E-02	1.4136E-03	7.1914E-04	4.4997E-04	3.2227E-04
1.6630E-04	6.7944E-05	3.4078E-05	2.1854E-05	1.4037E-05
**DIRECTION FROM SSE				
9.0530E-03	9.7035E-04	4.9928E-04	3.1441E-04	2.2661E-04
1.1840E-04	4.8978E-05	2.4664E-05	1.5854E-05	1.0251E-05
**DIRECTION FROM S				
1.2311E-02	1.4185E-03	7.1015E-04	4.3923E-04	3.1411E-04
1.6216E-04	6.6050E-05	3.3187E-05	2.1328E-05	1.3662E-05
**DIRECTION FROM SSW				
8.1377E-03	9.4090E-04	4.6578E-04	2.8608E-04	2.0368E-04
1.0428E-04	4.2019E-05	2.1014E-05	1.3466E-05	8.5817E-06
**DIRECTION FROM SW				
4.6772E-03	5.8323E-04	2.8173E-04	1.7020E-04	1.2013E-04
6.0658E-05	2.4076E-05	1.2065E-05	7.7626E-06	4.9044E-06
**DIRECTION FROM WSW				
2.9218E-03	3.3106E-04	1.5622E-04	9.3348E-05	6.5229E-05
3.2239E-05	1.2449E-05	6.1641E-06	3.9318E-06	2.4558E-06
**DIRECTION FROM W				
2.6670E-03	3.1168E-04	1.5284E-04	9.3527E-05	6.6106E-05
3.3353E-05	1.3319E-05	6.6977E-06	4.3148E-06	2.7373E-06
**DIRECTION FROM WNW				
6.3695E-03	7.5117E-04	3.4253E-04	1.9912E-04	1.3731E-04
6.6178E-05	2.4379E-05	1.1712E-05	7.3187E-06	4.4401E-06
**DIRECTION FROM NW				
4.7499E-03	5.4296E-04	2.6443E-04	1.6071E-04	1.1429E-04
5.8548E-05	2.3486E-05	1.1746E-05	7.5332E-06	4.8020E-06
**DIRECTION FROM NNW				
6.2758E-03	7.2510E-04	3.4728E-04	2.0899E-04	1.4756E-04
7.4593E-05	2.9493E-05	1.4721E-05	9.4389E-06	5.9740E-06

DISTANCES USED IN CALCULATIONS

594.0	2416.0	4020.0	5630.0	7240.0
12067.0	24135.0	40225.0	56315.0	80500.0

DATES OF LAST AIR DOSE ACCUMULATION ARE FROM 96 7 1 1 0 TO 96 93024 0
DOSE ACCUMULATION FOR BETA MRAD

FOR RELEASE POINT 1

**DIRECTION FROM N				
0.0000E+00	0.0000E+00	0.0000E+00	0.0000E+00	0.0000E+00
0.0000E+00	0.0000E+00	0.0000E+00	0.0000E+00	0.0000E+00
**DIRECTION FROM NNE				
0.0000E+00	0.0000E+00	0.0000E+00	0.0000E+00	0.0000E+00
0.0000E+00	0.0000E+00	0.0000E+00	0.0000E+00	0.0000E+00
**DIRECTION FROM NE				
5.9681E-03	8.3583E-04	3.8039E-04	2.1855E-04	1.5382E-04
7.8294E-05	3.0334E-05	1.4958E-05	9.5370E-06	5.9493E-06
**DIRECTION FROM ENE				
0.0000E+00	0.0000E+00	0.0000E+00	0.0000E+00	0.0000E+00
0.0000E+00	0.0000E+00	0.0000E+00	0.0000E+00	0.0000E+00
**DIRECTION FROM E				
0.0000E+00	0.0000E+00	0.0000E+00	0.0000E+00	0.0000E+00
0.0000E+00	0.0000E+00	0.0000E+00	0.0000E+00	0.0000E+00
**DIRECTION FROM ESE				
0.0000E+00	0.0000E+00	0.0000E+00	0.0000E+00	0.0000E+00
0.0000E+00	0.0000E+00	0.0000E+00	0.0000E+00	0.0000E+00
**DIRECTION FROM SE				
0.0000E+00	0.0000E+00	0.0000E+00	0.0000E+00	0.0000E+00
0.0000E+00	0.0000E+00	0.0000E+00	0.0000E+00	0.0000E+00
**DIRECTION FROM SSE				
0.0000E+00	0.0000E+00	0.0000E+00	0.0000E+00	0.0000E+00
0.0000E+00	0.0000E+00	0.0000E+00	0.0000E+00	0.0000E+00
**DIRECTION FROM S				
0.0000E+00	0.0000E+00	0.0000E+00	0.0000E+00	0.0000E+00
0.0000E+00	0.0000E+00	0.0000E+00	0.0000E+00	0.0000E+00
**DIRECTION FROM SSW				
0.0000E+00	0.0000E+00	0.0000E+00	0.0000E+00	0.0000E+00
0.0000E+00	0.0000E+00	0.0000E+00	0.0000E+00	0.0000E+00
**DIRECTION FROM SW				
0.0000E+00	0.0000E+00	0.0000E+00	0.0000E+00	0.0000E+00
0.0000E+00	0.0000E+00	0.0000E+00	0.0000E+00	0.0000E+00
**DIRECTION FROM WSW				
1.1369E-03	1.4627E-04	7.5259E-05	4.7511E-05	3.3674E-05
1.6984E-05	6.9511E-06	3.5695E-06	2.3332E-06	1.4888E-06
**DIRECTION FROM W				
7.4755E-04	1.0309E-04	4.7042E-05	2.7100E-05	1.9099E-05
9.7478E-06	3.7959E-06	1.8809E-06	1.2032E-06	7.5334E-07
**DIRECTION FROM WNW				
0.0000E+00	0.0000E+00	0.0000E+00	0.0000E+00	0.0000E+00
0.0000E+00	0.0000E+00	0.0000E+00	0.0000E+00	0.0000E+00
**DIRECTION FROM NW				
2.6133E-03	1.8528E-04	7.8853E-05	4.5253E-05	3.0410E-05
1.4115E-05	5.2879E-06	2.9110E-06	2.0793E-06	1.4546E-06
**DIRECTION FROM NNW				
2.7851E-03	3.9005E-04	1.7752E-04	1.0199E-04	7.1780E-05
3.6537E-05	1.4156E-05	6.9802E-06	4.4506E-06	2.7764E-06

DISTANCES USED IN CALCULATIONS

594.0	2416.0	4020.0	5630.0	7240.0
12067.0	24135.0	40225.0	56315.0	80500.0

DATES OF LAST AIR DOSE ACCUMULATION ARE FROM 96 7 1 1 0 TO 96 93024 0
DOSE ACCUMULATION FOR BETA MRAD

FOR RELEASE POINT 2

**DIRECTION FROM N				
5.3750E-02	6.7027E-03	3.0299E-03	1.7440E-03	1.2056E-03
5.8665E-04	2.1684E-04	1.0420E-04	6.5162E-05	3.9556E-05
**DIRECTION FROM NNE				
2.4485E-02	3.0897E-03	1.4376E-03	8.4518E-04	5.8997E-04
2.9220E-04	1.1172E-04	5.4745E-05	3.4694E-05	2.1471E-05
**DIRECTION FROM NE				
2.8333E-02	3.4585E-03	1.6442E-03	9.8205E-04	6.9011E-04
3.4555E-04	1.3459E-04	6.6403E-05	4.2230E-05	2.6417E-05
**DIRECTION FROM ENE				
4.4300E-02	5.1478E-03	2.5347E-03	1.5486E-03	1.1057E-03
5.7032E-04	2.3017E-04	1.1481E-04	7.3421E-05	4.6860E-05
**DIRECTION FROM E				
4.3633E-02	5.1305E-03	2.5259E-03	1.5431E-03	1.1015E-03
5.6808E-04	2.2948E-04	1.1468E-04	7.3468E-05	4.6902E-05
**DIRECTION FROM ESE				
2.9209E-02	3.5901E-03	1.7250E-03	1.0369E-03	7.3306E-04
3.7168E-04	1.4703E-04	7.3095E-05	4.6724E-05	2.9481E-05
**DIRECTION FROM SE				
2.2601E-02	2.5056E-03	1.2604E-03	7.8343E-04	5.5832E-04
2.8544E-04	1.1548E-04	5.7785E-05	3.7021E-05	2.3657E-05
**DIRECTION FROM SSE				
1.5019E-02	1.6417E-03	8.3375E-04	5.2085E-04	3.7394E-04
1.9416E-04	7.9703E-05	4.0081E-05	2.5759E-05	1.6598E-05
**DIRECTION FROM S				
1.7933E-02	2.1044E-03	1.0403E-03	6.3809E-04	4.5484E-04
2.3365E-04	9.4423E-05	4.7324E-05	3.0378E-05	1.9381E-05
**DIRECTION FROM SSW				
1.1646E-02	1.3850E-03	6.7204E-04	4.0724E-04	2.8803E-04
1.4580E-04	5.7809E-05	2.8745E-05	1.8365E-05	1.1604E-05
**DIRECTION FROM SW				
8.2772E-03	1.0613E-03	5.0619E-04	3.0296E-04	2.1302E-04
1.0690E-04	4.2010E-05	2.0985E-05	1.3483E-05	8.4710E-06
**DIRECTION FROM WSW				
5.4135E-03	6.2439E-04	2.8886E-04	1.7020E-04	1.1786E-04
5.7222E-05	2.1527E-05	1.0528E-05	6.6642E-06	4.0994E-06
**DIRECTION FROM W				
4.2094E-03	5.0785E-04	2.4731E-04	1.5065E-04	1.0594E-04
5.2906E-05	2.0921E-05	1.0502E-05	6.7625E-06	4.2630E-06
**DIRECTION FROM WNW				
1.2924E-02	1.5410E-03	6.8971E-04	3.9519E-04	2.7047E-04
1.2845E-04	4.6051E-05	2.1773E-05	1.3456E-05	8.0118E-06
**DIRECTION FROM NW				
7.8676E-03	8.9967E-04	4.3398E-04	2.6195E-04	1.8602E-04
9.5152E-05	3.7944E-05	1.8902E-05	1.2092E-05	7.6910E-06
**DIRECTION FROM NNW				
1.1603E-02	1.3405E-03	6.4047E-04	3.8481E-04	2.7132E-04
1.3675E-04	5.3846E-05	2.6797E-05	1.7146E-05	1.0825E-05

DISTANCES USED IN CALCULATIONS

594.0	2416.0	4020.0	5630.0	7240.0
12067.0	24135.0	40225.0	56315.0	80500.0

INDIVIDUAL DOSES (MREM) DUE TO GASEOUS EFFLUENT
FOR DATES 96 7 1 1 THRU 96 93024

	T.BODY	GI-TRCT	BONE	LIVER	KIDNEY	THYRD	LUNG	SKIN
PLUME PATHWAY, DIST GP= 1, 659. METERS WINDS TOWARD N								
ADULT	5.2E-03	5.2E-03	5.2E-03	5.2E-03	5.2E-03	5.2E-03	5.2E-03	1.1E-02
TEEN	5.2E-03	5.2E-03	5.2E-03	5.2E-03	5.2E-03	5.2E-03	5.2E-03	1.1E-02
CHILD	5.2E-03	5.2E-03	5.2E-03	5.2E-03	5.2E-03	5.2E-03	5.2E-03	1.1E-02
INFNT	5.2E-03	5.2E-03	5.2E-03	5.2E-03	5.2E-03	5.2E-03	5.2E-03	1.1E-02
GROUND PATHWAY, DIST GP= 1, 659. METERS WINDS TOWARD N								
ADULT	2.0E-02	2.0E-02	2.0E-02	2.0E-02	2.0E-02	2.0E-02	2.0E-02	2.4E-02
TEEN	2.0E-02	2.0E-02	2.0E-02	2.0E-02	2.0E-02	2.0E-02	2.0E-02	2.4E-02
CHILD	2.0E-02	2.0E-02	2.0E-02	2.0E-02	2.0E-02	2.0E-02	2.0E-02	2.4E-02
INFNT	2.0E-02	2.0E-02	2.0E-02	2.0E-02	2.0E-02	2.0E-02	2.0E-02	2.4E-02
VEGET PATHWAY, DIST GP= 1, 8045. METERS WINDS TOWARD N								
ADULT	5.4E-04	2.7E-04	1.9E-04	6.3E-04	3.9E-04	4.5E-04	3.0E-04	0.0E+00
TEEN	5.4E-04	3.1E-04	3.0E-04	8.6E-04	4.8E-04	4.6E-04	3.7E-04	0.0E+00
CHILD	6.4E-04	4.7E-04	7.0E-04	1.4E-03	7.5E-04	7.1E-04	5.7E-04	0.0E+00
INFNT	0.0E+00	0.0E+00	0.0E+00	0.0E+00	0.0E+00	0.0E+00	0.0E+00	0.0E+00
MEAT PATHWAY, DIST GP= 1, 8045. METERS WINDS TOWARD N								
ADULT	6.7E-05	3.9E-05	2.0E-05	7.6E-05	5.1E-05	6.1E-05	4.2E-05	0.0E+00
TEEN	3.6E-05	2.3E-05	1.6E-05	5.3E-05	3.3E-05	3.9E-05	2.6E-05	0.0E+00
CHILD	3.5E-05	2.8E-05	2.9E-05	6.6E-05	4.0E-05	5.2E-05	3.2E-05	0.0E+00
INFNT	0.0E+00	0.0E+00	0.0E+00	0.0E+00	0.0E+00	0.0E+00	0.0E+00	0.0E+00
COW PATHWAY, DIST GP= 1, 4091. METERS WINDS TOWARD N								
ADULT	1.1E-03	2.4E-04	6.0E-04	1.4E-03	6.1E-04	2.4E-03	3.4E-04	0.0E+00
TEEN	1.1E-03	3.2E-04	1.1E-03	2.3E-03	9.5E-04	3.8E-03	5.3E-04	0.0E+00
CHILD	1.1E-03	4.7E-04	2.5E-03	3.7E-03	1.5E-03	7.3E-03	8.2E-04	0.0E+00
INFNT	1.3E-03	7.1E-04	4.0E-03	6.8E-03	2.3E-03	1.7E-02	1.3E-03	0.0E+00
GOAT PATHWAY, DIST GP= 1, 4091. METERS WINDS TOWARD N								
ADULT	3.1E-03	5.2E-04	1.8E-03	3.9E-03	1.6E-03	3.1E-03	8.2E-04	0.0E+00
TEEN	3.1E-03	6.7E-04	3.1E-03	6.5E-03	2.5E-03	4.8E-03	1.3E-03	0.0E+00
CHILD	2.8E-03	9.8E-04	7.4E-03	1.1E-02	4.1E-03	9.2E-03	2.0E-03	0.0E+00
INFNT	3.1E-03	1.5E-03	1.2E-02	2.0E-02	6.3E-03	2.1E-02	3.4E-03	0.0E+00
INHAL PATHWAY, DIST GP= 1, 659. METERS WINDS TOWARD N								
ADULT	6.4E-03	5.5E-03	6.2E-04	6.6E-03	5.9E-03	1.1E-02	5.6E-03	0.0E+00
TEEN	6.2E-03	5.5E-03	8.5E-04	7.1E-03	6.1E-03	1.2E-02	5.7E-03	0.0E+00
CHILD	5.2E-03	4.9E-03	1.1E-03	6.3E-03	5.4E-03	1.3E-02	5.1E-03	0.0E+00
INFNT	2.9E-03	2.8E-03	6.9E-04	3.8E-03	3.1E-03	1.0E-02	2.9E-03	0.0E+00
SUBTOTALS (NO PLUME)								
ADULT	3.2E-02	2.7E-02	2.4E-02	3.3E-02	2.9E-02	3.7E-02	2.7E-02	2.4E-02
TEEN	3.1E-02	2.7E-02	2.6E-02	3.7E-02	3.0E-02	4.2E-02	2.8E-02	2.4E-02
CHILD	3.0E-02	2.7E-02	3.2E-02	4.3E-02	3.2E-02	5.0E-02	2.9E-02	2.4E-02
INFNT	2.8E-02	2.5E-02	3.7E-02	5.1E-02	3.2E-02	6.9E-02	2.8E-02	2.4E-02
TOTALS								
ADULT	3.7E-02	3.2E-02	2.9E-02	3.8E-02	3.4E-02	4.3E-02	3.3E-02	3.4E-02
TEEN	3.7E-02	3.2E-02	3.1E-02	4.2E-02	3.6E-02	4.7E-02	3.4E-02	3.4E-02
CHILD	3.5E-02	3.2E-02	3.7E-02	4.8E-02	3.7E-02	5.5E-02	3.4E-02	3.4E-02
INFNT	3.3E-02	3.0E-02	4.2E-02	5.6E-02	3.7E-02	7.4E-02	3.3E-02	3.4E-02

INDIVIDUAL DOSES(MREM).DUE TO GASEOUS EFFLUENT
FOR DATES 96 7 1 1 THRU 96 93024

	T.BODY	GI-TRCT	BONE	LIVER	KIDNEY	THYRD	LUNG	SKIN
PLUME PATHWAY, DIST GP= 1, 660. METERS WINDS TOWARD NNE								
ADULT	3.7E-03	3.7E-03	3.7E-03	3.7E-03	3.7E-03	3.7E-03	3.8E-03	7.7E-03
TEEN	3.7E-03	3.7E-03	3.7E-03	3.7E-03	3.7E-03	3.7E-03	3.8E-03	7.7E-03
CHILD	3.7E-03	3.7E-03	3.7E-03	3.7E-03	3.7E-03	3.7E-03	3.8E-03	7.7E-03
INFNT	3.7E-03	3.7E-03	3.7E-03	3.7E-03	3.7E-03	3.7E-03	3.8E-03	7.7E-03
GROUND PATHWAY, DIST GP= 1, 660. METERS WINDS TOWARD NNE								
ADULT	2.9E-02	2.9E-02	2.9E-02	2.9E-02	2.9E-02	2.9E-02	2.9E-02	3.4E-02
TEEN	2.9E-02	2.9E-02	2.9E-02	2.9E-02	2.9E-02	2.9E-02	2.9E-02	3.4E-02
CHILD	2.9E-02	2.9E-02	2.9E-02	2.9E-02	2.9E-02	2.9E-02	2.9E-02	3.4E-02
INFNT	2.9E-02	2.9E-02	2.9E-02	2.9E-02	2.9E-02	2.9E-02	2.9E-02	3.4E-02
VEGET PATHWAY, DIST GP= 1, 814. METERS WINDS TOWARD NNE								
ADULT	2.4E-02	5.1E-03	1.4E-02	3.0E-02	1.3E-02	1.8E-02	7.4E-03	0.0E+00
TEEN	2.2E-02	5.8E-03	2.1E-02	4.4E-02	1.8E-02	1.6E-02	1.0E-02	0.0E+00
CHILD	2.0E-02	8.6E-03	4.8E-02	7.1E-02	2.8E-02	2.5E-02	1.5E-02	0.0E+00
INFNT	0.0E+00	0.0E+00	0.0E+00	0.0E+00	0.0E+00	0.0E+00	0.0E+00	0.0E+00
MEAT PATHWAY, DIST GP= 1, 7725. METERS WINDS TOWARD NNE								
ADULT	7.1E-05	2.7E-05	3.1E-05	8.5E-05	4.5E-05	6.1E-05	3.2E-05	0.0E+00
TEEN	3.5E-05	1.6E-05	2.5E-05	6.2E-05	3.1E-05	4.1E-05	2.1E-05	0.0E+00
CHILD	3.0E-05	1.9E-05	4.5E-05	7.8E-05	3.7E-05	5.7E-05	2.5E-05	0.0E+00
INFNT	0.0E+00	0.0E+00	0.0E+00	0.0E+00	0.0E+00	0.0E+00	0.0E+00	0.0E+00
COW PATHWAY, DIST GP= 1, 4091. METERS WINDS TOWARD NNE								
ADULT	1.4E-03	1.8E-04	8.6E-04	1.8E-03	7.0E-04	3.3E-03	3.2E-04	0.0E+00
TEEN	1.4E-03	2.3E-04	1.5E-03	3.0E-03	1.1E-03	5.1E-03	5.4E-04	0.0E+00
CHILD	1.2E-03	3.2E-04	3.6E-03	5.0E-03	1.8E-03	1.0E-02	8.2E-04	0.0E+00
INFNT	1.3E-03	4.7E-04	5.7E-03	9.3E-03	2.8E-03	2.4E-02	1.4E-03	0.0E+00
GOAT PATHWAY, DIST GP= 1, 4091. METERS WINDS TOWARD NNE								
ADULT	4.1E-03	3.9E-04	2.6E-03	5.2E-03	1.9E-03	4.0E-03	8.3E-04	0.0E+00
TEEN	4.0E-03	5.0E-04	4.5E-03	8.9E-03	3.2E-03	6.3E-03	1.4E-03	0.0E+00
CHILD	3.3E-03	6.8E-04	1.1E-02	1.5E-02	5.1E-03	1.2E-02	2.2E-03	0.0E+00
INFNT	3.4E-03	9.9E-04	1.7E-02	2.7E-02	7.9E-03	2.9E-02	3.7E-03	0.0E+00
INHAL PATHWAY, DIST GP= 1, 660. METERS WINDS TOWARD NNE								
ADULT	4.2E-03	3.6E-03	4.6E-04	4.4E-03	3.9E-03	7.7E-03	3.7E-03	0.0E+00
TEEN	4.1E-03	3.6E-03	6.2E-04	4.7E-03	4.0E-03	8.8E-03	3.7E-03	0.0E+00
CHILD	3.4E-03	3.2E-03	8.2E-04	4.2E-03	3.5E-03	9.1E-03	3.3E-03	0.0E+00
INFNT	1.9E-03	1.8E-03	5.1E-04	2.6E-03	2.0E-03	7.2E-03	1.9E-03	0.0E+00
SUBTOTALS (NO PLUME)								
ADULT	6.3E-02	3.8E-02	4.7E-02	7.1E-02	4.9E-02	6.2E-02	4.1E-02	3.4E-02
TEEN	6.1E-02	3.9E-02	5.7E-02	9.0E-02	5.6E-02	6.6E-02	4.5E-02	3.4E-02
CHILD	5.7E-02	4.2E-02	9.3E-02	1.2E-01	6.8E-02	8.5E-02	5.1E-02	3.4E-02
INFNT	3.6E-02	3.2E-02	5.3E-02	6.8E-02	4.2E-02	9.0E-02	3.6E-02	3.4E-02
TOTALS								
ADULT	6.7E-02	4.2E-02	5.0E-02	7.5E-02	5.3E-02	6.6E-02	4.5E-02	4.2E-02
TEEN	6.4E-02	4.3E-02	6.1E-02	9.4E-02	5.9E-02	6.9E-02	4.9E-02	4.2E-02
CHILD	6.1E-02	4.6E-02	9.6E-02	1.3E-01	7.2E-02	8.9E-02	5.5E-02	4.2E-02
INFNT	3.9E-02	3.6E-02	5.6E-02	7.2E-02	4.6E-02	9.4E-02	4.0E-02	4.2E-02

INDIVIDUAL DOSES(MREM) DUE TO GASEOUS EFFLUENT
FOR DATES 96 7 1 1 THRU 96 93024

	T.BODY	GI-TRCT	BONE	LIVER	KIDNEY	THYRD	LUNG	SKIN
PLUME PATHWAY, DIST GP= 1, 943. METERS WINDS TOWARD NE								
ADULT	1.2E-03	1.2E-03	1.2E-03	1.2E-03	1.2E-03	1.2E-03	1.2E-03	2.7E-03
TEEN	1.2E-03	1.2E-03	1.2E-03	1.2E-03	1.2E-03	1.2E-03	1.2E-03	2.7E-03
CHILD	1.2E-03	1.2E-03	1.2E-03	1.2E-03	1.2E-03	1.2E-03	1.2E-03	2.7E-03
INFNT	1.2E-03	1.2E-03	1.2E-03	1.2E-03	1.2E-03	1.2E-03	1.2E-03	2.7E-03
GROUND PATHWAY, DIST GP= 1, 943. METERS WINDS TOWARD NE								
ADULT	1.2E-02	1.2E-02	1.2E-02	1.2E-02	1.2E-02	1.2E-02	1.2E-02	1.4E-02
TEEN	1.2E-02	1.2E-02	1.2E-02	1.2E-02	1.2E-02	1.2E-02	1.2E-02	1.4E-02
CHILD	1.2E-02	1.2E-02	1.2E-02	1.2E-02	1.2E-02	1.2E-02	1.2E-02	1.4E-02
INFNT	1.2E-02	1.2E-02	1.2E-02	1.2E-02	1.2E-02	1.2E-02	1.2E-02	1.4E-02
VEGET PATHWAY, DIST GP= 1, 1052. METERS WINDS TOWARD NE								
ADULT	1.1E-02	1.8E-03	6.3E-03	1.4E-02	5.5E-03	7.7E-03	2.8E-03	0.0E+00
TEEN	9.5E-03	2.0E-03	9.8E-03	2.0E-02	7.7E-03	6.8E-03	4.0E-03	0.0E+00
CHILD	8.3E-03	2.9E-03	2.3E-02	3.2E-02	1.2E-02	1.0E-02	6.1E-03	0.0E+00
INFNT	0.0E+00	0.0E+00	0.0E+00	0.0E+00	0.0E+00	0.0E+00	0.0E+00	0.0E+00
MEAT PATHWAY, DIST GP= 1, 7725. METERS WINDS TOWARD NE								
ADULT	4.5E-05	1.3E-05	2.2E-05	5.5E-05	2.7E-05	3.8E-05	1.7E-05	0.0E+00
TEEN	2.2E-05	7.9E-06	1.8E-05	4.1E-05	1.9E-05	2.6E-05	1.2E-05	0.0E+00
CHILD	1.7E-05	9.3E-06	3.2E-05	5.2E-05	2.3E-05	3.7E-05	1.4E-05	0.0E+00
INFNT	0.0E+00	0.0E+00	0.0E+00	0.0E+00	0.0E+00	0.0E+00	0.0E+00	0.0E+00
COW PATHWAY, DIST GP= 1, 4091. METERS WINDS TOWARD NE								
ADULT	9.7E-04	9.5E-05	6.2E-04	1.3E-03	4.7E-04	2.3E-03	2.0E-04	0.0E+00
TEEN	9.7E-04	1.2E-04	1.1E-03	2.1E-03	7.8E-04	3.7E-03	3.5E-04	0.0E+00
CHILD	8.1E-04	1.7E-04	2.6E-03	3.5E-03	1.2E-03	7.2E-03	5.3E-04	0.0E+00
INFNT	8.3E-04	2.4E-04	4.1E-03	6.6E-03	1.9E-03	1.7E-02	8.9E-04	0.0E+00
GOAT PATHWAY, DIST GP= 1, 4091. METERS WINDS TOWARD NE								
ADULT	2.9E-03	2.1E-04	1.8E-03	3.7E-03	1.3E-03	2.8E-03	5.3E-04	0.0E+00
TEEN	2.8E-03	2.8E-04	3.3E-03	6.3E-03	2.2E-03	4.5E-03	9.5E-04	0.0E+00
CHILD	2.3E-03	3.6E-04	7.7E-03	1.0E-02	3.5E-03	8.7E-03	1.4E-03	0.0E+00
INFNT	2.2E-03	5.2E-04	1.2E-02	1.9E-02	5.5E-03	2.1E-02	2.5E-03	0.0E+00
INHAL PATHWAY, DIST GP= 1, 943. METERS WINDS TOWARD NE								
ADULT	1.4E-03	1.0E-03	2.4E-04	1.5E-03	1.2E-03	3.1E-03	1.1E-03	0.0E+00
TEEN	1.3E-03	1.0E-03	3.4E-04	1.6E-03	1.2E-03	3.6E-03	1.1E-03	0.0E+00
CHILD	1.0E-03	9.0E-04	4.4E-04	1.5E-03	1.1E-03	3.8E-03	9.6E-04	0.0E+00
INFNT	5.6E-04	5.1E-04	2.7E-04	9.1E-04	6.3E-04	3.2E-03	5.6E-04	0.0E+00
SUBTOTALS (NO PLUME)								
ADULT	2.7E-02	1.5E-02	2.1E-02	3.2E-02	2.0E-02	2.8E-02	1.6E-02	1.4E-02
TEEN	2.6E-02	1.5E-02	2.6E-02	4.2E-02	2.4E-02	3.0E-02	1.8E-02	1.4E-02
CHILD	2.4E-02	1.6E-02	4.5E-02	5.9E-02	3.0E-02	4.2E-02	2.1E-02	1.4E-02
INFNT	1.5E-02	1.3E-02	2.8E-02	3.8E-02	2.0E-02	5.3E-02	1.5E-02	1.4E-02
TOTALS								
ADULT	2.9E-02	1.6E-02	2.2E-02	3.3E-02	2.1E-02	2.9E-02	1.7E-02	1.6E-02
TEEN	2.7E-02	1.6E-02	2.7E-02	4.3E-02	2.5E-02	3.1E-02	1.9E-02	1.6E-02
CHILD	2.5E-02	1.7E-02	4.6E-02	6.0E-02	3.1E-02	4.3E-02	2.2E-02	1.6E-02
INFNT	1.6E-02	1.4E-02	2.9E-02	4.0E-02	2.1E-02	5.4E-02	1.7E-02	1.6E-02

INDIVIDUAL DOSES(MREM) DUE TO GASEOUS EFFLUENT
FOR DATES 96 7 1 1 THRU 96 93024

	T.BODY	GI-TRCT	BONE	LIVER	KIDNEY	THYRD	LUNG	SKIN
PLUME PATHWAY, DIST GP= 1, 1747. METERS WINDS TOWARD ENE								
ADULT	2.2E-04	2.2E-04	2.2E-04	2.2E-04	2.2E-04	2.2E-04	2.3E-04	6.6E-04
TEEN	2.2E-04	2.2E-04	2.2E-04	2.2E-04	2.2E-04	2.2E-04	2.3E-04	6.6E-04
CHILD	2.2E-04	2.2E-04	2.2E-04	2.2E-04	2.2E-04	2.2E-04	2.3E-04	6.6E-04
INFNT	2.2E-04	2.2E-04	2.2E-04	2.2E-04	2.2E-04	2.2E-04	2.3E-04	6.6E-04
GROUND PATHWAY, DIST GP= 1, 1747. METERS WINDS TOWARD ENE								
ADULT	5.3E-03	5.3E-03	5.3E-03	5.3E-03	5.3E-03	5.3E-03	5.3E-03	6.2E-03
TEEN	5.3E-03	5.3E-03	5.3E-03	5.3E-03	5.3E-03	5.3E-03	5.3E-03	6.2E-03
CHILD	5.3E-03	5.3E-03	5.3E-03	5.3E-03	5.3E-03	5.3E-03	5.3E-03	6.2E-03
INFNT	5.3E-03	5.3E-03	5.3E-03	5.3E-03	5.3E-03	5.3E-03	5.3E-03	6.2E-03
VEGET PATHWAY, DIST GP= 1, 1852. METERS WINDS TOWARD ENE								
ADULT	4.9E-03	4.4E-04	3.2E-03	6.3E-03	2.3E-03	3.4E-03	9.9E-04	0.0E+00
TEEN	4.2E-03	5.0E-04	4.9E-03	9.5E-03	3.4E-03	2.9E-03	1.5E-03	0.0E+00
CHILD	3.4E-03	6.7E-04	1.1E-02	1.5E-02	5.3E-03	4.4E-03	2.3E-03	0.0E+00
INFNT	0.0E+00	0.0E+00	0.0E+00	0.0E+00	0.0E+00	0.0E+00	0.0E+00	0.0E+00
MEAT PATHWAY, DIST GP= 1, 3862. METERS WINDS TOWARD ENE								
ADULT	1.6E-04	2.0E-05	1.0E-04	2.1E-04	8.1E-05	1.3E-04	3.8E-05	0.0E+00
TEEN	7.5E-05	1.2E-05	8.2E-05	1.6E-04	6.0E-05	9.3E-05	2.9E-05	0.0E+00
CHILD	4.9E-05	1.3E-05	1.5E-04	2.1E-04	7.4E-05	1.4E-04	3.4E-05	0.0E+00
INFNT	0.0E+00	0.0E+00	0.0E+00	0.0E+00	0.0E+00	0.0E+00	0.0E+00	0.0E+00
COW PATHWAY, DIST GP= 1, 4091. METERS WINDS TOWARD ENE								
ADULT	1.2E-03	6.7E-05	7.9E-04	1.6E-03	5.5E-04	2.9E-03	2.0E-04	0.0E+00
TEEN	1.2E-03	8.5E-05	1.4E-03	2.7E-03	9.3E-04	4.6E-03	3.7E-04	0.0E+00
CHILD	9.2E-04	1.0E-04	3.3E-03	4.4E-03	1.5E-03	9.1E-03	5.6E-04	0.0E+00
INFNT	8.9E-04	1.4E-04	5.3E-03	8.3E-03	2.3E-03	2.2E-02	9.7E-04	0.0E+00
GOAT PATHWAY, DIST GP= 1, 4091. METERS WINDS TOWARD ENE								
ADULT	3.5E-03	1.6E-04	2.4E-03	4.6E-03	1.6E-03	3.5E-03	5.7E-04	0.0E+00
TEEN	3.5E-03	2.1E-04	4.2E-03	8.0E-03	2.7E-03	5.6E-03	1.1E-03	0.0E+00
CHILD	2.7E-03	2.3E-04	9.8E-03	1.3E-02	4.3E-03	1.1E-02	1.6E-03	0.0E+00
INFNT	2.5E-03	3.0E-04	1.6E-02	2.5E-02	6.7E-03	2.6E-02	2.8E-03	0.0E+00
INHAL PATHWAY, DIST GP= 1, 1747. METERS WINDS TOWARD ENE								
ADULT	2.7E-04	2.0E-04	4.6E-05	2.9E-04	2.3E-04	5.8E-04	2.1E-04	0.0E+00
TEEN	2.5E-04	2.0E-04	6.3E-05	3.2E-04	2.4E-04	6.8E-04	2.2E-04	0.0E+00
CHILD	2.0E-04	1.8E-04	8.3E-05	2.8E-04	2.2E-04	7.1E-04	1.9E-04	0.0E+00
INFNT	1.1E-04	1.0E-04	5.1E-05	1.8E-04	1.3E-04	5.9E-04	1.1E-04	0.0E+00
SUBTOTALS (NO PLUME)								
ADULT	1.5E-02	6.2E-03	1.2E-02	1.8E-02	1.0E-02	1.6E-02	7.3E-03	6.2E-03
TEEN	1.5E-02	6.3E-03	1.6E-02	2.6E-02	1.3E-02	1.9E-02	8.5E-03	6.2E-03
CHILD	1.3E-02	6.5E-03	3.0E-02	3.9E-02	1.7E-02	3.1E-02	1.0E-02	6.2E-03
INFNT	8.8E-03	5.9E-03	2.6E-02	3.8E-02	1.4E-02	5.4E-02	9.2E-03	6.2E-03
TOTALS								
ADULT	1.6E-02	6.4E-03	1.2E-02	1.9E-02	1.0E-02	1.6E-02	7.6E-03	6.9E-03
TEEN	1.5E-02	6.5E-03	1.6E-02	2.6E-02	1.3E-02	1.9E-02	8.8E-03	6.9E-03
CHILD	1.3E-02	6.7E-03	3.0E-02	3.9E-02	1.7E-02	3.1E-02	1.0E-02	6.9E-03
INFNT	9.0E-03	6.1E-03	2.7E-02	3.9E-02	1.5E-02	5.5E-02	9.4E-03	6.9E-03

INDIVIDUAL DOSES(MREM) DUE TO GASEOUS EFFLUENT
FOR DATES 96 7 1 1 THRU 96 93024

	T.BODY	GI-TRCT	BONE	LIVER	KIDNEY	THYRD	LUNG	SKIN
PLUME PATHWAY, DIST GP= 1, 1716. METERS WINDS TOWARD E								
ADULT	2.5E-04	2.5E-04	2.5E-04	2.5E-04	2.5E-04	2.5E-04	2.6E-04	6.8E-04
TEEN	2.5E-04	2.5E-04	2.5E-04	2.5E-04	2.5E-04	2.5E-04	2.6E-04	6.8E-04
CHILD	2.5E-04	2.5E-04	2.5E-04	2.5E-04	2.5E-04	2.5E-04	2.6E-04	6.8E-04
INFNT	2.5E-04	2.5E-04	2.5E-04	2.5E-04	2.5E-04	2.5E-04	2.6E-04	6.8E-04
GROUND PATHWAY, DIST GP= 1, 1716. METERS WINDS TOWARD E								
ADULT	2.6E-03	2.6E-03	2.6E-03	2.6E-03	2.6E-03	2.6E-03	2.6E-03	3.0E-03
TEEN	2.6E-03	2.6E-03	2.6E-03	2.6E-03	2.6E-03	2.6E-03	2.6E-03	3.0E-03
CHILD	2.6E-03	2.6E-03	2.6E-03	2.6E-03	2.6E-03	2.6E-03	2.6E-03	3.0E-03
INFNT	2.6E-03	2.6E-03	2.6E-03	2.6E-03	2.6E-03	2.6E-03	2.6E-03	3.0E-03
VEGET PATHWAY, DIST GP= 1, 1705. METERS WINDS TOWARD E								
ADULT	2.9E-03	5.0E-04	1.7E-03	3.7E-03	1.5E-03	2.1E-03	8.0E-04	0.0E+00
TEEN	2.6E-03	5.7E-04	2.7E-03	5.5E-03	2.1E-03	1.9E-03	1.1E-03	0.0E+00
CHILD	2.3E-03	8.3E-04	6.2E-03	8.8E-03	3.3E-03	2.9E-03	1.7E-03	0.0E+00
INFNT	0.0E+00	0.0E+00	0.0E+00	0.0E+00	0.0E+00	0.0E+00	0.0E+00	0.0E+00
MEAT PATHWAY, DIST GP= 1, 6810. METERS WINDS TOWARD E								
ADULT	3.3E-05	9.4E-06	1.7E-05	4.1E-05	1.9E-05	2.8E-05	1.2E-05	0.0E+00
TEEN	1.6E-05	5.6E-06	1.4E-05	3.1E-05	1.4E-05	1.9E-05	8.4E-06	0.0E+00
CHILD	1.2E-05	6.5E-06	2.5E-05	3.9E-05	1.7E-05	2.7E-05	1.0E-05	0.0E+00
INFNT	0.0E+00	0.0E+00	0.0E+00	0.0E+00	0.0E+00	0.0E+00	0.0E+00	0.0E+00
COW PATHWAY, DIST GP= 1, 4091. METERS WINDS TOWARD E								
ADULT	5.9E-04	5.7E-05	3.7E-04	7.6E-04	2.9E-04	1.4E-03	1.2E-04	0.0E+00
TEEN	5.9E-04	7.3E-05	6.6E-04	1.3E-03	4.7E-04	2.2E-03	2.1E-04	0.0E+00
CHILD	4.9E-04	1.0E-04	1.6E-03	2.1E-03	7.6E-04	4.4E-03	3.2E-04	0.0E+00
INFNT	5.0E-04	1.4E-04	2.5E-03	4.0E-03	1.2E-03	1.1E-02	5.4E-04	0.0E+00
GOAT PATHWAY, DIST GP= 1, 4091. METERS WINDS TOWARD E								
ADULT	1.7E-03	1.3E-04	1.1E-03	2.2E-03	8.0E-04	1.7E-03	3.2E-04	0.0E+00
TEEN	1.7E-03	1.6E-04	2.0E-03	3.8E-03	1.3E-03	2.7E-03	5.8E-04	0.0E+00
CHILD	1.4E-03	2.1E-04	4.7E-03	6.3E-03	2.1E-03	5.4E-03	8.7E-04	0.0E+00
INFNT	1.3E-03	3.0E-04	7.5E-03	1.2E-02	3.3E-03	1.3E-02	1.5E-03	0.0E+00
INHAL PATHWAY, DIST GP= 1, 1716. METERS WINDS TOWARD E								
ADULT	3.1E-04	2.4E-04	4.4E-05	3.2E-04	2.7E-04	6.2E-04	2.5E-04	0.0E+00
TEEN	2.9E-04	2.4E-04	6.0E-05	3.5E-04	2.8E-04	7.2E-04	2.6E-04	0.0E+00
CHILD	2.4E-04	2.2E-04	7.9E-05	3.2E-04	2.5E-04	7.6E-04	2.3E-04	0.0E+00
INFNT	1.3E-04	1.2E-04	4.9E-05	2.0E-04	1.5E-04	6.2E-04	1.3E-04	0.0E+00
SUBTOTALS (NO PLUME)								
ADULT	8.2E-03	3.5E-03	5.9E-03	9.7E-03	5.5E-03	8.5E-03	4.1E-03	3.0E-03
TEEN	7.8E-03	3.7E-03	8.0E-03	1.4E-02	6.8E-03	1.0E-02	4.8E-03	3.0E-03
CHILD	7.0E-03	4.0E-03	1.5E-02	2.0E-02	9.1E-03	1.6E-02	5.7E-03	3.0E-03
INFNT	4.6E-03	3.2E-03	1.3E-02	1.9E-02	7.2E-03	2.7E-02	4.8E-03	3.0E-03
TOTALS								
ADULT	8.4E-03	3.8E-03	6.1E-03	9.9E-03	5.8E-03	8.8E-03	4.4E-03	3.7E-03
TEEN	8.1E-03	3.9E-03	8.2E-03	1.4E-02	7.1E-03	1.0E-02	5.0E-03	3.7E-03
CHILD	7.2E-03	4.2E-03	1.5E-02	2.0E-02	9.3E-03	1.6E-02	6.0E-03	3.7E-03
INFNT	4.8E-03	3.4E-03	1.3E-02	1.9E-02	7.5E-03	2.7E-02	5.0E-03	3.7E-03

INDIVIDUAL DOSES(MREM) DUE TO GASEOUS EFFLUENT
FOR DATES 96 7 1 1 THRU 96 93024

	T.BODY	GI-TRCT	BONE	LIVER	KIDNEY	THYRD	LUNG	SKIN
PLUME PATHWAY, DIST GP= 1, 1643. METERS WINDS TOWARD ESE								
ADULT	1.7E-04	1.7E-04	1.7E-04	1.7E-04	1.7E-04	1.7E-04	1.7E-04	3.3E-04
TEEN	1.7E-04	1.7E-04	1.7E-04	1.7E-04	1.7E-04	1.7E-04	1.7E-04	3.3E-04
CHILD	1.7E-04	1.7E-04	1.7E-04	1.7E-04	1.7E-04	1.7E-04	1.7E-04	3.3E-04
INFNT	1.7E-04	1.7E-04	1.7E-04	1.7E-04	1.7E-04	1.7E-04	1.7E-04	3.3E-04
GROUND PATHWAY, DIST GP= 1, 1643. METERS WINDS TOWARD ESE								
ADULT	1.8E-03	1.8E-03	1.8E-03	1.8E-03	1.8E-03	1.8E-03	1.8E-03	2.1E-03
TEEN	1.8E-03	1.8E-03	1.8E-03	1.8E-03	1.8E-03	1.8E-03	1.8E-03	2.1E-03
CHILD	1.8E-03	1.8E-03	1.8E-03	1.8E-03	1.8E-03	1.8E-03	1.8E-03	2.1E-03
INFNT	1.8E-03	1.8E-03	1.8E-03	1.8E-03	1.8E-03	1.8E-03	1.8E-03	2.1E-03
VEGET PATHWAY, DIST GP= 1, 1628. METERS WINDS TOWARD ESE								
ADULT	2.2E-03	4.7E-04	1.2E-03	2.7E-03	1.2E-03	1.6E-03	6.8E-04	0.0E+00
TEEN	2.0E-03	5.4E-04	1.9E-03	4.0E-03	1.6E-03	1.5E-03	9.2E-04	0.0E+00
CHILD	1.8E-03	7.9E-04	4.3E-03	6.4E-03	2.5E-03	2.3E-03	1.4E-03	0.0E+00
INFNT	0.0E+00	0.0E+00	0.0E+00	0.0E+00	0.0E+00	0.0E+00	0.0E+00	0.0E+00
MEAT PATHWAY, DIST GP= 1, 2434. METERS WINDS TOWARD ESE								
ADULT	1.3E-04	3.5E-05	6.4E-05	1.6E-04	7.3E-05	1.1E-04	4.6E-05	0.0E+00
TEEN	6.1E-05	2.1E-05	5.2E-05	1.2E-04	5.1E-05	7.3E-05	3.2E-05	0.0E+00
CHILD	4.7E-05	2.4E-05	9.3E-05	1.5E-04	6.3E-05	1.0E-04	3.8E-05	0.0E+00
INFNT	0.0E+00	0.0E+00	0.0E+00	0.0E+00	0.0E+00	0.0E+00	0.0E+00	0.0E+00
COW PATHWAY, DIST GP= 1, 4091. METERS WINDS TOWARD ESE								
ADULT	3.9E-04	4.8E-05	2.4E-04	5.1E-04	2.0E-04	9.4E-04	8.9E-05	0.0E+00
TEEN	4.0E-04	6.2E-05	4.3E-04	8.6E-04	3.2E-04	1.5E-03	1.5E-04	0.0E+00
CHILD	3.4E-04	8.8E-05	1.0E-03	1.4E-03	5.1E-04	2.9E-03	2.3E-04	0.0E+00
INFNT	3.6E-04	1.3E-04	1.6E-03	2.6E-03	8.0E-04	7.0E-03	3.8E-04	0.0E+00
GOAT PATHWAY, DIST GP= 1, 4091. METERS WINDS TOWARD ESE								
ADULT	1.1E-03	1.1E-04	7.2E-04	1.5E-03	5.4E-04	1.2E-03	2.3E-04	0.0E+00
TEEN	1.1E-03	1.4E-04	1.3E-03	2.5E-03	9.0E-04	1.8E-03	4.0E-04	0.0E+00
CHILD	9.3E-04	1.9E-04	3.0E-03	4.2E-03	1.4E-03	3.6E-03	6.1E-04	0.0E+00
INFNT	9.5E-04	2.7E-04	4.9E-03	7.7E-03	2.2E-03	8.5E-03	1.0E-03	0.0E+00
INHAL PATHWAY, DIST GP= 1, 1643. METERS WINDS TOWARD ESE								
ADULT	2.5E-04	2.3E-04	1.1E-05	2.5E-04	2.4E-04	3.5E-04	2.4E-04	0.0E+00
TEEN	2.5E-04	2.4E-04	1.6E-05	2.6E-04	2.5E-04	3.8E-04	2.4E-04	0.0E+00
CHILD	2.1E-04	2.1E-04	2.0E-05	2.3E-04	2.2E-04	3.7E-04	2.1E-04	0.0E+00
INFNT	1.2E-04	1.2E-04	1.3E-05	1.4E-04	1.3E-04	2.7E-04	1.2E-04	0.0E+00
SUBTOTALS (NO PLUME)								
ADULT	5.9E-03	2.7E-03	4.1E-03	6.9E-03	4.1E-03	6.0E-03	3.1E-03	2.1E-03
TEEN	5.6E-03	2.8E-03	5.5E-03	9.5E-03	5.0E-03	7.0E-03	3.6E-03	2.1E-03
CHILD	5.2E-03	3.1E-03	1.0E-02	1.4E-02	6.6E-03	1.1E-02	4.3E-03	2.1E-03
INFNT	3.2E-03	2.3E-03	8.3E-03	1.2E-02	5.0E-03	1.8E-02	3.4E-03	2.1E-03
TOTALS								
ADULT	6.1E-03	2.9E-03	4.2E-03	7.1E-03	4.2E-03	6.2E-03	3.3E-03	2.4E-03
TEEN	5.8E-03	3.0E-03	5.6E-03	9.7E-03	5.1E-03	7.2E-03	3.7E-03	2.4E-03
CHILD	5.3E-03	3.3E-03	1.0E-02	1.4E-02	6.7E-03	1.1E-02	4.5E-03	2.4E-03
INFNT	3.4E-03	2.5E-03	8.5E-03	1.2E-02	5.1E-03	1.8E-02	3.5E-03	2.4E-03

INDIVIDUAL DOSES(MREM) DUE TO GASEOUS EFFLUENT
FOR DATES 96 7 1 1 THRU 96 93024

	T.BODY	GI-TRCT	BONE	LIVER	KIDNEY	THYRD	LUNG	SKIN
PLUME PATHWAY, DIST GP= 1, 1136. METERS WINDS TOWARD SE								
ADULT	6.8E-04	6.8E-04	6.8E-04	6.8E-04	6.8E-04	6.8E-04	7.0E-04	1.9E-03
TEEN	6.8E-04	6.8E-04	6.8E-04	6.8E-04	6.8E-04	6.8E-04	7.0E-04	1.9E-03
CHILD	6.8E-04	6.8E-04	6.8E-04	6.8E-04	6.8E-04	6.8E-04	7.0E-04	1.9E-03
INFNT	6.8E-04	6.8E-04	6.8E-04	6.8E-04	6.8E-04	6.8E-04	7.0E-04	1.9E-03
GROUND PATHWAY, DIST GP= 1, 1136. METERS WINDS TOWARD SE								
ADULT	6.4E-03	6.4E-03	6.4E-03	6.4E-03	6.4E-03	6.4E-03	6.4E-03	7.4E-03
TEEN	6.4E-03	6.4E-03	6.4E-03	6.4E-03	6.4E-03	6.4E-03	6.4E-03	7.4E-03
CHILD	6.4E-03	6.4E-03	6.4E-03	6.4E-03	6.4E-03	6.4E-03	6.4E-03	7.4E-03
INFNT	6.4E-03	6.4E-03	6.4E-03	6.4E-03	6.4E-03	6.4E-03	6.4E-03	7.4E-03
VEGET PATHWAY, DIST GP= 1, 914. METERS WINDS TOWARD SE								
ADULT	1.1E-02	2.4E-03	6.0E-03	1.4E-02	6.0E-03	1.5E-02	3.4E-03	0.0E+00
TEEN	9.9E-03	2.8E-03	9.3E-03	2.0E-02	8.2E-03	1.3E-02	4.7E-03	0.0E+00
CHILD	9.2E-03	4.1E-03	2.2E-02	3.2E-02	1.3E-02	2.0E-02	7.1E-03	0.0E+00
INFNT	0.0E+00	0.0E+00	0.0E+00	0.0E+00	0.0E+00	0.0E+00	0.0E+00	0.0E+00
MEAT PATHWAY, DIST GP= 1, 4354. METERS WINDS TOWARD SE								
ADULT	9.9E-05	3.1E-05	4.8E-05	1.2E-04	6.0E-05	1.5E-04	4.0E-05	0.0E+00
TEEN	4.9E-05	1.9E-05	3.9E-05	9.0E-05	4.2E-05	1.0E-04	2.7E-05	0.0E+00
CHILD	3.9E-05	2.2E-05	7.0E-05	1.1E-04	5.1E-05	1.5E-04	3.2E-05	0.0E+00
INFNT	0.0E+00	0.0E+00	0.0E+00	0.0E+00	0.0E+00	0.0E+00	0.0E+00	0.0E+00
COW PATHWAY, DIST GP= 1, 4091. METERS WINDS TOWARD SE								
ADULT	7.6E-04	9.6E-05	4.7E-04	9.7E-04	3.9E-04	3.8E-03	1.7E-04	0.0E+00
TEEN	7.6E-04	1.2E-04	8.3E-04	1.6E-03	6.3E-04	6.0E-03	2.9E-04	0.0E+00
CHILD	6.6E-04	1.7E-04	1.9E-03	2.7E-03	1.0E-03	1.2E-02	4.4E-04	0.0E+00
INFNT	7.1E-04	2.5E-04	3.1E-03	5.1E-03	1.6E-03	2.9E-02	7.4E-04	0.0E+00
GOAT PATHWAY, DIST GP= 1, 4091. METERS WINDS TOWARD SE								
ADULT	2.2E-03	2.1E-04	1.4E-03	2.8E-03	1.1E-03	4.7E-03	4.4E-04	0.0E+00
TEEN	2.2E-03	2.7E-04	2.5E-03	4.8E-03	1.7E-03	7.3E-03	7.7E-04	0.0E+00
CHILD	1.8E-03	3.7E-04	5.8E-03	7.9E-03	2.8E-03	1.4E-02	1.2E-03	0.0E+00
INFNT	1.8E-03	5.3E-04	9.3E-03	1.5E-02	4.3E-03	3.5E-02	2.0E-03	0.0E+00
INHAL PATHWAY, DIST GP= 1, 1136. METERS WINDS TOWARD SE								
ADULT	9.9E-04	8.7E-04	9.0E-05	1.0E-03	9.2E-04	1.8E-03	8.8E-04	0.0E+00
TEEN	9.7E-04	8.7E-04	1.2E-04	1.1E-03	9.5E-04	2.1E-03	9.0E-04	0.0E+00
CHILD	8.1E-04	7.7E-04	1.6E-04	9.7E-04	8.4E-04	2.1E-03	7.9E-04	0.0E+00
INFNT	4.6E-04	4.4E-04	1.0E-04	5.9E-04	4.9E-04	1.7E-03	4.6E-04	0.0E+00
SUBTOTALS (NO PLUME)								
ADULT	2.1E-02	1.0E-02	1.4E-02	2.5E-02	1.5E-02	3.2E-02	1.1E-02	7.4E-03
TEEN	2.0E-02	1.0E-02	1.9E-02	3.4E-02	1.8E-02	3.5E-02	1.3E-02	7.4E-03
CHILD	1.9E-02	1.2E-02	3.6E-02	5.0E-02	2.4E-02	5.5E-02	1.6E-02	7.4E-03
INFNT	9.4E-03	7.6E-03	1.9E-02	2.7E-02	1.3E-02	7.2E-02	9.6E-03	7.4E-03
TOTALS								
ADULT	2.2E-02	1.1E-02	1.5E-02	2.6E-02	1.5E-02	3.3E-02	1.2E-02	9.3E-03
TEEN	2.1E-02	1.1E-02	2.0E-02	3.5E-02	1.9E-02	3.6E-02	1.4E-02	9.3E-03
CHILD	2.0E-02	1.2E-02	3.7E-02	5.1E-02	2.5E-02	5.6E-02	1.7E-02	9.3E-03
INFNT	1.0E-02	8.3E-03	2.0E-02	2.7E-02	1.3E-02	7.2E-02	1.0E-02	9.3E-03

INDIVIDUAL DOSES(MREM) DUE TO GASEOUS EFFLUENT
FOR DATES 96 7 1 1 THRU 96 93024

	T.BODY	GI-TRCT	BONE	LIVER	KIDNEY	THYRD	LUNG	SKIN
PLUME PATHWAY, DIST GP= 1, 1507. METERS WINDS TOWARD SSE								
ADULT	6.3E-04	6.3E-04	6.3E-04	6.3E-04	6.3E-04	6.3E-04	6.5E-04	1.9E-03
TEEN	6.3E-04	6.3E-04	6.3E-04	6.3E-04	6.3E-04	6.3E-04	6.5E-04	1.9E-03
CHILD	6.3E-04	6.3E-04	6.3E-04	6.3E-04	6.3E-04	6.3E-04	6.5E-04	1.9E-03
INFNT	6.3E-04	6.3E-04	6.3E-04	6.3E-04	6.3E-04	6.3E-04	6.5E-04	1.9E-03
GROUND PATHWAY, DIST GP= 1, 1507. METERS WINDS TOWARD SSE								
ADULT	7.9E-03	7.9E-03	7.9E-03	7.9E-03	7.9E-03	7.9E-03	7.9E-03	9.3E-03
TEEN	7.9E-03	7.9E-03	7.9E-03	7.9E-03	7.9E-03	7.9E-03	7.9E-03	9.3E-03
CHILD	7.9E-03	7.9E-03	7.9E-03	7.9E-03	7.9E-03	7.9E-03	7.9E-03	9.3E-03
INFNT	7.9E-03	7.9E-03	7.9E-03	7.9E-03	7.9E-03	7.9E-03	7.9E-03	9.3E-03
VEGET PATHWAY, DIST GP= 1, 1093. METERS WINDS TOWARD SSE								
ADULT	1.5E-02	2.0E-03	8.9E-03	1.9E-02	7.3E-03	1.0E-02	3.5E-03	0.0E+00
TEEN	1.3E-02	2.3E-03	1.4E-02	2.8E-02	1.0E-02	9.0E-03	5.2E-03	0.0E+00
CHILD	1.1E-02	3.3E-03	3.2E-02	4.4E-02	1.6E-02	1.4E-02	7.7E-03	0.0E+00
INFNT	0.0E+00	0.0E+00	0.0E+00	0.0E+00	0.0E+00	0.0E+00	0.0E+00	0.0E+00
MEAT PATHWAY, DIST GP= 1, 1093. METERS WINDS TOWARD SSE								
ADULT	1.6E-03	2.8E-04	9.2E-04	2.0E-03	8.3E-04	1.3E-03	4.4E-04	0.0E+00
TEEN	7.4E-04	1.7E-04	7.4E-04	1.5E-03	6.0E-04	8.9E-04	3.2E-04	0.0E+00
CHILD	5.1E-04	1.9E-04	1.3E-03	1.9E-03	7.4E-04	1.3E-03	3.8E-04	0.0E+00
INFNT	0.0E+00	0.0E+00	0.0E+00	0.0E+00	0.0E+00	0.0E+00	0.0E+00	0.0E+00
COW PATHWAY, DIST GP= 1, 4091. METERS WINDS TOWARD SSE								
ADULT	1.4E-03	1.2E-04	9.2E-04	1.9E-03	6.8E-04	3.4E-03	2.7E-04	0.0E+00
TEEN	1.4E-03	1.5E-04	1.6E-03	3.2E-03	1.1E-03	5.4E-03	4.9E-04	0.0E+00
CHILD	1.2E-03	2.0E-04	3.8E-03	5.2E-03	1.8E-03	1.1E-02	7.4E-04	0.0E+00
INFNT	1.2E-03	2.8E-04	6.2E-03	9.8E-03	2.8E-03	2.6E-02	1.3E-03	0.0E+00
GOAT PATHWAY, DIST GP= 1, 4091. METERS WINDS TOWARD SSE								
ADULT	4.2E-03	2.7E-04	2.8E-03	5.5E-03	1.9E-03	4.2E-03	7.4E-04	0.0E+00
TEEN	4.1E-03	3.4E-04	4.9E-03	9.4E-03	3.2E-03	6.6E-03	1.4E-03	0.0E+00
CHILD	3.3E-03	4.3E-04	1.1E-02	1.6E-02	5.2E-03	1.3E-02	2.0E-03	0.0E+00
INFNT	3.2E-03	6.0E-04	1.8E-02	2.9E-02	8.0E-03	3.1E-02	3.5E-03	0.0E+00
INHAL PATHWAY, DIST GP= 1, 1507. METERS WINDS TOWARD SSE								
ADULT	7.7E-04	5.8E-04	1.3E-04	8.2E-04	6.6E-04	1.7E-03	6.0E-04	0.0E+00
TEEN	7.2E-04	5.8E-04	1.8E-04	9.0E-04	7.0E-04	1.9E-03	6.2E-04	0.0E+00
CHILD	5.7E-04	5.1E-04	2.4E-04	8.1E-04	6.2E-04	2.0E-03	5.5E-04	0.0E+00
INFNT	3.2E-04	2.9E-04	1.4E-04	5.1E-04	3.6E-04	1.7E-03	3.2E-04	0.0E+00
SUBTOTALS (NO PLUME)								
ADULT	3.1E-02	1.1E-02	2.2E-02	3.7E-02	1.9E-02	2.9E-02	1.4E-02	9.3E-03
TEEN	2.8E-02	1.1E-02	2.9E-02	5.1E-02	2.4E-02	3.2E-02	1.6E-02	9.3E-03
CHILD	2.4E-02	1.3E-02	5.7E-02	7.6E-02	3.2E-02	4.9E-02	1.9E-02	9.3E-03
INFNT	1.3E-02	9.1E-03	3.3E-02	4.7E-02	1.9E-02	6.6E-02	1.3E-02	9.3E-03
TOTALS								
ADULT	3.1E-02	1.2E-02	2.2E-02	3.7E-02	2.0E-02	2.9E-02	1.4E-02	1.1E-02
TEEN	2.8E-02	1.2E-02	3.0E-02	5.1E-02	2.5E-02	3.2E-02	1.7E-02	1.1E-02
CHILD	2.5E-02	1.3E-02	5.7E-02	7.7E-02	3.3E-02	4.9E-02	2.0E-02	1.1E-02
INFNT	1.3E-02	9.8E-03	3.3E-02	4.8E-02	2.0E-02	6.7E-02	1.4E-02	1.1E-02

INDIVIDUAL DOSES(MREM) DUE TO GASEOUS EFFLUENT
FOR DATES 96 7 1 1 THRU 96 93024

	T.BODY	GI-TRCT	BONE	LIVER	KIDNEY	THYRD	LUNG	SKIN
PLUME PATHWAY, DIST GP= 1, 1026. METERS WINDS TOWARD S								
ADULT	1.1E-03	1.1E-03	1.1E-03	1.1E-03	1.1E-03	1.1E-03	1.2E-03	2.6E-03
TEEN	1.1E-03	1.1E-03	1.1E-03	1.1E-03	1.1E-03	1.1E-03	1.2E-03	2.6E-03
CHILD	1.1E-03	1.1E-03	1.1E-03	1.1E-03	1.1E-03	1.1E-03	1.2E-03	2.6E-03
INFNT	1.1E-03	1.1E-03	1.1E-03	1.1E-03	1.1E-03	1.1E-03	1.2E-03	2.6E-03
GROUND PATHWAY, DIST GP= 1, 1026. METERS WINDS TOWARD S								
ADULT	1.1E-02	1.1E-02	1.1E-02	1.1E-02	1.1E-02	1.1E-02	1.1E-02	1.3E-02
TEEN	1.1E-02	1.1E-02	1.1E-02	1.1E-02	1.1E-02	1.1E-02	1.1E-02	1.3E-02
CHILD	1.1E-02	1.1E-02	1.1E-02	1.1E-02	1.1E-02	1.1E-02	1.1E-02	1.3E-02
INFNT	1.1E-02	1.1E-02	1.1E-02	1.1E-02	1.1E-02	1.1E-02	1.1E-02	1.3E-02
VEGET PATHWAY, DIST GP= 1, 863. METERS WINDS TOWARD S								
ADULT	1.6E-02	2.9E-03	9.5E-03	2.0E-02	8.5E-03	1.2E-02	4.5E-03	0.0E+00
TEEN	1.4E-02	3.3E-03	1.5E-02	3.0E-02	1.2E-02	1.1E-02	6.3E-03	0.0E+00
CHILD	1.3E-02	4.8E-03	3.4E-02	4.9E-02	1.8E-02	1.6E-02	9.5E-03	0.0E+00
INFNT	0.0E+00	0.0E+00	0.0E+00	0.0E+00	0.0E+00	0.0E+00	0.0E+00	0.0E+00
MEAT PATHWAY, DIST GP= 1, 6115. METERS WINDS TOWARD S								
ADULT	7.3E-05	2.1E-05	3.6E-05	8.9E-05	4.3E-05	6.1E-05	2.7E-05	0.0E+00
TEEN	3.5E-05	1.3E-05	2.9E-05	6.7E-05	3.0E-05	4.2E-05	1.9E-05	0.0E+00
CHILD	2.8E-05	1.5E-05	5.3E-05	8.3E-05	3.6E-05	5.9E-05	2.2E-05	0.0E+00
INFNT	0.0E+00	0.0E+00	0.0E+00	0.0E+00	0.0E+00	0.0E+00	0.0E+00	0.0E+00
COW PATHWAY, DIST GP= 1, 4091. METERS WINDS TOWARD S								
ADULT	1.1E-03	1.1E-04	6.6E-04	1.4E-03	5.1E-04	2.5E-03	2.2E-04	0.0E+00
TEEN	1.1E-03	1.4E-04	1.2E-03	2.3E-03	8.5E-04	4.0E-03	3.8E-04	0.0E+00
CHILD	8.8E-04	2.0E-04	2.8E-03	3.8E-03	1.4E-03	7.8E-03	5.8E-04	0.0E+00
INFNT	9.1E-04	2.9E-04	4.4E-03	7.1E-03	2.1E-03	1.9E-02	9.8E-04	0.0E+00
GOAT PATHWAY, DIST GP= 1, 4091. METERS WINDS TOWARD S								
ADULT	3.1E-03	2.5E-04	2.0E-03	4.0E-03	1.4E-03	3.1E-03	5.9E-04	0.0E+00
TEEN	3.0E-03	3.2E-04	3.5E-03	6.8E-03	2.4E-03	4.9E-03	1 0E-03	0.0E+00
CHILD	2.5E-03	4.2E-04	8.2E-03	1.1E-02	3.8E-03	9.5E-03	1.6E-03	0.0E+00
INFNT	2.4E-03	6.0E-04	1.3E-02	2.1E-02	5.9E-03	2.3E-02	2.7E-03	0.0E+00
INHAL PATHWAY, DIST GP= 1, 1026. METERS WINDS TOWARD S								
ADULT	1.4E-03	1.1E-03	2.2E-04	1.5E-03	1.2E-03	2.9E-03	1.1E-03	0.0E+00
TEEN	1.3E-03	1.1E-03	3.0E-04	1.6E-03	1.3E-03	3.4E-03	1.2E-03	0.0E+00
CHILD	1.1E-03	9.7E-04	4.0E-04	1.5E-03	1.1E-03	3.6E-03	1.0E-03	0.0E+00
INFNT	5.9E-04	5.5E-04	2.4E-04	9.1E-04	6.6E-04	2.9E-03	5.9E-04	0.0E+00
SUBTOTALS (NO PLUME)								
ADULT	3.3E-02	1.5E-02	2.3E-02	3.8E-02	2.3E-02	3.1E-02	1.7E-02	1.3E-02
TEEN	3.1E-02	1.6E-02	3.0E-02	5.2E-02	2.7E-02	3.4E-02	2.0E-02	1.3E-02
CHILD	2.8E-02	1.7E-02	5.6E-02	7.6E-02	3.6E-02	4.8E-02	2.4E-02	1.3E-02
INFNT	1.5E-02	1.2E-02	2.9E-02	4.0E-02	1.9E-02	5.5E-02	1.5E-02	1.3E-02
TOTALS								
ADULT	3.4E-02	1.6E-02	2.4E-02	3.9E-02	2.4E-02	3.2E-02	1.8E-02	1.5E-02
TEEN	3.2E-02	1.7E-02	3.2E-02	5.3E-02	2.8E-02	3.5E-02	2.1E-02	1.5E-02
CHILD	2.9E-02	1.8E-02	5.7E-02	7.7E-02	3.7E-02	4.9E-02	2.5E-02	1.5E-02
INFNT	1.6E-02	1.3E-02	3.0E-02	4.1E 02	2.1E-02	5.7E-02	1.6E-02	1.5E-02

INDIVIDUAL DOSES(MREM) DUE TO GASEOUS EFFLUENT
FOR DATES 96 7 1 1 THRU 96 93024

	T.BODY	GI-TRCT	BONE	LIVER	KIDNEY	THYRD	LUNG	SKIN
PLUME PATHWAY, DIST GP= 1, 942. METERS WINDS TOWARD SSW								
ADULT	1.2E-03	1.2E-03	1.2E-03	1.2E-03	1.2E-03	1.2E-03	1.2E-03	2.8E-03
TEEN	1.2E-03	1.2E-03	1.2E-03	1.2E-03	1.2E-03	1.2E-03	1.2E-03	2.8E-03
CHILD	1.2E-03	1.2E-03	1.2E-03	1.2E-03	1.2E-03	1.2E-03	1.2E-03	2.8E-03
INFNT	1.2E-03	1.2E-03	1.2E-03	1.2E-03	1.2E-03	1.2E-03	1.2E-03	2.8E-03
GROUND PATHWAY, DIST GP= 1, 942. METERS WINDS TOWARD SSW								
ADULT	5.0E-03	5.0E-03	5.0E-03	5.0E-03	5.0E-03	5.0E-03	5.0E-03	5.8E-03
TEEN	5.0E-03	5.0E-03	5.0E-03	5.0E-03	5.0E-03	5.0E-03	5.0E-03	5.8E-03
CHILD	5.0E-03	5.0E-03	5.0E-03	5.0E-03	5.0E-03	5.0E-03	5.0E-03	5.8E-03
INFNT	5.0E-03	5.0E-03	5.0E-03	5.0E-03	5.0E-03	5.0E-03	5.0E-03	5.8E-03
VEGET PATHWAY, DIST GP= 1, 770. METERS WINDS TOWARD SSW								
ADULT	8.9E-03	2.5E-03	4.6E-03	1.1E-02	5.2E-03	6.7E-03	3.3E-03	0.0E+00
TEEN	8.3E-03	2.9E-03	7.1E-03	1.6E-02	7.0E-03	6.3E-03	4.3E-03	0.0E+00
CHILD	8.2E-03	4.3E-03	1.6E-02	2.5E-02	1.1E-02	9.6E-03	6.6E-03	0.0E+00
INFNT	0.0E+00	0.0E+00	0.0E+00	0.0E+00	0.0E+00	0.0E+00	0.0E+00	0.0E+00
MEAT PATHWAY, DIST GP= 1, 8045. METERS WINDS TOWARD SSW								
ADULT	2.4E-05	1.2E-05	8.8E-06	2.8E-05	1.7E-05	2.1E-05	1.3E-05	0.0E+00
TEEN	1.3E-05	7.0E-06	7.2E-06	2.0E-05	1.1E-05	1.4E-05	8.5E-06	0.0E+00
CHILD	1.2E-05	8.4E-06	1.3E-05	2.5E-05	1.4E-05	1.9E-05	1.0E-05	0.0E+00
INFNT	0.0E+00	0.0E+00	0.0E+00	0.0E+00	0.0E+00	0.0E+00	0.0E+00	0.0E+00
COW PATHWAY, DIST GP= 1, 4091. METERS WINDS TOWARD SSW								
ADULT	4.6E-04	8.0E-05	2.6E-04	5.8E-04	2.4E-04	1.0E-03	1.2E-04	0.0E+00
TEEN	4.7E-04	1.0E-04	4.7E-04	9.7E-04	3.8E-04	1.6E-03	2.0E-04	0.0E+00
CHILD	4.2E-04	1.5E-04	1.1E-03	1.6E-03	6.1E-04	3.1E-03	3.1E-04	0.0E+00
INFNT	4.8E-04	2.3E-04	1.8E-03	2.9E-03	9.5E-04	7.4E-03	5.0E-04	0.0E+00
GOAT PATHWAY, DIST GP= 1, 4091. METERS WINDS TOWARD SSW								
ADULT	1.3E-03	1.7E-04	7.9E-04	1.7E-03	6.5E-04	1.3E-03	3.1E-04	0.0E+00
TEEN	1.3E-03	[illegible].2E-04	1.4E-03	2.8E-03	1.1E-03	2.0E-03	5.1E-04	0.0E+00
CHILD	1.1E-03	3.2E-04	3.3E-03	4.6E-03	1.7E-03	3.9E-03	7.8E-04	0.0E+00
INFNT	1.2E-03	4.7E-04	5.3E-03	8.6E-03	2.6E-03	9.1E-03	1.3E-03	0.0E+00
INHAL PATHWAY, DIST GP= 1, 942. METERS WINDS TOWARD SSW								
ADULT	1.4E-03	9.8E-04	3.0E-04	1.5E-03	1.2E-03	3.4E-03	1.0E-03	0.0E+00
TEEN	1.3E-03	9.8E-04	4.1E-04	1.7E-03	1.2E-03	4.0E-03	1.1E-03	0.0E+00
CHILD	1.0E-03	8.6E-04	5.5E-04	1.5E-03	1.1E-03	4.3E-03	9.4E-04	0.0E+00
INFNT	5.5E-04	5.0E-04	3.3E-04	9.9E-04	6.4E-04	3.6E-03	5.5E-04	0.0E+00
SUBTOTALS (NO PLUME)								
ADULT	1.7E-02	8.7E-03	1.1E-02	2.0E-02	1.2E-02	1.7E-02	9.7E-03	5.8E-03
TEEN	1.6E-02	9.1E-03	1.4E-02	2.6E-02	1.5E-02	1.9E-02	1.1E-02	5.8E-03
CHILD	1.6E-02	1.1E-02	2.6E-02	3.8E-02	1.9E-02	2.6E-02	1.4E-02	5.8E-03
INFNT	7.2E-03	6.2E-03	1.2E-02	1.7E-02	9.1E-03	2.5E-02	7.3E-03	5.8E-03
TOTALS								
ADULT	1.8E-02	9.9E-03	1.2E-02	2.1E-02	1.3E-02	1.9E-02	1.1E-02	8.6E-03
TEEN	1.8E-02	1.0E-02	1.6E-02	2.8E-02	1.6E-02	2.0E-02	1.2E-02	8.6E-03
CHILD	1.7E-02	1.2E-02	2.7E-02	3.9E-02	2.0E-02	2.7E-02	1.5E-02	8.6E-03
INFNT	8.4E-03	7.3E-03	1.4E-02	1.9E-02	1.0E-02	2.6E-02	8.6E-03	8.6E-03

SUMMARY OF MAXIMUM INDIVIDUAL DOSES

4th Quarter 1996

EFFLUENT	APPLICABLE ORGAN	ESTIMATED DOSE (mrem)	AGE GROUP	LOCATION DIST DIR (M) (Toward)	% OF APPLICABLE LIMIT	LIMIT (mrem) QTR
Liquid	Total Body	8.24E-2	Adult	Receptor 1	5.49E+0	1.5E+0
Liquid	Liver	1.08E-1	Teen	Receptor 1	2.16E+0	5.0E+0
Noble Gas	Air Dose (Gamma-mrad)	6.38E-3		651 N	1.28E-1	5.0E+0
Noble Gas	Air dose (Beta-mrad)	8.97E-3		651 N	8.97E-2	1.0E+1
Iodines and Particulates	Liver	1.68E-1	Child	659 N	2.24E+0	7.5E+0

FOR RECEPTOR NUMBER 1

LAST LIQUID DOSE ACCUMULATIONS (MREM)
START DATE 9610 1 1 END DATE 96123124

	BONE	LIVER	T.BODY	THYRD	KIDNEY	LUNG	GI-LLI	SKIN
WATER								
ADULT	3.6E-04	4.1E-03	4.0E-03	4.7E-03	3.7E-03	3.5E-03	3.8E-03	0.0E+00
TEEN	3.5E-04	3.1E-03	2.7E-03	3.6E-03	2.6E-03	2.5E-03	2.6E-03	0.0E+00
CHILD	9.8E-04	5.9E-03	4.9E-03	7.8E-03	5.1E-03	4.8E-03	4.8E-03	0.0E+00
INFANT	1.0E-03	6.1E-03	4.7E-03	9.6E-03	5.0E-03	4.7E-03	4.6E-03	0.0E+00
SHORE								
ADULT	6.7E-05	6.7E-05	6.7E-05	6.7E-05	6.7E-05	6.7E-05	6.7E-05	7.8E-05
TEEN	3.7E-04	3.7E-04	3.7E-04	3.7E-04	3.7E-04	3.7E-04	3.7E-04	4.4E-04
CHILD	7.8E-05	7.8E-05	7.8E-05	7.8E-05	7.8E-05	7.8E-05	7.8E-05	9.1E-05
INFANT	0.0E+00	0.0E+00	0.0E+00	0.0E+00	0.0E+00	0.0E+00	0.0E+00	0.0E+00
FW SPT FISH								
ADULT	5.3E-02	1.0E-01	7.8E-02	1.3E-03	3.4E-02	1.1E-02	4.3E-03	0.0E+00
TEEN	5.5E-02	1.0E-01	4.5E-02	1.2E-03	3.4E-02	1.3E-02	3.1E-03	0.0E+00
CHILD	6.8E-02	9.0E-02	1.7E-02	1.4E-03	2.8E-02	1.0E-02	1.2E-03	0.0E+00
INFANT	0.0E+00	0.0E+00	0.0E+00	0.0E+00	0.0E+00	0.0E+00	0.0E+00	0.0E+00
TOTAL								
ADULT	5.3E-02	1.1E-01	8.2E-02	6.1E-03	3.7E-02	1.5E-02	8.1E-03	7.8E-05
TEEN	5.6E-02	1.1E-01	4.8E-02	5.2E-03	3.7E-02	1.6E-02	6.1E-03	4.4E-04
CHILD	6.9E-02	9.6E-02	2.2E-02	9.3E-03	3.4E-02	1.5E-02	6.1E-03	9.1E-05
INFANT	1.0E-03	6.1E-03	4.7E-03	9.6E-03	5.0E-03	4.7E-03	4.6E-03	0.0E+00

DATES OF LAST AIR DOSE ACCUMULATION ARE FROM 9610 1 1 0 TO 96123124 0
DOSE ACCUMULATION FOR GAMMA MRAD

FOR RELEASE POINT 1

**DIRECTION FROM N				
0.0000E+00	0.0000E+00	0.0000E+00	0.0000E+00	0.0000E+00
0.0000E+00	0.0000E+00	0.0000E+00	0.0000E+00	0.0000E+00
**DIRECTION FROM NNE				
0.0000E+00	0.0000E+00	0.0000E+00	0.0000E+00	0.0000E+00
0.0000E+00	0.0000E+00	0.0000E+00	0.0000E+00	0.0000E+00
**DIRECTION FROM NE				
0.0000E+00	0.0000E+00	0.0000E+00	0.0000E+00	0.0000E+00
0.0000E+00	0.0000E+00	0.0000E+00	0.0000E+00	0.0000E+00
**DIRECTION FROM ENE				
0.0000E+00	0.0000E+00	0.0000E+00	0.0000E+00	0.0000E+00
0.0000E+00	0.0000E+00	0.0000E+00	0.0000E+00	0.0000E+00
**DIRECTION FROM E				
0.0000E+00	0.0000E+00	0.0000E+00	0.0000E+00	0.0000E+00
0.0000E+00	0.0000E+00	0.0000E+00	0.0000E+00	0.0000E+00
**DIRECTION FROM ESE				
0.0000E+00	0.0000E+00	0.0000E+00	0.0000E+00	0.0000E+00
0.0000E+00	0.0000E+00	0.0000E+00	0.0000E+00	0.0000E+00
**DIRECTION FROM SE				
1.1467E-05	1.3268E-06	5.8317E-07	3.3032E-07	2.2263E-07
1.0182E-07	3.4489E-08	1.5705E-08	9.4254E-09	5.3514E-09
**DIRECTION FROM SSE				
1.7014E-05	1.9685E-06	8.6523E-07	4.9008E-07	3.3030E-07
1.5106E-07	5.1171E-08	2.3301E-08	1.3984E-08	7.9397E-09
**DIRECTION FROM S				
0.0000E+00	0.0000E+00	0.0000E+00	0.0000E+00	0.0000E+00
0.0000E+00	0.0000E+00	0.0000E+00	0.0000E+00	0.0000E+00
**DIRECTION FROM SSW				
2.0911E-06	1.0181E-07	6.1186E-08	4.3688E-08	3.3973E-08
2.0383E-08	1.0191E-08	6.1147E-09	4.3677E-09	3.0555E-09
**DIRECTION FROM SW				
0.0000E+00	0.0000E+00	0.0000E+00	0.0000E+00	0.0000E+00
0.0000E+00	0.0000E+00	0.0000E+00	0.0000E+00	0.0000E+00
**DIRECTION FROM WSW				
6.2109E-06	2.2762E-07	1.0111E-07	6.7764E-08	5.2007E-08
3.1204E-08	1.5601E-08	9.3607E-09	6.6862E-09	4.6774E-09
**DIRECTION FROM W				
0.0000E+00	0.0000E+00	0.0000E+00	0.0000E+00	0.0000E+00
0.0000E+00	0.0000E+00	0.0000E+00	0.0000E+00	0.0000E+00
**DIRECTION FROM WNW				
3.5381E-05	3.4482E-06	1.8700E-06	1.2140E-06	8.8874E-07
4.7605E-07	2.0241E-07	1.0228E-07	6.5723E-08	4.3066E-08
**DIRECTION FROM NW				
0.0000E+00	0.0000E+00	0.0000E+00	0.0000E+00	0.0000E+00
0.0000E+00	0.0000E+00	0.0000E+00	0.0000E+00	0.0000E+00
**DIRECTION FROM NNW				
0.0000E+00	0.0000E+00	0.0000E+00	0.0000E+00	0.0000E+00
0.0000E+00	0.0000E+00	0.0000E+00	0.0000E+00	0.0000E+00

DISTANCES USED IN CALCULATIONS

594.0	2416.0	4020.0	5630.0	7240.0
12067.0	24135.0	40225.0	56315.0	80500.0

DATES OF LAST AIR DOSE ACCUMULATION ARE FROM 9610 1 1 0 TO 96123121 0
DOSE ACCUMULATION FOR GAMMA MRAD

FOR RELEASE POINT 2

**DIRECTION FROM N				
1.6634E-03	1.9123E-04	8.5503E-05	4.9062E-05	3.3796E-05
1.6338E-05	6.0160E-06	2.9204E-06	1.8442E-06	1.1287E-06
**DIRECTION FROM NNE				
9.8287E-04	1.0822E-04	5.0104E-05	2.9649E-05	2.0601E-05
1.0101E-05	3.8803E-06	1.9445E-06	1.2570E-06	7.9154E-07
**DIRECTION FROM NE				
2.7771E-03	2.9582E-04	1.4345E-04	8.7296E-05	6.1590E-05
3.0969E-05	1.2228E-05	6.0764E-06	3.8858E-06	2.4725E-06
**DIRECTION FROM ENE				
2.9586E-03	3.3761E-04	1.6046E-04	9.6230E-05	6.7620E-05
3.3847E-05	1.3248E-05	6.5892E-06	4.2182E-06	2.6587E-06
**DIRECTION FROM E				
4.8933E-03	5.4493E-04	2.7298E-04	1.6925E-04	1.2070E-04
6.1872E-05	2.5094E-05	1.2601E-05	8.0964E-06	5.1834E-06
**DIRECTION FROM ESE				
6.4932E-03	7.6527E-04	3.8305E-04	2.3697E-04	1.6897E-04
8.6684E-05	3.5209E-05	1.7732E-05	1.1422E-05	7.3012E-06
**DIRECTION FROM SE				
5.6462E-03	6.5535E-04	3.1664E-04	1.9163E-04	1.3527E-04
6.8217E-05	2.6966E-05	1.3425E-05	8.5884E-06	5.4281E-06
**DIRECTION FROM SSE				
8.6965E-03	1.0178E-03	5.0456E-04	3.1064E-04	2.2059E-04
1.1229E-04	4.5273E-05	2.2800E-05	1.4694E-05	9.3643E-06
**DIRECTION FROM S				
7.3323E-03	8.7356E-04	4.2037E-04	2.5358E-04	1.7890E-04
9.0231E-05	3.5677E-05	1.7806E-05	1.1423E-05	7.2231E-06
**DIRECTION FROM SSW				
3.8539E-03	4.5436E-04	2.1581E-04	1.2923E-04	9.0554E-05
4.5043E-05	1.7527E-05	8.7052E-06	5.5684E-06	3.4922E-06
**DIRECTION FROM SW				
1.5071E-03	1.6661E-04	7.6914E-05	4.5304E-05	3.1456E-05
1.5386E-05	5.8313E-06	2.8639E-06	1.8217E-06	1.1346E-06
**DIRECTION FROM WSW				
1.5540E-03	1.6493E-04	7.4953E-05	4.3685E-05	3.0142E-05
1.4565E-05	5.4094E-06	2.6316E-06	1.6676E-06	1.0373E-06
**DIRECTION FROM W				
2.7928E-03	3.2312E-04	1.4648E-04	8.5039E-05	5.8321E-05
2.7779E-05	1.0150E-05	4.8975E-06	3.0810E-06	1.8733E-06
**DIRECTION FROM WNW				
2.4491E-03	2.7259E-04	1.2700E-04	7.5087E-05	5.2389E-05
2.5850E-05	9.8412E-06	4.7898E-06	3.0184E-06	1.8756E-06
**DIRECTION FROM NW				
2.5370E-03	2.9674E-04	1.3486E-04	7.8254E-05	5.3850E-05
2.5839E-05	9.4663E-06	4.5384E-06	2.8345E-06	1.7179E-06
**DIRECTION FROM NNW				
1.9149E-03	2.2706E-04	1.0509E-04	6.1825E-05	4.2899E-05
2.0957E-05	7.9473E-06	3.9214E-06	2.5016E-06	1.5503E-06

DISTANCES USED IN CALCULATIONS

594.0	2416.0	4020.0	5630.0	7240.0
12067.0	24135.0	40225.0	56315.0	80500.0

DATES OF LAST AIR DOSE ACCUMULATION ARE FROM 9610 1 1 0 TO 96123124 0
DOSE ACCUMULATION FOR BETA MRAD

FOR RELEASE POINT 1

**DIRECTION FROM N				
0.0000E+00	0.0000E+00	0.0000E+00	0.0000E+00	0.0000E+00
0.0000E+00	0.0000E+00	0.0000E+00	0.0000E+00	0.0000E+00
**DIRECTION FROM NNE				
0.0000E+00	0.0000E+00	0.0000E+00	0.0000E+00	0.0000E+00
0.0000E+00	0.0000E+00	0.0000E+00	0.0000E+00	0.0000E+00
**DIRECTION FROM NE				
0.0000E+00	0.0000E+00	0.0000E+00	0.0000E+00	0.0000E+00
0.0000E+00	0.0000E+00	0.0000E+00	0.0000E+00	0.0000E+00
**DIRECTION FROM ENE				
0.0000E+00	0.0000E+00	0.0000E+00	0.0000E+00	0.0000E+00
0.0000E+00	0.0000E+00	0.0000E+00	0.0000E+00	0.0000E+00
**DIRECTION FROM E				
0.0000E+00	0.0000E+00	0.0000E+00	0.0000E+00	0.0000E+00
0.0000E+00	0.0000E+00	0.0000E+00	0.0000E+00	0.0000E+00
**DIRECTION FROM ESE				
0.0000E+00	0.0000E+00	0.0000E+00	0.0000E+00	0.0000E+00
0.0000E+00	0.0000E+00	0.0000E+00	0.0000E+00	0.0000E+00
**DIRECTION FROM SE				
1.2922E-03	1.4951E-04	6.5713E-05	3.7221E-05	2.5086E-05
1.1473E-05	3.8863E-06	1.7697E-06	1.0621E-06	6.0301E-07
**DIRECTION FROM SSE				
1.7978E-03	2.0801E-04	9.1426E-05	5.1785E-05	3.4902E-05
1.5962E-05	5.4070E-06	2.4622E-06	1.4777E-06	8.3896E-07
**DIRECTION FROM S				
0.0000E+00	0.0000E+00	0.0000E+00	0.0000E+00	0.0000E+00
0.0000E+00	0.0000E+00	0.0000E+00	0.0000E+00	0.0000E+00
**DIRECTION FROM SSW				
2.3712E-04	1.1544E-05	6.9381E-06	4.9540E-06	3.8524E-06
2.3114E-06	1.1556E-06	6.9338E-07	4.9527E-07	3.4647E-07
**DIRECTION FROM SW				
0.0000E+00	0.0000E+00	0.0000E+00	0.0000E+00	0.0000E+00
0.0000E+00	0.0000E+00	0.0000E+00	0.0000E+00	0.0000E+00
**DIRECTION FROM WSW				
7.0360E-04	2.5789E-05	1.1457E-05	7.6788E-06	5.8934E-06
3.5360E-06	1.7679E-06	1.0607E-06	7.5767E-07	5.3004E-07
**DIRECTION FROM W				
0.0000E+00	0.0000E+00	0.0000E+00	0.0000E+00	0.0000E+00
0.0000E+00	0.0000E+00	0.0000E+00	0.0000E+00	0.0000E+00
**DIRECTION FROM WNW				
4.0121E-03	3.9100E-04	2.1205E-04	1.3766E-04	1.0078E-04
5.3982E-05	2.2952E-05	1.1598E-05	7.4526E-06	4.8834E-06
**DIRECTION FROM NW				
0.0000E+00	0.0000E+00	0.0000E+00	0.0000E+00	0.0000E+00
0.0000E+00	0.0000E+00	0.0000E+00	0.0000E+00	0.0000E+00
**DIRECTION FROM NNW				
0.0000E+00	0.0000E+00	0.0000E+00	0.0000E+00	0.0000E+00
0.0000E+00	0.0000E+00	0.0000E+00	0.0000E+00	0.0000E+00

DISTANCES USED IN CALCULATIONS

594.0	2416.0	4020.0	5630.0	7240.0
12067.0	24135.0	40225.0	56315.0	80500.0

DATES OF LAST AIR DOSE ACCUMULATION ARE FROM 9610 1 1 0 TO 96123124 0
DOSE ACCUMULATION FOR BETA MRAD

FOR RELEASE POINT 2

**DIRECTION FROM N				
2.2569E-03	2.6000E-04	1.1637E-04	6.6816E-05	4.6102E-05
2.2383E-05	8.2872E-06	4.0374E-06	2.5568E-06	1.5712E-06
**DIRECTION FROM NNE				
1.3905E-03	1.5449E-04	7.1576E-05	4.2358E-05	2.9433E-05
1.4432E-05	5.5437E-06	2.7752E-06	1.7931E-06	1.1286E-06
**DIRECTION FROM NE				
4.0046E-03	4.2915E-04	2.0863E-04	1.2711E-04	8.9716E-05
4.5135E-05	1.7832E-05	8.8525E-06	5.6566E-06	3.5986E-06
**DIRECTION FROM ENE				
4.1278E-03	4.7576E-04	2.2733E-04	1.3673E-04	9.6267E-05
4.8364E-05	1.9021E-05	9.4737E-06	6.0684E-06	3.8304E-06
**DIRECTION FROM E				
6.9592E-03	7.7541E-04	3.9084E-04	2.4320E-04	1.7372E-04
8.9297E-05	3.6357E-05	1.8279E-05	1.1751E-05	7.5340E-06
**DIRECTION FROM ESE				
9.1522E-03	1.0724E-03	5.4040E-04	3.3582E-04	2.3982E-04
1.2331E-04	5.0296E-05	2.5375E-05	1.6361E-05	1.0478E-05
**DIRECTION FROM SE				
7.9071E-03	9.1695E-04	4.4546E-04	2.7055E-04	1.9133E-04
9.6796E-05	3.8452E-05	1.9186E-05	1.2291E-05	7.7866E-06
**DIRECTION FROM SSE				
1.2097E-02	1.4112E-03	7.0405E-04	4.3528E-04	3.0954E-04
1.5791E-04	6.3925E-05	3.2250E-05	2.0806E-05	1.3282E-05
**DIRECTION FROM S				
1.0305E-02	1.2302E-03	5.9416E-04	3.5924E-04	2.5371E-04
1.2819E-04	5.0828E-05	2.5393E-05	1.6298E-05	1.0317E-05
**DIRECTION FROM SSW				
5.5643E-03	6.5810E-04	3.1340E-04	1.8797E-04	1.3183E-04
6.5677E-05	2.5616E-05	1.2733E-05	8.1479E-06	5.1133E-06
**DIRECTION FROM SW				
2.1464E-03	2.3753E-04	1.0989E-04	6.4820E-05	4.5055E-05
2.2087E-05	8.3980E-06	4.1304E-06	2.6300E-06	1.6410E-06
**DIRECTION FROM WSW				
2.1573E-03	2.2969E-04	1.0463E-04	6.1062E-05	4.2172E-05
2.0415E-05	7.5989E-06	3.6963E-06	2.3414E-06	1.4571E-06
**DIRECTION FROM W				
3.7349E-03	4.3403E-04	1.9754E-04	1.1501E-04	7.9009E-05
3.7766E-05	1.3884E-05	6.7215E-06	4.2374E-06	2.5839E-06
**DIRECTION FROM WNW				
3.1504E-03	3.5119E-04	1.6527E-04	9.8347E-05	6.8960E-05
3.4369E-05	1.3260E-05	6.4911E-06	4.1047E-06	2.5679E-06
**DIRECTION FROM NW				
2.9939E-03	3.5288E-04	1.6181E-04	9.4444E-05	6.5303E-05
3.1655E-05	1.1774E-05	5.6905E-06	3.5732E-06	2.1846E-06
**DIRECTION FROM NNW				
2.3535E-03	2.8306E-04	1.3228E-04	7.8316E-05	5.4563E-05
2.6874E-05	1.0322E-05	5.1277E-06	3.2851E-06	2.0475E-06

DISTANCES USED IN CALCULATIONS

594.0	2416.0	4020.0	5630.0	7240.0
12067.0	24135.0	40225.0	56315.0	80500.0

INDIVIDUAL DOSES(MREM) DUE TO GASEOUS EFFLUENT
FOR DATES 9610 1 1 THRU 96123124

	T.BODY	GI-TRCT	BONE	LIVER	KIDNEY	THYRD	LUNG	SKIN
PLUME PATHWAY, DIST GP= 1, 659. METERS WINDS TOWARD N								
ADULT	3.6E-03	3.6E-03	3.6E-03	3.6E-03	3.6E-03	3.6E-03	3.7E-03	7.9E-03
TEEN	3.6E-03	3.6E-03	3.6E-03	3.6E-03	3.6E-03	3.6E-03	3.7E-03	7.9E-03
CHILD	3.6E-03	3.6E-03	3.6E-03	3.6E-03	3.6E-03	3.6E-03	3.7E-03	7.9E-03
INFNT	3.6E-03	3.6E-03	3.6E-03	3.6E-03	3.6E-03	3.6E-03	3.7E-03	7.9E-03
GROUND PATHWAY, DIST GP= 1, 659. METERS WINDS TOWARD N								
ADULT	4.7E-02	4.7E-02	4.7E-02	4.7E-02	4.7E-02	4.7E-02	4.7E-02	5.5E-02
TEEN	4.7E-02	4.7E-02	4.7E-02	4.7E-02	4.7E-02	4.7E-02	4.7E-02	5.5E-02
CHILD	4.7E-02	4.7E-02	4.7E-02	4.7E-02	4.7E-02	4.7E-02	4.7E-02	5.5E-02
INFNT	4.7E-02	4.7E-02	4.7E-02	4.7E-02	4.7E-02	4.7E-02	4.7E-02	5.5E-02
VEGET PATHWAY, DIST GP= 1, 8045. METERS WINDS TOWARD N								
ADULT	7.9E-04	1.7E-04	4.5E-04	1.0E-03	4.3E-04	1.8E-04	2.5E-04	0.0E+00
TEEN	7.2E-04	1.9E-04	6.9E-04	1.5E-03	5.9E-04	2.0E-04	3.4E-04	0.0E+00
CHILD	6.6E-04	2.9E-04	1.6E-03	2.3E-03	9.3E-04	3.2E-04	5.1E-04	0.0E+00
INFNT	0.0E+00	0.0E+00	0.0E+00	0.0E+00	0.0E+00	0.0E+00	0.0E+00	0.0E+00
MEAT PATHWAY, DIST GP= 1, 8045. METERS WINDS TOWARD N								
ADULT	8.9E-05	2.4E-05	4.6E-05	1.1E-04	5.1E-05	2.4E-05	3.2E-05	0.0E+00
TEEN	4.3E-05	1.4E-05	3.7E-05	8.3E-05	3.6E-05	1.5E-05	2.2E-05	0.0E+00
CHILD	3.2E-05	1.6E-05	6.7E-05	1.0E-04	4.4E-05	1.8E-05	2.6E-05	0.0E+00
INFNT	0.0E+00	0.0E+00	0.0E+00	0.0E+00	0.0E+00	0.0E+00	0.0E+00	0.0E+00
COW PATHWAY, DIST GP= 1, 4091. METERS WINDS TOWARD N								
ADULT	2.1E-03	1.9E-04	1.4E-03	2.7E-03	9.9E-04	4.1E-04	4.2E-04	0.0E+00
TEEN	2.1E-03	2.4E-04	2.4E-03	4.7E-03	1.6E-03	6.1E-04	7.4E-04	0.0E+00
CHILD	1.7E-03	3.3E-04	5.7E-03	7.7E-03	2.6E-03	1.2E-03	1.1E-03	0.0E+00
INFNT	1.7E-03	4.8E-04	9.1E-03	1.4E-02	4.1E-03	2.6E-03	1.9E-03	0.0E+00
GOAT PATHWAY, DIST GP= 1, 4091. METERS WINDS TOWARD N								
ADULT	6.2E-03	4.3E-04	4.1E-03	8.0E-03	2.8E-03	6.0E-04	1.1E-03	0.0E+00
TEEN	6.1E-03	5.5E-04	7.2E-03	1.4E-02	4.7E-03	8.9E-04	2.1E-03	0.0E+00
CHILD	4.8E-03	7.2E-04	1.7E-02	2.3E-02	7.6E-03	1.7E-03	3.1E-03	0.0E+00
INFNT	4.6E-03	1.0E-03	2.7E-02	4.2E-02	1.2E-02	3.5E-03	5.3E-03	0.0E+00
INHAL PATHWAY, DIST GP= 1, 659. METERS WINDS TOWARD N								
ADULT	4.6E-03	3.8E-03	5.7E-04	4.8E-03	4.1E-03	6.0E-03	3.9E-03	0.0E+00
TEEN	4.4E-03	3.8E-03	7.8E-04	5.1E-03	4.3E-03	6.8E-03	3.9E-03	0.0E+00
CHILD	3.6E-03	3.3E-03	1.0E-03	4.6E-03	3.8E-03	7.3E-03	3.5E-03	0.0E+00
INFNT	2.0E-03	1.9E-03	6.3E-04	2.8E-03	2.2E-03	5.6E-03	2.0E-03	0.0E+00
SUBTOTALS (NO PLUME)								
ADULT	6.1E-02	5.1E-02	5.3E-02	6.3E-02	5.5E-02	5.4E-02	5.3E-02	5.5E-02
TEEN	6.0E-02	5.2E-02	5.8E-02	7.2E-02	5.8E-02	5.5E-02	5.4E-02	5.5E-02
CHILD	5.8E-02	5.2E-02	7.2E-02	8.4E-02	6.2E-02	5.7E-02	5.5E-02	5.5E-02
INFNT	5.5E-02	5.0E-02	8.4E-02	1.1E-01	6.5E-02	5.9E-02	5.6E-02	5.5E-02
TOTALS								
ADULT	6.4E-02	5.5E-02	5.7E-02	6.7E-02	5.9E-02	5.8E-02	5.6E-02	6.3E-02
TEEN	6.4E-02	5.5E-02	6.2E-02	7.6E-02	6.2E-02	5.9E-02	5.8E-02	6.3E-02
CHILD	6.1E-02	5.5E-02	7.6E-02	8.8E-02	6.5E-02	6.1E-02	5.9E-02	6.3E-02
INFNT	5.9E-02	5.4E-02	8.7E-02	1.1E-01	6.8E-02	6.2E-02	6.0E-02	6.3E-02

INDIVIDUAL DOSES(MREM) DUE TO GASEOUS EFFLUENT
FOR DATES 9610 1 1 THRU 96123124

	T.BODY	GI-TRCT	BONE	LIVER	KIDNEY	THYRD	LUNG	SKIN
PLUME PATHWAY, DIST GP= 1, 660. METERS WINDS TOWARD NNE								
ADULT	1.9E-03	1.9E-03	1.9E-03	1.9E-03	1.9E-03	1.9E-03	1.9E-03	4.3E-03
TEEN	1.9E-03	1.9E-03	1.9E-03	1.9E-03	1.9E-03	1.9E-03	1.9E-03	4.3E-03
CHILD	1.9E-03	1.9E-03	1.9E-03	1.9E-03	1.9E-03	1.9E-03	1.9E-03	4.3E-03
INFNT	1.9E-03	1.9E-03	1.9E-03	1.9E-03	1.9E-03	1.9E-03	1.9E-03	4.3E-03
GROUND PATHWAY, DIST GP= 1, 660. METERS WINDS TOWARD NNE								
ADULT	4.1E-02	4.1E-02	4.1E-02	4.1E-02	4.1E-02	4.1E-02	4.1E-02	4.8E-02
TEEN	4.1E-02	4.1E-02	4.1E-02	4.1E-02	4.1E-02	4.1E-02	4.1E-02	4.8E-02
CHILD	4.1E-02	4.1E-02	4.1E-02	4.1E-02	4.1E-02	4.1E-02	4.1E-02	4.8E-02
INFNT	4.1E-02	4.1E-02	4.1E-02	4.1E-02	4.1E-02	4.1E-02	4.1E-02	4.8E-02
VEGET PATHWAY, DIST GP= 1, 814. METERS WINDS TOWARD NNE								
ADULT	3.0E-02	2.9E-03	1.9E-02	3.8E-02	1.4E-02	3.5E-03	6.2E-03	0.0E+00
TEEN	2.6E-02	3.3E-03	3.0E-02	5.7E-02	2.0E-02	3.7E-03	9.4E-03	0.0E+00
CHILD	2.0E-02	4.5E-03	6.9E-02	9.3E-02	3.2E-02	5.8E-03	1.4E-02	0.0E+00
INFNT	0.0E+00	0.0E+00	0.0E+00	0.0E+00	0.0E+00	0.0E+00	0.0E+00	0.0E+00
MEAT PATHWAY, DIST GP= 1, 7725. METERS WINDS TOWARD NNE								
ADULT	7.3E-05	1.2E-05	4.4E-05	9.3E-05	3.8E-05	1.2E-05	2.0E-05	0.0E+00
TEEN	3.4E-05	7.1E-06	3.5E-05	7.2E-05	2.8E-05	7.5E-06	1.4E-05	0.0E+00
CHILD	2.3E-05	8.0E-06	6.4E-05	9.1E-05	3.4E-05	9.5E-06	1.7E-05	0.0E+00
INFNT	0.0E+00	0.0E+00	0.0E+00	0.0E+00	0.0E+00	0.0E+00	0.0E+00	0.0E+00
COW PATHWAY, DIST GP= 1, 4091. METERS WINDS TOWARD NNE								
ADULT	1.8E-03	1.1E-04	1.2E-03	2.4E-03	8.1E-04	3.0E-04	3.1E-04	0.0E+00
TEEN	1.8E-03	1.4E-04	2.1E-03	4.0E-03	1.4E-03	4.7E-04	5.8E-04	0.0E+00
CHILD	1.4E-03	1.7E-04	5.0E-03	6.7E-03	2.2E-03	9.4E-04	8.7E-04	0.0E+00
INFNT	1.3E-03	2.4E-04	8.0E-03	1.2E-02	3.4E-03	2.2E-03	1.5E-03	0.0E+00
GOAT PATHWAY, DIST GP= 1, 4091. METERS WINDS TOWARD NNE								
ADULT	5.4E-03	2.6E-04	3.6E-03	7.0E-03	2.4E-03	4.1E-04	8.8E-04	0.0E+00
TEEN	5.2E-03	3.3E-04	6.4E-03	1.2E-02	4.0E-03	6.3E-04	1.7E-03	0.0E+00
CHILD	4.0E-03	3.8E-04	1.5E-02	2.0E-02	6.5E-03	1.2E-03	2.5E-03	0.0E+00
INFNT	3.7E-03	5.1E-04	2.4E-02	3.7E-02	1.0E-02	2.8E-03	4.3E-03	0.0E+00
INHAL PATHWAY, DIST GP= 1, 660. METERS WINDS TOWARD NNE								
ADULT	2.2E-03	1.7E-03	3.1E-04	2.3E-03	1.9E-03	3.0E-03	1.8E-03	0.0E+00
TEEN	2.1E-03	1.8E-03	4.3E-04	2.5E-03	2.0E-03	3.4E-03	1.8E-03	0.0E+00
CHILD	1.7E-03	1.5E-03	5.7E-04	2.2E-03	1.8E-03	3.7E-03	1.6E-03	0.0E+00
INFNT	9.3E-04	8.9E-04	3.5E-04	1.4E-03	1.0E-03	2.9E-03	9.4E-04	0.0E+00
SUBTOTALS (NO PLUME)								
ADULT	8.0E-02	4.6E-02	6.6E-02	9.1E-02	6.1E-02	4.9E-02	5.1E-02	4.8E-02
TEEN	7.6E-02	4.7E-02	8.0E-02	1.2E-01	6.9E-02	5.0E-02	5.5E-02	4.8E-02
CHILD	6.9E-02	4.8E-02	1.3E-01	1.6E-01	8.4E-02	5.3E-02	6.0E-02	4.8E-02
INFNT	4.7E-02	4.3E-02	7.4E-02	9.2E-02	5.6E-02	4.9E-02	4.8E-02	4.8E-02
TOTALS								
ADULT	8.2E-02	4.8E-02	6.8E-02	9.3E-02	6.3E-02	5.1E-02	5.2E-02	5.3E-02
TEEN	7.8E-02	4.9E-02	8.2E-02	1.2E-01	7.1E-02	5.1E-02	5.7E-02	5.3E-02
CHILD	7.1E-02	5.0E-02	1.3E-01	1.6E-01	8.6E-02	5.5E-02	6.2E-02	5.3E-02
INFNT	4.9E-02	4.5E-02	7.6E-02	9.4E-02	5.8E-02	5.1E-02	5.0E-02	5.3E-02

INDIVIDUAL DOSES(MREM) DUE TO GASEOUS EFFLUENT
FOR DATES 9610 1 1 THRU 96123124

	T.BODY	GI-TRCT	BONE	LIVER	KIDNEY	THYRD	LUNG	SKIN
PLUME PATHWAY, DIST GP= 1, 943. METERS WINDS TOWARD NE								
ADULT	4.1E-04	4.1E-04	4.1E-04	4.1E-04	4.1E-04	4.1E-04	4.2E-04	9.0E-04
TEEN	4.1E-04	4.1E-04	4.1E-04	4.1E-04	4.1E-04	4.1E-04	4.2E-04	9.0E-04
CHILD	4.1E-04	4.1E-04	4.1E-04	4.1E-04	4.1E-04	4.1E-04	4.2E-04	9.0E-04
INFNT	4.1E-04	4.1E-04	4.1E-04	4.1E-04	4.1E-04	4.1E-04	4.2E-04	9.0E-04
GROUND PATHWAY, DIST GP= 1, 943. METERS WINDS TOWARD NE								
ADULT	1.1E-02	1.1E-02	1.1E-02	1.1E-02	1.1E-02	1.1E-02	1.1E-02	1.3E-02
TEEN	1.1E-02	1.1E-02	1.1E-02	1.1E-02	1.1E-02	1.1E-02	1.1E-02	1.3E-02
CHILD	1.1E-02	1.1E-02	1.1E-02	1.1E-02	1.1E-02	1.1E-02	1.1E-02	1.3E-02
INFNT	1.1E-02	1.1E-02	1.1E-02	1.1E-02	1.1E-02	1.1E-02	1.1E-02	1.3E-02
VEGET PATHWAY, DIST GP= 1, 1052. METERS WINDS TOWARD NE								
ADULT	9.1E-03	8.3E-04	5.9E-03	1.2E-02	4.3E-03	1.0E-03	1.8E-03	0.0E+00
TEEN	7.8E-03	9.4E-04	9.2E-03	1.8E-02	6.2E-03	1.1E-03	2.8E-03	0.0E+00
CHILD	6.2E-03	1.3E-03	2.1E-02	2.8E-02	9.8E-03	1.7E-03	4.2E-03	0.0E+00
INFNT	0.0E+00	0.0E+00	0.0E+00	0.0E+00	0.0E+00	0.0E+00	0.0E+00	0.0E+00
MEAT PATHWAY, DIST GP= 1, 7725. METERS WINDS TOWARD NE								
ADULT	3.4E-05	4.7E-06	2.1E-05	4.3E-05	1.7E-05	4.8E-06	8.3E-06	0.0E+00
TEEN	1.6E-05	2.8E-06	1.7E-05	3.3E-05	1.3E-05	3.0E-06	6.3E-06	0.0E+00
CHILD	1.0E-05	3.1E-06	3.0E-05	4.2E-05	1.5E-05	3.8E-06	7.3E-06	0.0E+00
INFNT	0.0E+00	0.0E+00	0.0E+00	0.0E+00	0.0E+00	0.0E+00	0.0E+00	0.0E+00
COW PATHWAY, DIST GP= 1, 4091. METERS WINDS TOWARD NE								
ADULT	8.5E-04	4.5E-05	5.7E-04	1.1E-03	3.8E-04	1.4E-04	1.4E-04	0.0E+00
TEEN	8.3E-04	5.7E-05	1.0E-03	1.9E-03	6.4E-04	2.1E-04	2.7E-04	0.0E+00
CHILD	6.3E-04	7.0E-05	2.4E-03	3.1E-03	1.0E-03	4.3E-04	4.0E-04	0.0E+00
INFNT	6.0E-04	9.5E-05	3.8E-03	5.9E-03	1.6E-03	1.0E-03	7.0E-04	0.0E+00
GOAT PATHWAY, DIST GP= 1, 4091. METERS WINDS TOWARD NE								
ADULT	2.5E-03	1.1E-04	1.7E-03	3.3E-03	1.1E-03	1.8E-04	4.1E-04	0.0E+00
TEEN	2.5E-03	1.4E-04	3.0E-03	5.7E-03	1.9E-03	2.8E-04	7.7E-04	0.0E+00
CHILD	1.8E-03	1.6E-04	7.1E-03	9.4E-03	3.0E-03	5.6E-04	1.2E-03	0.0E+00
INFNT	1.7E-03	2.1E-04	1.1E-02	1.8E-02	4.7E-03	1.3E-03	2.0E-03	0.0E+00
INHAL PATHWAY, DIST GP= 1, 943. METERS WINDS TOWARD NE								
ADULT	5.1E-04	4.2E-04	6.6E-05	5.3E-04	4.6E-04	6.8E-04	4.3E-04	0.0E+00
TEEN	4.9E-04	4.2E-04	9.1E-05	5.8E-04	4.7E-04	7.7E-04	4.4E-04	0.0E+00
CHILD	4.0E-04	3.7E-04	1.2E-04	5.2E-04	4.2E-04	8.3E-04	3.9E-04	0.0E+00
INFNT	2.2E-04	2.1E-04	7.3E-05	3.2E-04	2.4E-04	6.4E-04	2.2E-04	0.0E+00
SUBTOTALS (NO PLUME)								
ADULT	2.4E-02	1.2E-02	1.9E-02	2.8E-02	1.7E-02	1.3E-02	1.4E-02	1.3E-02
TEEN	2.2E-02	1.2E-02	2.4E-02	3.7E-02	2.0E-02	1.3E-02	1.5E-02	1.3E-02
CHILD	2.0E-02	1.3E-02	4.2E-02	5.2E-02	2.5E-02	1.4E-02	1.7E-02	1.3E-02
INFNT	1.3E-02	1.1E-02	2.6E-02	3.5E-02	1.7E-02	1.4E-02	1.4E-02	1.3E-02
TOTALS								
ADULT	2.4E-02	1.3E-02	1.9E-02	2.8E-02	1.7E-02	1.3E-02	1.4E-02	1.4E-02
TEEN	2.3E-02	1.3E-02	2.5E-02	3.7E-02	2.0E-02	1.4E-02	1.6E-02	1.4E-02
CHILD	2.0E-02	1.3E-02	4.2E-02	5.3E-02	2.5E-02	1.5E-02	1.7E-02	1.4E-02
INFNT	1.4E-02	1.2E-02	2.7E-02	3.5E-02	1.8E-02	1.4E-02	1.4E-02	1.4E-02

INDIVIDUAL DOSES(MREM) DUE TO GASEOUS EFFLUENT
FOR DATES 9610 1 1 THRU 96123124

	T.BODY	GI-TRCT	BONE	LIVER	KIDNEY	THYRD	LUNG	SKIN
PLUME PATHWAY, DIST GP= 1, 1747. METERS WINDS TOWARD ENE								
ADULT	1.5E-04	1.5E-04	1.5E-04	1.5E-04	1.5E-04	1.5E-04	1.5E-04	3.6E-04
TEEN	1.5E-04	1.5E-04	1.5E-04	1.5E-04	1.5E-04	1.5E-04	1.5E-04	3.6E-04
CHILD	1.5E-04	1.5E-04	1.5E-04	1.5E-04	1.5E-04	1.5E-04	1.5E-04	3.6E-04
INFNT	1.5E-04	1.5E-04	1.5E-04	1.5E-04	1.5E-04	1.5E-04	1.5E-04	3.6E-04
GROUND PATHWAY, DIST GP= 1, 1747. METERS WINDS TOWARD ENE								
ADULT	5.8E-03	5.8E-03	5.8E-03	5.8E-03	5.8E-03	5.8E-03	5.8E-03	6.8E-03
TEEN	5.8E-03	5.8E-03	5.8E-03	5.8E-03	5.8E-03	5.8E-03	5.8E-03	6.8E-03
CHILD	5.8E-03	5.8E-03	5.8E-03	5.8E-03	5.8E-03	5.8E-03	5.8E-03	6.8E-03
INFNT	5.8E-03	5.8E-03	5.8E-03	5.8E-03	5.8E-03	5.8E-03	5.8E-03	6.8E-03
VEGET PATHWAY, DIST GP= 1, 1852. METERS WINDS TOWARD ENE								
ADULT	5.3E-03	4.4E-04	3.5E-03	6.9E-03	2.5E-03	5.4E-04	1.0E-03	0.0E+00
TEEN	4.6E-03	5.0E-04	5.4E-03	1.0E-02	3.6E-03	5.5E-04	1.6E-03	0.0E+00
CHILD	3.6E-03	6.7E-04	1.2E-02	1.7E-02	5.7E-03	8.7E-04	2.4E-03	0.0E+00
INFNT	0.0E+00	0.0E+00	0.0E+00	0.0E+00	0.0E+00	0.0E+00	0.0E+00	0.0E+00
MEAT PATHWAY, DIST GP= 1, 3862. METERS WINDS TOWARD ENE								
ADULT	1.8E-04	1.8E-05	1.1E-04	2.3E-04	8.4E-05	1.8E-05	3.7E-05	0.0E+00
TEEN	8.0E-05	1.1E-05	9.0E-05	1.8E-04	6.3E-05	1.1E-05	2.9E-05	0.0E+00
CHILD	5.0E-05	1.2E-05	1.6E-04	2.2E-04	7.7E-05	1.4E-05	3.4E-05	0.0E+00
INFNT	0.0E+00	0.0E+00	0.0E+00	0.0E+00	0.0E+00	0.0E+00	0.0E+00	0.0E+00
COW PATHWAY, DIST GP= 1, 4091. METERS WINDS TOWARD ENE								
ADULT	1.3E-03	6.1E-05	8.6E-04	1.7E-03	5.7E-04	1.8E-04	2.1E-04	0.0E+00
TEEN	1.2E-03	7.8E-05	1.5E-03	2.9E-03	9.6E-04	2.7E-04	3.9E-04	0.0E+00
CHILD	9.5E-04	9.1E-05	3.6E-03	4.7E-03	1.5E-03	5.7E-04	5.9E-04	0.0E+00
INFNT	8.9E-04	1.2E-04	5.7E-03	8.9E-03	2.4E-03	1.3E-03	1.0E-03	0.0E+00
GOAT PATHWAY, DIST GP= 1, 4091. METERS WINDS TOWARD ENE								
ADULT	3.8E-03	1.5E-04	2.6E-03	5.0E-03	1.7E-03	2.4E-04	6.0E-04	0.0E+00
TEEN	3.7E-03	1.9E-04	4.6E-03	8.6E-03	2.9E-03	3.6E-04	1.1E-03	0.0E+00
CHILD	2.8E-03	2.1E-04	1.1E-02	1.4E-02	4.6E-03	7.3E-04	1.7E-03	0.0E+00
INFNT	2.6E-03	2.7E-04	1.7E-02	2.7E-02	7.1E-03	1.7E-03	3.0E-03	0.0E+00
INHAL PATHWAY, DIST GP= 1, 1747. METERS WINDS TOWARD ENE								
ADULT	2.3E-04	2.0E-04	2.3E-05	2.4E-04	2.1E-04	2.9E-04	2.0E-04	0.0E+00
TEEN	2.2E-04	2.0E-04	3.2E-05	2.5E-04	2.2E-04	3.3E-04	2.1E-04	0.0E+00
CHILD	1.9E-04	1.8E-04	4.2E-05	2.3E-04	1.9E-04	3.4E-04	1.8E-04	0.0E+00
INFNT	1.0E-04	1.0E-04	2.6E-05	1.4E-04	1.1E-04	2.6E-04	1.0E-04	0.0E+00
SUBTOTALS (NO PLUME)								
ADULT	1.7E-02	6.7E-03	1.3E-02	2.0E-02	1.1E-02	7.1E-03	7.9E-03	6.8E-03
TEEN	1.6E-02	6.8E-03	1.7E-02	2.8E-02	1.4E-02	7.4E-03	9.2E-03	6.8E-03
CHILD	1.3E-02	7.0E-03	3.3E-02	4.2E-02	1.8E-02	8.4E-03	1.1E-02	6.8E-03
INFNT	9.4E-03	6.3E-03	2.9E-02	4.1E-02	1.5E-02	9.1E-03	1.0E-02	6.8E-03
TOTALS								
ADULT	1.7E-02	6.9E-03	1.3E-02	2.0E-02	1.1E-02	7.2E-03	8.1E-03	7.2E-03
TEEN	1.6E-02	7.0E-03	1.8E-02	2.8E-02	1.4E-02	7.5E-03	9.4E-03	7.2E-03
CHILD	1.4E-02	7.1E-03	3.3E-02	4.2E-02	1.8E-02	8.5E-03	1.1E-02	7.2E-03
INFNT	9.5E-03	6.5E-03	2.9E-02	4.2E-02	1.6E-02	9.2E-03	1.0E-02	7.2E-03

INDIVIDUAL DOSES(MREM) DUE TO GASEOUS EFFLUENT
FOR DATES 9610 1 1 THRU 96123124

	T.BODY	GI-TRCT	BONE	LIVER	KIDNEY	THYRD	LUNG	SKIN
PLUME PATHWAY, DIST GP= 1, 1716. METERS WINDS TOWARD E								
ADULT	2.9E-04	2.9E-04	2.9E-04	2.9E-04	2.9E-04	2.9E-04	3.0E-04	6.4E-04
TEEN	2.9E-04	2.9E-04	2.9E-04	2.9E-04	2.9E-04	2.9E-04	3.0E-04	6.4E-04
CHILD	2.9E-04	2.9E-04	2.9E-04	2.9E-04	2.9E-04	2.9E-04	3.0E-04	6.4E-04
INFNT	2.9E-04	2.9E-04	2.9E-04	2.9E-04	2.9E-04	2.9E-04	3.0E-04	6.4E-04
GROUND PATHWAY, DIST GP= 1, 1716. METERS WINDS TOWARD E								
ADULT	8.0E-03	8.0E-03	8.0E-03	8.0E-03	8.0E-03	8.0E-03	8.0E-03	9.3E-03
TEEN	8.0E-03	8.0E-03	8.0E-03	8.0E-03	8.0E-03	8.0E-03	8.0E-03	9.3E-03
CHILD	8.0E-03	8.0E-03	8.0E-03	8.0E-03	8.0E-03	8.0E-03	8.0E-03	9.3E-03
INFNT	8.0E-03	8.0E-03	8.0E-03	8.0E-03	8.0E-03	8.0E-03	8.0E-03	9.3E-03
VEGET PATHWAY, DIST GP= 1, 1705. METERS WINDS TOWARD E								
ADULT	8.3E-03	9.1E-04	5.3E-03	1.1E-02	4.0E-03	1.1E-03	1.8E-03	0.0E+00
TEEN	7.2E-03	1.0E-03	8.2E-03	1.6E-02	5.8E-03	1.1E-03	2.7E-03	0.0E+00
CHILD	5.9E-03	1.4E-03	1.9E-02	2.6E-02	9.0E-03	1.8E-03	4.1E-03	0.0E+00
INFNT	0.0E+00	0.0E+00	0.0E+00	0.0E+00	0.0E+00	0.0E+00	0.0E+00	0.0E+00
MEAT PATHWAY, DIST GP= 1, 6810. METERS WINDS TOWARD E								
ADULT	8.6E-05	1.3E-05	5.1E-05	1.1E-04	4.4E-05	1.4E-05	2.2E-05	0.0E+00
TEEN	4.0E-05	8.0E-06	4.2E-05	8.4E-05	3.2E-05	8.4E-06	1.7E-05	0.0E+00
CHILD	2.7E-05	9.0E-06	7.5E-05	1.1E-04	3.9E-05	1.1E-05	2.0E-05	0.0E+00
INFNT	0.0E+00	0.0E+00	0.0E+00	0.0E+00	0.0E+00	0.0E+00	0.0E+00	0.0E+00
COW PATHWAY, DIST GP= 1, 4091. METERS WINDS TOWARD E								
ADULT	1.7E-03	1.0E-04	1.1E-03	2.2E-03	7.7E-04	2.8E-04	3.0E-04	0.0E+00
TEEN	1.7E-03	1.3E-04	2.0E-03	3.8E-03	1.3E-03	4.4E-04	5.5E-04	0.0E+00
CHILD	1.3E-03	1.6E-04	4.7E-03	6.3E-03	2.1E-03	8.9E-04	8.3E-04	0.0E+00
INFNT	1.2E-03	2.3E-04	7.6E-03	1.2E-02	3.2E-03	2.0E-03	1.4E-03	0.0E+00
GOAT PATHWAY, DIST GP= 1, 4091. METERS WINDS TOWARD E								
ADULT	5.1E-03	2.5E-04	3.4E-03	6.6E-03	2.3E-03	3.9E-04	8.3E-04	0.0E+00
TEEN	4.9E-03	3.1E-04	6.0E-03	1.1E-02	3.8E-03	6.0E-04	1.6E-03	0.0E+00
CHILD	3.7E-03	3.7E-04	1.4E-02	1.9E-02	6.1E-03	1.2E-03	2.4E-03	0.0E+00
INFNT	3.5E-03	5.0E-04	2.3E-02	3.5E-02	9.5E-03	2.6E-03	4.1E-03	0.0E+00
INHAL PATHWAY, DIST GP= 1, 1716. METERS WINDS TOWARD E								
ADULT	4.6E-04	4.0E-04	4.2E-05	4.8E-04	4.3E-04	5.8E-04	4.1E-04	0.0E+00
TEEN	4.5E-04	4.1E-04	5.8E-05	5.1E-04	4.4E-04	6.4E-04	4.2E-04	0.0E+00
CHILD	3.8E-04	3.6E-04	7.7E-05	4.5E-04	3.9E-04	6.6E-04	3.7E-04	0.0E+00
INFNT	2.1E-04	2.1E-04	4.7E-05	2.7E-04	2.3E-04	4.9E-04	2.1E-04	0.0E+00
SUBTOTALS (NO PLUME)								
ADULT	2.4E-02	9.6E-03	1.8E-02	2.8E-02	1.5E-02	1.0E-02	1.1E-02	9.3E-03
TEEN	2.2E-02	9.9E-03	2.4E-02	4.0E-02	1.9E-02	1.1E-02	1.3E-02	9.3E-03
CHILD	1.9E-02	1.0E-02	4.6E-02	5.9E-02	2.6E-02	1.2E-02	1.6E-02	9.3E-03
INFNT	1.3E-02	8.9E-03	3.8E-02	5.5E-02	2.1E-02	1.3E-02	1.4E-02	9.3E-03
TOTALS								
ADULT	2.4E-02	9.9E-03	1.8E-02	2.8E-02	1.6E-02	1.1E-02	1.2E-02	9.9E-03
TEEN	2.3E-02	1.0E-02	2.5E-02	4.0E-02	2.0E-02	1.1E-02	1.4E-02	9.9E-03
CHILD	2.0E-02	1.1E-02	4.6E-02	6.0E-02	2.6E-02	1.3E-02	1.6E-02	9.9E-03
INFNT	1.3E-02	9.2E-03	3.9E-02	5.6E-02	2.1E-02	1.3E-02	1.4E-02	9.9E-03

INDIVIDUAL DOSES(MREM) DUE TO GASEOUS EFFLUENT
FOR DATES 9610 1 1 THRU 96123124

	T.BODY	GI-TRCT	BONE	LIVER	KIDNEY	THYRD	LUNG	SKIN
PLUME PATHWAY, DIST GP= 1, 1643. METERS WINDS TOWARD ESE								
ADULT	2.7E-04	2.7E-04	2.7E-04	2.7E-04	2.7E-04	2.7E-04	2.8E-04	1.1E-03
TEEN	2.7E-04	2.7E-04	2.7E-04	2.7E-04	2.7E-04	2.7E-04	2.8E-04	1.1E-03
CHILD	2.7E-04	2.7E-04	2.7E-04	2.7E-04	2.7E-04	2.7E-04	2.8E-04	1.1E-03
INFNT	2.7E-04	2.7E-04	2.7E-04	2.7E-04	2.7E-04	2.7E-04	2.8E-04	1.1E-03
GROUND PATHWAY, DIST GP= 1, 1643. METERS WINDS TOWARD ESE								
ADULT	3.8E-03	3.8E-03	3.8E-03	3.8E-03	3.8E-03	3.8E-03	3.8E-03	4.4E-03
TEEN	3.8E-03	3.8E-03	3.8E-03	3.8E-03	3.8E-03	3.8E-03	3.8E-03	4.4E-03
CHILD	3.8E-03	3.8E-03	3.8E-03	3.8E-03	3.8E-03	3.8E-03	3.8E-03	4.4E-03
INFNT	3.8E-03	3.8E-03	3.8E-03	3.8E-03	3.8E-03	3.8E-03	3.8E-03	4.4E-03
VEGET PATHWAY, DIST GP= 1, 1628. METERS WINDS TOWARD ESE								
ADULT	4.2E-03	7.2E-04	2.5E-03	5.4E-03	2.2E-03	8.1E-04	1.2E-03	0.0E+00
TEEN	3.8E-03	8.2E-04	3.9E-03	7.9E-03	3.1E-03	8.8E-04	1.6E-03	0.0E+00
CHILD	3.3E-03	1.2E-03	9.0E-03	1.3E-02	4.8E-03	1.4E-03	2.4E-03	0.0E+00
INFNT	0.0E+00	0.0E+00	0.0E+00	0.0E+00	0.0E+00	0.0E+00	0.0E+00	0.0E+00
MEAT PATHWAY, DIST GP= 1, 2434. METERS WINDS TOWARD ESE								
ADULT	2.4E-04	5.3E-05	1.3E-04	3.0E-04	1.3E-04	5.4E-05	7.6E-05	0.0E+00
TEEN	1.1E-04	3.2E-05	1.1E-04	2.3E-04	9.4E-05	3.3E-05	5.4E-05	0.0E+00
CHILD	8.2E-05	3.6E-05	1.9E-04	2.9E-04	1.1E-04	4.1E-05	6.4E-05	0.0E+00
INFNT	0.0E+00	0.0E+00	0.0E+00	0.0E+00	0.0E+00	0.0E+00	0.0E+00	0.0E+00
COW PATHWAY, DIST GP= 1, 4091. METERS WINDS TOWARD ESE								
ADULT	7.8E-04	6.8E-05	5.0E-04	1.0E-03	3.6E-04	1.5E-04	1.5E-04	0.0E+00
TEEN	7.7E-04	8.8E-05	8.9E-04	1.7E-03	6.0E-04	2.3E-04	2.7E-04	0.0E+00
CHILD	6.2E-04	1.2E-04	2.1E-03	2.8E-03	9.7E-04	4.5E-04	4.1E-04	0.0E+00
INFNT	6.2E-04	1.7E-04	3.3E-03	5.3E-03	1.5E-03	1.0E-03	7.0E-04	0.0E+00
GOAT PATHWAY, DIST GP= 1, 4091. METERS WINDS TOWARD ESE								
ADULT	2.3E-03	1.6E-04	1.5E-03	3.0E-03	1.0E-03	2.3E-04	4.2E-04	0.0E+00
TEEN	2.2E-03	2.0E-04	2.7E-03	5.1E-03	1.7E-03	3.3E-04	7.5E-04	0.0E+00
CHILD	1.8E-03	2.6E-04	6.3E-03	8.4E-03	2.8E-03	6.3E-04	1.1E-03	0.0E+00
INFNT	1.7E-03	3.7E-04	1.0E-02	1.6E-02	4.3E-03	1.3E-03	2.0E-03	0.0E+00
INHAL PATHWAY, DIST GP= 1, 1643. METERS WINDS TOWARD ESE								
ADULT	4.0E-04	3.5E-04	3.4E-05	4.1E-04	3.7E-04	4.8E-04	3.5E-04	0.0E+00
TEEN	3.9E-04	3.5E-04	4.6E-05	4.3E-04	3.8E-04	5.3E-04	3.6E-04	0.0E+00
CHILD	3.3E-04	3.1E-04	6.1E-05	3.9E-04	3.4E-04	5.5E-04	3.2E-04	0.0E+00
INFNT	1.8E-04	1.8E-04	3.7E-05	2.3E-04	1.9E-04	4.0E-04	1.8E-04	0.0E+00
SUBTOTALS (NO PLUME)								
ADULT	1.2E-02	5.1E-03	8.4E-03	1.4E-02	7.9E-03	5.5E-03	5.9E-03	4.4E-03
TEEN	1.1E-02	5.3E-03	1.1E-02	1.9E-02	9.7E-03	5.8E-03	6.8E-03	4.4E-03
CHILD	9.8E-03	5.7E-03	2.1E-02	2.8E-02	1.3E-02	6.8E-03	8.1E-03	4.4E-03
INFNT	6.3E-03	4.5E-03	1.7E-02	2.5E-02	9.8E-03	6.5E-03	6.6E-03	4.4E-03
TOTALS								
ADULT	1.2E-02	5.4E-03	8.7E-03	1.4E-02	8.1E-03	5.8E-03	6.2E-03	5.5E-03
TEEN	1.1E-02	5.5E-03	1.2E-02	1.9E-02	9.9E-03	6.0E-03	7.1E-03	5.5E-03
CHILD	1.0E-02	6.0E-03	2.2E-02	2.9E-02	1.3E-02	7.1E-03	8.4E-03	5.5E-03
INFNT	6.5E-03	4.8E-03	1.7E-02	2.5E-02	1.0E-02	6.8E-03	6.9E-03	5.5E-03

INDIVIDUAL DOSES(MREM) DUE TO GASEOUS EFFLUENT
FOR DATES 9610 1 1 THRU 96123124

	T.BODY	GI-TRCT	BONE	LIVER	KIDNEY	THYRD	LUNG	SKIN
PLUME PATHWAY, DIST GP= 1, 1136. METERS WINDS TOWARD SE								
ADULT	4.8E-04	4.8E-04	4.8E-04	4.8E-04	4.8E-04	4.8E-04	4.9E-04	1.0E-03
TEEN	4.8E-04	4.8E-04	4.8E-04	4.8E-04	4.8E-04	4.8E-04	4.9E-04	1.0E-03
CHILD	4.8E-04	4.8E-04	4.8E-04	4.8E-04	4.8E-04	4.8E-04	4.9E-04	1.0E-03
INFNT	4.8E-04	4.8E-04	4.8E-04	4.8E-04	4.8E-04	4.8E-04	4.9E-04	1.0E-03
GROUND PATHWAY, DIST GP= 1, 1136. METERS WINDS TOWARD SE								
ADULT	6.0E-03	6.0E-03	6.0E-03	6.0E-03	6.0E-03	6.0E-03	6.0E-03	7.1E-03
TEEN	6.0E-03	6.0E-03	6.0E-03	6.0E-03	6.0E-03	6.0E-03	6.0E-03	7.1E-03
CHILD	6.0E-03	6.0E-03	6.0E-03	6.0E-03	6.0E-03	6.0E-03	6.0E-03	7.1E-03
INFNT	6.0E-03	6.0E-03	6.0E-03	6.0E-03	6.0E-03	6.0E-03	6.0E-03	7.1E-03
VEGET PATHWAY, DIST GP= 1, 914. METERS WINDS TOWARD SE								
ADULT	1.0E-02	2.2E-03	5.7E-03	1.3E-02	5.6E-03	2.4E-03	3.2E-03	0.0E+00
TEEN	9.2E-03	2.5E-03	8.8E-03	1.9E-02	7.7E-03	2.7E-03	4.4E-03	0.0E+00
CHILD	8.6E-03	3.8E-03	2.0E-02	3.0E-02	1.2E-02	4.2E-03	6.6E-03	0.0E+00
INFNT	0.0E+00	0.0E+00	0.0E+00	0.0E+00	0.0E+00	0.0E+00	0.0E+00	0.0E+00
MEAT PATHWAY, DIST GP= 1, 4354. METERS WINDS TOWARD SE								
ADULT	9.1E-05	2.7E-05	4.5E-05	1.1E-04	5.4E-05	2.7E-05	3.5E-05	0.0E+00
TEEN	4.4E-05	1.6E-05	3.7E-05	8.3E-05	3.7E-05	1.6E-05	2.4E-05	0.0E+00
CHILD	3.4E-05	1.9E-05	6.6E-05	1.0E-04	4.5E-05	2.0E-05	2.8E-05	0.0E+00
INFNT	0.0E+00	0.0E+00	0.0E+00	0.0E+00	0.0E+00	0.0E+00	0.0E+00	0.0E+00
COW PATHWAY, DIST GP= 1, 4091. METERS WINDS TOWARD SE								
ADULT	7.0E-04	8.1E-05	4.3E-04	9.0E-04	3.4E-04	1.5E-04	1.6E-04	0.0E+00
TEEN	7.0E-04	1.0E-04	7.7E-04	1.5E-03	5.5E-04	2.2E-04	2.6E-04	0.0E+00
CHILD	5.8E-04	1.5E-04	1.8E-03	2.5E-03	8.8E-04	4.3E-04	4.0E-04	0.0E+00
INFNT	6.0E-04	2.2E-04	2.9E-03	4.7E-03	1.4E-03	9.2E-04	6.8E-04	0.0E+00
GOAT PATHWAY, DIST GP= 1, 4091. METERS WINDS TOWARD SE								
ADULT	2.0E-03	1.8E-04	1.3E-03	2.6E-03	9.5E-04	2.4E-04	4.1E-04	0.0E+00
TEEN	2.0E-03	2.3E-04	2.3E-03	4.5E-03	1.6E-03	3.4E-04	7.1E-04	0.0E+00
CHILD	1.6E-03	3.2E-04	5.4E-03	7.4E-03	2.5E-03	6.3E-04	1.1E-03	0.0E+00
INFNT	1.6E-03	4.6E-04	8.7E-03	1.4E-02	3.9E-03	1.3E-03	1.8E-03	0.0E+00
INHAL PATHWAY, DIST GP= 1, 1136. METERS WINDS TOWARD SE								
ADULT	8.8E-04	8.1E-04	4.9E-05	8.9E-04	8.4E-04	1.0E-03	8.1E-04	0.0E+00
TEEN	8.6E-04	8.1E-04	6.7E-05	9.3E-04	8.5E-04	1.1E-03	8.2E-04	0.0E+00
CHILD	7.4E-04	7.2E-04	8.8E-05	8.3E-04	7.6E-04	1.1E-03	7.3E-04	0.0E+00
INFNT	4.2E-04	4.1E-04	5.4E-05	4.9E-04	4.3E-04	7.5E-04	4.2E-04	0.0E+00
SUBTOTALS (NO PLUME)								
ADULT	2.0E-02	9.4E-03	1.4E-02	2.3E-02	1.4E-02	9.9E-03	1.1E-02	7.1E-03
TEEN	1.9E-02	9.8E-03	1.8E-02	3.2E-02	1.7E-02	1.0E-02	1.2E-02	7.1E-03
CHILD	1.8E-02	1.1E-02	3.4E-02	4.7E-02	2.2E-02	1.2E-02	1.5E-02	7.1E-03
INFNT	8.7E-03	7.1E-03	1.8E-02	2.5E-02	1.2E-02	9.0E-03	9.0E-03	7.1E-03
TOTALS								
ADULT	2.0E-02	9.9E-03	1.4E-02	2.4E-02	1.4E-02	1.0E-02	1.1E-02	8.1E-03
TEEN	1.9E-02	1.0E-02	1.9E-02	3.2E-02	1.7E-02	1.1E-02	1.3E-02	8.1E-03
CHILD	1.8E-02	1.1E-02	3.4E-02	4.7E-02	2.3E-02	1.3E-02	1.5E-02	8.1E-03
INFNT	9.2E-03	7.6E-03	1.8E-02	2.5E-02	1.2E-02	9.5E-03	9.5E-03	8.1E-03

INDIVIDUAL DOSES(MREM) DUE TO GASEOUS EFFLUENT
FOR DATES 9610 1 1 THRU 96123124

	T.BODY	GI-TRCT	BONE	LIVER	KIDNEY	THYRD	LUNG	SKIN
PLUME PATHWAY, DIST GP= 1, 1507. METERS WINDS TOWARD SSE								
ADULT	2.5E-04	2.5E-04	2.5E-04	2.5E-04	2.5E-04	2.5E-04	2.5E-04	5.3E-04
TEEN	2.5E-04	2.5E-04	2.5E-04	2.5E-04	2.5E-04	2.5E-04	2.5E-04	5.3E-04
CHILD	2.5E-04	2.5E-04	2.5E-04	2.5E-04	2.5E-04	2.5E-04	2.5E-04	5.3E-04
INFNT	2.5E-04	2.5E-04	2.5E-04	2.5E-04	2.5E-04	2.5E-04	2.5E-04	5.3E-04
GROUND PATHWAY, DIST GP= 1, 1507. METERS WINDS TOWARD SSE								
ADULT	3.4E-03	3.4E-03	3.4E-03	3.4E-03	3.4E-03	3.4E-03	3.4E-03	3.9E-03
TEEN	3.4E-03	3.4E-03	3.4E-03	3.4E-03	3.4E-03	3.4E-03	3.4E-03	3.9E-03
CHILD	3.4E-03	3.4E-03	3.4E-03	3.4E-03	3.4E-03	3.4E-03	3.4E-03	3.9E-03
INFNT	3.4E-03	3.4E-03	3.4E-03	3.4E-03	3.4E-03	3.4E-03	3.4E-03	3.9E-03
VEGET PATHWAY, DIST GP= 1, 1093. METERS WINDS TOWARD SSE								
ADULT	6.3E-03	1.1E-03	3.7E-03	8.0E-03	3.3E-03	1.2E-03	1.7E-03	0.0E+00
TEEN	5.6E-03	1.3E-03	5.8E-03	1.2E-02	4.6E-03	1.3E-03	2.5E-03	0.0E+00
CHILD	5.0E-03	1.8E-03	1.3E-02	1.9E-02	7.2E-03	2.1E-03	3.7E-03	0.0E+00
INFNT	0.0E+00	0.0E+00	0.0E+00	0.0E+00	0.0E+00	0.0E+00	0.0E+00	0.0E+00
MEAT PATHWAY, DIST GP= 1, 1093. METERS WINDS TOWARD SSE								
ADULT	7.0E-04	1.5E-04	3.9E-04	8.7E-04	3.8E-04	1.6E-04	2.2E-04	0.0E+00
TEEN	3.3E-04	9.1E-05	3.1E-04	6.7E-04	2.7E-04	9.6E-05	1.6E-04	0.0E+00
CHILD	2.4E-04	1.1E-04	5.6E-04	8.4E-04	3.3E-04	1.2E-04	1.8E-04	0.0E+00
INFNT	0.0E+00	0.0E+00	0.0E+00	0.0E+00	0.0E+00	0.0E+00	0.0E+00	0.0E+00
COW PATHWAY, DIST GP= 1, 4091. METERS WINDS TOWARD SSE								
ADULT	6.0E-04	5.6E-05	3.9E-04	7.8E-04	2.8E-04	1.2E-04	1.2E-04	0.0E+00
TEEN	6.0E-04	7.2E-05	6.8E-04	1.3E-03	4.7E-04	1.9E-04	2.1E-04	0.0E+00
CHILD	4.8E-04	1.0E-04	1.6E-03	2.2E-03	7.5E-04	3.7E-04	3.3E-04	0.0E+00
INFNT	4.9E-04	1.4E-04	2.6E-03	4.1E-03	1.2E-03	8.1E-04	5.5E-04	0.0E+00
GOAT PATHWAY, DIST GP= 1, 4091. METERS WINDS TOWARD SSE								
ADULT	1.8E-03	1.3E-04	1.2E-03	2.3E-03	8.1E-04	1.9E-04	3.3E-04	0.0E+00
TEEN	1.7E-03	1.6E-04	2.0E-03	3.9E-03	1.4E-03	2.7E-04	5.9E-04	0.0E+00
CHILD	1.4E-03	2.1E-04	4.8E-03	6.5E-03	2.2E-03	5.1E-04	8.9E-04	0.0E+00
INFNT	1.3E-03	3.1E-04	7.7E-03	1.2E-02	3.4E-03	1.1E-03	1.5E-03	0.0E+00
INHAL PATHWAY, DIST GP= 1, 1507. METERS WINDS TOWARD SSE								
ADULT	3.7E-04	3.3E-04	2.8E-05	3.8E-04	3.5E-04	4.4E-04	3.3E-04	0.0E+00
TEEN	3.6E-04	3.3E-04	3.9E-05	4.0E-04	3.5E-04	4.8E-04	3.4E-04	0.0E+00
CHILD	3.0E-04	2.9E-04	5.1E-05	3.6E-04	3.1E-04	4.9E-04	3.0E-04	0.0E+00
INFNT	1.7E-04	1.7E-04	3.1E-05	2.1E-04	1.8E-04	3.5E-04	1.7E-04	0.0E+00
SUBTOTALS (NO PLUME)								
ADULT	1.3E-02	5.1E-03	9.1E-03	1.6E-02	8.5E-03	5.5E-03	6.1E-03	3.9E-03
TEEN	1.2E-02	5.3E-03	1.2E-02	2.2E-02	1.0E-02	5.7E-03	7.1E-03	3.9E-03
CHILD	1.1E-02	5.9E-03	2.4E-02	3.2E-02	1.4E-02	6.9E-03	8.7E-03	3.9E-03
INFNT	5.3E-03	4.0E-03	1.4E-02	2.0E-02	8.0E-03	5.6E-03	5.6E-03	3.9E-03
TOTALS								
ADULT	1.3E-02	5.4E-03	9.3E-03	1.6E-02	8.7E-03	5.8E-03	6.4E-03	4.4E-03
TEEN	1.2E-02	5.5E-03	1.3E-02	2.2E-02	1.1E-02	6.0E-03	7.4E-03	4.4E-03
CHILD	1.1E-02	6.1E-03	2.4E-02	3.3E-02	1.4E-02	7.2E-03	9.0E-03	4.4E-03
INFNT	5.6E-03	4.2E-03	1.4E-02	2.0E-02	8.3E-03	5.9E-03	5.9E-03	4.4E-03

INDIVIDUAL DOSES(MREM) DUE TO GASEOUS EFFLUENT
FOR DATES 9610 1 1 THRU 96123124

	T.BODY	GI-TRCT	BONE	LIVER	KIDNEY	THYRD	LUNG	SKIN
PLUME PATHWAY, DIST GP= 1, 1026. METERS WINDS TOWARD S								
ADULT	4.0E-04	4.0E-04	4.0E-04	4.0E-04	4.0E-04	4.0E-04	4.1E-04	8.6E-04
TEEN	4.0E-04	4.0E-04	4.0E-04	4.0E-04	4.0E-04	4.0E-04	4.1E-04	8.6E-04
CHILD	4.0E-04	4.0E-04	4.0E-04	4.0E-04	4.0E-04	4.0E-04	4.1E-04	8.6E-04
INFNT	4.0E-04	4.0E-04	4.0E-04	4.0E-04	4.0E-04	4.0E-04	4.1E-04	8.6E-04
GROUND PATHWAY, DIST GP= 1, 1026. METERS WINDS TOWARD S								
ADULT	9.1E-03	9.1E-03	9.1E-03	9.1E-03	9.1E-03	9.1E-03	9.1E-03	1.1E-02
TEEN	9.1E-03	9.1E-03	9.1E-03	9.1E-03	9.1E-03	9.1E-03	9.1E-03	1.1E-02
CHILD	9.1E-03	9.1E-03	9.1E-03	9.1E-03	9.1E-03	9.1E-03	9.1E-03	1.1E-02
INFNT	9.1E-03	9.1E-03	9.1E-03	9.1E-03	9.1E-03	9.1E-03	9.1E-03	1.1E-02
VEGET PATHWAY, DIST GP= 1, 863. METERS WINDS TOWARD S								
ADULT	1.2E-02	1.2E-03	7.9E-03	1.6E-02	5.8E-03	1.5E-03	2.5E-03	0.0E+00
TEEN	1.1E-02	1.3E-03	1.2E-02	2.4E-02	8.4E-03	1.5E-03	3.9E-03	0.0E+00
CHILD	8.4E-03	1.8E-03	2.8E-02	3.8E-02	1.3E-02	2.4E-03	5.8E-03	0.0E+00
INFNT	0.0E+00	0.0E+00	0.0E+00	0.0E+00	0.0E+00	0.0E+00	0.0E+00	0.0E+00
MEAT PATHWAY, DIST GP= 1, 6115. METERS WINDS TOWARD S								
ADULT	4.9E-05	7.0E-06	3.0E-05	6.3E-05	2.5E-05	7.5E-06	1.2E-05	0.0E+00
TEEN	2.3E-05	4.2E-06	2.4E-05	4.9E-05	1.8E-05	4.7E-06	9.2E-06	0.0E+00
CHILD	1.5E-05	4.6E-06	4.4E-05	6.1E-05	2.2E-05	6.0E-06	1.1E-05	0.0E+00
INFNT	0.0E+00	0.0E+00	0.0E+00	0.0E+00	0.0E+00	0.0E+00	0.0E+00	0.0E+00
COW PATHWAY, DIST GP= 1, 4091. METERS WINDS TOWARD S								
ADULT	8.2E-04	4.6E-05	5.5E-04	1.1E-03	3.7E-04	1.5E-04	1.4E-04	0.0E+00
TEEN	8.0E-04	5.9E-05	9.7E-04	1.8E-03	6.2E-04	2.4E-04	2.6E-04	0.0E+00
CHILD	6.2E-04	7.3E-05	2.3E-03	3.0E-03	1.0E-03	4.8E-04	3.9E-04	0.0E+00
INFNT	5.8E-04	1.0E-04	3.7E-03	5.7E-03	1.5E-03	1.1E-03	6.8E-04	0.0E+00
GOAT PATHWAY, DIST GP= 1, 4091. METERS WINDS TOWARD S								
ADULT	2.4E-03	1.1E-04	1.6E-03	3.2E-03	1.1E-03	2.0E-04	4.0E-04	0.0E+00
TEEN	2.4E-03	1.4E-04	2.9E-03	5.5E-03	1.8E-03	3.1E-04	7.5E-04	0.0E+00
CHILD	1.8E-03	1.6E-04	6.9E-03	9.1E-03	2.9E-03	6.2E-04	1.1E-03	0.0E+00
INFNT	1.7E-03	2.2E-04	1.1E-02	1.7E-02	4.5E-03	1.4E-03	2.0E-03	0.0E+00
INHAL PATHWAY, DIST GP= 1, 1026. METERS WINDS TOWARD S								
ADULT	4.6E-04	3.8E-04	5.5E-05	4.8E-04	4.2E-04	6.0E-04	3.9E-04	0.0E+00
TEEN	4.4E-04	3.9E-04	7.6E-05	5.2E-04	4.3E-04	6.8E-04	4.0E-04	0.0E+00
CHILD	3.7E-04	3.4E-04	1.0E-04	4.6E-04	3.8E-04	7.2E-04	3.6E-04	0.0E+00
INFNT	2.0E-04	2.0E-04	6.1E-05	2.8E-04	2.2E-04	5.5E-04	2.1E-04	0.0E+00
SUBTOTALS (NO PLUME)								
ADULT	2.5E-02	1.1E-02	1.9E-02	3.0E-02	1.7E-02	1.2E-02	1.3E-02	1.1E-02
TEEN	2.3E-02	1.1E-02	2.5E-02	4.1E-02	2.0E-02	1.2E-02	1.4E-02	1.1E-02
CHILD	2.0E-02	1.1E-02	4.7E-02	6.0E-02	2.7E-02	1.3E-02	1.7E-02	1.1E-02
INFNT	1.2E-02	9.6E-03	2.4E-02	3.2E-02	1.5E-02	1.2E-02	1.2E-02	1.1E-02
TOTALS								
ADULT	2.5E-02	1.1E-02	2.0E-02	3.0E-02	1.7E-02	1.2E-02	1.3E-02	1.1E-02
TEEN	2.4E-02	1.1E-02	2.6E-02	4.1E-02	2.1E-02	1.2E-02	1.5E-02	1.1E-02
CHILD	2.1E-02	1.2E-02	4.7E-02	6.0E-02	2.7E-02	1.4E-02	1.7E-02	1.1E-02
INFNT	1.2E-02	1.0E-02	2.4E-02	3.2E-02	1.6E-02	1.3E-02	1.2E-02	1.1E-02

INDIVIDUAL DOSES(MREM) DUE TO GASEOUS EFFLUENT
FOR DATES 9610 1 1 THRU 96123124

	T.BODY	GI-TRCT	BONE	LIVER	KIDNEY	THYRD	LUNG	SKIN
PLUME PATHWAY, DIST GP= 1, 942. METERS WINDS TOWARD SSW								
ADULT	2.6E-04	2.6E-04	2.6E-04	2.6E-04	2.6E-04	2.6E-04	2.7E-04	5.8E-04
TEEN	2.6E-04	2.6E-04	2.6E-04	2.6E-04	2.6E-04	2.6E-04	2.7E-04	5.8E-04
CHILD	2.6E-04	2.6E-04	2.6E-04	2.6E-04	2.6E-04	2.6E-04	2.7E-04	5.8E-04
INFNT	2.6E-04	2.6E-04	2.6E-04	2.6E-04	2.6E-04	2.6E-04	2.7E-04	5.8E-04
GROUND PATHWAY, DIST GP= 1, 942. METERS WINDS TOWARD SSW								
ADULT	4.6E-03	4.6E-03	4.6E-03	4.6E-03	4.6E-03	4.6E-03	4.6E-03	5.3E-03
TEEN	4.6E-03	4.6E-03	4.6E-03	4.6E-03	4.6E-03	4.6E-03	4.6E-03	5.3E-03
CHILD	4.6E-03	4.6E-03	4.6E-03	4.6E-03	4.6E-03	4.6E-03	4.6E-03	5.3E-03
INFNT	4.6E-03	4.6E-03	4.6E-03	4.6E-03	4.6E-03	4.6E-03	4.6E-03	5.3E-03
VEGET PATHWAY, DIST GP= 1, 770. METERS WINDS TOWARD SSW								
ADULT	6.6E-03	7.7E-04	4.2E-03	8.5E-03	3.2E-03	9.4E-04	1.5E-03	0.0E+00
TEEN	5.8E-03	8.8E-04	6.5E-03	1.3E-02	4.6E-03	9.8E-04	2.2E-03	0.0E+00
CHILD	4.7E-03	1.2E-03	1.5E-02	2.1E-02	7.3E-03	1.5E-03	3.3E-03	0.0E+00
INFNT	0.0E+00	0.0E+00	0.0E+00	0.0E+00	0.0E+00	0.0E+00	0.0E+00	0.0E+00
MEAT PATHWAY, DIST GP= 1, 8045. METERS WINDS TOWARD SSW								
ADULT	1.4E-05	2.7E-06	8.1E-06	1.8E-05	7.5E-06	2.8E-06	4.1E-06	0.0E+00
TEEN	6.6E-06	1.6E-06	6.6E-06	1.4E-05	5.4E-06	1.7E-06	3.0E-06	0.0E+00
CHILD	4.6E-06	1.8E-06	1.2E-05	1.7E-05	6.6E-06	2.2E-06	3.5E-06	0.0E+00
INFNT	0.0E+00	0.0E+00	0.0E+00	0.0E+00	0.0E+00	0.0E+00	0.0E+00	0.0E+00
COW PATHWAY, DIST GP= 1, 4091. METERS WINDS TOWARD SSW								
ADULT	3.6E-04	2.4E-05	2.4E-04	4.7E-04	1.7E-04	6.9E-05	6.5E-05	0.0E+00
TEEN	3.6E-04	3.1E-05	4.3E-04	8.1E-04	2.8E-04	1.1E-04	1.2E-04	0.0E+00
CHILD	2.8E-04	3.9E-05	1.0E-03	1.3E-03	4.4E-04	2.1E-04	1.8E-04	0.0E+00
INFNT	2.7E-04	5.5E-05	1.6E-03	2.5E-03	6.9E-04	4.9E-04	3.1E-04	0.0E+00
GOAT PATHWAY, DIST GP= 1, 4091. METERS WINDS TOWARD SSW								
ADULT	1.1E-03	5.6E-05	7.2E-04	1.4E-03	4.8E-04	9.6E-05	1.8E-04	0.0E+00
TEEN	1.0E-03	7.2E-05	1.3E-03	2.4E-03	8.1E-04	1.4E-04	3.4E-04	0.0E+00
CHILD	8.0E-04	8.7E-05	3.0E-03	4.0E-03	1.3E-03	2.8E-04	5.1E-04	0.0E+00
INFNT	7.6E-04	1.2E-04	4.8E-03	7.4E-03	2.0E-03	6.3E-04	8.8E-04	0.0E+00
INHAL PATHWAY, DIST GP= 1, 942. METERS WINDS TOWARD SSW								
ADULT	3.1E-04	2.5E-04	4.3E-05	3.3E-04	2.8E-04	4.2E-04	2.6E-04	0.0E+00
TEEN	3.0E-04	2.5E-04	5.8E-05	3.6E-04	2.9E-04	4.8E-04	2.7E-04	0.0E+00
CHILD	2.4E-04	2.2E-04	7.7E-05	3.2E-04	2.6E-04	5.2E-04	2.4E-04	0.0E+00
INFNT	1.4E-04	1.3E-04	4.7E-05	2.0E-04	1.5E-04	4.0E-04	1.4E-04	0.0E+00
SUBTOTALS (NO PLUME)								
ADULT	1.3E-02	5.7E-03	9.8E-03	1.5E-02	8.7E-03	6.1E-03	6.6E-03	5.3E-03
TEEN	1.2E-02	5.8E-03	1.3E-02	2.1E-02	1.1E-02	6.3E-03	7.5E-03	5.3E-03
CHILD	1.1E-02	6.2E-03	2.4E-02	3.1E-02	1.4E-02	7.1E-03	8.8E-03	5.3E-03
INFNT	5.7E-03	4.9E-03	1.1E-02	1.5E-02	7.4E-03	6.1E-03	5.9E-03	5.3E-03
TOTALS								
ADULT	1.3E-02	5.9E-03	1.0E-02	1.6E-02	9.0E-03	6.4E-03	6.8E-03	5.9E-03
TEEN	1.2E-02	6.1E-03	1.3E-02	2.1E-02	1.1E-02	6.6E-03	7.8E-03	5.9E-03
CHILD	1.1E-02	6.4E-03	2.4E-02	3.1E-02	1.4E-02	7.4E-03	9.1E-03	5.9E-03
INFNT	6.0E-03	5.1E-03	1.1E-02	1.5E-02	7.7E-03	6.4E-03	6.2E-03	5.9E-03

Joint Frequency Tables
1st Quarter 1996

HOURS AT EACH WIND SPEED AND DIRECTION

PERIOD OF RECORD = 96010101-96033124
STABILITY CLASS: A DT/DZ
ELEVATION: SPEED:SPD10M DIRECTION:DIR10M LAPSE:DT60M

WIND DIRECTION	WIND SPEED(MPH) 1-3	4-7	8-12	13-18	19-24	>24	TOTAL
N	0	7	18	6	0	0	31
NNE	0	5	8	0	0	0	13
NE	0	10	10	1	0	0	21
ENE	0	12	3	0	0	0	15
E	1	18	6	0	0	0	25
ESE	0	6	6	0	0	0	12
SE	2	15	10	0	0	0	27
SSE	0	15	18	2	0	0	35
S	0	13	16	3	0	0	32
SSW	0	2	3	5	0	0	10
SW	1	5	5	0	0	0	11
WSW	0	12	27	10	1	0	50
W	0	8	22	7	0	0	37
WNW	0	14	11	0	0	0	25
NW	0	18	11	0	0	0	29
NNW	2	17	11	0	0	0	30
TOTAL	6	177	185	34	1	0	403

PERIODS OF CALM(HOURS): 0
VARIABLE DIRECTION 0
HOURS OF MISSING DATA: 17

Joint Frequency Tables
1st Quarter 1996

HOURS AT EACH WIND SPEED AND DIRECTION

PERIOD OF RECORD = 96010101-96033124
STABILITY CLASS: B DT/DZ
ELEVATION: SPEED:SPD10M DIRECTION:DIR10M LAPSE:DT60M

WIND DIRECTION	WIND SPEED(MPH) 1-3	4-7	8-12	13-18	19-24	>24	TOTAL
N	0	0	4	5	0	0	9
NNE	0	2	3	0	0	0	5
NE	0	2	5	2	0	0	9
ENE	0	2	1	0	0	0	3
E	0	12	2	0	0	0	14
ESE	0	7	3	0	0	0	10
SE	0	8	7	0	0	0	15
SSE	0	4	2	1	0	0	7
S	2	1	6	1	0	0	10
SSW	0	1	1	2	0	0	4
SW	0	3	5	2	1	0	11
WSW	0	2	8	4	1	0	15
W	0	4	3	1	0	0	8
WNW	1	6	6	0	0	0	13
NW	0	6	1	0	0	0	7
NNW	2	2	11	0	0	0	15
TOTAL	5	62	68	18	2	0	155

PERIODS OF CALM(HOURS): 0
VARIABLE DIRECTION 0
HOURS OF MISSING DATA: 17

Joint Frequency Tables
1st Quarter 1996

HOURS AT EACH WIND SPEED AND DIRECTION

PERIOD OF RECORD = 96010101-96033124
STABILITY CLASS: C DT/DZ
ELEVATION: SPEED:SPD10M DIRECTION:DIR10M LAPSE:DT60M

WIND DIRECTION	WIND SPEED (MPH) 1-3	4-7	8-12	13-18	19-24	>24	TOTAL
N	3	3	8	3	0	0	17
NNE	1	1	3	0	0	0	5
NE	0	5	8	4	0	0	17
ENE	0	7	5	0	0	0	12
E	0	9	1	0	0	0	10
ESE	1	8	1	0	0	0	10
SE	5	4	5	1	0	0	15
SSE	2	7	1	0	0	0	10
S	2	5	7	0	0	0	14
SSW	0	4	2	2	0	0	8
SW	0	5	6	4	2	0	17
WSW	1	9	10	8	0	0	28
W	3	5	7	10	2	0	27
WNW	1	4	9	8	0	0	22
NW	0	11	8	0	0	0	19
NNW	3	7	10	2	0	0	22
TOTAL	22	94	91	42	4	0	253

PERIODS OF CALM (HOURS): 0
VARIABLE DIRECTION 0
HOURS OF MISSING DATA: 17

Joint Frequency Tables
1st Quarter 1996

HOURS AT EACH WIND SPEED AND DIRECTION

PERIOD OF RECORD = 96010101-96033124
STABILITY CLASS: D DT/DZ
ELEVATION: SPEED:SPD10M DIRECTION:DIR10M LAPSE:DT60M

WIND DIRECTION	WIND SPEED (MPH) 1-3	4-7	8-12	13-18	19-24	>24	TOTAL
N	6	25	38	21	0	0	90
NNE	3	11	18	0	0	0	32
NE	3	17	31	2	0	0	53
ENE	10	17	1	0	0	0	28
E	7	12	3	0	0	0	22
ESE	3	14	4	0	0	0	21
SE	8	14	29	2	0	0	53
SSE	1	34	13	12	0	0	60
S	5	45	34	15	0	0	99
SSW	2	35	34	6	0	0	77
SW	1	15	21	10	1	0	48
WSW	1	16	34	17	3	0	71
W	1	14	49	21	0	0	85
WNW	1	23	31	4	0	0	59
NW	2	31	18	1	0	0	52
NNW	3	26	21	0	0	0	50
TOTAL	57	349	379	111	4	0	900

PERIODS OF CALM (HOURS): 0
VARIABLE DIRECTION 0
HOURS OF MISSING DATA: 17

Joint Frequency Tables
1st Quarter 1996

HOURS AT EACH WIND SPEED AND DIRECTION

PERIOD OF RECORD = 96010101-96033124
STABILITY CLASS: E DT/DZ
ELEVATION: SPEED:SPD10M DIRECTION:DIR10M LAPSE:DT60M

WIND DIRECTION	WIND SPEED(MPH) 1-3	4-7	8-12	13-18	19-24	>24	TOTAL
N	2	0	0	0	0	0	2
NNE	3	15	0	0	0	0	18
NE	7	18	1	0	0	0	26
ENE	10	11	0	0	0	0	21
E	12	15	0	0	0	0	27
ESE	16	19	0	0	0	0	35
SE	13	13	1	0	0	0	27
SSE	15	20	8	4	1	0	48
S	5	34	12	0	0	0	51
SSW	3	5	3	0	0	0	11
SW	3	9	7	0	0	0	19
WSW	4	3	0	0	0	0	7
W	1	9	1	0	0	0	11
WNW	1	6	0	0	0	0	7
NW	0	0	0	0	0	0	0
NNW	3	4	0	0	0	0	7
TOTAL	98	181	33	4	1	0	317

PERIODS OF CALM(HOURS): 0
VARIABLE DIRECTION 0
HOURS OF MISSING DATA: 17

Joint Frequency Tables
1st Quarter 1996

HOURS AT EACH WIND SPEED AND DIRECTION

PERIOD OF RECORD = 96010101-96033124
STABILITY CLASS: F DT/DZ
ELEVATION: SPEED:SPD10M DIRECTION:DIR10M LAPSE:DT60M

WIND DIRECTION	WIND SPEED(MPH) 1-3	4-7	8-12	13-18	19-24	>24	TOTAL
N	0	1	0	0	0	0	1
NNE	1	0	0	0	0	0	1
NE	1	3	0	0	0	0	4
ENE	4	3	0	0	0	0	7
E	1	4	0	0	0	0	5
ESE	5	3	0	0	0	0	8
SE	11	1	0	0	0	0	12
SSE	20	14	0	0	0	0	34
S	5	10	0	0	0	0	15
SSW	1	4	0	0	0	0	5
SW	3	0	0	0	0	0	3
WSW	2	0	0	0	0	0	2
W	1	1	0	0	0	0	2
WNW	0	0	0	0	0	0	0
NW	2	0	0	0	0	0	2
NNW	2	0	0	0	0	0	2
TOTAL	59	44	0	0	0	0	103

PERIODS OF CALM(HOURS): 0
VARIABLE DIRECTION 0
HOURS OF MISSING DATA: 17

Joint Frequency Tables
1st Quarter 1996

HOURS AT EACH WIND SPEED AND DIRECTION

PERIOD OF RECORD = 96010101-96033124
STABILITY CLASS: G DT/DZ
ELEVATION: SPEED:SPD10M DIRECTION:DIR10M LAPSE:DT60M

WIND DIRECTION	WIND SPEED (MPH) 1-3	4-7	8-12	13-18	19-24	>24	TOTAL
N	0	0	0	0	0	0	0
NNE	0	0	0	0	0	0	0
NE	0	0	0	0	0	0	0
ENE	0	1	0	0	0	0	1
E	3	1	0	0	0	0	4
ESE	2	0	0	0	0	0	2
SE	4	0	0	0	0	0	4
SSE	8	3	0	0	0	0	11
S	6	7	0	0	0	0	13
SSW	0	0	0	0	0	0	0
SW	0	0	0	0	0	0	0
WSW	0	0	0	0	0	0	0
W	0	0	0	0	0	0	0
WNW	0	0	0	0	0	0	0
NW	0	0	0	0	0	0	0
NNW	1	0	0	0	0	0	1
TOTAL	24	12	0	0	0	0	36

PERIODS OF CALM(HOURS): 0
VARIABLE DIRECTION 0
HOURS OF MISSING DATA: 17

Joint Frequency Tables
1st Quarter 1996

HOURS AT EACH WIND SPEED AND DIRECTION

PERIOD OF RECORD = 96010101-96033124
STABILITY CLASS: ALL DT/DZ
ELEVATION: SPEED:SPD10M DIRECTION:DIR10M LAPSE:DT60M

WIND DIRECTION	WIND SPEED(MPH) 1-3	4-7	8-12	13-18	19-24	>24	TOTAL
N	11	36	68	35	0	0	150
NNE	8	34	32	0	0	0	74
NE	11	55	55	9	0	0	130
ENE	24	53	10	0	0	0	87
E	24	71	12	0	0	0	107
ESE	27	57	14	0	0	0	98
SE	43	55	52	3	0	0	153
SSE	46	97	42	19	1	0	205
S	25	115	75	19	0	0	234
SSW	6	51	43	15	0	0	115
SW	8	37	44	16	4	0	109
WSW	8	42	79	39	5	0	173
W	6	41	82	39	2	0	170
WNW	4	53	57	12	0	0	126
NW	4	66	38	1	0	0	109
NNW	16	56	53	2	0	0	127
TOTAL	271	919	756	209	12	0	2167

PERIODS OF CALM(HOURS): 0
VARIABLE DIRECTION 0
HOURS OF MISSING DATA: 17

Joint Frequency Tables
2nd Quarter 1996

HOURS AT EACH WIND SPEED AND DIRECTION

PERIOD OF RECORD = 96040101-96063024
STABILITY CLASS: A DT/DZ
ELEVATION: SPEED:SPD10M DIRECTION:DIR10M LAPSE:DT60M

WIND DIRECTION	WIND SPEED(MPH) 1-3	4-7	8-12	13-18	19-24	>24	TOTAL
N	3	27	42	0	0	0	72
NNE	2	5	2	0	0	0	9
NE	1	16	2	0	0	0	19
ENE	2	6	7	1	0	0	16
E	4	24	19	0	0	0	47
ESE	0	28	14	0	0	0	42
SE	7	24	4	1	0	0	36
SSE	4	30	12	1	0	0	47
S	4	9	11	6	0	0	30
SSW	1	0	1	4	0	0	6
SW	1	9	30	3	0	0	43
WSW	2	41	34	2	0	0	79
W	5	26	6	0	0	0	37
WNW	4	32	4	0	0	0	40
NW	9	33	2	0	0	0	44
NNW	12	63	47	0	0	0	122
TOTAL	61	373	237	18	0	0	689

PERIODS OF CALM(HOURS): 0
VARIABLE DIRECTION 0
HOURS OF MISSING DATA: 6

Joint Frequency Tables
2nd Quarter 1996

HOURS AT EACH WIND SPEED AND DIRECTION

PERIOD OF RECORD = 96040101-96063024
STABILITY CLASS: B DT/DZ
ELEVATION: SPEED:SPD10M DIRECTION:DIR10M LAPSE:DT60M

WIND DIRECTION	WIND SPEED (MPH) 1-3	4-7	8-12	13-18	19-24	>24	TOTAL
N	1	4	7	0	0	0	12
NNE	0	0	1	0	0	0	1
NE	0	1	2	0	0	0	3
ENE	1	4	2	0	0	0	7
E	1	4	3	1	0	0	9
ESE	3	4	2	0	0	0	9
SE	1	5	2	0	0	0	8
SSE	0	4	1	0	0	0	5
S	0	4	6	0	0	0	10
SSW	1	1	3	1	0	0	6
SW	0	4	9	2	0	0	15
WSW	1	14	5	2	0	0	22
W	3	11	2	1	0	0	17
WNW	5	2	0	0	0	0	7
NW	3	3	0	0	0	0	6
NNW	5	3	4	0	0	0	12
TOTAL	25	68	49	7	0	0	149

PERIODS OF CALM(HOURS): 0
VARIABLE DIRECTION 0
HOURS OF MISSING DATA: 6

Joint Frequency Tables
2nd Quarter 1996

HOURS AT EACH WIND SPEED AND DIRECTION

PERIOD OF RECORD = 96040101-96063024
STABILITY CLASS: C DT/DZ
ELEVATION: SPEED:SPD10M DIRECTION:DIR10M LAPSE:DT60M

WIND DIRECTION	WIND SPEED (MPH) 1-3	4-7	8-12	13-18	19-24	>24	TOTAL
N	7	4	4	0	0	0	15
NNE	0	1	0	0	0	0	1
NE	1	2	0	0	0	0	3
ENE	1	4	2	2	0	0	9
E	3	5	3	0	0	0	11
ESE	2	8	0	0	0	0	10
SE	4	1	4	0	0	0	9
SSE	3	5	1	0	0	0	9
S	1	6	6	1	0	0	14
SSW	2	3	1	1	0	0	7
SW	1	9	3	5	0	0	18
WSW	4	12	3	5	0	0	24
W	5	6	0	0	0	0	11
WNW	6	3	0	0	0	0	9
NW	2	2	0	0	0	0	4
NNW	1	3	4	0	0	0	8
TOTAL	43	74	31	14	0	0	162

PERIODS OF CALM (HOURS): 0
VARIABLE DIRECTION 0
HOURS OF MISSING DATA: 6

Joint Frequency Tables
2nd Quarter 1996

HOURS AT EACH WIND SPEED AND DIRECTION

PERIOD OF RECORD = 96040101-96063024
STABILITY CLASS: D DT/DZ
ELEVATION: SPEED:SPD10M DIRECTION:DIR10M LAPSE:DT60M

WIND DIRECTION	WIND SPEED (MPH) 1-3	4-7	8-12	13-18	19-24	>24	TOTAL
N	9	30	13	2	0	0	54
NNE	5	7	13	0	0	0	25
NE	4	6	1	0	0	0	11
ENE	5	26	11	1	0	0	43
E	9	23	23	0	0	0	55
ESE	11	16	5	1	0	0	33
SE	4	8	6	0	0	0	18
SSE	5	6	2	0	0	0	13
S	5	13	7	6	0	0	31
SSW	7	8	20	5	0	0	40
SW	9	20	20	9	0	0	58
WSW	3	15	15	2	0	0	35
W	7	5	6	0	0	0	18
WNW	7	3	1	0	0	0	11
NW	8	4	0	0	0	0	12
NNW	11	26	4	1	0	0	42
TOTAL	109	216	147	27	0	0	499

PERIODS OF CALM (HOURS): 0
VARIABLE DIRECTION 0
HOURS OF MISSING DATA: 6

Joint Frequency Tables
2nd Quarter 1996

HOURS AT EACH WIND SPEED AND DIRECTION

PERIOD OF RECORD = 96040101-96063024
STABILITY CLASS: E DT/DZ
ELEVATION: SPEED:SPD10M DIRECTION:DIR10M LAPSE:DT60M

WIND DIRECTION	WIND SPEED (MPH) 1-3	4-7	8-12	13-18	19-24	>24	TOTAL
N	15	7	0	0	0	0	22
NNE	14	1	0	0	0	0	15
NE	7	6	0	0	0	0	13
ENE	11	10	0	0	0	0	21
E	10	17	0	0	0	0	27
ESE	13	7	0	0	0	0	20
SE	9	13	2	0	0	0	24
SSE	10	14	5	0	0	0	29
S	12	27	6	1	0	0	46
SSW	8	17	15	1	0	0	41
SW	10	19	29	1	0	0	59
WSW	3	11	7	0	0	0	21
W	8	11	3	0	0	0	22
WNW	6	1	0	0	0	0	7
NW	8	2	0	0	0	0	10
NNW	12	0	0	0	0	0	12
TOTAL	156	163	67	3	0	0	389

PERIODS OF CALM (HOURS): 0
VARIABLE DIRECTION 0
HOURS OF MISSING DATA: 6

Joint Frequency Tables
2nd Quarter 1996

HOURS AT EACH WIND SPEED AND DIRECTION

PERIOD OF RECORD = 96040101-96063024
STABILITY CLASS: F DT/DZ
ELEVATION: SPEED:SPD10M DIRECTION:DIR10M LAPSE:DT60M

WIND DIRECTION	WIND SPEED(MPH) 1-3	4-7	8-12	13-18	19-24	>24	TOTAL
N	5	2	0	0	0	0	7
NNE	4	0	0	0	0	0	4
NE	2	3	1	0	0	0	6
ENE	6	3	0	0	0	0	9
E	10	6	0	0	0	0	16
ESE	8	1	0	0	0	0	9
SE	7	1	0	0	0	0	8
SSE	18	10	1	0	0	0	29
S	16	7	0	0	0	0	23
SSW	5	2	0	0	0	0	7
SW	5	6	0	0	0	0	11
WSW	4	0	0	0	0	0	4
W	6	3	0	0	0	0	9
WNW	2	0	0	0	0	0	2
NW	5	2	0	0	0	0	7
NNW	4	0	0	0	0	0	4
TOTAL	107	46	2	0	0	0	155

PERIODS OF CALM(HOURS): 0
VARIABLE DIRECTION 0
HOURS OF MISSING DATA: 6

Joint Frequency Tables
2nd Quarter 1996

HOURS AT EACH WIND SPEED AND DIRECTION

PERIOD OF RECORD = 96040101-96063024
STABILITY CLASS: G DT/DZ
ELEVATION: SPEED:SPD10M DIRECTION:DIR10M LAPSE:DT60M

WIND DIRECTION	WIND SPEED(MPH) 1-3	4-7	8-12	13-18	19-24	>24	TOTAL
N	4	0	0	0	0	0	4
NNE	3	0	0	0	0	0	3
NE	8	0	0	0	0	0	8
ENE	6	1	0	0	0	0	7
E	11	0	0	0	0	0	11
ESE	22	0	0	0	0	0	22
SE	13	0	0	0	0	0	13
SSE	12	0	0	0	0	0	12
S	16	4	0	0	0	0	20
SSW	14	1	0	0	0	0	15
SW	7	0	0	0	0	0	7
WSW	2	0	0	0	0	0	2
W	5	0	0	0	0	0	5
WNW	3	0	0	0	0	0	3
NW	1	0	0	0	0	0	1
NNW	2	0	0	0	0	0	2
TOTAL	129	6	0	0	0	0	135

PERIODS OF CALM(HOURS): 0
VARIABLE DIRECTION 0
HOURS OF MISSING DATA: 6

Joint Frequency Tables
2nd Quarter 1996

HOURS AT EACH WIND SPEED AND DIRECTION

PERIOD OF RECORD = 96040101-96063024
STABILITY CLASS: ALL DT/DZ
ELEVATION: SPEED:SPD10M DIRECTION:DIR10M LAPSE:DT60M

WIND DIRECTION	WIND SPEED (MPH) 1-3	4-7	8-12	13-18	19-24	>24	TOTAL
N	44	74	66	2	0	0	186
NNE	28	14	16	0	0	0	58
NE	23	34	6	0	0	0	63
ENE	32	54	22	4	0	0	112
E	48	79	48	1	0	0	176
ESE	59	64	21	1	0	0	145
SE	45	52	18	1	0	0	116
SSE	52	69	22	1	0	0	144
S	54	70	36	14	0	0	174
SSW	38	32	40	12	0	0	122
SW	33	67	91	20	0	0	211
WSW	19	93	64	11	0	0	187
W	39	62	17	1	0	0	119
WNW	33	41	5	0	0	0	79
NW	36	46	2	0	0	0	84
NNW	47	95	59	1	0	0	202
TOTAL	630	946	533	69	0	0	2178

PERIODS OF CALM (HOURS): 0
VARIABLE DIRECTION 0
HOURS OF MISSING DATA: 6

Joint Frequency Tables
3rd Quarter 1996

HOURS AT EACH WIND SPEED AND DIRECTION

PERIOD OF RECORD = 96070101-96093024
STABILITY CLASS: A DT/DZ
ELEVATION: SPEED:SPD10M DIRECTION:DIR10M LAPSE:DT60M

WIND DIRECTION	WIND SPEED(MPH) 1-3	4-7	8-12	13-18	19-24	>24	TOTAL
N	11	90	4	0	0	0	105
NNE	1	2	0	0	0	0	3
NE	0	3	0	0	0	0	3
ENE	1	10	0	0	0	0	11
E	2	3	0	0	0	0	5
ESE	4	6	0	0	0	0	10
SE	3	5	0	0	0	0	8
SSE	4	4	0	0	0	0	8
S	3	19	2	0	0	0	24
SSW	0	16	8	0	0	0	24
SW	1	20	10	0	0	0	31
WSW	2	54	6	0	0	0	62
W	2	39	2	0	0	0	43
WNW	9	42	0	0	0	0	51
NW	10	37	0	0	0	0	47
NNW	14	74	1	0	0	0	89
TOTAL	67	424	33	0	0	0	524

PERIODS OF CALM(HOURS): 0
VARIABLE DIRECTION 0
HOURS OF MISSING DATA: 244

Joint Frequency Tables
3rd Quarter 1996

HOURS AT EACH WIND SPEED AND DIRECTION

PERIOD OF RECORD = 96070101-96093024
STABILITY CLASS: B DT/DZ
ELEVATION: SPEED:SPD10M DIRECTION:DIR10M LAPSE:DT60M

WIND DIRECTION	WIND SPEED(MPH) 1-3	4-7	8-12	13-18	19-24	>24	TOTAL
N	1	9	1	0	0	0	11
NNE	0	0	0	0	0	0	0
NE	1	0	0	0	0	0	1
ENE	0	1	0	0	0	0	1
E	0	2	1	0	0	0	3
ESE	1	2	0	0	0	0	3
SE	0	1	0	0	0	0	1
SSE	1	1	0	0	0	0	2
S	2	5	0	0	0	0	7
SSW	0	3	4	0	0	0	7
SW	0	4	3	0	0	0	7
WSW	3	8	2	0	0	0	13
W	1	5	0	0	0	0	6
WNW	2	1	0	0	0	0	3
NW	3	1	0	0	0	0	4
NNW	5	4	0	0	0	0	9
TOTAL	20	47	11	0	0	0	78

PERIODS OF CALM(HOURS): 0
VARIABLE DIRECTION 0
HOURS OF MISSING DATA: 244

Joint Frequency Tables
3rd Quarter 1996

HOURS AT EACH WIND SPEED AND DIRECTION

PERIOD OF RECORD = 96070101-96093024
STABILITY CLASS: C DT/DZ
ELEVATION: SPEED:SPD10M DIRECTION:DIR10M LAPSE:DT60M

WIND DIRECTION	WIND SPEED(MPH) 1-3	4-7	8-12	13-18	19-24	>24	TOTAL
N	3	5	0	0	0	0	8
NNE	1	2	0	0	0	0	3
NE	1	1	0	0	0	0	2
ENE	2	0	0	0	0	0	2
E	6	1	0	0	0	0	7
ESE	1	1	1	0	0	0	3
SE	3	2	0	0	0	0	5
SSE	3	0	0	0	0	0	3
S	2	0	0	0	0	0	2
SSW	0	2	2	0	0	0	4
SW	2	1	1	0	0	0	4
WSW	0	1	3	0	0	0	4
W	2	0	1	0	0	0	3
WNW	3	0	0	0	0	0	3
NW	2	2	0	0	0	0	4
NNW	7	1	0	0	0	0	8
TOTAL	38	19	8	0	0	0	65

PERIODS OF CALM(HOURS): 0
VARIABLE DIRECTION 0
HOURS OF MISSING DATA: 244

Joint Frequency Tables
3rd Quarter 1996

HOURS AT EACH WIND SPEED AND DIRECTION

PERIOD OF RECORD = 96070101-96093024
STABILITY CLASS: D DT/DZ
ELEVATION: SPEED:SPD10M DIRECTION:DIR10M LAPSE:DT60M

WIND DIRECTION	WIND SPEED(MPH) 1-3	4-7	8-12	13-18	19-24	>24	TOTAL
N	13	21	1	0	0	0	35
NNE	3	2	0	0	0	0	5
NE	4	0	0	0	0	0	4
ENE	1	0	0	0	0	0	1
E	6	4	0	0	0	0	10
ESE	2	13	4	0	0	0	19
SE	10	6	0	0	0	0	16
SSE	4	2	0	0	0	0	6
S	13	17	1	0	0	0	31
SSW	10	27	5	0	0	0	42
SW	5	14	5	0	0	0	24
WSW	3	6	10	0	0	0	19
W	11	3	2	0	0	0	16
WNW	6	3	0	0	0	0	9
NW	11	3	0	0	0	0	14
NNW	21	4	0	0	0	0	25
TOTAL	123	125	28	0	0	0	276

PERIODS OF CALM(HOURS): 0
VARIABLE DIRECTION 0
HOURS OF MISSING DATA: 244

Joint Frequency Tables
3rd Quarter 1996

HOURS AT EACH WIND SPEED AND DIRECTION

PERIOD OF RECORD = 96070101-96093024
STABILITY CLASS: E DT/DZ
ELEVATION: SPEED:SPD10M DIRECTION:DIR10M LAPSE:DT60M

WIND DIRECTION	WIND SPEED(MPH) 1-3	4-7	8-12	13-18	19-24	>24	TOTAL
N	25	13	0	0	0	0	38
NNE	21	5	0	0	0	0	26
NE	16	6	0	0	0	0	22
ENE	7	4	0	0	0	0	11
E	14	8	0	0	0	0	22
ESE	23	14	1	0	0	0	38
SE	17	2	0	0	0	0	19
SSE	7	2	0	0	0	0	9
S	41	15	1	0	0	0	57
SSW	21	25	0	0	0	0	46
SW	10	17	5	0	0	0	32
WSW	6	5	2	0	0	0	13
W	7	9	0	0	0	0	16
WNW	4	1	0	0	0	0	5
NW	12	2	0	0	0	0	14
NNW	26	3	0	0	0	0	29
TOTAL	257	131	9	0	0	0	397

PERIODS OF CALM(HOURS): 0
VARIABLE DIRECTION 0
HOURS OF MISSING DATA: 244

Joint Frequency Tables
3rd Quarter 1996

HOURS AT EACH WIND SPEED AND DIRECTION

PERIOD OF RECORD = 96070101-96093024
STABILITY CLASS: F DT/DZ
ELEVATION: SPEED:SPD10M DIRECTION:DIR10M LAPSE:DT60M

WIND DIRECTION	WIND SPEED(MPH) 1-3	4-7	8-12	13-18	19-24	>24	TOTAL
N	8	1	0	0	0	0	9
NNE	10	0	0	0	0	0	10
NE	25	2	0	0	0	0	27
ENE	22	0	0	0	0	0	22
E	33	0	0	0	0	0	33
ESE	17	1	0	0	0	0	18
SE	11	0	0	0	0	0	11
SSE	9	0	0	0	0	0	9
S	37	4	0	0	0	0	41
SSW	18	7	0	0	0	0	25
SW	12	5	0	0	0	0	17
WSW	4	1	1	0	0	0	6
W	5	1	0	0	0	0	6
WNW	8	0	0	0	0	0	8
NW	7	0	0	0	0	0	7
NNW	9	0	0	0	0	0	9
TOTAL	235	22	1	0	0	0	258

PERIODS OF CALM(HOURS): 0
VARIABLE DIRECTION 0
HOURS OF MISSING DATA: 244

Joint Frequency Tables
3rd Quarter 1996

HOURS AT EACH WIND SPEED AND DIRECTION

PERIOD OF RECORD = 96070101-96093024
STABILITY CLASS: G DT/DZ
ELEVATION: SPEED:SPD10M DIRECTION:DIR10M LAPSE:DT60M

WIND DIRECTION	WIND SPEED(MPH) 1-3	4-7	8-12	13-18	19-24	>24	TOTAL
N	5	0	0	0	0	0	5
NNE	4	0	0	0	0	0	4
NE	13	0	0	0	0	0	13
ENE	62	0	0	0	0	0	62
E	65	0	0	0	0	0	65
ESE	27	0	0	0	0	0	27
SE	36	0	0	0	0	0	36
SSE	33	0	0	0	0	0	33
S	48	0	0	0	0	0	48
SSW	37	0	0	0	0	0	37
SW	9	0	0	0	0	0	9
WSW	4	0	0	0	0	0	4
W	5	0	0	0	0	0	5
WNW	6	0	0	0	0	0	6
NW	7	0	0	0	0	0	7
NNW	5	0	0	0	0	0	5
TOTAL	366	0	0	0	0	0	366

PERIODS OF CALM(HOURS): 0
VARIABLE DIRECTION 0
HOURS OF MISSING DATA: 244

Joint Frequency Tables
3rd Quarter 1996

HOURS AT EACH WIND SPEED AND DIRECTION

PERIOD OF RECORD = 96070101-96093024
STABILITY CLASS: ALL DT/DZ
ELEVATION: SPEED:SPD10M DIRECTION:DIR10M LAPSE:DT60M

WIND DIRECTION	WIND SPEED(MPH) 1-3	4-7	8-12	13-18	19-24	>24	TOTAL
N	66	139	6	0	0	0	211
NNE	40	11	0	0	0	0	51
NE	60	12	0	0	0	0	72
ENE	95	15	0	0	0	0	110
E	126	18	1	0	0	0	145
ESE	75	37	6	0	0	0	118
SE	80	16	0	0	0	0	96
SSE	61	9	0	0	0	0	70
S	146	60	4	0	0	0	210
SSW	86	80	19	0	0	0	185
SW	39	61	24	0	0	0	124
WSW	22	75	24	0	0	0	121
W	33	57	5	0	0	0	95
WNW	38	47	0	0	0	0	85
NW	52	45	0	0	0	0	97
NNW	87	86	1	0	0	0	174
TOTAL	1106	768	90	0	0	0	1964

PERIODS OF CALM(HOURS): 0
VARIABLE DIRECTION 0
HOURS OF MISSING DATA: 244

Joint Frequency Tables
4th Quarter 1996

HOURS AT EACH WIND SPEED AND DIRECTION

PERIOD OF RECORD = 96100101-96123124
STABILITY CLASS: A DT/DZ
ELEVATION: SPEED:SPD10M DIRECTION:DIR10M LAPSE:DT60M

WIND DIRECTION	WIND SPEED(MPH) 1-3	4-7	8-12	13-18	19-24	>24	TOTAL
N	1	28	0	0	0	0	29
NNE	2	17	0	0	0	0	19
NE	2	17	0	0	0	0	19
ENE	2	13	11	3	0	0	29
E	2	13	5	1	0	0	21
ESE	4	4	0	0	0	0	8
SE	4	24	9	0	0	0	37
SSE	4	39	10	0	0	0	53
S	3	12	16	0	0	0	31
SSW	2	21	9	1	0	0	33
SW	2	7	4	0	0	0	13
WSW	1	6	18	11	0	0	36
W	0	4	9	5	0	0	18
WNW	0	5	6	0	0	0	11
NW	1	12	1	0	0	0	14
NNW	5	27	0	0	0	0	32
TOTAL	35	249	98	21	0	0	403

PERIODS OF CALM(HOURS): 0
VARIABLE DIRECTION 0
HOURS OF MISSING DATA: 58

Joint Frequency Tables
4th Quarter 1996

HOURS AT EACH WIND SPEED AND DIRECTION

PERIOD OF RECORD = 96100101-96123124
STABILITY CLASS: B DT/DZ
ELEVATION: SPEED:SPD10M DIRECTION:DIR10M LAPSE:DT60M

WIND DIRECTION	WIND SPEED (MPH) 1-3	4-7	8-12	13-18	19-24	>24	TOTAL
N	0	4	0	0	0	0	4
NNE	0	5	0	0	0	0	5
NE	3	0	1	0	0	0	4
ENE	2	9	1	0	0	0	12
E	2	3	1	0	0	0	6
ESE	0	0	0	0	0	0	0
SE	1	2	3	1	0	0	7
SSE	1	4	5	0	0	0	10
S	0	8	5	0	0	0	13
SSW	0	3	8	0	0	0	11
SW	1	2	4	0	0	0	7
WSW	0	1	5	1	0	0	7
W	0	1	5	3	0	0	9
WNW	0	7	5	0	0	0	12
NW	0	1	0	0	0	0	1
NNW	1	1	0	0	0	0	2
TOTAL	11	51	43	5	0	0	110

PERIODS OF CALM(HOURS): 0
VARIABLE DIRECTION 0
HOURS OF MISSING DATA: 58

Joint Frequency Tables
4th Quarter 1996

HOURS AT EACH WIND SPEED AND DIRECTION

PERIOD OF RECORD = 96100101-96123124
STABILITY CLASS: C DT/DZ
ELEVATION: SPEED:SPD10M DIRECTION:DIR10M LAPSE:DT60M

WIND DIRECTION	WIND SPEED (MPH) 1-3	4-7	8-12	13-18	19-24	>24	TOTAL
N	0	4	1	0	0	0	5
NNE	1	5	0	0	0	0	6
NE	2	11	1	0	0	0	14
ENE	1	9	0	0	0	0	10
E	1	7	2	0	0	0	10
ESE	1	2	0	0	0	0	3
SE	1	3	6	0	0	0	10
SSE	1	8	0	0	0	0	9
S	2	17	4	1	0	0	24
SSW	0	8	8	0	0	0	16
SW	0	4	9	0	0	0	13
WSW	0	11	17	3	0	0	31
W	2	10	11	4	0	0	27
WNW	0	9	3	0	0	0	12
NW	1	8	2	0	0	0	11
NNW	3	4	0	0	0	0	7
TOTAL	16	120	64	8	0	0	208

PERIODS OF CALM (HOURS): 0
VARIABLE DIRECTION 0
HOURS OF MISSING DATA: 58

Joint Frequency Tables
4th Quarter 1996

HOURS AT EACH WIND SPEED AND DIRECTION

PERIOD OF RECORD = 96100101-96123124
STABILITY CLASS: D DT/DZ
ELEVATION: SPEED:SPD10M DIRECTION:DIR10M LAPSE:DT60M

WIND DIRECTION	WIND SPEED (MPH) 1-3	4-7	8-12	13-18	19-24	>24	TOTAL
N	4	23	21	0	0	0	48
NNE	3	9	0	0	0	0	12
NE	4	26	0	0	0	0	30
ENE	10	26	5	0	0	0	41
E	15	18	2	0	0	0	35
ESE	13	10	0	0	0	0	23
SE	12	39	29	6	0	0	86
SSE	8	48	22	1	0	0	79
S	6	48	35	0	0	0	89
SSW	1	38	33	2	0	0	74
SW	2	22	8	2	1	0	35
WSW	0	13	36	3	2	0	54
W	2	41	65	13	2	0	123
WNW	3	51	24	0	0	0	78
NW	10	76	23	0	0	0	109
NNW	8	33	9	0	0	0	50
TOTAL	101	521	312	27	5	0	966

PERIODS OF CALM(HOURS): 0
VARIABLE DIRECTION 0
HOURS OF MISSING DATA: 58

Joint Frequency Tables
4th Quarter 1996

HOURS AT EACH WIND SPEED AND DIRECTION

PERIOD OF RECORD = 96100101-96123124
STABILITY CLASS: E DT/DZ
ELEVATION: SPEED:SPD10M DIRECTION:DIR10M LAPSE:DT60M

WIND DIRECTION	WIND SPEED (MPH) 1-3	4-7	8-12	13-18	19-24	>24	TOTAL
N	6	1	0	0	0	0	7
NNE	2	0	0	0	0	0	2
NE	2	4	0	0	0	0	6
ENE	7	7	0	0	0	0	14
E	9	4	0	0	0	0	13
ESE	16	16	0	0	0	0	32
SE	13	15	4	1	0	0	33
SSE	14	34	7	0	0	0	55
S	13	37	2	0	0	0	52
SSW	1	24	1	0	0	0	26
SW	1	6	1	0	0	0	8
WSW	1	3	2	0	0	0	6
W	3	2	4	0	0	0	9
WNW	2	1	8	0	0	0	11
NW	1	1	0	0	0	0	2
NNW	3	8	0	0	0	0	11
TOTAL	94	163	29	1	0	0	287

PERIODS OF CALM(HOURS): 0
VARIABLE DIRECTION 0
HOURS OF MISSING DATA: 58

Joint Frequency Tables
4th Quarter 1996

HOURS AT EACH WIND SPEED AND DIRECTION

PERIOD OF RECORD = 96100101-96123124
STABILITY CLASS: F DT/DZ
ELEVATION: SPEED:SPD10M DIRECTION:DIR10M LAPSE:DT60M

WIND DIRECTION	WIND SPEED(MPH) 1-3	4-7	8-12	13-18	19-24	>24	TOTAL
N	0	0	0	0	0	0	0
NNE	1	0	0	0	0	0	1
NE	3	0	0	0	0	0	3
ENE	2	1	0	0	0	0	3
E	9	4	0	0	0	0	13
ESE	13	6	0	0	0	0	19
SE	10	0	0	0	0	0	10
SSE	21	2	0	0	0	0	23
S	15	3	0	0	0	0	18
SSW	5	3	0	0	0	0	8
SW	1	0	0	0	0	0	1
WSW	0	0	0	0	0	0	0
W	2	0	0	0	0	0	2
WNW	0	1	0	0	0	0	1
NW	1	1	0	0	0	0	2
NNW	3	0	0	0	0	0	3
TOTAL	86	21	0	0	0	0	107

PERIODS OF CALM(HOURS): 0
VARIABLE DIRECTION 0
HOURS OF MISSING DATA: 58

Joint Frequency Tables
4th Quarter 1996

HOURS AT EACH WIND SPEED AND DIRECTION

PERIOD OF RECORD = 96100101-96123124
STABILITY CLASS: G DT/DZ
ELEVATION: SPEED:SPD10M DIRECTION:DIR10M LAPSE:DT60M

WIND DIRECTION	WIND SPEED(MPH) 1-3	4-7	8-12	13-18	19-24	>24	TOTAL
N	0	0	0	0	0	0	0
NNE	0	0	0	0	0	0	0
NE	3	0	0	0	0	0	3
ENE	3	0	0	0	0	0	3
E	10	0	0	0	0	0	10
ESE	5	11	1	0	0	0	17
SE	7	0	0	0	0	0	7
SSE	11	0	0	0	0	0	11
S	7	2	0	0	0	0	9
SSW	2	0	0	0	0	0	2
SW	1	0	0	0	0	0	1
WSW	1	0	0	0	0	0	1
W	0	0	0	0	0	0	0
WNW	1	1	1	0	0	0	3
NW	0	2	0	0	0	0	2
NNW	0	0	0	0	0	0	0
TOTAL	51	16	2	0	0	0	69

PERIODS OF CALM(HOURS): 0
VARIABLE DIRECTION 0
HOURS OF MISSING DATA: 58

Joint Frequency Tables
4th Quarter 1996

HOURS AT EACH WIND SPEED AND DIRECTION

PERIOD OF RECORD = 96100101-96123124
STABILITY CLASS: ALL DT/DZ
ELEVATION: SPEED:SPD10M DIRECTION:DIR10M LAPSE:DT60M

WIND DIRECTION	WIND SPEED(MPH) 1-3	4-7	8-12	13-18	19-24	>24	TOTAL
N	11	60	22	0	0	0	93
NNE	9	36	0	0	0	0	45
NE	19	58	2	0	0	0	79
ENE	27	65	17	3	0	0	112
E	48	49	10	1	0	0	108
ESE	52	49	1	0	0	0	102
SE	48	83	51	8	0	0	190
SSE	60	135	44	1	0	0	240
S	46	127	62	1	0	0	236
SSW	11	97	59	3	0	0	170
SW	8	41	26	2	1	0	78
WSW	3	34	78	18	2	0	135
W	9	58	94	25	2	0	188
WNW	6	75	47	0	0	0	128
NW	14	101	26	0	0	0	141
NNW	23	73	9	0	0	0	105
TOTAL	394	1141	548	62	5	0	2150

PERIODS OF CALM(HOURS): 0
VARIABLE DIRECTION 0
HOURS OF MISSING DATA: 58

Off-site Dose Calculation Manual (ODCM)

The Off-site Dose Calculation Manual, PMP 6010 OSD.001, was changed during the report period. The reasons for the changes and the PNSRC approval are documented on the procedure change sheet and procedure cover sheet. These changes did not reduce the accuracy or reliability of effluent, dose or setpoint calculations. It was determined that the change will maintain the level of radioactive effluent control required by: 10 CFR 20.106, Radioactivity in Effluents to Unrestricted Areas; 40 CFR Part 190, Environmental Radiation Protection Standards for Nuclear Power Operations; 10 CFR 50.36a, Technical Specifications on Effluents from Nuclear Power Reactors; and Appendix I to 10 CFR Part 50, Numerical Guides for Design Objectives and Limiting Conditions for Operation to meet the Criterion "As Low As Is Reasonably Achievable" for Radioactive Material in Light-Water-Cooled Nuclear Power Reactor Effluents.

FEB 08 1996
COMPILED DOCUMENT

INDIANA MICHIGAN POWER COMPANY

DONALD C. COOK NUCLEAR PLANT
INSTRUCTION AND PROCEDURE CHANGE SHEET

INSTRUCTION OR PROCEDURE NO.: 12 PMP 6010 OSD. 001 REVISION NO.: 9 CHANGE SHEET NO.: 1

TITLE: OFFSITE DOSE CALCULATION MANUAL PAGE 1 OF 1

ORIGINATED BY:	Michael W Snyder / M. Snyder	DATE:	1/11/96
MANAGEMENT STAFF:	[illegible]	DATE:	1/25/96
SENIOR REACTOR OPERATOR:	N/A	DATE:	N/A
50.59 REVIEWS COMPLETED:	[illegible]	DATE:	1/29/96
P.P.A. SUPERINTENDENT: (PM/PMP only)	[illegible]	DATE:	2/2/96
PNSRC:	#2943	DATE:	2-8-96
APPROVED BY:	John R. Sampson	DATE:	4/8/96

EXPIRATION DATE: N/A

DESCRIPTION OF CHANGE

CHANGED OFFSITE TLD STATION OFT-11 LOCATION DESCRIPTION FROM ELECTRICAL POLE B424-12 TO POLE B423-12.

REASON(S) FOR CHANGE

ODCM IN ERROR. BETWEEN 1992 AND 1993 A TRANSPOSITION ERROR OCCURRED AND "423" WAS CHANGED TO "424". THE PHYSICAL LOCATION OF STATION HAS ALWAYS REMAINED THE SAME (CORNER OF SNOW RD. AND BALDWIN RD, 3.8 MILES SOUTH OF PLANT). ERROR DISCOVERED DURING INVESTIGATION OF CONDITION REPORT 96-0020.

INSTRUCTIONS FOR INCORPORATING CHANGE

1. REPLACE L.O.E.P PAGE 4 OF 5 REVISION 9 WITH L.O.E.P PAGE 4 OF 5 REVISION 9 CHANGE SHEET 1.
2. REPLACE ATTACHMENT 3.19 PAGE 2 OF 4 REVISION 9 WITH ATTACHMENT 3.19 PAGE 2 OF 4 REVISION 9 CHANGE SHEET 1.

LIST OF EFFECTIVE PAGES

PAGE NUMBER	REVISION NUMBER/EFFECTIVE CHANGE SHEETS
ATTACHMENT 3.15	
Page 1 of 1	Revision 9
ATTACHMENT 3.16	
Page 1 of 2	Revision 9
Page 2 of 2	Revision 9
ATTACHMENT 3.17	
Page 1 of 1	Revision 9
ATTACHMENT 3.18	
Page 1 of 2	Revision 9
Page 2 of 2	Revision 9
ATTACHMENT 3.19	
Page 1 of 4	Revision 9
Page 2 of 4	Revision 9 | CS-1
Page 3 of 4	Revision 9
Page 4 of 4	Revision 9
ATTACHMENT 3.20	
Page 1 of 2	Revision 9
Page 2 of 2	Revision 9
ATTACHMENT 3.21	
Page 1 of 1	Revision 9
ATTACHMENT 3.22	
Page 1 of 1	Revision 9
ATTACHMENT 3.23	
Page 1 of 1	Revision 9

RADIOLOGICAL ENVIRONMENTAL MONITORING PROGRAM

SAMPLE STATIONS, SAMPLE TYPES, AND SAMPLE FREQUENCIES

SAMPLE STATION	DESCRIPTION/LOCATION	SAMPLE TYPE	SAMPLE FREQUENCY	ANALYSIS TYPE	ANALYSIS FREQUENCY
OFFSITE AIRBORNE AND DIRECT RADIATION (TLD) STATIONS					
OFT-1	4.5 miles NE, Pole #B294-44	TLD	Quarterly	Direct Radiation	Quarterly
OFT-2	3.6 miles, NE, Stevensville Substation	TLD	Quarterly	Direct Radiation	Quarterly
OFT-3	5.1 miles NE, Pole #B296-13	TLD	Quarterly	Direct Radiation	Quarterly
OFT-4	4.1 miles, E, Pole #B350-72	TLD	Quarterly	Direct Radiation	Quarterly
OFT-5	4.2 miles ESE, Pole #B387-32	TLD	Quarterly	Direct Radiation	Quarterly
OFT-6	4.9 miles SE, Pole #B426-1	TLD	Quarterly	Direct Radiation	Quarterly
OFT-7	2.5 miles S, Bridgman Substation	TLD	Quarterly	Direct Radiation	Quarterly
OFT-8	4.0 miles S, Pole #B424-20	TLD	Quarterly	Direct Radiation	Quarterly
OFT-9	4.4 miles ESE, Pole #B369-214	TLD	Quarterly	Direct Radiation	Quarterly
OFT-10	3.8 miles S, Pole #B422-152	TLD	Quarterly	Direct Radiation	Quarterly
OFT-11	3.8 miles S, Pole #B423-12	TLD	Quarterly	Direct Radiation	Quarterly CS-1
GROUNDWATER (WELL WATER) SAMPLE STATIONS					
W-1	1969 ft @ 11° from Plant Axis	Groundwater	Quarterly	Gamma Isotopic Tritium	Quarterly Quarterly
W-2	2292 ft @ 63° from Plant Axis	Groundwater	Quarterly	Gamma Isotopic Tritium	Quarterly Quarterly
W-3	3279 ft @ 107° from Plant Axis	Groundwater	Quarterly	Gamma Isotopic Tritium	Quarterly Quarterly
W-4	418 ft @ 301° from Plant Axis	Groundwater	Quarterly	Gamma Isotopic Tritium	Quarterly Quarterly
W-5	404 ft @ 290° from Plant Axis	Groundwater	Quarterly	Gamma Isotopic Tritium	Quarterly Quarterly
W-6	424 ft @ 273° from Plant Axis	Groundwater	Quarterly	Gamma Isotopic Tritium	Quarterly Quarterly
W-7	1895 ft @ 189° from Plant Axis	Groundwater	Quarterly	Gamma Isotopic Tritium	Quarterly Quarterly
W-8	1279 ft @ 53° from Plant Axis	Groundwater	Quarterly	Gamma Isotopic Tritium	Quarterly Quarterly
W-9	1447 ft @ 22° from Plant Axis	Groundwater	Quarterly	Gamma Isotopic Tritium	Quarterly Quarterly
W-10	4216 ft @ 129° from Plant Axis	Groundwater	Quarterly	Gamma Isotopic Tritium	Quarterly Quarterly
W-11	3206 ft @ 153° from Plant Axis	Groundwater	Quarterly	Gamma Isotopic Tritium	Quarterly Quarterly
W-12	2631 ft @ 162° from Plant Axis	Groundwater	Quarterly	Gamma Isotopic Tritium	Quarterly Quarterly
W-13	2152 ft @ 182° from Plant Axis	Groundwater	Quarterly	Gamma Isotopic Tritium	Quarterly Quarterly
W-14	1780 ft @ 164° from Plant Axis	Groundwater	Quarterly	Gamma Isotopic Tritium	Quarterly Quarterly
DRINKING WATER					
STJ	St. Joseph Public Intake Sta. 9 mi.NE	Drinking water	Daily	Gross Beta Gamma Isotopic I-131 Tritium	14 day Comp. 14 day Comp. 14 day Comp. Quart. Comp.
LTW	Lake Twp. Public Intake Sta. 0.4 mi.S	Drinking water	Daily	Gross Beta Gamma Isotopic I-131 Tritium	14 day Comp. 14 day Comp. 14 day Comp. Quart. Comp.

AEP

AMERICAN ELECTRIC POWER

VOID
NOT FOR PLANT USE
SEE
DOCUMENT # Rev. 11
1-24-97

DONALD C. COOK NUCLEAR PLANT

PLANT MANAGER PROCEDURE COVER SHEET

Procedure No.	12 PMP 6010 OSD.001
Revision No.	10

TITLE

OFF-SITE DOSE CALCULATION MANUAL

SCOPE OF REVISION

Marginal markings used. Incorporated Change Sheet 1. Incorporated Tech Spec Clarifications #14, Rev. 6; # 36, Rev. 4 and # 55, Rev. 1 per NS&A Dept. request. Changed reference due to Tech Spec changes. Added Attachment approving on-site storage of contaminated concrete per Dept Superintendent request. Implemented changes recommended by off-site vendor (RLD Consulting) review to provide consistency throughout the document and make it more independent. Deleted step referring to 40 CFR 141, Safe Drinking Water Act, as Lake Township supplies our drinking water. Deleted Special Report Requirements due to Tech Spec and 10 CFR 20 changes. Added clarification in Attachment 3.2 for Steam Generator Draining monitor requirements to eliminate confusion and redundancy. Added 25 % grace period for compensatory samples per CR 96-767. Changed Unit Vent tritium sampling requirement from continuous to weekly grab per Chemistry Dept. request. Deleted one reference to correspondence memo due to inability to locate it. Revised Annual Land use Census section for clarity. Deleted specific Emergency Plan values in section 4.3.2.6 due to upcoming implementation of EALs. Clarified in lieu of milk sampling section of the REMP in response to CR 96-838 which was written in response to QA-96-10 audit. Eliminated the need for compensatory sampling of ESW system when respective radiation monitors are inoperable unless the Containment Spray Heat Exchangers are in service, since these are only for post LOCA leak detection and have no associated trip functions. Renumbered steps after deletions to maintain cohesiveness.

	PRINTED NAME	SIGNATURE
PREPARED BY	D. W. Foster	D W Foster
PLANT PERFORMANCE ASSURANCE SUPERINTENDENT	Bruce Barrick	Bruce Barrick for MLHarvath
PLANT NUCLEAR SAFETY COMMITTEE	#3012 9-26-96	WB Depuydt
PLANT MANAGER APPROVAL	JR Sampson	JR Sampson
APPROVAL DATE	9/26/96	
EFFECTIVE DATE	10/22/96 ~~9/30/96~~ MAD 9-26-96	

LIST OF EFFECTIVE PAGES

PAGE NUMBER	REVISION NUMBER/EFFECTIVE CHANGE SHEETS
INDEX	
Page 1 of 3	Revision 10
Page 2 of 3	Revision 10
Page 3 of 3	Revision 10
BODY	
Page 1 of 21	Revision 10
Page 2 of 21	Revision 10
Page 3 of 21	Revision 10
Page 4 of 21	Revision 10
Page 5 of 21	Revision 10
Page 6 of 21	Revision 10
Page 7 of 21	Revision 10
Page 8 of 21	Revision 10
Page 9 of 21	Revision 10
Page 10 of 21	Revision 10
Page 11 of 21	Revision 10
Page 12 of 21	Revision 10
Page 13 of 21	Revision 10
Page 14 of 21	Revision 10
Page 15 of 21	Revision 10
Page 16 of 21	Revision 10
Page 17 of 21	Revision 10
Page 18 of 21	Revision 10
Page 19 of 21	Revision 10
Page 20 of 21	Revision 10
Page 21 of 21	Revision 10

LIST OF EFFECTIVE PAGES

PAGE NUMBER	REVISION NUMBER/EFFECTIVE CHANGE SHEETS
ATTACHMENT 3.1	
Page 1 of 5	Revision 10
Page 2 of 5	Revision 10
Page 3 of 5	Revision 10
Page 4 of 5	Revision 10
Page 5 of 5	Revision 10
ATTACHMENT 3.2	
Page 1 of 2	Revision 10
Page 2 of 2	Revision 10
ATTACHMENT 3.3	
Page 1 of 2	Revision 10
Page 2 of 2	Revision 10
ATTACHMENT 3.4	
Page 1 of 3	Revision 10
Page 2 of 3	Revision 10
Page 3 of 3	Revision 10
ATTACHMENT 3.5	
Page 1 of 2	Revision 10
Page 2 of 2	Revision 10
ATTACHMENT 3.6	
Page 1 of 1	Revision 10
ATTACHMENT 3.7	
Page 1 of 2	Revision 10
Page 2 of 2	Revision 10
ATTACHMENT 3.8	
Page 1 of 1	Revision 10

LIST OF EFFECTIVE PAGES

PAGE NUMBER	REVISION NUMBER/EFFECTIVE CHANGE SHEETS
ATTACHMENT 3.9	
Page 1 of 2	Revision 10
Page 2 of 2	Revision 10
ATTACHMENT 3.10	
Page 1 of 1	Revision 10
ATTACHMENT 3.11	
Page 1 of 1	Revision 10
ATTACHMENT 3.12	
Page 1 of 2	Revision 10
Page 2 of 2	Revision 10
ATTACHMENT 3.13	
Page 1 of 1	Revision 10
ATTACHMENT 3.14	
Page 1 of 2	Revision 10
Page 2 of 2	Revision 10
ATTACHMENT 3.15	
Page 1 of 1	Revision 10
ATTACHMENT 3.16	
Page 1 of 2	Revision 10
Page 2 of 2	Revision 10
ATTACHMENT 3.17	
Page 1 of 1	Revision 10
ATTACHMENT 3.18	
Page 1 of 2	Revision 10
Page 2 of 2	Revision 10
ATTACHMENT 3.19	
Page 1 of 4	Revision 10
Page 2 of 4	Revision 10
Page 3 of 4	Revision 10
Page 4 of 4	Revision 10

LIST OF EFFECTIVE PAGES

PAGE NUMBER	REVISION NUMBER/EFFECTIVE CHANGE SHEETS
ATTACHMENT 3.20	
Page 1 of 2	Revision 10
Page 2 of 2	Revision 10
ATTACHMENT 3.21	
Page 1 of 1	Revision 10
ATTACHMENT 3.22	
Page 1 of 1	Revision 10
ATTACHMENT 3.23	
Page 1 of 1	Revision 10
ATTACHMENT 3.24	
Page 1 of 3	Revision 10
Page 2 of 3	Revision 10
Page 3 of 3	Revision 10
ATTACHMENT 3.25	
Page 1 of 4	Revision 10
Page 2 of 4	Revision 10
Page 3 of 4	Revision 10
Page 4 of 4	Revision 10

AMERICAN ELECTRIC POWER
DONALD C. COOK NUCLEAR PLANT

OFF-SITE DOSE CALCULATION MANUAL

INDEX

Section Number		Page
1.0	OBJECTIVE	1
2.0	REFERENCES	1
3.0	LIST OF ATTACHMENTS	2
4.0	DETAILS	3
4.1	Calculation of Off-site Doses	3
4.1.1	Gaseous Effluent Releases	3
4.1.2	Liquid Effluent Releases	6
4.2	Limits of Operation and Surveillances of the Effluent Release Points	8
4.2.1	Radioactive Liquid Effluent Monitoring Instrumentation *	8
4.2.2	Radioactive Gaseous Effluent Monitoring Instrumentation *	8
4.2.3	Liquid Effluents	9
4.2.3.1	Concentration Excluding Releases via the Turbine Room Sump Discharge *	9
4.2.3.2	Concentration of Releases via the Turbine Room Sump Discharge *	9
4.2.3.3	Dose *	9
4.2.3.4	Liquid Radwaste Treatment System *	10
4.2.4	Gaseous Effluents	10
4.2.4.1	Dose Rate *	10
4.2.4.2	Dose - Noble Gases *	10

* Previous Radiological Effluent Technical Specification (RETS)

4.2.4.3 Dose - Iodine-131, Iodine-133, Tritium, and Radioactive Material in Particulate Form * 10

4.2.4.4 Gaseous Radwaste Treatment * 11

4.2.5 Radioactive Effluents - Total Dose* 11

4.3 Calculation of Alarm/Trip Setpoints 11

4.3.1 Liquid Monitors 12

4.3.1.1 Liquid Batch Monitor Setpoint Methodology 12

4.3.1.2 Liquid Continuous Monitor Setpoint Methodology 13

4.3.2 Gaseous Monitors 14

4.3.2.1 Plant Unit Vent 14

4.3.2.2 Waste Gas Decay Tanks . . .16

4.3.2.3 Containment Purge and Exhaust System 16

4.3.2.4 Steam Jet Air Ejector System 16

4.3.2.5 Gland Seal Condenser Exhaust 17

4.3.2.6 Emergency Gaseous Setpoint Methodology 17

4.4 Radioactive Effluents Total Dose 17

4.5 Radiological Environmental Monitoring Program 18

4.5.1 Purpose of the Radiological Environmental Monitoring Program . .18

4.5.2 Conduct of the Radiological Environmental Monitoring Program . .18

4.5.3 Annual Land Use Census 19

4.5.4 Interlaboratory Comparison Program 19

* Previous RETS

4.6 Steam Generator Storage Facility Groundwater Monitoring Program 19

4.6.1 Purpose of the Steam Generator Storage Facility Groundwater Radiological Monitoring Program . .19

4.6.2 Conduct of the Steam Generator Storage Facility Groundwater Radiological Monitoring Program . 19

4.7 Meteorological Model 20

4.8 Reporting Requirements 20

4.8.1 Annual Radiological Environmental Operating Report 20

4.8.2 Annual Radiological Effluent Release Report 20

4.9 Reporting/Management Review 21

AMERICAN ELECTRIC POWER
DONALD C. COOK NUCLEAR PLANT

OFF-SITE DOSE CALCULATION MANUAL

1.0 OBJECTIVE

The Off-Site Dose Calculation Manual (ODCM) is the top tier document for the Radiological Environmental Monitoring Program (REMP) and the Radioactive Effluent Controls Program (RECP) and contains criteria pertaining to the previous Radiological Effluent Technical Specifications (RETS), as defined in NUREG-0472. The ODCM contains the methodology and parameters to be used in the calculation of off site doses due to radioactive liquid and gaseous effluents and in the calculation of liquid and gaseous monitoring instrumentation alarm/trip setpoints. The ODCM provides flow diagrams detailing the treatment path and the major components of the radioactive liquid and gaseous waste management systems. The ODCM presents maps of the sample locations and the meteorological model used to estimate the atmospheric dispersion and deposition parameters. The ODCM specifically addresses the design characteristics of the Donald C. Cook Nuclear Plant based on the flow diagrams contained on the "OP Drawings" and plant "System Description" documents.

2.0 REFERENCES

2.1 10 CFR 20, Standards for Protection Against Radiation

2.2 10 CFR 50, Domestic Licensing of Production and Utilization Facilities

2.3 PMI 6010, Radiation Protection Plan

2.4 NUREG-0472

2.5 NUREG-0133

2.6 Regulatory Guide 1.109

2.7 Regulatory Guide 1.111

2.8 Regulatory Guide 1.113

2.9 Final Safety Analysis Report (FSAR)

2.10 Technical Specifications, Appendix A, Sections 6.8.1.e and 6.14, Off-Site Dose Calculation Manual

2.11 Final Environmental Statement D. C. Cook Nuclear Plant, August 1973

2.12 NUREG-0017

2.13 ODCM Setpoints for Liquid Effluent Monitors (Bases), ENGR 107-04 8112.1 Environs Rad Monitor System

2.14 Radiological Support Section Calculation RS-C-0202, July 31, 1989

2.15 Radiological Support Section Calculation RS-C-0106, March 19, 1987

2.16 "Implementation of Programmatic Controls for Radiological Effluent Technical Specifications in the Administrative Controls Section of the Technical Specifications and the Relocation of Procedural Details of RETS to the Off-Site Dose Calculation Manual or to the Process Control Program (Generic Letter 89-01)", United States Nuclear Regulatory Commission, January 31, 1989

2.17 12 THP 6010 RPP.601, Preparation of the Annual Radioactive Effluent Release Report

3.0 LIST OF ATTACHMENTS

3.1 Dose Factors for Various Pathways

3.2 Radioactive Liquid Effluent Monitoring Instrumentation

3.3 Radioactive Liquid Effluent Monitoring Instrumentation Surveillance Requirements

3.4 Radioactive Gaseous Effluent Monitoring Instrumentation

3.5 Radioactive Gaseous Effluent Monitoring Instrumentation Surveillance Requirements

3.6 Radioactive Liquid Waste Sampling and Analysis Program

3.7 Radioactive Gaseous Waste Sampling and Analysis Program

3.8 Multiple Release Point Factors for Release Points

3.9 Liquid Effluent Release Systems Diagram

3.10 Plant Liquid Effluent Parameters

3.11 Counting Efficiency Table for RRS-1000

3.12 Counting Efficiency Curve for R-19, R-24

3.13 Counting Efficiency Curve for R-20, R-28

3.14 Gaseous Effluent Release Systems Diagram

3.15 Plant Gaseous Effluent Parameters

3.16 $\overline{\chi/Q}$ and $\overline{D/Q}$ Meteorological Parameters

3.17 Annual Evaluation of $\overline{\chi/Q}$ and $\overline{D/Q}$ Values for All Sectors

3.18 Dose Factors for Noble Gases and Daughters, Radioiodines and Radioactive Particulates, and Gaseous Effluents

3.19 Sample Stations, Types and Frequencies for the REMP

3.20 Maximum Values for the Lower Limits of Detection

3.21 Reporting Levels for Radioactive Concentrations in Environmental Samples

3.22 On-Site Monitoring Locations

3.23 Off-Site Monitoring Locations

3.24 Safety Evaluation by the Office of Nuclear Reactor Regulation Related to Disposal of Slightly Contaminated Sludge

3.25 10 CFR 20.302 Approval to Store Contaminated Concrete on Site

4.0 DETAILS

4.1 Calculation of Off-Site Doses

4.1.1 Gaseous Effluent Releases

The calculation of doses from effluent releases is performed by the computer program MIDAS (Meteorological Information and Dose Assessment System). The site specific parameters associated with MIDAS reside in the following subprograms:

MIDER
MIDEX
MIDEL
MIDEG
MIDEN

The subprogram used to enter and edit gaseous release data is called MD1EQ (EQ). The data entered in EQ can be used to calculate the accumulation of dose to individual land based receptors based on hourly meteorology and release data. The air dose from this data is calculated via the XDAIR subprogram in MIDAS. It computes air dose results for use in Reg Guide 1.21 reports and 10 CFR 50 Appendix I calculations based on routine releases.

The formula used for the calculation of the air dose is taken from Reg Guide 1.109 (Eq 7):

$$D_\gamma,\ D_\beta\ air = \overline{\frac{\chi}{Q}} \times \Sigma[(M_i\ or\ N_i) \times Q_i \times 3.17E^{-8}]$$

D_γ, D_β air	=	the gamma or beta air dose in mrad/yr to an individual receptor.
$\overline{\chi/Q}$	=	the annual average or real time atmospheric dispersion factor over land, sec/m ^{3}.
M_i	=	the gamma air dose factor, mrad m^3/ yr μCi, from Attachment 3.18.
N_i	=	the beta air dose factor, mrad m^3/ yr μCi, from Attachment 3.18.
Q_i	=	the release of radionuclide, i, in μCi/yr.
3.17E-8	=	inverse number of seconds/year, years/second.

The value for the ground average $\overline{\chi/Q}$ is determined using equations shown below:

$$\overline{\chi/Q} = \frac{2.03}{\overline{u}_{m_g} \times x \times \Sigma_g} \times T_f$$

where:

$$\Sigma_g = minimum\ of \sqrt{\sigma_{z_g}^2 + \frac{H_c^2}{2\pi}}\quad or\quad \Sigma_g = \sqrt{3}\sigma_{z_g}$$

x = distance downwind of the source, meters. This information is found in parameter 5 of MIDEX.

$\overline{u}_{m_g}$ = *wind speed for ground release, meters/second.*

σ_{z_g} = *vertical dispersion coefficient for ground release (meters).*

H_c = building height (meters) from parameter 28 of MIDER.

T_t = terrain factor (= 1 for Cook Nuclear Plant) because we consider all our releases to be ground level (see parameter #5 in MIDEX).

$$2.03 = \sqrt{2 + \pi} \div 0.393 \; radians \; (22.5°)$$

The dose due to gaseous releases (other than the air dose) is calculated by the MIDAS subprogram GASPRO. GASPRO computes the accumulation of dose to individual receptors based on hourly meteorology and release data. Calculations consider the effect of each important radionuclide for each pathway, organ, age group, distance and direction.

Calculations are based on the environmental pathways-to-manmodels in Reg Guide 1.109. The program considers 7 pathways, 8 organs, and 4 age groups in 16 direction sectors. The distances used are taken from the MIDEG file.

The formulas used for these calculations are taken from Reg Guide 1.109:

Total Body Plume Pathway (Eq 10)

$$Dose \; (mrem/year) = 3.17E^{-8} \times \sum \; (Q_i \times \overline{\chi/Q} \times S_f \times DFB_i)$$

where:

S_f = shielding factor that accounts for the dose reduction due to shielding provided by residential structures during occupancy (maximum exposed individual = 0.7 per Table E-15 of Reg Guide 1.109).

DFB_i = the whole body dose factor from Table B-1 of Reg Guide 1.109, mrem - m^3 per μCi - yr. See Attachment 3.18.

Q_i = the release rate of radionuclide i, in μCi/yr.

$\overline{\chi/Q}$ = the annual average or real time atmospheric dispersion factor, sec/m^3.

Skin Plume Pathway (Eq 11)

$$Dose \; (mrem/yr) = 3.17E^{-8} \times S_f \times \frac{\chi}{Q} \times [\Sigma(Q_i \times 1.11 \times DF_i^{\gamma}) + \Sigma(Q_i \times DFS_i)]$$

where:

1.11 = conversion factor, tissue to air, mrem/mrad.

DF_i^{γ} = the gamma air dose factor for a uniform semi-infinite cloud of radionuclide i, in mrad-m^3/ μCi-yr from Table B-1, Reg Guide 1.109. See Attachment 3.18.

DFS_i = the beta skin dose factor for a semi-infinite cloud of radionuclide i, in mrem-m^3/ μCi-yr from Table B-1, Reg Guide 1.109. See Attachment 3.18.

Radionuclide and Radioactive Particulate Doses (Eq 13 & 14)

The dose, D_{IP} in mrem/yr, to an individual from radionuclides, other than noble gases, with half-lives greater than 8 days in gaseous effluents released to unrestricted areas will be determined as follows:

$$D_{IP} \; (mrem/year) = 3.17E^{-8} \times \Sigma(R_i \times W \times Q_{ic})$$

R_i = the most restrictive dose factor for each identified radionuclide i, in m^2 mrem sec / yr μCi (for food and ground pathways) or mrem m^3 / yr μCi (for inhalation pathway), for the appropriate pathway.

For sectors with existing pathways within 5 miles of the site, use the values of R_i for these real pathways, otherwise use pathways distance of 5 miles. See Attachment 3.1 for the maximum R_i values for the most controlling age group for selected radionuclides. R_i values were generated by computer code PARTS, see NUREG-0133, Appendix D.

W = the annual average or real time atmospheric dispersion parameters for estimating doses to an individual at the worst case location, and where W is further defined as:

W_{in} = $\overline{\chi/Q}$ for the inhalation pathway, in sec/m ^{3}.

W_{fg} = $\overline{D/Q}$ for the food and ground pathways in 1/m ^{2}.

Q_{ic} = the release rate of those radioiodines, radioactive materials in particulate form and radionuclides other than noble gases with half-lives greater than eight (8) days, in μCi/yr.

This calculation is made for each pathway. The maximum computed dose at any receptor for each pathway is selected. These are summed together to get the dose to compare to the limits. Only the maximum of the cow milk or goat milk pathway (not both) is included in the total.

In addition to the above routines, the QUICKG routine of the MIDAS system is used to provide data used in the monthly reports due to its ability to use annual average meteorological data rather than real time data, thus shortening the run time involved.

STEAM GENERATOR BLOWDOWN SYSTEM (START UP FLASH TANK VENT)

The amount of radioiodine and other radionuclides that are released via the start up flash tank and it's vent are calculated through actual sample results while the start up flash tank is in service.

The following calculation is performed to determine the amount of curies released through this pathway.

$$Curies = \frac{\mu Ci}{ml} \times GPM \times time\ on\ flash\ tank\ (\text{min}) \times 3.785E^{-3}$$

3.785E-3 conversion factor ml Ci / μCi gal.

The flow rate is determined from the blowdown valve position and the time on the start up tank. Chemistry Department performs the sampling and analysis of the samples.

This data is provided to the MIDAS computer and a dose calculation is performed to ensure compliance with section 4.2 dose limits. MIDAS uses the formulas given in section 4.1.2 to calculate doses to members of the public.

NOTE
THIS SECTION PROVIDES THE MINIMUM REQUIREMENTS TO BE FOLLOWED AT COOK PLANT. THIS WOULD BE USED IF ACTUAL SAMPLE DATA WAS NOT AVAILABLE EACH TIME THE START UP FLASH TANK WAS IN SERVICE.

The radioiodine release rate must be determined in accordance with the following equation every 31 day period whenever the specific activity of the secondary coolant system is greater than 0.01 μCi/g dose equivalent I-131.

If the specific activity of the secondary coolant system is less than 0.01 μCi/g dose equivalent I-131, then the release rate must be determined once every six months.

Q_y = (Ci) (IPF) (R_{stb})

where:

Q_y = The release rate of I-131 from the steam generator flash tank vent, in μCi/sec.

Ci = the concentration (μCi/cc) of I-131 in the secondary coolant averaged over a period not exceeding seven days.

IPF = the iodine partition factor for the Start Up Flash Tank, 0.05, in accordance with NUREG-0017.

R_{sgb} = the steam generator blowdown rate to the start up flash tank, in cc/sec.

The calculated release rate shall be assumed to be the release rate until the next determination and used in the monthly dose projections to ensure compliance with section 4.2 dose limits. The release rate calculations shall be reported in the Annual Radioactive Effluent Report.

Steam Generators are sparged, sampled and drained as batches early in outages to facilitate cooldown for entry into the steam generator. This is repeated prior to startup to improve steam generator chemistry for the startup.

4.1.2 Liquid Effluent Releases

The calculation of doses from liquid effluent releases is also performed by the MIDAS program. The subprogram used to enter and edit liquid release data is called MD1EB (EB).

To calculate the individual doses (in mrem), the program DS1LI (LD) is used. It computes the individual dose for up to 5 receptors for 14 liquid pathways due to release of radioactive liquid effluents. The pathways to be used can be selected using the MIDEL program by changing the values given in parameter 1. Cook Nuclear Plant uses 3 pathways: potable water; shoreline and aquatic foods (fresh water sport fishing).

The equations used are taken from Reg Guide 1.109 Appendix A. They are as follows:

<u>Potable Water (Eq 1)</u>

$$R_{apj} = 1100 \times \frac{U_{ap}}{M_p \times F \times 2.23E^{-3}} \times \sum_i Q_i \times D_{aipj} e^{-\lambda_i t_p}$$

where:

R_{apj} = the total annual dose to organ j to individuals of age groups a from all of the nuclides i in pathway p, in mrem/year.

1100 = conversion factor yr ft^3 ρCi / Ci sec l.

U_{ap} = a usage factor that specifies the exposure time or intake rate for an individual of age group "a" associated with pathway "p". Given in #29-84 of parameter 4 in MIDEL and Reg Guide 1.109 Table E-5. See Attachment 3.1.

M_p = the dilution factor at the point of exposure (or the point of withdrawal of drinking water or point of harvest of aquatic food). Given in parameter 5 of MIDEL as 2.6.

F = the dilution water flow rate in gpm.

2.23E-3 = conversion factor, ft^3 min / sec gal.

Q_i = the release rate of nuclide i for the time period of the run input via MIDEB, Curies/year.

D_{aipj} = the dose factor, specific to a given age group a, radionuclide i, pathway p, and organ j, which can be used to calculate the radiation dose from an intake of a radionuclide, in mrem/ ρCi. The values are taken from tables E-11 through E-14 of Reg Guide 1.109 and are located within the MIDAS code.

λ_i = the radioactive decay constant for radionuclide i, in hours^{-1}.

t_p = the average transit time required for nuclides to reach the point of exposure, 12 hours. This allows for nuclide transport through the water purification plant and the water distribution system. For internal dose, t_p is the total elapsed time between release of the nuclides and ingestion of food or water, in hours. Given as #25 of parameter 4 in MIDEL.

Aquatic Foods (Eq 2)

$$R_{apj} = 1100 \times \frac{U_{ap}}{M_p \times F \times 2.23E^{-3}} \times \sum_i Q_i \times B_{ip} \times D_{aipj} e^{-\lambda_i t_p}$$

where:

B_{ip} = the equilibrium bioaccumulation factor for nuclide i in pathway p, expressed as ρCi l / kg ρCi. The factors are located within the MIDAS code and are taken from Table A-1 of Reg Guide 1.109. See Attachment 3.1.

t_p = the average transit time required for nuclides to reach the point of exposure, 24 hours. This allows for decay during transit through the food chain, as well as during food preparation. Given as #26 of parameter 4 in MIDEL.

M_p = the dilution factor at the point of exposure, 1.0 for Aquatic Foods.

Shoreline Deposits (Eq 3)

$$R_{apj} = 110,000 \times \frac{U_{ap} \times W}{M_p \times F \times 2.23E^{-3}} \times \sum_i Q_i \times T_i \times D_{aipj} [e^{-\lambda_i t_p}] \times [1 - e^{-\lambda_i t_b}]$$

where:

W = the shoreline width factor. Given as an input of 0.3 when running the program, based on Table A-2 in Reg Guide 1.109.

T_i = the radioactive half-life of the nuclide, i, in days.

D_{aipj} = the dose factor for standing on contaminated ground, in mrem m^2 / hr ρCi. The values are taken from table E-6 of Reg Guide 1.109 and are located within the MIDAS code. See Attachment 3.1.

t_b = the period of time for which sediment or soil is exposed to the contaminated water, 1.31E+5hours. Given in MIDEL as item 6 of parameter 4.

t_p = the average transit time required for nuclides to reach the point of exposure, 0 hours. Given as #28 of parameter 4 in MIDEL.

110000 = conversion factor yr ft^3 ρCi / Ci sec m^2 day, this accounts for proportionality constant in the sediment radioactivity model.

M_p = the dilution factor at the point of exposure (or the point of withdrawal of drinking water or point of harvest of aquatic food). Given in parameter 5 of MIDEL as 2.6.

The MIDAS program uses the following plant specific parameters which are entered by the operator.

Irrigation rate = 0.0
Fraction of time on pasture = 0.0
Fraction of feed on pasture = 0.0
Shore width factor = 0.3
(from Reg Guide 1.109, Table A-2)

The results of DS1LI are printed in LDRPT (LP). These results are used in the monthly report of liquid releases.

In addition, the program DOSUM (DM) is used to search the results files of DS1LI to find the maximum liquid pathway individual doses. The highest exposures are then printed in a summary table. Each line is compared with the appropriate dose limit. The table provides a concise summary of off-site environmental dose calculations for inclusion in Reg Guide 1.21 reports.

4.2 Limits of Operation and Surveillances of the Effluent Release Points

4.2.1 Radioactive Liquid Effluent Monitoring Instrumentation

4.2.1.1 The radioactive liquid effluent monitoring instrumentation channels shown in Attachment 3.2 shall be operable with their alarm/trip setpoints set to ensure that the limits of section 4.2.3.1 are not exceeded.

4.2.1.2 The applicability of each channel is shown in Attachment 3.2.

4.2.1.3 With a radioactive liquid effluent monitoring instrumentation channel alarm/trip setpoint less conservative than a value which will ensure that the limits of section 4.2.3.1 are met, without delay suspend the release of radioactive liquid effluents monitored by the affected channel, and reset or declare the monitor inoperable.

4.2.1.4 With one or more radioactive liquid effluent monitoring instrumentation channels inoperable, take the applicable action shown in Attachment 3.2 with a maximum allowable extension not to exceed 25% of the surveillance interval, excluding the initial performance.

4.2.1.5 The setpoints shall be determined in accordance with the methodology as described in section 4.3.1. The setpoints shall be recorded.

4.2.1.6 Each radioactive liquid effluent monitoring instrumentation channel shall be demonstrated operable by performance of the CHANNEL CHECK, SOURCE CHECK, CHANNEL CALIBRATION and CHANNEL FUNCTIONAL TEST at the frequencies shown in Attachment 3.3.

4.2.2 Radioactive Gaseous Effluent Monitoring Instrumentation

4.2.2.1 The radioactive gaseous process and effluent monitoring instrumentation channels shown in Attachment 3.4 shall be operable with their alarm/trip setpoints set to ensure that the limits of section 4.2.4.1 are not exceeded.

4.2.2.2 The applicability of each channel is shown in Attachment 3.4.

4.2.2.3 With a radioactive gaseous process or effluent monitoring instrumentation channel alarm/trip setpoint less conservative than a value which will ensure that the limits of section 4.2.4.1 are met, without delay suspend the release of radioactive gaseous effluents monitored by the affected channel, and reset or declare the channel inoperable.

4.2.2.4 With less than the minimum number of radioactive gaseous effluent monitoring instrumentation channels operable, take the action shown in Attachment 3.4 with a maximum allowable extension not to exceed 25% of the surveillance interval, excluding the initial performance.

> NOTE
>
> THIS SURVEILLANCE REQUIREMENT DOES NOT APPLY TO THE WASTE GAS HOLDUP SYSTEM HYDROGEN AND OXYGEN MONITORS, AS THEIR SETPOINTS ARE NOT ADDRESSED IN THIS DOCUMENT.

4.2.2.5 The setpoints shall be determined in accordance with the methodology as described in section 4.3.2. The setpoint shall be recorded.

4.2.2.6 Each radioactive gaseous process or effluent monitoring instrumentation channel shall be demonstrated operable by performance of the CHANNEL CHECK, SOURCE CHECK, CHANNEL CALIBRATION, and CHANNEL FUNCTIONAL TEST operations at the frequencies shown in Attachment 3.5.

4.2.3 Liquid Effluents

4.2.3.1 Concentration Excluding Releases via the Turbine Room Sump Discharge

4.2.3.1.1 The concentration of radioactive material released at any time from the site via the Batch Release Tanks or Plant Continuous Releases (excluding only Turbine Room Sump discharge to the Absorption Pond) to unrestricted areas shall be limited to the concentrations in 10 CFR 20, Appendix B, Table 2, Column 2, for radionuclides other than dissolved or entrained noble gases. For dissolved or entrained noble gases, the concentration shall be limited to 2E-4 μCi/ml total activity.

4.2.3.1.2 With the concentration of radioactive material released from the site via the Batch Release Tanks or Plant Continuous Releases (other than the Turbine Room Sump to the Absorption Pond) exceeding the above limits, without delay restore the concentration to within the above limits.

4.2.3.1.3 Radioactive liquid wastes shall be sampled and analyzed according to the sampling and analysis program of Attachment 3.6.

4.2.3.1.4 The results of radioactive analysis shall be used in accordance with the methods of this document to assure that all concentrations at the point of release are maintained within the above limits.

4.2.3.2 Concentration of Releases from the Turbine Room Sump Discharge

4.2.3.2.1 Releases via the Turbine Room Sump discharge to the on-site Absorption Pond shall be limited to the concentrations specified in 10 CFR 20, Appendix B, Table 2, Column 2. For dissolved or entrained noble gases, the concentration shall be limited to 2E-4 μCi/ml total activity.

4.2.3.2.2 With releases from the Turbine Room Sump exceeding the above limits, perform a dose projection due to liquid releases to UNRESTRICTED AREAS to determine if the limits of section 4.2.3.3.1 have been exceeded. If the dose limits have been exceeded, follow the directions in step 4.2.3.3.2.

4.2.3.2.3 Radioactive liquid wastes shall be sampled and analyzed according to the sampling and analysis program of Attachment 3.6.

4.2.3.2.4 The results of radioactive analysis shall be used in accordance with the methods of this document to assure that all concentrations at the point of release are maintained within the limits as stated above.

4.2.3.3 Dose

4.2.3.3.1 The dose or dose commitment to an individual from radioactive material in liquid effluents released to unrestricted areas shall be limited during any calendar quarter to $\leq$ 1.5 mrem to the total body and to $\leq$ 5 mrem to any organ, and during any calendar year to $\leq$ 3 mrem to the total body and to $\leq$ 10 mrem to any organ.

4.2.3.3.2 With the calculated dose from the release of radioactive materials in liquid effluents exceeding 10 times any of the above limits, prepare and submit a Written Report, pursuant to 10 CFR 20.2203, within 30 days after learning of the event. This report must describe the extent of exposure of individuals to radiation and radioactive material, including, as appropriate:

- estimate of each individuals dose
- levels of radiation and concentration of radioactive material involved
- cause of elevated exposures, dose rates or concentrations
- corrective steps taken or planned to ensure against recurrence, including schedule for achieving conformance with applicable limits.

These reports must be formatted in accordance with PMP 7030.001.002, Licensee Event Reports, Special and Routine Reports, even though this is not an LER.

4.2.3.3.3 Cumulative dose contributions from liquid effluents shall be determined in accordance with this document at least once per 31 days. Dose may be projected based on estimates from previous monthly projections and current or future plant conditions.

4.2.3.4 Liquid Radwaste Treatment System

4.2.3.4.1 The liquid radwaste treatment system shall be used to reduce the radioactive materials in liquid wastes prior to their discharge when the projected doses due to the liquid effluent from the site when averaged over 31 days, would exceed 0.06 mrem to the total body or 0.2 mrem to any organ.

4.2.3.4.2 Doses due to liquid releases to UNRESTRICTED AREAS shall be projected at least once per 31 days, in accordance with this document, whenever liquid releases are being made without being processed by the liquid radwaste treatment system.

4.2.4 Gaseous Effluents

4.2.4.1 Dose Rate

4.2.4.1.1 The dose rate due to radioactive materials released in gaseous effluents from the site shall be limited to ≤ 500 mrem/yr to the total body and ≤ 3000 mrem/yr to the skin for noble gases. The dose rate due to all radioiodines and for all radioactive materials in particulate form and radionuclides (other than noble gases) with half-lives greater than 8 days shall be limited to ≤ 1500 mrem/yr to any organ.

4.2.4.1.2 With the dose rate(s) exceeding the above limits, without delay decrease the release rate to within the above limit(s).

4.2.4.1.3 The dose rate due to noble gases in gaseous effluents shall be determined to be within the above limits in accordance with the methods and procedures described in this document.

4.2.4.1.4 The dose rate due to radioactive materials, other than noble gases, in gaseous effluents shall be determined to be within the above limits in accordance with the methods and procedures of this document by obtaining representative samples and performing analyses in accordance with the sampling and analysis program in Attachment 3.7.

4.2.4.2 Dose - Noble Gases

4.2.4.2.1 The air dose in unrestricted areas due to noble gases released in gaseous effluents shall be limited during any calendar quarter, to ≤ 5 mrad for gamma radiation and ≤ 10 mrad for beta radiation and during any calendar year, to ≤ 10 mrad for gamma radiation and ≤ 20 mrad for beta radiation.

4.2.4.2.2 With the calculated air dose from radioactive noble gases in gaseous effluents exceeding 10 times any of the above limits, prepare and submit a Written Report, pursuant to 10 CFR 20.2203 and addressed in step 4.2.3.3.2, within 30 days after learning of the event.

4.2.4.2.3 Cumulative dose contributions for the total time period shall be determined in accordance with this document at least once every 31 days.

4.2.4.3 Dose - Iodine-131, Iodine-133, Tritium, and Radioactive Material in Particulate Form

4.2.4.3.1 The dose to a MEMBER OF THE PUBLIC from radioiodine, radioactive materials in particulate form, and radionuclides other than noble gases with half-lives greater than 8 days in gaseous effluents released to unrestricted areas (site boundary) shall be limited to the following:

(a) During any calendar quarter to less than or equal to 7.5 mrem to any organ

(b) During any calendar year to less than or equal to 15 mrem to any organ.

4.2.4.3.2 With the calculated dose from the release of radioiodines, radioactive materials in particulate form, or radionuclides other than noble gases in gaseous effluents exceeding 10 times any of the above limits, prepare and submit a Written Report, pursuant to 10 CFR 20.2203 and addressed in step 4.2.3.3.2, within 30 days after learning of the event.

4.2.4.3.3 Cumulative dose contributions for the total time period shall be determined in accordance with this document at least once every 31 days.

4.2.4.4 Gaseous Radwaste Treatment

4.2.4.4.1 The gaseous radwaste treatment system and the ventilation exhaust treatment system shall be used to reduce radioactive materials in gaseous wastes prior to their discharge when projected gaseous effluent air doses due to gaseous effluent releases to unrestricted areas when averaged over 31 days, would exceed 0.2 mrad for gamma radiation and 0.4 mrad for beta radiation. The ventilation exhaust treatment system shall be used to reduce radioactive materials in gaseous waste prior to their discharge when the projected doses due to gaseous effluent releases to unrestricted areas when averaged over 31 days would exceed 0.3 mrem to any organ.

4.2.4.4.2 Doses due to gaseous releases to UNRESTRICTED AREAS shall be projected at least once per 31 days in accordance with this document, whenever the gaseous waste treatment system or ventilation exhaust treatment system is not operational.

4.2.5 Radioactive Effluents - Total Dose

4.2.5.1 The dose or dose commitment to a real individual from all uranium fuel cycle sources is limited to ≤ 25 mrem to the total body or any organ (except the thyroid, which is limited to ≤ 75 mrem) over a period of 12 consecutive months.

4.2.5.2 With the calculated doses from the release of radioactive materials in liquid or gaseous effluents exceeding one half the annual limits of sections 4.2.3.3, 4.2.4.2 or 4.2.4.3 during any calendar quarter perform the following:

- Investigate and identify the causes for such release rates;
- Define and initiate a program for corrective action;
- Report these actions to the NRC within 30 days from the end of the quarter during which the release occurred.

If the estimated dose(s) exceeds the limits above, and if the release condition resulting in violation has not already been corrected prior to violation of 40 CFR 190, then the report shall include a request for a variance in accordance with the provisions of 40 CFR 190 and including the specified information of paragraph 190.11(b). Submittal of the report is considered a timely request, and a variance is granted until staff action on the request is complete. The variance only relates to the limits of 40 CFR 190, and does not apply in any way to the requirements for dose limitation of 10 CFR 50, as addressed in other sections of this procedure.

4.2.5.3 Cumulative dose contributions from liquid and gaseous effluents shall be determined in accordance with this document (including Sections 4.2.3.3, 4.2.4.2 and 4.2.4.3).

4.3 Calculation of Alarm/Trip Setpoints

The alarm and trip setpoints are to provide monitoring, indication and control of liquid and gaseous effluents. The setpoints are used in conjunction with sampling programs to assure that the releases are kept within the limits of 10 CFR 20, Appendix B, Table 2. Setpoints shall be established for liquid and gaseous monitors. Depending on the monitor function, it would be a continuous or batch monitor. The different types of monitors are subject to different setpoint methodologies.

One variable used in the setpoint calculations is the multiple release point factor (MRP). The MRP is a factor used such that when all the releases are integrated, the applicable LIMIT value will not be violated. The MRP is determined such that the sum of the MRP's for that effluent type (liquid or gaseous) is less than

or equal to 1. The value of the MRP is arbitrary, and it should be assigned based on operational performance. The values of the MRP's for each liquid release point are given in Attachments 3.8.

4.3.1 Liquid Monitors

Liquid monitor setpoints shall be established for each monitor of the liquid effluent release systems. A schematic of the liquid effluent release systems is shown as Attachment 3.9. A list of the Plant Liquid Effluent Parameters is in Attachment 3.10. The exact details of each system design and operation can be found in the system descriptions. The setpoints are intended to keep releases within the limits of 10 CFR 20, Appendix B, Table 2, Column 2. Setpoints shall be determined using either the batch or the continuous methodology.

4.3.1.1 Liquid Batch Monitor Setpoint Methodology

There is only one monitor used on the Waste Disposal System for liquid batch releases. This monitor is identified as RRS-1000. R-19 and R-24 also can be used to monitor batch releases while draining steam generators. The function of these monitors is to act as a check on the sampling program. The sampling program determines the nuclides and concentrations of those nuclides prior to release. The discharge flow rates and dilution flow rates are then adjusted to keep the release within the limits of 10 CFR 20. Based on the concentrations of nuclides in the release the count rate on the monitor can be predicted. The high alarm setpoint can then be set above the predicted value up to the maximum setpoint of the system.

The radioactive concentration of each batch of radioactive liquid waste to be discharged is determined prior to each release by sampling and analysis in accordance with Attachment 3.6.

The flow rates are determined in order to keep the release within the requirements of 10 CFR 20, Appendix B, Table 2, Column 2. The equation to calculate the flow rate is:

$$\left[\Sigma \frac{C_i}{LIMIT_i}\right] \times \frac{f}{MRP} \leq F + f$$

Where:

C_i = the concentration of nuclide i in μCi/ml.

$LIMIT_i$ = the 10 CFR 20, Appendix B, Table 2, Column 2 limit of nuclide i in μCi/ml.

f = the effluent flow rate in gpm (Attachment 3.10).

F = the dilution water flow rate as estimated prior to release. The dilution flow rate is a multiple of 230,000 gpm depending on the number of circulation pumps in operation.

MRP = the multiple release point factor. A factor such that when all the release points are operating at one time the limits of 10 CFR 20 will not be exceeded.

This equation shall be true during the batch release. Before the release is started, the maximum effluent flow rate and the minimum dilution flow rate should be substituted for f and F, respectively. If the equation is true, then the release can proceed with those flow rates as the limits of operation. If the equation is not true, then the effluent flow rate can be reduced or the dilution flow rate can be increased to make the equation true. This equation may be rearranged to solve for the maximum effluent release flow rate (f).

The setpoint is used as a quality check on the sampling program. The setpoint is used to stop the effluent flow when the monitor reading is greater than the predicted value from the sampling program. The predicted value is generated by converting the effluent concentration for each γ emitting radionuclide to counts per unit of time as per Attachment 3.11 or 3.12. The sum of all the counts per unit of time is the predicted count rate. The predicted count rate can then be multiplied by a factor to determine the high alarm setpoint that will provide a high degree of conservatism and eliminate spurious alarms.

4.3.1.2 Liquid Continuous Monitor Setpoint Methodology

There are eight monitors used as continuous liquid release monitors. These monitors are used in the steam generator blowdown, blowdown treatment and essential service water systems.

The monitors are identified as:

- R-19 for the steam generator blowdown for both units.
- R-24 for the blowdown treatment system for both units.
- R-20 for the east ESW system for each unit.
- R-28 for the west ESW system for each unit.

The function of the monitors is to assure that releases are kept within the limits of 10 CFR 20, Appendix B, Table 2.

The monitors on the steam generator blowdown and blowdown treatment systems have trip functions associated with their setpoints. The essential service water monitors are equipped with an alarm function only and monitor effluent in the event the Containment Spray Heat Exchangers are used.

The setpoint for the continuous monitors is:

$$S_p \leq \frac{C \times F \times MRP \times Eff \times SF}{f}$$

where:

S_p = the setpoint of the monitor (cpm)

C = 5E-7 μCi/ml, the maximum permissible limit from 10 CFR 20, Appendix B, Table 2, Column 2 of a known possible nuclide in the effluent stream.

OR

if a mixture is to be specified,

$$\frac{\Sigma\ C_i}{\Sigma\ \frac{C_i}{LIMIT_i}}$$

F = the dilution water (circ water) flow rate in gpm obtained from Attachment 3.10 For routine operation, the setpoint should be calculated using the minimum dilution flow rate of 230,000 gpm.

MRP = the multiple release point factor. A factor such that when all the release points are operating at one time the limits of 10 CFR 20 will not be exceeded (Attachment 3.8). The MRP for R-20 and R-28 is set to 1.

SF = Safety Factor, 0.9.

Eff = Efficiency

R-19 - 4.2 E6 cpm/ μCi/ml
R-24 - 7.5 E6 cpm/ μCi/ml
R-20 - 4.3 E6 cpm/ μCi/ml
R-28 - 4.3 E6 cpm/ μCi/ml

f = the applicable effluent release flow rate in gpm. For routine operation, the setpoint should be calculated using the maximum effluent flow rate (Attachment 3.10).

4.3.2 Gaseous Monitors

For the purpose of implementing sections 4.2.2 and 4.2.4.1, the alarm setpoints for gaseous effluents released into unrestricted areas will be established using the following methodology. In addition, the above sections do not apply to instantaneous alarm and trip setpoints for integrating radiation monitors sampling radioiodines, radioactive materials in particulate form and radionuclides other than noble gases. A schematic of the gaseous effluent release systems is presented in Attachment 3.14. Attachment 3.15 presents the effluent flow rate parameter(s).

4.3.2.1 Plant Unit Vent

The gaseous effluents discharged from the plant vent will be monitored by the plant vent radiation monitor low range noble gas channel [Tag No. VRS-1505 (Unit 1), VRS-2505 (Unit 2)] to assure that alarms and trip actions (isolation of gaseous release) will occur prior to exceeding the limits in section 4.2.4. The alarm setpoint values will be established using the following equation:

$$S_p = \frac{SF \times MRP \times DL_j}{F_p \times \overline{\chi/Q} \times \sum_i (W_i \times DCF_{ij})}$$

where:

S_p = the maximum setpoint of the monitor in μCi/cc for release point p, based on the most limiting organ.

SF = an administrative operation safety factor, < 1.0.

MRP = a weighted multiple release point factor (≤ 1.0), such that when all site gaseous releases are integrated, the applicable dose will not be exceeded based on the release rate of each effluent point. The MRP will be based on the ratio of the release rate or the volumetric flow rate of each effluent point to the total respective flow rate value of the plant and will be consistent with past operational experience. The MRP is computed as follows:

1) compute the average release rate, Q_p, (or the volumetric flow rate, f_p) from each release point p.

2) compute ΣQ_p (or Σf_p) for all release points.

3) ratio $Q_p / \Sigma Q_p$ (or $f_p / \Sigma f_p$) for each release point. This ratio is the MRP for that specific release point.

4) repeat 1) through 3) for each of the site's eight gaseous release points.

F_p = the maximum volumetric flow rate of release point p, at the time of the release in cc/sec. The maximum Unit Vent flow rate, by design, is 139,600 cfm for Unit 1 and 103,500 for Unit 2.

DL_j = dose rate limit to organ j in an unrestricted area (mrem/yr).

Based on continuous releases, the dose rate limits, DL_j from section 4.2.4.1, are as follows:

Total Body	≤ 500 mrem/year
Skin	≤ 3000 mrem/year
Any Organ	≤ 1500 mrem/year

$\overline{\chi/Q}$ = the annual average relative concentration in the applicable sector or area, in sec/m^3 (see Attachment 3.16). The χ/Q values will be evaluated on an annual basis against the 10 year averages and documented by completing Attachment 3.17 and filing in accordance with the retention schedule.

W_i = weighted factor for the radionuclide:

$$W_i = \frac{C_i}{\sum C_k}$$

where:

C_i = concentration of the most abundant radionuclide i.

C_k = total concentration of all identified radionuclides in that release pathway. For batch releases, this value may be set to one (1) for conservatism.

DCF_{ij} = dose conversion factor used to relate radiation dose to organ j, from exposure to radionuclide i in mrem m^3/ yr μCi. See equations below.

The dose conversion factor, DCF_{ij}, is dependent upon the organ of concern.

For the whole body:

$$DCF_{ij} = K_i$$

where:

K_i = whole body dose factor due to gamma emissions for each identified noble gas radionuclide in mrem m^3/ yr μCi. See Attachment 3.18

For the skin:

$$DCF_{ij} = L_i + 1.1M_i$$

where:

L_i = skin dose factor due to beta emissions for each identified noble gas radionuclide, in mrem m^3/ yr μCi. See Attachment 3.18

1.1 = the ratio of tissue to air absorption coefficient over the energy range of photons of interest. This ratio converts absorbed dose (mrad) to dose equivalent (mrem).

M_i = the air dose factor due to gamma emissions for each identified noble gas radionuclide in mrad m^3/ yr μCi. See Attachment 3.18.

For the thyroid, via inhalation:

$$DCF_{ij} = P_i$$

where:

P_i = the dose parameter, for radionuclides other than noble gas, for the inhalation pathway in mrem m^3/ yr μCi. See Attachment 3.18

The plant vent radiation monitor low range noble gas channel setpoint, S_p, will be set such that the dose rate in unrestricted areas to the whole body, skin and thyroid (or any other organ), whichever is most limiting, will be less than or equal to 500 mrem/yr, 3000 mrem/yr, and 1500 mrem/yr respectively. The thyroid dose is limited to the inhalation pathway only. The plant vent radiation monitor low range noble gas setpoint, S_p, will be recomputed whenever gaseous releases like Containment Purge, Gas Decay Tanks and CVCS HUTs are discharged through the plant vent to determine the most limiting organ. The setpoint, S_p, may be established at a lower value than the lowest computed value via the setpoint equation. Containment Pressure Reliefs will not have a recomputed setpoint, but will use the normal setpoint due to their randomness and the time constraints involved in recomputation.

At certain times, it may be desirable to increase the setpoint, if the vent flowrate is decreased. This may be accomplished in one of two ways.

$$\frac{Max\ Conc\ (\mu Ci/cc) \times Max\ Flowrate\ (cfm)}{New\ Max\ Concentration\ (\mu Ci/cc)} = New\ Max\ cfm$$

or

$$\frac{Max\ Conc\ (\mu Ci/cc) \times Max\ Flowrate\ (cfm)}{New\ Max\ Flowrate\ (cfm)} = New\ Max\ \mu Ci/cc$$

4.3.2.2 Waste Gas Decay Tanks

The gaseous effluents discharged from the Waste Gas System will be monitored by the vent stack monitors VRS-1505 and VRS-2505.

Due to a high radiation alarm, an automatic termination of the release from the waste gas system will be initiated from the plant vent radiation monitor low range noble gas channel (VRS-1505 or VRS-2505). Therefore, for any gaseous release configuration, which includes normal operation and waste gas system gaseous discharges, the alarm setpoint of the plant vent radiation monitor will be recomputed to determine the most limiting organ based on all gaseous effluent source terms.

4.3.2.3 Containment Purge and Exhaust System

The gaseous effluents discharged by the Containment Purge and Exhaust Systems and Instrumentation Room Purge and Exhaust System will be monitored by the plant vent radiation monitor noble gas channels (VRS-1505 for Unit 1, VRS-2505 for Unit 2); and alarms and trip actions will occur prior to exceeding the limits in section 4.2.4.1.

For the Containment System, a continuous air sample from the containment atmosphere is drawn through a closed, sealed system to the radiation monitors (Tag No. ERS-1300/1400 for Unit 1 and ERS-2300/2400 for Unit 2). The sample is then returned to containment. Grab sample analysis is performed for a Containment purge before release.

The Upper Containment area is monitored by normal range area gamma monitors (Tag No. VRS-1101/1201 for Unit 1 and VRS-2101/2201 for Unit 2), which also give Purge and Exhaust Isolation Trip signals upon actuation of their high alarm.

For the Containment Pressure Relief System, no sample is routinely taken.

The containment airborne and area monitors, upon actuation of their high alarm, will automatically initiate closure of the Containment and Instrument Room purge supply and exhaust duct valves and containment pressure relief system valves. Complete trip of all isolation control devices requires high alarm of one of the two Train A monitors (ERS-1300/2300 or VRS-1101/2101) and one of the two Train B monitors (ERS-1400/2400 or VRS-1201/2201).

4.3.2.4 Steam Jet Air Ejector System (SJAE)

The gaseous effluents from the Steam Jet Air Ejector System discharged to the environment are continuously monitored by radiation monitor (Tag No. SRA-1900 for Unit 1 and SRA-2900 for Unit 2). The monitor will alarm prior to exceeding the limits of section 4.2.4.1. The alarm setpoint for the Condenser Air Ejector System monitor will be based on the maximum air ejector exhaust flow rate, (Attachment 3.15). The alarm setpoint value will be established using the following equations:

$$S_{SJAE} = \frac{SF \times MRP \times DL_j}{F_p \times \overline{\chi/Q} \times \sum_i (W_i \times DCF_{ij})}$$

where:

S_{SJAE} = the maximum setpoint, based on the most limiting organ, in μCi/cc

and where the other terms are as previously defined.

4.3.2.5 Gland Seal Condenser Exhaust

The gaseous effluents from the Gland Seal Condenser Exhaust discharged to the environment are continuously monitored by radiation monitor (Tag No. SRA-1800 for Unit 1 and SRA-2800 for Unit 2). The radiation monitor will alarm prior to exceeding the limits of section 4.2.4.1. The alarm setpoint for the GSCE monitor will be based on the maximum condenser exhaust flow rate (1260 CFM for Unit 1, 2754 CFM each for the two Unit 2 vents). The alarm setpoint value will be established using the following equation:

$$S_{GSCE} = \frac{SF \times MRP \times DL_j}{F_p \times \overline{\chi/Q} \times \sum_i (W_i \times DCF_{ij})}$$

where:

S_{GSCE} = the maximum setpoint, based on the most limiting organ, in μCi/cc

and where the other terms are as previously defined.

4.3.2.6 Emergency Gaseous Setpoint Methodology

Each of the routine gaseous release paths can also indicate off-normal release concentrations. If this would occur, then the setpoint methodology for gaseous monitors would determine setpoints to alarm or trip and indicate an off-normal occurrence. The mid and high range setpoints should be used to indicate when the effluent concentrations are possibly exceeding limits that may contribute to a dose in excess of predetermined limits as outlined in the Emergency Plan. There are four classifications of accidents. They are Unusual Event, Alert, Site Area Emergency and General Emergency. The last two classifications have Emergency Plan site boundary dose rate limits associated with them. The mid and high range setpoints should be set to respond at these limits. The high range Unit Vent monitors, VRS-1509 and VRS-2509, will use a setpoint calculated to ensure protection of the low range monitor from excessive radiation. The PORV monitor is a single channel emergency monitor. To show when an event with radioactive releases occurred the setpoint should be set to the value for a General Emergency.

The equation used to determine the setpoint is then:

$$S_p = \frac{DR}{F \times \overline{\chi/Q} \times DCF}$$

where:

S_p = the alarm/setpoint of the monitor, μCi/cc.

DR = the dose rate associated with the setpoint (applicable E-Plan limit).

F = the maximum flow rate for this effluent point in m^3/sec. To convert CFM to m^3/sec, multiply the flow rate in CFM by 4.71E-4.

$\overline{\chi/Q}$ = The historical annual average relative concentration (sec/m^3) based on meteorological data summarized in Attachment 3.16 as recommended in Reg Guide 1.111

DCF = the dose conversion factor to change mrem/hr to μCi/cc. The conversion factor for the PORV monitors is 64,000 (Ref. 2.14). The conversion factor for the other mid and high range monitors is 622,000 (Ref. 2.14).

4.4 Radioactive Effluents Total Dose

The cumulative dose contributions from liquid and gaseous effluents will be determined by summing the cumulative doses as derived in Sections 4.2.3.3, 4.2.4.2 and 4.2.4.3 of this procedure. Dose contribution from direct radiation exposure will be based on the results of the direct radiation monitoring devices located at the REMP monitoring stations. See NUREG-0133, Section 3.8.

4.5 Radiological Environmental Monitoring Program (REMP)

4.5.1 Purpose of the REMP

The purpose of the REMP is to establish baseline radiation and radioactivity concentrations in the environs prior to reactor operations, to monitor critical environmental exposure pathways, and to determine the radiological impact, if any, caused by the operation of the Donald C. Cook Nuclear Plant upon the local environment.

The first purpose of the REMP was completed prior to the initial operation of either of the two nuclear units at the Cook Plant Site. The second and third purposes of the REMP are an on-going operation and as such various environmental media and exposure pathways are examined. The various pathways and sample media used are delineated in Attachment 3.19, Radiological Environmental Monitoring Program. Included is a list of the sample media, analysis required, sample stations, and frequency requirements for both collection and analysis. Attachment 3.19 defines the scope of the REMP for the Donald C. Cook Nuclear Plant.

4.5.2 Conduct of the REMP

Sample collection and analysis for the REMP shall be conducted in accordance with Attachment 3.19, Radiological Environmental Monitoring Program, Attachment 3.20, Maximum Values for Lower Limits of Detection, and Attachment 3.21, Reporting Levels for Radioactive Concentrations in Environmental Samples. These are applicable at all times. The on-site monitoring locations are shown on Attachment 3.22, while the off-site monitoring locations are shown on Attachment 3.23

4.5.2.1 Each surveillance requirement shall be performed within the specified time interval in Attachment 3.19 with a maximum allowable extension not to exceed 25% of the surveillance interval.

4.5.2.2 <u>If</u> an environmental sample cannot be collected in accordance with Step 4.5.2.1, <u>then</u> a description of the reasons for deviation and the actions taken to prevent a reoccurrence shall be submitted as part of the Annual Radiological Environmental Operating Report (AREOR).

Deviations from the required sampling schedule are permitted if specimens are unobtainable due to hazardous conditions, seasonal unavailability, or malfunction of automatic sampling equipment. If the deviation from the required sampling schedule is due to the malfunction of automatic sampling equipment, every effort shall be made to complete the corrective action prior to the end of the next sampling period.

4.5.2.3 <u>If</u> a radionuclide is detected in any sample medium exceeding the limit established in Attachment 3.21, <u>then</u> the Reporting Levels for Radioactivity Concentrations, or if more than one radionuclide is detected in any sample medium and the Total Fractional Level (TFL), when averaged over the calendar quarter is greater than or equal to 1, based on the following formula:

$$TFL = \frac{C_{(1)}}{L_{(1)}} + \frac{C_{(2)}}{L_{(2)}} + \ldots \geq 1$$

Where:

$C_{(1)}$ = Concentration of 1st detected nuclide

$C_{(2)}$ = Concentration of 2nd detected nuclide

$L_{(1)}$ = Reporting Level of 1st nuclide from Attachment 3.21

$L_{(2)}$ = Reporting Level of 2nd nuclide from Attachment 3.21

And, <u>if</u> the activity is the result of plant effluents, <u>then</u> evaluate the release conditions, environmental factors or other aspects which may have contributed to the identified levels for inclusion in the AREOR. <u>If</u> the radioactivity was not a result of plant effluents, <u>then</u> the results shall be described in the AREOR.

4.5.2.4 If a currently sampled milk farm location becomes unavailable, then a special milk farm survey, for that sector, shall be conducted within 15 days

4.5.2.4.1 If the unavailable location was an indicator farm, then an alternate sample location may be established in the same sector within 8 miles of the Plant if one is available.

4.5.2.4.2 If the unavailable location was a background farm, then an alternate sample location may be established > 15 but < 25 miles of the Plant in one of the less prevalent wind direction sectors, if one is available.

4.5.2.4.3 If a replacement farm is unobtainable and the total number of indicator farms is less than three or the background farms is less than one, then monthly vegetation sampling shall be performed in lieu of milk sampling.

4.5.3 Annual Land Use Census

A land use census shall be conducted and shall identify the location of the nearest milk animal, the nearest residence and the nearest garden of greater than 500 square feet producing fresh leafy vegetables in each of the 10 land sectors within a distance of five miles.

In lieu of the garden census, grape and broad leaf vegetation sampling may be performed as close to the site boundary as possible in a land sector, containing sample media, with the highest average deposition factor (D/Q) value.

This land use census shall be conducted annually between the dates of June 1 and October 1 by door-to-door survey, aerial survey, or by consulting local agricultural authorities.

4.5.3.1 With a land use census identifying a location(s) which yields a calculated dose or dose commitment greater than the values currently being calculated in this document, make appropriate changes to incorporate the new location(s) within 30 days, if possible.

4.5.4 Interlaboratory Comparison Program

In order to comply with Reg Guide 4.15, the analytical vendor shall participate in an Interlaboratory Comparison Program, approved by the Commission for radioactive materials. Program results and identified deficiencies shall be addressed in the AREOR.

4.5.4.1 With analyses not being performed as required above, report the corrective actions taken to prevent a recurrence to the Commission in the AREOR.

4.6 Steam Generator Storage Facility Groundwater Monitoring Program

4.6.1 Purpose of the Steam Generator Storage Facility Groundwater Radiological Monitoring Program

The purpose of the temporary on-site Steam Generator Storage Facility Radiological Monitoring Program is to establish baseline radiological data for the groundwater surrounding the facility prior to the storage of the Unit 2 Steam Generator Lower Assemblies. Thereafter, the purpose is to monitor the groundwater through observation wells with locations as shown in Attachment 3.22, to determine the radiological impact, if any, caused by the use of the Storage Facility.

4.6.2 Conduct of the Steam Generator Storage Facility Groundwater Radiological Monitoring Program

Groundwater samples shall be collected and analyzed in accordance with Attachment 3.19, REMP. The values from Attachment 3.20, Maximum Values for Lower Limits of Detection (excluding I-131), and Attachment 3.21, Reporting Levels for Radioactive Concentrations in Environmental Samples (excluding I-131) shall apply.

4.7 Meteorological Model

Three towers are used to determine the meteorological conditions at Cook Nuclear Plant. One of the towers is located at the Lake Michigan shoreline to determine the meteorological parameters associated with unmodified shoreline air. The data is accumulated by microprocessors at the tower sites and normally transferred to the central computer every 15 minutes.

The central computer uses the MIDAS program to provide atmospheric dispersion and deposition parameters. The meteorological model used is based on guidance provided in Reg Guide 1.111 for routine releases. All calculations use the Gaussian plume model.

4.8 Reporting Requirements

4.8.1 Annual Radiological Environmental Operating Report (AREOR)

Routine radiological environmental operating reports covering the operation of the units during the previous calendar year shall be submitted prior to May 1 of each year.

The AREOR shall include summaries, interpretations, and statistical evaluation of the results of the radiological environmental surveillance activities for the report period, including a comparison with preoperational studies, operational controls (as appropriate), and previous environmental surveillance reports and an assessment of the observed impacts of the plant operation on the environment. The reports shall also include the results of the land use censuses required by Section 4.5.3. If harmful effects or evidence of irreversible damage are detected by the monitoring, then the report shall provide an analysis of the problem and a planned course of action to alleviate the problem.

The AREOR shall include summarized and tabulated results of all radiological environmental samples taken during the report period. In the event that some results are not available for inclusion with the report, the report shall be submitted noting and explaining the reasons for the missing results. The missing data shall be submitted as soon as possible in a supplementary report.

The report shall include the following: a summary description of the REMP including sampling methods for each sample type, size and physical characteristics of each sample type, sample preparation methods, analytical methods, and measuring equipment used; a map of all sample locations keyed to a table giving distances and directions from one reactor; the result of the land use census required by Section 4.5.3; and the results of participation in the Interlaboratory Comparison Program required by section 4.5.4.

4.8.2 Annual Radiological Effluent Release Report (ARERR)

Routine ARERR covering the operation of the unit during the previous 12 months of operation shall be submitted within 90 days after January 1 of each year.

The ARERR shall include a summary of the quantities of radioactive liquid and gaseous effluents and solid waste released from the units as outlined in Reg Guide 1.21, "Measuring, Evaluating and Reporting in Solid Wastes and Releases of Radioactive Materials in Liquid and Gaseous Effluents from Light-Water Cooled Nuclear Power Plants," with data summarized on a quarterly basis following the format of Appendix B, thereof.

The ARERR to be submitted 90 days after January 1 of each year shall include a quarterly summary of hourly meteorological data collected during the reporting period. This summary may be in the form of an hour-by-hour listing of wind speed, wind direction, atmospheric stability, and precipitation (if measured) on magnetic tape, or in the form of joint frequency distributions of wind speed, wind direction and atmospheric stability. The report submitted 90 days after January 1 shall include an assessment of the radiation doses due to the radioactive liquid and gaseous effluents released from the unit or station during the previous calendar year. This report shall include an assessment of the radiation doses from radioactive liquid and gaseous effluents to members of the public due to their activities inside the site boundary during the reporting period. All assumptions used in making these assessments (i.e., specific activity, exposure time and location) shall be included in these reports. The meteorological conditions concurrent with the time of release of radioactive materials in gaseous effluents (as determined by sampling frequency and measurement) shall be used for determining the gaseous pathway doses. The assessment of radiation doses shall be performed in accordance with this procedure.

The ARERR to be submitted 90 days after January 1 of each year shall also include an assessment of radiation doses to the likely most exposed member of the public from reactor releases and other nearby uranium fuel cycle sources (including doses from primary effluent pathways and direct radiation) for the previous 12 consecutive months to show conformance with 40 CFR 190, Environmental Radiation Protection Standards for Nuclear Power Operation. Acceptable methods for calculating the dose contribution from liquid and gaseous effluents are given in Reg Guide 1.109, Rev.1.

The ARERR shall include the following information for each type of solid waste shipped off-site during the report period:

- Volume (cubic meters),
- Total curie quantity (specify whether determined by measurement or estimate),
- Principle radionuclides (specify whether determined by measurement or estimate),
- Type of waste (e.g., spent resin, compacted dry waste, evaporator bottoms),
- Type of container (e.g., LSA, Type A, Type B, Large Quantity), and
- Solidification agent (e.g., cement).

The ARERR shall include unplanned releases of radioactive materials in gaseous and liquid effluent from the site to unrestricted areas on a quarterly basis.

The ARERR shall include any change to this procedure made during the reporting period.

4.9 Reporting/Management Review

4.9.1 Any changes to this procedure must be incorporated in the ARERR.

4.9.2 This procedure must be updated when the Radiation Monitoring System, its instruments, or the specifications of instruments are changed.

4.9.3 This procedure must be reviewed or revised as appropriate based on the results of the land use census and REMP.

4.9.4 Any changes to this procedure must be evaluated for potential impact on other related Radiation Protection Department Procedures and changes to these procedures must be considered.

4.9.5 This procedure shall be reviewed during the first quarter of each year and updated if necessary. The part of this procedure that shall be reviewed is Attachment 3.16. The review will be documented using Attachment 3.17.

Dose Factors for Various Pathways

R_i Dose Factors

	PATHWAY					
NUCLIDE	GROUND	VEGETABLE	MEAT	COW MILK	GOAT MILK	INHALATION
H3	0.0E+00	4.0E+03	3.2E+02	2.4E+03	4.9E+03	1.3E+03
C14	0.0E+00	3.5E+06	5.8E+05	3.2E+06	3.2E+06	3.6E+04
CR51	4.7E+06	1.2E+07	1.6E+06	7.5E+06	9.0E+05	3.3E+03
MN54	1.4E+09	9.4E+08	2.2E+07	3.1E+07	3.7E+06	7.7E+04
FE59	2.7E+08	9.7E+08	1.8E+09	3.4E+08	4.4E+06	1.9E+05
CO58	3.8E+08	6.1E+08	3.1E+08	9.1E+07	1.1E+07	1.1E+05
CO60	2.2E+10	3.2E+09	1.1E+09	2.9E+08	3.4E+07	2.8E+05
ZN65	7.5E+08	2.7E+09	1.0E+09	1.7E+10	2.1E+09	1.3E+05
SR89	2.2E+04	3.5E+10	2.6E+08	1.1E+10	2.2E+10	6.0E+05
SR90	0.0E+00	1.4E+12	1.0E+10	1.0E+11	2.1E+11	1.1E+08
ZR95	2.5E+08	1.2E+09	1.6E+09	1.0E+06	1.2E+05	1.5E+05
SB124	6.0E+08	3.0E+09	4.7E+08	7.8E+08	9.3E+07	4.1E+05
CS134	6.8E+09	2.6E+10	1.2E+09	5.4E+10	1.6E+11	1.1E+06
CS136	1.5E+08	2.2E+08	4.5E+07	5.5E+09	1.7E+10	1.9E+05
CS137	1.0E+10	2.4E+10	1.0E+09	4.9E+10	1.5E+11	8.5E+05
BA140	2.1E+07	2.8E+08	5.7E+07	2.3E+08	2.8E+07	2.3E+05
CE141	1.4E+07	5.3E+08	3.2E+07	1.5E+07	1.8E+06	1.3E+05
CE144	7.0E+07	1.3E+10	3.9E+08	1.3E+08	1.6E+07	8.6E+05
I131	1.7E+07	4.8E+10	5.4E+09	1.0E+12	1.2E+12	1.6E+07
I133	2.4E+06	8.1E+08	1.3E+02	9.6E+09	1.2E+10	3.8E+06
I132	1.2E+06	7.6E+03	0.0E+00	1.4E+02	1.6E+02	1.1E+06
I134	4.5E+05	6.4E-03	0.0E+00	9.4E-10	1.1E-01	5.1E+04
I135	2.5E+06	1.4E+12	6.7E-15	2.0E+07	2.4E+07	7.9E+05
MO99	4.0E+06	1.7E+07	2.4E+05	3.1E+08	3.7E+07	4.1E+02
NB95	1.4E+08	4.7E+08	6.8E+09	2.9E+08	3.5E+07	1.0E+05
SR85	1.2E+05	3.5E+10	4.1E+08	1.1E+10	2.2E+10	6.0E+05

Units for all except inhalation pathway are m^2 mr sec / yr μCi, inhalation pathway units are mr m^3 / yr μCi.

U_{ap} Values to be Used For the Maximum Exposed Individual

Pathway	Infant	Child	Teen	Adult
Fruits, vegetables and grain (kg/yr)	-	520	630	520
Leafy vegetables (kg/yr)	-	26	42	64
Milk (l/yr)	330	330	400	310
Meat and poultry (kg/yr)	-	41	65	110
Fish (kg/yr)	-	6.9	16	21
Drinking water (l/yr)	330	510	510	730
Shoreline recreation (hr/yr)	-	14	67	12
Inhalation (m^3/yr)	1400	3700	8000	8000

B_{ip} Factors for Aquatic Foods
ρCi l / kg ρCi

Element	Fish	Invertebrate
H	9.0E-1	9.0E-1
C	4.6E3	9.1E3
Na	1.0E2	2.0E2
P	1.0E5	2.0E4
Cr	2.0E2	2.0E3
Mn	4.0E2	9.0E4
Fe	1.0E2	3.2E3
Co	5.0E1	2.0E2
Ni	1.0E2	1.0E2
Cu	5.0E1	4.0E2
Zn	2.0E3	1.0E4
Br	4.2E2	3.3E2
Rb	2.0E3	1.0E3
Sr	3.0E1	1.0E2
Y	2.5E1	1.0E3
Zr	3.3E0	6.7E0
Nb	3.0E4	1.0E2
Mo	1.0E1	1.0E1
Tc	1.5E1	5.0E0
Ru	1.0E1	3.0E2
Rh	1.0E1	3.0E2
Te	4.0E2	6.1E3
I	1.5E1	5.0E0
Cs	2.0E3	1.0E3
Ba	4.0E0	2.0E2
La	2.5E1	1.0E3
Ce	1.0E0	1.0E3
Pr	2.5E1	1.0E3
Nd	2.5E1	1.0E3
W	1.2E3	1.0E1
Np	1.0E1	4.0E2

D_{aipj} External Dose Factors for Standing on Contaminated Ground
mrem m^2 / hr ρCi

Radionuclide	Total Body	Skin
H-3	0	0
C-14	0	0
Na-24	2.5E-8	2.9E-8
P-32	0	0
Cr-51	2.2E-10	2.6E-10
Mn-54	5.8E-9	6.8E-9
Mn-56	1.1E-8	1.3E-8
Fe-55	0	0
Fe-59	8.0E-9	9.4E-9
Co-58	7.0E-9	8.2E-9
Co-60	1.7E-8	2.0E-8
Ni-63	0	0
Ni-65	3.7E-9	4.3E-9
Cu-64	1.5E-9	1.7E-9
Zn-65	4.0E-9	4.6E-9
Zn-69	0	0
Br-83	6.4E-11	9.3E-11
Br-84	1.2E-8	1.4E-8
Br-85	0	0
Rb-86	6.3E-10	7.2E-10
Rb-88	3.5E-9	4.0E-9
Rb-89	1.5E-8	1.8E-8
Sr-89	5.6E-13	6.5E-13
Sr-91	7.1E-9	8.3E-9
Sr-92	9.0E-9	1.0E-8
Y-90	2.2E-12	2.6E-12
Y-91m	3.8E-9	4.4E-9
Y-91	2.4E-11	2.7E-11
Y-92	1.6E-9	1.9E-9
Y-93	5.7E-10	7.8E-10
Zr-95	5.0E-9	5.8E-9
Zr-97	5.5E-9	6.4E-9
Nb-95	5.1E-9	6.0E-9
Mo-99	1.9E-9	2.2E-9
Tc-99m	9.6E-10	1.1E-9
Tc-101	2.7E-9	3.0E-9
Ru-103	3.6E-9	4.2E-9
Ru-105	4.5E-9	5.1E-9
Ru-106	1.5E-9	1.8E-9
Ag-110m	1.8E-8	2.1E-8
Te-125m	3.5E-11	4.8E-11
Te-127m	1.1E-12	1.3E-12
Te-127	1.0E-11	1.1E-11

D_{alpj} External Dose Factors for Standing on Contaminated Ground (cont'd)
mrem m^2 / hr ρCi

Te-129m	7.7E-10	9.0E-10
Te-129	7.1E-10	8.4E-10
Te-131m	8.4E-9	9.9E-9
Te-131	2.2E-9	2.6E-6
Te-132	1.7E-9	2.0E-9
I-130	1.4E-8	1.7E-8
I-131	2.8E-9	3.4E-9
I-132	1.7E-8	2.0E-8
I-133	3.7E-9	4.5E-9
I-134	1.6E-8	1.9E-8
I-135	1.2E-8	1.4E-8
Cs-134	1.2E-8	1.4E-8
Cs-136	1.5E-8	1.7E-8
Cs-137	4.2E-9	4.9E-9
Cs-138	2.1E-8	2.4E-8
Ba-139	2.4E-9	2.7E-9
Ba-140	2.1E-9	2.4E-9
Ba-141	4.3E-9	4.9E-9
Ba-142	7.9E-9	9.0E-9
La-140	1.5E-8	1.7E-8
La-142	1.5E-8	1.8E-8
Ce-141	5.5E-10	6.2E-10
Ce-143	2.2E-9	2.5E-9
Ce-144	3.2E-10	3.7E-10
Pr-143	0	0
Pr-144	2.0E-10	2.3E-10
Nd-147	1.0E-9	1.2E-9
W-187	3.1E-9	3.6E-9
Np-239	9.5E-10	1.1E-9

RADIOACTIVE LIQUID EFFLUENT MONITORING INSTRUMENTATION

Instrument	Minimum Channels Operable*	Applicability	Action
1. Gross Radioactivity Monitors Providing Automatic Release Termination			
a. Liquid Radwaste Effluent Line (RRS-1001)	(1)#	At times of release	1
b. Steam Generator Blowdown Line (R-19)	(1)	At times of release**	2
c. Steam Generator Blowdown Treatment Effluent (R-24)	(1)	At times of release**	2
2. Gross Radioactivity Monitors Not Providing Automatic Release Termination			
a. Service Water System Effluent Line (R-20, R-28)	(1) per train	At all times	3
3. Continuous Composite Sampler Flow Monitor			
a. Turbine Building Sump Effluent Line	(1)	At all times	3
4. Flow Rate Measurement Devices			
a. Liquid Radwaste Line (RFI-285)	(1)	At times of release	4
b. Discharge Pipes*	(1)	At all times	NA
c. Steam Generator Blowdown Treatment Effluent (DFI-352)	(1)	At times of release	4

* Pump curves and valve settings may be utilized to estimate flow; in such cases, Action Statement 4 is not applicable.

\# OPERABILITY of RRS-1001 includes OPERABILITY of flow switch RFS-1010, which is an attendant instrument as defined by Specification 1.6.

** Since these monitors can be used for either batch or continuous release the appropriate action statement of 1 or 2 should apply (i.e. Action 1 if a steam generator drain is being performed in lieu of Action 2).

- If an RMS monitor is inoperable solely as the result of the loss of it's control room alarm annunciation, then one of the following actions is acceptable to satisfy the ODCM action statement compensatory surveillance requirement:

1. Collect grab samples and conduct laboratory analyses per the specific monitor's action statement, OR
2. Collect local monitor readings at a frequency equal to or greater than (more frequently than) the action frequency.

If the RMS monitor is inoperable for reasons other than the loss of control room annunciation, then the only acceptable action is taking grab samples and conducting laboratory analyses as the reading is equivalent to a grab sample when the monitor is functional.

TABLE NOTATION

Action 1 With the number of channels OPERABLE less than required by the Minimum Channels OPERABLE requirement, effluent releases may be resumed for up to 30 days, provided that prior to initiating a release:

1. At least two independent samples are analyzed in accordance with Section 4.2.3.1 and;
2. At least two technically qualified members of the Facility Staff independently verify the discharge valving. Otherwise, suspend release of radioactive effluents via this pathway.

Action 2 With the number of channels OPERABLE less than required by the Minimum Channels OPERABLE requirement, effluent releases via this pathway may continue for up to 30 days provided grab samples are analyzed for gross radioactivity (beta or gamma) at a limit of detection of at least 10^{-7} μCi/gram:

1. At least once per 8 hours when the specific activity of the secondary coolant is >0.01 μCi/gram DOSE EQUIVALENT I-131.
2. At least once per 24 hours when the specific activity of the secondary coolant is ≤ 0.01 μCi/gram DOSE EQUIVALENT I-131.

Action 3 With the number of channels OPERABLE less than the required by the Minimum Channels OPERABLE requirement, effluent releases via this pathway may continue for up to 30 days provided that at least once per 8 hours, grab samples are collected and analyzed for gross radioactivity (beta or gamma) at a lower limit of detection of at least 10^{-7} μCi/ml whenever the Containment Spray Heat Exchanger is in service, since these monitors are only used for post LOCA leak detection and have no auto trip function associated with them.

Action 4 With the number of channels OPERABLE less than required by the Minimum Channels OPERABLE requirement, effluent releases via this pathway may continue for up to 30 days provided the flow rate is estimated at least once per 4 hours during actual releases.

RADIOACTIVE LIQUID EFFLUENT MONITORING INSTRUMENTATION SURVEILLANCE REQUIREMENTS

Instrument	CHANNEL CHECK	SOURCE CHECK	CHANNEL CALIBRATION	CHANNEL FUNCTIONAL TEST
1. Gross Beta or Gamma Radioactivity Monitors Providing Alarm and Automatic Isolation				
a. Liquid Radwaste Effluent Line (RRS-1001)	D*	P	R(3)	Q(5)
b. Steam Generator Blowdown Effluent Line	D*	M	R(3)	Q(1)
c. Steam Generator Blowdown Treatment Effluent Line	D*	M	R(3)	Q(1)
2. Gross Beta or Gamma Radioactivity Monitors Providing Alarm But Not Isolation				
a. Service Water System Effluent Line	D	M	R(3)	Q(2)
3. Continuous Composite Samplers				
a. Turbine Building Sump Effluent Line	D	N/A	N/A	N/A
4. Flow Rate Monitors				
a. Liquid Radwaste Effluent	D(4)*	N/A	R	Q
b. Steam Generator Blowdown Treatment Line	D(4)*	N/A	N/A	N/A

* During releases via this pathway

TABLE NOTATION

(1) The CHANNEL FUNCTIONAL TEST shall demonstrate that automatic isolation of this pathway and control room alarm annunciation occurs if any of the following conditions exists:

1. Instrument indicates measured levels above the alarm/trip setpoint.
2. Circuit failure.*
3. Instrument indicates a downscale failure.*
4. Instrument control not set in operating mode.*

(2) The CHANNEL FUNCTIONAL TEST shall demonstrate that control room alarm annunciation occurs if any of the following conditions exists:

1. Instrument indicates measured levels above the alarm setpoint.
2. Circuit failure.
3. Instrument indicate a downscale failure.
4. Instrument controls not set in operating mode.

(3) The initial CHANNEL CALIBRATION shall be performed using one or more sources with traceability back to the National Institute of Standards and Technology (NIST). These sources shall permit calibrating the system over its intended range of energy and measurement range. For subsequent CHANNEL CALIBRATION, sources that have been related to the initial calibration may be used.

(4) CHANNEL CHECK shall consist of verifying indication of flow during periods of release. CHANNEL CHECK shall be made at least once per 24 hours on days on which continuous, periodic or batch releases are made.

(5) The CHANNEL FUNCTIONAL TEST shall demonstrate that automatic isolation of this pathway and control room alarm annunciation occurs if any of the following conditions exists:

1. Instrument indicates measured levels above the alarm/trip setpoint.
2. Circuit failure.**
3. Instrument indicates a downscale failure.**
4. Instrument control not set in operating mode.*
5. Loss of sample flow.

* Instrument indicates, but does not provide for automatic isolation.

** Instrument indicates, but does not necessarily cause automatic isolation, no credit is taken for the automatic isolation on such occurrences.

RADIOACTIVE GASEOUS EFFLUENT MONITORING INSTRUMENTATION

Instrument (Instrument #)	Operable[1]	Minimum Channels Applicability	Action
1. Condenser Evacuation System			
a. Noble Gas Activity Monitor (SRA-1905/2905)	(1)	****	6
b. Flow Rate Monitor (SFR-401,	(1)	****	5
1/2-MR-054 and/or SRA-1910/2910)	(1)	****	5
2. Unit Vent. Auxiliary Building Ventilation System			
a. Noble Gas Activity Monitor (VRS-1505/2505)	(1)	*[2]	6
b. Iodine Sampler Cartridge for VRA-1503/2503	(1)	*	8
c. Particulate Sampler Filter for VRA-1501/2501	(1)	*[2]	8
d. Effluent System Flow Rate Measuring Device (VFR-315)	(1)	*	5
(MR-054 and/or VFR-1510/2510)	(1)	*	5
e. Sampler Flow Rate Measuring Device (VFS-1521/2521)	(1)	*	5
3. Containment Purge System			
a. Aux. Building Vent. System Noble Gas Activity Monitor (VRS-1505/2505)	(1)	****[3, 4]	7
b. Aux. Building Vent. System Particulate Sampler for VRA-1501/2501	(1)	****	8
4. Waste Gas Holdup System			
a. Noble Gas Activity Alarm and Termination of Gas Decay Tank Releases (VRS-1505/2505)	(1)	****[5]	9
5. Gland Seal Exhaust			
a. Noble Gas Activity Monitor (SRA-1805/2805)	(1)	****	6
b. Flow Rate Monitor (SFR-201)	(1)	****	5
(MR-054 or SFR-1810/2810)	(1)	****	5

* At all times
**** During releases via this pathway

1 If an RMS monitor is inoperable solely as the result of the loss of it's control room alarm annunciation, then one of the following actions is acceptable to satisfy the ODCM action statement compensatory surveillance requirement:

1. Take grab samples and conduct laboratory analyses per the specific monitor's action statement, OR
2. Take local monitor readings at a frequency equal to or greater than (more frequently than) the action frequency.

If the RMS monitor is inoperable for reasons other than the loss of control room annunciation, then the only acceptable action is taking grab samples and conducting laboratory analyses as the reading is equivalent to a grab sample when the monitor is functional.

2 It is not necessary to declare an airborne radioactivity monitor (SPING) inoperable, provided it is for a short preplanned evolution, for the following reason(s) (this includes stopping the sampling pump):

- Changing the particulate device
- Changing the iodine device
- Changing the tritium device

It is not necessary to declare an airborne radioactivity monitor (SPING) inoperable for the following reason(s) provided related action statements are performed prior to the sample pump being removed from service:

- Grab sampling required for environmental release determinations, personnel protection or monitor response evaluation.
- Sample pump low-flow trip due to blackout condition, provided the sample pump is returned to service without delay (applicable to Lower Containment Airborne Monitor only).
- Sample pump low-flow trip/fail-external channel status due to a loaded particulate filter if the filter is changed without delay.
- Fail high channel status due to high filter activity that results in over-ranging the channel if the filter(s) changed without delay.

3 Releases shall be considered as occurring "via this pathway" under the following conditions:

- The Containment Purge System is in operation and Containment integrity is established/required, OR
- The Containment Purge System is in operation and is being used as the vent path for the venting of contaminated systems within the containment building.

If Containment Integrity is not established/required and venting of a contaminated system within containment is not occurring, then the containment purge system is acting as a ventilation system and is covered by Item 2 of this Attachment.

4 For purge purposes only. See Attachment 3.4 (Items 2a, 4a) and Attachment 3.5 (Items 2a, 4a) for other requirements associated with this instrument.

5 For gas decay tank releases only, see Item 2 (Unit Vent, Auxiliary Building Ventilation System) for additional requirements.

TABLE NOTATIONS

Action 5 With the number of channels OPERABLE less than required by the Minimum Channels OPERABLE requirement, effluent releases via this pathway may continue for up to 30 days provided the flow rate is estimated at least once per 4 hours.

Action 6 With the number of channels OPERABLE less required by the Minimum Channels OPERABLE requirement, effluent releases via this pathway may continue for up to 30 days provided grab samples are taken at least once per 8 hours and these samples are analyzed for gross activity within 24 hours.

Action 7 With the number of channels OPERABLE less than required by the Minimum Channels OPERABLE requirements, immediately suspend PURGING of radioactive effluents via this pathway.

Action 8 With the number of channels OPERABLE less than require by the Minimum Channels OPERABLE requirement, effluent releases via the affected pathway may continue for up to 30 days provided samples required for weekly analysis are continuously collected with auxiliary sampling equipment as required in Attachment 3.7.

Action 9 With the number of channels OPERABLE less than required by the Minimum Channels OPERABLE requirement, the contents of the tank(s) may be released to the environment for up to 14 days provided that prior to initiating the release:

a. At least two independent samples of the tank's contents are analyzed and,
b. At least two technically qualified members of the Facility Staff independently verify the release rate calculations and discharge valve lineups; otherwise, suspend release of radioactive effluents via this pathway.

RADIOACTIVE GASEOUS EFFLUENT MONITORING INSTRUMENTATION SURVEILLANCE REQUIREMENTS

Instrument	CHANNEL CHECK	SOURCE CHECK	CHANNEL CALIBRATION	CHANNEL FUNCTIONAL TEST
1. Condenser Evacuation System				
a. Noble Gas Activity Monitor (SRA-1905/2905)	D**	M	R(2)	Q(1)
b. System Effluent Flow Rate (SFR-401, MR-054, SRA-1910/2910)	D**	NA	R	Q
2. Auxiliary Building Ventilation System				
a. Noble Gas Activity Monitor (VRS-1505/2505)	D*	M	R(2)	Q(1)
b. Iodine Sampler (For VRA-1503/2503)	W*	NA	NA	NA
c. Particulate Sampler (For VRA-1501/2501)	W*	NA	NA	NA
d. System Effluent Flow Rate Measurement Device (VFR-315, MR-054, VRS-1510/2510)	D*	NA	R	Q
e. Sampler Flow Rate Measuring Device (VFS-1521/2521)	D*	NA	R	Q
3. Containment Purge System				
a. Aux. Building Vent. System Noble Gas Activity Monitor (VRS-1505/2505)	D**	P	R(2)	Q(1)
b. Aux. Building Vent. System Particulate Sampler (For VRA-1501/2501)	W**	NA	NA	NA
4. Waste Gas Holdup System				
a. Noble Gas Activity Monitor Providing Alarm and Termination of Gas Decay Tank Releases (VRS-1505/2505)	P**	P	R(2)	Q(3)
5. Gland Seal Exhaust				
a. Noble Gas Activity (SRA-1805/2805)	D**	M	R(2)	Q(1)
b. System Effluent Flow Rate (SFR-201, MR-054, SRA-1810/2810)	D**	NA	R	Q

* At all times
** During releases via this pathway

TABLE NOTATIONS

1) The CHANNEL FUNCTIONAL TEST shall demonstrate that control room alarm annunciation occurs if any of the following conditions exists:

    1. Instrument indicates measured levels above the alarm setpoint.
    2. Circuit failure.
    3. Instrument indicates a downscale failure.
    4. Instrument controls not set in operate mode.

2) The initial CHANNEL CALIBRATION shall be performed using one or more sources with traceability back to the NIST. These sources shall permit calibrating the system over its intended range of energy and measurement range. For subsequent CHANNEL CALIBRATION, sources that have been related to the initial calibration may be used.

3) The CHANNEL CALIBRATION TEST shall demonstrate that automatic isolation of this pathway and control room alarm annunciation occurs if any of the following conditions exists:

    1. Instrument indicates measured levels above the alarm/trip setpoint.
    2. Circuit failure.*
    3. Instrument indicates a downscale failure.*
    4. Instrument controls not set in operate mode.*

* Instrument indicates, but does not provide automatic isolation

RADIOACTIVE LIQUID WASTE SAMPLING AND ANALYSIS PROGRAM

LIQUID RELEASE TYPE	SAMPLING FREQUENCY	MINIMUM ANALYSIS FREQUENCY	TYPE OF ACTIVITY ANALYSIS	LOWER LIMIT OF DETECTION (LLD) (μCi/ml)[a]
A. Batch Waste Release Tanks[c]	P Each Batch	P Each Batch	Principal Gamma Emitters[e]	$5x10^{-7}$
			I-131	$1x10^{-6}$
	P Each Batch	P Each Batch	Dissolved and Entrained Gases (Gamma Emitters)	$1x10^{-5}$
	P Each Batch	M Composite[b]	H-3	$1x10^{-5}$
			Gross Alpha	$1x10^{-7}$
	P Each Batch	Q Composite[b]	Sr-89, Sr-90	$5x10^{-8}$
			Fe-55	$1x10^{-6}$
B. Plant Continuous Releases[d]	Daily	W Composite[b]	Principal Gamma Emitters[e]	$5x10^{-7}$
			I-131	$1x10^{-6}$
	M Grab Sample	M	Dissolved and Entrained Gases (Gamma Emitters)	$1x10^{-5}$
	Daily	M Composite[b]	H-3	$1x10^{-5}$
			Gross Alpha	$1x10^{-7}$
	Daily	Q Composite[b]	Sr-89, Sr-90	$5x10^{-8}$
			Fe-55	$1x10^{-6}$

TABLE NOTATION

a. The lower limit of detection (LLD) is defined in Table Notation A. of Attachment 3.20.

b. A composite sample is one in which the quantity of liquid sampled is proportional to the quantity of liquid waste discharged and in which the method of sampling employed results in a specimen which is representative of the liquids released.

c. A batch release is the discharge of liquid wastes of a discrete volume. Prior to sampling for analysis, each batch shall be isolated and recirculated or sparged to ensure thorough mixing.

d. A continuous release is the discharge of liquid of a non-discrete volume; e.g. from a volume of system that has an input flow during the continuous release.

e. The principal gamma emitters for which the LLD specification applies exclusively are the following radionuclides: Mn-54, Fe-59, Co-58, Co-60, Zn-65, Mo-99, Cs-134, Cs-137, Ce-141 and Ce-144. This list does not mean that only these nuclides are to be detected and reported. Other peaks which are measurable and identifiable, together with the above nuclides, shall also be identified and reported.

RADIOACTIVE GASEOUS WASTE SAMPLING AND ANALYSIS PROGRAM

Gaseous Release Type	Frequency	Minimum Analysis Frequency	Type of Activity Analysis	Lower Limit of Detection (μCi/ml)[a]
a. Waste Gas Storage Tank	P Each Tank Grab Sample	P Each Tank	Principal Gamma Emitters[e]	$1x10^{-4}$
			H-3	$1X10^{-6}$
b. Containment Purge	P Each Purge Grab Sample	P Each Purge	Principal Gamma Emitters[e]	$1x10^{-4}$
			H-3	$1X10^{-6}$
c. Condenser Evacuation System and Gland Seal Exhaust	M Grab Sample[b]	M[b] Particulate Sample	Principle Gamma Emitters[e]	$1x10^{-4}$
		M[b]	H-3	$1x10^{-6}$
		M[b] Iodine Adsorbing Media	I-131	$1x10^{-12}$
	Continuous	W[h] Noble Gas Sample	Noble Gases	$1x10^{-6}$
d. Auxiliary Building Vent	Continuous[d]	W[c] Iodine Adsorbing Media	I-131	$1x10^{-12}$
	Continuous[d]	W[c] Particulate Sample	Principal Gamma Emitters[e]	$1x10^{-11}$
	Continuous[d]	M Composite Particulate Sample	Gross Alpha	$1x10^{-11}$
	W Grab Sample[b,j]	W H-3 Sample	H-3	$1x10^{-6}$
	Continuous[d]	Q Composite Particulate Sample	Sr-89, Sr-90	$1x10^{-11}$
	Continuous[d]	W[h] Noble Gas Sample	Noble Gases	$1x10^{-6}$
e. Incinerated Oil[f]	P Each Batch[g]	P Each Batch[g]	Principle Gamma Emitters[e]	5×10^{-7}

Table Notation

a. The lower limit of detection (LLD) is defined in Table Notation A. of Attachment 3.20.

b. Analyses shall also be performed following any operational occurrence which has altered the mixture of radionuclides as indicated by RCS analysis (i.e., start-up, 15% per hour power changes).

c. Samples shall be changed at least once per 7 days and analyses shall be completed within 48 hours after changing. Analyses shall also be performed at least once per 24 hours for 7 days following each shutdown, startup or THERMAL POWER change > 15% per hour of RATED THERMAL POWER. When samples collected for 24 hours are analyzed, the corresponding LLD's may be increased by a factor of 10. This requirement does not apply if (1) analysis shows that DOSEQ I131 concentration in the RCS has not increased more than a factor of 3; and (2) the noble gas monitor shows that effluent activity has not increased more than a factor of 3.

d. The ratio of the sample flow rate to the sampled stream flow rate shall be known for the time period covered by each dose or dose rate calculation made in accordance with Sections 4.2.4.1, 4.2.4.2, and 4.2.4.3 of this document.

e. The principal gamma emitters for which the LLD specification applies exclusively are the following radionuclides: Kr-87, Kr-88, Xe-133, Xe-133M, Xe-135 and Xe-138 for gaseous emissions and Mn-54, Fe-59, Co-58, Co-60, Zn-65, Mo-99, Cs-134, Cs-137, Ce-141 and Ce-144 for particulate emissions. This list does not mean that only these nuclides are to be detected and reported. Other peaks which are measurable and identifiable, together with the above nuclides, shall also be identified and reported.

f. Releases from incinerated oil are discharged through the Auxiliary Boiler System. Releases shall be accounted for based on pre-release grab sample data.

g. Samples of waste oil to be incinerated shall be collected from the container in which the waste oil is stored (e.g., waste oil storage tanks, 55 gal. drums) prior to transfer to the Auxiliary Boiler System and shall be representative of container contents.

h. A gas marinelli grab sample shall be obtained and analyzed weekly for noble gases effluent quantification.

i. Tritium grab samples shall be taken at least once per 24 hours when the refueling cavity is flooded.

Multiple Release Point Factors for Release Points

Liquid Factors

Monitor Description	Monitor Number	MRP
U 1 SG Blowdown	1R19/24*	0.35
U 2 SG Blowdown	2R19/24*	0.35
U 1 & 2 Liquid Waste Discharge	RRS-1000	0.30

Gaseous Factors

Monitor Description	Monitor Number	Flow Rate (cfm)	MRP #
Unit 1			
Unit Vent	VRS-1500	139,600	0.54
Gland Seal Vent	SRA-1800	1,260	0.00484
Steam Jet Air Ejector	SRA-1900	3,600 (b)	0.01
Start Up FT Vent		1,536	0.01
Total		145,996	
Unit 2			
Unit Vent	VRS-2500	103,500	0.40
Gland Seal Vent	SRA-2800	5,508 (a)	0.01
Steam Jet Air Ejector	SRA-2900	3,600 (b)	0.01
Start Up FT Vent		1,536	0.01
Total		114,144	

* Either R-19 or R-24 can be used for blowdown monitoring.
\# Nominal Values
a Two release points of 2,754 cfm each are totaled for this value.
b This is the total design maximum of the Start Up Air Ejectors. This is a conservative value for unit 1.

Liquid Effluent Release Systems

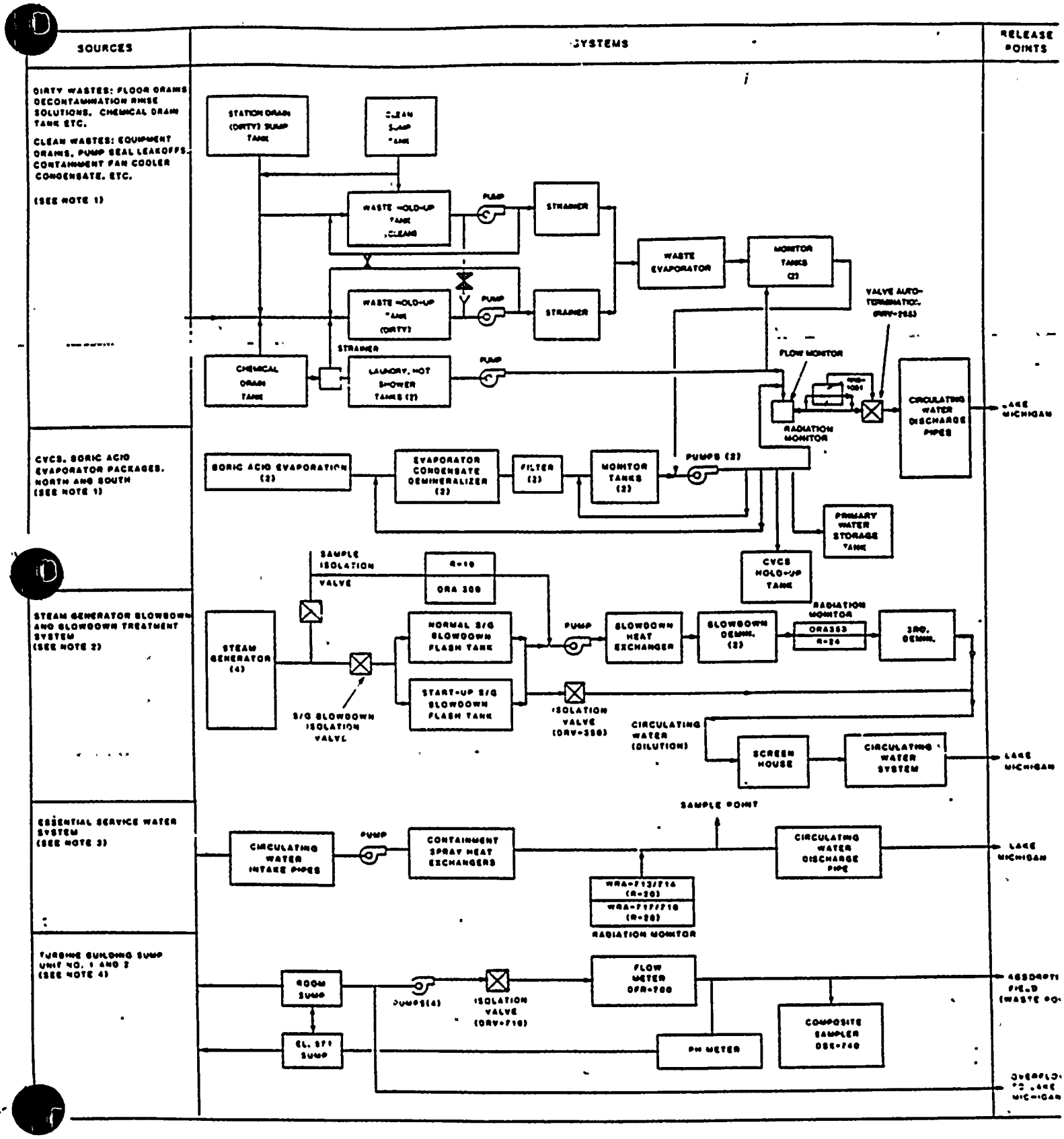

NOTES

NOTE 1: Drawings: OP-12-5119, -5123B, -5133, -5134, -5138, -5138A, -1-5661, -2-5661, -5104F.

System Descriptions: SD-DCC-CH113, -NE101, -HP119. Engineering Control Procedure ECP-12-R2-08.

NOTE 2: Drawings: OP-12-5105, -5105B, -5141, -5141A, -5119, -5125, -1-5661, -2-5661, -5104F.

System Descriptions: SD-DCC-CH114, -NE101, -HP119.

NOTE 3: Drawings: OP-12-5113, -5119, -1-5661, -2-5661.

System Descriptions: SD-DCC-HP102, -HP119, NE101.

NOTE 4: Drawings: OP-12-5125, -5125A, -12-5160.

System Descriptions: SD-DCC-CH117.

USE THE MOST CURRENT DRAWING AND SYSTEM DESCRIPTIONS

PLANT LIQUID EFFLUENT PARAMETERS

SYSTEM	COMPONENTS TANKS	COMPONENTS PUMPS	CAPACITY (EACH)	FLOW RATE (EACH)*
I Waste Disposal System				
+ Chemical Drain Tank	1	1	600 GAL.	20 GPM
+ Laundry & Hot Shower Tanks	2	1	600 GAL.	20 GPM
+ Monitor Tanks	4	2	21,600 GAL.	150 GPM
+ Waste Holdup Tanks	2		25,000 GAL.	
+ Waste Evaporators	3			30 GPM
+ Waste Evaporator Condensate Tanks	2	2	6,450 GAL.	150 GPM
II Steam Generator Blowdown and Blowdown Treatment Systems				
+ Start-up Flash Tank (Vented)	1		1,800 GAL.	350 GPM
+ Normal Flash Tank (Not Vented)	1		525 GAL.	100 GPM
+ Blowdown Treatment System	1			60 GPM
III Essential Service Water System				
+ Water Pumps	4			10,000 GPM
+ Containment Spray Heat Exchanger Outlet	4			3,300 GPM
IV Circulating Water Pumps				
Unit 1	3			230,000 GPM
Unit 2	4			230,000 GPM

*Nominal Values

VOLUMETRIC DETECTION EFFICIENCIES OF PRINCIPLE GAMMA EMITTING RADIONUCLIDES FOR RRS-1000

NUCLIDE	EFFICIENCY (cpm/μCi/cc)
I-131	3.78E7
Cs-137	3.00E7
Cs-134	7.93E7
Co-60	5.75E7
Co-58	4.58E7
Cr-51	3.60E6
Mn-54	3.30E7
Zn-65	1.58E7
Ag-110M	9.93E7
Ba-133	4.85E7
Ba-140	1.92E7
Cd-109	9.58E5
Ce-139	3.28E7
Ce-141	1.92E8
Ce-144	4.83E6
Co-57	3.80E7
Cs-136	1.07E8
Fe-59	2.83E7
Sb-124	5.93E7
I-133	3.40E7
I-134	7.23E7
I-135	3.95E7
Mo-99	8.68E6
Na-24	4.45E7
Nb-95	3.28E7
Nb-97	3.50E7
Rb-89	5.00E7
Ru-103	3.48E7
Ru-106	1.23E7
Sb-122	2.55E7
Sb-125	3.15E7
Sn-113	7.33E5
Sr-85	3.70E7
Sr-89	2.88E3
Sr-92	3.67E7
Tc-99M	3.60E7
Y-88	5.25E7
Zr-95	3.38E7
Zr-97	3.10E7
Kr-85	1.56E5
Kr-85M	3.53E7
Kr-88	4.10E7
Xe-131M	8.15E5
Xe-133	7.78E6
Xe-133M	5.75E6
Xe-135	3.83E7

The efficiency factor is 4.2 x 10^6 cpm/μCi/ml.

Steam Generator Blowdown

R-19

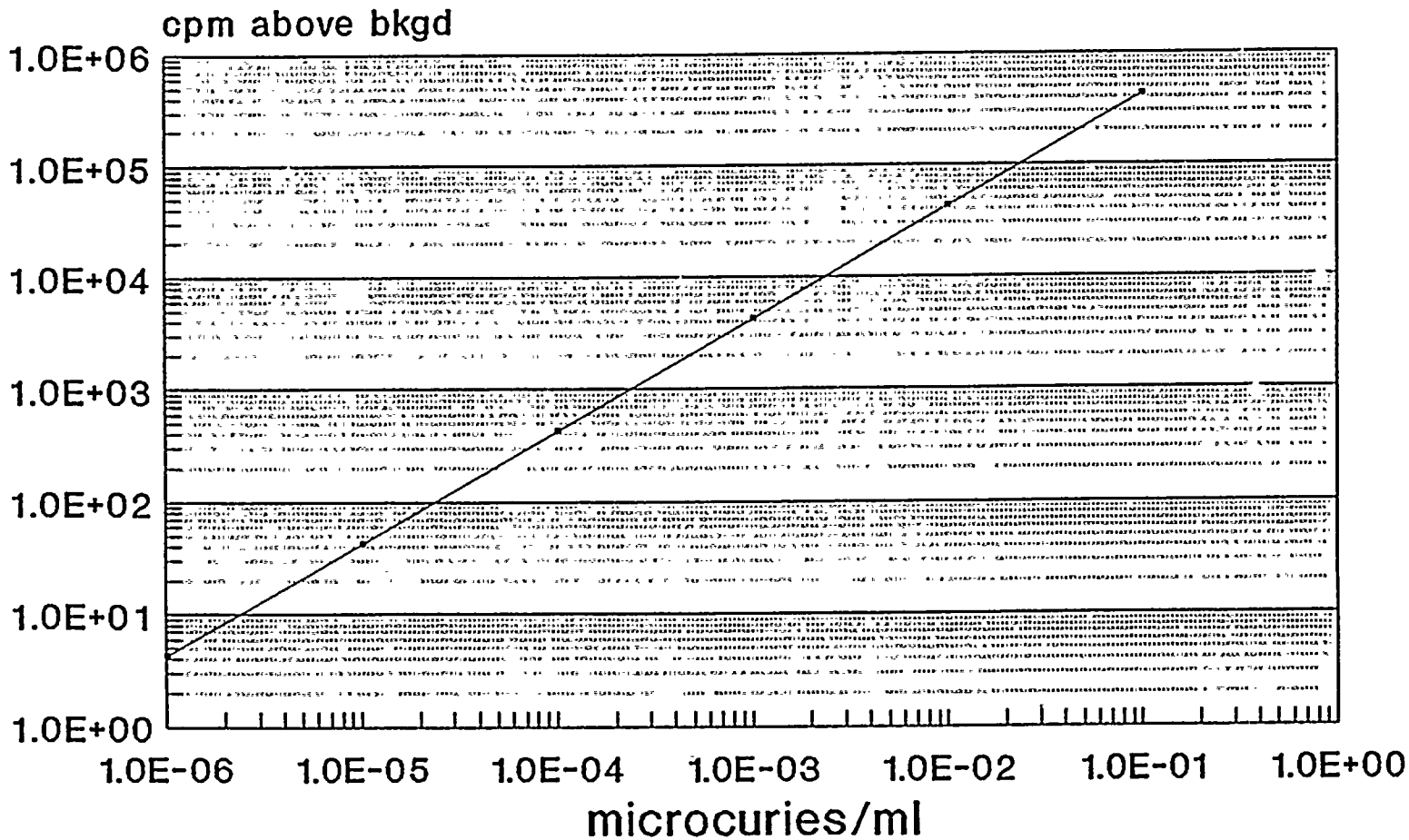

RMS

The efficiency factor is 7.5 x 10^6 cpm/μCi/ml.

S/G Blowdown Treatment

R-24

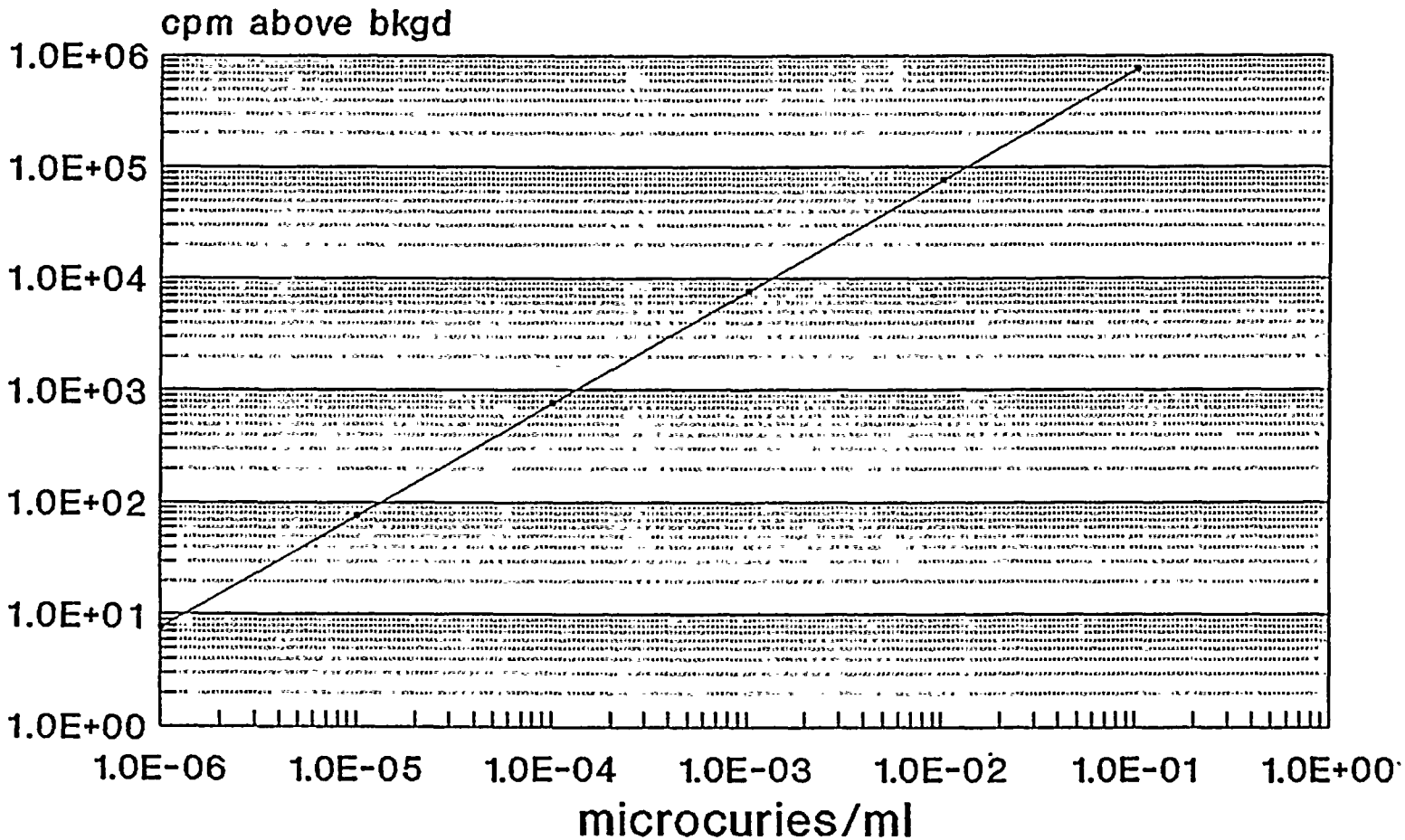

RMS

The efficiency factor is 4.3 x 10^6 cpm/μCi/ml.

ESW Monitors
R-20, R-28

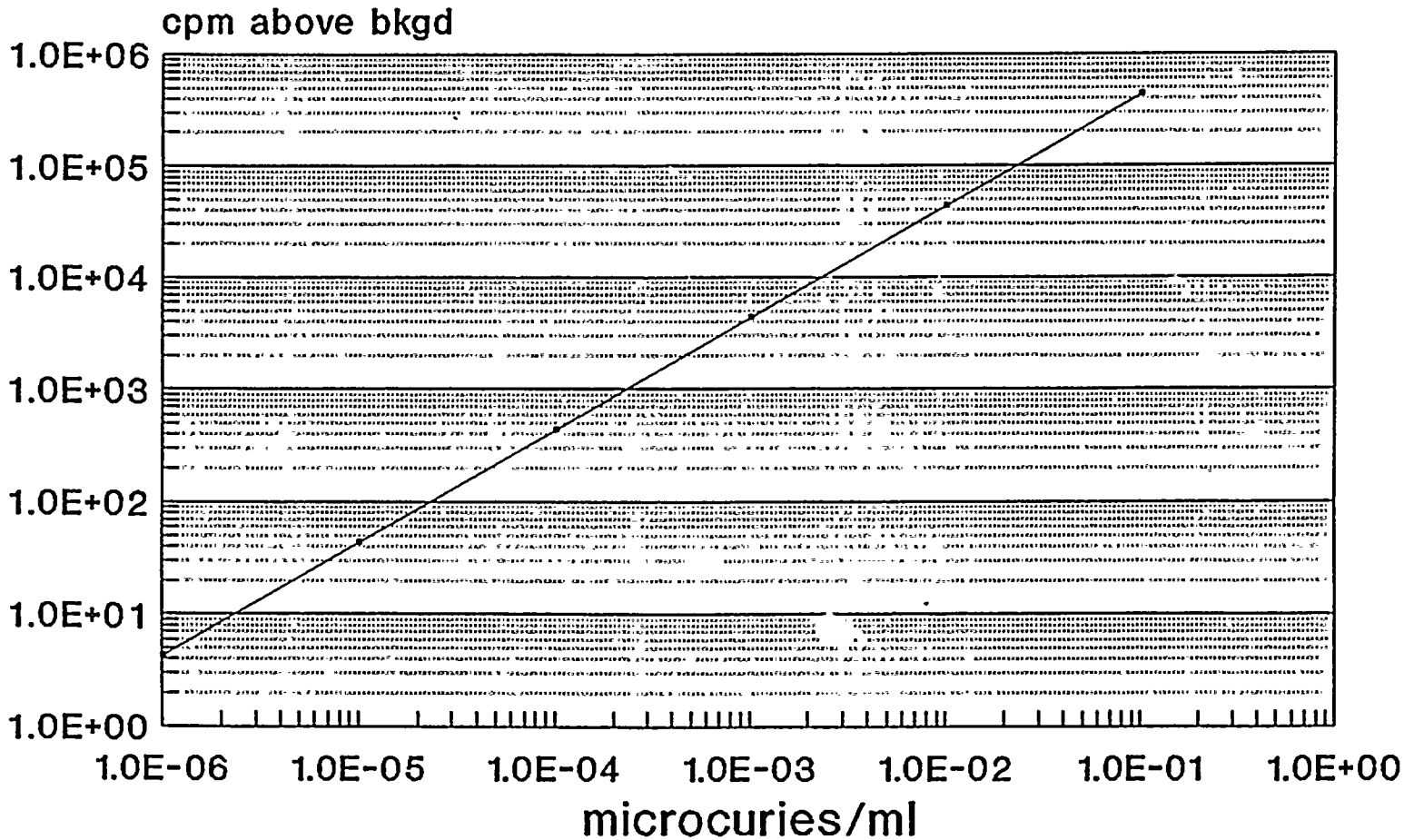

RMS

Gaseous Effluent Release Systems

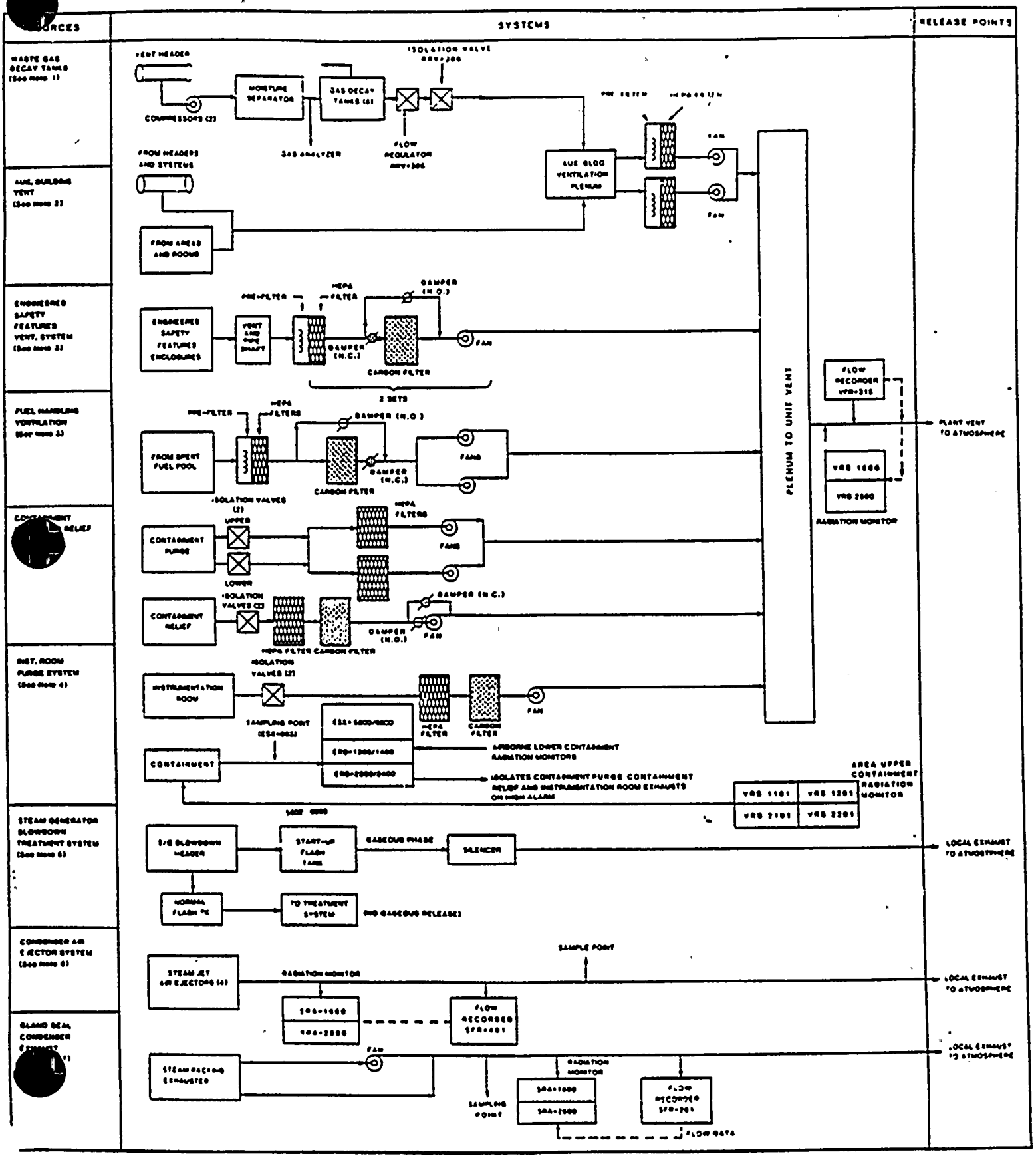

NOTES

NOTE 1: Drawings: OP-12-5119, -5123B, -5133, -5134, -5138, -5138A, 1-5661, -2-5661.

System Descriptions: SD-DCC-CH113, -NE101, -HP119.

NOTE 2: Drawings: OP-12-5105, -5105B, -5141, -5141A, -5119, -5125, -1-5661, -2-5661.

System Descriptions: SD-DCC-CH114, -NE101, -HP119.

NOTE 3: Drawings: OP-12-5113, -5119, -1-5661, -2-5661.

System Descriptions: SD-DCC-HP102, -HP119, NE101.

NOTE 4: Drawings: OP-12-5125, -5125A, -12-5160.

System Descriptions: SD-DCC-CH117.

USE THE MOST CURRENT DRAWING AND SYSTEM DESCRIPTIONS

PLANT GASEOUS EFFLUENT PARAMETERS

SYSTEM	UNIT	EXHAUST FLOW RATE (CFM)	CAPACITY
I PLANT UNIT VENT:	1	139,600	
	2	103,500	
WASTE GAS DECAY TANKS	1	125	4082 FT³ @100 psig (8 tanks total)
+AUXILIARY BUILDING EXHAUST	1	72,600	
	2	64,500	
+ENG. SAFETY FEATURES VENT	1&2	25,000	
+FUEL HANDLING AREA VENT SYSTEM	1	30,000	
+CONTAINMENT PURGE SYSTEM	1&2	12,000	
+CONTAINMENT PRESSURE RELIEF SYSTEM	1&2	1,000	
+INSTRUMENT ROOM PURGE SYSTEM	1&2	1,000	
II CONDENSER AIR EJECTOR SYSTEM			2 Release Points - One for Each Unit
NORMAL STEAM JET AIR EJECTORS	1&2	230	
START UP STEAM JET AIR EJECTORS	1&2	3,600	
III TURBINE SEALS SYSTEM	1	1,260	
	2	5,508	2 Release Points for Unit 2
IV START UP FLASH TANK VENT	1	1,536	
	2	1,536	

+ Designates total flow for all fans.

$\overline{\chi/Q}$ GROUND AVERAGE (sec/m^3)

10 YEAR AVERAGE OF 1985 - 1994 DATA

DISTANCE (METERS)

DIRECTION (WIND TO)	594.	2416.	4020.	5630.	7240.
S	3.02e-6	3.49e-7	1.63e-7	9.60e-8	6.71e-8
SSW	2.53e-6	3.00e-7	1.42e-7	8.45e-8	5.92e-8
SW	3.53e-6	4.18e-7	2.02e-7	1.22e-7	8.59e-8
WSW	4.62e-6	5.33e-7	2.63e-7	1.62e-7	1.15e-7
W	6.34e-6	7.14e-7	3.57e-7	2.21e-7	1.58e-7
WNW	6.55e-6	7.43e-7	3.71e-7	2.29e-7	1.64e-7
NW	7.91e-6	8.83e-7	4.45e-7	2.76e-7	1.98e-7
NNW	8.32e-6	9.34e-7	4.72e-7	2.94e-7	2.11e-7
N	8.89e-6	1.02e-6	5.08e-7	3.13e-7	2.23e-7
NNE	5.62e-6	6.60e-7	3.23e-7	1.97e-7	1.40e-7
NE	4.11e-6	4.95e-7	2.35e-7	1.41e-7	9.91e-8
ENE	3.60e-6	4.22e-7	2.00e-7	1.19e-7	8.38e-8
E	2.97e-6	3.40e-7	1.60e-7	9.57e-8	6.70e-8
ESE	2.82e-6	3.23e-7	1.51e-7	8.98e-8	6.28e-8
SE	2.73e-6	3.12e-7	1.46e-7	8.70e-8	6.09e-8
SSE	2.86e-6	3.29e-7	1.53e-7	9.02e-8	6.30e-8

DISTANCE

DIRECTION (WIND TO)	12067	24135	40225	56315	80500
S	3.33e-8	1.28e-8	6.36e-9	4.07e-9	2.55e-9
SSW	2.96e-8	1.15e-8	5.72e-9	3.66e-9	2.30e-9
SW	4.33e-8	1.71e-8	8.55e-9	5.48e-9	3.46e-9
WSW	5.86e-8	2.36e-8	1.18e-8	7.60e-9	4.85e-9
W	8.13e-8	3.31e-8	1.66e-8	1.07e-8	6.85e-9
WNW	8.40e-8	3.41e-8	1.71e-8	1.10e-8	7.04e-9
NW	1.02e-7	4.17e-8	2.09e-8	1.35e-8	8.64e-9
NNW	1.09e-7	4.49e-8	2.25e-8	1.45e-8	9.31e-9
N	1.15e-7	4.64e-8	2.33e-8	1.50e-8	9.57e-9
NNE	7.11e-8	2.85e-8	1.43e-8	9.13e-9	5.81e-9
NE	4.99e-8	1.96e-8	9.76e-9	6.25e-9	3.94e-9
ENE	4.21e-8	1.65e-8	8.20e-9	5.25e-9	3.31e-9
E	3.34e-8	1.30e-8	6.45e-9	4.13e-9	2.60e-9
ESE	3.12e-8	1.20e-8	5.95e-9	3.82e-9	2.39e-9
SE	3.03e-8	1.17e-8	5.83e-9	3.73e-9	2.35e-9
SSE	3.12e-8	1.20e-8	5.94e-9	3.81e-9	2.38e-9

<u>DIRECTION - SECTOR</u>

N = A	E = E	S = J	W = N
NNE = B	ESE = F	SSW = K	WNW = P
NE = C	SE = G	SW = L	NW = Q
ENE = D	SSE = H	WSW = M	NNW = R

Worst Case $\overline{\chi/Q}$ = 1.28e-5 sec/m^3 in Sector A 1994

D/Q DEPOSITION ($1/m^2$)

10 YEAR AVERAGE 1985 - 1994 DATA

DISTANCE (METERS)

DIRECTION (WIND TO)	594.	2416.	4020.	5630.	7240.
S	2.06e-8	1.99e-9	9.02e-10	4.74e-10	3.03e-10
SSW	1.27e-8	1.23e-9	5.56e-10	2.92e-10	1.86e-10
SW	1.34e-8	1.30e-9	5.87e-10	3.08e-10	1.96e-10
WSW	1.39e-8	1.34e-9	6.07e-10	3.18e-10	2.03e-10
W	1.77e-8	1.70e-9	7.73e-10	4.06e-10	2.59e-10
WNW	2.01e-8	1.95e-9	8.81e-10	4.63e-10	2.95e-10
NW	2.10e-8	2.03e-9	9.31e-10	4.83e-10	3.08e-10
NNW	2.08e-8	2.01e-9	9.13e-10	4.79e-10	3.05e-10
N	3.02e-8	2.92e-9	1.32e-9	6.95e-10	4.43e-10
NNE	2.36e-8	2.28e-9	1.03e-9	5.43e-10	3.46e-10
NE	2.39e-8	2.31e-9	1.05e-9	5.49e-10	3.51e-10
ENE	2.54e-8	2.46e-9	1.11e-9	5.85e-10	3.73e-10
E	2.11e-8	2.04e-9	9.22e-10	4.84e-10	3.09e-10
ESE	1.93e-8	1.87e-9	8.46e-10	4.44e-10	2.83e-10
SE	1.85e-8	1.79e-9	8.10e-10	4.25e-10	2.71e-10
SSE	1.97e-8	1.90e-9	7.64e-10	4.52e-10	2.89e-10

DISTANCE

DIRECTION (WIND TO)	12067	24135	40225	56315	80500
S	1.26e-10	4.11e-11	1.51e-11	8.08e-12	4.05e-12
SSW	7.78e-11	2.53e-11	9.33e-12	4.87e-12	2.49e-12
SW	8.20e-11	2.67e-11	9.82e-12	5.25e-12	2.63e-12
WSW	8.49e-11	2.76e-11	1.02e-11	5.43e-12	2.72e-12
W	1.08e-10	3.52e-11	1.30e-11	6.92e-12	3.47e-12
WNW	1.23e-10	4.02e-11	1.48e-11	7.89e-12	3.96e-12
NW	1.29e-10	4.19e-11	1.54e-11	8.23e-12	4.13e-12
NNW	1.28e-10	4.15e-11	1.53e-11	8.16e-12	4.09e-12
N	1.85e-10	6.02e-11	2.22e-11	1.18e-11	5.94e-12
NNE	1.45e-10	4.71e-11	1.74e-11	9.25e-12	4.64e-12
NE	1.47e-10	4.77e-11	1.76e-11	9.37e-12	4.70e-12
ENE	1.56e-10	5.07e-11	1.87e-11	9.97e-12	5.00e-12
E	1.29e-10	4.20e-11	1.55e-11	8.25e-12	4.08e-12
ESE	1.18e-10	3.86e-11	1.42e-11	7.27e-12	3.80e-12
SE	1.13e-10	3.69e-11	1.36e-11	7.25e-12	3.64e-12
SSE	1.20e-10	3.92e-11	1.44e-11	7.91e-12	3.87e-12

<u>DIRECTION - SECTOR</u>

N = A	E = E	S = J	W = N
NNE = B	ESE = F	SSW = K	WNW = P
NE = C	SE = G	SW = L	NW = Q
ENE = D	SSE = H	WSW = M	NNW = R

Worst Case D/Q = 4.41E-08 $1/m^2$ in Sector A 1990

ANNUAL EVALUATION OF $\overline{\chi/Q}$ AND $\overline{D/Q}$ VALUES FOR ALL SECTORS

1. Received annual update of $\overline{\chi/Q}$ and $\overline{D/Q}$ values.

Signature

R.P. Department
(print name, title)

2. Worst $\overline{\chi/Q}$ and $\overline{D/Q}$ value and sector determined. PMP 6010 OSD.001 has been updated, if necessary.

Signature

R.P. Department
(print name, title)

3. Approved and verified by:

Signature

R.P. Department
(print name, title)

DOSE FACTORS FOR NOBLE GASES AND DAUGHTERS*

RADIONUCLIDE	TOTAL BODY DOSE FACTOR K_i (DFB_i) (mrem m³ per μCi yr)	SKIN DOSE FACTOR L_i (DFS_i) (mrem m³ per μCi yr)	GAMMA AIR DOSE FACTOR M_i (DF^{γ}_i) (mrad m³ per μCi yr)	BETA AIR DOSE FACTOR N_i (DF^{β}_i) (mrad m³ per μCi yr)
Kr-83m	7.56E-02	--	1.93E+01	2.88E+02
Kr-85m	1.17E+03	1.46E+03	1.23E+03	1.97E+03
Kr-85	1.61E+01	1.34E+03	1.72E+01	1.95E+03
Kr-87	5.92E+03	9.73E+03	6.17E+03	1.03E+04
Kr-88	1.47E+04	2.37E+03	1.52E+04	2.93E+03
Kr-89	1.66E+04	1.01E+04	1.73E+04	1.06E+04
Kr-90	1.56E+04	7.29E+03	1.63E+04	7.83E+03
Xe-131m	9.15E+01	4.76E+02	1.56E+02	1.11E+03
Xe-133m	2.51E+02	9.94E+02	3.27E+02	1.48E+03
Xe-133	2.94E+02	3.06E+02	3.53E+02	1.05E+03
Xe-135m	3.12E+03	7.11E+02	3.36E+03	7.39E+02
Xe-135	1.81E+03	1.86E+03	1.92E+03	2.46E+03
Xe-137	1.42E+03	1.22E+04	1.51E+03	1.27E+04
Xe-138	8.83E+03	4.13E+03	9.21E+03	4.75E+03
Ar-41	8.84E+03	2.69E+03	9.30E+03	3.28E+03

* The listed dose factors are for radionuclides that may be detected in gaseous effluents, from Reg Guide 1.109, Table B-1.

DOSE FACTORS FOR RADIOIODINES AND RADIOACTIVE PARTICULATE, GASEOUS EFFLUENTS*

RADIONUCLIDE	P_i INHALATION PATHWAY (mrem m³ per μCi yr)	P_i FOOD & GROUND PATHWAYS (m² mrem sec per μCi yr)	RADIONUCLIDE	P_i INHALATION PATHWAY (mrem m³ per μCi yr)	P_i FOOD & GROUND PATHWAYS (m² mrem sec per μCi yr)
H-3	6.47E+02	2.40E+03	Rb-88	5.57E+02	4.74E+04
C-14	2.65E+04	2.38E+09	Rb-89	3.21E+02	1.76E+05
Na-24	1.06E+04	3.28E+07	Sr-89	2.03E+06	1.28E+10
P-32	2.03E+06	1.63E+11	Sr-90	4.09E+07	1.24E+11
Cr-51	1.28E+04	1.15E+07	Sr-91	7.34E+04	3.41E+06
Mn-54	1.00E+06	1.14E+09	Sr-92	1.40E+05	1.11E+06
Mn-56	7.17E+04	1.29E+06	Y-90	2.69E+05	9.64E+05
Fe-55	8.69E+04	1.38E+08	Y-91m	2.79E+03	1.44E+05
Fe-59	1.02E+06	7.89E+08	Y-91	2.45E+06	6.86E+06
Co-58	7.77E+05	5.89E+08	Y-92	1.27E+05	2.59E+05
Co-60	4.51E+06	4.62E+09	Y-93	1.67E+05	2.80E+05
Ni-63	3.39E+05	3.56E+10	Zr-95	1.75E+06	3.45E+08
Ni-65	5.01E+04	4.43E+05	Zr-97	1.40E+05	4.29E+06
Cu-64	1.50E+04	4.75E+06	Nb-95	4.79E+05	4.06E+08
Zn-65	6.47E+05	2.01E+10	Mo-99	1.35E+05	3.23E+08
Zn-69	1.32E+04	3.01E-09	Tc-99m	2.03E+03	2.81E+05
Rb-86	1.90E+05	2.27E+10	Tc-101	8.44E+02	2.92E+04
Te-131m	1.99E+05	3.48E+07	Ru-103	5.52E+05	1.55E+08
Te-131	8.22E+03	4.18E+04	Ru-105	4.84E+04	9.12E+05
Te-132	3.40E+05	7.26E+07	Ru-106	1.16E+07	3.02E+08
I-130	1.60E+06	8.99E+08	Ag-110m	3.67E+06	1.80E+10
I-131	1.48E+07	1.07E+12	Te-125m	4.47E+05	1.56E+08
I-132	1.69E+05	1.79E+06	Te-127m	1.31E+06	1.06E+09
I-133	3.56E+06	9.78E+09	Te-127	2.44E+04	1.53E+05
I-134	4.45E+04	6.40E+05	Te-129m	1.68E+06	1.45E+09
I-135	6.96E+05	2.40E+07	Te-129	2.63E+04	3.76E+04
Cs-134	7.03E+05	7.21E+10	Ce-143	1.16E+05	4.88E+06
Cs-136	1.35E+05	6.13E+09	Ce-144	9.84E+06	1.95E+08
Cs-137	6.12E+05	6.25E+10	Pr-143	4.33E+05	7.98E+05
Cs-138	8.76E+02	5.15E+05	Pr-144	4.28E+03	2.63E+03
Ba-139	5.10E+04	1.52E+05	Nd-147	3.22E+05	1.26E+07
Ba-140	1.60E+06	2.75E+08	W-187	3.96E+04	5.90E+06
Ba-141	4.75E+03	5.98E+04	Np-239	5.95E+04	2.55E+06
Ba-142	1.55E+03	6.43E+04			
La-140	1.68E+05	2.77E+07			
La-142	5.95E+04	1.09E+06			
Ce-141	5.17E+05	3.35E+07			

*If Sr-90 analysis is performed, then use P_i given in Ru-106 for unidentified components.

If Sr-90 and Ru-106 analyses are performed, then use P_i given in I-131 for unidentified components.

If Sr-90, Ru-106 and I-131 analyses are performed, then use P_i given in P-32 for unidentified components.

RADIOLOGICAL ENVIRONMENTAL MONITORING PROGRAM
SAMPLE STATIONS, SAMPLE TYPES, AND SAMPLE FREQUENCIES

SAMPLE STATION	DESCRIPTION/LOCATION	SAMPLE TYPE	SAMPLE FREQUENCY	ANALYSIS TYPE	ANALYSIS FREQUENCY
ON-SITE AIRBORNE AND DIRECT RADIATION (TLD) STATIONS					
ONS-1 (T-1)	1945 ft @ 18° from Plant Axis	Airborne Particulate	Weekly	Gross beta	Weekly
			Weekly	Gamma Isotopic	Quart. Comp.
		Airborne Radioiodine	Weekly	I-131	Weekly
		TLD	Quarterly	Direct Radiation	Quarterly
ONS-2 (T-2)	2338 ft @ 48° from Plant Axis	Airborne Particulate	Weekly	Gross Beta	Weekly
			Weekly	Gamma Isotopic	Quart. Comp.
		Airborne Radioiodine	Weekly	I-131	Weekly
		TLD	Quarterly	Direct Radiation	Quarterly
ONS-3 (T-3)	2407 ft @ 90° from Plant Axis	Airborne Particulate	Weekly	Gross Beta	Weekly
			Weekly	Gamma Isotopic	Quart. Comp.
		Airborne Radioiodine	Weekly	I-131	Weekly
		TLD	Quarterly	Direct Radiation	Quarterly
ONS-4 (T-4)	1852 ft. @ 118° from Plant Axis	Airborne Particulate	Weekly	Gross Beta	Weekly
			Weekly	Gamma Isotopic	Quart. Comp.
		Airborne Radioiodine	Weekly	I-131	Weekly
		TLD	Quarterly	Direct Radiation	Quarterly
ONS-5 (T-5)	1895 ft @ 189° from Plant Axis	Airborne Particulate	Weekly	Gross Beta	Weekly
			Weekly	Gamma Isotopic	Quart. Comp.
		Airborne Radioiodine	Weekly	I-131	Weekly
		TLD	Quarterly	Direct Radiation	Quarterly
ONS-6 (T-6)	1917 ft @ 210° from Plant Axis	Airborne Particulate	Weekly	Gross Beta	Weekly
			Weekly	Gamma Isotopic	Quart. Comp.
		Airborne Radioiodine	Weekly	I-131	Weekly
		TLD	Quarterly	Direct Radiation	Quarterly
T-7	2103 ft @ 36° from Plant Axis	TLD	Quarterly	Direct Radiation	Quarterly
T-8	2208 ft @ 82° from Plant Axis	TLD	Quarterly	Direct Radiation	Quarterly
T-9	1368 ft @ 149° from Plant Axis	TLD	Quarterly	Direct Radiat on	Quarterly
T-10	1390 ft @ 127° from Plant Axis	TLD	Quarterly	Direct Radiation	Quarterly
T-11	1969 ft @ 11° from Plant Axis	TLD	Quarterly	Direct Radiation	Quarterly
T-12	2292 ft @ 63° from Plant Axis	TLD	Quarterly	Direct Radiation	Quarterly
CONTROL AIRBORNE AND DIRECT RADIATION (TLD) STATIONS					
NBF	15.6 miles SSW New Buffalo, MI	Airborne Particulate	Weekly	Gross Beta	Weekly
			Weekly	Gamma Isotopic	Quart. Comp.
		Airborne Radioiodine	Weekly	I-131	Weekly
		TLD	Quarterly	Direct Radiation	Quarterly
SBN	26.2 miles SE South Bend, IN	Airborne Particulate	Weekly	Gross Beta	Weekly
			Weekly	Gamma Isotopic	Quart. Comp.
		Airborne Radioiodine	Weekly	I-131	Weekly
		TLD	Quarterly	Direct Radiation	Quarterly
DOW	24.3 miles ENE Dowagiac, MI	Airborne Particulate	Weekly	Gross Beta	Weekly
			Weekly	Gamma Isotopic	Quart. Comp.
		Airborne Radioiodine	Weekly	I-131	Weekly
		TLD	Quarterly	Direct Radiation	Quarterly
COL	18.9 miles NNE Coloma, MI	Airborne Particulate	Weekly	Gross Beta	Weekly
			Weekly	Gamma Isotopic	Quart. Comp.
		Airborne Radioiodine	Weekly	I-131	Weekly
		TLD	Quarterly	Direct Radiation	Quarterly

RADIOLOGICAL ENVIRONMENTAL MONITORING PROGRAM
SAMPLE STATIONS, SAMPLE TYPES, AND SAMPLE FREQUENCIES

SAMPLE STATION	DESCRIPTION/LOCATION	SAMPLE TYPE	SAMPLE FREQUENCY	ANALYSIS TYPE	ANALYSIS FREQUENCY
OFF-SITE AIRBORNE AND DIRECT RADIATION (TLD) STATIONS					
OFT-1	4.5 miles NE, Pole #B294-44	TLD	Quarterly	Direct Radiation	Quarterly
OFT-2	3.6 miles, NE, Stevensville Substation	TLD	Quarterly	Direct Radiation	Quarterly
OFT-3	5.1 miles NE, Pole #B296-13	TLD	Quarterly	Direct Radiation	Quarterly
OFT-4	4.1 miles, E, Pole #B350-72	TLD	Quarterly	Direct Radiation	Quarterly
OFT-5	4.2 miles ESE, Pole #B387-32	TLD	Quarterly	Direct Radiation	Quarterly
OFT-6	4.9 miles SE, Pole #B426-1	TLD	Quarterly	Direct Radiation	Quarterly
OFT-7	2.5 miles S, Bridgman Substation	TLD	Quarterly	Direct Radiation	Quarterly
OFT-8	4.0 miles S, Pole #B424-20	TLD	Quarterly	Direct Radiation	Quarterly
OFT-9	4.4 miles ESE, Pole #B369-214	TLD	Quarterly	Direct Radiation	Quarterly
OFT-10	3.8 miles S, Pole #B422-152	TLD	Quarterly	Direct Radiation	Quarterly
OFT-11	3.8 miles S, Pole #B423-12	TLD	Quarterly	Direct Radiation	Quarterly
GROUNDWATER (WELL WATER) SAMPLE STATIONS					
W-1	1969 ft @ 11° from Plant Axis	Groundwater	Quarterly	Gamma Isotopic	Quarterly
				Tritium	Quarterly
W-2	2292 ft @ 63° from Plant Axis	Groundwater	Quarterly	Gamma Isotopic	Quarterly
				Tritium	Quarterly
W-3	3279 ft @ 107° from Plant Axis	Groundwater	Quarterly	Gamma Isotopic	Quarterly
				Tritium	Quarterly
W-4	418 ft @ 301° from Plant Axis	Groundwater	Quarterly	Gamma Isotopic	Quarterly
				Tritium	Quarterly
W-5	404 ft @ 290° from Plant Axis	Groundwater	Quarterly	Gamma Isotopic	Quarterly
				Tritium	Quarterly
W-6	424 ft @ 273° from Plant Axis	Groundwater	Quarterly	Gamma Isotopic	Quarterly
				Tritium	Quarterly
W-7	1895 ft @ 189° from Plant Axis	Groundwater	Quarterly	Gamma Isotopic	Quarterly
				Tritium	Quarterly
W-8	1279 ft @ 53° from Plant Axis	Groundwater	Quarterly	Gamma Isotopic	Quarterly
				Tritium	Quarterly
W-9	1447 ft @ 22° from Plant Axis	Groundwater	Quarterly	Gamma Isotopic	Quarterly
				Tritium	Quarterly
W-10	4216 ft @ 129° from Plant Axis	Groundwater	Quarterly	Gamma Isotopic	Quarterly
				Tritium	Quarterly
W-11	3206 ft @ 153° from Plant Axis	Groundwater	Quarterly	Gamma Isotopic	Quarterly
				Tritium	Quarterly
W-12	2631 ft @ 162° from Plant Axis	Groundwater	Quarterly	Gamma Isotopic	Quarterly
				Tritium	Quarterly
W-13	2152 ft @ 182° from Plant Axis	Groundwater	Quarterly	Gamma Isotopic	Quarterly
				Tritium	Quarterly
W-14	1780 ft @ 164° from Plant Axis	Groundwater	Quarterly	Gamma Isotopic	Quarterly
				Tritium	Quarterly
DRINKING WATER					
STJ	St. Joseph Public Intake Sta. 9 mi.NE	Drinking water	Daily	Gross Beta	14 day Comp.
				Gamma Isotopic	14 day Comp.
				I-131	14 day Comp.
				Tritium	Quart. Comp.
LTW	Lake Twp. Public Intake Sta. 0.4 mi.S	Drinking water	Daily	Gross Beta	14 day Comp.
				Gamma Isotopic	14 day Comp.
				I-131	14 day Comp.
				Tritium	Quart. Comp.

RADIOLOGICAL ENVIRONMENTAL MONITORING PROGRAM
SAMPLE STATIONS, SAMPLE TYPES, AND SAMPLE FREQUENCIES

SAMPLE STATION	DESCRIPTION/LOCATION	SAMPLE TYPE	SAMPLE FREQUENCY	ANALYSIS TYPE	ANALYSIS FREQUENCY
SURFACE WATER					
SWL-1	Condenser Circulating Water Intake	Surface Water	Daily	Gamma Isotopic Tritium	Month. Comp. Quart. Comp.
SWL-2	Plant Site Boundary - South 500 ft. south of Plant Centerline	Surface Water	Daily	Gamma Isotopic Tritium	Month. Comp. Quart. Comp.
SWL-3	Plant Site Boundary - North 500 ft. north of Plant Centerline	Surface Water	Daily	Gamma Isotopic Tritium	Month. Comp. Quart. Comp.
SEDIMENT					
SL-2	Plant Site Boundary - South 500 ft. south of Plant Centerline	Sediment	Semi-Ann.	Gamma Isotopic	Semi-Annual
SL-3	Plant Site Boundary - North 500 ft. north of Plant Centerline	Sediment	Semi-Ann.	Gamma Isotopic	Semi-Annual
SL-4	Plant Site Boundary - South South storm drain culvert to lake	Sediment	Quarterly	Gamma Isotopic	Quarterly
SL-5	Plant Site Boundary - North North storm drain culvert to lake	Sediment	Quarterly	Gamma Isotopic	Quarterly
SL-4 & 5 are data collection points only not actual REMP samples					
GROUNDWATER (STEAM GENERATOR STORAGE FACILITY) SAMPLE STATIONS					
SG-1	0.8 mi @ 95° from Plant Axis	Groundwater	Quarterly	Gross Alpha Gross Beta Gamma Isotopic	Quarterly Quarterly Quarterly
SG-2	0.7 mi @ 92° from Plant Axis	Groundwater	Quarterly	Gross Alpha Gross Beta Gamma Isotopic	Quarterly Quarterly Quarterly
SG-4	0.7 mi @ 93° from Plant Axis	Groundwater	Quarterly	Gross Alpha Gross Beta Gamma Isotopic	Quarterly Quarterly Quarterly
SG-5	0.7 mi @ 92° from Plant Axis	Groundwater	Quarterly	Gross Alpha Gross Beta Gamma Isotopic	Quarterly Quarterly Quarterly
INGESTION - MILK	Indicator Farms				
Freehling Farm	7.0 mi. SE, Buchanan	Milk	Once every 15 days	I-131 Gamma Isotopic	per sample per sample
		Milk	Once every 15 days	I-131 Gamma Isotopic	per sample per sample
		Milk	Once every 15 days	I-131 Gamma Isotopic	per sample per sample
INGESTION - MILK	Background Farms				
Livinghouse Farm	20 miles S, La Porte, IN	Milk	Once every 15 days	I-131 Gamma Isotopic	per sample per sample
Wyant Farm	20.7 miles E, Dowagiac	Milk	Once every 15 days	I-131 Gamma Isotopic	per sample per sample
INGESTION - FISH					
ONS-N	0.3 mile N, Lake Michigan	Fish	2/year.	Gamma Isotopic	per sample
ONS-S	0.4 mile S, Lake Michigan	Fish	2/year.	Gamma Isotopic	per sample
OFS-N	3.5 mile N, Lake Michigan	Fish	2/year.	Gamma Isotopic	per sample
OFS-S	5.0 mile S, Lake Michigan	Fish	2/year.	Gamma Isotopic	per sample

RADIOLOGICAL ENVIRONMENTAL MONITORING PROGRAM
SAMPLE STATIONS, SAMPLE TYPES, AND SAMPLE FREQUENCIES

SAMPLE STATION	DESCRIPTION/LOCATION	SAMPLE TYPE	SAMPLE FREQUENCY	ANALYSIS TYPE	ANALYSIS FREQUENCY
INGESTION - FOOD PRODUCTS					
On Site					
ONS-G	Nearest sample to Plant in the highest D/Q land sector containing media.	Grapes	At time of harvest	Gamma Isotopic	At time of harvest
ONS-V		Broadleaf vegetation	At time of harvest	Gamma Isotopic	At time of harvest
Off Site					
OFS-G	In a land sector containing grapes, approximately 20 miles from the plant, in one of the less prevalent D/Q land sectors	Grapes	At time of harvest	Gamma Isotopic	At time of harvest
INGESTION - BROADLEAF IN LIEU OF MILK					
3 indicator samples of broad leaf vegetation collected at different locations, within eight miles of the plant in the highest annual average D/Q land sector.		Broadleaf vegetation	Monthly when available	Gamma Isotopic I131	Monthly when available
1 background sample of similar vegetation grown 15-25 miles distant in one of the less prevalent wind directions.		Broadleaf vegetation	Monthly when available	Gamma Isotopic I131	Monthly when available

Composite samples of Drinking and Surface water shall be collected at least daily. Particulate sample filters should be analyzed for gross beta activity 24 or more hours following filter removal. This will allow for radon and thoron daughter decay. If gross beta activity in air or water is greater than 10 times the yearly mean of control samples for any medium, gamma isotopic analysis should be performed on the individual samples.

If at least three indicator milk samples and one background milk sample cannot be obtained, then three indicator broad leaf samples will be collected at different locations, within eight miles of the plant, in the land sector with the highest D/Q (refers to the highest annual average D/Q). Also, one background broad leaf sample will be collected 15 to 25 miles from the plant in one of the less prevalent D/Q land sectors.

Please note the following definitions: Weekly --> at least once per every seven (7) days
Monthly --> at least once per every thirty-one (31) days
Quarterly --> at least once per every ninety-two (92) days
Semi-annually --> at least once every one hundred eight-four (184) days

MAXIMUM VALUES FOR LOWER LIMITS OF DETECTION [A,B]

Radionuclides	Food Product pCi/kg, wet	Water pCi/l	Milk pCi/l	Air Filter pCi/m³	Fish pCi/kg, wet	Sediment pCi/kg, dry
Gross Beta		4*		0.01		
H-3		2000				
Ba-140		60	60			
La-140		15	15			
Cs-134	60	15	15	0.06	130	150
Cs-137	60	18	18	0.06	150	180
Zr-95		30				
Nb-95		15				
Mn-54		15			130	
Fe-59		30			260	
Zn-65		30			260	
Co-58		15			130	
Co-60		15			130	
I-131	60	1	1	0.07		

* LLD for drinking water

NOTES

A. The Lower Limit of Detection (LLD) is defined as the smallest concentration of radioactive material in sample that will be detected with 95% probability and 5% probability of falsely concluding that a blank observation represents a "real" signal.

For a particular measurement system (which may include radiochemical separation), the LLD is given by the equation:

$$LLD = \frac{4.66^{*} \times S}{E \times V \times 2.22 \times Y \times e^{(-\lambda \times \Delta t)}}$$

where LLD is the a priori lower limit of detection as defined above (as pCi per unit mass or volume). Analysis shall be performed in such a manner that the stated LLDs will be achieved under routine conditions. Occasionally background fluctuations, unavoidably small sample sizes, the presence of interfering radionuclides, or other uncontrollable circumstances may render these LLDs unachievable.

S is the standard deviation of the background counting rate or of the counting rate of a blank sample as appropriate (as counts per minute).

E is the counting efficiency of the detection equipment as counts per transformation (i.e. disintegration)

V is the sample size in appropriate mass or volume units

2.22 is the conversion factor from picocuries (pCi) to transformations (disintegrations) per minute

Y is the fractional radiochemical yield as appropriate

λ is the radioactive decay constant for the particular radionuclide

Δt is the elapsed time between sample collection (or end of sample collection period) and time of counting.

B. Other peaks which are measurable and identifiable, together with the radionuclides listed in Attachment 3.20, shall be identified and reported.

* A 2.71 value may be added to the equation to provide correction for deviations in the Poisson distribution at low count rates, i.e. 2.71 + 4.66 x S.

REPORTING LEVELS FOR RADIOACTIVITY CONCENTRATIONS IN ENVIRONMENTAL SAMPLES

Radionuclide	Food Product pCi/kg, wet	Water pCi/l	Milk pCi/l	Air Filter pCi/m^3	Fish pCi/kg, wet
H-3		20000			
Ba-140		200	300		
La-140		200	300		
Cs-134	1000	30	60	10	1000
Cs-137	2000	50	70	20	2000
Zr-95		400			
Nb-95		400			
Mn-54		1000			30000
Fe-59		400			10000
Zn-65		300			20000
Co-58		1000			30000
Co-60		300			10000
I-131	100	2	3	0.90	

On-site REMP Monitoring Locations

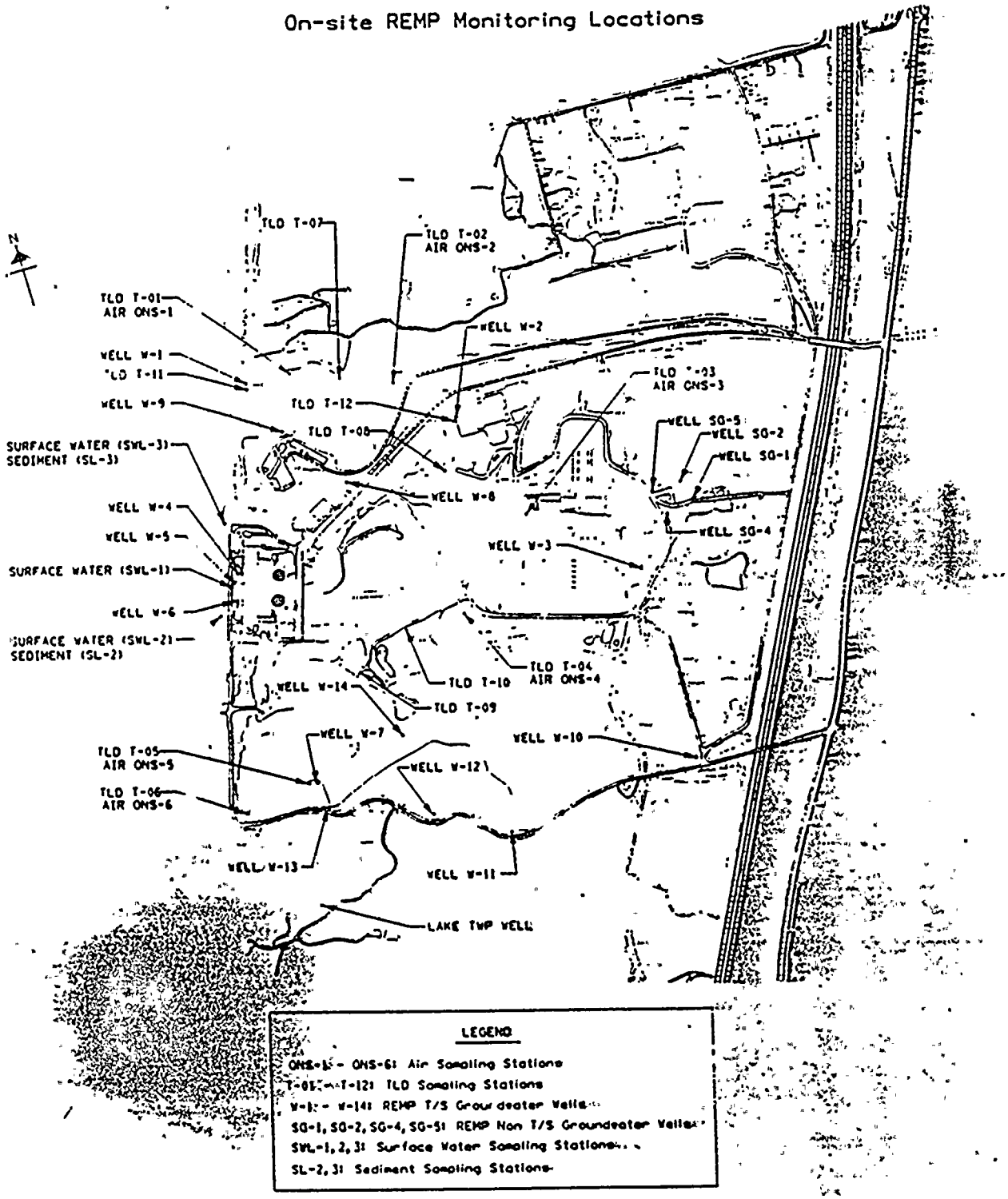

OFF-SITE MONITORING LOCATIONS

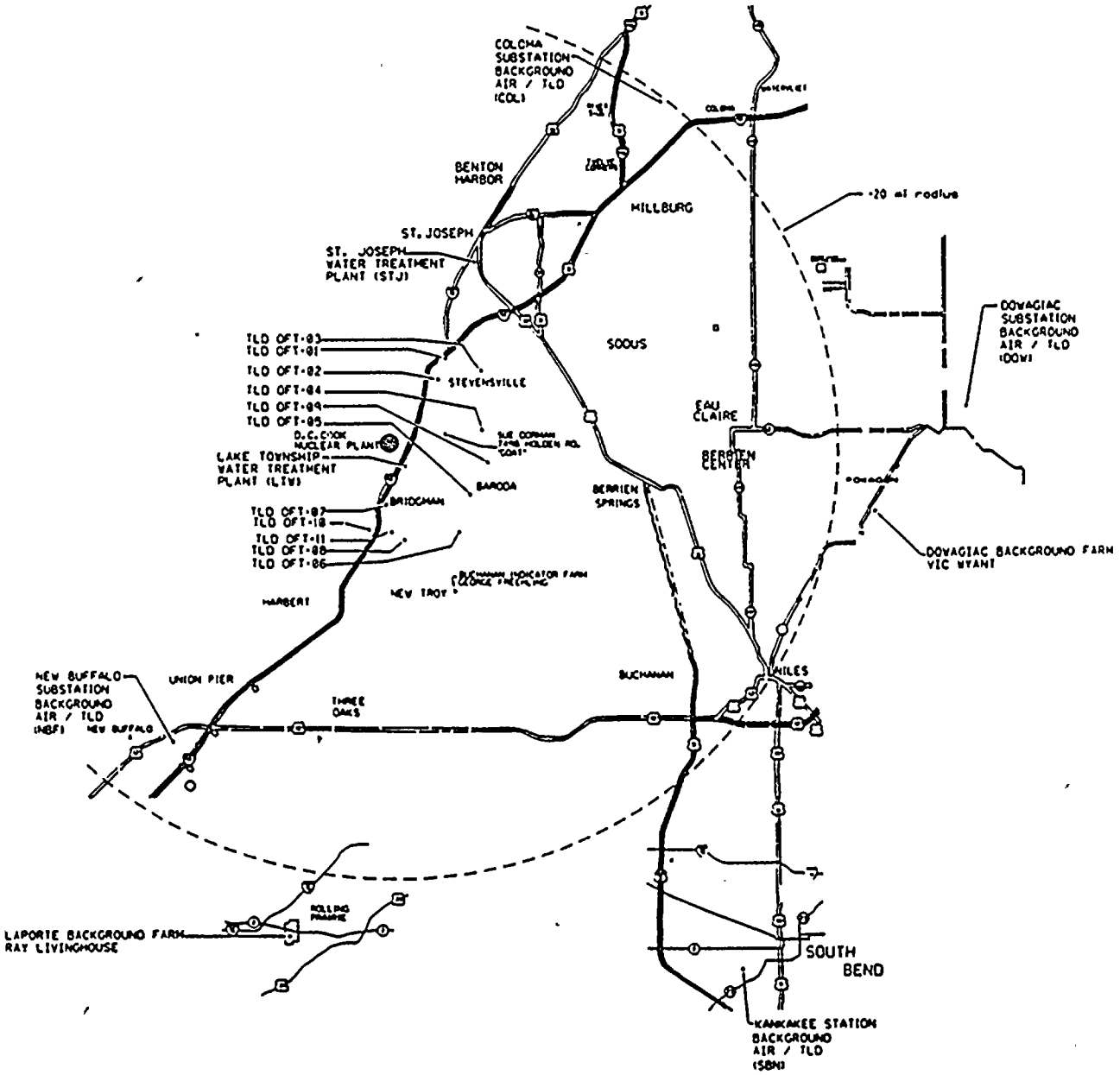

SAFETY EVALUATION BY THE OFFICE OF NUCLEAR REACTOR REGULATION

RELATED TO DISPOSAL OF SLIGHTLY CONTAMINATED SLUDGE

INDIANA MICHIGAN POWER COMPANY

DONALD C. COOK NUCLEAR PLANT, UNIT NOS. 1 AND 2

DOCKET NOS. 50-315 AND 50-316

1.0 INTRODUCTION

By letters dated October 9, 1991, October 23, 1991, September 3, 1993, and September 29, 1993, Indiana Michigan Power Company (I&M) requested approval pursuant to 10 CFR 20.2002 for the on-site disposal of licensed material not previously considered in the D. C. Cook Final Environmental Statement dated August 1973. Specifically, this request addresses actions taken in 1982 in which approximately 942 cubic meters of slightly contaminated sludge were removed from the turbine room sump absorption pond and pumped to the upper parking lot located within the exclusion area of the D. C. Cook Plant. The contaminated sludge was spread over an area of approximately 4.7 acres. The sludge contained a total radionuclide inventory of 8.89 millicuries (mCi) of Cesium-137, Cesium-136, Cesium-134, Cobalt-60 and Iodine-131.

In its submittal, the licensee addressed specific information requested in accordance with 10 CFR 20.2002(a), provided a detailed description of the licensed material, thoroughly analyzed and evaluated information pertinent to the impacts on the environment of the proposed disposal of licensed material, and committed to follow specific procedures to minimize the risk of unexpected exposures.

2.0 DESCRIPTION OF WASTE

The turbine room sump absorption pond is a collection place for water released from the plant's turbine room sump. The contamination was caused by a primary-to-secondary steam generator leak that entered the pond from the turbine building sump, a recognized release pathway. Sludge, consisting mainly of leaves and roots mixed with sand, built up in the pond. As a result, the licensee dredged the pond in 1982. The radioactive sludge removed by the dredging activities was pumped to a containment area located within the exclusion area. The total volume of 942 cubic meters of the radioactive sludge that was dredged from the bottom of the turbine room absorption pond was subsequently spread and made into a graveled road over the upper parking lot area of approximately 4.7 acres.

The principal radionuclides identified in the dredged material are listed below.

TABLE 1

NUCLIDE (half-life)	ACTIVITY (mCi) 1982	ACTIVITY (mCi) 1991
^{136}Cs (13.2 d)	0.03	NA*
^{134}Cs (2.1 y)	2.34	0.18
^{137}Cs (30.2 y)	5.59	4.57
^{60}Co (5.6 y)	0.90	0.27
^{131}I (8.04 d)	0.03	NA*
TOTAL:	8.89	5.02

*NA: not applicable due to decay

3.0 RADIOLOGICAL IMPACTS

The licensee in 1982 evaluated the following potential exposure pathways to members of the general public from the radionuclides in the sludge:

(1) external exposure caused by groundshine from the disposal site;

(2) internal exposure caused by inhalation of resuspended radionuclide; and

(3) internal exposure from ingesting ground water.

The staff has reviewed the licensee's calculational methods and assumptions and finds that they are consistent with NUREG-1101, "Onsite Disposal of Radioactive Waste," Volumes 1 and 2, November 1986 and February 1987, respectively. The staff finds the assessment methodology acceptable. Table 2 lists the doses calculated by the licensee for the maximally exposed member of the public based on a total activity of 8.89 mCi disposed in that year.

TABLE 2

Pathway	Whole Body Dose Received by Maximally Exposed Individual (mrem/year)
Groundshine	0.94
Inhalation	0.94
Groundwater Ingestion	0.73
Total	2.61

On July 5, 1991, the licensee re-sampled the onsite disposal area to assure that no significant impacts and adverse effects had occurred. A counting procedure based on the appropriate environmental low-level doses was used by the licensee; however, no activity was detected during the re-sampling[1]. This is consistent with the original activity of the material and the decay time. The 1991 re-sampling process used by the licensee confirms that the environmental impact of the 1982 disposal was very small. The staff finds the licensee's methodology acceptable.

4.0 ENVIRONMENTAL FINDING AND CONCLUSION

The staff has evaluated the environmental impact of the proposal to leave in place approximately 942 cubic meters of slightly contaminated sludge underneath the upper parking lot on the D. C. Cook site.

In 1982, the licensee evaluated the potential exposure to members of the general public from the radionuclides in the sludge and calculated the potential dose to the maximally exposed member of the public, based on a total activity of 8.89 mCi disposed in that year, to be 2.61 mrem/yr. The staff has reviewed the licensee's calculational methods and assumptions and found that they are consistent with NUREG-1101, "Onsite Disposal of Radioactive Waste," Volumes 1 and 2, November 1986 and February 1987, respectively. The staff finds the assessment methodology acceptable. For comparison, the radiation from the naturally occurring radionuclides in soils and rocks plus cosmic radiation gives a person in Michigan a whole-body dose rate of about 89 mrem per year outdoors. Subsequent licensee sampling in 1991 identified no detectable activity. The staff evaluated the licensee's sampling and analysis methodology and finds it acceptable. The results of the 1991 re-sampling by the licensee confirms that the environmental impact of the 1982 disposal was very small.

Based on the above the staff finds that the potential environmental impacts of leaving the contaminated sludge in place are insignificant. With regard to the nonradiological impacts, the staff has determined that leaving the soil in place represents the least impact to the environment.

5.0 CONCLUSION

Based on the staff's review of the licensee's discussion, the staff finds the licensee's proposal to retain the material in its present location as documented in this Safety Evaluation acceptable. Also, this Safety Evaluation shall be permanently

incorporated as an appendix to the licensee's Offsite Dose Calculation Manual (ODCM), and any future modifications shall be reported to NRC in accordance with the applicable ODCM change protocol.

---

[1] I&M letter from E. E. Fitzpatrick to the NRC Document Control Desk, September 29, 1993

Therefore, the licensee's proposal to consider the slightly contaminated sludge disposed by retention in place in the manner described in the D. C. Cook submittals date October 9, 1991, October 23, 1991, September 3, 1993, and September 29, 1993, is acceptable.

The guidelines used by the NRC staff for onsite disposal of licensed material and the staff's evaluation of how each guideline has been satisfied are given in Table 3.

Pursuant to 10 CFR 51.32, the Commission has determined that granting of this approval will have no significant impact on the environment (October 31, 1994, 59 FR 54477).

Principal Contributor: J. Minns

Date: November 10, 1994

TABLE 3

20.2002 GUIDELINE FOR ONSITE DISPOSAL[2]	STAFF'S EVALUATION
1. The radioactive material should be disposed of in such a manner that it is unlikely that the material would be recycled.	1. Due to the nature of the disposed material, recycling to the general public is not considered likely.
2. Doses to the total body and any body organ of a maximally exposed individuals (a member of the general public or a non-occupationally exposed worker) from the probable pathways of exposure to the disposed material should be less than 1 mrem/year.	2. This guideline was addressed in Table 2. Although the 2.61 mrem/yr is greater than staff's guidelines, the staff finds it acceptable due to 9 yrs decay following analysis and the expected lack of activity detected in the 1991 survey.
3. Doses to the total body and any body organ of an inadvertent intruder from the probable pathways of exposure should be less than 5 mrem/year.	3. Because the material will be land-spread, the staff considers the maximally exposed individual scenario to also address the intruder scenario.
4. Doses to the total body and any body organ of an individual from assumed recycling of the disposed material at the time the disposal site is released from regulatory control from all likely pathways of exposure should be less than 1 mrem.	4. Even if recycling were to occur after release from regulatory control, the dose to a maximally exposed member of the public is not expected to exceed 1 mrem/year, based on exposure scenarios considered in this analysis.

---

[2] E. F. Branagan, Jr. and F. J. Congel, "Disposal of Contaminated Radioactive Wastes from Nuclear Power Plants," presented at the Health Physics Society's Mid-Year Symposium on Health Physics Consideration in Decontamination/Decommissioning, Knoxville, Tennessee, February 1986, (CONF-860203).

APPROVAL UNDER 10 CFR 20.302 TO RETAIN CONTAMINATED CONCRETE ON SITE AT D.C. COOK NUCLEAR PLANT (TAC NO.67788)

1.0 Environmental Assessment and Finding of No Significant Impact

The U.S. Nuclear Regulatory Commission (the Commission) is considering the approval of a procedure for the disposal of contaminated concrete at the Donald C. Cook Nuclear Plant, pursuant to 10 CFR 20.302, as requested by Indiana Michigan Power Company (the licensee). D.C. Cook Nuclear Plant is located in Berrien County, Michigan.

2.0 Environmental Assessment

2.1 Identification of Proposed Action

The proposed action would approve the onsite disposal of contaminated concrete resulting from the replacement of the steam generators in D.C. Cook Unit No. 2.

2.2 The Need for the Proposed Action

To provide access for complete replacement of the four steam generator lower assemblies, a large opening will be cut in each of the reinforced concrete doghouses surrounding the steam generators. Large sections of reinforced concrete will need to be removed from the Unit 2 steam generator doghouse enclosures and must be disposed of. The licensee proposes to decontaminate the concrete to the extent practical. Following decontamination of the concrete, the licensee intends to dispose of the concrete outside the protected area fence, but within the D.C.Cook Nuclear Plant site boundary. The chosen site is presently the site of concrete spoils and other construction remnants left from the construction of the plant.

2.3 Environmental Impacts of the Proposed Action

By letter dated February 29, 1988 the licensee submitted an application for the onsite disposal of contaminated concrete slabs, a licensed material not previously considered by the Commission's staff in the D.C.Cook Final Environmental Statement (FES) dated August 1973. The application, prepared in accordance with 10 CFR 20.302(a), contains a detailed description of the licensed material, thoroughly analyzes and evaluates the information pertinent to the effects on the environment of the disposal of the licensed material, and commits the licensee to follow specific procedures to minimize the risk of unexpected or hazardous exposure.

The proposed action would allow the licensee to retain contaminated concrete on site at the D.C. Cook Nuclear Plant. Large sections of reinforced concrete will be removed from the D.C. Cook Unit No. 2 steam generator doghouse enclosures and must be disposed of. Decontamination by mechanical removal of paint, and surface concrete to a depth of 1/16", will eliminate the majority of the contamination accumulated in the concrete. However, the concrete sections will have trace quantities of Cobalt-60 (Co-60), Cesium-134 (Cs-134), and Cesium-137 (Cs-137) distributed in the remaining outer surfaces. The concrete will be removed in 24 to 30 large slabs ranging in weight from 25 to 70 tons each. It is planned to dispose of the material in this form, as large structural segments. The roof sections are three feet thick, and the wall portions are two feet thick. The estimated total weight of the slabs is 920 tons. This total includes an estimated 65 tons of reinforcing steel and steel structural supports.

The outer surfaces of the doghouse structures are in the upper containment volume. The surfaces were painted with nuclear Grade I paint prior to operation of the unit. However, the airborne contamination inside containment, arising due to normal operations, has brought small amounts of radioactive contamination into contact with the surfaces. Over the ten years of plant operation, the small amounts of contamination have diffused through the paint and into the outer layer of concrete. Inside the doghouse structure, airborne contamination again has contributed to the deposition of radioactivity on the walls,

Radiological analysis was performed on samples of paints and underlying concrete from the outside wall of the doghouse structures. Three nuclides were found in the concrete: Co-60, Cs-134, and Cs-137. The average of the measured sample concentration of each nuclide is given in the licensee's application and is shown in Table 1. The licensee indicated in the application that the concentrations represent the activity expected in the surface of the concrete when it is disposed of after decontamination. The licensee used maximum measured sample concentration in portions of the radiological impact assessment to insure conservatism in the calculations, and these values are summarized in Table 1 also.

To calculate the total activity present in the concrete, the licensee's estimate was made, based on the sample data, of the amount of diffusion of the radionuclides into the concrete. Diffusion is a physical phenomena generally applied to gaseous and liquid materials 'migrating' into a host material. The amount of diffusion of one material into another is dependent on the properties of both materials, the temperature, and the concentration of the diffusing material at the surface of contact. Water evaporating into air is an example of diffusion. The process of diffusion for the subject concrete was modeled mathematically according to Fick's Law which is a natural exponential function. The concentration of the diffusing material (i.e., the radioisotopes) at the contact surface migrates into the host material, here being the concrete, and gradually decreases with depth from the surface. The mathematical model never reaches zero concentration due to the properties of exponential functions, therefore practically, one chooses a very small cut off point at which it can be assumed the concentration has essentially reached zero. The licensee chose the cut off in this case to be the depth at which the surface activity concentration was decreased by 100,000 times. Actual activity at this level would be impossible to measure and is several times below natural background levels of radiation. This depth was calculated to be approximately one inch. To be more conservative, the licensee assumed that all of the calculated activity in the one inch of concrete was uniformly near the surface. Based on this conservative assumption it would be contained in the first one-tenth of an inch. This assumption was used in the exposure pathway dose calculations. The licensee calculated the total activity by integrating the concentration to this depth over the entire surface area of the concrete blocks.

The licensee indicated in the application that several conservative assumptions were made in calculating the total activity content of the concrete. First, the surface areas as calculated based on total volume of concrete and a uniform thickness of two feet. This effectively creates approximately 25 percent more potentially contaminated surface area than actually exists. Second, all surfaces were assumed to be equally contaminated. Due to the presence of the protective steel liner plate, any contamination on the inner concrete surface is expected to be small relative to that measured on the outer surface. Table 1 indicates the licensee's total calculated activity of each radionuclide based on both the average of the sample concentrations and on the maximum concentrations measured in the surface.

Table 1

Nuclide	Half-life (years)	Ave. Conc. (ρCi/gm)	Max. Conc. (ρCi/gm)	Ave. Based Activity (μCi)	Max. Based Activity (μCi)
Co-60	5.3	1.33	2.7	7.8	16.0
Cs-134	2.1	0.33	0.7	1.9	4.1
Cs-137	30.0	2.6	7.7	15.4	45.6
Total		4.26	11.1	25.1	65.7

Prior to disposal, items embedded in the concrete such as equipment supports, anchor bolts, and conduit and piping restraints shall be cut off flush with the concrete surface. The painted surface of the concrete will be removed to a minimum depth of 1/16" into the underlying concrete by a mechanical scarifying process.

The decontaminated blocks will again be surveyed prior to release for disposal. Any areas on the blocks which do not meet radiation protection release criteria, or exceed the assumptions made in the radiation dose evaluation of the application, will be further decontaminated prior to release for disposal.

The proposed disposal method for the concrete blocks is to remove them to an area outside the protected area fence, but within the Donald C. Cook Nuclear Plant site boundary. The Cook Nuclear Plant is located in Lake Township, Berrien County, Michigan, approximately 11 miles South-Southwest of the center of Benton Harbor, Michigan. The plant site consists of approximately 650 acres situated along the eastern shore of Lake Michigan. A more detailed description of the plant site area can be found in the "Final Environmental Statement Related to Operation of Donald C. Cook Nuclear Plant Units 1 and 2" (FES), August 1973.

The chosen site is presently the site of concrete spoils and other construction remnants left from the construction of the plant. The site is more than 200 yards away from any area occupied by plant personnel on any regular basis, and is 150 yards away from Thornton Road. The site is also surrounded by earthen mounds on all sides, with the exception of the access point.

Once the concrete is in place, it will not be visible except at the access point. It has not yet been determined whether or not the slabs will be stacked or individually laid down, but the maximum actual area occupied by the blocks will be less than 20 x 25 yards.

An evaluation of the potential dose to the plant site worker and to a member of the general public was performed by the licensee to determine the radiological impact of placing the concrete in the proposed location. The calculations were performed using applicable methodologies in Regulatory Guide 1.109, NUREG/CR-3332, and Introduction to Health Physics, Cember.

The licensee, in the application, stated all potential exposure pathways recommended by Regulatory Guide 1.109 were evaluated with the exception of potential dose from incineration of the waste. There is no feasible scenario by which the concrete would be burned. The licensee's evaluation consisted of a determination of the environmental pathways through which radiological exposure could be expected to occur and an evaluation of the radiological consequences of the disposal of the concrete for each of the pathways considered. The following environmental pathways were considered:

(1) External exposure from concrete - occupational and intruder

(2) Internal exposure due to release of contaminants to surface and ground water - ingestion of drinking water, fish and other aquatic foods, and well water

(3) Internal exposure due to agricultural activities on the disposal site following loss of institutional control - ingestion of vegetables, meat and dairy products

(4) Internal exposure due to inhalation of resuspended contaminated concrete dusts - occupational, and intruder following loss of institutional control

This evaluation demonstrates that any doses to occupational workers, intruders, and members of the general public would be very small, and far lower than the levels permitted for unrestricted areas by 10 CFR 20.105.

In the FES for the operation of D.C. Cook, the Commission's staff considered the potential effects on the environment of licensed material from operation of the plant and, in the summary of radiological impacts, concluded that "... the routine operation of the Cook Station is expected to add only a small increment to the natural background dose." "... these doses correspond to concentrations which are a small percentage of permissible standards set forth in 10 CFR Part 20."

Since the disposal proposed in the licensee's application dated February 29, 1988, involves licensed materials containing much less than 0.1 percent of the radioactivity, primarily Co-60, Cs-134, and Cs-137, already considered acceptable in the FES, and involve exposure pathways much less significant and radiochemical forms much less mobile than those considered in the FES, the Commission's staff considers this site-specific application for the D.C. Cook Nuclear plant to have insignificant radiological impact. The Commission's staff accepts the evaluations of the licensee documented in Attachment 1 of the February 29, 1988, application as further assurance that the proposed disposal procedures will have a negligible effect on the environment and on the general population in comparison to normal background radiation.

2.4 Alternatives to the Proposed Action

An alternative to on-site burial would be to ship and dispose of the concrete slabs at an offsite licensed disposal site. The overall benefit from the proposed method for the disposal of these slightly contaminated concrete slabs will be a cost saving of approximately $1.6 million and a saving of burial site space of approximately 16,000 cubic feet, which can be used for other radwaste of higher activity. The alternative would not be environmentally preferable.

2.5 Alternative Use of Resources

This action involves no use of resources not previously considered in connection with the "Final Environmental Statement Related to Operation of Donald C. Cook Nuclear Plant Units 1 and 2" dated, August 1973.

2.6 Agencies and Persons Consulted

The Commission's staff reviewed the licensee's request and did not consult other agencies or persons.

3.0 Finding of No Significant Impact

The Commission has determined not to prepare an environmental impact statement for the proposed action.

Based upon the foregoing environmental assessment, the Commission concludes that the proposed action will not have a significant effect on the quality of the human environment.

For further details with respect to this action, see the application dated February 29, 1988, which is available for public inspection at the Commission's Public Document Room, 1717 H Street, NW., Washington, DC, and at the Maude Preston Palenski Memorial Library, 500 Market Street, St. Joseph, Michigan 49805

Dated at Rockville, Maryland, this 23(rd) day of August 1988.

For the Nuclear Regulatory Commission

Martin J. Virgilio, Director
Project Directorate III-1
Division of Reactor Projects - III, IV, V & Special Projects