ITEM NO.	DESCRIPTION	QTY.
1	PRIMARY NOZZLE	2
2	TUBE PLATE	1
3	STEAM OUTLET NOZZLE	1
4	FEEDWATER INLET NOZZLE	1
5	BOTTOM BLOWDOWN CONN.	2
6	STEAM DRUM PRESSURE TAP	1
7	SHELL DRAIN	1
8	WIDE RANGE WATER LEVEL TAP	2
	NARROW RANGE WATER LEVEL TAP	6
10	PRIMARY MANWAY	2
11	SECONDARY MANWAY	2
12	SECONDARY HANDHOLE	6
13	PRIMARY MANWAY INSERT	2
14	STUB BARREL SECTION	1
15	LOWER SHELL BARREL SECTIONS	2
16	TRANSITION CONE SECTION	1
17	UPPER SHELL BARREL SECTIONS	2
18	UPPER HEAD	1
19	CHANNEL HEAD	1
20	SUPPORT PADS	4
21	INSPECTION PORT	2

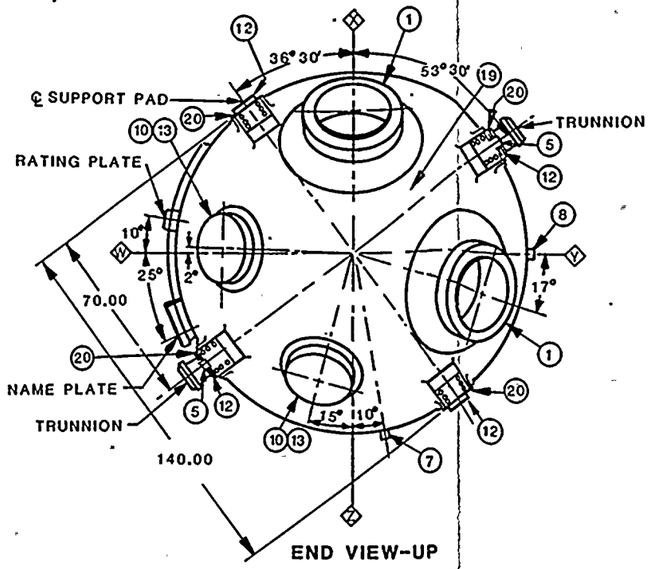

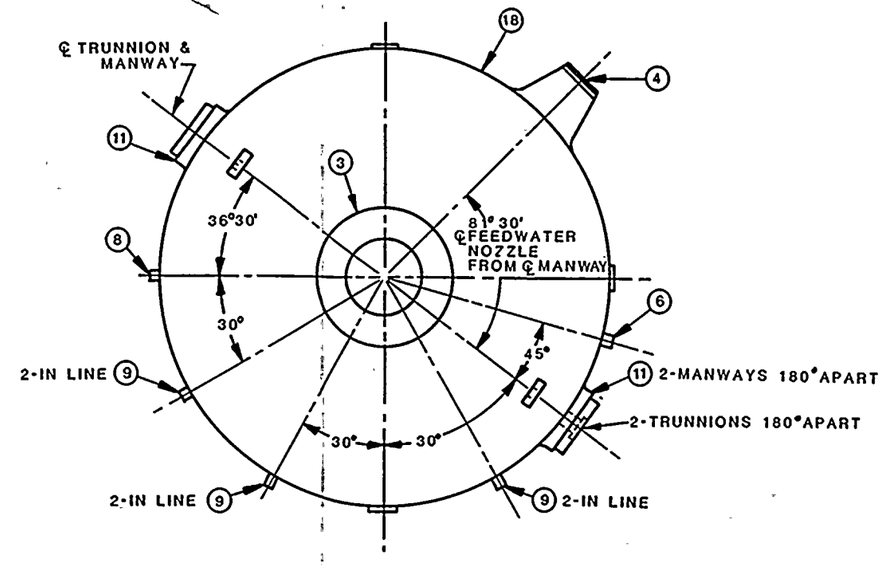

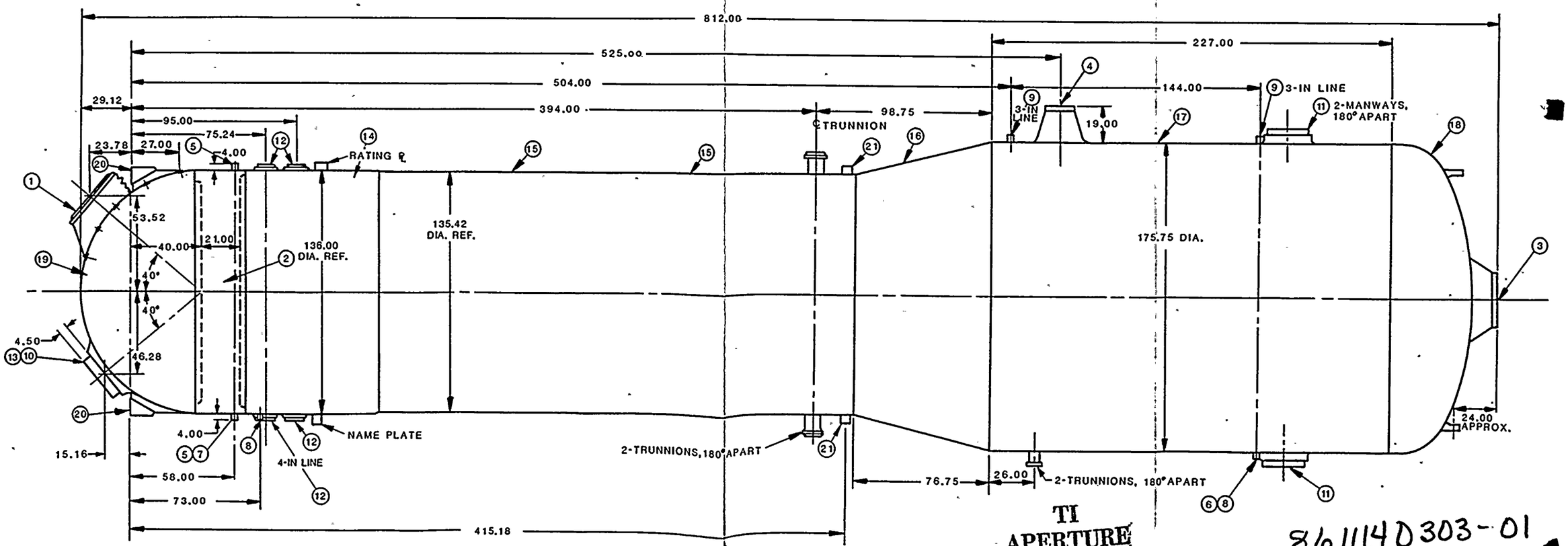

TI APERTURE CARD

8611140303-01

FIGURE 2.2-3
STEAM GENERATOR DETAILS

Also Available On Aperture Card

REVISION 0

FIGURE 2.3-1

TUBE DAMAGE LOCATIONS

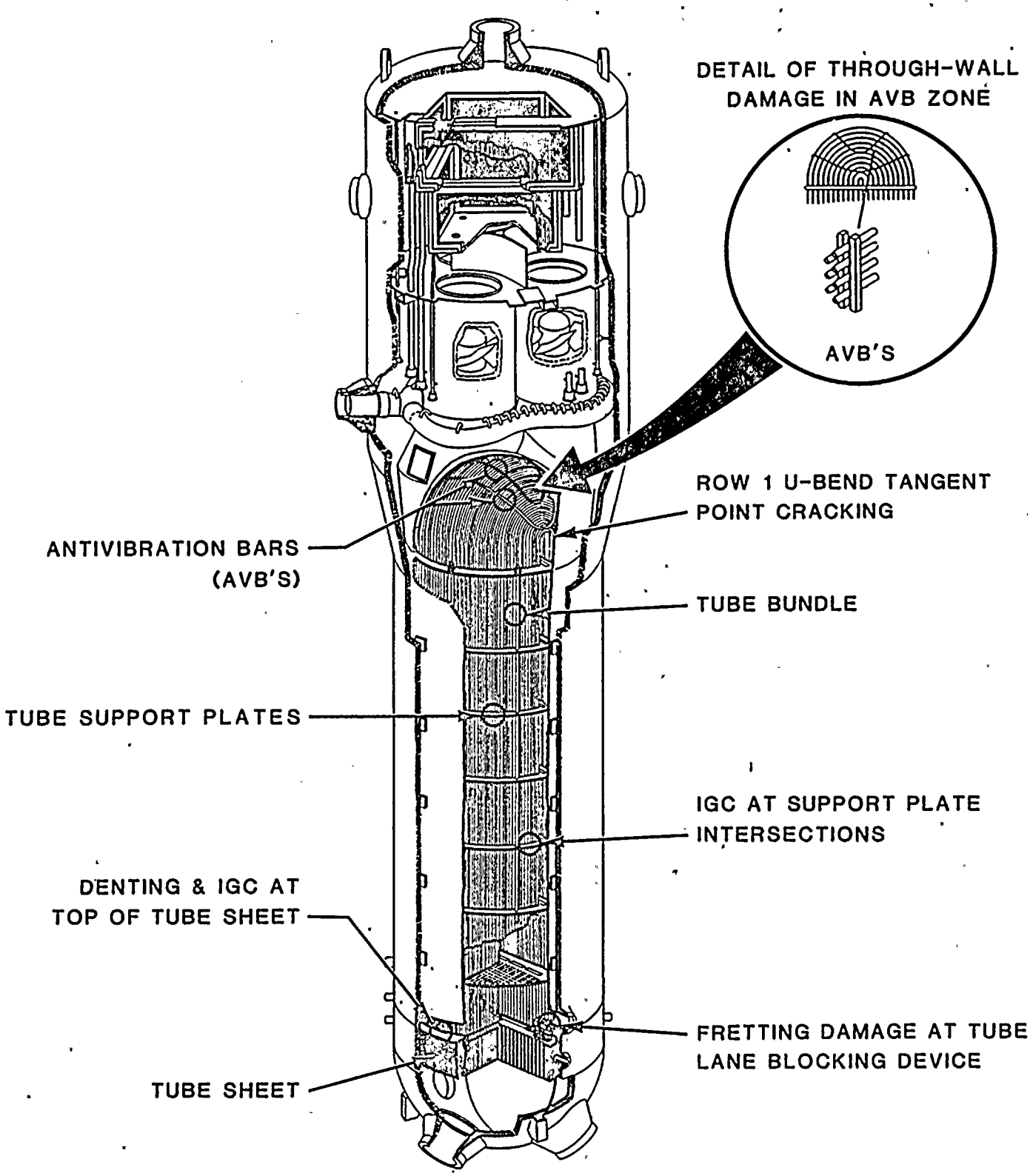

SERIES 51 STEAM GENERATOR

- The requirements of 10 CFR 20, "Standards for Protection Against Radiation," and the guidelines contained in Regulatory Guide 8.8, "Information Relevant to Ensuring that Occupational Radiation Exposure at Nuclear Power Stations Will Be As Low As Is Reasonably Achievable", will be followed as applicable to the Steam Generator Repair Project. The repair project will be preplanned to the extent necessary. Mockup training and project specific training will be used as appropriate to minimize outage time and radiation exposures. Decontamination and other exposure saving techniques will be used where the benefit in achieving a level of protection equals or exceeds the cost of implementation. Scaffolding and other components will be prefabricated to the extent possible to minimize radiation exposure and outage time.

- The repair project will be completed in accordance with the Donald C. Cook FSAR Chapter 1.7, "Quality Assurance of the Donald C. Cook Nuclear Plant," also referred to as the "Updated Quality Assurance Program Description" as supplemented with a "Steam Generator Repair Project Quality Assurance Program."

- The existing plant facilities will be augmented as necessary to accommodate the additional personnel who will participate in the repair project or to facilitate the actual repair work.

- Field work performed as part of the Steam Generator Repair Project will be in accordance with the applicable Industry Codes and Standards listed in Table 3.2-1 and the applicable USNRC Regulatory Guides listed in Table 3.2-2. Codes and Standards and USNRC Regulatory Guides applicable to the manufacture of the new steam generator lower assemblies are discussed in Section 2.4. 1

o Although there will be no fuel in the Unit 2 core, Unit 2 will be considered to be in Mode 6 during the Steam Generator Repair Project. Unit 2 Technical Specifications will be adhered to with the exception of those Technical Specifications listed in Table 3.2-3. The Technical Specifications listed in Table 3.2-3 will not be applicable during the Steam Generator Repair Project. For purposes of Technical Specification applicability, the Steam Generator Repair Project will begin when the last fuel assembly from the Unit 2 core is placed in the spent fuel pool and will end when the first fuel assembly is removed from the spent fuel pool to refuel the Unit 2 core. 2

TABLE [illegible]-1
INDUSTRY CODES AND STANDARDS APPLICABLE TO THE
STEAM GENERATOR REPAIR PROJECT

CODE OR STANDARD	ADDITIONAL INFORMATION/EXCEPTION
ACI 301-84, "Specifications for Structural Concrete Buildings, Chapters 2 and 3."	Exception: Mix proportions shall be selected (1) utilizing laboratory or field trial batches, (2) previous satisfactory performance on similar work using the same or similar materials, or (3) prior experience with these or similar materials to provide concrete of the required strength, durability, workability, economy, etc. . .
ACI 304-85, "Recommended Practices for Measuring, Mixing, Transporting, and Placing Concrete."	
ACI 315-80, "Details and Detailing of Concrete Reinforcement."	
ACI 308-81, "Recommended Practice for Curing Concrete."	Exception: Curing shall be for a period of seven (7) days or until standard cured cylinders reach a compressive strength of 3500 PSI, whichever is first. Adherence to this criteria shall be sufficient to preclude testing for "Evaluation of Procedures," "Curing Criteria Effectiveness" or "Maturity Factor Basis."
ACI 318-83, "Building Code Requirements for Reinforced Concrete, Chapters 3, 4, and 5."	Exception: Mix proportions shall be selected (1) utilizing laboratory or field trial batches, (2) previous satisfactory performance on similar work using the same or similar materials, or (3) prior experience with these or similar materials to provide concrete of the required strength, durability, workability, economy, etc.
American Welding Society D.1.1-1986, "Structural Welding Code Steel."	
American Welding Society D.1.3.-1981, "Structural Welding Code, Sheet Steel."	
ASME Boiler and Pressure Vessel Code, Section II, "Material Specifications," edition and addenda in use at time of material procurement.	

TABLE 3.2-1 (Continued)

CODE OR STANDARD	ADDITIONAL INFORMATION/EXCEPTION
ASME Boiler and Pressure Vessel Code, Section III, "Rules for Construction of Nuclear Vessels/Rules for Construction of Nuclear Power Plant Components," edition and addenda as discussed below. The original Construction code for D. C. Cook Unit 2 nuclear vessels is Section III, 1968 Edition plus Addenda through Winter 1968, and for piping components is ANSI B31.1-1967 and ANSI B31.7-1969. As allowed by ASME Section XI, Subarticle IWA-7210, selected portions of the original Construction Codes dealing with installation and testing will be updated to applicable portions of Section III, 1983 Edition plus Addenda through Summer 1984.	Exceptions: - Consistent with the plant design basis, fracture toughness requirements will not apply. - N-stamping of fabricated piping components will not be required.
ASME Boiler and Pressure Vessel Code, Section IX, "Welding and Brazing Qualifications," edition and addenda in use at time of procedure qualification.	
ASME Boiler and Pressure Vessel Code, Section XI, "Rules for Inservice Inspection of Nuclear Power Plant Components," 1983 Edition plus Addenda through Summer 1983.	Exception: - Consistent with the plant design basis, fracture toughness requirements will not apply.
ANSI B31.1, "Power Piping", edition and addenda in use at time of contract award for field piping services.	Exception: - This code applies only to power piping not classified under ASME Section III, Division 1.
ANSI N45.2 - 1977 Quality Assurance Program Requirements for Nuclear Facilities	
USAS (ANSI) B31.1-1967, "Power Piping". USAS (ANSI) B31.7-1969, "Nuclear Power Piping".	Exception: - As noted under ASME Boiler and Pressure Vessel Code, Section III, "Rules for Construction of Nuclear Vessels/Rules for Construction of Nuclear Power Plant Components" above, these codes represent the original Construction Code for

TABLE 3.2-1 (Continued)

CODE OR STANDARD	ADDITIONAL INFORMATION/EXCEPTION
	nuclear piping components. Portions dealing with materials and fabrication for new nuclear pressure retaining components, and installation and testing of all nuclear pressure retaining components, will be updated to ASME Section III, with the exception that fracture toughness requirements will not apply. The piping design basis and any additional design activities relating to nuclear piping systems will be in accordance with USAS (ANSI) B31.1-1967.
ASTM C31 "Standard Method of Making and Curing Concrete Specimens in the Field".	
ASTM C33 "Standard Specification for Coarse Aggregates".	<u>Exceptions</u>: - The average fineness modulus of the fine aggregate may be between 2.5 and 3.0, however individual samples shall not vary more than 0.20 from the average. - Compliance with gradation and fineness modulus requirements for fine aggregate shall consist of 4 out of 5 successive test results meeting the specifications. - Coarse aggregate gradation shall be Number 57, 1 inch x #4. - Coarse aggregate sodium sulfate soundness loss shall be a 10 percent maximum at 5 cycles. - Coarse aggregate Los Angeles Abrasion loss shall be a maximum of 40 percent at 500 revolutions.
ASTM C39 "Test Method for Compressive Strength of Cylindrical Specimens".	
ASTM C40 "Test Method for Organic Impurities in Fine Aggregates for Concrete".	

TABLE 3.2-1 (Continued)

CODE OR STANDARD	ADDITIONAL INFORMATION/EXCEPTION
ASTM C88 "Test Method for Soundness of Aggregates by Use of Sodium Sulfate or Magnesium Sulfate".	
ASTM C94 "Standard Specification for Ready Mix Concrete".	
ASTM C117 "Test Method for Materials Finer Than No. 200 Sieve in Mineral Aggregates by Washing".	
ASTM C123 "Test Method for Lightweight Pieces in Aggregate".	
ASTM C127 "Test Method for Specific Gravity and Adsorption of Coarse Aggregate".	
ASTM C128 "Test Method for Specific Gravity and Adsorption for Fine Aggregate".	
ASTM C131 "Test Method of Resistance to Degradation of Small-Size Coarse Aggregate by Abrasion and Impact in the Los Angeles Machine".	
ASTM C136 "Method for Sieve Analysis of Fine and Coarse Aggregates".	
ASTM C138 "Test Method for Unit Weight, Yield, and Air Content (Gravimetric) of Concrete".	Exceptions: - Except strike off bar utilized in lieu of glass plate for unit weight determination. - Except "Yield" and "Air Content (Gravimetric)" portions will not be utilized.
ASTM C142 "Test Method for Clay Lumps and Friable Particles in Aggregate".	
ASTM C143 "Test Method for Slump of Portland Cement Concrete".	
ASTM C150 "Specification for Portland Cement".	Exceptions: - Except cement shall be free of false set when tested in accordance with ASTM C451.

TABLE 3.2-1 (Continued)

CODE OR STANDARD	ADDITIONAL INFORMATION/EXCEPTION
	- Except total alkalies shall not exceed 0.60 percent by weight when calculated as the percentage of Na_2O plus 0.658 times the percentage of K_2O.
ASTM C172 "Method of Sampling Freshly Mixed Concrete".	
ASTM C231 "Test Method for Air Content of Freshly Mixed Concrete by the Pressure Method".	Exception: - Only the Type B Apparatus shall be utilized.
ASTM C260 "Specifications for Air-Entrained Admixtures for Concrete".	
ASTM C289 "Test Method for Potential Reactivity of Aggregates (Chemical Method)".	
ASTM C309 "Specifications for Liquid Membrane-Forming Compounds for Curing Concrete".	
ASTM C311 "Methods of Sampling and Testing Fly Ash or Natural Pozzolans for Use as a Mineral Admixture in Portland Cement Concrete".	
ASTM C494 "Specification for Chemical Admixtures in Concrete".	
ASTM C566 "Test Method for Total Moisture Content of Aggregate by Drying".	
ASTM C617 "Practice for Capping Cylindrical Concrete Specimens".	
ASTM C618 "Specification for Fly Ash and Rain or Calcined Natural Pozzolan for Use as a Mineral Admixture in Portland Cement Concrete".	
ASTM C702 "Methods for Reducing Field Samples of Aggregate to Testing Size".	

TABLE 3.2-1 (Continued)

CODE OR STANDARD	ADDITIONAL INFORMATION/EXCEPTION
SSPC-SP1 through SP10 - 1982 Steel Structures Painting Council Specifications for Surface Preparation of Steel Surfaces	

Note: 1) All ASTMs are latest edition.

TABLE 3.2-2

USNRC REGULATORY GUIDES APPLICABLE TO THE STEAM GENERATOR REPAIR PROJECT FIELD WORK

REGULATORY GUIDE NUMBER	REGULATORY GUIDE TITLE	REGULATORY GUIDE REVISION	ADDITIONAL INFORMATION/EXCEPTIONS
1.8	Personnel Selection and Training	1-R (9/75)	Committed to in UFSAR, Section 1.7, "QAPD", Appendix A.
1.26	Quality Group Classification and Standards for Water, Steam, and Rad-waste Containing Components of Nuclear Power Plants	3 (2/76)	Classification of Class 2 and 3 components for the purpose of implementing ASME Section XI requirements was made in accordance with this guide.
Safety Guide 30	Quality Assurance Requirements for Installation, Inspection and Testing of Instrumentation and Electrical Equipment	(8/72)	Committed to in UFSAR, Section 1.7, "QAPD", Appndix A.
1.31	Control of Ferrite Content in Stainless Steel Weld Metal	3 (4/78)	The requirements of this guide are now covered by ASME Section III. Field work relating to the steam generator repair project will be in compliance with this regulatory guide.
Safety Guide 33	Quality Assurance Program Requirements (Operational)	(11/72)	Committed to in UFSAR, Section 1.7, "QAPD", Appendix A.
1.37	Quality Assurance Requirements for Cleaning of Fluid Systems and Associated Components of Water-Cooled Nuclear Power Plants	0 (3/73)	Committed to in UFSAR, Section 1.7, "QAPD", Appendix A.

TABLE 3.2-2 (Continued)

REGULATORY GUIDE NUMBER	REGULATORY GUIDE TITLE	REGULATORY GUIDE REVISION	ADDITIONAL INFORMATION/EXCEPTIONS
1.38	Quality Assurance Requirements for Packing, Shipping, Receiving Storage, and Handling of Items for Water-Cooled Nuclear Power Plants	1 (10/76)	Committed to in UFSAR, Section 1.7, "QAPD", Appendix A.
1.39	Housekeeping Requirements for Water-Cooled Nuclear Power Plants	1 (10/76)	Committed to in UFSAR, Section 1.7, "QAPD", Appendix A.
1.44	Control of Sensitized Stainless Steel	0 (5/73)	If applicable to this repair project, the field work will comply to this guide.
1.48	Design Limits and Loading Combinations for Seismic Category I Fluid System Components		This regulatory guide was withdrawn 3/4/85 (see 50FR9732).
1.50	Control of Preheat Temperature for Welding of Low-Alloy Steel	0 (5/73)	Project repair work will be performed in compliance with this regulatory guide.
1.54	Quality Assurance Requirements for Protective Coatings Applied	0 (6/73)	Committed to in UFSAR, Section 1.7, "QAPD", Appendix A. Exception: Committed only to ANSI N101.4-1972.
1.58	Qualification of Nuclear Power Plant Inspection Examination and Testing Personnel	1 (9/80)	Committed to in UFSAR, Section 1.7, "QAPD", Appendix A.

TABLE 3.2-2 (Continued)

REGULATORY GUIDE NUMBER	REGULATORY GUIDE TITLE	REGULATORY GUIDE REVISION	ADDITIONAL INFORMATION/EXCEPTIONS
1.64	Quality Assurance Requirements for the Design of Nuclear Power Plants	0 (10/73)	Committed to in UFSAR, Section 1.7, "QAPD", Appendix A.
1.68	Initial Test Program for Water-Cooled Nuclear Power Plants	2 (8/78)	This regulatory guide will be used only for guidance in developing a test program for those components and systems affected by the Steam Generator Repair Project.
1.71	Welder Qualifications for Areas of Limited Accessibility	0 (12/73)	Welders making welds in areas of restricted accessibility will be required to practice and qualify on a similar configuration to the weld being made.
1.74	Quality Assurance Terms and Definitions	0 (2/74)	Committed to in UFSAR, Section 1.7, "QAPD", Appendix A.
1.88	Collection, Storage, and Maintenance of Nuclear Power Plants Quality Assurance Records	2 (10/76)	Committed to in UFSAR, Section 1.7, "QAPD", Appendix A.
1.89	Environmental Qualification of Certain Electrical Equipment Important to Safety for Nuclear Power Plants	1 (7/84)	Project repair work will be performed in accordance with this regulatory guide.

TABLE 3.2-2 (Continued)

REGULATORY GUIDE NUMBER	REGULATORY GUIDE TITLE	REGULATORY GUIDE REVISION	ADDITIONAL INFORMATION/EXCEPTIONS
1.94	Quality Assurance Requirements for Installation, Inspection, and Testing of Structural Concrete and Structural Steel During the Construction Phase of Nuclear Power Plants	1 (4/76)	Exceptions: - "Grout testing" (ASTM C109) included in Table B of ANSI N45.2.5-1974 is inappropriate for field testing as it is a sophisticated laboratory test utilized for cement evaluation. In lieu of daily tests, pre-packaged non-shrink grouts shall be accepted for use on the basis of manufacturer's certification or compressive strength tests made in the field. Confirmation compressive strength tests shall be made during the first day's production and thereafter on a basis of either once per day or every one-hundred (100) bags used, whichever is least. - Water and ice shall be sampled and tested to ensure either potability or certified to contain not more than 2,000 parts per million of chlorides as Cl, nor more than 1,500 parts per million of sulfates as SO_4. Acceptability of this water or ice shall be per this certification and preclude the ASTM's referenced in Table B of ANSI N45.2.5-1974. - The reference, in Table B of ANSI N45.2.5-1974, to soft fragment testing per ASTM changed designations to ASTM C851 which was deleted in 1985. No testing for soft fragments is intended.

TABLE 3.2-2 (Continued)

REGULATORY GUIDE NUMBER	REGULATORY GUIDE TITLE	REGULATORY GUIDE REVISION	ADDITIONAL INFORMATION/EXCEPTIONS
			Exception: Sister splices will be substituted for production splice required for tensile testing under Section 4.9 of ANSI N45.2.5-1974. See Supplement 3 for further information. 4
1.100	Seismic Qualification of Electric Equipment Important to Safety for Nuclear Power Plants	1 (8/77)	Project repair work will be performed in accordance with this regulatory guide.
1.116	Quality Assurance Requirements for Installation, Inspection, and Testing of Mechanical Equipment and Systems.	0-R (5/77)	Exception: Committed to ANSI N45.2.8 (1975), "Supplementary Quality Assurance Requirements for Installation, Inspection and Testing of Mechanical Equipment and Systems for the Construction Phase of Nuclear Power Plants" per UFSAR, Section 1.7, "QAPD", Appendix A. Not committed to this regulatory guide.
1.123	Quality Assurance Requirements for Control of Procurement of Items and Services for Nuclear Plants	1 (7/77)	Committed to in UFSAR, Section 1.7, "QAPD", Appendix A.
1.131	Qualification Tests of Electric Cables, Field Splices, and Connections for Light-Water-Cooled Nuclear Power Plants	0 (8/77)	Project field work will be performed in accordance with this regulatory guide.
1.144	Auditing of Quality Assurance Programs for Nuclear Power Plants	0 (1/79)	Committed to in UFSAR, Section 1.7, "QAPD", Appendix A.
1.146	Qualification of Quality Assurance Program Audit Personnel for Nuclear Power Plants	0 (8/80)	Committed to in UFSAR, Section 1.7, "QAPD", Appendix A.

TABLE 3.2-3

D. C. COOK UNIT 2 TECHNICAL SPECIFICATIONS NOT APPLICABLE DURING THE STEAM GENERATOR REPAIR PROJECT

TECHNICAL SPECIFICATION NUMBER	TITLE	ADDITIONAL INFORMATION/COMMENT
3.1.1.3	Reactivity Control Systems - Boron Dilution	This Technical Specification ensures adequate mixing of coolant with the low boron concentration stream being introduced into the system. This mixing prevents a large concentration gradient in the core which would cause localized power excursions. With no fuel in the reactor vessel, there is no concern about decay heat removal or boron mixing.
3.1.2.1	Reactivity Control Systems - Boration Systems - Flow Paths - Shutdown	This Technical Specification requires that one boron injection flow path remains operable. This ensures that negative reactivity control is available. With no fuel in the reactor vessel there is no need for negative reactivity control.
3.1.2.5	Reactivity Control Systems - Boric Acid Transfer Pumps - Shutdown	This Technical Specification requires that at least one boric acid transfer pump remain operable. This ensures that negative reactivity control is available. With no fuel in the reactor vessel there is no need for negative reactivity control.
3.3.3.9	Instrumentation - Radioactive Liquid Effluent Instrumentation, specifically the following surveillance requirements: 4.3.3.9.2, 1b Steam Generator Blowdown Line (2-R-19) 4.3.3.9.2, 1c Steam Generator Blowdown Treatment Effluent (2-R-24)	Because there will be no steam or steam generators these two monitors will not be maintained operable.

TABLE 3.2-3
(Continued)

TECHNICAL SPECIFICATION NUMBER	TITLE	ADDITIONAL INFORMATION/COMMENT
3.3.3.10	Instrumentation - Radioactive Gaseous Process and Effluent Monitoring Instrumentation, Specifically the following surveillance requirements: 4.3.3.10.2, 2a Condenser Evacuation System Noble Gas Activity Monitor (SRA-2905) 4.3.3.10.2, 2b Condenser Evacuation System Effluent Flow Rate (SFR-401, 2-MR-054, SRA-2910) 4.3.3.10.2, 6a Gland Seal Exhaust Noble Gas Activity (SRA-2805) 4.3.3.10.2, 6b System Effluent Flow Rate (SFR-201, 2-MR-054, SRA-2810)	Because there will be no steam or steam generators these eight monitors will not be maintained operable.
3.4.7	Reactor Coolant System - Chemistry	This technical specification provides adequate corrosion protection to ensure the structural integrity of the Reactor Coolant System over the life of the plant. During the steam generator repair there will be a period of approximately six months when the Reactor Coolant System will be drained to half-loop, the reactor vessel head will be in place and the Residual Heat Removal Pumps will be shutdown. During this portion of the outage it will not be possible to obtain a chemistry sample from the Reactor Coolant System. Therefore the Reactor Coolant System will be placed within specification limits prior to this shutdown and isolation period. Once sampling can be reestablished following the steam generator repair it will be verified that the Reactor Coolant System is still within the chemistry limits. If the Reactor Coolant System is not within the chemistry limits, the system will be cleaned-up prior to reloading fuel into the reactor. Our engineering

TABLE 3.2-3
(Continued)

TECHNICAL SPECIFICATION NUMBER	TITLE	ADDITIONAL INFORMATION/COMMENT
		evaluation has determined that the structural integrity of the Reactor Coolant System will not be diminished by an unlikely increase in chlorides or fluorides above the technical specification limits of 0.16 ppm. This is based on the Reactor Coolant System being at ambient temperature during this period and that stress corrosion cracking (SCC) does not occur below 80°F and rarely at less than 145°F. Also, SCC does not occur until the concentration of chloride and fluoride reaches several orders of magnitude above the technical specification limit of 0.15 ppm; the level below which the Reactor Coolant System will be left at during the period of shutdown and isolation.
3.9.1	Refueling Operations - Boron Concentration	Since there will be no fuel in the reactor vessel limitations on reactivity conditions in the reactor vessel are no longer a concern.
3.9.2	Refueling Operations - Instrumentation	Since there will be no fuel in the reactor vessel there will be no change in the reactivity condition of the core, therefore, the source range neutron flux monitors are not needed.
3.9.8.1	Refueling Operations - Residual Heat Removal and Coolant Circulation	With no fuel in the reactor vessel there will be no residual heat to remove. Therefore, there is no need to maintain an operational residual heat removal loop.
3.9.8.2	Refueling Operations - Low Water Level	With no fuel in the reactor vessel there will be no residual heat to remove. Therefore, there is no need to maintain an operational residual heat removal loop.

TABLE 3.2-3
(Continued)

TECHNICAL SPECIFICATION NUMBER	TITLE	ADDITIONAL INFORMATION/COMMENT
6.5.1.6(a)	Administrative Controls - Plant Nuclear Safety Review Committee - Responsibilities	The PNSRC will review the following steam generator repair project documents: 1. The Steam Generator Repair Report 2. The Steam Generator Repair Quality Assurance Program 3. Procedures covering return to service testing.
6.8.2	Administrative Controls - Procedures	The PNSRC will review the procedures written covering return to service testing.
6.8.3	Administrative Controls - Procedures	Temporary changes made to procedures covering return to service testing provided items a, b, and c of technical specification 6.8.3 are satisfied.
6.12.2	Administrative Controls - High Radiation Area	The keys to those high radiation areas turned over to the steam generator project team shall be maintained under the administrative control of the Project Health Physicist.

- All portions of the repair project will be performed by experienced contractors under the construction/project management of AEPSC/I&MECo. Contractors will provide quality assurance, quality control and nondestructive examination personnel with I&MECo providing quality assurance audit and surveillance personnel to monitor contractor activities. Contractors will be required to have an ASME Code stamp applicable to the work being performed.

- Site areas not previously disturbed will not be used during the repair project. Therefore, environmental impacts resulting from the repair project will be minimal. Proper environmental controls will be enforced throughout the duration of the repair project to ensure that environmental impacts are kept to a minimum.

3.3 Preshutdown Activities

This subsection describes those activities which will take place prior to the unit shutdown to prepare the plant for the actual repair activities.

3.3.1 Site Preparation

Figure 3.3-1 shows the site layout that will be utilized during the repair project. Major changes to the site that will take place in preparation for the repair project include:

- Extension and upgrading of various plant access roads;
- Construction of an approximately 10,000 square foot fabrication shop/warehouse;
- Construction of an approximately 3,000 square foot site security access building;

- Construction of an approximately 9,600 square foot containment access building;
- Construction of a temporary on-site steam generator storage facility;
- Upgrade of parking lots.

3.3.1.1 Access Roads

Approximately 5 miles of currently existing access roads will be upgraded to handle construction traffic during the repair project (see Figure 3.3-1). Upgrading these roads will involve some light grading and excavation and the addition of gravel or blacktop to provide a road surface. These access roads will be utilized by contractor personnel during the repair project for ingress and egress to the plant site. Heavy components used during the project (i.e. construction materials, plant equipment, etc.) will enter the plant site through the existing main gate access off Red Arrow Highway.

3.3.1.2 Fabrication Shop/Warehouse

An approximately 10,000 square foot fabrication shop/warehouse will be constructed in the contractor's area to the south of the plant (see Figure 3.3-1). This area is currently utilized for laydown space and parking. The warehouse will have a concrete foundation and will be a pre-engineered metal structure with vinyl siding. The warehouse will be utilized throughout the repair project for storage, field fabrication, and mockup training.

3.3.1.3 Security Access Building

An approximately 3,000 square foot security access building will be constructed inside the protected area south of the plant (see Figure 3.3-1). This security access building will be used to handle the increase in personnel requiring access to the plant during the repair project. All contractor and trade personnel will use this facility as their entrance into the protected area. This facility will house a bullet proof guard island, three ingress lanes equipped with explosive sniffers, metal detectors, and x-ray machines, and three exit lanes equipped with portal radiation monitors.

3.3.1.4 Containment Access Building

Due to the size, duration, and nature of the Steam Generator Repair Project, a new temporary containment access building will be constructed. This two story structure will be located in the protected area on the east end of the auxiliary building and will encompass approximately 9,600 square feet. It is intended that project personnel will use this building to access the Donald C. Cook Unit 2 containment.

The first elevation (see Figure 3.3-2) will contain the radiation protection facilities including hot and cold change areas, radiation protection office, respirator issue room, personnel decontamination room, personnel contamination monitors, step off pad, dosimetry room, instrument issue and repair room, count room and rest rooms. Because this floor will have potentially contaminated areas, a separate ventilation system will be provided from the rest of the building.

The second elevation (see Figure 3.3-3) contains the offices and work areas for those personnel requiring ready access to the work area.

3.3.1.5 Temporary On-Site Steam Generator Storage Facility

The temporary on-site steam generator storage facility for the original steam generator lower assemblies will be a reinforced concrete structure located just east of the 345 kV switch yard (see Figure 3.3-1 for location). The structure will be at grade level and will be blocked from view by the area terrain.

The temporary on-site steam generator storage facility will be designed as a Class III structure in accordance with the requirements of the American Concrete Institute Standards ACI-318-83, the AISC Manual of Steel Construction, eighth edition, and the Michigan State Building Code. The concrete will have a design strength of f'c = 3500 PSI at 28 days and be reinforced with ASTM A-615 grade 60 reinforcing steel. See Figure 3.3-4 for details of temporary on-site steam generator storage facility.

A drainage system with a collection sump will be included in the foundation. Any liquids collected in the sump will be monitored through an outside accessible port. Additional ports will be included to facilitate radiological monitoring. All ports will be sealed and locked when not in use. High Efficiency Particulate Absolute (HEPA) filters will be installed on all air equalization ports. Access for changing filters will be on the outside with the access locked.

A radiological monitoring program will be established as part of the temporary on-site steam generator storage facility procedures. The surface radiation levels will not exceed those listed in 10 CFR 20.105, "Permissible Levels of Radiation in Unrestricted Areas" using concrete wall thicknesses to provide necessary shielding. Ground water observation wells will be installed to monitor the area ground water.

The temporary on-site steam generator storage facility and the steam generator lower assemblies are non-combustible which will eliminate the need for any permanently installed fire detection or suppression systems. The floor and the walls up to a height of one foot will be coated with a protective coating system to facilitate clean-up.

The maximum water level increase along the lake shore at the plant site should not exceed 8 feet. The temporary on-site steam generator storage facility will be located approximately 5,000 feet from Lake Michigan and at an elevation approximately 35 feet above the lake level, which will eliminate any concern with flooding.

Access will be through vestibules at the northeast corner of the temporary on-site steam generator storage facility. Vestibules are approximately 6' x 6' x 8' high inside dimensions. Exterior doors will be made of 3'0" x 6'8" steel doors with louvers. Interior doors will be made of 3'8" x 6'8" steel doors with gaskets to provide air seal and 6" high door sill above vestibule floor level. Interior and exterior doors will have security locks.

3.3.1.6 Parking Lots

Parking for the additional personnel onsite as the result of the repair project will be provided in areas previously used for parking during other outages or in areas currently used for laydown storage. Parking lot surfaces will be either gravel or blacktop.

3.3.2 <u>Shipment and Storage of Replacement Components</u>

Shipment and storage of the replacement lower assemblies will be in compliance with ANSI N45.2.2-1972 and the requirements of Regulatory Guide 1.38.

The replacement lower assemblies will be transported to the Donald C. Cook Plant by barge/railroad combination. They will be barged to Mt. Vernon, Indiana, where they will be transferred to railroad cars for transportation by rail to the plant. The lower assemblies will be drained, dried and sealed prior to shipment. A nitrogen blanket will be maintained on the primary and secondary side during shipment and storage. During transportation the assemblies will be supported on the barge/car deck on specially fabricated saddles, tied down by cables and restrained by end braces secured to the deck.

3.3.3 Modification to Auxiliary Building Structural Steel

To handle the loads associated with the Steam Generator Repair Project, the existing Auxiliary Building overhead bridge crane will be upgraded to single-failure-proof status and a second 150/20 ton single-failure-proof overhead bridge crane will be installed in the Auxiliary Building. Both cranes will travel on the existing rails, which extend the length of the auxiliary building, while carrying loads approaching 250 tons (see Section 6.2.1 and Supplement 1 of this report for a detailed description of the cranes and the load handling methodologies).

2

Each crane rail is supported by a crane rail girder which in turn transfers the crane load to the auxiliary building structural steel columns. An analysis was performed to ensure the integrity of the existing auxiliary building structural steel elements which support the crane loads. The analysis was performed assuming both cranes operating in tandem while moving a 300 ton load. The results of the analysis shows that the existing auxiliary building structural steel is adequate to support the crane loads with minor modifications.

This Space Left Intentionally Blank

3.3.4 Polar Crane Power Circuit Relocation

Approximately 200 feet of the polar crane power supply cable is located in the cut area of a Unit 2 steam generator doghouse enclosure wall. To eliminate this cable as a cut interference and at the same time provide maximum availability of the polar crane, the cable will be permanently relocated prior to the start of the steam generator repair project. The entire cable, from the containment penetration connection up to the crane, will be replaced to avoid splicing. The rerouted new cable is of approximately the same length as the existing cable and therefore will not significantly increase the permanent combustible fire loading in the containment building. The rerouted cable will be mounted to the walls per Seismic Class I requirements. 2

3.4 Post Shutdown Activities

3.4.1 Containment Preparations

3.4.1.1 Reactor Vessel

Prior to the start of repair project the reactor will be defueled. The upper internals will be returned to the reactor vessel and the reactor vessel head reinstalled. The missile shields will be reinstalled and a heavy steel work

platform will be assembled over the refueling cavity. Lay-up procedures to insure reactor vessel cleanliness, prevent foreign objects from entering the reactor vessel, and minimize corrosion of the reactor coolant system will be developed.

3.4.1.2 Polar Crane

The polar crane is equipped with a 250-ton capacity main hoist and 3 ton auxiliary hoist mounted on a single trolley. The polar crane possesses sufficient capacity to handle all major lifting requirements for the steam generator project inside containment and can be rerated to a higher capacity as required; however, rerating of the hoists is not anticipated.

A complete inspection of the polar crane shall be conducted prior to its use in the Steam Generator Repair Project. The inspection shall comply with the requirement of ANSI B30.2.0 - 1976, "Inspection." A load test of the polar crane is not required, since the crane has not been extensively repaired or altered. As a result, the benefits accrued from the initial load test remain in effect.

After completion of the Steam Generator Repair Project, the polar crane will undergo an inspection to determine its fitness for normal service. This inspection shall also meet or exceed the requirements of ANSI B30.2.0 - 1976, Section 2-2.1.

3.4.1.3 Miscellaneous Hoisting Equipment Inside Containment

Miscellaneous hoisting equipment will be required inside the containment area to handle general lifting without utilizing the polar cranes. Options to provide this hoisting equipment are being evaluated.

3.4.1.4 Laydown Space Provisions

The elevation 652'-7 1/2" floor area in the containment can be used for laydown as long as the live load limits for the floor system are not exceeded. Any potential laydown area in which there is a question about live load limits or about specific equipment laydown will be reviewed by the AEPSC Structural Design Section.

3.4.1.5 Steam Generator Transfer Platforms

A temporary steel transport deck will be built at elevation 654'-9 3/4" over the refueling cavity in the containment building, through the equipment hatch and into the auxiliary building in the area between the Unit 1 and Unit 2 equipment hatches. This deck will be designed, fabricated and erected pursuant to the requirements of the American Institute of Steel Construction Code (AISC) eighth edition. The deck will be classified as a non-seismic structure. 1

3.4.1.6 Containment Ventilation

The containment ventilation system to be used during Steam Generator Repair Project will consist of a combination of existing and temporary systems. The existing containment purge supply and exhaust system will be used continually during construction to keep dust and contamination levels down and to provide heating for the containment during the winter. Mechanical cooling will be added to the purge supply system.

3.4.1.7 Electrical Power

Power for repair activities within containment will be provided by using the Donald C. Cook Unit 2 Reactor Coolant Pumps Motor power circuit(s). Each motor (Quads 1, 2, 3 and 4) has an electrical power circuit rated approximately 6MVA (3 phase, 60 hertz, 4kV). One or all of these 4 circuits may be used depending on a detailed plan of actual construction loads and power distribution requirements. As an alternative to the RCP power circuit as a temporary source, the pressurizer heater circuits or a source from outside containment may be utilized. 1

3.4.2 <u>Removal of Concrete, Structural and Equipment Interferences</u>

3.4.2.1 Mechanical Equipment

Steam generator snubber removal is covered under Section 3.4.2.9.

There are currently four upper containment ventilation units above the steam generator doghouse enclosures. All the units will have to be either removed from containment or moved out of the way of the concrete removal operations. Piping to be removed is described in Section 3.4.2.4. The units removed will be stored in a secure area until reinstallation.

3.4.2.2 Platforms

Adjacent to the steam generators, there are several levels of access platforms supported by steel framing bolted or welded to embedments in the reinforced concrete steam generator doghouse enclosures. To provide access for steam generator component removal, these platforms will be dismantled and stored temporarily.

Prior to removal, all members shall be physically piece-marked and inventoried to facilitate re-erection after the repaired steam generator components are in place. All pipes, conduits, cabling or ducts attached to the platforms or framing will be removed prior to platform dismantling.

Removal will be performed by unbolting or cutting in accordance with approved procedures and specifications by qualified personnel. Dismantled platform members will be removed from the containment, and stored in a secure area.

3.4.2.3 Reinforced Concrete

Portions of the reinforced concrete steam generator doghouse enclosure will be removed to provide access for steam generator component removal. The extent of the concrete removal necessary is illustrated in Figure 3.4-1. Removal of the reinforced concrete will be performed in accordance with approved procedures and specifications, including management of airborne particulates. The removal will be performed in two phases as described below.

- Phase I

  This phase involves cutting the concrete steam generator doghouse enclosures in sections to provide an opening as shown in Figure 3.4-1. The opening will require the removal of a portion of the top slab over the steam generator doghouse enclosure at elevation 695'-0" and a portion of the steam generator doghouse enclosure wall down to elevation 663'-0". Once cut, each section (approx. 40 tons) will be moved out of the containment through the equipment hatch and out of the auxiliary building. The sections will be surveyed for contamination and disposed of based on the results of the survey. This phase of removal will leave the remaining concrete with a smooth surface with reinforcing bars cut flush with the surface.

- Phase II

  This phase involves removing concrete to expose the existing reinforcing bars to allow mechanical splicing (cadweld) of new bars to existing bars. Removal will be performed in a manner that will not affect the structural capacity of the existing bars, will insure adequate bonding and will provide a keyway to transfer shear stresses. Provisions will be made to manage debris created during this phase and collect all concrete removed. The concrete removed will be surveyed for contamination and disposed of based on the results of the survey.

3.4.2.4 Piping Systems Removal

Removal of the main steam and feedwater lines is addressed in Section 3.5.1.1.

Piping connected to the steam generator will be cut back as required to permit access and capped to prevent contamination. Piping designated for reuse will be physically piece-marked, and inventoried to facilitate reinstallation. Piping designated for reuse will be maintained in a clean condition.

3.4.2.5 Instrumentation

Sensing lines will be cut back as required to permit access and capped to prevent the spread of contamination. Cutting methods will be selected to help reduce the possibility of debris entering the lines. Approved procedures and/or specifications on cleanliness criteria for these lines will be followed.

Instruments requiring removal will be disconnected as they would be for maintenance and stored in accordance with approved procedures and/or specifications.

3.4.2.6 Cable and Conduit Removal and Storage

Cable in the affected areas will be removed back to an existing splice or terminal point. After the cables have been removed, conduit and cable trays will be removed as required. As the items are removed, tags will be placed on each piece of equipment clearly identifying the item. AEPSC Specification DCCEE-400-QCN, "General Instructions for On-site Storage of Electrical Equipment," will be used as guidance for storing the equipment.

Some circuits of the following systems will be temporarily disconnected and/or removed:

- Fire Detection
- Communication
- Steam Generator Process Instrumentation
- Containment Ventilation
- Fuel Handling
- Hydrogen Recombiner
- 600 V Non-Ess Dist. & 120/208 V Lighting
- Seismic Instrumentation

Equipment determined to be essential during the Steam Generator Repair Project will be relocated, and/or its cable, conduit, and cable trays will be re-routed as required to maintain the equipment in proper operating condition.

3.4.2.7 Heating, Ventilation and Air Conditioning Ductwork

Ductwork in the removal pathway will be removed or temporary relocated. Duct pieces removed will be cleaned, marked and placed in temporary storage outside containment until needed for reinstallation.

3.4.2.8 Steam Generator Insulation

The existing steam generator metallic insulation will be reused. The outer dimensions of the replacement steam generators duplicates the original steam generators, although some insulation sections will require modifications to accommodate the additional hand holes and inspection ports. Sections of insulation shall be removed, cleaned, wrapped in plastic bags and stored in strong tight containers. These containers will be stored outside containment off the ground and protected from the weather. Sequence of removal and storage location will be documented to facilitate installation. Those 2

sections requiring modifications will be stored separately to allow rework prior to installation. The original equipment supplier, Diamond Power Speciality Corp., will provide procedures and technical supervision for insulation removal, storage, modifications and installation.

3.4.2.9 Seismic Restraints Removal

The steam generator snubbers will be removed to provide access for handling and movement of the steam generators. In addition, the pipe whip restraint at the main steam pipe will also be removed.

Removal and storage of the snubbers and restraints will be in accordance with approved procedures and/or specifications. Snubbers are periodically removed for ISI testing and off-site disassembly and inspection by an independent laboratory. Removal and reinstallation procedures will be similar to those established for the periodic inspections.

3.4.2.10 Fire Sensors

Thermistor cable tray fire sensors will be pulled back where they extend beyond removed cable tray sections. These sensor circuits will remain in service during the steam generator project and will be reinstalled in accordance with approved procedures.

3.5 Steam Generator Removal Activities

3.5.1 Steam Generator Cutting Methods and Locations

3.5.1.1 Feedwater and Main Steam Line Piping Cuts

The feedwater and main steam lines will be mechanically cut in two places. The location of the cuts, the equipment to be used, and the method of cutting

will be developed by the contractor and subject to approval by AEPSC. Standard industry practice and equipment will be employed to perform the pipe cuts. Cut locations are illustrated in Figure 3.5-1.

3.5.1.2 Reactor Coolant Inlet and Outlet Piping Cuts

The reactor coolant inlet and outlet piping will be disconnected from the steam generator by a single cut on each steam generator primary nozzle. Cut location, equipment and methodology will be developed by the contractor and subject to approval by AEPSC. Standard industry practice and equipment will be employed to perform the pipe cuts. Cut locations are illustrated in Figure 3.5-1. After cutting, a circular steel plate will be welded on each steam generator primary nozzle.

3.5.1.3 Steam Generator Shell Cut

An oxy-fuel cut, located approximately as shown in Figure 3.5-1, will be used to remove the upper shell assembly from the lower assembly. Cut location, equipment and methodology for cutting will be developed by the contractor and subject to approval by AEPSC. Technical advice will be provided by the original equipment manufacturer, Westinghouse. 1

3.5.1.4 Steam Generator Wrapper Cut

An oxy-fuel cut of the tube bundle wrapper plate will be made after cutting the exterior shell. Cut location, equipment and methodology for cutting will be developed by the contractor subject to AEPSC approval. Technical advice will be provided by the original equipment manufacturer, Westinghouse. 1

3.5.1.5 Cleanliness Requirements During Pipe Cuts

Approved procedures and/or specifications will be followed by the contractor during all cutting operations to prevent debris or cutting chips from entering piping systems or the reusable pipe sections and to maintain overall cleanliness. Where possible, dams will be employed in piping systems to minimize ingress of cutting chips or slag. Where dams cannot be used, cutting methods which will minimize chips on the final parting cuts will be considered. After all cutting operations, the system piping and removed sections will be cleaned and capped.

Approved procedures and/or specifications will incorporate the requirements of N45.2.1-1973 and Regulatory Guide 1.37, March 1973.

3.5.2 Removal and Handling of the Steam Generator Upper Assemblies (Upper Assembly)

Temporary laterals support will be attached to the top of the lower assembly to stabilize the steam generator before the removal of the steam generator upper lateral supports.

After the piping attached to the upper assembly has been restrained and cut and the lifting trunnions bolted to the upper assembly, a lifting beam attached to the main hook of the polar crane will be lowered into position above the upper assembly trunnions. The lifting beam will be connected to the trunnions with slings, and the slack removed from the slings. 1

The upper assembly will then be cut from the lower assembly above the centerline of the existing transition cone girth weld. After completion of the cut, the polar crane will support the entire weight of the upper assembly. The upper assembly will be raised vertically until it clears the steam generator enclosure horizontal wall cut. It will then be moved horizontally through the opening in the enclosure wall.

Upon clearing the enclosure wall the upper assembly will be lowered into a horizontal position and placed on low profile saddles. After the upper assembly has been secured to the saddle and the saddle placed on rollers, the upper assembly will be winched through the equipment hatch.

Once the upper assembly is through the Unit 2 equipment hatch and resting on the transport deck in the auxiliary building between the Unit 1 and Unit 2 equipment hatches, the upper assembly will be attached to the auxiliary building bridge crane. The upper assembly will then be lifted, rotated and moved in a southeast direction until it has passed the southwest corner of the spent fuel pool. After the upper assembly has passed by the southwest corner of the spent fuel pool it will be oriented in an east-west direction and moved to the eastern edge of the elevation 650′ floor. The upper assembly will be oriented to a north-south direction, lowered to elevation 609′, loaded onto a transporter and moved to the Unit 2 turbine building crane bay for refurbishing. Space requirement evaluations are still being conducted and if possible, one or more of the upper assemblies will remain in the containment. 1

The movement of an upper assembly from a doghouse enclosure to the auxiliary building crane bay is illustrated in Figures 3.5-2, 3.5-3 and 3.5-4. These figures illustrate the planned pathway and one of the rigging options currently under evaluation. Detailed rigging procedures and methods will be developed by the contractor and approved by AEPSC.

3.5.3 Removal and Handling of the Steam Generator Lower Assemblies (Lower Assembly)

Upon removal of the upper assembly from the steam generator doghouse enclosure, a circular steel plate shall be welded to the top of the lower assembly as a radiation contamination barrier. The lower assembly will then be cut free of all remaining piping. 1

A lifting assembly connecting the main polar crane hook to the lower assembly will be installed.

After the lifting assembly is installed, the crane shall take the weight of the lower assembly while the lower assembly is still supported by the temporary lateral support and the steam generator support columns. The temporary lateral support will be removed and the lower assembly then lifted slightly off its support columns.

The lower assembly shall be raised until the lifting assembly is approximately 2'-0" below the underside of the steam generator doghouse enclosure roof and then moved horizontally until it is within approximately 5 inches of the opening in the steam generator doghouse enclosure wall. It will be lifted again until the bottom of the lower assembly clears the horizontal wall cut. It will then be moved horizontally out of the steam generator enclosure. After clearing the steam generator doghouse enclosure a downending fixture will be attached to the steam generator lower assembly and it will be lowered onto a set of low profile saddles. After the lower assembly has been secured to the saddles and the saddles have been placed on rollers, the upper assembly will be winched through the equipment hatch. 2

Once the lower assembly is through the Unit 2 equipment hatch and resting on the transport deck in the auxiliary building between the Unit 1 and Unit 2 equipment hatches, it will be attached to the tandem auxiliary building bridge cranes. The lower assembly will then be lifted, rotated and moved in a southeast direction until it has passed the southwest corner of the spent fuel pool. After the lower assembly has passed by the southwest corner of the spent fuel pool it will be oriented in an east-west direction and moved to the eastern edge of the elevation 650' floor. At the eastern edge of the elevation 650' floor, the lower assembly will be moved out into the railroad bay and oriented in a north-south direction, lowered to the 609' elevation and secured to a wheeled transporter. The lower assembly will then be transported 2

through the auxiliary building north roll-up door to the temporary on-site steam generator storage facility via the plant access road and existing haul road. There, the lower assembly will be placed in the temporary on-site steam generator storage facility and off-loaded from the transporter. The movement of a lower assembly from a doghouse enclosure to the auxiliary building track bay is illustrated in Figures 3.5-5, 3.5-6, 3.5-7 and 3.5-8. These figures illustrate the planned pathway and one of the rigging options currently under evaluation. Detailed rigging procedures and methods will be developed by the contractor and approved by AEPSC.

3.6 Installation Activities

3.6.1 Handling and Installation of the Replacement Lower Assemblies (Lower Assembly)

The replacement lower assembly will be moved from the storage area to the auxiliary building track bay at elevation 609'-0" on a wheeled transporter. The lower assemblies will be transported into the steam generator doghouse enclosure using the reverse of the procedure described in Section 3.5.3. 1

The replacement lower assembly will be lowered onto the original support columns, positioned for fit-up and welding. The lower assembly will be secured in place by temporary restraints located on the upper part of the shell to prevent movement during subsequent operations involving welding of reactor coolant pipe and attachment of the upper assembly. Weld preparation on the steam generator lower assembly nozzles will be performed by the manufacturer. Detailed rigging procedures and methods will be developed by the contractor and approved by AEPSC.

THIS PAGE LEFT INTENTIONALLY BLANK

1

3.6.2 Handling and Installation of the Upper Assemblies (Upper Assembly)

Prior to installing the upper assembly, rework will be performed on the internals and shell. The general work scope, some of which is shown in Figure 2.2-1 and 2.2-2, is as follows for each upper assembly:

- Install new top hat assemblies on each of the three existing swirl vane primary moisture separators.
- Install additional drain piping from the secondary moisture separators.
- Install new feedwater ring with Inconel J-nozzles.
- Weld prep the wrapper plate.
- Weld prep the edge of the upper assembly shell plate to be joined to the lower steam generator assemblies.
- Weld prep the feedwater nozzle and steam outlet nozzle.
- Weld prep instrumentation taps.

All work to be performed to procedures, developed by the contractor and approved by AEPSC utilizing Westinghouse instructions, specifications, drawings and technical direction. 1

The steam generator upper assemblies will be moved from their temporary storage locations into the steam generator doghouse enclosures using the reverse of the procedure described in Section 3.5.2.

The upper assembly shall be moved through the enclosure wall opening and positioned over the replacement lower assembly. The upper assembly will be positioned to align with the lower assembly transition cone and the feedwater pipe elbow. Detailed procedures and methods for rigging and reattachment of the upper assembly and wrapper plate will be developed by the contractor and approved by AEPSC. The shell weld will be ASME Code stamped.

1

3.6.3 Installation of Major Piping Components

The reattachment of all major piping i.e., main steam, feedwater and reactor coolant, will be performed based upon procedures and methods developed by the contractor and approved by AEPSC. The sequence of piping installation will be done in a manner that insures proper alignment and that reduces the possibility of damaging the feedwater elbow thermal sleeve.

For other, miscellaneous piping systems (e.g., blowdown and instrumentation), approved procedures and/or specifications will be used to perform the installation.

3.6.4 Installation of Concrete, Structural and Equipment Interferences

All concrete, structural and equipment interferences will be reinstalled to meet original design configurations and installation requirements.

3.6.4.1 Mechanical Equipment Installation

As stated in Section 3.4.2.9, snubbers are periodically removed for inspection and subsequently reinstalled. Approved procedures and/or specifications will be followed during this reinstallation.

After the steam generator doghouse enclosures are restored, the upper containment ventilation units will be placed back in their original locations and the piping and electrical connections will be reconnected.

Pipe whip restraints will also be reinstalled according to approved procedures and/or specifications.

3.6.4.2 Platforms

When the new steam generator components are in place and the steam generator doghouse enclosure concrete has been replaced, the platforms will be removed from the secured storage area and re-installed in their original locations in accordance with approved drawings, procedures and specifications.

3.6.4.3 Reinforced Concrete

When the new steam generator components are in place and the steam generator doghouse enclosures can be restored, new reinforcing bars will be mechanically

spliced (cadwelded) to the existing bars previously exposed and new concrete poured to restore the steam generator doghouse enclosure to its original condition. New embedments will be installed, replacing those removed with the concrete, to facilitate re-installation of platform support framing and other supports as required. All work will be performed by qualified contractors in accordance with approved procedures and specifications.

3.6.4.4 Piping Systems Installation

The contractor, with AEPSC approval, will develop fit-up and welding procedures for main steam, feedwater and reactor coolant piping installation. Miscellaneous piping systems will be handled by procedures approved by AEPSC.

3.6.4.5 Instrumentation

Instrumentation and sensing lines removed during the repair process will be installed per contractor's procedure in accordance with approved procedures and specifications and AEPSC specifications. Normal calibration and channel functional tests will be performed prior to returning the instruments to service.

3.6.4.6 Cable and Conduit Installation

Installation of cable and conduit will be performed as required by approved procedures. Electrical components and materials will be qualified and approved for the environment and service in which they are used. Installation details, testing and check-out will be in accordance with AEPSC Electrical Engineering Division Specifications.

3.6.4.7 Ductwork

Ductwork pieces removed due to interferences will be replaced after the steam generator is placed, and the concrete work completed.

3.6.5 Welding Codes, Processes and Materials

Reinstallation of piping will be performed in accordance with the ASME Boiler and Pressure Vessel Code, Section III (1983 Edition plus Addenda through Summer 1984) and Section XI (1983 Edition plus Addenda through Summer 1983). The piping system will be reinstalled in accordance with FSAR criteria.

Reinstallation of the steam generator shell weld will be performed in accordance with the above referenced Code Sections III and XI.

Postweld heat treatment practices, typical of that used at the Turkey Point, Surry, and Point Beach plants during steam generator repairs, will be used for the Donald C. Cook Unit 2 repair project.

The repair project methodology does not involve any field-welded joints between clad components. The steam generator channel head cladding is applied at the manufacturing facility. Safe ends are installed on the inlet and outlet reactor coolant nozzles at the manufacturing facility to facilitate field welding of the nozzles to the stainless steel pipe fittings without the need for stress relief heat treatment. Therefore, there will be no welding, cutting, or stress relief heat treatment effects of clad components.

Table 3.6-1 provides a tabulation of the welds anticipated to be performed during the repair project along with welding and NDE requirements.

TABLE 3.6-1

STEAM GENERATOR REPAIR WELDS

WELD	MATERIAL	OUTSIDE DIA.[1] IN.	WALL IN.	JOINT	PROCESS[2]	FILLER[3]	MINIMUM PREHEAT °F	POSTHEAT °F	WELD FINISH	NDE[4]
Feedwater										
Nozzle to elbow	SA508,C1-2 SA234,WPB	16	0.843	Single V 35-40° without backing ring (flat root)	GTAW-r SMAW-f	ER70S-2 E7018	250	1100-1200 1 hr Above 600 heat & cool 400/hr	Grind to remove weld ripple	RT 1/3 fill plus RT final & MT
Elbow to reducer or	SA234,WPB	16	0.843	Single V with backing ring	SMAW GTAW cap	E7018 ER70S-2	50	1100-1200 1 hr Above 600 heat & cool 400/hr	As welded	RT, MT
Reducer to Pipe	SA234,WPB SA106,B	14	0.705	Single V with backing ring	SMAW GTAW cap	E7018 ER70S-2	50	None	As welded	RT, MT
Liner	SA106,B	12-3/4	0.5	Single V	GTAW-r SMAW-f	ER70S-2 E7018	50	None	As welded	VT-1, RT
SG Vessel										
Transition cone to plate	SA508,C1-3 to SA533, A, C1-1	175-3/4	3.62	Double V modified backgouge	SMAW-r &SAW, GMAW or FCAW	E9018-M or E8018-C3 & matching wire E81N11	250	1100-1200 2 hr 30 m Above 800 heat & cool 110/hr	Grind for UT exam	RT,UT, & PT or MT
Wrapper plate and misc. non press comp	SA285,C	124.25	3/8	Single V w/o backing (flat root)	SMAW or GTAW	E7018 ER70S-2	50	None	Grind flush	MT
Misc Connections o Blowdown o Drain o Level	SA508,C1-1a to SA105, red. to SA206,B pipe SA106,B SA106,B	2.5 to 2 1 3/4	>1-1/4	Socket	SMAW or GTAW	E7018 ER70S-2	50	None	As welded	MT

TABLE 3.6-1 (cont'd.)
STEAM GENERATOR REPAIR WELDS

WELD	MATERIAL	OUTSIDE DIA.[1] IN.	WALL IN.	JOINT	PROCESS[2]	FILLER[3]	MINIMUM PREHEAT °F	POSTHEAT °F	WELD FINISH	NDE[4]
Main Steam										
o Nozzle to elbow or elbow to elbow &	SA508, C1-2 to SA234, WPB	32	1-1/8	Single V 35-40° backing ring	SMAW B/R with GTAW cap	E7018	250	1100-1200 1 hr 15 m Above 600 heat & cool	As welded	RT, MT
o Reducer to elbow or pipe	SA234, WPB or SA155, C1-1, Gr-KC70	32/30	1-1/8 1	Single V 35-40° backing ring	SMAW B/R with GTAW cap	E7018	250	1100-1200 1 hr 15 m Above 600 heat & cool 350/hr		RT, MT
Reactor Coolant										
Elbow to SG nozzle	SA351, CF8M to E308 weld overlay on carbon steel	31 ID	2.88	Single V flat root	GTAW-r SMAW-f or Auto GTAW/GMAW-f	ER308 E308 ER308	50	None	Grind & polish with 360 grit or finer	RT,UT,PT

1. Outside diameter except as noted.
2. Welds shall be made and qualified in accordance with the requirements of ASME Code Sections III and IX.
3. Weld filler metals and electrodes to be ordered in accordance with ASME Code Section II, Part C. Austenitic stainless steel to meet delta ferrite requirement in ASME Code Section III, NB-2433. Covered electrodes to meet analysis tests of ASME Code Section III, NB2420.
4. NDE to be in accordance with ASME Section V with acceptance standards in accordance with ASME Code Section III.

3.7 Post Installation Activities

3.7.1 Tests, Inspection and Cleanup

The repair of the steam generators in the Donald C. Cook Unit 2 will have minimal impact on existing equipment except for the steam generators and their associated piping and instrumentation. The objective of the testing program will be to assure that the plant is returned to safe and reliable full power operation.

3.7.1.1 Tests

Both the primary and secondary sides of the steam generators will be pressure tested in accordance with applicable codes.

Thermal expansion of the reactor coolant system will be measured to verify that the steam generators can expand and contract without obstruction. Where necessary, clearances will be adjusted to allowable limits.

Calorimetric test to verify adequate reactor coolant flows will be conducted in accordance with appropriate technical specifications.

Reinstallation of affected instruments will be verified. Appropriate functionality tests will be performed on affected instruments.

Restoration of electrical wiring and cables will be verified and appropriate functionality testing performed.

Thermal performance testing will be conducted as necessary to verify the thermal performance parameters of the repaired steam generators.

Steam generator water level stability testing will be performed to verify stability of automatic level control system.

3.7.1.2 Inspection

Baseline inservice inspection records will be established to meet ASME Code Section XI requirements. These records will include 100% eddy current tube examination. Field radiography of the main steam and feedwater lines along with ultrasonic testing of the primary reactor coolant pipe and steam generator welds will also provide baseline inservice inspection records.

3.7.1.3 Cleanup

Work areas within the reactor coolant system will be sealed prior to commencement of repair activities, and then thoroughly cleaned before being returned to service to minimize the need for flushing.

The primary side of each steam generator channel head will be inspected. Any dirt and debris will be removed prior to return to service. The secondary side of the steam generators will be inspected before being returned to service and thoroughly cleaned to remove debris or foreign objects.

3.7.1.4 Return-To-Service Testing

Sixty days prior to the start of return-to-service testing, the program for such testing will be submitted to the NRC for their review.

3.8 Radiological Protection Program

3.8.1 Project Radiation Protection/ALARA Plan Summary

3.8.1.1 Introduction

Because projects of this type have the potential for individual and collective radiation exposures beyond that of other routine maintenance, AEPSC will provide a separate Radiation Protection/ALARA Plan and organization apart from the Donald C. Cook Radiation Protection Group to provide the specialized type

THIS SPACE LEFT INTENTIONALLY BLANK

of planning and coverage required. The program description that follows provides a summary of the Project Radiation Protection/ALARA Plan and associated radiological control measures unique to the project.

AEPSC has recognized the importance of keeping the individual as well as collective man-rem to As Low As Reasonably Achievable (ALARA). This commitment by AEPSC has been demonstrated in the company's ALARA policy statement which states:

"It is our objective to achieve a rating of 'above average,' the highest on the scale of nuclear plant measurement, as assessed by the U.S. Nuclear Regulatory Commission. To accomplish this it is essential that the Cook Nuclear Plant be operated and maintained so as to maximize its operating safety, efficiency, reliability and economy of operations. We plan to do this by:

Establishing, constantly improving and strictly adhering to a program designed to minimize nuclear radiation hazards to personnel, with such a program to include -- but not be limited to -- measures to reduce radiation exposure to the level of 'As Low As Reasonably Achievable' (i.e., ALARA)."

This commitment is further demonstrated by the development and implementation of the Donald C. Cook Steam Generator Repair Project Radiation Protection/ALARA Plan. The intent of this program is to keep the individual

and collective radiation exposures to ALARA levels by studying the tasks, procedures, work methods, surveys and evaluation of lessons learned from past steam generator repair projects.

3.8.1.2 Project Radiation Protection/ALARA Plan

The Project Radiological Protection/ALARA Plan has been developed to meet the requirements contained in 10 CFR 20, "Standards for Protection Against Radiation," and the guidelines established in NRC Regulatory Guides 8.8, "Information Relevant to Ensuring That Occupation Radiation Exposures at Nuclear Power Stations will be AS LOW AS IS REASONABLY ACHIEVABLE," and 8.10, "Operating Philosophy For Maintaining Occupational Radiation Exposures AS LOW AS IS REASONABLY ACHIEVABLE." The policies and procedures set forth in the Project Radiation Protection/ALARA Plan are consistent and in accordance with both AEPSC corporate policies and existing Donald C. Cook procedures. The Project Radiation Protection/ALARA Plan covers the following areas:

- Project Radiological Protection/ALARA Organization
- Radiation Exposure Monitoring and Control
- Personnel Training and Qualifications
- ALARA Methods
- Facilities and Equipment
- Records, Reports, Documentation
- Radioactive Waste Management

3.8.1.3 Project Radiological Protection Organization

The Project Radiological Protection/ALARA Group (see Figure 3.8-1) will be formed to provide ALARA engineering support and radiological controls for the Steam Generator Repair Project. The Project Radiological Protection/ALARA Group will be staffed by AEPSC, I&MECo and experienced contractor personnel and will report to the AEPSC Project Health Physicist, who will have overall responsibility for the ALARA and radiological protection coverage for the Steam Generator Repair Project.

The Radiological Protection/ALARA Group will be comprised of five support groups which report to the Project Health Physicist. The Project Health Physicist has overall responsibility for the implementation and documentation of the project Radiological Protection Program and reports directly to the Project Site Manager. The support groups include: 1

- The Radiation Protection Group, which will be responsible for implementing the Project Radiation Protection Plan once the outage begins. This group will supply radiological protection technician coverage including task surveillance and monitoring in radiologically controlled work areas.

- The ALARA Group, which will be responsible for radiological engineering and evaluations required to maintain the project radiation exposure consistent with ALARA principles. The group will review, evaluate, and approve the contractor's procedures, policies, training programs, and work packages.

- The Dosimetry and Records Group, which will coordinate internal and external dosimetry functions, including TLD issue and reading, whole body badging, extremity monitoring, electronic dosimetry, telemetric dosimetry, and self-reading dosimetry issue, as appropriate. In addition, they will be responsible for maintaining up-to-date exposure information for both personnel and tasks involved with the project. This group will organize the record system, input data, correlate and distribute reports, and provide documentation to support the Project Radiological Protection/ALARA Group. 1

- The Radiation Protection Support Services Group which will coordinate and supervise all support services such as anti-contamination clothing laundry services, respirator cleaning services, and tool/equipment decontamination services. 1

- The Training Group, which will be responsible for the evaluation of present training facilities and programs, preparation, implementation, and supervision of the project training program. 1

The Project ALARA Committee will be used during the project. Its function will be to provide a forum for discussion and evaluation of project related ALARA and Radiation Protection concerns.

The repair contractor for the Steam Generator Repair Project will be an important participant in the Project Radiological Protection/ALARA Program. Pre-job planning, mockup training, worker dose control, scheduling, ALARA method implementation, and radiological material control are some of the areas in which the general contractor will work closely with the Project Radiological Protection/ALARA Group. 1

In addition, a Plant/Project interface document shall be implemented to define areas of responsibility, communications, control, and interface between the Project Radiation Protection/ALARA Group and the Plant Radiation Protection Section. Regular meetings between members of these two groups will be held to insure adequate communications and dissemination of information.

3.8.1.4 Radiation Exposure Control - Monitoring and Tracking

Health Physics practices and procedures for the Steam Generator Repair Project will involve methods of both internal and external exposure control, monitoring, and tracking.

o Principal methods of external exposure control are designed to lower individual as well as collective radiation dose and provide accurate monitoring. These methods include:

- Radiation Work Permit (RWP) System - All work performed in a radiation area will be governed by the RWP program. A computerized RWP system will be used.

- Containment Access Control - A separate building for containment access will be provided to control the flow of project personnel into and out of the containment work areas (Figure 3.3-2 and 3.3-3). 1

- Shielding - Shielding in the containment will be designed by the repair contractor based on their special requirements (i.e., machine and equipment interferences), man-rem and cost benefit analysis, and Project Radiological Protection/ALARA Group requirements. All shielding designs will be reviewed and approved by the Project Radiological Protection/ALARA Group for radiological considerations and by AEPSC Project Engineers for engineering and code acceptability. Installation and removal of shielding will be performed by a contractor using Project Radiological Protection/ALARA Group approved procedures. Whenever 1

shielding is put in place or removed, a new radiation survey of the area will be performed before personnel are allowed to resume work in the area. Specially engineered shielding will be designed, constructed and installed in certain high radiation areas where standard shielding would prove to be ineffective or inefficient.

- Worker Surveillance - Radiation Protection technicians will provide continuous work surveillance in the containment and other work areas by on-the-job dedicated technician coverage and/or remote monitoring by closed circuit audio/video systems. They will keep workers informed of any changes to radiological conditions, provide RWP updates, and ensure that workers are using good health physics work practices. They will monitor workers to ensure that they are in compliance with RWP requirements and are following appropriate radiation protection procedures. 1

- Area postings - The containment as well as other work areas will be posted by the Radiation Protection Group in accordance with regulations set forth in 10 CFR 20, "Standards For Protection Against Radiation." In addition, low dose rate areas will be conspicuously marked as approved ALARA waiting areas.

- Core Configuration - The core will be unloaded and the fuel stored in the spent fuel pool to help maintain doses ALARA.

- Steam Generator Secondary Side Water Level - Water level in the secondary side of the steam generator will be kept as high as possible as long as possible to provide additional shielding.

- Decontamination - A program of decontamination will begin with an initial containment decontamination and will continue with an on-going program stressing good housekeeping practices and, as necessary, an area decontamination effort. The respiratory and clothing requirements will be kept as low as possible by providing a decontamination program which will keep contamination to a minimum, thus allowing more efficient working conditions.

- Special ALARA Considerations - Evaluations of different work methods, including tools and equipment, will be performed prior to commencement of work. Additional evaluations will be performed during and after the work to compare similar jobs and determine effectiveness of ALARA methods. 1

- Dosimetry - Whole body badging, electronic dosimetry (remote and self-reading), extremity badging and/or standard self-reading pocket dosimetry will be used to monitor doses during the project. TLDs will provide the official dose record.

- Exposure Tracking and Trending - A computerized system will be used to track individual tasks, personnel, groups, and activities. This data will be used to evaluate the success of the ALARA methods used and to recommend improvements. The principle function of the system will be to provide up-to-date man-rem and man-hour expenditure data.

- Principal methods of internal exposure control are designed to insure that ingestion or inhalation of contaminates is ALARA. These methods include:

  - Initial Decontamination - Before the major work begins, a thorough decontamination of work areas will be performed.

  - Housekeeping - Contractors will be required to maintain their work areas in a clean condition, including contamination levels. Should surveys show an increase or unacceptable levels of contamination, the area will be decontaminated to an acceptable level.

  - Containments - Glove bags, tents, and other types of containments will be evaluated and used where necessary.

  - Ventilation - Portable ventilation units will be used as necessary to provide local area ventilation. These units will have HEPA filter systems installed and charcoal filter capabilities. In addition, the existing containment ventilation system will provide a slight negative pressure to prevent any leakage of airborne contamination to the environment.

  - Respiratory Protection Program - The Project Radiological Protection/ALARA Group will adhere to Regulatory Guide 8.15, "Acceptable Programs for Respiratory Protection," and approved procedures and will first investigate alternate methods for reducing airborne concentrations of radioactive materials

prior to recommending the use of respirators as a control technique. A respiratory training and fit program will be used to insure proper usage and protection.

- Bioassay Program - A program will be implemented to confirm the adequacy of the respiratory protection program and methods by monitoring for intake of radioactive material.

3.8.1.5 Personnel Training and Qualifications

Training will be conducted for on-site personnel involved in the Steam Generator Repair Project. Additions to the standard Nuclear General Employment Training program will be made to reflect the special conditions required by the project. Personnel working on the project will receive further training in ALARA and Radiation Protection from the Project Radiological Protection/ALARA Group. The type and degree of training received will be dependent upon the type of work and management level of the personnel attending. The Project Radiological Protection/ALARA Group will assist the contractors with the preparation and monitoring of the mockup training to ensure that workers are adequately prepared and knowledgeable in ALARA and Radiation Protection techniques and procedures.

The Project Radiological Protection/ALARA Group will document and maintain records of individuals receiving Radiation Protection/ALARA training or retraining and will provide written and/or practical examinations to demonstrate that the personnel have received and comprehend the program objectives as presented.

3.8.1.6 ALARA Methods

Special emphasis will be placed on cutting, machining, grinding, and welding methods. Use of methods or devices which provide a positive ALARA benefit will be recommended to project management. In addition to those devices mentioned above, closed-circuit television and robotics may be used to minimize work time in high radiation or contamination areas.

3.8.1.7 Facilities and Equipment

Existing Donald C. Cook Plant facilities and equipment will be augmented during the repair project. Additional equipment storage, personnel change and decontamination, equipment decontamination, frisking, bioassay, office, and lab facilities may be provided. Adequate additional personnel contamination monitors and health physics survey/analysis instruments will be obtained for the project. In addition to the radiation protection instrumentation, adequate repair and calibration facilities will be provided.

Additional respiratory and contaminated laundry facilities and/or services may be acquired if necessary.

Closed circuit audio/video monitoring equipment may be provided to help reduce exposure to supervisory, health physics, and craft personnel. In addition, the video tape recordings of the tasks can provide training and documentation as an aid to post-job and pre-job reviews.

3.8.1.8 Reports, Records, and Documentation

Reports will be generated to provide project management with survey data, dose tracking/trending, and other information necessary to plan, schedule, and manage this project from a radiological/ALARA viewpoint.

A system will be established to document and store reports, studies, records, correspondence, transactions, etc., generated by the Project Radiological Protection/ALARA Group.

3.8.1.9 Radioactive Waste Management

A Radioactive Waste Management Program will be implemented for the project which will include training, volume reduction techniques, radioactive waste handling and storage. (See Section 3.8.3).

3.8.2 ALARA Considerations

3.8.2.1 Philosophy

The project ALARA philosophy depends heavily on several main areas including training, lessons learned, communications, and incentives. As previously stated, the Project Radiological Protection/ALARA Group is committed to a thorough training program that is designed specifically to address this type of repair project and the individuals who make up the repair team both contractor and utility. An on-going study of past projects in the industry, not just steam generator repair, will continue throughout the planning phase. Lessons learned from other utility and contractor projects will be incorporated into our program. The Project Radiation Protection/ALARA Group will provide sufficient documentation to be able to evaluate the program and progress to determine lessons learned during the project. Several methods of communications both formal and informal will be provided for contractor and utility project personnel to ask questions, make suggestions, and receive feedback from Project Radiation Protection/ALARA Group management.

3.8.2.2 Pre-Project Planning

During outages prior to the start of the Steam Generator Repair Project, walkdowns, inspections, and surveys will be performed to provide as much data as possible for pre-outage planning. Material pathways, laydown and work areas will be reviewed for electrical and mechanical systems and components that will impede the repair effort and increase worker exposure. Existing facilities and equipment will be evaluated to determine suitability for outage needs.

3.8.2.3 Design Considerations

Although the replacement lower assemblies are similar to the original lower assemblies, certain design changes provide a positive ALARA benefit.

- All improvements to minimize tube degradation (described in Section 2.3.1) contribute to exposure reduction by reducing the extent and frequency of required maintenance.

- The tube ends are welded flush with the tube sheet cladding, thereby minimizing locations for crud buildup and reducing the radiation inside the primary head.

- Forgings have been used for the transition cone and barrel section of the lower shell assembly to reduce the number of welds required to be examined for ISI, thus reducing man-rem expended for examination.

- The girth welds for the upper transition cone will now provide a flat weld geometry and the weld knuckle will be eliminated thus minimizing ISI requirements.

- Various material improvements have been made including material in the feedrings, tubes, and other steam generator components to minimize cobalt content, improve corrosion resistance, and provide for a longer steam generator life while minimizing maintenance.

3.8.3 Generation and Disposal of Solid Radioactive Waste

The majority of the solid radioactive waste can be generally categorized as:

- Dry Active Waste (DAW) - This category of waste will include such items as rags, plastic, metal shavings, paper, etc. The volume of this waste shall be minimized using administrative controls, segregation and compaction.

- Concrete - Some 10,800 cubic feet of concrete has been estimated to be removed from containment for disposal during the Steam Generator Repair Project. The majority of this waste will have minimal amounts of contamination. The volume of this waste will be minimized to the extent possible by using decontamination techniques in hopes that some or all of it can be released unrestricted.

- Evaporator Concentrates - This is the residue of the decontaminated radioactive liquids that could not be processed via ion exchange. This waste will be solidified using acceptable methods.

- Ion Exchange Media - This is spent ion exchange media resulting from the processing of radioactive liquid waste. This waste will either be dewatered or solidified depending upon acceptable practices.

The total volume and curie content of the radioactive waste estimated to be generated during the Steam Generator Repair Project are given in the table below. These estimates are based on existing volume reduction techniques at the Donald C. Cook Plant, actual volumes of waste generated at other plants during their steam generator repairs, and NUREG-CR-1595.

Type	Volume (ft^3)	Percent (%)	Curies
DAW	30,000	71.8	50
Concrete*	10,800	25.8	<1
Evaporator Concentrates and Ion Exchange Media	1,000	2.4	2
Total	41,800	100.0	52

*all concrete assumed to be disposed of at a licensed burial facility for conservatism.

After processing and packaging the solid radioactive waste, disposal at a commercial disposal facility is desired, but on-site storage may be necessary. On-site storage may be necessary due to the provisions of The Low Level Radioactive Waste Policy Amendments Act of 1985. This Act restricts the available disposal space allotted to the Donald C. Cook Plant. The Act does, however, give DOE the responsibility of allocating additional space for unusual maintenance, in which the steam generator repair should fall. DOE procedures have not yet been developed, thus it is impossible to determine whether the Donald C. Cook Plant would qualify for extra space. These issues will be followed so that ample time will be available to determine waste disposition prior to steam generator repair operations.

3.8.4 Project Man-Rem Estimate

Table 3.8-1 gives the estimated man-rem to be expended during the Donald C. Cook Unit 2 Steam Generator Repair Project based on the most accurate data available at time of submission. The man-rem estimate is based on three factors:

- Doserate - This reflects an average work area doserate based on current survey data and has been adjusted to take into account steam generator water level, placement of temporary shielding, removal of nearby source material and any other plant specific conditions. Doserates used have been compared with data from previous steam generator projects to arrive at realistic doserates for comparable tasks, work conditions, and methodology.

- Task Duration - Task duration represents the total man-hours estimated in the radiation area required to perform the task from initial preparation to final completion. This does not include dress-out, transit time nor any other non-radiation area associated activity. Times are the sum of all craft expected to work on that task. The durations used for this estimate are based on past steam generator projects, incorporation of lessons learned, and anticipated work methodology.

- Work methodology - The particular method used to perform the tasks greatly affects both the doserates and the task durations. The work methodology for this estimate is based on past steam generator projects. The final work methodology will be developed by the general contractor who will actually perform the work and, because this contractor has not been chosen at the time of this submittal, has not been incorporated into this estimate.

As an example of how the man-rem estimate was performed refer to Table 3.8-1, line 16, Containment Protection, and the calculations shown below:

Task/Activity Description - Protect plant instruments, equipment and components from damage during the steam generator repair project. This work would include identifying those items to be protected, installing protective covers or barriers around these items, and removing the covers when the project is completed.

Craft Involved - Primarily the work will be accomplished by electricians for the instrumentation, and pipefitters for mechanical devices. To a lesser degree, the carpenters and laborers will also provide man-hours.

Man-hours - It is anticipated that approximately 1133 man-hours are needed to accomplish the task. This number was derived from past projects actual man-hours and items requiring protection and adjusted to reflect the number and type of items requiring protection at the Donald C. Cook Plant.

Doserate - The doserate is an average from recent surveys of the Donald C. Cook Plant Unit 2 in the general areas where these instruments, etc. are located. In addition, these values have been compared to the doserates found at other steam generator projects. Figure 3.8-2, "Unit 2 Steam Generator Enclosure, Piping, and Shell Plate Cut Locations and Dose Rates," shows representative general area dose rates for Donald C. Cook Unit 2 steam generators.

Man-rem = Doserate x man-hours = 1133 x 4.3 = 4.8 man-rem. This calculated number has been compared with the actual man-rem expenditures at past steam generator repair projects and found to be reasonable (i.e., Point Beach, Exposure for Protection of Containment Components = 4.29 man-rem).

W.P. = Work Package Number

This information appears on the man-rem estimate as follows:

Line#	Task/Activity	Labor	Man-hours	Doserate (mrem/hr)	Man-rem	W.P.
16	Containment protection	el,pf	1133	4.3	4.8	1.7

Under the Labor column, the following abbreviations are used:

pf	pipefitter
lb	laborer
op	plant operations
mt	plant maintenance
smw	sheet metal worker
cr	carpenter
el	electrician
rp	radiation protection
qc	quality control
iw	iron worker
oe	operating engineer
bm	boilermaker

The estimate is broken down by phase, work package, and task. The phase describes the primary type of work such as "Shutdown and Preparation" or "Removal Activities." The work package breaks the estimate down into the component, work area, or work classification such as "auxiliary building

crane" or "S/G doghouse removal" and reflects the actual work packages anticipated for the project. The tasks are the actual work items such as "Install Temporary Lights" or "Containment Protection."

The phases are:

Phase I Shutdown and Preparation

Phase II Removal Activities

Phase III Installation Activities

Phase IV Post Installation and Start-up

The Work Packages for the man-rem estimates are:

1.1 Temporary Facilities

1.2 Steam Generator Storage Building

1.3 Auxiliary Building Crane

1.4 Training

1.5 Distributive Operations

1.6 Containment Turnover

1.7 Temporary Containment Support Systems

1.8 Decontamination and Waste Management

1.9 Interference Removal

1.10 S/G Doghouse Removal

1.11 Steam Dome Removal

1.12 Lower Assembly Removal

1.13 Moisture Separator Modifications

1.14 Lower Assembly Installation

1.15 Steam Dome Installation

1.16 S/G Doghouse Restoration

1.17 System Integration and Doghouse Interior Restoration

1.18 Containment Restoration

1.19 Site Restoration

Table 3.8-2 gives the total estimated man-rem for the project.

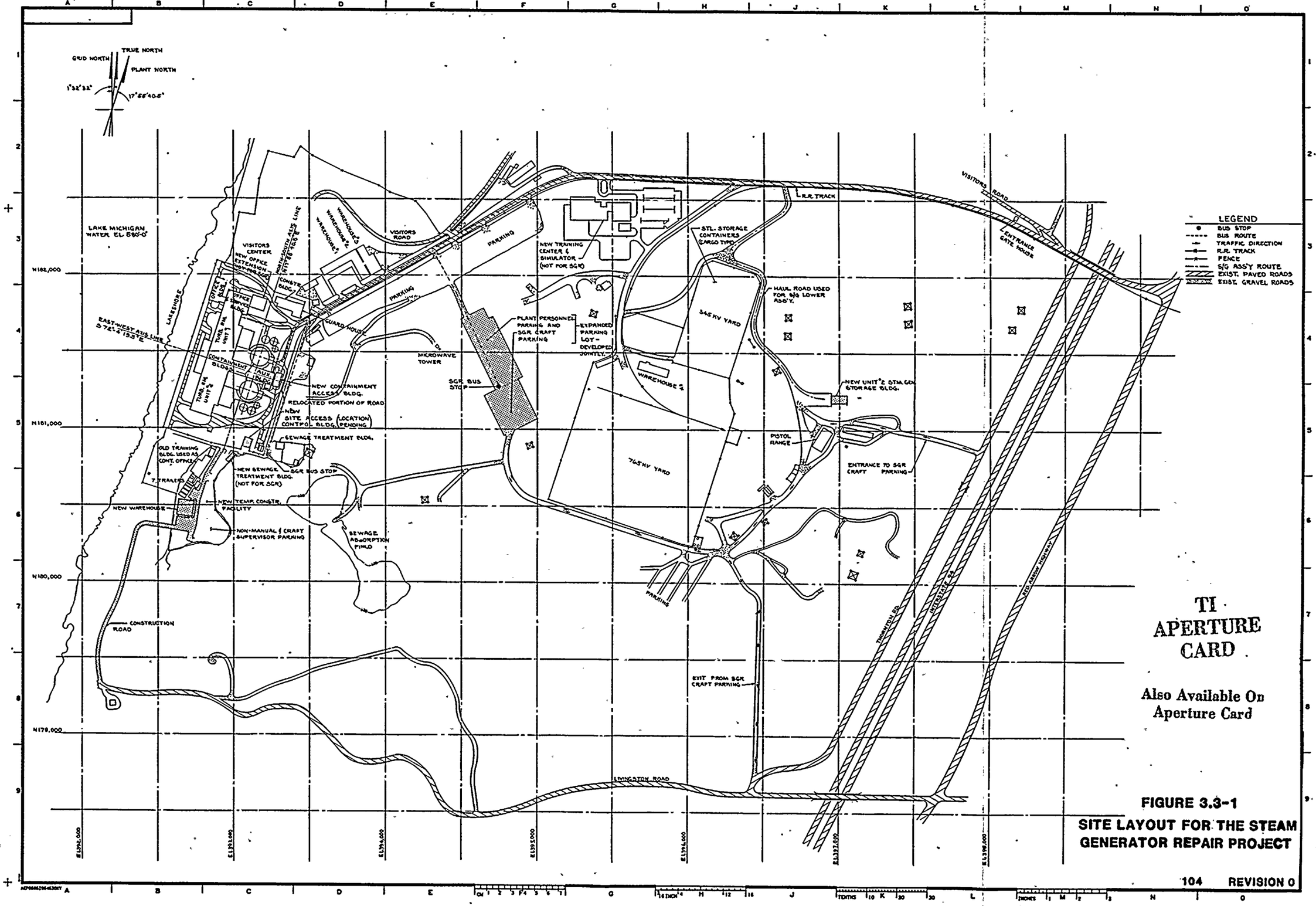

TI APERTURE CARD

Also Available On Aperture Card

FIGURE 3.3-1

SITE LAYOUT FOR THE STEAM GENERATOR REPAIR PROJECT

8611140303-02

Figure 3.3–2

Containment Access Building
First Elevation

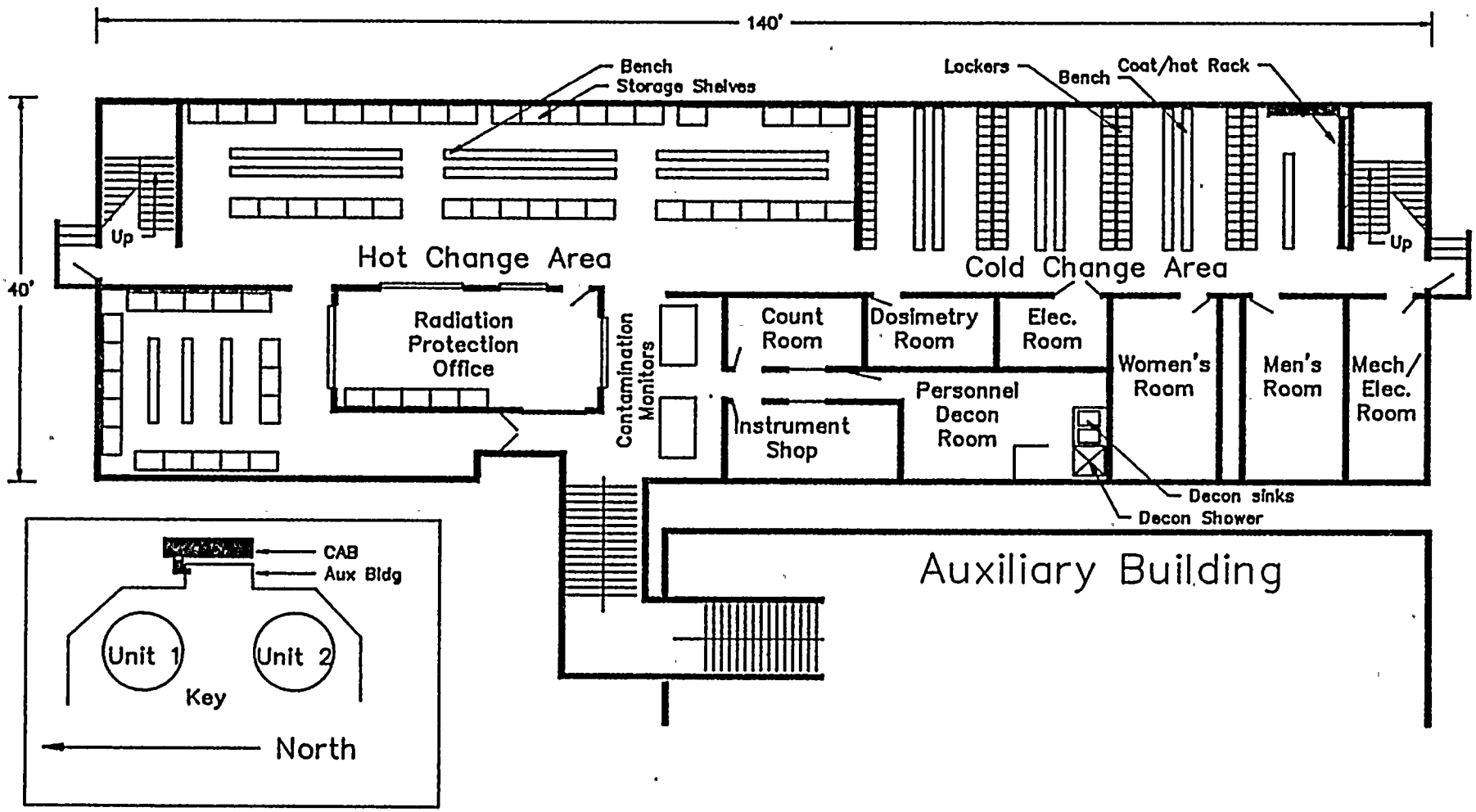

Figure 3.3–3
Containment Access Building
Second Elevation

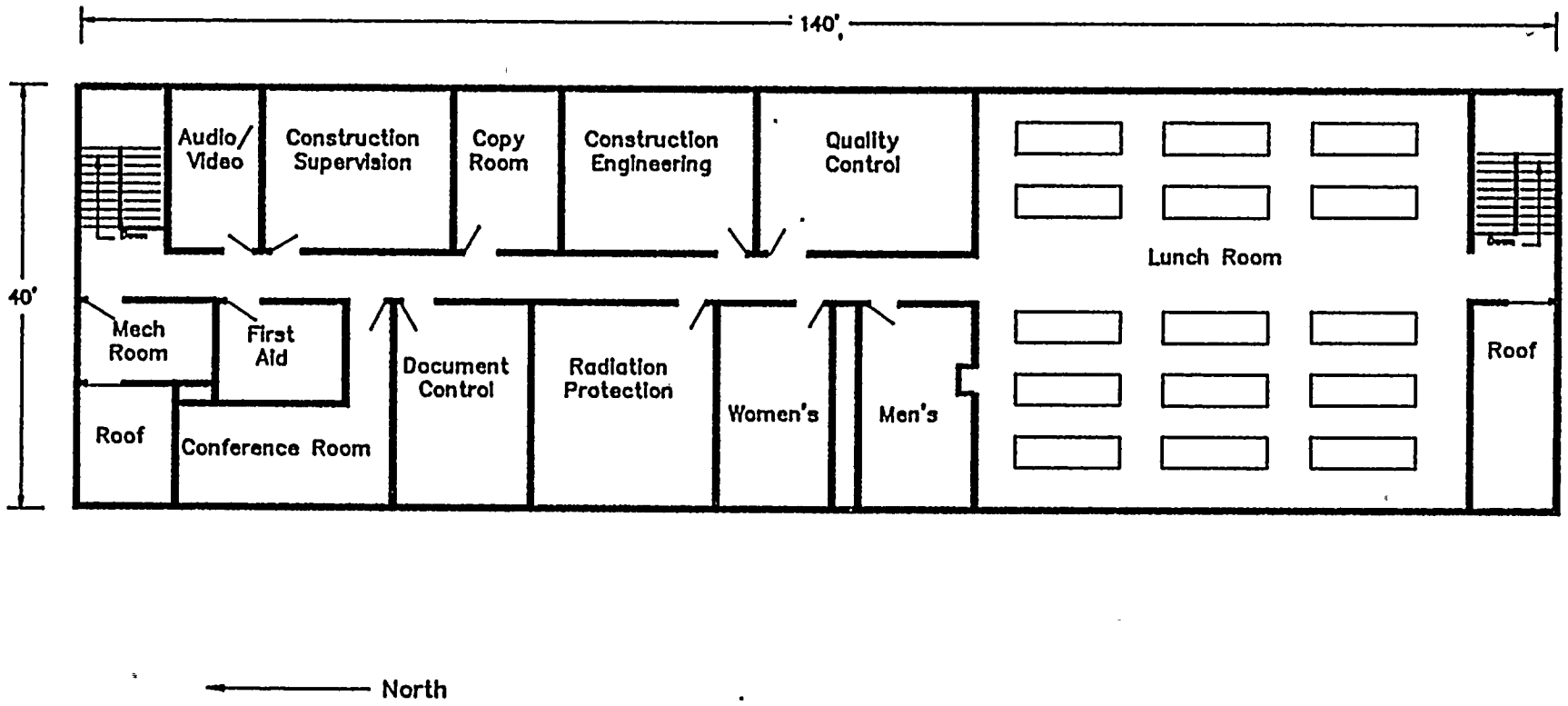

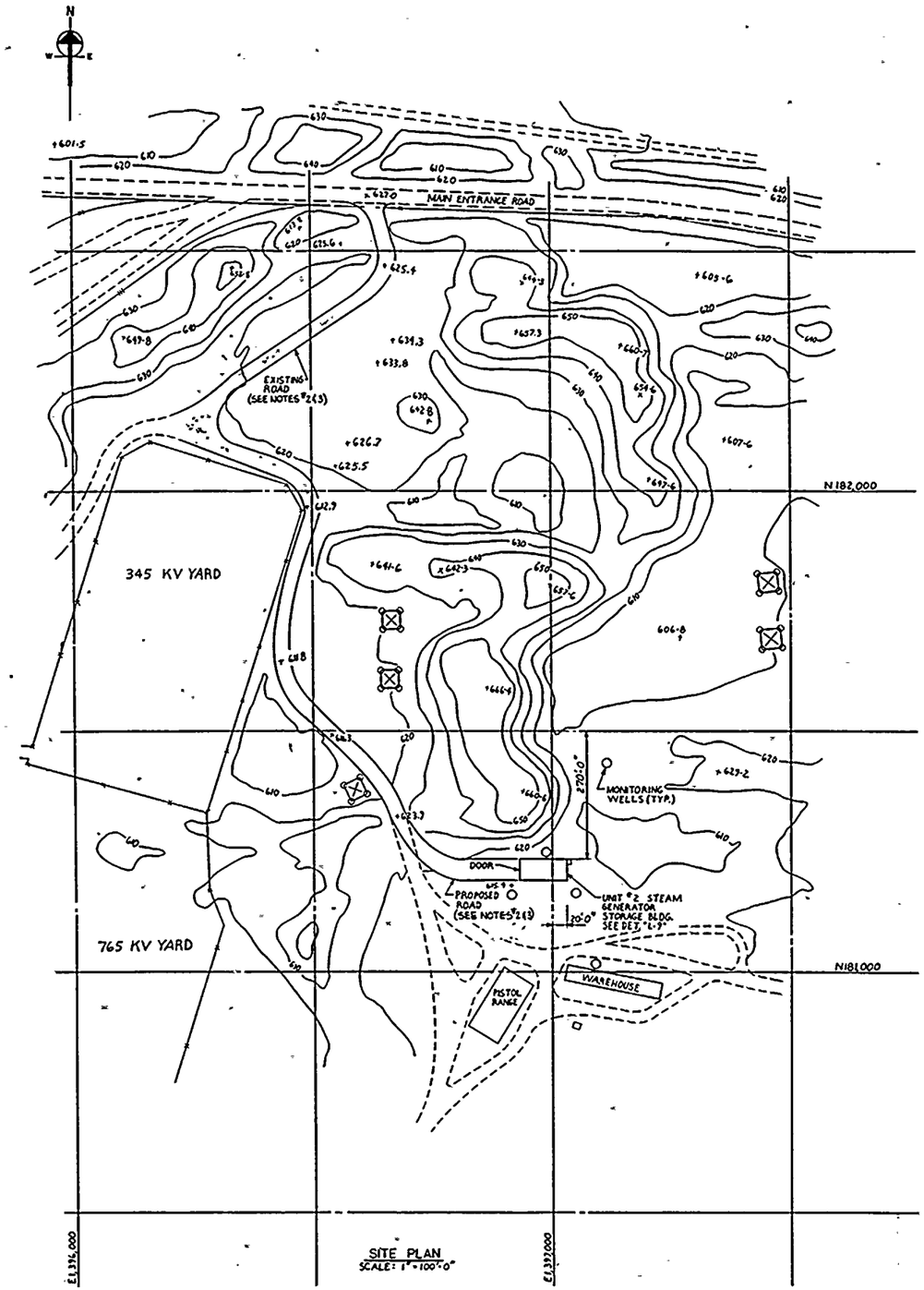

SITE PLAN
SCALE: 1" = 100'-0"

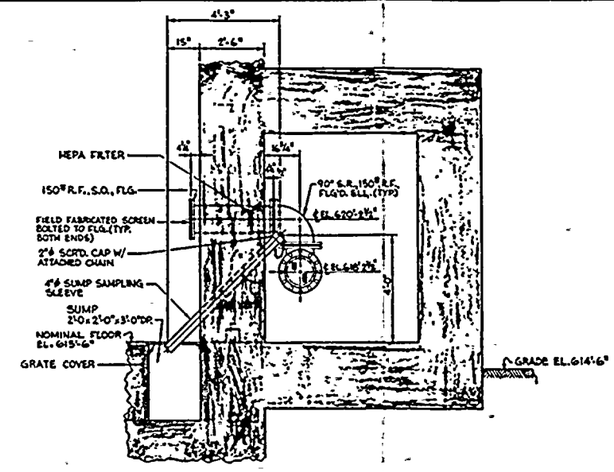

SECTION "K-4"
SCALE: 1/2" = 1'-0"

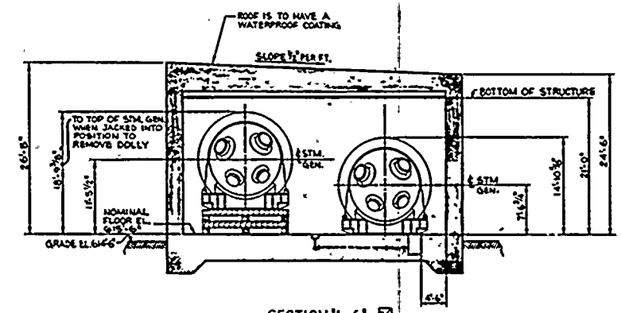

SECTION "L-6"
SCALE: 1/8" = 1'-0"

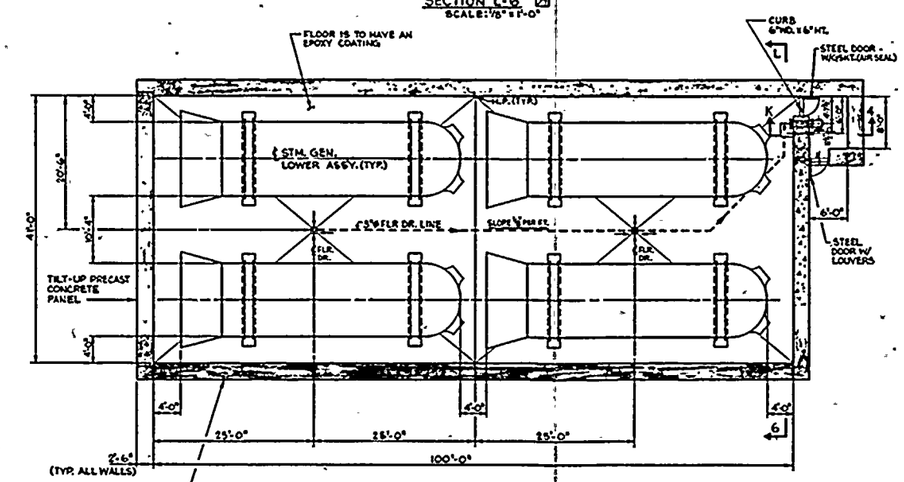

DETAIL "L-9"
SCALE: 1/8" = 1'-0"

TI APERTURE CARD

Also Available On Aperture Card

FIGURE 3.3-4
TEMPORARY ON-SITE STEAM GENERATOR STORAGE FACILITY

8611140303-03

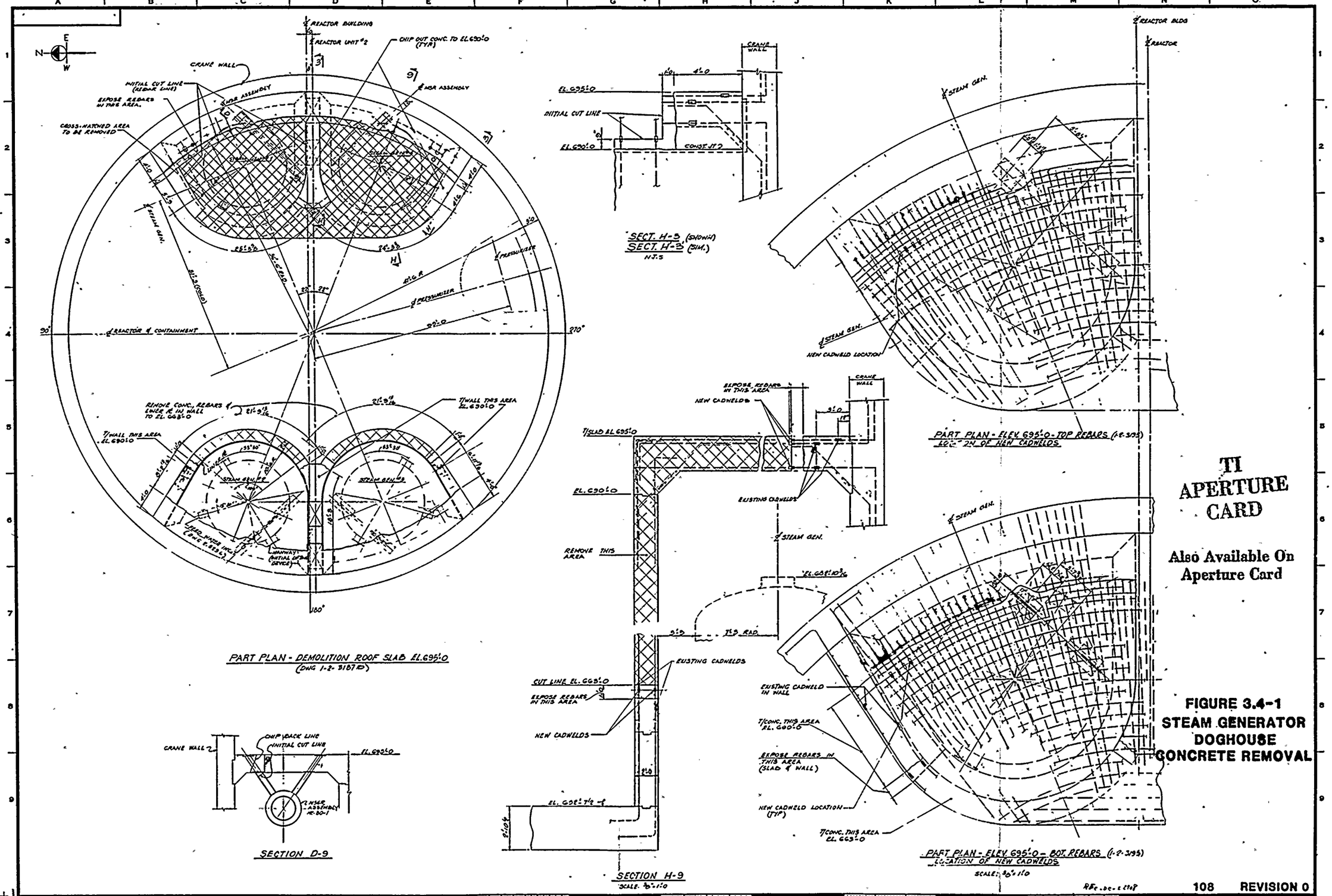

TI APERTURE CARD

Also Available On Aperture Card

FIGURE 3.4-1
STEAM GENERATOR DOGHOUSE CONCRETE REMOVAL

8611140303-04

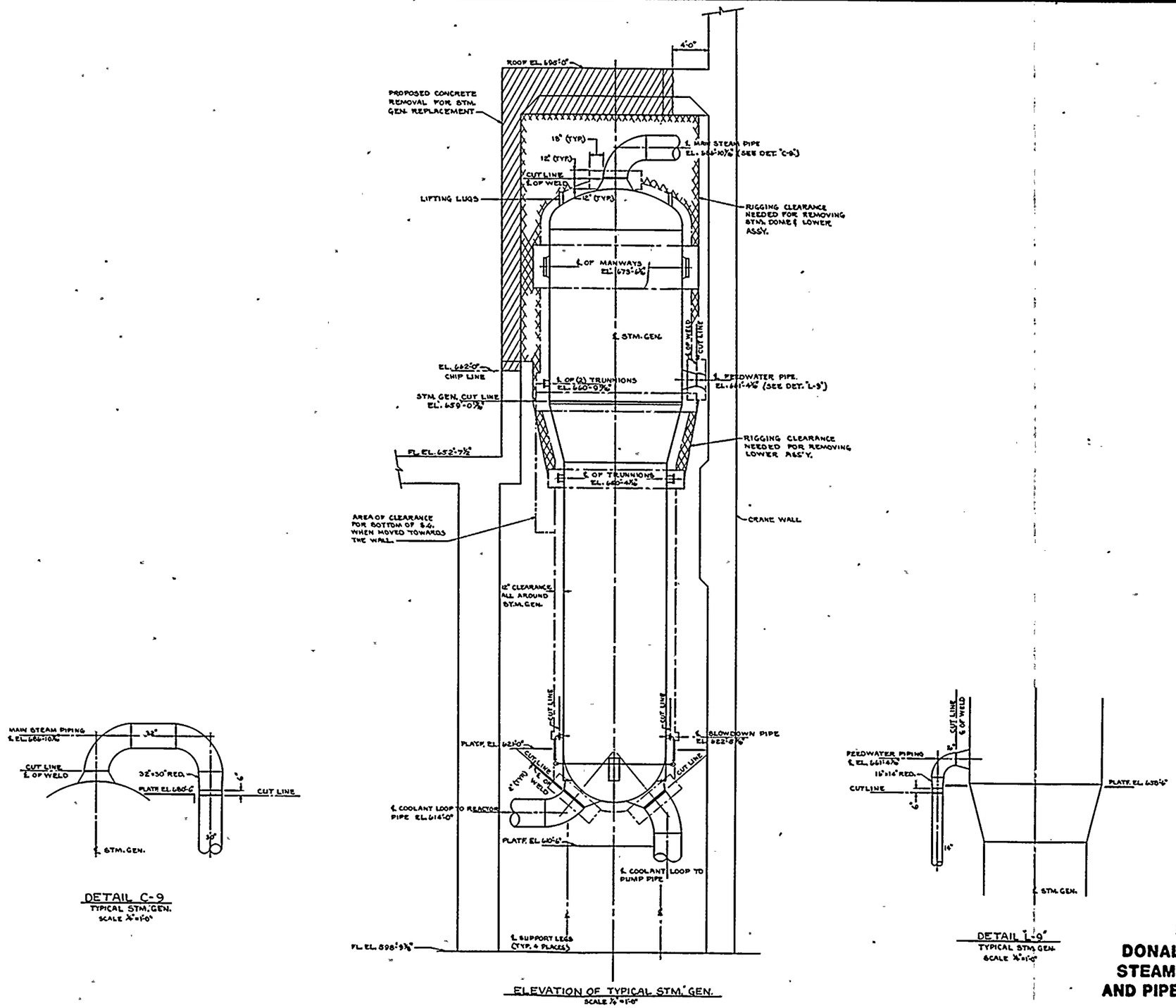

TI APERTURE CARD

Also Available On Aperture Card

FIGURE 3.5-1
DONALD C. COOK UNIT 2
STEAM GENERATOR SHELL AND PIPE CUTTING LOCATIONS

8611140303-05

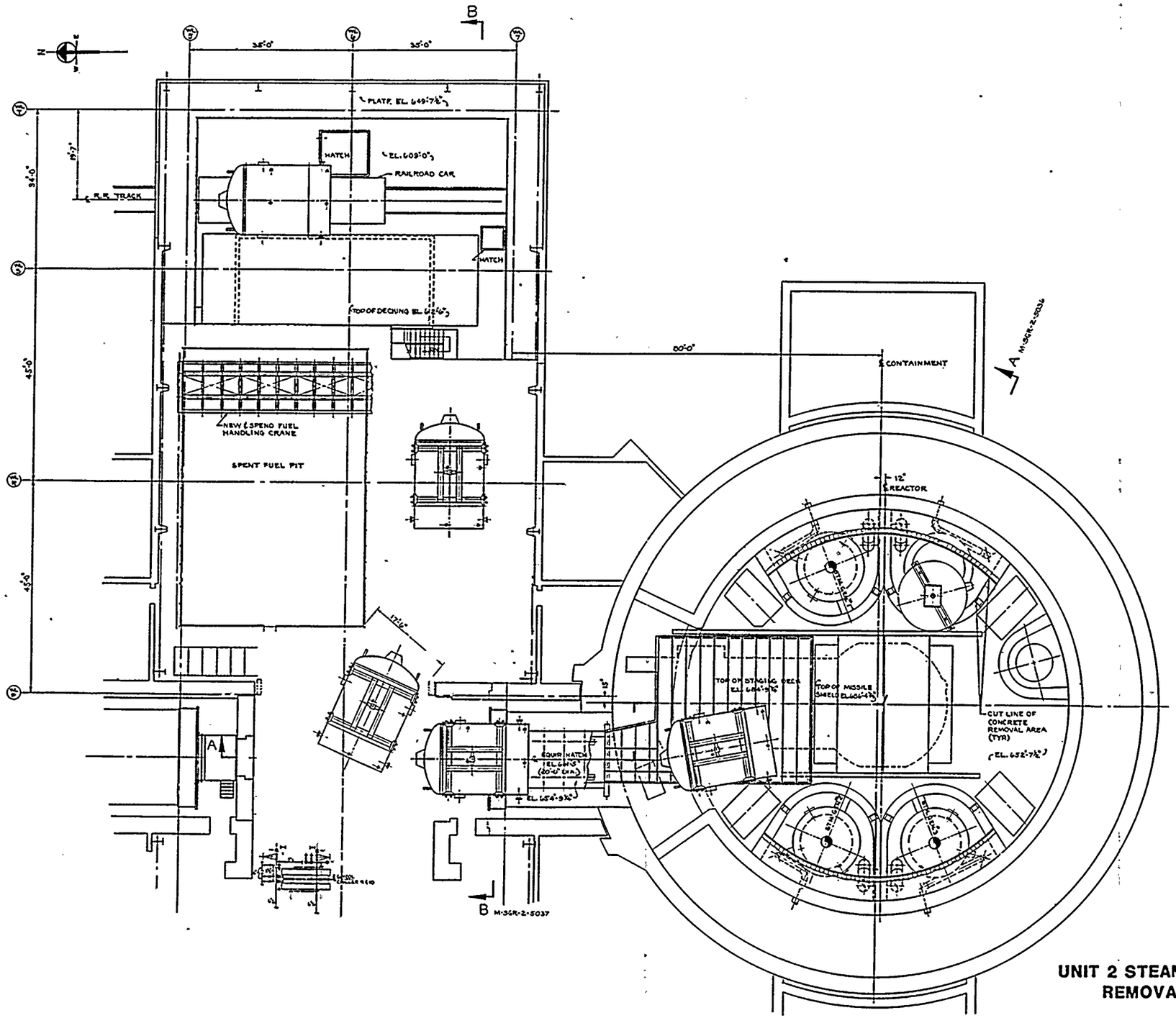

TI APERTURE CARD

Also Available On Aperture Card

FIGURE 3.5-2
UNIT 2 STEAM GENERATOR UPPER ASSEMBLY REMOVAL AND REPLACEMENT, PLAN ELEVATION 650'-0"

8611140303-06

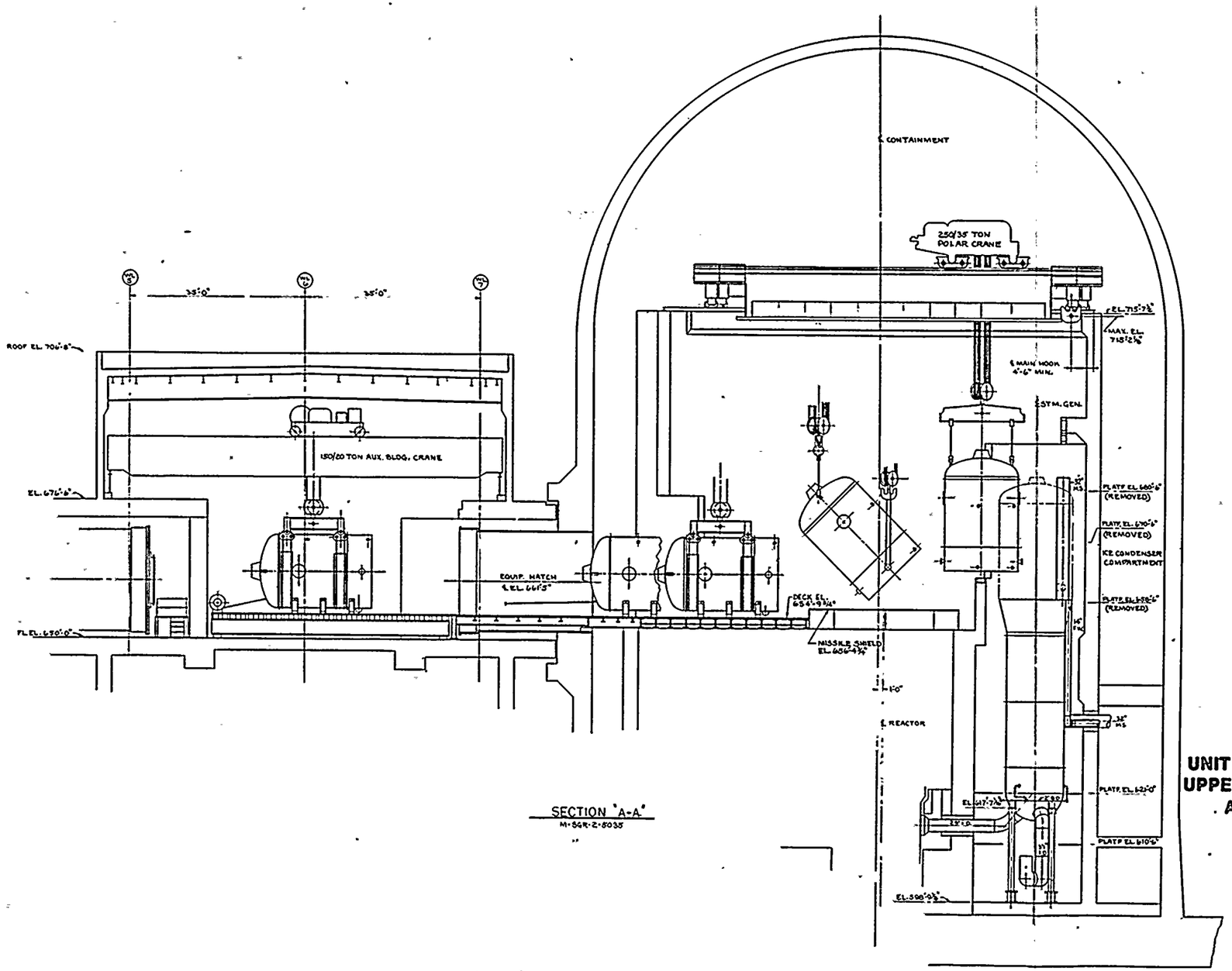

FIGURE 3.5-3
UNIT 2 STEAM GENERATOR UPPER ASSEMBLY REMOVAL AND REPLACEMENT, SECTION A-A

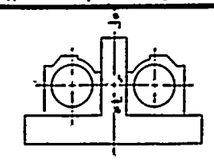

KEY PLAN

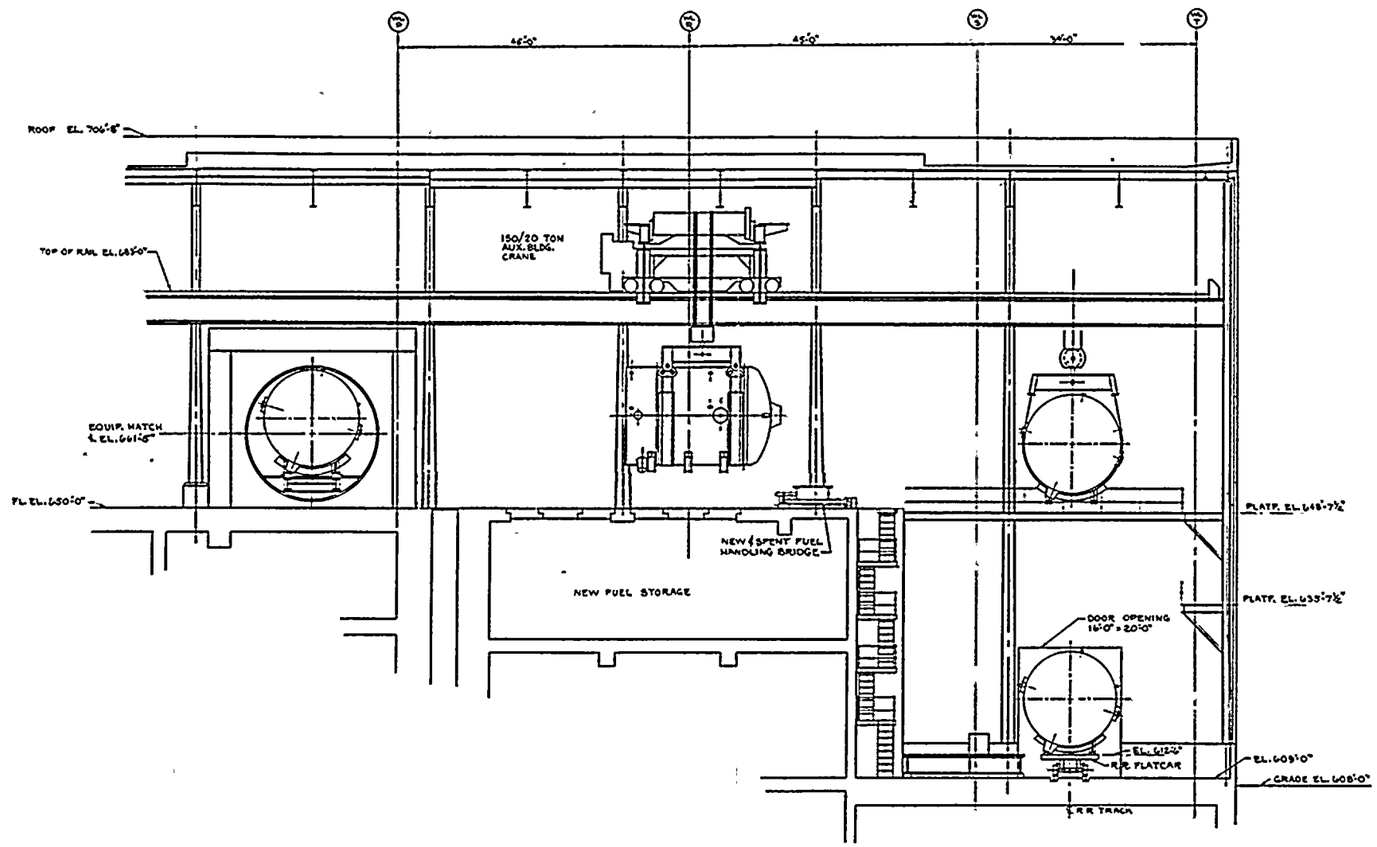

SECTION B-B

M-5GR-2-5035

TI APERTURE CARD

Also Available On Aperture Card

FIGURE 3.5-4
UNIT 2 STEAM GENERATOR UPPER ASSEMBLY REMOVAL AND REPLACEMENT, SECTION B-B

8611140303-08

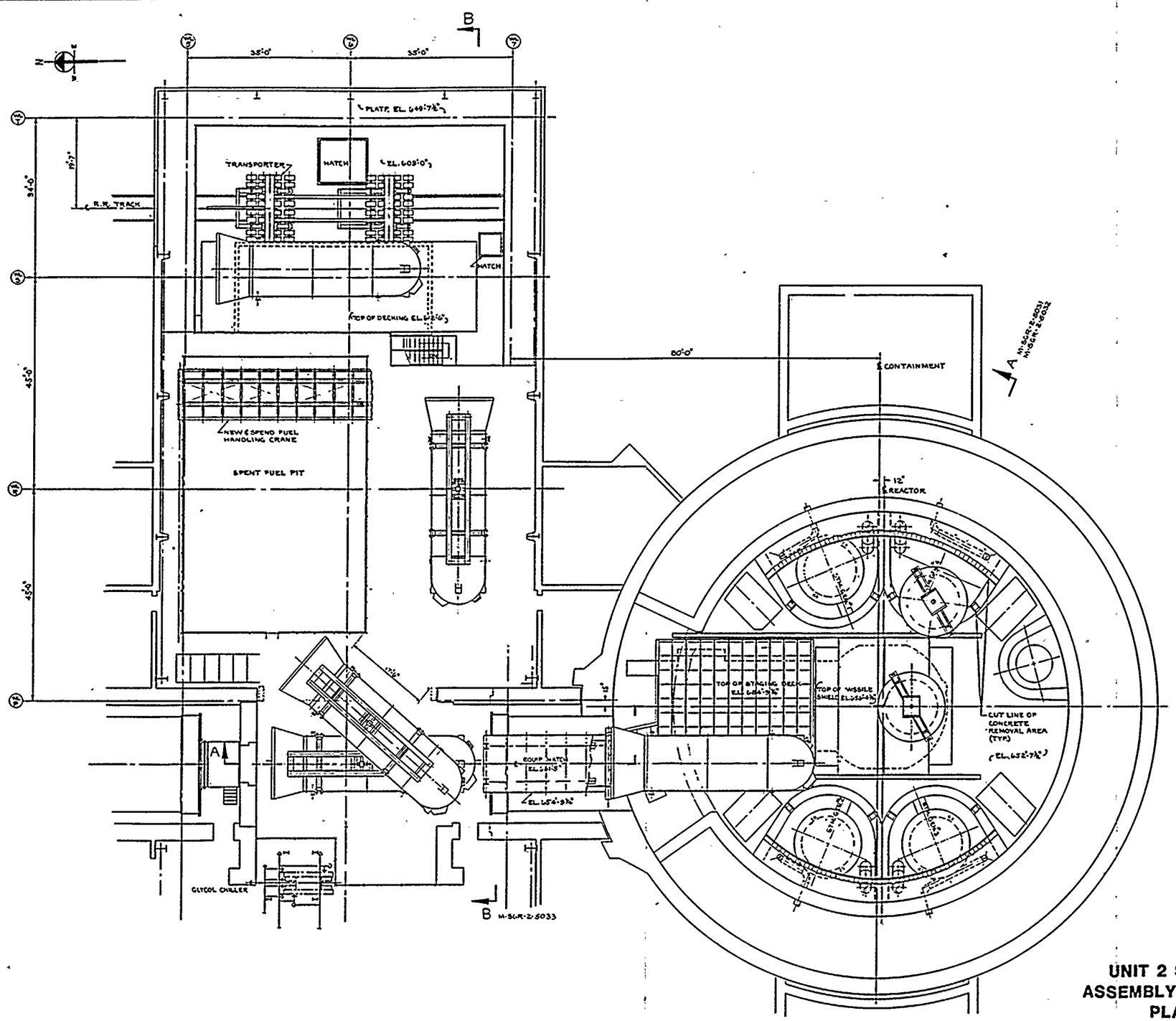

TI
APERTURE
CARD

Also Available On
Aperture Card

FIGURE 3.5-5
UNIT 2 STEAM GENERATOR LOWER
ASSEMBLY REMOVAL AND REPLACEMENT,
PLAN ELEVATION 650'-0"

8611140303-09

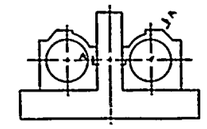

KEY PLAN

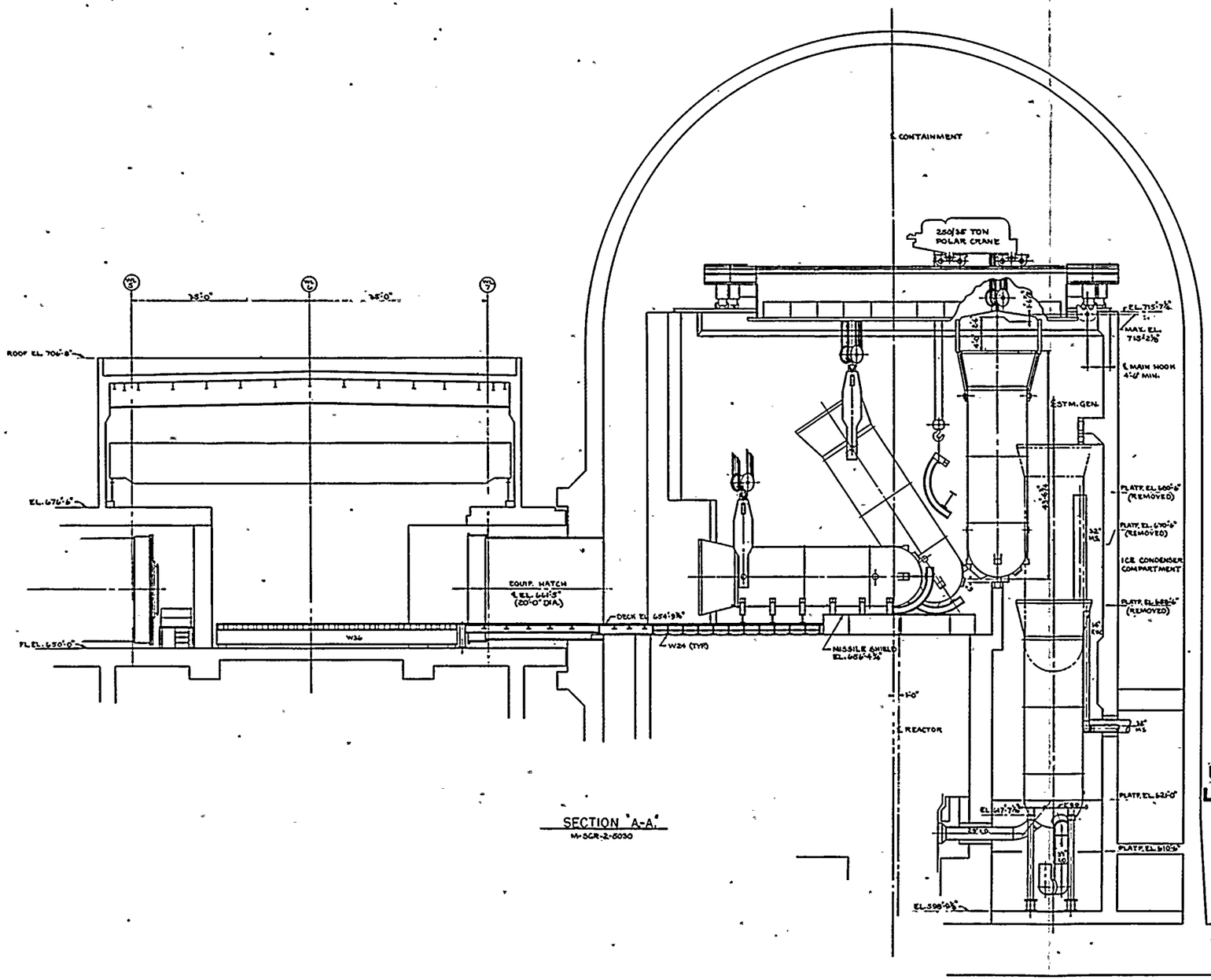

SECTION "A-A"
M-SGR-2-6030

TI
APERTURE
CARD

Also Available On
Aperture Card

FIGURE 3.5-6
UNIT 2 STEAM GENERATOR LOWER ASSEMBLY REMOVAL AND REPLACEMENT, SECTION A_1-A_1

8611140303-10

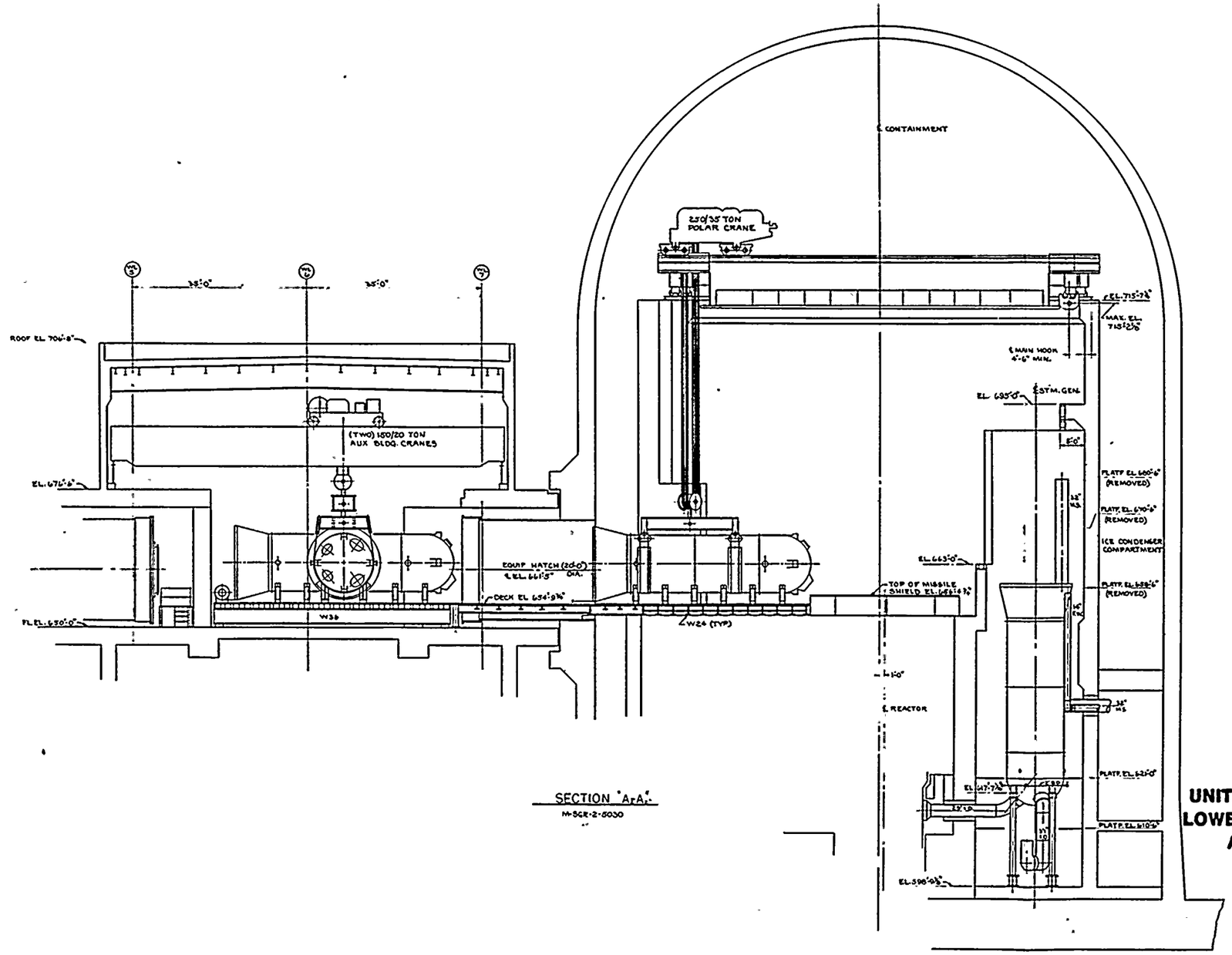

TI APERTURE CARD

Also Available On Aperture Card

FIGURE 3.5-7
UNIT 2 STEAM GENERATOR LOWER ASSEMBLY REMOVAL AND REPLACEMENT, SECTION A_2-A_2

8611140303-11

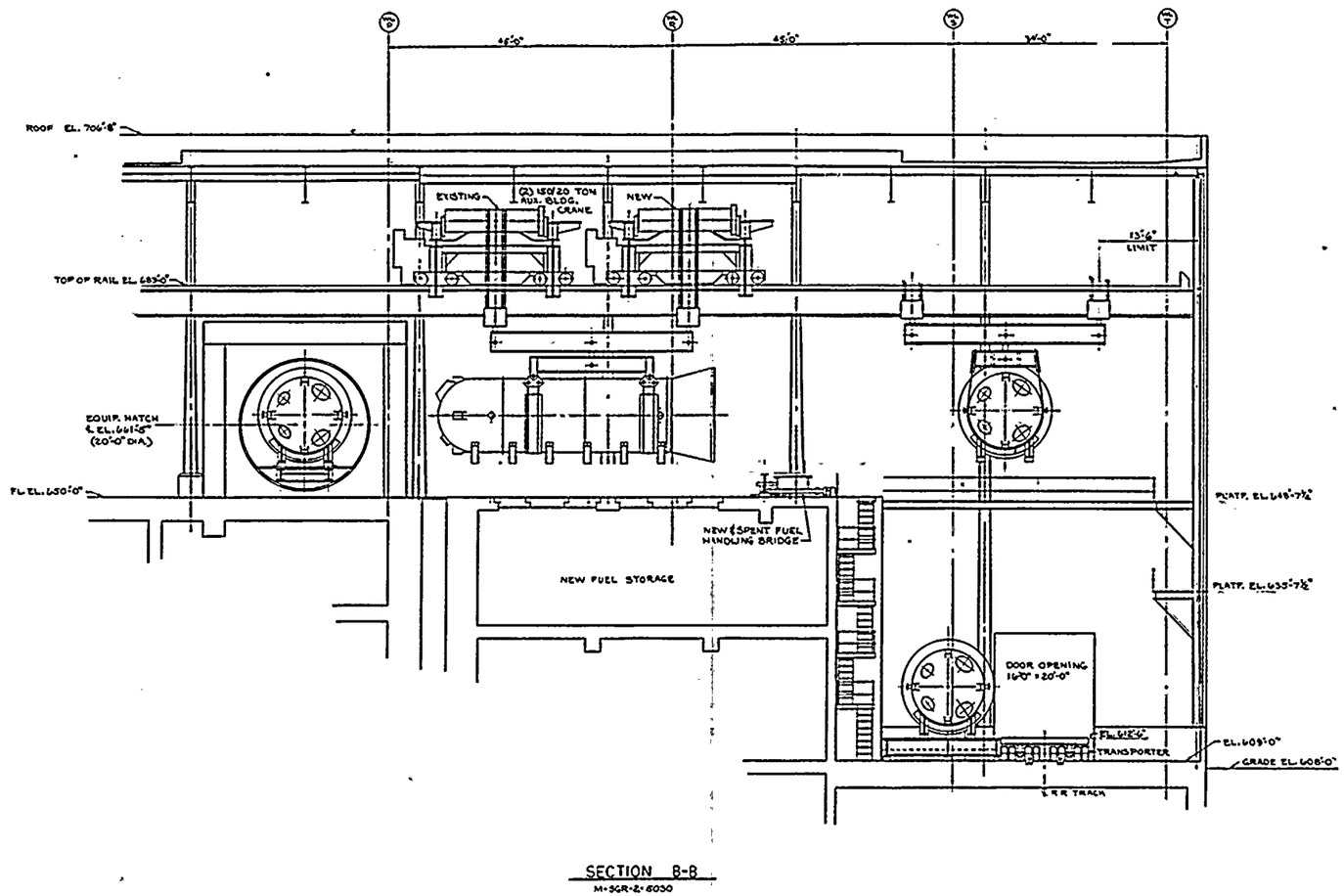

SECTION B-B
M-SGR-2-6030

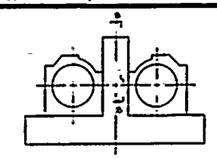

KEY PLAN

TI APERTURE CARD

Also Available On Aperture Card

FIGURE 3.5-8
UNIT 2 STEAM GENERATOR LOWER ASSEMBLY REMOVAL AND REPLACEMENT, SECTION B-B

REVISION 0

8611140303-12

FIGURE 3.8-1

Donald C. Cook Nuclear Plant
Steam Generator Repair Project
Radiation Protection/ALARA and Radwaste Organization

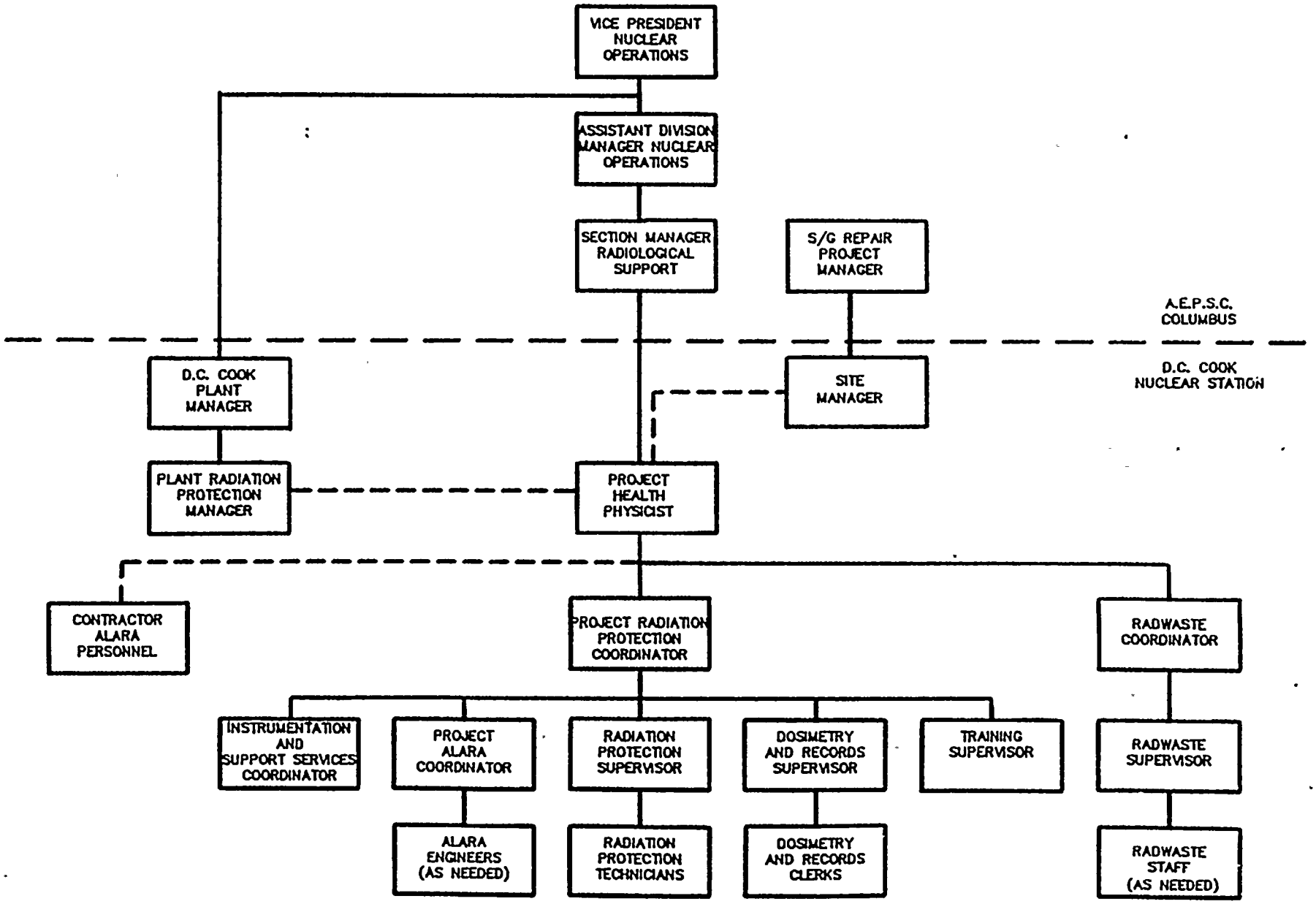

4

Figure 3.8–2
Unit 2 Steam Generator
Enclosure, Piping, and Shell Plate
Cut Locations and Dose Rates

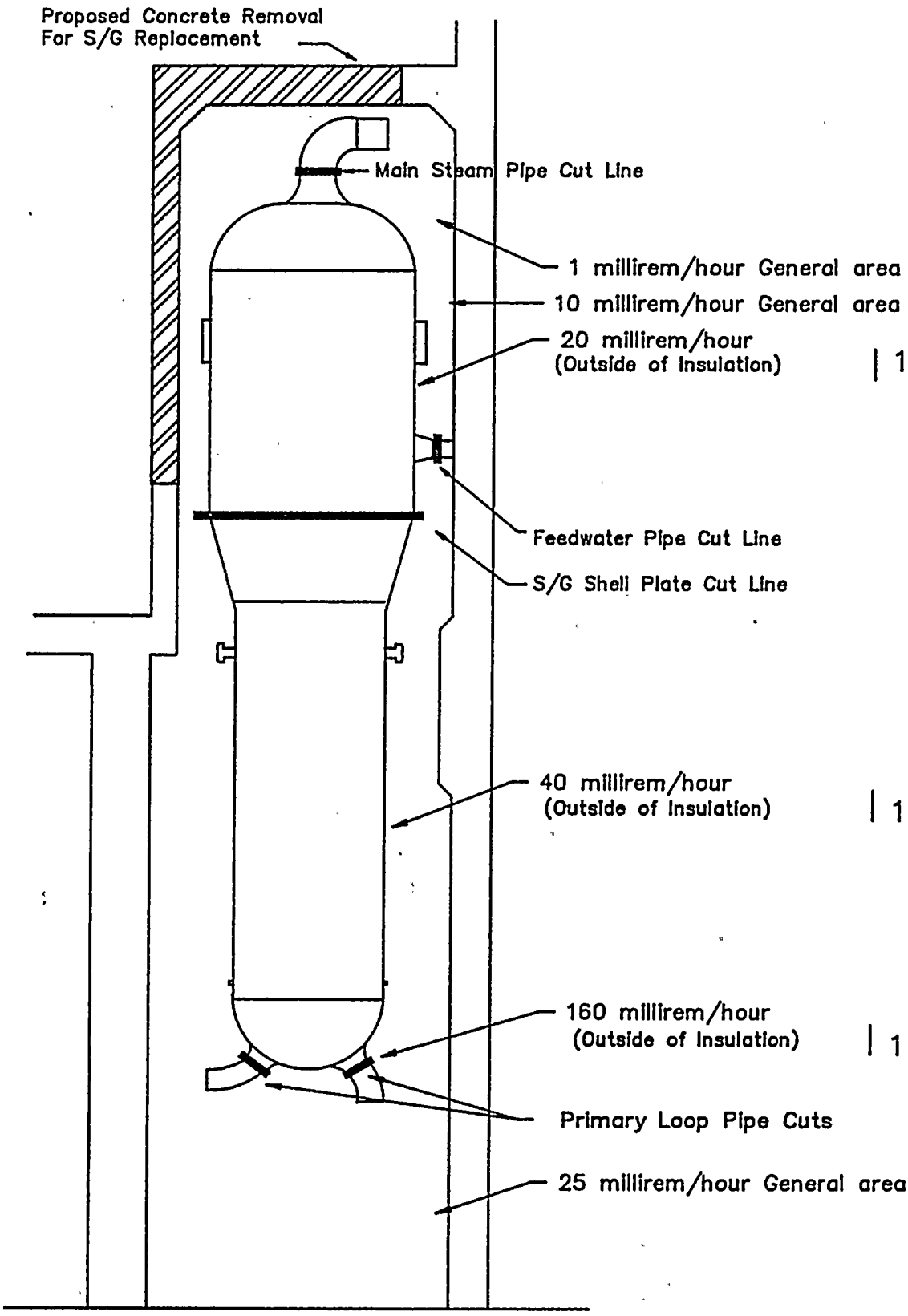

SECTION 4 - SECURITY

4.1 Physical Modifications to Existing Plant Security Facilities

This section describes the physical modifications and additions that will be made to the existing plant security facilities. The following discussion is intended to be a general overview only, due to the proprietary nature of security information. Detailed description of these changes can be found in Chapter 8, "Special Security Measures During Refueling or Maintenance Outage," of the Donald C. Cook Plant Modified Amended Security Plan.

4.1.1 Access Control to the Protected Area

Access to the plant protected area for I&MECo and AEPSC personnel will remain unchanged. I&MECo and AEPSC personnel will continue to use the existing security access facility located in the northeast corner of the plant protected area. A second security facility called the "Site Access Control Building" will be constructed on the south protected area fence line, west of the chlorine building. All Steam Generator Repair Project contractor and trade personnel will normally use this facility as their point of entry to the protected area.

The Site Access Control Building will be approximately 3,200 square feet in size including a vestibule area. The building will house a bullet proof guard island, three ingress lanes equipped with x-ray machines, explosive detectors, chemical detectors and bar gate turnstiles, and three egress lanes equipped with radiation monitoring portals, and exit bar gate turnstiles.

4.1.2 Access Control to Vital Areas

Access to vital areas will be controlled through a combination of security access badges and fencing. The plant security computerized card key access control system allows security to limit specific individuals to specific areas based on the individual's security clearance authorization. For purposes of the repair project, contractor personnel will have only the authorization necessary to gain access to the Donald C. Cook Unit 2 containment and those vital areas necessary to complete their job tasks. In addition the Donald C. Cook Unit 1 containment and those vital areas not affected by the repair project will be off limits to contractor personnel working in the Donald C. Cook Unit 2 containment.

4.2 Additional Security Aspects of the Repair Project

4.2.1 Screening/Fitness for Duty

All contractors working on the steam generator repair project will be required to comply with the Donald C. Cook Plant access authorization procedure for non-company employees for determining acceptability of personnel for unescorted access. This procedure is available for NRC inspection at the plant site; it meets or exceeds the objectives of ANSI 18.17, dated June 1973, paragraph 4.3.

SECTION 5 - QUALITY ASSURANCE

5.1 Introduction

The Donald C. Cook Unit 2 Steam Generator Repair Project will have a quality assurance program that ensures compliance with the applicable regulatory requirements. The Donald C. Cook FSAR Chapter 1.7, "Quality Assurance" also referred to as the "Updated Quality Assurance Program Description for the D. C. Cook Plant" or "QAPD"" supplemented with a Steam Generator Repair Quality Assurance Program (SGR QAP) will administer the requirements. Topics in this report that will be expanded in the SGR QAP are: 1

- o Organization
- o Quality Assurance
- o Design Control
- o Procurement Document Control
- o Audit and Surveillance
- o Document and Record Control
- o Nonconformance and Corrective Action Control

The details as to how the QA program will be expanded in these topics will be described in the SGR QAP. 1

5.2 Organization

5.2.1 AEPSC

AEPSC will retain complete organizational control and delegate responsibilities to members of the Steam Generator Repair Project. Contractors, suppliers and agents will be integrated into the Steam Generator Repair Project organization with responsibilities commensurate with their scope of work.

AEPSC QA will ensure that organizations are defined and responsibilities are delineated among the project members. The AEPSC Manager of Quality Assurance will delegate special responsibilities to the Steam Generator Repair Project Quality Assurance Supervisor for site activities. Other QA Department sections will support the Steam Generator Repair Project QA Section when activities require additional staffing or expertise. 1 1

5.2.2 Repair Contractor

The repair contractor organizational structure will be described in its approved QA program. Lines of authority and responsibilities shall be described to control activities as associated with safety-related items, delegated by AEPSC. 1

The QA program will describe the personnel responsible for performing QA functions, location, and degree of independence those persons will have to administer the QA program. The program will assure proper implementation of the QA program at all levels of the repair contractor's scope of work. The repair contractor will perform activities associated with safety-related items according to its QA program and procedures that have been reviewed and approved by AEPSC QA. 1

Subcontractors will be identified in the repair contractor's QA program and requirements will exist to ensure the adequacy of the subcontractor's QA program in fulfilling the requirements of the subcontractor's scope of work. 1

5.2.3 Suppliers and Agents

Suppliers and agents will administer an organizational structure within their approved QA program. Suppliers and agents will have responsibilities, interfacing relationships and QA program implementation plans described within their QA programs. Subtier suppliers will be included in the organizational description to ensure lines of authority and QA program implementation to such suppliers.

5.3 Quality Assurance Program

5.3.1 Present Quality Assurance Program Description

The AEPSC QA Program is currently administered by the "Updated Quality Assurance Description for the D. C. Cook Nuclear Plant" (QAPD). This document describes the implementation of quality assurance requirements set forth in 10 CFR 50, Appendix B, applicable regulatory guides and ANSI Standards. The QAPD is updated annually as required for the D. C. Cook FSAR. Steam Generator Repair Project activities initiated on and after July 1, 1988 will be implemented using the Steam Generator Repair Quality Assurance Program (SGR QAP). 1

5.3.2 SGR QAP

The SGR QAP expands topics that involve Steam Generator Repair Project activities associated with safety-related items. The SGR QAP shall be administered as a separate document from the current QAPD and submitted with the July, 1988 updated QAPD. The SGR QAP will be implemented by project specific procedures or applicable existing AEPSC/I&MECo procedures. 1

5.3.3 SGR Project Turnover Control

The release and turnover of project systems, structures, components and items will be controlled to maintain quality and integrity. Measures will be taken to ensure that AEPSC Steam Generator Repair Project Management Organization, the repair contractor, and I&MECo plant personnel, control the status and conditions of plant components assigned as their responsibility. 1

Procedures will describe responsibilities and controls of safety related activities when plant components are transferred from one project member or organization to another. The controlled activities are: 1

- the turnover of Donald C. Cook Unit 2 components required by the SGR Project, from I&MECo plant personnel to AEPSC Steam Generator Repair Project Management Organization; 1

- retention and control by I&MECo plant personnel of components shared by both units, to ensure components are not operated in a manner that will endanger either unit, or personnel;

- AEPSC Steam Generator Repair Project Management Organization turnover of plant components to the repair contractor; 1

- The steam generator repair contractor' release and turnover of plant components under its responsibility to AEPSC Steam Generator Repair Project management;

- AEPSC Steam Generator Repair Project Management Organization release and turnover of plant components, after coordinated Steam Generator Repair Project activities are complete, to I&MECo plant personnel; 1

5.3.4 Indoctrination, Training and Qualifications

The Steam Generator Repair Project will have means to indoctrinate, train and, as appropriate, qualify personnel performing activities on safety-related items. The training and indoctrination program described in the QAPD and SGR QAP defines the implementation of training and indoctrination. All Steam Generator Repair Project employees will receive introductory training in the description of the SGR QA Program, use of instructions and procedures, personnel requirements for procedure compliance and the systems and components controlled by the SGR QA Program. 1 1 1

AEPSC Steam Generator Repair Project and repair contractor personnel responsible for performing activities that affect the quality of safety-related items and require skills beyond those "skills of the trade or profession" will be instructed as to the purpose, scope, and implementing materials, procedures and instruction. A lesson plan will document training objectives, program content, attendees and instruction date. 1

Additional training and indoctrination will be provided to:

- qualify personnel assigned to duties such as special cleaning processes, welding, NDE, heat treating and coating operations in accordance with applicable codes, standards and regulatory guides;

- qualify personnel who perform inspection and examination functions defined in Regulatory Guide 1.58, ANSI N45.2.6, SNT-TC-1A, or the ASME Code, as applicable and with the exceptions defined in the QAPD;

- qualify personnel who participate in QA audits and surveillances in accordance with Regulatory Guide 1.146 and ANSI N45.2.23, as applicable and with the exceptions defined in the QAPD.

The training program will have provisions for retraining, reexamination, and recertification to maintain proficiency.

5.3.5 Stop Work Authority

AEPSC QA is responsible for ensuring that activities affecting safety-related items are performed in a manner that meets the 1

requirements of the QAPD and SGR QAP. The AEPSC Vice Chairman - Engineering and Construction has given the AEPSC Manager of Quality Assurance the authority to stop work on any activity that does not meet the applicable requirements. Stop work authority is further delegated by the AEPSC Manager of Quality Assurance to the Steam Generator Repair Project Quality Assurance Supervisor. 1

Steam Generator Repair Project Quality Assurance Supervisor shall notify AEPSC Steam Generator Repair Project Management Organization when conditions prompt the issuance of a stop work order. The AEPSC Steam Generator Repair Project Management Organization shall immediately ensure that all nonconforming processes are stopped until implementation of corrective actions. Procedures describing authority, responsibilities, processing and release of stop work orders shall administer the controls of this authority. 1

5.4 Design Control

Design control for the Steam Generator Repair Project shall be administered by AEPSC as defined in the QAPD and SGR QAP. The controls apply to preparation and review of design documents, including the correct translation of applicable regulatory requirements and design basis into the design, procurement, and procedural documents. 1

Organizational design responsibilities for design development, review, potential 10 CFR 50.59 unreviewed safety questions, and approval of design changes are delegated to AEPSC and plant management. Lines of 1

communication are established for controlling the flow of design interfaces, including changes to the information as work progresses.

Design change implementation shall be administered by AEPSC Steam Generator Repair Project Management Organization. The scope of work will be separated by the repair contractor, into work packages for installation under the repair contractor's QA program. AEPSC SGR QA will maintain surveillance on the scope of work implementation and review the completed design change package for documentation close-out. 1 1

Changes to design documents are reviewed, approved and controlled in a manner commensurate with that used for the approved document.

5.5 Procurement Document Control

Procurement documents for the Steam Generator Repair Project will include the applicable regulatory requirements, technical specifications and QA program commitment requirements. Procedures will establish the review and approval of procurement documents to ensure the maintenance of these controls. Procurement documents for items or services will contain the applicable requirements of AEPSC Specifications, the Donald C. Cook Plant list of nuclear safety-related items, and qualified suppliers list or equivalent to ensure correct component classification and quality of the supplier. 1 1

Changes to a procurement document will be reviewed, approved and controlled in a manner commensurate with that used for the original document.

The repair contractor, suppliers and agents will implement procurement document control for activities under their Steam Generator Repair Project scope of work. These procurement activities will be controlled and implemented in a manner commensurate with AEPSC procurement commitments in the QAPD and SGR QAP. 1

AEPSC QA Department performs off-line reviews of procurement documents to assure that procurement documents have been prepared, reviewed and approved in accordance with QA program requirements.

5.6 Audit and Surveillance Program

The audit and surveillance of Steam Generator Repair Project organizations will provide a comprehensive independent verification and evaluation of procedures and activities associated with safety-related items. Audits and surveillances will be performed in areas applicable to the requirements of the QAPD and SGR QAP. Emphasis will be placed on activities based on the individual Steam Generator Repair Project organization's scope of work. 1

5.6.1 AEPSC QA

AEPSC QA will verify and evaluate the QA programs, procedures and activities of Steam Generator Repair Project organizations. The quality activity plan administers the performance, frequencies and schedule of audits and surveillance. Audits and surveillances will be scheduled based upon the status and safety importance of the activity, and initiated to assure effective quality controls during design, procurement, manufacturing, construction, installation, inspection and testing. 1

Audits and surveillances will be performed using written procedures and checklists, and conducted by trained personnel not having direct responsibilities in the areas being audited. Audits and surveillances will include an objective evaluation of activities, procedures, instructions, activities and items, and the review of documents and records associated with safety-related items to ensure technical acceptability, workability and management support of the QA program. 1

Associated areas to be addressed in applicable audit and surveillance activities are:

- Site features which are unique to the Steam Generator Repair Project 1
- Preparation, review and approval, and control of early procurements
- Indoctrination and training programs

- Steam Generator Repair Project interface controls

- Nonconformance and corrective action control

- Activities associated with computer codes

- Security

- Radiological safety

AEPSC QA will analyze audit and surveillance information, and indicate quality problems, the effectiveness of the QA program, the need to reaudit deficient areas, and report to management for review and assessment.

The repair contractor, suppliers and agents will be subject to a pre-award audit to verify acceptance to the applicable AEPSC Specification requirements. The acceptance of the repair contractor's subcontractors and agents will be the responsibility of the repair contractor.

Prior to the start of work, the repair contractor will have a prework audit performed to ensure that its QA program is technically acceptable, workable and endorsed by management support.

A post-work, or demobilization audit will be performed to ensure that all deviations, open items and problems are resolved prior to contractor departing the job site.

5.6.2 Repair Contractor

The repair contractor will be responsible for maintaining an audit and surveillance process to ensure compliance to its approved QA program. The repair contractor will perform audits and surveillances on all activities and procedures under its scope of work, and also the work of its subcontractors and agents to ensure compliance to the repair contractor's quality requirements. 1

Audits and surveillances will be performed with written procedures and checklists, and conducted by trained personnel not having direct responsibilities in the areas being audited. Audits and surveillances shall include an objective evaluation of activities, procedures, and a review of documents and records associated with safety-related items to ensure technical acceptability, workability and management support of the QA program. 1

The repair contractor will analyze audit and surveillance information, and indicate quality problems, the effectiveness of the QA program, the need to reaudit deficient areas, and report to management for review and assessment. Significant problems in quality shall be reported to AEPSC QA. 1

5.6.3 Suppliers and Agents

Suppliers and agents for the Steam Generator Repair Project shall be responsible for maintaining audit and surveillance processes to ensure compliance to their approved QA program. Suppliers and agents shall perform audits and surveillances on all activities and procedures under their scope of work, and the work of their subtier suppliers or agents. 1

Suppliers and agents will be subject to an AEPSC QA pre-award evaluation to verify acceptability as a qualified supplier. 1

5.7 Document and Records Control

The control of documentation and records will be established for the review, approval, issue and any subsequent revisions to documents categorized as design documents, drawings and related documents, procurement documents, instructions and procedures, as-built, quality assurance and quality control manuals and nonconformance and corrective action documents. Documents will establish criteria to ensure adequate technical and quality requirements are incorporated and responsible organizations are identified for the review, approval, issue and document maintenance. 1 1

The review of changes to documents will be performed by the organization that performed the original review, or by an organization designated in accordance with the procedure governing the review and approval of the specific documents.

Master lists or indices will be used to identify current document revisions. These control lists or indices are updated and distributed to designated personnel who are responsible for maintaining current copies of the applicable document. Measures will be established to assure that obsolete or superseded documents are removed and replaced by current revisions in a timely manner. 1

Documents that furnish evidence of Steam Generator Repair Project activities affecting the quality of safety-related items shall, upon completion, become records. Instructions and procedures shall establish the requirements for the identification and preparation of records, and provide the retention controls of these records. 1

The individual Steam Generator Repair Project organizations are responsible for establishing procedures for the identification, collection, maintenance and storage or records generated under their scope of work. These procedures will ensure that the maintenance of records is sufficient to furnish objective evidence that activities affecting the quality of safety-related items are in compliance with the established QA program. When an Steam Generator Repair Project organization demobilizes, the records of its scope of work will be turned over to AEPSC Steam Generator Repair Project management for processing to the Donald C. Cook Plant Records and Information Center. 1 1

Except for records that can only be stored as originals, such as radiographs, magnetic recording devices and strip charts, records are stored in dual facilities to prevent damage, deterioration or loss. When the single original can only be retained, special fire-rated facilities are used.

5.8 Nonconformance and Corrective Action Control

Nonconformances and corrective actions of the Steam Generator Repair Project will be identified and controlled to ensure measures are implemented for prompt correction of conditions adverse to quality.

The nonconformance and corrective action requirements of the QAPD and SGR QAP will be applied to the safety-related scope of work for all Steam Generator Repair Project organizations.

Individual Steam Generator Repair Project organization will establish procedures for the identification, documentation, segregation or administrative control, disposition, review and notification of nonconformances and corrective actions associated with safety-related items. Steam Generator Repair Project organizations discovering a problem will notify AEPSC QA in writing. 1

Procedures for nonconformance and corrective action will define and describe the organizational responsibilities in implementing nonconformance and corrective action control, and individuals or groups with authority for disposition review and approval, and close out of nonconformances items. 1 The lines of authority and responsibility will be in accordance with the Steam Generator Repair Project organization's QA program. 1

Nonconformance and corrective action documentation will describe the nonconformance, disposition of the nonconformance, corrective action to preclude reoccurrence and inspection or test requirements to correct the problem or deficiency. Items that are dispositioned as repair or use-as-is require AEPSC Steam Generator Repair Project management concurrence to document acceptability. 1 Items that have been repaired or reworked will be inspected and tested in accordance with the original inspection and test requirements, or will be acceptable in accordance with documented alternative methods.

Nonconformance and corrective action reports are periodically analyzed by AEPSC QA for evidence of quality-related trends and the implementation of timely corrective action. Results demonstrating a breakdown in quality will be reported to appropriate AEPSC Steam Generator Repair Project Management Organization for review, assessment and correction of the situation. 1

SECTION 6 - SAFETY EVALUATION

6.1 FSAR Evaluations

6.1.1 Introduction

The purpose of this section is to evaluate the impact, if any, that the repaired steam generators may have on the transient analysis of accidents for the Donald C. Cook Unit 2. This section provides a qualitative discussion of the effect on the accident analysis of steam generator parameter changes resulting from the steam generator repair. This evaluation is required by 10 CFR 50.59 to verify that there are no unreviewed safety questions and no required changes to the Technical Specifications.

The relevant Donald C. Cook Unit 2 operating parameters and steam generator design parameters are compared in Section 2.2 for the original and the repaired steam generators. Although certain design improvements have been made, the repaired steam generators match the design performance of the original steam generators. It can be seen in Section 2.2 that the steam generator repair will result in very little change to the original operating parameters. Therefore, the impact on the accident analyses will be insignificant. The results of the accident evaluation confirm that repair of the steam generators with physically and functionally similar units does not result in any adverse changes in the plant operating conditions used in the plant's licensing basis and therefore the accident analyses in the licensing bases are still valid. It is concluded that no unreviewed safety questions exist due to operation with the repaired steam generators.

6.1.2 Non-Loss-Of-Coolant Accident Accidents

The D. C. Cook Nuclear Plant licensing basis includes analyses or evaluations of non-LOCA accidents. These accidents are:

- Decrease in Feedwater Temperature
- Increase in Feedwater Flow
- Increase in Steam Flow
- Inadvertent Opening of a Steam Generator Relief or Safety Valve
- Steam System Piping Failures
- Loss of External Load
- Turbine Trip
- Loss of Condenser Vacuum
- Loss of Non-Emergency AC Power to Station Auxiliaries
- Loss of Normal Feedwater
- Feedwater System Pipe Breaks
- Loss of Forced Reactor Coolant Flow
- Reactor Coolant Pump Rotor Seizure
- Reactor Coolant Pump Shaft Break
- Uncontrolled RCCA Withdrawal from Subcritical or Low Power Condition
- Uncontrolled RCCA Withdrawal (Power)
- Control Rod Misoperation
- Startup of an Inactive Loop
- CVCS Malfunction Resulting in Reduced RCS Boron Concentration
- Inadvertent Loading of a Fuel Assembly in an Improper Position
- Spectrum of Rod Ejection Accidents
- Inadvertent Operation of ECCS that Increases RCS Inventory
- CVCS Malfunction that Increases RCS Inventory
- Waste Gas System Failure

- Radioactive Liquid Waste System Leak or Failure
- Radioactive Releases Due to Liquid Containing Tank Failure
- Radiological Consequences of Fuel Handling Accident
- Spent Fuel Cask Drop Accident
- Inadvertent Opening of a Pressurizer Pressure Relief Valve
- Radiological Consequences of Failure of Small Lines Carrying Primary Coolant Outside Containment

The evaluations of these non-LOCA accidents appear in Sections 6.1.2.1 through 6.1.2.30.

6.1.2.1 Decrease in Feedwater Temperature

A reduction in the enthalpy of the feedwater entering the steam generators will cause RCS temperature and pressure to decrease, thus creating increased load demand and reactor power. Such increases are attenuated by the thermal capacity in the secondary plant and in the reactor coolant system. The overpower-overtemperature protection (nuclear power and ΔT trips) prevents any power increase which could lead to a DNBR less than the limit value. An example of such an event is accidental opening of a feedwater heater bypass valve. Although the secondary water mass in the repaired steam generators is decreased and the heat capacity is slightly lower, the slightly increased cooldown rate will have an insignificant impact in such an event. The feedwater enthalpy reduction event is bounded by the Increase in Steam Flow event.

6.1.2.2 Increase in Feedwater Flow

Additions of excessive feedwater cause increase in core power by decreasing reactor coolant temperature. Such transients are attenuated by the thermal capacity of the secondary plant and of the Reactor Coolant System (RCS). The

overpower-overtemperature protection (nuclear power, overtemperature and overpower ΔT trips) prevents any power increase which could lead to a DNBR less than the limit value. Additionally, long term addition of excessive feedwater is prevented by the steam generator high-high level protection.

Excessive feedwater flow may be caused by the full opening of a feedwater control valve due to a feedwater control system malfunction or an operator error. At power this excess flow causes a greater load demand on the RCS due to increased subcooling in the steam generator. With the plant at no-load conditions the addition of cold feedwater may cause a decrease in RCS temperature and thus a reactivity insertion due to the effects of the negative moderator coefficient of reactivity.

One case presented in the FSAR analyzes an accidental opening of one feedwater control valve with the reactor just critical at zero load conditions, assuming a conservatively negative moderator temperature coefficient. The slight decrease of the secondary water mass in the repaired steam generators at zero load condition (~1.9%) and the consequent slightly lower heat capacity will have an insignificant impact on the results presented in the FSAR. Therefore the conclusions presented in the FSAR remain valid for the repaired steam generators.

The other case presented in the FSAR analyzes an accidental opening of one feedwater control valve with the reactor in automatic control at full power. The repaired steam generator design has a smaller full load steam generator secondary-side mass, approximately 6 percent lower. This decreased secondary side heat capacity would result in a slightly higher cooldown rate than in the

FSAR analysis. However the change in margins to reactor trip will be insignificant and the minimum DNBR will remain above the limit value. Therefore, the conclusions presented in the FSAR remain valid for the repaired steam generators.

6.1.2.3 Increase in Steam Flow

An increase in steam flow causes a mismatch between reactor core power and steam generator load demand. The transient continues toward a new steady state condition at either the initial RCS temperature or a lower RCS temperature. The overtemperature ΔT and overpower ΔT trips are available to prevent the violation of the acceptance criteria. If no reactor trip occurs, the reactor system will reach a new steady-state condition at a power level greater than the initial power level which is consistent with the increased heat removal rate. The final steady-state conditions which are achieved will depend upon the magnitude of the moderator temperature coefficient and whether the rod control system is in automatic. If there is a positive moderator temperature coefficient, the reactor power would decrease as the core average coolant temperature decreased, and this event would not produce a challenge to the acceptance criteria.

Two cases were analyzed for Cycle 6, both with automatic rod control: a minimum feedback case with zero moderator coefficient, and a maximum feedback case with a bounding negative moderator coefficient. Repair of the steam generators resulting in units of similar physical size and tube structure could slightly affect the Increase in Steam Flow event in that the lower full power fluid inventory of the repaired steam generators could cause the

transient to progress more quickly; however, the same equilibrium condition would still be reached, since no reactor trips are encountered. Therefore, the conclusions of the Cycle 6 analysis remain valid.

6.1.2.4 Inadvertent Opening of a Steam Generator Relief or Safety Valve

An uncontrolled release of steam, through a ruptured steam line or a defective or inadvertently opened valve, causes the secondary system pressure and temperature to fall and the heat transfer rate through the steam generator tubes to rise. The heat removal rate from the RCS increases and the moderator temperature falls.

The analysis of an uncontrolled steam release was performed to demonstrate that:

- Assuming a stuck RCCA with or without offsite power and assuming a single failure in the engineered safety features, there is no consequential damage to the primary system and the core remains in place and intact.

- There is no return to criticality for any single active failure in the main steam system. The single active failure is the opening, with failure to close, of the largest of any single steam bypass, relief, or safety valve.

- Energy release to the containment from the worst steamline break does not cause failure of the containment structure.

Major assumptions include use of end-of-life core kinetics parameters, assumption of the most reactive RCCA stuck in the fully withdrawn position, and minimum safety injection capability due to a single failure in the system.

The cases considered are the complete severance of a main steam pipe upstream and downstream of the flow restrictor in the steam pipe, with and without the simultaneous loss of offsite power and steam release through a safety valve. All the cases assume initial hot shutdown condition since steam generator mass inventory is greatest at that condition. Should the reactor be just critical or at power at the time of the steam line break the reactor would be tripped by the normal overpower protection system and the additional stored energy would be removed by the cooldown before the no load condition and shutdown margin assumed above are reached. In addition, the larger steam generator mass at hot shutdown conditions (as compared to full load conditions) increases the magnitude and duration of the cooldown.

The core power and reactor coolant system transients, along with the energy released to containment, will not be affected by the repaired steam generators. The reasons for this conclusion include the following:

- The key parameters which strongly influence the transient are performance of the emergency shutdown system and core reactivity coefficients. There are no changes to these parameters as they are used in the analysis due to repair of the steam generators.

- The flow area of the main steam line is an important factor in determining the amount and rate of heat extracted from the reactor coolant. This flow area remains unchanged for the repaired steam generators.

- No changes are expected due to differences in initial conditions (zero load steam temperature and pressure are identical for the unit with repaired steam generators). The no load steam generator mass decreases insignificantly (~2.0 percent).

Therefore the conclusions of the existing steam line break analyses remain valid for the repaired steam generators.

6.1.2.5 Steam System Piping Failures

Refer to Section 6.1.2.4 for discussion that applies to this accident as well.

6.1.2.6 Loss of External Load

Donald C. Cook Unit 2 is designed to have full load rejection capability, and a reactor trip may not occur following a loss of external load. It is expected that steam dump valves would open in such a load rejection, dumping steam directly to the condenser. Reactor coolant temperature and pressure do not significantly increase if the turbine bypass system and pressurizer pressure control system are functioning properly. If the steam dump valves do not operate, the reactor will trip due to high pressurizer pressure signal, high pressurizer level signal, or overtemperature ΔT signal. Primarily to 4
show the adequacy of the pressure-relieving devices and to demonstrate core protection margins, the Donald C. Cook FSAR and analysis of record analyze cases where the steam dump valves do not operate, and there is no direct reactor trip due to a turbine trip. It is shown in the FSAR and the analysis of record that the accident criteria on system pressure and DNB are not violated in any of the loss-of-load cases.

The slight decrease in full load mass of the repaired steam generators would provide a reduced heat capacity and would slightly increase the heatup rate. However, this would cause the transient to generate a reactor trip sooner than before. Therefore the change in the margins to overpressurization and DNB are insignificant. Thus, the conclusions of the FSAR and the analysis of record remain valid.

6.1.2.7 Turbine Trip

Refer to Section 6.1.2.6 for discussion of Loss of External Load, which bounds the turbine trip event.

6.1.2.8 Loss of Condenser Vacuum

Refer to Section 6.1.2.6 for discussion of Loss of External Load, which bounds the loss of condenser vacuum event.

6.1.2.9 Loss of Non-Emergency AC Power to Station Auxiliaries

As analyzed for safety considerations, the loss of offsite power results in:

1. Loss of power to reactor coolant pumps
2. Turbine and reactor trip
3. Loss of power to main feedwater system
4. Start of auxiliary feedwater systems.

Steam system pressure will rise to automatically open PORVs to the atmosphere, as the steam dump to the condenser is not available. If the PORVs are not available, the steam generator self actuated safety valves may lift to dissipate the heat from the fuel and the coolant.

Upon the loss of power to the reactor coolant pumps, coolant flow necessary for core cooling and the removal of residual heat is maintained by natural circulation in the reactor coolant loops. Differences in the average tube height could produce a change in the steam generator contribution to the natural circulation buoyancy driving head, and changes in the tube structure could cause a difference in primary steam system pressure drop. In the repaired steam generator design, the average tube height has decreased insignificantly and the primary system pressure drop has decreased by 4.1 psi. Therefore, it is concluded that there will be an insignificant impact on natural circulation flow. The loss of AC power analysis of record for Donald C. Cook Unit 2 is still applicable for the repaired steam generators and the conclusions of the existing analysis remain valid.

6.1.2.10 Loss of Normal Feedwater

Loss of normal feedwater from events other than a feedwater pipe break may present the problem of loss of heat sink, thus allowing reactor residual heat to increase RCS temperature and pressure, possibly to the point of releasing water through the pressurizer safety relief valves. Since the repaired steam generators will have slightly smaller secondary water mass at full load than the original steam generators, the mass inventory at the low-low steam generator water level reactor trip setpoint will also be slightly reduced. However, the steam generator inventory at the reactor trip, along with the auxiliary feedwater system, will still provide adequate heat removal capability without water relief from the primary system. Therefore, the conclusions of the existing analysis remain valid for the repaired steam generators.

6.1.2.11 Feedwater System Pipe Breaks

In the event of a major rupture of a main feedwater pipe, the loss of secondary side heat sink will cause the reactor residual heat to increase RCS temperature and pressure. Auxiliary feedwater provides sufficient decay heat removal to preclude overpressurization of the primary system and core uncovering. Since the repaired steam generators will have slightly smaller mass than the original steam generators at full load, the mass inventory at the low-low steam generator water level reactor trip setpoint will also be slightly reduced. However, adequate heat removal is maintained by the auxiliary feedwater system. Therefore, the conclusions of the existing analysis remain valid for the repaired steam generators.

6.1.2.12 Loss of Forced Reactor Coolant Flow

Loss of forced reactor coolant flow covers total loss of RCS flow, partial loss of RCS flow and locked rotor events. In these events, a rapid increase in coolant temperature and approach to DNB are arrested by reactor trip due to low frequency, low voltage or low coolant flow. These trips occur much more quickly than the RCS loop transport time. This, as well as the lack of change in RCS flow characteristics or heat extraction capability, it is concluded that the steam generator repair does not change this type of accident. The conclusions of the existing analysis of record remain valid.

6.1.2.13 Reactor Coolant Pump Rotor Seizure

Refer to Section 6.1.2.12 for discussion that applies to this accident as well.

6.1.2.14 Reactor Coolant Pump Shaft Break

Refer to Section 6.1.2.12 for discussion that applies to this accident as well.

6.1.2.15 Uncontrolled RCCA Withdrawal from Subcritical or Low Power Condition

This accident will not be affected by the repair of the steam generators. The repaired steam generators will not change the flow characteristics of the reactor coolant system (RCS). The RCS heat extraction capability will be maintained at nearly the same level. Further, the RCS loop fluid transport time is approximately 15 seconds, which is much longer than the 3 second duration for the transient with respect to power level. This also assures there can be no primary to secondary effect. It is valid to conclude that steam generator repair will have no effect on this accident.

6.1.2.16 Uncontrolled RCCA Withdrawal (Power)

The statements made in 6.1.2.15 apply here as well: no change in flow characteristics and insignificant change in heat extraction capability. Again, it is valid to conclude that the steam generator repair will have no effect on this accident.

6.1.2.17 RCCA Misoperation

Again it can be stated that there are no changes in flow characteristics and insignificant change in heat extraction capability. The limiting aspect to this accident is due to neutron flux redistribution caused by RCCA movement which is clearly independent of steam generator characteristics. Further, the time period of flux redistribution is much shorter than that for RCS loop transport. It is valid to conclude that steam generator repair will have no effect on this accident.

6.1.2.18 Startup of an Inactive Loop

Since the Cycle 6 Technical Specification submittal removed reference to three loop operation, only four loop operation is currently allowed. Therefore, the impact of the repaired steam generators on this accident is not reviewed here.

6.1.2.19 CVCS Malfunction Resulting in Reduced RCS Boron Concentration

The chemical and volume control system malfunction is an RCS boron dilution caused by added unborated water by the makeup control system. Factors affecting the result of this event are the time for operator recognition and corrective action, and the maximum dilution rate as determined by the charging pump characteristics. Since the steam generator repair does not impact these factors, and since there is no change in the RCS flow characteristics and insignificant change in the heat extraction capability, the repair will have no effect on this accident.

6.1.2.20 Inadvertent Loading of a Fuel Assembly in an Improper Position

The limiting aspect to this accident is due to neutron flux redistribution effects as in RCCA misalignment. For the same reason, it is concluded that steam generator repair will have no effect on this accident.

6.1.2.21 Spectrum of Rod Ejection Accidents

This event, which involves ejection of an RCCA from the core, is a core reactivity event independent of steam generator design. Further, this transient reaches its peak condition in a time less than the RCS loop transport time. Therefore, the steam generator repair does not affect this accident.

6.1.2.22 Inadvertent Operation of ECCS That Increases RCS Inventory

Refer to Section 6.1.2.6 for discussion of Loss of External Load, which bounds the inadvertent operation of ECCS event.

6.1.2.23 CVCS Malfunction That Increases RCS Inventory

Refer to Section 6.1.2.6 for discussion of Loss of External Load, which bounds the CVCS malfunction that increases RCS inventory event.

6.1.2.24 Waste Gas System Failure

The design of the steam generators does not impact the waste gas system or accidents associated with it.

6.1.2.25 Radioactive Liquid Waste System Leak or Failure

The design of the steam generators does not impact the liquid waste system or accidents associated with it.

6.1.2.26 Radioactive Releases Due to Liquid Containing Tank Failure

The design of the steam generators does not impact tanks containing radioactive liquid or accidents associated with them.

6.1.2.27 Radiological Consequences of Fuel Handling Accident

The design of the steam generators does not impact the radiological consequences of a fuel handling accident.

6.1.2.28 Spent Fuel Cask Drop Accident

The design of the steam generators does not impact the consequences of a spent fuel cask drop accident.

6.1.2.29 Inadvertent Opening of a Pressurizer Pressure Relief Valve

Refer to Section 6.1.3.2 for discussion of the LOCA characteristics that apply to this accident.

6.1.2.30 Radiological Consequences of Failure of Small Lines Carrying Primary Coolant Outside Containment

The design of the steam generators does not impact the radiological consequences of failure of small lines carrying primary coolant outside containment.

6.1.3 Loss of Coolant Accidents

This section discusses the impact of the repaired steam generators on the large and small break LOCA analyses.

6.1.3.1 Large Break LOCA

In the event of a major RCS pipe break, the RCS depressurization causes the reactor to trip and injects borated ECCS water into the RCS at the appropriate setpoints. Reactor trip and borated water injection supplement void formation in the core and cause rapid reduction of nuclear power to a residual level corresponding to delayed fissions and fission product decay. Injection of borated water assures sufficient flooding of the core to prevent excessive fuel temperatures. At the beginning of the blowdown phase, the entire RCS contains subcooled liquid which removes heat from the core by forced convection with some fully developed nucleate boiling. During blowdown, the core heat transfer is based on local conditions with the major heat transfer mechanism being transition boiling and forced convection to steam. After the blowdown phase of the transient, during lower plenum refill, rod to rod

radiation is the only heat transfer mechanism. With the continued injection of borated water, the core refloods, preventing melting. Those repaired steam generator parameters which differ from the original steam generator parameters primarily affect the core reflooding phase of the large break LOCA transient, the phase during which the Donald C. Cook Unit 2 exhibits its calculated PCT.

Comparing the parameters of the repaired steam generators with the original steam generators, the following effects are noted:

- The lowering of the primary side pressure drop through the steam generators by approximately 4.2 psi (based on Thermal Design Flow calculations in both the repaired and original steam generators) will reduce the resistance to steam venting from the core, thus increasing the reflooding water inlet velocity. Due to the lower pressure drop (resistance) a decrease in PCT should result.

- The increase in the number of steam generator U-tubes effectively increases the primary side flow area by 5.68% through each steam generator when no tube plugging is accounted for in the original steam generators. If the 10% tube plugging assumed in the LOCA analysis to account for leaks detected and plugged prior to repair is taken into account along with 1% tube plugging in the repaired steam generators, the primary side flow area is effectively increased by 16.25%. This increase in flow area will aid in the venting of core produced steam via the break; consequently, reflooding of the core will occur earlier resulting in a lower PCT.

- The decrease in secondary side mass is of negligible impact with respect to large break LOCA.

It has been concluded that repairing the Donald C. Cook Unit 2 steam generators will result in a large break LOCA benefit; therefore, the analysis performed for the original steam generators is conservative with respect to the repaired steam generators. The current licensing basis large break LOCA analysis is bounding for the Donald C. Cook Unit 2 with the repaired steam generators.

6.1.3.2 Small Break LOCA

The steam generators serve as a heat sink during a small break LOCA when the break is incapable of removing all of the core decay heat. A small break in the RCS primary causes the system to depressurize to a pressure which remains above the steam generator secondary side pressure. The primary pressure and duration of time that the RCS primary pressure remains above the secondary pressure are governed by the rate of decay energy removal through the break and the amount of heat transferred to the steam generator secondary sides. Since the main steam line isolation valves (MSIVs) are assumed to close at once during the small break LOCA, the steam generator secondaries may pressurize until the secondary PORVs or the steam generator safety valves (Safeties) open . Mass removal from the steam generator secondary side through the PORVs or Safeties causes energy removal from the primary RCS, providing primary side pressure control. The initial steam generator secondary mass inventory and internal energy distribution will affect the secondary response to closure of the MSIVs and the opening of the PORVs or Safeties, which will feed back and affect the primary RCS.

Comparison of steam generator parameters that may affect the results of the small break LOCA analysis resulted in the following appraisal:

The decrease in secondary side overall volume and increase in the secondary voiding at 100% load (steady state operating conditions, time of break initiation) associated with the replacement steam generator will result in less efficient decay heat removal from the primary RCS in the first minutes of the transient. The initial increased voiding and decrease in total volume cause the Safeties setpoint to be reached earlier, resulting in greater mass and energy removal from the primary RCS. The opening of the Safeties and subsequent primary depressurization is later aided by the cooling obtained from the auxiliary feedwater flow. Auxiliary feedwater will be more effective in cooling the repaired steam generator because of its lower mass inventory. This will benefit system performance and counteract the less effective removal of core decay heat via the secondary side earlier in the transient. Hence, the small break LOCA analysis performed for the Donald C. Cook Unit 2 original steam generators is considered to be bounding for the operation of the Donald C. Cook Unit 2 with the repaired steam generators.

6.1.4 Steam Generator Tube Rupture

The important parameters in determining the doses following a steam generator tube rupture accident are the amount of primary to secondary break flow, the amount of steam released from the ruptured steam generator, and the partitioning of iodine. After reviewing the original and repaired steam generator specifications, it has been judged that the steam generator repair will not result in an increase in the amount of primary to secondary break

flow or the amount of steam released from the ruptured steam generator, and the iodine partitioning will not be affected. Comparing the repaired design to the original design there will be slightly less water in the steam generator secondary side at the beginning of the accident. This reduction in secondary side water volume would result in a somewhat lessened dilution of the incoming primary coolant during a steam generator tube rupture accident. This minor reduction in dilution would result in an insignificant increase in the thyroid doses; doses due to the release of noble gases are not affected. Thus it can be stated that the steam generator repair will have no adverse impact on the steam generator tube rupture transient and negligible impact on the radiological consequences of the accident.

6.2 Construction Related Evaluations

6.2.1 Handling of Heavy Loads

The purpose of this section is to evaluate the impact, if any, that the movement of heavy loads inside the Unit 2 containment building and the auxiliary building may have on the safe shutdown and decay heat removal capabilities of both Unit 1 and Unit 2 and on the ability of the spent fuel pool cooling and purification system to adequately cool the spent fuel assemblies stored there. This section provides a description of the methods that will be employed to move heavy loads in the areas discussed above. This evaluation is required by 10CFR50.59 to verify that there are no unreviewed safety questions and no required changes to the Technical Specifications. 1

Section 3 provides a discussion and illustrations for both the removal process and movement pathways for the steam generator upper and lower assemblies from the Unit 2 containment to the auxiliary building crane bay. Other heavy loads

associated with the Repair Project (i.e., concrete sections of the steam generator doghouses, lifting beams, pipe sections and upending devices) will be moved along this same pathway.

6.2.1.1 Handling of Heavy Loads in the Unit 2 Containment Building

As discussed in Section 3.2, all fuel will be removed from the Unit 2 reactor vessel prior to the start of repair work. Since there will be no fuel in the Unit 2 core, accidents associated with movement of heavy loads, such as load drops, which could affect safe shutdown and decay heat removal equipment inside the Unit 2 containment would be an economic consequence rather than a safety concern and would not result in an unsafe condition. In addition, the travel path of heavy loads inside the Unit 2 containment will not interact with the fuel transfer canal. Therefore, the integrity of the transport tube and drainage of the spent fuel pool will not be a concern. 1

Based on the above we believe that the movement of heavy loads inside the Unit 2 containment building will not constitute an unreviewed safety question as defined in 10CFR50.59 nor adversely affect the health and safety of the public.

6.2.1.2 Handling of Heavy Loads in the Auxiliary Building

As discussed in Revision 0 to the Steam Generator Repair Report, a number of options have been evaluated to move the heavy loads associated with the Repair Project through the auxiliary building. To accomplish this task for heavy loads, excluding the Steam Generator lower assemblies, the Indiana & Michigan Electric Company has decided to procure a 150 ton capacity overhead

bridge crane that meets the single-failure-proof criteria of NUREG-0554, "Single-Failure-Proof Cranes for Nuclear Power Plants" and the applicable sections of NUREG-0612, "Control of Heavy Loads at Nuclear Power Plants." To show how the guidelines and criteria of NUREG-0554 and NUREG-0612 are being implemented, the information requested by Attachment 1 of Enclosure 3 to the NRC's letter, dated December 22, 1980 is provided in Supplement 1 to this Repair Report.

To handle the steam generator lower assemblies the new auxiliary building crane and the existing auxiliary building crane, which is in the process of being upgraded to single-failure-proof, will be operated in tandem as a single-failure-proof lifting device to provide the required lifting capacity. The rated capacity of the two cranes operating in tandem will be 300 tons.

Based on the fact that single-failure-proof cranes will be used to move heavy loads through the auxiliary building, it can be concluded that handling of heavy loads in the auxiliary building will be accomplished without affecting equipment important to the safe operation of Unit 1 or the spent fuel pool and associated cooling and purification equipment. 1

Therefore, we believe the movement of heavy loads in the auxiliary building will not constitute an unreviewed safety question as defined in 10CFR50.59 nor adversely affect the health and safety of the public.

THIS PAGE LEFT INTENTIONALLY BLANK

1

THIS PAGE LEFT INTENTIONALLY BLANK

1

1

6.2.1.3 Transport of the Steam Generator Lower Assembly

This subsection presents the preliminary safety evaluation concerning the transport of the steam generator outside the auxiliary building.

- Background Information

  Before transporting the steam generator lower assemblies outside the auxiliary building the pathways will be examined. The potential for interaction with safety-related components will be evaluated. Sufficient administrative control and/or temporary safety barriers will be in place in order to prevent the potential interaction with equipment important to safety. The following is a list of some of the equipment that is located in the proximity of the load path:

1. Refueling Water Storage Tank
2. Condensate Storage Tank
3. Primary Water Storage Tank
4. Start-up Transformer
5. Overhead 345kv cables
6. Buried diesel oil storage tank

Some of the variables involved in handling heavy loads in the proximity of the above-listed equipment are:

1. The grade of the route
2. Maximum traveling speed
3. Soil bearing capacity
4. Protection of underground utilities
5. Transporter structure failure/overturn
6. Runaway transporter

The equipment and the design variables listed above (not an all-inclusive list) will be evaluated, and a safe pathway will be finalized for moving the steam generator lower assemblies from auxiliary building to the temporary on-site steam generator storage facility. The potential interaction with Donald C. Cook Unit 1 will be evaluated, and necessary modifications and/or administrative controls will be implemented to address any interface problems. 1

NUREG-0612 does not cover the requirements for transporting heavy loads outside the auxiliary building. However, potential interaction with other safety-related systems will be evaluated as noted above. It is believed that the final safety evaluation will conclude that the transport of heavy loads outside the auxiliary building will not involve an unreviewed safety question as defined in 10 CFR 50.59.

6.2.1.4 Conclusions

Based on the preliminary safety evaluation, it is anticipated that the steam generator upper and lower assembly transport program, including the other construction-related heavy loads, will have no significant affect on the operating unit and that the repair activities can be completed in a safe manner. Ongoing evaluations, which are being conducted while detailed engineering is being completed, are not expected to alter this basic conclusion, that is, that the entire process can be performed without constituting an unreviewed safety question as defined in 10 CFR 50.59.

6.2.2 Shared System Analysis

Walkdowns and reviews of the load path were performed to identify potential interactions with equipment considered important to safety in the operating unit. These walkdowns and reviews determined that the Steam Generator Repair Project should not require movement or alteration of any equipment important to safety for the operating unit.

An accident involving the dropping or tipping of the steam generators during the removal process is considered highly unlikely because of the strict controls which will be placed on the movement process. In the unlikely event that an accident involving the steam generators does occur, our reviews have determined that the only potential interactions with shared systems of significant concern involve the spent fuel pool cooling equipment located in the vicinity of the load path. However, the slight potential for damaging spent fuel pool cooling equipment is not considered to represent an unreviewed safety question as defined in 10 CFR 50:59. This conclusion is based on the various malfunction analyses presented in Chapter 9.4 of the FSAR. These analyses conclude that it is not possible for a piping failure to cause drainage of the pool below the top of the stored fuel elements. In the event all cooling for the pool is lost, it would take a minimum of 8 hours for the temperature in the pool to reach 180°F (which still allows 32°F margin to boiling). Thus, sufficient time exists to either restore cooling capability or replace water which could be lost through boiloff to prevent damage to the stored fuel elements.

6.3 Fire Protection Evaluation

The effect of a Unit 2 construction fire was evaluated by assuming that the equipment in the Unit 2 containment and Auxiliary Building fire areas directly affected by construction activities would be damaged. Loss of all equipment in the combined fire areas would not cause loss of Unit 1 safe shutdown capability. 2

The fixed combustible loading of these fire areas will not be significantly affected by construction activities. Transient combustible loading in the construction areas will increase beyond the levels assessed in the Fire Hazards Analysis for normal conditions.

The Safe Shutdown Capability Assessment exemption requests and fire barrier evaluations for the affected fire areas were reviewed to assess the impact of increased fire loadings and fire hazards due to construction activities. Construction activities were determined not to impact the validity of these evaluations with respect to Unit 1 shutdown capability provided there is no continuity of combustibles, such as wooden temporary stairs and trash chutes, between the Crane Bay and the 650' elevation of the Auxiliary Building which could promote rapid fire spread. Temporary stairs and other structures connecting these elevations will be made primarily of non-combustible materials or compensatory measures will be provided. 2

The repair contractor will operate under existing plant procedures and administrative controls with the exception of areas turned over to his direct control for construction, access, and laydown. The repair contractor will prepare a fire protection program to govern work activities in the areas under his control which will be designed to minimize construction fire hazards.

6.4 Analysis of Significant Hazards Consideration

This section presents, pursuant to 10 CFR 50.91, the analysis which sets forth the determination that the Steam Generator Repair Project does not involve any Significant Hazard Consideration as defined by 10 CFR 50.92.

In addition to the appraisal on the significant hazards issue using the standards in 10 CFR 50.92, which are presented below, it is important to note that the Steam Generator Repair Project proposed by I&MECo involves practices that have been successfully implemented at two other commercial nuclear power plants, namely, the steam generator repairs completed by the Virginia Electric

and Power Company for the Surry Power Station and by the Wisconsin Electric Power Company for the Point Beach Nuclear Plant, Unit 1. The repair project is also similar to the repair projects conducted by the Carolina Power and Light Company for the H. B. Robinson Steam Electric Plant, Unit No. 2 and by the Florida Power and Light Company for the Turkey Point Plant Units 3 and 4.

6.4.1 Criterion 1

Involve a significant increase in the probability or consequences of an accident.

The Steam Generator Repair Project does not affect the probability or consequence of an accident. The probability or consequence of an accident is determined by the design and operation of plant systems. The repair project involves the replacement of the Donald C. Cook Unit 2 Steam Generator Lower Assemblies. Due to the almost identical design of the replacement lower assemblies the repair of the Donald C. Cook Unit 2 steam generators is a replacement in kind and will not change the design or operation of plant systems. Thus, this repair does not involve a significant increase in the probability or consequences of an accident previously evaluated.

6.4.2 Criterion 2

Create the possibility of a new or different kind of accident from any accident previously evaluated.

The possibility of a new or different kind of accident is not created by the repair to the Donald C. Cook Unit 2 steam generators. All components and piping will be reinstalled to meet the original design and configurations and installation requirements. Therefore, because there will be no changes to the plant and plant systems design no new or different accidents are created.

6.4.3 Criterion 3

Involve a significant reduction in a margin of safety.

Section 2.2 of this report illustrates that, although certain design enhancements have been made, the steam generator repair will result in very little change to the original operating parameters. Therefore, the impact on the accident analysis, as shown in Section 6.1 will be insignificant and there will be no significant resolution in the margin of safety.

SECTION 7.0 - ENVIRONMENTAL EVALUATION

7.1 Purpose of the Environmental Evaluation

The purpose of this Environmental Report is to show that the proposed repair program will not significantly affect the quality of the human environment, that there are no preferable alternatives to the proposed action and that any impacts from the repair program are outweighed by its benefits.

7.2 The Plant and Environmental Interfaces

7.2.1 Geography and Demography

7.2.1.1 Plant Location and Description

The Donald C. Cook Nuclear Plant is located in Lake Township, Berrien County, Michigan approximately 11 miles south-southwest of the center of Benton Harbor. The plant site consist of approximately 650 acres situated along the eastern shore of Lake Michigan. A more detailed description of the plant site area can be found in the "Final Environmental Statement Related to Operation of Donald C. Cook Nuclear Plant Units 1 and 2" (FES), issued by the United States Atomic Energy Commission in August 1973.

7.2.1.2 Demography and Land Use

The population of Berrien County has increased approximately 16% since the issuance of the 1973 FES. At the time the 1973 FES was issued there were 7,033 individuals living within four miles of the plant. Using the 1980 census as data, the 1984 Time Evacuation Study for the Donald C. Cook Plant found 8,145 individuals living within four miles of the station.

Other land uses examined as part of the Regional Demography and Land Use section of the 1973 FES included; Industry and Industrial Population, Agricultural Production, Transportation, Schools and Hospitals, and Parks and Open Space. A review of this information concluded that no significant changes have occurred in land use in Berrien County in the last ten years.

7.2.2 Regional Historic, Archeological, Architectural, Scenic, Cultural, and Natural Features

A list of historic landmarks in Berrien County, Michigan can be found in Table II.11 of the 1973 FES. There are two national historic sites in Berrien County, Michigan but both are over 10 miles from the Plant.

Previous construction excavations on the plant site have not unearthed any finds of archaeological significance. These previous excavations include construction of the plant, construction of access roads, and the construction of various support facilities built since the plant began operation.

7.2.3 Hydrology

7.2.3.1 Ground Water

The Donald C. Cook Nuclear Plant is sited within a groundwater basin bounded by Lake Michigan to the west and Covert Ridge (an impermeable moraine) to the east. The aquifer is unconfined and is composed of beach sands overlain by sand dunes and underlain by impermeable lacustrine clays. The absorption pond has modified groundwater flow

directions that existed when the 1973 FES was issued. Discharge to the adsorption pond has created a groundwater mound which superimposed a radial flow pattern on the regional flow towards Lake Michigan.

7.2.3.2 Surface Water

A detailed discussion of the surface water characteristics associated with the plant site can be found in Chapter II, Section E of the FES. The most significant surface water resource associated with the plant site is Lake Michigan. There have been no significant changes to the surface water since the issuance of the FES.

7.2.4 Geology

There have been no significant changes to the geology and soils of the plant site as identified in the FES.

7.2.5 Ecology

7.2.5.1 Aquatic Ecology

A detailed discussion of the aquatic ecology associated with the plant site can be found in Chapter II, Section F of the FES. Changes that have occurred since the issuance of the FES can be found in the Donald C. Cook Environmental Operating Report, 1982 and in the Benton Harbor Power Plant Limnological Studies.

7.2.5.2 Terrestrial Ecology

As stated in the FES the major terrestrial environments near the site are the beaches, blowouts along the lakeshore and high dunes. Because these areas have remained undisturbed by the operation of the plant there is no reason to expect any significant changes in flora and fauna surrounding the plant site as identified in the FES.

7.2.6 Noise

Noise levels generated by the activities associated with the repair project are not expected to exceed those levels that occurred during the construction of the plant. Most of the noise associated with the repair project will come from the heavy machinery that will be utilized at various times throughout the repair project.

7.3 Non-Radiological Environmental Impacts

7.3.1 Geography and Demography

The proposed steam generator repair project will have little or no impact on the geography, demography and land use of the area surrounding the plant site. Approximately 500-600 workers will be required during the Steam Generator Repair Project many of which will be hired from the local populace. The need for additional housing as a result of the Steam Generator Repair Project will be minimal. No other changes in the land uses of the area surrounding the plant site are anticipated.

7.3.2 Regional Historic, Archeological, Architectural, Scenic, Cultural, and Natural Features

No known historic, archeological, architectural or natural resources exist on the portion of the plant site affected by the Steam Generator Repair Project.

The access road used during plant construction parallels the beach and will be used for light construction traffic during the repair project. This traffic may pose an aesthetic impact to individual using the beach for recreation, however, this is a temporary impact that will end with the completion of the repair project.

7.3.3 Hydrology

7.3.3.1 Ground Water

No impact to the site ground water is expected to occur as a result of the Steam Generator Repair Project.

7.3.3.2 Surface Water

No impact to the surface water associated with the plant site is expected to occur as a result of the construction phase of the Steam Generator Repair Project. In addition, the repaired steam generators will have essentially the same amount of blowdown discharged during operation as do the original steam generators and it is anticipated that there will be no changes to the plant NPDES permit. 2

7.3.4 Geology

There will be no geological impacts as the result of the Steam Generator Repair Project. Excavation, grading, and compaction will occur in limited amounts and these actions will occur in areas previously disturbed (i.e. parking lots, roadways, and laydown areas).

7.3.5 Ecology

7.3.5.1 Terrestrial Ecology

There will be no impacts to the terrestrial ecology surrounding the plant site for the following reasons:

- No habitat will be removed as a result of the Steam Generator Repair Project since all activities related to the repair project will occur on previously disturbed area (i.e. existing access roads, parking lots, laydown area.

- Since the area affected is already subjected to the intrusion of man and machinery (i.e. security patrols, existing security lights, and normal plant operations), animals residing in the areas adjacent to the construction related activities should not be disturbed by the increased activity.

7.3.5.2 Aquatic Ecology

As discussed in Section 7.3.3.2 neither the construction phase of the Steam Generator Repair Program or the operation of the repaired steam generators will impact the aquatic ecology associated with the plant site. 2

7.3.6 Noise

Noise levels generated by construction equipment could be considered a nuisance by individuals using the adjacent beach and lake area. However, this is only a temporary impact that will end at the completion of the project. In addition, appropriate measures will be taken to reduce the noise levels (see Section 7.9).

7.4 Radiological Environmental Effects

This section discusses the impacts on man that can be attributed to the release of radioactive materials and to direct radiation from the Steam Generator Repair Project. Estimates of the radiological impact on man via the most significant exposure pathways are provided. This section is divided into two subsections; 1) Occupational Exposure, and; 2) Public Exposure.

7.4.1 Occupational Exposure

The preliminary man-rem estimate for the project is 1733 manrem as shown in Section 3.8.4. Although this estimate represents a significant increase in manrem expenditure over the normal operational expenditures (see Table 7.4-1), it compares favorably with similar steam generator replacement projects (see Table 7.4-2). This estimate (1733 man-rem) will be revised after a general contract has been awarded and additional information on man-hours and job methodology is available.

TABLE 7.4-1
DONALD C. COOK PER UNIT AVERAGE ANNUAL MAN-REM EXPENDITURES

YEAR	Exposure (Man-rem)
1980	246
1981	327
1982	321
1983	283
1984	344
1985	448
1986	336

2

Table 7.4-2
STEAM GENERATOR MAN-REM EXPENDITURE COMPARISON

Unit	Replacement Method	Actual Exposure Total (Man-rem)	Actual Exposure Per S/G (Man-rem)
Surry 2	Pipe Cut	2141	714
Surry 1	Pipe Cut	1759	586
Turkey Point 3	Channel Head	2152	717
Turkey Point 4	Channel Head	1305	435
H.B. Robinson	Channel Head	1206	402
Cook 2	Pipe Cut	1733	433 (1)

Note: (1) Estimated

7.4.2 Public Exposure

7.4.2.1 Airborne Releases

Airborne effluent releases to the environment resulting from this type of repair project have been estimated as follows:

The primary airborne releases of radionuclides during steam generator removal are due to 1) cutting the reactor coolant piping and 2) cutting other system piping. Containment envelopes are assumed to be used when cutting the reactor coolant piping. These containment envelopes have a HEPA filter in their ventilation system and are exhausted through the plant ventilation system. For other cutting operations, no containment envelopes are assumed. Segmenting the steam generator at the transition cone and the internal wrapper does not contribute significantly to airborne releases because the contamination levels on the secondary side of the generator are several orders of magnitude below those on the primary side.

Airborne releases were calculated as follows:

Cutting the Reactor Coolant Piping

- Four cuts (per steam generator) with a 0.95-cm kerf are made in 86-cm-ID pipe.
- 4 x Pi x .95 x 86 = 1027 cm^2 of material vaporized.
- The contamination level on the interior of the piping is 86 uCi/cm^2 (see Table 7.4-3).
- 1027 cm^2 x 86 uCi/cm^2 = 8.9 x 10^4 uCi released.
- With a decontamination factor of 10^4 (two HEPA filters preceded by demisters), release to the atmosphere is 8.9 uCi per steam generator.

Cutting Other System Piping

- All other pipe cuts (feedwater, main steam, instrumentation, etc.) are expected to be cut by mechanical methods which will not vaporize the contamination.

Cutting the Steam Generator Shell

- The girth cut on the steam generator shell is expected to be cut by a thermal method and will have a diameter of 445 cm (175 inches) and a kerf of .95 cm. Due to the relatively low contamination levels (i.e. 10^{-3} uc/cm^2), this will not contribute appreciably to the airborne contamination levels.

Assuming four steam generators per reactor unit, the total particulate release for cutting operations would be 36 uCi. The radionuclide distribution would be similar to that listed in Table 7.4-4.

In addition to the particulate activity associated with cutting the reactor coolant system piping and steam generators, the airborne releases associated with a refueling outage and normal outage maintenance are anticipated. The actual airborne releases measured during the steam generator repair at Surry Unit 2 are provided (Table 7.4-5) and compared with the anticipated airborne releases for the Donald C. Cook Unit 2 Steam Generator Repair Project (Table 7.4-6).

- Environmental Consequences of Airborne Releases

The critical organ and whole body doses for an adult at the worst site boundary location resulting from the estimated airborne effluent

releases during the repair effort were evaluated using NUREG-CR-1595 methodology, an annual average ground level release atmospheric dispersion factor of 1.5×10^{-6} sec/m^3, and the dose models and dose factors given in Regulatory Guide 1.109. The critical organ (lung) and the whole body doses for an adult at the site boundary are estimated to be 3.6×10^{-5} mrem and 1.0×10^{-7} mrem respectively during the repair effort for the Donald C. Cook Plant Unit 2.

o Comparison with Observed Gaseous Releases and Estimated Doses During Normal Operation

The estimated releases of radioactive airborne effluents per unit during the repair effort are found to be much smaller than the observed gaseous effluent releases per unit for the Donald C. Cook Plant during the year 1985. Observed gaseous effluent releases during 1985 are compared with estimated releases during the repair effort in Table 7.4-6.

The critical organ (thyroid) and whole body doses to an adult at the nearest site boundary location due to the release of gaseous effluents for the year 1985 were calculated to be 0.030 and 0.036 mrem/unit, respectively. The estimated critical organ (lung) dose for the repair effort is less than 0.12 percent of the calculated critical organ dose during 1985. The estimated whole body dose for the repair effort is less than 0.0003 percent of the calculated whole body dose during 1985.

7.4.2.2 Liquid Effluent Releases

Liquid effluent releases resulting from the repair effort were estimated using the following parameters and assumptions:

- The reactor coolant system is drained 15 days after reactor shutdown and the reactor coolant is subsequently discharged (about 30 days after shutdown) after processing through a mixed bed demineralizer and through the boric acid recovery evaporator as required. Laundry waste water is discharged without processing.
- The decontamination factors for processing equipment are listed below and are in accordance with NRC NUREG-0017:

Processing Equipment	Decontamination Factors		
	Iodines	Cs and Rb	Others
Mixed bed demineralizer	10	2	10
Boric acid recovery evaporator	100	1,000	1,000

- Reactor coolant concentrations are given in Table 7.4-7 and are taken from NRC NUREG-0017. These values are conservative since the Donald C. Cook Unit 2 reactor coolant concentrations have been generally much lower.

- The mass of the reactor coolant discharged after processing is 5.5 x 10^5 lbs.

- Laundry releases were estimated using the expected specific activities in the laundry waste water given in Table 7.4-8 and assuming approximately 26,000 gal/day of laundry waste water will be discharged for approximately 365 days during the repair effort for one unit. (It is expected, however, that on the average only 10,000 gal/day of laundry waste water will be discharged during this period.)

The total radioactive liquid effluent release based on the above assumptions is estimated to be approximately 0.68 Ci/unit (chiefly laundry waste), excluding tritium and dissolved gases, and approximately 250 Ci/unit of tritium. Details of this release by isotope are given in Tables 7.4-9 and 7.4-10.

- Comparison with Observed Radioactive Liquid Releases During Normal Operation

Estimated radioactive liquid releases during the repair effort are compared with the observed liquid waste releases during the year 1985 in Table 7.4-11. The estimated total radioactive liquid release per unit (excluding tritium and dissolved gases) during the repair effort is seen to be about 60 percent of the observed total liquid waste release per unit (excluding tritium and dissolved gases) during 1985. The estimated tritium release per unit during the replacement effort is about 44 percent of the observed tritium release per unit during 1985.

TABLE 7.4-3

GROSS CONTAMINATION LEVELS BY LOCATION IN PIPING AND STEAM GENERATOR

Component	Contamination Level (uCi/cm^2)
Reactor coolant piping	86
Other piping	6.2
Steam generator	
Primary side	
tubes	8.2
tubesheet	140
channel head	68
partition plate	140
Secondary side	$\sim 10^{-3}$

TABLE 7.4-4

DONALD C. COOK NUCLEAR PLANT UNIT 2
ESTIMATED STEAM GENERATOR CURIE CONTENT

Isotope	Percent of Total	Estimated Curies
Co-60	37	210
Co-58	27	153
Cr-51	21	119
Nb-95	7.0	40
Zr-95	2.4	14
Mn-54	1.4	8
Fe-59	1.2	7
Others*	3.0	17
Total	100	568

*Other isotopes identified include: Co-57, Zn-65, Ru-103, Ru-106, Sn-113, Sb-125, and Ce-144.

TABLE 7.4-5

EFFLUENT RELEASE ISOTOPIC DISTRIBUTORS
STEAM GENERATOR REPLACEMENT PROJECT
SURRY POWER STATION - UNIT NO. 2

GASEOUS EFFLUENTS

Isotope	Total Activity Released (Ci)	Percent of Total Activity
Noble Gases		
Xe-133	99.4	98
Xe-135	1.9	2
Total	101.3	100
Iodines		
I-131	6.88×10^{-6}	100
Total	6.88×10^{-6}	100
Particulates		
Co-60	7.00×10^{-4}	53
Co-58	3.01×10^{-4}	23
Cs-137	2.19×10^{-4}	16
Cs-134	4.94×10^{-5}	4
Cr-51	4.51×10^{-5}	3
Mn-54	8.37×10^{-6}	1
Total	1.32×10^{-3}	100

TABLE 7.4-6

COMPARISON OF GASEOUS EFFLUENT RELEASES
FROM DONALD C. COOK NUCLEAR PLANT

Radioactive Species	Average 1985 Release/Unit (Ci)	Estimated Release During the SG Repair Effort (Ci)
Noble gases	2.47×10^{3}	Negligible
Iodines	6.46×10^{-2}	6.9×10^{-6}(1)
Particulates	3.72×10^{-2}	2.92×10^{-4}
Tritium	10.8	Negligible

2

Notes

(1) Estimated from Surry Unit 2 Data.

TABLE 7.4-7

RADIONUCLIDE CONCENTRATIONS IN REACTOR COOLANT

Radio-nuclide	Half-life, days	Concentration uCi/g	Radio-nuclide	Half-life, days	Concentration uCi/g
H-3	4.51E+03	1.0E+00	Ru-106	3.68E+02	9.0E-02
N-16	8.22E-05	4.0E+01	Ag-110m	2.53E+02	1.3E-03
Na-24	6.25E-01	4.7E-02	Te-129m	3.36E+01	1.9E-04
Cr-51	2.77E+01	3.1E-03	Te-129	4.83E-02	2.4E-02
Mn-54	3.13E+02	1.6E-03	Te-131m	1.25E+00	1.5E-03
Fe-55	9.86E+02	1.2E-03	Te-131	1.74E-02	7.7E-03
Fe-59	4.46E+01	3.0E-04	Te-132	3.26E+00	1.7E-03
Co-58	7.09E+01	4.6E-03	I-131	8.04E+00	4.5E-02
Co-60	1.93E+03	5.3E-04	I-132	9.50E-02	2.1E-01
Zn-65	2.44E+02	5.1E-04	I-133	8.67E-01	1.4E-01
Br-84	2.21E-02	1.6E-02	I-134	3.65E-02	3.4E-01
Rb-88	1.24E-02	1.9E-01	I-135	2.75E-01	2.6E-01
Sr-89	5.06E+01	1.4E-04	Cs-134	7.53E+02	7.1E-03
Sr-90	1.04E+04	1.2E-05	Cs-136	1.31E+01	8.7E-04
Sr-91	3.96E-01	9.6E-04	Cs-137	1.10E+04	9.4E-03
Y-91m	3.40E-02	4.6E-04	Ba-140	1.28E+01	1.3E-02
Y-91	5.81E+01	5.2E-06	La-140	1.68E+00	2.5E-02
Y-93	4.21E-01	4.2E-03	Ce-141	3.25E+01	1.5E-04
Zr-95	6.40E+01	3.9E-04	Ce-143	1.38E+00	2.8E-03
Nb-95	3.52E+01	2.8E-04	Ce-144	2.84E+02	3.9E-03
Mo-99	2.75E+00	6.4E-03	W-187	1.00E+00	2.5E-03
Tc-99m	2.51E-01	4.7E-03	Np-239	2.35E+00	2.2E-03
Ru-203	3.93E+01	7.5E-03			

TABLE 7.4-8

ESTIMATED SPECIFIC ACTIVITIES OF LAUNDRY WASTE WATER

Radionuclide	Specific Activity (1) uCi/cc
Mn-54	7.3×10^{-7}
Co-58	6.7×10^{-6}
Co-60	5.0×10^{-6}
I-131	1.1×10^{-7}
Cs-134	6.5×10^{-7}
Cs-137	5.4×10^{-6}

NOTE

(1) Time averaged specific activity during a period of 365 days.

TABLE 7.4-9

ESTIMATED RADIONUCLIDE RELEASES DUE TO DISCHARGE OF REACTOR COOLANT WATER [a]

Radionuclide	Release, Curies
H-3	1.5E+02
Cr-51	3.7E-05
Mn-54	3.7E-05
Fe-55	2.9E-05
Fe-59	4.7E-06
Co-58	8.6E-05
Co-60	1.3E-05
Zn-65	1.2E-05
Sr-89	2.3E-06
Sr-90	3.0E-07
Y-91	9.1E-08
Zr-95	7.1E-06
Nb-95	3.9E-06
Mo-99	8.3E-08
Ru-103	1.1E-04
Ru-106	2.1E-03
Ag-110m	3.0E-05
Te-129m	2.6E-06
Te-131m	2.3E-12
Te-132	7.2E-08
I-131	8.5E-04
I-133	1.3E-12
Cs-134	8.6E-04
Cs-136	2.2E-05
Cs-137	1.2E-03

TABLE 7.4-9 (continued)

ESTIMATED RADIONUCLIDE RELEASES DUE TO DISCHARGE OF REACTOR COOLANT WATER[a]

Radionuclide	Release, Curies
Ba-140	6.4E-05
La-140	2.6E-09
Ce-141	2.0E-06
Ce-143	2.1E-11
Ce-144	9.1E-05
Np-239	7.9E-09
Total	2.5E+02 Including Tritium
	5.6E-03 Excluding Tritium

(a) For a power plant with four steam generators.

TABLE 7.4-10

ESTIMATED RADIOACTIVE LIQUID EFFLUENT RELEASES
DURING THE DONALD C. COOK UNIT 2 STEAM GENERATOR REPAIR PROJECT

Radionuclide	Release/Unit (Ci)
Mn-54	1.3×10^{-2}
Co-58	1.2×10^{-1}
Co-60	9.0×10^{-2}
I-131	2.8×10^{-3}
Cs-134	1.3×10^{-2}
Cs-137	9.8×10^{-2}
Total	3.4×10^{-1}
Tritium	250

TABLE 7.4-11

COMPARISON OF RADIOACTIVE LIQUID EFFLUENT RELEASES

Isotope	Average 1985 Release/Unit (Ci)	Estimated Release During the S.G. Repair Effort[1] (Ci)
Total (excluding tritium and dissolved gases)	1.13	0.68
Tritium	568	250

(1) The total releases excluding tritium, estimated for steam generator repair activities, conservatively assumes no processing of laundry wastes prior to release. It is expected that these wastes will be processed in the plant radioactive waste processing system. Such processing would reduce the estimated releases by at least an order of magnitude.

7.5 Environmental Effects of Accidents

This section discusses the effects of postulated accidents, that could occur as the result of the replacement of the steam generator lower assemblies, on the environment. Because the design of the plant and plant operating parameters that affect accident analyses will not change as a result of the steam generator repair project the assessment of the environmental impacts of postulated accidents presented in the August 1973 FES will be unchanged and remain valid.

7.5.1 Steam Generator Lower Assembly Drop

The steam generator lower assembly, after having been secured, can undergo a hypothetical accidental drop during removal and transport to the storage building. If such a drop should occur outside containment, the welded plate over the primary side might be breached. To assess the radiological consequences of such an accident, a number of conservative assumptions were made. The assumptions are that ten percent of the solid radioactive corrosion products contained within the steam generator are released following impact (56.8 curies), and that of this amount, one percent consists of particulates of diameter less than one micron which become airborne. Although the distance from containment to the nearest site perimeter is 1982 feet (604 meters) and from the steam generator storage building to the nearest site perimeter if 1500 feet (457 meters), the nearest point from the steam generator transport road to the site perimeter is 600 feet (183 meters). To remain conservative, this shortest distance is used in the analysis. The atmospheric dispersion factor at this distance (183 meters) is calculated to be 3.94 $\times 10^{-3}$ sec/m^3.

Using the above assumptions, the resulting maximum radiological consequence to a receptor at the site perimeter, with minimum distance from the postulated drop accident, would be 184 millirem to the lung. This is a very small fraction of the guideline lung dose limit inferred from ICRP-26 and the 10 CFR part 20 guideline of 500 mrem. A similar drop occurring inside containment would result in a substantially lower dose because of the very circuitous path to the environment.

7.5.2 Cutting of the Reactor Coolant Piping

For this postulated cutting accident, total vaporization of the radioactive corrosion products in the kerf area, some 8.9×10^4 microcuries, is conservatively assumed to be released to the environment without benefit of filtration. Applying the short term site boundary atmospheric dispersion factor of 3.15×10^{-4} sec/m^3, the lung dose is calculated to be 2.3 millirem.

7.6 Economic and Social Effects

7.6.1 Costs

7.6.1.1 Economic Costs

It is estimated that the repair of the four Donald C. Cook Unit 2 steam generators in the manner prescribed in Section 3 will require a total capital expenditure of $161,860,000. This cost includes labor, equipment, and other charges such as overhead, contingency funds, escalation, and allowance for funds used during construction.

The Steam Generator Repair Project is expected to last 52 weeks. Typical outage activities, which usually require 13 weeks to perform, will take place in series with the repair project. Therefore, the portion of the total outage time, which can be attributed solely to the repair project is 39 weeks.

The differential replacement power cost for this 39 week outage is expected to be $62,656,000 (current dollars). This dollar amount reflects the differential fuel cost derived by subtracting $9.92 per MWh cost of energy produced by Donald C. Cook Unit 2 from the average $20.79 per MWh cost of energy from other available sources. It should be noted that the total differential replacement power costs was calculated assuming Donald C. Cook Unit 2 could operate at 80% of its design rating of 1100 MWe throughout the repair project.

Based on the above figures, the total cost of the Steam Generator Repair Project is projected to be $224,516,000 (current dollars). This figure is the sum of the capital expenditure and the replacement power cost.

7.6.1.2 Social Costs

The social costs associated with the Steam Generator Repair Project are not expected to be different than those associated with a normal surveillance outage (i.e. increased noise, increased traffic congestion, and increased load on local sewage treatment facilities and water supplies). However, each of these social costs are temporary and should last no longer than one year.

7.6.2 Benefits

7.6.2.1 Economic Benefits

Without Steam Generator Repair, Donald C. Cook Unit 2 cannot continue unrestricted operation. Currently, reactor power is limited to 80 percent to reduce operating temperature and heat flux; forced unit shutdowns to find and plug defective tubes are likely to occur in the future. The annual cost of this restriction, taking into account only fuel and anticipated additional steam generator maintenance costs, is about $27.5 million in 1986 dollars. Additionally, the potential loss of sales to non-system companies is conservatively estimated at $7.5 million on an annual basis.

An economic evaluation for a 20 year period shows the conservative $35 million annual cost associated with the power restriction and periodic tube plugging to be more costly, by more than $100 million on a present worth basis, than the proposed steam generator repair project.

7.6.2.2 Social Benefits

The social benefits associated with the repair project include increased number of jobs and subsequent increased flow of money into the local economy. This social benefit outweighs the temporary social costs associated with the repair project.

7.7 Alternatives to the Proposed Action

This section discusses the alternatives to the proposed replacement of the steam generator lower assemblies that were considered. The alternative actions considered were retubing the steam generators in

place, sleeving the steam generators, no change to operation, and shutting down Donald C. Cook Unit 2 and relying on alternative power supplies.

7.7.1 Alternative 1: Retubing the Steam Generators in Place

Both Westinghouse and Canadian Deuterium Uranium have accomplished in-place retubing of nuclear steam generators, although neither has conducted this repair in a radioactive environment. Because the feasibility of this technique has not been demonstrated at an operating nuclear plant, retubing was rejected as a viable repair technique. No economic evaluation was conducted for this alternative.

7.7.2 Alternative 2: Sleeving the Steam Generators

Until August of 1985, sleeving was being considered as a viable repair technique for the Donald C. Cook Unit 2 steam generators. As long as intergranular corrosion is confined to the tubesheet region, tubes can be repaired by sleeving. However, sleeving is generally restricted to relatively short straight sections of steam generator tubes. Therefore, when intergranular corrosion was discovered at the tube support plate intersections in August of 1985 sleeving was rejected as viable repair technique. Sleeving at multiple elevations is not a practical or economic alternative. Also, sleeving would not provide a permanent fix but would only delay the need for repair of the lower assemblies.

7.7.3 Alternative 3: No Change to Operation

Another alternative to repairing the steam generators by replacing the steam generator lower assemblies is to continue operations at reduced power. This restriction of operation at 80% reactor power was initiated early in 1986.

Although it is unlikely, for purposes of economic justification, it was assumed that Donald C. Cook Unit 2 could continue to operate at 80% reactor power for the next 20 years. It was assumed that this would require unit shutdowns to find and plug defective tubes every six months. The annual cost of this restriction, taking into account only fuel and additional tube inspection costs, is about $27.5 million in 1986 dollars. In addition, the potential loss of sales to non-system companies is conservatively estimated at $7.5 million on an annual basis. For the assumed 20 year period, the annual cost associated with the power restriction and additional steam generator maintenance has a present worth of over $300 million. This alternative is clearly uneconomical when compared with the cost of the proposed repair.

7.7.4 Alternative 4: Shutting Down Donald C. Cook Unit 2 and Relying on Alternative Power Supplies

The last alternative examined was the shutting down of Donald C. Cook Unit 2 and relying on alternative power supplies. It was assumed for

this alternative that D. C. Cook Unit 2 is retired in 1990, the projected end date for the repair outage. Over the twenty year time period in question (1990-2009), it is estimated that it would cost the American Electric Power System at least an additional $2.2 billion to $3.4 billion, in 1986 dollars, to replace D. C. Cook Unit 2 capacity and projected generation. That cost includes the capital cost of the new capacity and the additional operation and maintenance and fuel cost associated with the replacement energy.

In carrying out the analysis it was assumed that a 1300 MW coal-fired generating unit, operating at 65 percent capacity factor, would be an equivalent replacement for the "loss" of D. C. Cook Unit 2. Capital cost of that unit was assumed to be between 1378$/kW and 2091$/kW (1986 dollars). The most up-to-date information regarding the energy cost, and operation and maintenance expense of a new coal-fired unit and D. C. Cook Unit 2 was used to estimate the additional energy cost. Annual escalation rates of 4 percent and 6 percent were used for years 1986-1989 and 1990-2009. Annual rate of return of 12.6 percent and annual investment carrying charge of 20.46 percent were also used in the analysis.

7.7.5 Alternate Methods of Disposal of the Steam Generator Lower Assemblies

7.7.5.1 Introduction

The ultimate disposal of the Steam Generator Lower Assembly is a separable issue from the Steam Generator Repair Project and will therefore be evaluated separately.

The steam generator lower assemblies to be removed represent the largest source of radioactive material to be disposed of during the project.

7.7.5.2 Objectives

The objectives of the disposal operations are:

- To dispose of the steam generator lower assemblies safely and economically.
- To provide a method of disposing of the steam generator lower assemblies while keeping the radiation exposure levels to personnel as low as reasonably achievable.
- To minimize the release potential of radioactivity to the environment to ensure that radiation exposure to the public is as low as is reasonably achievable.
- To comply with all federal, state, and local regulations.

7.7.5.3 Temporary On-site Storage

This alternative involves storage of the steam generator lower assemblies in an on-site facility. This would require the construction of a storage building with the following design criteria included:

- Appropriate shielding for direct dose.
- Surveillance of the steam generators lower assemblies on a periodic basis.
- Provisions for prevention of releases to the environment.

On-site storage has no cask requirements because transfer of the lower assemblies will only take place on-site. Final disposal will occur at a later date. This will probably occur at the time of decommissioning of Unit 2.

7.7.5.4 Off-site Storage

This alternative has two major options:

- o Intact shipment to a licensed burial facility.
- o Sectioning at the site and shipment to a licensed burial facility.

The major difficulty associated with the intact shipment of the lower assemblies is their relatively high degree of radioactivity. Immediate shipment would not be possible under Department of Transportation regulations. To meet these regulations, the assemblies could be placed in casks or decontaminated. Obtaining casks of the magnitude necessary to hold an intact steam generator is not feasible. Decontamination would result in the expenditure of additional man-rem and would pose other potential problems such as gaseous and liquid releases. It would be difficult to meet the regulations even with decontamination because of the number of plugged tubes which could not be easily deconned. Decontamination would also raise the economic costs involved.

Sectioning of the steam generator lower assemblies will add a large man-rem burden to the project. This option also increases economic costs by requiring extra shipments and enclosure envelopes for the cutting process.

7.7.5.5 Conclusion

Based on the above discussion, it is concluded that temporary storage of the steam generator lower assemblies in a temporary on-site steam generator storage facility is the best alternative. This option allows for the possibility of off-site disposal if the problems with economic costs, man-rem exposures, and logistics are eliminated. At the same

time, the decay of the radioactive content proceeds to more manageable levels.

7.8 Summary Cost-Benefit Analysis

A summary cost-benefit analysis is presented in Table 7.8-1.

TABLE 7.8-1

SUMMARY COST-BENEFIT ANALYSIS FOR THE UNIT 2
STEAM GENERATOR REPAIR PROJECT

<u>Environmental Costs</u>	
Land Use:	
1. Upgrade and use of roads and parking lots	There will be no use of areas not previously disturbed during this repair program.
2. Construction of temporary facilities to support repair program	
Water use:	
1. 500-600 additional workers on site using potable water supplies and sanitary facilities	No different from normal surveillance outages.
2. Chemicals discharged to lake	No change to plant discharge as a result of this repair outage.
Radiological Impact:	
1. Critical organ (lung) and whole body dose for adult at site boundary	3.6×10^{-5} mrem and 1.0×10^{-7} mrem, respectively (less than 0.12 percent and less than 0.0003 percent of the calculated lung as whole body dose, respectively from station operation during 1985.
2. Lung dose to adult at nearest site boundary from accidents during repair program and transportation of lower assemblies.	Potential exposure postulated to be very small fraction of lung dose limit inferred from ICRP-2 and 10 CFR Part 20 guidelines.
Biological Impact:	
1. Terrestrial Ecology	No destruction of habitat.
2. Aquatic Ecology	No impact to aquatic ecologies.

TABLE 7.8-1 (cont.)

Cultural and Social Impact:	
1. Regional Historic, Archeological, Architectural, Scenic, Cultural and Natural Features	None of these features located close to or on plate site.
2. Noise	Some impact, but only temporary in nature (Approx. 2½ years).
3. Traffic congestion, demand for housing, increased load on local sewage treatment and water supplied	Some impact, but only temporary in nature. No different than normal surveillance outage.
<u>Benefits</u>	
Primary Benefits:	
1. Electrical energy to be supplies	Return Unit 2 to 100% of rated capacity.
2. Generating capacity contributing to reliability of electrical power in the I&M service area and the AEP system	Return Unit 2 to 100% of rated capacity and increase reliability and availability of 1100 MWe.
Secondary Local Benefits:	
1. Employment of contractor personnel	500-600 workers for duration of repair outage.
2. Local taxes	Increased payroll brings increased tax revenue for duration of repair outage.

7.9 Environmental Controls

The following environmental controls shall be utilized to minimize the environmental impacts associated with the steam generator repair program. These environmental controls shall be reviewed by the contractor prior to the start of work. In addition, it is recommended that these environmental controls be included as part of the contractor work specifications.

7.9.1 Noise

To reduce the impact of noise on the surrounding community, the majority of the construction activities involving the use of heavy machinery will take place only during the day shift. If second shift construction activity involving heavy machinery must occur, it will end by 9:00 p.m. Noise from internal combustion engines will be controlled by the use of exhaust mufflers.

7.9.2 Limitations of Machinery Movement

No machinery will be allowed to operate in areas not previously disturbed by construction activities. If areas not previously disturbed are inadvertently impacted by machinery, it will be the responsibility of the contractor operating the machinery to restore the disturbed area to its original state. 2

7.9.3 Handling and Storage of Oil and Polluting Materials

The handling and storage of oil and polluting materials will be conducted in accordance with the D. C. Cook, "Oil Spill Prevention Control and Countermeasure Plan," and the D. C. Cook, "Pollution Incident Prevention Plan." 2

7.9.4 Environmental Monitoring

Periodic inspections of the construction activities will be conducted. If any of the construction activities appear to be causing significant environmental impacts, appropriate actions will be taken.

7.9.5 Permits

A list of State and local permits needed to begin construction activities at D. C. Cook will be developed by the D. C. Cook Environmental Section and the AEPSC Radiological Support Section. The AEPSC Radiological Support Section will be responsible for obtaining the required permits. 2

7.10 Conclusion

It is concluded that with the proper mitigation practices as outlined in the Environmental Controls Section of this report, no significant adverse environmental impact will result from the proposed activity, that there are no preferable alternatives to the proposed action and that the impacts associated with the repair program are outweighed by its benefits.

It is further concluded that the site preparation work, as described in Section 3, does not involve an unreviewed environmental question pursuant to Part II, Section 3.1 of the Donald C. Cook Plant Environmental Technical Specifications.

SINGLE-FAILURE-PROOF CRANE INFORMATION

SUPPLEMENT 1

TO THE

DONALD C. COOK NUCLEAR PLANT

UNIT NO. 2

STEAM GENERATOR REPAIR REPORT

D. C. COOK PLANT UNIT NO. 2
STEAM GENERATOR REPAIR REPORT

SUPPLEMENT 1

TABLE OF CONTENTS

LIST OF TABLES

LIST OF FIGURES

1.1 GENERAL

This report supplements the Donald C. Cook Nuclear Plant Unit 2 Steam Generator Repair Report. The purpose of this report is to provide the information specified in Attachment 1 of Enclosure 3 to a letter from the NRC, dated December 22, 1980 for single-failure-proof handling systems.

As discussed in Section 6.2 of the Steam Generator Repair Report, the Indiana & Michigan Electric Company has decided to procure a new 150-ton capacity single-failure-proof crane to handle heavy loads in the auxiliary building weighing 150 tons or less. For the purpose of moving the steam generator lower assemblies, the only lift required during the repair project in excess of 150 tons, the existing auxiliary building bridge crane and the new bridge crane will be operated in tandem as a special lifting device to provide the needed capacity to handle the lower assemblies. The existing auxiliary building bridge crane is currently being upgraded to single-failure-proof status for use during normal plant operations and maintenance.

The information provided in this report will discuss how the guidelines and criteria of NUREG-0554, "Single-Failure-Proof Cranes for Nuclear Power Plants" and the applicable portions of NUREG-0612, "Control of Heavy Loads at Nuclear Power Plants" will be implemented in the design, fabrication, use and maintenance of the new 150-ton single-failure-proof crane.

1.2 EVALUATION

This evaluation provides the information specified in Attachment 1 of Enclosure 3 to a letter sent to all licensees of operating plants and applicants for operating licenses and holders of construction permits from the Nuclear Regulatory Commission, dated December 22, 1980, Subject: Control of Heavy Loads.

1.2.1 Crane Manufacturer and Design-Rated Load

The new crane being purchased by the Indiana & Michigan Electric Company for use during the Steam Generator Repair Project will be designed and manufactured by the Whiting Corporation of Harvey, Illinois. A discussion concerning the design-rated load and maximum critical load is given in Section 2.2 of this supplement.

1.2.2 Comparison to NUREG-0554 and NUREG-0612

This section provides a detailed evaluation of the overhead handling system with respect to the features of

design, fabrication, inspection, testing and operation as delineated in NUREG-0554 and supplemented by NUREG-0612. This evaluation is presented in the form of a point-by-point comparison to NUREG-0554. This point-by-point comparison was developed by AEPSC and Whiting Corporation. The new crane will meet all applicable sections of CMAA Specification #70, Revision 75 and ANSI B30.2.0 - 1967. For ease in making a point-by-point comparison the following section numbers correspond to the section numbers in NUREG-0554: 2

2. SPECIFICATION AND DESIGN CRITERIA

2.1 Construction and Operating Periods

Since the Donald C. Cook Nuclear Plant is an operating plant, the construction portion of this section is not applicable. For the repair project and subsequent operating period the new crane will be designed per CMAA #70, Revision 75. Dynamic loads are considered due to load accelerations associated with a 150-ton load but not seismic loadings. Simultaneous static and dynamic loading will not stress the equipment beyond the material yield.

2.2 Maximum Critical Load

Since the new crane will be operating indoors, degradation due to exposure will not be considered a factor in the crane design. However, items subject to wear will have an additional design factor applied to them (see Table 2.2-1 of this supplement).

TABLE 2.2-1

150-TON CAPACITY SINGLE-FAILURE-PROOF CRANE

DESIGN FACTORS

	100%	125%
Main hoist unit	10.0	8.0
Main hoist cable	12.0	9.6
Main trolley drive unit	9.8	8.3
Main trolley wheel assemblies	6.1	5.2
Bridge wheel assemblies	6.4	5.6
Bridge girders	4.6	4.1

Design factors based on average ultimate stress and all components in tact.

2.2 Maximum Critical Loads (cont'd.)

The crane is being designed per CMAA #70, Revision 75 for dynamic loads due to the load accelerations associated with 150 ton load. Considering dynamic loads due only to load accelerations, the maximum critical load is 150 tons the same as the design rated load. However, as presented in the preliminary seismic analysis discussion, Section 1.2.3, when dynamic loads due to a seismic event (safe shutdown earthquake) are applied to the crane the maximum critical load is 60 tons. 2

A maximum critical load of 60 tons is sufficient for all but 24 lifts associated with the repair project.

Because these 24 lifts are one time only special lifts the provisions of NUREG-0612 Section 5.1.1(4) will apply. This section states that for special lifts, loads imposed by the safe shutdown earthquake need not be included in the dynamic loads imposed on the lifting device. Therefore, for these 24 special lifts the maximum critical load will be the same as the design rated load of 150 tons. The design rated load and the maximum critical load will be marked on the crane.

TABLE 2.2-2

STEAM GENERATOR REPAIR PROJECT
AUXILIARY BUILDING CRANE LIFTS
OVER 60 TONS

Item	Est. Wt. (Tons)	Number Lifts
Steam Generator Concrete Doghouse Front Roof Section	70	4
Steam Generator Concrete Doghouse Back Roof Section	60	4
Old Steam Generator Upper Assembly	112	4
Old Steam Generator * Lower Assembly	247	4
New Steam Generator * Lower Assembly	240	4
Refurbished Steam Generator Upper Assembly	112	4
		24 Total

* These lifts will be made using the upgraded existing crane and the new crane in a tandem configuration. 2

2.3 Operating Environment

Since the crane will be operated in the auxiliary building the crane will not be subjected to design basis accident type changes in pressure, temperature, humidity or exposed to corrosive or hazardous conditions. Therefore, such considerations have not been included in the design of the crane. The ranges of temperature, pressure, and humidity anticipated for crane usage are as follows:

Temperature: Ambient temperature inside the auxiliary building with seasonal variations between winter and summer.

Pressure: Ambient pressure except during refueling outage activities, when slightly negative pressure ($\geq$ 1/8 inch w.g.) will be maintained as required by Technical Specification 4.9.12.d.4. 2

Humidity: This could range from a minimum of 0% to a maximum 100%.

2.4 Material Properties

In addition to impact testing requirements on the main hook, structural members essential to structural integrity and greater in thickness than 5/8 inches are fabricated of impact tested material in accordance with the Section III of the ASME code. The minimum operating temperature of the crane will be established by the crane manufacturer. Any necessary steps to prevent operation of the crane below the minimum operating temperature will be taken. In addition, low alloy steels are not used in the fabrication of the crane, and cast iron is restricted to non-load bearing components.

2.5 Seismic Design

See Section 1.2.3.

2.6 Lamellar Tearing

The main bridge girders and structural load support members of the trolley, specifically those members supporting the critical load, are fabricated from structural plate. Welded, rolled structural shapes are not used for these members. Moreover, weld joints associated with the structural members within the main hoist load path are typically oriented such that the induced stresses will not be manifested in lamellar tearing at the weld zone. All weld joints whose failure could result in the drop of a critical load will be nondestructively examined. If any of these weld joint geometrics would be susceptible to lamellar tearing, the base metal at the joints will be nondestructively examined.

2.7 Structural Fatigue

As stated in Section 2.1, the crane will not be used for plant construction lifts. The allowable stress range for the fatigue design of this crane is higher than the normal design allowables of Crane Manufacturers Association of America (CMAA) Specification No. 70-1975. As a result, a fatigue analysis will not be performed, since it is not a governing factor in design of the crane. 2

2.8 Welding Procedures

Welding, welding procedures (pre heat, post weld heat treatments), and welder qualifications are in accordance with AWS D1.1 "Structural Welding Code." Further, low-alloy materials will not be used in the main load support structure. 2

3. SAFETY FEATURES

3.2 Auxiliary Systems

The auxiliary 20 ton hoist is of single-failure-proof design. 2

Where dual components are not provided within either hoist mechanical load path, redundancy is provided through an increased design factor on such components as required per NUREG-0612.

3.3 Electric Control Systems

Limit controls are incorporated to minimize the likelihood of inflicting damage to the hoisting drive machinery and structure that otherwise might occur through inattentive and/or unskilled operator action. An emergency stop button will be added to the radio remote control unit that will interrupt the power supply to the crane and stop all crane motion. 2

3.4 Emergency Repairs

This crane is designed so that, should a malfunction or failure of controls or components occur, it will be able to hold the load while repairs and adjustments are made.

4. HOISTING MACHINERY

4.1 Reeving System

The static-inertia design factor of the wire rope, with all parts in the dual system supporting the DRL is 11 to 1. Such conservative design more than surpasses requirements to sustain the dynamic effects of load transfer due to the loss of one of the two independent rope systems with an ample design margin remaining in the

six parts supporting the load. The maximum load (including static and inertia forces) on each individual wire rope in the dual reeving system with the MCL attached will not exceed 10% of the manufacturer's published breaking strength. Compliance to this recommendation requires high alloy rope. By definition, reverse bends do not exist in the reeving system of the main hoist. Studies have been conducted to establish the effects of reverse bend on fatigue life. In consideration for the geometry of wire rope (helix) construction, unless the distance between the sheaves in the load block and head block are under one lead of the wire rope, a reverse bend cycle is not incurred. Moreover, the ratio of rope to sheave diameter in the only qualifying area of the hoist mechanism is related to the drum, which is 30 to 1; 125% of minimum requirement per CMAA Spec. #70, Rev. 75. 2

The pitch diameter of running sheaves and drums shall be in accordance with CMAA Spec. #70, Rev. 75. All fleet angles within the main hoist reeving are within the recommended 3 1/2 degrees. The crane is equipped with an equalizer beam/fixed sheave arrangement that provides two separate and complete reeving systems.

Protection against excessive wire rope wear and fatigue damage will be ensured through periodic inspection and maintenance. 2

4.2 Drum Support

The indicated drum support provisions are included in the design which, as required, would insure against disengagement of the drum from its braking control system.

4.3 Head and Load Blocks

Both reeving systems associated with this crane are designed with dual reeving. This design will ensure the vertical load balance is maintained.

Each load-attaching point (sister hook and eye bolt) is amply designed to sustain 200% of the 150-ton DRL. The overhead crane shall be load tested at 125% of the 150-ton DRL.

Nondestructive examination of the sister hook and eye bolt will be performed. After successful completion of the load test, a complete inspection of the crane, including a nondestructive examination of the sister hook and eye bolt, will be performed.

4.4 Hoisting Speed

The main hoist full rated load speed of approximately 4.5 FPM is less than the suggested operating speed in the "slow" column of Figure 70-6 of CMAA specification #70. 2

Further, the rope line speed at the drum at approximately 27 FPM is considered to be conservative.

4.5 Design Against Two-Blocking

The main hoist is equipped with two independent travel limit control devices in addition to a load sensing system, as suggested, to insure against two-blocking. Actuation of hoist travel limit switches or load sensing devices will deenergize the hoist drive. In addition, the mechanical holding brake will have the capability to withstand the maximum torque of the driving motor.

4.6 Lifting Device

The lifting beams and other devices attached to the crane hook block will be designed to have factors of safety based on guidelines noted in NUREG-0612 and NUREG-0554. Each device will be able to support a load of three times the load (static and dynamic) being handled without permanent deformation as recommended in Section 4.6 of NUREG-0554. 2

4.7 Wire Rope Protection

Operation of the hoist is only to be attempted with the trolley and block aligned over the center of the load for a vertical lift.

4.8 Machinery Alignment

The provisions of this paragraph are incorporated in the design of the overhead crane.

4.9 Hoist Braking System

The provisions of this paragraph are incorporated in the design of the overhead crane.

5. BRIDGE AND TROLLEY

5.1 Braking Capacity

The bridge and trolley drives will each be provided with an appropriately sized electric holding brake which, upon interruption of power, is applied whether through operator action or violation of travel limit provisions on the trolley and restrict area limit controls for the bridge. Further, these brakes are capable of being operated manually.

The AC induction-motors and magnetic controls utilized for these drives are not prone to an overspeed condition, which is attributed to inherent operating characteristics. Therefore, overspeed limit controls for the bridge and

trolley motion equipped with this type of drive would represent a needless feature. Moreover, the motor controls are provided with adequate overload protection.

The mechanical drive components are designed to sustain maximum peak loadings capable of being transmitted by either the motor or brake under all attitudes of normal crane operation.

All other recommendations of this section are compatible with the design of the crane.

5.2 Safety Stops

As stated in Section 5.1, an overspeed condition considering the type of drive used for the bridge and trolley is not a concern with this equipment. Appropriately designed and sized bumpers and stops are provided in accordance with CMAA Spec. #70 Rev. 75 and are adequate to absorb the energy of the trolley and bridge in the event of limit switch malfunction.

6. DRIVERS AND CONTROLS

6.1 Driver Selection

The main hoist motor was selected on the basis of hoisting the design-rated load (150 tons) at the design hoisting speed. Further, all proper and due consideration was given to the design of related mechanical and structural components to adequately resist peak torques transmitted by this motor within normal design limits.

Hoist overspeed and overload sensing-limit control provisions have been incorporated to guard against such occurrences. Additionally, the hoist holding brakes are capable of controlling the design rated load within the 3 inches (8 cm) specified stopping distance. In addition, emergency power disconnect switches will be located at operating floor level to interrupt power to the crane independent of the crane controls. Since the MCL is less than the DRL, administrative controls will be established to reset the overloading sensing device. 2

6.2 Driver Control Systems

The design considerations discussed in this section have been addressed and incorporated as appropriate except for the restriction of simultaneous operation of motions. The crane is not used to handle spent fuel assemblies.

6.3 Malfunction Protection

Features to sense, respond to, and secure the load in the event of hoist overspeed, overcurrent, overload, over

travel, and loss of one rope of the dual reeving system have been incorporated.

6.4 Slow Speed Drives

Features recommended in this paragraph will be incorporated as part of the motion control circuitry.

6.5 Safety Devices

Each hoist is equipped with two independent hoist overtravel limit controls.

6.6 Control Stations

Since this crane is not equipped with a cab, the complete operating control system and emergency controls for the crane will be located on a radio remote control unit. In addition, as stated earlier emergency power disconnect switches will be located at operating floor level to interrupt power to the crane independent of the radio remote control unit. 2

Since the design rated load is greater than the maximum critical load, administrative controls will be established to ensure that the resetting of the overload sensing device is properly conducted.

7. INSTALLATION INSTRUCTIONS

7.1 General

Complete operation, maintenance, installation and testing instructions will be provided for the overhead crane by the crane manufacturer.

7.2 Construction and Operating Periods

As discussed in Section 2.1 this crane will not be used for plant construction. The crane will be designed for Class A-1 service as defined in CMAA Specification #70, Revision 75. The allowable design stress limits will not be exceeded during the repair project.

During and after installation of the crane, the proper assembly of electrical and structural components should be verified.

8. TESTING AND PREVENTIVE MAINTENANCE

8.1 General

A complete check will be made of all the crane's mechanical and electrical systems to verify the proper installation and to prepare the crane for testing.

Proof-testing of a subcomponent is an independent verification of the subcomponent's ability to perform. The main hook block and eye bolt of the hook block assembly will be tested at 200% of the design-rated load (DRL). Before and after this test, the hook and eye bolt will be subject to nondestructive examinations. The wire rope supplier will test a section of wire rope by subjecting it to an overload condition until breaking occurs. No other components of the crane shall be proof-tested. Upon successful completion of the above proof tests, the overhead crane will be tested at 125% of the DRL. This test will ensure the ability of the crane and its subcomponents to perform their intended function.

8.2 Static and Dynamic Load Tests

The overhead crane will be tested after installation by means of a no-load test and a 125% capacity load test. The no-load test consists of operating each crane motion to its extreme travel limit without a load on the hook. During the no-load test, the crane bridge shall travel the entire length of the runway, the top-running trolley shall traverse the crane bridge, and the hook block shall be operated through its complete vertical travel limits. Upon successful completion of the no-load test, the 125% capacity DRL test will be conducted. Each crane motion shall be engaged with the 125% DRL test load suspended from the hook. However, due to the physical restrictions of the plant, each motion will not be operated to its full travel limit during the 125% DRL load test.

8.3 Two-Block Test

Although the hoist is equipped with an overload sensing device, load-anchor testing is not recommended by the crane manufacturer (Whiting Corporation). Since Whiting customers have followed the recommendation, there is no available information on past load-anchor tests. The overload-sensing device will be preset and tested using a load higher than the preset load. The last sentence of Section 8.3 of NUREG-0554 states: "The crane manufacturer may suggest additional or substitute test procedures that will ensure the proper functioning of protective overload devices." Based on that provision, and per crane manufacturers' recommendations, we are planning to perform the overload testing rather than the load-anchor test.

8.4 Operation Tests

Whiting's standard procedures require a no-load running test before shipment. Calibration and adjustments for hoist overload and overspeed will be done after installation.

8.5 Maintenance

A maintenance program including periodic inspections of the crane will be developed. This maintenance program will ensure that the crane is maintained at the design rated load. Both the maximum critical load and the design rated load will be plainly marked on each side of the crane.

9. OPERATING MANUAL

The operating manual supplied by the crane manufacturer will comply with Section 9.0 in its entirety, including details on preventive maintenance program items noted in the first paragraph of Section 9.0 of NUREG-0554. The existing plant procedures on the preventive maintenance program will be revised to address the above-noted items.

10. QUALITY ASSURANCE

The Whiting Corporation is on the Donald C. Cook Nuclear Plant Qualified Suppliers List for spare and replacement crane parts. Whiting has a QA program that complies with ANSI N.45.2-1971/NRC Regulatory Guide 1.28. This program applies also to the fabrication of new cranes for nuclear power plants. Whiting will be audited for QSL recertification in April 1987.

Donald C. Cook Nuclear Procedure MHI-2071, "Qualification and Training of Crane Operators," covers qualification requirements of crane operators and will be revised as necessary to reflect the single-failure-proof features of the new crane.

1.2.3 Seismic Analysis

This section presents the preliminary seismic analysis conducted to demonstrate the largest load the new crane can stop and hold during a safe shutdown earthquake. The following information provides a description of the method of analysis, the assumptions used, and the mathematical model evaluated in the analysis.

1.2.3.1 Analysis Description

The crane was analyzed to determine the effect of seismic excitations. For this analysis, the matrix displacement method was used based upon finite element techniques. The crane was mathematically modeled as a system of node points interconnected by various finite elements representing straight beams. All masses and inertias were distributed among the nodes whose degrees of freedom characterize the response of the structure. The interconnecting finite elements were assigned stiffness equivalent to that of the actual structure.

The mathematical model represents as accurately as possible the flexibility of the bridge girders, hoist rope, and girder end connection. The trolley, the drive units and the bridge trucks were represented as rigid bodies.

The crane was analyzed with the trolley positioned at mid-span. This was done with loads of 50 and 60 tons in the down position. Preliminary calculations showed that this condition would produce the maximum girder stress for a given load.

The dynamic analysis was of the mode frequency (MODAL) type, solving for the resonant frequencies and the mode shapes that characterize the crane. The modes with meaningful participation in a given direction are directly expanded by the computer program to yield the expanded mode shapes, the element stresses and the reaction values. This type of analysis is linear and plastic deformation, sliding, friction, and slack rope are not taken into account.

The normal mode approach was employed for the analysis of the components. All significant eigen-values and eigen-vectors were extracted, and these modes were combined by the method specified by the U. S. Nuclear Regulatory Commission, Regulatory Guide 1.29, Rev. 1, Section 1.2.2 (Combination of Modal Responses with Closely Spaced Modes by the 10% Method). Those modes with mode coefficient ratios less than 1% in the x direction or 0.5% in the y and z directions were dropped because their contribution is proportionally small when compared to the largest mode coefficient of the related directional excitation. The results of the three orthogonal dynamic excitations were combined by the square root of the sum of the squares method (SRSS) and then absolutely added to the results of the static condition.

Because the y reaction exceeds the frictional resistance of those bridge wheels that are braked, slip will occur. The maximum acceleration in the y direction will be reduced from that predicted by the modal analysis. The primary y mode was therefore reduced by a scale factor such that the resulting y reaction approaches the maximum that could be sustained before slip. The results were then resummed as previously described.

In order to assure structural integrity, the job specification requires that the maximum stresses not exceed the minimum yield strength of the material divided by 1.5 for the OBE and 1.1 for the SSE.

The crane is constructed of ASTM A36 structural steel except for components which are specifically noted in the report. A36 material has a specified minimum yield

strength of 36 ksi. The combined bending and axial stresses are limited to 24 ksi for the OBE and 32.7 ksi for the SSE.

The actual properties of the specified materials show a great deal of variation and are generally considerably higher than the minimum required by the material specification. Also the maximum stresses occur only at a point on a section and cannot be themselves be indicative of the tendency of the section to permanently deform, especially when the nominal stresses on the extreme fibers of the adjoining faces are significantly lower. It is therefore conservative to compare the combined bending and axial stresses at the corners with the specified allowables to assure structural integrity.

Impact factors for wheel flange to rail contact, etc., have been consider negligible. The state of the art is such that these impacts cannot rigorously be studied; however, independent time history analyses have been run in many cases, all indicating slow relative motion between the rail and the wheel. This is because of the time dependency of the forcing function coming from the building into the crane. Note that the only coupling through which these forces can be transmitted is dynamic friction. Upon reaching the rail the wheel will first rise through the corner radius and then contact the rail. During this period, the structure is starting to deflect as the end of the crane in this direction is flexible.

The computer analysis was performed using ANSYS, a large scale finite element program.

1.2.3.2 Summary of Results

The crane was mathematically modeled using finite elements. On the basis of preliminary runs, the number of degrees of freedom and the significance criteria for modal expansion were adjusted. Static and three load step reduced modal runs were made and the results summed. Because slip occurs, the y excitation was proportioned and these results resummed.

The crane was analyzed with the main trolley at mid-span (see Figure 1.2-1). For this position the analysis was done with 50 and 60 ton loads on the main hook in the low position. From preliminary studies, the load case considered should yield the maximum stresses in the girders.

Because of the seismic acceleration a slack rope condition was found to exist under certain conditions. This cannot be truly simulated with a linear modal analysis. However our experience with time history analyses shows that a

modal analysis tends to produce conservative results. The rope load predicated by the modal analysis is well below the allowable rope load.

When the excess dynamic rope load (that which produces a slack rope) is deducted, a small upkick is produced by the loading conditions examined. When the wheel loads parallel to the runway are compared with the vertical wheel load times the coefficient of friction, it is found that the crane bridge will tend to slide under certain loading conditions examined. This sliding is oscillatory in nature and the loadings predicted by a modal analysis are conservative. The wheel loads have been adjusted to account for frictional effects.

Although some non-linearities are produced by the specified excitations the specified linear analysis will conservatively predict the behavior of the crane during a seismic excitation.

The crane was found to meet the requirements for a seismic excitation with a 60 ton load on the main hook.

1.2.4 Lifting Beams

Stress levels of all load-bearing members of the lifting beam will not exceed 6,000 psi under rated load. This low stress level meets requirements of NUREG-0612 and ANSI N14.6 specifications for increased design factors for single-load-path components. Further, this design stress level qualifies for material test exemptions per Paragraph AM 218 of the ASME Boiler and Pressure Vessel Code, Section III, Division 2, as referenced in Paragraph 3.3.6 of ANSI N14.6-1978.

Proposed lifting beam will not be subject to high amounts of radiation, 200 mili-rem/hour maximum, nor will it be submerged at any time. Based on this criteria the proposed lifting beam design will not be subject to any sections of ANSI N14.6-1978 which refers to submerged duty, decontamination or radiation degradation.

Application of any coating system onto the lifting beam must not violate E.P.A. codes.

Under Section 6 of ANSI N14.6-1978 the main beam section and the hooks swivel are single path designed with stress levels below 6,000 psi. Since the materials for these items will have mill certification and that 100% of critical welds will undergo nondestructive examination to ensure structural integrity, these two items will not be subject to load test of three times their rated capacity. These two items will however be subjected to a 150% load test.

1.2.5 Interfacing Lift Points

Interfacing lift points will be dual-load-path and will be designed to shear stress levels not to exceed 4,500 psi under rated load. This design stress levels qualifies for material test exemptions per Paragraph AM 218 of the ASME Boiler and Pressure Vessel Code, Section III, Division 2 as referenced in Paragraph 3.2.6 of ANSI N14.6-1978.

1.2.6 Monorail Hoist

Due to the configuration of the two cranes in the auxiliary building there will be some areas in the auxiliary building that cannot be reached by either crane. To provide access to these areas the new crane will be equipped with a 2,500 lb. capacity, fully electric hoist mounted on a fixed monorail suspended from the idler girder of the new crane. The hoist will weigh approximately 1,200 lbs. and will have a vertical lift of approximately 122 feet. Control of the hoist will be by radio remote control. The hoist is being designed to ANSI/ASME HST-4M-1985, "Performance Standards for Overhead Electric Wire Rope Hoist." 2

1.3 CONCLUSION

The new crane being purchased by the Indiana & Michigan Electric Company for use during the Steam Generator Repair Project has been evaluated against the criteria of NUREG-0554 and NUREG-0612. Results of this evaluation have shown that the crane being purchased meets the guidelines and criteria of NUREG-0554 and NUREG-0612 and therefore will be classified and used as a single-failure-proof crane.

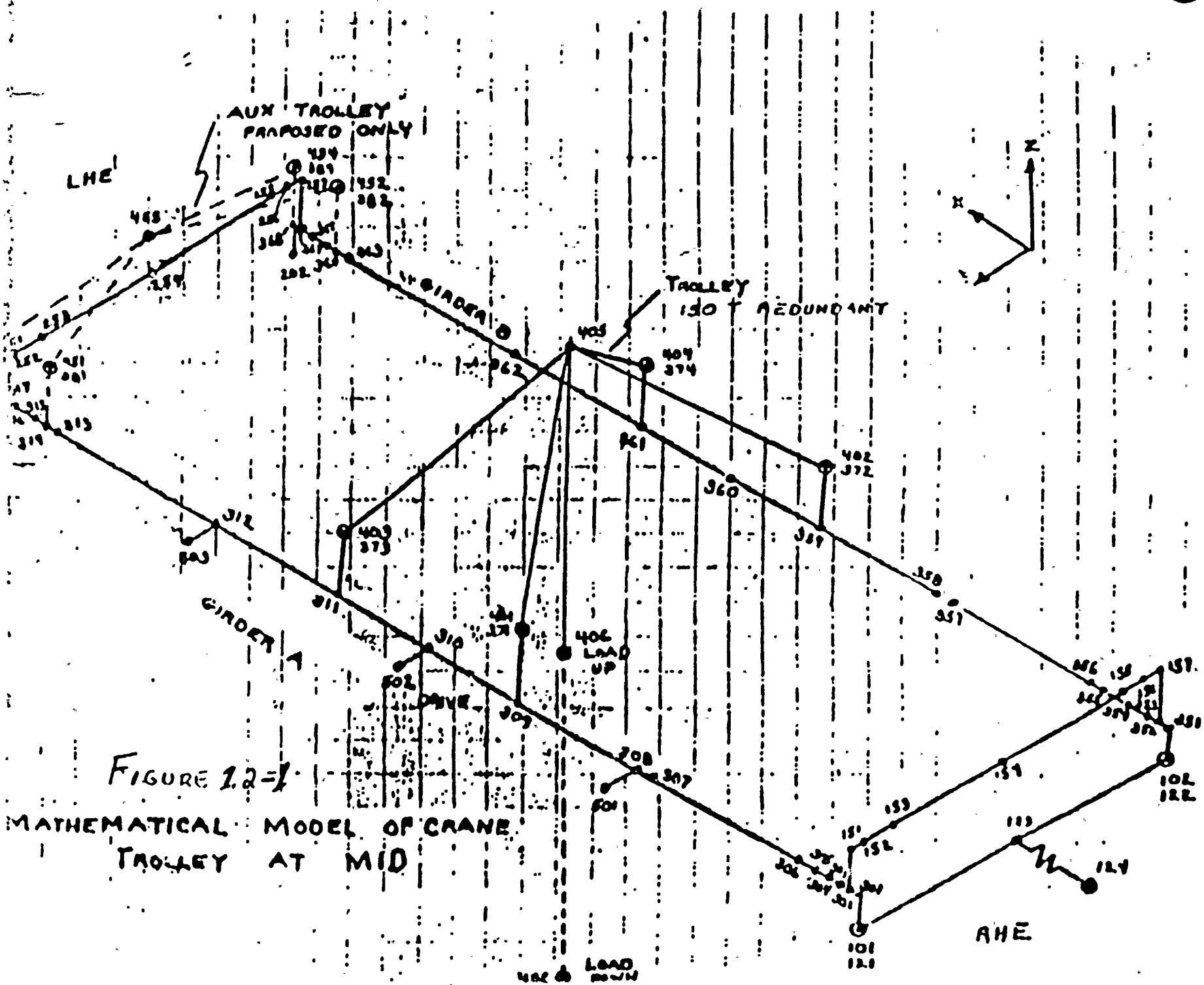

FIGURE 1.2-1

MATHEMATICAL MODEL OF CRANE
TROLLEY AT MID

SUPPLEMENT 2

NRC REQUEST FOR ADDITIONAL INFORMATION

This supplement contains U.S. Nuclear Regulatory Commission requests for additional information provided by J. Minns on August 19, 1987, followed by the response to each question.

Supplement 2 contains the following:

Questions	Topic
PRPB-1	Contamination Control Program
PRPB-2	Volatilization Accident with Decontamination Solution
PRPB-3	Radiation Protection Training Program
PRPB-4	Radiation Protection Equipment
PRPB-5	Discussion on Types of Respiratory Protection Equipment

3

QUESTION PRPB-1

Provide a description of your contamination control program including:

(1) Limits for demarcation of controlled surface contamination areas and controls for release of equipment for unrestricted use.

(2) Methods of restricting contamination to controlled surface contamination areas.

(3) Specification of skin dose evaluation criteria including action points for dose evaluation.

RESPONSE

Radioactive contamination controls will be in place to minimize the contamination of areas, equipment, and personnel. Control of radioactive contamination minimizes possible inhalation or ingestion of radioactivity by personnel and the spread to or build-up of radioactivity in the work area.

Contamination is divided into two categories: loose surface contamination, which is easily portable and removable by wiping the surface with dry smears; and fixed contamination which remains on affected surfaces and cannot be removed or further reduced by normal decontamination methods. Items, components, or materials which have become radioactive through irradiation are treated as having fixed contamination. Fixed contamination is controlled because of its resultant radiation level and because mechanical operations involving surface removal such as machining, grinding, sanding, or welding, are likely to release and spread radioactivity. 3

(1-A) Area Posting Requirement/Release Limits

Any area that exceeds the below-listed limits shall be considered a Contaminated Area and shall be posted and controlled.

Loose surface contamination in uncontrolled areas shall not exceed the following limits:

(a) 1000 dpm of beta-gamma radioactivity as measured on a dry smear of 100 cm^2 of a representative portion of a surface, or 1000 dpm for the entire surface if less than 100 cm^2; and

(b) 20 dpm/100cm^2 of alpha radioactivity as measured on a dry smear.

Areas with loose surface contamination in excess of the limits stated above shall be designated a Contaminated Area to prevent personnel entry without appropriate protective clothing.

(1-B) Unrestricted Release

Material (tools, equipment, pipe, concrete blocks, vehicles, etc.) leaving the Radiological Control Area (RCA) shall be handled as radioactive and shall not be released for unrestricted use until they have been monitored for radioactivity by a Radiation Protection Technician trained to conduct release surveys and are determined releasable in accordance with the applicable criteria listed below (per IE Circular 81-07).

(a) Loose surface contamination shall not exceed 1000 dpm beta-gamma activity measured on a dry smear wiped over 100 cm^2 of a representative portion of the item's surface or over the entire surface, if less than 100 cm^2; and

(b) The highest radiation level caused by the item shall not exceed 100 counts per minute above background as measured with a thin window GM detector (or equipment with equivalent detection capabilities). The total contamination on an item (loose and fixed) shall not exceed 5000 dpm/100 cm^2.

Note: Surveying shall be accomplished by slowly scanning near the surface and in a background of 300 cpm or less. The probe shall be held stationary for actual measurement of levels when contamination is located.

(c) Alpha radioactivity shall not exceed 20 dpm measured on a dry smear, if alpha is suspected.

(d) Total alpha radioactivity shall not exceed 100 dpm/100 cm^2 fixed and loose contamination as determined by the direct survey method, if alpha is suspected.

(e) Procedures shall specify the instrumentation that is acceptable and the technique to be utilized in the performance of unconditional release surveys. 3

(f) Items with surfaces not accessible for measurement of radioactivity (pipes, ductwork) shall be subject to a case specific evaluation by the surveying Radiation Protection Technician for unrestricted use.

(2) Controlling Radioactive Contamination During Work Activities

A variety of contamination control methods will be evaluated and those that are determined to be effective will be used. These include, but are not limited to:

(a) Containment tents and enclosures;
(b) Drop cloths;
(c) Glove bags;
(d) Catch containers;
(e) Work tents;
(f) Portable HEPA - filtered ventilation;
(g) Station ventilation;

(h) Containment and general work area decontamination;
(i) Removable coatings;
(j) Control of access to contaminated areas;
(k) Step-off pads.

(3) Monitoring for Skin Dose

In accordance with 10 CFR 20.202, monitoring device(s) shall be used to monitor the dose to the skin of the whole body, and used as listed below:

(a) The TLD will be used for monitoring.

(b) The skin dose shall be entered into the individual's dose record but should not be added to the whole body dose. 3

(c) Skin dose calculations due to personnel skin contaminations will be performed for contaminations incidents in which a level of 30,000 corrected counts per minute (ccpm) as measured with a pancake GM detector is exceeded.

Skin dose may be calculated for less severe contaminations, depending on the circumstances, primarily related to duration of exposure.

QUESTION PRPB-2

In the event of a large volatilization accident with the decontamination solution at D. C. Cook, please indicate what precautions have been taken to assure safe habitability or evacuation of the workers from the steam generator areas: (1) how will the workers in other areas be notified of such an event; (2) what protection is afforded to the workers; and (3) what procedures will be followed during the course of such an accident?

What is the estimated dose to workers from such an accident?

3

RESPONSE

As discussed with NRC personnel during our August 19, 1987 meeting, the containment decontamination will be performed without hazardous chemical solutions. Hydrolazing will be performed with water only. Any chemicals used (normally mild detergent) will be locally applied.

QUESTION PRPB-3

Provide a description of the radiation protection training program for outside contractor personnel who will be working on this project.

RESPONSE

As referenced in Section 3.8.1.5 of the Steam Generator Repair Report (AEP:NRC:0980, November 7, 1986), project personnel who work in the protection area will receive training on the project Radiation Protection and ALARA program. This will be in addition to Nuclear General Employee Training (NGET) and will address specific information to assist project radiation workers in understanding and complying with the radiation protection program. NGET covers the following subjects:

(1) Introduction and Plant Layout
(2) Radiation Theory
(3) Biological Effects of Radiation
(4) Radiation Exposure Limits and Records
(5) Personnel Dosimetry
(6) Radiation Measuring Instruments
(7) Radiological Area Designations
(8) Radiation Work Permits (RWP's)
(9) Minimizing Radiation Exposure
(10) Anti-Contamination Clothing
(11) Removing Anti-Contamination Clothing
(12) Contamination Control

Practical factors training and practice will also be administered. As a minimum, this training will consist of the following: 3

(1) Donning anti-contamination clothing
(2) Use of step-off pad
(3) Removing anti-contamination clothing
(4) Proper frisking techniques

The supplemental project training will include details of the project radiation protection program, such as the RWP system, facilities that will be used, worker responsibilities under the program and the radiological hazards of Steam Generator Repair.

Contractor radiation protection technicians will receive extensive training on the project radiation protection program. Procedures and policies to be implemented will be covered thoroughly and tested.

Course outlines and lesson plans are in the process of being developed and will be utilized for the Training Program to be conducted prior to the start of the Steam Generator Repair Project.

The Project Radiological Protection/ALARA Group will document and maintain records of individuals receiving Radiation Protection/ALARA training or retraining and will provide written and/or practical examinations to demonstrate that the personnel have received and comprehend the program objectives as presented.

QUESTION PRPB-4

Provide a discussion indicating any unique radiation protection equipment expected to be utilized during this repair operation for normal and accident conditions. Include in the discussion the types of instruments, their numbers, sensitivities, and ranges.

RESPONSE

The radiation protection instrumentation to be utilized during the Steam Generator Repair Project will consist of industry accepted equipment. No unique radiation protection instrumentation is currently planned.

The following table identifies the proposed types and quantities of additional non-D. C. Cook instrumentation to be used by the staff for the SGRP. The scope of coverage for instrumentation includes work in containment, the auxiliary building, the turbine track bays, and in the counting room (CAB).

Types of Instruments:

PORTABLE INSTRUMENTS (Survey)

Model	Type	Range	Sensitivity	Quantity
RO-2	Ion Chamber	0-5R	beta, gamma	12
RO-2A	Ion Chamber	0-50R	beta, gamma	12
Teletector 6112B (analog)	GM Tube	0-1000R	gamma (beta)	6
E120/HP270	GM Tube	0-50MR	beta, gamma	2
E530N/HP270	GM Tube	0-20R	gamma	2
PAC4G/PC21	Scintillation	0-500K cpm	alpha	2
E140/HP260	GM Tube	0-50mR	beta, gamma	6
RM14/HP210	GM Tube	0-500K cpm	beta, gamma	12
Semi-Permanent (Installed)				
PCM-1B	Gas flow prop (personnel contam)	Adjustable (3 modes)	beta, gamma	5
Counting Room Instruments				
SAC-4	Scintillation	Six Decades	alpha	2
MS-3/HP210	GM Tube	Six Decades	beta, gamma	2
High Purity Ge Detector w/MCA	Spectrometer	Variable	gamma	2

3

Model	Type	Range	Sensitivity	Quantity
Automatic Planchet Counter	Gas Flow Prop	Environmental	beta, gamma	1
Air Sampling Instruments				
RAS-1	Low Volume w/iodine	N/A	N/A	12
Radeco	High Volume (Particulate only)	N/A	N/A	6
AMS-3	GM Tube	10-100K cpm	beta (gamma)	3

3

QUESTION PRPB-5

Provide a discussion of the respiratory protection equipment expected to be utilized during the repair activities, and criteria for requiring such use.

RESPONSE

The Project Radiation Protection Group will attempt to minimize the use of respiratory protection equipment through the use of engineered controls such as containments, glove bags and ventilation. When these controls cannot ensure that workers are adequately protected from airborne radioactivity, respiratory protection equipment will be available. This equipment will be industry-standard, including:

- Full-face masks, particulate filtered
- Full-face masks, supplied air
- Bubble hoods, supplied air

3

Respiratory protection will be required when entry is required into areas with airborne radioactivity concentrations greater than or equal to 1 MPC. At concentrations greater than 0.25 MPC but less than 1 MPC, the need for respiratory protection will be evaluated, with considerations for the type of work being performed and the length of time in the area.

Self-contained breathing apparatus (SCBA) will be available for non-routine situations when the equipment listed above is not appropriate and entries are required prior to restoration of air quality (e.g. containment tours to restore ventilation in atmospheres with high airborne radioactivity). It is not planned to use SCBA for routine activities.

INSPECTION AND TESTING PROGRAM

FOR

CADWELD MECHANICAL SPLICES

4

SUPPLEMENT 3

TO THE

DONALD C. COOK NUCLEAR PLANT

UNIT NO. 2

STEAM GENERATOR REPAIR REPORT

TABLE OF CONTENTS

4

LIST OF TABLES

LIST OF FIGURE

1.0 GENERAL

The cadweld inspection and testing program which will be implemented during the restoration of the steam generator doghouse enclosures, will be based on ANSI N45.2.5-1974 except that sister splices will be substituted for production splice test samples. This substitution is necessary to account for geometric constraints associated with replacing production splices taken for tensile testing.

Approximately 1,600 cadwelds will be installed during the restoration of the steam generator doghouse enclosures. Approximately 1,100 of the cadwelds will be installed on horizontal curved bars; the remaining 500 will be horizontal, vertical, and diagonal straight bars.

All procedures established for cadwelding will be reviewed and approved by AEPSC. The installation procedure will be reviewed to insure that all requirements established in the installation specification along with those established by the cadweld manufacturer are met.

2.0 OPERATOR QUALIFICATION

Prior to performing any production splicing of concrete reinforcement, each member of the splicing crew (or each crew if the members work as a crew) shall prepare two qualification splices for each of the splice positions (horizontal, vertical, and diagonal) to be used. The qualification splices are to be made using the same material (filler metal, sleeves) as those to be used in the reconstruction of the steam generator doghouse enclosure walls, with exception of the concrete reinforcement. The concrete reinforcement used for operator qualification tests shall be the same as the new reinforcement used in the reconstruction of the steam generator doghouse enclosure walls. The existing (in place) concrete reinforcement will not be used for qualification splices. 4

In order for each member of the splicing crew (or each crew if members work as a crew) to qualify for production splicing, the qualification splices must meet specified visual acceptance standards (see section 3.0) and specified tensile requirements (see Section 7.0).

Operators will be requalified if a specific position (horizontal, vertical, or diagonal) has not been used by a member of a splicing crew (or each crew if members work as a crew) for a period of three months or more. In addition, an operator shall be required to requalify if a splice fails a visual inspection or a tensile test. The requalification procedures shall be the same as the original qualification procedure.

3.0 VISUAL INSPECTION

Two separate and distinct inspection teams will perform visual inspections on all production and sister cadwelds. The inspections will be performed in accordance with the requirements of ANSI N45.2.5-1974, Section 4.9.2. The first inspection will be performed by the general contractor while the second inspection will be performed by an independent, inspection team that will report directly to AEPSC. All

inspection personnel shall meet the requirements specified in ANSI N45.2.5-1974, Section 2.4. Differences in findings between the two teams will be resolved on a case by case basis by AEPSC's Civil Engineering Division.

Prior to installing any cadwelds, an inspection will be made to insure that the cadwelds are satisfactory for installation. A visual examination will be performed to insure that the cadweld sleeves and filler metal are not physically damaged or contaminated. A review of documentation for each cadweld will be made to insure compliance to the procurement specification.

The visual inspection and acceptance standards are as follows:

a. All mechanical splices will be visually inspected to ensure that the splice sleeves are longitudinally centered on the spliced ends of the reinforcing bars. Reference marks will be established on each bar. The location of these marks will be documented. The tap hole must be located as shown on Figure 3.0-1, within the specified tolerances. Mechanical splices failing to meet this criteria shall be removed and replaced.

b. All mechanical splices shall be inspected at each end for voids. All splices with voids in excess of those specified by the manufacturer shall be removed and replaced.

c. All mechanical splices shall be inspected for leakage of filler metal. All splices with leakage of filler metal, which results in voids in excess of those specified by the manufacturer, shall be removed and replaced. 4

d. All mechanical splices shall be inspected for gas blowout. All splices with gas blowout shall be removed and replaced.

e. All mechanical splices shall be inspected for slag at the tap hole. All splices with slag at the tap hole shall be removed and replaced.

All mechanical splices which fail the visual inspection shall not be used for test samples for tensile testing.

4.0 TENSILE TEST SAMPLES AND FREQUENCY OF TESTS

4.1 Straight Bars

The tensile test frequency for straight bars will be increased over and above the frequency requirements of ANSI N45.2.5-1974, Section 4.9.4. A minimum of two sister splices will be substituted for each straight bar production splice required. The substitution is consistent with the value that the ANSI standard appears to have assigned to straight bar sister splices. The value can be determined by comparing the two tensile test frequency options that Section 4.9.4 allows the engineer to select from for straight bar production splices (See Table 4.1-2). Frequency option 4.9.4(1) involves testing only

production splices. Frequency option 4.9.4(2) involves testing a combination of sister splices and a lesser number of production splices than required in Option 4.9.4(1).

4.2 Curved Bars

For curved bars, Section 4.9.3 of the ANSI Standard states that because "... curved reinforcing bars will not tensile test accurately, production splice samples should not be removed from curved reinforcing bars for tensile testing. Straight sister splice samples should be made for each of the required curved reinforcing bar production splices." Section 4.9.3 further states: "The sampling frequency specified in Section 4.9.4(2) should then be followed, except that all splices tested shall be sister splices." As such, the test frequency that will represent curved bar production splices need not be increased, because the one for one substitution of sister splices for production splices has always been the acceptance standard for curved reinforcing bars.

5.0 SPARE SISTER SPLICE SAMPLES 4

In addition to the sister splices made for tensile testing as outlined above, 6 spare sister splices per 100 production splices for curved bars and 18 spare sister splices per 100 production splices for straight bars will be tested if the initial samples fail to meet the acceptance criteria established in ANSI N45.2.5-1974, Section 4.9.3. Table 5.0-1 summarizes the sister splices to be made for straight and curved bars.

6.0 SISTER SPLICE LOCATION

Sister splices shall be made next to, at the same time as, and under the same conditions as the corresponding production splices. Sister splices shall be uniformly distributed throughout the production splices which they represent. Production and sister splices shall be installed in a sequential order (e.g. one sister splice located between two production splices, install one production splice, then a sister splice, and then the other production splice). Separate sets of sister splices shall be made for horizontal, vertical, and diagonal bars for each splicing crew.

TABLE 4.1-1

TENSILE TESTING FREQUENCY

ANSI N45.2.5 1974

Stage of Construction	Section 4.9.4(1) Uses Only Production Splices	Section 4.9.4(2) Uses Combination of Sister Splices and Production
First 100 Production Splices Made	1 Production splices of the first 10 splices made	1 Production splice of the first 10 splices made
	1 Production splice of the next 90 splices made	1 Production splice and 3 sister splices for the next 90 production splices made
Subsequent Units of 100 Production Splices Made	2 Production splices of the next and subsequent units of 100 splices made	3 Splices either production or sister for the next 100 splices @ least 1/4 must be production splices

4

TABLE 5.0-1

SISTER SPLICE SAMPLES TO BE MADE AND INTENDED USE

STRAIGHT BARS				CURVED BARS			
Stage of Construction	(1) Tensile Testing Samples	(2) Spare samples if testing in (1) does not meet acceptance criteria	(3)=(1)+(2) Total Samples to be made that represent straight bar production splices	Stage of Construction	(4) Tensile Testing Samples	(5) Spare samples if testing in in (4) does not meet acceptance criteria	(6)=(4)+(5) Total Samples to be made that represent curved bar production splices
1st 100 Production Splices Made	3 for the 1st 10 production splices	3 for the 1st 10 production splices	6	1st 100 Production Splice Made	1 for the 1st 10 production splices	1 for the 1st 10 production splices	2
	6 for the next 90 production splices	15 for the next 90 production splices	21		4 for the next 90 production splices	5 for the next 90 production splices	9
Subsequent Units of 100 Production Splices Made	4	18	22	Subsequent Units of 100 Production Splices Made	3	6	9

7.0 TENSILE TEST ACCEPTANCE CRITERIA AND EVALUATION OF RESULTS

All sister splice test samples shall be tested to failure using the loading rate set forth in ASTM A-370.

The acceptance criteria shall be as follows:

a. The tensile strength of each sister splice tested shall meet or exceed 125 percent of the minimum yield strength specified for ASTM-A615 Grade 40.

b. The average tensile strength of each group of 15[1] consecutive samples shall meet or exceed the ultimate tensile strength specified for ASTM-A615, Grade 40.

If any sister splice fails to meet 125 percent of the minimum yield strength specified for ASTM-A615, Grade 40, and the observed rate of failure does not exceed one for each 15 consecutive test samples, the sampling procedure shall start a new.

If any sister splice used for tensile testing fails to meet 125 percent of the minimum yield strength specified for ASTM-A615, Grade 40, and the observed rate of failure exceeds one for each 15 consecutive test samples, mechanical splicing shall be stopped. In addition, an independent laboratory analysis shall be performed to determine the cause of the failures. AEPSC shall specify corrective action to prevent any further substandard splices. Furthermore, six additional sister splices corresponding to the 100 production splices under investigation shall be tensile tested, provided the production splices under investigation are on curved bars. If the production splices under investigation are on straight bars, 18 sister splices corresponding to the 100 production splices shall be tensile tested. If two or more sister splices from any of the additional splice samples fail to meet 125 percent of the specified yield strength specified for ASTM-A615, Grade 40, the 100 production splices under investigation shall be removed and replaced. 4

If the average tensile strength of the 15 consecutive samples fails to meet the ultimate tensile strength specified for ASTM-A615, Grade 40, AEPSC will evaluate and assess the acceptability of the reduced average tensile strength with respect to the required strength of the location where the samples were taken.

[1]The groups of 15 consecutive samples are independent of crews. Samples will be tested on a "first in the lab-First tested" basis. i.e. A group of 15 consecutive samples can be comprised of samples made by several crews. This basis is typically used on nuclear construction.

FIGURE 3.0-1

CADWELD SPLICE LONGITUDINAL CENTERING

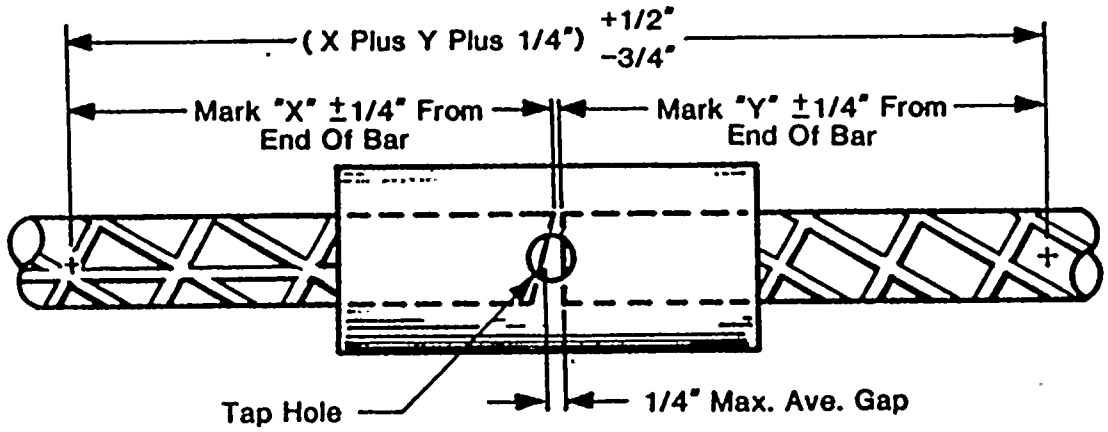

ATTACHMENT 3 TO AEP:NRC:0980F

DOCUMENT CONTROL ACKNOWLEDGEMENT LETTER

TABLE 4-3
DONALD C. COOK NUCLEAR PLANT
COMPARISON OF STRESSES IN REINFORCED CONCRETE
UNDER COLUMN N-15A

STRUCTURAL ELEMENT	CONCRETE STRESSES (ksi)		REINFORCING STEEL STRESSES (ksi)	
ELEVATION	BEFORE	AFTER	BEFORE	AFTER
WALL 650'	0.998	1.447	7.45	11.54
WALL 633'	0.371	0.552	2.62	4.01
WALL 609'	0.515	0.708	3.75	5.29
WALL 587'	0.680	0.847	5.11	6.47
SLAB 584'	0.577	0.607	20.00	21.10
WALL 570'	0.541	0.706	4.01	5.33
SLAB 570'	0.416	0.546	9.50	12.50

Note: All of the concrete stresses are compressive. All of the reinforcing steel stresses in the walls are compressive. The reinforcing steel stresses in the slabs are tensile.

Question 4-2

What type of protection will be provided to minimize the potential for damage to the condensate storage tank, the primary water storage tank, and the refueling water storage tank from construction traffic during the Steam Generator Repair Project?

RESPONSE 5

Temporary concrete traffic barriers, of the type used for highway construction, will be placed between the storage tanks and the path of construction traffic.

...pe of protection will be provided to minimize the potential for ...to the condensate storage tank, the primary water storage tank, ...retaining water storage tank from construction traffic during ...Generator Repair Project?

5

...concrete traffic barriers, of the type used for highway ...be placed between the storage tanks and the path of ...on ...

SUPPLEMENT 4

This supplement contains a response to a request for additional information made by the Nuclear Regulatory Commission. The request for additional information was made at a September 15, 1987 meeting held at the Nuclear Regulatory Commission offices in Bethesda, Maryland. 5

Question	Topic
4-1	Auxiliary Building Structural Stresses
4-2	Storage Tank Protection

Question 4-1

For a vertical slice through the Auxiliary Building at a typical interior column, provide a tabular comparison of the stresses before and after the upgrade to single-failure-proof status of the existing crane and the addition of a second single-failure-proof crane. This vertical section shall include the crane runway girder, a column and the reinforced concrete structure.

RESPONSE

Three tables have been provided in response to Question 4-1. Table 4-1, "Donald C. Cook Nuclear Plant Comparison of Stresses in the Auxiliary Building Runway Girder", compares the existing or "before" stresses to the new or "after" stresses with and without girder reinforcement.

Table 4-2, "Donald C. Cook Nuclear Plant Comparison of Stresses in an Auxiliary Building Support Column", compares the existing or "before" stresses to the new or "after" stresses at five elevations along column N-15A. Two conditions are analyzed in Table 4-2. The first condition, presented under the heading "Operating" compares the existing stresses (stresses imposed on the column, including those imposed by the existing 150 ton crane with 150 ton load on the hook) to the new stresses (stress imposed on the column including those imposed by the operation of two 150 ton single-failure-proof cranes lifting a steam generator lower assembly, approximately 300 tons). The second condition presented under the heading "Seismic (SSE)" compares the existing stresses (stresses imposed on the column, including those stresses imposed by the existing 150 ton crane with no load during a safe shutdown earthquake (SSE)) to the new stresses (stresses imposed by the new single-failure-proof crane with a 60 ton load on the hook during a safe shutdown earthquake). 5

Table 4-3, "Donald C. Cook Nuclear Plant Comparison of Stresses in Reinforced Concrete Under Column N-15A", compares the "before" concrete stresses to the "after" concrete stresses and the "before" reinforcing steel stresses to the "after" reinforcing steel stresses.

The analyses of the Auxiliary Building performed by Sargent and Lundy and AEPSC found that the concrete structure has sufficient capacity to support the steel superstructure including the loads imposed by the two single-failure-proof cranes. These analyses considered the worst conditions resulting from the loads imposed during the installation and removal of the steam generator lower assemblies and the use of the cranes as 60 ton single-failure-proof cranes during normal plant operations.

TABLE 4-1
DONALD C. COOK NUCLEAR PLANT
COMPARISON OF STRESSES IN THE AUXILIARY
BUILDING CRANE RUNWAY GIRDER

LOAD CASE	WEB SHEAR		BEARING STIFFNER				BENDING MOMENT			
			COLUMN ACTION		BEARING		+ MOMENT		- MOMENT	
	fv (ksi)	Fv (ksi)	fa (ksi)	Fa (ksi)	fp (ksi)	Fp (ksi)	fb (ksi)	Fb (ksi)	fb (ksi)	Fb (ksi)
Existing	12.6	14.5	19.2	21.2	31.7	32.4	22.2	33.0	14.1	22.0
New Without Girder Reinforcement	16.7	14.5	27.4	21.2	47.1	32.4	22.2*	33.0	19.8	22.0
New With Girder Reinforcement	8.8	14.5	18.4	21.2	23.6	32.4				

Notes:
1. These stresses are for a 36 foot section of runway girder from Column N to Column P.
2. fv, Fv: Actual and allowable shear stresses, respectively.
3. fa, Fa: Actual and allowable compressive stresses, respectively.
4. fp, Fp: Actual and allowable bearing stresses, respectively.
5. fb, Fb: Actual and allowable bending stresses, respectively.

* Existing Stresses Controlled

5

NOTES: 1. Times estimated and for overhead cylinder alone.

2. (a) For manual, non automatic compression processes respectively.

3. (b) For actual non automatic finishing processes respectively.

4. (c) Use: assumed multiplication factors.

5. [illegible] Original (backlog) stress.

6. (x) Minimum alert stress (based on [illegible] test results).

TABLE 4-2

DONALD C. COOK NUCLEAR PLANT

COMPARISON OF STRESSES IN THE AUXILIARY BUILDING SUPPORT COLUMNS

ELEVATION	LOAD CASE	OPERATING								SEISMIC (SSE)							
		AXIAL			BENDING				Axial & Bending	AXIAL			BENDING				Axial & Bending
		fa (ksi)	Fa (ksi)	Ka=fa/Fa	fb (ksi)	Fb (ksi)	m_1	$K_b=\frac{m_1 fb}{Fb}$	K_a+K_b	fa (ksi)	F_{cr} (ksi)	$K_a=fa/F_{cr}$	fb (ksi)	Fy (ksi)	m_2	$K_b=\frac{m_2 fb}{Fy}$	K_a+K_b
696'	Exist.	2.5	19.87	0.13	12.8	24.8	1.0	0.52	0.65	3.2	33.86	0.10	26.3	37.63	1.0	0.70	0.80
	New	2.5		0.13	19.0		1.0	0.77	0.90	3.3		0.10	32.6		1.0	0.86	0.96
682'	Exist.	2.5	19.87	0.13	12.1	24.8	1.0	0.49	0.62	3.9	33.86	0.12	10.1	37.63	1.0	0.27	0.39
	New	2.5		0.13	13.7		1.0	0.55	0.68	3.9		0.12	10.8		1.0	0.29	0.41
678'	Exist.	4.7	19.23	0.24	6.2	22.0	1.0	0.28	0.52	7.0	33.86	0.21	7.0	36.3	1.0	0.19	0.40
	New	4.9		0.25	11.1		1.0	0.50	0.75	10.0		0.30	12.8		1.0	0.35	0.65
655'	Exist.	4.7	19.23	0.24	3.5	22.0	1.0	0.16	0.40	7.1	33.86	0.21	13.0	36.3	1.0	0.36	0.57
	New	4.9		0.25	8.3		1.0	0.38	0.63	10.2		0.30	14.8		1.0	0.41	0.71
650'	Exist.	4.2	19.23	0.22	4.0	22.0	1.0	0.18	0.40	6.3	33.86	0.19	13.6	36.3	1.0	0.37	0.56
	New	4.4		0.23	8.3		1.0	0.38	0.61	9.0		0.27	14.7		1.0	0.41	0.68

Notes:
1. These stresses are for support column N15A.
2. fa, Fa: Actual and allowable compressive stresses, respectively.
3. fb, Fb: Actual and allowable bending stresses, respectively.
4. m_1, m_2: Bending amplification factors.
5. F_{cr}: Critical (buckling) stress.
6. Fy: Minimum yield stress (based on mill test reports).

5

[illegible]