ATTACHMENT A

Proposed Technical Specification Changes

9212140159 921130
PDR ADOCK 05000244
P PDR

## ATTACHMENT A

Revise the Technical Specification pages as follows:

| Remove | Insert |
|---|---|
| 3.6-1 | 3.6-1 |
| 3.6-2 | 3.6-2 |
| 3.6-3 | 3.6-3 |
| ----- | 3.6-3a |
| 3.6-4 | ----- |
| 3.6-5 | ----- |
| 3.6-6 | ----- |
| 3.6-7 | ----- |
| 3.6-7A | ----- |
| 3.6-8 | ----- |
| 3.6-9 | ----- |
| 3.6-10 | ----- |
| 3.6-11 | ----- |
| 3.8-1 | 3.8-1 |
| 3.8-3 | 3.8-3 |
| 3.8-5 | 3.8-5 |
| ----- | 3.8-6 |
| 4.4-4 | 4.4-4 |
| 4.4-6 | 4.4-6 |
| 4.4-7 | 4.4-7 |
| 4.4-8 | 4.4-8 |
| 4.4-11 | 4.4-11 |
| 4.4-13 | 4.4-13 |
| 4.4-14 | 4.4-14 |
| 4.4-17 | 4.4-17 |

## 3.6 Containment System

Applicability:

Applies to the integrity of reactor containment.

Objective:

To define the operating status of the reactor containment for plant operation.

Specification:

### 3.6.1 Containment Integrity

a. Except as allowed by 3.6.3, containment integrity shall not be violated unless the reactor is in the cold shutdown condition. Closed valves may be opened on an intermittent basis under administrative control.

b. The containment integrity shall not be violated when the reactor vessel head is removed unless the boron concentration is greater than 2000 ppm.

c. Positive reactivity changes shall not be made by rod drive motion or boron dilution whenever the containment integrity is not intact unless the boron concentration is greater than 2000 ppm.

### 3.6.2 Internal Pressure

If the internal pressure exceeds 1 psig or the internal vacuum exceeds 2.0 psig, the condition shall be corrected within 24 hours or the reactor rendered subcritical.

3.6.3 Containment Isolation Boundaries

3.6.3.1 With a containment isolation boundary inoperable for one or more containment penetrations, either:

a. Restore each inoperable boundary to OPERABLE status within 4 hours, or

b. Isolate each affected penetration within 4 hours by use of at least one deactivated automatic valve secured in the isolation position, one closed manual valve, or a blind flange, or

c. Verify the operability of a closed system for the affected penetrations within 4 hours and either restore the inoperable boundary to OPERABLE status or isolate the penetration as provided in 3.6.3.1.b within 30 days, or

d. Be in at least hot shutdown within the next 6 hours and in cold shutdown within the following 30 hours.

3.6.4 Combustible Gas Control

3.6.4.1 When the reactor is critical, at least two independent containment hydrogen monitors shall be operable. One of the monitors may be the Post Accident Sampling System.

3.6.4.2 With only one hydrogen monitor operable, restore a second monitor to operable status within 30 days or be in at least hot shutdown within the next 6 hours.

3.6.4.3 With no hydrogen monitors operable, restore at least one monitor to operable status within 72 hours or be in at least hot shutdown within the next 6 hours.

3.6.5 Containment Mini-Purge

Whenever the containment integrity is required, emphasis will be placed on limiting all purging and venting times to as low as achievable. The mini-purge isolation valves will remain closed to the maximum extent practicable but may be open for pressure control, for ALARA, for respirable air quality considerations for personnel entry, for surveillance tests that may require the valve to be open or other safety related reasons.

Basis:

The reactor coolant system conditions of cold shutdown assure that no steam will be formed and hence there would be no pressure buildup in the containment if the reactor coolant system ruptures.

The shutdown margins are selected based on the type of activities that are being carried out. The (2000 ppm) boron concentration provides shutdown margin which precludes criticality under any circumstances. When the reactor head is not to be removed, a cold shutdown margin of 1%$\Delta k/k$ precludes criticality in any occurrence.

Regarding internal pressure limitations, the containment design pressure of 60 psig would not be exceeded if the internal pressure before a major steam break accident were as much as 1 psig.[1] The containment is designed to withstand an internal vacuum of 2.5 psig.[2] The 2.0 psig vacuum is specified as an operating limit to avoid any difficulties with motor cooling.

In order to minimize containment leakage during a design basis accident involving a significant fission product release, penetrations not required for accident mitigation are provided with isolation boundaries. These isolation boundaries consist of either passive devices or active automatic valves and are listed in UFSAR Table 6.2-15. Closed manual valves, deactivated automatic valves secured in their closed position (including check valves with flow through the valve secured), blind flanges and closed systems are considered passive devices. Automatic isolation valves designed to close following an accident without operator action, are considered active devices. Two isolation devices are provided for each mechanical penetration, such that no single credible failure or malfunction of an active component can cause a loss of isolation, or result in a leakage rate that exceeds limits assumed in the safety analyses.

In the event that one isolation boundary is inoperable, the affected penetration must be isolated with at least one boundary that is not affected by a single active failure. Isolation boundaries that meet this criterion are a closed and deactivated automatic containment isolation valve, a closed manual valve, or a blind flange. A closed system also meets this criterion, however, a 30 day period to either fix the inoperable boundary or provide additional isolation is conservatively applied. Verification of the operability of the closed system can be accomplished through normal system operation, containment leakage detection systems, surveillance testing, or normal operator walkdowns.

The opening of closed containment isolation valves on an intermittent basis under administrative control includes the following considerations: (1) stationing an individual qualified in accordance with station procedures, who is in constant communication with the control room, at the valve controls, (2) instructing this individual to close these valves in an accident situation, and (3) assuring that environmental conditions will not preclude access to isolate the boundary and that this action will prevent the release of radioactivity outside the containment.

References:

(1) Westinghouse Analysis, "Report for the BAST Concentration Reduction for R. E. Ginna", August 1985, submitted via Application for Amendment to the Operating License in a letter from R.W. Kober, RG&E to H.A. Denton, NRC, dated October 16, 1985

(2) UFSAR - Section 3.8.1.2.2

(3) UFSAR Table 6.2-15

3.8 REFUELING

Applicability

Applies to operating limitations during refueling operations.

Objective

To ensure that no incident could occur during refueling operations that would affect public health and safety

Specification

3.8.1 During refueling operations the following conditions shall be satisfied.

a. Containment penetrations shall be in the following status:

i. The equipment hatch shall be in place with at least one access door closed, or the closure plate that restricts air flow from containment shall be in place,

ii. At least one access door in the personnel air lock shall be closed, and

iii. Each penetration providing direct access from the containment atmosphere to the outside atmosphere shall be either:

1. Closed by an isolation valve, blind flange, or manual valve, or

2. Be capable of being closed by an OPERABLE automatic Shutdown Purge or Mini Purge valve.

b. Radiation levels in the containment shall be monitored continuously.

c. Core subcritical neutron flux shall be continuously monitored by at least two source range neutron monitors, each with continuous visual indication in the control room and one with audible indication in the containment and control room available whenever core geometry is being changed. When core geometry is not being changed at

flange. If this condition is not met, all operations involving movement of fuel or control rods in the reactor vessel shall be suspended.

3.8.2 If any of the specified limiting conditions for refueling is not met, refueling of the reactor shall cease; work shall be initiated to correct the violated conditions so that the specified limits are met; no operations which may increase the reactivity of the core shall be made.

3.8.3 If the conditions of 3.8.1.d are not met, then in addition to the requirements of 3.8.2, isolate the Shutdown Purge and Mini Purge penetrations within 4 hours.

Basis:

The equipment and general procedures to be utilized during refueling are discussed in the UFSAR. Detailed instructions, the above specified precautions, and the design of the fuel handling equipment incorporating built-in interlocks and safety features, provide assurance that no incident could occur during the refueling operations that would result in a hazard

provided on the lifting hoist to prevent movement of more than one fuel assembly at a time. The spent fuel transfer mechanism can accommodate only one fuel assembly at a time. In addition, interlocks on the auxiliary building crane will prevent the trolley from being moved over stored racks containing spent fuel.

The operability requirements for residual heat removal loops will ensure adequate heat removal while in the refueling mode. The requirement for 23 feet of water above the reactor vessel flange while handling fuel and fuel components in containment is consistent with the assumptions of the fuel handling accident analysis.

The analysis[3] for a fuel handling accident inside containment establishes acceptable offsite limiting doses following rupture of all rods of an assembly operated at peak power. No credit is taken for containment isolation or effluent filtration prior to release. Requiring closure of penetrations which provide direct access from containment atmosphere to the outside atmosphere establishes additional margin for the fuel handling accident and establishes a seismic envelope to protect against seismic events during refueling. Isolation of these penetrations may be achieved by an OPERABLE shutdown purge or mini-purge valve, blind flange, or isolation valve. An OPERABLE shutdown purge or mini-purge valve is capable of being automatically isolated by R11 or R12. Penetrations which do not provide direct access from containment atmosphere to the outside atmosphere support containment integrity by either a closed system within containment, necessary isolation valves, or a material which can provide a temporary ventilation barrier, at atmospheric pressure, for the containment penetrations during fuel movement.

References

(1) UFSAR Sections 9.1.4.4 and 9.1.4.5

(2) Reload Transient Safety Report, Cycle 14

(3) UFSAR Section 15.7.3.3

4.4.1.4 Acceptance Criteria

a. The leakage rate Ltm shall be <0.75 Lt at Pt. Pt is defined as the containment vessel reduced test pressure which is greater than or equal to 35 psig. Ltm is defined as the total measured containment leakage rate at pressure Pt. Lt is defined as the maximum allowable leakage rate at pressure Pt.

b. Lt shall be determined as $Lt = La\left(\frac{Pt}{Pa}\right)^{1/2}$ which equals .1528 percent weight per day at 35 psig. Pa is defined as the calculated peak containment internal pressure related to design basis accidents which is greater than or equal to 60 psig. La is defined as the maximum allowable leakage rate at Pa which equals .2 percent weight per day.

c. The leakage rate at Pa (Lam) shall be <0.75 La. Lam is defined as the total measured containment leakage rate at pressure Pa.

4.4.1.5 Test Frequency

a. A set of three integrated leak rate tests shall be performed at approximately equal intervals during each 10-year service period. The third test of each set shall be conducted in the final year of the 10-year service period or one year before or after the final year of the 10-year service period provided:

i. the interval between any two Type A tests does not exceed four years,

ii. following each in-service inspection, the containment airlocks, the steam generator inspection/maintenance penetration, and the equipment hatch are leak tested prior to returning the plant to operation, and

iii. any repair, replacement, or modification of a containment barrier resulting from the inservice inspections shall be followed by the appropriate leakage test.

b. The local leakage rate shall be measured for each of the following components:

i. Containment penetrations that employ resilient seals, gaskets, or sealant compounds, piping penetrations with expansion bellows and electrical penetrations with flexible metal seal assemblies.

ii. Air lock and equipment door seals.

iii. Fuel transfer tube.

iv. Isolation valves on the testable fluid systems lines penetrating the containment.

v. Other containment components, which require leak repair in order to meet the acceptance criterion for any integrated leakage rate test.

4.4.2.2 Acceptance Criterion

Containment isolation boundaries are inoperable from a leakage standpoint when the demonstrated leakage of a single boundary or cumulative total leakage of all boundaries is greater than 0.60 La.

4.4.2.3 Corrective Action

a. If at any time it is determined that the total leakage from all penetrations and isolation boundaries exceeds 0.60 La, repairs shall be initiated immediately.

b. If repairs are not completed and conformance to the acceptance criterion of 4.4.2.2 is not demonstrated within 48 hours, the reactor shall be shutdown and depressurized until repairs are effected and the local leakage meets the acceptance criterion.

c. If it is determined that the leakage through a mini-purge supply and exhaust line is greater than 0.05 La an engineering evaluation shall be performed and plans for corrective action developed.

4.4.2.4 Test Frequency

a. Except as specified in b. and c. below, individual penetrations and containment isolation valves shall be tested during each reactor shutdown for refueling, or other convenient intervals, but in no case at intervals greater than two years.

b. The containment equipment hatch, fuel transfer tube, steam generator inspection/maintenance penetration, and shutdown purge system flanges shall be tested at each refueling shutdown or after each use, if that be sooner.

c. The containment air locks shall be tested at intervals of no more than six months by pressurizing the space between the air lock doors. In addition, following opening of the air lock door during the interval, a test shall be performed by pressurizing between the dual seals of each door opened, within 48 hours of the opening, unless the reactor was in the cold shutdown condition at the time of the opening or has been subsequently brought to the cold shutdown condition. A test shall also be performed by pressurizing between the dual seals of each door within 48 hours of leaving the cold shutdown condition, unless the doors have not been open since the last test performed either by pressurizing the space between the air lock doors or by pressurizing between the dual door seals.

the tendon containing 6 broken wires) shall be inspected. The accepted criterion then shall be no more than 4 broken wires in any of the additional 4 tendons. If this criterion is not satisfied, all of the tendons shall be inspected and if more than 5% of the total wires are broken, the reactor shall be shut down and depressurized.

4.4.4.2 Pre-Stress Confirmation Test

a. Lift-off tests shall be performed on the 14 tendons identified in 4.4.4.1a above, at the intervals specified in 4.4.4.1b. If the average stress in the 14 tendons checked is less than 144,000 psi (60% of ultimate stress), all tendons shall be checked for stress and retensioned, if necessary, to a stress of 144,000 psi.

b. Before reseating a tendon, additional stress (6%) shall be imposed to verify the ability of the tendon to sustain the added stress applied during accident conditions.

4.4.5 Containment Isolation Valves

4.4.5.1 Each containment isolation valve shall be demonstrated to be OPERABLE in accordance with the Ginna Station Pump and Valve Test program submitted in accordance with 10 CFR 50.55a.

4.4.6 Containment Isolation Response

4.4.6.1 Each containment isolation instrumentation channel shall be demonstrated OPERABLE by the performance of the CHANNEL CHECK, CHANNEL CALIBRATION, and CHANNEL FUNCTIONAL TEST operations for the MODES and at the frequencies shown in Table 4.1-1.

4.4.6.2 The response time of each containment isolation valve shall be demonstrated to be within its limit at least once per 18 months. The response time includes only the valve travel time for those valves which the safety analysis assumptions take credit for a change in valve position in response to a containment isolation signal.

The Specification also allows for possible deterioration of the leakage rate between tests, by requiring that the total measured leakage rate be only 75% of the maximum allowable leakage rate.

The duration and methods for the integrated leakage rate test established by ANSI N45.4-1972 provide a minimum level of accuracy and allow for daily cyclic variation in temperature and thermal radiation. The frequency of the integrated leakage rate test is keyed to the refueling schedule for the reactor, because these tests can best be performed during refueling shutdowns. Refueling shutdowns are scheduled at approximately one year intervals.

The specified frequency of integrated leakage rate tests is based on three major considerations. First is the low probability of leaks in the liner, because of (a) the use of weld channels to test the leaktightness of the welds during erection, (b) conformance of the complete containment to a 0.1% per day leak rate at 60 psig during preoperational testing, and (c) absence of any significant stresses in the liner during reactor operation. Second is the more frequent testing, at the full accident pressure, of those portions of the containment envelope that are most likely to develop leaks during reactor operation (penetrations and isolation valves) and the low value (0.60 La) of the total leakage that is specified as acceptable. Third is the tendon stress surveillance program, which provides assurance than an important part of the structural integrity of the containment is maintained.

The basis for specification of a total leakage of 0.60 La from penetrations and isolation boundaries is that only a portion of the allowable integrated leakage rate should be from those sources in order to provide assurance that the integrated leakage rate would remain within the specified limits during the intervals between integrated leakage rate tests. Because most leakage during an integrated leak rate test occurs though penetrations and isolation valves, and because for most penetrations and isolation valves a smaller leakage rate would result from an integrated leak test than from a local test, adequate assurance of maintaining the integrated leakage rate within the specified limits is provided. The limiting leakage rates from the Recirculation Heat Removal Systems are judgement values based primarily on assuring that the components could operate without mechanical failure for a period on the order of 200 days after a design basis accident. The test

The pre-stress confirmation test provides a direct measure of the load-carrying capability of the tendon.

If the surveillance program indicates by extensive wire breakage or tendon stress relation that the pre-stressing tendons are not behaving as expected, the situation will be evaluated immediately. The specified acceptance criteria are such as to alert attention to the situation well before the tendon load-carrying capability would deteriorate to a point that failure during a design basis accident might be possible. Thus the cause of the incipient deterioration could be evaluated and corrective action studied without need to shut down the reactor. The containment is provided with two readily removable tendons that might be useful to such a study. In addition, there are 40 tendons, each containing a removable wire which will be used to monitor for possible corrosion effects.

Operability of the containment isolation boundaries ensures that the containment atmosphere will be isolated from the outside environment in the event of a release of radioactive material to the containment atmosphere or pressurization of the containment. Performance of cycling tests and verification of isolation times associated with automatic containment isolation valves is covered by the Pump and Valve Test Program. Compliance with Appendix J to 10 CFR 50 is addressed under local leak testing requirements.

References:


(1) UFSAR Section 3.1.2.2.7

(2) UFSAR Section 6.2.6.1

(3) UFSAR Section 15.6.4.3

(4) UFSAR Section 6.3.3.8

(5) UFSAR Table 15.6-9

(6) FSAR Page 5.1.2-28

(7) North-American-Rockwell Report 550-x-32, Autonetics Reliability Handbook, February 1963.

(8) FSAR Page 5.1-28

# ATTACHMENT B

## Safety Evaluation

The primary purpose of this amendment is to remove Table 3.6-1, "Containment Isolation Valves", from the R.E. Ginna Technical Specifications. The reference to Table 3.6-1 in Technical Specification sections 3.6.3.1, 4.4.5.1, and 4.4.6.2 will be deleted with a reference to UFSAR Table 6.2-13 being added to the bases for Technical Specification 3.6. In addition, the inoperability definition and action required statement for Technical Specifications 3.6.1 and 3.6.3.1 will be clarified. The Specifications and Bases for containment integrity during refueling operations (3.8.1 section a and 3.8.3) will be revised to make them more consistent with industry standards. Technical Specifications 4.4.1.5, section a (ii) and 4.4.2.4, section b, will be revised to include the modified steam generator inspection/ maintenance penetration. Technical Specification 4.4.1.5, section a (ii) and the Bases for section 4.4 will also be clarified. The temporary notes associated with the purge system and mini-purge valves (Technical Specifications 3.6.5 and 4.4.2.4 section a and d) will be removed since the valves have been installed. Also, the acceptance criteria for containment leakage criteria as listed in Technical Specification 4.4.1.4 and 4.4.2.2 will be clarified.

The 1988 Inservice Test (IST) Program provided a complete review of the containment isolation valves for Ginna and their testing requirements. The information obtained during this review was submitted to the NRC to define the IST requirements for the third ten-year interval at Ginna. This submittal was subsequently approved by the NRC. As a result of this submittal and approval, numerous clarifications were required of Technical Specification Table 3.6-1 and UFSAR Table 6.2-15 (formerly 6.2-13). However, this amendment will remove Technical Specification Table 3.6-1. The necessary changes to UFSAR Table 6.2-15 have been completed. Attachment E contains the revised UFSAR table and associated figures for your information.

Generic Letter 91-08 provides guidance on removing component lists from technical specifications, including the table of containment isolation valves, since their removal would not alter the requirements that are applied to these components. Removing Table 3.6-1 from the Technical Specifications and incorporating the required information into Ginna UFSAR Table 6.2-15 will maintain the listing of the containment isolation boundaries within a licensee controlled document. Changes to this document can only be performed under the criteria of 10 CFR 50.59 to ensure that no unreviewed safety questions are related to the change. Any future changes to UFSAR Table 6.2-15 will be submitted as part of the required UFSAR update. In addition, a report summary of the changes to the Ginna UFSAR are furnished to the NRC on a required basis. A reference to UFSAR Table 6.2-15 has also been provided in the bases for Technical Specification 3.6 consistent with Generic Letter 91-08.

Generic Letter 91-08 also provided instructions to add a note to the containment isolation valve LCO with respect to opening locked or sealed closed containment isolation valves under administrative control. This note was added to Technical Specification 3.6.1 and a discussion of the necessary administrative controls required for performing this action was added to the bases.

Technical Specification 3.6.3.1 is revised to include the use of a closed system as an allowable means to isolate a containment penetration that has a inoperable containment isolation boundary. A closed system can be considered equal, or in many cases preferable, to the remaining alternatives (e.g., a closed manual valve), since the closed system by definition must be missile protected, seismically designed and leak tested. The use of a closed system is also consistent with the intent of the bases for containment isolation in NUREG-1430 which states:

> In the event one containment isolation valve in one or more penetration flow paths is inoperable [except for purge valve leakage not within limits], the affected penetration must be isolated. The method of isolation must include the use of at least one isolation barrier that cannot be adversely affected by a single active failure.

Since a closed system is not affected by any single active failure, it provides an equivalent barrier to a blind flange, a closed manual valve, or a deactivated containment isolation valve. However, a 30 day limit was conservatively assigned to the use of only the closed system before additional isolation must be provided or the inoperable boundary repaired. The 30 day limit is also consistent with Standard Technical Specifications which require that the flow path for penetrations with inoperable containment isolation valves be verified isolated once every 31 days. The Bases for Technical Specification 3.6 were also updated to provide necessary supporting information with respect to using a closed system to isolate an inoperable isolation boundary.

The remaining changes with respect to the required actions of Technical Specification 3.6.3.1 allow consistency with Standard Technical Specifications. However, "isolation boundary" was used in place of "isolation valve" since not all penetrations have two containment isolation valves. For example, penetrations under the specifications for General Design Criteria 57 only require a single isolation valve; the piping provides an additional boundary. The use of "isolation boundary" is also consistent with the column headings of the current Containment Isolation Valve Table 3.6-1. Information on what qualifies as an "isolation boundary" is provided in the bases for Technical Specification 3.6. These criteria are consistent with the necessary General Design Criteria, or exemption, as appropriate. "Isolation boundary" was also used in place of "isolation valve" in Technical Specifications 4.4.2.2, 4.4.2.3, and the Bases for section 4.4.

The inoperability definition based on leakage for containment isolation boundaries was also removed from Technical Specification 3.6.3.1. This definition is found in Technical Specification 4.4.2.3 which was subsequently updated to make it more consistent with 10 CFR 50 Appendix J. This change eliminates duplication within the Technical Specifications and is consistent with Standard Technical Specifications.

The action statement associated with Technical Specification 3.8.1 section a was modified to make it more nearly consistent with Standard Technical Specifications. The most significant change was with respect to removing the requirement of having all automatic containment isolation valves operable during refueling operations. The proposed specification now only requires that all penetrations providing direct access from the containment atmosphere to the outside atmosphere be either isolated or capable of being isolated by an automatic purge valve. This change is considered acceptable since a fuel handling accident will not significantly pressurize the containment. In addition, the fuel handling accident analyzed for Ginna does not take credit for isolation of containment while remaining well within 10 CFR 100 guidelines (UFSAR Section 15.7.3.3.1.1). Therefore, the removal of this requirement does not affect the consequences of a fuel handling accident.

The changes to Technical Specification 3.8.3 now specifically identify which penetrations must be closed if there is no residual heat removal loop in service (i.e., Shutdown Purge and Mini-Purge). The remaining penetrations that provide direct access from the containment atmosphere to the outside atmosphere are already required to be isolated during refueling operations per new Technical Specification 3.8.1 section a (iii). The changes to the bases are consistent with Standard Technical Specifications. Consequently, these are not technical changes.

The changes with respect to containment leakage criteria in Technical Specification 4.4.1.4 are clarifications only. All terms contained in the definition for Lt is specified in the Technical Specifications consistent with 10 CFR 50 Appendix J.

The addition of the steam generator inspection/maintenance penetration to both the UFSAR Table and the necessary Technical Specification surveillance requirements is the result of a modification to enhance containment closure during mid-loop operation (Generic Letter 88-17). No new containment isolation valves were added as a result of this modification. The addition of this penetration to the UFSAR Table and Technical Specifications 4.4.1.5, section a (ii) and 4.4.2.4, section b, results in the new penetration to be treated consistent with respect to the Personnel and Equipment Hatches, and the fuel transfer tube (see letter from R.C. Mecredy, RG&E, to A.R. Johnson, NRC, dated March 13, 1990).

The first line of Technical Specification 4.4.1.5, section a (ii) is also modified to state "following each in-service inspection..." The hyphenation of "in-service" is to correct a typographical error only. The replacement of "one" with "each" provides greater understanding of the test frequency requirements. These changes are a minor clarification only and do not involve a technical change.

The temporary notes associated with the purge and mini-purge valves in Technical Specifications 3.6.5, 4.4.2.4 section a and d are removed since these valves have been installed. This is not a technical change since the notes were only intended to be applicable until the completion of the necessary modifications.

Technical Specifications 4.4.5.1 and 4.4.6.2 were revised to remove the reference to Table 3.6-1 since this is being deleted. These specifications were also changed to make them consistent with Standard Technical Specifications.

In accordance with 10 CFR 50.91, these changes to the Technical Specifications have been evaluated to determine if the operation of the facility in accordance with the proposed amendment would:

1. involve a significant increase in the probability or consequences of an accident previously evaluated; or

2. create the possibility of a new or different kind of accident previously evaluated; or

3. involve a significant reduction in a margin of safety.

These proposed changes do not increase the probability or consequences of a previously evaluated accident or create a new or different type of accident. Furthermore, there is no reduction in the margin of safety for any particular Technical Specification. The detailed changes are described in Attachment F.

Therefore, Rochester Gas and Electric submits that the issues associated with this Amendment request are outside the criteria of 10 CFR 50.91; and a no significant hazards finding is warranted.

# ATTACHMENT C

## 10 CFR 50 Appendix J Relief Requests

In support of preparing this amendment request, RG&E has performed an extensive review of the containment isolation valves (CIVs) and boundaries (CIBs) for Ginna Station. Included with this review was an assessment of the test procedures that are used for 10 CFR 50, Appendix J testing. These procedures were replaced in their entirety with the new procedures being used for necessary Appendix J testing during the recent 1992 refueling outage. However, as a result of preparing and using these new test procedures, RG&E determined that relief is necessary from certain provisions of Appendix J for several containment isolation valves and boundaries. These relief requests are directly related to this application for amendment since relief is necessary in order to eliminate the need for potential station modifications and revision of the isolation valves and boundaries currently identified on UFSAR Table 6.2-15.

The relief requests, and their basis, are provided below. If granted, these requests will be added to the 1990-1999 Inservice Pump and Valve Test Program for Ginna Station as necessary.

(1) Penetrations 105 and 109 contain the Containment Spray injection lines to the ring headers. Both penetrations have test and drain lines located outside containment that are not used for 10 CFR 50 Appendix J testing. These 3/4 inch lines have the necessary containment isolation valves and boundaries; however, these components cannot be leak tested since there are no available test connections. The Containment Spray lines are normally filled with water to a level at least 45 feet above the test and drain lines in order to facilitate faster response of the system during an accident. RG&E has performed an analysis of this line and concluded that the water would not boil off during a LOCA. Since the test and drain lines are constantly exposed to this head of water during power operations, any leakage would be noticed either by normal operator walkdowns (i.e., indication of water on valve or floor), or during monthly tests of the containment spray pumps which require confirmation of the head of water. Consequently, a verifiable water barrier between the containment atmosphere and the valves will always be in place such that leak testing with air should not be required. RG&E estimates that it would cost approximately $40,000 to install the necessary test connections for these lines. As such, RG&E proposes to fill the Containment Spray injection lines using the RWST each refueling outage to a minimum level of 66.9 feet (or 29 psig). This is the maximum height of water that can be used without creating the potential for flooding the containment charcoal filter units. Each test and drain line containment isolation valve or boundary would then be evaluated for any observed leakage either through visual inspection or the use of local pressure indication. RG&E believes that this test meets the underlying purpose of Appendix J without creating undue hardships on the licensee.

(2) AOV 959 for penetration 111 provides a containment isolation boundary by isolating the non-closed portion of the Residual Heat Removal (RHR) system. Based on 10 CFR 50, Appendix J, AOV 959 would be required to be leak tested once every refueling outage since it is an automatic containment isolation valve. However, leak testing of this valve cannot be accomplished since there are no available test connections. AOV 959 is normally closed at power with its fuses removed and a boundary control tag in place. Following an accident, the valve is continuously pressurized above the peak containment accident pressure by the head of the RHR pumps acting in the safety injection mode. This pressure head is available throughout the post accident period regardless of any single active failure. Consequently, AOV 959 should not require testing since it does not perform a containment isolation function as defined by 10 CFR 50, Appendix J, Section II.B. The manual valve downstream of 959 (957) is also maintained closed at power in order to provide additional redundancy. It should be noted that this position was accepted by the NRC for MOVs 720 and 721 which are also CIVs for penetration 111 (see letter from D. M. Crutchfield, NRC, to J. E. Maier, RG&E, subject: Completion of Appendix J Review, dated May 6, 1981).

(3) Penetrations 130 and 131 contain the Component Cooling Water (CCW) return and supply lines respectively, for the Reactor Support Coolers. These penetrations take credit for a closed system inside containment (CLIC) and two MOVs (813 and 814) as the containment isolation boundaries. The two MOVs are currently tested with air in accordance with 10 CFR 50, Appendix J; however, RG&E proposes to test these valves with water. The CCW system provides a 30 day water seal for the two MOVS since the system is required to support the Residual Heat Removal Coolers post-LOCA. The only time that CCW would not be operating during this 30 day period is for the injection phase of the accident. However, a failure of the CLIC does not need to be assumed until 24 hours following the accident since it is a passive component. At this time, the recirculation phase would be initiated and the CCW system operating.

(4) Penetration 140 contains the Residual Heat Removal (RHR) suction line from Hot Leg A. The two main containment isolation barriers for this penetration are MOV 701 and a closed system outside containment (CLOC). MOV 701 does not require 10 CFR 50, Appendix J testing for the same reason as MOVs 720 and 721 (see #2 above). Instead, MOV 701 is hydrostatically tested every refueling outage. The drain and vent lines used in support of this test are located between MOV 701 and containment; consequently, they are required to have containment isolation valves and be tested in accordance with Appendix J. RG&E estimates that it would cost approximately $100,000 to add the necessary test connections for these lines. In addition, there are significant ALARA concerns with respect to modifying this piping. Therefore, RG&E requests that relief from Appendix J be granted for the isolation valves on these lines consistent with MOV 701.

(5) Penetration 143 contains the Reactor Coolant Drain Tank Discharge Line. The isolation boundaries for this penetration consist of three automatic air-operated valves and two manual valves. Manual isolation valve 1722 cannot currently be directly tested since there is no downstream vent; however, the valve is "inferred" tested (i.e., exposed to air test pressure through the testing of another isolation boundary whereby the leakage through 1722 could be inferred). In addition, it cannot be assured that all water has been drained from the valve seat prior to Appendix J testing since this is the drain line from the Fuel Transfer Canal. RG&E estimates that it would cost approximately $50,000 to install a vent line and isolation valve for 1722. There are also ALARA concerns since the piping normally contains radioactive fluid. Consequently, RG&E proposes to continue to "infer" test 1722 after draining the line as much as possible. It should also be noted that 1722 will normally have a water seal against it when containment integrity is required.

(6) Penetrations 201a, 201b, 209a, and 209b contain the Service Water (SW) supply and return lines for the Reactor Compartment Cooling Units. In addition, penetrations 312, 316, 319, and 320 contain the SW supply lines to the Containment Fan Coolers while penetrations 308, 311, 315, and 323 contain the return lines. These twelve penetrations all take credit for a closed system inside containment (CLIC) and a normally open manual containment isolation valve outside containment. These manual valves are only hydrostatically tested (i.e., not tested to 10 CFR 50, Appendix J criteria) as a result of a cost/benefit study performed during the Systematic Evaluation Program for Ginna. This study determined that the manual isolation valves would only be required if there was a significant breach of the CLIC following a design basis LOCA whereas installing new automatic valves and test connections would cost several million dollars. The NRC accepted the proposed hydrostatic testing approach since the CLIC is seismically designed and missile protected (NUREG-0821, Section 4.22.3). A further review of these lines has found various pressure indicators, flow and temperature transmitters, and drain valves located between the manual isolation valves and containment. However, these components cannot be leak tested since they do not have the necessary test connections. RG&E estimates that it would cost approximately $120,000 to install new test connections. Consequently, RG&E proposes to continue to hydrostatically test these components, similar to that performed for the manual valves, in place of the required Appendix J testing.

(7) Penetrations 206B and 207B are the Steam Generator Sample lines while 321 and 322 are the Steam Generator Blowdown lines. Each of these four penetrations contain two containment isolation valves consisting of a normally open manual valve and an automatic air-operated valve. All eight valves are currently tested to 10 CFR 50, Appendix J. However, these four lines originate from the steam generator secondary side; consequently, the steam generator tubes form one containment barrier as a closed system inside containment (CLIC). Other similar penetrations for Ginna (e.g., Main Steam, Main Feedwater) only have a single isolation valve outside containment that does not need to be tested to Appendix J (See Attachment D, Question #14). Consequently, RG&E proposes to only identify the automatic air-operated valves as CIVs and remove all Appendix J testing requirements.

(8) Fire Service Water penetration 307 contains check valve 9229 which is located inside containment. However, it cannot be assured that all water has been drained from the valve seat prior to Appendix J testing due to its location with respect to available drain lines. RG&E estimates that it would cost approximately $20,000 to install the necessary drain line. Since valve 9229 is outside the missile shield, it is highly unlikely that the Fire Service Water pipe would break in a location such that all water would be completely drained from the valve seat. Therefore, testing 9229 in its current configuration is representative of the conditions that the valve would most likely see during an accident. RG&E will continue to try and remove as much water as possible before the test, but does not believe that the addition of a drain valve is necessary.

(9) The containment isolation boundaries for Hydrogen Monitor Instrumentation penetration 332a are SOVs 922 and 924 and the nuclear sampling system (i.e., closed system outside containment). The two SOVs are required to be tested in accordance with 10 CFR 50, Appendix J since they are automatic CIVs; however, there is no available downstream vent. RG&E estimates that it would cost approximately $15,000 to install the necessary vents. The second containment isolation boundary for this penetration is the Hydrogen Monitor Sampling System which is a closed system outside containment (CLOC). This closed system is tested by pressurizing the Hydrogen Monitor piping up to the two SOVs. Consequently, SOVs 922 and 924 are "inferred" tested though in the opposite direction. Therefore, RG&E proposes to continue to infer test the valves based on the cost related to adding a vent.

ATTACHMENT D

Response To NRC Request For Additional Information

Letter From A.R. Johnson, NRC, to R.C. Mecredy, RG&E,
dated September 26, 1991

As a result of reviewing RG&E's Application for Amendment to Operating License DPR-18 with respect to removing the list of containment isolation valves from Technical Specifications, the NRC responded with a Request for Additional Information (see letter from A. R. Johnson, NRC, to R. C. Mecredy, RG&E, dated September 26, 1991). The issues discussed in this RAI have already been addressed within the Amendment Request and associated UFSAR table and figures; however, a specific response to each of the twenty-nine comments and questions is provided below.

1. *Table 6.2-13 identifies many valves, but does not distinguish between which valves are containment isolation valves and those that are not, other than by use of notes. For example some notes indicate that some valves are not considered containment isolation valves. The use of the term "considered" does not clarify what the classification of the valve is and should [not] be used to describe valves. If there is any clarification to be noted because valves are listed which are not classified as containment isolation valves, it should be provided for accuracy. Additional comments on specific notes are provided in paragraphs below. With respect to boundaries, the table, in general, is not clear on what constitutes a boundary particularly in cases where only one valve is classified as a containment isolation valve for a given penetration. A containment isolation boundary may be a blind flange or a closed system. However, the table does not make clear the boundaries of the second containment isolation barrier. The figures note that some instruments constitute a containment isolation boundary. Therefore, where a system or component is considered a second barrier, in addition to a single containment isolation valve, it should be so identified. Also, the location of that component would be identified under Table 6.2-13 column heading "Position Relative to Containment." Footnote 4 to the table would be applicable where this boundary is a closed system outside containment, however, this note presently does not identify that closed system. Footnote 4 is poorly worded since it is appended to the line entry that identifies the containment isolation valve. This information is important since the TS requires an operable boundary, or second isolation valve in the case that one containment isolation valve is inoperable, and the TS Bases references this table for such information.*

<u>RESPONSE:</u>

RG&E has performed an extensive review of the containment isolation valves (CIVs) and boundaries (CIBs) for Ginna Station. The results of this review have been incorporated into the CIV/CIB testing program, UFSAR Table 6.2-15 (formerly 6.2-13), and the associated UFSAR figures (see Attachment E). Details concerning the specific changes which were made are provided in the answers to the questions which follow; however, a summary of the significant changes that were made is presented below.

a.) All components which provide a containment isolation boundary are identified on both UFSAR Table 6.2-15 and the associated figures. Closed systems that are used as an isolation boundary have been specifically identified on UFSAR Table 6.2-15 with either "CLOC - Closed Loop Outside Containment" or "CLIC - Closed Loop Inside Containment". Blind flanges, instruments, or other components which provide a passive containment isolation boundary have been identified with "CIB" on the figures.

b.) UFSAR Table notes have been clarified to provide the explicit basis for Appendix J relief where necessary.

c.) All CIV/CIB test procedures were reviewed, upgraded, and subsequently used for necessary 10 CFR 50, Appendix J testing during the recent 1992 refueling outage. UFSAR Table 6.2-15 was then revised to ensure that it was consistent with the Appendix J testing program. Most UFSAR figures are now taken directly from the CIV/CIB test procedures to ensure that they remain accurate in the future.

2. *In a number of cases, more than one penetration is listed under a single penetration number in Table 6.2-13. This is contrary to the general practice of identifying each penetration with its associated valves or boundary as a separate entry. Each penetration should be listed and identified individually. This includes the following:*

*124a (Separate penetrations for supply and return.)*
*124b (Separate penetrations for air sample to "C" fan and common return.)*
*201 Top and 201 Bottom*
*202 (Separate penetrations for H2 "main" and "pilot" burners.)*
*203b (Separate penetrations for air sample to "B" fan and common return.)*
*209 Top and 209 Bottom*
*305c (Appears to be three penetrations, but containment boundary is not shown on Figure 6.2-61)*
*332c (Three penetrations shown for the same penetration number.)*

RESPONSE:

A containment penetration at Ginna may contain several process lines. As such, both the "supply" and "return" lines for a given system, or multiple lines performing the same function may go through a single penetration. However, to prevent any misinterpretations, UFSAR Table 6.2-15 has been revised to show a separate entry for each process line. The penetration names have also been revised as necessary for consistency (i.e., eliminated use of "top" and "bottom"). See Attachment E for further details.

3. *Where footnote 9 is used in Table 6.2-13, the purpose for the automatic closure of the associated valve should be clarified. For valve 427 on the letdown line, its closure on a containment isolation signal (CIS) is important if one of the orifice valves fails to close since it precludes the loss of reactor coolant to the pressurizer relief tank when reactor pressure is greater than the relief setting of relief valve 203 that is isolated by the closure of valve 371 on a CIS. For penetrations 123, 205, 206a, 207a, and 210, the closure of a second valve on a CIS provides a degree of redundancy for containment isolation.*

RESPONSE:

Note 9 to UFSAR Table 6.2-15 is used to identify those valves which receive a containment isolation signal (CIS), but are not containment isolation valves based on missile barrier or class break criteria. These valves are only shown on the table to prevent any future questions relating to components which receive a CIS, but are not included on the table. With respect to AOV 427, this valve fails open on loss of instrument air which will occur shortly after receipt of a CIS since instrument air to containment is also isolated. Consequently, AOV 427 will always fail open until instrument air is restored to containment. The importance of AOV 427 with respect to the failure of an orifice valve is an operational concern. It is not the intent of the UFSAR table to identify the potential significance of every valve, or to distinguish every scenario where the valve may be used (e.g., recovery from an accident). Instead, these issues are addressed by procedures and training. Consequently, Note 9 has not been revised.

4. *For penetration 143 in the Table 6.2-13, valve 1722 should be added since it has been marked as a "CIV" (containment isolation valve) on Figure 6.2-43.*

RESPONSE:

UFSAR Table 6.2-15 has been updated to include valve 1722 as a CIV.

5. *Note 17 in the table should be updated to reference correspondence which granted relief from Appendix J leak testing, not just correspondence requesting such.*

RESPONSE:

The NRC agreed that testing to Appendix J requirements was not required for these valves during the SEP (see NUREG-0821, Section 4.22.3). Note 17 to UFSAR Table 6.2-15 has been changed to reference this NUREG.

6. *Figure 6.2-14 includes a note that "CIV" is used to designate containment isolation valves on this and subsequent figures. This notation was also used on some other figures to designate an isolation boundary, but has been subsequently modified by deleting the letter "V." It is recommended that you identify "CI," or preferably "CIB," as notation for a containment isolation boundary or barrier by the use of a note on this figure. Also on Figure 6.2-14, Figure 6.2-16, and Figure 6.2-18, an arrow is shown for the check valves to designate flow direction. On other figures it appears that marked changes for check valves (Figures 6.2-37 and 6.2-38) were for the purpose to clarify flow direction (it is presumed that the intent is that the flow direction is from the upper side marking) yet no convention for such is provided. It would appear to be clearer to use the arrow symbol for consistency, since the presumed intent of marking does not work for a check valve shown in a vertical line such as in Figure 6.2-15.*

RESPONSE:

All UFSAR figures have been updated to identify containment isolation boundaries as "CIB" and valves as "CIV". All items identified with a CIB or CIV have also been added to the UFSAR table. The arrows on check valves have been deleted and new arrows have been placed on process lines to indicate direction of flow as necessary (i.e., incoming and outgoing).

7. *On Figure 6.2-19, valve 304B was added and on Figure 6.2-23, Valve 304A was added. One of these figures could now be deleted since they are redundant. Also both figures identify the penetration as P-110 rather than by its full designation "P-110a (top)" as identified in Table 6.2-13.*

RESPONSE:

All UFSAR figures have been replaced; consequently, there is typically a separate drawing for each penetration. The figure titles have also been updated to be consistent with UFSAR Table 6.2-15.

8. *On Figure 6.2-33, the containment penetrations should be labeled as "P-124a (Supply)" and "P-124a (Return)" to identify each.*

RESPONSE:

All UFSAR figures have been replaced; consequently, there is typically a separate drawing for each penetration. The figure titles have also been updated to be consistent with UFSAR Table 6.2-15.

9. *On Figure 6.2-34, the containment penetrations should be labeled as "P-124b (Top)" and "P-124b (Bottom)" or other appropriate means to distinguish between the two penetrations that are currently designated as "P-124b."*

RESPONSE:

All UFSAR figures have been replaced; consequently, there is typically a separate drawing for each penetration. The figure titles have also been updated to be consistent with UFSAR Table 6.2-15.

10. *On Figures 6.2-40 and 6.2-44, the location of containment relative to P-131 and P-209 (Top) is the reverse of what is shown (Figures 6.2-33 and 6.2-44 have the proper configuration shown).*

RESPONSE:

The new UFSAR figures correctly show the location of containment for these two penetrations.

11. *The "CIV" designation is improperly used for the reactor compartment cooler 1B on Figure 6.2-44.*

RESPONSE:

The CIV designation associated with the compartment cooler has been removed on the new UFSAR figure.

12. *On Figure 6.2-46, the two penetrations should be identified to distinguish them as separate penetrations and with the same P-202 designation used in the title block and the table.*

RESPONSE:

All UFSAR figures have been replaced; consequently, there is typically a separate drawing for each penetration. The figure titles have also been updated to be consistent with UFSAR Table 6.2-15.

13. *On Figure 6.2-72, the pressure transmitters should not be designated as "CIVs" but rather as an isolation boundary.*

RESPONSE:

The new UFSAR figure for penetration 332a correctly identifies the transmitters as CIBs.

14. *All check valves on Figure 6.2-75 (P-403 & P-404) should be designated and shown as "CIVs." Likewise, Footnote 11 should be deleted for these valves as shown in Table 6.2-13.*

RESPONSE:

The steam generator tubes form a containment isolation boundary for the main steam, feedwater and auxiliary feedwater penetrations. The first isolation valve(s) outside containment for these penetrations have been added to the UFSAR table as requested. In addition, Footnote 11 has been revised to show that these valves are CIVs, but they do not require Appendix J leak testing consistent with previous conversations between RG&E and the staff. RG&E has agreed to this change even though the current Technical Specification Table 3.6-1 explicitly states that these are not containment isolation valves with the understanding that the NRC approves that no Appendix J testing is required.

15. *Where instruments are connected to a line upstream of the containment isolation valve, the instrument and its root valve should be listed in Table 6.2-13, similar to the other listing of instruments and root valves. This includes valves 885A, 885B and the associated PTs (which should be numbered) as shown on figure 6.2-15. This is true also of valve 2856 and PI-933A and an unidentified instrument on Figure 6.2-18, valve 2859 and PI-933B on Figure 6.2-22, valve 4588 and PI-2141 on Figure 6.2-44, valve 4590 and PI 2232 on Figure 6.2-45, PI-(unidentified number) on Figure 6.2-49, valve 8052 and PI-(unidentified number) on Figure 6.2-56, valves and PIs and FIs shown on Figure 6.2-63.*

RESPONSE:

All UFSAR figures have been replaced with the CIV/CIB testing procedure drawings. The instrumentation lines were reviewed and added as necessary; however, the changes with respect to the penetrations identified in this question are provided below.

P-101 Added PT-923 and PI-923A as CIB's and 885B and 12407 as CIVs.

P-105 Added 869A and 2856 as CIV's (pressure indicator root valves are now closed).

P-109 Added 869B and 2858 as CIV's (pressure indicator root valves are now closed).

P-113 Added PT-922 and PI-922A as CIBs, and 885A and 12406 as CIV's.

| | |
|---|---|
| P-201b | Added PI-2141 as a CIB. Root valve 4588 is not required to be a CIV since the Service Water system is a CLIC. |
| P-204 | No changes were made. See response to Question 23. |
| P-209b | Added PI-2232 as a CIB. Root valve 4590 is not required to be a CIV since the Service Water system is a CLIC. |
| P-300 | No changes were made. See response to Question 26. |
| P-308 | Added FIA-2033 and TIA-2010 as CIBs. No root valves were added since the Service Water system is a CLIC. |
| P-311 | Added FIA-2034 and TIA-2011 as CIBs. No root valves were added since the Service Water system is a CLIC. |
| P-312 | Added 12500K (drain line) as a CIV and PI-2144 as a CIB. No root valves were added since the Service Water system is a CLIC. |
| P-315 | Added FIA-2035 and TIA-2012 as CIBs. No root valves were added since the Service Water system is a CLIC. |
| P-316 | Added PI-2138 as a CIB. No root valves were added since the Service Water system is a CLIC. |
| P-319 | Added PI-2142 as a CIB. No root valves were added since the Service Water system is a CLIC. |
| P-320 | Added 12500H (drain line) as a CIV and PI-2136 as a CIB. No root valves were added since the Service Water system is a CLIC. |
| P-323 | Added FIA-2036 and TIA-2013 as CIBs. No root valves were added since the Service Water system is a CLIC. |

16. *Test, vent, and drain valves that are used for Appendix J local leak rate testing need not be listed Table 6.2-13. However, valves provided for other purposes including testing should be listed as locked closed valves and identified as containment isolation valves. Therefore, it is suggested to identify those valves which are test, vent, or drain valves used for local leak rate testing with some notation on the figures, or by listing them in Table 6.2-13 with an appropriate footnote. By providing this identification it will be clear as to which of the remaining valves are "CIVs" and subject to the Appendix J requirements. Clarification of the function of the following valves on the following figures should be noted:*

| *Figure* | *Valve* |
|---|---|
| *6.2-18* | *864A, 2825, 2829* |
| *6.2-22* | *864B, 2826, 2830* |
| *6.2-30* | *497, 498, 567, 576* |
| *6.2-56* | *8049* |
| *6.2-73* | *7448, 7452, 7456, 8437, 8438, 8439* |

RESPONSE:

All UFSAR figures have been replaced with the CIV/CIB testing procedure drawings. Connections used for Appendix J testing are now specifically identified on the figures while other connections have been added to the UFSAR table as CIVs. The changes made with respect to the penetrations identified in the question are provided below.

P-105 Added 864A and 2829 as CIVs. Valve 2825 is a test connection used for Appendix J testing.

P-109 Added 864B and 2830 as CIVs. Valve 2826 is a test connection used for Appendix J testing.

P-121a Added 497 and 498 as CIVs. Valve 567 is a test connection used for Appendix J testing. Valve 576 is a test connection downstream of two CIVs (567 and 508) and is not required to be a CIV.

P-300 No changes were made. See response to Question 26.

P-332a-d Added 7452, 7456, and 7448 as CIVs. Valves 8437, 8438, and 8439 are used for Appendix J testing.

17. *No Question*

18. *On Figure 6.2-24, valve 959 should be noted as a CIV since it ensures that the Residual Heat Removal (RHR) system is a closed system on a CIS and should be listed in Table 6.2-13. Also, the valves to the safety injection system inside containment should be shown and listed in the table as CIVs as well as the check valve and the parallel valve shown connecting to the letdown line. If an exception is taken to this position, it should be justified.*

RESPONSE:

AOV 959 was already listed on Table 6.2-15 as a CIV; however, the "CIV" designator was missing for the valve on Figure 6.2-24. The figure has been revised accordingly. With respect to the "valves to the Safety Injection System", the wording on the UFSAR figure was incorrect. These two MOVs (852A and 852B) are used for low pressure injection to the reactor vessel. Consequently, both lines are completely inside containment and have no affect upon the integrity of RHR as a closed system (i.e., the failure of 720 to isolate would not create a release path from containment through the subject two lines). In addition, both MOVs open on a SI signal to provide a RHR injection path; consequently, they cannot be closed due to their function and were therefore not added as CIVs. This issue is addressed in a letter from the D. Crutchfield, NRC, to J. Maier, RG&E dated September 29, 1981.

The flowpath to the letdown line connects to the CVCS between the two sets of containment isolation valves for Penetration 112. Consequently, the isolation valve outside containment for Penetration 112 (i.e., 371) must fail in addition to 720 to create a release path from containment. However, no credible single failure exists between 371 and 720 (e.g., AOV versus MOV, separate ESFAS trains and control power sources). Therefore, the check valve to the letdown line was not added.

19. *Valves 9704A and 9704B on Figure 6.2-26 should be shown as CIVs and listed in Table 6.2-13.*

RESPONSE:

The steam generator tubes form a containment isolation boundary for the main steam, feedwater and auxiliary feedwater penetrations. The first isolation valve(s) outside containment for these penetrations have been added to the UFSAR table as requested. In addition, Footnote 11 has been revised to show that these valves are CIVs, but they do not require Appendix J leak testing consistent with previous conversations between RG&E and the staff. RG&E has agreed to this change even though the current Technical Specification Table 3.6-1 explicitly states that these are not containment isolation valves with the understanding that the NRC approves that no Appendix J testing is required.

20. *Footnote 14 states that valve 745 for penetration 124a (return) is to be manually closed until it is modified to receive an automatic closure signal. What is the status of this change and why has it not been implemented?*

RESPONSE:

AOV 745 was to be modified by the end of the 1992 refueling outage as stated in a letter from R. Mecredy, RG&E, to A. Johnson, NRC, dated July 9, 1990. However, following a cost benefit analysis, and the fact that no automatic isolation of this penetration is required based on the current GDCs, this modification was canceled. Operations is still instructed to close 745 following a CIS for additional redundancy. See August 26, 1991 letter from R. Mecredy, RG&E, to A. Johnson, NRC. Footnote 14 was modified to reflect this change.

21. *Please provide your 50.59 evaluation and the basis for the change in the classification for valves 851A and 851B to delete the CIV notation from these valves. Also on Figure 6.2-42, valves 1813A and 1813B should be shown as CIVs. If an exception is taken to this position, it should be justified.*

RESPONSE:

The 50.59 evaluation to remove valves 851A and 851B from the table is contained in Section 3.3.2.7 of the safety analysis included with the original Amendment Request dated October 15, 1990 (NSL-0000-SA24). However, the basis for making this deletion is contained in the August 30, 1982 letter from J. Maier, RG&E, to D. Crutchfield, NRC, in response to the final SER on SEP Topic VI-4 (see NRC letter dated April 12, 1982). Since the final NUREG-0821 both references and reflects the position expressed in our August 30, 1982 letter, RG&E assumes that the NRC had agreed that 851A and 851B are not CIVs. With respect to 1813A and 1813B, the UFSAR figure has been revised to include the necessary "CIV" designation.

22. *Valve 1722 should be listed in Table 6.2-13 and is presumed to be a locked closed valve. If not, a justification should be provided.*

RESPONSE:

Valve 1722 is a locked closed valve. The UFSAR figure has been updated to reflect this.

23. *Valve 8074 on Figure 6.2-49 should be shown as a CIV and listed in the Table 6.2-13 as a locked closed valve.*

RESPONSE:

Manual valves 8074, 8074A, and PI-2 are not CIV's or CIB's since the hinged flange provides two containment isolation boundaries (i.e., two O-rings). AOV 5869 is only listed on the UFSAR table since it can be used in place of the hinged flange during refueling to provide the necessary barrier.

24. *Valve 5749 on Figure 6.2-52 should be shown as a CIV and listed in the Table 6.2-13 as a locked closed valve.*

RESPONSE:

This penetration was modified during the 1992 Refueling Outage so that valve 5749 is only used for Appendix J testing. The new figure correctly shows the modified penetration.

25. *Valve 5754 on Figure 6.2-54 should be shown as a CIV and listed in the Table 6.2-13 as a locked closed valve.*

RESPONSE:

This penetration was modified during the 1992 Refueling Outage so that valve 5754 is only used for Appendix J testing. The new figure correctly shows the modified penetration.

26. *Valve 8050 on Figure 6.2-56 should be shown as a CIV and listed in the Table 6.2-13 as a locked closed valve.*

RESPONSE:

Manual valves 8050, 8052, and PI-35 are not CIV's or CIB's since the hinged flange provides two containment isolation boundaries (i.e., two O-rings). AOV 5879 is only listed on the UFSAR table since it can be used in place of the hinged flange during refueling to provide the necessary barrier.

27. *The containment penetration should be shown on Figure 6.2-61. If three penetrations, Top, Middle, and Bottom, exist, they should be identified and listed separately Table 6.2-13.*

RESPONSE:

UFSAR Table 6.2-15 was updated to list each of the three penetrations individually. A separate UFSAR figure is also provided for each penetration.

28. *The drain valves shown on Figure 6.2-63 should be shown as CIVs and listed in the Table 6.2-13 as a locked closed valve.*

RESPONSE:

The drain valves were added to UFSAR Table 6.2-15 as CIVs; however, these valves are not locked closed. The drain valves are maintained normally closed during power operation per system lineup procedures and have "containment isolation boundary" control tags which are controlled by the CIV/CIB test procedures. This form of administrative control is considered acceptable since all plant personnel are instructed in the use of equipment tags. In addition, the Service Water system for these penetrations is a CLIC, thereby requiring a passive failure coincident with a LOCA before challenging the integrity of the drain valves.

29. *Valve 5752 on Figure 6.2-69 should be shown as a CIV and listed in the Table 6.2-13 as a locked closed valve.*

RESPONSE:

This penetration was modified during the 1992 Refueling Outage so that valve 5752 is only used for Appendix J testing. The new figure correctly shows the modified penetration.

30. *Valves 3504A, 3505A, 3516, 3517, 3521, and 3506, 3507 or their associated atmospheric relief valves should be shown as CIVs on Figure 6.2-74, for penetrations 403 and 404, and listed in Table 6.2-13 as such.*

RESPONSE:

The steam generator tubes form a containment isolation boundary for the main steam, feedwater and auxiliary feedwater penetrations. The first isolation valve(s) outside containment for these penetrations have been added to the UFSAR table as requested. In addition, Footnote 11 has been revised to show that these valves are CIVs, but they do not require Appendix J leak testing consistent with previous conversations between RG&E and the staff. RG&E has agreed to this change even though the current Technical Specification Table 3.6-1 explicitly states that these are not containment isolation valves.

ATTACHMENT E

UFSAR Table 6.2-15 and Figures 6.2-13 through 6.2-78

SI
APERTURE
CARD

Also Available On
Aperture Card

Table 6.2-15

CONTAINMENT PIPING PENETRATIONS
AND ISOLATION VALVING

| System | Penetration No. | Valve/ Boundary | Isolation Position[a] | Valve Type | Valve Operator Type | Position Indication In Control Room | Position Relative to Containment | Position At: Normal Operation | Cold Shutdown | Immediate Postaccident[b] | Power Failure | Trip on CIS | Maximum Isolation Time (sec)[c] | UFSAR Figure | Class[d] | Notes (See end of table)[e] |
|---|---|---|---|---|---|---|---|---|---|---|---|---|---|---|---|---|
| Steam generator inspection/ maintenance | 2 | NA | a1 | Blind flange | NA | NA | Inside | C | O/C | C | NA | NA | NA | 6.2-13 | 5 | 1, 2 |
| | | NA | a2 | Blind flange | NA | NA | Outside | C | O/C | C | NA | NA | NA | 6.2-13 | 5 | 1, 2 |
| Fuel transfer tube | 29 | NA | a1, a2 | Blind flange | NA | NA | Inside | C | O/C | C | NA | NA | NA | 6.2-13 | 5 | 2, 3 |
| Charging line to B loop | 100 | 370B | a1 | Check | NA | NA | Inside | O | C | C | NA | NA | NA | 6.2-14 | 3B | |
| | | CLOC | a2 | NA | NA | NA | Outside | C | C | C | NA | NA | NA | 6.2-14 | 3B | 4 |
| Safety injection pump 1B discharge | 101 | 870B | a1 | Check | NA | NA | Outside | C | C | O | NA | NA | NA | 6.2-15 | 3B | 5 |
| | | 889B | a1 | Check | NA | NA | Outside | C | C | O | NA | NA | NA | 6.2-15 | 3B | |
| | | CLOC | a2 | NA | NA | NA | Outside | C | C | C | NA | NA | NA | 6.2-15 | 3B | |
| | | 12407 | b1 | Globe | Manual | No | Outside | C | C | C | NA | NA | NA | 6.2-15 | 3B | |
| | | PI-923A | b1 | NA | NA | NA | Outside | NA | NA | NA | NA | NA | NA | 6.2-15 | 3B | |
| | | PT-923 | b1 | NA | NA | NA | Outside | NA | NA | NA | NA | NA | NA | 6.2-15 | 3B | 6 |
| | | 885B | b2 | Globe | Manual | No | Outside | O | O | O | NA | NA | NA | 6.2-15 | 3B | |
| Alternate charging to A cold leg | 102 | 383B | a1 | Check | NA | NA | Inside | C | C | C | NA | NA | NA | 6.2-16 | 3B | |
| | | CLOC | a2 | NA | NA | NA | Outside | C | C | C | NA | NA | NA | 6.2-16 | 3B | 4 |
| Construction fire service water | 103 | NA | a1 | Welded cap | NA | NA | Inside | C | C | C | NA | NA | NA | 6.2-17 | 5 | 7 |
| | | 5129 | a2 | Gate | Manual | No | Outside | LC | LC | LC | NA | NA | NA | 6.2-17 | 5 | |
| Containment spray pump 1A | 105 | 862A | a1 | Check | NA | NA | Outside | C | C | O | NA | NA | NA | 6.2-18 | 3B | |
| | | CLOC | a2 | NA | NA | NA | Outside | C | C | C | NA | NA | NA | 6.2-18 | 3B | 8 |
| | | 2829 | b1 | Globe | Manual | NA | Outside | LC | O/C | LC | NA | NA | NA | 6.2-18 | 3B | |
| | | Cap | b2 | NA | NA | NA | Outside | C | O/C | C | NA | NA | NA | 6.2-18 | 3B | |
| | | 869A | c1 | Globe | Manual | No | Outside | C | C | C | NA | NA | NA | 6.2-18 | 3B | 9 |
| | | 2856 | c2 | Globe | Manual | No | Outside | C | C | C | NA | NA | NA | 6.2-18 | 3B | 9 |
| | | 2825 | d1 | Globe | Manual | No | Outside | LC | LC | LC | NA | NA | NA | 6.2-18 | 3B | |
| | | 2825A | d2 | Ball | Manual | No | Outside | C | C | C | NA | NA | NA | 6.2-18 | 3B | |
| | | 864A | e1 | Globe | Manual | No | Outside | C | C | C | NA | NA | NA | 6.2-18 | 3B | 9 |
| | | 859A | e2 | Globe | Manual | No | Outside | LC | LC | LC | NA | NA | NA | 6.2-18 | 3B | 10 |
| | | 859B | e2 | Globe | Manual | No | Outside | LC | LC | LC | NA | NA | NA | 6.2-18 | 3B | 10 |
| | | 859C | e2 | Globe | Manual | No | Outside | C | C | C | NA | NA | NA | 6.2-18 | 3B | 9, 10 |
| Reactor coolant pump A seal water inlet | 106 | 304A | a1 | Check | NA | NA | Inside | O | O | C | NA | NA | NA | 6.2-19 | 3B | |
| | | CLOC | a2 | NA | NA | NA | Outside | C | C | C | NA | NA | NA | 6.2-19 | 3B | 4 |
| Sump A discharge to waste holdup tank | 107 | 1723 | a1 | Diaphragm | Air | Status | Outside | O | O/C | C | FC | Yes | 60 | 6.2-20 | 2 | |
| | | 1728 | a2 | Diaphragm | Air | Status | Outside | O | O/C | C | FC | Yes | 60 | 6.2-20 | 2 | |

8

Legend

| | | | | | | | | |
|---|---|---|---|---|---|---|---|---|
| AI | = Fails as is | CLOC | = Closed loop outside containment | O | = Open |
| AOV | = Air-operated valve | CV | = Check valve | O/C | = Open or closed |
| BLC | = Breaker locked closed | D | = Drain | OMB | = Outside missile barrier |
| BLO | = Breaker locked open | FC | = Fails closed | R/G | = Red/green light on main control board |
| Both | = R/G and Status | FO | = Fails open | S | = Safety injection signal |
| C | = Closed | IMB | = Inside missile barrier | SOV | = Solenoid-operated valve |
| CIB | = Containment isolation boundary/barrier | J | = Appendix J connection | Status | = White status light |
| CIS, T | = Containment isolation signal | LC | = Locked closed | TC | = Test connection |
| CIV | = Containment isolation valve | MOV | = Motor-operated valve | V | = Vent |
| CLIC | = Closed loop inside containment | MV | = Manual valve | | |

9212140159-01

ORIGINALES

SI APERTURE CARD

Also Available On Aperture Card

Table 6.2-15

CONTAINMENT PIPING PENETRATIONS AND ISOLATION VALVING (Continued)

| System | Penetration No. | Valve/ Boundary | Isolation Position[a] | Valve Type | Valve Operator Type | Position Indication In Control Room | Position Relative to Containment | Position At: Normal Operation | Position At: Cold Shutdown | Position At: Immediate Postaccident[b] | Position At: Power Failure | Trip on CIS | Maximum Isolation Time (sec)[c] | UFSAR Figure | Class[d] | Notes (See end of table)[e] |
|---|---|---|---|---|---|---|---|---|---|---|---|---|---|---|---|---|
| Reactor coolant pump seal water return line and excess letdown to VCT | 108 | 313 | a1 | Gate | Motor | Both | Outside | O | O/C | C | AI | Yes | 60 | 6.2-21 | 1 | |
| | | CLOC | a2 | NA | NA | NA | Outside | C | C | C | NA | NA | NA | 6.2-21 | 1 | 11 |
| Containment spray pump 1B | 109 | 862B | a1 | Check | NA | NA | Outside | C | C | O | NA | NA | NA | 6.2-22 | 3B | |
| | | CLOC | a2 | NA | NA | NA | Outside | C | C | C | NA | NA | NA | 6.2-22 | 3B | 8 |
| | | 2830 | b1 | Globe | Manual | No | Outside | LC | O/C | LC | NA | NA | NA | 6.2-22 | 3B | |
| | | Cap | b2 | NA | Na | NA | Outside | C | O/C | C | NA | NA | NA | 6.2-22 | 3B | |
| | | 869B | c1 | Globe | Manual | No | Outside | C | C | C | NA | NA | NA | 6.2-22 | 3B | 9 |
| | | 2858 | c2 | Globe | Manual | No | Outside | C | C | C | NA | NA | NA | 6.2-22 | 3B | 9 |
| | | 2826 | d1 | Globe | Manual | No | Outside | LC | LC | LC | NA | NA | NA | 6.2-22 | 3B | |
| | | 2826A | d2 | Ball | Manual | No | Outside | C | C | C | NA | NA | NA | 6.2-22 | 3B | |
| | | 864B | e1 | Globe | Manual | No | Outside | C | C | C | NA | NA | NA | 6.2-22 | 3B | 9 |
| | | 859A | e2 | Globe | Manual | No | Outside | LC | LC | LC | NA | NA | NA | 6.2-22 | 3B | 10 |
| | | 859B | e2 | Globe | Manual | No | Outside | LC | LC | LC | NA | NA | NA | 6.2-22 | 3B | 10 |
| | | 859C | e2 | Globe | Manual | No | Outside | C | C | C | NA | NA | NA | 6.2-22 | 3B | 9, 10 |
| Reactor coolant pump B seal water inlet | 110a | 304B | a1 | Check | NA | NA | Inside | O | O | C | NA | NA | NA | 6.2-23 | 3B | |
| | | CLOC | a2 | NA | NA | NA | Outside | C | C | C | NA | NA | NA | 6.2-23 | 3B | 4 |
| Safety injection test line | 110b | 879 | a1, a2 | Globe | Manual | No | Outside | LC | LC | LC | NA | NA | NA | 6.2-15 | 1 | 12 |
| Residual heat removal to B cold leg | 111 | 720 | a1 | Gate | Motor | R/G | Inside | C | O | C | AI | No | NA | 6.2-24 | 3B | 13, 14 |
| | | 959 | a2 | Globe | Air | Status | Outside | C | O/C | C | FC | Yes | NA | 6.2-24 | 3B | |
| | | CLOC | a2 | NA | NA | NA | NA | C | C | C | NA | NA | NA | 6.2-24 | 3B | 15 |
| Letdown to nonregenerative heat exchanger | 112 | 200A | a1 | Globe | Air | R/G | Inside | O/C | C | C | FC | Yes | 60 | 6.2-25 | 1 | 16 |
| | | 200B | a1 | Globe | Air | R/G | Inside | O/C | C | C | FC | Yes | 60 | 6.2-25 | 1 | 16 |
| | | 202 | a1 | Globe | Air | R/G | Inside | C | C | C | FC | Yes | 60 | 6.2-25 | 1 | 16 |
| | | 371 | a2 | Globe | Air | Both | Outside | O | O | C | FC | Yes | 60 | 6.2-25 | 1 | |
| | | 427 | NA | Globe | Air | R/G | Inside | O | O/C | C | FO | Yes | NA | 6.2-25 | 1 | 17 |
| Safety injection pump 1A discharge | 113 | 870A | a1 | Check | NA | NA | Outside | C | C | O | NA | NA | NA | 6.2-15 | 3B | 4 |
| | | 889A | a1 | Check | NA | NA | Outside | C | C | O | NA | NA | NA | 6.2-15 | 3B | 4 |
| | | CLOC | a2 | NA | NA | NA | Outside | C | C | C | NA | NA | NA | 6.2-15 | 3B | 5 |
| | | 12406 | b1 | Globe | Manual | No | Outside | C | C | C | NA | NA | NA | 6.2-15 | 3B | |
| | | PI-922A | b1 | NA | NA | NA | Outside | NA | NA | NA | NA | NA | NA | 6.2-15 | 3B | |
| | | PT-922 | b1 | NA | NA | NA | Outside | NA | NA | NA | NA | NA | NA | 6.2-15 | 3B | 6 |
| | | Cap | b1 | NA | NA | NA | Outside | C | C | C | NA | NA | NA | 6.2-15 | 3B | |
| | | 885A | b2 | Globe | Manual | No | Outside | O | O | O | NA | NA | NA | 6.2-15 | 3B | |
| Standby auxiliary feedwater line to steam generator 1A | 119 | 9704A | a1 | Stop-check | Motor | R/G | Outside | O | O | O | AI | No | NA | 6.2-26 | 4 | 18 |
| | | 9723 | a1 | Globe | Manual | No | Outside | LC | LC | LC | NA | NA | NA | 6.2-26 | 4 | |
| | | CLIC | a2 | NA | NA | NA | Inside | C | C | C | NA | NA | NA | 6.2-26 | 4 | 19 |
| Nitrogen to accumulators | 120a | 846 | a1 | Globe | Air | Both | Outside | C | O/C | C | FC | Yes | 60 | 6.2-27 | 3A | |
| | | 8623 | a2 | Check | NA | NA | Inside | O/C | O/C | C | NA | NA | NA | 6.2-27 | 3A | |
| Pressurizer relief tank to gas analyzer | 120b | 539 | a1 | Globe | Air | Status | Outside | C | O/C | C | FC | Yes | 60 | 6.2-28 | 2 | |
| | | 546 | a2 | Globe | Manual | No | Outside | O | O | O | NA | NA | NA | 6.2-28 | 2 | |

8



9212140159-02

ORIGINAL PAGE IS

SI APERTURE CARD

Also Available On Aperture Card

Table 6.2-15

CONTAINMENT PIPING PENETRATIONS AND ISOLATION VALVING (Continued)

| System | Penetration No. | Valve/ Boundary | Isolation Position[a] | Valve Type | Valve Operator Type | Position Indication In Control Room | Position Relative to Containment | Position At: Normal Operation | Position At: Cold Shutdown | Position At: Immediate Postaccident[b] | Position At: Power Failure | Trip on CIS | Maximum Isolation Time (sec)[c] | UFSAR Figure | Class[d] | Notes (See end of table)[e] |
|---|---|---|---|---|---|---|---|---|---|---|---|---|---|---|---|---|
| Makeup water to pressurizer relief tank | 121a | 508 | a1 | Diaphragm | Air | Both | Outside | C | O/C | C | FC | Yes | 60 | 6.2-29 | 3A | |
| | | 529 | a2 | Check | NA | NA | Inside | O/C | O/C | C | NA | NA | NA | 6.2-29 | 3A | |
| Nitrogen to pressurizer relief tank | 121b | 528 | a1 | Check | NA | NA | Inside | C | O/C | C | NA | NA | NA | 6.2-30 | 3A | |
| | | 547 | a2 | Globe | Manual | No | Outside | LC | O/C | LC | NA | NA | NA | 6.2-30 | 3A | 20 |
| Containment pressure transmitters PT945 and PT946 | 121c | PT945 | a1 | NA | NA | NA | Outside | NA | NA | NA | NA | NA | NA | 6.2-31 | 2 | 6 |
| | | 1819A | a2 | Globe | Manual | No | Outside | O | O | O | NA | NA | NA | 6.2-31 | 2 | |
| | | PT946 | b1 | NA | NA | NA | Outside | NA | NA | NA | NA | NA | NA | 6.2-31 | 2 | 6 |
| | | 1819B | b2 | Globe | Manual | No | Outside | O | O | O | NA | NA | NA | 6.2-31 | 2 | |
| Reactor coolant drain tank to gas analyzer line | 123a | 1600A | NA | Globe | Solenoid | No | Outside | O | O/C | C | FC | Yes | NA | 6.2-32 | 2 | 17 |
| | | 1655 | a1 | Globe | Manual | No | Outside | O | O | O | NA | NA | NA | 6.2-32 | 2 | |
| | | 1789 | a2 | Diaphragm | Air | Status | Outside | O | O/C | C | FC | Yes | 60 | 6.2-32 | 2 | |
| Standby auxiliary feedwater line to steam generator 1B | 123b | 9704B | a1 | Stop-check | Motor | R/G | Outside | O | O | O | AI | No | NA | 6.2-26 | 4 | 18 |
| | | 9725 | a1 | Globe | Manual | No | Outside | C | C | C | NA | NA | NA | 6.2-26 | 4 | |
| | | 9724 | a1 | Globe | Manual | No | Outside | C | C | C | NA | NA | NA | 6.2-26 | 4 | |
| | | CLIC | a2 | NA | NA | NA | Inside | C | C | C | NA | NA | NA | 6.2-26 | 4 | 19 |
| Excess letdown heat exchanger cooling water supply | 124a | 743 | a1 | Check | NA | NA | Inside | C | C | C | NA | NA | NA | 6.2-33 | 4 | |
| | | CLIC | a2 | NA | NA | NA | Inside | C | C | C | NA | NA | NA | 6.2-33 | 4 | 22 |
| Postaccident air sample to common return | 124b | 1572 | a1 | Diaphragm | Manual | No | Outside | LC | LC | LC | NA | NA | NA | 6.2-34 | 5 | |
| | | 1573 | a2 | Globe | Manual | No | Outside | C | C | C | NA | NA | NA | 6.2-34 | 5 | |
| | | 1574 | a2 | Diaphragm | Manual | No | Outside | LC | LC | LC | NA | NA | NA | 6.2-34 | 5 | |
| Excess letdown heat exchanger cooling water return | 124c | 745 | a1 | Globe | Air | R/G | Outside | C | C | C | FC | No | NA | 6.2-33 | 4 | 21 |
| | | CLIC | a2 | NA | NA | NA | Inside | C | C | C | NA | NA | NA | 6.2-33 | 4 | 22 |
| Postaccident air sample to C fan | 124d | 1569 | a1 | Diaphragm | Manual | No | Outside | LC | LC | LC | NA | NA | NA | 6.2-34 | 5 | |
| | | 1570 | a2 | Globe | Manual | No | Outside | C | C | C | NA | NA | NA | 6.2-34 | 5 | |
| | | 1571 | a2 | Diaphragm | Manual | No | Outside | LC | LC | LC | NA | NA | NA | 6.2-34 | 5 | |
| Component cooling water from reactor coolant pump 1B | 125 | 759B | a1 | Gate | Motor | R/G | Outside | O | C | O | AI | No | NA | 6.2-35 | 2 | |
| | | CLOC | a2 | NA | NA | NA | Outside | C | C | C | NA | NA | NA | 6.2-35 | 2 | 23 |
| Component cooling water from reactor coolant pump 1A | 126 | 759A | a1 | Gate | Motor | R/G | Outside | O | C | O | AI | No | NA | 6.2-36 | 2 | |
| | | CLOC | a2 | NA | NA | NA | Outside | C | C | C | NA | NA | NA | 6.2-36 | 2 | 23 |
| Component cooling water to reactor coolant pump 1A | 127 | 749A | a1 | Gate | Motor | R/G | Outside | O | C | O | AI | No | NA | 6.2-37 | 3B | |
| | | 750A | a2 | Check | NA | NA | Inside | O | C | O | NA | NA | NA | 6.2-37 | 3B | |
| Component cooling water to reactor coolant pump 1B | 128 | 749B | a1 | Gate | Motor | R/G | Outside | O | C | O | AI | No | NA | 6.2-38 | 3B | |
| | | 750B | a2 | Check | NA | NA | Inside | O | C | O | NA | NA | NA | 6.2-38 | 3B | |

8



9212140159-03

SI
APERTURE
CARD

Also Available On
Aperture Card

Table 6.2-15

CONTAINMENT PIPING PENETRATIONS
AND ISOLATION VALVING (Continued)

| System | Penetration No. | Valve/ Boundary | Isolation Position[a] | Valve Type | Valve Operator Type | Position Indication In Control Room | Position Relative to Containment | Position At: Normal Operation | Position At: Cold Shutdown | Position At: Immediate Postaccident[b] | Position At: Power Failure | Trip on CIS | Maximum Isolation Time (sec)[c] | UFSAR Figure | Class[d] | Notes (See end of table)[e] |
|---|---|---|---|---|---|---|---|---|---|---|---|---|---|---|---|---|
| Reactor coolant drain tank and pressurizer relief tank to containment vent header | 129 | 1713 | a1 | Check | NA | NA | Outside | C | O/C | C | NA | NA | NA | 6.2-39 | 3A | |
| | | 1793 | a2 | Diaphragm | Manual | No | Outside | LC | O/C | LC | NA | NA | NA | 6.2-39 | 3A | 20 |
| | | 1786 | b1 | Diaphragm | Air | Status | Outside | O | C | C | FC | Yes | 60 | 6.2-39 | 3A | |
| | | 1787 | b2 | Diaphragm | Air | Status | Outside | O | C | C | FC | Yes | 60 | 6.2-39 | 3A | |
| Component cooling water from reactor support cooling | 130 | 814 | a1 | Gate | Motor | Both | Outside | O | O | C | AI | Yes | 60 | 6.2-40 | 4 | |
| | | CLIC | a2 | NA | NA | NA | Inside | C | C | C | NA | NA | NA | 6.2-40 | 4 | 22 |
| Component cooling water to reactor support cooling | 131 | 813 | a1 | Gate | Motor | Both | Outside | O | O | C | AI | Yes | 60 | 6.2-40 | 4 | |
| | | CLIC | a2 | NA | NA | NA | Inside | C | C | C | NA | NA | NA | 6.2-40 | 4 | 22 |
| Containment mini-purge exhaust | 132 | 7970 | a1 | Butterfly | Air | Both | Inside | O/C | O/C | C | FC | Yes | 3 | 6.2-41 | 5 | |
| | | 7971 | a2 | Butterfly | Air | Both | Outside | C | O/C | C | FC | Yes | 3 | 6.2-41 | 5 | |
| | | Cap | a2 | NA | NA | NA | Outside | C | C | C | NA | NA | NA | 6.2-41 | 5 | |
| Residual heat removal pump suction from A hot leg | 140 | 701 | a1 | Gate | Motor | R/G | Inside | C | O | C | AI | No | NA | 6.2-42 | 1 | 13, 14 |
| | | 2763 | a1 | Globe | Manual | No | Inside | C | C | C | NA | NA | NA | 6.2-42 | 1 | 15 |
| | | 2786 | a1 | Globe | Manual | No | Inside | C | C | C | NA | NA | NA | 6.2-42 | 1 | |
| | | CLOC | a2 | NA | NA | NA | Outside | C | C | C | NA | NA | NA | 6.2-42 | 1 | |
| Residual heat removal pump A suction from sump B | 141 | 850A | a1 | Gate | Motor | R/G | Outside | C | C | O | AI | No | NA | 6.2-43 | 5 | 24 |
| | | CLOC | a2 | NA | NA | NA | Outside | C | C | C | NA | NA | NA | 6.2-43 | 5 | 15 |
| | | 1813A | b1, b2 | Gate | Motor | R/G | Outside | C | O/C | C | AI | No | NA | 6.2-43 | 5 | 14, 25 |
| Residual heat removal pump B suction from sump B | 142 | 850B | a1 | Gate | Motor | R/G | Outside | C | C | O | AI | No | NA | 6.2-44 | 5 | 24 |
| | | CLOC | a2 | NA | NA | NA | Outside | C | C | C | NA | NA | NA | 6.2-44 | 5 | 15 |
| | | 1813B | b1, b2 | Gate | Motor | R/G | Outside | C | O/C | C | AI | No | NA | 6.2-44 | 5 | 14, 25 |
| Reactor coolant drain tank discharge line | 143 | 1003A | a1 | Diaphragm | Air | Status | Outside | O | O/C | C | FC | Yes | 60 | 6.2-45 | 2 | |
| | | 1003B | a1 | Diaphragm | Air | Status | Outside | O | O/C | C | FC | Yes | 60 | 6.2-45 | 2 | |
| | | 1709G | a1 | Gate | Manual | No | Outside | C | C | C | NA | NA | NA | 6.2-45 | 2 | |
| | | 1722 | a1 | Diaphragm | Manual | No | Outside | LC | LC | LC | NA | NA | NA | 6.2-45 | 2 | |
| | | 1721 | a2 | Diaphragm | Air | Status | Outside | O | O | C | FC | Yes | 60 | 6.2-45 | 2 | |
| Reactor compartment cooling unit A | 201a | 4757 | a1 | Butterfly | Manual | No | Outside | O | O | O | NA | NA | NA | 6.2-46 | 4 | 26 |
| | | 4775 | a1 | Gate | Manual | No | Outside | C | C | C | NA | NA | NA | 6.2-46 | 4 | |
| | | CLIC | a2 | NA | NA | NA | Inside | C | C | C | NA | NA | NA | 6.2-46 | 4 | 27 |
| Reactor compartment cooling unit B return | 201b | 4636 | a1 | Butterfly | Manual | No | Outside | O | O | O | NA | NA | NA | 6.2-47 | 4 | 30 |
| | | 4776 | a1 | Gate | Manual | No | Outside | C | C | C | NA | NA | NA | 6.2-47 | 4 | |
| | | PI-2141 | a1 | NA | NA | NA | Outside | NA | NA | NA | NA | NA | NA | 6.2-47 | 4 | |
| | | CLIC | a2 | NA | NA | NA | Inside | C | C | C | NA | NA | NA | 6.2-47 | 4 | 27 |
| B hydrogen recombiner (pilot) | 202a | 1076B | a1 | Diaphragm | Manual | No | Outside | LC | LC | LC | NA | NA | NA | 6.2-48 | 5 | |
| | | 10211S1 | a2 | Globe | Solenoid | Status | Outside | C | C | C | FC | Yes | 3 | 6.2-48 | 5 | 28 |
| B hydrogen recombiner (main) | 202b | 1084b | a1 | Diaphragm | Manual | No | Outside | LC | LC | LC | NA | NA | NA | 6.2-48 | 5 | |
| | | 10213S1 | a2 | Globe | Solenoid | Status | Outside | C | C | C | FC | Yes | 3 | 6.2-48 | 5 | 28 |
| Containment pressure transmitter PT947 and PT948 | 203a | PT947 | a1 | NA | NA | NA | Outside | NA | NA | NA | NA | NA | NA | 6.2-49 | 2 | 6 |
| | | 1819C | a2 | Globe | Manual | No | Outside | O | O | O | NA | NA | NA | 6.2-49 | 2 | |
| | | PT948 | b1 | NA | NA | NA | Outside | NA | NA | NA | NA | NA | NA | 6.2-49 | 2 | 6 |
| | | 1819D | b2 | Globe | Manual | No | Outside | O | O | O | NA | NA | NA | 6.2-49 | 2 | |

8



9212140159-04

SI
APERTURE
CARD

Also Available On
Aperture Card

Table 6.2-15

CONTAINMENT PIPING PENETRATIONS
AND ISOLATION VALVING (Continued)

| System | Penetration No. | Valve/ Boundary | Isolation Position[a] | Valve Type | Valve Operator Type | Position Indication In Control Room | Position Relative to Containment | Position At: Normal Operation | Cold Shutdown | Immediate Postaccident[b] | Power Failure | Trip on CIS | Maximum Isolation Time (sec)[c] | UFSAR Figure | Class[d] | Notes (See end of table)[e] |
|---|---|---|---|---|---|---|---|---|---|---|---|---|---|---|---|---|
| Postaccident air sample from D fan | 203b | 1563 | a1 | Diaphragm | Manual | No | Outside | LC | LC | LC | NA | NA | NA | 6.2-50 | 5 | |
| | | 1564 | a2 | Globe | Manual | No | Outside | C | C | C | NA | NA | NA | 6.2-50 | 5 | |
| | | 1565 | a2 | Diaphragm | Manual | No | Outside | LC | LC | LC | NA | NA | NA | 6.2-50 | 5 | |
| Postaccident air sample from common header | 203c | 1566 | a1 | Diaphragm | Manual | No | Outside | LC | LC | LC | NA | NA | NA | 6.2-50 | 5 | |
| | | 1567 | a2 | Globe | Manual | No | Outside | C | C | C | NA | NA | NA | 6.2-50 | 5 | |
| | | 1568 | a2 | Diaphragm | Manual | No | Outside | LC | LC | LC | NA | NA | NA | 6.2-50 | 5 | |
| Purge supply duct | 204 | NA | a1, a2 | Blind flange | NA | NA | Inside | C | O | C | NA | NA | NA | 6.2-51 | 5 | 2, 29 |
| | | 5869 | NA | Butterfly | Air | Both | Outside | C | O/C | C | FC | Yes | NA | 6.2-51 | 5 | 29 |
| Loop B hot leg sample | 205 | 955 | NA | Globe | Air | Status | Inside | C | C | C | FC | Yes | NA | 6.2-52 | 1 | 17 |
| | | 956D | a1 | Needle | Manual | No | Outside | O | O | O | NA | NA | NA | 6.2-52 | 1 | |
| | | 966C | a2 | Globe | Air | Status | Outside | C | C | C | FC | Yes | 60 | 6.2-52 | 1 | |
| Pressurizer liquid space sample | 206a | 953 | NA | Globe | Air | Status | Inside | C | C | C | FC | Yes | NA | 6.2-53 | 1 | 17 |
| | | 956E | a1 | Needle | Manual | No | Outside | O | O | O | NA | NA | NA | 6.2-53 | 1 | |
| | | 966B | a2 | Globe | Air | Status | Outside | C | C | C | FC | Yes | 60 | 6.2-53 | 1 | |
| Steam generator A sample | 206b | CLIC | a1 | NA | NA | NA | Inside | C | C | C | NA | NA | NA | 6.2-54 | 4 | 19 |
| | | 5735 | a2 | Gate | Air | Status | Outside | O | C | C | FC | Yes | 60 | 6.2-54 | 4 | |
| Pressurizer steam space sample | 207a | 951 | NA | Globe | Air | Status | Inside | C | C | C | FC | Yes | NA | 6.2-55 | 1 | 17 |
| | | 956F | a1 | Needle | Manual | No | Outside | O | O | O | NA | NA | NA | 6.2-55 | 1 | |
| | | 966A | a2 | Globe | Air | Status | Outside | C | C | C | FC | Yes | 60 | 6.2-55 | 1 | |
| Steam generator B sample | 207b | CLIC | a1 | NA | NA | NA | Inside | C | C | C | NA | NA | NA | 6.2-56 | 4 | 19 |
| | | 5736 | a2 | Globe | Air | Status | Outside | O | C | C | FC | Yes | 60 | 6.2-56 | 4 | |
| Reactor compartment cooling unit B return | 209a | 4635 | a1 | Butterfly | Manual | No | Outside | O | O | O | NA | NA | NA | 6.2-47 | 4 | 26 |
| | | 4637 | a1 | Gate | Manual | No | Outside | C | C | C | NA | NA | NA | 6.2-47 | 4 | |
| | | CLIC | a2 | NA | NA | NA | Inside | C | C | C | NA | NA | NA | 6.2-47 | 4 | |
| Reactor compartment cooling Unit A supply | 209b | 4638 | a1 | Gate | Mannual | No | Outside | O | O | O | NA | NA | NA | 6.2-46 | 4 | 30 |
| | | 4758 | a1 | Butterfly | Manual | No | Outside | C | C | C | NA | NA | NA | 6.2-46 | 4 | |
| | | PI-2232 | a1 | NA | NA | NA | Outside | NA | NA | NA | NA | NA | NA | 6.2-46 | 4 | |
| | | CLIC | a2 | NA | NA | NA | Inside | C | C | C | NA | NA | NA | 6.2-46 | 4 | |
| Oxygen makeup to A & B recombiners | 210 | 1080A | a1 | Globe | Manual | No | Outside | LC | LC | LC | NA | NA | NA | 6.2-57 | 5 | |
| | | 10214S1 | a2 | Globe | Solenoid | Status | Outside | C | C | C | FC | Yes | 3 | 6.2-57 | 5 | 28 |
| | | 10214S | NA | Globe | Solenoid | Status | Outside | C | C | C | FC | Yes | 3 | 6.2-57 | 5 | 15, 28 |
| | | 10215S1 | a2 | Globe | Solenoid | Status | Outside | C | C | C | FC | Yes | 3 | 6.2-57 | 5 | 28 |
| | | 10215S | NA | Globe | Solenoid | Status | Outside | C | C | C | FC | Yes | 3 | 6.2-57 | 5 | 17, 28 |
| Purge exhaust duct | 300 | NA | a1, a2 | Blind flange | NA | NA | Inside | C | O | C | NA | NA | NA | 6.2-58 | 5 | 2, 29 |
| | | 5879 | NA | Butterfly | Air | Both | Outside | C | O/C | C | FC | Yes | NA | 6.2-58 | 5 | 29 |
| Auxiliary steam supply to containment | 301 | 6151 | a1 | Gate | Manual | No | Outside | LC | LC | LC | NA | NA | NA | 6.2-59 | 4 | 7 |
| | | 6165 | a2 | Gate | Manual | No | Outside | LC | LC | LC | NA | NA | NA | 6.2-59 | 4 | 7 |
| Auxiliary steam condensate return | 303 | 6152 | a1 | Diaphragm | Manual | No | Outside | LC | LC | LC | NA | NA | NA | 6.2-59 | 4 | 7 |
| | | 6175 | a2 | Diaphragm | Manual | No | Outside | LC | LC | LC | NA | NA | NA | 6.2-59 | 4 | 7 |

8



9212140159-05

SI
APERTURE
CARD

Also Available On
Aperture Card

Table 6.2-15

CONTAINMENT PIPING PENETRATIONS
AND ISOLATION VALVING (Continued)

| System | Penetration No. | Valve/ Boundary | Isolation Position[a] | Valve Type | Valve Operator Type | Position Indication In Control Room | Position Relative to Containment | Position At: Normal Operation | Position At: Cold Shutdown | Position At: Immediate Postaccident[b] | Position At: Power Failure | Trip on CIS | Maximum Isolation Time (sec)[c] | UFSAR Figure | Class[d] | Notes (See end of table)[e] |
|---|---|---|---|---|---|---|---|---|---|---|---|---|---|---|---|---|
| A hydrogen recombiner (pilot) | 304a | 1076A | a1 | Diaphragm | Manual | No | Outside | LC | LC | LC | NA | NA | NA | 6.2-60 | 5 | |
| | | 10205S1 | a2 | Globe | Solenoid | Status | Outside | C | C | C | FC | Yes | 3 | 6.2-60 | 5 | 28 |
| A hydrogen recombiner (main) | 304b | 1084A | a1 | Diaphragm | Manual | No | Outside | LC | LC | LC | NA | NA | NA | 6.2-60 | 5 | |
| | | 10209S1 | a2 | Globe | Solenoid | Status | Outside | C | C | C | FC | Yes | 3 | 6.2-60 | 5 | 28 |
| Containment air sample postaccident | 305a | 1554 | a1 | Diaphragm | Manual | No | Outside | LC | LC | LC | NA | NA | NA | 6.2-61 | 5 | |
| | | 1555 | a2 | Globe | Manual | No | Outside | C | C | C | NA | NA | NA | 6.2-61 | 5 | |
| | | 1556 | a2 | Diaphragm | Manual | No | Outside | LC | LC | LC | NA | NA | NA | 6.2-61 | 5 | |
| Containment air sample inlet | 305b | 1598 | a1 | Diaphragm | Air | Both | Outside | O | O | C | FC | Yes | 60 | 6.2-62 | 3A | |
| | | 1599 | a2 | Diaphragm | Air | Both | Outside | O | O | C | FC | Yes | 60 | 6.2-62 | 3A | |
| Containment air sample postaccident | 305c | 1557 | a1 | Diaphragm | Manual | No | Outside | LC | LC | LC | NA | NA | NA | 6.2-61 | 5 | |
| | | 1558 | a2 | Globe | Manual | No | Outside | C | C | C | NA | NA | NA | 6.2-61 | 5 | |
| | | 1559 | a2 | Diaphragm | Manual | No | Outside | LC | LC | LC | NA | NA | NA | 6.2-61 | 5 | |
| Containment air sample postaccident | 305d | 1560 | a1 | Diaphragm | Manual | No | Outside | LC | LC | LC | NA | NA | NA | 6.2-61 | 5 | |
| | | 1561 | a2 | Globe | Manual | No | Outside | C | C | C | NA | NA | NA | 6.2-61 | 5 | |
| | | 1562 | a2 | Diaphragm | Manual | No | Outside | LC | LC | LC | NA | NA | NA | 6.2-61 | 5 | |
| Containment air sample out | 305e | 1596 | a1 | Globe | Manual | No | Outside | O | O | O | NA | NA | NA | 6.2-63 | 2 | |
| | | 1597 | a2 | Diaphragm | Air | Both | Outside | O | O | C | FC | Yes | 60 | 6.2-63 | 2 | |
| Fire service water | 307 | 9227 | a1 | Gate | Air | Both | Outside | C | O | C | FC | Yes | 60 | 6.2-64 | 5 | |
| | | 9229 | a2 | Check | NA | NA | Inside | C | C | C | NA | NA | NA | 6.2-64 | 5 | |
| Service water from A fan cooler | 308 | 4629 | a1 | Butterfly | Manual | No | Outside | LO | O/C | LO | NA | NA | NA | 6.2-65 | 4 | 26 |
| | | 4633 | a1 | Gate | Manual | No | Outside | C | C | C | NA | NA | NA | 6.2-65 | 4 | |
| | | FIA-2033 | a1 | NA | NA | NA | Outside | NA | NA | NA | NA | NA | NA | 6.2-65 | 4 | |
| | | TIA-2010 | a1 | NA | NA | NA | Outside | NA | NA | NA | NA | NA | NA | 6.2-65 | 4 | |
| | | CLIC | a2 | NA | NA | NA | Inside | C | C | C | NA | NA | NA | 6.2-65 | 4 | 27 |
| Mini-purge supply | 309 | 7445 | a1 | Butterfly | Air | Both | Outside | O/C | C | C | FC | Yes | 3 | 6.2-66 | 5 | |
| | | 7478 | a2 | Butterfly | Air | Both | Inside | O/C | C | C | FC | Yes | 3 | 6.2-66 | 5 | |
| Instrument air to containment | 310a | 5392 | a1 | Globe | Air | Both | Outside | O | O | C | FC | Yes | 60 | 6.2-67 | 3A | |
| | | 5393 | a2 | Check | NA | NA | Inside | O | O | C | NA | NA | NA | 6.2-67 | 3A | |
| Service air to containment | 310b | 7141 | a1 | Gate | Manual | No | Outside | LC | O/C | LC | NA | NA | NA | 6.2-68 | 3A | |
| | | 7226 | a2 | Check | NA | NA | Inside | C | O/C | C | NA | NA | NA | 6.2-68 | 3A | |
| Service water from B fan cooler | 311 | 4630 | a1 | Butterfly | Manual | No | Outside | LO | O/C | LO | NA | NA | NA | 6.2-65 | 4 | 26 |
| | | 4634 | a1 | Gate | Manual | No | Outside | C | C | C | NA | NA | NA | 6.2-65 | 4 | |
| | | FIA-2034 | a1 | NA | NA | NA | Outside | NA | NA | NA | NA | NA | NA | 6.2-65 | 4 | |
| | | TIA-2011 | a1 | NA | NA | NA | Outside | NA | NA | NA | NA | NA | NA | 6.2-65 | 4 | |
| | | CLIC | a2 | NA | NA | NA | Inside | C | C | C | NA | NA | NA | 6.2-65 | 4 | 27 |
| Service water to D fan cooler | 312 | 4642 | a1 | Butterfly | Manual | No | Outside | LO | O/C | LO | NA | NA | NA | 6.2-65 | 4 | 30 |
| | | 4646 | a1 | Gate | Manual | No | Outside | C | C | C | NA | NA | NA | 6.2-65 | 4 | |
| | | 12500K | a1 | Globe | Manual | No | Outside | C | C | C | NA | NA | NA | 6.2-65 | 4 | |
| | | PI-2144 | a1 | NA | NA | NA | Outside | NA | NA | NA | NA | NA | NA | 6.2-65 | 4 | |
| | | CLIC | a2 | NA | NA | NA | Inside | C | C | C | NA | NA | NA | 6.2-65 | 4 | 27 |
| Leakage test depressurization | 313 | NA | a1 | Blind flange | NA | NA | Inside | C | C | C | NA | NA | NA | 6.2-69 | 5 | |
| | | 7444 | a2 | Butterfly | Motor | Status | Outside | C | C | C | AI | Yes | NA | 6.2-69 | 5 | |

8

9212140159-06

SI
APERTURE
CARD

Also Available On
Aperture Card

Table 6.2-15

CONTAINMENT PIPING PENETRATIONS
AND ISOLATION VALVING (Continued)

| System | Penetration No. | Valve/ Boundary | Isolation Position[a] | Valve Type | Valve Operator Type | Position Indication In Control Room | Position Relative to Containment | Position At: Normal Operation | Cold Shutdown | Immediate Postaccident[b] | Power Failure | Trip on CIS | Maximum Isolation Time (sec)[c] | UFSAR Figure | Class[d] | Notes (See end of table)[e] |
|---|---|---|---|---|---|---|---|---|---|---|---|---|---|---|---|---|
| Service water from C fan cooler | 315 | 4643 | a1 | Butterfly | Manual | No | Outside | LO | O/C | LO | NA | NA | NA | 6.2-65 | 4 | 26 |
| | | 4647 | a1 | Gate | Manual | No | Outside | C | C | C | NA | NA | NA | 6.2-65 | 4 | |
| | | FIA-2035 | a1 | NA | NA | NA | Outside | NA | NA | NA | NA | NA | NA | 6.2-65 | 4 | |
| | | TIA-2012 | a1 | NA | NA | NA | Outside | NA | NA | NA | NA | NA | NA | 6.2-65 | 4 | |
| | | CLIC | a2 | NA | NA | NA | Inside | C | C | C | NA | NA | NA | 6.2-65 | 4 | 27 |
| Service water to B fan cooler | 316 | 4628 | a1 | Butterfly | Manual | No | Outside | LO | O/C | LO | NA | NA | NA | 6.2-65 | 4 | 30 |
| | | 4632 | a1 | Gate | Manual | No | Outside | C | C | C | NA | NA | NA | 6.2-65 | 4 | |
| | | PI-2138 | a1 | NA | NA | NA | Outside | NA | NA | NA | NA | NA | NA | 6.2-65 | 4 | |
| | | CLIC | a2 | NA | NA | NA | Inside | C | C | C | NA | NA | NA | 6.2-65 | 4 | 27 |
| Leakage test supply | 317 | NA | a1 | Blind flange | NA | NA | Inside | C | O | C | NA | NA | NA | 6.2-70 | 5 | |
| | | 7443 | a2 | Butterfly | Motor | Status | Outside | C | O | C | AI | Yes | NA | 6.2-70 | 5 | |
| Deadweight tester | 318 | NA | a1, a2 | NA | NA | NA | NA | NA | NA | NA | NA | NA | NA | NA | NA | 31 |
| Service water to A fan cooler | 319 | 4627 | a1 | Butterfly | Manual | No | Outside | LO | O/C | LO | NA | NA | NA | 6.2-65 | 4 | 30 |
| | | 4631 | a1 | Gate | Manual | No | Outside | C | C | C | NA | NA | NA | 6.2-65 | 4 | |
| | | PI-2142 | a1 | NA | NA | NA | Outside | NA | NA | NA | NA | NA | NA | 6.2-65 | 4 | |
| | | CLIC | a2 | NA | NA | NA | Inside | C | C | C | NA | NA | NA | 6.2-65 | 4 | 27 |
| Service water to C fan cooler | 320 | 4641 | a1 | Butterfly | Manual | No | Outside | LO | O/C | LO | NA | NA | NA | 6.2-65 | 4 | 30 |
| | | 4645 | a1 | Gate | Manual | No | Outside | C | C | C | NA | NA | NA | 6.2-65 | 4 | |
| | | PI-2136 | a1 | NA | NA | NA | Outside | NA | NA | NA | NA | NA | NA | 6.2-65 | 4 | |
| | | 12500B | a1 | Globe | Manual | No | Outside | C | C | C | NA | NA | NA | 6.2-65 | 4 | |
| | | CLIC | a2 | NA | NA | NA | Inside | C | C | C | NA | NA | NA | 6.2-65 | 4 | 27 |
| A steam generator blowdown | 321 | 5738 | a1 | Globe | Air | Status | Outside | O | O/C | C | FC | Yes | 60 | 6.2-71 | 4 | |
| | | CLIC | a2 | NA | NA | NA | Inside | C | C | C | NA | NA | NA | 6.2-71 | 4 | 19 |
| B steam generator blowdown | 322 | 5737 | a1 | Globe | Air | Status | Outside | O | O/C | C | FC | Yes | 60 | 6.2-72 | 4 | |
| | | CLIC | a2 | NA | NA | NA | Inside | C | C | C | NA | NA | NA | 6.2-72 | 4 | 19 |
| Service water from D fan cooler | 323 | 4644 | a1 | Butterfly | Manual | No | Outside | LO | O/C | LO | NA | NA | NA | 6.2-65 | 4 | 26 |
| | | 4648 | a1 | Gate | Manual | No | Outside | C | C | C | NA | NA | NA | 6.2-65 | 4 | |
| | | FIA-2036 | a1 | NA | NA | NA | Outside | NA | NA | NA | NA | NA | NA | 6.2-65 | 4 | |
| | | TIA-2013 | a1 | NA | NA | NA | Outside | NA | NA | NA | NA | NA | NA | 6.2-65 | 4 | |
| | | CLIC | a2 | NA | NA | NA | Inside | C | C | C | NA | NA | NA | 6.2-65 | 4 | 27 |
| Demineralized water to containment | 324 | 8418 | a1 | Globe | Air | Both | Outside | C | O/C | C | FC | Yes | 60 | 6.2-73 | 5 | |
| | | 8419 | a2 | Check | NA | NA | Inside | C | O/C | C | NA | NA | NA | 6.2-73 | 5 | |
| Hydrogen monitor instrumentation line | 332a | 922 | a1 | Gate | Solenoid | Both | Outside | C | C | C | FC | Yes | 3 | 6.2-74 | 5 | |
| | | 924 | a1 | Gate | Solenoid | Both | Outside | C | C | C | FC | Yes | 3 | 6.2-74 | 5 | |
| | | CLOC | a2 | NA | NA | NA | Outside | C | C | C | NA | NA | NA | 6.2-74 | 5 | 32 |
| | | 7452 | b1 | Globe | Manual | No | Outside | C | C | C | NA | NA | NA | 6.2-74 | 5 | |
| | | Cap | b2 | NA | NA | NA | Outside | C | C | C | NA | NA | NA | 6.2-74 | 5 | |
| Hydrogen monitor instrumentation line | 332b | 923 | a1 | Gate | Solenoid | Both | Outside | C | C | C | FC | Yes | 3 | 6.2-74 | 5 | |
| | | CLOC | a2 | NA | NA | NA | Outside | C | C | C | NA | NA | NA | 6.2-74 | 5 | 32 |
| | | 7456 | b1 | Globe | Manual | No | Outside | C | C | C | NA | NA | NA | 6.2-74 | 5 | |
| | | Cap | b2 | NA | NA | NA | Outside | C | C | C | NA | NA | NA | 6.2-74 | 5 | |
| Containment pressure transmitters PT944, PT949, and PT950 | 332c | PT944 | a1 | NA | NA | NA | Outside | NA | NA | NA | NA | NA | NA | 6.2-75 | 2 | 6 |
| | | 1819G | a2 | Globe | Manual | No | Outside | O | O | O | NA | NA | NA | 6.2-75 | 2 | |
| | | PT949 | b1 | NA | NA | NA | Outside | NA | NA | NA | NA | NA | NA | 6.2-75 | 2 | 6 |
| | | 1819E | b2 | Globe | Manual | No | Outside | O | O | O | NA | NA | NA | 6.2-75 | 2 | |
| | | PT950 | c1 | NA | NA | NA | Outside | NA | NA | NA | NA | NA | NA | 6.2-75 | 2 | 6 |
| | | 1819F | c2 | Globe | Manual | No | Outside | O | O | O | NA | NA | NA | 6.2-75 | 2 | |

8

9212140159-07

SI APERTURE CARD

Also Available On Aperture Card

Table 6.2-15

CONTAINMENT PIPING PENETRATIONS AND ISOLATION VALVING (Continued)

| System | Penetration No. | Valve/ Boundary | Isolation Position[a] | Valve Type | Valve Operator Type | Position Indication In Control Room | Position Relative to Containment | Position At: Normal Operation | Position At: Cold Shutdown | Position At: Immediate Postaccident[b] | Position At: Power Failure | Trip on CIS | Maximum Isolation Time (sec)[c] | UFSAR Figure | Class[d] | Notes (See end of table)[e] |
|---|---|---|---|---|---|---|---|---|---|---|---|---|---|---|---|---|
| Hydrogen monitor instrumentation line | 332d | 921 | a1 | Gate | Solenoid | Both | Outside | C | C | C | FC | Yes | 3 | 6.2-74 | 5 | |
| | | CLOC | a2 | NA | NA | NA | Outside | C | C | C | NA | NA | NA | 6.2-74 | 5 | 32 |
| | | 7448 | b1 | Globe | Manual | No | Outside | C | C | C | NA | NA | NA | 6.2-74 | 5 | |
| | | Cap | b2 | NA | NA | NA | Outside | C | C | C | NA | NA | NA | 6.2-74 | 5 | |
| Main steam from A steam generator | 401 | 3413A | a1 | Globe | Manual | No | Outside | O | C | O/C | NA | NA | NA | 6.2-76 | 4 | 18 |
| | | 3455 | a1 | Globe | Manual | No | Outside | C | C | C | NA | NA | NA | 6.2-76 | 4 | |
| | | 3505A | a1 | Gate | Motor | R/G | Outside | C | C | O/C | AI | No | NA | 6.2-76 | 4 | |
| | | 3505C | a1 | Gate | Manual | No | Outside | C | C | C | NA | NA | NA | 6.2-76 | 4 | |
| | | 3507 | a1 | Gate | Manual | No | Outside | O | C | O/C | NA | NA | NA | 6.2-76 | 4 | |
| | | 3507A | a1 | Gate | Manual | No | Outside | C | C | C | NA | NA | NA | 6.2-76 | 4 | |
| | | 3517 | a1 | Swing check | Air | R/G | Outside | O | C | C | AI | No | NA | 6.2-76 | 4 | 18 |
| | | 3521 | a1 | Gate | Manual | No | Outside | O | O | O/C | NA | NA | NA | 6.2-76 | 4 | 18 |
| | | 3615 | a1 | Gate | Manual | No | Outside | C | C | C | NA | NA | NA | 6.2-76 | 4 | |
| | | 3669 | a1 | Gate | Manual | No | Outside | O | C | O/C | NA | NA | NA | 6.2-76 | 4 | 18 |
| | | 11027 | a1 | Gate | Manual | No | Outside | C | C | C | NA | NA | NA | 6.2-76 | 4 | |
| | | 11029 | a1 | Gate | Manual | No | Outside | C | C | C | NA | NA | NA | 6.2-76 | 4 | |
| | | 11031 | a1 | Gate | Manual | No | Outside | C | C | C | NA | NA | NA | 6.2-76 | 4 | |
| | | PS-2092 | a1 | NA | NA | NA | Outside | NA | NA | NA | NA | NA | NA | 6.2-76 | 4 | 6 |
| | | PT-468 | a1 | NA | NA | NA | Outside | NA | NA | NA | NA | NA | NA | 6.2-76 | 4 | 6 |
| | | PT-469 | a1 | NA | NA | NA | Outside | NA | NA | NA | NA | NA | NA | 6.2-76 | 4 | 6 |
| | | PT-469A | a1 | NA | NA | NA | Inside | NA | NA | NA | NA | NA | NA | 6.2-76 | 4 | 6 |
| | | PT-482 | a1 | NA | NA | NA | Outside | NA | NA | NA | NA | NA | NA | 6.2-76 | 4 | 6 |
| | | End caps | a1 | NA | NA | NA | Outside | C | C | C | NA | NA | NA | 6.2-76 | 4 | 33 |
| | | CLIC | a2 | NA | NA | NA | Inside | C | C | C | NA | NA | NA | 6.2-76 | 4 | 19 |
| Main steam from B steam generator | 402 | 3412A | a1 | Gate | Manual | No | Outside | O | C | O/C | NA | NA | NA | 6.2-77 | 4 | 18 |
| | | 3456 | a1 | Globe | Manual | No | Outside | C | C | C | NA | NA | NA | 6.2-77 | 4 | |
| | | 3504A | a1 | Gate | Motor | R/G | Outside | C | C | O/C | AI | No | NA | 6.2-77 | 4 | |
| | | 3504C | a1 | Gate | Manual | No | Outside | C | C | C | NA | NA | NA | 6.2-77 | 4 | |
| | | 3506 | a1 | Gate | Manual | No | Outside | O | C | O/C | NA | NA | NA | 6.2-77 | 4 | 18 |
| | | 3506A | a1 | Gate | Manual | No | Outside | C | C | C | NA | NA | NA | 6.2-77 | 4 | |
| | | 3516 | a1 | Swing check | Air | R/G | Outside | O | C | C | AI | No | NA | 6.2-77 | 4 | 18 |
| | | 3520 | a1 | Gate | Manual | No | Outside | O | O | O | NA | NA | NA | 6.2-77 | 4 | 18 |
| | | 3614 | a1 | Gate | Manual | No | Outside | C | C | C | NA | NA | NA | 6.2-77 | 4 | |
| | | 3668 | a1 | Globe | Manual | No | Outside | O | C | O/C | NA | NA | NA | 6.2-77 | 4 | 18 |
| | | 11021 | a1 | Gate | Manual | No | Outside | C | C | C | NA | NA | NA | 6.2-77 | 4 | |
| | | 11023 | a1 | Gate | Manual | No | Outside | C | C | C | NA | NA | NA | 6.2-77 | 4 | |
| | | 11025 | a1 | Gate | Manual | No | Outside | C | C | C | NA | NA | NA | 6.2-77 | 4 | |
| | | PS-2093 | a1 | NA | NA | NA | Outside | NA | NA | NA | NA | NA | NA | 6.2-77 | 4 | 6 |
| | | PT-478 | a1 | NA | NA | NA | Outside | NA | NA | NA | NA | NA | NA | 6.2-77 | 4 | 6 |
| | | PT-479 | a1 | NA | NA | NA | Outside | NA | NA | NA | NA | NA | NA | 6.2-77 | 4 | 6 |
| | | PT-483 | a1 | NA | NA | NA | Outside | NA | NA | NA | NA | NA | NA | 6.2-77 | 4 | 6 |
| | | End caps | a1 | NA | NA | NA | Outside | C | C | C | NA | NA | NA | 6.2-77 | 4 | 33 |
| | | CLIC | a2 | NA | NA | NA | Inside | C | C | C | NA | NA | NA | 6.2-77 | 4 | 19 |
| Feedwater line to A steam generator | 403 | 3993 | a1 | Check | NA | NA | Outside | O | C | C | NA | NA | NA | 6.2-78 | 4 | 34 |
| | | 3995X | a1 | Globe | Manual | No | Outside | C | C | C | NA | NA | NA | 6.2-78 | 4 | |
| | | 4000C | a1 | Check | NA | NA | Outside | C | C | O/C | NA | NA | NA | 6.2-78 | 4 | 34 |
| | | 4003 | a1 | Check | NA | NA | Outside | C | C | O/C | NA | NA | NA | 6.2-78 | 4 | 34 |
| | | 4011A | a1 | Globe | Manual | No | Outside | C | C | C | NA | NA | NA | 6.2-78 | 4 | |
| | | 4003A | a1 | Gate | Manual | No | Outside | C | C | C | NA | NA | NA | 6.2-78 | 4 | |
| | | 4099E | a1 | Gate | Manual | No | Outside | C | C | C | NA | NA | NA | 6.2-78 | 4 | |
| | | 8651 | a1 | Gate | Manual | No | Outside | C | C | C | NA | NA | NA | 6.2-78 | 4 | |
| | | CLIC | a2 | NA | NA | NA | Inside | C | C | C | NA | NA | NA | 6.2-78 | 4 | 19 |

8

9212140159-08

SI APERTURE CARD

Also Available On Aperture Card

Table 6.2-15

CONTAINMENT PIPING PENETRATIONS AND ISOLATION VALVING (Continued)

| System | Penetration No. | Valve/ Boundary | Isolation Position[a] | Valve Type | Valve Operator Type | Position Indication In Control Room | Position Relative to Containment | Position At: Normal Operation | Position At: Cold Shutdown | Position At: Immediate Postaccident[b] | Position At: Power Failure | Trip on CIS | Maximum Isolation Time (sec)[c] | UFSAR Figure | Class[d] | Notes (See end of table)[e] |
|---|---|---|---|---|---|---|---|---|---|---|---|---|---|---|---|---|
| Feedwater line to B steam generator | 404 | 3992 | a1 | Check | NA | NA | Outside | O | C | C | NA | NA | NA | 6.2-78 | 4 | 34 |
| | | 3994E | a1 | Globe | Manual | No | Outside | C | C | C | NA | NA | NA | 6.2-78 | 4 | |
| | | 4000D | a1 | Check | NA | NA | Outside | C | C | O/C | NA | NA | NA | 6.2-78 | 4 | 34 |
| | | 4004 | a1 | Check | NA | NA | Outside | C | C | O/C | NA | NA | NA | 6.2-78 | 4 | 34 |
| | | 4012A | a1 | Globe | Manual | No | Outside | C | C | C | NA | NA | NA | 6.2-78 | 4 | |
| | | 3994X | a1 | Gate | Manual | No | Outside | C | C | C | NA | NA | NA | 6.2-78 | 4 | |
| | | 4004A | a1 | Gate | Manual | No | Outside | C | C | C | NA | NA | NA | 6.2-78 | 4 | |
| | | 8650 | a1 | Gate | Manual | No | Outside | C | C | C | NA | NA | NA | 6.2-78 | 4 | |
| | | CLIC | a2 | NA | NA | NA | Inside | C | C | C | NA | NA | NA | 6.2-78 | 4 | 11 |
| Personnel hatch | 1000 | NA | a1 | NA | NA | NA | Inside | C | O/C | C | NA | NA | NA | 3.8-31 | NA | 2 |
| | | NA | a2 | NA | NA | NA | Outside | C | O/C | C | NA | NA | NA | 3.8-31 | NA | 2 |
| Equipment hatch | 2000 | NA | a1 | NA | NA | NA | Inside | C | O/C | C | NA | NA | NA | 3.8-30 | NA | 2 |
| | | NA | a2 | NA | NA | NA | Outside | C | O/C | C | NA | NA | NA | 3.8-30 | NA | 2 |

[a]This two-character designator identifies the branch line which contains the valve (a, b, c, d, or e) and the isolation boundary (1 or 2 since each line contains two barriers).

[b]Refers to position immediately following receipt of containment isolation signal and containment ventilation isolation signal.

[c]The maximum isolation time does not include diesel start time nor instrument delay time.

[d]Refers to classes defined in Section 6.2.4.4.

[e]Notes only used to supplement Section 6.2.4.4.

8

Notes

(1) Penetration number 2 was added as a result of EWR 4998 to facilitate steam generator maintenance activities during reduced inventory operation. This penetration is closed by a double-gasketed blind flange on both ends. The innermost gasket for each flange (i.e., gasket closest to containment wall) provides a containment barrier. Therefore, both flanges are necessary for containment integrity.

(2) This penetration is provided with redundant seals and is closed during normal operation.

(3) The end of the fuel transfer tube inside containment is closed by a double-gasketed blind flange, to prevent leakage of spent fuel pool water into the containment during plant operation. This flange also serves as protection against leakage from the containment following a loss-of-coolant accident.

(4) The charging system is a closed system outside containment (CLOC). Verification of this closed system as a containment isolation boundary is accomplished via normal system operation (2235 psig).

(5) The safety injection system is a closed system outside containment (CLOC). Verification of this closed system as a containment isolation boundary is accomplished via inservice and/or shutdown leakage checks.

(6) The pressure transmitter assembly, by its design, provides a containment pressure boundary. The integrity of this boundary is verified by annual leakage tests.

(7) This penetration was only utilized during initial plant construction and is maintained inactive.

(8) The containment spray system is a closed system outside containment (CLOC). Verification of this closed system as a containment isolation boundary is accomplished via inservice and/or shutdown leakage checks.

(9) This valve may be opened during containment spray pump testing since there will always be at least one isolation boundary between the valve and containment for the duration of the test.

(10) Manual valves 859A, 859B, and 859C are CIVs for both penetrations 105 and 109.

(11) A second isolation barrier is provided by the volume control tank and connecting piping per letter from D. D. DiIanni, NRC, to R. W. Kober, RG&E, dated January 30, 1987. This barrier is not required to be tested.

9212140159-09

SI
APERTURE
CARD

Also Available On
Aperture Card

Table 6.2-15

CONTAINMENT PIPING PENETRATIONS
AND ISOLATION VALVING (Continued)

(12) Only one isolation barrier is provided since there are two Event V check valves in the safety injection cold legs, and two check valves and a normally closed motor-operated valve in the safety injection hot legs. This configuration was accepted by the NRC during the SEP (NUREG 0821, Section 4.22.2).

(13) 10 CFR 50, Appendix J containment leakage testing is not required per D.M. Crutchfield, NRC, letter to J. E. Maier, RG&E, dated May 6, 1981.

(14) MOVs 1813A, 1813B, 720, and 701 are maintained closed at power with their breakers locked off.

(15) The residual heat removal system is a closed system outside containment (CLOC). Verification of this closed system as a containment isolation boundary is accomplished via inservice and/or shutdown leakage checks.

(16) Containment isolation signals were added to AOVs 200A, 200B, and 202 since AOV 427 fails open on loss of power. The isolation signal for these three valves is relayed from AOV 427.

(17) This valve receives a containment isolation signal; however, credit is not taken for this function since the valve is inside the missile barrier or outside the necessary class break boundary. Therefore, this valve is not subject to 10 CFR 50, Appendix J leakage testing, nor does it require a maximum isolation time. The containment isolation signal only enhances isolation capability.

(18) This valve is normally open at power since it is required during power operation or increases the reliability of a standby system. However, this valve can either be closed from the control room or locally when required.

(19) The main steam, main feedwater, and standby auxiliary feedwater penetrations take credit for the steam generator tubes as a closed system inside containment. Verification of this closed system as a containment isolation boundary is accomplished via normal power operation. The isolation valves outside containment for these penetrations are not required to be Appendix J tested.

(20) Manual valves 547 and 1793 are locked closed and leak tested to provide equivalent protection for GDC 56 and 57 (see UFSAR Section 6.2.4.4.4.1, Class 3A).

(21) Operations is instructed to manually close AOV 745 following a containment isolation signal to provide additional redundancy.

(22) The component cooling water system piping inside containment for this penetration is a closed system (CLIC). Verification of this closed system as a containment isolation boundary is accomplished via inservice and/or shutdown leakage checks.

(23) The component cooling water system piping outside containment for this penetration is a closed system (CLOC). Verification of this closed system as a containment isolation boundary is accomplished via inservice and/or shutdown leakage checks. 8

(24) Sump lines are in operation and filled with fluid following an accident; therefore, 10 CFR 50, Appendix J leakage testing, is not required for this valve. See D. M. Crutchfield, NRC, letter to J. E. Maier, RG&E, dated May 6, 1981.

(25) There is no second containment barrier for this branch line. However, MOVs 1813A and 1813B are maintained closed at power and tested to Appendix J. These lines are also filled with water post LOCA, thus providing a barrier to the release of containment atmosphere.

(26) This manual valve is subject to an annual hydrostatic leakage test and is not subject to 10 CFR 50, Appendix J leakage testing.

(27) The service water system piping inside containment for this penetration is a closed system (CLIC). Verification of this closed system as a containment isolation boundary is accomplished via inservice and/or shutdown leakage checks.

(28) This solenoid valve is maintained inactive in the closed position by removal of its dc control power.

(29) The flanges and associated double seals provide containment isolation and ensure that containment integrity is maintained for all modes of operation above cold shutdown. During cold shutdown when the flanges are removed these valves provide isolation for containment shutdown purge and exhaust. These valves do not require 10 CFR 50, Appendix J leakage testing, nor a maximum isolation time.

(30) The service water system operates at a higher pressure than the containment accident pressure and is missile protected inside containment. Therefore, this manual valve is used for flow control only and is not subject to 10 CFR 50, Appendix J leakage testing. See letter from J. E. Maier, RG&E, to D. M. Crutchfield, NRC, dated August 30, 1982.

(31) This penetration is decommissioned and welded shut.

(32) Acceptable isolation capability is provided for these instrument lines by two isolation boundaries outside containment. One of the boundaries outside containment is a Seismic Category I closed system which is subjected to Type C leakage testing under 10 CFR 50, Appendix J.

(33) These end caps include those found on the sensing lines for PS-2092, PT-468, PT-469, PT-469A, and PT-482 (Penetration 401) and PS-2093, PT-479, and PT-483 (Penetration 402).

(34) This check valve can be open when containment isolation is required in order to provide necessary feedwater or auxiliary feedwater to the steam generators. The check valve will close once feedwater is isolated to the affected steam generator.

9212140159-10

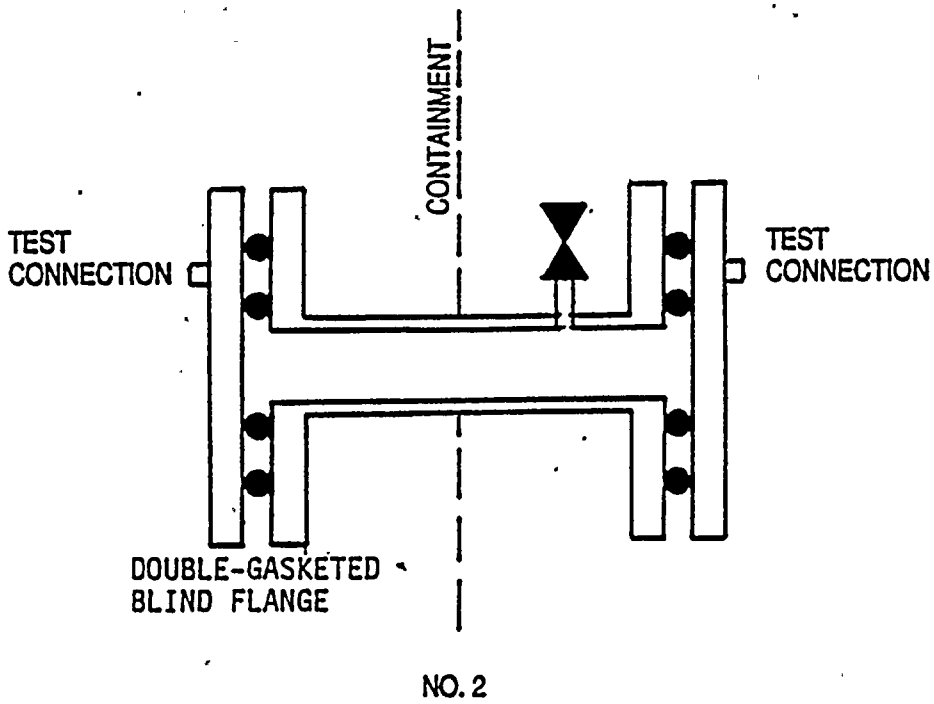


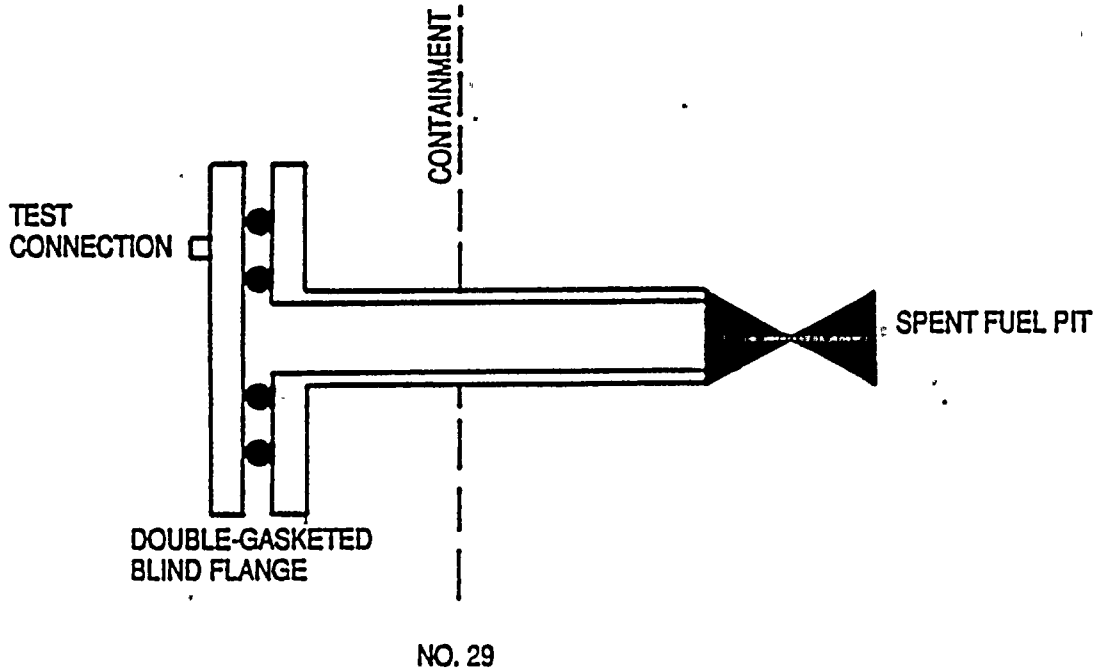


ROCHESTER GAS AND ELECTRIC CORPORATION
R. E. GINNA NUCLEAR POWER PLANT
UPDATED FINAL SAFETY ANALYSIS REPORT

Figure 6.2-13
S/G Inspection/Maintenance,
Penetration No. 2
Fuel Transfer Tube, Penetration No. 29

REV 6 12/90

# RCS CHARGING LINE
# PENETRATION 100

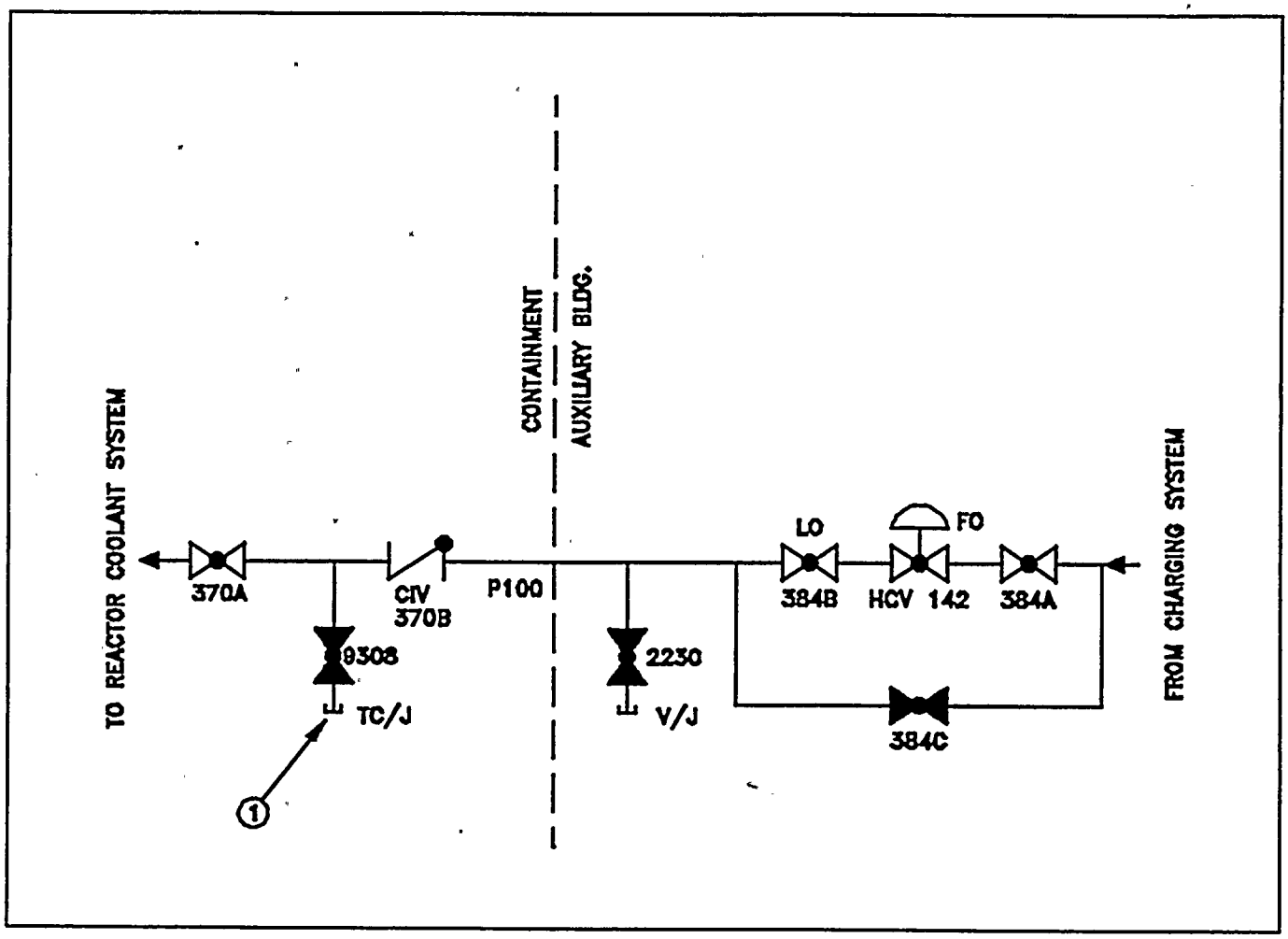


| NOTE | DESCRIPTION |
|---|---|
| - | Containment Basement (Regenerative Hx Area) |
| - | Auxiliary Bldg Basement (RWST Area) |
| (1) | LRM should be located in Containment Basement (Regenerative Hx Area) |
| | |
| | |

ROCHESTER GAS AND ELECTRIC CORPORATION
R. E. GINNA NUCLEAR POWER PLANT
UPDATED FINAL SAFETY ANALYSIS REPORT

Figure 6.2-14

Reactor Coolant System
Charging Line
Penetration 100

# SI TO LOOP A, SI TO LOOP B and SI TEST LINE PENETRATIONS 101, 110b and 113

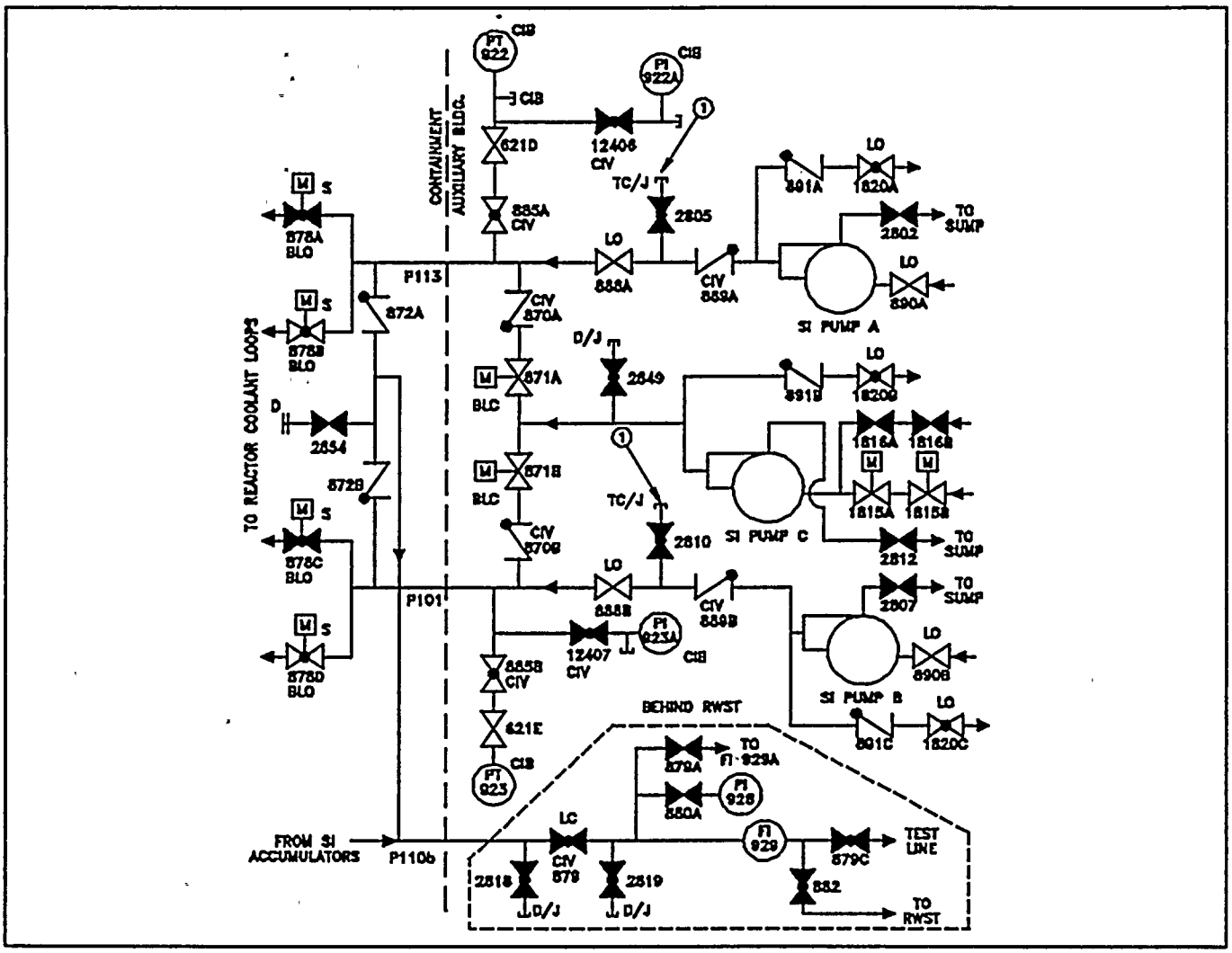


| NOTE | DESCRIPTION |
|---|---|
| - | Containment near B Stairway |
| - | Auxiliary Bldg Basement SI Pump Area |
| (1) | LRM should be located in Aux Bldg Basement |
| | |
| | |

ROCHESTER GAS AND ELECTRIC CORPORATION
R. E. GINNA NUCLEAR POWER PLANT
UPDATED FINAL SAFETY ANALYSIS REPORT

Figure 6.2-15

Safety Injection System
Penetrations 101, 110b, and 113

# ALTERNATE CHARGING LINE PENETRATION 102

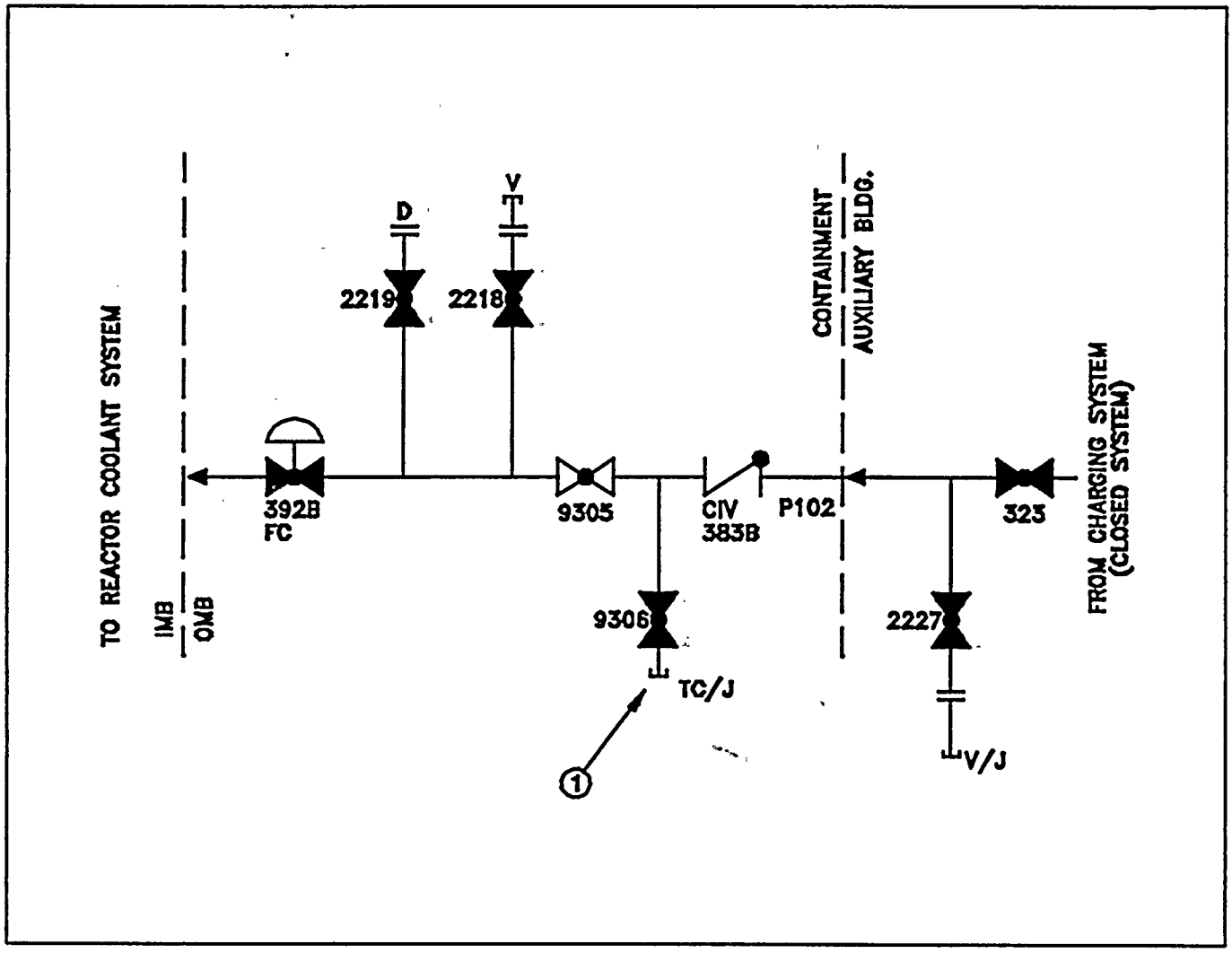


| NOTE | DESCRIPTION |
|---|---|
| - | Containment Basement (Regenerative Hx Area) |
| - | Auxiliary Bldg Basement (Outside RWST Area) |
| (1) | LRM should be located in Containment Basement (Regenerative Hx Area) |
| | |
| | |

ROCHESTER GAS AND ELECTRIC CORPORATION
R. E. GINNA NUCLEAR POWER PLANT
UPDATED FINAL SAFETY ANALYSIS REPORT

Figure 6.2-16

Alternate Charging Line
Penetration 102

# CONSTRUCTION FIRE SERVICE WATER PENETRATION 103

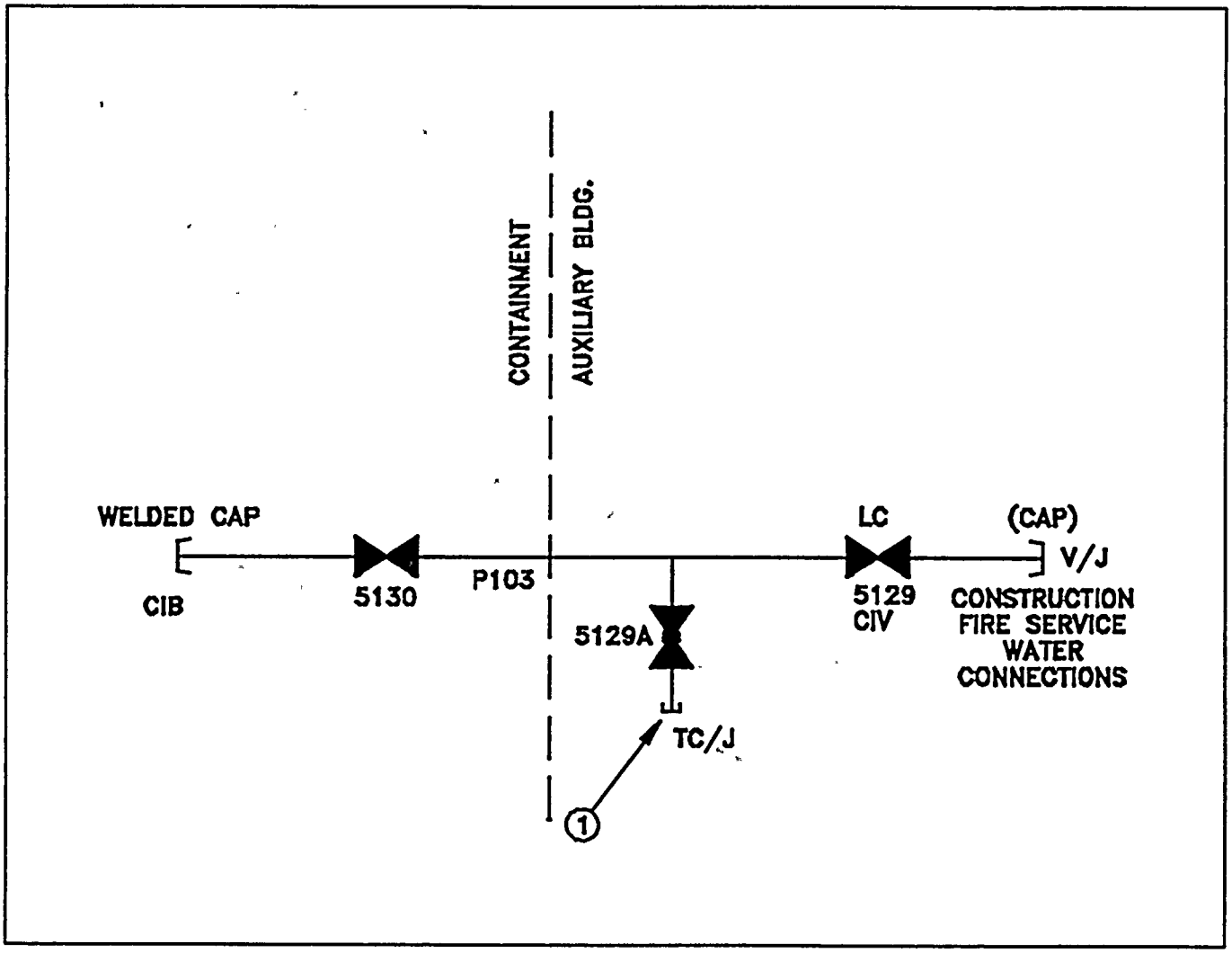


| NOTE | DESCRIPTION |
|---|---|
| - | Containment Basement (Regenerative Hx Area) |
| - | Auxiliary Bldg (RWST Area) |
| (1) | LRM should be located in Auxiliary Bldg Basement near RWST |
| | |
| | |

ROCHESTER GAS AND ELECTRIC CORPORATION
R. E. GINNA NUCLEAR POWER PLANT
UPDATED FINAL SAFETY ANALYSIS REPORT

Figure 6.2-17

Construction Fire Service Water Penetration 103

# "A" CONTAINMENT SPRAY HEADER
# PENETRATION 105

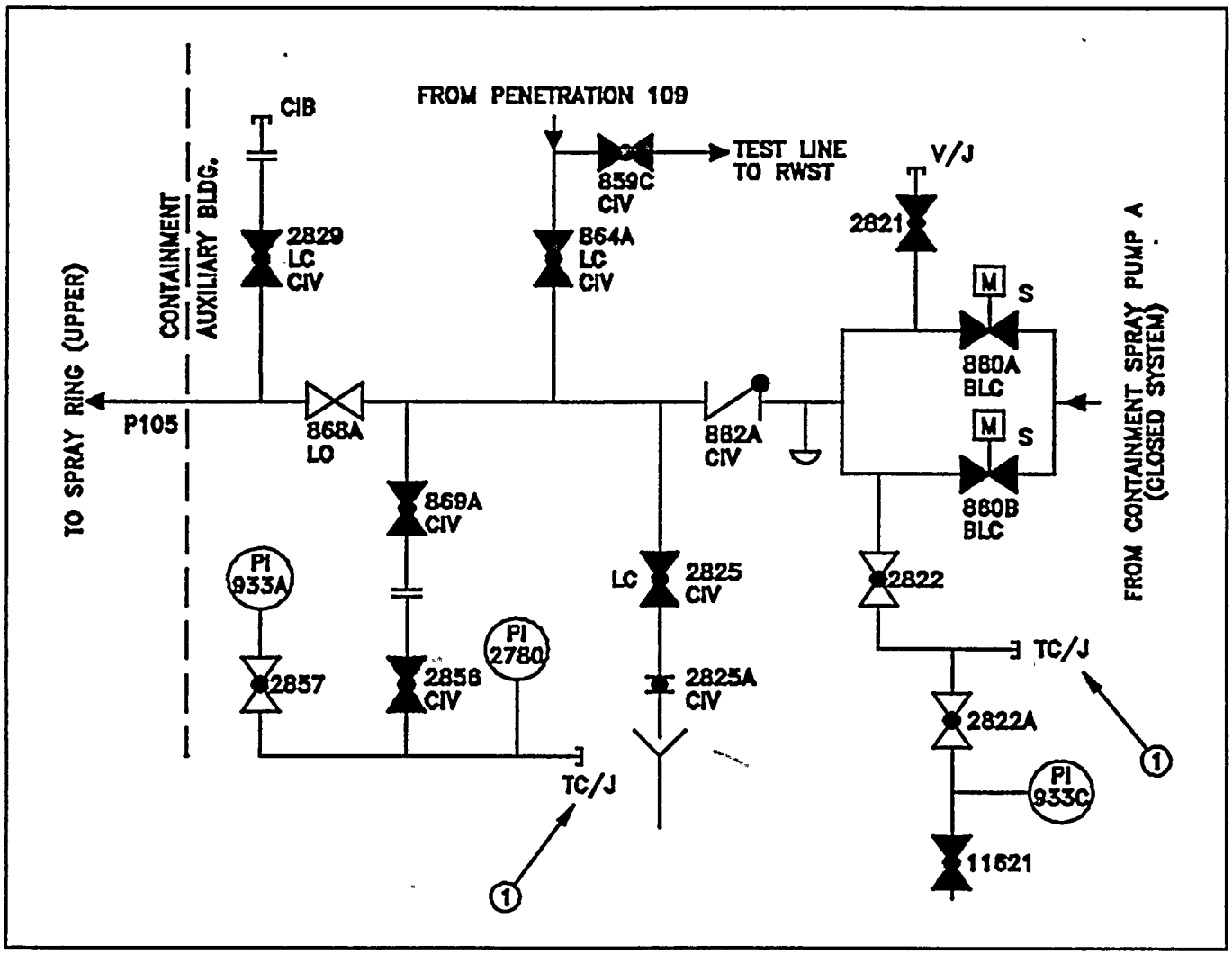


| NOTE | DESCRIPTION |
|---|---|
| - | Containment Basement near RHX |
| - | Auxiliary Bldg Basement (Behind RWST) |
| (1) | LRM should be located in Auxiliary Bldg Basement near CS Pumps |
| | |
| | |

ROCHESTER GAS AND ELECTRIC CORPORATION
R. E. GINNA NUCLEAR POWER PLANT
UPDATED FINAL SAFETY ANALYSIS REPORT

Figure 6.2-18

Containment Spray Header A
Penetration 105

# "A" RCP SEAL WATER LINE
# PENETRATION 106

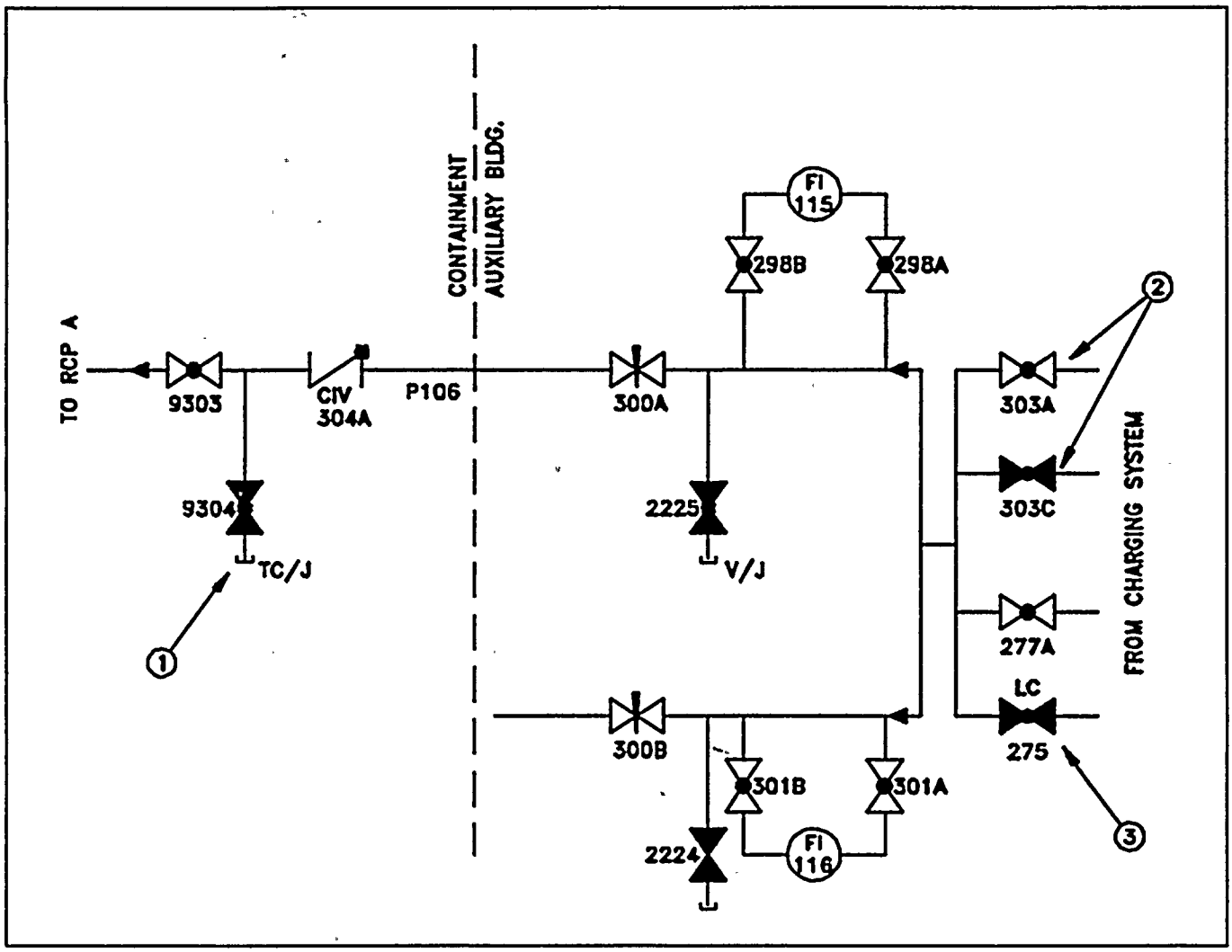


| NOTE | DESCRIPTION |
|---|---|
| - | Containment Basement (Regenerative Hx Area) |
| - | Auxiliary Bldg Basement (RWST Area) |
| (1) | LRM should be located in Containment Basement near Regenerative Hx |
| (2) | Operated with Reach Rods by the CS Pumps |
| (3) | Located 20 ft above the floor behind RWST Area |

ROCHESTER GAS AND ELECTRIC CORPORATION
R. E. GINNA NUCLEAR POWER PLANT
UPDATED FINAL SAFETY ANALYSIS REPORT

Figure 6.2-19

Reactor Coolant Pump A
Seal Water Line
Penetration 106

# SUMP "A" DISCHARGE
# PENETRATION 107

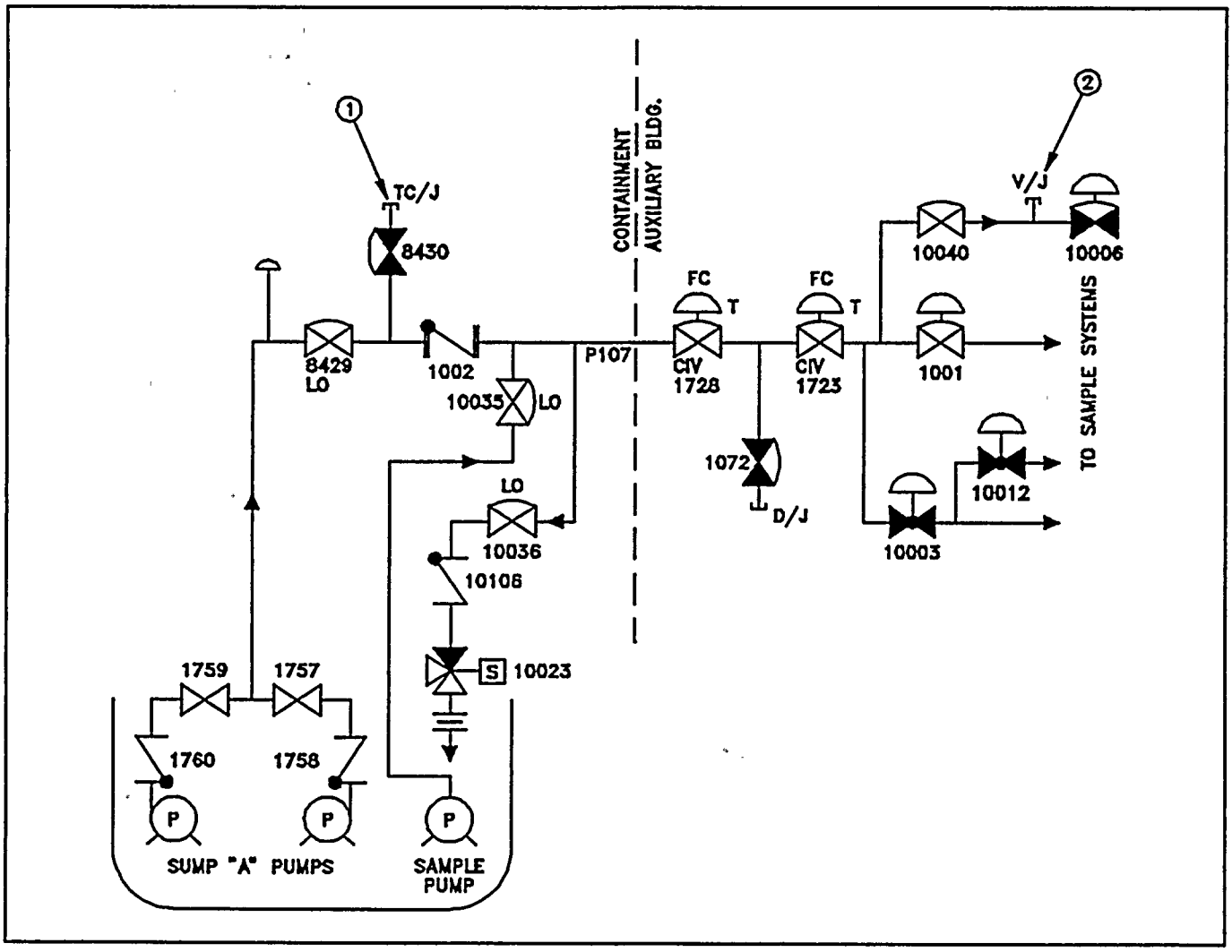


| NOTE | DESCRIPTION |
|---|---|
| - | CNMT Basement B Stairway Area |
| - | Auxiliary Bldg Basement Fan Cooler Area |
| (1) | LRM should be located in Containment Basement (B Stairway Area) |
| | |
| | |

ROCHESTER GAS AND ELECTRIC CORPORATION
R. E. GINNA NUCLEAR POWER PLANT
UPDATED FINAL SAFETY ANALYSIS REPORT

Figure 6.2-20

Sump A Discharge
Penetration 107

# RCP SEAL WATER RETURN & EXCESS LETDOWN PENETRATION 108

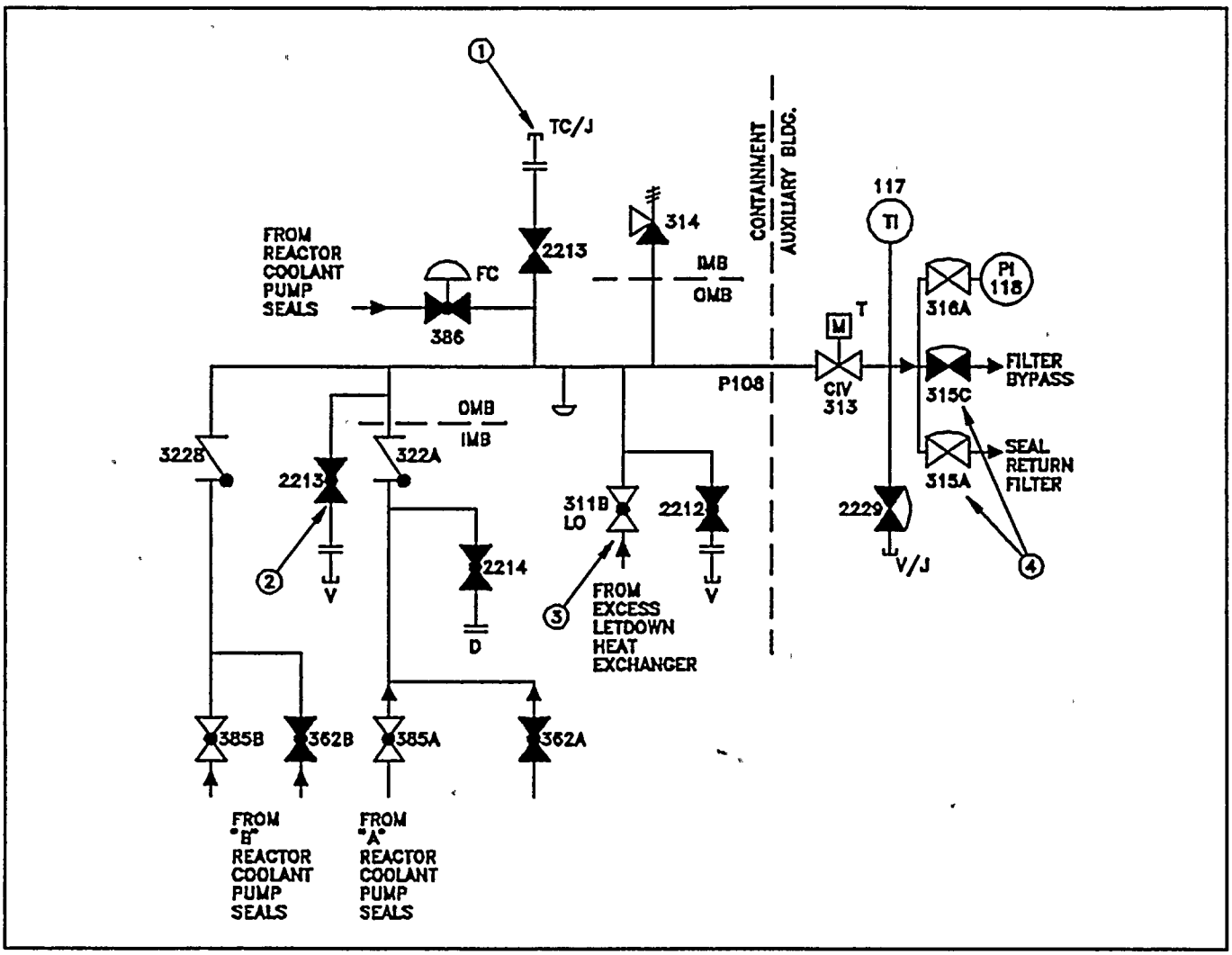


| NOTE | DESCRIPTION |
|---|---|
| - | Containment RHX Area |
| - | Auxiliary Bldg Basement (RWST Area) |
| (1) | LRM should be located in Containment Basement near RHX |
| (2) | On stairwell next to AOV-386 |
| (3) | Located in Regenerative Hx Area |
| (4) | Operated from outside the Seal Return Filter Room with reach rods |

ROCHESTER GAS AND ELECTRIC CORPORATION
R. E. GINNA NUCLEAR POWER PLANT
UPDATED FINAL SAFETY ANALYSIS REPORT

Figure 6.2-21

Reactor Coolant Pump Seal Water Return and Excess Letdown Penetration 108

# "B" CONTAINMENT SPRAY HEADER PENETRATION 109

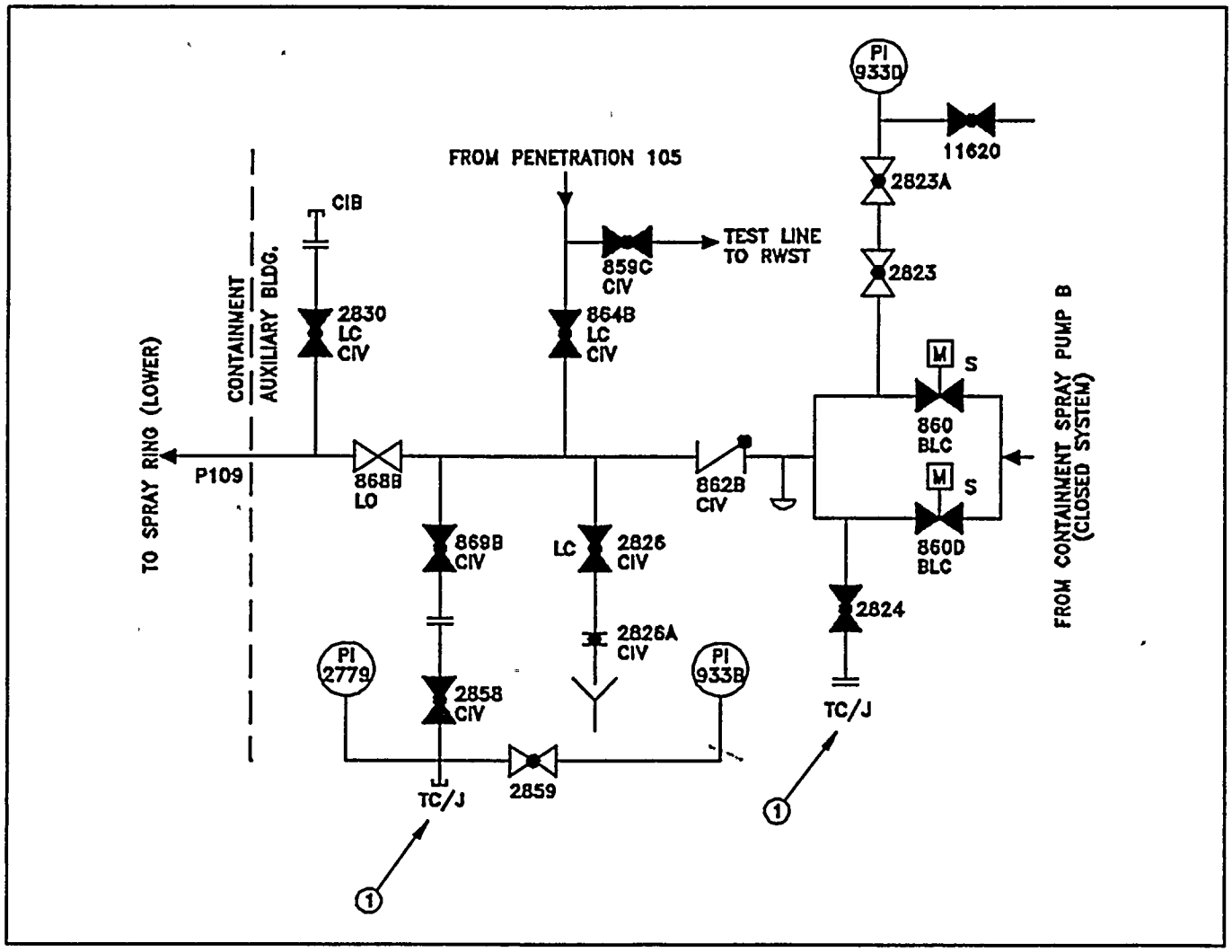


| NOTE | DESCRIPTION |
|---|---|
| - | Containment Basement (RHX Area) |
| - | Auxiliary Bldg (RWST Area) |
| (1) | LRM should be located in Auxiliary Bldg near CS Pumps |
| | |
| | |

ROCHESTER GAS AND ELECTRIC CORPORATION
R. E. GINNA NUCLEAR POWER PLANT
UPDATED FINAL SAFETY ANALYSIS REPORT

Figure 6.2-22

Containment Spray Header B
Penetration 109

# "B" RCP SEAL WATER LINE
# PENETRATION 110a

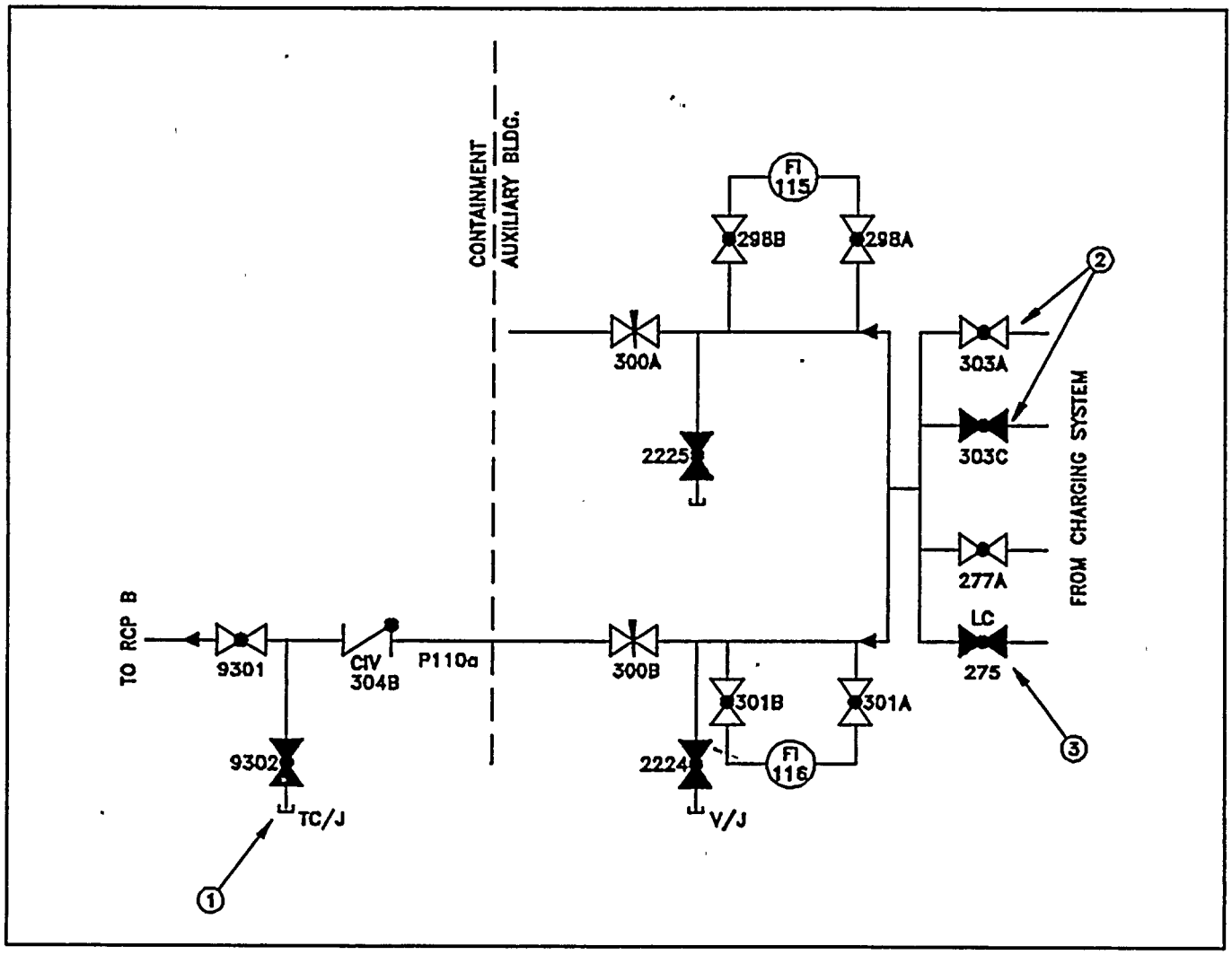


| NOTE | DESCRIPTION |
|---|---|
| - | Containment Basement (Regenerative Hx Area) |
| - | Auxiliary Bldg Basement (RWST Area) |
| (1) | LRM should be located in Containment Basement near Regenerative Hx |
| (2) | Operated with Reach Rods by the CS Pumps |
| (3) | Located 20 ft above the floor behind RWST Area |

ROCHESTER GAS AND ELECTRIC CORPORATION
R. E. GINNA NUCLEAR POWER PLANT
UPDATED FINAL SAFETY ANALYSIS REPORT

Figure 6.2-23

Reactor Coolant Pump B
Seal Water Line
Penetration 110a

# RESIDUAL HEAT REMOVAL TO B COLD LEG
# PENETRATION 111

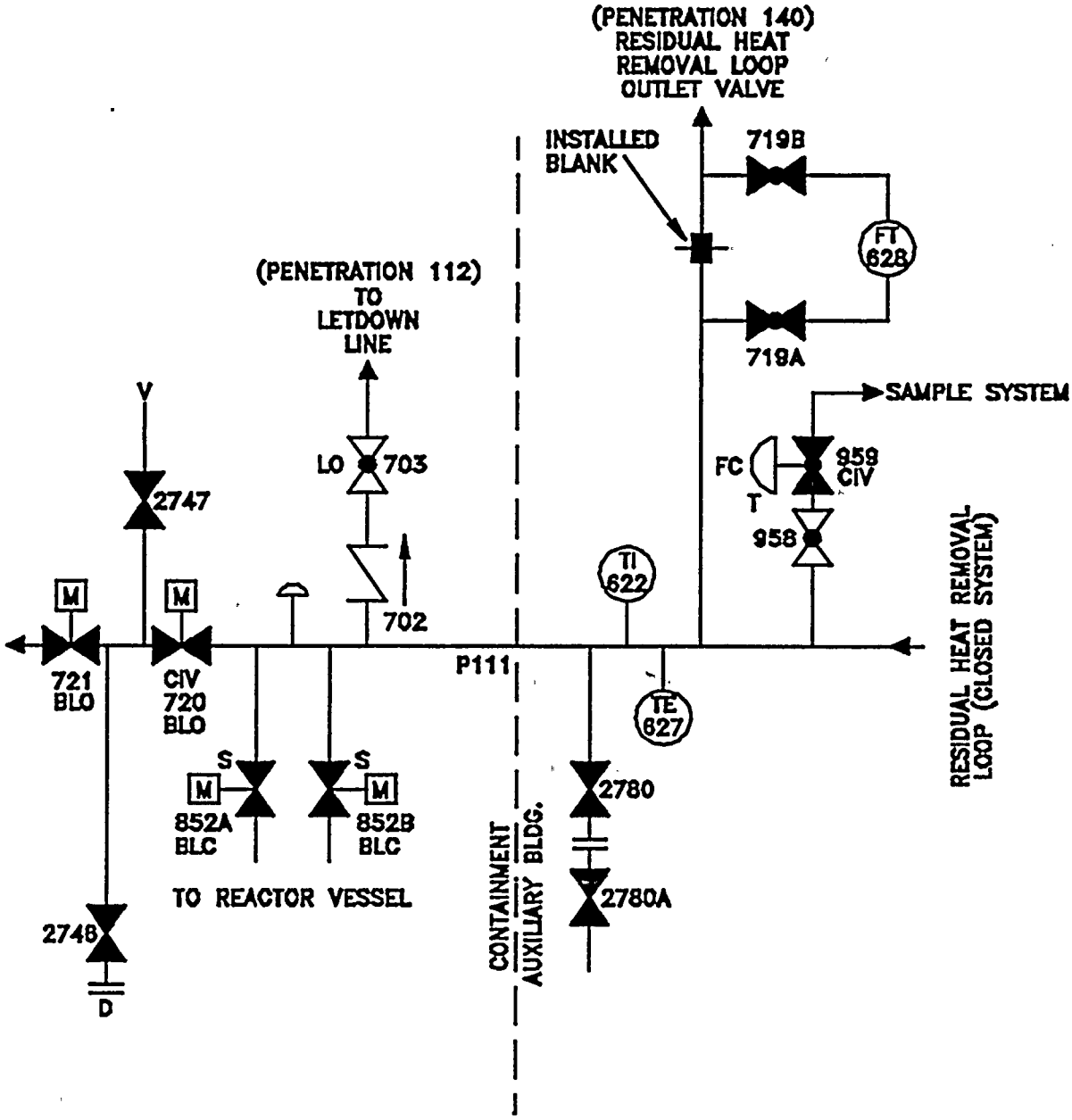


| ROCHESTER GAS AND ELECTRIC CORPORATION<br>R. E. GINNA NUCLEAR POWER PLANT<br>UPDATED FINAL SAFETY ANALYSIS REPORT |
|---|
| Figure 6.2-24<br>Residual Heat Removal<br>to Loop B Cold Leg<br>Penetration 111 |

Isolation from 33013-1247, Revision 19

# LETDOWN LINE FROM REACTOR COOLANT SYSTEM PENETRATION 112

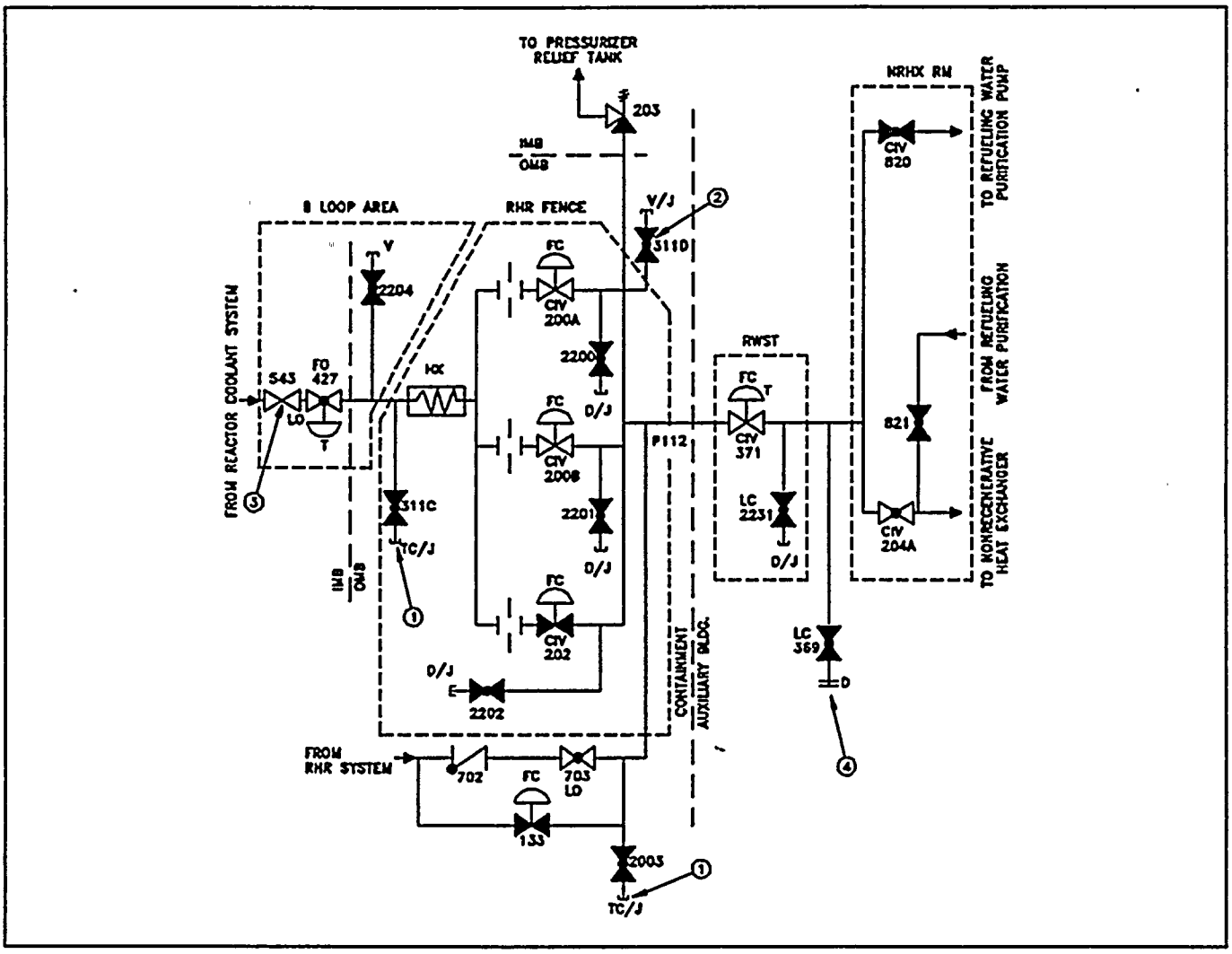


| NOTE | DESCRIPTION |
|---|---|
| - | Containment Basement (Regenerative Hx Area) |
| - | Auxiliary Bldg Basement (RWST Area) |
| (1) | LRM should be located in Containment Basement Regenerative Hx Area |
| (2) | Located on Mid Floor near Square Corner |
| (3) | Located in B Loop area at base of ladder to RCP Platform |
| (4) | Located Auxiliary Bldg Basement nesr B CS Pump |

ROCHESTER GAS AND ELECTRIC CORPORATION
R. E. GINNA NUCLEAR POWER PLANT
UPDATED FINAL SAFETY ANALYSIS REPORT

Figure 6.2-25

Letdown Line from Reactor Coolant System Penetration 112

# STANDBY AUXILIARY FEEDWATER TO STEAM GENERATOR A PENETRATION 119 AND 123b

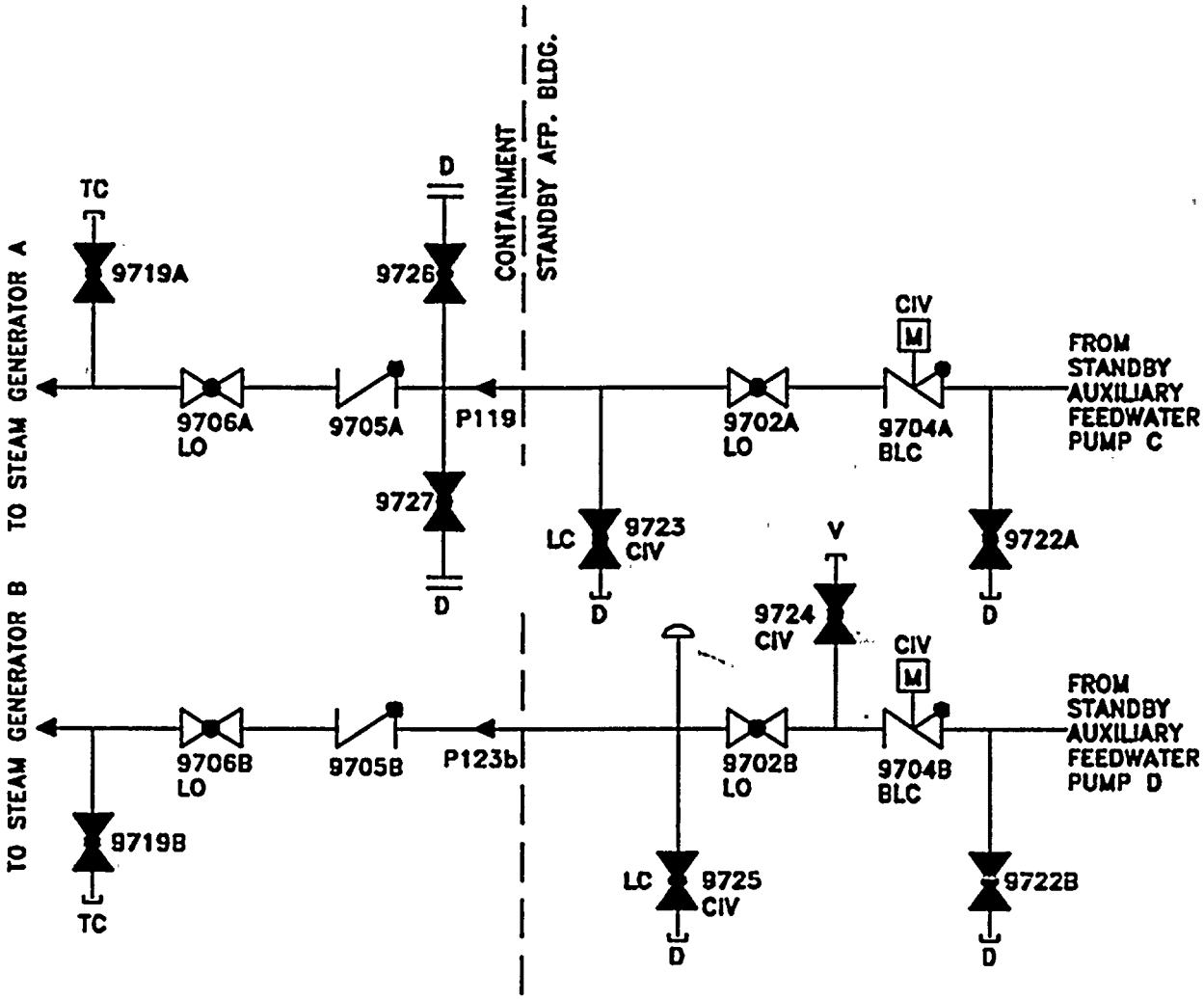


| ROCHESTER GAS AND ELECTRIC CORPORATION<br>R. E. GINNA NUCLEAR POWER PLANT<br>UPDATED FINAL SAFETY ANALYSIS REPORT |
|---|
| Figure 6.2-26<br>Standby Auxiliary Feedwater to Steam Generator A Penetrations 119 and 123b |

Isolation from 33013-1238, Revision 8

# NITROGEN TO ACCUMULATORS
# PENETRATION 120a

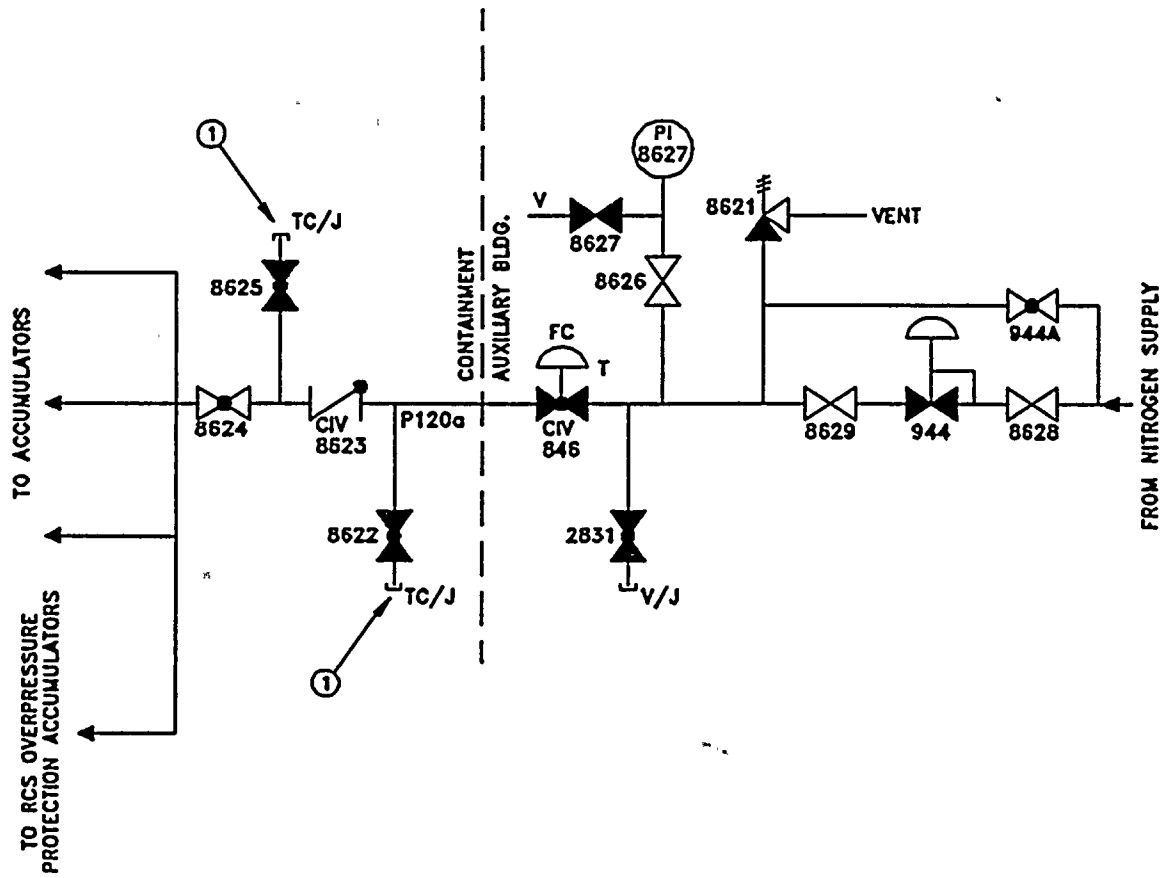


| NOTE | DESCRIPTION |
|---|---|
| - | Containment Mid Floor (Square Corner) |
| - | Auxiliary Bldg Mid Floor (SFP Hx) |
| (1) | LRM should be located in Containment Mid Floor (Square Corner) |
| | |
| | |

ROCHESTER GAS AND ELECTRIC CORPORATION
R. E. GINNA NUCLEAR POWER PLANT
UPDATED FINAL SAFETY ANALYSIS REPORT

Figure 6.2-27

Nitrogen to Accumulators
Penetration 120a

# PRT GAS ANALYZER PENETRATION 120b

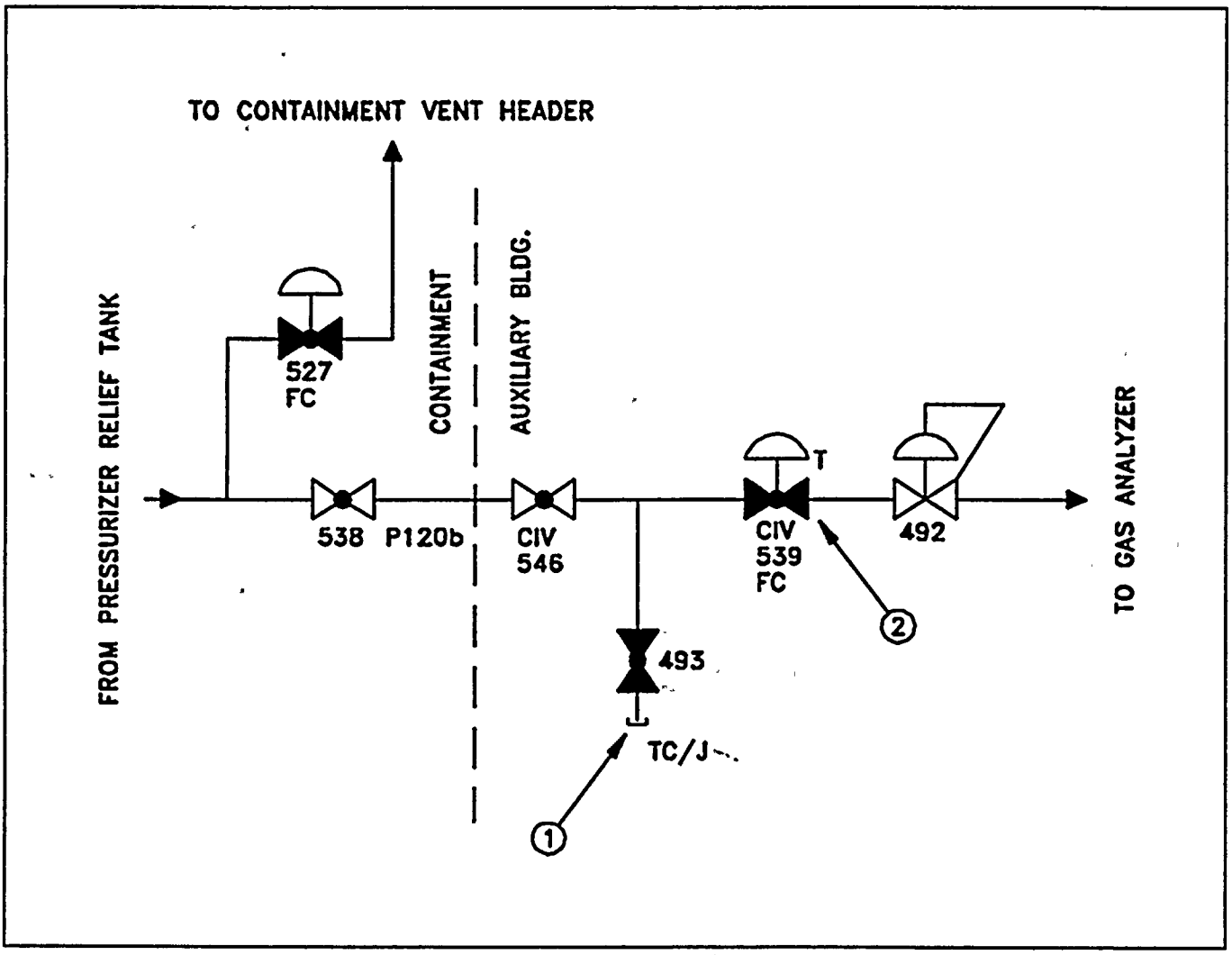


| NOTE | DESCRIPTION |
|---|---|
| - | Containment Mid Floor (Square Corner) |
| - | Auxiliary Bldg Mid Floor (SFP Hx) |
| (1) | LRM should be located in the Auxiliary Bldg Mid Floor near SFP HX |
| (2) | Downstream vent point |
| | |

ROCHESTER GAS AND ELECTRIC CORPORATION
R. E. GINNA NUCLEAR POWER PLANT
UPDATED FINAL SAFETY ANALYSIS REPORT

Figure 6.2-28

Pressurizer Relief Tank
Gas Analyzer
Penetration 120b

# PRT MAKEUP WATER
# PENETRATION 121a

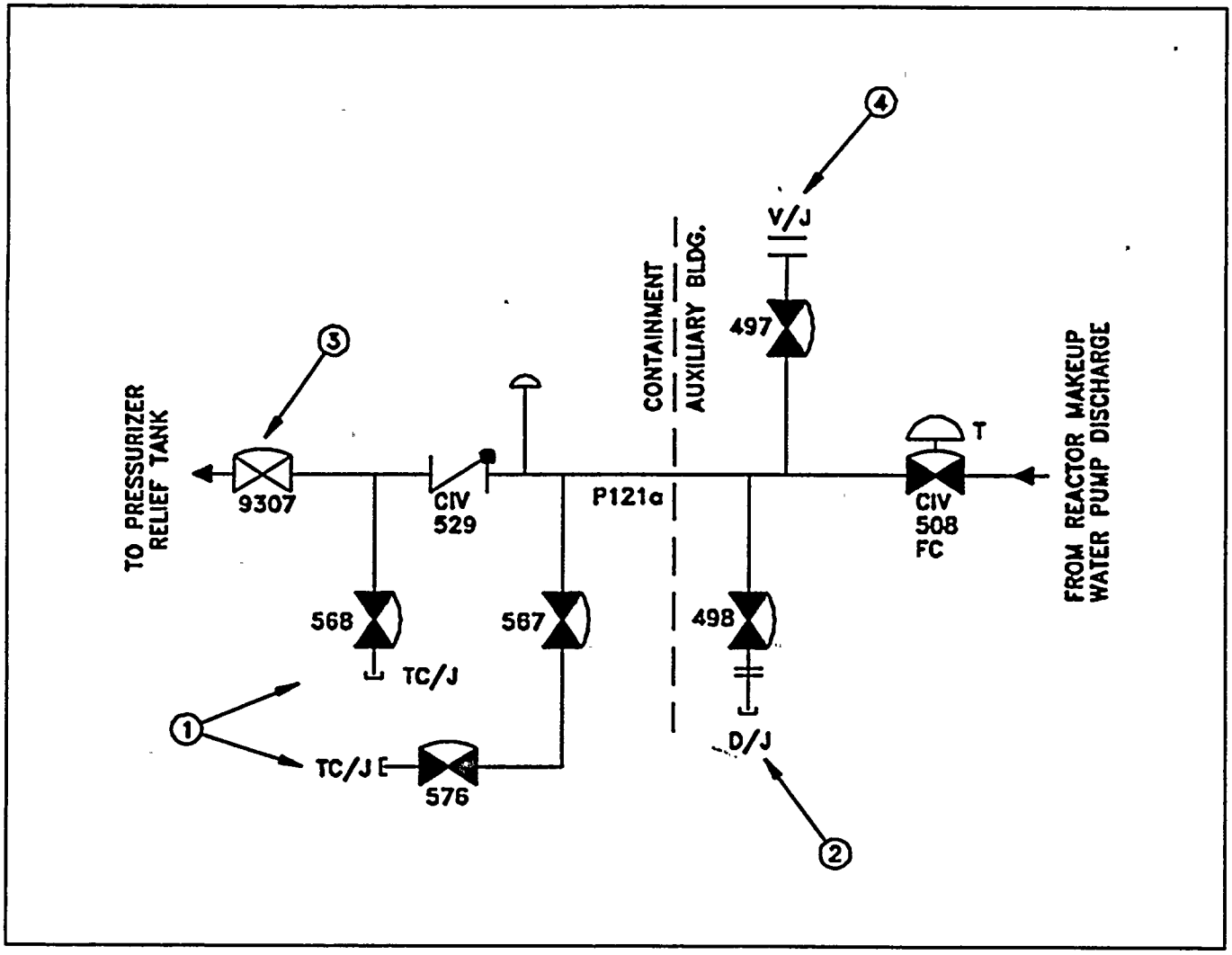


| NOTE | DESCRIPTION |
|---|---|
| - | Containment (Square Corner) |
| - | Auxiliary Bldg Mid Floor (SFP Hx) |
| (1) | LRM should be located in the Containment Square Corner Area |
| (2) | 3/4" pipe connection |
| (3) | Located 10 ft above the floor, adjacent to missile barrier |
| (4) | Located 15 ft above the floor |

ROCHESTER GAS AND ELECTRIC CORPORATION
R. E. GINNA NUCLEAR POWER PLANT
UPDATED FINAL SAFETY ANALYSIS REPORT

Figure 6.2-29

Pressurizer Relief Tank
Makeup Water
Penetration 121a

# PRT $N_2$
# PENETRATION 121b

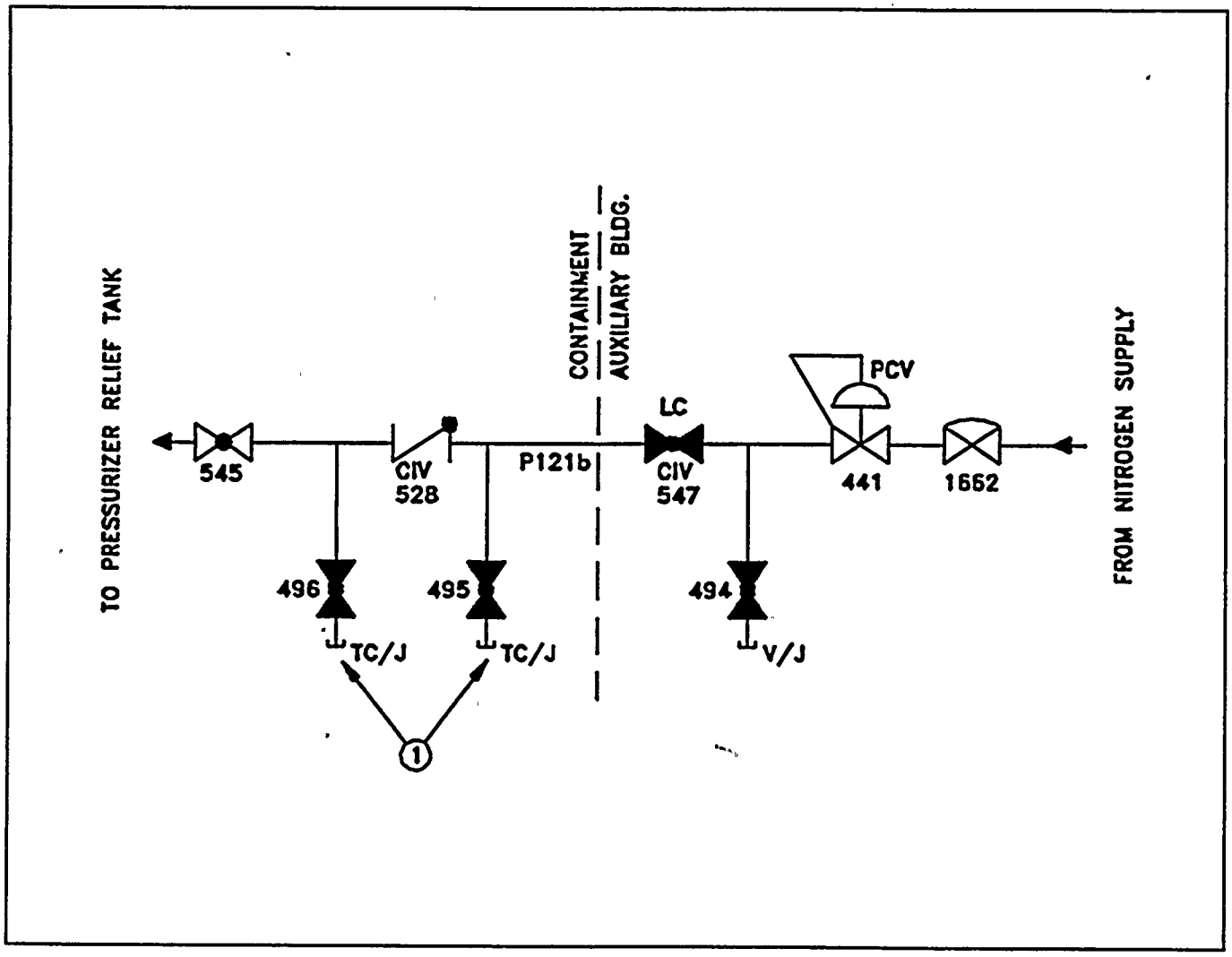


| NOTE | DESCRIPTION |
|---|---|
| - | Containment Mid Floor (Square Corner) |
| - | Auxiliary Bldg. Mid Floor (SFP Hx) |
| (1) | LRM should be located in Containment in the Square Corner |
| | |
| | |

ROCHESTER GAS AND ELECTRIC CORPORATION
R. E. GINNA NUCLEAR POWER PLANT
UPDATED FINAL SAFETY ANALYSIS REPORT

Figure 6.2-30
Pressurizer Relief Tank $N_2$
Penetration 121b

# CONTAINMENT PRESSURE TRANSMITTERS PT-945 AND PT-946
# PENETRATION 121c

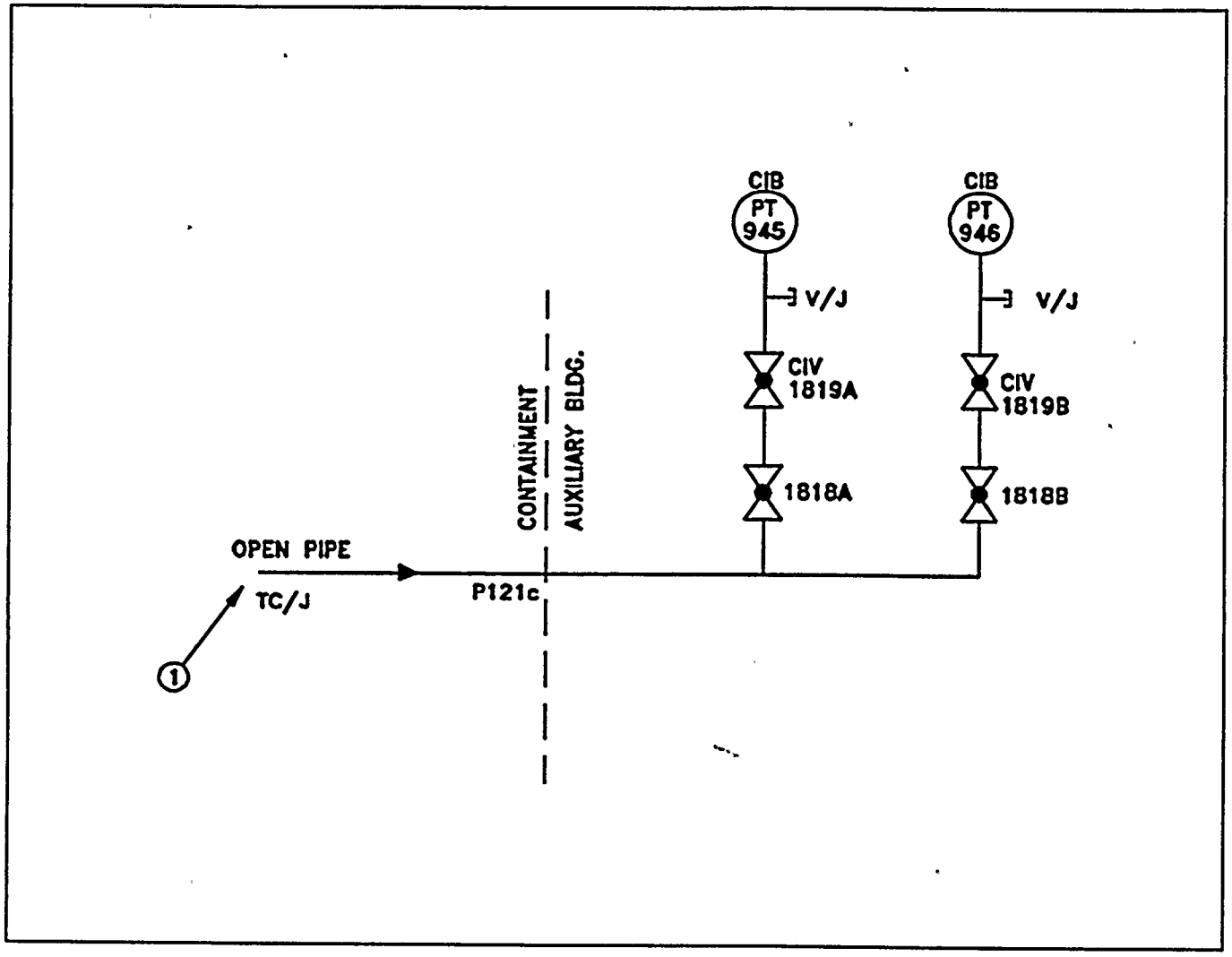


| NOTE | DESCRIPTION |
|---|---|
| - | Containment Mid Floor (Square Corner) |
| - | Auxiliary Bldg Mid Floor (SFP Hx) |
| (1) | LRM should be located in Containment Mid Floor in the Square Corner |
| | |
| | |

ROCHESTER GAS AND ELECTRIC CORPORATION
R. E. GINNA NUCLEAR POWER PLANT
UPDATED FINAL SAFETY ANALYSIS REPORT

Figure 6.2-31

Containment Pressure Transmitters
PT-945 and PT-946
Penetration 121c

# RCDT TO GAS ANALYZER
# PENETRATION 123a

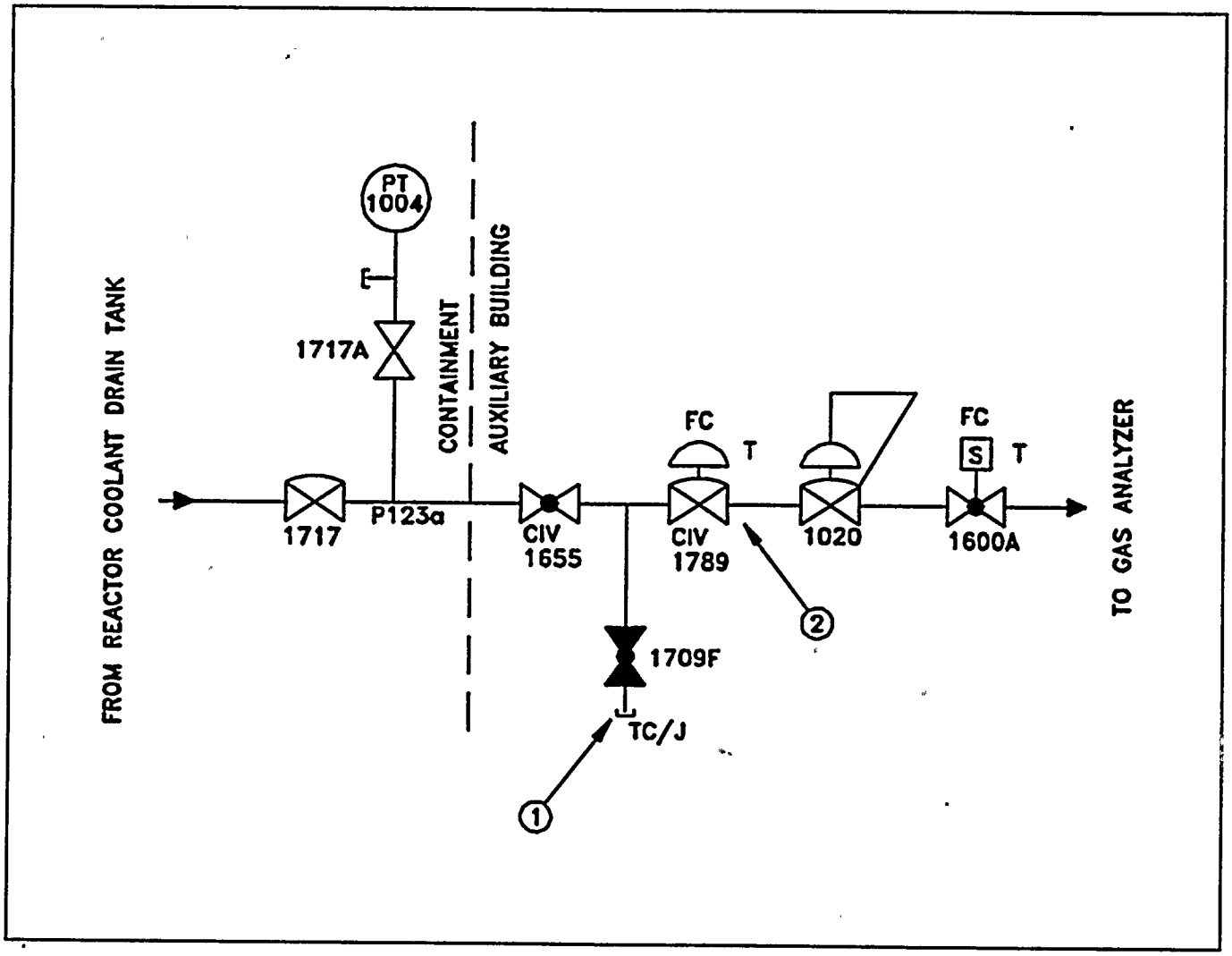


| NOTE | DESCRIPTION |
|---|---|
| - | Containment Mid Floor (Square Corner) |
| - | Auxiliary Bldg Mid Floor (SFP Hx) |
| (1) | LRM should be located in the Aux Bldg Mid Floor near SFP Hx. |
| (2) | Downstream vent point |
| | |

ROCHESTER GAS AND ELECTRIC CORPORATION
R. E. GINNA NUCLEAR POWER PLANT
UPDATED FINAL SAFETY ANALYSIS REPORT

Figure 6.2-32

Reactor Coolant Drain Tank
to Gas Analyzer
Penetration 123a

# CCW TO/FROM EXCESS LETDOWN HX
# PENETRATION 124a and 124c

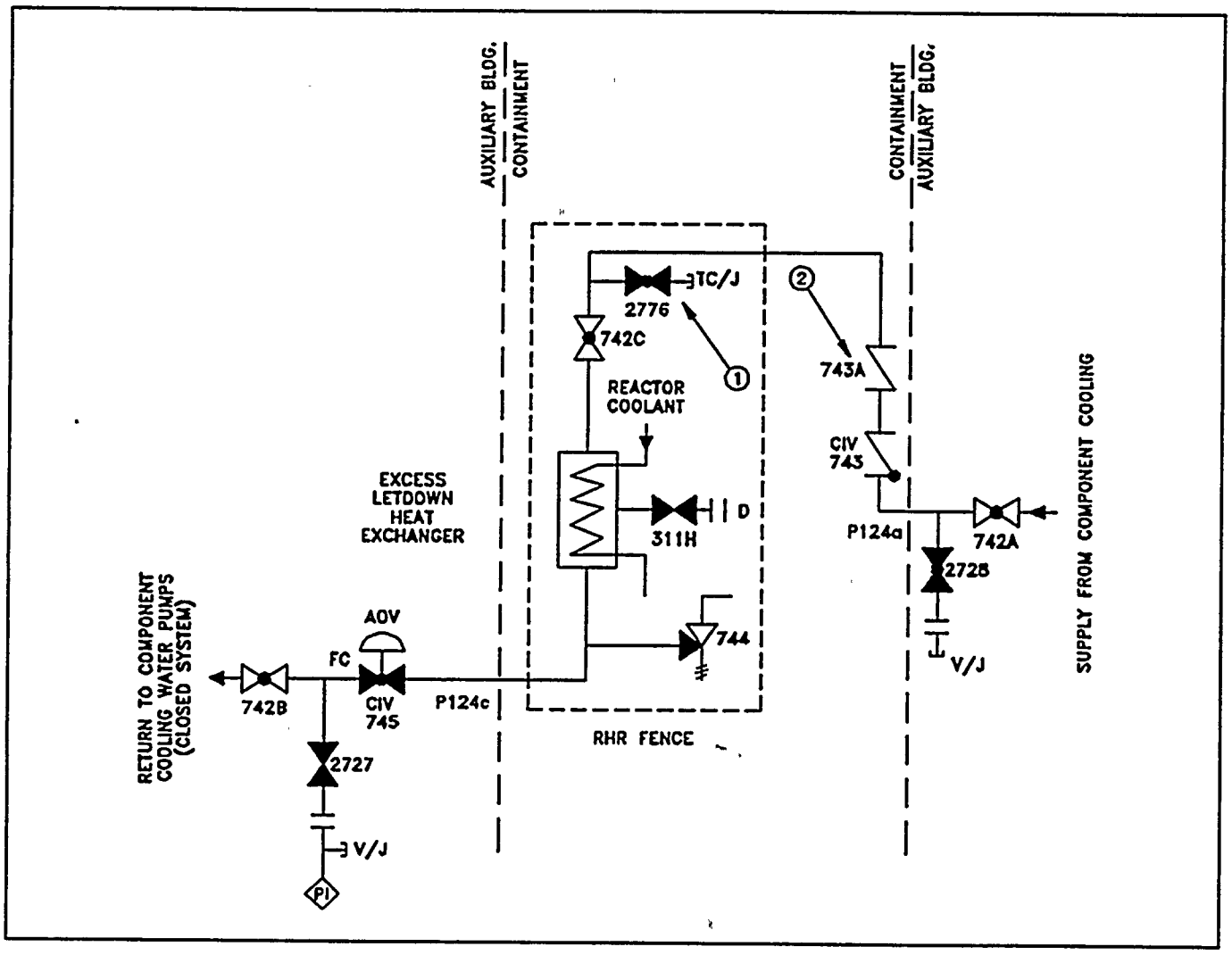


| NOTE | DESCRIPTION |
|---|---|
| - | Containment Mid Floor ("B" Stairway) |
| - | Auxiliary Bldg Mid Floor (RWST) |
| (1) | LRM should be located in containment basement near "B" stairway |
| (2) | CV internals have been permanently removed |
| | |

ROCHESTER GAS AND ELECTRIC CORPORATION
R. E. GINNA NUCLEAR POWER PLANT
UPDATED FINAL SAFETY ANALYSIS REPORT

Figure 6.2-33

Component Cooling Water to and from Excess Letdown Heat Exchanger Penetrations 124a and 124c

# CONTAINMENT POST ACCIDENT AIR SAMPLE (C FAN)
# PENETRATION 124b, and 124d

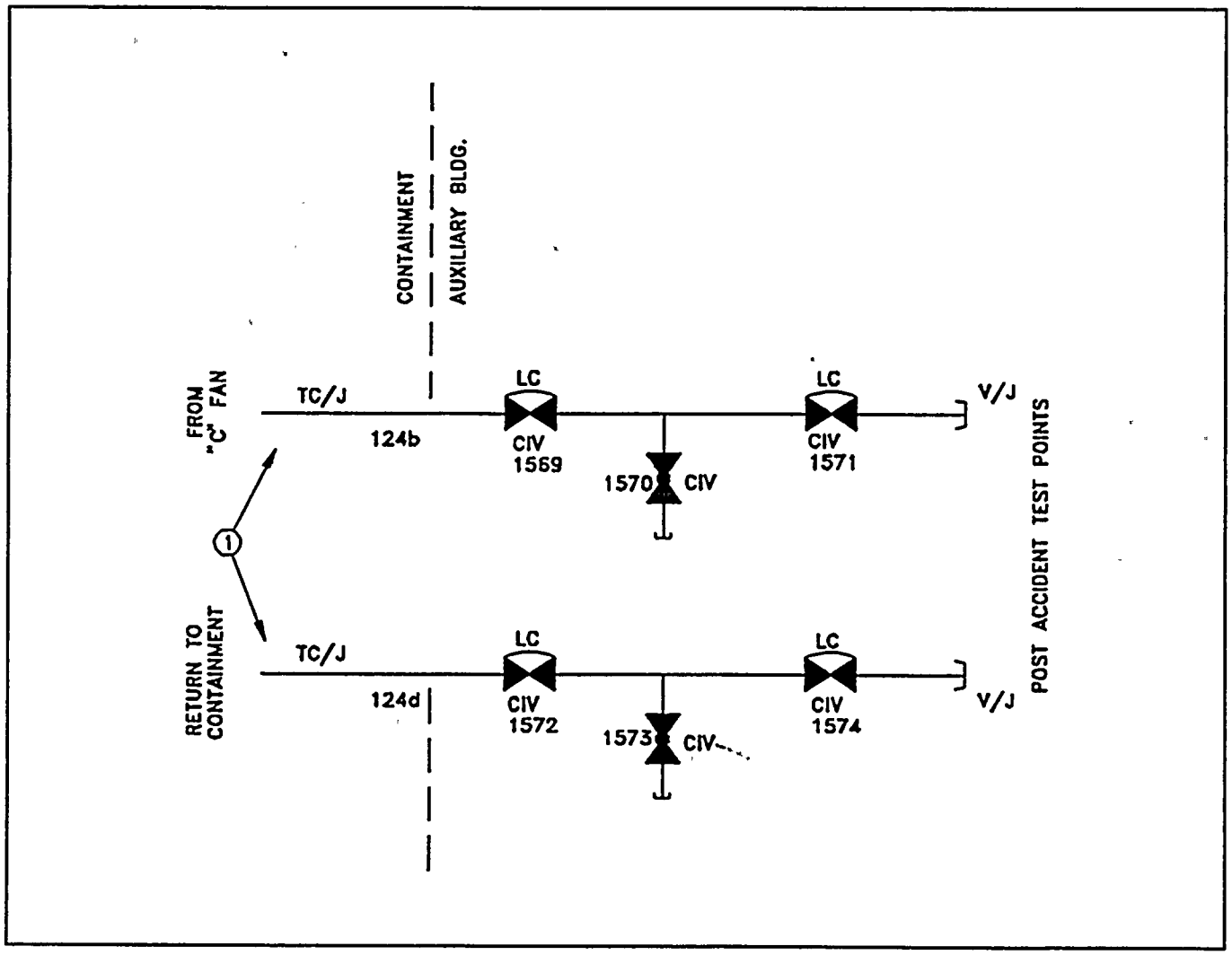


| NOTE | DESCRIPTION |
|---|---|
| - | Containment Mid Floor (B Stairway) |
| - | Auxiliary Bldg Mid Floor (RWST Area) |
| (1) | LRM should be located in Containment Mid Floor near B Stairway |
| | |
| | |

ROCHESTER GAS AND ELECTRIC CORPORATION
R. E. GINNA NUCLEAR POWER PLANT
UPDATED FINAL SAFETY ANALYSIS REPORT

Figure 6.2-34

Containment Postaccident Air Sample (C Fan) Penetrations 124b and 124d

# CCW FROM B RCP
# PENETRATION 125

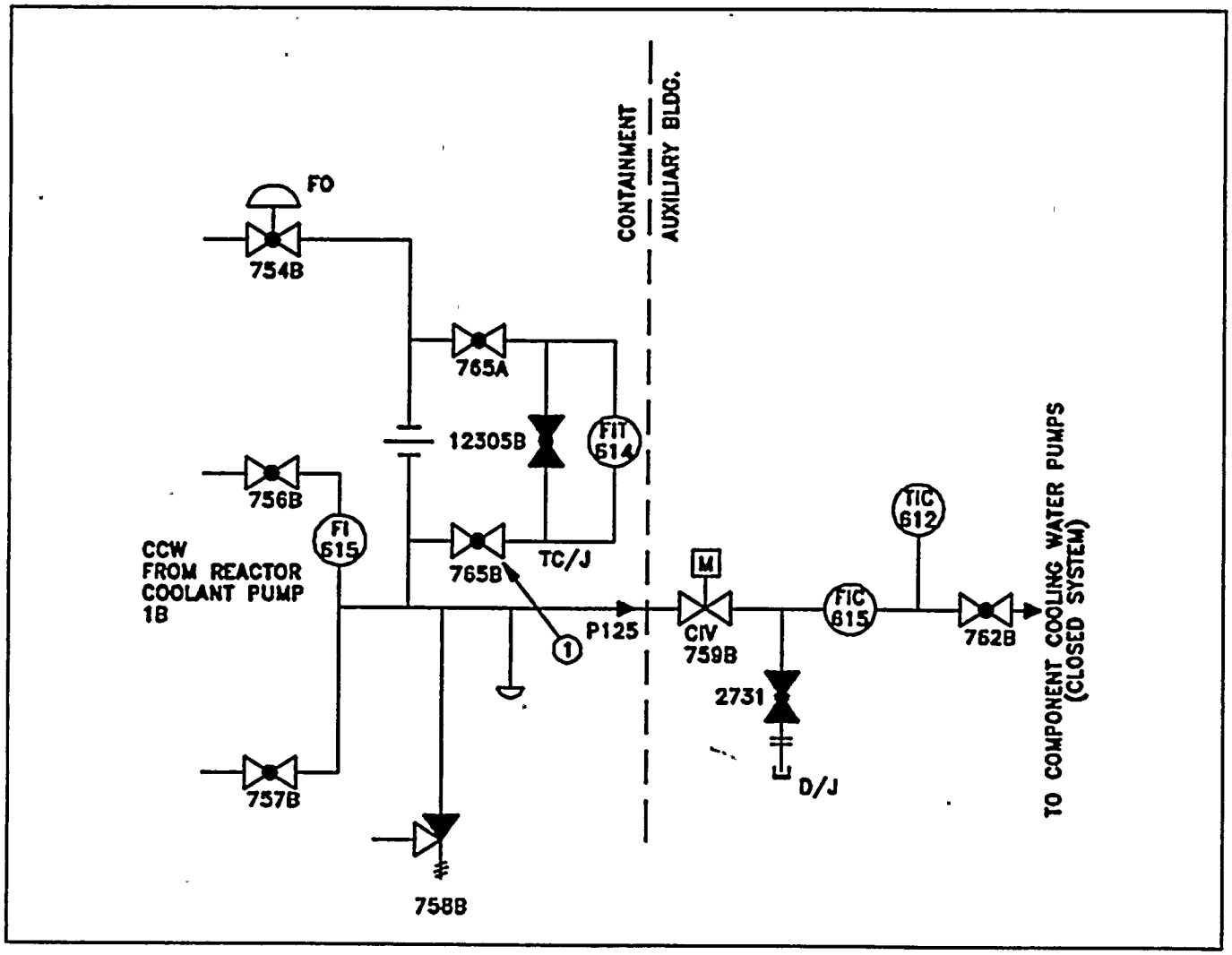


| NOTE | DESCRIPTION |
|---|---|
| - | Containment Mid Floor (B Stairway) |
| - | Auxiliary Bldg. Mid Floor (RWST) |
| (1) | LRM should be located in the Containment Mid Floor near "B" Stairway |
| | |
| | |

ROCHESTER GAS AND ELECTRIC CORPORATION
R. E. GINNA NUCLEAR POWER PLANT
UPDATED FINAL SAFETY ANALYSIS REPORT

Figure 6.2-35

Component Cooling Water from Reactor Coolant Pump 1B Penetration 125

# CCW FROM A RCP PENETRATION 126

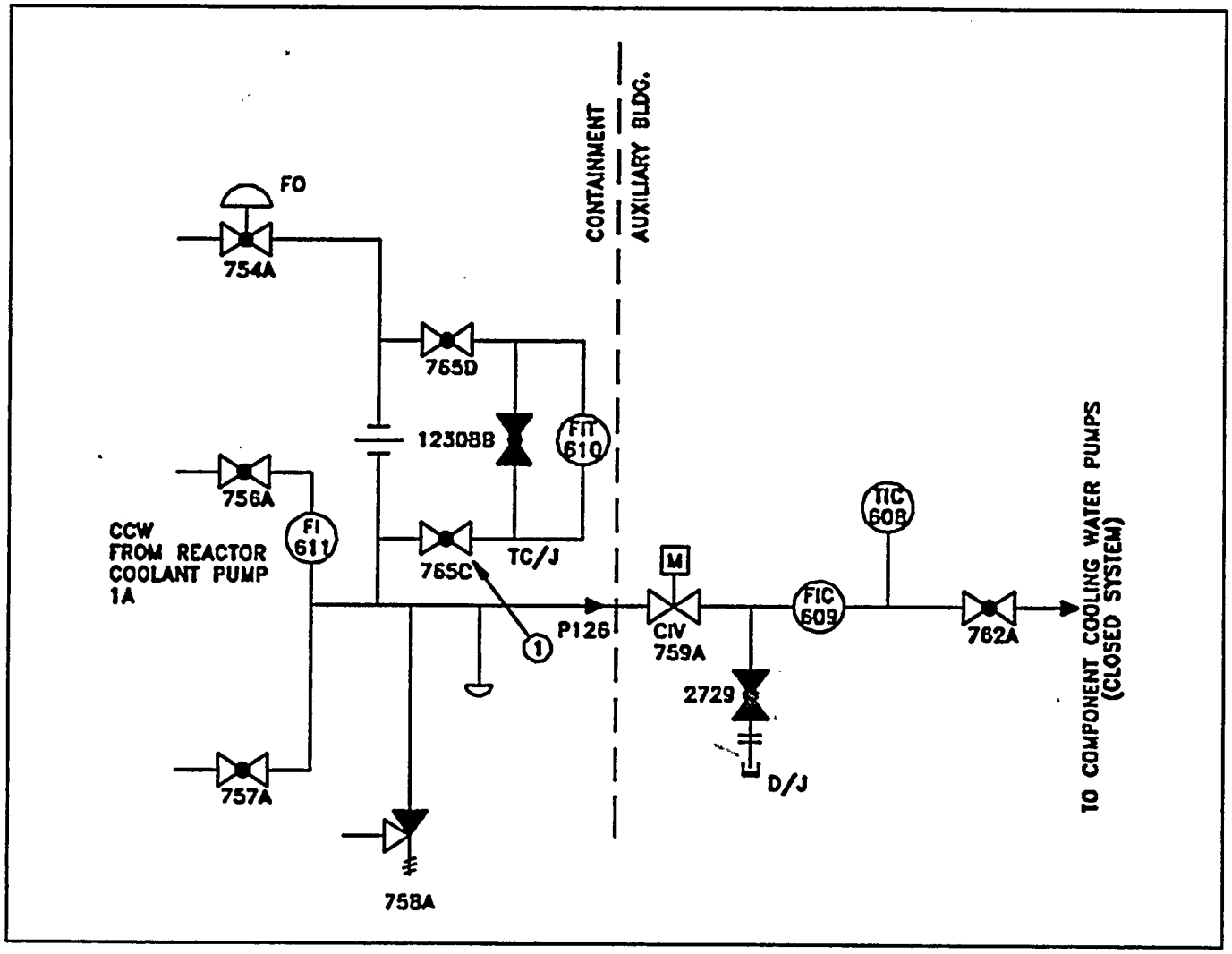


| NOTE | DESCRIPTION |
|---|---|
| - | Containment Mid Floor (B Stairway) |
| - | Auxiliary Bldg. Mid Floor (RWST) |
| (1) | LRM should be located in the Containment Basement near the Rx Compt Coolers |
| | |
| | |

ROCHESTER GAS AND ELECTRIC CORPORATION
R. E. GINNA NUCLEAR POWER PLANT
UPDATED FINAL SAFETY ANALYSIS REPORT

Figure 6.2-36

Component Cooling Water from Reactor Coolant Pump 1A Penetration 126

# COMPONENT COOLING WATER TO REACTOR COOLANT PUMP 1A PENETRATION 127

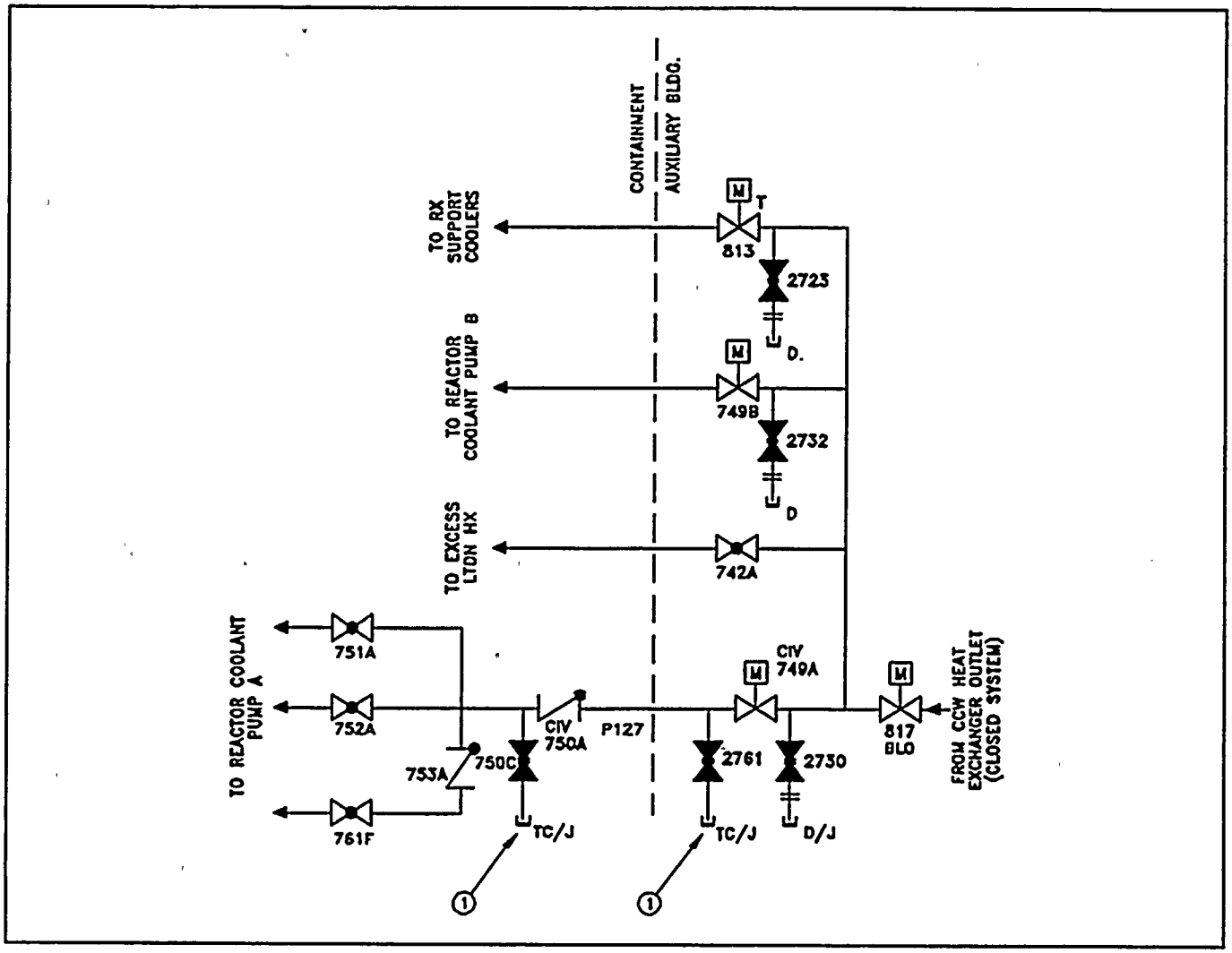


| NOTE | DESCRIPTION |
|---|---|
| - | Containment Mid Floor (B Stairway) |
| - | Auxiliary Bldg. Mid Floor (RWST) |
| (1) | LRM should be located in Containment Basement near Rx Compt Coolers and Auxiliary Bldg. Mid Floor near RWST |
| | |
| | |

ROCHESTER GAS AND ELECTRIC CORPORATION
R. E. GINNA NUCLEAR POWER PLANT
UPDATED FINAL SAFETY ANALYSIS REPORT

Figure 6.2-37

Component Cooling Water to Reactor Coolant Pump 1A Penetration 127

# CCW TO "B" RCP
# PENETRATION 128

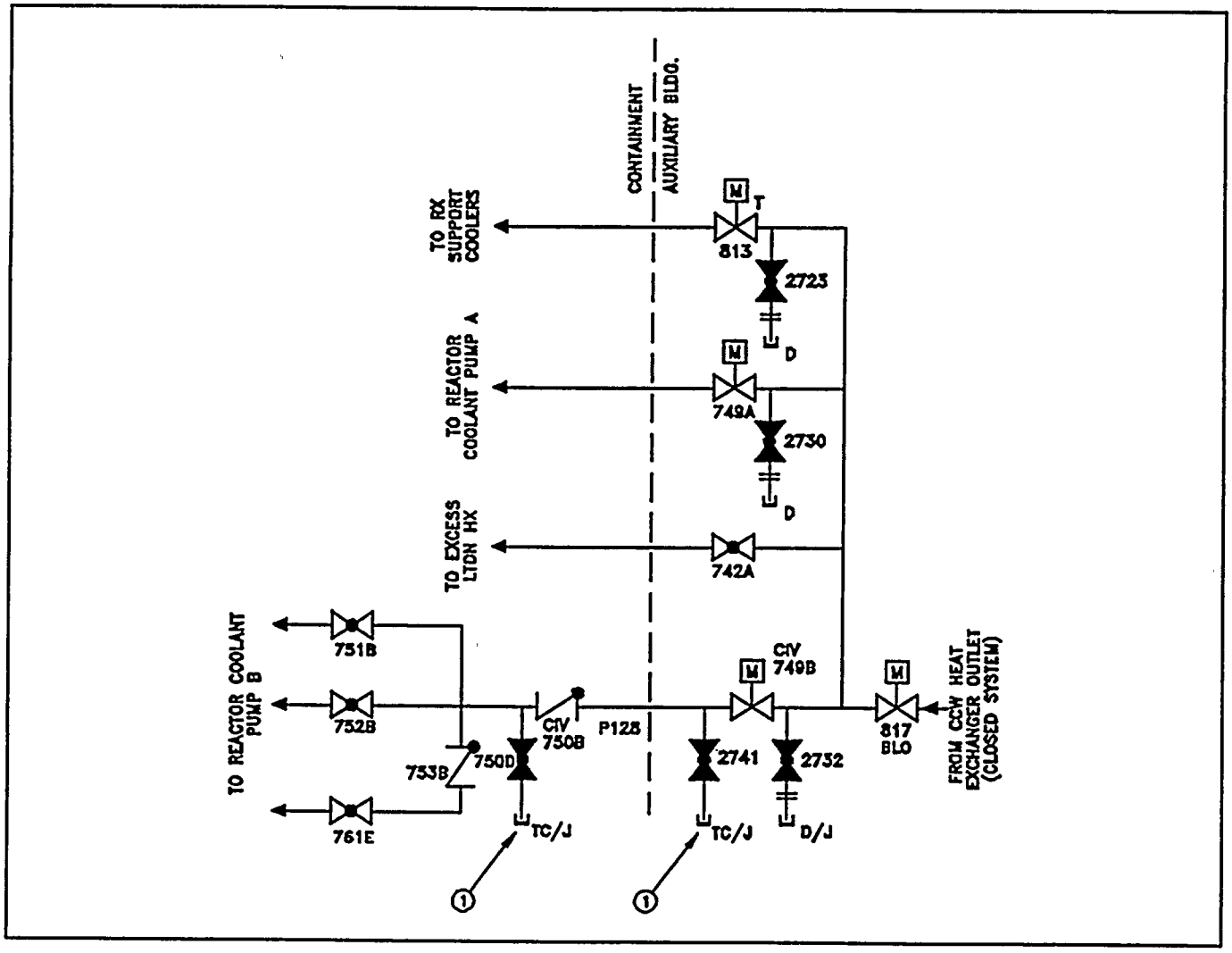


| NOTE | DESCRIPTION |
|---|---|
| - | Containment Mid Floor (B Stairway) |
| - | Auxiliary Bldg Mid Floor (RWST) |
| (1) | LRM should be located in Containment near the "B" Stairway and Auxiliary Bldg Mid Floor near RWST |
| | |
| | |

ROCHESTER GAS AND ELECTRIC CORPORATION
R. E. GINNA NUCLEAR POWER PLANT
UPDATED FINAL SAFETY ANALYSIS REPORT

Figure 6.2-38

Component Cooling Water
to Reactor Coolant Pump B
Penetration 128

# RCDT GAS HEADER
# PENETRATION 129

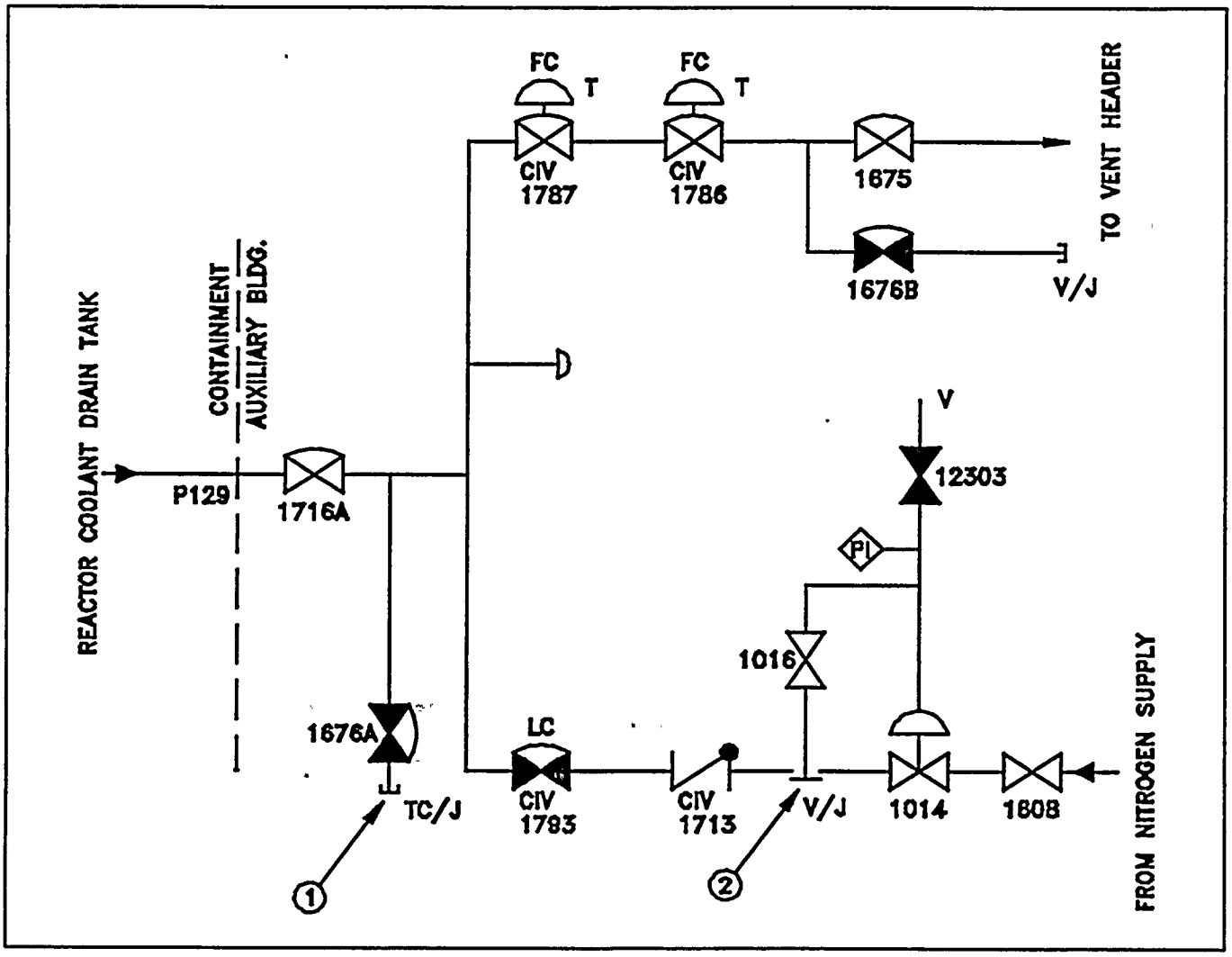


| NOTE | DESCRIPTION |
|---|---|
| - | Containment Mid Floor (Square Corner) |
| - | Auxiliary Bldg Mid Floor (Behind SFP Hx) |
| (1) | LRM should be located in Auxiliary Bldg Mid Floor (Behind SFP Hx) |
| (2) | Disconnect tubing for downstream vent |
| | |

ROCHESTER GAS AND ELECTRIC CORPORATION
R. E. GINNA NUCLEAR POWER PLANT
UPDATED FINAL SAFETY ANALYSIS REPORT

Figure 6.2-39

Reactor Coolant Drain Tank
Gas Header
Penetration 129

# CCW FROM/TO RX SUPPORT CLRS
# PENETRATION 130 and 131

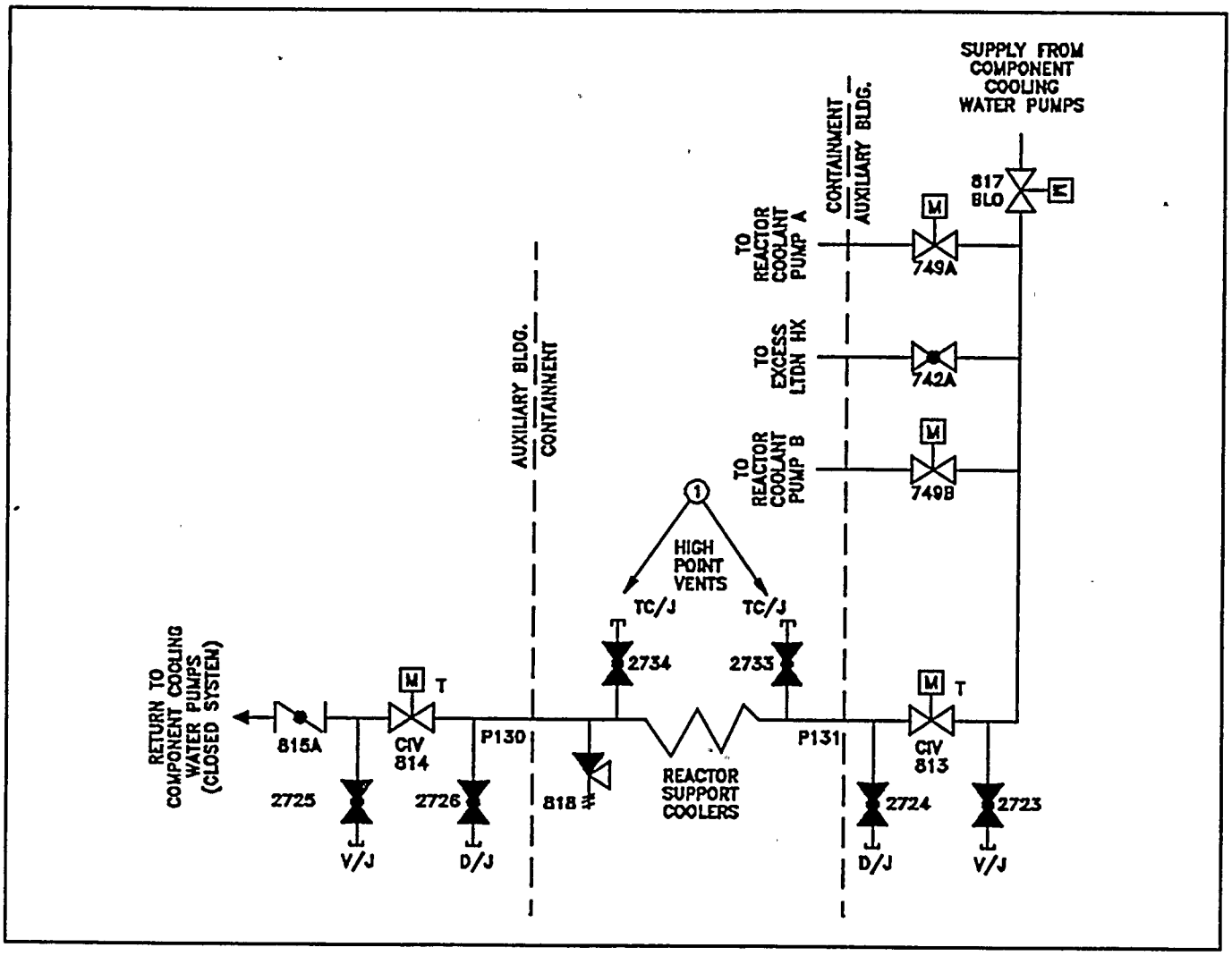


| NOTE | DESCRIPTION |
|---|---|
| - | Containment Mid Floor ("B" Stairway) |
| - | Auxiliary Bldg Mid Floor (Behind RWST) |
| (1) | LRM should be located in Containment Mid Floor near the "B" Stairway |
| | |
| | |

ROCHESTER GAS AND ELECTRIC CORPORATION
R. E. GINNA NUCLEAR POWER PLANT
UPDATED FINAL SAFETY ANALYSIS REPORT

Figure 6.2-40

Component Cooling Water from and to Reactor Support Coolers Penetrations 130 and 131

# MINI PURGE EXHAUST
# PENETRATION 132

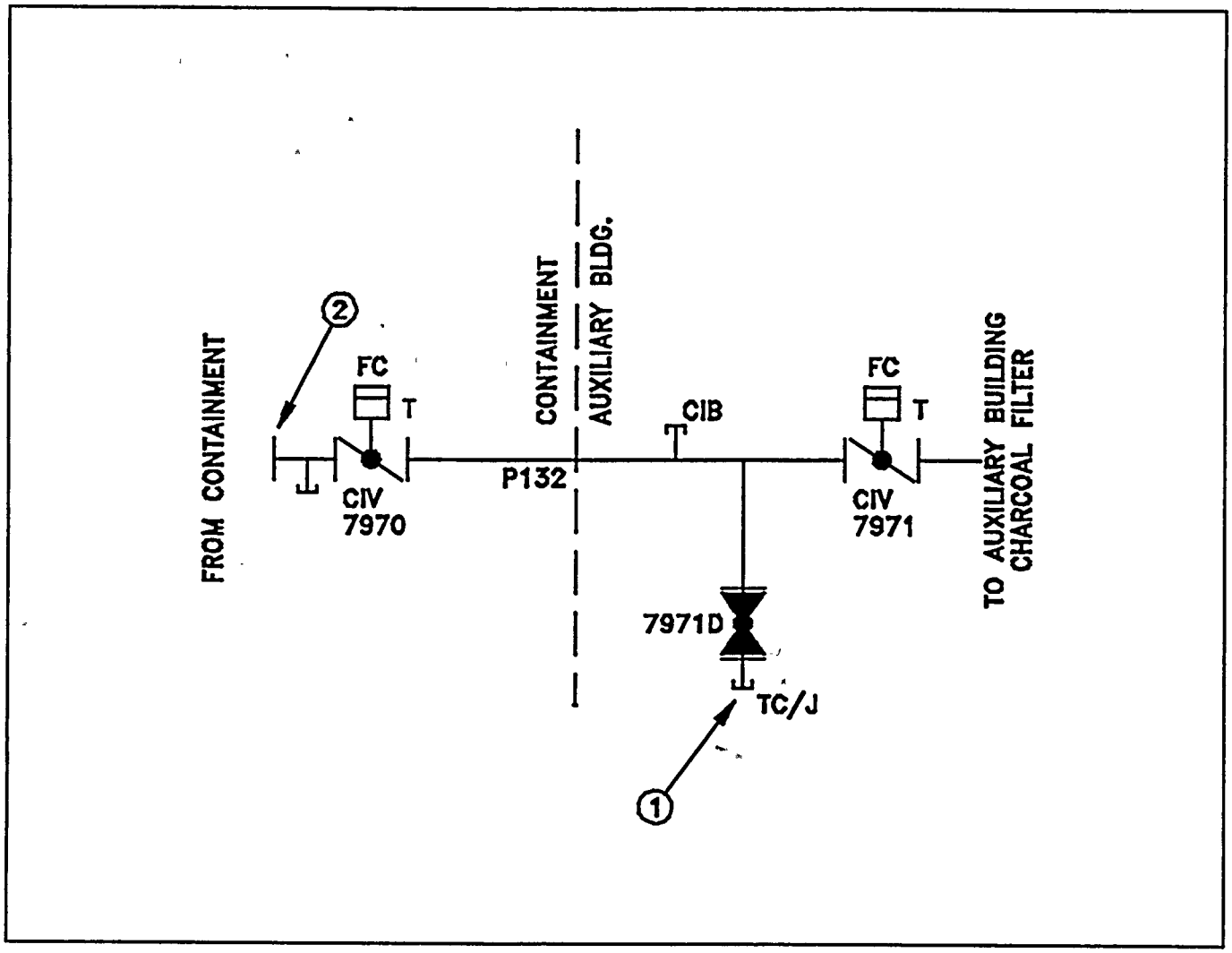


| NOTE | DESCRIPTION |
|---|---|
| - | Containment Mid Floor (Square Corner) |
| - | Auxiliary Bldg Mid Floor (Behind SFP Hx) |
| (1) | LRM should be located in Auxiliary Bldg Mid Floor near SFP Hx. |
| (2) | Open pipe with debris screen |
| | |

ROCHESTER GAS AND ELECTRIC CORPORATION
R. E. GINNA NUCLEAR POWER PLANT
UPDATED FINAL SAFETY ANALYSIS REPORT

Figure 6.2-41

Mini-Purge Exhaust
Penetration 132

# RESIDUAL HEAT REMOVAL FROM A HOT LEG PENETRATION 140

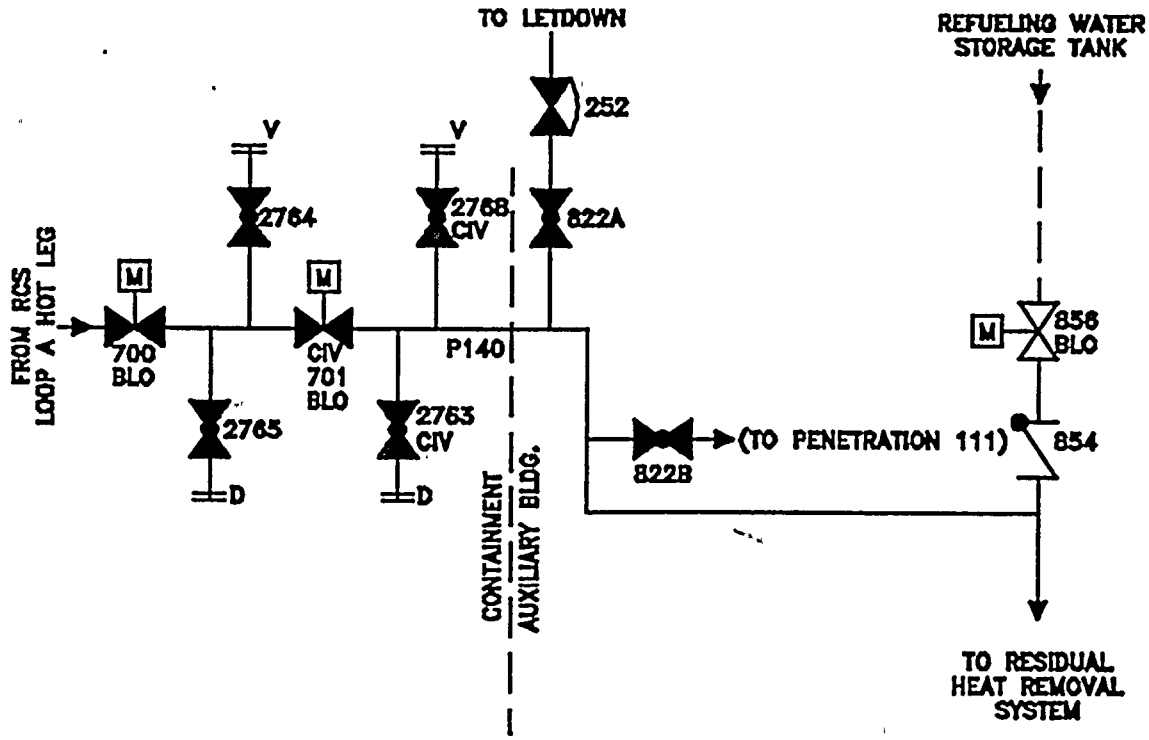


| ROCHESTER GAS AND ELECTRIC CORPORATION<br>R. E. GINNA NUCLEAR POWER PLANT<br>UPDATED FINAL SAFETY ANALYSIS REPORT |
|---|
| Figure 6.2-42<br>Residual Heat Removal from Loop A Hot Leg Penetration 140 |

Isolation from 33013-1247 Revision 19

# SUMP "B" TO "A" RCDT PUMP
# PENETRATION 141

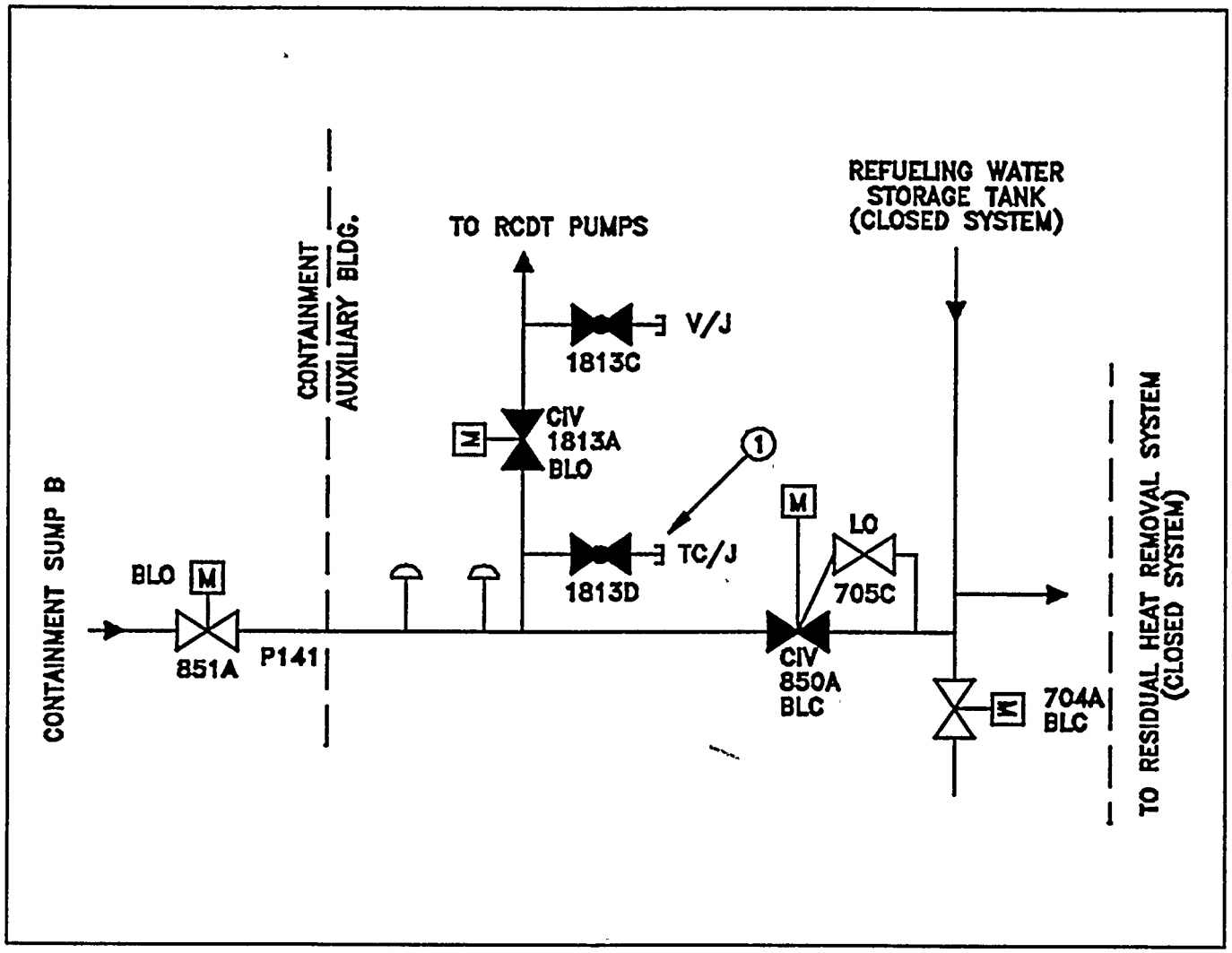


| NOTE | DESCRIPTION |
|---|---|
| - | CNMT Sump B |
| - | Auxiliary Bldg Basement |
| (1) | LRM should be located in Auxiliary Bldg Basement (connected in RHR Sub Basement) |
| | |
| | |

ROCHESTER GAS AND ELECTRIC CORPORATION
R. E. GINNA NUCLEAR POWER PLANT
UPDATED FINAL SAFETY ANALYSIS REPORT

Figure 6.2-43

Sump B to Reactor Coolant
Drain Tank Pump A
Penetration 141

# SUMP "B" TO "B" RCDT PUMP
# PENETRATION 142

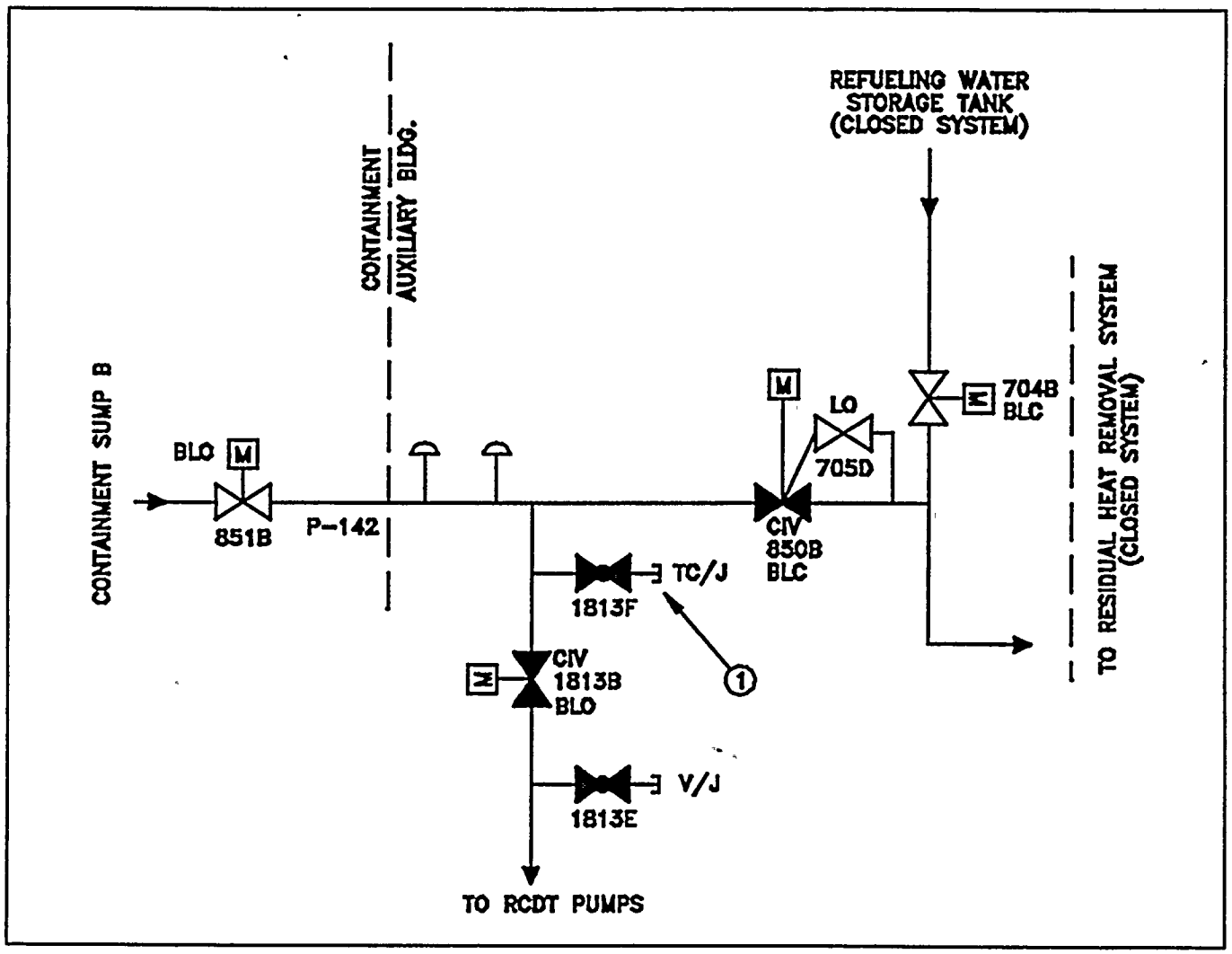


| NOTE | DESCRIPTION |
|---|---|
| - | CNMT Sump B |
| - | Auxiliary Bldg Basement |
| (1) | LRM should be located in Auxiliary Bldg Basement (connected in RHR Sub Basement) |
| | |
| | |

ROCHESTER GAS AND ELECTRIC CORPORATION
R. E. GINNA NUCLEAR POWER PLANT
UPDATED FINAL SAFETY ANALYSIS REPORT

Figure 6.2-44

Sump B to Reactor Coolant Drain Tank Pump B Penetration 142

# RCDT DISCHARGE PENETRATION 143

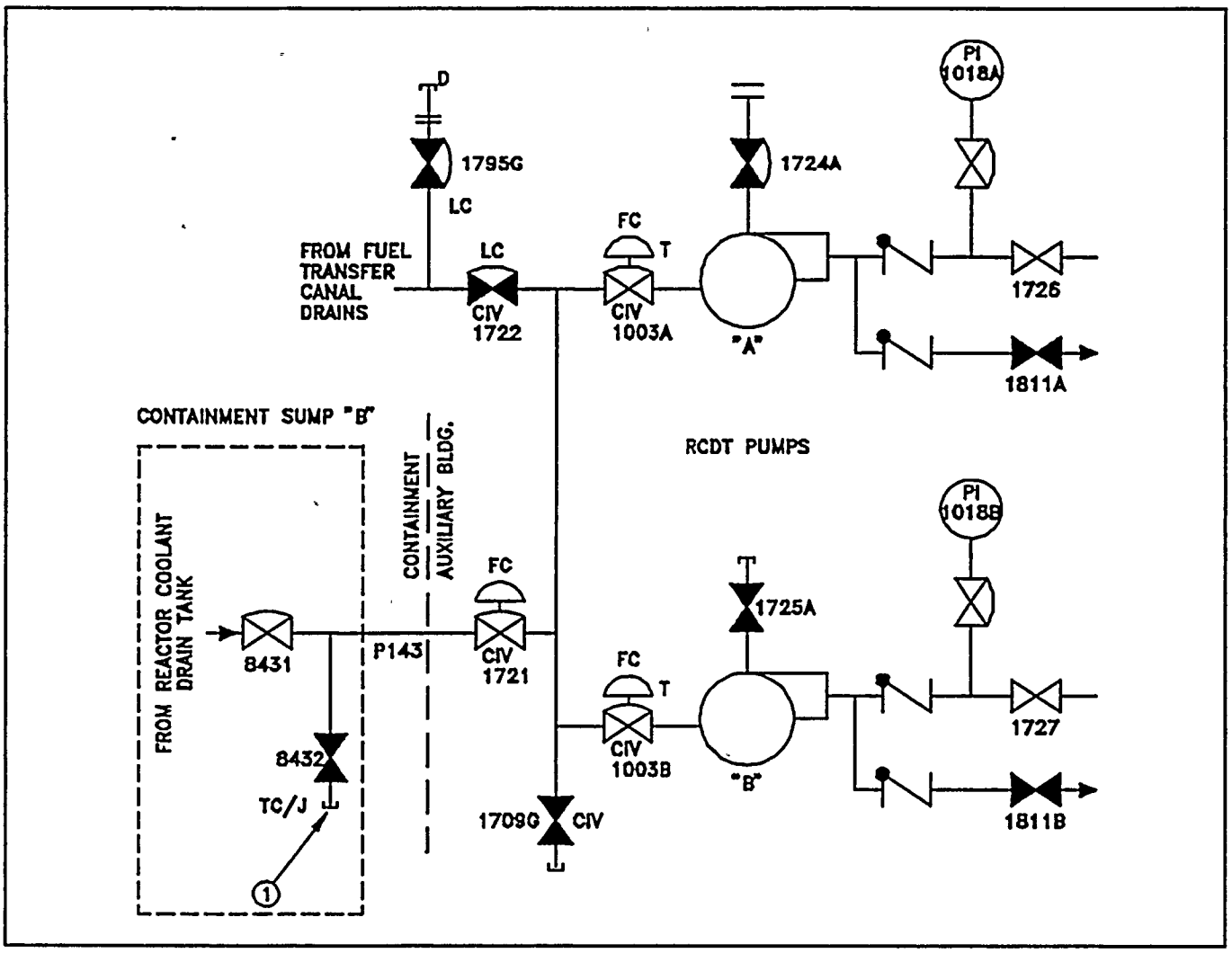


| NOTE | DESCRIPTION |
|---|---|
| - | Containment Sump B |
| - | Auxiliary Bldg Sub Basement |
| (1) | LRM should be located at entrance to Containment Sump B |
| | |
| | |

ROCHESTER GAS AND ELECTRIC CORPORATION
R. E. GINNA NUCLEAR POWER PLANT
UPDATED FINAL SAFETY ANALYSIS REPORT

Figure 6.2-45

Reactor Coolant Drain Tank Discharge Penetration 143

# REACTOR COMPARTMENT COOLING UNIT A SUPPLY AND RETURN PENETRATIONS 201a AND 209b

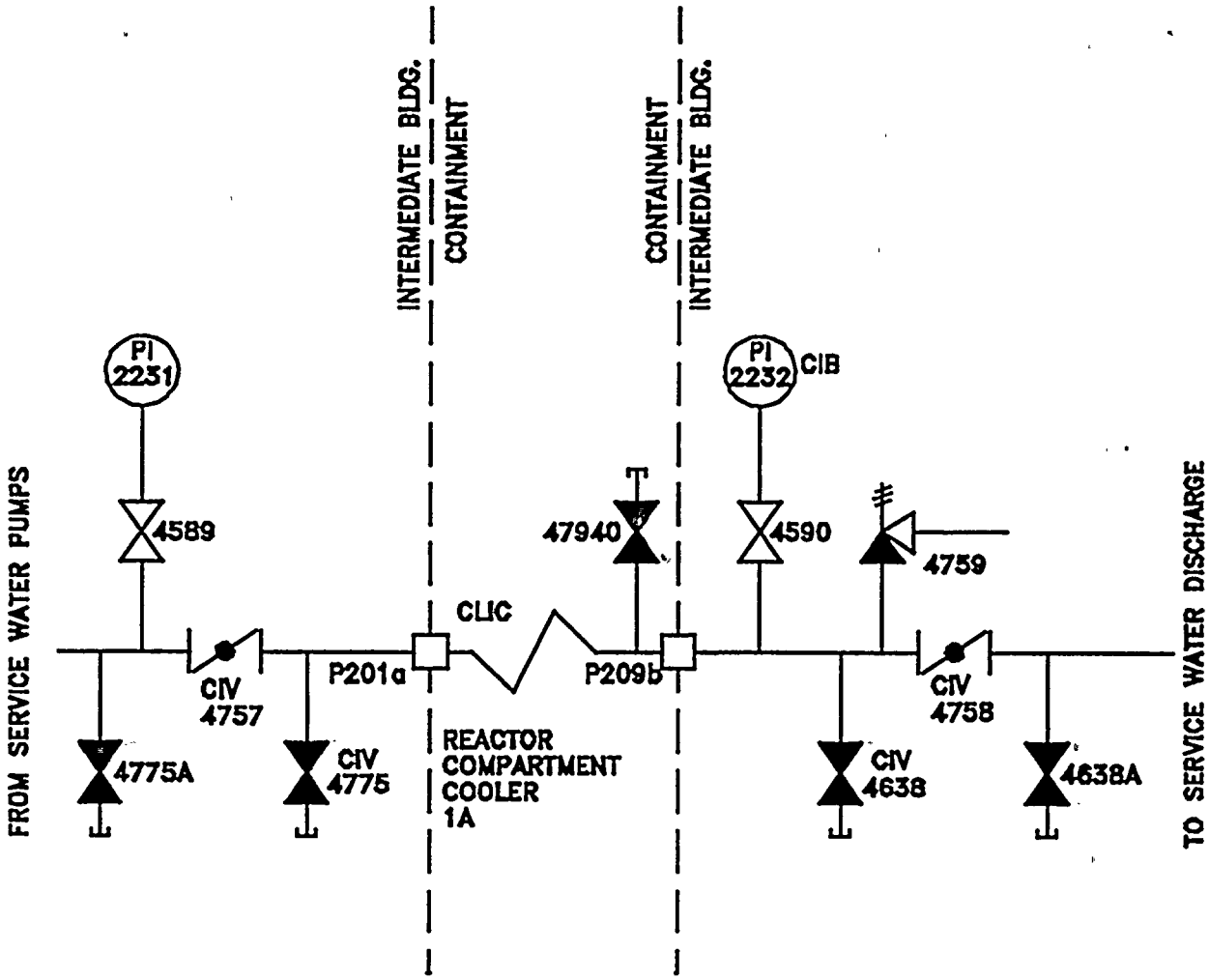


| ROCHESTER GAS AND ELECTRIC CORPORATION<br>R. E. GINNA NUCLEAR POWER PLANT<br>UPDATED FINAL SAFETY ANALYSIS REPORT |
|---|
| Figure 6.2-46<br>Reactor Compartment Cooling Unit A Supply and Return Penetrations 201a and 209b |

Isolation from 33013-1250-3 Revision 7

REV 8 7/92

# REACTOR COMPARTMENT COOLING UNIT B SUPPLY AND RETURN PENETRATIONS 201b AND 209a

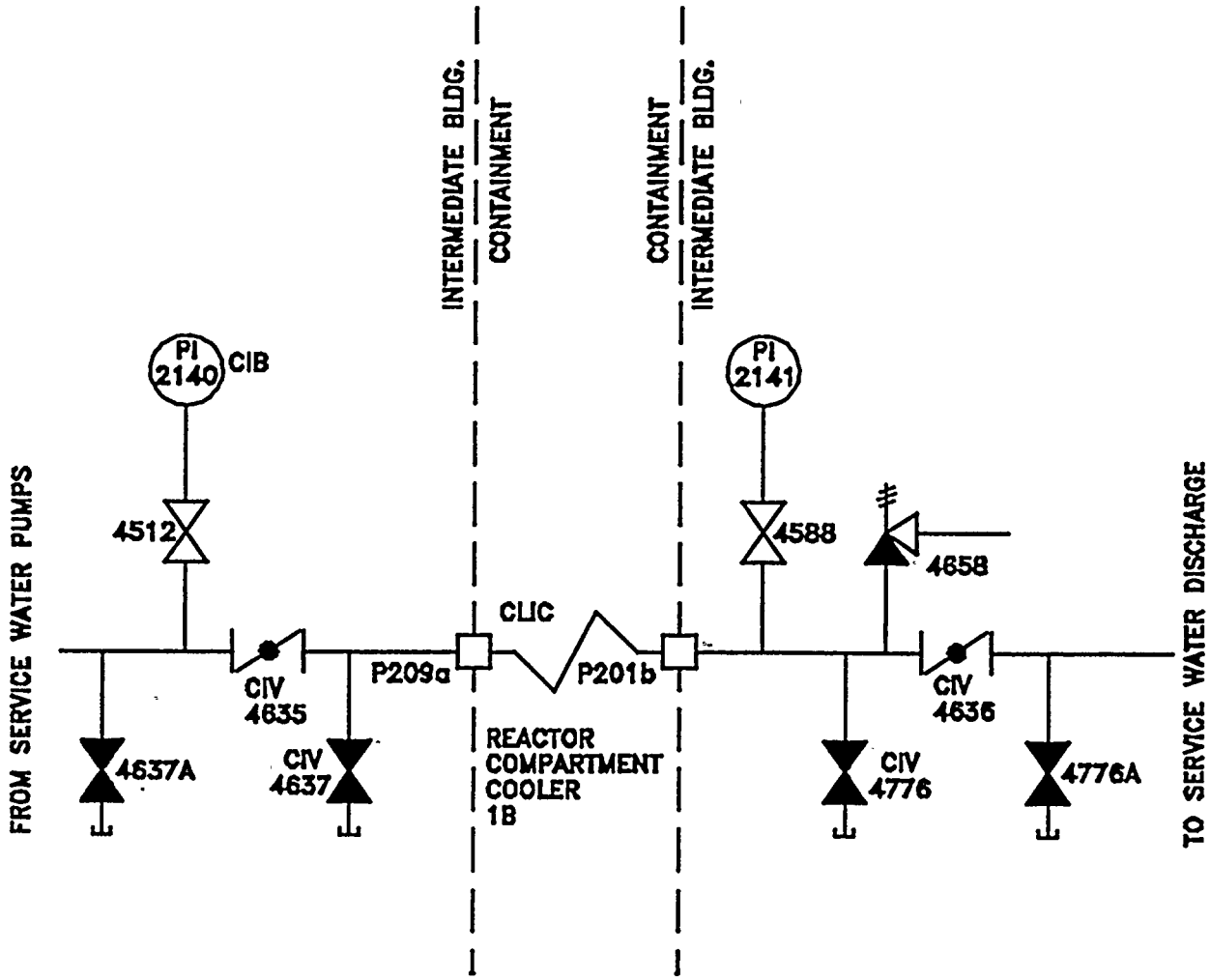


| ROCHESTER GAS AND ELECTRIC CORPORATION<br>R. E. GINNA NUCLEAR POWER PLANT<br>UPDATED FINAL SAFETY ANALYSIS REPORT |
|---|
| Figure 6.2-47<br>Reactor Compartment Cooling Unit B Supply and Return Penetrations 201b and 209a |

Isolation from 33013-1250-3 Revision 7

# B HYDROGEN RECOMBINER (MAIN AND PILOT)
# PENETRATION 202a and 202b

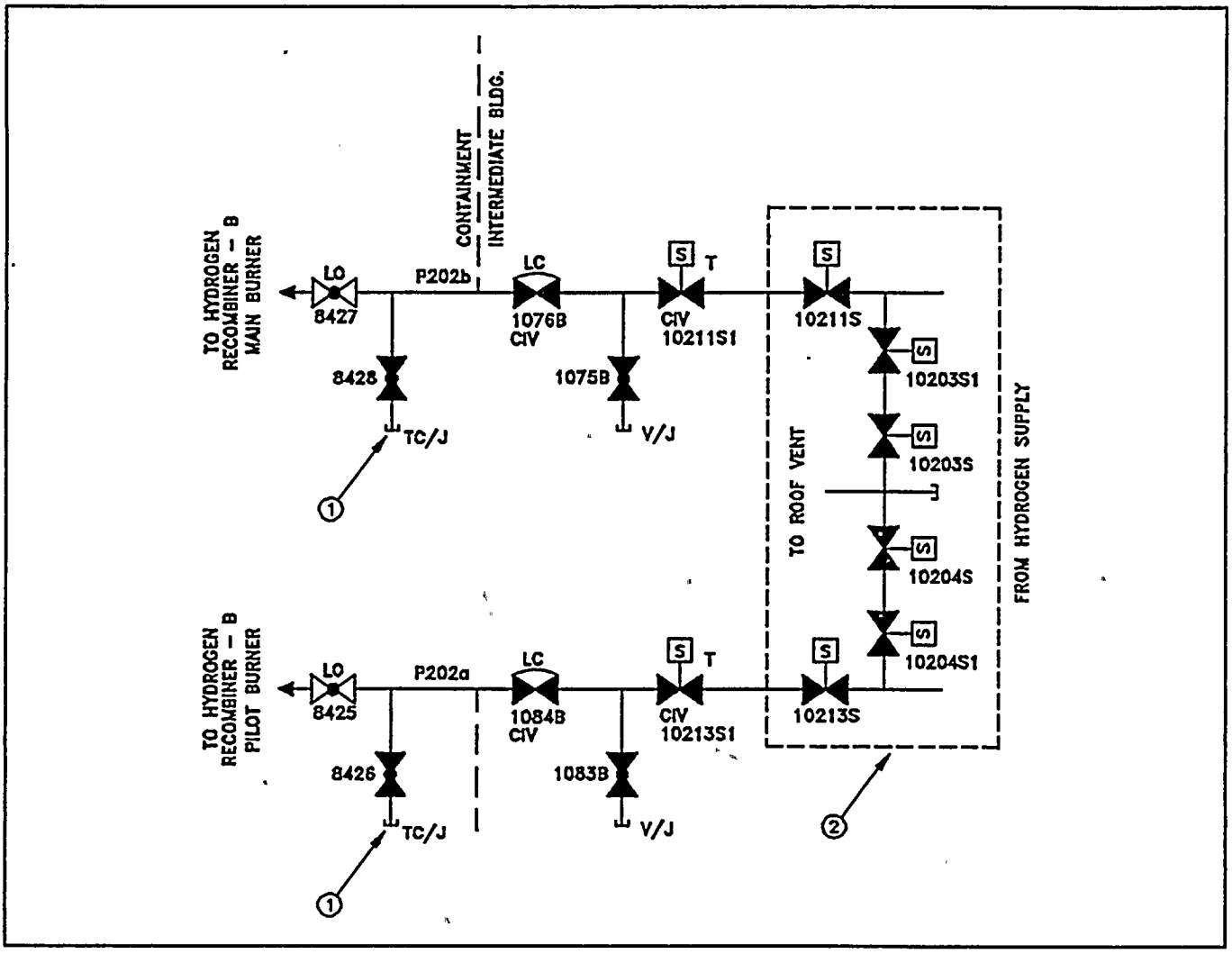


| NOTE | DESCRIPTION |
|---|---|
| - | Containment Mid Floor (above "A" Accumulator) |
| - | Intermediate Bldg (Sample Shed) |
| (1) | LRM should be located in Containment Mid Floor above "A" Accumulator |
| (2) | Located in Intermediate Bldg Basement outside Hot Shop |
| | |

ROCHESTER GAS AND ELECTRIC CORPORATION
R. E. GINNA NUCLEAR POWER PLANT
UPDATED FINAL SAFETY ANALYSIS REPORT

Figure 6.2-48

Hydrogen Recombiner B
(Main and Pilot)
Penetrations 202a and 202b

# CONTAINMENT PRESSURE TRANSMITTERS PT-947 AND PT-948
# PENETRATION 203a

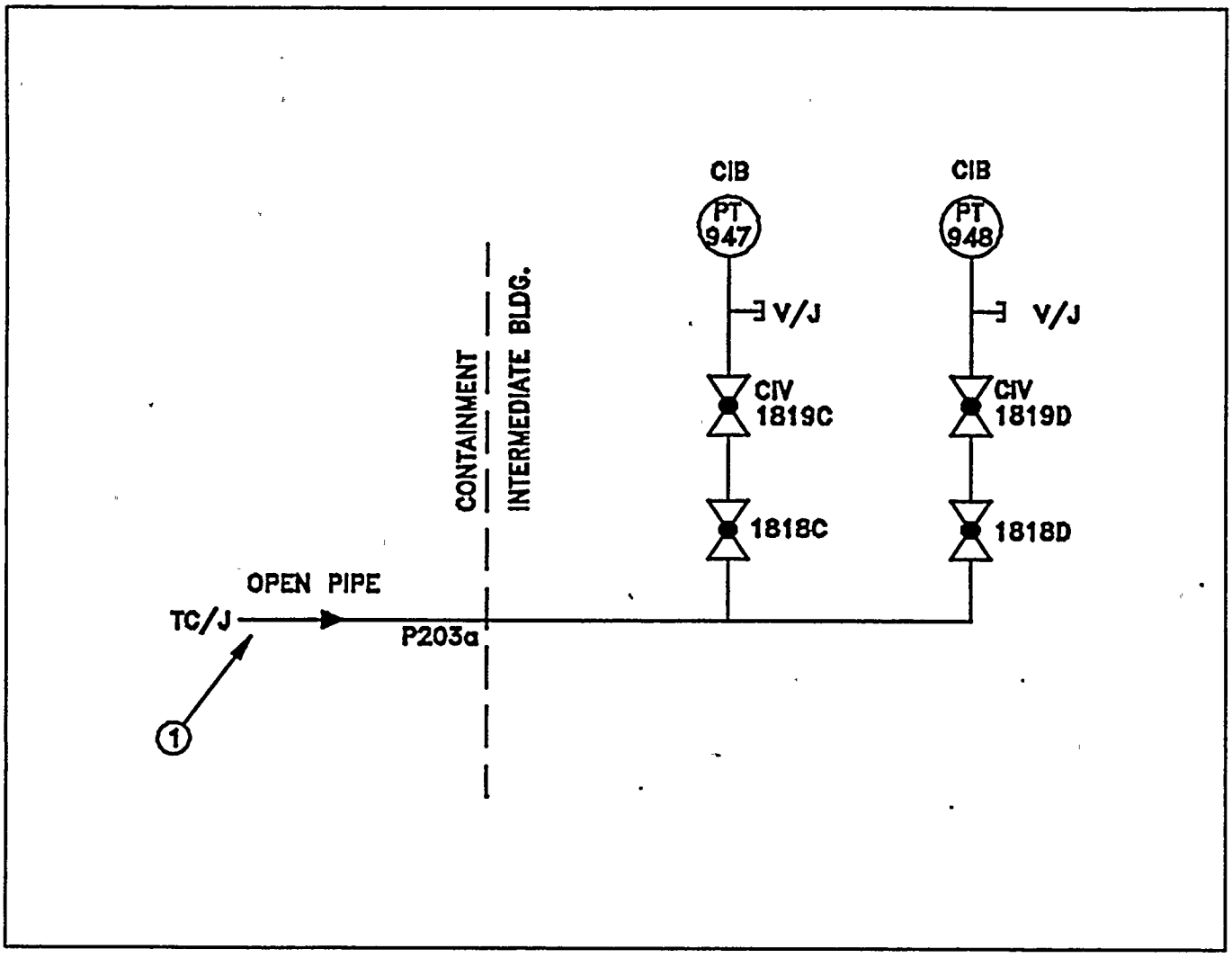


| NOTE | DESCRIPTION |
|---|---|
| - | Containment Mid Floor (Above "A" SI Accumulator) |
| - | Intermediate Bldg. (Sample Shed) |
| (1) | LRM should be located in Containment Mid Floor above "A" SI Accumulator |
| | |
| | |

ROCHESTER GAS AND ELECTRIC CORPORATION
R. E. GINNA NUCLEAR POWER PLANT
UPDATED FINAL SAFETY ANALYSIS REPORT

Figure 6.2-49

Containment Pressure Transmitters
PT-947 and PT-948
Penetration 203a

# CONTAINMENT POST ACCIDENT AIR SAMPLE (D FAN)
# PENETRATION 203b, and 203c

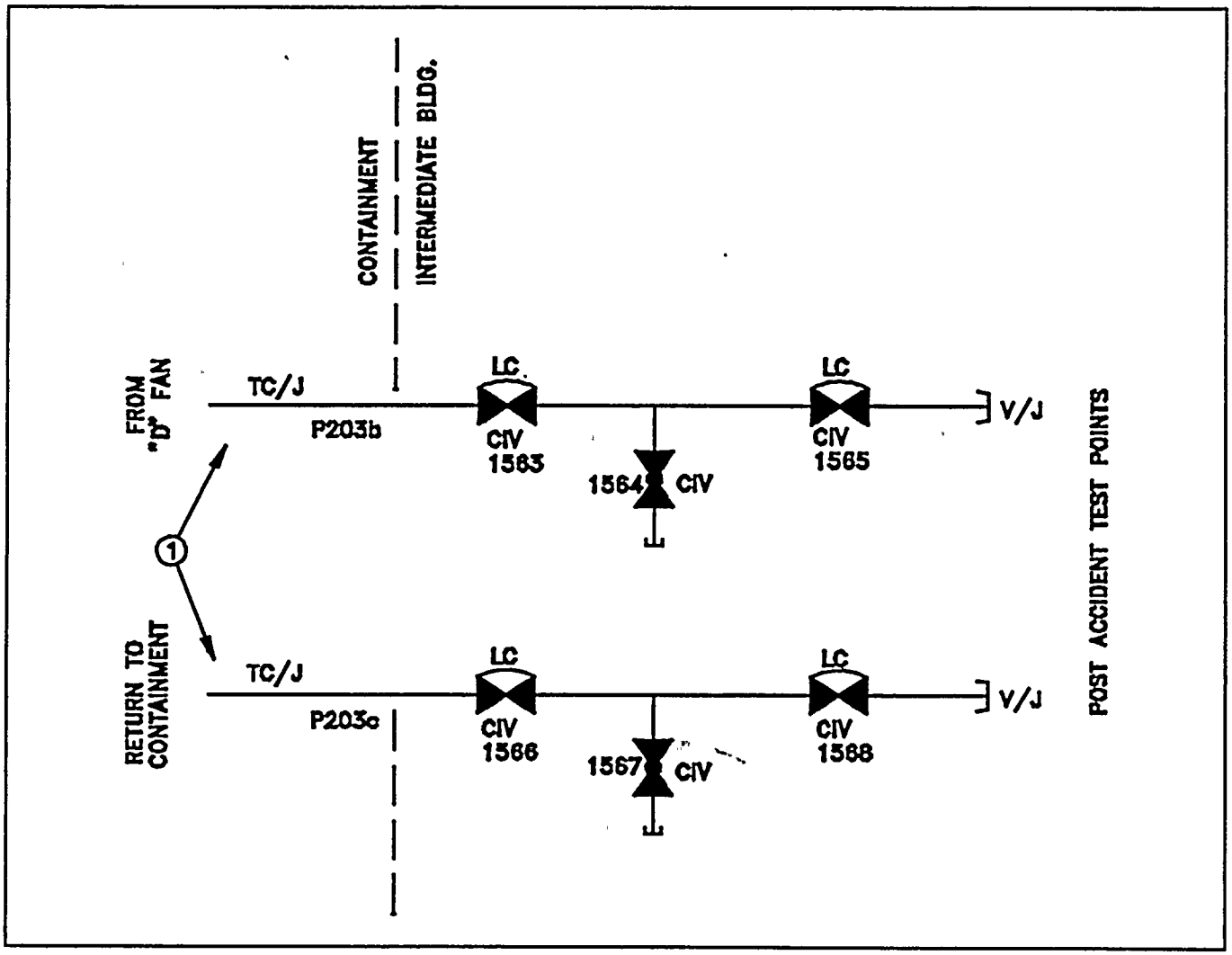


| NOTE | DESCRIPTION |
|---|---|
| - | Containment Mid Floor (above "A" Accumulator) |
| - | Intermediate Bldg (Sample Shed) |
| (1) | LRM should be located in Containment Mid Floor above "A" Accumulator |
| | |
| | |

ROCHESTER GAS AND ELECTRIC CORPORATION
R. E. GINNA NUCLEAR POWER PLANT
UPDATED FINAL SAFETY ANALYSIS REPORT

Figure 6.2-50

Containment Postaccident Air Sample (Fan D) Penetrations 203b and 203c

# PURGE SUPPLY
# PENETRATION 204

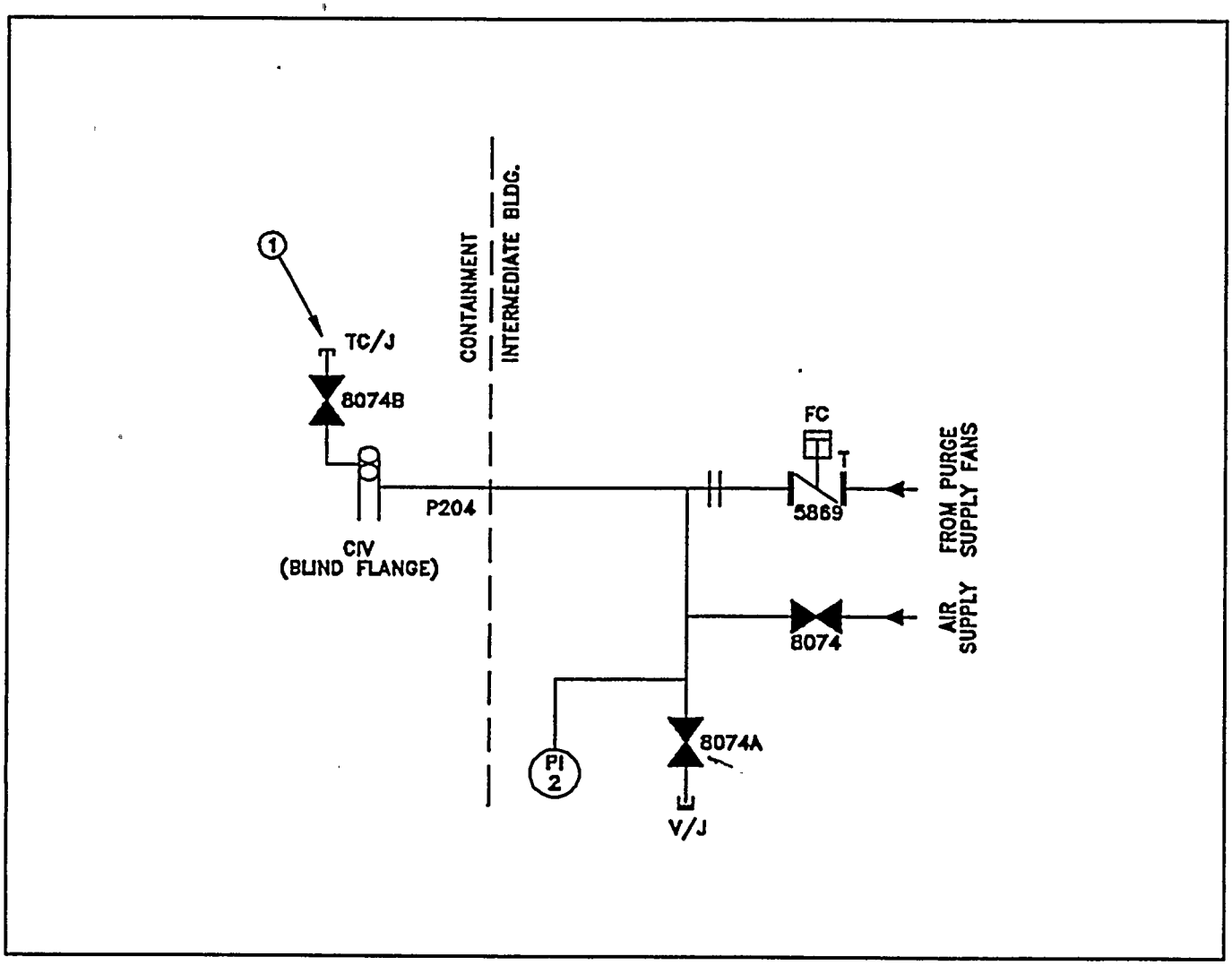


| NOTE | DESCRIPTION |
|---|---|
| - | Containment Mid Floor (behind "A" Accumulator) |
| - | Intermediate Bldg Basement (near Controlled Access Fans) |
| (1) | LRM should be located in Containment Mid Floor behind "A" Accumulator |
| | |
| | |

ROCHESTER GAS AND ELECTRIC CORPORATION
R. E. GINNA NUCLEAR POWER PLANT
UPDATED FINAL SAFETY ANALYSIS REPORT

Figure 6.2-51

Purge Supply
Penetration 204

# RCS LOOP B HOT LEG SAMPLE
# PENETRATION 205

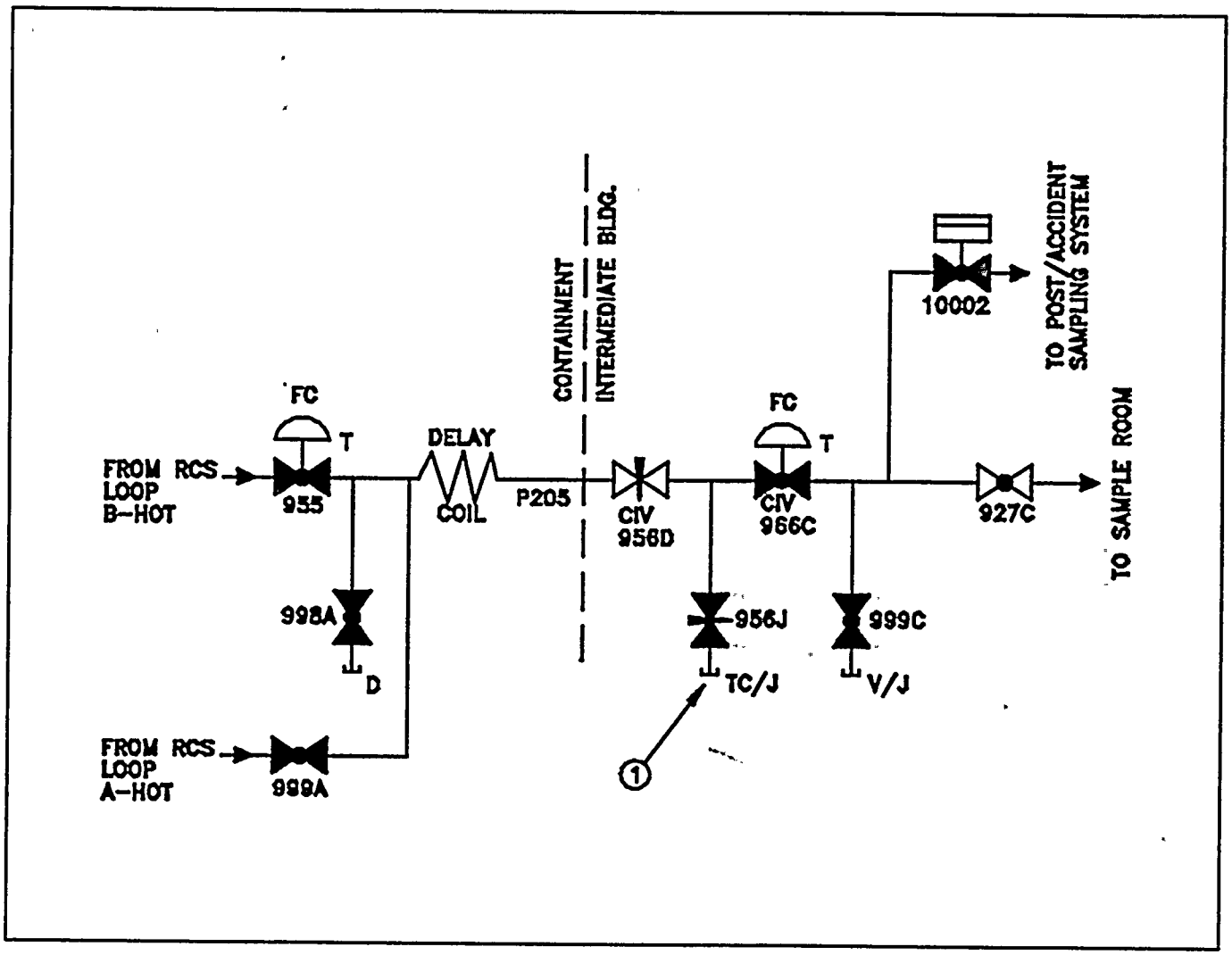


| NOTE | DESCRIPTION |
|---|---|
| - | Containment Mid Floor (Above "A" Accumulator) |
| - | Intermediate Bldg (Sample Shed) |
| (1) | LRM should be located in Intermediate Bldg near Sample Shed |
| | |
| | |

ROCHESTER GAS AND ELECTRIC CORPORATION
R. E. GINNA NUCLEAR POWER PLANT
UPDATED FINAL SAFETY ANALYSIS REPORT

Figure 6.2-52

Reactor Coolant System Loop B
Hot Leg Sample
Penetration 205

# PRESSURIZER LIQUID SAMPLE
# PENETRATION 206a

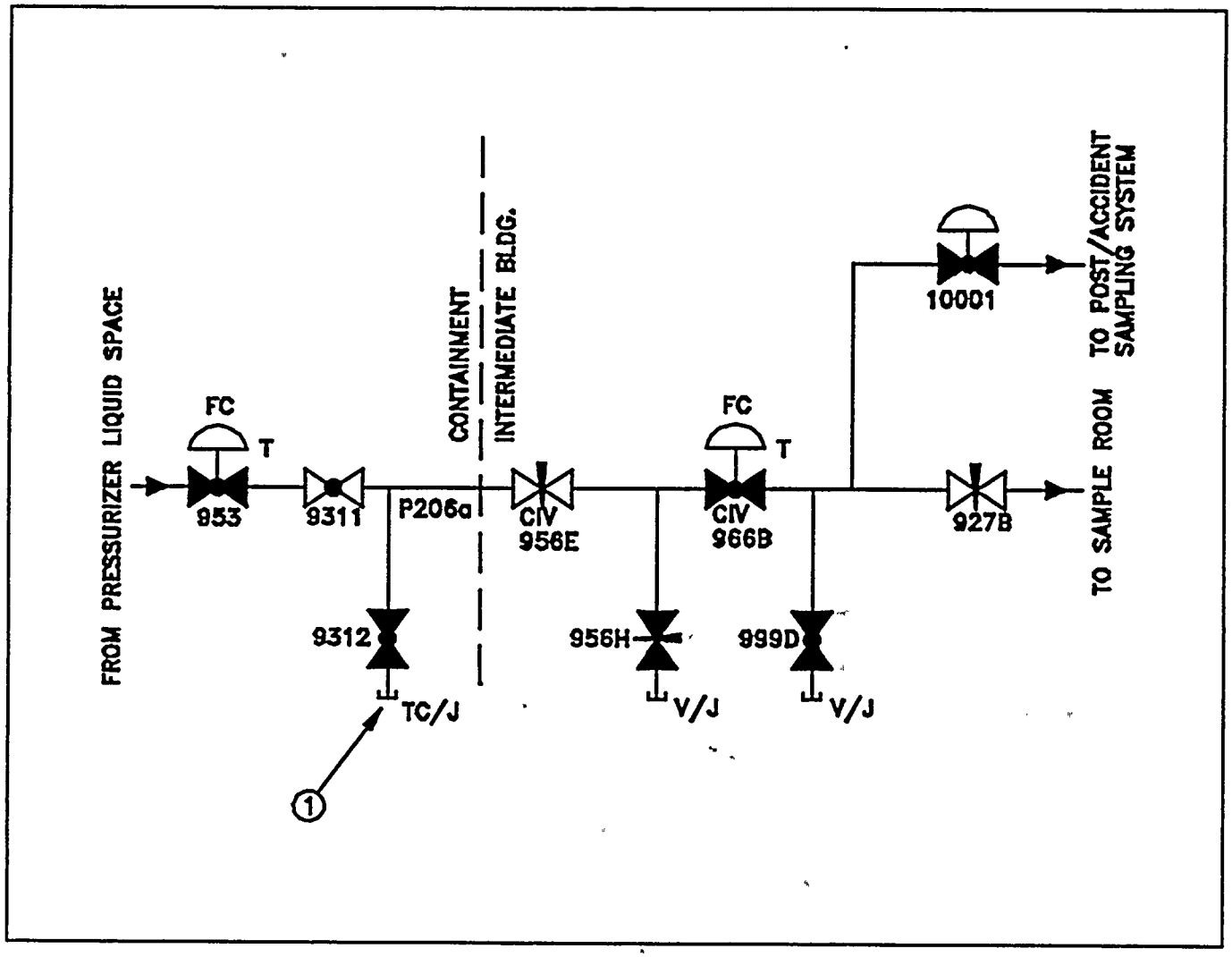


| NOTE | DESCRIPTION |
|---|---|
| - | Containment Mid Floor (above "A" Accumulator) |
| - | Intermediate Bldg (Sample Shed) |
| (1) | LRM should be located in Containment Mid Floor above "A" Accumulator |
| | |
| | |

ROCHESTER GAS AND ELECTRIC CORPORATION
R. E. GINNA NUCLEAR POWER PLANT
UPDATED FINAL SAFETY ANALYSIS REPORT

Figure 6.2-53

Pressurizer Liquid Sample
Penetration 206a

# "A" STEAM GENERATOR SAMPLE PENETRATION 206b

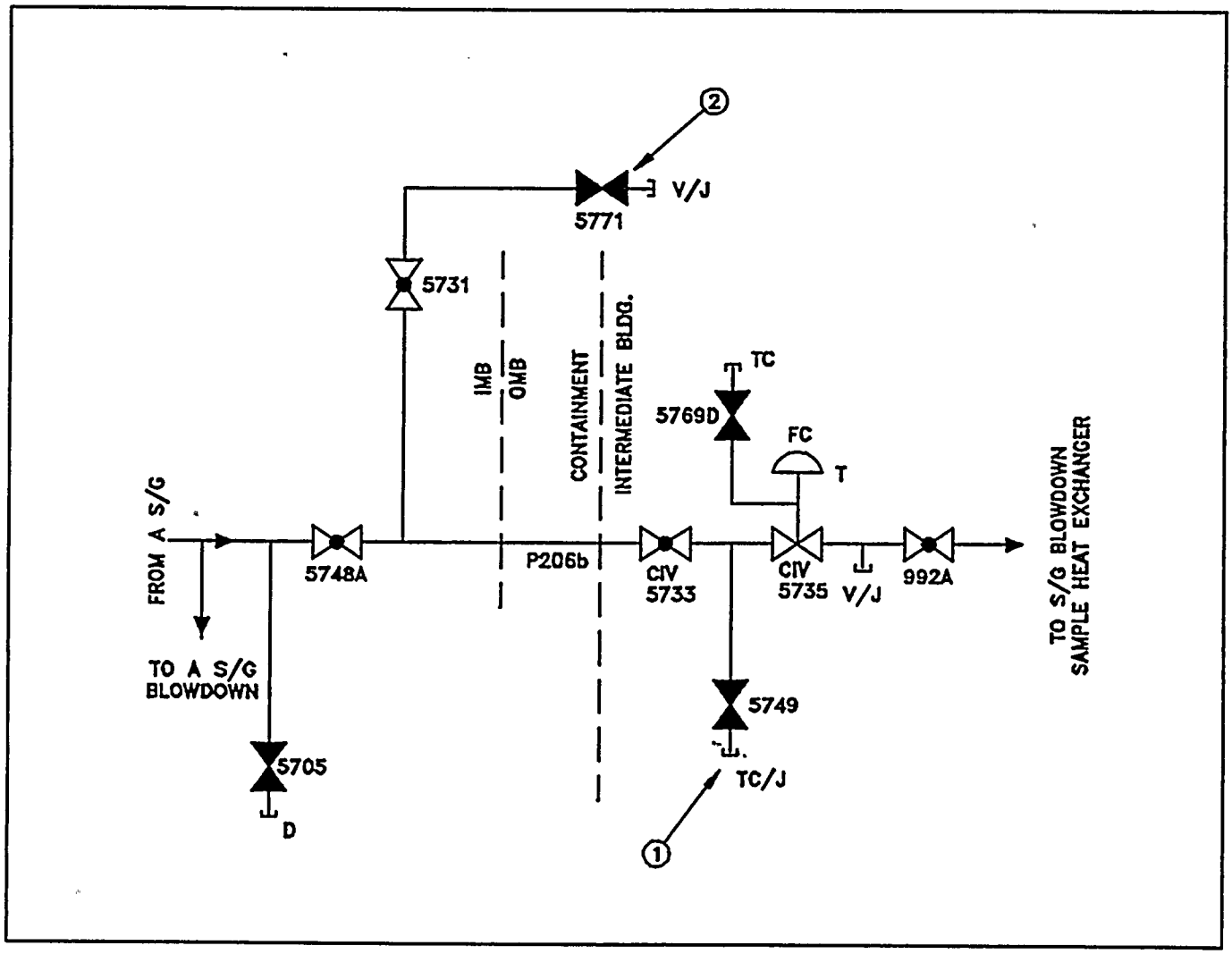


| NOTE | DESCRIPTION |
|---|---|
| - | Containment Mid Floor (above "A" Accumulator) |
| - | Intermediate Bldg (Sample Shed) |
| (1) | LRM should be located in Intermediate Bldg (Sample Shed) |
| (2) | Located on S/G Platform |
| | |

ROCHESTER GAS AND ELECTRIC CORPORATION
R. E. GINNA NUCLEAR POWER PLANT
UPDATED FINAL SAFETY ANALYSIS REPORT

Figure 6.2-54

Steam Generator A Sample
Penetration 206b

# PRESSURIZER STEAM SAMPLE
# PENETRATION 207a

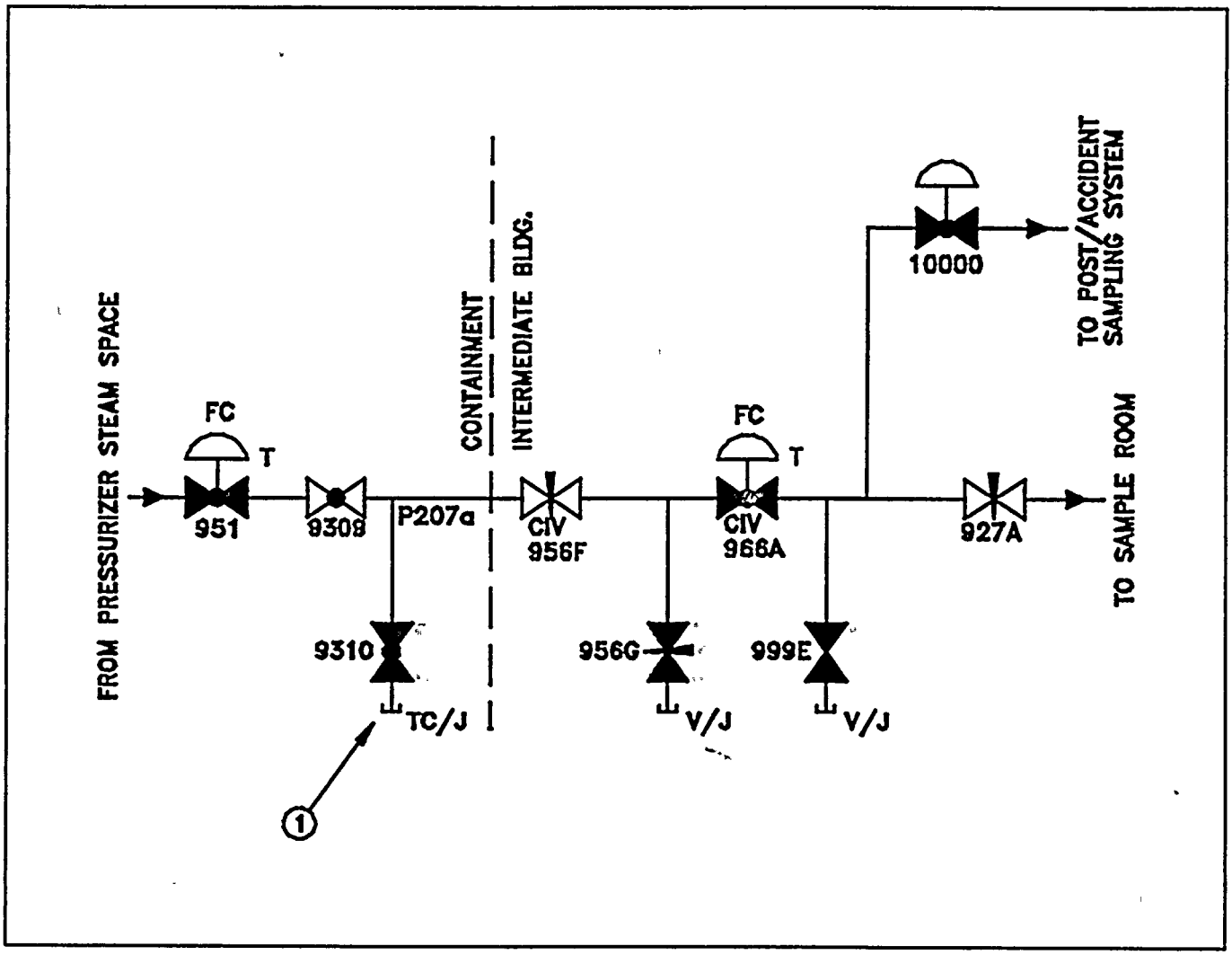


| NOTE | DESCRIPTION |
|---|---|
| - | Containment Mid Floor (above "A" Accumulator) |
| - | Intermediate Bldg (Sample Shed) |
| (1) | LRM should be located in Containment Mid Floor above "A" Accumulator. |
| | |
| | |

ROCHESTER GAS AND ELECTRIC CORPORATION
R. E. GINNA NUCLEAR POWER PLANT
UPDATED FINAL SAFETY ANALYSIS REPORT

Figure 6.2-55

Pressurizer Steam Sample
Penetration 207a

## "B" STEAM GENERATOR SAMPLE PENETRATION 207b

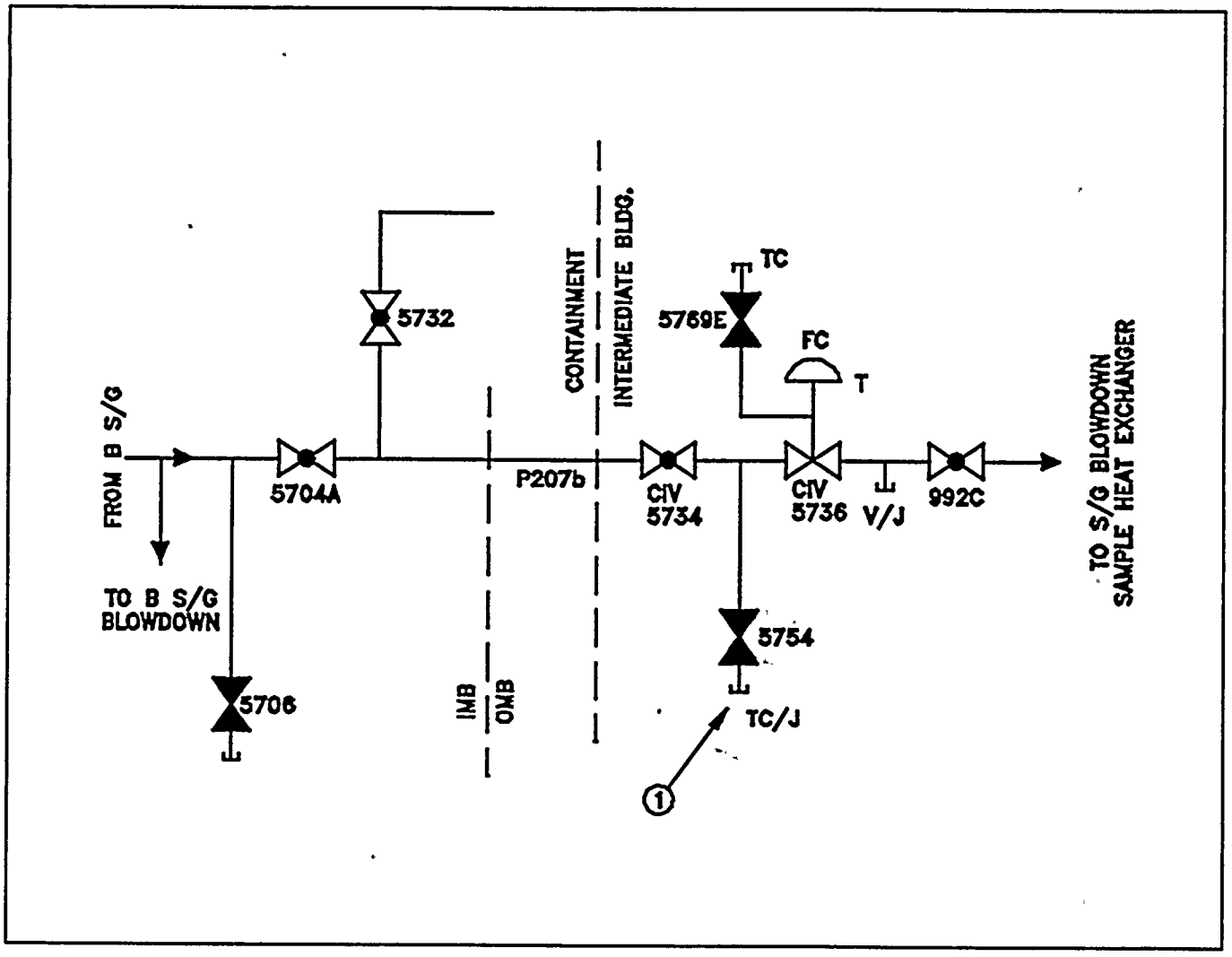


| NOTE | DESCRIPTION |
|---|---|
| - | Containment Mid Floor (above "A" Accumulator) |
| - | Intermediate Bldg (Sample Shed) |
| (1) | LRM should be located in Intermediate Bldg (Sample Shed) |
| | |
| | |

ROCHESTER GAS AND ELECTRIC CORPORATION
R. E. GINNA NUCLEAR POWER PLANT
UPDATED FINAL SAFETY ANALYSIS REPORT

Figure 6.2-56

Steam Generator B Sample Penetration 207b

## "A" AND "B" HYDROGEN RECOMBINER OXYGEN MAKEUP PENETRATION 210

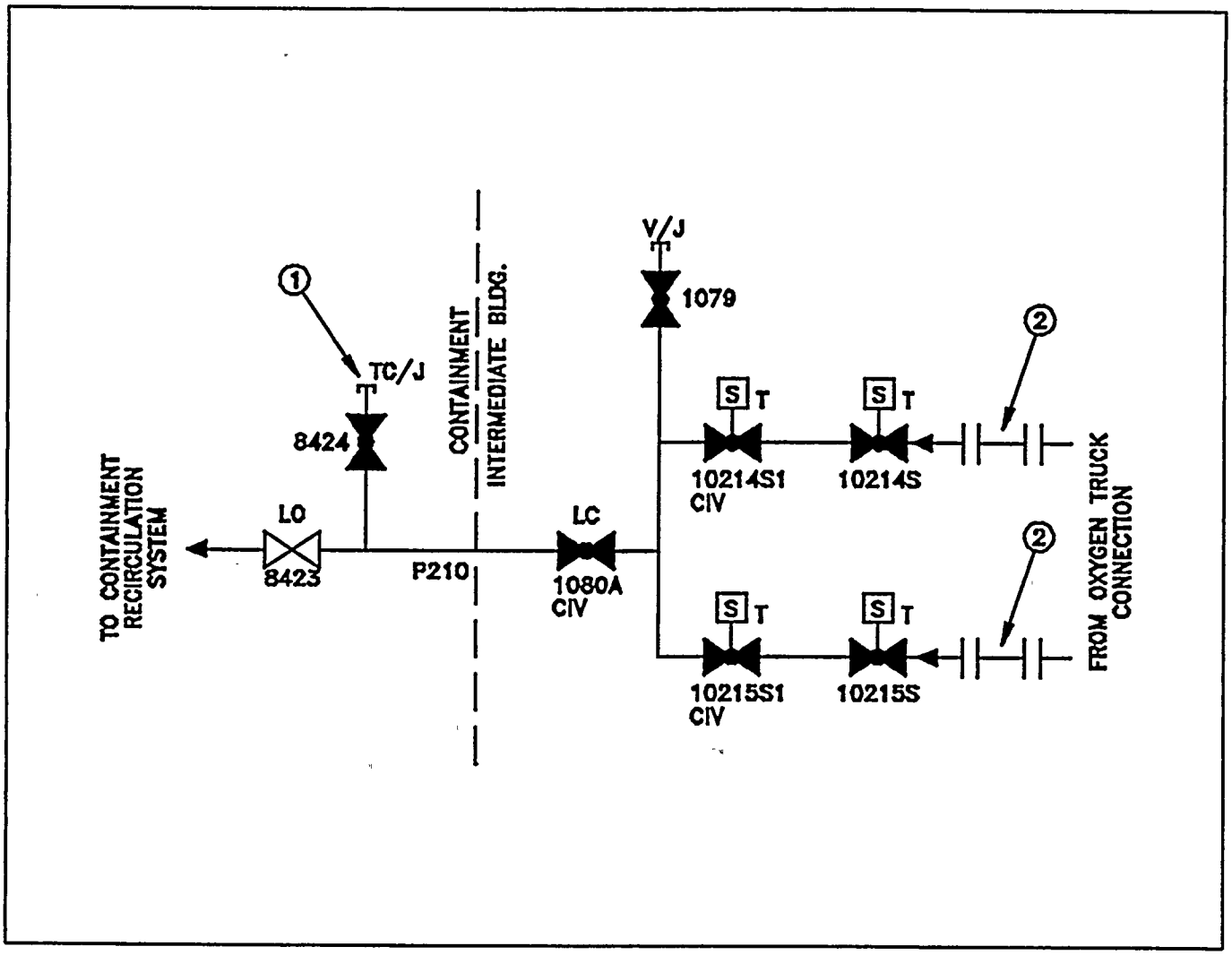


| NOTE | DESCRIPTION |
|---|---|
| - | Containment Mid Floor (Above "A" Accumulator) |
| - | Intermediate Bldg (Sample Shed) |
| (1) | LRM should be located in Containment Mid Floor Above "A" Accumulator |
| (2) | Spool pieces located in Intermediate Bldg Basement below Sample Shed |
| | |

ROCHESTER GAS AND ELECTRIC CORPORATION
R. E. GINNA NUCLEAR POWER PLANT
UPDATED FINAL SAFETY ANALYSIS REPORT

Figure 6.2-57

Hydrogen Recombiner A and B
Oxygen Makeup
Penetration 210

# PURGE EXHAUST PENETRATION 300

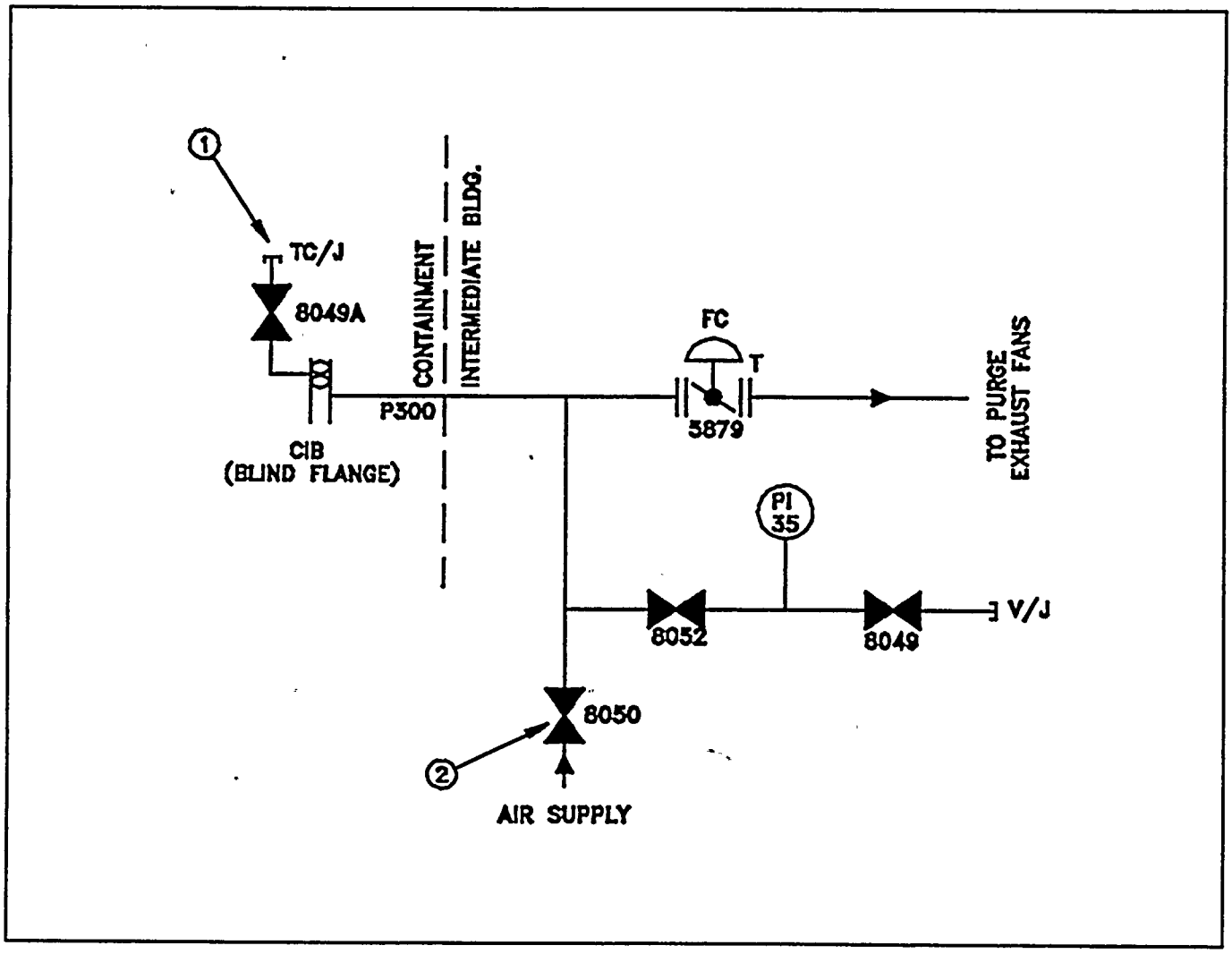


| NOTE | DESCRIPTION |
|---|---|
| - | Containment Top Floor (Mezzanine) |
| - | Intermediate Bldg. (floor above steam header) |
| (1) | LRM should be located in Containment on Top Floor Mezzanine |
| (2) | Intermediate Bldg Top Floor |
| | |

ROCHESTER GAS AND ELECTRIC CORPORATION
R. E. GINNA NUCLEAR POWER PLANT
UPDATED FINAL SAFETY ANALYSIS REPORT

Figure 6.2-58

Purge Exhaust
Penetration 300

# AUX STEAM SUPPLY AND AUX STEAM CNDST RETURN PENETRATIONS 301 AND 303

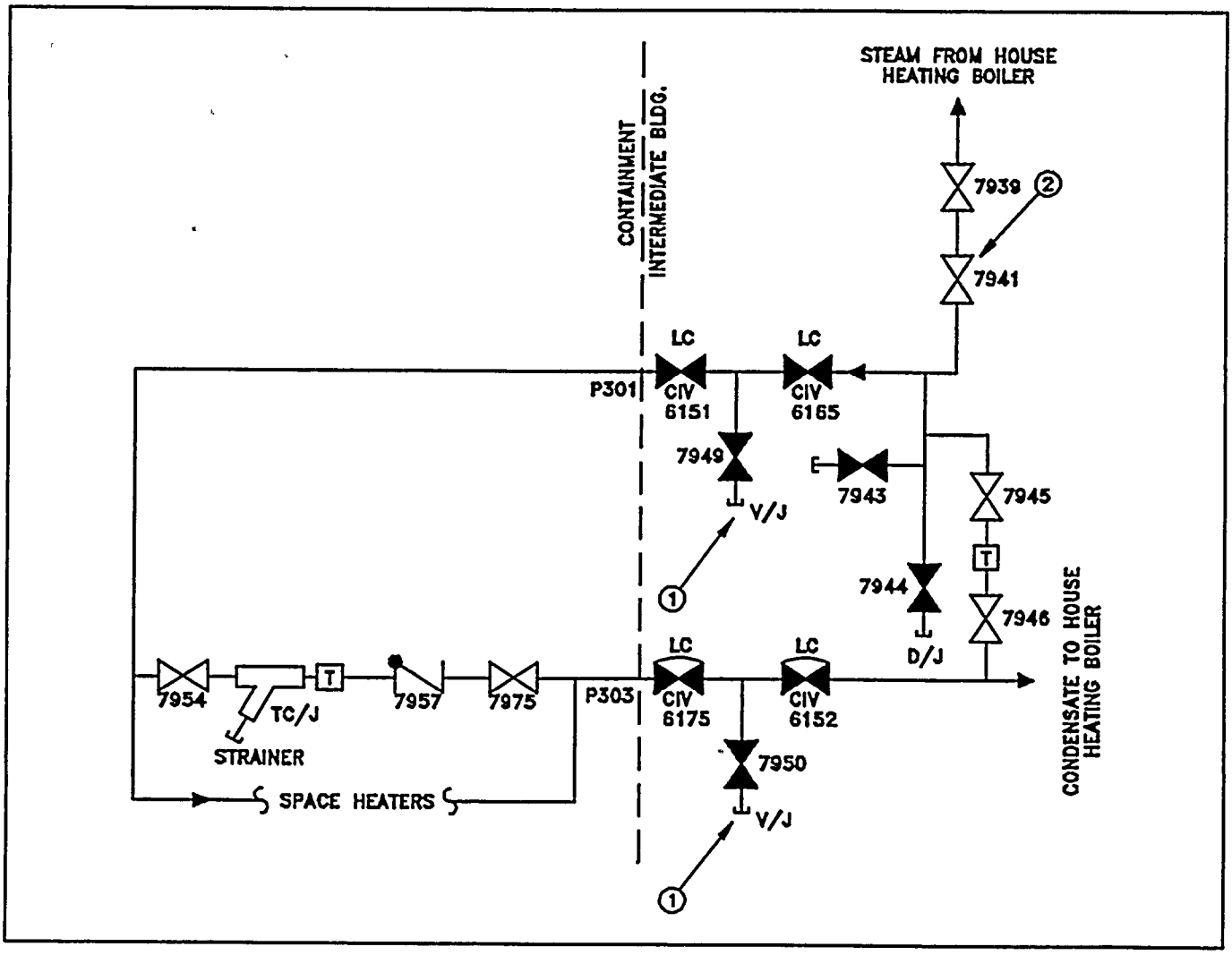


| NOTE | DESCRIPTION |
|---|---|
| - | Containment Mid Floor ("A" Fan Area) |
| - | Intermediate Bldg (TDAFWP Area) |
| (1) | LRM should be located in Intermediate Bldg (TDAFWP Area) |
| (2) | V-7941 is in overhead above "A" Chiller Unit |
| | |

ROCHESTER GAS AND ELECTRIC CORPORATION
R. E. GINNA NUCLEAR POWER PLANT
UPDATED FINAL SAFETY ANALYSIS REPORT

Figure 6.2-59

Auxiliary Steam Supply and Condensate Return Penetrations 301 and 303

# A HYDROGEN RECOMBINER (MAIN AND PILOT) PENETRATION 304a and 304b

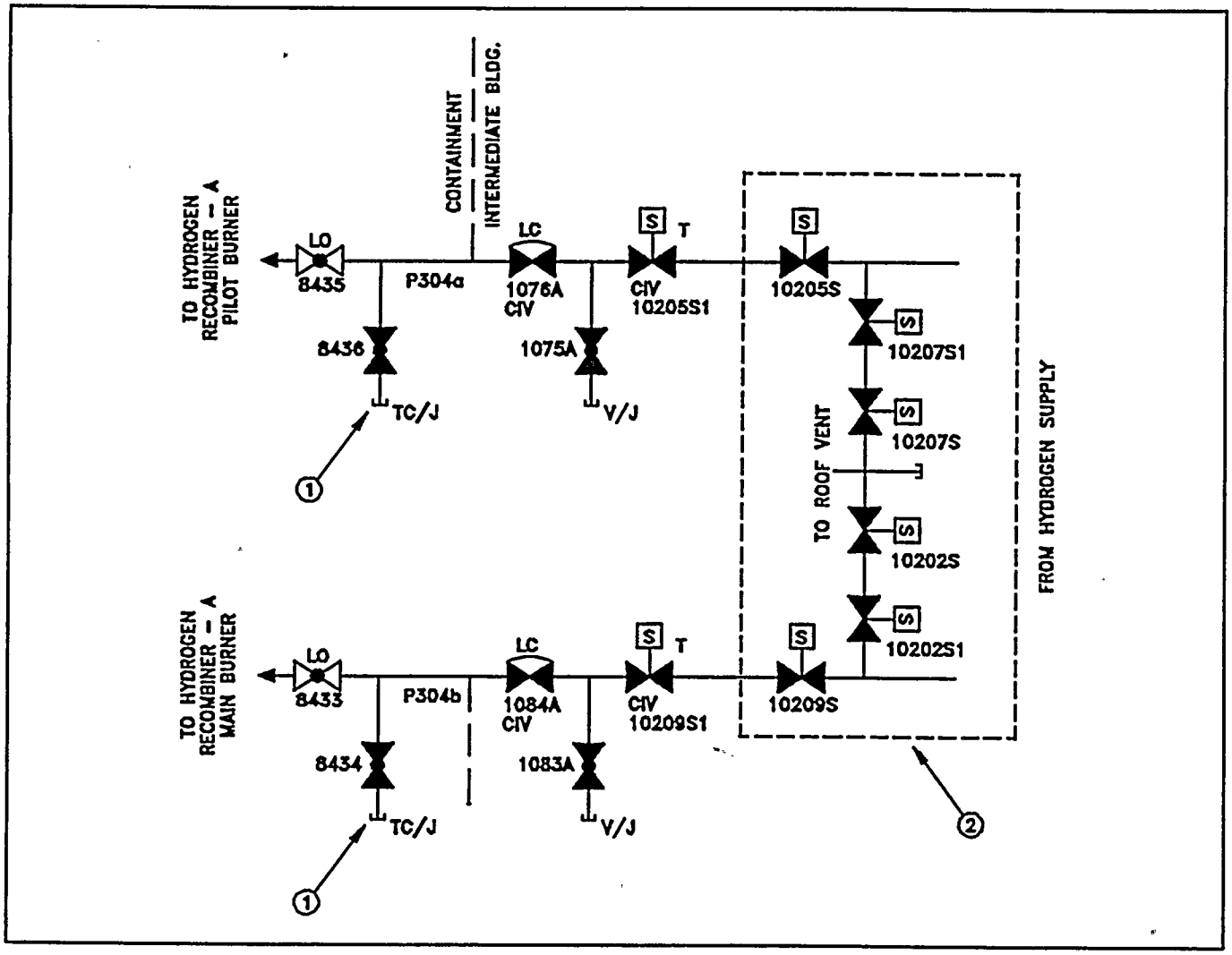


| NOTE | DESCRIPTION |
|---|---|
| - | Containment Mid Floor ("A" Recirc Fan Area) |
| - | Intermediate Bldg (TDAFW Pump Area) |
| (1) | LRM should be located in Containment Mid Floor "A" Recirc Fan Area |
| (2) | Located in Intermediate Bldg Basement outside Hot Shop |
| | |

ROCHESTER GAS AND ELECTRIC CORPORATION
R. E. GINNA NUCLEAR POWER PLANT
UPDATED FINAL SAFETY ANALYSIS REPORT

Figure 6.2-60

Hydrogen Recombiner A
(Main and Pilot)
Penetrations 304a and 304b

# CONTAINMENT POST ACCIDENT AIR SAMPLE
# PENETRATION 305a, 305c, and 305d

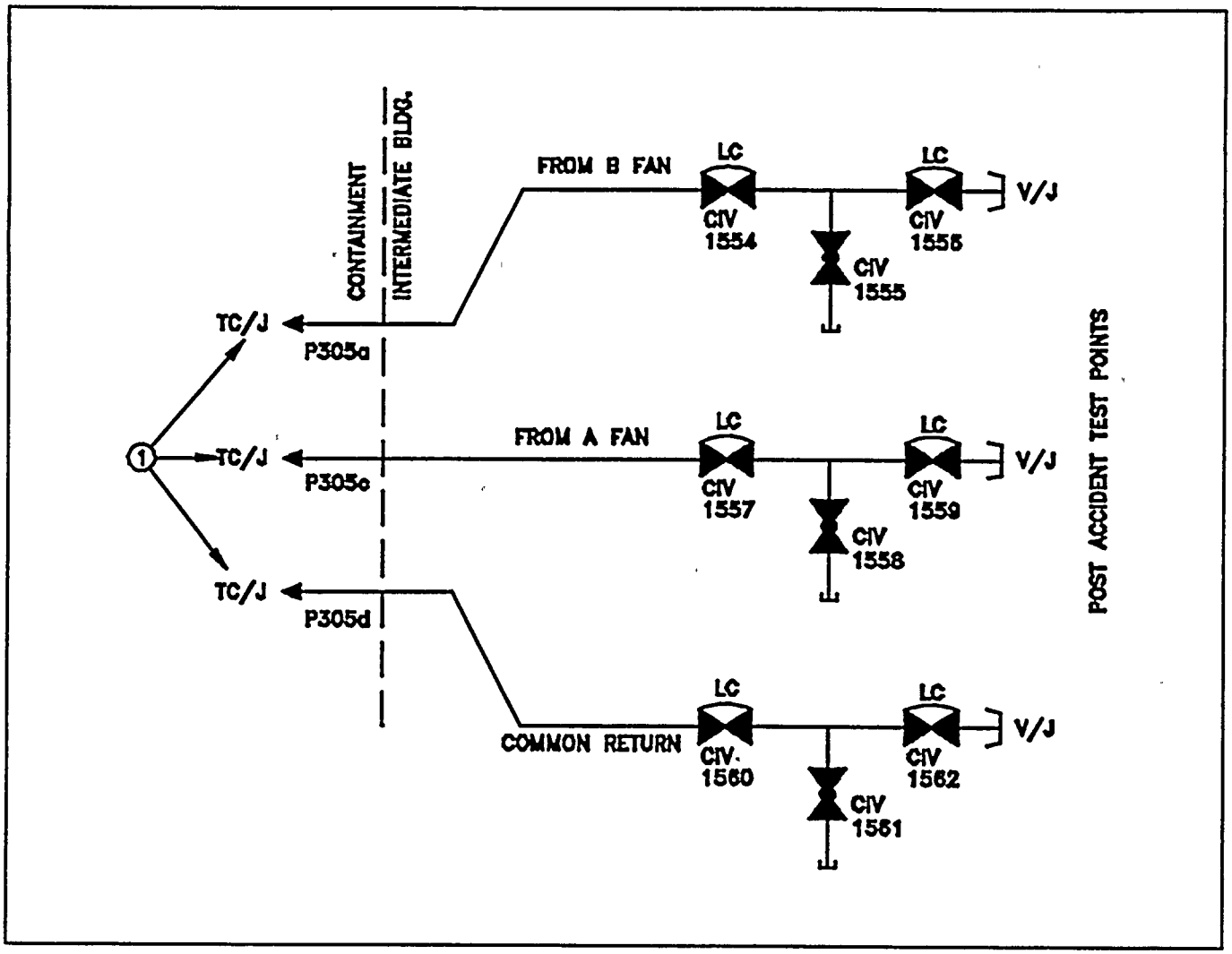


| NOTE | DESCRIPTION |
|---|---|
| - | Containment Mid Floor ("A" Recirc Fan Area) |
| - | Intermediate Bldg (TDAFW Pump Area) |
| (1) | LRM should be located in Containment Mid Floor near "A" Recirc Fan Area |
| | |
| | |

ROCHESTER GAS AND ELECTRIC CORPORATION
R. E. GINNA NUCLEAR POWER PLANT
UPDATED FINAL SAFETY ANALYSIS REPORT

Figure 6.2-61

Containment Postaccident
Air Sample
Penetrations 305a, 305c, and 305d

# CONTAINMENT AIR SAMPLE (RETURN)
# PENETRATION 305b

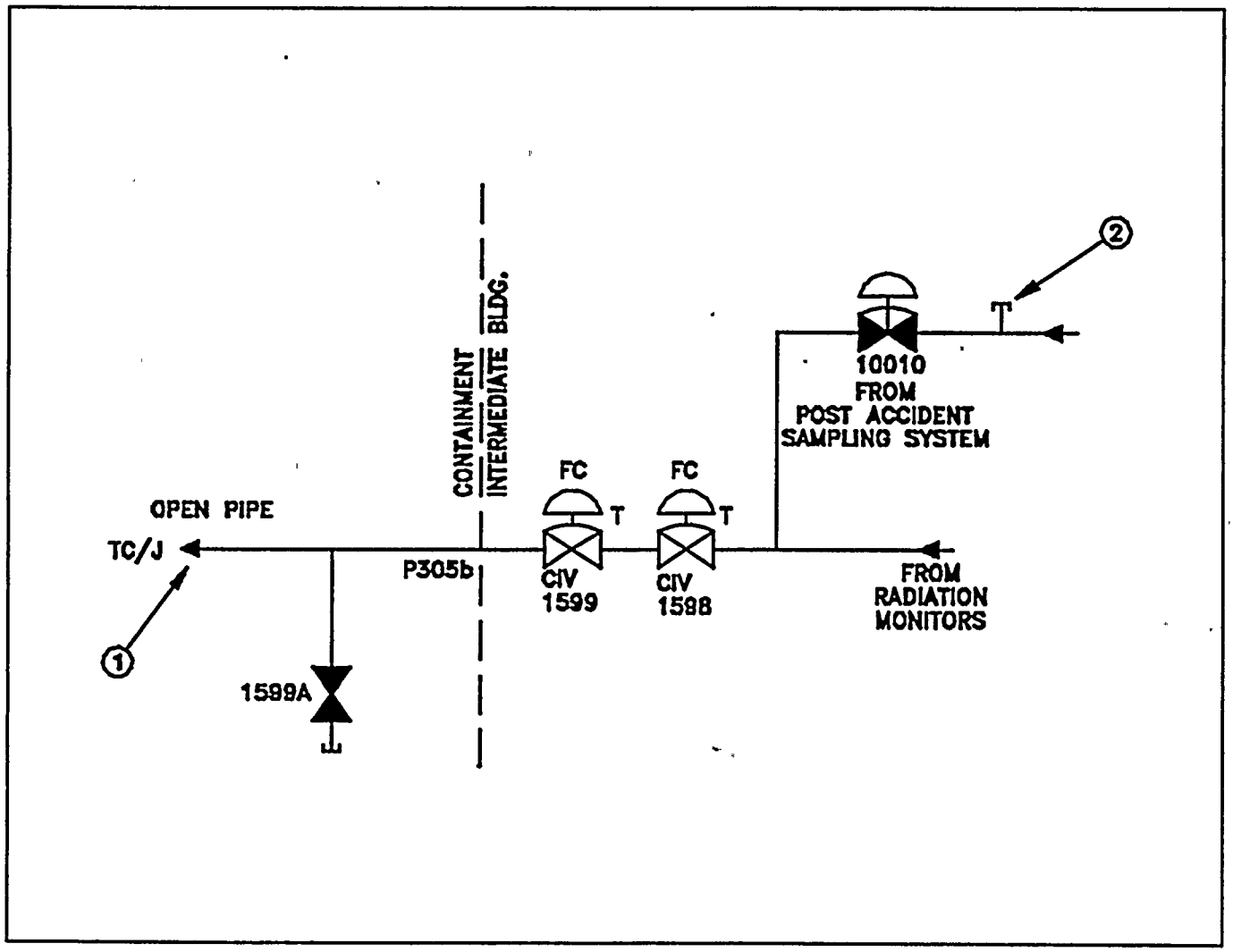


| NOTE | DESCRIPTION |
|---|---|
| - | Containment Mid Floor ("A" Recirc Fan Area) |
| - | Intermediate Bldg (TDAFWP Area) |
| (1) | LRM should be located in Containment Mid Floor near "A" Recirc Fan. |
| (2) | Main Steam Header Adjacent to Containment Wall |
| | |

ROCHESTER GAS AND ELECTRIC CORPORATION
R. E. GINNA NUCLEAR POWER PLANT
UPDATED FINAL SAFETY ANALYSIS REPORT

Figure 6.2-62

Containment Air Sample (Return)
Penetration 305b

# CONTAINMENT AIR SAMPLE OUTLET PENETRATION 305e

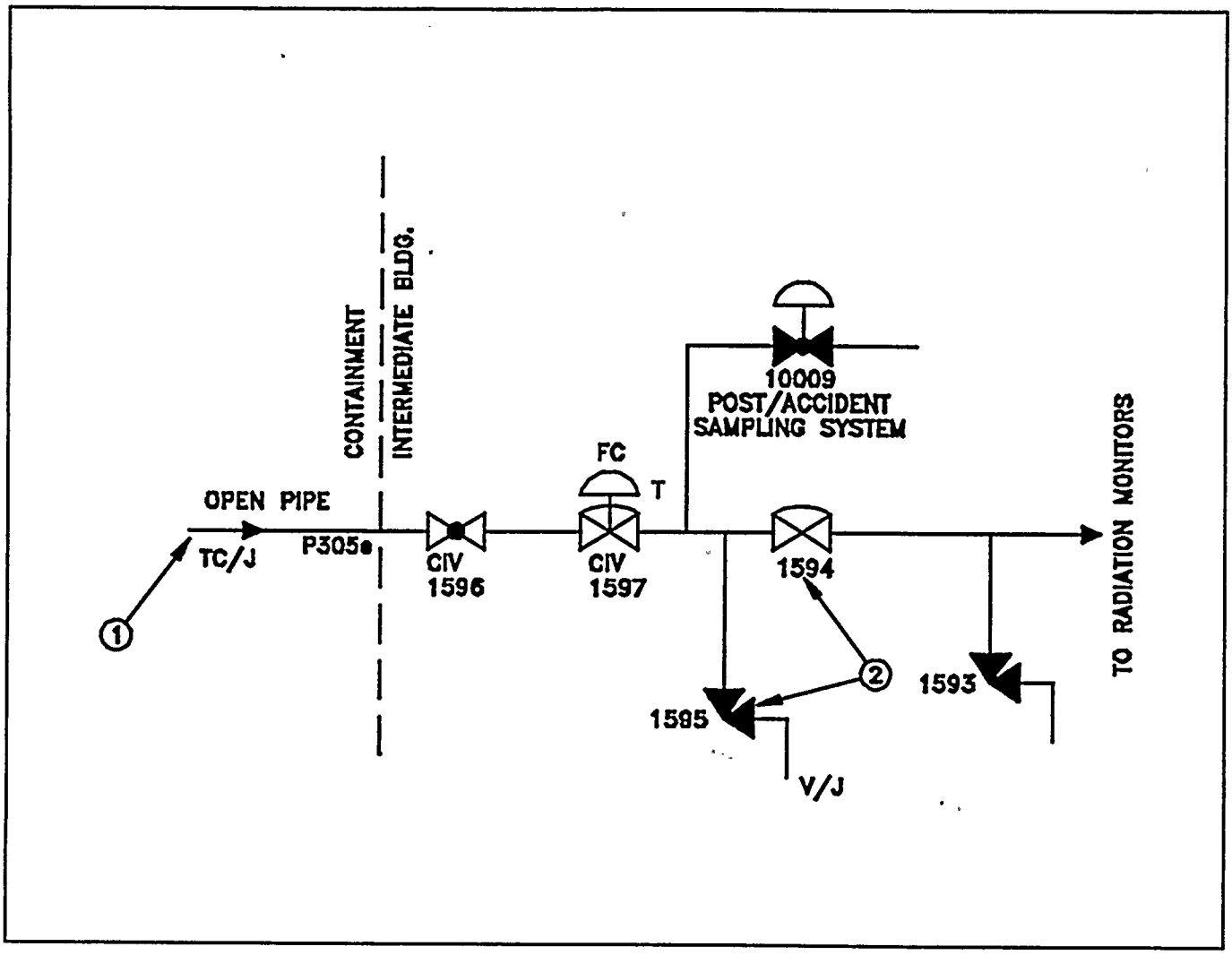


| NOTE | DESCRIPTION |
|---|---|
| - | Containment Mid Floor ("A" Recirc Fan Area) |
| - | Intermediate Bldg (TDAFW Pump Area) |
| (1) | LRM should be located in Containment Mid Floor near "A" Recirc Fan. |
| (2) | Located on Main Steam Header Floor |
| | |

ROCHESTER GAS AND ELECTRIC CORPORATION
R. E. GINNA NUCLEAR POWER PLANT
UPDATED FINAL SAFETY ANALYSIS REPORT

Figure 6.2-63

Containment Air Sample Outlet Penetration 305e

# FIRE SERVICE WATER
# PENETRATION 307

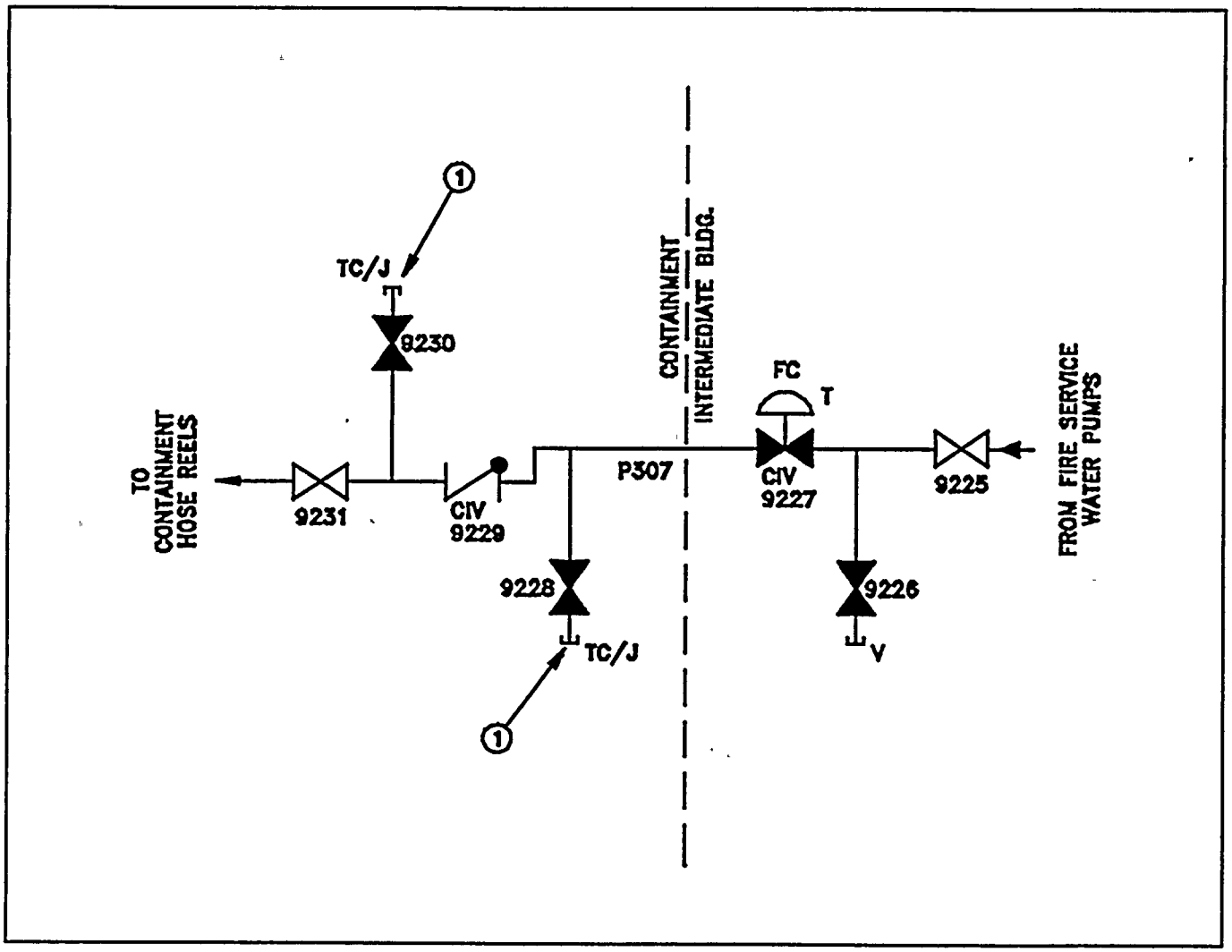


| NOTE | DESCRIPTION |
|---|---|
| - | Containment Mid Floor ("A" Fan Area) |
| - | Intermediate Bldg (TDAFWP Area) |
| (1) | LRM should be located in Containment Mid Floor "A" Fan Area |
| | |
| | |

ROCHESTER GAS AND ELECTRIC CORPORATION
R. E. GINNA NUCLEAR POWER PLANT
UPDATED FINAL SAFETY ANALYSIS REPORT

Figure 6.2-64

Fire Service Water
Penetration 307

# SERVICE WATER FOR CONTAINMENT FAN COOLERS
# PENETRATIONS 308, 311, 312, 315, 316, 319, 320, 323

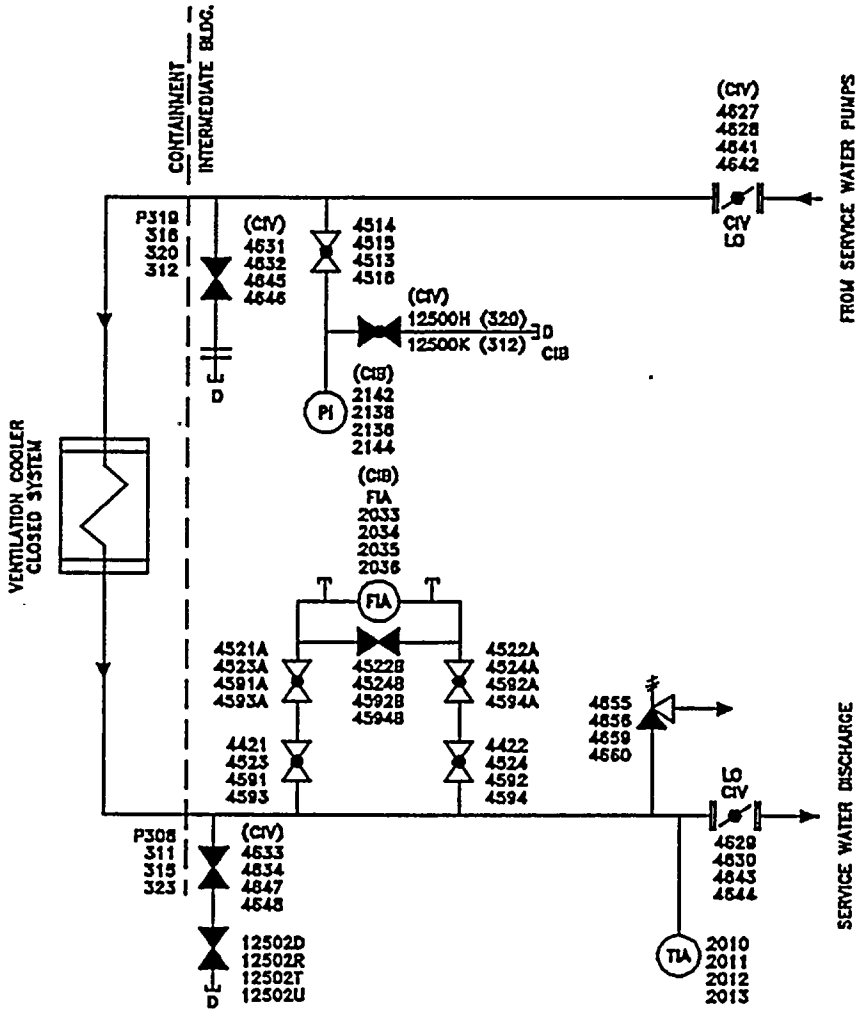


| ROCHESTER GAS AND ELECTRIC CORPORATION<br>R. E. GINNA NUCLEAR POWER PLANT<br>UPDATED FINAL SAFETY ANALYSIS REPORT |
|---|
| Figure 6.2-65<br>Service Water for Containment Fan Coolers, Penetrations 308, 311, 312, 315, 316, 319, 320, and 323 |

Isolation from 33013-1250-3, Revision 7

# MINI PURGE SUPPLY
# PENETRATION 309

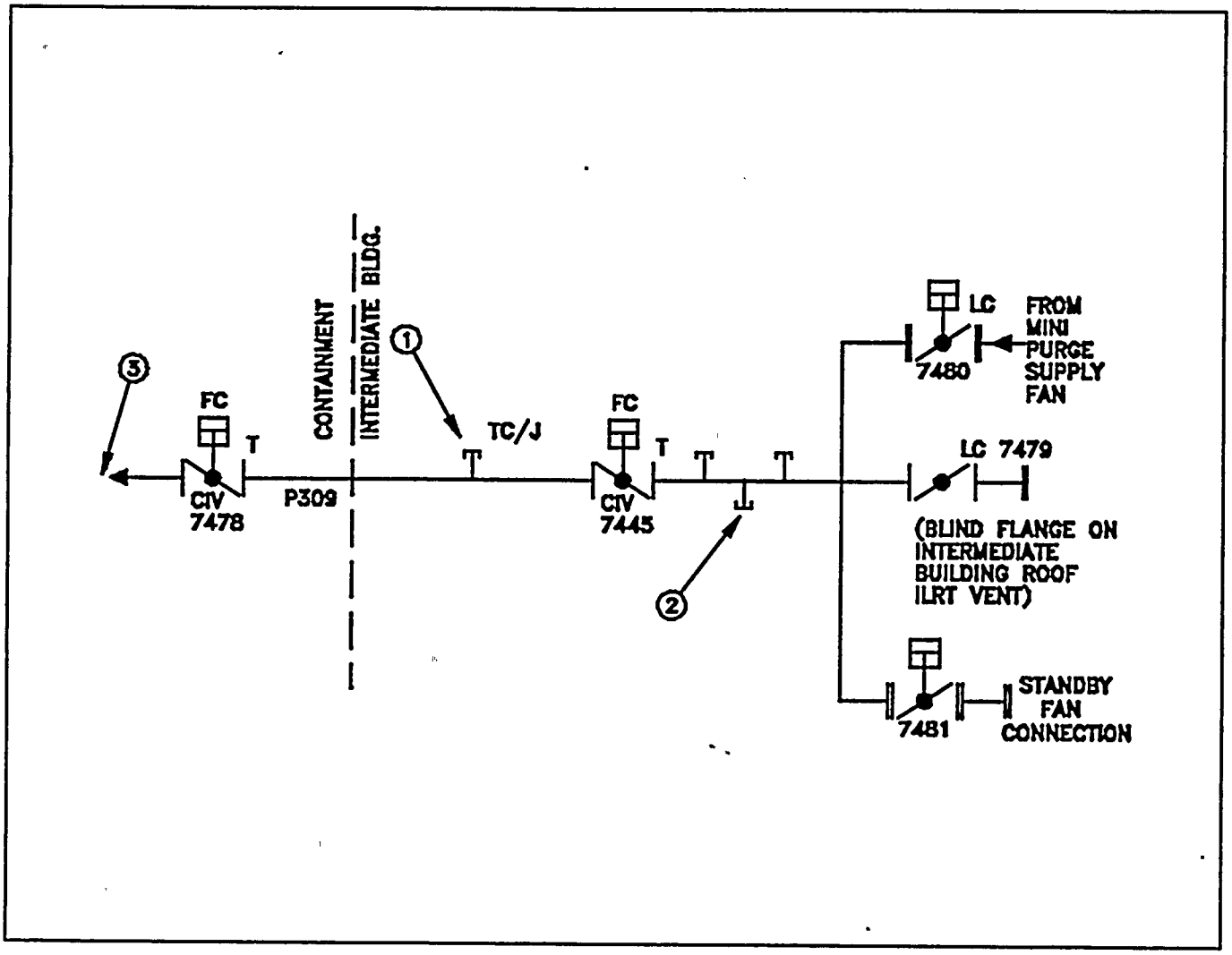


| NOTE | DESCRIPTION |
|---|---|
| - | Containment Mid Floor ("A" Recirc Fan Area) |
| - | Intermediate Bldg (TDAFW Pump Area) |
| (1) | LRM should be located in Intremediate Bldg near TDAFW Pump. |
| (2) | Located in Intermediate Bldg. above Steam Header |
| (3) | Open pipe with debris screen |

ROCHESTER GAS AND ELECTRIC CORPORATION
R. E. GINNA NUCLEAR POWER PLANT
UPDATED FINAL SAFETY ANALYSIS REPORT

Figure 6.2-66

Mini-Purge Supply
Penetration 309

# INSTRUMENT AIR PENETRATION 310a

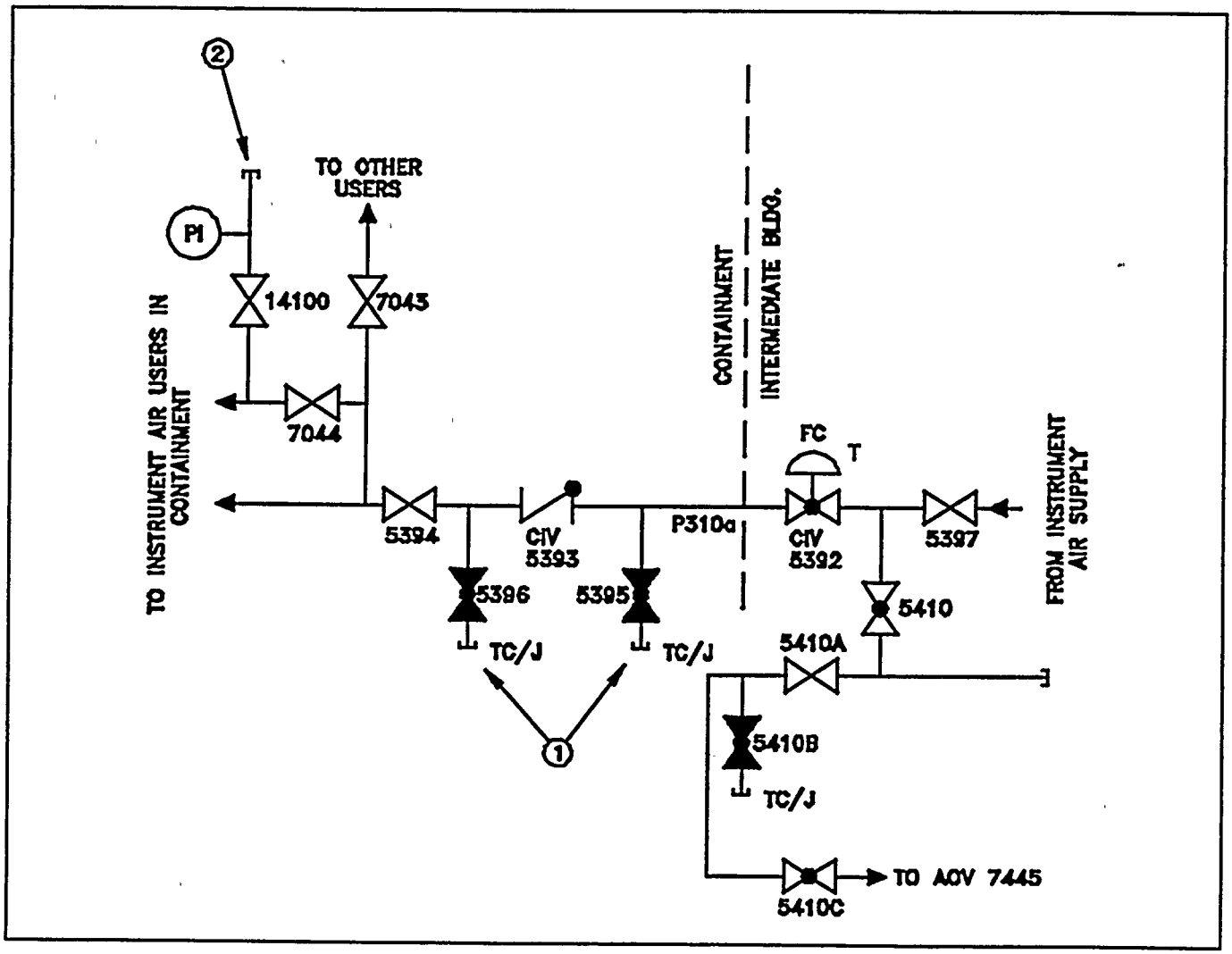


| NOTE | DESCRIPTION |
|---|---|
| - | Containment Mid Floor ("A" Fan Area) |
| - | Intermediate Bldg (TDAFWP Area) |
| (1) | LRM should be located in Containment Mid Floor "A" Fan Area |
| (2) | $N_2$ Bottle connection point |
| | |

ROCHESTER GAS AND ELECTRIC CORPORATION
R. E. GINNA NUCLEAR POWER PLANT
UPDATED FINAL SAFETY ANALYSIS REPORT

Figure 6.2-67

Instrument Air
Penetration 310a

# SERVICE AIR
# PENETRATION 310b

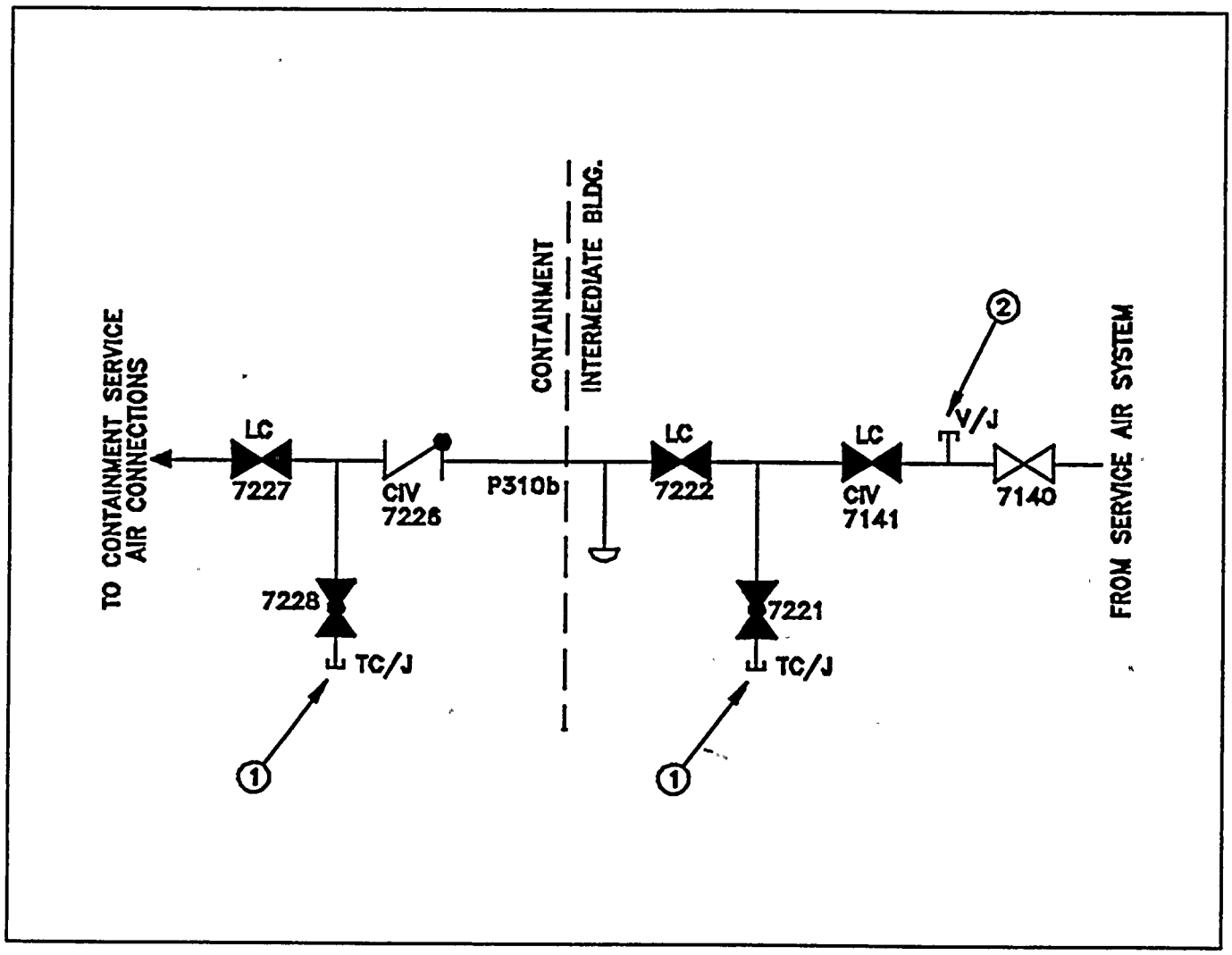


| NOTE | DESCRIPTION |
|---|---|
| - | Containment Mid Floor ("A" Fan Area) |
| - | Intermediate Bldg (TDAFW Pump Area) |
| (1) | LRM should be located in Containment Mid Floor near "A" Fan, and Intermediate Bldg near TDAFW Pump |
| (2) | Located approximately 10 ft above floor |
| | |

ROCHESTER GAS AND ELECTRIC CORPORATION
R. E. GINNA NUCLEAR POWER PLANT
UPDATED FINAL SAFETY ANALYSIS REPORT

Figure 6.2-68

Service Air
Penetration 310b

# LEAKAGE TEST DEPRESSURIZATION
# PENETRATION 313

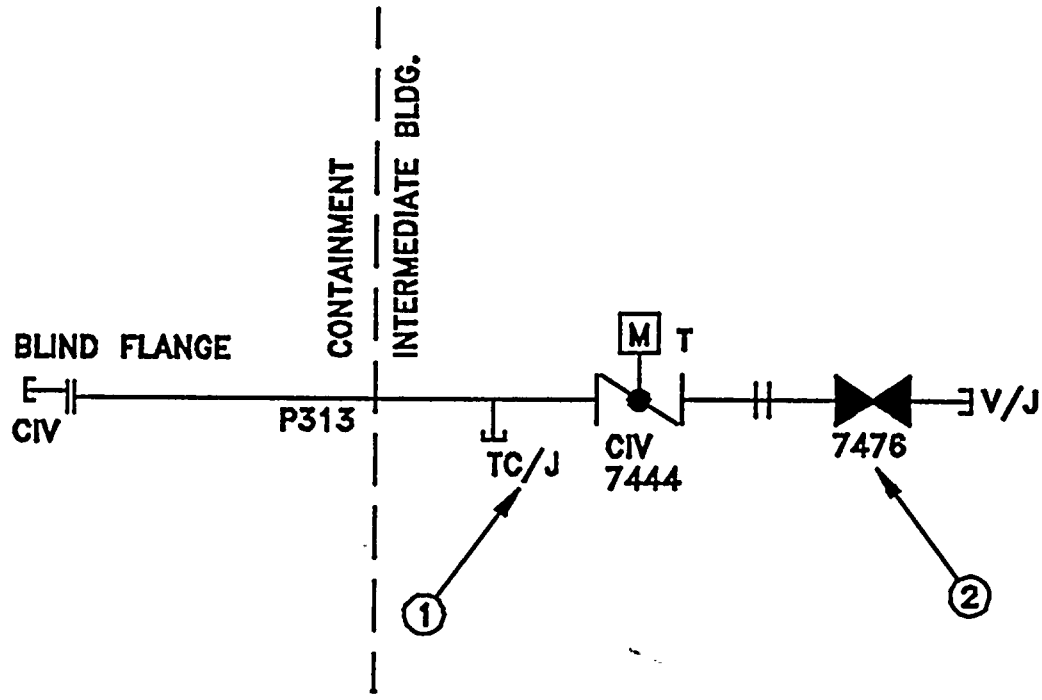


| NOTE | DESCRIPTION |
|---|---|
| - | Containment Mid Floor ("A" Recirc Fan Area) |
| - | Intermediate Bldg. (TDAFWP Area) |
| (1) | LRM should be located in Intermediate Bldg. near TDAFWP |
| (2) | Intermediate Bldg. Roof adjacent to CNMT Dome platform Door 54, Cap removal/replace should be done when valve is positioned. |
| | |

ROCHESTER GAS AND ELECTRIC CORPORATION
R. E. GINNA NUCLEAR POWER PLANT
UPDATED FINAL SAFETY ANALYSIS REPORT

Figure 6.2-69

Leakage Test Depressurization
Penetration 313

# LEAKAGE TEST SUPPLY
# PENETRATION 317

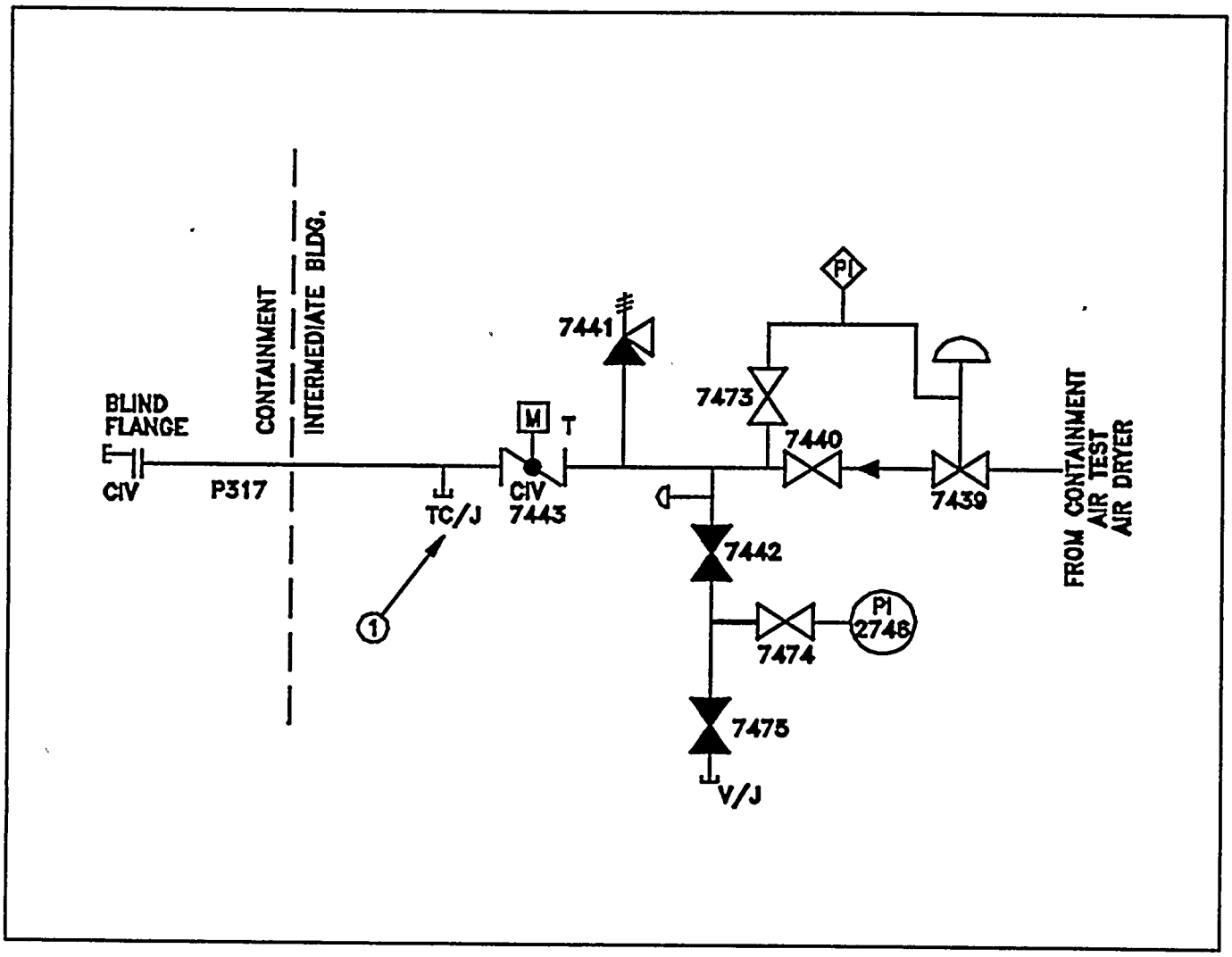


| NOTE | DESCRIPTION |
|---|---|
| - | Containment Mid Floor ("A" Recirc Fan Area) |
| - | Intermediate Bldg. (TDAFWP Area) |
| (1) | LRM should be located in Intermediate Bldg. near TDAFWP |
| | |
| | |

ROCHESTER GAS AND ELECTRIC CORPORATION
R. E. GINNA NUCLEAR POWER PLANT
UPDATED FINAL SAFETY ANALYSIS REPORT

Figure 6.2-70

Leakage Test Supply
Penetration 317

# "A" STEAM GENERATOR BLOWDOWN PENETRATION 321

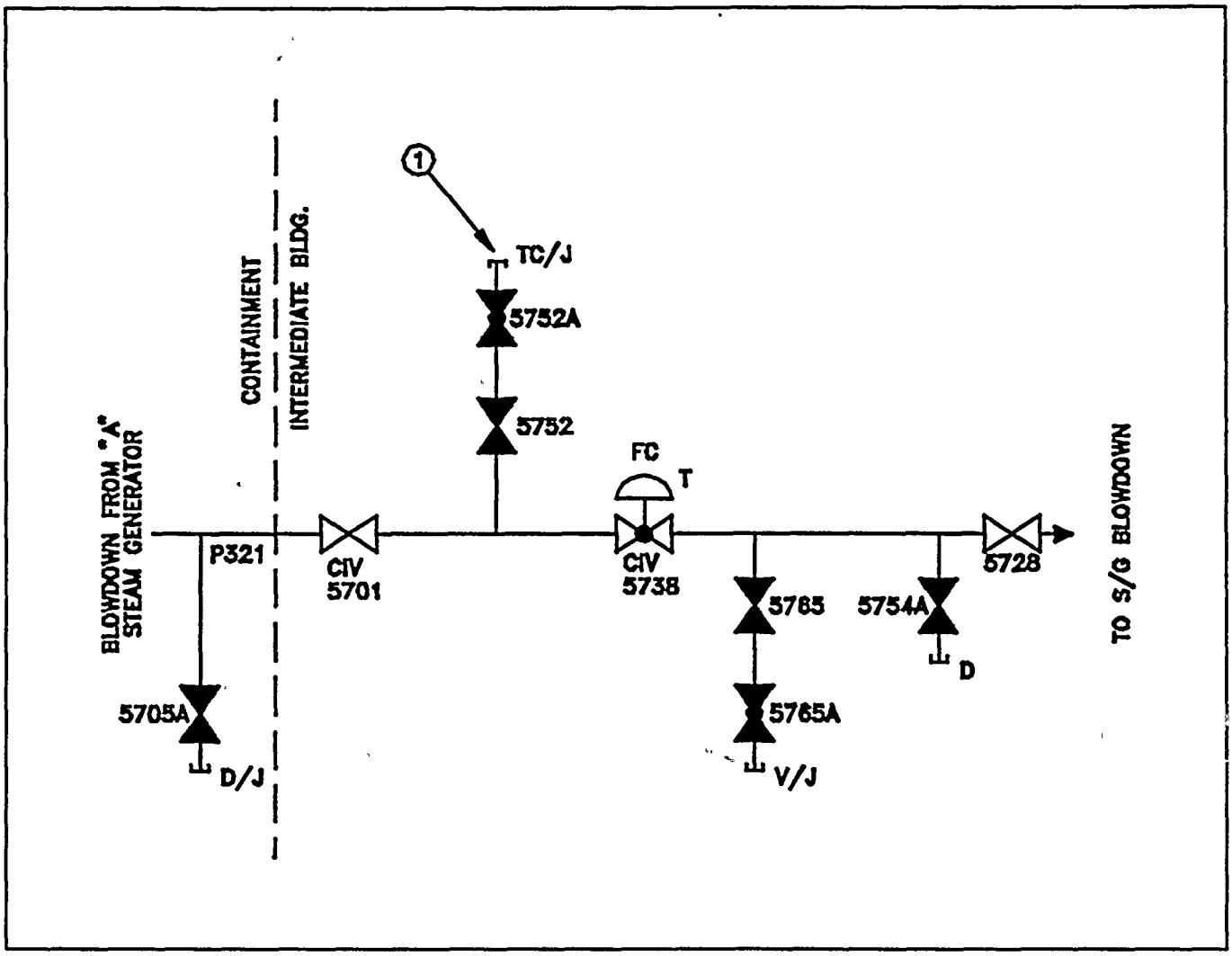


| NOTE | DESCRIPTION |
|---|---|
| - | Containment Mid Floor (above "A" Accumulator) |
| - | Intermediate Bldg (TDAFWP Area) |
| (1) | LRM should be located in Intermediate Bldg (TDAFWP Area) |
| | |
| | |

ROCHESTER GAS AND ELECTRIC CORPORATION
R. E. GINNA NUCLEAR POWER PLANT
UPDATED FINAL SAFETY ANALYSIS REPORT

Figure 6.2-71

Steam Generator A Blowdown Penetration 321

## "B" STEAM GENERATOR BLOWDOWN PENETRATION 322

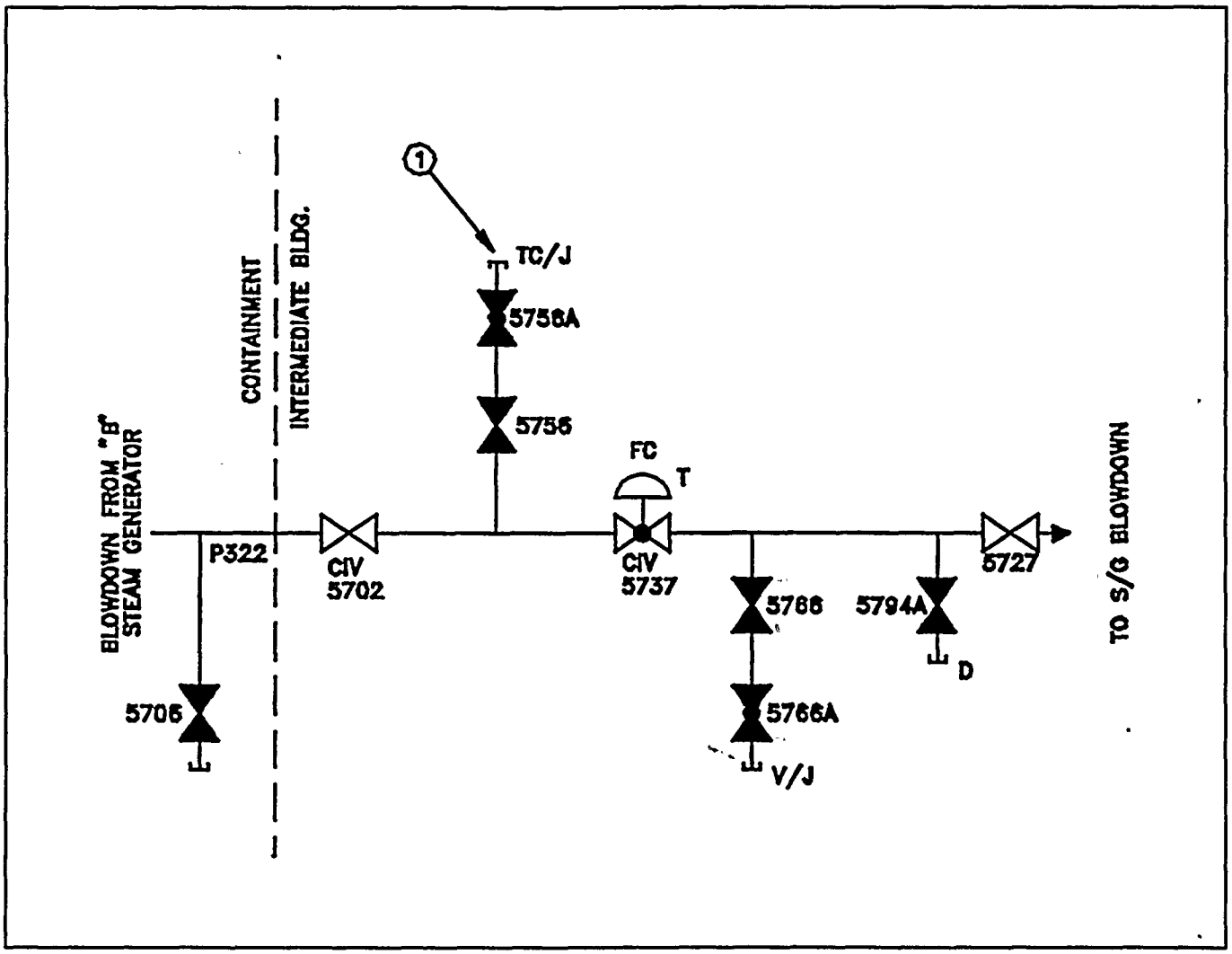


| NOTE | DESCRIPTION |
|---|---|
| - | Containment Mid Floor (above "A" Accumulator) |
| - | Intermediate Bldg (TDAFWP Area) |
| (1) | LRM should be located in Intermediate Bldg (TDAFWP Area) |
| | |
| | |

ROCHESTER GAS AND ELECTRIC CORPORATION
R. E. GINNA NUCLEAR POWER PLANT
UPDATED FINAL SAFETY ANALYSIS REPORT

Figure 6.2-72

Steam Generator B Blowdown Penetration 322

# DEMINERALIZED WATER PENETRATION 324

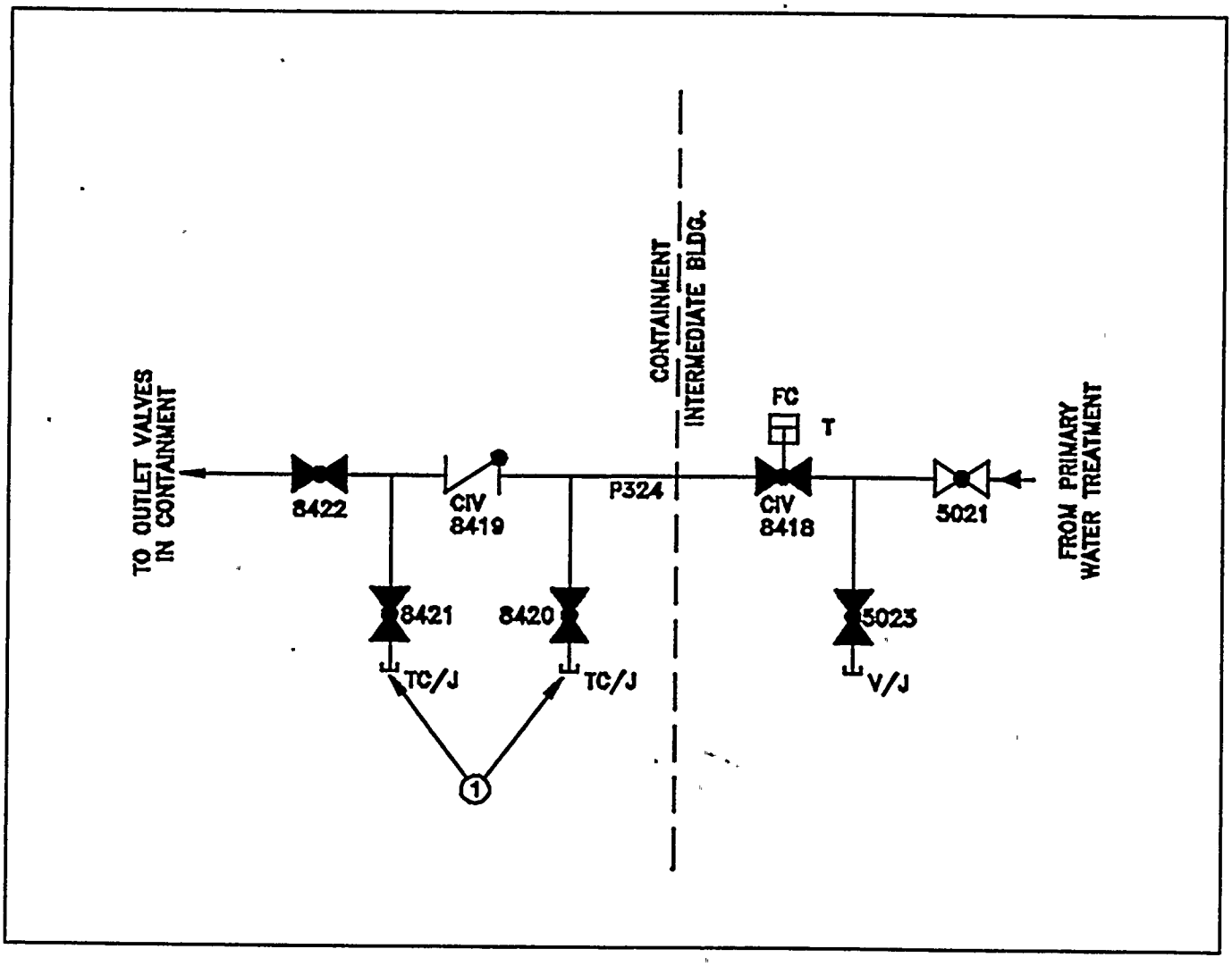


| NOTE | DESCRIPTION |
|---|---|
| - | Containment Mid Floor ("A" Fan Area) |
| - | Intermediate Bldg (TDAFWP Area) |
| (1) | LRM should be located in Containment Mid Floor "A" Fan Area |
| | |
| | |

ROCHESTER GAS AND ELECTRIC CORPORATION
R. E. GINNA NUCLEAR POWER PLANT
UPDATED FINAL SAFETY ANALYSIS REPORT

Figure 6.2-73

Demineralized Water Penetration 324

# CONTAINMENT $H_2$ MONITORS
# PENETRATION 332a, 332b and 332d

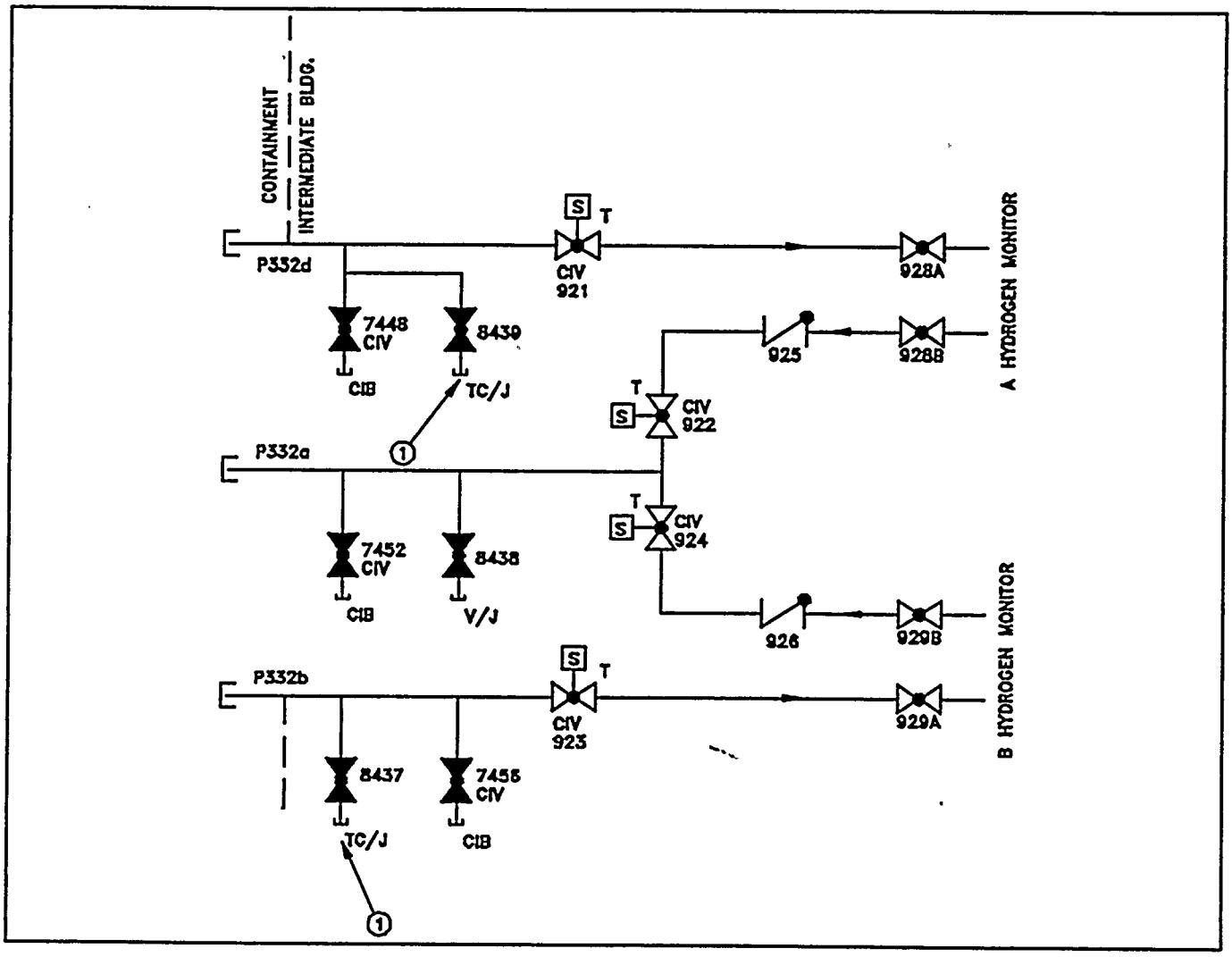


| NOTE | DESCRIPTION |
|---|---|
| - | Containment Mid Floor ("A" Recirc Fan Area) |
| - | Intermediate Bldg (TDAFW Pump Area) |
| (1) | LRM should be located in Intermediate Bldg TDAFW Pump Area |
| | |
| | |

ROCHESTER GAS AND ELECTRIC CORPORATION
R. E. GINNA NUCLEAR POWER PLANT
UPDATED FINAL SAFETY ANALYSIS REPORT

Figure 6.2-74
Containment $H_2$ Monitors
Penetrations 332a, 332b, and 332d

# CONTAINMENT PRESSURE TRANSMITTERS PT-944, PT-949, AND PT-950 PENETRATION 332c

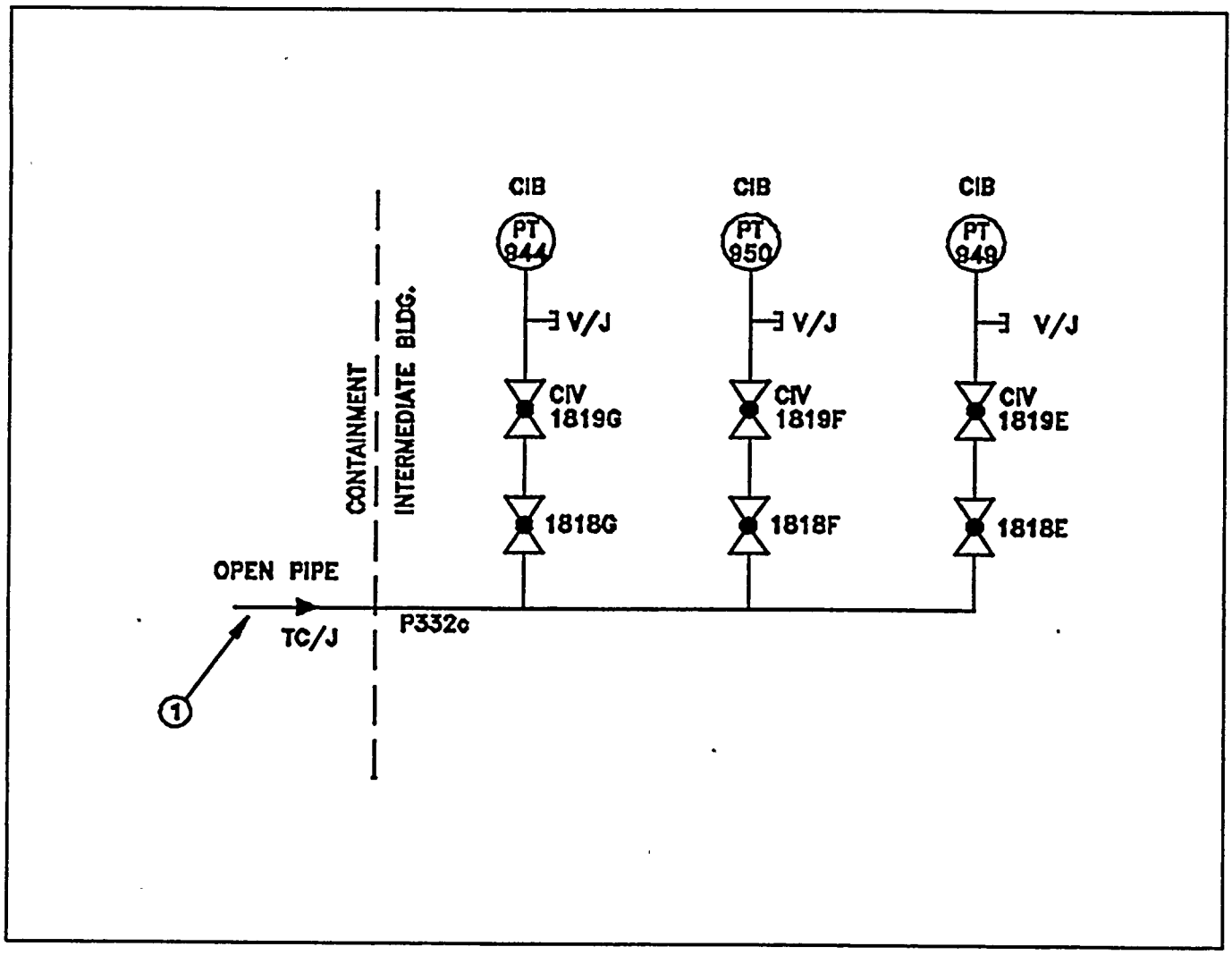


| NOTE | DESCRIPTION |
|---|---|
| - | Containment Mid Floor ("A" Recirc Fan Area) |
| - | Intermediate Bldg. (TDAFWP Area) |
| (1) | LRM should be located in Containment Mid Floor near "A" Recirc Fan |
| | |
| | |

ROCHESTER GAS AND ELECTRIC CORPORATION
R. E. GINNA NUCLEAR POWER PLANT
UPDATED FINAL SAFETY ANALYSIS REPORT

Figure 6.2-75

Containment Pressure Transmitters PT-944, PT-949, and PT-950 Penetration 332c

# MAIN STEAM FROM STEAM GENERATOR A
# PENETRATION 401

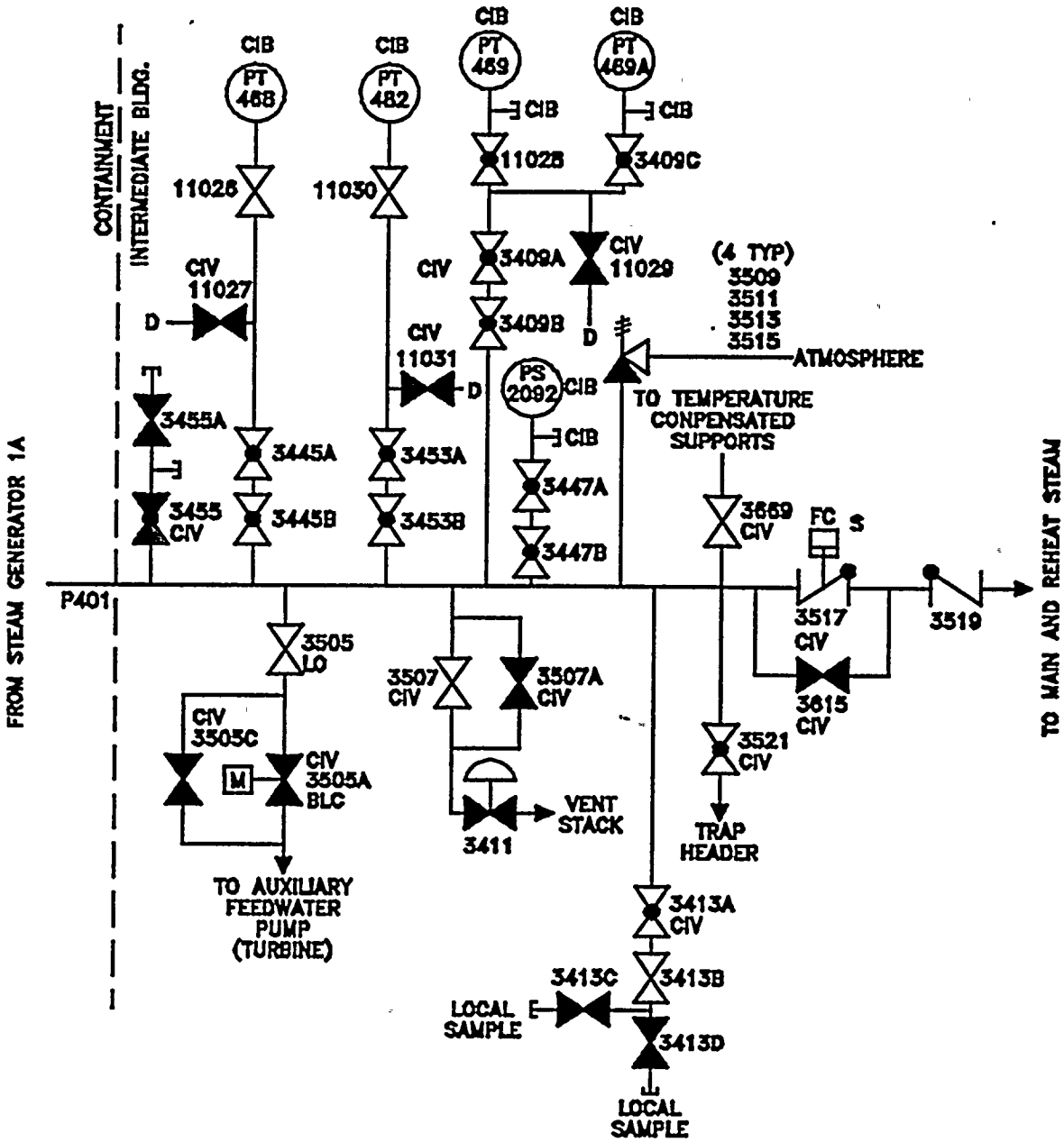


| ROCHESTER GAS AND ELECTRIC CORPORATION<br>R. E. GINNA NUCLEAR POWER PLANT<br>UPDATED FINAL SAFETY ANALYSIS REPORT |
|---|
| Figure 6.2-76<br>Main Steam from Steam Generator A<br>Penetration 401 |

Isolation from 33013-1231, Revision 19

# MAIN STEAM FROM STEAM GENERATOR B
# PENETRATION 402

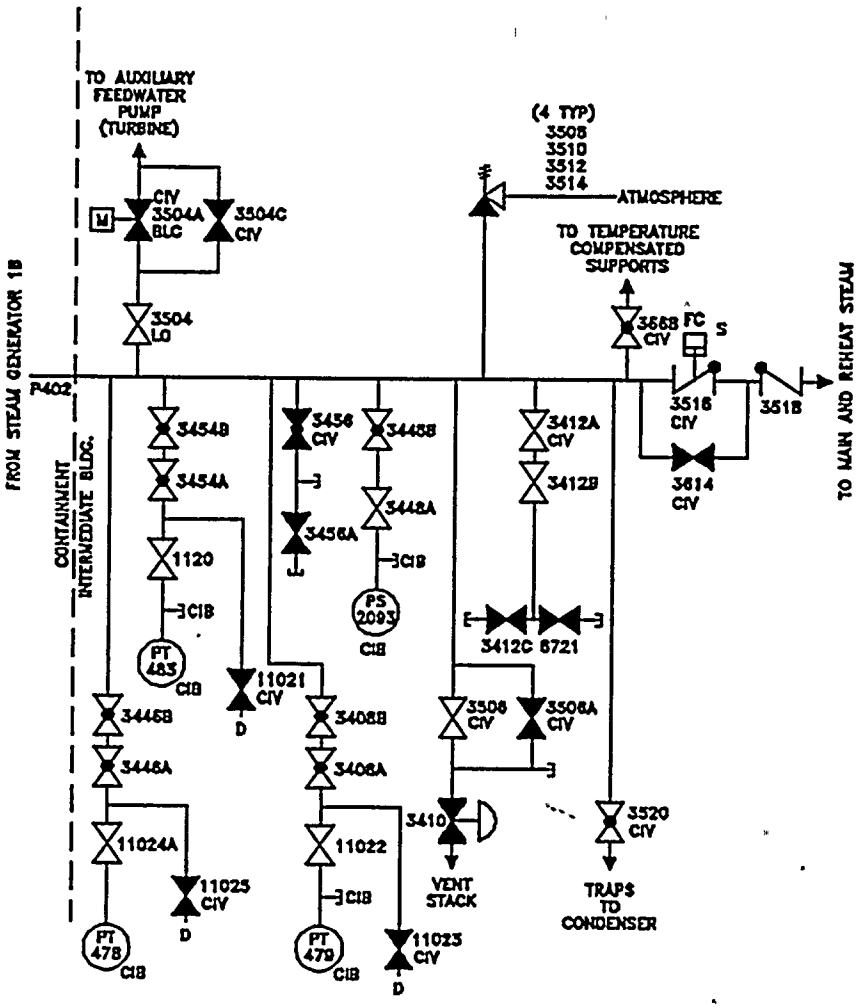


| ROCHESTER GAS AND ELECTRIC CORPORATION<br>R. E. GINNA NUCLEAR POWER PLANT<br>UPDATED FINAL SAFETY ANALYSIS REPORT |
|---|
| Figure 6.2-77<br>Main Steam from Steam Generator B<br>Penetration 402 |

Isolation from 33013-1231, Revision 19

# MAIN AND AUXILIARY FEEDWATER TO STEAM GENERATORS A AND B PENETRATIONS 403 AND 404

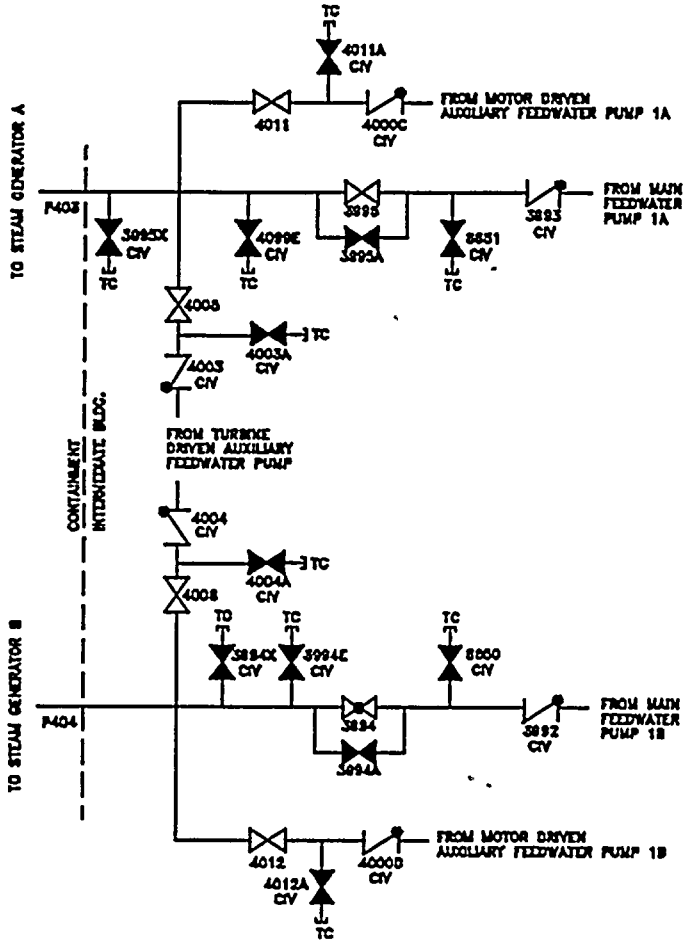


| ROCHESTER GAS AND ELECTRIC CORPORATION<br>R. E. GINNA NUCLEAR POWER PLANT<br>UPDATED FINAL SAFETY ANALYSIS REPORT |
|---|
| Figure 6.2-78<br>Main and Auxiliary Feedwater to Steam Generators A and B Penetrations 403 and 404 |

Isolation from 33013-1236-2, Revision 5 and 33013-1237, Revision 25

# ATTACHMENT F

## Table of Technical Specification Changes

| Technical Specification Changes | | |
|---|---|---|
| # | Changes | Effect |
| 1. | Removed reference to Table 3.6-1 from Technical Specifications 3.6.3.1, 4.4.5.1, and 4.4.6.2. Added statement to Bases for Technical Specification 3.6 that containment isolation boundaries are listed in UFSAR Table 6.2-15. | No technical change. Specifications are now consistent with Generic Letter 91-08. |
| 2. | Removed Table 3.6-1 from Technical Specifications and placed information in UFSAR Table 6.2-15. | Valve listing remains in a licensee controlled document under 10 CFR 50.59 program. |
| 3. | Revised action statement of Technical Specification 3.6.3.1. | Specification now considers closed systems as an acceptable interim passive boundary and is more consistent with Standard Technical Specifications. |
| 4. | Removed definition of leakage inoperability from Technical Specification 3.6.3.1. | Definition is found in Technical Specification 4.4.2.2. Eliminated redundant discussion of leakage acceptance criteria. |
| 5. | Added statement related to intermittent operation of boundaries to both Technical Specification 3.6.1 and the bases. | No technical change. Specification now consistent with Generic letter 91-08. |
| 6. | Removed note associated with Technical Specification 3.6.5. | Mini-purge valves have been installed so specification is considered effective. No technical change. |
| 7. | Added definition of "isolation boundary" to Bases for Technical Specification 3.6. | No technical change. Clarification of "isolation boundary" provides consistency with UFSAR Table 6.2-15. |
| 8. | Updated reference list contained in Bases for Technical Specifications 3.6, 3.8, and 4.4. | No technical change. |

| Technical Specification Changes | | |
|---|---|---|
| # | Changes | Effect |
| 9. | Revised action statement of Technical Specification 3.8.1 section a. | Clarification only. Specification now consistent with Standard Technical Specifications. |
| 10. | Revised action statement of Technical Specification 3.8.3. | No technical change. Specification now specifically addresses affected containment penetrations. |
| 11. | Revised bases for Technical Specification 3.8. | No technical change. Bases are now consistent with Standard Technical Specifications and support changes to 3.8.1 section a and 3.8.3. |
| 12. | Added "Pt" and necessary definitions to Technical Specification 4.4.1.4 section a. | Addition of "Pt" definition provides clarification of testing type consistent with 10 CFR 50, Appendix J. All terms in 4.4.1.4, section a are now fully defined. No technical change. |
| 13. | Added to the definition of "Lt" in Technical Specification 4.4.1.4 section b. | Addition of "Lt" definition provides clarification consistent with 10 CFR 50, Appendix J. All terms in 4.4.1.4, section b are now fully defined. No technical change. |
| 14. | Added definition of "Pa" and "Lam" to Technical Specification 4.4.1.4. | Addition of "Pa" and "Lam" provides clarification consistent with 10 CFR 50, Appendix J. All terms in 4.4.1.4 now fully defined. No technical change. |
| 15. | Added steam generator inspection/maintenance penetration to Technical Specification 4.4.1.5 section a (ii). | Addition of this penetration provides testing criteria similar to the equipment hatch and containment air locks. |
| 16. | Revised first line of Technical Specification 4.4.1.5, section a (ii). | Minor clarification only. No technical change. |

| Technical Specification Changes | | |
|---|---|---|
| # | Changes | Effect |
| 17. | Revised acceptance criteria provided in Technical Specification 4.4.2.2 | Clarification only. No technical change. |
| 18. | Replaced "isolation valve" with "isolation boundary" in Technical Specification 4.4.2.3 and the Bases for section 4.4. | Minor clarification only. Specification and bases are now consistent with the revised Technical Specification 3.6.3. |
| 19. | Removed notes associated with Technical Specification 4.4.2.4 section a. Also, deleted reference to section d. | Mini-purge valves have been installed so specification is considered effective. Section d will be removed from Technical Specifications with this amendment. |
| 20. | Added steam generator inspection/maintenance penetration to Technical Specification 4.4.2.4 section b. | Addition of this penetration provides testing criteria similar to the equipment hatch and containment air locks. |
| 21. | Removed Technical Specification 4.4.2.4 section d and associated note. | Blind flanges have been installed so specification is considered effective. No technical change. |
| 22. | Revised statement for Technical Specification 4.4.5.1. | Specification now consistent with Standard Technical Specifications. |
| 23. | Revised statement for Technical Specification 4.4.6.2. | Specification now consistent with Standard Technical Specifications. |

## 3.6 Containment System

Applicability:

Applies to the integrity of reactor containment.

Objective:

To define the operating status of the reactor containment for plant operation.

Specification:

### 3.6.1 Containment Integrity

a. Except as allowed by 3.6.3, containment integrity shall not be violated unless the reactor is in the cold shutdown condition. Closed valves may be opened on an intermittent basis under administrative control.

b. The containment integrity shall not be violated when the reactor vessel head is removed unless the boron concentration is greater than 2000 ppm.

c. Positive reactivity changes shall not be made by rod drive motion or boron dilution whenever the containment integrity is not intact unless the boron concentration is greater than 2000 ppm.

### 3.6.2 Internal Pressure

If the internal pressure exceeds 1 psig or the internal vacuum exceeds 2.0 psig, the condition shall be corrected within 24 hours or the reactor rendered subcritical.

3.6.3 Containment Isolation ~~Valves~~ Boundaries

3.6.3.1 With ~~one or more of the isolation valve(s) specified in Table 3.6-1 inoperable, maintain at least one isolation boundary operable in each affected penetration that is open and~~ a containment isolation boundary inoperable for one or more containment penetrations, either:

a. Restore ~~the~~ each inoperable ~~valve(s)~~ boundary to ~~operable~~ OPERABLE status within 4 hours, or

b. Isolate each affected penetration within 4 hours by use of at least one deactivated automatic valve secured in the isolation position, one closed manual valve, or a blind flange, or

c. ~~Isolate each affected penetration within 4 hours by use of at least one closed manual valve or blind flange,~~ Verify the operability of a closed system for the affected penetrations within 4 hours and either restore the inoperable boundary to OPERABLE status or isolate the penetration as provided in 3.6.3.1.b within 30 days, or

d. Be in at least hot shutdown within the next 6 hours and in cold shutdown within the following 30 hours.

~~Isolation valves are inoperable from a leakage standpoint if the leakage is greater than that allowed by 10 CFR 50 Appendix J.~~

3.6.4 Combustible Gas Control

3.6.4.1 When the reactor is critical, at least two independent containment hydrogen monitors shall be operable. One of the monitors may be the Post Accident Sampling System.

3.6.4.2 With only one hydrogen monitor operable, restore a second monitor to operable status within 30 days or be in at least hot shutdown within the next 6 hours.

3.6.4.3 With no hydrogen monitors operable, restore at least one monitor to operable status within 72 hours or be at least hot shutdown within the next 6 hours.

3.6.5 Containment Mini-Purge

Whenever the containment integrity is required, emphasis will be placed on limiting all purging and venting times to as low as achievable. The mini-purge isolation valves will remain closed to the maximum extent practicable but may be open for pressure control, for ALARA, for respirable air quality considerations for personnel entry, for surveillance tests that may require the valve to be open or other safety related reasons.

~~* Becomes effective upon installation of containment mini-purge valves~~

Basis:

The reactor coolant system conditions of cold shutdown assure that no steam will be formed and hence there would be no pressure buildup in the containment if the reactor coolant system ruptures.

The shutdown margins are selected based on the type of activities that are being carried out. The (2000 ppm) boron concentration provides shutdown margin which precludes criticality under any circumstances. When the reactor head is not to be removed, a cold shutdown margin of 1%$\Delta k/k$ precludes criticality in any occurrence.

Regarding internal pressure limitations, the containment design pressure of 60 psig would not be exceeded if the internal pressure before a major steam break accident were as much as 1 psig.[1] The containment is designed to withstand an internal vacuum of 2.5 psig.[2] The 2.0 psig vacuum is specified as an operating limit to avoid any difficulties with motor cooling.

In order to minimize containment leakage during a design basis accident involving a significant fission product release, penetrations not required for accident mitigation are provided with isolation boundaries. These isolation boundaries consist of either passive devices or active automatic valves and are listed in UFSAR Table 6.2-15. Closed manual valves, deactivated automatic valves secured in their closed position (including check valves with flow through the valve secured), blind flanges and closed systems are considered passive devices. Automatic isolation valves designed to close following an accident without operator action, are considered active devices. Two isolation devices are provided for each mechanical penetration, such that no single credible failure or malfunction of an active component can cause a loss of isolation, or result in a leakage rate that exceeds limits assumed in the safety analyses.

In the event that one isolation boundary is inoperable, the affected penetration must be isolated with at least one boundary that is not affected by a single active failure. Isolation boundaries that meet this criterion are a closed and deactivated automatic containment isolation valve, a closed manual valve, or a blind flange. A closed system also meets this criterion, however, a 30 day period to either fix the inoperable boundary or provide additional isolation is conservatively applied. Verification of the operability of the closed system can be accomplished through normal system operation, containment leakage detection systems, surveillance testing, or normal operator walkdowns.

The opening of closed containment isolation valves on an intermittent basis under administrative control includes the following considerations: (1) stationing an individual qualified in accordance with station procedures, who is in constant communication with the control room, at the valve controls, (2) instructing this individual to close these valves in an accident situation, and (3) assuring that environmental conditions will not preclude access to isolate the boundary and that this action will prevent the release of radioactivity outside the containment.

References:

(1) Westinghouse Analysis, "Report for the BAST Concentration Reduction for R. E. Ginna", August 1985, submitted via application for Amendment to the Operating License in a letter from R.W. Kober, RG&E, to H.A. Denton, NRC, dated October 16, 1985

(2) UFSAR - Section 6.2.1.4

(3) UFSAR Table 6.2-15

3.8 REFUELING

Applicability

Applies to operating limitations during refueling operations.

Objective

To ensure that no incident could occur during refueling operations that would affect public health and safety

Specification

3.8.1 During refueling operations the following conditions shall be satisfied.

a. ~~The equipment door, or a closure plate that restricts air flow from containment, and at least one personnel door in the equipment door or closure plate and in the personnel air lock shall be properly closed. In addition, all automatic containment isolation valves shall be operable or at least one valve in each line shall be locked closed. The 48 inch shutdown purge valves must also be operable or closed or the associated flange must be installed.~~

Containment penetrations shall be in the following status:

i. The equipment hatch shall be in place with at least one access door closed, or the closure plate that restricts air flow from containment shall be in place,

ii. At least one access door in the personnel air lock shall be closed, and

iii. Each penetration providing direct access from the containment atmosphere to the outside atmosphere shall be either:

1. Closed by an isolation valve, blind flange, or manual valve, or

2. Be capable of being closed by an OPERABLE automatic Shutdown Purge or Mini Purge valve.

b. Radiation levels in the containment shall be monitored continuously.

c. Core subcritical neutron flux shall be continuously monitored by at least two source range neutron monitors, each with continuous visual indication in the control room and one with audible indication in the containment and control room available whenever core geometry is being changed. When core geometry is not being changed at

flange. If this condition is not met, all operations involving movement of fuel or control rods in the reactor vessel shall be suspended.

3.8.2 If any of the specified limiting conditions for refueling is not met, refueling of the reactor shall cease; work shall be initiated to correct the violated conditions so that the specified limits are met; no operations which may increase the reactivity of the core shall be made.

3.8.3 If the conditions of 3.8.1.d are not met, then in addition to the requirements of 3.8.2, ~~close all containment penetrations providing direct access from the containment atmosphere to the outside atmosphere~~ isolate the Shutdown Purge and Mini Purge penetrations within 4 hours.

Basis:

The equipment and general procedures to be utilized during refueling are discussed in the UFSAR. Detailed instructions, the above specified precautions, and the design of the fuel handling equipment incorporating built-in interlocks and safety features, provide assurance that no incident could occur during the refueling operations that would result in a hazard

provided on the lifting hoist to prevent movement of more than one fuel assembly at a time. The spent fuel transfer mechanism can accommodate only one fuel assembly at a time. In addition, interlocks on the auxiliary building crane will prevent the trolley from being moved over stored racks containing spent fuel.

The operability requirements for residual heat removal loops will ensure adequate heat removal while in the refueling mode. The requirement for 23 feet of water above the reactor vessel flange while handling fuel and fuel components in containment is consistent with the assumptions of the fuel handling accident analysis.

The analysis[4][3] for a fuel handling accident inside containment establishes acceptable offsite limiting doses following rupture of all rods of an assembly operated at peak power. No credit is taken for containment isolation or effluent filtration prior to release. Requiring closure of ~~the containment openings and~~ penetrations which provide direct access from containment atmosphere to the outside atmosphere establishes additional margin for the fuel handling accident and establishes a seismic envelope to protect against seismic events during refueling. Isolation of these penetrations may be achieved by an OPERABLE shutdown purge or mini-purge valve, blind flange, or isolation valve. An OPERABLE shutdown purge or mini-purge valve is capable of being automatically isolated by R11 or R12. Penetrations which do not provide direct access from containment atmosphere to the outside atmosphere support containment integrity by either a closed system within containment, necessary isolation valves, or a material which can provide a temporary ventilation barrier, at atmospheric pressure, for the containment penetrations during fuel movement.

References

(1) ~~FSAR -- Section 9.5.2~~ UFSAR Sections 9.1.4.4 and 9.1.4.5

(2) Reload Transient Safety Report, Cycle 14

(3) ~~FSAR -- Section 9.3.1~~ UFSAR Section 15.7.3.3

~~(4) Updated Final Safety Analysis Report, Section 15.7~~

4.4.1.4 Acceptance Criteria

a. The leakage rate Ltm shall be ~~less than~~ <0.75 Lt at Pt. Pt is defined as the containment vessel reduced test pressure which is greater than or equal to 35 psig. Ltm is defined as the total measured containment leakage rate at pressure Pt. Lt is defined as the maximum allowable leakage rate at pressure Pt.

b. Lt shall be determined as $Lt = La\left(\frac{Pt}{Pa}\right)^{1/2}$ which equals .1528 percent weight per day at 35 psig. Pa is defined as the calculated peak containment internal pressure related to design basis accidents which is greater than or equal to 60 psig. La is defined as the maximum allowable leakage rate at Pa which equals .2 percent weight per day.

c. The leakage rate at Pa (Lam) shall be <0.75 La. Lam is defined as the total measured containment leakage rate at pressure Pa.

4.4.1.5 Test Frequency

a. A set of three integrated leak rate tests shall be performed at approximately equal intervals during each 10-year service period. The third test of each set shall be conducted in the final year of the 10-year service period or one year before or after the final year of the 10-year service period provided:

i. the interval between any two Type A tests does not exceed four years.

ii. following ~~one~~ each in-service inspection, the containment airlocks, the steam generator inspection/maintenance penetration, and the equipment hatch are leak tested prior to returning the plant to operation, and

iii. any repair, replacement, or modification of a containment barrier resulting from the inservice inspections shall be followed by the appropriate leakage test.

b. The local leakage rate shall be measured for each of the following components:

i. Containment penetrations that employ resilient seals, gaskets, or sealant compounds, piping penetrations with expansion bellows and electrical penetrations with flexible metal seal assemblies.

ii. Air lock and equipment door seals.

iii. Fuel transfer tube.

iv. Isolation valves on the testable fluid systems lines penetrating the containment.

v. Other containment components, which require leak repair in order to meet the acceptance criterion for any integrated leakage rate test.

4.4.2.2 Acceptance Criterion

~~The total leakage from all penetrations and isolation valves shall not exceed~~ Containment isolation boundaries are inoperable from a leakage standpoint when the demonstrated leakage of a single boundary or cumulative total leakage of all boundaries is greater than 0.60 La.

4.4.2.3 Corrective Action

a. If at any time it is determined that the total leakage from all penetrations and isolation ~~valves~~ boundaries exceeds 0.60 La, repairs shall be initiated immediately.

b. If repairs are not completed and conformance to the acceptance criterion of 4.4.2.2 is not demonstrated within 48 hours, the reactor shall be shutdown and depressurized until repairs are effected and the local leakage meets the acceptance criterion.

c. If it is determined that the leakage through a mini-purge supply and exhaust line is greater than 0.05 La an engineering evaluation shall be performed and plans for corrective action developed.

4.4.2.4 Test Frequency

a. Except as specified in b.~~,~~ and c.~~, and d.~~ below, individual penetrations and containment isolation valves shall be tested during each reactor shutdown for refueling, or other convenient intervals, but in no case at intervals greater than two years.~~ In addition, the four mini-purge isolation valves shall be tested at six month intervals.*~~

b. The containment equipment hatch, fuel transfer tube, steam generator inspection/maintenance penetration, and shutdown purge system flanges shall be tested at each refueling shutdown or after each use, if that be sooner.

~~* (This requirement is applicable for two years following isolation of the mini-purge system).~~

c. The containment air locks shall be tested at intervals of no more than six months by pressurizing the space between the air lock doors. In addition, following opening of the air lock door during the interval, a test shall be performed by pressurizing between the dual seals of each door opened, within 48 hours of the opening, unless the reactor was in the cold shutdown condition at the time of the opening or has been subsequently brought to the cold shutdown condition. A test shall also be performed by pressurizing between the dual seals of each door within 48 hours of leaving the cold shutdown condition, unless the doors have not been open since the last test performed either by pressurizing the space between the air lock doors or by pressurizing between the dual door seals.

~~d. Within 24 hours after each closing when containment integrity is required, except when being used for multiple cycles and then at least once per 72 hours, each containment purge isolation valve shall be tested to verify that when the measured leakage rate is added to the leakage rates determined for all other Type B and C penetrations, the combined leakage rate is less than or equal to 0.60 La.~~

~~* This paragraph may be deleted upon installation of the~~

~~containment shutdown purge system flanges.~~

the tendon containing 6 broken wires) shall be inspected. The accepted criterion then shall be no more than 4 broken wires in any of the additional 4 tendons. If this criterion is not satisfied, all of the tendons shall be inspected and if more than 5% of the total wires are broken, the reactor shall be shut down and depressurized.

4.4.4.2 Pre-Stress Confirmation Test

a. Lift-off tests shall be performed on the 14 tendons identified in 4.4.4.1a above, at the intervals specified in 4.4.4.1b. If the average stress in the 14 tendons checked is less than 144,000 psi (60% of ultimate stress), all tendons shall be checked for stress and retensioned, if necessary, to a stress of 144,000 psi.

b. Before reseating a tendon, additional stress (6%) shall be imposed to verify the ability of the tendon to sustain the added stress applied during accident conditions.

4.4.5 Containment Isolation Valves

4.4.5.1 Each containment isolation valve ~~specified in Table 3.6-1~~ shall be demonstrated to be ~~operable~~ OPERABLE in accordance with the Ginna Station Pump and Valve Test program submitted in accordance with 10 CFR 50.55a.

4.4.6 Containment Isolation Response

4.4.6.1 Each containment isolation instrumentation channel shall be demonstrated OPERABLE by the performance of the CHANNEL CHECK, CHANNEL CALIBRATION, and CHANNEL FUNCTIONAL TEST operations for the MODES and at the frequencies shown in Table 4.1-1.

4.4.6.2 The ~~RESPONSE TIME~~ response time of each ~~the~~ containment isolation valves~~, as listed in Table 3.6-1,~~ shall be demonstrated to be within ~~the~~ its limit at least once per 18 months. The response time includes only the valve travel time for ~~all valves which change position~~ those valves which the safety analysis assumptions take credit for a change in valve position in response to a containment isolation signal.

The Specification also allows for possible deterioration of the leakage rate between tests, by requiring that the total measured leakage rate be only 75% of the maximum allowable leakage rate.

The duration and methods for the integrated leakage rate test established by ANSI N45.4-1972 provide a minimum level of accuracy and allow for daily cyclic variation in temperature and thermal radiation. The frequency of the integrated leakage rate test is keyed to the refueling schedule for the reactor, because these tests can best be performed during refueling shutdowns. Refueling shutdowns are scheduled at approximately one year intervals.

The specified frequency of integrated leakage rate tests is based on three major considerations. First is the low probability of leaks in the liner, because of (a) the use of weld channels to test the leaktightness of the welds during erection, (b) conformance of the complete containment to a 0.1% per day leak rate at 60 psig during preoperational testing, and (c) absence of any significant stresses in the liner during reactor operation. Second is the more frequent testing, at the full accident pressure, of those portions of the containment envelope that are most likely to develop leaks during reactor operation (penetrations and isolation valves) and the low value (0.60 La) of the total leakage that is specified as acceptable ~~from penetrations and isolation valves~~. Third is the tendon stress surveillance program, which provides assurance than an important part of the structural integrity of the containment is maintained.

The basis for specification of a total leakage of 0.60 La from penetrations and isolation ~~valves~~ boundaries is that only a portion of the allowable integrated leakage rate should be from those sources in order to provide assurance that the integrated leakage rate would remain within the specified limits during the intervals between integrated leakage rate tests. Because most leakage during an integrated leak rate test occurs though penetrations and isolation valves, and because for most penetrations and isolation valves a smaller leakage rate would result from an integrated leak test than from a local test, adequate assurance of maintaining the integrated leakage rate within the specified limits is provided. The limiting leakage rates from the Recirculation Heat Removal Systems are judgement values based primarily on assuring that the components could operate without mechanical failure for a period on the order of 200 days after a design basis accident. The test

The pre-stress confirmation test provides a direct measure of the load-carrying capability of the tendon.

If the surveillance program indicates by extensive wire breakage or tendon stress relation that the pre-stressing tendons are not behaving as expected, the situation will be evaluated immediately. The specified acceptance criteria are such as to alert attention to the situation well before the tendon load-carrying capability would deteriorate to a point that failure during a design basis accident might be possible. Thus the cause of the incipient deterioration could be evaluated and corrective action studied without need to shut down the reactor. The containment is provided with two readily removable tendons that might be useful to such a study. In addition, there are 40 tendons, each containing a removable wire which will be used to monitor for possible corrosion effects.

Operability of the containment isolation ~~valves~~ boundaries ensures that the containment atmosphere will be isolated from the outside environment in the event of a release of radioactive material to the containment atmosphere or pressurization of the containment. Performance of cycling tests and verification of isolation times ~~are~~ associated with automatic containment isolation valves is covered by the Pump and Valve Test Program. Compliance with Appendix J to 10 CFR 50 is addressed under local leak testing requirements.

References:


(1) ~~FSAR Section 5.1.2.3~~ UFSAR Section 3.1.2.2.7

(2) ~~FSAR Section 5.1.2~~ UFSAR Section 6.2.6.1

(3) ~~FSAR Section 14.3.5~~ UFSAR Section 15.6.4.3

(4) ~~FSAR Table 6.2-8~~ UFSAR Section 6.3.3.8

(5) ~~FSAR Section 6.2.3~~ UFSAR Table 15.6-9

(6) FSAR Page 5.1.2-28

(7) North-American-Rockwell Report 550-x-32, Autonetics Reliability Handbook, February 1963.

(8) FSAR Page 5.1-28