ACCELERATED DISTRIBUTION DEMONSTRATION SYSTEM

REGULATORY INFORMATION DISTRIBUTION SYSTEM (RIDS)

ACCESSION NBR:9002220730 DOC.DATE: 90/02/08 NOTARIZED: NO DOCKET #
FACIL:50-244 Robert Emmet Ginna Nuclear Plant, Unit 1, Rochester G 05000244
AUTH.NAME AUTHOR AFFILIATION
* Rochester Gas & Electric Corp.
RECIP.NAME RECIPIENT AFFILIATION

PDV 3/6/90

SUBJECT: Revised emergency operating procedures,including Rev 9 to AP-CR.1,Rev 6 to AP-CCW.1 & Rev 8 to AP-CCW.2.

DISTRIBUTION CODE: A045D COPIES RECEIVED:LTR 1 ENCL 1 SIZE: 72
TITLE: OR Submittal: Emergency Preparedness Plans, Implement'g Procedures, C

NOTES:License Exp date in accordance with 10CFR2,2.109(9/19/72). 05000244

	RECIPIENT ID CODE/NAME	COPIES LTTR	COPIES ENCL	RECIPIENT ID CODE/NAME	COPIES LTTR	COPIES ENCL
	PD1-3 PD	1	1	JOHNSON,A	1	1
INTERNAL:	AEOD/DOA/IRB	1	1	NRR/DREP/PEPB9D	1	1
	NUDOCS-ABSTRACT	1	1	REG FILE 01	1	1
EXTERNAL:	LPDR	1	1	NRC PDR	1	1
	NSIC	1	1			

R I D S / A D D S

R I D S / A D D S

NOTE TO ALL "RIDS" RECIPIENTS:

PLEASE HELP US TO REDUCE WASTE! CONTACT THE DOCUMENT CONTROL DESK, ROOM P1-37 (EXT. 20079) TO ELIMINATE YOUR NAME FROM DISTRIBUTION LISTS FOR DOCUMENTS YOU DON'T NEED!

TOTAL NUMBER OF COPIES REQUIRED: LTTR 9 ENCL 9

mA/H

ROCHESTER GAS AND ELECTRIC CORPORATION • 89 EAST AVENUE, ROCHESTER, N.Y. 14649-0001

TELEPHONE
AREA CODE 716 546-2700

February 8, 1990

U. S. Nuclear Regulatory Commission
Document Control Desk
Attn: Mr. Allen Johnson
Project Directorate I-3
Washington, D. C. 20555

Subject: Emergency Operating Procedures
R. E. Ginna Nuclear Power Plant
Docket No. 50-244

Gentlemen:

As requested, enclosed are Ginna Station Emergency Operating Procedures.

Very truly yours,

Robert C. Mecredy
Division Manager
Nuclear Production

Enclosures

xc: USNRC, Region I (2 copies)
Resident Inspector, Ginna Station

Cat No P340957185

A045
1/1

ROCHESTER GAS AND ELECTRIC CORPORATION

GINNA STATION

CONTROLLED COPY NUMBER 23

TECHNICAL REVIEW

PORC REVIEW DATE 9-20-89

Joseph A. Widay
PLANT SUPERINTENDENT

9-27-89
EFFECTIVE DATE

QA X NON-QA ____ CATEGORY 1.0

REVIEWED BY: _____

GINNA STATION
START:
DATE _____
TIME _____
COMPLETED:
DATE _____
TIME: _____

Superceded per Rev. 9, AP-CR.1
Rev. 6 AP-CW.1, Rev. 8 AP-CW.2
50-244
2/8/90
9002200130

A. PURPOSE - This procedure provides the step necessary to place and maintain the plant in a Hot Shutdown Condition in the event that a control room evacuation is necessary.

B. ENTRY CONDITIONS/SYMPTOMS

1. SYMPTOMS - The symptoms of CONTROL ROOM INACCESSIBILITY are;

   a. Fire in the Control Room, or

   b. Smoke in the Control Room, or

   c. Noxious Fumes in the Control Room, or

   d. Intrusion

STEP	ACTION/EXPECTED RESPONSE	RESPONSE NOT OBTAINED
	NOTE: Steps 1 and 2 are immediate action steps.	
1	Verify Reactor Trip: o Reactor trip breakers - OPEN o MRPI indicates - ALL CONTROL AND SHUTDOWN RODS ON BOTTOM	Manual trip the reactor from the control board. IF the RX can NOT be tripped from the Control Room, THEN locally open the reactor trip breakers.
2	Verify Turbine Trip: o Stop valves - CLOSED	Manually trip turbine from MCB. IF turbine can NOT be tripped at the MCB, THEN locally trip turbine at trip lever on HP turbine.

STEP	ACTION/EXPECTED RESPONSE	RESPONSE NOT OBTAINED
3	Verify That Fire HAS NOT significantly damaged the MCB Control Circuits o MCB - NO FIRE OR FIRE UNDER CONTROL o Safety related controls and indications - NO SIGNIFICANT LOSS OF CONTROLS/INDICATION	Perform the following actions: a. Close both MSIVs. b. Trip both reactor coolant pumps. c. Close both PRZR relief vlv PCV-430 (431C). d. Proceed to the Appendix R locker, immediately outside the Control Room. e. Control Room Foreman and communicator proceed to TSC and refer to SC-100 for report requirements. f. Implement procedure SC-3.30.1 ALTERNATIVE SHUTDOWN FOR CONTROL COMPLEX FIRE. DO NOT continue in this procedure.
4	Establish Local Operating Stations - AS OUTLINED IN ATTACHMENT A	
5	Establish AFW To The Steam Generators:	
	a. Start - BOTH MOTOR DRIVEN AFW PUMPS	a. Start the TDAFW pump. Manually open TDAFW pump steam admission valves at the steam header MOV-3504A, MOV-3505A.
	b. Verify - BOTH PUMPS THROTTLE TO <230 GPM	b. Manually throttle AFW flow.

STEP	ACTION/EXPECTED RESPONSE	RESPONSE NOT OBTAINED
6	Establish Charging Flow:	
	a. Charging pumps - AT LEAST ONE RUNNING	a. Start a charging pump.
	b. Control charging and letdown - TO MAINTAIN PRESSURIZER LEVEL	
7	Establish Boration Of The RCS To The Xenon Free CSD Condition:	
	a. Refer to O-3.1 - FOR DETERMINATION OF AMOUNT OF BORIC ACID TO BE ADDED	
	b. Start - A BORIC ACID PUMP	
	c. Manually open - MOV-350	
	d. Stop boration - WHEN REQUIRED BORIC ACID HAS BEEN ADDED	
8	Establish Service Water:	Start pumps as necessary.
	o Verify - AT LEAST ONE SERVICE WATER PUMP RUNNING IN EACH LOOP	
9	Establish Containment Cooling:	Start fans as necessary.
	o Verify - AT LEAST TWO RECIRC FAN COOLERS ARE RUNNING	

STEP	ACTION/EXPECTED RESPONSE	RESPONSE NOT OBTAINED
10	Throttle AFW as necessary - TO MAINTAIN S/G LEVELS BETWEEN 77% AND 85%	
11	Check - IF THE CONTROL ROOM IS AGAIN HABITABLE	Return to Step 7.
12	Establish Normal Control Room Operations: a. Restore - NORMAL OPERATION OF EQUIPMENT o Refer to - 0-2.2, PLANT FROM HSD TO COLD SHUTDOWN -OR- o Refer to 0-2.4, NATURAL CIRCULATION COOLDOWN FROM HOT SHUTDOWN	

-END-

ATTACHMENT A

Duties of Personnel During a Control Room Evacuation

SHIFT SUPERVISOR -

Will direct overall plant operations and recovery actions. No specific duty station is assigned but the Shift Supervisor should maintain communication with the various groups working to recover from the evacuation.

CONTROL ROOM FOREMAN -

Will assist the Head Control Operator in transferring equipment to local control, after completion of the transfer the Control Room Foreman will direct the operator's actions to recover the plant.

HEAD CONTROL OPERATOR -

Will go to Auxiliary Feedwater pump area taking operating procedures "O" book, official records; curve book with him and transfer equipment to local control.

CONTROL OPERATOR -

Will go to the local operating station in the Charging Pump Room.

PRIMARY AUX OPERATOR -

Will go to the local operating stations in the Boric Acid Tank Room.

SHIFT TECHNICAL ADVISOR -

Will assist the Head Control Operator while remaining cognizant of plant conditions.

OTHER PERSONNEL -

Will assume fire fighting or other duties as directed by the Shift Supervisor or Control Room Foreman.

ROCHESTER GAS AND ELECTRIC CORPORATION

GINNA STATION

CONTROLLED COPY NUMBER 23

TECHNICAL REVIEW

PORC REVIEW DATE 10-11-89

Joseph A. Widay
PLANT SUPERINTENDENT

10-20-89
EFFECTIVE DATE

QA X NON-QA _____ CATEGORY 1.0

REVIEWED BY: _____

GINNA STATION
START:
DATE _____
TIME _____
COMPLETED:
DATE _____
TIME: _____

A. PURPOSE - This procedure provides the actions required to identify and isolate leakage into the CCW system and to control the plant during the course of the event.

B. ENTRY CONDITIONS/SYMPTOMS

1. SYMPTOMS - The symptoms of LEAKAGE INTO THE COMPONENT COOLING LOOP are;

   a. A-5, COMP COOLING SURGE TANK HI LEVEL 58.8%, or

   b. CCW radiation monitor (R-17) alarm, or

   c. A-7 (15), RCP 1A (1B) CCW RETURN HI TEMP OR LO FLOW 165 GPM 125°F, or

   d. Erratic RCP labyrinth seal D/P.

STEP	ACTION/EXPECTED RESPONSE	RESPONSE NOT OBTAINED

* *

CAUTION

IF, AT ANY TIME DURING THIS PROCEDURE, A REACTOR TRIP OR SI OCCURS, E-0, REACTOR TRIP OR SAFETY INJECTION, SHOULD BE PERFORMED.

* *

NOTE: Letdown diversion to CVCS HUT may cause R-17 increase or alarm.

1	Check CCW Radiation Monitor (R-17) - INCREASING	Go to Step 11.
2	Check CCW Radiation Monitor (R-17) - IN ALARM	Go to Step 4.
3	Verify CCW Surge Tk Vent RCV-017 - CLOSED	Close CCW surge tk vent RCV-017.
4	Check RCS Leakage - GREATER THAN NORMAL	Go to Step 11.

NOTE: RCPs may be safely operated without CCW to the thermal barrier if seal injection flow is maintained.

5	Check RCP Thermal Barrier Indications:	IF either pump has indication of a thermal barrier leak, THEN:
	o Labyrinth seal D/Ps - NORMAL	a. Verify seal injection flow
	o RCP #1 seal leak off flows - NORMAL	b. Close CCW from 1A (1B) thermal barrier MOV-754A (754B).
	o AR-A-7/15 RCP 1A/1B CCW RETURN HI TEMP OR LO FLOW 165 GPM 125°F ALARM - EXTINGUISHED	c. Go to Step 19.

STEP	ACTION/EXPECTED RESPONSE	RESPONSE NOT OBTAINED

* *

CAUTION

CLOSELY MONITOR PRZR LEVEL WHILE LETDOWN IS ISOLATED.

* *

6	Check NRHX For Leakage:	
	a. Normal letdown - INSERVICE	a. IF excess letdown inservice, THEN go to Step 10.
	b. Letdown indications o Letdown line flow - NORMAL o Low press LTDN pressure - NORMAL o NRHX CCW outlet (local TI-600) - LESS THAN 190°F	b. Isolate letdown as follows: 1) Close letdown loop B cold leg to RHx AOV-427. 2) Close LTDN orifices AOVs 200A, 200B, and 202. 3) Place low press LTDN press PI-135 PCV-135 in manual AND close. 4) Reduce charging as necessary. 5) Go to Step 7.
	c. Go to Step 11	
7	Check If CCW Inleakage Has Stopped: o CCW surge tank level - STABLE	Restore normal letdown and go to Step 11.

STEP	ACTION/EXPECTED RESPONSE	RESPONSE NOT OBTAINED
8	Establish Excess Letdown:	
	a. Place excess LTDN Hx divert to seal Hx or drn tk AOV-312 in the - NORMAL POSITION	
	b. Verify seal or excess LTDN return isol vlv MOV-313 - OPEN	
	c. Verify CCW from ex LTDN Hx isol vlv AOV-745 - OPEN	
	d. Place AOV-310 inlet to excess letdown Hx to - OPEN POSITION	
	e. Throttle flow using - HCV-123, OUTLET FROM EXCESS LETDOWN HX	
9	Check PRZR Level:	
	a. PRZR level - TRENDING TO REFERENCE LEVEL	a. Reduce charging as necessary to control PRZR level.
	b. Go to Step 18	
10	Establish Excess Letdown Isolation:	
	a. Excess LTDN loop A cold to Hx AOV-310 - CLOSED	
	b. Excess LTDN (TI-122) HCV-123 - CLOSED	
	c. Check CCW surge tank level - STABLE	c. <u>IF</u> CCW surge tank level continues to increase, <u>THEN</u> restore excess letdown to service and go to Step 11.
	d. Go to Step 18	

STEP	ACTION/EXPECTED RESPONSE	RESPONSE NOT OBTAINED
11	Check RMW to CCW Surge Tank: o MOV-823 - CLOSED o RMW pump(s) - NOT RUNNING	IF RMW to CCW surge tank MOV-823 open OR RMW pump running, THEN: a. Close RMW to CCW surge tank MOV-823. b. Shut off running RMW pumps. c. IF CCW inleakage stops, THEN go to Step 19. d. IF CCW inleakage continues, go to Step 12.
12	Check For Sample Hx Leaks In Nuclear Sample Room: o Sample Hx (TI-602) common CCW return temperature from sample Hxs - NORMAL o Sample Hx (FI-603) common CCW return flow from sample Hxs - NORMAL	Determine which sample Hx CCW outlet temperature is high, THEN: a. Isolate the affected HX. b. Check if inleakage has stopped to CCW surge tank. If inleakage has stopped, go to Step 18. IF inleakage continues, go to Step 13.

* *

CAUTION

IF AN RHR PUMP OR HX IS REMOVED FROM SERVICE, REFER TO TECH SPEC SECTIONS 3.1.1.1 AND 3.3.1 FOR LCO. ONE RHR TRAIN SHOULD BE OPERABLE AT ALL TIMES.

* *

13	Check RHR System - IN SERVICE	Go to Step 16. Observe caution prior to Step 16.

STEP	ACTION/EXPECTED RESPONSE	RESPONSE NOT OBTAINED
14	Place 1 RHR Loop Out Of Service And Isolate The Idle Pump And Hx: a. RHR loop - REMOVED FROM SERVICE b. Idle RHR pump and Hx - ISOLATED	
15	Check If CCW Inleakage Has Stopped: a. CCW surge tank level - STABLE b. Go to Step 18	a. <u>IF</u> CCW inleakage continues, <u>THEN</u>: o Restore isolated RHR loop to service and repeat Steps 14 and 15 for the other RHR loop. o <u>IF</u> leakage is not from either RHR loop, <u>THEN</u> restore both loops to operable and go to Step 16.

* *

<u>CAUTION</u>

IF AN SI OR CS PUMP IS REMOVED FROM SERVICE, REFER TO TECH SPEC SECTION 3.3.1 OR 3.3.2 FOR THE LCO.

* *

16	Check Any SI Or Containment Spray Pumps - RUNNING	<u>IF</u> no SI or CS pumps running, <u>THEN</u> go to Step 19.

STEP	ACTION/EXPECTED RESPONSE	RESPONSE NOT OBTAINED
17	Stop Then Isolate One SI or CS Pump At A Time And Check CCW Surge Tank Level - STABLE	IF in leakage cannot be located, THEN, go to Step 19.
18	Place The Affected Component - IN AN ISOLATED AND HELD CONDITION	
19	Verify - THAT PLANT OPERATION CAN CONTINUE	IF plant shutdown is required, THEN refer to 0-2.1, NORMAL SHUTDOWN TO HOT SHUTDOWN.
20	Complete - NOTIFICATION TO HIGHER SUPERVISION	

-END-

AUTOMATIC ACTIONS

- CCW surge tank vent RCV-017 closes on CCW radiation monitor (R-17) alarm.

ROCHESTER GAS AND ELECTRIC CORPORATION

GINNA STATION

CONTROLLED COPY NUMBER 23

TECHNICAL REVIEW

PORC REVIEW DATE 9-13-89

Joseph A. Widay
PLANT SUPERINTENDENT

9-15-89
EFFECTIVE DATE

QA X NON-QA _____ CATEGORY 1.0

REVIEWED BY: _____

GINNA STATION
START:
DATE _____
TIME _____
COMPLETED:
DATE _____
TIME: _____

A. PURPOSE - This procedure provides the steps necessary to respond to a loss of CCW while the plant is at power.

B. ENTRY CONDITIONS/SYMPTOMS

1. SYMPTOMS - The symptoms of LOSS OF CCW DURING POWER OPERATION are;

   a. A-13 COMP COOLING SURGE TANK LO LEVEL 41.2%, alarm, or

   b. A-22 CCW PUMP DISCHARGE LO PRESS 60 PSI, alarm, or

   c. A-31, CCW SYSTEM LO FLOW 1800 GPM, or

   d. A-17, MOTOR OFF, RCP, CCP alarm, or

   e. A-9, RHR PUMP COOLING WATER OUTLET LO FLOW 15 GPM alarm, or

   f. A-6, CONT SPRAY PUMP COOLING WATER OUT LOW FLOW 15 GPM GPM alarm, or

   g. A-14, SAFETY INJ PUMPS COOLING WATER OUT LO FLOW 25 GPM alarm, or

   h. A-7 (A-15), RCP 1A (1B) CCW RETURN HI TEMP OR LO FLOW 165 GPM 125°F, alarm.

   i. A-24 (A-32), RCP 1A (1B) OIL LEVEL + 1.25, alarm.

STEP	ACTION/EXPECTED RESPONSE	RESPONSE NOT OBTAINED

* *

CAUTION

IF CCW FLOW TO A RCP IS INTERRUPTED FOR GREATER THAN 2 MINUTES OR IF EITHER RCP MOTOR BEARING TEMPERATUE EXCEEDS 200°F, THEN CCW SHOULD BE CONSIDERED LOST TO THAT RCP, REFER TO STEP 3.

* *

NOTE: Step 1 is an IMMEDIATE ACTION step.

1	Check CCW Pump Status: o A-17, Motor Off RCP CCP - EXTINGUISHED o Both CCW pump breaker white disagreement lights - EXTINGUISHED	Perform the following: a. Verify auto start of standby CCW pump or start manually. b. IF A-22, CCW pump discharge lo press 60 psi energized, THEN, check closed CCW to RHR HXs (MOV-738A and MOV-738B).

STEP	ACTION/EXPECTED RESPONSE	RESPONSE NOT OBTAINED
	NOTE: CCW surge tank level should be verified locally in the Aux Bldg, if possible.	
2	Verify CCW Surge Tank Level Normal:	
	a. CCW surge tank level - APPROXIMATELY 50% AND STABLE	a. Open RMW to CCW surge tank (MOV-823) and start a RMW pump and perform the following: IF surge tank level is stable or increasing, THEN go to Step 3. IF surge tank level can NOT be maintained greater than 10%, THEN: 1) Trip the Rx. 2) Trip the RCPs. 3) Place both CCW pumps in pull stop. 4) Go to E-0, REACTOR TRIP or SAFETY INJECTION.

STEP	ACTION/EXPECTED RESPONSE	RESPONSE NOT OBTAINED

* *

CAUTION

- o IF AN RCP(S) IS TRIPPED DUE TO A LOSS OF CCW, SEAL INJECTION SHOULD BE MAINTAINED TO THE IDLE RCP(S) UNTIL RCS TEMPERATURE IS LESS THAN 200°F, OR UNTIL CCW IS RESTORED.
- o REACTOR POWER MUST BE LESS THAN 8% FOR SINGLE LOOP OPERATION.

* *

3	Check CCW To Both RCPs: o A-7 (A-15), RCP 1A (1B) CCW return Hi temp or low flow 165 gpm 125°F alarm - EXTINGUISHED o RCP motor bearings temperature (PPCS address GD-RCPS OR RCP temperature monitor RK-30A recorder) - ≤ 200°F	IF CCW lost to RCP(s), THEN: a. Trip the Rx. b. Trip affected RCP(s). c. Go to E-0, REACTOR TRIP or SAFETY INJECTION.
4	Check CCW Valve Alignment - NORMAL	Align CCW valves as necessary.

STEP	ACTION/EXPECTED RESPONSE	RESPONSE NOT OBTAINED

NOTE: o An evaluation must be made to determine if operation may continue while investigating a CCW leak in containment.

o Operation may continue with the reactor support coolers isolated. If this occurs, notify higher supervision.

5	Check For CCW Leakage In CNMT:	
	a. CNMT sump levels - NORMAL	a. IF abnormal increase in CNMT sump level, THEN: 1) Direct HP Tech to sample sump A for chromates. 2) Prepare to make CNMT entry to check for CCW leak.
	b. RCP oil levels - NOT INCREASING	b. IF any RCP oil level increasing uncontrollably, THEN: 1) Close CCW to and from affected RCP(s), (MOVs 749A and 759A for "A" RCP; MOVs 749B and 759B for "B" RCP). 2) Trip Rx. 3) Trip affected RCP(s). 4) Go to E-0, REACTOR TRIP or SAFETY INJECTION.

STEP	ACTION/EXPECTED RESPONSE	RESPONSE NOT OBTAINED
6	Check For CCW Leakage In AUX BLDG: o Aux Bldg sump pump - INCREASED START FREQUENCY -OR- o Waste holdup tank level - UNEXPLAINED INCREASE -OR- o Aux Bldg - VISUAL LEAKAGE IDENTIFIED	IF no leakage indicated in Aux Bldg, THEN: a. Direct HP Tech to sample CCW HX SW outlet for chromates. b. Go to step 10.
7	Establish - THE SOURCE OF THE CCW LEAKAGE AND ISOLATE	
8	Verify CCW Surge Tank Level Normal: o CCW surge tank level - APPROXIMATELY 50%	IF CCW surge tank level NOT approximately 50%, THEN open RMW to CCW surge tank, MOV-823 and start a RMW pump to fill CCW surge tank to approximately 50%.
9	Check CCW System For Chromates: o CCW system chromates concentration - NORMAL	IF CCW system chromates concentration low, THEN add chromates to CCW system as directed by HP.
10	Verify - CONDITIONS PERMIT CONTINUED POWER OPERATION, (Refer to Technical Specification Section 3.3.3)	IF shutdown required, THEN refer to 0-2.1, NORMAL SHUTDOWN TO HOT SHUTDOWN

STEP	ACTION/EXPECTED RESPONSE	RESPONSE NOT OBTAINED
	NOTE: Refer to 0-9.3, NRC IMMEDIATE NOTIFICATION, for reporting requirements.	
11	Complete - NOTIFICATION TO HIGHER SUPERVISION	
12	Establish Further Guidance:	
	a. Problem or leakage - CORRECTED	a. IF problem NOT corrected or leakage NOT found or isolated, THEN return to Step 4.
	b. Return to - APPROPRIATE NORMAL OPERATING PROCEDURE	

-END-

AUTOMATIC ACTIONS

- The standby component cooling pump starts automatically from a low pressure condition in the pump discharge header.
- Control valve TCV-130 in the cooling water return line from the non-regenerative heat exchanger may open wide because of a high temperature condition in the letdown line.
- Valve TCV-145 in the letdown line may operate to divert flow from the demineralizers directly to the volume control tank.

ROCHESTER GAS AND ELECTRIC CORPORATION

GINNA STATION

CONTROLLED COPY NUMBER 23

TECHNICAL REVIEW

PORC REVIEW DATE 9-13-89

Joseph A. Widay
PLANT SUPERINTENDENT

9-15-89
EFFECTIVE DATE

QA X NON-QA _____ CATEGORY 1.0

REVIEWED BY: _____

GINNA STATION
START:
DATE _____
TIME _____
COMPLETED:
DATE _____
TIME: _____

A. PURPOSE - This procedure provides the steps necessary to respond to a loss of CCW while the plant is shut down.

B. ENTRY CONDITIONS/SYMPTOMS

1. SYMPTOMS - The symptoms of Loss of CCW - Plant Shutdown are:

   a. A-13, COMP COOLING SURGE TANK LO LEVEL 41.2% alarm, or

   b. A-22, CCW PUMP DISCHARGE LO PRESS 60 PSI alarm, or

   c. A-31, CCW SYSTEM LO FLOW 1800 GPM alarm or

   d. A-17, MOTOR OFF RCP CCP alarm, or

   e. A-9, RHR PUMP COOLING WATER OUTLET LO FLOW 15 GPM alarm, or

   f. A-6, CONT SPRAY PUMP COOLING WATER OUT LO FLOW 15 GPM alarm, or

   g. A-14, SAFETY INJ PUMPS COOLING WATER OUT LO FLOW 25 GPM alarm, or

   h. A-7, (A-15), RCP 1A (1B) CCW RETURN HI TEMP OR LO FLOW 165 GPM 125°F alarm. flow alarm.

STEP	ACTION/EXPECTED RESPONSE	RESPONSE NOT OBTAINED
1	Check CCW Pump Status: o Neither pump breaker white disagreement light - IS LIT o Alarm A-17, Motor Off, RCP CCP - EXTINGUISHED	IF 2 pumps were previously running and one has tripped, THEN reset and attempt to restart the tripped pump, if required for cooling. IF one pump was previously running and it tripped, THEN ensure auto start of the standby pump or start pump manually.
2	Check CCW Pump Discharge Lo Pressure 60 PSI - ALARM A-22, EXTINGUISHED	IF CCW pump discharge pressure is low, THEN: a. Check closed or close CCW to RHR Hx A(B) MOV-738A(B) unless on RHR cooling. b. Dispatch an aux operator to the aux bldg to check discharge pressure locally and to look for leaks.
3	Check CCW To Operating RCPs: a. A-7 (A-15), RCP 1A (1B) CCW RETURN HI TEMP OR LOW FLOW 165 GPM 125°F - EXTINGUISHED b. Verify - NO RCP MOTOR BEARING TEMPERATURE ALARMS	IF CCW is lost to operating RCPs for GREATER THAN 2 minutes OR IF an RCP motor bearing temperature exceeds 200°F, THEN trip the affected RCP and see Attachment A, if natural circulation is required.

STEP	ACTION/EXPECTED RESPONSE	RESPONSE NOT OBTAINED
4	Check For CCW Leak:	
	a. Verify CCW Surge Tank Level Normal - A-13, COMP COOLING SURGE TANK LO LEVEL 41.2% ALARM EXTINGUISHED AND LEVEL STABLE	a. IF CCW surge tank level is decreasing, THEN: 1) Open RMW to CCW surge tank MOV-823 and start RMW pump 1A(1B) as necessary to fill the tank. 2) IF CCW surge tank level can NOT be restored, THEN: a) Stop any running RCP. b) Pull stop both CCW pumps. c) Verify Natural Circulation as per Attachment A if required. 3) Go to Step 5.
	b. Go to step 8	

STEP	ACTION/EXPECTED RESPONSE	RESPONSE NOT OBTAINED
5	Check for CCW Leakage In CNMT:	
	a. CNMT Sump Levels - NORMAL	a. IF abnormal increase in CNMT Sump Level, THEN: 1) Direct Health Physics Tech to sample Sump A for Chromates. 2) Prepare to make CNMT entry to check for CCW leak.
	b. RCP Oil Levels - NOT INCREASING	b. IF any RCP oil level increasing uncontrollably, THEN: 1) Stop affected RCP. 2) Close CCW supply and return for affected RCP(s) (MOV-749A and MOV-759A for A RCP; MOV-749B and MOV-759B for B RCP). 3) Verify Natural Circulation as per Attachment A if required.
6	Check for CCW Leakage In AUX BLDG:	IF no leakage indicated in AUX BLDG, THEN:
	o Start frequency of AUX BLDG sump pump(s) - INCREASED	a. Direct HP Tech to sample CCW HX SW outlet for chromates.
	o Waste holdup tank level - UNEXPLAINED INCREASE	b. RETURN to step 3.

STEP	ACTION/EXPECTED RESPONSE	RESPONSE NOT OBTAINED

* *

CAUTION

IF AN RCP(S) IS TRIPPED DUE TO A LOSS OF CCW, SEAL INJECTION SHOULD BE MAINTAINED TO THE IDLE RCP(S) UNTIL RCS TEMPERATURE IS LESS THAN 200°F, OR UNTIL CCW IS RESTORED.

* *

NOTE: If CCW is lost to operating CS, RHR, or SI pumps, they may be left running for brief periods while isolating a CCW leak.

7	Establish - SOURCE OF CCW LEAKAGE AND ISOLATE	
8	Check CCW Valve Alignment - AS REQUIRED FOR PLANT CONDITIONS	Realign valves as necessary to restore CCW to individual components.
9	Verify CCW Available - TO ANY OPERATING RHR HX	IF RHR in operation and CCW is lost to RHR HX, GO TO AP-RHR.1, LOSS OF RHR.
10	Complete - HIGHER SUPERVISION NOTIFICATION	

NOTE: REFER TO 0-9.3, NRC IMMEDIATE NOTIFICATION, for reporting requirements.

11 Establish Further Guidance

- o RETURN TO - NORMAL OPERATING PROCEDURES

-END-

AUTOMATIC ACTIONS

- The standby component cooling pump starts automatically from a low pressure condition in the pump discharge header.
- Control valve TCV-130 in the cooling water return line from the non-regenerative heat exchanger may open wide because of a high temperature condition in the letdown line.
- Valve TCV-145 in the letdown line may operate to divert flow from the demineralizers directly to the volume control tank.

ATTACHMENT A

The following conditions support or indicate natural circulation flow:

- RCS subcooling based on core exit TCs - GREATER THAN REQUIREMENTS OF FIGURE MIN SUBCOOLING.
- S/G pressures - STABLE OR DECREASING.
- RCS hot leg temperatures - STABLE OR DECREASING (ADMINISTRATIVE LIMIT FOR COOLDOWN ON NATURAL CIRCULATION IS 25°F/HR.)
- Core exit TCs - STABLE OR DECREASING.
- RCS cold leg temperatures - AT SATURATION TEMPERATURE FOR S/G PRESSURE.
- Both control rod shroud fans should be running for head cooling.

NOTE: Ensure that PRZR heaters are restored within 1 hour of initiation of natural circulation, REFER TO ER-PRZR.1, RESTORATION OF PRZR HEATERS DURING BLACKOUT.

FIGURE MIN SUBCOOLING

NOTE: Subcooling Margin = Saturation Temperature From Figure Below [-] Core Exit T/C Indication

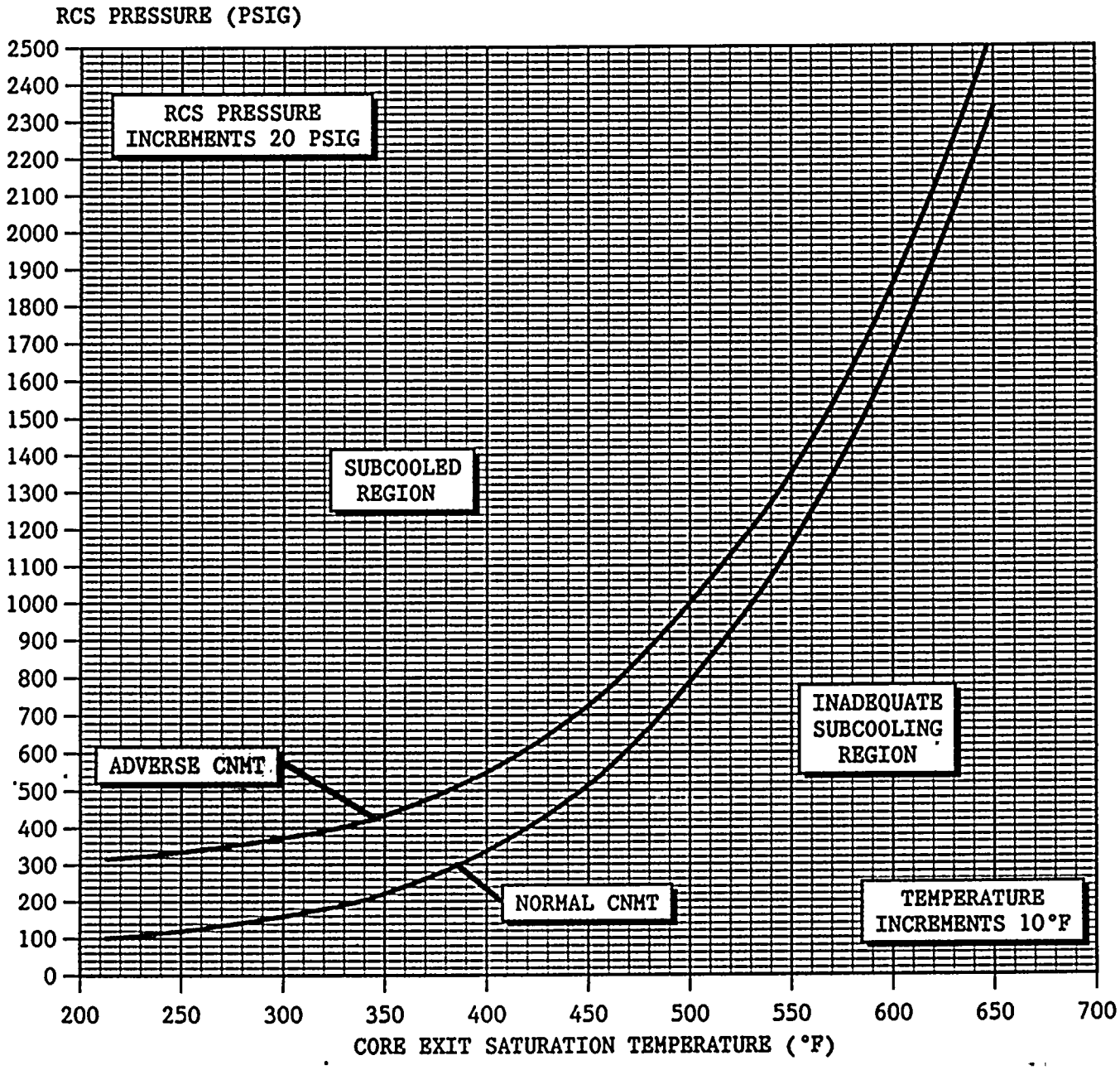

ROCHESTER GAS AND ELECTRIC CORPORATION

GINNA STATION

CONTROLLED COPY NUMBER 23

TECHNICAL REVIEW

PORC REVIEW DATE 9-13-89

Joseph A. Widay
PLANT SUPERINTENDENT

9-15-89
EFFECTIVE DATE

QA X NON-QA _____ CATEGORY 1.0

REVIEWED BY: _____

GINNA STATION

START:

DATE _____

TIME _____

COMPLETED:

DATE _____

TIME: _____

A. PURPOSE - This procedure provides the necessary instructions to mitigate the consequences of a CVCS leak.

B. ENTRY CONDITIONS/SYMPTOMS

1. ENTRY CONDITIONS - This procedure is entered from;

   a. AP-RCS.1, REACTOR COOLANT LEAK, Step 5, when conditions indicate a CVCS leak.

2. SYMPTOMS - The symptoms of CVCS leak are;

   a. B-9/B-10 RCP LABYR SEAL LO DIFF PRESS ALARM, or

   b. Charging line pressure low, or

   c. F-14, CHARGING PUMP SPEED ALARM, or

   d. A-4, REGEN HX LETDOWN OUT HI TEMP 395°F ALARM, or

   e. Letdown line low pressure and low flow, or

   f. Charging Pump Room AREA MONITOR R-4 ALARM

STEP	ACTION/EXPECTED RESPONSE	RESPONSE NOT OBTAINED

* *

CAUTION

IF, AT ANY TIME DURING THIS PROCEDURE, A REACTOR TRIP OR SI OCCURS, E-0, REACTOR TRIP OR SAFETY INJECTION, SHOULD BE PERFORMED.

* *

1 Check RCS Inventory o PRZR level - DECREASING	IF PRZR level is stable, THEN go to Step 4.
2 Increase PRZR Level: a. Start - ADDITIONAL CHARGING PUMPS AND INCREASE SPEED AS NECESSARY	
3 Check PRZR Level: o PRZR level - GREATER THAN 13% AND STABLE OR INCREASING	IF available charging pumps are running at maximum speed with letdown isolated, AND PRZR level is still decreasing in an uncontrolled manner, THEN trip the reactor and go to E-0, REACTOR TRIP or SAFETY INJECTION.
4 Check For Component Cooling System Leak: o CCW radiation monitor (R-17) - NORMAL o CCW surge tank level - NORMAL	IF CCW leak indicated, THEN go to AP-CCW.1, LEAKAGE INTO THE COMPONENT COOLING LOOP.

STEP	ACTION/EXPECTED RESPONSE	RESPONSE NOT OBTAINED
5	Check For Letdown Line Leak: o Letdown line flow - APPROXIMATELY 40 GPM o Low press LTDN pressure - APPROXIMATELY 250 PSIG	IF abnormal letdown flow or pressure exist, THEN close LTDN loop B cold leg to RHx AOV-427, AND IF RCS leakage returns to normal, THEN go to Step 8, OR IF RCS leakage does not return to normal, THEN go to Step 6.
6	Check For Charging Line Leak: a. Charging pump discharge pressure - NORMAL b. REGEN Hx LTDN outlet temp TI-127 - NORMAL c. Charging line flow - NORMAL (FI-128 ~25 gpm) d. Go to Step 12	IF charging line leak is indicated, THEN go to Step 7.

STEP	ACTION/EXPECTED RESPONSE	RESPONSE NOT OBTAINED
7	Check Aux Bldg For Leak:	
	a. Operation personnel - DISPATCHED TO AUX BLDG WITH NECESSARY LOCKED AREA KEYS TO INVESTIGATE FOR LEAK	
	b. CVCS leak - NOT IN AUX BLDG	b. IF charging line leak is in the Aux Bldg AND isolable, THEN go to Step 8. IF charging line leak is in the Aux Bldg AND is not isolable, THEN: 1) IF leak is manageable (i.e. pressurizer level, seal injection, and makeup can be maintained), shut the plant down as quickly as possible (Refer to 0-2.1, NORMAL SHUTDOWN TO HOT SHUTDOWN, AND go to Step 16. 2) IF leak is not manageable, THEN trip the reactor AND go to E-0, REACTOR TRIP or SAFETY INJECTION.
8	Establish Isolation Of Letdown Flow to REGEN Hx: o LTDN loop B cold leg to RHx AOV-427 - CLOSED o LTDN orifices valves AOV-200A, AOV-200B, and AOV-202 - CLOSED	

STEP	ACTION/EXPECTED RESPONSE	RESPONSE NOT OBTAINED
9	Establish Isolation Of Charging Flow to REGEN Hx: o HCV-142 - CLOSED	
10	Establish Control Of Charging Pumps As Necessary To Maintain RCP Labyrinth Seal ΔP - LESS THAN 80 INCHES	
11	Establish Excess Letdown: a. Place excess LTDN Hx divert to seal Hx or drn tk AOV-312 - IN THE NORMAL POSITION b. Verify seal or excess LTDN return isol vlv MOV-313 - OPEN c. Verify CCW from EX LTDN Hx isol vlv AOV-745, CCW from excess letdown Hx - OPEN d. Place excess LTDN loop A cold to Hx AOV-310 - TO OPEN POSITION e. Flow from excess letdown Hx - CONTROLLED BY EXCESS LTDN HCV-123 f. Go to STEP 13	

STEP	ACTION/EXPECTED RESPONSE	RESPONSE NOT OBTAINED

* *

CAUTION

RCP OPERATION MAY CONTINUE WITHOUT SEAL INJECTION IF CCW IS BEING SUPPLIED TO THE THERMAL BARRIER. HOWEVER, SINCE SEAL SUPPLY WILL NOW BE UNFILTERED, RCP OPERATION WITHOUT SEAL INJECTION SHOULD BE MINIMIZED.

* *

12	Check For RCP Seal Injection Leak: o RCP labyrinth seal D/P - GREATER THAN 15 INCHES o RCP #1 seal return flows - NORMAL o RCP standpipe level alarms - OFF	IF RCP labyrinth seal D/P is low or zero, THEN suspect leak in seal injection line. Dispatch AO to investigate AND go to Step 14. IF seal return flow or standpipe alarms indicate RCP seal malfunction, THEN GO TO AP-RCP.1, RCP SEAL MALFUNCTION.

* *

CAUTION

THE NORMAL METHOD OF VCT DIVERSION (AOV-112A) IS NOT AVAILABLE WHILE ON EXCESS LETDOWN. VCT LEVEL MAY BE DECREASED BY MANUALLY DIVERTING EXCESS LETDOWN TO THE RCDT USING AOV-312.

* *

13	Establish Control Of Charging And Excess Letdown Flows - TO RESTORE PRZR LEVEL TO NORMAL	
14	Establish The Location Of CVCS Leak And Have Personnel - COMPLETE MANUAL ISOLATION AS REQUIRED	IF the leak can NOT be isolated, THEN go to AP-RCS.1, REACTOR COOLANT LEAK, Step 6.

STEP	ACTION/EXPECTED RESPONSE	RESPONSE NOT OBTAINED
15	Allow Conditions To Stabilize, THEN Perform An RCS Leakage Calculation - TO VERIFY THAT LEAK HAS BEEN ISOLATED	IF the leak can NOT be isolated, THEN go to AP-RCS.1, REACTOR COOLANT LEAK, Step 6.

NOTE: Refer to 0-9.3, NRC IMMEDIATE NOTIFICATION, for reporting requirements.

16 Complete - NOTIFICATION TO HIGHER SUPERVISION

-END-

AUTOMATIC ACTIONS

- Auto make-up.
- Charging pump speed increase.
- Letdown isolation PRZR level at 13%
- Charging pump suction swapover to RWST at VCT level of 5%.
- AUX BLDG sump pump auto start.
- Plant ventilation trip.

ROCHESTER GAS AND ELECTRIC CORPORATION

GINNA STATION

CONTROLLED COPY NUMBER 23

TECHNICAL REVIEW

PORC REVIEW DATE 8/21/89

Joseph A. Widay
PLANT SUPERINTENDENT

8/22/89
EFFECTIVE DATE

QA _____ NON-QA X CATEGORY 1.0

REVIEWED BY: _____

GINNA STATION
START:
DATE _____
TIME _____
COMPLETED:
DATE _____
TIME: _____

A. PURPOSE - This procedure provides the instructions necessary in the event of a loss of instrument air.

B. ENTRY CONDITIONS/SYMPTOMS

1. ENTRY CONDITIONS - This procedure is entered from:

   a. E-0, REACTOR TRIP OR SAFETY INJECTION, Step 33, or

   b. E-1, LOSS OF REACTOR OR SECONDARY COOLANT, Step 8, or

   c. ES-1.1, SI TERMINATION, Step 3, or

   d. ECA-2.1, UNCONTROLLED DEPRESSURIZATION OF BOTH STEAM GENERATORS, Step 11, or

   e. E-3, STEAM GENERATOR TUBE RUPTURE, Step 11, or

   f. ECA-3.1, SGTR WITH LOSS OF REACTOR COOLANT - SUBCOOLED RECOVERY DESIRED, Step 3, or

   g. FR-I.1, RESPONSE TO HIGH PRESSURIZER LEVEL, Step 2, or

   h. FR-I.3, RESPONSE TO VOIDS IN REACTOR VESSEL HEAD, Step 3, or

   i. FR-H.1, RESPONSE TO LOSS OF SECONDARY HEAT SINK, Step 14, or

   j. FR-P.1, RESPONSE TO IMMINENT PRESSURIZED THERMAL SHOCK CONDITION, Step 5.

2. SYMPTOMS - The symptoms of LOSS OF INSTRUMENT AIR are;

   a. H-8, Instrument Air Lo Press, 100 psi, alarm lit, or

   b. H-16, Instrument Air Compressor, alarm lit.

STEP	ACTION/EXPECTED RESPONSE	RESPONSE NOT OBTAINED

* *

CAUTION

IF AT ANY TIME DURING THIS PROCEDURE, A REACTOR TRIP OR SI OCCURS, E-0, REACTOR TRIP OR SAFETY INJECTION, SHOULD BE PERFORMED.

* *

NOTE: o Step 1 is an IMMEDIATE ACTION Step.

o If this procedure is entered from any EOP, go to Step 3.

1	Check Instrument Air Pressure - GREATER THAN 60 PSIG AND STABLE	IF IA pressure is greater than 60 psig but decreasing, THEN start standby IA compressor. IF IA pressure is less than 60 psig, THEN: o Trip the reactor. o Go to E-0, REACTOR TRIP or SAFETY INJECTION.

STEP	ACTION/EXPECTED RESPONSE	RESPONSE NOT OBTAINED

* *

CAUTION

- o OBSERVE D/G LOADING LIMITS OF 2300 KW FOR 1/2 HOUR, 2250 KW FOR 2 HOURS, AND 1950 KW FOR CONTINUOUS SERVICE.
- o WHEN IA PRESSURE IS LOW, MFW REGULATING VALVES SHOULD BE MONITORED FOR PROPER OPERATION.

* *

2 Verify Power To Bus 13 and Bus 15: o Bus 13 - APPROXIMATELY 480 VOLTS o Bus 15 - APPROXIMATELY 480 VOLTS	IF IA pressure is low due to a loss of power to bus 13 OR bus 15, THEN: a. Crosstie bus 13 to 14, OR crosstie bus 15 to 16 as required. b. Start IA compressors as necessary (75 kw each). c. IF offsite power is lost, THEN go to AP-ELEC.1, LOSS OF #12 SS TRANSFORMER.
3 Check IA Compressors: o At least 2 compressors - RUNNING AND IA PRESSURE STABLE OR INCREASING	Perform the following: a. Start additional IA compressors. b. Service air compressor running OR start service air compressor. c. Automatic service air to IA crosstie (AOV-5251) open OR open manual crosstie, V-5365.

STEP	ACTION/EXPECTED RESPONSE	RESPONSE NOT OBTAINED
4	Check IA System Major Components Locally:	
	a. IA dryers: o Dryers - NOT BLOWING AIR o Dryers - AUTO TRANSFER OCCURRING PROPERLY	a. IF IA dryer is blowing air OR IF dryer transfer is NOT occurring, THEN isolate the faulty dryer: 1) A IA dryer isolation: o Open bypass V-5276. o Close inlet V-5277. o Close outlet V-5275. 2) B IA dryer isolation: o Open bypass V-8230. o Close inlet V-8228. o Close outlet V-8229.
	b. IA dryer prefilters and after filters D/P - NORMAL (<10 psid)	b. IF any filter D/P is excessive (> 10 psid), THEN bypass the affected filter.
	c. Running IA compressors - INDICATIONS NORMAL	c. IF any IA compressor malfunctioning, THEN: 1) Remove faulty IA compressor from service. 2) Isolate faulty IA compressor from IA header if necessary.

STEP	ACTION/EXPECTED RESPONSE	RESPONSE NOT OBTAINED

* *

CAUTION

AN EVALUATION OF THE CONSEQUENCES SHOULD BE PERFORMED BEFORE A LEAKING SECTION OF THE IA SYSTEM IS ISOLATED. REFER TO ATTACHMENT A FOR MAJOR EQUIPMENT AFFECTED IN EACH SPECIFIC AREA.

* *

5 Check For Instrument Air Leakage In The Turbine And Intermediate (Clean Side) Buildings: o Turbine Building - NO LEAKAGE DETECTED o Intermediate Building (clean side) - NO LEAKAGE DETECTED	IF the IA leak is found in the turbine or intermediate bldgs., THEN: a. Isolate the leak (Refer to Figure 1). b. Go to Step 15.
6 Establish Letdown Isolation: o AOV-427 - CLOSED o AOV-200A, AOV-200B, and AOV-202 - CLOSED	

NOTE: When IA is isolated to CNMT, PRZR spray valves will not function. PRZR heaters should be manually controlled.

7 Close AOV-5392 - TO ISOLATE IA TO CNMT	
8 Check IA Pressure - a. Pressure - STABLE OR INCREASING b. Go to Step 12	a. IF IA pressure continues to decrease, THEN open IA to CNMT (AOV-5392) AND go to Step 9.

STEP	ACTION/EXPECTED RESPONSE	RESPONSE NOT OBTAINED

NOTE: When IA is isolated to the Aux Bldg, make-up to the VCT and from the RWST is disabled, AND charging pumps will go to minimum speed, AND HCV-142 fails open.

9 Close V-7350 (By SFP On West Wall) - TO ISOLATE IA TO AUX BLDG

10 Check IA Pressure - STABLE OR INCREASING

IF IA leak is NOT in Aux Bldg, THEN:

a. Restore letdown as follows:

1) Open IA to Aux Bldg V-7350.

2) Ensure V-5392, IA to CNMT is open. IF NOT, go to Step 12.

3) Ensure AOV-371 and AOV-427 open.

4) Place PCV-135 and TCV-130 in manual at ~ 25% open.

5) Open desired orifice isolation valve.

6) Adjust PCV-135 and TCV-130 as necessary.

7) Restore PCV-135 and TCV-130 to auto at ~ 250 psig and 80°F to 120°F.

b. Continue investigation.

c. Go to Step 16.

STEP	ACTION/EXPECTED RESPONSE	RESPONSE NOT OBTAINED

* *

CAUTION

IF CHARGING PUMP SUCTION IS SWAPPED TO THE RWST TO INCREASE VCT LEVEL, A LOAD REDUCTION MAY BE REQUIRED TO MAINTAIN TAVG AT TREF.

* *

11 Check VCT Level - GREATER THAN 20%	IF VCT level is low and IA has NOT been restored, THEN open V-358 RWST to charging pump suction. IF normal VCT makeup or normal or excess letdown can NOT be restored, THEN, plant shutdown will be required, (Refer to 0-2.1 Normal Shutdown to Hot Shutdown).
12 Verify CCW Is Being Supplied To The RCPs: o Alarm A-7 - EXTINGUISHED o Alarm A-15 - EXTINGUISHED	Perform the following: a. Restore CCW to the RCPs. b. IF CCW can NOT be restored to RCPs, THEN go to Step 14.

* *

CAUTION

MONITOR RCP SEAL INDICATIONS WHEN CHARGING PUMP IS NOT RUNNING.

* *

13 Start And Stop Charging Pump(s) As Necessary - TO CONTROL PRZR LEVEL	

STEP	ACTION/EXPECTED RESPONSE	RESPONSE NOT OBTAINED
14	Throttle Charging Flow Locally - TO MAINTAIN RCP SEAL INJECTION FLOW WHEN CHARGING PUMPS(S) ARE RUNNING	
15	Establish Isolation Of IA Leak: a. Investigate - LEAKING SECTION TO BE ISOLATED b. Isolate - LEAK AS CLOSE TO SOURCE AS POSSIBLE	IF IA leak can NOT be isolated, with plant at power, THEN: a. Trip the reactor. b. Go to E-0, REACTOR TRIP or SAFETY INJECTION. IF IA leak occurred while performing any EOP and can NOT be isolated, THEN, return to procedure and step in effect.
16	Complete - RESTORATION OF UNAFFECTED PORTIONS OF THE IA SYSTEM TO SERVICE	
17	Verify - THAT PLANT OPERATION CAN CONTINUE	

NOTE: Refer to 0-9.3, NRC IMMEDIATE NOTIFICATION, for reporting requirements.

18	Complete - MAINTENANCE AND HIGHER SUPERVISION NOTIFICATION	

STEP	ACTION/EXPECTED RESPONSE	RESPONSE NOT OBTAINED

19 Establish Further Guidance:

- o Return to - PROCEDURE AND STEP IN EFFECT

-OR-

- o Return to - NORMAL PLANT OPERATIONS

-END-

AUTOMATIC ACTIONS

- Standby IA compressor may start on low IA header pressure of approximately 115 psig.
- Service air to IA automatic crosstie, AOV-5251), will open when IA pressure is less than 90 psig.

FIGURE1

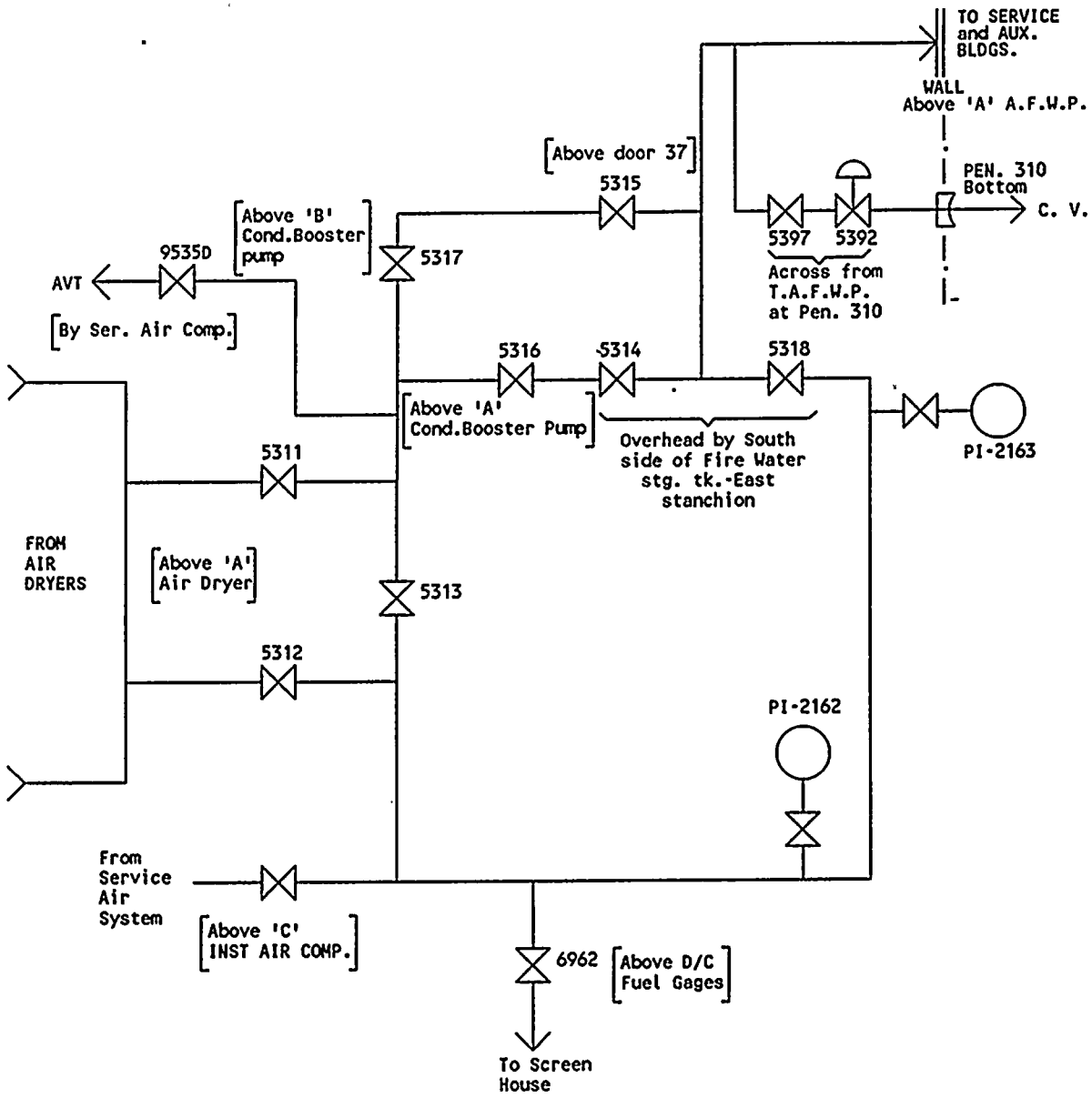
TO SERVICE and AUX. BLDGS.
WALL Above 'A' A.F.W.P.
[Above door 37]
5315
PEN. 310 Bottom
C. V.
5397
5392
Across from T.A.F.W.P. at Pen. 310
[Above 'B' Cond.Booster pump]
5317
9535D
AVT
[By Ser. Air Comp.]
5316
5314
5318
[Above 'A' Cond.Booster Pump]
Overhead by South side of Fire Water stg. tk.-East stanchion
PI-2163
5311
FROM AIR DRYERS
[Above 'A' Air Dryer]
5313
5312
PI-2162
From Service Air System
[Above 'C' INST AIR COMP.]
6962
[Above D/C Fuel Gages]
To Screen House

ATTACHMENT A

CNMT IA LOSS AND FAILURE MODE

- Letdown AOV-427 FO AOV-200A, 200B, 202 FC
- Excess letdown AOV-310 FC
- Charging AOV-294, 392A, 392B FC
- PRZR Spray PCV-431A, 431B FC
- Aux. Spray AOV-296 FC
- PRZR PORVs FC (can be opened using overpressurization N_2 system)
- RCP seal return AOV-270A, 270B, FO AOV-386 FC
- RCP thermal barrier CCW AOV-754A, 754B FO
- RCS and PRZR sample valves FC

AUX BLDG IA LOADS AND FAILURE MODE

- Charging Pump speed control fails to minimum
- VCT makeup valves AOV-110A FO AOV-110B, 110C, 111 FC
- Letdown valves AOV-371 FC TCV-145, AOV-112A, Fail to VCT
- Charging pump suction AOV-112B FC AOV-112C FO
- NaOH Tank Outlet vlvs AOV-836A, 836B FO
- RHR vlvs HCV-624, 625 FO HCV-626 FC
- RCS and PRZR sample valves FC

TURBINE BLDG IA LOADS AND FAILURE MODE

- MFW regulating valves and bypass valves FC
- Steam Dump valves FC
- S/G blowdown and sample vlvs FC
- Condensate Bypass valve FO
- H_2 cooler bypass valve AOV 4229 FO
- H_2 cooler inlet vlv AOV 4230 FO
- Condenser Makeup vlv FC
- Condensate Makeup vlv FC
- Condensate Trim valves FC
- Heater Drain Pump Recirc vlv FO (HDT pumps trip if recirc vlv full open 1 min)
- Reheater 2nd pass Hi level dump vlvs to condenser FO
- Reheater 2nd pass level control vlvs to #5 heaters FC
- S/G ARVs (have backup N_2 supply)

ROCHESTER GAS AND ELECTRIC CORPORATION

GINNA STATION

CONTROLLED COPY NUMBER 23

TECHNICAL REVIEW

PORC REVIEW DATE 8/23/89

T R Schuler
for PLANT SUPERINTENDENT

8/24/89
EFFECTIVE DATE

QA X NON-QA _____ CATEGORY 1.0

REVIEWED BY: _____

GINNA STATION

START:

DATE _____

TIME _____

COMPLETED:

DATE _____

TIME: _____

A. PURPOSE - This procedure provides a mechanism to allow the operator to determine or confirm the most appropriate post accident recovery procedure.

B. ENTRY CONDITIONS/SYMPTOMS

1. ENTRY CONDITIONS - This procedure is entered based on operator judgement.

STEP	ACTION/EXPECTED RESPONSE	RESPONSE NOT OBTAINED

NOTE: o FOLDOUT page should be open and monitored periodically.

o This procedure should only be used if SI is in service or is required.

1	Check If Any S/G Secondary Side Is Intact	
	a. Check pressures in all S/Gs - ANY S/G STABLE OR INCREASING	a. IF a controlled cooldown is in progress, THEN GO TO Step 2. IF NOT, THEN the following applies: o IF main steamlines NOT isolated, THEN you should be in E-2, FAULTED STEAM GENERATOR ISOLATION. -OR- o IF main steamlines isolated, THEN you should be in ECA-2.1, UNCONTROLLED DEPRESSURIZATION OF BOTH STEAM GENERATORS.
2	Check If BOTH S/Gs Secondary Sides Are Intact o NO S/G PRESSURE DECREASING IN AN UNCONTROLLED MANNER o NO S/G COMPLETELY DEPRESSURIZED	Verify faulted S/G isolated unless needed for RCS cooldown: o Steamlines o Feedlines IF NOT THEN you should be in E-2, FAULTED STEAM GENERATOR ISOLATION, Step 1

STEP	ACTION/EXPECTED RESPONSE	RESPONSE NOT OBTAINED
3	Check If S/G Tubes Are Ruptured: o ANY S/G LEVEL INCREASING IN AN UNCONTROLLED MANNER -OR- o ANY S/G WITH HIGH RADIATION	You should be in an E-1 or ECA-1 series procedure.
4	You Should Be In An E-3 Or ECA-3 Series Procedure	

-END-

FOLDOUT PAGE

1. RCP TRIP CRITERIA

IF BOTH conditions listed below occur, THEN trip both RCPs:

a. SI pumps - AT LEAST TWO RUNNING

b. RCS pressure minus maximum S/G pressure - LESS THAN 175 psig [400 psig adverse CNMT]

2. SI ACTUATION CRITERIA

IF ANY condition listed below occurs, THEN actuate SI and go to E-0, REACTOR TRIP OR SAFETY INJECTION, Step 1:

- RCS subcooling based on core exit T/Cs - LESS THAN 0°F USING FIGURE MIN SUBCOOLING

-OR-

- PRZR level - LESS THAN 5% [30% adverse CNMT] AND RCS subcooling based on core exit T/Cs - LESS THAN 20°F USING FIGURE MIN SUBCOOLING

-OR-

- Any automatic SI setpoint is reached

3. SI PUMP AUTO SWITCHOVER CRITERION

WHEN BAST level decreases to 10%, THEN ensure SI pump automatic switchover to RWST.

4. AFW SUPPLY SWITCHOVER CRITERION

IF CST level decreases to less than 5 feet, THEN switch to alternate AFW water supply (Refer to ER-AFW.1, ALTERNATE WATER SUPPLY TO AFW PUMPS).

ROCHESTER GAS AND ELECTRIC CORPORATION

GINNA STATION

CONTROLLED COPY NUMBER 23

TECHNICAL REVIEW

PORC REVIEW DATE 7/16/89

Joseph A. Widay
PLANT SUPERINTENDENT

7/21/89
EFFECTIVE DATE

QA_____ NON-QA_____ CATEGORY 1.0

REVIEWED BY:_____

GINNA STATION

START:

DATE _____

TIME _____

COMPLETED:

DATE _____

TIME: _____

CSFST:	Title:	Rev: 1
F-0.3	HEAT SINK	Page 1 of 1

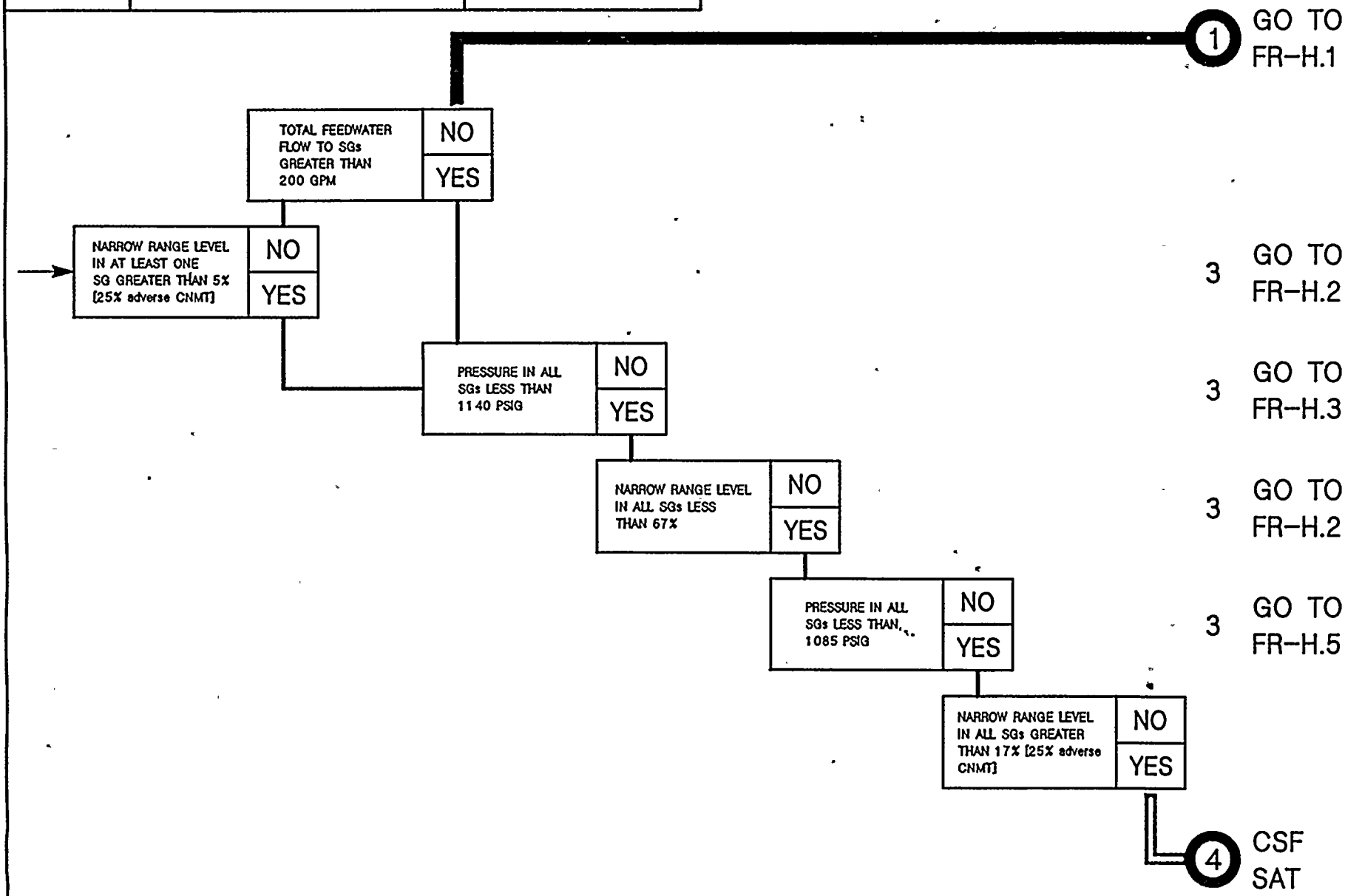

ROCHESTER GAS AND ELECTRIC CORPORATION

GINNA STATION

CONTROLLED COPY NUMBER 23

TECHNICAL REVIEW

PORC REVIEW DATE 7/16/89

Joseph A. Widay
PLANT SUPERINTENDENT

7/21/89
EFFECTIVE DATE

QA_____ NON-QA_____ CATEGORY 1.0

REVIEWED BY:_____

GINNA STATION
START:
DATE _____
TIME _____
COMPLETED:
DATE _____
TIME: _____

CSFST:	Title:	Rev: 1
F-0.5	CONTAINMENT	Page 1 of 1

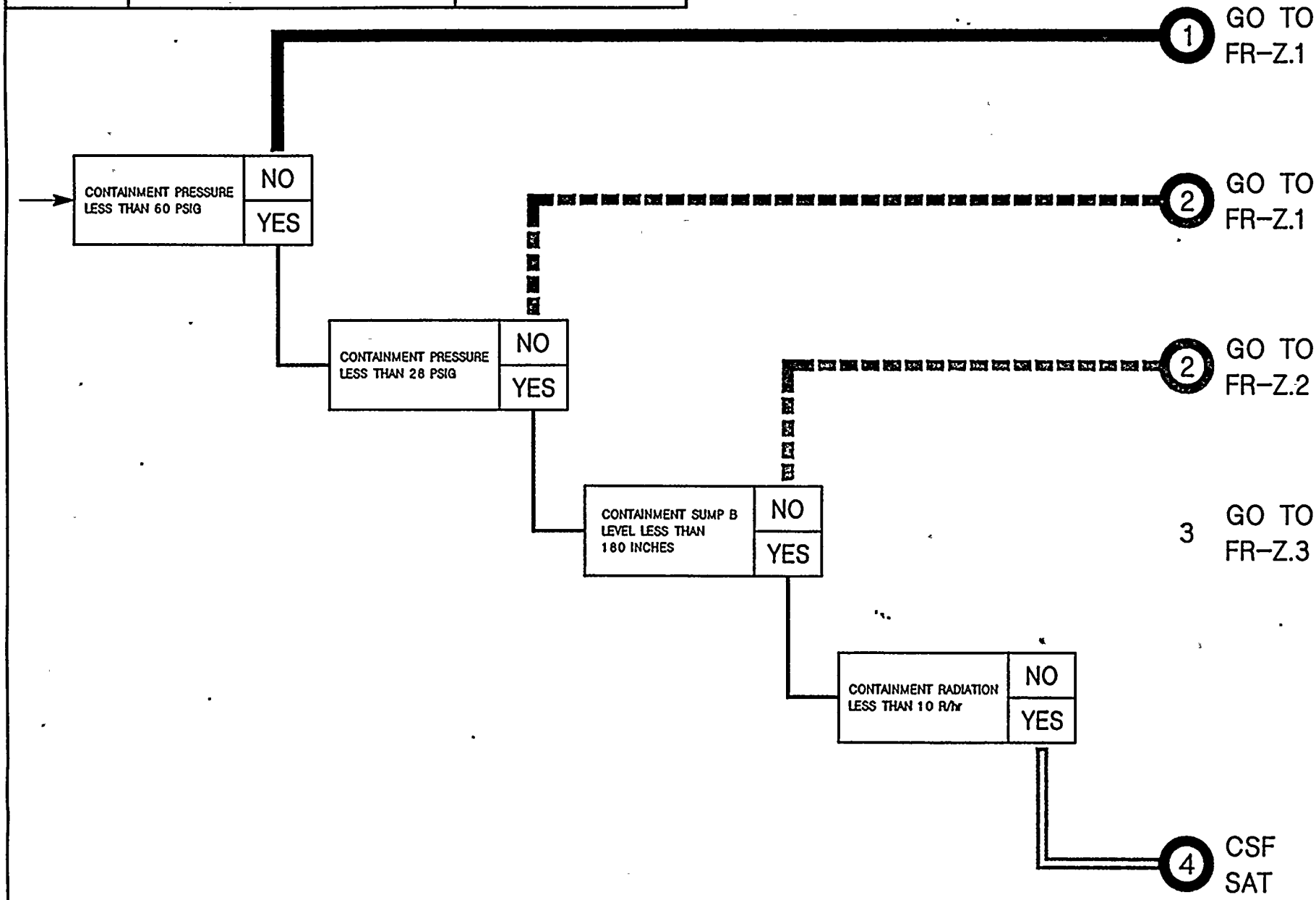

ROCHESTER GAS AND ELECTRIC CORPORATION

GINNA STATION

CONTROLLED COPY NUMBER 23

TECHNICAL REVIEW

PORC REVIEW DATE 7/16/89

Joseph A. Widay
PLANT SUPERINTENDENT

7/21/89
EFFECTIVE DATE

QA_____ NON-QA_____ CATEGORY 1.0

REVIEWED BY:_____

GINNA STATION
START:
DATE _____
TIME _____
COMPLETED:
DATE _____
TIME: _____

CSFST:	Title:	Rev: 2
F-0.6	INVENTORY	Page 1 of 1