KELEHER & McLEOD, P. A.
ATTORNEYS AND COUNSELORS AT LAW
PUBLIC SERVICE BUILDING
P. O. DRAWER AA
ALBUQUERQUE, NEW MEXICO 87103

RUSSELL MOORE
WILLIAM B. KELEHER
MICHAEL L. KELEHER
PATRICK W. HURLEY
CHARLES A. PHARRIS
RICHARD B. COLE
ARTHUR O. BEACH
JOHN M. KULIKOWSKI
THOMAS F. KELEHER
PETER H. JOHNSTONE
HENRY F. NARVAEZ
CHARLES L. MOORE
ROBERT H. CLARK
BRIAN J. O'ROURKE
RONALD F. HORN
PHIL KREHBIEL
CLYDE F. WORTHEN
SPENCER REID
MICHAEL WILE
ELIZABETH E. WHITEFIELD
ROBERT C. CONKLIN
REBECCA A. HOUSTON
BARBARA ALBIN
KATHRYN J. KUHLEN
MARK STYLES
EVAN S. HOBBS
PATRICK V. APODACA
RANDOLPH L. HAMBLIN
P. SCOTT EATON
MARGARET E. DAVIDSON
THOMAS E. GRIESS
PAULA Z. HANSON
THOMAS C. BIRD
THOMAS H. TOEVS
RIKKI L. QUINTANA
WILLIAM M. CASEY
RICHARD L. ALVIDREZ
KURT WIHL
HELEN D. HILLEGASS
CAROL LISA SMITH
JUDITH L. DURZO
THOMAS J. ZIMBRICK
JONATHAN M. DUKE
THOMAS F. BLUEHER
LYNDA LATTA
DOUGLAS E. BRYAN
CHRISTOPHER A. McCLELLAN
TERESA M. JOHNSON
LARRY HEYECK

W. A. KELEHER
1886-1972
A. H. McLEOD
1902-1976
JOHN B. TITTMANN
OF COUNSEL

TELEPHONE 842-6262
AREA CODE 505

(431-284)

January 6, 1988

VIA FEDERAL EXPRESS

Director of Nuclear Reactor Regulation
Attention: Mr. Frank J. Miraglia, Director
Division of Pressurized Water Reactor Licensing - B
U. S. Nuclear Regulatory Commission
Washington, D.C. 20555

Re: Sale and Leaseback Transactions by
Public Service Company of New Mexico -
NRC Docket Nos. STN 50-528 and STN 50-529

Gentlemen:

By letters dated June 10, 1986 and November 26, 1986 to the Director of Nuclear Reactor Regulation, Mudge Rose Guthrie Alexander & Ferdon, on behalf of Public Service Company of New Mexico ("PNM"), identified certain prospective Equity Investors with respect to sale and leaseback transactions proposed by PNM in the above dockets. One of such Equity Investors was identified to be a direct or indirect subsidiary or affiliate of The Chase Manhattan Corporation. As previously reported to the Commission, transactions were subsequently closed with a number of Equity Investors, including three (3) transactions involving Chase Manhattan Realty Leasing Corporation ("Chase Leasing") as the affiliate of The Chase Manhattan Corporation. Transaction documents reflecting the August 1, 1986 and the two December 17, 1986 closings of sale and leaseback transactions involving Chase Leasing were filed with our firm's letters to you dated August 8, 1986 and December 24, 1986, respectively.

On January 4, 1988, PNM received notice from Chase Leasing that, effective December 31, 1987, it had transferred its interests in its sale and leaseback transactions to three (3) separate wholly-owned subsidiaries, as follows:

~~8801120335~~ 2PP

- It transferred its interest in its August 1, 1986 - Unit 1 transaction to Palo Verde 1 - PNM August 50 Corporation;

- It transferred its interest in its December 17, 1986 - Unit 1 transaction to Palo Verde 1 - PNM December 75 Corporation; and

- It transferred its interest in its December 17, 1986 - Unit 2 transaction to PV2 - PNM December 35 Corporation.

All transfers were made in a manner which is specifically permitted under the respective Participation Agreements dated as of July 31, 1986 and December 15, 1986, copies of which were filed with the Commission. Also, it should be noted that the transferees fall within the description of the Equity Investor contained in the above-referenced letters dated June 10, 1986 and November 26, 1986, that is, each transferee is a direct or indirect subsidiary or affiliate of The Chase Manhattan Corporation. The First National Bank of Boston will remain the Owner Trustee for the transactions, and the terms of the respective Facility Leases remain unchanged.

The purpose of this letter is to notify the Commission, as a matter of courtesy, of the above transfers. Copies of the transfer documents will be filed with the Commission in due course upon their receipt by PNM.

If you have any questions, please do not hesitate to call.

Sincerely yours,

KELEHER & McLeod, P.A.

By _____
Rikki L. Quintana

RLQ/lj
cc: Edwin J. Reis, Esq. (Via Federal Express)
Mr. George W. Knighton (Via Federal Express)
Arthur C. Gehr, Esq. (Via Federal Express)
Timothy M. Toy, Esq. (Via Federal Express)
Mr. A. J. Robison

bcc: Terry Horn
CLM
Greg Nielsen

0605q

789

87 210929

When Recorded, Return to: Greg R. Nielsen, Esq.
Snell & Wilmer
3100 Valley Bank Center
Phoenix, Arizona 85073

CERTAIN RIGHTS OF THE LESSOR UNDER THE FACILITY LEASE AS HERETOFORE AMENDED AND AS AMENDED BY THIS AMENDMENT NO. 3 THERETO HAVE BEEN ASSIGNED TO, AND ARE SUBJECT TO A SECURITY INTEREST IN FAVOR OF, CHEMICAL BANK, AS INDENTURE TRUSTEE UNDER A TRUST INDENTURE, MORTGAGE, SECURITY AGREEMENT AND ASSIGNMENT OF RENTS DATED AS OF DECEMBER 16, 1985, AS AMENDED. THIS AMENDMENT NO. 3 HAS BEEN EXECUTED IN SEVERAL COUNTERPARTS. SEE SECTION 3(e) OF THIS AMENDMENT NO. 3 FOR INFORMATION CONCERNING THE RIGHTS OF HOLDERS OF VARIOUS COUNTERPARTS HEREOF AND OF THE FACILITY LEASE.

THIS COUNTERPART IS NOT THE ORIGINAL COUNTERPART.

---

AMENDMENT NO. 3
Dated as of March 30, 1987
to
FACILITY LEASE
Dated as of December 16, 1985, as amended
between
THE FIRST NATIONAL BANK OF BOSTON,
not in its individual capacity,
but solely as Owner Trustee under
a Trust Agreement, dated as of
December 16, 1985, with MFS
Leasing Corp.,
Lessor
and
PUBLIC SERVICE COMPANY OF NEW MEXICO,
Lessee

RECORDED IN OFFICIAL RECORDS
OF MARICOPA COUNTY, ARIZONA
APR 7 1987 -3 00
KEITH POLETIS, County Recorder
FEE 18 00 PGS 14 R.N.

---

Original Facility Lease recorded December 31, 1985, as Instrument No. 85-623275, re-recorded April 17, 1986, as Instrument No. 86-187561, confirmed by document recorded April 25, 1986, as Instrument No. 86-203238, amended by Amendment No. 1 thereto recorded July 17, 1986, as Instrument No. 86-367463, and amended by Amendment No. 2 thereto recorded on November 25, 1986, as Instrument No. 86-650767, in Maricopa County, Arizona Recorder's Office.

---

6091.MFSU1.DEBT.71:1

87 210929

**AMENDMENT NO. 3**, dated as of March 30, 1987 (**Amendment No. 3**), to the Facility Lease dated as of December 16, 1985, between **THE FIRST NATIONAL BANK OF BOSTON**, a national banking association, not in its individual capacity, but solely as Owner Trustee under a Trust Agreement, dated as of December 16, 1985, with MFS Leasing Corp. (the **Lessor**), and **PUBLIC SERVICE COMPANY OF NEW MEXICO**, a New Mexico corporation (the **Lessee**).

W I T N E S S E T H :

**WHEREAS**, the Lessee and the Lessor have heretofore entered into a Facility Lease dated as of December 16, 1985, as heretofore amended (the **Facility Lease**), providing for the lease by the Lessor to the Lessee of the Undivided Interest and the Real Property Interest;

**WHEREAS**, the Lessee and the Lessor desire to amend the Facility Lease as set forth in Section 2 hereof; and

**WHEREAS**, the Indenture Trustee has consented to this Amendment No. 3 pursuant to the Request, Instruction and Consent effective on March 30, 1987;

**NOW, THEREFORE**, in consideration of the premises and of other good and valuable consideration, the receipt and sufficiency of which are hereby acknowledged, the parties hereto agree as follows:

SECTION 1. Definitions.

For purposes hereof, capitalized terms used herein and not otherwise defined herein or in the recitals shall have the meanings assigned to such terms in Appendix A to the Facility Lease.

SECTION 2. Amendments.

(a) Section 3(a)(ii) of the Facility Lease (as amended by Amendment No. 2 thereto) is hereby amended to read in its entirety as follows:

> "(ii)(1) on July 15, 1986 an amount equal to 4.28951% of Facility Cost (2) on January 15, 1987 an amount equal to 4.65010% of Facility Cost and (3) on July 15, 1987 and on each Basic Rent Payment Date thereafter to and including January 15, 2015, an amount equal to 4.64717% of Facility Cost; and".

(b) Section 16(a)(v) of the Facility Lease is hereby amended by (i) striking the "or" at the end of clause (B) thereof, (ii) inserting an "or" at the end of clause (C) thereof and (iii) inserting at the end of such Section 16(a)(v) the following new clause (D):

> "(D) an amount equal to the higher of (1) the Casualty Value (Special Casualty Value if the Event of Default is an event specified in clause (v), (viii) or (x)(2) of Section 15 hereof), computed as of the Basic Rent Payment Date specified in such notice or (2) the Fair Market Sales Value of the Undivided Interest and the Real Property Interest;"

(c) Section 16(a)(v) of the Facility Lease, as amended by Amendment No. 1 thereto, is hereby further amended by deleting the parenthetical phrase first preceding clause (A) of such Section 16(a)(v) and inserting in lieu thereof ("and, in the case of (D) below, upon receipt of such payment the Lessor shall (or, prior to receipt of such payment, may) Transfer to the Lessee the Undivided Interest and the Real Property Interest)".

(d) Section 16(a)(vi) of the Facility Lease is hereby amended by inserting the phrase", but not in the case of an Event of Default specified in clause (iii) of Section 15," immediately following the words "if it shall so elect".

(e) The definitions of "Event of Loss" and "Final Shutdown" set forth in Appendix A to the Facility Lease are hereby amended to read in their entirety as set forth in Appendix A-1 hereto.

(f) The definition of "Undivided Interest Percentage" set forth in Appendix A to the Facility Lease is hereby amended in its entirety to read as follows:

> "**Undivided Interest Percentage** shall, when used with respect to Unit 1 (not including Common Facilities), mean an undivided 1.36% interest therein and shall, when used with respect to Common Facilities, mean an undivided .453333% interest therein."

**SECTION 3. Miscellaneous.**

(a) **Effective Date of Amendments.** The amendments set forth in Section 2 hereof shall be and become effective upon the execution hereof by the parties hereto.

(b) **Counterpart Execution.** This Amendment No. 3 may be executed in any number of counterparts and by each of the parties hereto on separate counterparts; all such counterparts shall together constitute but one and the same instrument.

(c) **Governing Law.** This Amendment No. 3 has been negotiated and delivered in the State of New York and shall be governed by, and be construed in accordance with, the laws of the State of New York, except to the extent that pursuant to the law of the State of Arizona such law is mandatorily applicable hereto.

(d) **Disclosure.** Pursuant to Arizona Revised Statutes Section 33-401, the beneficiary of the Trust Agreement is MFS Leasing Corp., a Delaware corporation. The address of the beneficiary is Suite 3030, One Mellon Bank Center, Pittsburgh, PA 15258, Attention: President. A copy of the Trust Agreement is available for inspection at the offices of the Owner Trustee at 100 Federal Street, Boston, Massachusetts 02110, Attention of Corporate Trust Division.

(e) **Amendment No. 3.** The single executed original of this Amendment No. 3 marked "THIS COUNTERPART IS THE ORIGINAL COUNTERPART" and containing the receipt of the Indenture Trustee thereon shall be the "Original" of this Amendment No. 3. To the extent that the Facility Lease constitutes chattel paper, as such term is defined in the Uniform Commercial Code as in effect in any applicable jurisdiction, no security interest in the Facility Lease as amended by this Amendment No. 3 may be created or continued through the transfer or possession of any counterpart of this Amendment No. 3 other than the "Original".

87 210920

**IN WITNESS WHEREOF**, each of the parties hereto has caused this Amendment No. 3 to Facility Lease to be duly executed in Boston, Massachusetts, or Albuquerque, New Mexico, as the case may be, by an officer thereunto duly authorized.

**THE FIRST NATIONAL BANK OF BOSTON,**
not in its individual capacity, but solely as Owner Trustee under a Trust Agreement, dated as of December 16, 1985, with MFS Leasing Corp.

By _____
**Assistant Cashier**

**PUBLIC SERVICE COMPANY OF NEW MEXICO**

By _____
Vice President and Corporate Controller



6091.MFSU1.DEBT.71:1

87 210920

IN WITNESS WHEREOF, each of the parties hereto has caused this Amendment No. 3 to Facility Lease to be duly executed in Boston, Massachusetts, or Albuquerque, New Mexico, as the case may be, by an officer thereunto duly authorized.

THE FIRST NATIONAL BANK OF BOSTON,
not in its individual capacity, but solely as Owner Trustee under a Trust Agreement, dated as of December 16, 1985, with MFS Leasing Corp.

By_____
Assistant Cashier

PUBLIC SERVICE COMPANY OF NEW MEXICO

By B.D. Shirley
Vice President and Corporate Controller



6091.MFSU1.DEBT.71:1

87 210920

State of New Mexico )
) ss:
County of Bernallilo )

The foregoing instrument was acknowledged before me this 27th day of March, 1987, by B.D. Lackey, the Vice President and Corporate Controller of **PUBLIC SERVICE COMPANY OF NEW MEXICO**, a New Mexico corporation, on behalf of the corporation.

Notary Public

Commonwealth of Massachusetts )
) ss:
County of Suffolk )

The foregoing instrument was acknowledged before me this 27th day of March, 1987, by James E. Mogavero, an Assistant Cashier of **THE FIRST NATIONAL BANK OF BOSTON**, a national banking association, on behalf of the banking association as trustee under that certain Trust Agreement dated as of December 16, 1985 with MFS Leasing Corp..

Notary Public

6091.MFSU1.DEBT.71:1

87 210929

State of New Mexico )
) ss:
County of Bernallilo )

The foregoing instrument was acknowledged before me this 27th day of March, 1987, by B.D. Lackey, the Vice President and Corporate Controller of **PUBLIC SERVICE COMPANY OF NEW MEXICO**, a New Mexico corporation, on behalf of the corporation.

_____
Notary Public

Commonwealth of Massachusetts )
) ss:
County of Suffolk )

The foregoing instrument was acknowledged before me this 27th day of March, 1987, by James E. Mogavero, an Assistant Cashier of **THE FIRST NATIONAL BANK OF BOSTON**, a national banking association, on behalf of the banking association as trustee under that certain Trust Agreement dated as of December 16, 1985 with MFS Leasing Corp..

Julie E. Comeau
Notary Public

JULIE E. COMEAU
Notary Public
My Commission Expires December 17, 1988

6091.MFSU1.DEBT.71:1

SCHEDULE A-1
to
AMENDMENT NO. 3

## Amendment to Definitions of "Event of Loss" and "Final Shutdown"

**Event of Loss** shall mean any of the following events: (a) a Final Shutdown, (b) a Requisition of Title, or (c) a Requisition of Use for an indefinite period which can be reasonably expected to exceed, or a stated period which ends on the last day of or after, the Lease Term (including the Renewal Term only if the Renewal Term shall have been elected prior to such Requisition of Use by the exercise of the renewal option provided in Section 12 of the Facility Lease).

**Final Shutdown** shall mean the earlier to occur of:

(1) the expiration or revocation of the License or that portion of the License that permits the operation of Unit 1 or the expiration, suspension or revocation of the License or that portion of the License that permits the possession by the Lessee of the Undivided Interest and the Real Property Interest; or

(2) the suspension (pursuant to 10 C.F.R. Section 2.202, as amended, and any successor provision) of the License or that portion of the License that permits the operation of Unit 1, which suspension remains in effect for three consecutive calendar months; or

(3) the permanent or temporary cessation of operation of Unit 1 as a result of a Nuclear Incident at Unit 1 (or if Unit 1 is not in operation immediately prior to the occurrence of such Nuclear Incident, the failure to resume operation thereof as a result of such Nuclear Incident) if (A) the Period of such cessation or failure equals or exceeds twenty-four consecutive calendar months, or (B) such Nuclear Incident causes the radiation level in the containment building of Unit 1, as measured by the average of two high range radiation monitors in such containment building of Unit 1 (or if only one such monitor is operating at such time, such monitor) over one hour to equal or exceed 500 rads per hour; **provided, however,** this subsection (B) shall not apply in respect of a Nuclear Incident arising solely from a fuel handling accident; or

(4) the permanent or temporary cessation of operation of Unit 1 as a result of a Nuclear Incident at Unit 2 or 3 (the **Affected Unit**) (or if Unit 1 is not in operation immediately prior to the occurrence of such Nuclear Incident, the failure to resume operation thereof as a result of such Nuclear Incident) if (A) the Period of such cessation or failure equals or exceeds thirty-six consecutive calendar months; or (B) such Nuclear Incident causes the radiation level in the containment building of the Affected Unit, as measured by the average of two high range radiation monitors in such containment building (or if only one such monitor is operating at such time, such monitor) over one hour to equal or exceed 500 rads per hour; provided, however, this subsection (B) shall not apply in respect of a Nuclear Incident arising solely from a fuel handling accident;

(5) the occurrence of a Nuclear Incident at Unit 1, 2 or 3 causing (A) substantial injury or death to any person on or off the PVNGS Site or (B) a discharge or dispersal of Source, Special Nuclear or Byproduct Material from its intended place of confinement in amounts off the PVNGS Site or causing radiation levels off the PVNGS Site such that, in the case of (B) above (x) the NRC declares the occurrence of an Extraordinary Nuclear Occurrence or declares any other event connoting an equivalent level of accident or (y) the surface contamination dose rate measured off the PVNGS Site by a radiation monitor at 1 meter above the surface level equals or is greater at any time than 10 millirads/hour (0.10 milligray/hour) or in the case of noble gas plume passage, the radiation dose rate equals or is greater than 10 rads (0.10 gray) integrated over 24 hours, (or if the NRC shall at any time lower the radiation levels required for the occurrence of an Extraordinary Nuclear Occurrence, such lower levels as shall be consistent with such change by the NRC); or

(6) damage to or destruction of any portion of Unit 1 and, unless the Lessee theretofore shall have exercised its purchase option under Section 13(b) of the Facility Lease, the failure of the Lessee, or of the Lessee and one or more other ANPP Participants, (A) to agree within eighteen calendar months of such damage or destruction (or prior to such earlier date as of which one or more other ANPP Participants shall agree to restore or reconstruct any damaged portion of Unit 1 in accordance with Section 16.2 of the ANPP Participation

Agreement) to restore or reconstruct Unit 1 to completion prior to the day sixty calendar months after the date of such agreement and (B) thereafter to complete the restoration and reconstruction of Unit 1 within a period of sixty calendar months after the date of such agreement, **provided** that no Final Shutdown shall be deemed to have occurred pursuant to this clause. (6) if and so long as Unit 1 is in operation at a rated core power level of at least 1900 megawatts thermal; or

(7) the non-operation of Unit 1 or the operation of Unit 1 at a net rated power level below 630 megawatts electric or any combination thereof for any reason (including, without limitation, the occurrence of any Nuclear Incident at any generating facility located anywhere in the world) for a Period of thirty-six consecutive calendar months (or a period through the penultimate day of the Lease Term if the Lessee shall have given notice of its intent to exercise the purchase option permitted by Section 13(b) of the Facility Lease) other than as a result of damage to or destruction of Unit 1.

For purposes of this definition, a Final Shutdown resulting from the occurrence of an event described in clause (5) above shall be deemed to have occurred immediately and automatically upon the decline of the water coolant within Unit 1 to a level three feet above the nuclear fuel.

**For purposes of the definition of "Final Shutdown" only, the following capitalized terms set forth therein shall have the following meanings (other capitalized terms having the respective meanings set forth in Appendix A to the Facility Lease):**

**Extraordinary Nuclear Occurrence** shall have its meaning as defined in Section 11 of the Atomic Energy Act and the related NRC regulations, as amended to the date hereof, and as the meaning of such term shall be expanded from time to time by future amendments thereof. The definition of "extraordinary nuclear occurrence" contained in Section 11 of the Atomic Energy Act on the date hereof is: "any event causing a discharge or dispersal of source, special nuclear, or byproduct material from its intended place of confinement in amounts offsite, or causing radiation levels offsite, which the Commission determines to be substantial, and which the Commission determines has resulted or will

probably result in substantial damages to persons offsite or property offsite. Any determination by the Commission that such an event has, or has not, occurred shall be final and conclusive, and no other official or any court shall have power or jurisdiction to review any such determination. The Commission shall establish criteria in writing setting forth the basis upon which such determination shall be made. As used in this subsection, 'offsite' means away from 'the location' or 'the contract location' as defined in the applicable Commission indemnity agreement, entered into pursuant to section 2210 of this title."

**Nuclear Incident** shall have its meaning as defined in Section 11 of the Atomic Energy Act, as amended to the date hereof and as the meaning of such term may be expanded from time to time by future amendments thereof. The definition of "nuclear incident" contained in the Atomic Energy Act on the date hereof is: "any occurrence, including an extraordinary nuclear occurrence, within the United States causing, within or outside the United States, bodily injury, sickness, disease, or death, or loss of or damage to property, or loss of use of property, arising out of or resulting from the radioactive, toxic, explosive, or other hazardous properties of source, special nuclear, or byproduct material: Provided, however, that as the term is used in section 2210(1) of this title, it shall include any such occurrence outside the United States: And provided further, That as the term is used in section 2210(d) of this title, it shall include any such occurrence outside the United States if such occurrence involves source, special nuclear, or byproduct material owned by, and used by or under contract with, the United States: And provided further, That as the term is used in section 2210(c) of this title, it shall include any such occurrence outside both the United States and any other nation if such occurrence arises out of or results from the radioactive, toxic, explosive, or other hazardous properties of source, special nuclear, or byproduct material licensed pursuant to subchapters V, VI, VII, and IX of this chapter, which is used in connection with the operation of a licensed stationary production or utilization facility or which moves outside the territorial limits of the United States in transit from one person licensed by the Commission to another person licensed by the Commission."

**Period** of a stated duration in respect of any event shall mean an indefinite period which can reasonably be expected to exceed the lesser of such duration and the period remaining to the date which is three years prior to the end of the remaining Basic Lease Term (or if such event occurs after the date three years prior to the end of the remaining Basic Lease Term, the lesser of six months and the period remaining to the day next preceding the end of the Basic Lease Term) or a stated period in excess of the lesser thereof or an actual period which continues in excess of the lesser thereof.

**Source, Special Nuclear or Byproduct Material** shall have their respective defined meanings as defined in Section 11 of the Atomic Energy Act of 1954, as amended to the date hereof and as the meanings of such terms may be expanded by future amendments thereof.

189

542

When Recorded, Return to: Greg R. Nielsen, Esq.
Snell & Wilmer
3100 Valley Bank Center
Phoenix, Arizona 85073

87 210923

CERTAIN RIGHTS OF THE LESSOR UNDER THE FACILITY LEASE AS HERETOFORE AMENDED AND AS AMENDED BY THIS AMENDMENT NO. 3 THERETO HAVE BEEN ASSIGNED TO, AND ARE SUBJECT TO A SECURITY INTEREST IN FAVOR OF, CHEMICAL BANK, AS INDENTURE TRUSTEE UNDER A TRUST INDENTURE, MORTGAGE, SECURITY AGREEMENT AND ASSIGNMENT OF RENTS DATED AS OF DECEMBER 16, 1985, AS AMENDED. THIS AMENDMENT NO. 3 HAS BEEN EXECUTED IN SEVERAL COUNTERPARTS. SEE SECTION 3(e) OF THIS AMENDMENT NO. 3 FOR INFORMATION CONCERNING THE RIGHTS OF HOLDERS OF VARIOUS COUNTERPARTS HEREOF AND OF THE FACILITY LEASE.

THIS COUNTERPART IS NOT THE ORIGINAL COUNTERPART.

---

AMENDMENT NO. 3
Dated as of March 30, 1987
to
FACILITY LEASE
Dated as of December 16, 1985, as amended
between
THE FIRST NATIONAL BANK OF BOSTON,
not in its individual capacity,
but solely as Owner Trustee under
a Trust Agreement, dated as of
December 16, 1985, with Chrysler
Financial Corporation,
Lessor
and
PUBLIC SERVICE COMPANY OF NEW MEXICO,
Lessee

RECORDED IN OFFICIAL RECORDS
OF MARICOPA COUNTY, ARIZONA
APR 7 1987 -3 00
KEITH POLETIS, County Recorder
FEE 20.00 96 XD

---

Original Facility Lease recorded December 31, 1985 as Instrument No. 85-623282, amended by Amendment No. 1 thereto recorded July 17, 1986, as Instrument No. 86-367464 and amended by Amendment No. 2 thereto recorded on November 25, 1986, as Instrument 86-650763, in Maricopa County, Arizona Recorder's Office.

---

6091.CHRYSLER.DEBT.71:1

87 210923

**AMENDMENT NO. 3**, dated as of March 30, 1987 (**Amendment No. 3**), to the Facility Lease dated as of December 16, 1985, between **THE FIRST NATIONAL BANK OF BOSTON**, a national banking association, not in its individual capacity, but solely as Owner Trustee under a Trust Agreement, dated as of December 16, 1985, with Chrysler Financial Corporation (the **Lessor**), and **PUBLIC SERVICE COMPANY OF NEW MEXICO**, a New Mexico corporation (the **Lessee**).

W I T N E S S E T H :

**WHEREAS**, the Lessee and the Lessor have heretofore entered into a Facility Lease dated as of December 16, 1985, as heretofore amended (the **Facility Lease**), providing for the lease by the Lessor to the Lessee of the Undivided Interest and the Real Property Interest;

**WHEREAS**, the Lessee and the Lessor desire to amend the Facility Lease as set forth in Section 2 hereof; and

**WHEREAS**, the Indenture Trustee has consented to this Amendment No. 3 pursuant to the Request, Instruction and Consent effective on March 30, 1987;

**NOW, THEREFORE**, in consideration of the premises and of other good and valuable consideration, the receipt and sufficiency of which are hereby acknowledged, the parties hereto agree as follows:

SECTION 1. Definitions.

For purposes hereof, capitalized terms used herein and not otherwise defined herein or in the recitals shall have the meanings assigned to such terms in Appendix A to the Facility Lease.

SECTION 2. Amendments.

(a) Section 3(a)(ii) of the Facility Lease (as amended by Amendment No. 2 thereto) is hereby amended to read in its entirety as follows:

> "(ii)(1) on July 15, 1986 an amount equal to 4.3683233% of Facility Cost (2) on January 15, 1987 an amount equal to 4.755716% of Facility Cost and (3) on July 15, 1987 and on each Basic Rent Payment Date thereafter to and including January 15, 2015, an amount equal to 4.7527840% of Facility Cost; and".

(b) Section 16(a)(v) of the Facility Lease is hereby amended by (i) striking the "or" at the end of clause (B) thereof, (ii) inserting an "or" at the end of clause (C) thereof and (iii) inserting at the end of such Section 16(a)(v) the following new clause (D):

> "(D) an amount equal to the higher of (1) the Casualty Value (Special Casualty Value if the Event of Default is an event specified in clause (v), (viii) or (x)(2) of Section 15 hereof), computed as of the Basic Rent Payment Date specified in such notice or (2) the Fair Market Sales Value of the Undivided Interest and the Real Property Interest;"

(c) Section 16(a)(v) of the Facility Lease, as amended by Amendment No. 1 thereto, is hereby further amended by deleting the parenthetical phrase first preceding clause (A) of such Section 16(a)(v) and inserting in lieu thereof ("and, in the case of (D) below, upon receipt of such payment the Lessor shall (or, prior to receipt of such payment, may) Transfer to the Lessee the Undivided Interest and the Real Property Interest)".

(d) Section 16(a)(vi) of the Facility Lease is hereby amended by inserting the phrase", but not in the case of an Event of Default specified in clause (iii) of Section 15," immediately following the words "if it shall so elect".

(e) The definitions of "Event of Loss" and "Final Shutdown" set forth in Appendix A to the Facility Lease are hereby amended to read in their entirety as set forth in Appendix A-1 hereto.

(f) The definition of "Undivided Interest Percentage" set forth in Appendix A to the Facility Lease is hereby amended in its entirety to read as follows:

> "**Undivided Interest Percentage** shall, when used with respect to Unit 1 (not including Common Facilities), mean an undivided 3.74% interest therein and shall, when used with respect to Common Facilities, mean an undivided 1.246667% interest therein."

SECTION 3. Miscellaneous.

(a) **Effective Date of Amendments.** The amendments set forth in Section 2 hereof shall be and become effective upon the execution hereof by the parties hereto.

(b) **Counterpart Execution.** This Amendment No. 3 may be executed in any number of counterparts and by each of the parties hereto on separate counterparts; all such counterparts shall together constitute but one and the same instrument.

(c) **Governing Law.** This Amendment No. 3 has been negotiated and delivered in the State of New York and shall be governed by, and be construed in accordance with, the laws of the State of New York, except to the extent that pursuant to the law of the State of Arizona such law is mandatorily applicable hereto.

(d) Disclosure. Pursuant to Arizona Revised Statutes Section 33-401, the beneficiary of the Trust Agreement is Chrysler Financial Corporation, a Michigan corporation. The address of the beneficiary is Greenwich Office Park I, Greenwich, Connecticut 06836. A copy of the Trust Agreement is available for inspection at the offices of the Owner Trustee at 100 Federal Street, Boston, Massachusetts 02110, Attention of Corporate Trust Division.

(e) Amendment No. 3. The single executed original of this Amendment No. 3 marked "THIS COUNTERPART IS THE ORIGINAL COUNTERPART" and containing the receipt of the Indenture Trustee thereon shall be the "Original" of this Amendment No. 3. To the extent that the Facility Lease constitutes chattel paper, as such term is defined in the Uniform Commercial Code as in effect in any applicable jurisdiction, no security interest in the Facility Lease as amended by this Amendment No. 3 may be created or continued through the transfer or possession of any counterpart of this Amendment No. 3 other than the "Original".

IN WITNESS WHEREOF, each of the parties hereto has caused this Amendment No. 3 to Facility Lease to be duly executed in Boston, Massachusetts, or Albuquerque, New Mexico, as the case may be, by an officer thereunto duly authorized.

THE FIRST NATIONAL BANK OF BOSTON,
not in its individual capacity, but solely as Owner Trustee under a Trust Agreement, dated as of December 16, 1985, with Chrysler Financial Corporation

By _____
Assistant Cashier

PUBLIC SERVICE COMPANY OF NEW MEXICO

By _____
Vice President and Corporate Controller

**IN WITNESS WHEREOF**, each of the parties hereto has caused this Amendment No. 3 to Facility Lease to be duly executed in Boston, Massachusetts, or Albuquerque, New Mexico, as the case may be, by an officer thereunto duly authorized.

**THE FIRST NATIONAL BANK OF BOSTON,**
not in its individual capacity, but solely as Owner Trustee under a Trust Agreement, dated as of December 16, 1985, with Chrysler Financial Corporation

By_____
**Assistant Cashier**

**PUBLIC SERVICE COMPANY OF NEW MEXICO**

By B D Stark
Vice President and Corporate Controller

87 210923

State of New Mexico )
) ss:
County of Bernallilo )

The foregoing instrument was acknowledged before me this 27th day of March, 1987, by B.D. Lackey, the Vice President and Corporate Controller of PUBLIC SERVICE COMPANY OF NEW MEXICO, a New Mexico corporation, on behalf of the corporation.

Notary Public

Commonwealth of Massachusetts )
) ss:
County of Suffolk )

The foregoing instrument was acknowledged before me this 27th day of March, 1987, by James E. Mogavero, an Assistant Cashier of THE FIRST NATIONAL BANK OF BOSTON, a national banking association, on behalf of the banking association as trustee under that certain Trust Agreement dated as of December 16, 1985 with Chrysler Financial Corporation.

Notary Public

6091.CHRYSLER.DEBT.71:1

87 210922

State of New Mexico )
) ss:
County of Bernallilo )

The foregoing instrument was acknowledged before me this 27th day of March, 1987, by B.D. Lackey, the Vice President and Corporate Controller of PUBLIC SERVICE COMPANY OF NEW MEXICO, a New Mexico corporation, on behalf of the corporation.

Notary Public

Commonwealth of Massachusetts )
) ss:
County of Suffolk )

The foregoing instrument was acknowledged before me this 27th day of March, 1987, by James E. Mogavero, an Assistant Cashier of THE FIRST NATIONAL BANK OF BOSTON, a national banking association, on behalf of the banking association as trustee under that certain Trust Agreement dated as of December 16, 1985 with Chrysler Financial Corporation.

Julie E. Comeau
Notary Public
JULIE E. COMEAU
Notary Public
My Commission Expires December 17, 1988

6091.CHRYSLER.DEBT.71:1

87 210922

SCHEDULE A-1
to
AMENDMENT NO. 3

## Amendment to Definitions of "Event of Loss" and "Final Shutdown"

**Event of Loss** shall mean any of the following events: (a) a Final Shutdown, (b) a Requisition of Title, (c) a Requisition of Use which can reasonably be expected to exceed, or for a stated period which ends on or after, the penultimate day of the Lease Term, (d) any degradation of the rated capacity of Unit 1 to below 630 megawatts electric for an indefinite period which can reasonably be expected to exceed the lesser of 5 years and the remaining Lease Term or for a stated period in excess of the lesser of five years and the remaining Lease Term (other than as a result of damage to or destruction of Unit 1), or (e) any degradation of the rated capacity of Unit 1 to below, or the inability of Unit 1 to produce electricity at a level above, 630 megawatts electric for the Minimum Period (other than as a result of damage to or destruction of Unit 1, Governmental Action or an event referred to in part (10)(x) or (10)(y) of the definition of "Final Shutdown"). For purposes of this definition, **Minimum Period** shall mean the shorter of (x) the shorter of (1) an indefinite period unless such period can reasonably be expected to be shorter than the applicable Benchmark Period and (2) an actual period in excess of the applicable Benchmark Period and (y) a period beginning on the date of determination through and including the penultimate day of the Lease Term, and **Benchmark Period** shall mean a period equal to any 60 consecutive calendar months except that a period of 36 consecutive calendar months shall be applicable with respect to events specified in part 10(y) of the definition of "Final Shutdown". The period specified in the foregoing clause (x)(1) shall be determined by an independent nuclear consultant agreed to by the Lessee and the Owner Participant or, failing prompt agreement upon such consultant, appointed by the American Arbitration Association (or comparable or successor organization).

**Final Shutdown** shall mean the earlier to occur of:

(1) (i) the expiration, suspension (for an indefinite period which can reasonably be expected to exceed the lesser of five years and the remaining Lease Term or for a stated period in excess of the lesser of five years and the remaining Lease Term) or revocation of that portion of the License that permits the operation of Unit 1 or the possession by the Lessee of the Undivided Interest and the Real Property Interest, (ii) the cessation of operation of Unit 1 as a result of a nuclear incident relating to PVNGS for an indefinite period which can reasonably be expected to exceed the lesser of five years and the remaining Lease Term or for a stated period in excess of the lesser of five years and the remaining Lease Term, (iii) damage to or destruction of Unit 1 and the failure of the Lessee, or of the Lessee and one or more other ANPP Participants, to agree within five years of such damage or destruction to restore and reconstruct Unit 1 and (iv) damage to or destruction of Unit 1, without restoration or reconstruction having been completed by the end of the Lease Term, such that Unit 1 will have a rated capacity as of the penultimate day of the Lease Term of at least 630 megawatts electric; or

(2) the suspension of the License or that portion of the License that permits the possession by the Lessee of the Undivided Interest and the Real Property Interest; or

(3) the suspension (pursuant to 10 C.F.R. Section 2.202, as amended, and any successor provision) of the License or that portion of the License that permits the operation of Unit 1, which suspension remains in effect for three consecutive calendar months; or

(4) the permanent or temporary cessation of operation of Unit 1 as a result of a Nuclear Incident at Unit 1 (or if Unit 1 is not in operation immediately prior to the occurrence of such Nuclear Incident, the failure to resume operation thereof as a result of such Nuclear Incident) if (A) the Period of such cessation or failure equals or exceeds twenty-four consecutive calendar months, or (B) such Nuclear Incident causes the radiation level in the containment building of Unit 1, as measured by the average of two high range radiation monitors in such containment building of Unit 1 (or if

only one such monitor is operating at such time, such monitor) over one hour to equal or exceed 500 rads per hour; **provided, however,** this clause (B) shall not apply in respect of a Nuclear Incident arising solely from a fuel handling accident; or

(5) the permanent or temporary cessation of operation of Unit 1 as a result of a Nuclear Incident at Unit 2 or 3 (the **Affected Unit**) (or if Unit 1 is not in operation immediately prior to the occurrence of such Nuclear Incident, the failure to resume operation thereof as a result of such Nuclear Incident) if (A) the Period of such cessation or failure equals or exceeds thirty-six consecutive calendar months; or (B) such Nuclear Incident causes the radiation level in the containment building of the Affected Unit, as measured by the average of two high range radiation monitors in such containment building (or if only one such monitor is operating at such time, such monitor) over one hour to equal or exceed 500 rads per hour; **provided, however,** this clause (B) shall not apply in respect of a Nuclear Incident arising solely from a fuel handling accident; or

(6) the occurrence of a Nuclear Incident at Unit 1, 2 or 3 causing (A) substantial injury or death to any person on or off the PVNGS Site or (B) a discharge or dispersal of Source, Special Nuclear or Byproduct Material from its intended place of confinement in amounts off the PVNGS Site or causing radiation levels off the PVNGS Site such that, in the case of this clause (B) (x) the NRC declares the occurrence of an Extraordinary Nuclear Occurrence or declares any other event connoting an equivalent level of accident or (y) the surface contamination dose rate measured off the PVNGS Site by a radiation monitor at 1 meter above the surface level equals or is greater at any time than 10 millirads/hour (0.10 milligray/hour) or, in the case of noble gas plume passage, the radiation dose rate equals or is greater than 10 rads (0.10 gray) integrated over 24 hours, (or if the NRC shall at any time lower the radiation levels required for the occurrence of an Extraordinary Nuclear Occurrence, such lower levels as shall be consistent with such change by the NRC); or

(7) damage to or destruction of any portion of Unit 1 and, unless the Lessee theretofore shall have exercised its purchase option under Section 13(b) of the Facility Lease, the failure of the Lessee, or of the

Lessee and one or more other ANPP Participants, (A) to agree within eighteen calendar months of such damage or destruction (or prior to such earlier date as of which one or more other ANPP Participants shall agree to restore or reconstruct any damaged portion of Unit 1 in accordance with Section 16.2 of the ANPP Participation Agreement) to restore or reconstruct Unit 1 to completion prior to the day sixty calendar months after the date of such agreement and (B) thereafter to complete the restoration and reconstruction of Unit 1 within a period of sixty calendar months after the date of such agreement, provided that no Final Shutdown shall be deemed to have occurred pursuant to this part (7) if and so long as Unit 1 is in operation at a rated core power level of at least 1900 megawatts thermal; or

(8) the non-operation of Unit 1 or the operation of Unit 1 at a net rated power level below 630 megawatts electric or any combination thereof for any reason (including, without limitation, the occurrence of any Nuclear Incident at any generating facility located anywhere in the world) for a Period of thirty-six consecutive calendar months (or a period through the penultimate day of the Lease Term if the Lessee shall have given notice of its intent to exercise the purchase option permitted by Section 13(b) of the Facility Lease) other than as a result of damage to or destruction of Unit 1; or

(9) the taking of any Governmental Action or the adoption or making of any interpretations, directives or requests by any Governmental Authority (including, without limitation, the staff thereof) or the concurrence by any Governmental Authority in the voluntary action of the operator thereof, in each such case whether formal or informal, by reason of which Unit 1 shall cease to operate, or shall be unable under Applicable Law to resume operation, at a capacity level of at least 630 megawatts electric for the Minimum Period; or

(10) the cessation of operation of Unit 1 as a result of either (x) the occurrence of an Extraordinary Nuclear Occurrence or an Incipient Extraordinary Nuclear Occurrence relating to Unit 1 or (y) a Nuclear Incident relating to Unit 1 and, in the case of this clause (y), the continuation of such cessation for the Minimum Period; or

(11) damage to Unit 1, without restoration or reconstruction having been completed by the expiration of the Minimum Period, such that Unit 1 has a rated capacity of at least 630 megawatts electric; or

(12) destruction of Unit 1.

For purposes of clause (iii) of part (1) of this definition, Final Shutdown will be deemed to have occurred upon the earlier of (x) the written declaration of the Lessee of its intent not so to agree and (y) the expiration of such five-year period without written agreement, and pursuant to the foregoing clause (iv) of part (1), Final Shutdown will be deemed to have occurred on the day preceding the Lease Termination Date. For purposes of part (6) of this definition, a Final Shutdown shall be deemed to have occurred immediately and automatically upon the decline of the water coolant within Unit 1 to a level three feet above the nuclear fuel and for purposes of parts (9), (10)(y) and (11) of this definition, on the last day of the Minimum Period.

For purposes of parts (9), (10) and (11) of this definition, **Minimum Period** shall have the same meaning assigned to it in the definition of "Event of Loss".

For purposes of part (6) of this definition, **Extraordinary Nuclear Occurrence** shall have its meaning as defined in Section 11 of the Atomic Energy Act and the related NRC regulations, as amended to the date hereof, and as the meaning of such term shall be expanded from time to time by future amendments thereof. The definition of "extraordinary nuclear occurrence" contained in Section 11 of the Atomic Energy Act on the date hereof is: "any event causing a discharge or dispersal of source, special nuclear, or by-product material from its intended place of confinement in amounts offsite, or causing radiation levels offsite, which the Commission determines to be substantial, and which the Commission determines has resulted or will probably result in substantial damages to persons offsite or property offsite. Any determination by the Commission that such an event has, or has not, occurred shall be final and conclusive, and no other official or any court shall have power or jurisdiction to review any such determination. The Commission shall establish criteria in writing setting forth the basis upon which such determination shall be made. As used in this

subsection, 'offsite' means away from 'the location' or 'the contract location' as defined in the applicable Commission indemnity agreement, entered into pursuant to section 2210 of this title."

For purposes of part (10) of this definition: the term "Extraordinary Nuclear Occurrence" shall have its meaning as defined in Section 11 of the Atomic Energy Act of 1954, as amended to the Closing Date; the term "Incipient Extraordinary Nuclear Occurrence" shall mean an event causing a discharge or dispersal of nuclear source, special nuclear or nuclear by-product material from its intended place of confinement in amounts off site or on site or causing a radiation level off site or on site which an independent nuclear consultant agreed to by the Lessee and the Owner Participant (or, failing prompt agreement, appointed by the American Arbitration Association) determines to be substantial and which such consultant determines has resulted in substantial injury to persons on or off the PVNGS Site or substantial damage to property off the PVNGS Site; and the term "Nuclear Incident" shall mean any occurrence causing bodily injury, sickness, disease or death, or loss of or damage to property, or the loss of use of property, arising out of or resulting from the radioactive, toxic, explosive or other hazardous properties of nuclear source, special nuclear or nuclear by-product material.

For purposes of parts (4), (5), (6) and (8) of this definition, **Nuclear Incident** shall have its meaning as defined in Section 11 of the Atomic Energy Act, as amended to the date hereof and as the meaning of such term may be expanded from time to time by future amendments thereof. The definition of "nuclear incident" contained in the Atomic Energy Act on the date hereof is: "any occurrence, including an extraordinary nuclear occurrence, within the United States causing, within or outside the United States, bodily injury, sickness, disease, or death, or loss of or damage to property, or loss of use of property, arising out of or resulting from the radioactive, toxic, explosive, or other hazardous properties of source, special nuclear, or byproduct material: Provided, however, that as the term is used in section 2210(1) of this title, it shall include any such occurrence outside the United States: And provided further, That as the term is used in section 2210(d) of this title, it shall include any such occurrence outside the United States if such occurrence involves source,

special nuclear, or byproduct material owned by, and used by or under contract with, the United States: And provided further, That as the term is used in section 2210(c) of this title, it shall include any such occurrence outside both the United States and any other nation if such occurrence arises out of or results from the radioactive, toxic, explosive, or other hazardous properties of source, special nuclear, or byproduct material licensed pursuant to subchapters V, VI, VII, and IX of this chapter, which is used in connection with the operation of a licensed stationary production or utilization facility or which moves outside the territorial limits of the United States in transit from one person licensed by the Commission to another person licensed by the Commission."

For purposes of parts (4), (5) and (8) of this definition, **Period of a stated duration** in respect of any event shall mean an indefinite period which can reasonably be expected to exceed the lesser of such duration and the period remaining to the date which is three years prior to the end of the remaining Basic Lease Term (or if such event occurs after the date three years prior to the end of the remaining Basic Lease Term, the lesser of six months and the period remaining to the day next preceding the end of the Basic Lease Term) or a stated period in excess of the lesser thereof or an actual period which continues in excess of the lesser thereof.

For purposes of part (6) of this definition, **Source, Special Nuclear or Byproduct Material** shall have their respective defined meanings as defined in Section 11 of the Atomic Energy Act of 1954, as amended to the date hereof and as the meanings of such terms may be expanded by future amendments thereof.

4 of 9

87 210926

When Recorded, Return to: Greg R. Nielsen, Esq.
Snell & Wilmer
3100 Valley Bank Center
Phoenix, Arizona 85073

**CERTAIN RIGHTS OF THE LESSOR UNDER THE FACILITY LEASE AS HERETOFORE AMENDED AND AS AMENDED BY THIS AMENDMENT NO. 3 THERETO HAVE BEEN ASSIGNED TO, AND ARE SUBJECT TO A SECURITY INTEREST IN FAVOR OF, CHEMICAL BANK, AS INDENTURE TRUSTEE UNDER A TRUST INDENTURE, MORTGAGE, SECURITY AGREEMENT AND ASSIGNMENT OF RENTS DATED AS OF DECEMBER 16, 1985, AS AMENDED. THIS AMENDMENT NO. 3 HAS BEEN EXECUTED IN SEVERAL COUNTERPARTS. SEE SECTION 3(e) OF THIS AMENDMENT NO. 3 FOR INFORMATION CONCERNING THE RIGHTS OF HOLDERS OF VARIOUS COUNTERPARTS HEREOF AND OF THE FACILITY LEASE.**

**THIS COUNTERPART IS NOT THE ORIGINAL COUNTERPART.**

---

**AMENDMENT NO. 3**
Dated as of March 30, 1987
to
**FACILITY LEASE**
Dated as of December 16, 1985, as amended
between
**THE FIRST NATIONAL BANK OF BOSTON,**
not in its individual capacity,
but solely as Owner Trustee under
a Trust Agreement, dated as of
December 16, 1985, with Burnham
Leasing Corporation,
**Lessor**
and
**PUBLIC SERVICE COMPANY OF NEW MEXICO,**
**Lessee**

RECORDED IN OFFICIAL RECORDS
OF MARICOPA COUNTY ARIZONA
APR 7 1987 -3 00
KEITH POLETIS, County Recorder
FT 18.00 PGS 14 R.N.

---

**Original Facility Lease recorded December 31, 1985, as Instrument No. 85-623268, re-recorded April 17, 1986, as Instrument No. 86-187558, confirmed by document recorded April 25, 1986, as Instrument No. 86-203239, amended by Amendment No. 1 thereto recorded July 17, 1986, as Instrument No. 86-367462, and amended by Amendment No. 2 thereto recorded on November 25, 1986, as Instrument No. 86-650739, in Maricopa County, Arizona Recorder's Office.**

---

6091.BURNHAMU1.DEBT.71:1

**AMENDMENT NO. 3**, dated as of March 30, 1987 (**Amendment No. 3**), to the Facility Lease dated as of December 16, 1985, between **THE FIRST NATIONAL BANK OF BOSTON**, a national banking association, not in its individual capacity, but solely as Owner Trustee under a Trust Agreement, dated as of December 16, 1985, with Burnham Leasing Corporation (the **Lessor**), and **PUBLIC SERVICE COMPANY OF NEW MEXICO**, a New Mexico corporation (the **Lessee**).

W I T N E S S E T H :

**WHEREAS**, the Lessee and the Lessor have heretofore entered into a Facility Lease dated as of December 16, 1985, as heretofore amended (the **Facility Lease**), providing for the lease by the Lessor to the Lessee of the Undivided Interest and the Real Property Interest;

**WHEREAS**, the Lessee and the Lessor desire to amend the Facility Lease as set forth in Section 2 hereof; and

**WHEREAS**, the Indenture Trustee has consented to this Amendment No. 3 pursuant to the Request, Instruction and Consent effective on March 30, 1987;

**NOW, THEREFORE**, in consideration of the premises and of other good and valuable consideration, the receipt and sufficiency of which are hereby acknowledged, the parties hereto agree as follows:

SECTION 1. Definitions.

For purposes hereof, capitalized terms used herein and not otherwise defined herein or in the recitals shall have the meanings assigned to such terms in Appendix A to the Facility Lease.

SECTION 2. Amendments.

(a) Section 3(a)(ii) of the Facility Lease (as amended by Amendment No. 2 thereto) is hereby amended to read in its entirety as follows:

> "(ii)(1) on July 15, 1986 an amount equal to 4.3683233% of Facility Cost (2) on January 15, 1987 an amount equal to 4.70354% of Facility Cost and (3) on July 15, 1987 and on each Basic Rent Payment Date thereafter to and including January 15, 2015, an amount equal to 4.7006080% of Facility Cost; and".

(b) Section 16(a)(v) of the Facility Lease is hereby amended by (i) striking the "or" at the end of clause (B) thereof, (ii) inserting an "or" at the end of clause (C) thereof and (iii) inserting at the end of such Section 16(a)(v) the following new clause (D):

> "(D) an amount equal to the higher of (1) the Casualty Value (Special Casualty Value if the Event of Default is an event specified in clause (v), (viii) or (x)(2) of Section 15 hereof), computed as of the Basic Rent Payment Date specified in such notice or (2) the Fair Market Sales Value of the Undivided Interest and the Real Property Interest;"

(c) Section 16(a)(v) of the Facility Lease, as amended by Amendment No. 1 thereto, is hereby further amended by deleting the parenthetical phrase first preceding clause (A) of such Section 16(a)(v) and inserting in lieu thereof ("and, in the case of (D) below, upon receipt of such payment the Lessor shall (or, prior to receipt of such payment, may) Transfer to the Lessee the Undivided Interest and the Real Property Interest)".

(d) Section 16(a)(vi) of the Facility Lease is hereby amended by inserting the phrase", but not in the case of an Event of Default specified in clause (iii) of Section 15," immediately following the words "if it shall so elect".

(e) The definitions of "Event of Loss" and "Final Shutdown" set forth in Appendix A to the Facility Lease are hereby amended to read in their entirety as set forth in Appendix A-1 hereto.

(f) The definition of "Undivided Interest Percentage" set forth in Appendix A to the Facility Lease is hereby amended in its entirety to read as follows:

> "**Undivided Interest Percentage** shall, when used with respect to Unit 1 (not including Common Facilities), mean an undivided 2.266667% interest therein and shall, when used with respect to Common Facilities, mean an undivided .755556% interest therein."

SECTION 3. Miscellaneous.

(a) **Effective Date of Amendments.** The amendments set forth in Section 2 hereof shall be and become effective upon the execution hereof by the parties hereto.

(b) **Counterpart Execution.** This Amendment No. 3 may be executed in any number of counterparts and by each of the parties hereto on separate counterparts; all such counterparts shall together constitute but one and the same instrument.

(c) **Governing Law.** This Amendment No. 3 has been negotiated and delivered in the State of New York and shall be governed by, and be construed in accordance with, the laws of the State of New York, except to the extent that pursuant to the law of the State of Arizona such law is mandatorily applicable hereto.

(d) **Disclosure.** Pursuant to Arizona Revised Statutes Section 33-401, the beneficiary of the Trust Agreement is Burnham Leasing Corporation, a New York corporation. The address of the beneficiary is 60 Broad Street, New York, New York 10004, Attention: Assistant Treasurer. A copy of the Trust Agreement is available for inspection at the offices of the Owner Trustee at 100 Federal Street, Boston, Massachusetts 02110, Attention of Corporate Trust Division.

(e) **Amendment No. 3.** The single executed original of this Amendment No. 3 marked "THIS COUNTERPART IS THE ORIGINAL COUNTERPART" and containing the receipt of the Indenture Trustee thereon shall be the "Original" of this Amendment No. 3. To the extent that the Facility Lease constitutes chattel paper, as such term is defined in the Uniform Commercial Code as in effect in any applicable jurisdiction, no security interest in the Facility Lease as amended by this Amendment No. 3 may be created or continued through the transfer or possession of any counterpart of this Amendment No. 3 other than the "Original".

87 210926

IN WITNESS WHEREOF, each of the parties hereto has caused this Amendment No. 3 to Facility Lease to be duly executed in Boston, Massachusetts, or Albuquerque, New Mexico, as the case may be, by an officer thereunto duly authorized.

THE FIRST NATIONAL BANK OF BOSTON,
not in its individual capacity, but solely as Owner Trustee under a Trust Agreement, dated as of December 16, 1985, with Burnham Leasing Corporation

By _____
Assistant Cashier

PUBLIC SERVICE COMPANY OF NEW MEXICO

By _____
Vice President and Corporate Controller



6091.BURNHAMU1.DEBT.71:1

87 210926

IN WITNESS WHEREOF, each of the parties hereto has caused this Amendment No. 3 to Facility Lease to be duly executed in Boston, Massachusetts, or Albuquerque, New Mexico, as the case may be, by an officer thereunto duly authorized.

THE FIRST NATIONAL BANK OF BOSTON,
not in its individual capacity, but solely as Owner Trustee under a Trust Agreement, dated as of December 16, 1985, with Burnham Leasing Corporation

By_____
Assistant Cashier

PUBLIC SERVICE COMPANY OF NEW MEXICO

By_____
Vice President and Corporate Controller



6091.BURNHAMU1.DEBT.71:1

87 210926

State of New Mexico )
) ss:
County of Bernallilo )

The foregoing instrument was acknowledged before me this 27th day of March, 1987, by B.D. Lackey, the Vice President and Corporate Controller of **PUBLIC SERVICE COMPANY OF NEW MEXICO**, a New Mexico corporation, on behalf of the corporation.

Notary Public

Commonwealth of Massachusetts )
) ss:
County of Suffolk )

The foregoing instrument was acknowledged before me this 27th day of March, 1987, by James E. Mogavero, an Assistant Cashier of **THE FIRST NATIONAL BANK OF BOSTON**, a national banking association, on behalf of the banking association as trustee under that certain Trust Agreement dated as of December 16, 1985 with Burnham Leasing Corporation.

Notary Public

6091.BURNHAMU1.DEBT.71:1

87 210926

SCHEDULE A-1
to
AMENDMENT NO. 3

## Amendment to Definitions of "Event of Loss" and "Final Shutdown"

**Event of Loss** shall mean any of the following events: (a) a Final Shutdown, (b) a Requisition of Title, or (c) a Requisition of Use for an indefinite period which can be reasonably expected to exceed, or a stated period which ends on the last day of or after, the Lease Term (including the Renewal Term only if the Renewal Term shall have been elected prior to such Requisition of Use by the exercise of the renewal option provided in Section 12 of the Facility Lease).

**Final Shutdown** shall mean the earlier to occur of:

(1) the expiration or revocation of the License or that portion of the License that permits the operation of Unit 1 or the expiration, suspension or revocation of the License or that portion of the License that permits the possession by the Lessee of the Undivided Interest and the Real Property Interest; or

(2) the suspension (pursuant to 10 C.F.R. Section 2.202, as amended, and any successor provision) of the License or that portion of the License that permits the operation of Unit 1, which suspension remains in effect for three consecutive calendar months; or

(3) the permanent or temporary cessation of operation of Unit 1 as a result of a Nuclear Incident at Unit 1 (or if Unit 1 is not in operation immediately prior to the occurrence of such Nuclear Incident, the failure to resume operation thereof as a result of such Nuclear Incident) if (A) the Period of such cessation or failure equals or exceeds twenty-four consecutive calendar months, or (B) such Nuclear Incident causes the radiation level in the containment building of Unit 1, as measured by the average of two high range radiation monitors in such containment building of Unit 1 (or if only one such monitor is operating at such time, such monitor) over one hour to equal or exceed 500 rads per hour; provided, however, this subsection (B) shall not apply in respect of a Nuclear Incident arising solely from a fuel handling accident; or

87 210926

State of New Mexico )
) ss:
County of Bernallilo )

The foregoing instrument was acknowledged before me this 27th day of March, 1987, by B.D. Lackey, the Vice President and Corporate Controller of PUBLIC SERVICE COMPANY OF NEW MEXICO, a New Mexico corporation, on behalf of the corporation.

Notary Public

Commonwealth of Massachusetts )
) ss:
County of Suffolk )

The foregoing instrument was acknowledged before me this 27th day of March, 1987, by James E. Mogavero, an Assistant Cashier of THE FIRST NATIONAL BANK OF BOSTON, a national banking association, on behalf of the banking association as trustee under that certain Trust Agreement dated as of December 16, 1985 with Burnham Leasing Corporation.

Julie E. Comeau
Notary Public

JULIE E. COMEAU
Notary Public
My Commission Expires December 17, 1990

6091.BURNHAMU1.DEBT.71:1

(4) the permanent or temporary cessation of operation of Unit 1 as a result of a Nuclear Incident at Unit 2 or 3 (the **Affected Unit**) (or if Unit 1 is not in operation immediately prior to the occurrence of such Nuclear Incident, the failure to resume operation thereof as a result of such Nuclear Incident) if (A) the Period of such cessation or failure equals or exceeds thirty-six consecutive calendar months; or (B) such Nuclear Incident causes the radiation level in the containment building of the Affected Unit, as measured by the average of two high range radiation monitors in such containment building (or if only one such monitor is operating at such time, such monitor) over one hour to equal or exceed 500 rads per hour; **provided, however,** this subsection (B) shall not apply in respect of a Nuclear Incident arising solely from a fuel handling accident;

(5) the occurrence of a Nuclear Incident at Unit 1, 2 or 3 causing (A) substantial injury or death to any person on or off the PVNGS Site or (B) a discharge or dispersal of Source, Special Nuclear or Byproduct Material from its intended place of confinement in amounts off the PVNGS Site or causing radiation levels off the PVNGS Site such that, in the case of (B) above (x) the NRC declares the occurrence of an Extraordinary Nuclear Occurrence or declares any other event connoting an equivalent level of accident or (y) the surface contamination dose rate measured off the PVNGS Site by a radiation monitor at 1 meter above the surface level equals or is greater at any time than 10 millirads/hour (0.10 milligray/hour) or in the case of noble gas plume passage, the radiation dose rate equals or is greater than 10 rads (0.10 gray) integrated over 24 hours, (or if the NRC shall at any time lower the radiation levels required for the occurrence of an Extraordinary Nuclear Occurrence, such lower levels as shall be consistent with such change by the NRC); or

(6) damage to or destruction of any portion of Unit 1 and, **unless** the Lessee theretofore shall have exercised its purchase option under Section 13(b) of the Facility Lease, the failure of the Lessee, or of the Lessee and one or more other ANPP Participants, (A) to agree within eighteen calendar months of such damage or destruction (or prior to such earlier date as of which one or more other ANPP Participants shall agree to restore or reconstruct any damaged portion of Unit 1 in accordance with Section 16.2 of the ANPP Participation

Agreement) to restore or reconstruct Unit 1 to completion prior to the day sixty calendar months after the date of such agreement and (B) thereafter to complete the restoration and reconstruction of Unit 1 within a period of sixty calendar months after the date of such agreement, **provided** that no Final Shutdown shall be deemed to have occurred pursuant to this clause (6) if and so long as Unit 1 is in operation at a rated core power level of at least 1900 megawatts thermal; or

(7) the non-operation of Unit 1 or the operation of Unit 1 at a net rated power level below 630 megawatts electric or any combination thereof for any reason (including, without limitation, the occurrence of any Nuclear Incident at any generating facility located anywhere in the world) for a Period of thirty-six consecutive calendar months (or a period through the penultimate day of the Lease Term if the Lessee shall have given notice of its intent to exercise the purchase option permitted by Section 13(b) of the Facility Lease) other than as a result of damage to or destruction of Unit 1.

For purposes of this definition, a Final Shutdown resulting from the occurrence of an event described in clause (5) above shall be deemed to have occurred immediately and automatically upon the decline of the water coolant within Unit 1 to a level three feet above the nuclear fuel.

**For purposes of the definition of "Final Shutdown" only, the following capitalized terms set forth therein shall have the following meanings (other capitalized terms having the respective meanings set forth in Appendix A to the Facility Lease):**

**Extraordinary Nuclear Occurrence** shall have its meaning as defined in Section 11 of the Atomic Energy Act and the related NRC regulations, as amended to the date hereof, and as the meaning of such term shall be expanded from time to time by future amendments thereof. The definition of "extraordinary nuclear occurrence" contained in Section 11 of the Atomic Energy Act on the date hereof is: "any event causing a discharge or dispersal of source, special nuclear, or byproduct material from its intended place of confinement in amounts offsite, or causing radiation levels offsite, which the Commission determines to be substantial, and which the Commission determines has resulted or will

probably result in substantial damages to persons offsite or property offsite. Any determination by the Commission that such an event has, or has not, occurred shall be final and conclusive, and no other official or any court shall have power or jurisdiction to review any such determination. The Commission shall establish criteria in writing setting forth the basis upon which such determination shall be made. As used in this subsection, 'offsite' means away from 'the location' or 'the contract location' as defined in the applicable Commission indemnity agreement, entered into pursuant to section 2210 of this title."

**Nuclear Incident** shall have its meaning as defined in Section 11 of the Atomic Energy Act, as amended to the date hereof and as the meaning of such term may be expanded from time to time by future amendments thereof. The definition of "nuclear incident" contained in the Atomic Energy Act on the date hereof is: "any occurrence, including an extraordinary nuclear occurrence, within the United States causing, within or outside the United States, bodily injury, sickness, disease, or death, or loss of or damage to property, or loss of use of property, arising out of or resulting from the radioactive, toxic, explosive, or other hazardous properties of source, special nuclear, or byproduct material: Provided, however, that as the term is used in section 2210(1) of this title, it shall include any such occurrence outside the United States: And provided further, That as the term is used in section 2210(d) of this title, it shall include any such occurrence outside the United States if such occurrence involves source, special nuclear, or byproduct material owned by, and used by or under contract with, the United States: And provided further, That as the term is used in section 2210(c) of this title, it shall include any such occurrence outside both the United States and any other nation if such occurrence arises out of or results from the radioactive, toxic, explosive, or other hazardous properties of source, special nuclear, or byproduct material licensed pursuant to subchapters V, VI, VII, and IX of this chapter, which is used in connection with the operation of a licensed stationary production or utilization facility or which moves outside the territorial limits of the United States in transit from one person licensed by the Commission to another person licensed by the Commission."

**Period** of a stated duration in respect of any event shall mean an indefinite period which can reasonably be expected to exceed the lesser of such duration and the period remaining to the date which is three years prior to the end of the remaining Basic Lease Term (or if such event occurs after the date three years prior to the end of the remaining Basic Lease Term, the lesser of six months and the period remaining to the day next preceding the end of the Basic Lease Term) or a stated period in excess of the lesser thereof or an actual period which continues in excess of the lesser thereof.

**Source, Special Nuclear** or **Byproduct Material** shall have their respective defined meanings as defined in Section 11 of the Atomic Energy Act of 1954, as amended to the date hereof and as the meanings of such terms may be expanded by future amendments thereof.

87 240895

When Recorded, Return to: Greg R. Nielsen, Esq.
Snell & Wilmer
3100 Valley Bank Center
Phoenix, Arizona 85073

CERTAIN RIGHTS OF THE LESSOR UNDER THE FACILITY LEASE AS HERETOFORE AMENDED AND AS FURTHER AMENDED BY THIS AMENDMENT NO. 3 THERETO HAVE BEEN ASSIGNED TO, AND ARE SUBJECT TO A SECURITY INTEREST IN FAVOR OF, CHEMICAL BANK, AS INDENTURE TRUSTEE UNDER A TRUST INDENTURE, MORTGAGE, SECURITY AGREEMENT AND ASSIGNMENT OF RENTS DATED AS OF JULY 31, 1986, AS HERETOFORE AMENDED. THIS AMENDMENT NO. 3 HAS BEEN EXECUTED IN SEVERAL COUNTERPARTS. SEE SECTION 3(e) OF THIS AMENDMENT NO. 3 FOR INFORMATION CONCERNING THE RIGHTS OF HOLDERS OF VARIOUS COUNTERPARTS HEREOF.

THIS COUNTERPART IS NOT THE ORIGINAL COUNTERPART.

---

**AMENDMENT NO. 3**
Dated as of April 8, 1987
to
**FACILITY LEASE**
Dated as of July 31, 1986,
as heretofore amended,

between

THE FIRST NATIONAL BANK OF BOSTON,
not in its individual capacity,
but solely as Owner Trustee
under a Trust Agreement, dated as
of July 31, 1986,
with Chase Manhattan Realty
Leasing Corporation,

**Lessor**

and

PUBLIC SERVICE COMPANY OF NEW MEXICO,

**Lessee**

---

Original Facility Lease Recorded on August 1, 1986, as Instrument No. 86-404570, Amendment No. 1 Recorded on November 25, 1986, as Instrument No. 86-650771, and Amendment No. 2 Recorded on December 17, 1986, as Instrument No. 86-695945, all in Maricopa County Recorder's Office.

---

RECORDED IN OFFICIAL RECORDS
OF MARICOPA COUNTY, ARIZONA
APR 20 1987 -4 00
KEITH POLETIS, County Recorder
FEE 23 00 PGS 19 L.D.

6091.CHASE.DEBT.160:1

AMENDMENT NO. 3, dated as of April 8, 1987 (Amendment No. 3), to the Facility Lease dated as of July 31, 1986, as heretofore amended, between THE FIRST NATIONAL BANK OF BOSTON, a national banking association, not in its individual capacity, but solely as Owner Trustee under a Trust Agreement, dated as of July 31, 1986, with Chase Manhattan Realty Leasing Corporation, a New York corporation (the Lessor), and PUBLIC SERVICE COMPANY OF NEW MEXICO, a New Mexico corporation (the Lessee).

W I T N E S S E T H :

WHEREAS, the Lessee and the Lessor have heretofore entered into a Facility Lease dated as of July 31, 1986, as heretofore amended (the Facility Lease), providing for the lease by the Lessor to the Lessee of the Undivided Interest and the Real Property Interest;

WHEREAS, the Lessee and the Lessor desire to amend the Facility Lease as set forth in Section 2 hereof; and

WHEREAS, the Indenture Trustee has consented to this Amendment No. 3 pursuant to the Request, Instruction and Consent effective on April 8, 1987;

NOW, THEREFORE, in consideration of the premises and of other good and valuable consideration, the receipt and sufficiency of which are hereby acknowledged, the parties hereto agree as follows:

SECTION 1. Definitions.

For purposes hereof, capitalized terms used herein and not otherwise defined herein or in the recitals shall have the meanings assigned to such terms in Appendix A to the Facility Lease.

SECTION 2. Amendments.

(a) Section 5(a) of the Facility Lease is hereby amended to read in its entirety as follows:

"(a) **Return of the Undivided Interest.** On the Lease Termination Date, the Lessee will (1) surrender possession of the Undivided Interest and the Real Property Interest to the Lessor (or to a Person specified by the Lessor to the Lessee in writing not less than 6 months prior to the Lease Termination Date) (i) with full rights as a "Transferee" and the sole "Participant" with respect to the Undivided Interest and the Real Property Interest within the meaning of Section 15.10 of the ANPP Participation Agreement and (ii) without a Price-Anderson Event (as hereinafter defined) having arisen prior to, or arising upon, or immediately following, such surrender and (2) furnish to the Lessor: (i) copies certified by a senior officer of the Lessee of all Governmental Action necessary to effect such surrender (including, but without limitation, appropriate amendments to the License permitting the Lessor (without the Lessor being required to change its business) or such Person to possess the Undivided Interest and the Real Property Interest with or without the continued involvement of the Lessee as Agent), which Governmental Action shall be in full force and effect; and (ii) an opinion of counsel (which may be Mudge Rose Guthrie Alexander & Ferdon, Snell & Wilmer or another counsel experienced with NRC and other nuclear matters reasonably satisfactory to the Owner Participant) to the effect that (A) the Lessee has obtained all Governmental Action and action under the ANPP Participation Agreement necessary to effect such surrender by the Lessee and receipt of possession by the Lessor (or by the Person so specified by the Lessor) and (B) such Governmental Action is in full force and effect. At the time of such return the Lessee shall pay or have paid all amounts due and payable, or to become due and payable, by it as an ANPP Participant under each and every ANPP Project Agreement allocable or

chargeable (whether or not payable during or after the Lease Term) to the Undivided Interest or the Real Property Interest in respect of any period or periods ending on or prior to the Lease Termination Date (including, but without limitation, all amounts payable with respect to any and all discretionary Capital Improvements to Unit 1 or the PVNGS Site approved or authorized (without the concurrence of the Owner Participant) within the 3-year period preceding the end of the Lease Term, whether or not implementation thereof has been completed on or prior to the Lease Termination Date), and the Undivided Interest and the Real Property Interest shall be free and clear of all Liens (other than Permitted Liens described in clauses (i), (v) (other than those arising by, through or under the Lessee alone), (vi), (vii) (other than as aforesaid), (viii) (other than as aforesaid), (ix) and (x) of the definition of such term) and in the condition and state of repair required by Section 8. In the event that on or prior to the Lease Termination Date there shall have occurred a default by any ANPP Participant (other than the Lessee) under the ANPP Participation Agreement and such default shall not have been cured by the defaulting ANPP Participant, then (i) the Lessee agrees to indemnify and hold the Lessor (and each successor, assign and transferee thereof) harmless against any and all obligations under the ANPP Participation Agreement with respect to contributions or payments required to be made thereby as a result of such default and (ii) the Lessor (and each successor, assign and transferee thereof) agrees to reimburse the Lessee for all amounts paid by the Lessee pursuant to the foregoing clause (i) to the extent, but only to the extent, that the Lessor (or such successor, assign or transferee) shall have actually received proceeds from the sale of the Generation Entitlement Share of the defaulting ANPP Participant as a result of the payment made by the Lessee pursuant to the foregoing clause (i), and, to the extent the Lessor (or such successor, assign or transferee) shall have received such proceeds, the amount to be

reimbursed to the Lessee pursuant to this clause (ii) shall include interest at the Prime Rate from the date of any payment by the Lessee pursuant to the foregoing clause (i) through the date of reimbursement of such amount pursuant to this clause (ii). For purposes of this Section 5(a) a "Price-Anderson Event" shall mean any change in, or new interpretation by Governmental Authority having jurisdiction of, Applicable Law, including without limitation the Price-Anderson Act, the Atomic Energy Act and the regulations of the NRC, in each case as in effect on the Closing Date, but only if such change is specified in clauses (2)(i) through (iv) of the definition of "Deemed Loss Event" (other than a change which is specified in clause (A) of the definition of "Acceptable Change")."

(b) A new Section 8(g) of the Facility Lease is inserted therein, to read in its entirety as follows:

"(g) **Useful Life.** If the Lessee shall not theretofore have exercised its option under Section 13 to purchase the Undivided Interest and the Real Property Interest, then (i) if the Lessee shall not theretofore have exercised its option to renew the Lease pursuant to Section 12, on January 15, 2014, the Lessee shall initiate the Appraisal Procedure to determine the remaining Economic Useful Life of Unit 1 as of July 15, 2014 and (ii) on the Rent Payment Date occurring one year prior to the end of the Renewal Term, if any, the Lessee shall initiate the Appraisal Procedure to determine the remaining Economic Useful Life of Unit 1 as of the date six months prior to the end of the Renewal Term. The Lessee and the Lessor agree to use their best efforts to ensure that such determination of remaining economic useful life is made no later than July 15, 2014 (in the case of the first such determination) and six months prior to the end of the Renewal Term (in the case of the second such determination)."

(c) Section 15(iv) of the Facility Lease is hereby amended to read in its entirety as follows:

"(iv) (1) the Lessee shall fail to perform its agreements set forth in Section 5(a) hereof or (2) the remaining Economic Useful Life of Unit 1, as determined under Section 8(g) if required thereby to be so determined, shall be (x) as of the date six months prior to the end of the Basic Lease Term, less than five and one-half years or (y) as of the date six months prior to the end of the Renewal Term, three and one-half years; or"

(d) Section 16(a)(vii) of the Facility Lease is hereby amended to read in its entirety as follows:

"(vii) in the case of an Event of Default specified in clause (iv) of Section 15, the Lessor may demand, by written notice to the Lessee specifying a payment date which shall be (A) in the case of an Event of Default specified in subclause (1) of said clause (iv), not earlier than the date 30 days after the last Basic Rent Payment Date of the Lease Term, and (B), in the case of an Event of Default specified in subclause (2) of said clause (iv), the last Basic Rent Payment Date of the Lease Term, that the Lessee pay to the Lessor, and the Lessee shall pay to the Lessor, on such payment date, as liquidated damages for loss of a bargain and not as a penalty, any unpaid Rent due through such last Basic Rent Payment Date plus an amount (not less than zero) equal to the Fair Market Sales Value (determined without regard to the obligation of the Lessee under Section 10(b)(3)(xi) of the Participation Agreement) of the Undivided Interest and the Real Property Interest (determined on the basis of the actual condition of Unit 1) determined as of such last Basic Rent Payment Date (together with interest on such amount at the interest rate specified in Section 3(b)(iii) from such last Basic Rent Payment Date to the date of actual payment) and upon receipt of such payment the Lessor shall (or may prior to the receipt of such payment) Transfer to the

Lessee the Undivided Interest and the Real Property Interest); provided, however, that the Lessor may not exercise the foregoing remedy if the Lessor shall have failed to Transfer the Undivided Interest and the Real Property Interest to the bidder (which shall not be the Lessee or an Affiliate of the Lessee) that shall have submitted the highest cash bid on or before the date on which such Event of Default arose excluding, however, any such cash bid which the Lessor or the Owner Participant determines was not submitted in good faith, or as to which the bidder fails to certify to the Lessor such information as the Lessor or Owner Participant may reasonably request in order to determine whether or not such bid was submitted in good faith (and the Lessor agrees that it will, if and to the extent so requested by the Lessee on or after the date 90 days preceding such last Basic Rent Payment Date, use reasonable efforts (at the expense of the Lessee) for a period ending on the day 90 days after such last Basic Rent Payment Date, to find a Person willing to submit such cash bid; provided, however, that the failure of the Lessor to do so shall not relieve the Lessee of its obligations under this clause (vii))."

(e) The definition of "Acceptable Change" set forth in Appendix A to the Facility Lease is hereby amended to read in its entirety as follows:

"Acceptable Change shall mean any change in or new interpretation by Governmental Authority having jurisdiction of the Price-Anderson Act or the Atomic Energy Act (or the regulations of the NRC relating thereto) if, after giving effect to such change or new interpretation:

(A) (a) the "aggregate liability" for a single "nuclear incident" of "persons indemnified" shall not exceed $6.563 billion (assuming 101 operating nuclear facilities participating in the deferred premium or similar plan referred to in clause (c) below and subject to adjustment in an amount not exceeding (X) $63 million for each increase or decrease in said number of operating nuclear facilities and (Y)

the aggregate of all changes in such "aggregate liability" to reflect the effects of inflation contemplated pursuant to clause (c) below);

(b) the "aggregate liability" for a single "nuclear incident" of "persons indemnified" shall not exceed the sum of, without duplication, (X) the amount of insurance coverage available from commercial insurance underwriters on terms substantially equivalent (in the reasonable opinion of the Owner Participant) to the terms in effect on the Closing Date under Applicable Law and required to be maintained by each licensee with respect to any single nuclear facility, and (Y) the maximum aggregate amount payable with respect to a single "nuclear incident" by all licensees of nuclear facilities participating in any deferred premium or similar plan required under Applicable Law, by more than $40 million.

(c) the amount payable by all licensees of a single nuclear facility with respect to such facility under any deferred premium or similar plan required under Applicable Law shall not exceed $63 million per "nuclear incident" (subject to an annual adjustment upward for each calendar year after the enactment of a change in the Price-Anderson Act (if such change increases the standard deferred premium) by an amount equal to, if specified by such change or otherwise by Applicable law, (X) the annual percentage change during the immediately prior calendar year in the implicit price deflator for the Gross National Product published by the United States Department of Commerce or (Y) the annual percentage change in the consumer price index since the immediately prior calendar year; **provided, however**, that (i) in the event that Applicable Law shall not specify an inflation adjustment, then the inflation adjustment permitted by this parenthetical shall be that specified in the preceding sub-clause (X) and (ii) in the event that Applicable Law shall specify a standard deferred premium below $63 million, the inflation adjustment factor shall

not be available to increase the standard deferred premium permissible under this clause (c) beyond $63 million until such lower deferred premium (as so inflated) equals or exceeds $63 million);

(d) the amount payable by all licensees of a single nuclear facility with respect to such facility in any one year with respect to any one "nuclear incident" under any deferred premium or similar plan required under Applicable Law shall not exceed $12 million;

(e) insurance or other financial protection shall be in effect under which the providers of such insurance or other financial protection shall agree to pay any amount payable by any licensee under any deferred premium or similar plan upon a default in such payment by such licensee up to a maximum aggregate amount for all such defaults in payment of not less than $30 million;

(f) a provision shall be included (X) which authorizes (whether or not subject to appropriation acts) the NRC or other Governmental Authority to borrow from the United States Treasury (1) to make payments on behalf of any licensees under any deferred premium or similar plan and (2) to make payments to claimants in the event that funds available to pay valid claims in any year are insufficient as a result of any limitation on the amount of deferred premiums that may be required of a licensee under Applicable Law (in both cases the reimbursement obligation of such licensees in any calendar year shall not exceed $12 million, plus interest), or (Y) which makes the exclusive source of payments for public liability claims the funds provided by financial protection required by Applicable Law and, where appropriate, funds provided as a result of NRC or other Governmental Authority borrowings or (Z) which establishes another mechanism under which the maximum potential liability of all Persons during any calendar year as a result of a "nuclear incident" shall not exceed the amount of insurance or other financial protection

required to be available during such calendar year to pay all amounts which may become payable by any such Person, when and as they become payable, in respect of such liability;

(g) there shall be no claim, liability or expense excluded (1) from the limitation of liability established by the Price-Anderson Act (as in effect on the Closing Date) (through modification of the definitions of "aggregate liability", "persons indemnified", "nuclear incident" or otherwise) or (2) under commercially available insurance or other financial protection required under Applicable Law (as in effect on the Closing Date) (other than an exclusion of the costs of investigating and settling claims and defending suits for damages), except, for purposes of subclauses (1) and (2) of this clause (g), to the extent excluded pursuant to Applicable Law as in effect on the Closing Date;

(h) subject only to clause (b) above, policies of insurance, including policies in respect of any deferred premium or similar plan, shall provide, or shall have been amended or modified to provide, in both timing and amount, and make available, or shall have been amended or modified to make available, financial protection required under Applicable Law; and

(i) neither the Owner Trustee nor the Owner Participant shall be (in the opinion of independent counsel to the Owner Participant) exposed to any other increase in its real or potential liability with respect to a "nuclear incident", either during or subsequent to the Lease Term; **or**

(B) at all times from the date of such change to, but not including, the Lease Termination Date,

(a) a provision shall be included, with language reasonably satisfactory to the Owner Participant, which exempts the Owner Trustee and the Owner Participant from all real or potential liability in respect of a "nuclear incident" so long as neither the Owner Trustee nor the Owner Participant is in actual

possession and control of Unit 1 or the Undivided Interest, unless (in the opinion of independent counsel to the Owner Participant) (x) a court could reasonably hold that the statute incorporating such provision is unconstitutional or (y) there shall have occurred a subsequent change in, or new interpretation by Governmental Authority having jurisdiction of, the exemption from liability provided by such provision as to interests of the Owner Trustee and the Owner Participant in Unit 1 which change or new interpretation renders ineffective such exemption;

(b) the "aggregate liability" for a single "nuclear incident" of "persons indemnified" shall not exceed $13 billion (assuming 101 operating nuclear facilities participating in the deferred premium or similar plan referred to in clause (c) of paragraph (A) above and subject to adjustment in an amount not exceeding (X) $126 million for each increase or decrease in said number of operating nuclear facilities and (Y) the aggregate of all changes in such "aggregate liability" to reflect the effects of inflation contemplated pursuant to clause (c) of paragraph (A) above (but without giving effect to clause (ii) of the proviso set forth in such clause)); and

(c) the amount payable by all licensees of a single nuclear facility in respect of such facility in any one year and with respect to any one "nuclear incident" under any deferred premium or similar plan required by Applicable Law shall not exceed $36 million (subject to adjustment as provided in subclause (Y) of the preceding clause (b)).

For purposes of this definition, "nuclear facility" shall mean and refer to a facility designed for producing substantial amounts of electricity and having a rated capacity of 100,000 electrical kilowatts or more."

(f) A new definition is hereby added to Appendix A to the Facility Lease, to read in its entirety as follows:

"**Decommissioning** shall mean the decommissioning and retirement from service of Unit 1, and the related possession, maintenance and disposal of radioactive material used in or produced incident to the possession and operation of Unit 1, including, without limitation, (i) placement and maintenance of Unit 1 in a state of protective storage, (ii) in-place entombment and maintenance of Unit 1, (iii) dismantlement of Unit 1, (iv) any other form of decommissioning and retirement from service required by or acceptable to the NRC and (v) all activities undertaken incident to the implementation thereof and to the obtaining of NRC authority therefor, including, without limitation, maintenance, storage, custody, removal, decontamination, and disposition of materials, equipment and fixtures, razing of Unit 1, removal and disposition of debris from the PVNGS Site, and restoration of the PVNGS Site related to Unit 1 for unrestricted use."

(g) A new definition is hereby added to Appendix A to the Facility Lease, to read in its entirety as follows:

"**Decommissioning Costs** shall mean all costs, liabilities and expenses relating or allocable to, or incurred in connection with, the Decommissioning of Unit 1, including, without limitation, (i) any and all costs of activities undertaken to terminate NRC licensing authority and requirements to own, operate and possess Unit 1 and to possess radioactive material used in or produced incident to the possession and operation of Unit 1; and (ii) any and all costs of activities undertaken, prior to termination of all NRC licensing authority and requirements with respect to Unit 1 and the radioactive material used in or produced incident to the possession and operation of Unit 1, to possess, maintain, and dispose of radioactive material used in or

produced incident to the possession and operation of Unit 1."

(h) A new definition is hereby added to Appendix A to the Facility Lease, to read in its entirety as follows:

"**Economic Useful Life** shall mean that period (commencing on the date as of which the determination of Economic Useful Life is to be made as provided in Section 8(g) of the Facility Lease and ending on the date upon which either of the states of affairs described in clauses (i) and (ii) below ceases to apply, or can reasonably be expected to cease to apply, to Unit 1) during which (i) Unit 1 will be useful to, and usable by, any owner or lessee thereof as a facility for the generation of electric power and (ii) Unit 1 is an economic and commercially practical facility for the generation of electric power capable of producing (after taking into account costs of capital) a reasonable economic return to the owner thereof. For the purposes of determinations under clauses (i) and (ii) above, the following factors, among others, shall be taken into account (as such factors obtain on the date of determination and as such factors are reasonably expected to obtain in the future): (a) provisions of the ANPP Project Agreements (**including, without limitation,** the ANPP Participation Agreement and the Material Project Agreements (or substitutes for such Material Project Agreements in effect on the date of determination)); (b) the actual condition and performance of Unit 1; (c) the actual condition and performance of such other facilities constituting PVNGS (**including, without limitation,** the Common Facilities) as are integral to the operation of Unit 1; (d) the actual condition of, and access of the ANPP Participants to, the ANPP Switchyard and such other transmission facilities as are available and necessary to permit the transmission of the maximum amount of power generated by PVNGS; (e) the cost of obtaining, handling, storing and disposing of nuclear fuel for Unit 1; (f) the projected cost (**including, without limitation,**

costs attributable to obligations to fund any reserve fund maintained (or funded) by licensed owners and/or lessees of Unit 1 to the extent dedicated to (or attributable to and freely available with respect to) Unit 1 (the Unit 1 Fund)) or the Decommissioning or retirement from service of Unit 1 including, without limitation, Decommissioning Costs (taking into account the balance (plus projected investment earnings thereon) of the Unit 1 Fund); (g) the cost of Capital Improvements to Unit 1 then planned to be made, or reasonably expected to be made; (h) the cost of acquiring or leasing the Unit 1 Retained Assets; (i) the current status of all Governmental Action with respect to Unit 1 (including, without limitation, the License) required to permit licensed owners and/or lessees to possess and (in the case of the Operating Agent) to operate Unit 1 and such other facilities constituting PVNGS (including, without limitation, the Common Facilities) as are integral to the operation of Unit 1; and (j) the relative cost of producing an amount of electric power and energy equivalent to the generating capacity of Unit 1 from other facilities then available in the region serviced, or reasonably expected to be serviced, by PVNGS."

SECTION 3. Miscellaneous.

(a) **Effective Date of Amendments.** The amendments set forth in Section 2 hereof shall be and become effective upon the execution hereof by the parties hereto.

(b) **Counterpart Execution.** This Amendment No. 3 may be executed in any number of counterparts and by each of the parties hereto on separate counterparts; all such counterparts shall together constitute but one and the same instrument.

(c) **Governing Law.** This Amendment No. 3 has been negotiated and delivered in the State of New York and shall be governed by, and be construed in accordance with, the laws of the State of New York, except to the extent that pursuant to the law of the State of Arizona such law is mandatorily applicable hereto.

(d) **Disclosure.** Pursuant to Arizona Revised Statutes Section 33-401, the beneficiary of the Trust Agreement is Chase Manhattan Realty Leasing Corporation, a New York corporation. The address of the beneficiary is One Chase Manhattan Plaza, New York, New York 10081. A copy of the Trust Agreement is available for inspection at the offices of the Owner Trustee at 100 Federal Street, Boston, Massachusetts 02110, Attention of Corporate Trust Division.

(e) **Amendment No. 3.** The single executed original of this Amendment No. 3 marked "THIS COUNTERPART IS THE ORIGINAL COUNTERPART" and containing the receipt of the Indenture Trustee thereon shall be the "Original" of this Amendment No. 3. To the extent that this Amendment No. 3 constitutes chattel paper, as such term is defined in the Uniform Commercial Code as in effect in any applicable jurisdiction, no security interest in this Amendment No. 3 may be created or continued through the transfer or possession of any counterpart other than the "Original".

IN WITNESS WHEREOF, each of the parties hereto has caused this Amendment No. 3 to Facility Lease to be duly executed by an officer thereunto duly authorized.

THE FIRST NATIONAL BANK OF BOSTON,
not in its individual capacity, but solely as Owner Trustee under a Trust Agreement, dated as of July 31, 1986, with Chase Manhattan Realty Leasing Corporation

By _____
Assistant Cashier

PUBLIC SERVICE COMPANY OF NEW MEXICO

By _____
Vice President and
Corporate Controller

IN WITNESS WHEREOF, each of the parties hereto has caused this Amendment No. 3 to Facility Lease to be duly executed by an officer thereunto duly authorized.

THE FIRST NATIONAL BANK OF BOSTON,
not in its individual capacity, but solely as Owner Trustee under a Trust Agreement, dated as of July 31, 1986, with Chase Manhattan Realty Leasing Corporation

By_____
Assistant Cashier

PUBLIC SERVICE COMPANY OF NEW MEXICO

By_____
Vice President and
Corporate Controller

87 240895

State of New Mexico )
) ss:
County of Bernalillo )

The foregoing instrument was acknowledged before me this 8th day of April, 1987, by B.D. Lackey, the Vice President and Corporate Controller of **PUBLIC SERVICE COMPANY OF NEW MEXICO**, a New Mexico corporation, on behalf of the corporation.

Notary Public

Commonwealth of Massachusetts )
) ss:
County of Suffolk )

The foregoing instrument was acknowledged before me this 8th day of April, 1987, by James E. Mogavero, Assistant Cashier of **THE FIRST NATIONAL BANK OF BOSTON**, a national banking association, on behalf of the banking association as Owner Trustee under the Trust Agreement dated as of July 31, 1986 with Chase Manhattan Realty Leasing Corporation.

Notary Public

6091.CHASE.DEBT.160:1

87 240895

State of New Mexico )
) ss:
County of Bernalillo )

The foregoing instrument was acknowledged before me this 8th day of April, 1987, by B.D. Lackey, the Vice President and Corporate Controller of **PUBLIC SERVICE COMPANY OF NEW MEXICO**, a New Mexico corporation, on behalf of the corporation.

_____
Notary Public

Commonwealth of Massachusetts )
) ss:
County of Suffolk )

The foregoing instrument was acknowledged before me this 8th day of April, 1987, by James E. Mogavero, Assistant Cashier of **THE FIRST NATIONAL BANK OF BOSTON**, a national banking association, on behalf of the banking association as Owner Trustee under the Trust Agreement dated as of July 31, 1986 with Chase Manhattan Realty Leasing Corporation.

Carol Malley
Notary Public

CAROL MALLEY
Notary Public
My Commission [illegible]

6091.CHASE.DEBT.160:1

87 240898

When Recorded, Return to: Greg R. Nielsen, Esq.
Snell & Wilmer
3100 Valley Bank Center
Phoenix, Arizona 85073

CERTAIN RIGHTS OF THE LESSOR UNDER THE FACILITY LEASE AS AMENDED BY THIS AMENDMENT NO. 1 THERETO HAVE BEEN ASSIGNED TO, AND ARE SUBJECT TO A SECURITY INTEREST IN FAVOR OF, CHEMICAL BANK, AS INDENTURE TRUSTEE UNDER A TRUST INDENTURE, MORTGAGE, SECURITY AGREEMENT AND ASSIGNMENT OF RENTS DATED AS OF DECEMBER 15, 1986. THIS AMENDMENT NO.1 HAS BEEN EXECUTED IN SEVERAL COUNTERPARTS. SEE SECTION 3(e) OF THIS AMENDMENT NO. 1 FOR INFORMATION CONCERNING THE RIGHTS OF HOLDERS OF VARIOUS COUNTERPARTS HEREOF.

THIS COUNTERPART IS NOT THE ORIGINAL COUNTERPART.

---

AMENDMENT NO. 1
Dated as of April 8, 1987
to
FACILITY LEASE (Unit 1)
Dated as of December 15, 1986
between

THE FIRST NATIONAL BANK OF BOSTON,
not in its individual capacity,
but solely as Owner Trustee
under a Trust Agreement, dated as
of December 15, 1986,
with Chase Manhattan Realty
Leasing Corporation,

Lessor

and

PUBLIC SERVICE COMPANY OF NEW MEXICO,

Lessee

RECORDED IN OFFICIAL RECORDS
OF MARICOPA COUNTY, ARIZONA
APR 20 1987 -4 00
KEITH POLETIS, County Recorder
FEE 17 00 PGS 13 L.D.

---

Original Facility Lease Recorded on December 17, 1986, as Instrument No. 86-695925, in Maricopa County Recorder's Office.

---

6091.CHASEU1.LEASE.204:1

AMENDMENT NO. 1, dated as of April 8, 1987 (Amendment No. 1), to the Facility Lease dated as of December 15, 1986, between THE FIRST NATIONAL BANK OF BOSTON, a national banking association, not in its individual capacity, but solely as Owner Trustee under a Trust Agreement, dated as of December 15, 1986, with Chase Manhattan Realty Leasing Corporation, a New York corporation (the Lessor), and PUBLIC SERVICE COMPANY OF NEW MEXICO, a New Mexico corporation (the Lessee).

W I T N E S S E T H :

WHEREAS, the Lessee and the Lessor have heretofore entered into a Facility Lease dated as of December 15, 1986 (the Facility Lease), providing for the lease by the Lessor to the Lessee of the Undivided Interest and the Real Property Interest;

WHEREAS, the Lessee and the Lessor desire to amend the Facility Lease as set forth in Section 2 hereof; and

WHEREAS, the Indenture Trustee has consented to this Amendment No. 1 pursuant to the Request, Instruction and Consent effective on April 8, 1987;

NOW, THEREFORE, in consideration of the premises and of other good and valuable consideration, the receipt and sufficiency of which are hereby acknowledged, the parties hereto agree as follows:

SECTION 1. Definitions.

For purposes hereof, capitalized terms used herein and not otherwise defined herein or in the recitals shall have the meanings assigned to such terms in Appendix A to the Facility Lease.

SECTION 2. Amendments.

(a) A new Section 8(g) of the Facility Lease is inserted therein, to read in its entirety as follows:

"(g) Useful Life. If the Lessee shall not theretofore have exercised its option under Section 13 to purchase the Undivided Interest and the Real Property Interest, then (i) if the Lessee shall not theretofore have exercised its option to renew the Lease pursuant to Section 12, on January 15, 2014, the Lessee shall initiate the Appraisal Procedure to determine the remaining Economic Useful Life of Unit 1 as of July 15, 2014 and (ii) on the Rent Payment Date occurring one year prior to the end of the Renewal Term, if any, the Lessee shall initiate the Appraisal Procedure to determine the remaining Economic Useful Life of Unit 1 as of the date six months prior to the end of the Renewal Term. The Lessee and the Lessor agree to use their best efforts to ensure that such determination of remaining economic useful life is made no later than July 15, 2014 (in the case of the first such determination) and six months prior to the end of the Renewal Term (in the case of the second such determination)."

(b) Section 15(iv) of the Facility Lease is hereby amended to read in its entirety as follows:

"(iv) (1) the Lessee shall fail to perform its agreements set forth in Section 5(a) hereof or (2) the remaining Economic Useful Life of Unit 1, as determined under Section 8(g) if required thereby to be so determined, shall be (x) as of the date six months prior to the end of the Basic Lease Term, less than five and one-half years or (y) as of the date six months prior to the end of the Renewal Term, three and one-half years; or"

(c) Section 16(a)(vii) of the Facility Lease is hereby amended to read in its entirety as follows:

"(vii) in the case of an Event of Default specified in clause (iv) of Section 15, the Lessor may demand, by written notice to the Lessee specifying a payment date which shall be (A) in the case of an Event of Default specified in subclause (1) of said clause (iv), not earlier than the date 30 days after the last Basic Rent Payment Date of the Lease Term, and (B), in the case of an Event of Default specified in subclause (2) of said clause (iv), the last Basic Rent Payment Date of the Lease Term, that the Lessee pay to the Lessor, and the Lessee shall pay to the Lessor, on such payment date, as liquidated damages for loss of a bargain and not as a penalty, any unpaid Rent due through such last Basic Rent Payment Date plus an amount (not less than zero) equal to the Fair Market Sales Value (determined without regard to the obligation of the Lessee under Section 10(b)(3)(xi) of the Participation Agreement) of the Undivided Interest and the Real Property Interest (determined on the basis of the actual condition of Unit 1) determined as of such last Basic Rent Payment Date (together with interest on such amount at the interest rate specified in Section 3(b)(iii) from such last Basic Rent Payment Date to the date of actual payment) and upon receipt of such payment the Lessor shall (or may prior to the receipt of such payment) Transfer to the Lessee the Undivided Interest and the Real Property Interest); provided, however, that the Lessor may not exercise the foregoing remedy if the Lessor shall have failed to Transfer the Undivided Interest and the Real Property Interest to the bidder (which shall not be the Lessee or an Affiliate of the Lessee) that shall have submitted the highest cash bid on or before the date on which such Event of Default arose excluding, however, any such cash bid which the Lessor or the Owner Participant determines was not submitted in good faith, or as to which the bidder fails to

certify to the Lessor such information as the Lessor or Owner Participant may reasonably request in order to determine whether or not such bid was submitted in good faith (and the Lessor agrees that it will, if and to the extent so requested by the Lessee on or after the date 90 days preceding such last Basic Rent Payment Date, use reasonable efforts (at the expense of the Lessee) for a period ending on the day 90 days after such last Basic Rent Payment Date, to find a Person willing to submit such cash bid; provided, however, that the failure of the Lessor to do so shall not relieve the Lessee of its obligations under this clause (vii))."

(d) A new definition is hereby added to Appendix A to the Facility Lease, to read in its entirety as follows:

"Decommissioning shall mean the decommissioning and retirement from service of Unit 1, and the related possession, maintenance and disposal of radioactive material used in or produced incident to the possession and operation of Unit 1, including, without limitation, (i) placement and maintenance of Unit 1 in a state of protective storage, (ii) in-place entombment and maintenance of Unit 1, (iii) dismantlement of Unit 1, (iv) any other form of decommissioning and retirement from service required by or acceptable to the NRC and (v) all activities undertaken incident to the implementation thereof and to the obtaining of NRC authority therefor, including, without limitation, maintenance, storage, custody, removal, decontamination, and disposition of materials, equipment and fixtures, razing of Unit 1, removal and disposition of debris from the PVNGS Site, and restoration of the PVNGS Site related to Unit 1 for unrestricted use."

(e) A new definition is hereby added to Appendix A to the Facility Lease, to read in its entirety as follows:

"**Decommissioning Costs** shall mean all costs, liabilities and expenses relating or allocable to, or incurred in connection with, the Decommissioning of Unit 1, including, without limitation, (i) any and all costs of activities undertaken to terminate NRC licensing authority and requirements to own, operate and possess Unit 1 and to possess radioactive material used in or produced incident to the possession and operation of Unit 1; and (ii) any and all costs of activities undertaken, prior to termination of all NRC licensing authority and requirements with respect to Unit 1 and the radioactive material used in or produced incident to the possession and operation of Unit 1, to possess, maintain, and dispose of radioactive material used in or produced incident to the possession and operation of Unit 1."

(f) A new definition is hereby added to Appendix A to the Facility Lease, to read in its entirety as follows:

"**Economic Useful Life** shall mean that period (commencing on the date as of which the determination of Economic Useful Life is to be made as provided in Section 8(g) of the Facility Lease and ending on the date upon which either of the states of affairs described in clauses (i) and (ii) below ceases to apply, or can reasonably be expected to cease to apply, to Unit 1) during which (i) Unit 1 will be useful to, and usable by, any owner or lessee thereof as a facility for the generation of electric power and (ii) Unit 1 is an economic and commercially practical facility for the generation of electric power capable of producing (after taking into account costs of capital) a reasonable economic return to the owner thereof. For the purposes of determinations under clauses (i) and (ii) above, the following factors, among others, shall be taken into account (as such factors obtain on the date of determination and as such factors are reasonably expected to obtain in the future): (a) provisions of the

ANPP Project Agreements (including, without limitation, the ANPP Participation Agreement and the Material Project Agreements (or substitutes for such Material Project Agreements in effect on the date of determination)); (b) the actual condition and performance of Unit 1; (c) the actual condition and performance of such other facilities constituting PVNGS (including, without limitation, the Common Facilities) as are integral to the operation of Unit 1; (d) the actual condition of, and access of the ANPP Participants to, the ANPP Switchyard and such other transmission facilities as are available and necessary to permit the transmission of the maximum amount of power generated by PVNGS; (e) the cost of obtaining, handling, storing and disposing of nuclear fuel for Unit 1; (f) the projected cost (including, without limitation, costs attributable to obligations to fund any reserve fund maintained (or funded) by licensed owners and/or lessees of Unit 1 to the extent dedicated to (or attributable to and freely available with respect to) Unit 1 (the Unit 1 Fund)) or the Decommissioning or retirement from service of Unit 1 including, without limitation, Decommissioning Costs (taking into account the balance (plus projected investment earnings thereon) of the Unit 1 Fund); (g) the cost of Capital Improvements to Unit 1 then planned to be made, or reasonably expected to be made; (h) the cost of acquiring or leasing the Unit 1 Retained Assets; (i) the current status of all Governmental Action with respect to Unit 1 (including, without limitation, the License) required to permit licensed owners and/or lessees to possess and (in the case of the Operating Agent) to operate Unit 1 and such other facilities constituting PVNGS (including, without limitation, the Common Facilities) as are integral to the operation of Unit 1; and (j) the relative cost of producing an amount of electric power and energy equivalent to the generating capacity of Unit 1 from other facilities then available

in the region serviced, or reasonably expected to be serviced, by PVNGS."

(e) Paragraph (B)(c) of the definition of "Acceptable Change" set forth in Appendix A to the Facility Lease is hereby amended to read in its entirety as follows:

"(c) the amount payable by all licensees of a single nuclear facility in respect of such facility in any one year and with respect to any one "nuclear incident" under any deferred premium or similar plan required by Applicable Law shall not exceed $36 million (subject to adjustment as provided in subclause (Y) of the preceding clause (b))."

SECTION 3. Miscellaneous.

(a) **Effective Date of Amendments.** The amendments set forth in Section 2 hereof shall be and become effective upon the execution hereof by the parties hereto.

(b) **Counterpart Execution.** This Amendment No. 1 may be executed in any number of counterparts and by each of the parties hereto on separate counterparts; all such counterparts shall together constitute but one and the same instrument.

(c) **Governing Law.** This Amendment No. 1 has been negotiated and delivered in the State of New York and shall be governed by, and be construed in accordance with, the laws of the State of New York, except to the extent that pursuant to the law of the State of Arizona such law is mandatorily applicable hereto.

(d) **Disclosure.** Pursuant to Arizona Revised Statutes Section 33-401, the beneficiary of the Trust Agreement is Chase Manhattan Realty Leasing Corporation, a New York corporation. The address of the beneficiary is One Chase Manhattan Plaza, New York, New York 10081. A copy of the Trust Agreement is available for inspection at the offices of the Owner Trustee at 100 Federal Street, Boston, Massachusetts 02110, Attention of Corporate Trust Division.

(e) **Amendment No. 1.** The single executed original of this Amendment No. 1 marked "THIS COUNTERPART IS THE ORIGINAL COUNTERPART" and containing the receipt of the Indenture Trustee thereon shall be the "Original" of this Amendment No. 1. To the extent that this Amendment No. 1 constitutes chattel paper, as such term is defined in the Uniform Commercial Code as in effect in any applicable jurisdiction, no security interest in this Amendment No. 1 may be created or continued through the transfer or possession of any counterpart other than the "Original".

IN WITNESS WHEREOF, each of the parties hereto has caused this Amendment No. 1 to Facility Lease to be duly executed by an officer thereunto duly authorized.

THE FIRST NATIONAL BANK OF BOSTON,
not in its individual capacity, but solely as Owner Trustee under a Trust Agreement, dated as of December 15, 1986, with Chase Manhattan Realty Leasing Corporation

By _____
Assistant Cashier

PUBLIC SERVICE COMPANY OF NEW MEXICO

By _____
Vice President and
Corporate Controller

IN WITNESS WHEREOF, each of the parties hereto has caused this Amendment No. 1 to Facility Lease to be duly executed by an officer thereunto duly authorized.

THE FIRST NATIONAL BANK OF BOSTON,
not in its individual capacity, but solely as Owner Trustee under a Trust Agreement, dated as of December 15, 1986, with Chase Manhattan Realty Leasing Corporation

By_____
Assistant Cashier

PUBLIC SERVICE COMPANY OF NEW MEXICO

By B D Lacke
Vice President and
Corporate Controller

87 240898

State of New Mexico )
) ss:
County of Bernalillo )

The foregoing instrument was acknowledged before me this 8th day of April, 1987, by B.D. Lackey, the Vice President and Corporate Controller of **PUBLIC SERVICE COMPANY OF NEW MEXICO**, a New Mexico corporation, on behalf of the corporation.

Notary Public

Commonwealth of Massachusetts )
) ss:
County of Suffolk )

The foregoing instrument was acknowledged before me this 8th day of April, 1987, by James E. Mogavero, an Assistant Cashier of **THE FIRST NATIONAL BANK OF BOSTON**, a national banking association, on behalf of the banking association as Owner Trustee under the Trust Agreement dated as of December 15, 1986 with Chase Manhattan Realty Leasing Corporation.

Notary Public

87 240898

State of New Mexico )
) ss:
County of Bernalillo )

The foregoing instrument was acknowledged before me this 8th day of April, 1987, by B.D. Lackey, the Vice President and Corporate Controller of **PUBLIC SERVICE COMPANY OF NEW MEXICO**, a New Mexico corporation, on behalf of the corporation.

Notary Public

Commonwealth of Massachusetts )
) ss:
County of Suffolk )

The foregoing instrument was acknowledged before me this 8th day of April, 1987, by James E. Mogavero, an Assistant Cashier of **THE FIRST NATIONAL BANK OF BOSTON**, a national banking association, on behalf of the banking association as Owner Trustee under the Trust Agreement dated as of December 15, 1986 with Chase Manhattan Realty Leasing Corporation.

Carol Malley
Notary Public

CAROL MALLEY
Notary Public
My Commission Expires January 28, 199

87 240901

When Recorded, Return to: Greg R. Nielsen, Esq.
Snell & Wilmer
3100 Valley Bank Center
Phoenix, Arizona 85073

CERTAIN RIGHTS OF THE LESSOR UNDER THE FACILITY LEASE AS AMENDED BY THIS AMENDMENT NO. 1 THERETO HAVE BEEN ASSIGNED TO, AND ARE SUBJECT TO A SECURITY INTEREST IN FAVOR OF, CHEMICAL BANK, AS INDENTURE TRUSTEE UNDER A TRUST INDENTURE, MORTGAGE, SECURITY AGREEMENT AND ASSIGNMENT OF RENTS DATED AS OF DECEMBER 15, 1986. THIS AMENDMENT NO.1 HAS BEEN EXECUTED IN SEVERAL COUNTERPARTS. SEE SECTION 3(e) OF THIS AMENDMENT NO. 1 FOR INFORMATION CONCERNING THE RIGHTS OF HOLDERS OF VARIOUS COUNTERPARTS HEREOF.

THIS COUNTERPART IS NOT THE ORIGINAL COUNTERPART.

---

AMENDMENT NO. 1
Dated as of April 8, 1987

to

FACILITY LEASE (Unit 2)
Dated as of December 15, 1986

between

THE FIRST NATIONAL BANK OF BOSTON,
not in its individual capacity,
but solely as Owner Trustee
under a Trust Agreement, dated as
of December 15, 1986,
with Chase Manhattan Realty
Leasing Corporation,

Lessor

and

PUBLIC SERVICE COMPANY OF NEW MEXICO,

Lessee

RECORDED IN OFFICIAL RECORDS
OF MARICOPA COUNTY, ARIZONA
APR 20 1987 -4 00
KEITH POLETIS, County Recorder
FEE 17 00 PGS 13 L.D.

---

Original Facility Lease Recorded on December 17, 1986, as Instrument No. 86-695936, in Maricopa County Recorder's Office.

---

**AMENDMENT NO. 1**, dated as of April 8, 1987 (**Amendment No. 1**), to the Facility Lease dated as of December 15, 1986, between **THE FIRST NATIONAL BANK OF BOSTON**, a national banking association, not in its individual capacity, but solely as Owner Trustee under a Trust Agreement, dated as of December 15, 1986, with Chase Manhattan Realty Leasing Corporation a New York corporation (the **Lessor**), and **PUBLIC SERVICE COMPANY OF NEW MEXICO**, a New Mexico corporation (the **Lessee**).

W I T N E S S E T H :

**WHEREAS**, the Lessee and the Lessor have heretofore entered into a Facility Lease dated as of December 15, 1986 (the **Facility Lease**), providing for the lease by the Lessor to the Lessee of the Undivided Interest and the Real Property Interest;

**WHEREAS**, the Lessee and the Lessor desire to amend the Facility Lease as set forth in Section 2 hereof; and

**WHEREAS**, the Indenture Trustee has consented to this Amendment No. 1 pursuant to the Request, Instruction and Consent effective on April 8, 1987;

**NOW, THEREFORE**, in consideration of the premises and of other good and valuable consideration, the receipt and sufficiency of which are hereby acknowledged, the parties hereto agree as follows:

**SECTION 1. Definitions.**

For purposes hereof, capitalized terms used herein and not otherwise defined herein or in the recitals shall have the meanings assigned to such terms in Appendix A to the Facility Lease.

SECTION 2. Amendments.

(a) A new Section 8(g) of the Facility Lease is inserted therein, to read in its entirety as follows:

"(g) Useful Life. If the Lessee shall not theretofore have exercised its option under Section 13 to purchase the Undivided Interest and the Real Property Interest, then (i) if the Lessee shall not theretofore have exercised its option to renew the Lease pursuant to Section 12, on January 15, 2015, the Lessee shall initiate the Appraisal Procedure to determine the remaining Economic Useful Life of Unit 2 as of July 15, 2015 and (ii) on the Rent Payment Date occurring one year prior to the end of the Renewal Term, if any, the Lessee shall initiate the Appraisal Procedure to determine the remaining Economic Useful Life of Unit 2 as of the date six months prior to the end of the Renewal Term. The Lessee and the Lessor agree to use their best efforts to ensure that such determination of remaining economic useful life is made no later than July 15, 2015 (in the case of the first such determination) and six months prior to the end of the Renewal Term (in the case of the second such determination)."

(b) Section 15(iv) of the Facility Lease is hereby amended to read in its entirety as follows:

"(iv) (1) the Lessee shall fail to perform its agreements set forth in Section 5(a) hereof or (2) the remaining Economic Useful Life of Unit 2, as determined under Section 8(g) if required thereby to be so determined, shall be (x) as of the date six months prior to the end of the Basic Lease Term, less than five and one-half years or (y) as of the date six months prior to the end of the Renewal Term, three and one-half years; or"

(c) Section 16(a)(vii) of the Facility Lease is hereby amended to read in its entirety as follows:

"(vii) in the case of an Event of Default specified in clause (iv) of Section 15, the Lessor may demand, by written notice to the Lessee specifying a payment date which shall be (A) in the case of an Event of Default specified in subclause (1) of said clause (iv), not earlier than the date 30 days after the last Basic Rent Payment Date of the Lease Term, and (B), in the case of an Event of Default specified in subclause (2) of said clause (iv), the last Basic Rent Payment Date of the Lease Term, that the Lessee pay to the Lessor, and the Lessee shall pay to the Lessor, on such payment date, as liquidated damages for loss of a bargain and not as a penalty, any unpaid Rent due through such last Basic Rent Payment Date **plus** an amount (not less than zero) equal to the Fair Market Sales Value (determined without regard to the obligation of the Lessee under Section 10(b)(3)(xi) of the Participation Agreement) of the Undivided Interest and the Real Property Interest (determined on the basis of the actual condition of Unit 2) determined as of such last Basic Rent Payment Date (together with interest on such amount at the interest rate specified in Section 3(b)(iii) from such last Basic Rent Payment Date to the date of actual payment) and upon receipt of such payment the Lessor shall (or may prior to the receipt of such payment) Transfer to the Lessee the Undivided Interest and the Real Property Interest); **provided, however,** that the Lessor may not exercise the foregoing remedy if the Lessor shall have failed to Transfer the Undivided Interest and the Real Property Interest to the bidder (which shall not be the Lessee or an Affiliate of the Lessee) that shall have submitted the highest cash bid on or before the date on which such Event of Default arose **excluding, however,** any such cash bid which the Lessor or the Owner Participant determines was not submitted in good faith, or as to which the bidder fails to

certify to the Lessor such information as the Lessor or Owner Participant may reasonably request in order to determine whether or not such bid was submitted in good faith (and the Lessor agrees that it will, if and to the extent so requested by the Lessee on or after the date 90 days preceding such last Basic Rent Payment Date, use reasonable efforts (at the expense of the Lessee) for a period ending on the day 90 days after such last Basic Rent Payment Date, to find a Person willing to submit such cash bid; provided, however, that the failure of the Lessor to do so shall not relieve the Lessee of its obligations under this clause (vii))."

(d) A new definition is hereby added to Appendix A to the Facility Lease, to read in its entirety as follows:

"Decommissioning shall mean the decommissioning and retirement from service of Unit 2, and the related possession, maintenance and disposal of radioactive material used in or produced incident to the possession and operation of Unit 2, including, without limitation, (i) placement and maintenance of Unit 2 in a state of protective storage, (ii) in-place entombment and maintenance of Unit 2, (iii) dismantlement of Unit 2, (iv) any other form of decommissioning and retirement from service required by or acceptable to the NRC and (v) all activities undertaken incident to the implementation thereof and to the obtaining of NRC authority therefor, including, without limitation, maintenance, storage, custody, removal, decontamination, and disposition of materials, equipment and fixtures, razing of Unit 2, removal and disposition of debris from the PVNGS Site, and restoration of the PVNGS Site related to Unit 2 for unrestricted use."

(e) A new definition is hereby added to Appendix A to the Facility Lease, to read in its entirety as follows:

"**Decommissioning Costs** shall mean all costs, liabilities and expenses relating or allocable to, or incurred in connection with, the Decommissioning of Unit 2, including, without limitation, (i) any and all costs of activities undertaken to terminate NRC licensing authority and requirements to own, operate and possess Unit 2 and to possess radioactive material used in or produced incident to the possession and operation of Unit 2; and (ii) any and all costs of activities undertaken, prior to termination of all NRC licensing authority and requirements with respect to Unit 2 and the radioactive material used in or produced incident to the possession and operation of Unit 2, to possess, maintain, and dispose of radioactive material used in or produced incident to the possession and operation of Unit 2."

(f) A new definition is hereby added to Appendix A to the Facility Lease, to read in its entirety as follows:

"**Economic Useful Life** shall mean that period (commencing on the date as of which the determination of Economic Useful Life is to be made as provided in Section 8(g) of the Facility Lease and ending on the date upon which either of the states of affairs described in clauses (i) and (ii) below ceases to apply, or can reasonably be expected to cease to apply, to Unit 2) during which (i) Unit 2 will be useful to, and usable by, any owner or lessee thereof as a facility for the generation of electric power and (ii) Unit 2 is an economic and commercially practical facility for the generation of electric power capable of producing (after taking into account costs of capital) a reasonable economic return to the owner thereof. For the purposes of determinations under clauses (i) and (ii) above, the following factors, among others, shall be taken into account (as such factors obtain on the date of determination and as such factors are reasonably expected to obtain in the future): (a) provisions of the

ANPP Project Agreements (including, without limitation, the ANPP Participation Agreement and the Material Project Agreements (or substitutes for such Material Project Agreements in effect on the date of determination)); (b) the actual condition and performance of Unit 2; (c) the actual condition and performance of such other facilities constituting PVNGS (including, without limitation, the Common Facilities) as are integral to the operation of Unit 2; (d) the actual condition of, and access of the ANPP Participants to, the ANPP Switchyard and such other transmission facilities as are available and necessary to permit the transmission of the maximum amount of power generated by PVNGS; (e) the cost of obtaining, handling, storing and disposing of nuclear fuel for Unit 2; (f) the projected cost (including, without limitation, costs attributable to obligations to fund any reserve fund maintained (or funded) by licensed owners and/or lessees of Unit 2 to the extent dedicated to (or attributable to and freely available with respect to) Unit 2 (the Unit 2 Fund)) or the Decommissioning or retirement from service of Unit 2 including, without limitation, Decommissioning Costs (taking into account the balance (plus projected investment earnings thereon) of the Unit 2 Fund); (g) the cost of Capital Improvements to Unit 2 then planned to be made, or reasonably expected to be made; (h) the cost of acquiring or leasing the Unit 2 Retained Assets; (i) the current status of all Governmental Action with respect to Unit 2 (including, without limitation, the License) required to permit licensed owners and/or lessees to possess and (in the case of the Operating Agent) to operate Unit 2 and such other facilities constituting PVNGS (including, without limitation, the Common Facilities) as are integral to the operation of Unit 2; and (j) the relative cost of producing an amount of electric power and energy equivalent to the generating capacity of Unit 2 from other facilities then available

in the region serviced, or reasonably expected to be serviced, by PVNGS."

(e) Paragraph (B)(c) of the definition of "Acceptable Change" set forth in Appendix A to the Facility Lease is hereby amended to read in its entirety as follows:

"(c) the amount payable by all licensees of a single nuclear facility in respect of such facility in any one year and with respect to any one "nuclear incident" under any deferred premium or similar plan required by Applicable Law shall not exceed $36 million (subject to adjustment as provided in subclause (Y) of the preceding clause (b))."

**SECTION 3. Miscellaneous.**

**(a) Effective Date of Amendments.** The amendments set forth in Section 2 hereof shall be and become effective upon the execution hereof by the parties hereto.

**(b) Counterpart Execution.** This Amendment No. 1 may be executed in any number of counterparts and by each of the parties hereto on separate counterparts; all such counterparts shall together constitute but one and the same instrument.

**(c) Governing Law.** This Amendment No. 1 has been negotiated and delivered in the State of New York and shall be governed by, and be construed in accordance with, the laws of the State of New York, except to the extent that pursuant to the law of the State of Arizona such law is mandatorily applicable hereto.

**(d) Disclosure.** Pursuant to Arizona Revised Statutes Section 33-401, the beneficiary of the Trust Agreement is Chase Manhattan Realty Leasing Corporation, a New York corporation. The address of the beneficiary is One Chase Manhattan Plaza, New York, New York 10081. A copy of the Trust Agreement is available for inspection at the offices of the Owner Trustee at 100 Federal Street, Boston, Massachusetts 02110, Attention of Corporate Trust Division.

(e) **Amendment No. 1.** The single executed original of this Amendment No. 1 marked "THIS COUNTERPART IS THE ORIGINAL COUNTERPART" and containing the receipt of the Indenture Trustee thereon shall be the "Original" of this Amendment No. 1. To the extent that this Amendment No. 1 constitutes chattel paper, as such term is defined in the Uniform Commercial Code as in effect in any applicable jurisdiction, no security interest in this Amendment No. 1 may be created or continued through the transfer or possession of any counterpart other than the "Original".

IN WITNESS WHEREOF, each of the parties hereto has caused this Amendment No. 1 to Facility Lease to be duly executed by an officer thereunto duly authorized.

THE FIRST NATIONAL BANK OF BOSTON,
not in its individual capacity, but solely as Owner Trustee under a Trust Agreement, dated as of December 15, 1986, with Chase Manhattan Realty Leasing Corporation

By _____
Assistant Cashier

PUBLIC SERVICE COMPANY OF NEW MEXICO

By _____
Vice President and
Corporate Controller

IN WITNESS WHEREOF, each of the parties hereto has caused this Amendment No. 1 to Facility Lease to be duly executed by an officer thereunto duly authorized.

THE FIRST NATIONAL BANK OF BOSTON,
not in its individual capacity, but solely as Owner Trustee under a Trust Agreement, dated as of December 15, 1986, with Chase Manhattan Realty Leasing Corporation

By_____
Assistant Cashier

PUBLIC SERVICE COMPANY OF NEW MEXICO

By B D Sacke
Vice President and
Corporate Controller

87 240901

State of New Mexico )
) ss:
County of Bernalillo )

The foregoing instrument was acknowledged before me this 8th day of April, 1987, by B. D. Lackey the Vice President and Corporate Controller of **PUBLIC SERVICE COMPANY OF NEW MEXICO**, a New Mexico corporation, on behalf of the corporation.

Notary Public

Commonwealth of Massachusetts )
) ss:
County of Suffolk )

The foregoing instrument was acknowledged before me this 8th day of April, 1987, by James E. Mogavero, an Assistant Cashier of **THE FIRST NATIONAL BANK OF BOSTON**, a national banking association, on behalf of the banking association as Owner Trustee under the Trust Agreement dated as of December 15, 1986 with Chase Manhattan Realty Leasing Corporation.

Notary Public

87 240901

State of New Mexico )
) ss:
County of Bernalillo )

The foregoing instrument was acknowledged before me this 8th day of April, 1987, by B. D. Lackey the Vice President and Corporate Controller of **PUBLIC SERVICE COMPANY OF NEW MEXICO**, a New Mexico corporation, on behalf of the corporation.

_____
Notary Public

Commonwealth of Massachusetts )
) ss:
County of Suffolk )

The foregoing instrument was acknowledged before me this 8th day of April, 1987, by James E. Mogavero, an Assistant Cashier of **THE FIRST NATIONAL BANK OF BOSTON**, a national banking association, on behalf of the banking association as Owner Trustee under the Trust Agreement dated as of December 15, 1986 with Chase Manhattan Realty Leasing Corporation.

Carol Malley
Notary Public

CAROL MALLEY
Notary Public
My Commission Expires January 28, 1994

87 240892

When Recorded, Return to: Greg R. Nielsen, Esq.
Snell & Wilmer
3100 Valley Bank Center
Phoenix, Arizona 85073

701

CERTAIN RIGHTS OF THE LESSOR UNDER THE FACILITY LEASE AS HERETOFORE AMENDED AND AS AMENDED BY THIS AMENDMENT NO. 2 THERETO HAVE BEEN ASSIGNED TO, AND ARE SUBJECT TO A SECURITY INTEREST IN FAVOR OF, CHEMICAL BANK, AS INDENTURE TRUSTEE UNDER A TRUST INDENTURE, MORTGAGE, SECURITY AGREEMENT AND ASSIGNMENT OF RENTS DATED AS OF AUGUST 12, 1986, AS AMENDED. THIS AMENDMENT NO. 2 HAS BEEN EXECUTED IN SEVERAL COUNTERPARTS. SEE SECTION 3(e) OF THIS AMENDMENT NO. 2 FOR INFORMATION CONCERNING THE RIGHTS OF HOLDERS OF VARIOUS COUNTERPARTS HEREOF AND OF THE FACILITY LEASE.

THIS COUNTERPART IS NOT THE ORIGINAL COUNTERPART.

---

AMENDMENT NO. 2
Dated as of April 10, 1987
to
FACILITY LEASE
Dated as of August 12, 1986, as amended
between
THE FIRST NATIONAL BANK OF BOSTON,
not in its individual capacity,
but solely as Owner Trustee under
a Trust Agreement, dated as of
August 12, 1986, with MFS Leasing
Corp.,
Lessor
and
PUBLIC SERVICE COMPANY OF NEW MEXICO,
Lessee

---

Original Facility Lease recorded August 18, 1986, as Instrument No. 86-439399, amended by Amendment No. 1 thereto recorded November 25, 1986, as Instrument No. 86-650755 all in Maricopa County, Arizona Recorder's Office.

---

RECORDED IN OFFICIAL RECORDS
OF MARICOPA COUNTY, ARIZONA
APR 20 1987 -4 00
KEITH POLETIS, County Recorder
FEE 12 00 PGS 8 L.D.

6091.MFSU1.DEBT.71B:1

87 240892

**AMENDMENT NO. 2**, dated as of April 10, 1987 (**Amendment No. 2**), to the Facility Lease dated as of August 12, 1986, between **THE FIRST NATIONAL BANK OF BOSTON**, a national banking association, not in its individual capacity, but solely as Owner Trustee under a Trust Agreement, dated as of August 12, 1986, with MFS Leasing Corp. (the **Lessor**), and **PUBLIC SERVICE COMPANY OF NEW MEXICO**, a New Mexico corporation (the **Lessee**).

W I T N E S S E T H :

**WHEREAS**, the Lessee and the Lessor have heretofore entered into a Facility Lease dated as of August 12, 1986, as heretofore amended (the **Facility Lease**), providing for the lease by the Lessor to the Lessee of the Undivided Interest and the Real Property Interest;

**WHEREAS**, the Lessee and the Lessor desire to amend the Facility Lease as set forth in Section 2 hereof; and

**WHEREAS**, the Indenture Trustee has consented to this Amendment No. 2 pursuant to the Request, Instruction and Consent effective on April 10, 1987;

**NOW, THEREFORE**, in consideration of the premises and of other good and valuable consideration, the receipt and sufficiency of which are hereby acknowledged, the parties hereto agree as follows:

SECTION 1. Definitions.

For purposes hereof, capitalized terms used herein and not otherwise defined herein or in the recitals shall have the meanings assigned to such terms in Appendix A to the Facility Lease.

SECTION 2. Amendment.

The definition of "Change in Tax Law" set forth in Appendix A to the Facility Lease is hereby amended to read in its entirety as follows:

> "**Change in Tax Law** shall mean any change in the Code or successor legislation enacted by the Ninety-ninth Congress (other than a change in respect of an alternative minimum tax or an add-on minimum tax having the same effect as an alternative minimum tax), or if prior to January 15, 1997 (i) there is enacted any technical correction thereto, or (ii) there are adopted, promulgated, issued or published any proposed, temporary or final Regulations resulting therefrom (regardless of the effective date of such technical corrections or Regulations, but only if such technical corrections or Regulations would affect Net Economic Return); **provided, however,** that a Change in Tax Law shall occur in the event the provision set forth in Section 1509(b) of H.R. 3838 as passed by the U.S. House of Representatives on December 17, 1985 and Section 1809(b) of H.R. 3838 as passed by the U.S. Senate on June 24, 1986 shall fail to be enacted into law in the form therein set forth or, if such provision is so enacted into law, it shall not apply to the Common Facilities."

SECTION 3. Miscellaneous.

(a) **Effective Date of Amendment.** The amendment set forth in Section 2 hereof shall be and become effective on and as of December 31, 1985.

(b) **Counterpart Execution.** This Amendment No. 2 may be executed in any number of counterparts and by each of the parties hereto on separate counterparts; all such counterparts shall together constitute but one and the same instrument.

(c) **Governing Law.** This Amendment No. 2 has been negotiated and delivered in the State of New York and shall be governed by, and be construed in accordance with, the laws of the State of New York, except to the extent that pursuant to the law of the State of Arizona such law is mandatorily applicable hereto.

(d) **Disclosure.** Pursuant to Arizona Revised Statutes Section 33-401, the beneficiary of the Trust Agreement is MFS Leasing Corp., a Delaware corporation. The address of the beneficiary is Suite 3030, One Mellon Bank Center, Pittsburgh, PA 15258, Attention: President. A copy of the Trust Agreement is available for inspection at the offices of the Owner Trustee at 100 Federal Street, Boston, Massachusetts 02110, Attention of Corporate Trust Division.

(e) **Amendment No. 2.** The single executed original of this Amendment No. 2 marked "THIS COUNTERPART IS THE ORIGINAL COUNTERPART" and containing the receipt of the Indenture Trustee thereon shall be the "Original" of this Amendment No. 2. To the extent that the Facility Lease constitutes chattel paper, as such term is defined in the Uniform Commercial Code as in effect in any applicable jurisdiction, no security interest in the Facility Lease as amended by this Amendment No. 2 may be created or continued through the transfer or possession of any counterpart of this Amendment No. 2 other than the "Original".

IN WITNESS WHEREOF, each of the parties hereto has caused this Amendment No. 2 to Facility Lease to be duly executed in Boston, Massachusetts, or Albuquerque, New Mexico, as the case may be, by an officer thereunto duly authorized.

THE FIRST NATIONAL BANK OF BOSTON,
not in its individual capacity, but solely as Owner Trustee under a Trust Agreement, dated as of August 12, 1986, with MFS Leasing Corp.

By _____
Assistant Cashier

PUBLIC SERVICE COMPANY OF NEW MEXICO

By _____
Vice President and Corporate Controller

IN WITNESS WHEREOF, each of the parties hereto has caused this Amendment No. 2 to Facility Lease to be duly executed in Boston, Massachusetts, or Albuquerque, New Mexico, as the case may be, by an officer thereunto duly authorized.

THE FIRST NATIONAL BANK OF BOSTON,
not in its individual capacity, but solely as Owner Trustee under a Trust Agreement, dated as of August 12, 1986, with MFS Leasing Corp.

By_____
Assistant Cashier

PUBLIC SERVICE COMPANY OF NEW MEXICO

By B D Shirley
Vice President and Corporate Controller

State of New Mexico )
) ss:
County of Bernallilo )

87 240892

The foregoing instrument was acknowledged before me this 10th day of April, 1987, by B.D. Lackey, the Vice President and Corporate Controller of PUBLIC SERVICE COMPANY OF NEW MEXICO, a New Mexico corporation, on behalf of the corporation.

Notary Public

Commonwealth of Massachusetts )
) ss:
County of Suffolk )

The foregoing instrument was acknowledged before me this 10th day of April, 1987, by James E. Mogavero, an Assistant Cashier of THE FIRST NATIONAL BANK OF BOSTON, a national banking association, on behalf of the banking association as trustee under that certain Trust Agreement dated as of August 12, 1986 with MFS Leasing Corp..

Notary Public



6091.BURNHAMU1.DEBT.71B:1

State of New Mexico )
) ss:
County of Bernallilo )

87 240892

The foregoing instrument was acknowledged before me this 10th day of April, 1987, by B.D. Lackey, the Vice President and Corporate Controller of PUBLIC SERVICE COMPANY OF NEW MEXICO, a New Mexico corporation, on behalf of the corporation.

Notary Public

Commonwealth of Massachusetts )
) ss:
County of Suffolk )

The foregoing instrument was acknowledged before me this 10th day of April, 1987, by James E. Mogavero, an Assistant Cashier of THE FIRST NATIONAL BANK OF BOSTON, a national banking association, on behalf of the banking association as trustee under that certain Trust Agreement dated as of August 12, 1986 with MFS Leasing Corp..

Carol Malley
Notary Public

CAROL MALLEY
Notary Public
My Commission Expires January 28, 1994



6091.BURNHAMU1.DEBT.71B:1

August 14, 1987

Public Service Company of
New Mexico
Alvarado Square
Albuquerque, New Mexico 87158
Attention: Secretary

First PV Funding Corporation
c/o Corporation Trust Center
1209 Orange Street
Wilmington, Delaware 19801
Attention: President

The First National
Bank of Boston
100 Federal Street
Boston, Massachusetts 02110
Attention: Corporate Trust
Division

Chemical Bank
55 Water Street
New York, New York 10041
Attention: Corporate Trustee
Administration

Gentlemen:

We refer to the Participation Agreement dated as of August 12, 1986 (as amended and in effect on the date hereof, the "Participation Agreement") among Beneficial Leasing Group, Inc. (the "Owner Participant"), First PV Funding Corporation, The First National Bank of Boston, individually and as Owner Trustee (in such capacity, the "Owner Trustee") under a Trust Agreement dated as of August 12, 1986 with the Owner Participant, Chemical Bank, individually and as Indenture Trustee under a Trust Indenture, Mortgage, Security Agreement and Assignment of Rents dated as of August 12, 1986 with the Owner Trustee, as amended, and Public Service Company of New Mexico. Capitalized terms used herein have the meanings assigned to such terms in Appendix A to the Participation Agreement.

The Owner Participant hereby notifies each of you, pursuant to Section 15(b) of the Participation Agreement, that, effective August 14, 1987, it has transferred to MFS Leasing Corp., a Delaware corporation (the "Transferee"), in accordance with Section 15(a) of the Participation Agreement, all of its right, title and interest in, to and under the Participation Agreement and each of the other Transaction Documents and its beneficial interest in the Trust Estate. A copy of the Deed and Bill of Sale, Assignment and Assumption Agreement (the "Deed and Bill of Sale, Assignment and Assumption Agreement") pursuant to which such transfer was effected is attached hereto.

The transfer referred to above complies with Section 15(a) of the Participation Agreement because (a) the Transferee has, in accordance with Section 15(a)(i) of the Participation Agreement, entered into the Deed and Bill of Sale,

Assignment and Assumption Agreement in which the Transferee agrees that it shall be bound by the terms of the Participation Agreement and each other Transaction Document as if it had been originally named as the Owner Participant thereunder, (b) the Transferee has been approved by the Lessee in accordance with Section 15(a)(ii)(D) of the Participation Agreement, and (c) such transfer does not violate the Securities Act or any provision of, or create a relationship which, would be in violation of, any Applicable Law or agreement to which the Owner Participant or the Transferee is a party or by which its property is bound.

Notices to be delivered to the "Owner Participant" pursuant to the Transaction Documents should be delivered to Transferee at Suite 3030, One Mellon Bank Center, Pittsburgh, Pennsylvania 15258, Attention: President. All payments required to be made to the Owner Participant under any of the Transaction Documents should be made to the Transferee by wire transfer to Mellon Bank, N.A., Pittsburgh, Pennsylvania, account number 092-8199, for account of MFS Leasing Corp.

Please acknowledge your receipt of this letter and of a copy of the Deed and Bill of Sale, Assignment and Assumption Agreement by executing and delivering to the undersigned a counterpart hereof. By executing and returning such counterpart, you also confirm that, as a result of the transfer referred to above and in accordance with Section 15(a) of the Participation Agreement, the Owner Participant has been released from all of its obligations under the Participation Agreement and the other Transaction Documents (including, without limitation, the Trust Agreement).

By its execution of this Letter and in accordance with Section 2.01 of the Trust Agreement, the Owner Participant hereby requests and directs the Owner Trustee to execute and deliver the acknowledgement and confirmation set forth below.

This letter and the acknowledgements hereto may be executed in any number of counterparts, all of which taken together shall constitute one agreement, and any of the parties hereto may execute this letter by signing any such counterpart.

Very truly yours,

BENEFICIAL LEASING GROUP, INC.

By Leonora Greni

Title: AVP

By its signature below, each of the undersigned hereby (i) acknowledges receipt of this letter and a copy of the Deed and Bill of Sale, Assignment and Assumption Agreement, (ii) in the case of Public Service Company of New Mexico, approves the Transferee in accordance with Section 15(a)(ii)(D) of the Participation Agreement, and (iii) confirms that, as a result of the transfer referred to herein and in accordance with Section 15(a) of the Participation Agreement, Beneficial Leasing Group, Inc. has been released from all of its obligations under the Participation Agreement and the other Transaction Documents (including, without limitation, the Trust Agreement).

PUBLIC SERVICE COMPANY OF
NEW MEXICO

By _____
Title: VICE PRESIDENT AND TREASURER

FIRST PV FUNDING CORPORATION

By _____
Title: PRESIDENT

THE FIRST NATIONAL BANK OF BOSTON,
as Owner Trustee

By _____
Title: Assistant Treasurer

CHEMICAL BANK, as Indenture Trustee

By _____
Title: Vice President

DEED AND BILL OF SALE, ASSIGNMENT AND ASSUMPTION AGREEMENT

Deed and Bill of Sale, Assignment and Assumption Agreement dated as of August 14, 1987 between Beneficial Leasing Group, Inc., a Delaware corporation ("Beneficial"), and MFS Leasing Corp., a Delaware corporation ("MFS").

WHEREAS, Beneficial has entered into a Participation Agreement dated as of August 12, 1986 (as amended and in effect on the date hereof, the "Participation Agreement") among Beneficial, First PV Funding Corporation (the "Loan Participant"), The First National Bank of Boston, individually and as Owner Trustee (in such capacity, the "Owner Trustee") under a Trust Agreement dated as of August 12, 1986 with Beneficial, Chemical Bank, individually and as Indenture Trustee (in such capacity, the "Indenture Trustee") under a Trust Indenture, Mortgage, Security Agreement and Assignment of Rents dated as of August 12, 1986 with the Owner Trustee, as amended, and Public Service Company of New Mexico (the "Lessee"), and

WHEREAS, MFS wishes to purchase from Beneficial, and Beneficial wishes to sell to MFS, all of Beneficial's right, title and interest in, to and under the Participation Agreement, each of the other Transaction Documents and all insurance policies and other agreements, documents and instruments required to be maintained or furnished in accordance with the terms of the Transaction Documents, including without limitation the beneficial interest of Beneficial in the Trust Estate, and all proceeds of each thereof (collectively, the "Assigned Property");

WHEREAS, MFS has agreed to assume the liabilities of Beneficial in connection with the Assigned Property; and

WHEREAS, Section 15(a) of the Participation Agreement provides that Beneficial as Owner Participant may transfer the Assigned Property subject to the satisfaction of the conditions set forth therein;

NOW, THEREFORE, in consideration of the premises and of other good and valuable consideration, receipt of which is hereby acknowledged, the parties hereto agree as follows:

SECTION 1. Definitions. All capitalized terms used herein and not otherwise defined herein shall have the meanings assigned to such terms in Appendix A to the Participation Agreement.

SECTION 2. Assignment. As of the date hereof, Beneficial hereby unconditionally and irrevocably sells, assigns, transfers and conveys to MFS, WITHOUT RECOURSE, REPRESENTATION OR WARRANTY, EXPRESS OR IMPLIED, OF ANY NATURE WHATSOEVER, EXCEPT AS SET FORTH IN SECTION 5 HEREOF (THE WARRANTY SET FORTH IN SAID SECTION 5 BEING IN LIEU OF ALL OTHER WARRANTIES OF BENEFICIAL WHETHER WRITTEN, ORAL OR IMPLIED, WITH RESPECT TO THIS AGREEMENT AND THE ASSIGNED PROPERTY), all of the right, title and interest of Beneficial in, to and under the Assigned Property.

SECTION 3. Assumption. As of the date hereof, MFS hereby (a) accepts the assignment made under Section 2 hereof and (b) unconditionally and irrevocably undertakes, accepts and assumes all of the rights and obligations of Beneficial under each of the Transaction Documents, and agrees to be bound by the terms of each of the Transaction Documents to the same extent as if it had been originally named as the Owner Participant thereunder.

SECTION 4. Reference to Owner Participant. Effective as of the date hereof, each reference in the Transaction Documents to Beneficial or to the "Owner Participant" shall mean MFS.

SECTION 5. Representations of Beneficial.

A. Beneficial is a corporation duly organized, validly existing and in good standing under the laws of the State of Delaware and has the corporate power and authority to enter into and perform its obligations under this Agreement.

B. The execution, delivery and performance of this Agreement has been duly authorized by all necessary corporate action on the part of Beneficial.

C. This Agreement has been duly executed and delivered by Beneficial and constitutes its legal, valid and binding obligation, enforceable against it in accordance with its terms (except as the enforceability hereof may be limited by bankruptcy, insolvency, moratorium, reorganization or other similar laws

affecting the enforcement of creditors' rights generally).

D. Neither the execution, delivery or performance by Beneficial of this Agreement, nor the consummation by Beneficial of the transactions contemplated hereby, nor compliance by Beneficial with the provisions hereof conflicts with, or results in the breach of any provision of, or is inconsistent with, its charter or by-laws or contravenes the Securities Act or any other Applicable Law or any indenture, mortgage or any other agreement or instrument to which Beneficial is a party or by which it or its property is bound or requires any Governmental Action with respect to Beneficial, other than such Governmental Actions as have been duly obtained, given or accomplished.

E. Beneficial is the true and lawful owner of, and has good and marketable title to, the Assigned Property, free and clear of all Liens and has the legal right to transfer the Assigned Property as provided herein, and upon consummation of the transactions contemplated hereby, Beneficial will have duly, validly and effectively conveyed and transferred to MFS good and marketable title to the Assigned Property, free and clear of all Liens (it being understood for purposes of this paragraph that the term "Lien" as used in this paragraph and in the opinion of Mark R. Decker, Esq. delivered to MFS in connection with the transactions contemplated hereby shall not include any Lien in respect of the Assigned Property existing solely by reason of a Permitted Lien in respect of the Undivided Interest or the Real Property Interest).

F. Beneficial has delivered to MFS true and complete copies of each of the Transaction Documents and each other document delivered to Beneficial pursuant to any Transaction Document.

G. Beneficial is not obligated to provide to the Owner Trustee additional funds for the payment of any Transaction Expenses pursuant to Section 14 of the Participation Agreement or otherwise.

SECTION 6. Representations of MFS.

A. MFS is a corporation duly incorporated, validly existing and in good standing under the laws of the State of Delaware and has the corporate power and authority to enter into and perform its obligations under this Agreement and under each of the Transaction Documents.

B. The execution, delivery and performance of this Agreement and the performance of its obligations under each of the Transaction Documents have been duly authorized by all necessary corporate action on the part of MFS.

C. This Agreement has been duly executed and delivered by MFS and constitutes, and after giving effect to the provisions of Section 3 hereof each of the Transaction Documents will constitute, its legal, valid and binding obligation, enforceable against it in accordance with its terms (except as the enforceability hereof or thereof may be limited by bankruptcy, insolvency, moratorium, reorganization or other similar laws affecting the enforcement of creditors' rights generally).

D. Neither the execution, delivery or performance by MFS of this Agreement, nor the consummation by MFS of the transactions contemplated hereby, nor compliance by MFS with the provisions hereof nor the performance by MFS of its obligations under the Transaction Documents conflicts with, or results in the breach of any provision of, or is inconsistent with, its charter or by-laws or contravenes the Securities Act or any other Applicable Law or any indenture, mortgage or any other agreement or instrument to which MFS is a party or by which it or its property is bound or requires any Governmental Action with respect to MFS, other than such Governmental Actions as have been duly obtained, given or accomplished.

E. MFS is purchasing the Assigned Property for its own account for investment and not with a present view or intent to resell or distribute such Assigned Property to any Person, other than a transfer to an Affiliate of MFS or a transfer to another Person in compliance with the provisions of the Securities Act.

SECTION 7. Miscellaneous. This Agreement may be executed in any number of counterparts and by the different parties on separate counterparts, each of which, when so executed and delivered, shall be an original, but all such counterparts shall together constitute but one and the same instrument. This Agreement shall be governed by and construed in accordance with the laws of the State of New York, except to the extent that pursuant to the laws of the State of Arizona, the laws of the State of Arizona are mandatorily applicable thereto. This Agreement shall be binding upon and inure to the benefit of each of the parties hereto and their respective successors and permitted assigns.

IN WITNESS WHEREOF, the parties hereto have caused this Agreement to be duly executed as of the date hereof.

BENEFICIAL LEASING GROUP, INC.

By _____
Title:

MFS LEASING CORP.

By _____
Title:

STATE OF _____)
) ss.:
COUNTY OF _____)

The foregoing instrument was acknowledged before me this ___ day of August, 1987, by _____, _____ of BENEFICIAL LEASING GROUP, INC., a Delaware corporation, on behalf of the corporation.

_____
Notary Public

DIANE MYSKOWSKI
NOTARY PUBLIC, State of New York
No. 31-4844528
Qualified in New York County
Commission Expires March 30, 199

STATE OF _____)
) ss.:
COUNTY OF _____)

The foregoing instrument was acknowledged before me this ___ day of August, 1987, by _____, _____ of MFS LEASING CORP., a Delaware corporation, on behalf of the corporation.

_____
Notary Public

DIANE MYSKOWSKI
NOTARY PUBLIC, State of New York
No. 31-4844528
Qualified in New York County
Commission Expires March 30, 198

**Chase Manhattan Realty Leasing Corporation**
1 Chase Manhattan Plaza
New York, New York 10081

CHASE

December 31, 1987

Public Service Company of
New Mexico
Alvarado Square
Albuquerque, New Mexico 87158
Attention: Secretary

First PV Funding Corporation
c/o Corporation Trust Center
1209 Orange Street
Wilmington, Delaware 19801
Attention: President

The First National
Bank of Boston
100 Federal Street
Boston, Massachusetts 02110
Attention: Corporate Trust
Division

Chemical Bank
55 Water Street
New York, New York 10041
Attention: Corporate Trustee
Administration

Gentlemen:

We refer to the Participation Agreement dated as of July 31, 1986 (as amended and in effect on the date hereof, the "Participation Agreement") among Chase Manhattan Realty Leasing Corporation (the "Owner Participant"), First PV Funding Corporation, The First National Bank of Boston, individually and as Owner Trustee (in such capacity, the "Owner Trustee") under a Trust Agreement dated as of July 31, 1986 with the Owner Participant, Chemical Bank, individually and as Indenture Trustee under a Trust Indenture, Mortgage, Security Agreement and Assignment of Rents dated as of July 31, 1986 with the Owner Trustee, as amended, and Public Service Company of New Mexico. The Participation Agreement relates to a sale and leaseback of a 1.133333% undivided interest in Palo Verde Nuclear Generating Station Unit 1 and a .377777% undivided interest in certain Common Facilities. Capitalized terms used herein have the meanings assigned to such terms in Appendix A to the Participation Agreement.

The Owner Participant hereby notifies each of you, pursuant to Section 15(b) of the Participation Agreement, that, effective December 31, 1987, it has transferred to

Palo Verde 1 - PNM August 50 Corporation, a Delaware corporation (the "Transferee"), in accordance with Section 15(a) of the Participation Agreement, all of its right, title and interest in, to and under the Participation Agreement and each of the other Transaction Documents and its beneficial interest in the Trust Estate. A copy of the Deed and Bill of Sale, Contribution, Assignment and Assumption Agreement (the "Deed and Bill of Sale, Contribution, Assignment and Assumption Agreement") dated as of December 31, 1987 between the Owner Participant and the Transferee, pursuant to which such transfer was effected, is attached hereto.

The transfer referred to above complies with Section 15(a) of the Participation Agreement because (a) the Transferee has, in accordance with Section 15(a)(i) of the Participation Agreement, entered into the Deed and Bill of Sale, Contribution, Assignment and Assumption Agreement in which the Transferee agrees that it shall be bound by the terms of the Participation Agreement and each other Transaction Document as if it had been originally named as the Owner Participant thereunder, (b) the Transferee is a direct, wholly-owned subsidiary of the Owner Participant as contemplated by Section 15(a)(ii)(B)(1) of the Participation Agreement, and (c) such transfer does not violate the Securities Act or any provision of, or create a relationship which, would be in violation of, any Applicable Law or agreement to which the Owner Participant or the Transferee is a party or by which its property is bound.

Notices to be delivered to the "Owner Participant" pursuant to the Transaction Documents should be delivered to Transferee at 1 Chase Manhattan Plaza, New York, New York 10081, Attention: Leasing Administrator. All payments required to be made to the Owner Participant under any of the Transaction Documents should be made to the Transferee by wire transfer to The Chase Manhattan Bank (National Association), account number 910-1-438076, for account of Palo Verde 1 - PNM August 50 Corporation.

Please acknowledge your receipt of this letter and a copy of the Deed and Bill of Sale, Contribution, Assignment and Assumption Agreement by executing and delivering to the undersigned a counterpart hereof. By executing and returning such counterpart, you also confirm that, as a result of the transfer referred to above and in accordance with Section 15(a) of the Participation

Agreement, the Owner Participant has been released from all of its obligations under the Participation Agreement and the other Transaction Documents (including, without limitation, the Trust Agreement).

By its execution of this Letter and in accordance with Section 2.01 of the Trust Agreement, the Owner Participant hereby requests and directs the Owner Trustee to execute and deliver the acknowledgment and confirmation set forth below.

This letter and the acknowledgments hereto may be executed in any number of counterparts, all of which taken together shall constitute one agreement, and any of the parties hereto may execute this letter by signing any such counterpart.

Very truly yours,

CHASE MANHATTAN REALTY LEASING CORPORATION

By M. Sanfilippo, Jr.
Title: Vice President

Acknowledged:

PALO VERDE 1 - PNM AUGUST 50 CORPORATION

By Frank Sanz
Title: Vice President

Date: December 31, 1987

By its signature below, each of the undersigned hereby (i) acknowledges receipt of this letter and a copy of the Deed and Bill of Sale, Contribution, Assignment and Assumption Agreement, and (ii) confirms that, as a result of the transfer referred to herein and in accordance with Section 15(a) of the Participation Agreement, Chase Manhattan Realty Leasing Corporation has been released from all of its obligations under the Participation Agreement and the other Transaction Documents (including, without limitation, the Trust Agreement).

PUBLIC SERVICE COMPANY OF
NEW MEXICO

By A1 Robison
Title:

FIRST PV FUNDING CORPORATION

By_____
Title:

THE FIRST NATIONAL BANK OF BOSTON,
as Owner Trustee

By_____
Title:

CHEMICAL BANK, as Indenture Trustee

By_____
Title:

By its signature below, each of the undersigned hereby (i) acknowledges receipt of this letter and a copy of the Deed and Bill of Sale, Contribution, Assignment and Assumption Agreement, and (ii) confirms that, as a result of the transfer referred to herein and in accordance with Section 15(a) of the Participation Agreement, Chase Manhattan Realty Leasing Corporation has been released from all of its obligations under the Participation Agreement and the other Transaction Documents (including, without limitation, the Trust Agreement).

PUBLIC SERVICE COMPANY OF
NEW MEXICO

By_____
Title:

FIRST RV FUNDING CORPORATION

By_____
Title: PRESIDENT

THE FIRST NATIONAL BANK OF BOSTON,
as Owner Trustee

By_____
Title:

CHEMICAL BANK, as Indenture Trustee

By_____
Title:

By its signature below, each of the undersigned hereby (i) acknowledges receipt of this letter and a copy of the Deed and Bill of Sale, Contribution, Assignment and Assumption Agreement, and (ii) confirms that, as a result of the transfer referred to herein and in accordance with Section 15(a) of the Participation Agreement, Chase Manhattan Realty Leasing Corporation has been released from all of its obligations under the Participation Agreement and the other Transaction Documents (including, without limitation, the Trust Agreement).

PUBLIC SERVICE COMPANY OF
NEW MEXICO

By_____
Title:

FIRST PV FUNDING CORPORATION

By_____
Title:

THE FIRST NATIONAL BANK OF BOSTON,
as Owner Trustee

By_____
Title:

CHEMICAL BANK, as Indenture Trustee

By_____
Title:

By its signature below, each of the undersigned hereby (i) acknowledges receipt of this letter and a copy of the Deed and Bill of Sale, Contribution, Assignment and Assumption Agreement, and (ii) confirms that, as a result of the transfer referred to herein and in accordance with Section 15(a) of the Participation Agreement, Chase Manhattan Realty Leasing Corporation has been released from all of its obligations under the Participation Agreement and the other Transaction Documents (including, without limitation, the Trust Agreement).

PUBLIC SERVICE COMPANY OF
NEW MEXICO

By_____
Title:

FIRST PV FUNDING CORPORATION

By_____
Title:

THE FIRST NATIONAL BANK OF BOSTON,
as Owner Trustee

By_____
Title:

CHEMICAL BANK, as Indenture Trustee

By_____
Title: VICE PRESIDENT

DEED AND BILL OF SALE, CONTRIBUTION, ASSIGNMENT AND ASSUMPTION AGREEMENT

Deed and Bill of Sale, Contribution, Assignment and Assumption Agreement dated as of December 31, 1987 between Chase Manhattan Realty Leasing Corporation, a New York corporation ("CMRL"), and Palo Verde 1 - PNM August 50 Corporation, a Delaware corporation ("Newco").

WHEREAS, CMRL has entered into a Participation Agreement dated as of July 31, 1986 (as amended and in effect on the date hereof, the "Participation Agreement") among CMRL, First PV Funding Corporation (the "Loan Participant"), The First National Bank of Boston, individually and as Owner Trustee (in such capacity, the "Owner Trustee") under a Trust Agreement dated as of July 31, 1986 with CMRL, Chemical Bank, individually and as Indenture Trustee (in such capacity, the "Indenture Trustee") under a Trust Indenture, Mortgage, Security Agreement and Assignment of Rents dated as of July 31, 1986 with the Owner Trustee, as amended, and Public Service Company of New Mexico (the "Lessee") which Participation Agreement relates to a sale and leaseback of a 1.133333% undivided interest in Palo Verde Nuclear Generating Station Unit 1 and a .377777% undivided interest in certain Common Facilities; and

WHEREAS, CMRL wishes to assign, transfer and contribute to Newco, and Newco wishes to accept from CMRL, all of CMRL's right, title and interest in, to and under the Participation Agreement, each of the other Transaction Documents and all insurance policies and other agreements, documents and instruments required to be maintained or furnished in accordance with the terms of the Transaction Documents, including without limitation the beneficial interest of CMRL in the Trust Estate, and all proceeds of each thereof (collectively, the "Assigned Property"); and

WHEREAS, Newco has agreed to undertake, accept and assume all of the rights and obligations of CMRL under each of the Transaction Documents and has agreed to be bound by the terms of each of the Transaction Documents to the same extent as if it had been originally named as the Owner Participant thereunder; and

WHEREAS, Newco has agreed to assume all of the liabilities of CMRL in connection with the Assigned Property; and

WHEREAS, Section 15(a) of the Participation Agreement provides that CMRL as Owner Participant may transfer the Assigned Property subject to the satisfaction of the conditions set forth therein;

NOW, THEREFORE, in consideration of the premises and of other good and valuable consideration, receipt of which is hereby acknowledged, the parties hereto agree as follows:

SECTION 1. Definitions. All capitalized terms used herein and not otherwise defined herein shall have the meanings assigned to such terms in Appendix A to the Participation Agreement.

SECTION 2. Assignment. As of the date hereof, CMRL hereby unconditionally and irrevocably sells, assigns, transfers and conveys to Newco WITHOUT RECOURSE, REPRESENTATION OR WARRANTY, EXPRESS OR IMPLIED, OF ANY NATURE WHATSOEVER, EXCEPT AS SET FORTH IN SECTION 5 HEREOF (THE WARRANTY SET FORTH IN SAID SECTION 5 BEING IN LIEU OF ALL OTHER WARRANTIES OF CMRL WHETHER WRITTEN, ORAL OR IMPLIED, WITH RESPECT TO THIS AGREEMENT AND THE ASSIGNED PROPERTY), all of the right, title and interest of CMRL in, to and under the Assigned Property.

SECTION 3. Assumption. As of the date hereof, Newco hereby (a) accepts the assignment made under Section 2 hereof, (b) unconditionally and irrevocably undertakes, accepts and assumes all of the rights and obligations of CMRL under each of the Transaction Documents, and agrees to be bound by the terms of each of the Transaction Documents to the same extent as if it had been originally named as the Owner Participant thereunder and (c) assumes all of the liabilities of CMRL in connection with the Assigned Property.

SECTION 4. Reference to Owner Participant. Effective as of the date hereof, each reference in the Transaction Documents to CMRL or to the "Owner Participant" shall mean Newco.

SECTION 5. Representations of CMRL.

A. CMRL is a corporation duly organized, validly existing and in good standing under the laws of the State of New York and has the corporate power and authority to enter into and perform its obligations under this Agreement.

B. The execution, delivery and performance of this Agreement has been duly authorized by all necessary corporate action on the part of CMRL.

C. This Agreement has been duly executed and delivered by CMRL and constitutes its legal, valid and binding obligation, enforceable against it in accordance with its terms (except as the enforceability hereof may be limited by bankruptcy, insolvency, moratorium, reorganization or other similar laws affecting the enforcement of creditors' rights generally).

D. Neither the execution, delivery or performance by CMRL of this Agreement, nor the consummation by CMRL of the transactions contemplated hereby, nor compliance by CMRL with the provisions hereof conflicts with, or results in the breach of any provision of, or is inconsistent with, its charter or by-laws or contravenes the Securities Act or any other Applicable Law or any indenture, mortgage or any other agreement or instrument to which CMRL is a party or by which it or its property is bound or requires any Governmental Action with respect to CMRL, other than such Governmental Actions as have been duly obtained, given or accomplished.

E. CMRL is the true and lawful owner of, and has good and marketable title to, the Assigned Property, free and clear of all Liens and has the legal right to transfer the Assigned Property as provided herein, and upon consummation of the transactions contemplated hereby, CMRL will have duly, validly and effectively conveyed and transferred to Newco good and marketable title to the Assigned Property, free and clear of all Liens (it being understood for purposes of this paragraph that the term "Lien" as used in this paragraph shall not include any Lien in respect of the Assigned Property existing solely by reason of a Permitted Lien in respect of the Undivided Interest or the Real Property Interest).

F. CMRL has delivered to Newco true and complete copies of each of the Transaction Documents and each other document delivered to CMRL pursuant to any Transaction Document.

G. CMRL is not obligated to provide to the Owner Trustee additional funds for the payment of any Transaction Expenses pursuant to Section 14 of the Participation Agreement or otherwise.

SECTION 6. Representations of Newco.

A. Newco is a corporation duly incorporated, validly existing and in good standing under the laws of the State of Delaware and has the corporate power and authority to enter into and perform its obligations under this Agreement and under each of the Transaction Documents.

B. The execution, delivery and performance of this Agreement and the performance of its obligations under each of the Transaction Documents have been duly authorized by all necessary corporate action on the part of Newco.

C. This Agreement has been duly executed and delivered by Newco and constitutes, and after giving effect to the provisions of Section 3 hereof each of the Transaction Documents will constitute, its legal, valid and binding obligation, enforceable against it in accordance with its terms (except as the enforceability hereof or thereof may be limited by bankruptcy, insolvency, moratorium, reorganization or other similar laws affecting the enforcement of creditors' rights generally).

D. Neither the execution, delivery or performance by Newco of this Agreement, nor the consummation by Newco of the transactions contemplated hereby, nor compliance by Newco with the provisions hereof nor the performance by Newco of its obligations under the Transaction Documents conflicts with, or results in the breach of any provision of, or is inconsistent with, its charter or by-laws or contravenes the Securities Act or any other Applicable Law or any indenture, mortgage or any other agreement or instrument to which Newco is a party or by which it or its property is bound or requires any Governmental Action with respect to Newco,

other than such Governmental Actions as have been duly obtained, given or accomplished.

E. Newco is acquiring the Assigned Property for its own account in the ordinary course of its business and Newco has no intention of making any sale or other distribution of the Assigned Property in violation of any legislation, rule or regulation relating to limitations upon the sale or other distribution of interests such as those comprising the Assigned Property.

SECTION 7. Miscellaneous. This Agreement may be executed in any number of counterparts and by the different parties on separate counterparts, each of which, when so executed and delivered, shall be an original, but all such counterparts shall together constitute but one and the same instrument. This Agreement shall be governed by and construed in accordance with the law of the State of New York, except to the extent that pursuant to the laws of the State of Arizona, the laws of the State of Arizona are mandatorily applicable thereto. This Agreement shall be binding upon and inure to the benefit of each of the parties hereto and their respective successors and permitted assigns.

IN WITNESS WHEREOF, the parties hereto have caused this Agreement to be duly executed as of the date hereof.

CHASE MANHATTAN REALTY LEASING CORPORATION

By M. Springer, Jr.
Title: Vice President

PALO VERDE 1 - PNM AUGUST 50 CORPORATION

By Frank Gomez
Title: Vice President

STATE OF NEW YORK )
: ss.:
COUNTY OF NEW YORK )

The foregoing instrument was acknowledged before me this 31st day of December, 1987, by M. Spragins, Jr., Vice President of CHASE MANHATTAN REALTY LEASING CORPORATION, a New York corporation, on behalf of the corporation.

Notary Public

MARY M. PHILLIPS
NOTARY PUBLIC, State of New York
No. 31-4851386
Qualified in New York County
Certificate filed in New York County
Commission Expires February 17, 1988

STATE OF NEW YORK )
: ss.:
COUNTY OF NEW YORK )

The foregoing instrument was acknowledged before me this 31st day of December, 1987, by Frank Sainz, Vice President of PALO VERDE 1 - PNM AUGUST 50 CORPORATION, a Delaware corporation, on behalf of the corporation.

Mary M. Phillips
Notary Public

MARY M. PHILLIPS
NOTARY PUBLIC, State of New York
No. 31-4851384
Qualified in New York County
Certificate filed in New York County
Commission Expires February 17, 1988

Chase Manhattan Realty Leasing Corporation
1 Chase Manhattan Plaza
New York, New York 10081

CHASE

December 31, 1987

Public Service Company of
New Mexico
Alvarado Square
Albuquerque, New Mexico 87158
Attention: Secretary

First PV Funding Corporation
c/o Corporation Trust Center
1209 Orange Street
Wilmington, Delaware 19801
Attention: President

The First National
Bank of Boston
100 Federal Street
Boston, Massachusetts 02110
Attention: Corporate Trust
Division

Chemical Bank
55 Water Street
New York, New York 10041
Attention: Corporate Trustee
Administration

Gentlemen:

We refer to the Participation Agreement dated as of December 15, 1986 (as amended and in effect on the date hereof, the "Participation Agreement") among Chase Manhattan Realty Leasing Corporation (the "Owner Participant"), First PV Funding Corporation, The First National Bank of Boston, individually and as Owner Trustee (in such capacity, the "Owner Trustee") under a Trust Agreement dated as of December 15, 1986 with the Owner Participant, Chemical Bank, individually and as Indenture Trustee under a Trust Indenture, Mortgage, Security Agreement and Assignment of Rents dated as of December 15, 1986 with the Owner Trustee, as amended, and Public Service Company of New Mexico. The Participation Agreement relates to a sale and leaseback of a 1.700000% undivided interest in Palo Verde Nuclear Generating Station Unit 1 and a .566667% undivided interest in certain Common Facilities. Capitalized terms used herein have the meanings assigned to such terms in Appendix A to the Participation Agreement.

The Owner Participant hereby notifies each of you, pursuant to Section 15(b) of the Participation Agreement, that, effective December 31, 1987, it has transferred to

Palo Verde 1 - PNM December 75 Corporation, a Delaware corporation (the "Transferee"), in accordance with Section 15(a) of the Participation Agreement, all of its right, title and interest in, to and under the Participation Agreement and each of the other Transaction Documents and its beneficial interest in the Trust Estate. A copy of the Deed and Bill of Sale, Contribution, Assignment and Assumption Agreement (the "Deed and Bill of Sale, Contribution, Assignment and Assumption Agreement") dated as of December 31, 1987 between the Owner Participant and the Transferee, pursuant to which such transfer was effected, is attached hereto.

The transfer referred to above complies with Section 15(a) of the Participation Agreement because (a) the Transferee has, in accordance with Section 15(a)(i) of the Participation Agreement, entered into the Deed and Bill of Sale, Contribution, Assignment and Assumption Agreement in which the Transferee agrees that it shall be bound by the terms of the Participation Agreement and each other Transaction Document as if it had been originally named as the Owner Participant thereunder, (b) the Transferee is a direct, wholly-owned subsidiary of the Owner Participant as contemplated by Section 15(a)(ii)(B)(1) of the Participation Agreement, and (c) such transfer does not violate the Securities Act or any provision of, or create a relationship which, would be in violation of, any Applicable Law or agreement to which the Owner Participant or the Transferee is a party or by which its property is bound.

Notices to be delivered to the "Owner Participant" pursuant to the Transaction Documents should be delivered to Transferee at 1 Chase Manhattan Plaza, New York, New York 10081, Attention: Leasing Administrator. All payments required to be made to the Owner Participant under any of the Transaction Documents should be made to the Transferee by wire transfer to The Chase Manhattan Bank (National Association), account number 910-1-438076, for account of Palo Verde 1 - PNM December 75 Corporation.

Please acknowledge your receipt of this letter and a copy of the Deed and Bill of Sale, Contribution, Assignment and Assumption Agreement by executing and delivering to the undersigned a counterpart hereof. By executing and returning such counterpart, you also confirm that, as a result of the transfer referred to above and in accordance with Section 15(a) of the Participation

Agreement, the Owner Participant has been released from all of its obligations under the Participation Agreement and the other Transaction Documents (including, without limitation, the Trust Agreement).

By its execution of this Letter and in accordance with Section 2.01 of the Trust Agreement, the Owner Participant hereby requests and directs the Owner Trustee to execute and deliver the acknowledgment and confirmation set forth below.

This letter and the acknowledgments hereto may be executed in any number of counterparts, all of which taken together shall constitute one agreement, and any of the parties hereto may execute this letter by signing any such counterpart.

Very truly yours,

CHASE MANHATTAN REALTY LEASING CORPORATION

By M. Springer, Jr.
Title: Vice President

Acknowledged:

PALO VERDE 1 - PNM DECEMBER 75 CORPORATION

By Frank Sanz
Title: Vice President

Date: December 31, 1987

By its signature below, each of the undersigned hereby (i) acknowledges receipt of this letter and a copy of the Deed and Bill of Sale, Contribution, Assignment and Assumption Agreement, and (ii) confirms that, as a result of the transfer referred to herein and in accordance with Section 15(a) of the Participation Agreement, Chase Manhattan Realty Leasing Corporation has been released from all of its obligations under the Participation Agreement and the other Transaction Documents (including, without limitation, the Trust Agreement).

PUBLIC SERVICE COMPANY OF
NEW MEXICO

By A J Robison
Title:

FIRST PV FUNDING CORPORATION

By_____
Title:

THE FIRST NATIONAL BANK OF BOSTON,
as Owner Trustee

By_____
Title:

CHEMICAL BANK, as Indenture Trustee

By_____
Title:

By its signature below, each of the undersigned hereby (i) acknowledges receipt of this letter and a copy of the Deed and Bill of Sale, Contribution, Assignment and Assumption Agreement, and (ii) confirms that, as a result of the transfer referred to herein and in accordance with Section 15(a) of the Participation Agreement, Chase Manhattan Realty Leasing Corporation has been released from all of its obligations under the Participation Agreement and the other Transaction Documents (including, without limitation, the Trust Agreement).

PUBLIC SERVICE COMPANY OF
NEW MEXICO

By_____
Title:

FIRST PV FUNDING CORPORATION

By_____
Title: PRESIDENT

THE FIRST NATIONAL BANK OF BOSTON,
as Owner Trustee

By_____
Title:

CHEMICAL BANK, as Indenture Trustee

By_____
Title:

By its signature below, each of the undersigned hereby (i) acknowledges receipt of this letter and a copy of the Deed and Bill of Sale, Contribution, Assignment and Assumption Agreement, and (ii) confirms that, as a result of the transfer referred to herein and in accordance with Section 15(a) of the Participation Agreement, Chase Manhattan Realty Leasing Corporation has been released from all of its obligations under the Participation Agreement and the other Transaction Documents (including, without limitation, the Trust Agreement).

PUBLIC SERVICE COMPANY OF
NEW MEXICO

By_____
Title:

FIRST PV FUNDING CORPORATION

By_____
Title:

THE FIRST NATIONAL BANK OF BOSTON,
as Owner Trustee

By_____
Title:

CHEMICAL BANK, as Indenture Trustee

By_____
Title:

By its signature below, each of the undersigned hereby (i) acknowledges receipt of this letter and a copy of the Deed and Bill of Sale, Contribution, Assignment and Assumption Agreement, and (ii) confirms that, as a result of the transfer referred to herein and in accordance with Section 15(a) of the Participation Agreement, Chase Manhattan Realty Leasing Corporation has been released from all of its obligations under the Participation Agreement and the other Transaction Documents (including, without limitation, the Trust Agreement).

PUBLIC SERVICE COMPANY OF
NEW MEXICO

By_____
Title:

FIRST PV FUNDING CORPORATION

By_____
Title:

THE FIRST NATIONAL BANK OF BOSTON,
as Owner Trustee

By_____
Title:

CHEMICAL BANK, as Indenture Trustee

By_____
Title: VICE PRESIDENT

DEED AND BILL OF SALE, CONTRIBUTION, ASSIGNMENT AND ASSUMPTION AGREEMENT

Deed and Bill of Sale, Contribution, Assignment and Assumption Agreement dated as of December 31, 1987 between Chase Manhattan Realty Leasing Corporation, a New York corporation ("CMRL"), and Palo Verde 1 - PNM December 75 Corporation, a Delaware corporation ("Newco").

WHEREAS, CMRL has entered into a Participation Agreement dated as of December 15, 1986 (as amended and in effect on the date hereof, the "Participation Agreement") among CMRL, First PV Funding Corporation (the "Loan Participant"), The First National Bank of Boston, individually and as Owner Trustee (in such capacity, the "Owner Trustee") under a Trust Agreement dated as of December 15, 1986 with CMRL, Chemical Bank, individually and as Indenture Trustee (in such capacity, the "Indenture Trustee") under a Trust Indenture, Mortgage, Security Agreement and Assignment of Rents dated as of December 15, 1986 with the Owner Trustee, as amended, and Public Service Company of New Mexico (the "Lessee") which Participation Agreement relates to a sale and leaseback of a 1.700000% undivided interest in Palo Verde Nuclear Generating Station Unit 1 and a .566667% undivided interest in certain Common Facilities; and

WHEREAS, CMRL wishes to assign, transfer and contribute to Newco, and Newco wishes to accept from CMRL, all of CMRL's right, title and interest in, to and under the Participation Agreement, each of the other Transaction Documents and all insurance policies and other agreements, documents and instruments required to be maintained or furnished in accordance with the terms of the Transaction Documents, including without limitation the beneficial interest of CMRL in the Trust Estate, and all proceeds of each thereof (collectively, the "Assigned Property"); and

WHEREAS, Newco has agreed to undertake, accept and assume all of the rights and obligations of CMRL under each of the Transaction Documents and has agreed to be bound by the terms of each of the Transaction Documents to the same extent as if it had been originally named as the Owner Participant thereunder; and

WHEREAS, Newco has agreed to assume all of the liabilities of CMRL in connection with the Assigned Property; and

WHEREAS, Section 15(a) of the Participation Agreement provides that CMRL as Owner Participant may transfer the Assigned Property subject to the satisfaction of the conditions set forth therein;

NOW, THEREFORE, in consideration of the premises and of other good and valuable consideration, receipt of which is hereby acknowledged, the parties hereto agree as follows:

SECTION 1. Definitions. All capitalized terms used herein and not otherwise defined herein shall have the meanings assigned to such terms in Appendix A to the Participation Agreement.

SECTION 2. Assignment. As of the date hereof, CMRL hereby unconditionally and irrevocably sells, assigns, transfers and conveys to Newco WITHOUT RECOURSE, REPRESENTATION OR WARRANTY, EXPRESS OR IMPLIED, OF ANY NATURE WHATSOEVER, EXCEPT AS SET FORTH IN SECTION 5 HEREOF (THE WARRANTY SET FORTH IN SAID SECTION 5 BEING IN LIEU OF ALL OTHER WARRANTIES OF CMRL WHETHER WRITTEN, ORAL OR IMPLIED, WITH RESPECT TO THIS AGREEMENT AND THE ASSIGNED PROPERTY), all of the right, title and interest of CMRL in, to and under the Assigned Property.

SECTION 3. Assumption. As of the date hereof, Newco hereby (a) accepts the assignment made under Section 2 hereof, (b) unconditionally and irrevocably undertakes, accepts and assumes all of the rights and obligations of CMRL under each of the Transaction Documents, and agrees to be bound by the terms of each of the Transaction Documents to the same extent as if it had been originally named as the Owner Participant thereunder and (c) assumes all of the liabilities of CMRL in connection with the Assigned Property.

SECTION 4. Reference to Owner Participant. Effective as of the date hereof, each reference in the Transaction Documents to CMRL or to the "Owner Participant" shall mean Newco.

SECTION 5. Representations of CMRL.

A. CMRL is a corporation duly organized, validly existing and in good standing under the laws of the State of New York and has the corporate power and authority to enter into and perform its obligations under this Agreement.

B. The execution, delivery and performance of this Agreement has been duly authorized by all necessary corporate action on the part of CMRL.

C. This Agreement has been duly executed and delivered by CMRL and constitutes its legal, valid and binding obligation, enforceable against it in accordance with its terms (except as the enforceability hereof may be limited by bankruptcy, insolvency, moratorium, reorganization or other similar laws affecting the enforcement of creditors' rights generally).

D. Neither the execution, delivery or performance by CMRL of this Agreement, nor the consummation by CMRL of the transactions contemplated hereby, nor compliance by CMRL with the provisions hereof conflicts with, or results in the breach of any provision of, or is inconsistent with, its charter or by-laws or contravenes the Securities Act or any other Applicable Law or any indenture, mortgage or any other agreement or instrument to which CMRL is a party or by which it or its property is bound or requires any Governmental Action with respect to CMRL, other than such Governmental Actions as have been duly obtained, given or accomplished.

E. CMRL is the true and lawful owner of, and has good and marketable title to, the Assigned Property, free and clear of all Liens and has the legal right to transfer the Assigned Property as provided herein, and upon consummation of the transactions contemplated hereby, CMRL will have duly, validly and effectively conveyed and transferred to Newco good and marketable title to the Assigned Property, free and clear of all Liens (it being understood for purposes of this paragraph that the term "Lien" as used in this paragraph shall not include any Lien in respect of the Assigned Property existing solely by reason of a Permitted Lien in respect of the Undivided Interest or the Real Property Interest).

F. CMRL has delivered to Newco true and complete copies of each of the Transaction Documents and each other document delivered to CMRL pursuant to any Transaction Document.

G. CMRL is not obligated to provide to the Owner Trustee additional funds for the payment of any Transaction Expenses pursuant to Section 14 of the Participation Agreement or otherwise.

SECTION 6. Representations of Newco.

A. Newco is a corporation duly incorporated, validly existing and in good standing under the laws of the State of Delaware and has the corporate power and authority to enter into and perform its obligations under this Agreement and under each of the Transaction Documents.

B. The execution, delivery and performance of this Agreement and the performance of its obligations under each of the Transaction Documents have been duly authorized by all necessary corporate action on the part of Newco.

C. This Agreement has been duly executed and delivered by Newco and constitutes, and after giving effect to the provisions of Section 3 hereof each of the Transaction Documents will constitute, its legal, valid and binding obligation, enforceable against it in accordance with its terms (except as the enforceability hereof or thereof may be limited by bankruptcy, insolvency, moratorium, reorganization or other similar laws affecting the enforcement of creditors' rights generally).

D. Neither the execution, delivery or performance by Newco of this Agreement, nor the consummation by Newco of the transactions contemplated hereby, nor compliance by Newco with the provisions hereof nor the performance by Newco of its obligations under the Transaction Documents conflicts with, or results in the breach of any provision of, or is inconsistent with, its charter or by-laws or contravenes the Securities Act or any other Applicable Law or any indenture, mortgage or any other agreement or instrument to which Newco is a party or by which it or its property is bound or requires any Governmental Action with respect to Newco,

other than such Governmental Actions as have been duly obtained, given or accomplished.

E. Newco is acquiring the Assigned Property for its own account in the ordinary course of its business and Newco has no intention of making any sale or other distribution of the Assigned Property in violation of any legislation, rule or regulation relating to limitations upon the sale or other distribution of interests such as those comprising the Assigned Property.

SECTION 7. Miscellaneous. This Agreement may be executed in any number of counterparts and by the different parties on separate counterparts, each of which, when so executed and delivered, shall be an original, but all such counterparts shall together constitute but one and the same instrument. This Agreement shall be governed by and construed in accordance with the law of the State of New York, except to the extent that pursuant to the laws of the State of Arizona, the laws of the State of Arizona are mandatorily applicable thereto. This Agreement shall be binding upon and inure to the benefit of each of the parties hereto and their respective successors and permitted assigns.

IN WITNESS WHEREOF, the parties hereto have caused this Agreement to be duly executed as of the date hereof.

CHASE MANHATTAN REALTY LEASING CORPORATION

By M. Spragins, Jr.
Title: Vice President

PALO VERDE 1 - PNM DECEMBER 75 CORPORATION

By Frank Sanz
Title: Vice President

STATE OF NEW YORK )
: ss.:
COUNTY OF NEW YORK )

The foregoing instrument was acknowledged before me this 31st day of December, 1987, by M. Spragins, Jr., Vice President of CHASE MANHATTAN REALTY LEASING CORPORATION, a New York corporation, on behalf of the corporation.

Mary M. Phillips
Notary Public

MARY M. PHILLIPS
NOTARY PUBLIC, State of New York
No. 31-4851384
Qualified in New York County
Certificate filed in New York County
Commission Expires February 17, 1988

STATE OF NEW YORK )
: ss.:
COUNTY OF NEW YORK )

The foregoing instrument was acknowledged before me this 31st day of December, 1987, by Frank Sainz, Vice President of PALO VERDE 1 - PNM DECEMBER 75 CORPORATION, a Delaware corporation, on behalf of the corporation.

Mary M. Phillips
Notary Public

MARY M. PHILLIPS
NOTARY PUBLIC, State of New York
No. 31-4851384
Qualified in New York County
Certificate filed in New York County
Commission Expires February 17, 1988

**Chase Manhattan Realty Leasing Corporation**
1 Chase Manhattan Plaza
New York, New York 10081

CHASE

December 31, 1987

Public Service Company of
New Mexico
Alvarado Square
Albuquerque, New Mexico 87158
Attention: Secretary

First PV Funding Corporation
c/o Corporation Trust Center
1209 Orange Street
Wilmington, Delaware 19801
Attention: President

The First National
Bank of Boston
100 Federal Street
Boston, Massachusetts 02110
Attention: Corporate Trust
Division

Chemical Bank
55 Water Street
New York, New York 10041
Attention: Corporate Trustee
Administration

Gentlemen:

We refer to the Participation Agreement dated as of December 15, 1986 (as amended and in effect on the date hereof, the "Participation Agreement") among Chase Manhattan Realty Leasing Corporation (the "Owner Participant"), First PV Funding Corporation, The First National Bank of Boston, individually and as Owner Trustee (in such capacity, the "Owner Trustee") under a Trust Agreement dated as of December 15, 1986 with the Owner Participant, Chemical Bank, individually and as Indenture Trustee under a Trust Indenture, Mortgage, Security Agreement and Assignment of Rents dated as of December 15, 1986 with the Owner Trustee, as amended, and Public Service Company of New Mexico. The Participation Agreement relates to a sale and leaseback of a .7933333% undivided interest in Palo Verde Nuclear Generating Station Unit 2 and a .2644444% undivided interest in certain Common Facilities. Capitalized terms used herein have the meanings assigned to such terms in Appendix A to the Participation Agreement.

The Owner Participant hereby notifies each of you, pursuant to Section 15(b) of the Participation Agreement, that, effective December 31, 1987, it has

transferred to PV2 - PNM December 35 Corporation, a Delaware corporation (the "Transferee"), in accordance with Section 15(a) of the Participation Agreement, all of its right, title and interest in, to and under the Participation Agreement and each of the other Transaction Documents and its beneficial interest in the Trust Estate. A copy of the Deed and Bill of Sale, Contribution, Assignment and Assumption Agreement (the "Deed and Bill of Sale, Contribution, Assignment and Assumption Agreement") dated as of December 31, 1987 between the Owner Participant and the Transferee, pursuant to which such transfer was effected, is attached hereto.

The transfer referred to above complies with Section 15(a) of the Participation Agreement because (a) the Transferee has, in accordance with Section 15(a)(i) of the Participation Agreement, entered into the Deed and Bill of Sale, Contribution, Assignment and Assumption Agreement in which the Transferee agrees that it shall be bound by the terms of the Participation Agreement and each other Transaction Document as if it had been originally named as the Owner Participant thereunder, (b) the Transferee is a direct, wholly-owned subsidiary of the Owner Participant as contemplated by Section 15(a)(ii)(B)(1) of the Participation Agreement, and (c) such transfer does not violate the Securities Act or any provision of, or create a relationship which, would be in violation of, any Applicable Law or agreement to which the Owner Participant or the Transferee is a party or by which its property is bound.

Notices to be delivered to the "Owner Participant" pursuant to the Transaction Documents should be delivered to Transferee at 1 Chase Manhattan Plaza, New York, New York 10081, Attention: Leasing Administrator. All payments required to be made to the Owner Participant under any of the Transaction Documents should be made to the Transferee by wire transfer to The Chase Manhattan Bank (National Association), account number 910-1-438076, for account of PV2 - PNM December 35 Corporation.

Please acknowledge your receipt of this letter and a copy of the Deed and Bill of Sale, Contribution, Assignment and Assumption Agreement by executing and delivering to the undersigned a counterpart hereof. By executing and returning such counterpart, you also confirm that, as a result of the transfer referred to above and in accordance with Section 15(a) of the Participation

Agreement, the Owner Participant has been released from all of its obligations under the Participation Agreement and the other Transaction Documents (including, without limitation, the Trust Agreement).

By its execution of this Letter and in accordance with Section 2.01 of the Trust Agreement, the Owner Participant hereby requests and directs the Owner Trustee to execute and deliver the acknowledgment and confirmation set forth below.

This letter and the acknowledgments hereto may be executed in any number of counterparts, all of which taken together shall constitute one agreement, and any of the parties hereto may execute this letter by signing any such counterpart.

Very truly yours,

CHASE MANHATTAN REALTY LEASING CORPORATION

By_____
Title: Vice President

Acknowledged:

PV2 - PNM DECEMBER 35 CORPORATION

By_____
Title: Vice President

Date: December 31, 1987

By its signature below, each of the undersigned hereby (i) acknowledges receipt of this letter and a copy of the Deed and Bill of Sale, Contribution, Assignment and Assumption Agreement, and (ii) confirms that, as a result of the transfer referred to herein and in accordance with Section 15(a) of the Participation Agreement, Chase Manhattan Realty Leasing Corporation has been released from all of its obligations under the Participation Agreement and the other Transaction Documents (including, without limitation, the Trust Agreement).

PUBLIC SERVICE COMPANY OF
NEW MEXICO

By_____
Title:

FIRST PV FUNDING CORPORATION

By_____
Title:

THE FIRST NATIONAL BANK OF BOSTON,
as Owner Trustee

By_____
Title:

CHEMICAL BANK, as Indenture Trustee

By_____
Title:

DEED AND BILL OF SALE, CONTRIBUTION, ASSIGNMENT AND ASSUMPTION AGREEMENT

Deed and Bill of Sale, Contribution, Assignment and Assumption Agreement dated as of December 31, 1987 between Chase Manhattan Realty Leasing Corporation, a New York corporation ("CMRL"), and PV2 - PNM December 35 Corporation, a Delaware corporation ("Newco").

WHEREAS, CMRL has entered into a Participation Agreement dated as of December 15, 1986 (as amended and in effect on the date hereof, the "Participation Agreement") among CMRL, First PV Funding Corporation (the "Loan Participant"), The First National Bank of Boston, individually and as Owner Trustee (in such capacity, the "Owner Trustee") under a Trust Agreement dated as of December 15, 1986 with CMRL, Chemical Bank, individually and as Indenture Trustee (in such capacity, the "Indenture Trustee") under a Trust Indenture, Mortgage, Security Agreement and Assignment of Rents dated as of December 15, 1986 with the Owner Trustee, as amended, and Public Service Company of New Mexico (the "Lessee") which Participation Agreement relates to a sale and leaseback of a .7933333% undivided interest in Palo Verde Nuclear Generating Station Unit 2 and a .2644444% undivided interest in certain Common Facilities; and

WHEREAS, CMRL wishes to assign, transfer and contribute to Newco, and Newco wishes to accept from CMRL, all of CMRL's right, title and interest in, to and under the Participation Agreement, each of the other Transaction Documents and all insurance policies and other agreements, documents and instruments required to be maintained or furnished in accordance with the terms of the Transaction Documents, including without limitation the beneficial interest of CMRL in the Trust Estate, and all proceeds of each thereof (collectively, the "Assigned Property"); and

WHEREAS, Newco has agreed to undertake, accept and assume all of the rights and obligations of CMRL under each of the Transaction Documents and has agreed to be bound by the terms of each of the Transaction Documents to the same extent as if it had been originally named as the Owner Participant thereunder; and

WHEREAS, Newco has agreed to assume all of the liabilities of CMRL in connection with the Assigned Property; and

WHEREAS, Section 15(a) of the Participation Agreement provides that CMRL as Owner Participant may transfer the Assigned Property subject to the satisfaction of the conditions set forth therein;

NOW, THEREFORE, in consideration of the premises and of other good and valuable consideration, receipt of which is hereby acknowledged, the parties hereto agree as follows:

SECTION 1. Definitions. All capitalized terms used herein and not otherwise defined herein shall have the meanings assigned to such terms in Appendix A to the Participation Agreement.

SECTION 2. Assignment. As of the date hereof, CMRL hereby unconditionally and irrevocably sells, assigns, transfers and conveys to Newco WITHOUT RECOURSE, REPRESENTATION OR WARRANTY, EXPRESS OR IMPLIED, OF ANY NATURE WHATSOEVER, EXCEPT AS SET FORTH IN SECTION 5 HEREOF (THE WARRANTY SET FORTH IN SAID SECTION 5 BEING IN LIEU OF ALL OTHER WARRANTIES OF CMRL WHETHER WRITTEN, ORAL OR IMPLIED, WITH RESPECT TO THIS AGREEMENT AND THE ASSIGNED PROPERTY), all of the right, title and interest of CMRL in, to and under the Assigned Property.

SECTION 3. Assumption. As of the date hereof, Newco hereby (a) accepts the assignment made under Section 2 hereof, (b) unconditionally and irrevocably undertakes, accepts and assumes all of the rights and obligations of CMRL under each of the Transaction Documents, and agrees to be bound by the terms of each of the Transaction Documents to the same extent as if it had been originally named as the Owner Participant thereunder and (c) assumes all of the liabilities of CMRL in connection with the Assigned Property.

SECTION 4. Reference to Owner Participant. Effective as of the date hereof, each reference in the Transaction Documents to CMRL or to the "Owner Participant" shall mean Newco.

SECTION 5. Representations of CMRL.

A. CMRL is a corporation duly organized, validly existing and in good standing under the laws of the State of New York and has the corporate power and authority to enter into and perform its obligations under this Agreement.

B. The execution, delivery and performance of this Agreement has been duly authorized by all necessary corporate action on the part of CMRL.

C. This Agreement has been duly executed and delivered by CMRL and constitutes its legal, valid and binding obligation, enforceable against it in accordance with its terms (except as the enforceability hereof may be limited by bankruptcy, insolvency, moratorium, reorganization or other similar laws affecting the enforcement of creditors' rights generally).

D. Neither the execution, delivery or performance by CMRL of this Agreement, nor the consummation by CMRL of the transactions contemplated hereby, nor compliance by CMRL with the provisions hereof conflicts with, or results in the breach of any provision of, or is inconsistent with, its charter or by-laws or contravenes the Securities Act or any other Applicable Law or any indenture, mortgage or any other agreement or instrument to which CMRL is a party or by which it or its property is bound or requires any Governmental Action with respect to CMRL, other than such Governmental Actions as have been duly obtained, given or accomplished.

E.. CMRL is the true and lawful owner of, and has good and marketable title to, the Assigned Property, free and clear of all Liens and has the legal right to transfer the Assigned Property as provided herein, and upon consummation of the transactions contemplated hereby, CMRL will have duly, validly and effectively conveyed and transferred to Newco good and marketable title to the Assigned Property, free and clear of all Liens (it being understood for purposes of this paragraph that the term "Lien" as used in this paragraph shall not include any Lien in respect of the Assigned Property existing solely by reason of a Permitted Lien in respect of the Undivided Interest or the Real Property Interest).

F. CMRL has delivered to Newco true and complete copies of each of the Transaction Documents and each other document delivered to CMRL pursuant to any Transaction Document.

G. CMRL is not obligated to provide to the Owner Trustee additional funds for the payment of any Transaction Expenses pursuant to Section 14 of the Participation Agreement or otherwise.

SECTION 6. Representations of Newco.

A. Newco is a corporation duly incorporated, validly existing and in good standing under the laws of the State of Delaware and has the corporate power and authority to enter into and perform its obligations under this Agreement and under each of the Transaction Documents.

B. The execution, delivery and performance of this Agreement and the performance of its obligations under each of the Transaction Documents have been duly authorized by all necessary corporate action on the part of Newco.

C. This Agreement has been duly executed and delivered by Newco and constitutes, and after giving effect to the provisions of Section 3 hereof each of the Transaction Documents will constitute, its legal, valid and binding obligation, enforceable against it in accordance with its terms (except as the enforceability hereof or thereof may be limited by bankruptcy, insolvency, moratorium, reorganization or other similar laws affecting the enforcement of creditors' rights generally).

D. Neither the execution, delivery or performance by Newco of this Agreement, nor the consummation by Newco of the transactions contemplated hereby, nor compliance by Newco with the provisions hereof nor the performance by Newco of its obligations under the Transaction Documents conflicts with, or results in the breach of any provision of, or is inconsistent with, its charter or by-laws or contravenes the Securities Act or any other Applicable Law or any indenture, mortgage or any other agreement or instrument to which Newco is a party or by which it or its property is bound or requires any Governmental Action with respect to Newco,

other than such Governmental Actions as have been duly obtained, given or accomplished.

E. Newco is acquiring the Assigned Property for its own account in the ordinary course of its business and Newco has no intention of making any sale or other distribution of the Assigned Property in violation of any legislation, rule or regulation relating to limitations upon the sale or other distribution of interests such as those comprising the Assigned Property.

SECTION 7. Miscellaneous. This Agreement may be executed in any number of counterparts and by the different parties on separate counterparts, each of which, when so executed and delivered, shall be an original, but all such counterparts shall together constitute but one and the same instrument. This Agreement shall be governed by and construed in accordance with the law of the State of New York, except to the extent that pursuant to the laws of the State of Arizona, the laws of the State of Arizona are mandatorily applicable thereto. This Agreement shall be binding upon and inure to the benefit of each of the parties hereto and their respective successors and permitted assigns.

IN WITNESS WHEREOF, the parties hereto have caused this Agreement to be duly executed as of the date hereof.

CHASE MANHATTAN REALTY LEASING CORPORATION

By M. Gregorio, Jr.
Title: Vice President

PV2 - PNM DECEMBER 35 CORPORATION

By Frank Sa
Title: Vice President

STATE OF NEW YORK )
: ss.:
COUNTY OF NEW YORK ) .

The foregoing instrument was acknowledged before me this 31st day of December, 1987, by M. Spragins, Jr., Vice President of CHASE MANHATTAN REALTY LEASING CORPORATION, a New York corporation, on behalf of the corporation.

Mary M. Phillips
Notary Public

MARY M. PHILLIPS
NOTARY PUBLIC, State of New York
No. 31-4851384
Qualified in New York County
Certificate filed in New York County
Commission Expires February 17, 1988

STATE OF NEW YORK )
: ss.:
COUNTY OF NEW YORK )

The foregoing instrument was acknowledged before me this 31st day of December, 1987, by Frank Sainz, Vice President of PV2 - PNM DECEMBER 35 CORPORATION, a Delaware corporation, on behalf of the corporation.

Mary M. Phillips
Notary Public

MARY M. PHILLIPS
NOTARY PUBLIC, State of New York
No. 31-4851384
Qualified in New York County
Certificate filed in New York County
Commission Expires February 17, 1988

# ARIZONA NUCLEAR POWER PROJECT

## PARTICIPATION AGREEMENT

## AGREEMENT SUMMARY

Amendment No. 1

Execution date: January 1, 1974

Summary: Transferred a 2.4% undivided interest in ANPP to the Arizona Electric Power Cooperative, Inc. (AEPCO) from APS (1.0%), SRP (1.0%) and TEP (0.4%).

Amendment No. 2

Execution date: August 28, 1975

Summary: Modified the Agreement to reflect:
(i) Southern California Edison Company (SCE) purchase of TEP's share of ANPP and (ii) changes in Construction Schedule (Appendix C).

Amendment No. 3

Execution date: July 22, 1976

Summary: Transferred a 2.4% share of ANPP from AEPCO to APS (1.0%), SRP (1.0%) and SCE (0.4%). AEPCO is no longer a Participant in ANPP.

Amendment No. 4

Execution date: December 15, 1977

Summary: Modified the language of Section 7.4 to reflect that in certain circumstances it may be desirable that a Participant, rather than the Project Manager, acquire the fee title or other lesser property rights or interests in and to lands required for or useful in the construction, operation or maintenance of ANPP.

Amendment No. 5

Effective date: December 5, 1979

Summary: Provides that each Participant will furnish or have furnished his share of startup and testing power and energy when such power cannot be supplied by one of the ANPP Generating Units.

Amendment No. 6

Effective date: October 16, 1981

Summary: Provides for an assured supply of Uranium Concentrates and also allows each Participant which chooses to provide all or a portion of its Generation Entitlement Share of Additional Uranium Concentrates. A new Appendix K (Uranium Concentrates Acquisition Program) attached as part of Agreement.

Amendment No. 7

Effective date: April 1, 1982

Summary: Modifies the Agreement and Appendix F (Investments In and Accounting for Nuclear Fuel) to simplify, as far as practicable, the nuclear fuel accounting requirements imposed upon the Operating Agreement. This Amendment also accommodates the changes required by the modification to Appendix K (see Amendment No. 6) which allowed the Participants to supply their own uranium concentrates.

Amendment No. 8

Effective date: September 12, 1983

Summary: Formally introduces Southern California Public Power Authority (SCPPA) as an ANPP Participant, (i) establishes criteria and guidelines to be utilized by the Project Manager or Operating Agent to sell, transfer or convey equipment or materials which are no longer useful, (ii) establishes a form of contract which may be entered into by the Project Manager or Operating Agent concerning mutual assistance regarding the temporary borrowing, loan or exchange of personnel, equipment or material and (iii) revises Section 18.8 regarding the disposition of retired Units of Property (previously disposed of by the Operating Agent subject to his discretion - now subject to certain criteria and guidelines).

Amendment No. 9

Effective date: June 12, 1984

Summary: Amends the Participation Agreement to limit the risk of liability for the project. A $10,000,000 limit per occurrence has been established for all liability except for adjudicated Willful Action which has no liability limit.

Amendment No. 10

Effective date: November 21, 1985

Summary: Amends the Participation Agreement to allow for sale and leaseback financing transactions involving the Participants.

Amendment No. 11

Effective date: January 10, 1987

Summary: Amends the Participation Agreement in order to provide for the determination of administrative and general expenses regarding the Start-up and Pre-Operation Costs as agreed to in the letter entitled Letter of Understanding Concerning Administrative and General Expenses Charged to Arizona Nuclear Power Project Start-up and Pre-Operations Expenses, which became effective February 21, 1985, and adds the Department of Water and Power of the City of Los Angeles ("LADWP") to the Participation Agreement, assigning it a 5.7% Generation Entitlement Share.

Amendment No. 12

Effective date: August 5, 1988

Summary: Amends the Participation Agreement in order to revise certain definitions, to create a new defined term, to add an additional function to the functions of the Engineering and Operating Committee and to make other minor language modifications.

Reformed Copy

# ARIZONA NUCLEAR POWER PROJECT PARTICIPATION AGREEMENT
## SUMMARY OF CHANGES

| Section No. | Amendment No. | Type of Change |
|---|---|---|
| 1 | 1 | Revision |
| 1 | 2 | Revision |
| 1 | 3 | Revision |
| 1 | 8 | Revision |
| 1 | 11 | New |
| 3.1A | 6 | New |
| 3.3 | 1 | Revision |
| 3.7 | 12 | Revision |
| 3.8A | 11 | New |
| 3.8B | 11 | New |
| 3.21A | 6 | New |
| 3.23 | 11 | Revision |
| 3.26 | 7 | Revision |
| 3.27 | 5 | Revision |
| 3.27 | 12 | Revision |
| 3.28 | 1 | Revision |
| 3.28 | 2 | Revision |
| 3.28 | 3 | Revision |
| 3.28 | 8 | Revision |
| 3.28 | 11 | Revision |
| 3.31 | 12 | Revision |
| 3.33 | 12 | Revision |
| 3.43 | 10 | Revision |
| 3.45A | 11 | New |
| 3.46 | 7 | Revision |
| 3.46 | 10 | Revision |
| 3.52A | 6 | New |
| 3.53A | 11 | New |
| 3.54 | 12 | Revision |
| 3.54A | 5 | New |
| 3.54B | 5 | New |
| 3.54C | 12 | New |
| 3.55A | 6 | New |
| 3.56 | 9 | Revision |
| 4.1 | 10 | Revision |
| 5 | 5 | Revision |
| 5.6 | 12 | Revision |
| 5.8 | 5 | New |
| 6.2.7.2 | 6 | Revision |
| 6.2.11 | 8 | New |
| 6.2.12 | 8 | New |
| 6.3.1 | 5 | Revision |
| 6.3.2.5 | 5 | Revision |
| 6.3.2.5 | 12 | Revision |
| 6.3.2.7 | 5 | Revision |
| 6.3.2.11 | 5 | Revision |
| 6.3.2.17 | 12 | New |
| 6.3.5 | 8 | New |

# ARIZONA NUCLEAR POWER PROJECT PARTICIPATION AGREEMENT
## SUMMARY OF CHANGES (Cont'd)

| Section No. | Amendment No. | Type of Change |
|---|---|---|
| 6.3.6 | 8 | New |
| 6.6 | 6 | Revision |
| 7.3.1.2 | 6 | Revision |
| 7.3.19 | 5 | Revision |
| 7.3.33 | 5 | Revision |
| 7.3.34 | 8 | New |
| 7.3.35 | 8 | New |
| 7.3.36 | 8 | New |
| 7.4 | 4 | Revision |
| 8.3.4 | 6 | Revision |
| 8.3.18 | 5 | Revision |
| 8.3.27 | 8 | New |
| 8.3.28 | 8 | New |
| 10A | 11 | New |
| 10A.1 | 11 | New |
| 10A.1.1 | 11 | New |
| 10A.1.2 | 11 | New |
| 10A.1.3 | 11 | New |
| 10A.2 | 11 | New |
| 13.1 | 7 | Revision |
| 15 | 10 | Revision |
| 15.1 | 10 | Revision |
| 15.1.1 | 10 | New |
| 15.1.2 | 10 | New |
| 15.2 | 10 | Revision |
| 15.2.1 | 10 | New |
| 15.2.2 | 10 | New |
| 15.3 | 1 | Revision |
| 15.4 | 7 | Revision |
| 15.6 | 10 | New |
| 15.6.1 | 10 | New |
| 15.6.2 | 10 | New |
| 15.6.3 | 10 | New |
| 15.6.3.1 | 10 | New |
| 15.6.3.2 | 10 | New |
| 15.6.3.3 | 10 | New |
| 15.6.3.4 | 10 | New |
| 15.6.3.5 | 10 | New |
| 15.6.3.6 | 10 | New |
| 15.6.4 | 10 | New |
| 15.7 | 10 | New |
| 15.8 | 10 | New |
| 15.9 | 10 | New |
| 15.10 | 10 | New |
| 15.10.1 | 10 | New |
| 15.10.2 | 10 | New |

# ARIZONA NUCLEAR POWER PROJECT PARTICIPATION AGREEMENT
## SUMMARY OF CHANGES (Cont'd)

| Section No. | Amendment No. | Type of Change |
|---|---|---|
| 15.10.3 | 10 | New |
| 15.10.4 | 10 | New |
| 18.8 | 8 | Revision |
| 20.8 | 10 | Revision |
| 21 | 9 | Revision |
| 21.1 | 9 | Revision |
| 21.2 | 9 | Revision |
| 21.3 | 9 | Revision |
| 21.4 | 9 | Revision |
| 21.5 | 9 | Revision |
| 21.6 | 9 | Revision |
| 21.7 | 9 | Revision |
| 23.5 | 12 | Revision |
| 23.5.4 | 7 | Revision |
| 32.1 | 7 | Revision |
| 32.1 | 10 | Revision |
| 32.1.1 | 10 | Revision |
| 32.1.2 | 10 | Revision |
| 32.1.3 | 10 | Revision |
| 32.1.4 | 10 | Revision |
| 32.1.5 | 10 | Revision |
| 32.1.6 | 10 | New |
| 32.1.7 | 10 | New |
| 32.1.8 | 10 | New |
| 38.1.3 | 2 | Revision |
| 38.1.5 | 1 | Revision |
| 38.1.6 | 1 | New |
| 38.1.6 | 3 | Deleted |
| 38.1.6 | 8 | New |
| 38.1.7 | 11 | New |
| Appendix A | 1 | Revision |
| Appendix B | 1 | Revision |
| Appendix C | 2 | Revision |
| Appendix D.1.6 | 5 | Revision |
| Appendix E.1 | 5 | Revision |
| Appendix E.6 | 11 | Revision |
| Appendix E.6.1 | 11 | Revision |
| Appendix E.6.2 | 11 | Revision |
| Appendix E.8 | 11 | Revision |
| Appendix E.8.1 | 11 | Revision |
| Appendix E.8.2 | 11 | Revision |
| Appendix E.8.3 | 11 | Revision |
| Appendix E.8.4 | 11 | Revision |
| Appendix E.9 | 11 | Revision |
| Appendix E.9.1 | 1 | Revision |

Reformed Copy

# ARIZONA NUCLEAR POWER PROJECT PARTICIPATION AGREEMENT
## SUMMARY OF CHANGES (Cont'd)

| Section No. | Amendment No. | Type of Change |
|---|---|---|
| Appendix E.9.1 | 11 | Revision |
| Appendix E.9.2 | 1 | Revision |
| Appendix E.9.2 | 11 | Revision |
| Appendix F | 7 | Revision |
| Appendix K | 6 | Revision |
| Appendix L | 11 | New |

# REFORMED COPY
# ARIZONA NUCLEAR POWER PROJECT
# PARTICIPATION AGREEMENT

## TABLE OF CONTENTS


| Section No. | Caption | Page |
|---|---|---|
| 1. | PARTIES | 1 |
| 2. | AGREEMENT | 1 |
| 3. | DEFINITIONS | 1 |
| 3.1 | Accounting Practice | 1 |
| 3.1A | Additional Uranium Concentrates | 1 |
| 3.2 | Administrative Committee | 2 |
| 3.3 | ANPP | 2 |
| 3.4 | ANPP High Voltage Switchyard(s) | 2 |
| 3.5 | Arizona Nuclear Power Project | 2 |
| 3.6 | Auditing Committee | 2 |
| 3.7 | Available Generating Capability | 2 |
| 3.8 | Base Load Period | 2 |
| 3.8A | Beginning of Generating Unit Fuel Load | 2 |
| 3.8B | Beginning of Generating Unit Precore Hot Functional | 2 |
| 3.9 | Capacity | 2 |
| 3.10 | Capital Improvements | 2 |
| 3.11 | Construction Account | 3 |
| 3.12 | Construction Agreement | 3 |
| 3.13 | Construction Costs | 3 |
| 3.14 | Construction Funds | 3 |
| 3.15 | Construction Insurance | 3 |
| 3.16 | Construction Schedule | 3 |
| 3.17 | Construction Work | 3 |
| 3.18 | Date of Firm Operation | 3 |
| 3.19 | Emergency Spare Parts | 4 |
| 3.20 | Engineering and Operating Committee | 4 |
| 3.21 | Energy | 4 |
| 3.21A | Estimated Monthly Requirements | 4 |
| 3.22 | Final Completion Report | 4 |
| 3.23 | FPC Accounts | 4 |
| 3.24 | Fuel Assembly | 4 |
| 3.25 | Fuel Expense | 4 |
| 3.26 | Fuel Financer | 4 |
| 3.27 | General Service Requirements | 4 |
| 3.28 | Generation Entitlement Share | 5 |
| 3.29 | Generating Unit | 5 |
| 3.30 | Materials and Supplies | 5 |
| 3.31 | Maximum Generating Capability | 5 |
| 3.32 | Minimum Generating Capability | 5 |
| 3.33 | Net Energy Generation | 5 |
| 3.34 | Nuclear Fuel | 6 |

| Section No. | Caption | Page |
|---|---|---|
| 3.35 | Nuclear Fuel Agreement | 6 |
| 3.36 | Nuclear Plant Site | 6 |
| 3.37 | Operating Account | 6 |
| 3.38 | Operating Agent | 6 |
| 3.39 | Operating Emergency | 6 |
| 3.40 | Operating Funds | 6 |
| 3.41 | Operating Insurance | 6 |
| 3.42 | Operating Work | 6 |
| 3.43 | Participant | 7 |
| 3.44 | Payroll Taxes | 7 |
| 3.45 | Power | 7 |
| 3.45A | Power Ascension Level 50% | 7 |
| 3.46 | Project Agreements | 7 |
| 3.47 | Project Director | 7 |
| 3.48 | Project Insurance | 7 |
| 3.49 | Project Manager | 7 |
| 3.50 | Protective Action Plan | 7 |
| 3.51 | Reactor | 7 |
| 3.52 | Scheduled Date of Firm Operation | 7 |
| 3.52A | Short Term Requirements | 7 |
| 3.53 | Start-Up Period | 8 |
| 3.53A | Start-Up and Pre-Operation Costs | 8 |
| 3.54 | Target Capacity | 8 |
| 3.54A | Testing and Start-Up Power and Energy | 8 |
| 3.54B | Transmission Agreements | 8 |
| 3.54C | Unit Rating | 8 |
| 3.55 | Units of Property | 8 |
| 3.55A | Uranium Concentrates | 8 |
| 3.56 | Willful Action | 8 |
| 3.57 | Work Liability | 9 |
| 3.58 | Zero Net Load | 9 |
| 4. | OWNERSHIP OF AND TITLE TO ARIZONA NUCLEAR POWER PROJECT | 10 |
| 5. | POWER AND ENERGY ENTITLEMENTS AND REQUIREMENTS | 10 |
| 6. | ADMINISTRATION | 11 |
| 7. | PROJECT MANAGER | 18 |
| 8. | OPERATING AGENT | 25 |
| 9. | INTERCONNECTIONS AND TRANSMISSION LINES | 30 |
| 10. | CONSTRUCTION COSTS | 30 |
| 10.A | START-UP AND PRE-OPERATION COSTS | 31 |
| 11. | OPERATION AND MAINTENANCE COSTS | 31 |
| 12. | ADVANCEMENT OF FUNDS | 32 |
| 13. | TAXES | 34 |
| 14. | NONPARTITIONMENT | 35 |
| 15. | MORTGAGE, SALE AND LEASEBACK AND TRANSFER OF INTEREST | 35 |

| Section No. | Caption | Page |
|---|---|---|
| 16. | DESTRUCTION | 41 |
| 17. | SEVERANCE OF IMPROVEMENTS | 41 |
| 18. | CAPITAL IMPROVEMENTS | 41 |
| 19. | PROJECT INSURANCE | 42 |
| 20. | GENERAL PROVISIONS AFFECTING PROJECT INSURANCE | 45 |
| 21. | LIABILITY | 48 |
| 22. | AUTHORIZATIONS AND APPROVALS | 50 |
| 23. | DEFAULTS AND COVENANTS REGARDING OTHER AGREEMENTS | 50 |
| 24. | ARBITRATION | 53 |
| 25. | ACTIONS PENDING RESOLUTION OF DISPUTES | 55 |
| 26. | REMOVAL OF PROJECT MANAGER OR OPERATING AGENT | 55 |
| 27. | RELATIONSHIP OF PARTICIPANTS | 56 |
| 28. | FEES | 57 |
| 29. | ENVIRONMENTAL PROTECTION | 57 |
| 30. | UNCONTROLLABLE FORCES | 57 |
| 31. | GOVERNING LAW | 58 |
| 32. | BINDING OBLIGATIONS | 58 |
| 33. | NONDEDICATION OF FACILITIES | 59 |
| 34. | GENERAL PROVISIONS GOVERNING PROJECT AGREEMENTS | 59 |
| 35. | TERMS AND TERMINATION | 60 |
| 36. | ASSIGNMENT OF INTERESTS | 61 |
| 37. | EQUAL OPPORTUNITY | 62 |
| 38. | NOTICES | 63 |
| 39. | EXECUTION | 65 |


## APPENDICES


| Appendix Letter | Caption | Page |
|---|---|---|
| A | DESCRIPTION OF ARIZONA NUCLEAR POWER PROJECT | A-1 |
| B | DESCRIPTION OF THE NUCLEAR PLANT SITE | B-1 |
| C | CONSTRUCTION SCHEDULE | C-1 |
| D | CONSTRUCTION COSTS OF ARIZONA NUCLEAR POWER PROJECT | D-1 |
| E | COSTS OF OPERATING WORK AND CAPITAL IMPROVEMENTS | E-1 |
| F | INVESTMENTS IN AND ACCOUNTING FOR NUCLEAR FUEL | F-1 |
| G | PRE-OPERATIONAL OPERATING WORK | G-1 |
| H | OPERATING EMERGENCY | H-1 |

Reformed Copy

## APPENDIX


| Letter | Caption | Page |
|---|---|---|
| I | PRINCIPLES FOR OWNERSHIP, CONSTRUCTION AND OPERATION OF THE ANPP HIGH VOLTAGE SWITCHYARD(S) | I-1 |
| J | PRINCIPLES OF INTERCONNECTED OPERATION FOR FOUR CORNERS INTERCONNECTION AGREEMENT | J-1 |
| K | URANIUM CONCENTRATES ACQUISITION PROGRAM | K-1 |
| L | START-UP AND PRE-OPERATION ADMINISTRATION AND GENERAL EXPENSE | L-1 |

# ARIZONA NUCLEAR POWER PROJECT

# PARTICIPATION AGREEMENT

#1 1. **PARTIES:**

#2
#3
#8
#11

The parties to this Participation Agreement are: ARIZONA PUBLIC SERVICE COMPANY, a corporation organized and existing under and by virtue of the laws of the State of Arizona, hereinafter referred to as "Arizona"; SALT RIVER PROJECT AGRICULTURAL IMPROVEMENT AND POWER DISTRICT, an agricultural improvement district organized and existing under and by virtue of the laws of the State of Arizona, hereinafter referred to as "Salt River Project"; SOUTHERN CALIFORNIA EDISON COMPANY, a corporation organized and existing under and by virtue of the laws of the State of California, hereinafter referred to as "Edison"; PUBLIC SERVICE COMPANY OF NEW MEXICO, a corporation organized and existing under and by virtue of the laws of the State of New Mexico, hereinafter referred to as "PNM"; EL PASO ELECTRIC COMPANY, a corporation organized and existing under and by virtue of the laws of the State of Texas, hereinafter referred to as "El Paso"; SOUTHERN CALIFORNIA PUBLIC POWER AUTHORITY, a joint powers agency organized and existing under and by virtue of the laws of the State of California, doing business in the State of Arizona as SOUTHERN CALIFORNIA PUBLIC POWER AUTHORITY ASSOCIATION, hereinafter referred to as "SCPPA"; and DEPARTMENT OF WATER AND POWER OF THE CITY OF LOS ANGELES, a municipal corporation organized and existing under and by virtue of the laws of the State of California, hereinafter referred to as "LADWP"; and their respective assignees who shall have assumed all or part of the obligations of a Participant hereunder in accordance with the terms hereof.

2. **AGREEMENT:**

In consideration of the mutual covenants herein, the Parties agree as follows:

3. **DEFINITIONS:**

The following terms, when used herein and in the Appendices attached hereto, shall have the meanings specified:

3.1 **Accounting Practice:** Generally accepted accounting principles in accordance with the FPC Accounts.

#6 3.1A **Additional Uranium Concentrates:** The quantity of Uranium Concentrates required in any year for the operation of all Generating Units at their respective Target Capacities (except during scheduled outages) less the sum of (i) the quantities of Uranium Concentrates committed under the Agreement, dated March 14, 1979, between The Anaconda Company and Arizona Public Service Company acting for itself as a Participant and as agent for all other Participants, as it may be amended pursuant to the letter, dated July 30, 1981, from H. L. Storey to Russell D. Hulse, and all other contracts executed by the Operating

Agent on behalf of all Participants pursuant to Section K.2.2.2 of Appendix K hereof and (ii) the quantities of Uranium Concentrates furnished by the Palo Verde Uranium Venture, established by the Palo Verde Uranium Venture Agreement, dated as of January 7, 1977, as amended.

3.2 **Administrative Committee:** The committee established pursuant to Section 6.1.1 hereof.

#1 3.3 **ANPP:** The Arizona Nuclear Power Project, which shall, after January 1, 1974, be known and referred to as the Palo Verde Nuclear Generating Station (the "Palo Verde Station").

3.4 **ANPP High Voltage Switchyard(s):** The facilities, described generally in Section 9 hereof and Appendix I attached hereto.

3.5 **Arizona Nuclear Power Project:** One or more nuclear steam electric Generating Units, together with all facilities, structures and Nuclear Fuel used or to be used therewith or related thereto, including the Nuclear Plant Site, all facilities and rights-of-way for the collection, transportation, treatment, storage and disposal of water required for Construction Work, Operating Work and Capital Improvements and for rail access wherever such facilities and rights-of-way are located, but excluding the ANPP High Voltage Switchyard(s), and all transmission facilities connected thereto, all as described generally in Appendix A attached hereto which may be revised from time to time by the Administrative Committee pursuant to Section 6.2.9 hereof.

3.6 **Auditing Committee:** The Committee established pursuant to Section 6.1.3 hereof.

#12 3.7 **Available Generating Capability:** The Maximum Generating Capability of each Generating Unit less the General Service Requirements allocated to that Generating Unit pursuant to Section 6.3.2.5.

3.8 **Base Load Period:** Any period of time during which any Generating Unit is scheduled, pursuant to Section 6.3.2.12 hereof, to be operated to achieve and maintain its then Maximum Generating Capability.

#11 3.8A **Beginning of Generating Unit Fuel Load:** The date on which the first Fuel Assembly is placed in the reactor vessel of each Generating Unit.

#11 3.8B **Beginning of Generating Unit Precore Hot Functional Test:** The date on which information is first recorded in the Hot Functional Director's Log of Information for each Generating Unit in accordance with Section 8.1 of the PVNGS Manual, Procedure No. 90HF-1ZZ01.

3.9 **Capacity:** The rate at which electrical Energy can be generated expressed in megawatts (MWe).

3.10 **Capital Improvements:** Any Units of Property, land or land rights which are added to ANPP, the betterment of land or land rights or the enlargement or betterment of any Units of Property constituting a part of

ANPP, and the replacement of any Units of Property for other Units of Property or the replacement of land or land rights constituting a part of ANPP, irrespective of whether such replacement constitutes an enlargement or betterment of that which it replaces, which additions, betterments, enlargements and replacements in accordance with Accounting Practice would be capitalized and are not included or reflected in the Final Completion Report.

3.11 **Construction Account:** Any bank account or accounts selected and established by the Project Manager to receive and disburse construction funds pursuant to Section 12.4 hereof.

3.12 **Construction Agreement:** Any agreement entered into by the Project Manager for the design, engineering, construction or installation of any component or system for ANPP, including without limitation the nuclear steam supply system and the initial Nuclear Fuel Agreement for Fuel Assemblies to be fabricated for use in a Reactor, containment, turbine-generator, radioactive waste treatment system, architectural, engineering, design, construction, supervisory, licensing or consulting services in connection with the Construction Work, siting studies, preoperational environmental studies or reports, and for any other services or things necessary or useful in the performance of the Construction Work.

3.13 **Construction Costs:** The costs of constructing ANPP as described in Section 10 hereof.

3.14 **Construction Funds:** Monies advanced to the Project Manager for Construction Work by or on behalf of the Participants in accordance with this Participation Agreement.

3.15 **Construction Insurance:** Policies of insurance to be procured and maintained or caused to be procured and maintained by the Project Manager in accordance with Sections 19 and 20 hereof.

3.16 **Construction Schedule:** The schedule of Construction Work to be prepared and from time to time revised by the Project Manager as set forth in Appendix C attached hereto.

3.17 **Construction Work:** All engineering, design, contract preparation, purchasing, construction, supervision, negotiation, preparation and performance of Construction Agreements, acquisition of land and water rights, expediting, inspection, accounting, testing and start-up for each Generating Unit and preparation of operating and equipment manuals, quality assurance manuals, Protective Action Plans, all reports required by regulatory authorities and the conduct of hearings, conferences and other activities incidental to obtaining requisite permits, licenses and certificates for the construction and operation of each Generating Unit prior to the Date of Firm Operation of such Generating Unit.

3.18 **Date of Firm Operation:** The date with respect to each Generating Unit on which the Engineering and Operating Committee determines it to be reliable as a source of Power and on which such Generating Unit

can reasonably be expected to operate steadily at any load up to its Target Capacity.

3.19 **Emergency Spare Parts:** Spare parts or equipment, the cost of which is capitalized, which are stocked for ANPP.

3.20 **Engineering and Operating Committee:** The committee established pursuant to Section 6.1.2 hereof.

3.21 **Energy:** Kilowatt-hours (kwh).

#6 3.21A **Estimated Monthly Requirements:** The estimated monthly quantities of Uranium Concentrates required to be delivered to a conversion facility in any year in accordance with the operating schedules for all Generating Units and fuel management plan(s) in effect at the time that the estimate is made, including the schedule, by months, for delivery of such Uranium Concentrates to a conversion facility.

3.22 **Final Completion Report:** A complete summary of Construction Costs, a description of ANPP and a summary of each Participant's contributions to Construction Costs.

#11 3.23 **FPC Accounts:** The Federal Energy Regulatory Commission's (FERC) "Uniform System of Accounts Prescribed for Public Utilities and Licensees (Class A and Class B)", in effect as of the date of this Participation Agreement, and as such system of accounts may be in effect from time to time. References in this Participation Agreement to any specific FPC Account number shall mean the FERC Account number in effect as of the effective date of this Participation Agreement or any successor FERC Account.

3.24 **Fuel Assembly:** An integral unit of fabricated Nuclear Fuel prepared for insertion into a Reactor, including all hardware incorporated in such integral unit.

3.25 **Fuel Expense:** The net costs of the character directly or indirectly includable in FPC Account 518, but excluding from such costs any interest during construction as well as any other interest, rental, carrying or use charges, costs of fuels, other than Nuclear Fuel, used for ancillary steam facilities including super heat, and, except as provided in Section 13.3 hereof, any ad valorem taxes or payments in lieu thereof.

#7 3.26 **Fuel Financer:** Each and every person, corporation, partnership, joint venture, bank, trust company or other entity of any nature who under a Nuclear Fuel financing arrangement with any Participant shall either pay or assume the obligation to pay on behalf of such Participant its share of any Nuclear Fuel Expenditure or Project Uranium Costs or shall reimburse such Participant for all or any portion of any such expenditures or who shall take and hold legal title to or any beneficial interest in, as trustee or otherwise, such Participant's undivided ownership in any Nuclear Fuel.

#5 #12 3.27 **General Service Requirements:** The Power and Energy, including without limitation Testing and Start-Up Power and Energy, required during any period for each Generating Unit for testing, start-up, or operation of all process and auxiliary equipment and systems used or useful in connection with the operation and maintenance of that Generating Unit, plus an allocation of loads common to all Generating Units.

#1 #2 #3 #8 #11 3.28 **Generation Entitlement Share:** The percentage entitlement of each Participant to the Net Energy Generation and to the Available Generating Capability. Each Participant's percentage entitlement is as follows:

| | | |
|---|---|---|
| 3.28.1 | Arizona | = 29.1 percent |
| 3.28.2 | Salt River Project | = 17.49 percent |
| 3.28.3 | Edison | = 15.8 percent |
| 3.28.4 | PNM | = 10.2 percent |
| 3.28.5 | El Paso | = 15.8 percent |
| 3.28.6 | SCPPA | = 5.91 percent |
| 3.28.7 | LADWP | = 5.7 percent |

3.29 **Generating Unit:** A complete system of ANPP for generating electricity, including without limitation the nuclear steam supply system and its containment, resident Fuel Assemblies, the turbine-generator, all auxiliary structures, system facilities and equipment necessary for or useful in the operation of the unit and any structures, systems, facilities and equipment shared with any other Generating Unit at the Nuclear Plant Site, such as the radioactive waste treatment systems, fire protection systems, water supply and treatment systems, all as more specifically described in Appendix A attached hereto and as revised from time to time.

3.30 **Materials and Supplies:** Materials and supplies which are stocked for ANPP, as defined in FPC Account 154.

#12 3.31 **Maximum Generating Capability:** The maximum capability of any Generating Unit to produce Power for sustained periods under conditions existing from time to time, measured at its main generator output terminals, including without limitation restrictions imposed by any law, regulation, license or permit, derating due to fuel conditions, water and atmospheric conditions or any other conditions other than an Operating Emergency.

3.32 **Minimum Generating Capability:** The lowest Power level at which each Generating Unit can be reliably maintained in service on a continuous basis.

#12 3.33 **Net Energy Generation:** The Energy generated over any period of time by each Generating Unit, measured at its main generator output terminals, less the Energy allocated for General Service Requirements pursuant to Sections 6.3.2.5 and 8.3.25 hereof.

3.34 **Nuclear Fuel:** Any source, special nuclear or by-product material as defined in the Atomic Energy Act of 1954, as amended as of the date of this Agreement, including any ores, mined or unmined, or concentrates from which any such material can be obtained, and any Fuel Assemblies.

3.35 **Nuclear Fuel Agreement:** Any agreement entered into by the Project Manager or the Operating Agent relating to the purchase, sale, lease, transfer, disposition, storage, transportation, mining, conversion, milling, enrichment, processing, fabrication and reprocessing of any Nuclear Fuel for use in, used in or removed from a Reactor.

3.36 **Nuclear Plant Site:** The land to be acquired for the construction, operation and maintenance of ANPP, including all exclusionary areas and any lands held for future use, the boundaries of which shall be established initially and revised from time to time as circumstances warrant by the Administrative Committee. When the boundaries are so established or revised, a plat of the Nuclear Plant Site, as it may from time to time be constituted, shall be prepared and incorporated in this Agreement as Appendix B pursuant to Section 6.2.8 hereof.

3.37 **Operating Account:** Any bank account or accounts selected and established by the Operating Agent to receive and disburse funds, pursuant to Section 12 hereof, for Operating Work and Capital Improvements and for payments under any Nuclear Fuel Agreement.

3.38 **Operating Agent:** The Participant responsible for the performance of Operating Work and making Capital Improvements.

3.39 **Operating Emergency:** An unplanned event or circumstance which reduces or may reduce the availability of Power from or the generation of Energy by any Generating Unit.

3.40 **Operating Funds:** Monies advanced to the Operating Agent for Operating Work, Capital Improvements and payments due under any Nuclear Fuel Agreement by or on behalf of the Participants or others in accordance with this Participation Agreement.

3.41 **Operating Insurance:** Policies of insurance to be procured and maintained or caused to be procured and maintained by the Operating Agent in accordance with Sections 19 and 20 hereof.

3.42 **Operating Work:** Engineering, contract preparation, purchasing, repair, supervision, recruitment, training, expediting, inspection, accounting, testing, protection, operation, use, management, retirement, reconstruction, and maintenance associated with operating ANPP, including any work undertaken by the Operating Agent pursuant to Section 16 hereof and any work necessitated by an Operating Emergency, but excluding all work undertaken to make any Capital Improvements.

#10 3.43 **Participant:** Any party hereto and any successor or assignee of such party under Section 15.2 or Section 15.3 and any Transferee under Section 15.10 hereof.

3.44 **Payroll Taxes:** Taxes based on payroll.

3.45 **Power:** Megawatts electric (MWe).

#11 3.45A **Power Ascension Level 50%:** That point at which each Generating Unit is certified at the fifty percent (50%) "Reliable (Power Level) Power Operation During Power Ascension Testing" level by the Engineering and Operating Committee pursuant to the Engineering and Operating Committee's Procedure No. 7.

#7 #10 3.46 **Project Agreements:** This Participation Agreement, any Construction Agreement, any Nuclear Fuel Agreement, but excluding any Nuclear Fuel Agreements for the supply of Uranium Concentrates to which all Participants are not parties, and any agreements between the Participants or any of them and any third party for land, land rights or water rights for ANPP, as such agreements are originally executed or as they may thereafter be supplemented or amended and any other agreements as the Participants agree to designate as Project Agreements. Project Agreements shall not include any deed of trust, mortgage, indenture, security agreement or any agreement or instrument relating to a sale and leaseback transaction, unless the Participants shall otherwise agree.

3.47 **Project Director:** The individual designated by the Project Manager to be in charge of the Construction Work pursuant to Section 7.5 hereof.

3.48 **Project Insurance:** Construction Insurance and Operating Insurance.

3.49 **Project Manager:** The Participant responsible for the performance of Construction Work.

3.50 **Protective Action Plan:** A plan providing for the coordinated mobilization and control of action and communications by and between any and all Participants, Federal, state and local authorities and any public or private institutions in the event of an abnormal occurrence at the Nuclear Plant Site when any protective action outside the Nuclear Plant Site may be warranted to minimize exposure of the public to radiation.

3.51 **Reactor:** The pressure vessel of each Generating Unit in which Fuel Assemblies are placed for the purpose of generating heat.

3.52 **Scheduled Date of Firm Operation:** The target date established by the Administrative Committee, pursuant to Section 6.2.7.1 hereof for each Generating Unit on which the Construction Work shall be completed and the Generating Unit shall be available to operate continuously at its Target Capacity.

#6 3.52A **Short Term Requirements:** The summation at any time of the Estimated Monthly Requirements for each of the 36 months following the month in which the summation is made.

3.53 **Start-Up Period:** The period with respect to each Generating Unit commencing with the date on which the first Fuel Assembly is inserted into the Generating Unit's Reactor and terminating with its Date of Firm Operation.

#11 3.53A **Start-Up and Pre-Operation Costs:** The costs of start-up and pre-operation of ANPP as described in Section 10A.

#12 3.54 **Target Capacity:** The nominal generating capacity established by the Administrative Committee, pursuant to Section 6.2.7.1 hereof for each Generating Unit. The initial nominal generating capacity for each Generating Unit is 1270 megawatts electrical.

#5 3.54A **Testing and Start-Up Power and Energy:** The amount of Power and Energy required for the purposes of testing of any component or system of any Generating Unit before, during, or after its Start-Up Period.

#5 3.54B **Transmission Agreements:** Transmission Agreements which may be entered into between and among the Parties and third parties for the explicit purpose of defining transmission arrangements and charges for the delivery of each Participant's Generation Entitlement Share and/or Testing and Start-Up Power and Energy.

#12 3.54C **Unit Rating:** The effective Available Generating Capability as determined from time to time by the Engineering and Operating Committee, pursuant to Section 6.3.2.17, to reflect seasonal changes in Generating Unit operation.

3.55 **Units of Property:** Units of property as described in the Federal Power Commission's "List of Units of Property for Use in Connection with Uniform System of Accounts Prescribed for Public Utilities and Licensees" in effect as of the date of this Participation Agreement, and as such list may be amended from time to time.

#6 3.55A **Uranium Concentrates:** Natural uranium conforming to specifications established by an operator of a domestic conversion facility designated by the Operating Agent for conversion without any surcharges.

#9 3.56 **Willful Action:**

3.56.1 Action taken or not taken by a Participant (including the Operating Agent), at the direction of its directors, members of its governing bodies, officers or employees having management or administrative responsibility affecting its performance under any of the Project Agreements, which action is knowingly or intentionally taken or not taken with conscious indifference to the consequences thereof or with intent that injury or damage would result or would probably result therefrom.

3.56.2 Action taken or not taken by a Participant (including the Operating Agent), at the direction of its directors, members of its governing bodies, officers or employees having manage-

ment or administrative responsibility affecting its performance under any of the Project Agreements, which action has been determined by final arbitration award or final judgment or judicial decree to be a material default under any of the Project Agreements and which action occurs or continues beyond the time specified in such arbitration award or judgment or judicial decree for curing such default or, if no time to cure is specified therein, occurs or continues beyond a reasonable time to cure such default.

3.56.3 Action taken or not taken by a Participant (including the Operating Agent), at the direction of its directors, members of its governing bodies, officers or employees having management or administrative responsibility affecting its performance under any of the Project Agreements, which action is knowingly or intentionally taken or not taken with the knowledge that such action taken or not taken is a material default under any of the Project Agreements.

3.56.4 The phrase "employees having management or administrative responsibility" as used in this Section 3.56 means employees of a Participant who are responsible for one or more of the executive functions of planning, organizing, coordinating, directing, controlling, and supervising such Participant's performance under any of the Project Agreements; provided however, that, with respect to employees of the Operating Agent acting in its capacity as such and not in its capacity as a Participant, such phrase shall refer only to (i) the senior employee of the Operating Agent on duty at ANPP who is responsible for the operation of the Generating Units and (ii) anyone in the organizational structure of the Operating Agent between such senior employee and an officer.

3.56.5 Willful Action does not include any act or failure to act which is merely involuntary, accidental or negligent.

3.57 **Work Liability:** Liability of one or more Participants for damage suffered by anyone other than a Participant, whether or not resulting from the negligence of any Participant, its directors, officers, employees or any other person or entity whose negligence could be imputed to such Participant, resulting from:

3.57.1 The performance or non-performance of Construction Work or Operating Work.

3.57.2 The use or ownership of ANPP.

3.58 **Zero Net Load:** The Power load upon a Generating Unit when its gross Power production equals its share of the then General Service Requirements allocated in accordance with policies, criteria and procedures approved by the Engineering and Operating Committee pursuant to Section 6.3.2.5 hereof.

4. OWNERSHIP OF AND TITLE TO ARIZONA NUCLEAR POWER PROJECT:

#10 4.1 Except as otherwise permitted in Section 15.1.1(b) hereof, each Participant shall accept, acquire and own an undivided interest as a tenent in common in ANPP and all Project Agreements in proportion to its Generation Entitlement Share, but excluding (i) Option and Purchase of Effluent Agreement, Agreement No. 13904, dated April 23, 1973, between Arizona and Salt River Project and the Cities of Phoenix, Glendale, Mesa, Scottsdale and Tempe and the Town of Youngtown, except to the extent only that said agreement governs the rights and obligations for the purchase and delivery of wastewater effluent required for Construction Work, Operating Work and Capital Improvements and (ii) any Project Agreement which by its terms establishes an ownership interest or rights of any Participants in the subject matter thereof which differs from its Generation Entitlement Share under this Participation Agreement.

4.2 The ownership of and title to ANPP described or to be described in this Participation Agreement and all Capital Improvements shall be deemed to have vested simultaneously in the Participants so that the estate of each of them shall be deemed to be concurrent as to time, right and priority.

4.3 At any time as any Participant may reasonably demand in writing, the Participants shall jointly make, execute and deliver one or more supplements to this Participation Agreement in recordable form which shall describe with such particularity and detail as may be warranted under the circumstances the property and facilities then constituting ANPP and the rights, titles and interests of each Participant therein.

4.4 In the event any Participant transfers or assigns any of its rights, title or interest in and to ANPP in accordance with Section 15 hereof and other terms and conditions of this Participation Agreement, the Participants and any successor shall jointly make, execute and deliver a supplement to this Participation Agreement in recordable form which shall describe with such particularity and detail as may be warranted under the circumstances the rights, titles and interests of each Participant and any successor following such transfer or assignment.

#5 5. POWER AND ENERGY ENTITLEMENTS AND REQUIREMENTS:

5.1 During the Start-Up Period and any Base Load Period of any Generating Unit each Participant shall schedule and be obligated to take delivery of its Generation Entitlement Share of the Net Energy Generation of such Generating Unit.

5.2 At all times after the Date of Firm Operation of each Generating Unit other than those referred to in Section 5.1 hereof each Participant shall be entitled to schedule for its account Power from such Generating Unit equal to the product of its Generation Entitlement Share and the Available Generating Capability of such Generating Unit; and each Participant shall be obligated to provide its own reserve requirements, including spinning reserves, for its Generation Entitlement Share of the Available Generating Capability of all Generating Units.

5.3 Whenever any Participant schedules for its account Power from a Generating Unit, the Operating Agent, unless otherwise established by the Administrative Committee, shall additionally schedule for each Participant a percentage, equal to its Generation Entitlement Share, of the Zero Net Load as effective during the period that such Generating Unit is operated to meet such schedule.

5.4 Operation of any Generating Unit by the Operating Agent shall be subject to scheduled outages or curtailments, restrictions imposed by any regulatory authority or by Operating Emergencies.

5.5 The delivery of Power and Energy from ANPP shall be scheduled by the Participants in advance with the Operating Agent and accounted for on the basis of such advance schedules.

#12 5.6 The Operating Agent shall deliver Power and Energy to each Participant from each Generating Unit at the ANPP High Voltage Switchyard(s) in accordance with the schedule submitted by such Participant to the Operating Agent or in accordance with any revisions thereto.

5.7 In the event of an Operating Emergency, the Participants shall, if necessary, revise their schedules to reflect the actual Power and Energy available from ANPP during the period of the Operating Emergency.

#5 5.8 Each of the Participants shall, in accordance with any applicable Transmission Agreements or other agreements for the delivery or supply of ANPP Testing and Start-Up Power and Energy, deliver or have delivered to the 500 KV bus at the ANPP High Voltage Switchyard its share, equal to its Generation Entitlement Share, of all or a portion of the Testing and Start-Up Power and Energy requirements of any Generating Unit which the Project Manager or the Operating Agent shall have determined, in accordance with policies, criteria, and procedures approved by the Engineering and Operating Committee pursuant to Section 6.3.2.5 hereof, cannot or should not be supplied by any other Generating Unit and shall have scheduled for delivery in accordance with procedures approved by the Engineering and Operating Committee pursuant to Section 6.3.2.7. The costs of Testing and Start-Up Power and Energy delivered by each Participant shall be borne by such Participant consistent with any applicable Transmission Agreements or other agreements for the delivery or supply of ANPP Testing and Start-Up Power and Energy and shall be accounted for by such Participant in such manner as it deems appropriate.

## 6. ADMINISTRATION:

6.1 As a means of securing effective cooperation and interchange of information and of providing consultation on a prompt and orderly basis among the Participants in connection with various administrative and technical matters which may arise from time to time in connection with the terms and conditions of the Project Agreements, the Participants establish the committees described in this Section 6.1. The chairman of each of such committees shall be a representative of the Project Manager up to the Date of Firm Operation of the first Generating Unit and thereafter shall be a representative of the Operating Agent. The chairman shall

be responsible for calling meetings and establishing agendas. The following committees are hereby established and shall have the functions and responsibilities described herein and in the Project Agreements:

6.1.1 An Administrative Committee consisting of one representative appointed by each Participant, who shall be an officer or the general manager or his authorized designee of a Participant.

6.1.2 An Engineering and Operating Committee consisting of not more than two (2) representatives appointed by each Participant; provided, however, in respect of each matter brought before the Committee, that if any Participant appoints two representatives, only one of such representatives shall have the right to vote thereon. In addition, until completion of the Construction Work, the Project Director shall be a member of the committee, but shall have the right to vote only on such matters as the Project Manager shall designate to him to act as its voting representative on the committee.

6.1.3 An Auditing Committee consisting of not more than two representatives appointed by each Participant; provided that in respect of each matter brought before the committee, if any Participant appoints two (2) representatives, only one of such representatives shall have the right to vote.

6.2 The Administrative Committee shall have the following functions, among others:

6.2.1 Provide liaison between the Participants at the management level.

6.2.2 Exercise general supervision over the Engineering and Operating Committee, the Auditing Committee and any other standing or ad hoc committees established pursuant to Section 6.13 hereof.

6.2.3 Consider and resolve matters referred to it by other committees.

6.2.4 Perform such other functions and duties as may be assigned to it in the Project Agreements.

6.2.5 Review, discuss and act upon disputes among the Participants arising under the Project Agreements.

6.2.6 Provide liaison between the Participants and the Project Manager and the Operating Agent with respect to progress, performance and completion of Construction Work and performance of Operating Work and the financial and accounting aspects thereof.

6.2.7 Review and approve, modify, or otherwise act on recommendations of the Project Manager or the Operating Agent, as the case may be, concerning:

6.2.7.1 The type and capacity of the nuclear steam supply systems for each Generating Unit and the Target Capacity and Scheduled Date of Firm Operation of each Generating Unit and any recommended revisions thereof.

#6 6.2.7.2 Any contract for nuclear steam supply systems, any Nuclear Fuel Agreement, and any contract with engineers or consultants related to the foregoing, but excluding any Nuclear Fuel Agreements for the supply of Uranium Concentrates to which all Participants are not parties.

6.2.7.3 The selection and arrangements for acquisition of the Nuclear Plant Site.

6.2.7.4 Contracts for and all other arrangements or actions necessary to obtain requisite water and water rights for ANPP.

6.2.8 Establish, and as circumstances from time to time warrant, revise the boundaries of the Nuclear Plant Site and cause Appendix B to be prepared or revised as the case may be and incorporated herein.

6.2.9 Revise the general description of ANPP as circumstances from time to time warrant and cause Appendix A attached hereto to be revised accordingly and as so revised incorporated herein.

6.2.10 On the request of any Participant authorize, on such terms and conditions as the committee may deem appropriate, the installation on the Nuclear Plant Site or any other property comprising ANPP of any structures, facilities or equipment by any one or more Participants or any third party for its or their own use, which structures, facilities or equipment shall be deemed not to be a part of ANPP.

#8 6.2.11 Review, modify if necessary and approve a form of contract recommended by the Engineering and Operating Committee pursuant to Section 6.3.5, which may be executed by the Project Manager, pursuant to Section 7.3.34, or the Operating Agent, pursuant to Section 8.3.27, as applicable, for and on behalf of all Participants concerning mutual assistance among the parties thereto in the nature of the temporary borrowing, loan or exchange of personnel, equipment or material.

#8 6.2.12 Review, modify if necessary and approve criteria and guidelines which are to be utilized by the Project Manger or Operating Agent, as the case may be, concerning (i) the sale, transfer or conveyance of equipment or materials acquired for use in the performance of Construction Work, Operating Work or the construction, operation or maintenance of Capital Improvements which are no longer required for such purposes and (ii) the disposal of retired Units of Property pursuant to Section 18.8. Such criteria and guidelines are to be developed by the Project Manager and shall be reviewed and modified as necessary by the Engineering and Operating Committee prior to being forwarded to the Administrative Committee. Such criteria and guidelines shall also include any specific requirements which may be deemed necessary with respect to the sale, transfer or conveyance, by a non-competitive bid process, of such equipment or materials or retired Units of Property to any Participant or subsidiary thereof, the Project Manager or the Operating Agent.

6.3 The Engineering and Operating Committee shall have the following functions:

#5 6.3.1 Provide liaison between Participants and the Project Manager with regard to the Construction Work, including without limitation the scheduling and delivery by the Participants of Testing and Start-Up Power and Energy.

6.3.2 Review, and approve, modify or otherwise act upon recommendations of the Operating Agent concerning the following items related to the performance of Operating Work or making Capital Improvements:

6.3.2.1 The annual capital expenditures budget, annual manpower table and budget, and annual operation and maintenance budget.

6.3.2.2 The planned outages scheduled for maintenance and the manner of selection of any maintenance contractor for contract maintenance included in the annual operation and maintenance budget.

6.3.2.3 The policies for establishing the Emergency Spare Parts inventory and Materials and Supplies inventory.

6.3.2.4 The written statistical and administrative reports, written budgets, and information and other similar records, and the form thereof, to be kept and furnished by the Operating Agent (excluding accounting records used internally by the Operating Agent for the purpose of accumulating financial and statistical data,

such as books of original entry, ledgers, work papers, and source documents).

#5
#12

6.3.2.5 The policies, criteria and procedures for determining Available Generating Capability, General Service Requirements, Maximum Generating Capability, Minimum Generating Capability, Net Energy Generation, Unit Rating and Zero Net Load, for allocating the General Service Requirements among the Generating Units consistent with Section 3.27 and for determining the amounts of Testing and Start-Up Power and Energy to be provided by the Participants.

6.3.2.6 The procedures for performance and efficiency testing.

6.3.2.6a The quality assurance program governing the conduct of Operating Work and Capital Improvements pursuant to Section 8.3.20 hereof.

#5

6.3.2.7 The procedures for scheduling deliveries of Power and Energy to the Participants, scheduling deliveries of Testing and Startup Power and Energy from the Participants, and for forecasting and estimating requirements for and scheduling deliveries of Nuclear Fuel, water, and Materials and Supplies.

6.3.2.8 The Operating Agent's analysis of the total expenditures caused by an Operating Emergency.

6.3.2.9 The written statement of operating practices and procedures.

6.3.2.10 The list of transportation and motorized equipment to be owned or leased by the Operating Agent for Operating Work or making Capital Improvements.

#5

6.3.2.11 The practices and procedures for keeping each Participant advised of (i) the Available Generating Capability of each Generating Unit, (ii) the deliver(y) of Power and Energy from ANPP in accordance with the Participants' schedules, and (iii) the Testing and Start-Up Power and Energy requirements to be provided by the Participants pursuant to schedules. Such practices and procedures shall provide for modifying said schedules to meet the needs of day-to-day or hour-by-hour

operation, including emergencies on a Participant's system.

6.3.2.12 The scheduling, whenever fuel or other conditions warrant, of any Generating Unit to operate in a mode which restricts changes in Power of such Generating Unit for such specified periods as may be appropriate under such circumstances.

6.3.2.13 The policies, criteria and practices to be followed to optimize the use of the Nuclear Fuel in each Generating Unit.

6.3.2.14 Fuel management plans and the criteria and procedures for determining or estimating those factors, values, quantities, costs and expenses required to be determined or estimated as provided in Appendix F attached hereto.

6.3.2.15 The establishment of procedures for the operation of ANPP during periods of curtailed operations which reduce or may reduce the Available Generating Capability.

6.3.2.16 Arrangements for developing and implementing a Protective Action Plan.

#12 6.3.2.17 Value(s) of Unit Rating for each Generating Unit determined pursuant to Section 6.3.2.5.

6.3.3 Determine the Date of Firm Operation for each Generating Unit.

6.3.4 Perform such other duties as may be assigned to it in any Project Agreement or by the Administrative Committee.

#8 6.3.5 Develop and recommend to the Administrative Committee a form of contract which may be executed by the Project Manager, pursuant to Section 7.3.34, or the Operating Agent, pursuant to Section 8.3.27, as applicable, for and on behalf of all Participants concerning mutual assistance among the parties thereto in the nature of the temporary borrowing, loan or exchange of personnel, equipment or material.

#8 6.3.6 Review, modify as necessary and forward to the Administrative Committee for their approval, criteria and guidelines to be developed by the Project Manager which are to be utilized by the Project Manager or the Operating Agent, as the case may be, concerning (i) the sale, transfer or conveyance of equipment or materials acquired for use in the performance of Construction Work, Operating Work or the construction, operation or maintenance of Capital Improvements

which are no longer required for such purposes and (ii) the disposal of retired Units of Property pursuant to Section 18.8.

6.4 The Auditing Committee shall have the following functions:

6.4.1 Development of procedures for accounting and auditing Construction Costs, and costs of Operating Work and Capital Improvements and Fuel Expenses and advances of Construction Funds and Operating Funds consistent with the provisions of the Project Agreements and Accounting Practice and development of procedures for making forecasts and requests for funds pursuant to Sections 12 and 18 hereof.

6.4.2 Audit or cause to be audited the books and records of the Project Manager, Operating Agent, and any other Participant or contractor relevant to the performance of Construction Work and Operating Work and to the construction of Capital Improvements.

6.4.3 Establish the minimum amounts for the Construction Account and the Operating Account pursuant to Sections 12.5 and 12.7 hereof, respectively.

6.4.4 Perform such other duties as may be assigned to it in any Project Agreement or by the Administrative Committee.

6.5 Within thirty (30) days after the execution of this Participation Agreement, each Participant shall designate its representatives on the committees hereby established, with notice thereof given to the other Participants.

#6 6.6 Any action or determination of a committee must be unanimous except as otherwise provided in Section 35 or Appendix K hereof.

6.7 The Administrative Committee, the Engineering and Operating Committee and the Auditing Committee shall each keep written minutes, and records of all meetings and all actions, agreements or determinations made by any such committee shall be reduced to writing and shall be signed by a representative of each Participant on said committee or an authorized alternate.

6.8 The committees shall have no authority to modify any of the terms, covenants or conditions of the Project Agreements.

6.9 If the Engineering and Operating Committee or the Auditing Committee fails to agree while performing the functions and duties delegated to it in this Participation Agreement or in the Project Agreements, then such disagreement shall be referred to the Administrative Committee for determination.

6.10 If the Administrative Committee fails to reach agreement while performing the respective functions and duties assigned to it in this Participation Agreement or in the other Project Agreements, then such dis-

agreement shall be referred to higher authority within each Participant's organization before proceeding to arbitration as provided in Section 24 hereof.

6.11 In the event any committee established in accordance with this Section 6 is unable or fails to agree in respect of any matter which such committee is authorized to determine, approve or otherwise act upon after a reasonable opportunity so to do, then the Project Manager or the Operating Agent is authorized and obligated to take such action as in its discretion is necessary, pending the resolution of any such inability or failure to agree by arbitration pursuant to Section 24 hereof or otherwise, to the successful and proper construction, operation and maintenance of ANPP as contemplated hereby; provided, however, this Section 6.11 shall not be applicable in respect of those matters required to be approved pursuant to Section 6.2.7 hereof.

6.12 Each Participant shall notify the other Participants promptly of any change in the designation of its representatives on the committees. A Participant may designate an alternate to act as its representative on any committee in the absence of the regular member or to act on specified occasions with respect to specified matters. Any alternate representative appearing at a committee meeting shall be deemed to have authority to act on behalf of the Participant he represents unless the committee chairman is furnished with written notice to the contrary.

6.13 The Participants, acting through the Administrative Committee, shall have the right to establish standing or ad hoc committees. The authority and duties of any such committee shall be set forth in writing and shall be subject to the provisions of the Project Agreements.

6.14 Any expenses incurred by any member of the Administrative Committee or any standing or ad hoc committees in connection with his duties on such committee shall be paid and borne by the Participant whom he represents and shall not be included in Construction Costs or in costs for Operating Work.

7. PROJECT MANAGER:

7.1 The Project Manager for ANPP shall be Arizona.

7.2 The Participants hereby appoint the Project Manager as their agent, and the Project Manager shall undertake as their agent and as principal on its own behalf to perform the Construction Work and to carry out the duties and responsibilities provided hereunder to be performed by it.

7.3 The Project Manger shall:

7.3.1 Prepare and submit recommendations to the Administrative Committee concerning:

7.3.1.1 The type and capacity of the nuclear steam supply systems for each Generating Unit and the Target Capacity and Scheduled Date of Firm Operation of each Generating Unit and

any revisions thereof as circumstances may warrant.

#6

7.3.1.2 Contracts for nuclear steam supply systems, and any Nuclear Fuel Agreement, including any agreement for the fabrication of the initial supply of Fuel Assemblies, and the purchase of uranium and enrichment and conversion services necessary for such fabrication, including contracts with engineers or consultants related to the foregoing, but excluding any Nuclear Fuel Agreements for the supply of Uranium Concentrates to which all Participants are not parties.

7.3.1.3 The selection of the Nuclear Plant Site.

7.3.1.4 Contracts for and all other pertinent arrangements or actions necessary to obtain requisite water and water rights for ANPP.

7.3.2 Carry out the directions of the Administrative Committee in respect of the matters set forth in Section 7.3.1.

7.3.3 With respect to all aspects of Construction Work not governed by Sections 6.2.7, 7.3.1 and 7.3.2, negotiate and enter into any Construction Agreement, and purchase and procure such equipment, apparatus, machinery, materials, tools, supplies and services as it in its sole discretion may deem necessary or useful for the performance and completion of the Construction Work from any source or sources it may select.

7.3.4 Transmit as and when received from the architect, engineer, constructor, consultants, contractors or vendors, any studies, specifications, drawings and any documentation related to the foregoing in respect of ANPP to each member of the Engineering and Operating Committee for review and comment. With respect to any such matters which under the provisions of any Construction Agreement the Project Manager shall have the right of approval or comment, the Project Manager shall notify each member of the Engineering and Operating Committee of the date on which comments from any such member must be received by the Project Manager for consideration; provided, however, that the opportunity for comment by such members need not be afforded with respect to changes in design or specifications where in the discretion of the Project Manager the need for prompt action is overriding. Each such member shall be advised of major meetings with the architect, engineer, constructor, consultants, contractors and vendors related to the foregoing matters and shall be permitted to have a representative to attend any such meeting and to offer comments at or in advance of such meetings on any aspects to be discussed thereat.

7.3.5 Furnish each member of the Administrative Committee with copies of all contracts with the architect, engineer, constructor, contractors and principal subcontractors, vendors and consultants.

7.3.6 Notwithstanding the provisions of Section 7.3.3, review with the Administrative Committee the Project Manager's proposal for awards to vendors for major equipment in advance of such awards, including the recommendations of the architect, engineer, constructor relating to the proposed award, at either a meeting called for such purpose by the Project Manager or by conference telephone call.

7.3.7 Arrange for placement of Construction Insurance pursuant to Sections 19 and 20 hereof.

7.3.8 Determine what contractors, if any, shall be required to furnish any portion of the Construction Insurance, other insurance and faithful performance and payment bonds.

7.3.9 Assist any insurer in the investigation, adjustment and settlement of any loss or claim covered by Construction Insurance.

7.3.10 Present and prosecute claims against insurers and provide Construction Insurance or indemnities in respect of any loss of or damage to any property of ANPP or liability of any Participant to third parties covered by Construction Insurance or indemnities, and to the extent that any such loss or damage is not covered by Construction Insurance, present and prosecute claims therefor against any parties who may be liable therefor. In the event the cost of repair, replacement or correction of such loss or damage arising out of a single incident or event exceeds $250,000, the Project Manager shall not make any settlement of any claims in respect thereof without the consent and approval of the Administrative Committee.

7.3.11 Subject to the provisions of Section 21 hereof and except as hereinafter provided in this Section 7.3.11, investigate, adjust, defend and settle claims against any or all Participants arising out of or attributable to Construction Work, or the past or future performance or nonperformance of the obligations and duties of any Participant, including the Project Manager, under or pursuant to this Participation Agreement, including but not limited to any claim resulting from death or injury to persons or damage to property, when said claims are not covered by valid and collectible Construction Insurance or other valid and collectible insurance carried by any Participant, and, whenever and to the extent warranted, present and prosecute claims against any third party, including insurers, for any costs, losses and damages incurred in connection with said claims. The approval of the Administrative Committee shall be obtained by the Project Manager before

any said claim or combination of said claims against any or all Participants arising out of the same transaction or incident is settled for more than $250,000 unless it shall be established that the entire amount of the settlement in excess of $250,000 is recoverable from an insurer providing Construction Insurance.

7.3.12 Execute, perform and enforce all Construction Agreements in the name of the Project Manager, acting as principal on its own behalf and as agent for all Participants, in which all Participants shall have undivided interests as tenants in common equal to their respective Generation Entitlement Shares.

7.3.13 Comply with (i) any and all laws applicable to the performance of Construction Work, including without limitation all applicable laws, rules and regulations for protection of the environment and all applicable provisions of any workmen's compensation laws; and (ii) the terms and conditions of any contract, permit or license relating to ANPP.

7.3.14 Expend the funds advanced to the Project Manager only in the manner and for the purposes set forth in Sections 10 and 12 hereof.

7.3.15 Keep and maintain records of monies received and expended, obligations incurred, credits accrued, estimates of Construction Costs (excluding, subject to Section 13.3 hereof, ad valorem taxes or payments in lieu thereof and interest during construction)and contracts entered into in the performance of Construction Work, and make such records available for inspection by the Auditing Committee at reasonable times and places.

7.3.16 Not suffer any liens to remain in effect unsatisfied against ANPP (other than liens permitted under the Project Agreements, liens for taxes or assessments not yet delinquent, liens for labor and material not yet perfected, or undetermined charges or liens incidental to the performance of Construction Work); provided, however, that the Project Manager shall not be required to pay or discharge any such lien as long as the Project Manager in good faith shall be contesting the same, which contest shall operate during the pendency thereof to prevent the collection or enforcement of such lien so contested.

7.3.17 Obtain or cause to be obtained necessary construction permits, temporary access rights and other licenses and approvals requisite to the performance and completion of Construction Work and initiation of Operating Work.

7.3.18 As soon as practicable after the Date of Firm Operation of each Generating Unit, provide each Participant with a summary of the Construction Costs applicable to such Generat-

ing Unit in a form which will allow each such Participant to classify such Construction Costs to appropriate FPC Accounts.

#5 7.3.19 Provide the Participants with all necessary and required records and information pertaining to the performance of Construction Work, including progress reports at such regular intervals as the Administrative Committee or the Engineering and Operating Committee shall determine, and the amount and scheduling of delivery by the Participants of Testing and Start-Up Power and Energy prior to the Date of Firm Operation of the first Generating Unit.

7.3.20 Keep the Participants fully and promptly informed of any known default by any Participant under the provisions of this Participation Agreement.

7.3.21 As soon as practicable after the commencement of Construction Work, furnish each Participant an estimate of total Construction Costs broken down by major categories of equipment and services and a forecast of the cash requirements of each Participant to meet such Construction Costs. Such forecast shall set forth such cash requirements (i) for each quarterly period commencing on the first day of January, April, July and October in which Construction Costs will become due and (ii) for each month of the first two quarterly periods immediately following the issuance of such forecast. Such forecast shall be revised and furnished to each Participant every three (3) months thereafter until completion of Construction Work. In addition, and as soon as practicable after commencement of Construction Work, the Project Manager shall furnish each Participant a detailed monthly forecast of each Participant's estimated expenditures during each week of the succeeding month for Construction Work, which said forecast shall be furnished each Participant monthly thereafter until completion of Construction Work.

7.3.22 Furnish a Participant any information reasonably available pertaining to the construction of ANPP that will assist said Participant in responding to a request for such information by any Federal, state or local regulatory authority.

7.3.23 Use its best efforts in the performance of its responsibilities hereunder to effect the completion of Construction Work in accordance with the Scheduled Date of Firm Operation for each Generating Unit. To achieve this objective and keep the Participants informed, the Project Manager shall from time to time revise the Construction Schedule attached to this Participation Agreement as Appendix C which shall include those milestones that the Project Manager shall deem significant and target dates for their accomplishment consistent with meeting the Scheduled Date of Firm Operation of each Generating Unit.

7.3.24 Keep the Participants fully and promptly advised of significant developments in connection with the progress, performance and completion of Construction Work.

7.3.25 Prepare and distribute the Final Completion Report to each Participant as soon as practicable but not later than twenty-four (24) months after the Date of Firm Operation of the final Generating Unit to be completed unless such time is extended by the Administrative Committee.

7.3.26 Provide the Administrative Committee with all necessary and required records and information for its use in the performance of its responsibilities under this Participation Agreement.

7.3.27 Construct ANPP so as to comply with the Project Agreements.

7.3.28 Conduct tests to verify that specified characteristics of major equipment items have been achieved and, if necessary, make or cause to be made final equipment modifications to meet the specified requirements thereof.

7.3.29 Provide for and enforce any and all warranties on equipment, facilities, materials and services sold to or furnished for ANPP, except that any equipment warranties which expire more than one (1) year after the Date of Firm Operation of the final Generating Unit and all fuel warranties shall be enforced by the Operating Agent.

7.3.30 Conduct such environmental and economic studies of alternative sites as the Administrative Committee directs or as the Project Manager in its discretion deems necessary or appropriate in arriving at a recommendation to the Administrative Committee of a suitable site for ANPP.

7.3.31 Establish a quality assurance program to be observed in the design, fabrication, procurement, storage, handling, shipping, installation and construction of ANPP which shall at a minimum fully meet the requirements of the regulations set forth by the U.S. Atomic Energy Commission in 10 CFR, Part 50, Appendix B, as amended and in effect from time to time.

7.3.32 Establish a quality assurance organization to review and verify conformance with the established quality assurance procedures utilizing personnel from any source, provided no person assigned to audit any activity shall be or have been responsible for the conduct of such activity.

#5 7.3.33 Coordinate with the Operating Agent all arrangements (i) for shipment, transfer, receipt, inspection, storage and loading of Nuclear Fuel at the Nuclear Plant Site, (ii) for the preoperational testing and acceptance by the Operating Agent of

components and systems of ANPP, (iii) for preoperational radiological, meteorological, and other environmental monitoring programs which are to be continued after the Date of Firm Operation of the first Generating Unit, (iv) for the start-up, operational testing, and operation of each Generating Unit prior to its Date of Firm Operation, (v) for the scheduling and delivery of Testing and Start-Up Power and Energy required after the Date of Firm Operation of the first Generating Unit and (vi) for the preservation and organization of all quality assurance records accumulated in the performance of Construction Work and for the on-going quality assurance and surveillance programs to be conducted during ANPP operation.

#8 7.3.34 Enter into mutual assistance agreements with utilities and others providing for the temporary borrowing, loan or exchange of personnel, equipment or material upon request of any party to such agreement; provided that each such agreement shall be in a form as approved by the Administrative Committee pursuant to Section 6.2.11 and shall include such warranty, indemnity, insurance and other provisions as such committee may have deemed appropriate.

#8 7.3.35 Develop and recommend to the Engineering and Operating Committee for their review, modification if necessary and forwarding to the Administrative Committee for final review, modification if necessary and approval, criteria and guidelines to be utilized by the Project Manager or Operating Agent, as the case may be, concerning (i) the sale, transfer or conveyance of equipment or materials acquired for use in the performance of Construction Work, Operating Work or the construction, operation or maintenance of Capital Improvements which are no longer required for such purposes and (ii) the disposal of retired Units of Property pursuant to Section 18.8.

#8 7.3.36 Consistent with the criteria and guidelines approved by the Administrative Committee pursuant to Section 6.2.12(i), sell, transfer and convey for and on behalf of all Participants to any entity, including without limitation any Participant or the Operating Agent, any and all equipment or material acquired for use in the performance of Construction Work, provided that at the time of such sale, transfer or conveyance (i) the Project Manager shall have determined that such equipment or material is no longer used or useful for ANPP, (ii) the Project Manager shall sell, transfer or convey any such equipment or material only on an "as is" basis without any representation or warranty as to quality, condition or fitness for any purpose and (iii) proceeds, if any, received therefrom shall be credited or distributed to the Participants in proportion to their Generation Entitlement Shares.

#4 7.4 Each Participant shall provide to the extent possible all assistance required by the Project Manager in the performance of its obligations

hereunder and such Participant shall be reimbursed for its costs and expenses incurred in providing such assistance on such terms and conditions as may be agreed upon by such Participant and the Project Manager. Each Participant shall, within sixty (60) days after the execution of this Participation Agreement, submit to the Project Manager any special requirement it may have regarding accounting, records, or information in order that all required records may be maintained in the same manner throughout the construction and final completion of ANPP. The Project Manager shall use its best efforts to accommodate said special requirements. Where acquisition or immediate possession of rights-of-way, easements or real property are necessary, and the Project Manager and a Participant determine that such acquisition may best be accomplished by the Participant, the Project Manager shall request assistance of the Participant in writing and the assistance shall be provided in conformance with the terms of this paragraph.

7.5 The Project Manager shall have the full responsibility and authority for the employment and organization of the personnel and staff required to prosecute the Construction Work. The Project Manager shall designate an individual to serve as Project Director who shall be responsible solely to the Project Manager and shall be charged with the duties of supervising and coordinating all Construction Work subject to the terms of the Project Agreements.

8. OPERATING AGENT:

8.1 The Operating Agent for ANPP shall be Arizona.

8.2 The Participants hereby appoint the Operating Agent as their agent, and the Operating Agent shall undertake as their agent and as principal on its own behalf, to perform the Operating Work and Capital Improvements and to carry out the duties and responsibilities provided hereunder to be performed by it.

8.3 The Operating Agent shall:

8.3.1 Administer, enforce and perform the Operating Work so as to comply with Project Agreements and in a manner consistent with generally accepted practices in the electric utility industry recognizing that such practices may be affected by the design and operational characteristics of ANPP, the rights and obligations of the Participants under this Participation Agreement and other special circumstances affecting the Operating Work.

8.3.2 Furnish from its own resources or contract for and obtain from any other sources it may select, including any Participant, the services and studies necessary for performance of Operating Work.

8.3.3 Execute, administer, perform and enforce contracts in the name of the Operating Agent, acting as principal on its own behalf and as agent for all of the other Participants, for Operating Work, including without limitation any and all

warranties on equipment, facilities, materials and services furnished pursuant to any such contracts.

#6 8.3.4 Administer, perform and enforce any Nuclear Fuel Agreements executed by the Project Manager pursuant to Section 7.3.2 hereof or by the Operating Agent pursuant to Appendix K hereof and, subject to the provisions of Section 6.2.7 hereof, execute, administer, perform and enforce all other Nuclear Fuel Agreements.

8.3.5 Administer, perform and enforce all other contractual obligations and arrangements, including all warranties applicable thereto, entered into by the Project Manager and continuing beyond the period ending one year after the Date of Firm Operation of the final Generating Unit.

8.3.6 Furnish or recruit the necessary personnel and provide for such training as may be required to qualify them to perform the Operating Work and to meet all licensing requirements established by law.

8.3.7 Comply with (i) any and all laws applicable to the performance of Operating Work and Capital Improvements, including without limitation all applicable laws, rules and regulations for protection of the environment and all applicable provisions of any workmen's compensation laws; and (ii) the terms and conditions of any contract, permit or license relating to ANPP.

8.3.8 Purchase and procure, through and from any source it may select, in the name of the Participants with undivided interests as tenants in common in accordance with their Generation Entitlement Shares, the equipment, apparatus, machinery, tools, Materials and Supplies and Emergency Spare Parts necessary for the performance of Operating Work and Capital Improvements.

8.3.9 Expend the Operating Funds advanced to the Operating Agent in accordance with the terms and conditions of this Participation Agreement.

8.3.10 Keep and maintain such records of monies received and expended, obligations incurred, credits accrued, the conduct of Operating Work and making Capital Improvements, and of contracts entered into in the performance of Operating Work as may be necessary or useful in carrying out Project Agreements or required to permit an audit of the Operating Work and Capital Improvements, and make such records available for inspection by the Auditing Committee.

8.3.11 Not suffer any liens to remain in effect unsatisfied against ANPP (other than the liens permitted under the Project Agreements, liens for taxes and assessments not yet delinquent, liens for labor and material not yet perfected or unde-

termined charges or liens incidental to the performance of the Operating Work); provided, that the Operating Agent shall not be required to pay or discharge any such lien as long as the Operating Agent in good faith shall be contesting the same which contest shall operate during the pendency thereof to prevent the collection or enforcement of such lien so contested.

8.3.12 Arrange for the placement and maintenance of Operating Insurance as provided in Sections 19 and 20 hereof.

8.3.13 Assist any insurer in the investigation, adjustment and settlement of any loss or claim covered by Operating Insurance.

8.3.14 Present and prosecute claims against insurers and indemnitors providing Operating Insurance or indemnities in respect of any loss of or damage to any property of ANPP or liability of any Participant to third parties covered by any indemnity agreement, and to the extent that any such loss, damage or liability is not covered by Operating Insurance or by any indemnity agreement, present and prosecute claims therefor against any parties who may be liable therefor. In the event the cost of repair, replacement or correction of such loss or damage arising out of a single incident or event exceeds $250,000, the Operating Agent shall not make any settlement of any claims in respect thereof without the consent and approval of the Administrative Committee.

8.3.15 Subject to the provisions of Section 21 hereof and except as hereinafter provided in this Section 8.3.15, investigate, adjust, defend and settle claims against any or all Participants arising out of or attributable to Operating Work or Capital Improvements, or the past or future performance or nonperformance of the obligations and duties of any Participant, including the Operating Agent, under or pursuant to this Participation Agreement, including but not limited to any claim resulting from death or injury to persons or damage to property, when said claims are not covered by valid and collectible Operating Insurance carried by any Participant, and whenever and to the extent reasonable present and prosecute claims against any third party, including insurers, for any costs, losses and damages incurred in connection with said claims. The approval of the Administrative Committee shall be obtained by the Operating Agent before any said claim or combination of said claims against any or all Participants arising out of the same transaction or incident is settled for more than $250,000 unless the entire amount of the settlement in excess of $250,000 is recoverable from an insurer providing Operating Insurance.

8.3.16 Keep the Participants fully and promptly advised of material changes in conditions or other material developments affecting the performance of Operating Work and furnish the other

Participants with copies of any notices given or received pursuant to the Project Agreements.

8.3.17 Provide the Administrative, Engineering and Operating and Auditing Committees with all written statistical and administrative reports, accounting records, written budgets, information and other records relating to Operating Work and Capital Improvements necessary or useful in the performance of their respective responsibilities under this Participation Agreement.

#5 8.3.18 Determine, in accordance with policies, criteria and procedures established by the Engineering and Operating Committee pursuant to Section 6.3.2.5 hereof, and keep the system dispatcher of each Participant advised of (i) the Maximum Generating Capability, Minimum Generating Capability, and the Available Generating Capability of each Generating Unit and (ii) the Testing and Start-Up Power and Energy to be provided by the Participants after the Date of Firm Operation of the first Generating Unit.

8.3.19 Upon the request of any Participant, provide such Participant, in reasonable quantity without direct charge therefor, a copy or copies of any report, record, list, budget, manual, accounting or billing summary, classification of accounts or other documents or revisions of any of the aforesaid items, all as prepared in accordance with this Participation Agreement.

8.3.20 Establish a quality assurance program to be followed in the operation and maintenance, changes in design, facilities or equipment and Capital Improvements of ANPP, including without limitation in-service inspections and other surveillance procedures and techniques, which shall, at a minimum, fully meet the requirements of the regulations the U.S. Atomic Energy Commission set forth in 10 CFR, Part 50, Appendix B, as amended and in effect from time to time, including without limitation those regulations governing the delegation of authority for checking, auditing, inspecting or other verifying compliances with the quality assurance program.

8.3.21 Take custody of and maintain a suitable recovery system for all quality assurance records pertaining to Construction Work received from the Project Manager.

8.3.22 Take such action and responsibility for pre-operational Operating Work as required under Appendix G attached hereto.

8.3.23 Keep the Participants fully and promptly informed of any known default of the Project Agreements and submit to the Participants any recommendations for amendments of the Project Agreements.

8.3.24 Prepare recommendations covering the matters which are to be reviewed and acted upon by the Administrative Committee pursuant to Section 6.2.7 hereof or by the Engineering and Operating Committee pursuant to Section 6.3.2 hereof.

8.3.25 Carry out and follow the practices and procedures and directions which have been approved and issued by the Administrative Committee, the Engineering and Operating Committee, or the Auditing Committee pursuant to the Project Agreements, except as otherwise provided in Section 8.3.26 hereof.

8.3.26 In the event of an Operating Emergency take such action as the Operating Agent in its sole discretion may deem prudent or necessary, notwithstanding any practices and procedures and directions approved and issued by the Administrative Committee or the Engineering and Operating Committee, to terminate the Operating Emergency, to preserve and maintain the safety, integrity and operability of ANPP, to maintain to the maximum extent the availability of Power and Energy from each Generating Unit, to protect the health and safety of the public or to minimize any adverse environmental effects and such other action as required by Appendix H attached hereto.

#8 8.3.27 Enter into mutual assistance agreements with utilities and others providing for the temporary borrowing, loan or exchange of personnel, equipment or material upon request of any party to such agreement; provided that each such agreement shall be in a form as approved by the Administrative Committee pursuant to Section 6.2.11 and shall include such warranty, indemnity, insurance and other provisions as such committee shall deem appropriate.

#8 8.3.28 Consistent with the criteria and guidelines approved by the Administrative Committee pursuant to Section 6.2.12(i), sell, transfer and convey for and on behalf of all Participants to any entity, including without limitation any Participant, any and all equipment or material acquired for use in the performance of Operating Work, or acquired for use in the construction, operation or maintenance of any Capital Improvement; provided that at the time of such sale, transfer or conveyance (i) the Operating Agent shall have determined that such equipment or material is no longer used or useful for ANPP, (ii) the Operating Agent shall sell, transfer or convey any such equipment or material only on an "as is" basis without any representation or warranty as to quality, condition or fitness for any purpose and (iii) proceeds, if any, received therefrom shall be credited or distributed to the Participants in proportion to their Generation Entitlement Shares.

8.4 The other Participants shall lend and be properly reimbursed for all necessary and available assistance as may be requested by the Operating Agent in the performance of Operating Work.

8.5 It is recognized that some Participants may have interests in training personnel in the operation and maintenance of a nuclear station and the Operating Agent shall institute a program to provide such training of personnel of any Participant as the Operating Agent may deem feasible and consistent with the performance of its other duties and responsibilities hereunder. The regular operating and maintenance staff assigned to ANPP, however, will be comprised of the Operating Agent's personnel solely unless the Operating Agent otherwise determines.

9 INTERCONNECTIONS AND TRANSMISSION LINES:

9.1 Power and Energy generated by ANPP shall be delivered to the Participants by means of (i) one or more ANPP High Voltage Switchyard(s) to be constructed on the Nuclear Plant Site and (ii) such high voltage transmission lines as the Participants or any of them shall determine to construct, operate and maintain to interconnect ANPP with either existing or planned transmission systems owned or to be owned, and operated, by one or more Participants or any other party with whom any Participant has or will have a right to interconnect.

9.2 The Participants shall establish one or more task groups or committees to study, plan and coordinate transmission and interconnection arrangements suitable for delivery to the Participants of Power and Energy generated by ANPP and necessary to satisfy the transmission requirements of the Participants. Such group(s) shall further develop such transmission and interconnection agreements as may be appropriate, including without limitation an agreement governing the ownership, construction, operation and maintenance of the ANPP High Voltage Switchyard(s) which, unless otherwise agreed by all Participants, shall meet the principles established in and be otherwise consistent with Appendix I attached hereto and made a part hereof.

9.3 Since the Arizona Nuclear Power Project will interconnect the systems of the Participants, such interconnections shall be governed by the Principles of Interconnected Operation for Four Corners Interconnection Agreement attached as Appendix J hereto to the extent applicable and the Participants agree to proceed with due diligence to enter into a more definitive interconnection agreement for implementing said principles.

10. CONSTRUCTION COSTS:

10.1 Construction Costs of ANPP shall include all payments made and obligations incurred by the Project Manager for or in connection with Construction Work, including but not limited to those costs specified in Appendix D attached hereto and in Section 10.2 hereof.

10.2 Construction Costs shall also include the costs incurred by any Participant in developing ANPP prior to or after the effective date of this Participation Agreement, including (i) the costs incurred in preparation of this Participation Agreement and negotiation and preparation of other

Project Agreements and the costs of studies associated therewith, (ii) the costs incurred or contributed by any Participant to make the studies and reports conducted and prepared by Arizona Nuclear Resource Study Group to investigate the feasibility of constructing and operating a nuclear power station in Arizona, and (iii) the costs incurred or contributed by any Participant in connection with the preparation of the Preliminary Evaluation Study for Nuclear Dual Purpose Plants in Southwest Arizona, dated June, 1972, and all studies associated therewith.

10.3 All Construction Costs shall be shared by the Participants in proportion to their respective Generation Entitlement Shares and shall be advanced by them and disbursed and accounted for by the Project Manager in accordance with Section 12 hereof.

#11 10A. START-UP AND PRE-OPERATION COSTS:

#11 10A.1 For the purposes of computing the allowance for start-up and pre-operation administrative and general expenses beginning on October 1, 1984, and through the Date of Firm Operation of each respective Generating Unit, Start-Up and Pre-Operation Costs of ANPP for each Generating Unit, including its one-third share of common facilities, shall consist of all payments made and obligations incurred by the Project Manager and Operating Agent as follows:

#11 10A.1.1 Costs of pre-operational Operating Work, as such costs are described within Appendix G, Section G.7.1;

#11 10A.1.2 Costs of training personnel for Operating Work, as such training expenses are described within Appendix G, Section G.7.3 and G.7.4;

#11 10A.1.3 Costs of all operation and maintenance performed by any contractor.

#11 10A.2 Start-Up and Pre-Operational Costs shall not receive an allowance for administrative and general expenses except as provided pursuant to Appendix L, attached hereto and made a part hereof.

11. OPERATION AND MAINTENANCE COSTS:

11.1 Operation and maintenance costs of ANPP shall include all payments made and obligations incurred by the Operation [Operating] Agent for or in connection with the performance of Operation [Operating] Work, including (i) those costs of Operating Work specified in Appendix E attached hereto, (ii) those costs specified in Section 13 hereof to the extent any tax or payment in lieu thereof is levied against a Participant in behalf of all of the Participants, and in Section 19 hereof (excluding workmen's compensation expense for the Operating Agent's employees), (iii) those costs and expenses described in Section 21.3 hereof, and (iv) all costs, including option payments, for wastewater effluent under Agreement No. 13904 described in Section 4.1 hereof, required or reserved for operation and maintenance of ANPP, but excluding all such costs as may be included in Construction Costs or in the cost of Capital Improvements.

11.2 Except as provided in Section 11.3 hereof, the costs of Operating Work, including costs of water used for Operating Work, shall be shared by the Participants in proportion to their respective Generation Entitlement Shares and shall be advanced by them to the Operating Agent and disbursed and accounted for by it in accordance with Section 12 hereof.

11.3 Fuel Expenses of the character chargeable to FPC Account 518 and investments in Nuclear Fuel shall be shared among the Participants and accounted for in accordance with Appendix F attached hereto.

12. ADVANCEMENT OF FUNDS:

12.1 Each Participant shall advance its share of Construction Funds and Operating Funds prior to the date when funds are required by the Project Manager or Operating Agent to pay for Construction Work, Operating Work and Capital Improvements so that neither the Project Manager nor the Operating Agent in its capacity as such will have to advance any funds on behalf of another Participant.

12.2 Each Participant shall pay weekly in advance its share (equal to its Generation Entitlement Share) of all Construction Costs in accordance with the monthly forecasts of estimated weekly expenditures for Construction Work prepared by the Project Manager and furnished to each Participant pursuant to Section 7.3.21 hereof. Construction Funds on hand shall be invested to the maximum extent feasible. Earnings and losses, if any, shall be allocated to the Participants on the basis of such funds advanced. Following completion of the Construction Work, the Project Manager shall compute the total Construction Costs of ANPP, and each Participant shall promptly settle any balance of its share of such total Construction Costs in accordance therewith. If at any time it is determined that a Participant has made advances which are greater or less than its share of the Construction Costs, the difference shall be paid by or refunded to such Participant.

12.3 The sum of the advances by the Participants hereunder to the Project Manager shall not exceed 100 percent of the total Construction Costs forecasted to be expended as of the date specified in the detailed monthly forecast furnished to the Participants pursuant to Section 7.3.21 hereof plus or minus any adjustments of previous estimates to actual costs.

12.4 The Project Manager shall establish a Construction Account at a bank of its choice and notify the Participants in writing of the establishment of the Construction Account not later than five (5) days following its establishment.

12.5 Not less than sixty (60) days prior to the establishment of the Construction Account, the Auditing Committee shall establish a minimum amount for the Construction Account so that the Project Manager will have Construction Funds to pay for expenditures or obligations incurred by the Project Manager pursuant to this Participation Agreement. Such minimum amount may be revised by the Auditing Committee at any time. The original minimum amount and any increase therein shall be allocated among the Participants in accordance with their respective Generation Entitlement Shares and shall be due and payable within fif-

teen (15) business days following notification of the establishment of the Construction Account or of the date on which any increase in such minimum amount shall become effective. In the event the Auditing Committee authorizes a decrease in such minimum amount, then each Participant shall receive a credit which shall be in proportion to its Generation Entitlement Share.

12.6 Construction Funds required to be advanced by the Participants in accordance with this Participation Agreement shall be deposited in the Construction Account, and the Project Manager shall, unless otherwise agreed to by the Participants, make disbursements from the Construction Account only for expenditures or obligations incurred by it in the performance of Construction Work or for the investment of Construction Funds pursuant to Section 12.2 hereof.

12.7 Not less than sixty (60) days prior to the establishment of the Operating Account, the Auditing Committee shall establish a minimum balance for the Operating Account so that the Operating Agent will have Operating Funds to pay for expenditures or obligations incurred by the Operating Agent pursuant to this Participation Agreement. Such minimum balance may be revised by the Auditing Committee at any time. The original minimum balance and any increase therein shall be allocated among the Participants on the basis of their respective Generation Entitlement Shares and shall be due and payable within fifteen (15) business days following notification of the establishment of the Operating Account or of the date on which any increase in such minimum balance shall become effective. In the event the Auditing Committee authorizes a decrease in such minimum balance, then each Participant shall receive a credit on the next bills from the Operating Agent.

12.8 All Operating Funds required to be advanced by the Participants in accordance with this Participation Agreement shall be made payable to the account of the Operating Agent, or may be credited to the Operating Account by bank transfers. All Operating Funds shall be deposited in the Operating Account, and the Operating Agent shall, unless otherwise directed by the Administrative Committee, make disbursements from the Operating Account only for expenditures or obligations incurred by it in the performance of Operating Work or Capital Improvements or for payments due under any Nuclear Fuel Agreement.

12.9 Not less than thirty (30) days prior to incurring any cost for Operating Work or making any payment under any Nuclear Fuel Agreement, whichever occurs first, on behalf of the Participants pursuant to this Participation Agreement, the Operating Agent shall establish the Operating Account. The Operating Agent shall notify the Participants in writing of the establishment of the Operating Account not later than five (5) days following its establishment.

12.10 Each Participant shall advance Operating Funds to the Operating Account on the basis of bills it receives from the Operating Agent which reflect such Participant's share of the costs of Operating Work and Capital Improvements determined in accordance with this Participation Agreement as follows:

12.10.1 All costs of Operating Work and Capital Improvements (except for expenditures billed under Sections 12.10.2, 12.11 and 12.12 and Fuel Expenses billed under Appendix F attached hereto) shall be billed in writing as follows:

12.10.1.1 On the 5th and 20th day of each month for the payroll paid to the Operating Agent's employees on the last preceding pay day.

12.10.1.2 On the 20th day of each month for the total monthly expenditures for Operating Work and Capital Improvements except those expenditures billed under Section 12.10.1.1 hereof.

12.10.2 Expenditures described in Sections 13, 19.2 (excluding workmen's compensation expenses for the Operating Agent's employees) and 21 and costs for any charitable contributions if such contributions are authorized by the Administrative Committee may be billed prior to their due dates and shall be due and payable not less than three (3) days prior to the date payment by the Operating Agent is due. If such expenditures have no specific due date, then they shall be billed and become due within a reasonable time.

12.11 Each Participant shall advance funds to the Operating Account for its share of all expenditures for Operating Emergencies (excluding those items billed under Sections 12.10.1.1 and 12.10.1.2 hereof) on the basis of estimates made in accordance with Section H.4 of Appendix H attached hereto.

12.12 Each Participant shall advance Operating Funds to the Operating Account for its share of all payments due under any Nuclear Fuel Agreement in accordance with Section F.3 of Appendix F attached hereto.

12.13 Funds not advanced to the Project Manager or the Operating Agent on or before the due date specified in Sections 12.2, 12.5, 12.7, 12.10, 12.11 and 12.12 hereof shall be payable with interest, if any, accrued as provided in Section 23.3 hereof.

12.14 If a Participant shall dispute any portion of any amount specified in a monthly forecast, billing or a request for funds, the disputant shall make the total payment specified in said forecast, billing or request for funds pursuant to Section 23.4 hereof.

13. TAXES:

#7 13.1 The Participants shall use their best efforts to have any taxing or other authority levying any taxes or assessments, or payments in lieu thereof, or making any valuations for the purpose of levying any taxes or assessments or payments in lieu thereof, on ANPP, or any interest or rights therein, assess and levy such taxes or assessments or payments in lieu thereof directly against the ownership or beneficial interest of each Participant or its Fuel Financer, if any.

13.2 All taxes or assessments or payments in lieu thereof levied against each Participant's ownership or beneficial interest in ANPP, excepting those taxes or assessments or payments in lieu thereof levied against an individual Participant in behalf of any or all of the other Participants, shall be the sole responsibility of the Participant upon whose ownership or beneficial interest said taxes or assessments or payments in lieu thereof are levied.

13.3 If any property taxes or payments in lieu thereof or any other taxes or assessments are levied or assessed in a manner other than as specified in Section 13.1 hereof, it shall be the responsibility of the Administrative Committee to establish equitable practices and procedures for the apportionment among the Participants of such taxes and assessments or payments in lieu thereof.

13.4 No Participant who is exempt from any taxes assessed against any or all of the other Participants shall be obligated to make any contribution toward such taxes to the extent of the exemption.

14. NONPARTITIONMENT:

Each Participant hereby waives any rights which it may have to partition any component of ANPP or the Project Agreements, whether by partitionment in kind or by sale and division of the proceeds, and further agrees that it will not resort to any action in law or in equity to partition such component or the Project Agreements, and it waives the benefits of all laws that may now or hereafter authorize such partition for a term (i) which shall be conterminous with this Participation Agreement, or (ii) which shall be for such lesser period as may be required under applicable law.

#10 15. MORTGAGE, SALE AND LEASEBACK AND TRANSFER OF INTEREST:

#10 15.1 The following provisions shall apply to the right of each Participant to enter into mortgage and sale and leaseback transactions.

#10 15.1.1 Each Participant shall have the right at any time and from time to time to

(a) mortgage, create or provide for a security interest in or convey in trust all or part of its ownership share in ANPP, together with an equal interest in the Project Agreements, to a trustee or trustees under deed of trust, mortgage or indenture or to a secured party or parties under a security agreement, as security for its present or future bonds or other obligations or securities, and to any successors or assigns thereof, or

(b) sell and lease back, under a net lease having a primary term of not less than 25 years, all or part of its interest in a Generating Unit and Capital Improvements made from time to time with respect thereto, together with all or any part of its Generation Entitlement Share with respect to such Generating

Unit or part thereof, to a trustee or trustees under a grantor trust or trusts and to any successors or assigns thereof,

without need for the prior written consent of any other Participant and without such mortgage, trustee, secured party or lessor under such sale and leaseback transaction assuming or becoming in any respect obligated to perform any of the obligations of such Participant; provided, however, at or prior to any sale and leaseback pursuant to clause (b) of this Section 15.1.1, the conditions to such transaction set forth in Section 15.6 hereof shall have been satisfied.

#10 15.1.2 Each lessor under a sale and leaseback transaction permitted under clause (b) of Section 15.1.1 shall have the right at any time and from time to time to mortgage, create or provide for a security interest in or convey in trust all or any part of its ownership share in ANPP to a trustee or trustees under deed of trust, mortgage or indenture or to a secured party or parties under a security agreement, as security for its present or future bonds or other obligations or securities, and to any successors or assigns thereof, without need for the prior written consent of any Participant and without such mortgagee, trustee or secured party assuming or becoming in any respect obligated to perform any of the obligations of the Participants.

#10 15.2 The following provisions shall apply to the exercise of rights in respect of transactions permitted by Section 15.1.

#10 15.2.1 Any mortgagee, trustee or secured party under present or future deeds of trust, mortgages, indentures or security agreements of any of the Participants and any successor or assignee thereof, and any receiver, referee or trustee in bankruptcy or reorganization of any of the Participants, and any successor by action of law or otherwise, and any purchaser, transferee or assignee of any thereof may, without need for the prior written consent of any other Participant, succeed to and acquire all the rights, titles and interests of such Participant in ANPP and the Project Agreements, and may take over possession of or foreclose upon said property, rights, titles and interests of such Participant, and in such event shall assume and be obligated fully to perform and discharge all of the obligations hereunder and under any other Project Agreement of such Participant.

#10 15.2.2 From and after, but in no event prior to, the date of a rejection or deemed rejection by any receiver, referee or trustee in bankruptcy or reorganization of any Participant of the lease or other executory contract constituting part of a sale and leaseback transaction relating to ANPP to which such Participant is a party, the lessor in such sale and leaseback transaction (or any mortgagee, trustee or secured party under present and future deeds of trust, mortgages, indentures or

security agreements of such lessor and any successor or assignee thereof, and any receiver, referee or trustee in bankruptcy or reorganization of such lessor and any successor by action of law or otherwise, and any purchaser, transferee or assignee of any thereof) may (subject, however, to the rights of the other Participants under the Project Agreements, including but not limited to, Section 23 hereof), withou need for the prior written consent of any other Participant, (i) succeed to and acquire all the rights, titles and interests of such Participant in ANPP and the Project Agreements, to the extent, but only to the extent, of the Generating Unit (or portion thereof) and the portion of such Participant's Generation Entitlement Share acquired by such lessor in such transaction, and (ii) take over possession of or foreclose upon said property, rights, titles and interests of such Participant, and in such event such lessor or other party shall assume and be obligated fully to perform and discharge all obligations arising thereafter hereunder and under any other Project Agreement of such Participant to the extent, but only to the extent, or the Generating Unit (or portion thereof) and the portion of such Participant's Generation Entitlement Share subject to such transaction.

#1 15.3 Without the prior written consent of any other Participant, each Participant shall have the right to transfer or assign all or part of its Generation Entitlement Share, together with an equal interest in the ownership of ANPP and in the Project Agreements, to any person, partnership, corporation or governmental corporation or agency engaged in the generation, transmission or distribution of Energy.

#7 15.4 Unless otherwise determined by the Administrative Committee, all Nuclear Fuel to be used in or removed from any Generating Unit of ANPP or recovered after reprocessing for reuse in any such Generating Unit or for sale to others shall be jointly-owned by the Participants in accordance with their respective Generation Entitlement Shares, subject to Section F.1.3.1 of Appendix F attached hereto, provided that any Participant may at any time finance (through a Fuel Financer) its undivided interest in any discrete portion or portions of such Nuclear Fuel in the manner provided in Section F.1.4 of Appendix F attached hereto, subject to the conditions set forth therein and to the further conditions that in each instance (a) any such Fuel Financer (i) shall waive all right to partitionment of such discrete portion or portions of Nuclear Fuel, (ii) shall not obtain any rights not possessed by such Participant with respect to the operation or scheduling of any Generating Unit or the removal of Nuclear Fuel therefrom and (iii) shall not become a Participant in ANPP unless or until it succeeds to all of such Participant's right, title and interest in ANPP, and agrees to assume and be fully obligated to perform and discharge all of such Participant's obligations hereunder and under any other Project Agreement, and (b) such Participant shall indemnify all other Participants against any costs or expenses incurred by them because of such Participant's financing of its undivided interest in such discrete portion or portions of the Nuclear Fuel.

15.5 Except as otherwise provided in Sections 15.1 and 15.2 hereof, any successor to the rights, titles and interests of a Participant in ANPP, together with an equal interest in the Project Agreements, shall assume and agree fully to perform and discharge all of the obligations hereunder of such Participant, and such successor shall notify each of the other Participants in writing of such transfer, assignment or merger, and shall furnish to each Participant evidence of such transfer, assignment or merger and thereupon shall be considered to be a Participant in ANPP and the transferring Participant shall thereupon, without the consent of any other Participant, be released from all obligations under the Project Agreements so assumed and agreed to by such successor.

#10 15.6 The right of a Participant to enter into a sale and leaseback transaction as provided in clause (b) of Section 15.1.1 is subject to the following:

#10 15.6.1 The other Participants shall have received (1) an instrument of each lessor party to such transaction confirming the matters set forth in Section 15.6.3.2 hereof, (2) a certificate of such Participant to the effect that such transaction will satisfy the conditions set forth in Section 15.6 hereof, and all other provisions of this Participation Agreement, and (3) an opinion of counsel to such Participant with respect to the matters set forth in Sections 15.6.3.1 and 15.6.3.4 hereof and to the effect that the documents and agreements relating to such transaction are not inconsistent with the requirements of Section 15.6.3 hereof.

#10 15.6.2 The Administrative Committee, based upon the instrument, the certificate and the opinion described in Section 15.6.1, shall have found, by unanimous resolution, such transaction to be consistent with Section 15 hereof. The representative of any Participant need no join in such finding if such transaction (1) is inconsistent with Section 15 hereof or (2) may, in some manner, materially impair the rights of such Participant to retain or obtain tax benefits arising from its property interest in ANPP.

#10 15.6.3 Such transaction, and the documents and agreements relating thereto, shall provide that:

#10 15.6.3.1 The rights and remedies of the parties thereto shall be subject and subordinate to the rights and remedies of the Participants (other than (i) the Participant party thereto or (ii) any person who shall become a Participant in respect of the lessor's interest in ANPP under such transaction) under the Project Agreements;

#10 15.6.3.2 Except as provided in Sections 15.2.2, 15.6.4 and 15.10 hereof, the Participant party thereto shall be and remain the sole "Participant" for all purposes of this Participation Agreement and the sole representative

(with power to bind each lessor party to such transaction and each mortgagee, trustee and secured party of such lessor described in Section 15.1.2 hereof) in all dealings with the other Participants in relation to the property, rights, titles and interests of such Participant transferred pursuant to such transaction;

#10 15.6.3.3 Any right conferred by Section 15.2.2 hereof shall be exercised only in concert (through a single nominee, agent, receiver or subsequent transferee) with similar rights conferred by Section 15.2.2 hereof on parties to other sales and leaseback transactions involving the same Participant and interests in the same Generating Unit;

#10 15.6.3.4 All right to partitionment with respect to the interest acquired shall be waived by the lessor party to such transaction;

#10 15.6.3.5 Upon the expiration of the lease in such transaction and upon the Participant party thereto failing to purchase all the right, title and interest in ANPP and contractual rights related thereto necessary for the operation of such interest (a "Lessor's Interest") acquired by the lessor in such transaction, such lessor shall entertain cash bids from each other Participant for such Lessor's Interest; and

#10 15.6.3.6 The provisions of such transaction responsive to the foregoing Sections of this Section 15.6.3 shall remain in full force and effect until such time as the Administrative Committee shall otherwise consent.

#10 15.6.4 Such transaction may provide that the authority of the Participant party thereto described in Section 15.6.3.2 hereof shall not extend to approval of any amendment to the Participation Agreement the effect of which would be to reduce the Generation Entitlement Share in which the lessor or lessors party to such transaction have acquired an interest.

#10 15.7 Except to the extent provided in Section 15.10 hereof, a Participant shall not be released from any obligation under the Project Agreements notwithstanding any assumption of, or agreement to perform or discharge in whole or in part, such obligtion by any other person in connection with a sale and leaseback transaction.

#10 15.8 Anything in a sale and leaseback transaction to the contrary notwithstanding: (1) the rights and remedies of the parties thereto shall be subject and subordinate to the rights and remedies of the Participants under the Project Agreements (including but not limited to Section 23 hereof),

other than (i) the Participant party thereto and (ii) any person who shall become a Participant in respect of the lessor's interest in ANPP under such transaction; (2) no other Participant shall incur any obligations or liabilities in respect of such transaction; and (3) the lessor party thereto shall be bound by the provisions of Section 21 hereof (other than Section 21.3) to the same extent as if such lessor were a Participant.

#10 15.9 If a Participant enters into a sale and leaseback transaction as provided in clause (b) of Section 15.1.1 such Participant shall indemnify all other Participants against any costs and expenses incurred by them because of such Participant's entering into such transaction.

#10 15.10 Upon a lease or sale to a person, partnership, corporation or governmental corporation or agency engaged in the generation, transmission or distribution of Energy (other than the Participant originally party to such transaction) (a "Transferee") of a Lessor's Interest acquired by a lessor in a sale and leaseback transaction:

#10 15.10.1 The Transferee shall be and become the sole "Participant" for all purposes of this Participation Agreement and the sole representative (with power to bind any lessor) in all dealings with the other Participants in relation to such interest;

#10 15.10.2 The Transferee (1) shall assume and agree, and be deemed to have assumed and agreed, fully to perform and discharge all obligations under the Project Agreements relating to such interest to the extent arising subsequent to such lease or sale, except obligations in respect of decommissioning and removing from service the Generating Unit to which such interest relates (the "Termination Obligation"), (2) if such Transferee was not previously a Participant, may assume and agree fully to perform and discharge all or any part of the Termination Obligation and, (3) if such Transferee is and was previously a Participant, shall assume and agree, and be deemed to have assumed and agreed, fully to perform and discharge the Termination Obligation;

#10 15.10.3 The Participant originally party to such transaction shall thereupon, with the consent (which consent shall not be withheld by any Participant unless a release would, in some manner, materially impair or materially adversely affect the rights of such Participant under this Participation Agreement or the rights or security of obligation holders of such Participant) of each other Participant, be release from all obligations under the Project Agreements so assumed and agreed to by the Transferee but only to the extent of such assumption and agreement; and

#10 15.10.4. The Transferee shall furnish to each other Participant evidence of such sale or lease and such assumption and agreement.

16. DESTRUCTION:

16.1 If ANPP or any portion thereof should be damaged or destroyed to the extent that the cost of repairs or reconstruction is estimated to be less than 150% of the aggregate amount of Project Insurance coverage carried pursuant to Section 19 hereof, and covering the cost of such repairs or reconstruction, then the Project Manager or the Operating Agent shall cause such repairs or reconstruction to be made so that ANPP shall be restored to substantially the same general condition, character or use as existed prior to such damage or destruction and the Participants shall share the costs of such repairs or reconstruction in proportion to their Generation Entitlement Shares.

16.2 If ANPP or any portion thereof should be damaged or destroyed to the extent that the costs of repairs or reconstruction is estimated to be 150% or more of the aggregate amount of Project Insurance coverage carried and covering the cost of such repairs or reconstruction, then upon agreement of all Participants the Project Manager or the Operating Agent shall cause such repairs or reconstruction to be made as may be agreed and the Participants shall share the costs of such repairs or reconstruction in proportion to their Generation Entitlement Shares; provided, however, that should all of the Participants not agree to restore or reconstruct the damaged portion of ANPP, but some of the Participants nevertheless desire to do so, then any Participant who does not agree to restore or reconstruct shall sell its Generation Entitlement Share and ownership interest in ANPP to the remaining Participants for a price equal in amount to its Generation Entitlement Share in the salvage value thereof. The Participants agreeing to repair or reconstruct such Generating Unit shall share the costs of repair or reconstruction in the proportion that the Generation Entitlement Share of each bears to the total Generation Entitlement Shares of such Participants.

17. SEVERANCE OF IMPROVEMENTS:

The Participants agree that all facilities, structures, improvements, equipment and property of whatever kind and nature constructed, placed or affixed on the rights-of-way, easements, patented and leased lands as part of or as a Capital Improvement to ANPP, as against all parties and persons whomsoever (including without limitation any party acquiring any interest in the rights-of-way, easements, patented or leased lands or any interest in or lien, claim or encumbrance against any of such facilities, structures, improvements, equipment and property of whatever kind and nature), shall be deemed to be and remain personal property of the Participant(s), not affixed to the realty.

18. CAPITAL IMPROVEMENTS:

18.1 The Participants recognize that from time to time it may be necessary or desirable to make Capital Improvements or that Capital Improvements may be required by laws and regulations applicable to ANPP.

18.2 If requested by a Participant, any such Capital Improvement shall be described in a supplement to this Participation Agreement executed in recordable form.

18.3 All Capital Improvements shall be included in the annual capital expenditures budget. After such budget has been approved by the Engineering and Operating Committee, each Participant shall be obligated for the costs incurred for such Capital Improvements in proportion to its Generation Entitlement Share.

18.4 At any time the Engineering and Operating Committee may authorize Capital Improvements not included in the annual capital expenditures budget if any such Capital Improvement is required to comply with any lawful order, rule or regulation of a regulatory agency or if the cost of any such Capital Improvement is less than $500,000. All other Capital Improvements not included in the annual capital expenditures budget may only be authorized by the Administrative Committee.

18.5 The Operating Agent shall submit to the Participants a forecast of cash requirements for each authorized Capital Improvement. Such forecast shall set forth such cash requirements (i) for each quarterly period commencing on the first day of January, April, July and October in which costs for such Capital Improvements shall become due and (ii) for each month of the first two quarterly periods immediately following the issuance of such forecast. Such forecast shall be revised and furnished to each Participant every three (3) months thereafter until completion of the Capital Improvement.

18.6 The Operating Agent shall be responsible for the design and construction of all Capital Improvements unless otherwise agreed by the Administrative Committee.

18.7 The cost of Capital Improvements shall be determined in accordance with Appendix E attached hereto.

#8 18.8 Units of Property retired from service, whether considered original construction or Capital Improvements, shall be disposed of by the Operating Agent on the best available terms as soon as practicable consistent with the criteria and guidelines approved by the Administrative Committee pursuant to Section 6.2.12(ii); provided that at the time of such disposal (i) the Operating Agent shall have determined that such Units of Property are no longer used or useful for ANPP, (ii) the Operating Agent shall dispose of such Units of Property only on an "as is" basis without any representation or warranty as to quality, condition or fitness for any purpose and (iii) proceeds, if any, received therefrom shall be credited or distributed to the Participants in proportion to their Generation Entitlement Shares.

## 19. PROJECT INSURANCE:

19.1 Unless otherwise specified by the Administrative Committee, during the performance of Construction Work the Project Manager shall procure and maintain in force, or cause to be procured and maintained in force, Construction Insurance providing coverage against the following risks, hazards and perils:

19.1.1 Comprehensive liability risks, including bodily injury, personal injury and property damage risks, hazards of automo-

bile liability, contractual liability, contractor's protective liability and liability for products and completed operations, in an amount not less than $10,000,000.

19.1.2 Risks covered by the standard form of All Risk Builder's Risk Insurance, including the transportation hazard. Such insurance shall be written with such deductibles(s) as shall be approved by the Administrative Committee or in the absence of any approval with the smallest deductible(s) normally available and shall afford coverage from the time that Construction Work is commenced or material and equipment is shipped, as to each Generating Unit, until such time as Nuclear Fuel arrives at the Nuclear Plant Site and coverage of such risks is provided by the Project Insurance required to be obtained pursuant to Section 19.4 hereof.

19.1.3 Risks covered by the standard form of All Risk Contractor's Equipment Floater Insurance covering owned, non-owned and leased equipment used in connection with the performance of Construction Work.

19.1.4 Risks covered by the standard form of employees' dishonesty bond covering loss of property or funds of ANPP due to dishonest or fraudulent acts committed by an officer or employee of the Project Manager, any Participant or contractor who is engaged in Construction Work.

19.1.5 Risks covered by the standard form of workmen's compensation and employer's liability insurance, covering officers and employees of the Project Manager, any Participant and contractors engaged in the performance of Construction Work. Unless otherwise directed by the Administrative Committee, workmen's compensation coverage for officers and employees of the Project Manager shall be written with a deductible of $50,000. Coverage for employer's liability shall be written in an amount not less than $500,000.

19.2 Unless otherwise specified by the Administrative Committee, the Operating Agent shall procure and maintain in force, or cause to be procured and maintained in force, so as to be effective not later than the date on which the Operating Agent shall first incur a risk of loss, damage or liability, Operating Insurance providing coverage against the following risks, hazards and perils:

19.2.1 Comprehensive liability risks, including bodily injury, personal injury and property damage risks, hazards of automobile liability, contractual liability, contractors' protective liability and liability for products and completed operations, in an amount not less than $10,000,000.

19.2.2 Risks covered by the standard form of employee dishonesty bond covering loss of property or funds of ANPP due to dishonest or fraudulent acts committed by an officer or employee of the Operating Agent, any Partici-

pant or contractor who is engaged in Operating Work or Capital Improvements.

19.2.3 Risks covered by the standard form of workmen's compensation and employer's liability insurance covering officers and employees of the Operating Agent, any Participant and contractors and their employees engaged in the performance of Operating Work. Unless otherwise directed by the Administrative Committee, workmen's compensation coverage for the Operating Agent's officers and employees shall be written with a deductible of $50,000. Coverage for employer's liability shall be written in an amount not less than $500,000.

19.2.4 In the event any Capital Improvements are undertaken at the Nuclear Plant Site the Operating Agent, shall procure and maintain or cause to be procured and maintained Construction Insurance providing coverage for risks described in Section 19.1.1, 19.1.2 and 19.1.3 hereof in respect of the construction of such Capital Improvements.

19.3 Whenever there shall be Nuclear Fuel at the Nuclear Plant Site or in transit to or from the Nuclear Plant Site, the Project Manager prior to the Date of Firm Operation of the first Generating Unit and the Operating Agent thereafter such shall have in force and effect (i) Project Insurance in minimum amount and in such form or forms as may be required, approved or permitted from time to time by law, including the rules and regulations of the U.S. Atomic Energy Commission and (ii) an indemnity agreement executed and delivered by the U.S. Atomic Energy Commission as required by the Atomic Energy Act of 1954 as amended as of the date of this Participation Agreement. In the event that a construction permit required to be issued by the U.S. Atomic Energy Commission for any Generating Unit is not issued prior to August 1, 1977, and Section 170(c) of said Act shall not have been amended prior to such date to extend the availability of the financial protection currently afforded by said Section 170(c) or other legislation affording comparable financial protection in respect of such Generating Unit shall not have been enacted prior to such date or in the event that, prior to August 1, 1977, and the issuance of such a construction permit, said Act or the rules and regulations of the U.S. Atomic Energy Commission shall be further amended in a manner which substantially changes the limit of liability of "persons indemnified" or otherwise substantially increases the risk of "public liability" of any Participant arising out of or resulting from a nuclear incident, as such terms are defined in the Atomic Energy Act of 1954 as amended as of the date of this Participation Agreement, any Participant may terminate its participation in ANPP with respect to such Generating Unit upon the terms and conditions set forth in Section 35 hereof.

19.4 Unless otherwise directed by the Administrative Committee, at all times when it is required under Section 19.3 hereof, the Project Manager prior to the Date of Firm Operation of the first Generating Unit and the Operating Agent thereafter shall have and maintain in force and effect nuclear property insurance providing coverage against radioactive contamination

and all other risks of loss except those risks excluded in the standard form of policy of the Nuclear Energy Property Insurance Association which are not insurable by any available endorsement thereto. Except as otherwise authorized herein or directed by the Administrative Committee, such insurance shall be maintained in an amount not less than 90% of either the actual cash value or replacement cost, as the Administrative Committee shall direct or in the absence of any such direction as the Project Manager or the Operating Agent may in its sole discretion determine, of all property at the Nuclear Plant Site as determined from time to time by independent qualified appraisers selected by the Project Manager prior to completion of Construction Work or the Operating Agent thereafter. At any time that the maximum amount of insurance available from all domestic insurers or pools of insurers or any utilities mutual insurance company to cover the risks required to be insured under this Section 19.4 is less than 90% of the actual cash value or replacement cost of all property at the Nuclear Plant Site, then the Project Manager or the Operating Agent shall report such fact in writing to each Participant and shall obtain an endorsement of any policy procured in compliance with this Section 19.4 to render the conditions of any co-insurance clause therein inapplicable, provided that, if such an endorsement is not available, then the Project Manager or the Operating Agent shall use its best efforts to obtain, subject to Section 20.9 hereof, the maximum amount of nuclear property insurance available from all sources. Unless otherwise directed by the Administrative Committee the insurance policy or policies secured in compliance with this Section 19.4 shall be written with such deductible(s) as shall be approved by the Administrative Committee or in the absence of any approval with the lowest deductible amounts offered by the insurer or insurers providing such policy or policies for property situated at the Nuclear Plant Site in its entirety and any component thereof.

## 20. GENERAL PROVISIONS AFFECTING PROJECT INSURANCE:

Except as otherwise directed by the Administrative Committee, the following provisions shall apply to the Project Insurance obtained by the Project Manager or Operating Agent in compliance with Section 19 hereof.

20.1 Except for Project Insurance described in Sections 19.1.3, 19.1.4, 19.1.5, 19.2.2 and 19.2.3 hereof, each Participant shall be named an additional insured, individually and jointly with the other Participants, on all policies of Project Insurance, and the policies of Project Insurance referred to in Sections 19.1.1 and 19.2.1 hereof shall carry cross-liability endorsements. In lieu of naming Participants insureds on policies described in Section 19.1.1 hereof, the Project Manager may require contractors to procure owner's protective liability insurance naming the Participants as insureds therein, with limits similar to those required in Section 19.1.1 hereof.

20.2 Any deductibles shall be apportioned among the Participants on the basis set forth in Section 21.3 hereof, except that deductibles under any workmen's compensation insurance carried for officers and employees of the Project Manager and Operating Agent shall be apportioned in the manner specified in Section E.7 of Appendix E attached hereto.

20.3 Project Insurance policies shall be primary insurance for all purposes and shall be so endorsed. Any other insurance carried by a Participant individually shall not participate with Project Insurance as to any loss or claim for which valid and collectible Project Insurance shall apply. Such other insurance shall apply solely as to the individual interest of the Participant carrying such other insurance; provided, however, that each Participant shall accept any reasonably restrictive endorsement to its separate insurance policies as may be required by an insurer as a condition precedent to the issuance of a policy of Project Insurance.

20.4 At the direction of the Project Manager or Operating Agent, any party furnishing services, materials, parts or equipment in connection with the planning, design, engineering, construction, maintenance, operation or use of property at the Nuclear Plant Site may be named as an insured as its interest may appear in any of the Project Insurance policies, and either the Project Manager or the Operating Agent may waive on behalf of each Participant its right of recovery against any such party for insured loss of or damage to any property covered by Project Insurance, provided that no such waiver shall impair the right to recover any sums otherwise payable to any Participant under the Project Insurance.

20.5 The Project Manager and Operating Agent respectively shall furnish the other Participants with a certified copy of each of the policy forms of Project Insurance, together with a line sheet therefor (and any subsequent amendments) naming the insurers and underwriters and the extent of their participation.

20.6 Each of the Project Insurance policies shall be endorsed so as to provide that the Participants and additional named insureds pursuant to Section 20.4 hereof shall be given the same advance notice of cancellation or material change as that required to be given to the Project Manager or Operating Agent.

20.7 In the event the Administrative Committee is unable to agree upon any matters relating to Project Insurance not governed by Sections 19 and 20 hereof, the Project Manager or Operating Agent, pending the resolution of such disagreement, shall procure or cause to be procured, such policies of Project Insurance as in its best judgment are necessary and required to protect the Participants against the insurable risks more particularly set forth in Section 19 hereof. During any period of negotiations with an insurer, or other negotiations which are pending at the expiration of the period of coverage of a Project Insurance policy, or in the event a Project Insurance policy is cancelled, the Project Manager and Operating Agent shall renew or bind policies as an emergency measure or may procure policies of insurance which are identical to those which were cancelled, or may, to the extent possible, secure replacement policies which will provide substantially the same coverage as the policy expiring or cancelled.

#10 20.8 Each Participant shall have the right to have any lessor (and any trustee or trustees under a deed of trust, mortgage or indenture or any secured party or parties under a security agreement) in a sale and leaseback transaction named on all or any of the Project Insurance policies as loss payee or additional insured as its interest may appear, by notice in writ-

ing to the Project Manager or Operating Agent given to writing not less than thirty (30) days prior to the date proposed for such naming, which notice shall specify the name or names of such lessor and such additional information as may be necessary or required to permit to be included on the policy(ies) of insurance.

20.9 Unless otherwise directed by the Administrative Committee, the Project Manager and Operating Agent shall obtain Project Insurance from such insurers or underwriters, including stock companies, mutuals and pools or groups of insurers or underwriters, as either of them in its sole discretion may select, provided that any policy which obligates any Participant to pay any assessment shall not be obtained unless such Participant has agreed in writing to undertake such obligation.

20.10 Any refunds of premiums or dividends received by the Project Manager or Operating Agent on any Project Insurance shall be allocated among the Participants in proportion to their Generation Entitlement Shares at the time of receipt thereof, provided that any reserve premium refunds received under any nuclear liability insurance policy or any other policy with a comparable retrospective rating plan shall be allocated among the Participants at the time of payment of the reserve premium in proportion to their Generation Entitlement Shares at such time.

20.11 Nothing herein shall prohibit the Project Manager or Operating Agent from combining the coverage required by this Participation Agreement with coverage outside the scope of that required by this Participation Agreement. If the Project Manager or Operating Agent does so combine coverages, the Administrative Committee shall determine the portion of the total premium cost which is allocable to Construction Insurance or Operating Insurance. If the Administrative Committee is unable to determine such allocation, the Project Manager or Operating Agent, as the case may be, may make an estimated allocation and bill the Participants on the basis thereof, with adjustment to be made when the dispute is resolved.

20.12 Except as provided in Section 20.8 hereof, if any Participant desires changes in any policy of Project Insurance, such Participant shall request in writing to the Project Manager or Operating Agent, as the case may be, to have the desired changes made. Upon receipt of any such request the Project Manager or Operating Agent shall promptly determine whether or not the desired changes can be made and the effect thereof upon the coverage afforded each other Participant and upon insurance premiums. If the Project Manager or Operating Agent determines that (i) the desired changes can be made, (ii) will not reduce the coverage otherwise afforded to any Participant and (iii) will not result in any increase in premium expense or if an increase in premium expenses will result and the requesting Participant agrees in writing to pay such increase, then the Project Manager or Operating Agent shall cause such desired changes to be made at the earliest feasible time. If the Project Manager or Operating Agent determines that the desired changes can be made but to do so (i) will result in a reduction in coverage otherwise afforded to any Participant or (ii) will result in an increase in premium expense shared by the Participants, such request shall be referred to the Administrative Committee for resolution.

#9 21. LIABILITY:

#9 21.1 Except for any judgment debt for damage resulting from Willful Action and except to the extent any judgment debt is collectible from valid Project Insurance, and subject to the provisions of Sections 21.2, 21.4, 21.5, and 21.6 hereof, each Participant hereby extends to all other Participants, their directors, members of their governing bodies, officers and employees its covenant not to execute, levy or otherwise enforce a judgment obtained against any of them, including recording or effecting a judgment lien, for any direct, indirect or consequential loss, damage, claim, cost, charge or expense, whether or not resulting from the negligence of such Participant, its directors, members of its governing bodies, officers, employees, or any person or entity whose negligence would be imputed to such Participant from (i) Construction Work, Operating Work, the design and construction of Capital Improvements, or the use of or ownership of ANPP or (ii) the performance or nonperformance of the obligations of a Participant under the Project Agreements, other than the obligation to pay any monies which have become due.

#9 21.2 In the event any insurer providing Project Insurance refuses to pay any judgment obtained by a Participant against another Participant, its directors, members of its governing bodies, officers or employees, on account of liability referred to in Section 21.1 hereof, the Participant, its directors, members of its governing bodies, officers or employees against whom the judgment is obtained shall, at the request of the prevailing Participant and in consideration of the covenant given in Section 21.1 hereof, execute such documents as may be necessary to effect an assignment of its contractual rights against the nonpaying insurer and thereby give the prevailing Participant the opportunity to enforce its judgment directly against such insurer. In no event when a judgment debt is collectible from valid Project Insurance shall the Participant obtaining the judgment execute, levy or otherwise enforce the judgment (including recording or effecting a judgment lien) against the Participant, its directors, members of its governing bodies, officers or employees, against whom the judgment was obtained.

#9 21.3 Except as provided in Sections 21.4, 21.5, and 21.6 hereof, the costs and expenses of discharging all Work Liability or liability resulting from the design or construction of Capital Improvements imposed upon one or more of the Participants for which payment is not made by Project Insurance shall be shared among and paid by all Participants in proportion to their respective Generation Entitlement Shares.

#9 21.4 Each Participant shall be responsible for any damage, loss, claim, cost, charge or expense that is not covered by Project Insurance and results from its own Willful Action as defined in Section 3.56.2 hereof and shall indemnify and hold harmless the other Participants, their directors, members of their governing bodies, officers, and employees from any such damage, loss, claim, cost, charge or expense.

#9 21.5 Except as provided in Section 21.4 hereof, the aggregate liability of any Participant to all other Participants for Willful Action not covered by Project Insurance shall be determined as follows:

21.5.1 All such liability for damages, losses, claims, costs, charges or expenses of such Participant shall not exceed $10,000,000 per occurrence. Each Participant extends to each other Participant, its directors, members of its governing bodies, officers and employees its covenant not to execute, levy or otherwise enforce a judgment obtained against any of them for any such aggregate liability in excess of $10,000,000 per occurrence.

21.5.2 A claim based on Willful Action must be perfected by filing suit in a court of competent jurisdiction within three years after the Willful Action occurs. All claims made thereafter relating to the same Willful Action shall be barred by this Section 21.5.2. The award to each nonwillfully acting Participant from each Participant determined to have committed Willful Action shall be determined as follows: (i) Each Participant who successfully files suit for remuneration shall receive the lesser of (a) its final judgment awarded (or settlement made) or (b) its pro-rata Generation Entitlement Share of the $10,000,000 maximum recovery established in Section 21.5.1 hereof. (ii) When all pending suits are resolved, those Participants who were awarded judgments or reached settlements but whose claims were not fully satisfied pursuant to Section 21.5.2(i) shall be entitled to participate in any remaining portion of the $10,000,000 maximum recovery limit, based upon the ratio of the unsatisfied portion of such Participant's judgment or settlement to the total unsatisfied portion of all such judgments and settlements. Such participation shall be limited to the Participants' unsatisfied judgments or settlements.

#9 21.6 Except for liability resulting from Willful Action (which, subject to the provisions of Section 21.5 hereof, shall be the responsibility of the willfully acting Participant), any Participant whose electric customer shall have a claim or bring an action against any other Participant for any death, injury, loss or damage arising out of or in connection with electric service to such customer and caused by the operation or failure of operation of ANPP or any portion thereof, shall indemnify and hold harmless such other Participant, its directors, members of its governing bodies, officers and employees from and against any liability for such death, injury, loss or damage.

#9 21.7 The provisions of this Section 21 shall not be construed so as to relieve any insurer of its obligation to pay any insurance proceeds in accordance with the terms and conditions of valid and collectible Project Insurance policies

21.8 The Participants agree that the aggregate liability limit of $10,000,000 referenced in Sections 21.5.1 and 21.5.2 hereof may be determined in the future to be inappropriate and shall make a good faith effort to evaluate and, if appropriate, revise said limit at the request of any Participant.

## 22. AUTHORIZATIONS AND APPROVALS:

22.1 The Project Manager shall be responsible for obtaining all licenses, permits and authorizations requisite to construct each Generating Unit and any components thereof and, in coordination with the Operating Agent, for obtaining all licenses, permits and authorizations requisite to operate and maintain such Generating Unit prior to the Date of Firm Operation, for the release of any effluents therefrom and the storage, shipment, use or disposal of any radioactive materials prior to such date and is authorized to submit and prosecute on behalf of each Participant any applications therefor, including the preparation and submission of any supplementary or supporting documentation or other evidence and appearing at any hearing. The Project Manager shall furnish each Participant with copies of all documents submitted as much in advance of the filing or submission date as may be reasonably possible without incurring a delay or risk of delay of the Date of Firm Operation of any Generating Unit and shall otherwise keep each Participant informed of the status of all applications. Each Participant shall cooperate with the Project Manager in the preparation, submission and execution of such information, records, statements or other material required to obtain any such licenses, permits or authorizations.

22.2 The Operating Agent shall be responsible for obtaining and continuing in effect all licenses, permits and authorizations requisite to (i) operate and maintain each Generating Unit, (ii) release of any effluents and (iii) store, ship or dispose of any wastes and to construct or install any Capital Improvements and is authorized on behalf of each Participant to submit and prosecute any applications therefor, including the preparation and submission of any supplementary or supporting documentation or other evidence and appearance at any hearing. The Operating Agent shall furnish each Participant with copies of all documents submitted and all licenses, permits and authorizations received and shall otherwise keep each Participant informed of the status of all licenses, permits and authorizations in effect and any pending or proposed applications therefor or for changes thereto. Each Participant shall cooperate with the Operating Agent in the preparation, submission and execution of such information, records, statements or other material required to obtain and continue in effect any such licenses, permits or authorizations and any changes thereto.

22.3 Except as provided in Sections 22.1 and 22.2 hereof, each Participant shall be responsible for obtaining, at its own expense, its required authorizations and approvals, if any, relating to its participation in the construction or reconstruction and operation of ANPP and to its performance of the provisions of the Project Agreements, from Federal, state or local regulatory authorities having jurisdiction to issue such authorizations and approvals, and each Participant shall keep the Project Manager and Operating Agent informed of its applications therefor.

## 23. DEFAULTS AND COVENANTS REGARDING OTHER AGREEMENTS:

23.1 Each Participant hereby agrees that it shall pay all monies and carry out all other duties and obligations agreed to be paid and/or performed by it pursuant to all of the terms and conditions set forth and contained in the

Project Agreements, and a default by any Participant in the covenants and obligations to be kept and performed pursuant to the terms and conditions set forth and contained in any of the Project Agreements shall be an act of default under this Participation Agreement.

23.2 In the event of a default by any Participant in any of the terms and conditions of the Project Agreements, then, within ten (10) days after written notice has been given by any non-defaulting Participant to all other Participants of the existence and nature of the default, the non-defaulting Participant [Participants] shall remedy such default either by advancing the necessary funds and/or commencing to render the necessary performance, with each non-defaulting Participant contributing to such remedy in the ratio of its Generation Entitlement Share to the total of the Generation Entitlement Shares of all non-defaulting Participants.

23.3 In the event of a default by any Participant in any of the terms and conditions of the Project Agreements and the giving of notice as provided in Section 23.2 hereof, the defaulting Participant shall take all steps necessary to cure such default as promptly and completely as possible and shall pay promptly upon demand to each non-defaulting Participant the total amount of money and/or the reasonable equivalent in money of non-monetary performance, if any, paid and/or made by such non-defaulting Participant in order to cure any default by the defaulting Participant, together with interest on such money and/or the costs of non-monetary performance at the rate of ten per cent (10%) per annum, or the maximum rate of interest legally chargeable, whichever is the lesser, from the date of the expenditure of such money and/or the date of completion of such non-monetary performance by each such non-defaulting Participant to the date of such reimbursement by the defaulting Participant, or such greater amount as may be otherwise provided in the Project Agreements.

23.4 In the event that any Participant shall dispute the existence or nature of a default asserted in a notice given pursuant to Section 23.2, then such Participant shall pay the disputed payment or perform the disputed obligation, but may do so under protest. The protest shall be in writing, shall accompany the disputed payment or precede the performance of the disputed obligation, and shall specify the reasons upon which the protest is based. Copies of such protest shall be mailed by such Participant to all other Participants. Payments not made under protest shall be deemed to be correct, except to the extent that periodic or annual audits may reveal over or under payments by Participants, necessitating adjustments. In the event it is determined by arbitration, pursuant to the provisions of this Participation Agreement or otherwise, that a protesting Participant is entitled to a refund of all or any portion of a disputed payment or payments or is entitled to the reasonable equivalent in money of non-monetary performance of a disputed obligation theretofore made, then, upon such determination, the non-protesting Participants shall pay such amount to the protesting Participants, together with interest thereon at the rate of six per cent (6%) per annum from the date of payment or from the date of completion of performance of a disputed obligation to the date of reimbursement. Reimbursement of the amount so paid shall be made by the non-protesting Participants in the ratio of their respective

Generation Entitlement Shares to the total of the Generation Entitlement Shares of all non-protesting Participants.

#12 23.5 Unless otherwise determined by a board of arbitrators, in the event of a default by any Participant in the payment or performance of any obligation under the Project Agreements shall continue for a period of six (6) months or more without having been cured by the defaulting Participant or without such Participant having commenced or continued action in good faith to cure such default, or in the event the question of whether an act of default exists becomes the subject of an arbitration pursuant to Section 24 hereof, and such act continues for a period of six (6) months following a final determination by a board of arbitrators or otherwise that an act of default exists and the defaulting Participant has failed to cure such default or to commence such action during said six (6) month period, then, at any time thereafter and while said default is continuing, all of the non-defaulting Participants, by written notice to all Participants, may suspend the right of the defaulting Participant (i) to be represented on and participate in the actions of all committees and (ii) to receive all or any part of its proportionate share of the Available Generating Capability and Net Energy Generation in which event:

23.5.1 During the period that such suspension is in effect, the non-defaulting Participants (i) shall bear all of the operation and maintenance costs, insurance costs and other expenses, including Fuel Expenses and Nuclear Fuel Expenditures, otherwise payable by the defaulting Participant under the Project Agreements and (ii) shall be entitled to schedule and receive for their respective accounts the Generation Entitlement Share of the defaulting Participant of the Available Generating Capability and Net Energy Generation of all Generating Units, in the ratio of their respective Generation Entitlement Shares to the total of the Generation Entitlement Shares of all non-defaulting Participants.

23.5.2 A defaulting Participant shall be liable to the non-defaulting Participants in the proportion that the Generation Entitlement Shares of each non-defaulting Participant bears to the total of the Generation Entitlement Shares of all non-defaulting Participants for all costs incurred by such non-defaulting Participants pursuant to Section 23.5.1 hereof. The proceeds paid by any defaulting Participant to remedy any such default shall be distributed to the non-defaulting Participants in the ratio of their respective Generation Entitlement Shares to the total of the Generation Entitlement Shares of all non-defaulting Participants.

23.5.3 The suspension of any defaulting Participant shall be terminated and its full rights hereunder restored when all of its defaults have been cured and all costs incurred by non-defaulting Participants pursuant to Section 23.5.1 have been paid by the defaulting Participant or other arrangements suitable to all non-defaulting Participants have been made.

#7

23.5.4 During the period that such suspension is in effect, no Fuel Expense Credits nor net credit adjustments to the Assigned Fuel Expense to which the defaulting Participant would in the absence of such suspension have been entitled, pursuant to Appendix F attached hereto, shall become due and payable to the defaulting Participant and the non-defaulting Participants may apply all or any portion of any such Fuel Expense Credits and of any such net credit adjustments as offsets to the costs and expenses incurred by them and arising from or in connection with such default.

23.6 In addition to the remedies provided for in Section 23.5 hereof the non-defaulting Participants may, in submitting a dispute to arbitration in accordance with the provision [provisions] of Section 24 hereof, request that the board of arbitrators determine what additional remedies may be reasonably necessary or required under the circumstances which give rise to the dispute. The board of arbitrators may determine what remedies are necessary or required in the premises, including but not limited to the conditions under which ANPP may be operated economically and efficiently during periods when the defaulting Participant's right to receive its proportionate share of the Available Generating Capability is suspended.

23.7 The rights and remedies of the Participants set forth in this Participation Agreement shall be in addition to the rights and remedies of the Participants set forth in any other of the Project Agreements.

24. ARBITRATION:

24.1 If a dispute between any of the Participants should arise under the Project Agreements, any Participant(s) may call for submission of the dispute to arbitration which shall be binding upon all of the other Participants.

24.2 The Participant(s) calling for arbitration shall give written notice to all other Participants, setting forth in such notice in adequate detail the nature of the dispute, the amount or amounts, if any, involved in such dispute, and the remedy sought by such arbitration proceedings, and, within twenty (20) days from receipt of such notice, any other Participant(s) involved may, by written response to the first Participant(s) and all other Participants, submit its or their own statement of the matter at issue and set forth in adequate detail additional related matters or issues to be arbitrated. Thereafter, the Participant(s) first submitting its or their notice of the matter at issue shall have ten (10) days in which to submit a written rebuttal statement, copies of which shall be given to all other Participants.

24.3 Within forty (40) days following delivery of the written notice pursuant to Section 24.2 hereof, the Participants, acting through their representatives on the Administrative Committee, shall meet for the purpose of selecting arbitrators. Each Participant or group of Participants representing one side of the dispute shall designate an arbitrator. The arbitrators so selected shall meet within twenty (20) days following their selection and shall select additional arbitrators, the number of which

shall be one (1) less than the total number of arbitrators selected by the Participants. If the arbitrators selected by the Participants, as herein provided, shall fail to select such additional arbitrator(s) within said twenty (20) day period, then the arbitrators shall request from the American Arbitration Association (or a similar organization if the American Arbitration Association should not at the time exist) a list of arbitrators who are qualified and eligible to serve as hereinafter provided. The arbitrators selected by the Participants shall take turns striking names from the list of arbitrators furnished by the American Arbitration Association, and the last name(s) remaining on said list shall be the additional arbitrator(s). All arbitrators shall be persons skilled and experienced in the field which gives rise to the dispute, and no person shall be eligible for appointment as an arbitrator who is an officer or employee of any of the parties to the dispute or is otherwise interested in the matter to be arbitrated.

24.4 Except as otherwise provided in this Section 24, the arbitration shall be governed by the rules and practice of the American Arbitration Association (or the rules and practice of a similar organization if the American Arbitration Association should not at that time exist) from time to time in force, except that if such rules and practice, as modified herein, shall conflict with state or Federal law, as the case may be, then in force which are specifically applicable to such arbitration proceedings, such law shall govern.

24.5 Included in the issues which may be submitted to arbitration pursuant to this Section 24 is the issue of whether the right to arbitrate a particular dispute is permitted under the Project Agreements.

24.6 The arbitrators shall hear evidence submitted by the respective Participants and may call for additional information, which additional information shall be furnished by the Participant(s) having such information. The decision of a majority of the arbitrators shall be binding upon all the Participants.

24.7 The award of the arbitrators shall contain findings relative to the materiality of the default, the period of time within which the defaulting party must remedy the default or commence remedial action, and the remedies which may be exercised by the non-defaulting Participants in the event the default is not remedied within such period of time.

24.8 This agreement to arbitrate shall be specifically enforceable, and the award and findings of the arbitrators shall be final and binding upon the Participants to the extent permitted by applicable law. Any award may be filed with the clerk of any court having jurisdiction over the Participants, or any of them, against whom the award is rendered, and, upon such filing, such award, to the extent permitted by the laws of the jurisdiction in which said award is filed, shall be specifically enforceable or shall form the basis of a declaratory judgment or other similar relief.

24.9 The fees and expenses of the arbitrators shall be shared by the Participants equally, unless the decision of the arbitrators shall specify some other apportionment of such fees and expenses. All other expenses and

costs of the arbitration shall be borne by the Participant incurring the same.

24.10 In the event that any Participant shall attempt to carry out the provisions herein set forth in regard to arbitration, and such Participant shall not be able to obtain a valid and enforceable arbitration decree, such Participant shall be entitled to seek legal remedies in the courts having jurisdiction in the premises, and the provisions of the Project Agreements referring to decision of a board of arbitration, to the extent allowable by law, shall be then deemed applicable to final decisions of such courts.

## 25. ACTIONS PENDING RESOLUTION OF DISPUTES:

25.1 If a dispute should arise which is not resolved by the Administrative Committee or the higher authorities within the Participants' organizations, then, pending the resolution of the dispute by arbitration or judicial proceedings, the Project Manager or Operating Agent shall proceed with Construction Work, Operating Work or Capital Improvements in a manner consistent with the Project Agreements and generally accepted practice in the electric utility industry, and the Participants shall advance the funds required to perform such Construction Work, Operating Work, or Capital Improvements in accordance with the applicable provisions of the Project Agreements. The resolution of any dispute involving the failure of the Administrative Committee to reach agreement upon matters involving future expenditures shall have prospective application from the date of final determination, and amounts advanced by the Participants pursuant to this Section 25 during the pendency of such dispute shall not be subject to refund except upon a final determination that the expenditures were not made in a manner consistent with the Project Agreement [Agreements] and generally accepted practice in the electric utility industry.

## 26. REMOVAL 0F PROJECT MANAGER OR OPERATING AGENT:

26.1 The Project Manager and Operating Agent shall serve during the term of and pursuant to this Participation Agreement unless either one resigns by giving written notice to the Participants at least one (1) year in advance of the date of resignation or until receipt by either one of notice of its removal following a determination that it is in default of this Participation Agreement as provided in Section 26.2.2 hereof. Upon the effective date of such resignation or removal, the Participants shall designate a new Project Manager or Operating Agent by written agreement.

26.2 The following provisions shall apply solely in regard to violations or allegations of violations of this Participation Agreement by the Project Manager or the Operating Agent on the basis of which removal of either one is sought:

26.2.1 In the event any Participant shall be of the opinion that an action taken or not taken by the Project Manager or Operating Agent constitutes a violation of this Participation Agreement, it may give written notice thereof to the Project Manager or the Operating Agent as the case may be and the

other Participants, together with a statement of the reasons for its opinion. Thereupon, the Project Manager or the Operating Agent may prepare a statement of the reasons justifying its action or failure to take action. If agreement in settling the dispute is not reached between the Project Manager or the Operating Agent and the Participant which gave such notice, then the matter shall be submitted to arbitration in the manner provided in Section 24 hereof. During the continuance of the arbitration proceedings, the Project Manager or the Operating Agent may continue such action taken or not taken in the manner it deems most advisable and consistent with this Participation Agreement.

26.2.2 If it is determined that the Project Manager or the Operating Agent is violating this Participation Agreement, then it shall act with due diligence to end such violation and shall, within six (6) months or within such lesser time following the determination as may be prescribed in the determination, take action or commence action in good faith to terminate such violation. In the event that the Project Manager or the Operating Agent has failed either to correct, or to commence action to correct, the violation within such allowed period (which itself may be a subject of dispute for determination as above provided) it shall be deemed to be in default under this Participation Agreement and shall be subject to removal upon receipt of notice, executed by all the other Participants, in accordance with Section 26.1 hereof.

26.2.3 The provisions of Section 23 hereof shall not apply to disputes as to whether or not an action or non-action of the Project Manager or the Operating Agent, in its capacity as such, is a violation or a default under this Participation Agreement.

## 27. RELATIONSHIP OF PARTICIPANTS:

27.1 The covenants, obligations and liabilities of the Participants are intended to be several and not joint or collective and nothing herein contained shall ever be construed to create an association, joint venture, trust or partnership, or to impose a trust or partnership covenant, obligation or liability on or with regard to any one or more of the Participants. Each Participant shall be individually responsible for its own covenants, obligations and liabilities as herein provided. No Participant or group of Participants shall be under the control of or shall be deemed to control any other Participant or the Participants as a group. No Participant shall be the agent of or have a right or power to bind any other Participant without its express written consent, except as expressly provided in this Participation Agreement or other Project Agreements.

27.2 The Participants hereby elect to be excluded from the application of Subchapter "K" of Chapter 1 of Subtitle "A" of the Internal Revenue Code of 1954, or such portion or portions thereof as may be permitted or authorized by the Secretary of the Treasury or his delegate insofar as such

Subchapter, or any portion or portions thereof, may be applicable to the Participants under the Project Agreements.

28. FEES:

No Project Manager or Operating Agent shall receive any fee or profit hereunder.

29. ENVIRONMENTAL PROTECTION:

29.1 The Participants agree to design, construct, operate and maintain ANPP in a manner consistent with the Participants' objective of attaining the degree of environmental protection reasonably feasible. The Participants affirm their continuing obligation to comply fully with applicable Federal, state and local laws, orders, regulations, rules and standards relating to environmental protection. The Participants shall to the extent practicable anticipate and make provision for the future installation of any systems required to comply with changes in said laws, orders, regulations, rules and standards.

29.2 The Participants hereby direct that the Project Manager and Operating Agent shall install and diligently operate as part of ANPP such solid, gaseous and liquid effluent control and treatment systems as may be necessary to comply with and fulfill the objectives and obligations set forth in Section 29.1 hereof.

29.3 The Project Manager is hereby authorized and directed to conduct such studies and monitoring programs and employ such expert consultants as may be required or useful to properly evaluate alternative plant sites and feasible means of minimizing the impact of ANPP on the environment and of enhancing the incidental environmental benefits which may accrue from or be developed in connection with the operation and maintenance of ANPP. Further, the Project Manager shall take all appropriate measures to harmonize ANPP with the environment and shall exercise care to prevent any unnecessary destruction, scarring, or defacing of the natural surroundings in the vicinity of the Nuclear Plant Site.

29.4 The Operating Agent shall continue or initiate such monitoring programs as may be appropriate to detect in their incipiency any changes, anticipated and unanticipated, in the environment that may be attributable to the operation of ANPP and recommend to the Engineering and Operating Committee such Capital Improvements as may in the future with improvements in technology enhance the environmental benefits derivable from ANPP or minimize any adverse effects.

30. UNCONTROLLABLE FORCES:

30.1 No Participant shall be considered to be in default in the performance of any of its obligations under the Project Agreements (other than obligations of said Participant to pay costs and expenses) when a failure of performance shall be due to an uncontrollable force. The term "uncontrollable force" shall be any cause beyond the control of the Participant affected, including but not restricted to failure of or threat of failure of facilities, flood, earthquake, tornado, storm, fire, lightning, epidemic, war, riot, civil disturbance or disobedience, labor dispute, labor

or material shortage, sabotage, restraint by court order or public authority, and action or non-action by or failure to obtain the necessary authorizations or approvals from any governmental agency or authority, which by exercise of due diligence such Participant could not reasonably have been expected to avoid and which by exercise of due diligence it shall be unable to overcome. Nothing contained herein shall be construed so as to require a Participant to settle any strike or labor dispute in which it may be involved. Any Participant rendered unable to fulfill any of its obligations under the Project Agreements by reason of an uncontrollable force shall give prompt written notice of such fact to the other Participants and shall exercise due diligence to remove such inability with all reasonable dispatch. The term "Participant" as used in this Section 30 shall include the Project Manager and Operating Agent in their capacities as such.

31. GOVERNING LAW:

31.1 This Agreement shall be governed by and construed and enforceable in accordance with the laws of the State of Arizona.

32. BINDING OBLIGATIONS:

#7 #10 32.1 All of the respective covenants and obligations of each of the Participants set forth and contained in the Project Agreements shall bind and shall be and become the respective covenants and obligations of:

#10 32.1.1 Each such Participant;

#10 32.1.2 All mortgagees, trustees and secured parties under all present and future mortgages, indentures and deeds of trust, and security agreements which are or may become a lien upon any of the interests of such Participant in ANPP; provided, however, that such covenants and obligations shall become binding upon such parties only at the time of taking possession;

#10 32.1.3 All receivers, assignees for the benefit of creditors, bankruptcy trustees and referees of such Participant;

#10 32.1.4 All lessors under all future sale and leaseback transactions (or other person described in Section 15.1.2 hereof) involving interests in ANPP; provided, however, that such covenants and obligations shall become binding on such lessors (or other persons) only in accordance with Section 15.2.2 hereof;

#10 32.1.5 All receivers, assignees for the benefit of creditors, bankruptcy trustees and referees of such lessors;

#10 32.1.6 All Transferees pursuant to Section 15.10 hereof; provided, however, that such covenants and obligations shall become binding on a Transferee only in accordance with Section 15.10.2 hereof;

#10 32.1.7 All other persons, firms, partnerships or corporations claiming through or under any of the foregoing; and

#10 32.1.8 Any successors or assigns of any of those mentioned in Sections 32.1.1 through 32.1.7 hereof,

and shall be covenants and obligations running with such Participant's respective rights, titles and interests in ANPP and in, to and under the Project Agreements, and shall be for the benefit of the respective rights, titles and interests of the Participants and their respective successors and assigns, in and to ANPP. It is the specific intention of this provision that all such covenants and obligations shall be binding upon any party which acquires any of the rights, titles, and interests of any such Participant in ANPP or in, to and under the Project Agreements and that all of the above-described persons and groups shall be obligated to use such Participant's rights, titles and interests in ANPP and/or in, to or under the Project Agreements for the purpose of discharging its covenants and obligations under the Project Agreements: except (i) that in the case of a partial assignment the assignee shall only be required to share in the cost of fulfilling the covenants and obligations of the assigning Participant in, to and under the Project Agreements to an extent proportionate or attributable to such assignment, (ii) the rights and obligations of any Fuel Lessor of any Participant shall be governed by the provisions of Section 15.4 hereof and (iii) the rights and obligations of any person specified in Section 32.1.2, 32.1.4 and 32.1.6 hereof shall be governed as set forth in such Suctions.

## 33. NONDEDICATION OF FACILITIES:

33.1 The Participants do not intend to dedicate and nothing in this Participation Agreement or the Project Agreements shall be construed as constituting a dedication by any Participant of its properties or facilities, or any part thereof, to any other Participant or to the customers of any Participant.

## 34. GENERAL PROVISIONS GOVERNING PROJECT AGREEMENTS:

34.1 The Participants agree to negotiate in good faith and to proceed with diligence to obtain all of the Project Agreements among the Participants and between the Participants and other entities.

34.2 It is acknowledged by the Participants that one or more of the Project Agreements may contain provisions which are in conflict with or contrary to the terms of this Participation Agreement, and any such provision in a Project Agreement executed subsequent to the execution of this Participation Agreement and agreed to by the Participants shall be deemed to supersede, amend or modify any conflicting or contrary provision herein. The mutual agreement of the Participants to supersede, amend or modify the terms hereof shall constitute the legal consideration to support such change in the legal rights and obligations of the Participants.

34.3 Each Participant agrees, upon request by the other Participants, to make, execute and deliver any and all documents reasonably required to implement this Participation Agreement and the Project Agreements.

34.4 Each term, covenant and condition of this Participation Agreement and the Project Agreements is deemed to be an independent term, covenant and condition, and the obligation of any Participant to perform any or all of the terms, covenants and conditions to be kept and performed by it is not dependent on the performance by the other Participants of any or all of the terms, covenants and conditions to be kept and performed by them.

34.6 In the event that any of the terms, covenants or conditions of this Participation Agreement or any of the Project Agreements, or the application of any such term, covenant or condition, shall be held invalid as to any person or circumstance by any court having jurisdiction in the premises, all other terms, covenants or conditions of such agreements and their application shall not be affected thereby, but shall remain in force and effect.

34.7 The Project Agreements shall be subject to filing with, and to such changes or modifications as may from time to time be directed by, competent regulatory authority, if any, in the exercise of its jurisdiction.

34.8 Except as otherwise specifically provided in this Participation Agreement or the Project Agreements, the Participants do not intend to create rights in or to grant remedies to any third party as a beneficiary of this Participation Agreement or the Project Agreements or of any duty, covenant, obligation or undertaking established therein.

34.9 Any waiver at any time by any Participant of its rights with respect to a default or any other matter arising in connection with this Participation Agreement or a Project Agreement shall not be deemed a waiver with respect to any subsequent default or matter.

35. TERMS AND TERMINATION:

35.1 This Participation Agreement shall become effective on September 1, 1973, provided that it shall have been then duly executed by all of the Participants and shall have a term of fifty (50) years from its effective date or forty (40) years from the Date of Firm Operation of the last Generating Unit constructed hereunder whichever is later.

35.2 In the event any Participant elects to terminate its participation in ANPP in respect of any Generating Unit in accordance with Section 19.3 hereof, such election shall be exercised by delivery to each other Participant not later [than] September 1, 1977, of a written notice of such election and shall become effective as of December 1, 1977.

35.3 Upon delivery of any notice by any Participant pursuant to Section 35.2 hereof, each other Participant shall have the right to terminate its participation in ANPP in respect of the Generating Unit affected by such notice. Such right to terminate shall be exercised by delivery to each other Participant on or before December 1, 1977, of a written notice of the exercise of such right. Any such termination shall become effective on December 1, 1977.

35.4 No election or exercise of the right to terminate participation in respect of any Generating Unit pursuant to Section 35.2 or 35.3 hereof shall mod-

ify or alter the rights and obligations of any Participant in respect of any other Generating Unit.

35.5 In the event any Participant elects or exercises its right to terminate its participation in any Generating Unit pursuant to Section 35.2 or 35.3 hereof ("Terminating Participant"), the accumulated Construction Costs, charges and expenses paid or incurred by all Participants prior to the effective date of such termination and any termination costs shall be shared by all Participants on the basis of the respective Generation Entitlement Shares of the Participants in the affected Generating Unit. All equipment, facilities and property theretofore acquired or constructed in connection with such Generating Unit shall, subject to Section 35.6 hereof, be disposed of by the Project Manager in the manner most beneficial to all Participants, and the benefits accruing therefrom shall be shared on the basis of the Participants' Generation Entitlement Shares.

35.6 Should any Participants desire to proceed with the construction of such Generating Unit or any component thereof, they shall have the right to purchase from each Terminating Participant and each Terminating Participant shall be obligated to sell to the continuing Participant(s) its right, title and interest in such Generating Unit, including any Project Agreement related thereto, for the amount that such Terminating Participant has expended therefor pursuant to this Participation Agreement, excluding interest during construction but including a proportionate share determined on the basis of ratios of Maximum Generating Capability of the cost of any facilities shared by such Generating Unit with any other Generating Unit, and upon receipt of payment thereof all rights and obligations of such Terminating Participant under this Participation Agreement in respect of such Generating Unit shall cease and terminate. If two or more Participants desire to exercise their rights to purchase under this Section 35.6, then, unless they shall otherwise agree, each of them shall be entitled to purchase a pro rata share, based upon their respective Generation Entitlement Shares, of the right, title and interest of the Terminating Participant(s) in such Generating Unit and this Participation Agreement shall remain in force and effect with respect to the continuing Participants until the expiration of the term provided in Section 35.1 hereof.

35.7 In any event this Participation Agreement shall continue in force and effect until (i) the expiration of the term set forth in Section 35.1 hereof, or (ii) all property comprising ANPP has been disposed of and all termination costs have been paid.

## 36. ASSIGNMENT OF INTERESTS:

Any Participant who acquires in its name an interest in any real or personal property or contract which is part of ANPP shall transfer and assign an undivided interest therein to the other Participants so that the ownership and rights of the Participants in such property or contract shall be as provided for in this Participation Agreement and the Project Agreements.

## 37. EQUAL OPPORTUNITY:

37.1 During the term of this Participation Agreement, the Project Manager and the Operating Agent (hereinafter in this Secton 37 referred to collectively as the "Contractor") agree as follows:

37.1.1 The Contractor will not discriminate against any employee or applicant for employment because of race, color, religion, sex or national origin. The Contractor will take affirmative action to ensure that applicants are employed, and that employees are treated during employment without regard to their race, color, religion, sex, or national origin. Such action shall include, but not be limited to, the following: employment, upgrading, demotion or transfer; recruitment or recruitment advertising; layoff or termination; rates of pay or other forms of compensation; and selection for training, including apprenticeship. The Contractor agrees to post in conspicuous places, available to employees and applicants for employment, notices to be provided by the contracting officer setting forth the provisions of this nondiscrimination clause.

37.1.2 The Contractor will, in all solicitations or advertisements for employees placed by or on behalf of the Contractor, state that all qualified applicants will receive consideration for employment without regard to race, color, religion, sex or national origin.

37.1.3 The Contractor will send to each labor union or representative of workers with which it has a collective bargaining agreement or other contract or understanding, a notice to be provided advising the said labor union or workers' representative of the Contractor's commitments under this Section 37, and shall post copies of the notice in conspicuous places available to employees and applicants for employment.

37.1.4 The Contractor will comply with all provisions of Executive Order 11246 of September 24, 1965, as amended by Executive Order 11375 of October 13, 1967, and of the rules, regulations and relevant orders of the Secretary of Labor.

37.1.5 The Contractor will furnish all information and reports required by Executive Order 11246 as amended by rules, regulations and orders of the Secretary of Labor, or pursuant thereto, and will permit access to its books, records and accounts by the administering agency and the Secretary of Labor for purposes of investigation to ascertain compliance with such rules, regulations and orders.

37.1.6 In the event of the Contractor's noncompliance with the nondiscrimination clauses of this Participation Agreement or with any of the said rules, regulations or orders, this

Participation Agreement may be cancelled, terminated or suspended in whole or in part and the Contractor may be declared ineligible for further Government contracts or federally assisted construction contracts in accordance with procedures authorized in said Executive Order 11246 as amended and such other sanctions may be imposed and remedies invoked as provided in the said Executive Order as amended or by rule, regulation or order of the Secretary of Labor, or as otherwise provided by law.

37.1.7 The Contractor will include the provisions of Sections 37.1.1 through 37.1.7 hereof in every subcontract or purchase order unless exempted by rules, regulations or orders of the Secretary of Labor issued pursuant to Section 204 of said Executive Order 11246 as amended, so that such provisions will be binding upon each subcontractor or vendor. The Contractor will take such action with respect to any subcontract or purchase order as the administering agency may direct as a means of enforcing such provisions, including sanctions for non-compliance; provided, however, that in the event a Contractor becomes involved in, or is threatened with, litigation with a subcontractor or vendor as a result of such direction by the administering agency, the Contractor may request the United States to enter into such litigation to protect the interests of the United States.

37.2 The parties recognize there are a number of Indian Reservations in the area in which the Contractor operates. Pursuant to the provisions of Title 42 U.S.C.A. 2000-e-2(i), the Contractor now has several agreements and contemplates it may have additional agreements with Indian Tribes providing for preference to qualified Indians for employment on the Reservation of such Indians. The parties agree that Contractor's act of giving preference to qualified Indians for employment on the Reservation of said Indians is not to be deemed inconsistent with the purposes or provisions of Section 37.1 hereof.

38. NOTICES:

38.1 Except as set forth in Section 38.2 hereof, any notice, demand or request provided for in this Participant [Participation] Agreement or any other Project Agreement shall be in writing and shall be deemed properly served, given or made if delivered in person or sent by registered or certified mail, postage prepaid, to the persons specified below:

38.1.1 Arizona Public Service Company
c/o Secretary
P. O. Box 21666
Phoenix, Arizona 85036

38.1.2 Salt River Project Agricultural Improvement
and Power District
c/o Secretary
P. O. Box 1980
Phoenix, Arizona 85001

| | | |
|---|---|---|
| #2 | 38.1.3 | Southern California Edison Company<br>c/o Secretary<br>P. O. Box 800<br>2244 Walnut Grove Avenue<br>Rosemead, California 91770 |
| | 38.1.4 | Public Service Company of New Mexico<br>c/o Secretary<br>P. O. Box 2267<br>Albuquerque, New Mexico 87103 |
| #1 | 38.1.5 | El Paso Electric Company<br>c/o Secretary<br>P. O. Box 982<br>El Paso, Texas 79999 |
| #1<br>#3<br>#8 | 38.1.6 | Southern California Public Power Authority<br>c/o Executive Director<br>Room 300<br>613 East Broadway<br>Glendale, California 91205 |
| #11 | 38.1.7 | Department of Water and Power<br>of the City of Los Angeles<br>c/o Chief Electric Engineer and<br>Assistant Manager<br>P. O. Box 111<br>111 North Hope Street<br>Los Angeles, California 90015 |

38.2 Communications of a routine nature, including requests for funds and related matters, shall be given in such manner as the Administrative Committee shall arrange.

38.3 Any Participant may, at any time, by written notice to all other Participants, designate different or additional persons or different addresses for the giving of notices hereunder.

39. EXECUTION:

IN WITNESS WHEREOF, the Participants have caused this Participation Agreement to be executed as of the 23rd day of August, 1973.

ARIZONA PUBLIC SERVICE COMPANY

By_____
President

ATTEST:

_____
Assistant Secretary

SALT RIVER PROJECT AGRICULTURAL IMPROVEMENT AND POWER DISTRICT

By_____
President

ATTEST AND COUNTERSIGN:

_____
Secretary

Reformed Copy

SOUTHERN CALIFORNIA EDISON COMPANY

By_____
Vice President

ATTEST:

_____
Assistant Secretary

PUBLIC SERVICE COMPANY OF NEW MEXICO

By_____
President

ATTEST:

_____
Secretary

EL PASO ELECTRIC COMPANY

By_____
President

ATTEST:

_____
Secretary

SOUTHERN CALIFORNIA PUBLIC POWER AUTHORITY, doing business in the State of Arizona as SOUTHERN CALIFORNIA PUBLIC POWER AUTHORITY ASSOCIATION

By_____
President

ATTEST:

_____
Assistant Secretary

Reformed Copy

DEPARTMENT OF WATER AND POWER OF
THE CITY OF LOS ANGELES

By

BOARD OF WATER AND POWER
COMMISSIONERS OF THE CITY OF LOS
ANGELES

By_____
President

STATE OF ARIZONA )
) : ss.
County of Maricopa )

On this the 23rd day of August, 1973, before me, the undersigned Notary Public, personally appeared Karl F. Abel and F. E. Smith who acknowledged themselves to be the President and Secretary of the SALT RIVER PROJECT AGRICULTURAL IMPROVEMENT AND POWER DISTRICT, an agricultural improvement district organized and existing under the laws of the State of Arizona, and that they as such officers, being authorized so to do, executed the foregoing instrument for the purposes therein contained by signing the name of the company by themselves as such President and Secretary.

IN WITNESS WHEREOF, I hereunto set my hand and official seal.

_____
Notary Public

My Commission Expires:

_____

STATE OF ARIZONA )
) : ss.
County of Maricopa )

On this the 23rd day of August, 1973, before me, the undersigned Notary Public personally appeared W. P. Reilly and Gerald J. Griffin who acknowledged themselves to be the President and Assistant Secretary of ARIZONA PUBLIC SERVICE COMPANY, an Arizona corporation, and that they as such officers, being authorized so to do, executed the foregoing instrument for the purposes therein contained by signing the name of the company by themselves as such President and Assistant Secretary.

IN WITNESS WHEREOF, I hereunto set my hand and official seal.

_____
Notary Public

My Commission Expires:

_____

STATE OF CALIFORNIA )
) ss.
County of Los Angeles )

On this the 7th day of May, 1976, before me, the undersigned Notary Public, personally appeared J. T. Head, Jr. and R. D. Gorman who acknowledged themselves to be the Vice-President and Assistant Secretary of the SOUTHERN CALIFORNIA EDISON COMPANY, a California corporation, and that they as such officers, being authorized so to do, executed the foregoing instrument for the purposes therein contained by signing the name of the company by themselves as such Vice-President and Assistant Secretary.

IN WITNESS WHEREOF, I hereunto set my hand and official seal.

_____
Notary Public

My Commission Expires:

_____

STATE OF NEW MEXICO )
) ss.
County of Bernalillo )

On this the 30th day of August, 1973, before me, the undersigned Notary Public personally appeared G. A. Schreiber and D. E. Peckham who acknowledged themselves to be the President and Secretary of PUBLIC SERVICE COMPANY OF NEW MEXICO, a New Mexico corporation, and that they as such officers, executed the foregoing instrument for the purposes therein contained by signing the name of the Company by themselves, as such President and Secretary.

IN WITNESS WHEREOF, I hereunto set my hand and official seal.

_____
Notary Public

My Commission Expires:

_____

STATE OF TEXAS )
) ss.
County of El Paso )

On this the 4th day of September, 1973, before me, the undersigned Notary Public personally appeared D. H. Lane and I. J. Lambka who acknowledged themselves to be the President and Secretary of EL PASO ELECTRIC COMPANY, a Texas corporation, and that they as such officers, executed the foregoing instrument for the purposes therein contained by signing the name of the company by themselves as such President and Secretary.

IN WITNESS WHEREOF, I hereunto set my hand and official seal.

_____
Notary Public

My Commission Expires:

_____

STATE OF CALIFORNIA )
) ss.
County of Los Angeles )

On this the 12th day of September, 1983, before me, the undersigned Notary Public personally appeared Karl A. Johnson and Charles W. Montoya who acknowledged themselves to be the President and Assistant Secretary of SOUTHERN CALIFORNIA PUBLIC POWER AUTHORITY, a California corporation, and that they as such officers, being authorized so to do, executed the foregoing instrument for the purposes therein contained by signing the name of the company by themselves as such President and Assistant Secretary.

IN WITNESS WHEREOF, I hereunto set my hand and official seal.

_____
Notary Public

My Commission Expires:

_____

STATE OF CALIFORNIA )
) ss.
County of Los Angeles )

On this the 29th day of October, 1986, before me, the undersigned Notary Public personally appeared Eldon A. Cotton who acknowledged himself to be the Assistant Chief Engineer, Power of the DEPARTMENT OF WATER AND POWER OF THE CITY OF LOS ANGELES, a California municipal corporation, and that he as such officer, being authorized so to do, executed the foregoing instrument for the purposes therein contained by signing the name of the company by himself as such Assistant Chief Engineer, Power.

IN WITNESS WHEREOF, I hereunto set my hand and official seal.

_____
Notary Public

My Commission Expires:

_____

# APPENDIX A

#1

## DESCRIPTION OF ARIZONA NUCLEAR POWER PROJECT

I. Three (3) Combustion Engineering "System 80" pressurized water reactor nuclear steam supply systems. Each NSSS is comprised of a reactor vessel containing 241 fuel assemblies with approximately 100 tons of enriched uranium, two steam generators, four reactor coolant pumps and various additional systems and subsystems. The thermal rating of each NSSS is 3817 MWt.

II. Three (3) GE TC6F-43, 1800 R/MIN tandem-compound, six flow, reheat turbine generators including turbines, generators, moisture separator-reheaters, exciters, controls, and auxiliary subsystems. The direct-driven generator is conductor cooled and rated at 1,554 MVA at 24,000 V, 3 phase, 60 Hz, 1.5 in Hg ABS back pressure, and approximately 1,363 MWe maximum gross output.

III. Three (3) 146 ft. inside diameter, steel-lined, prestressed concrete cylindrical containment buildings with hemispherical domes designed for 60 psig. Each containment building houses the reactor systems.

IV. Auxiliary systems and equipment including engineered safeguards systems, reactor auxiliary systems, turbine-generator auxiliary systems associated with I, II and III.

V. Three (3) cooling tower systems, including closed cycle circulating water systems, make-up water systems and essential spray ponds.

VI. Three (3) radioactive waste treatment systems, including liquid, gaseous, and solid waste subsystems, controls, instrumentation, storage, handling and shipment facilities.

VII. An administration building, three (3) auxiliary buildings, three (3) turbine buildings, warehouse, visitor center, and other support buildings to be located adjacent to said units.

VIII. All facilities and equipment to provide interconnection between each turbine generator and the High Voltage Switchyard, including startup transformers and standby equipment and systems.

IX. Three (3) emergency diesel-generator systems, including three diesel generator buildings which contain two diesel generators each, fuel oil systems, storage tanks, emergency buses and control and instrumentation systems.

X. Station internal and external communication systems, including associated interconnections and computer data links.

XI. The Plant Site described in Appendix B.

XII. Access roads, railroad spurs, security fencing and surveillance systems and guard facilities, including associated radioactive monitoring systems or equipment.

XIII. Water treatment facilities and transport systems, including rights-of-way, for supply of waste water effluent from the 91st Avenue sewage treatment plant serving the Phoenix metropolitan area.

# APPENDIX B

#1

## DESCRIPTION OF THE NUCLEAR PLANT SITE

The Palo Verde Nuclear Generating Station Site is located in Maricopa County, Arizona, approximately 36 miles west of the City of Phoenix and approximately 16 miles west of the City of Buckeye. The Plant Site is described as follows:

The West Half (W 1/2) of the Northwest Quarter (NW 1/4) and the West Half (W 1/2) and the Southeast Quarter (SE 1/4) of the Southwest Quarter (SW 1/4) of Section Twenty-six (26), all of Section Twenty-seven (27) except the Northwest quarter (NW 1/4) thereof, the Southeast Quarter (SE 1/4) of Section Twenty-eight (28), the East Half (E 1/2) of Section Thirty-three (33), all of Section Thirty-four (34) and the West Half (W 1/2) of Section Thirty-five (35), all in Township One (1) North, Range Six (6) West of the Gila and Salt River Base and Meridian, Maricopa County, Arizona; and

The West Half (W 1/2) of the West Half (W 1/2) of Section Two (2), all of Section Three (3), the East Half of Section Four (4), the East Half (E 1/2) of the Southeast Quarter (SE 1/4) of Section Nine (9), all of Section Ten (10) except the West Half (W 1/2) of the Northwest Quarter (NW 1/4) and the East Half (E 1/2) of the Southeast Quarter (SE 1/4) therof, all in Township One (1) South, Range Six (6) West of the Gila and Salt River Base and Meridian, Maricopa County, Arizona.

#2

# APPENDIX C (REVISED)

## CONSTRUCTON SCHEDULE

## ARIZONA NUCLEAR POWER PROJECT

| Milestone | Unit 1 | Unit 2 | Unit 3 |
|---|---|---|---|
| Selection of siting and environmental consultants and initiation of siting and environmental studies | 6/29/72 | 6/29/72 | 6/29/72 |
| Contract with engineer-constructor | 1/15/73 | 1/15/73 | 1/15/73 |
| Invitation for bids for supply of nuclear steam supply systems | 2/27/73 | 2/27/73 | 2/27/73 |
| Contract for wastewater effluent | 4/23/73 | 4/23/73 | 4/23/73 |
| Nuclear Plant Site selection | 9/1/73 | 9/1/73 | 9/1/73 |
| Contracts for nuclear steam supply systems and initial supply of Nuclear Fuel | 8/20/73 | 8/20/73 | 8/20/73 |
| Begin preliminary engineering | 8/20/73 | 8/20/73 | 8/20/73 |
| Contract for supply of turbine-generators | 3/21/74 | 3/21/74 | 3/21/74 |
| Submit applications to USAEC for construction permits | 7/11/74 | 7/11/74 | 7/11/74 |
| Submit applications to the Arizona Power Plant and Transmission Line Siting Committee for a Certificate of Environmental Compatibility | 10/28/75 | 10/28/75 | 10/28/75 |
| Obtain all authorizations required to commence construction and begin final design and engineering | 5/1/76 | 5/1/76 | 5/1/76 |
| Complete final design and engineering and submit applications to USNRC for operating licenses | 11/1/78 | 11/1/78 | 11/1/78 |
| Issuance of operating license and begin loading and start-up testing | 11/1/81 | 11/1/83 | 11/1/85 |
| Scheduled Date of Commercial Operation | 5/1/82 | 5/1/84 | 5/1/86 |

# APPENDIX D

## CONSTRUCTION COSTS OF ARIZONA NUCLEAR POWER PROJECT

D.1 Construction Costs shall consist of payments made and obligations incurred for or in connection with Construction Work (excluding allowance for funds during construction and, except as provided in Section 13.3 of the Participation Agreement, ad valorem taxes or payments in lieu thereof) for the account of Construction Work and shall consist of the following:

D.1.1 All costs of labor, services and studies performed in connection with Construction Work, if authorized and approved by the Project Manager.

D.1.2 Payroll and other expenses of the Project Manager's employees while performing the Construction Work, including applicable allocated labor loading charges, such as department overhead, time-off allowances, Payroll Taxes (allocated in accordance with Section E.1.5 of Appendix E), workmen's compensation expenses (allocated in accordance with Section E.1.8 of Appendix E), retirement and death benefits and other employee benefits and any incidental expenses (e.g., travel) incurred by the Project Manager in connection with the employment of any employees of any Participant assigned to the Project Manager.

D.1.3 Payroll and other expenses incurred by any Participant with respect to any of its employees who have been assigned to the Project Manager to perform Construction Work which expenses have not been paid by the Project Manager under Section D.1.2 hereof. All such payroll and other expenses, including applicable labor loading charges, such as vacation, sick, holiday and other time-off allowances, Payroll Taxes, workmen's compensation expenses, retirement and death benefits, other employee benefits, incidental expenses and applicable administrative and general expenses (excluding department overheads), shall be billed by the assigning Participant to the Project Manager at appropriate intervals not less frequently than once each year. The Project Manager shall pay any such bill within fifteen (15) days after receipt.

D.1.4 Overhead costs associated with Construction Work (including the allowance for the Project Manager's administrative and general expenses described in Section D.1.14 hereof), costs of temporary facilities, land and land rights, structures and improvements, and equipment for ANPP as set forth in the Electric Plant Instructions of the FPC Accounts.

D.1.5 All costs and expenses, including those of outside consultants and attorneys, incurred by the Project Manager or other Participants with respect to the securing of licenses, permits, certificates and any other authorizations required by law, compliance with any applicable laws, rules or regulations respecting the environment, conservation of the public health and safety, negotiation for and acquisition of land, land rights, water rights and fuel requirements and supply, and to the preparation of agreements and permits relating to Construction Work with entities other than the Participants. A Participant anticipating such costs and expenses shall

submit an estimate thereof to the Project Manager for authorization and approval. Any Participant incurring such costs and expenses after such authorization and approval shall bill the Project Manager therefor.

#5 D.1.6 Applicable costs of materials, supplies, tools, machinery, equipment, apparatus, construction Power and Energy (excluding Testing and Start-Up Power and Energy supplied by the Participants pursuant to Section 5.8 of the Participation Agreement), including installation of any facilities necessary therefor, determined in accordance with the established charges, rates, rules, regulations, and practices of the utility furnishing such construction Power, Energy, and facilities, construction water in connection with Construction Work, including rental charges, and Emergency Spare Parts.

D.1.7 All costs of Construction Insurance, except costs of workmen's compensation insurance included in Section D.1.2 hereof.

D.1.8 All costs of any loss, damage or liability arising out of or caused by Construction Work which are not satisfied under the coverage of Construction Insurance, and the expenses incurred in settlement of injury and damage claims, including the costs of labor and related supplies and expenses incurred in injury and damage activities, (all as referred to in FPC Account 925 and FPC Accounts Electric Plant Instruction 3(8), but excluding any costs or expenses included in Section D.1.2 hereof), because of any claim arising out of or attributable to the construction of ANPP, the past or future performance or nonperformance of the obligations and duties of any Participant (including the Project Manager) or the past or future performance or nonperformance of Construction Work, including but not limited to any claim resulting from death or injury to persons or damage to property.

D.1.9 All Federal, state or local taxes of any character imposed upon Construction Work, except any tax assessed directly against an individual Participant unless such tax was assessed to such individual Participant in behalf of any or all of the Participants.

D.1.10 Expenses of other Participants incurred in the performance of Construction Work, if authorized and approved by the Project Manager, and the expenses of the Operating Agent incurred prior to the Date of Firm Operation of each Generating Unit which are properly chargeable to Construction Costs and are billed by the Operating Agent to the Project Manager pursuant to Appendix G attached to the Participation Agreement.

D.1.11 All costs and expenses of enforcing or attempting to enforce the provisions of Construction Insurance policies, payment and performance bonds, contracts executed as Project Manager and warranties extended to facilities constituting a part of ANPP, except any costs or expenses included in Section D.1.2 hereof.

D.1.12 All costs and expenses, including those of attorneys and consultants, incurred by the Project Manager or a Participant with respect to environmental matters such as lawsuits, hearings and environmental studies related thereto. All Participants anticipating such costs and expenses shall submit an estimate thereof to the Project Manager for authorization and

approval. Any Participant incurring such costs and expenses after such authorization and approval shall bill the Project Manager therefor.

D.1.13 All costs for charitable contributions if authorized and approved by the Administrative Committee.

D.1.14 An allowance for the Project Manager's administrative and general expenses deemed to have been incurred by it in the performance of Construction Work. Said expenses shall be allocated monthly at the rate of one percent (1%) of Construction Costs incurred and not previously billed, excluding from such Construction Costs:

D.1.14.1 Any allowance for administrative and general expenses provided for in this Section D.1.14.

D.1.14.2 Expenses described in Section D.1.3 hereof.

D.1.14.3 Expenses described in Section D.1.8 hereof.

D.1.14.4 Expenses described in Section D.1.10 hereof.

D.1.14.5 Expenses described in Section D.1.12 hereof when such expenses are incurred by a Participant other than the Project Manager.

D.1.15 Miscellaneous costs and expenses, consisting of any and all other types of costs and expenses incidental to and necessary for the performance of Construction Work.

D.2 In cases where the allocation of a cost item is made between Construction Work and the other work, such allocation shall be made on a fair and equitable basis.

D.3 The Project Manager shall develop, or cause to have developed, and shall employ a project planning control system which recognizes and contains the elements of planning, scheduling, reporting, forecasting and analysis with the variables of time and money. Such control system employed must provide the tools for corrective action. The accounting classifications employed must be converted to the FPC Accounts for the Final Completion Report and any supplement thereto, of total cost of Construction Work.

D.4 The Project Manager and the other Participants shall not be entitled to a fee, price, percentage or any other compensation over and above the costs of services rendered by them in performance of Construction Work.

D.5 Travel and other related expenses of employees of the Project Manager whose salary costs are considered administrative and general expenses recoverable through the administrative and general expense allowance specified in D.1.14 hereof shall not be charged directly to Construction Work as Construction Costs.

# APPENDIX E

## COSTS OF OPERATING WORK AND CAPITAL IMPROVEMENTS

#5 E.1 **Operation and Maintenance Expenses.** In determining ANPP operating expenses, the Operating Agent shall include the following expenses to the extent that they are chargeable to ANPP in accordance with Accounting Practice, including Arizona's normal time-off allowances and Materials and Supplies stores load, but excluding the costs of Testing and Start-Up Power and Energy provided by the Participants:

E.1.1 The operation expenses chargeable to FPC Accounts 517, 518 (excluding Fuel Expenses), 519 to 525, inclusive, 556, 557, 560, 561, 562, 565, 566 and 567.

E.1.2 The maintenance expenses chargeable to FPC Accounts 528 to 532, inclusive, 568, 569, 570 and 573.

E.1.3 All costs incurred by the Operating Agent directly associable with Operating Work and directly chargeable to FPC Accounts 408 (except Payroll Taxes which are allocated in accordance with Section E.1.5 hereof and ad valorem taxes, or payments in lieu thereof)[,] 925 (except workmen's compensation expense allocated to ANPP pursuant to Section E.1.8) and 928.

E.1.4 Overhead expenses incurred by the Operating Agent which are allocable to the operation and maintenance of ANPP. Such overhead expenses shall be determined in accordance with Section E.3 hereof.

E.1.5 The portion of the Operating Agent's employee Payroll Taxes chargeable to FPC Account 408 determined by applying the Payroll Tax Ratio computed in accordance with Section E.4 hereof to labor charges of ANPP operating and maintenance expenses, including without limitation the labor portion of expenses chargeable to ANPP pursuant to Sections E.1.1, E.1.2, E.1.3 and E.1.4 hereof.

E.1.6 The portion of the Operating Agent's employee pensions and benefits expenses as defined under FPC Account 926 and determined by applying the Benefits Ratio computed in accordance with Section E.5 hereof to the total labor charges of ANPP operating and maintenance expenses, including without limitation the labor portion of expenses chargeable to ANPP pursuant to Sections E.1.1, E.1.2, E.1.3 and E.1.4 hereof.

E.1.7 The portion of the Operating Agent's administrative and general expenses chargeable to FPC Accounts 920, 921, 923 and 932 determined by applying the Operating and Maintenance A & G Ratio computed in accordance with Section E.6 hereof to the total labor charges of ANPP operating and maintenance expenses, including without limitation the labor portion of expenses chargeable to ANPP pursuant to Sections E.1.1, E.1.2, E.1.3 and E.1.4 hereof.

E.1.8 The portion of the Operating Agent's workmen's compensation expense, including premiums, payments and accruals, chargeable to FPC Account 925 (except amounts charged to ANPP pursuant to Section E.1.3) and allocable to ANPP which shall be determined by applying the Compensation Insurance Ratio computed in accordance with Section E.7 hereof to the total labor charges of ANPP operating and maintenance expense, including without limitation the labor portion of the expenses chargeable to ANPP pursuant to Sections E.1.1, E.1.2, E.1.3 and E.1.4 hereof.

E.1.9 The portion of the Operating Agent's administrative and general expenses for work performed by a contractor, the cost of which is chargeable to ANPP operation and maintenance expenses in accordance with Sections E.1.1, E.1.2 and E.1.3 hereof, determined by multiplying the total contract cost thereof by one percent (1%).

E.2 **Cost of Capital Improvements.** In determining the costs of Capital Improvements, the Operating Agent shall include all costs, including time-off allowances, incurred by the Operating Agent (other than allowance for funds used during construction) which conform to the provisions of Electric Plant Instruction 3 of FPC Accounts entitled "Components of Construction Cost"; provided, that (i) charges for insurance other than workmen's compensation insurance for the Operating Agent's officers and employees shall be limited to (a) the cost of Construction Insurance obtained by the Operating Agent pursuant to Section 19.2.4 of the Participation Agreement and (b) any increases in the cost of Operating Insurance attributable to the construction of Capital Improvements, (ii) charges for injuries and damages shall be limited to those injuries or damages arising out of or in connection with and occurring in the course of construction of the Capital Improvements, and (iii) charges for taxes shall not include any taxes paid by any Participant pursuant to Section 13 of the Participation Agreement. In making such cost determinations the Operating Agent shall include the following:

E.2.1 Overhead expenses incurred by the Operating Agent which are allocable to the cost of Capital Improvements. Such overhead expenses shall be determined in accordance with Section E.3 hereof.

E.2.2 The portion of the Operating Agent's employee Payroll Taxes, workmen's compensation expense and an allowance for administrative and general expenses chargeable to ANPP construction accounts determined by multiplying (i) the Payroll Tax Ratio, the Compensation Insurance Ratio and the Capital A & G Ratio computed in accordance with Sections E.4, E.7 and E.9 respectively, by (ii) the sum of the Operating Agent's labor charges included in the cost of Capital Improvements, including the cost of Capital Improvements pursuant to Section E.3 hereof.

E.2.3 The portion of the Operating Agent's administrative and general expenses for work in making Capital Improvements performed by a contractor determined by multiplying the total contract cost thereof by one percent (1%).

E.3 Allocation of Overhead Expenses

E.3.1 Overhead expenses incurred by the Operating Agent which are allocable to ANPP are comprised of, but not limited to, the following:

E.3.1.1 All of the following expenses incurred at the Nuclear Plant Site:

E.3.1.1.1 The salaries and expenses of the Station Superintendent and his supervisory, administrative, engineering and clerical staff assigned to ANPP;

E.3.1.1.2 Stationery and office supplies expense;

E.3.1.1.3 The payroll and other costs incurred in processing grievances;

E.3.1.1.4 The payroll and other costs, excluding expenses for initial training, incurred in attending job training meetings by employees assigned to the ANPP; and

E.3.1.1.5 Miscellaneous expenses not assignable to other functions of ANPP.

E.3.1.2 A portion of the expenses incurred by the Operating Agent's Power Production Department, such portion to be determined by multiplying the total of such expenses by a ratio, the numerator of which is the total payroll for ANPP and the denominator of which is the total payroll supervised by the Vice President, Power Production. Such expenses shall include, but not be limited to, the following:

E.3.1.2.1 The salaries and expenses of the Vice President, Power Production, and his supervisory, administrative, engineering and clerical staff;

E.3.1.2.2 Stationery and office supplies expense;

E.3.1.2.3 Expenses (but not payroll costs) incurred in attending certain conventions and committee meetings; and

E.3.1.2.4 Miscellaneous expenses not assignable to other functions.

E.3.1.3 A portion of the expenses incurred by the Operating Agent's Electric and Gas Operations Group, such portion to be determined by multiplying the total of such expenses by a ratio, the numerator of which is the total payroll for ANPP and the denominator of which is the total payroll supervised by the Executive Vice President, Engineering and Operations. Such expenses shall include, but not be limited to, the following:

E.3.1.3.1 The salaries and expenses of the Executive Vice President, Engineering and Opera-

tions, and his engineering and clerical staff, less that portion chargeable to administrative and general accounts;

E.3.1.3.2 Stationery and office supplies expense; and

E.3.1.3.3 Miscellaneous expenses not assignable to other functions.

E.3.1.4 A portion of the expenses incurred by the Operating Agent's System Electric Operations Department, such portion to be determined by multiplying the total of such expenses by a ratio, the numerator of which is the total payroll for ANPP and the denominator of which is the total payroll supervised by the Executive Vice President, Engineering and Operations. Such expenses shall include, but not be limited to, the following:

E.3.1.4.1 The salaries and expenses of the Manager of System Electric Operations, his supervisory, administrative, engineering and clerical staff, and his load supervisors;

E.3.1.4.2 Stationery and office supplies expense;

E.3.1.4.3 Expenses (but not payroll costs) incurred in attending certain conventions and committee meetings by System Electric Operations personnel; and

E.3.1.4.4 Miscellaneous expenses not assignable to other functions of the System Electric Operations Department.

E.3.2 Overhead expenses described in Section E.3.1 of this Appendix shall be allocated to certain FPC Accounts and to Captial Improvements as follows:

E.3.2.1 The total direct labor expense incurred at the Nuclear Plant Site shall be deemed to be the sum of the following:

E.3.2.1.1 Direct operating labor chargeable to FPC Accounts 517 through 525;

E.3.2.1.2 Direct maintenance labor chargeable to FPC Accounts 528 through 532;

E.3.2.1.3 Direct maintenance labor chargeable to FPC Accounts 568, 569, 570 and 573; and

E.3.2.1.4 Direct labor chargeable to Capital Improvements.

E.3.2.2 Overhead expenses described in Sections E.3.1.1 and E.3.1.3 hereof shall be allocated to FPC Accounts 517, 528 and 568, and to Capital Improvements, as follows:

E.3.2.2.1 The portion of said overhead expenses to be allocated to FPC Account 517 shall be equal to said overhead expenses multiplied by a ratio, the numerator of which is the direct operating labor set forth in Section E.3.2.1.1 hereof and the denominator of which is the total direct labor expense set forth in Section E.3.2.1 hereof.

E.3.2.2.2 The portion of said overhead expenses to be allocated to FPC Account 528 shall be equal to said overhead expenses multiplied by by [sic] a ratio, the numerator of which is the direct maintenance labor set forth in Section E.3.2.1.2 hereof and the denominator of which is the total direct labor expense set forth in Section E.3.2.1 hereof.

E.3.2.2.3 The portion of said overhead expense to be allocated to FPC Account 568 shall be equal to said overhead expense multiplied by a ratio, the numerator of which is the direct maintenance labor set forth in Section E.3.2.1.3 hereof and the denominator of which is the total direct labor expense set forth in Section E.3.2.1 hereof.

E.3.2.2.4 The portion of said overhead expenses to be allocated to Capital Improvements shall be equal to said overhead expenses multiplied by a ratio, the numerator of which is the direct labor set forth in Section E.3.2.1.4 hereof and the denominator of which is the total labor expense set forth in Section E.3.2.1 hereof.

E.3.2.3 Overhead expenses described in Section E.3.1.2 hereof shall be allocated to FPC Accounts 517 and 528, and to Capital Improvements, as follows:

E.3.2.3.1 The portion of said overhead expenses to be allocated to FPC Account 517 shall be equal to said overhead expenses multiplied by a ratio, the numerator of which is the direct operating labor set forth in Section E.3.2.1.1 hereof and the denominator of which is the sum of the direct labor set forth in Sections E.3.2.1.1, E.3.2.1.2 and E.3.2.1.4 hereof.

E.3.2.3.2 The portion of said overhead expenses to be allocated to FPC Account 528 shall be equal to said overhead expenses multiplied by a ratio, the numerator of which is the direct maintenance labor set forth in Section E.3.2.1.2 hereof and the denominator of which is the sum of the direct labor set forth in Sections E.3.2.1.1, E.3.2.1.2 and E.3.2.1.4 hereof.

E.3.2.3.3 The portion of said overhead expenses to be allocated to Capital Improvements shall be equal to said overhead expenses mutliplied by a ratio, the numerator of which is the direct labor set forth in Section E.3.2.1.4 hereof and the denominator of which is the sum of the direct labor set forth in Sections E.3.2.1.1, E.3.2.1.2 and E.3.2.1.4 hereof.

E.3.2.4 Overhead expenses described in Section E.3.1.4 hereof shall be allocated to FPC Account 556.

E.3.3 The job and department titles referred to in this Section E.3 are those currently in use by the Operating Agent, as follows: Station Superintendent; Vice President, Power Production; Executive Vice President, Engineering and Operations; Manager of System Electric Operations; Power Production Department; Electric and Gas Operations Group; and System Electric Operations Department. The provisions of this Section E.3 shall refer to those jobs and departments having generally the same responsiblity and functions as those listed above without regard to any subsequent assignment of a different title by the Operating Agent.

## E.4 Payroll Tax Ratio

E.4.1 The Payroll Tax Ratio set forth below shall be applied to the labor expense portion of the ANPP operation and maintenance expenses, to the Operat- [Operating] Agent's direct labor charges incurred in effecting Capital Improvements, and to the labor expenses included in the Operating Agent's supervisory and administrative and general expense accounts. Estimated and actual Payroll Tax Ratios shall be determined, adjusted and used in the manner set forth in Section E.10 hereof.

$$\text{Payroll Tax Ratio} = \frac{T}{P}$$

Where: T = The Operating Agent's Payroll Tax expenses.
P = The Operating Agent's total labor distributed including accruals.

E.4.2 The following example sets forth the method to be employed by the Operating Agent to determine the Payroll Tax Ratio:

EXAMPLE COMPUTATION OF PAYROLL TAX RATIO

(Based on Operating Agent's 1972 Expenses)

| | |
|---|---|
| Total Payroll Taxes: | |
| F.I.C.A. | $ 1,543,360 |
| F.U.T.A | 76,296 |
| S.U.I. | 47,365 |
| Total Payroll Taxes | $ 1,667,021 |
| Total labor charged to operation and maintenance, construction and miscellaneous general ledger accounts | $44,502,733 |

Payroll Tax Ratio: $1,677,021 $44,502,733 = 3.746%

## E.5 Benefits Ratio

E.5.1 The Benefits Ratio set forth below shall be applied to the labor expense portion of the ANPP operations and maintenance expenses, to the Operating Agent's direct labor charges incurred in effecting Capital Improvements, and to the labor expenses included in the Operating Agent's supervisory and administrative and general expense accounts. Estimated and actual Benefits Ratios shall be determined, adjusted and used in the manner set forth in Section E.10 hereof.

$$\text{Benefits Ratio} = \frac{B}{L}$$

Where: B = The Operating Agent's total system employee pensions and benefits (as defined in FPC Account 926), including Payroll Taxes and workmen's compensation expense on labor charged to employee pensions and benefits.

L = The Operating Agent's total labor distributed including accruals less labor charged to employee pensions and benefits.

E.5.2 The following example sets forth the method to be employed by the Operating Agent to determine the Benefits Ratio:

EXAMPLE COMPUTATION
OF BENEFITS RATIO

(Based on Operating Agent's 1972 Expenses)

| Pensions and Benefits | Labor | Total |
|---|---|---|
| Employees Pensions and Benefits | $624,964 | $ 5,590,439 |
| Payroll Taxes @ 3.746% of labor (See Example in Section E.4.2) | | 23,411 |
| Compensation Insurance @ 1.204% of labor (See Example in Section E.7.2) | | 7,525 |
| Total Pensions and Benefits | | $ 5,621,375 |
| **Labor Base** | | |
| Labor charged to operation and maintenance, construction and miscellaneous general ledger accounts | | $44,502,733 |
| Less total labor charged to Pensions and Benefits | | 624,964 |
| Total applicable labor | | $43,877,769 |
| Benefits Ratio: $5,621,375 $43,877,769 | | 12.811% |

#11 E.6 **Operation and Maintenance A & G Ratio**

#11 E.6.1 The Operation and Maintenance A & G Ratio shall be the percentage computed by dividing (i) the sum of (a) the total amounts charged to FPC Accounts 920 and 921 multiplied by the O & M Ratio computed in accordance with Section E.8 hereof, (b) the total amounts charged to FPC Accounts 923 (except any amounts directly chargeable to ANPP) and 935 (formerly 932), (c) the product of the portion of labor charges included within (a) and (b) above multiplied by the Payroll Tax Ratio computed in accordance with Section E.4 hereof [,] (d) the product of the labor charges included within (a) and (b) above multiplied by the Benefits Ratio computed in accordance with Section E.5 hereof, and (e) the product of the labor charges included within (a) and (b) above multiplied by the Compensation Insurance Ratio computed in accordance with Section E.7 hereof, less (f) the one percent (1%) portion of the administrative and general expenses charged to FPC Accounts 920 and 921 allocable to contract operation and maintenance by (ii) the direct labor (i.e. total labor

less labor charge to clearing accounts) chargeable to operation and maintenance accounts (exclusive of A & G), to include O & M labor billed to Participants and the labor portion of Start-Up and Pre-Operation Costs subject to the Operation and Maintenance A & G Ratio pursuant to Section L.1.3, and to exclude the labor portion of Start-Up and Pre-Operation Costs subject to the construction administrative and general expense percentage of one percent (1%) pursuant to Section L.1.3.

#11 E.6.2 The following example sets forth the method to be employed by the Operating Agent to determine the Operation and Maintenance A & G Ratio:

EXAMPLE COMPUTATION OF OPERATIONS
AND MAINTENANCE A & G RATIO

(Based on the Operating Agent's 1984 Experience)

| | Labor | Total |
|---|---|---|
| Administrative and General Salaries charged to FPC Account 920 | $17,408,542 | $ 17,406,779 |
| Office Supplies and Expenses charged to FPC Account 921 | | 7,208,084 |
| [Line 7] Total | $17,408,542 | $ 24,614,863 |
| Total FPC Accounts 920 and 921, multipled by O & M Ratio @ 68.48% | $11,921,544 | $ 16,856,504 |
| FPC Account 923 | | 919,166 |
| FPC Account 932 (presently 935) | 1,555,913 | 3,127,002 |
| [Line 11] Subtotal | $13,477,457 | $ 20,902,672 |
| Payroll Taxes @ 7.126% | | 960,404 |
| Pensions and Benefits @ 13.512% | | 1,821,074 |
| Compensation Insurance @ 0.451% | | 60,783 |
| Less that 1% portion of A & G allocable to Contract Operation and Maintenance | | 1,483,314 |
| Total administrative and general expenses allocable to operations and maintenance | | $ 22,261,619 |

Labor Base

| | |
|---|---|
| Direct labor charged to system operations and maintenance, as further defined in Section E.6.1 | $148,557,953 |
| Less direct labor charged to administrative and general expenses (FPC Accounts 920-931 and 935) | 13,160,635 |
| Labor Base | $135,397,318 |

Operation and Maintenance
A & G Ratio for 1984 $22,261,619 ' $135,397,318 = 16.442%

Note: All labor figures include loading for allowed time.

## E.7 Compensation Insurance Ratio

E.7.1 The Compensation Insurance Ratio set forth below shall be applied to the labor expense portion of the ANPP operation and maintenance expenses, to the Operating Agent's direct labor charges incurred in effecting Capital Improvements, and to the labor expenses included in the Operating Agent's supervisory and administrative and general accounts. Estimated and actual Compensation Insurance Ratios shall be determined, adjusted and used in the manner set forth in Section E.10 hereof.

$$\text{Compensation Insurance Ratio} = \frac{I}{P}$$

Where: I = The Operating Agent's total system workmen's compensation insurance premiums and accruals for self-insurance as defined in FPC Account 925.

P = The Operating Agent's total labor distributed including accruals.

E.7.2 The following example sets forth the method to be employed by the Operating Agent to determine the Compensation Insurance Ratio:

EXAMPLE COMPUTATION
OF COMPENSATION INSURANCE RATIO

(Based on Operating Agent's 1972 Expenses)

| | Total |
|---|---|
| Workmen's Compensation Insurance premiums, payments and accruals as defined in FPC Account 925 | $ 534,767 |
| Labor Base | |
| Total labor in operations and maintenance, construction and miscellaneous general ledger accounts | $44,502,733 |
| Less labor charged to Compensation Account | 91,905 |
| Total applicable labor | $44,410,828 |
| Compensation Insurance Ratio: $534,767 $44,410,828 | 1.204% |

11 E.8 **O & M Ratio and Construction Ratio:**

#11 E.8.1 The O & M Ratio set forth below shall be applied to the amounts chargeable to FPC Accounts 920 and 921 for the purpose of determining one component in the computation of the Operations and Maintenance A & G Ratio as provided in Section E.6 hereof.

$$\text{O \& M Ratio} = \frac{O}{L}$$

Where: O = The Operating Agent's direct labor chargeable to operation and maintenance accounts (exclusive of A & G), to include O & M labor billed to Participants and the labor portion of Start-Up and Pre-Operation Costs subject to the Operations and Maintenance A & G Ratio pursuant to Section L.1.3, and to exlude the labor portion of Start-Up and Pre-Operation Costs subject to the construction administrative and general expense percentage of one percent (1%) pursuant to Section L.1.3.

L = The Operating Agent's direct labor distributed, including accruals, less direct labor chargeable to FPC Accounts 920 through 931 and 935.

#11 E.8.2 The Construction Ratio set forth below shall be applied to the amounts chargeable to FPC Accounts 920 and 921 for the purpose of determining one component in the computation of the Capital A & G Ratio as provided in Section E.9 hereof.

$$\text{Construction Ratio} = \frac{C}{L}$$

Where: C = The Operating Agent's direct labor in construction accounts (exclusive of A & G), to include construction labor billed to Participants, including the labor portion of Start-Up and Pre-Operation Costs subject to the construction administrative and general expense percentage of one percent (1%) pursuant to Section L.1.3, and excluding the labor portion of Start-Up and Pre-Operation Costs subject to the Operation and Maintenance A & G Ratio pursuant to Section L.1.3.

L = The Operating Agent's direct labor distributed, including accruals, less direct labor chargeable to FPC Accounts 920 through 931 and 935.

#11 E.8.3 Estimated and actual O & M Ratios and Construction Ratios shall be determined, adjusted and used in the manner set forth in Section E.10 hereof.

#11 E.8.4 The following example sets forth the method to be employed by the Operating Agent to determine the O & M Ratio and the Construction Ratio:

EXAMPLE COMPUTATION
O & M RATIO AND CONSTRUCTION RATIO

(Based on the Operating Agent's 1984 Experience)

| | | |
|---|---|---|
| Total direct labor in operation and maintenance Accounts | $148,557,953 | |
| Less: direct labor charged to administrative and general expense FPC Accounts 920 through 931, inclusive and FPC Account 935 | 13,160,635 | |
| Net Labor in O & M Accounts | $135,397,318 | |
| Total direct labor charged to General Ledger Accounts | 6,355,648 | |
| Total direct labor in construction Accounts (exclusive of A & G) | 56,061,726 | |
| Total Labor Base | $197,714,692 | |
| Ratio of net O & M labor to direct labor | $135,397,318 / $197,714,692 | = 68.481% |
| Ratio of construction labor to direct labor | $ 56,061 726 / $197,714,692 | = 28.355% |

Note: All labor figures include loading for allowed time.

#11 E.9 **Capital A & G Ratio:**

#1 #11 E.9.1 The Capital A & G Ratio shall be the percentage computed by dividing (i) the amounts equal to (A) the sum of (a) the total amounts charged to FPC Accounts 920 and 921 multiplied by the Construction Ratio computed in accordance with Section E.8 hereof, and (b) the product of the portion of labor charges included in (a) above multiplied by the sum of the Payroll Tax Ratio, the Benefits Ratio and the Compensation Insurance Ratio less (B) the one percent (1%) portion of administrative and general expenses charged to FPC Accounts 920 and 921 allocable to contract construction (including the administrative and general expenses (i) recovered on Start-Up and Pre-Operation Costs subject to the construction administrative and general expense percentage of one percent (1%) pursuant to Section L.1.3, (ii) recovered on ANPP construction expenses, and (iii) allocable to other contract construction) by (ii) the direct labor in construction accounts (exclusive of A & G), to include construction labor billed to Participants, excluding the labor portion of Start-Up and Pre-Operation Costs subject to the Operation and Maintenance A & G Ratio pursuant to Section L.1.3, less the labor portion of construction expenses to which the one percent (1%) portion of administrative and general expenses is applicable, and less the labor portion of Start-Up and Pre-Operation Costs subject to the construction administrative and general expense percentage of one percent (1%) pursuant to Section L.1.3.

#1
#11

E.9.2 The following example sets forth the method to be employed by the Operating Agent to determine the Capital A & G Ratio:

EXAMPLE COMPUTATION OF CAPITAL A & G RATIO

(Based on the Operating Agent's 1984 Experience)

| | Labor | Total |
|---|---|---|
| Administrative and General Salaries charged to FPC Account 920 | $17,408,542 | $17,406,779 |
| Office Supplies and Expenses charged to FPC Account 921 | | 7,208,084 |
| [Line 7] Total | $17,408,542 | $24,614,863 |
| Total FPC Accounts 920 and 921, multiplied [Line 9] by Construction Ratio @ 28,355% | $ 4,936,192 | $ 6,979,544 |
| Payroll Taxes @ 7.126% | | 351,753 |
| Pensions and Benefits @ 13.512% | | 666,978 |
| Compensation Insurance @ 0.451% | | 22,262 |
| Less that 1% portion of A & G allocable to Contract Construction, as further defined in Section E.9.1 | | 3,634,919 |
| Total A & G Expense allocable to Construction | | $ 4,385,618 |
| Construction Direct Labor | | 56,061,726 |
| Less the labor portion of Construction Work, Start-Up and Pre-Operation Costs subject to the construction administrative and general expense percentage of one percent (1%) | | 13,496,824 |
| Total Construction Direct Labor Base | | $42,564,902 |

Capital A & G Ratio for 1984 $4,385,618 ' $42,564,902 = 10.303%

Note: All labor figures include loading for allowed time.

E.10 Use and Adjustment of Estimated Ratios

E.10.1 At the start of each calendar year an estimated Payroll Tax Ratio, Benefits Ratio, Operation and Maintenance A & G Ratio, Compensation Insurance Ratio, O & M Ratio, Construction Ratio and Capital A & G Ratio shall be used, and such rates shall be determined in accordance with the methods set forth in Sections E.4, E.5, E.6, E.7, E.8, and E.9, respectively. Such rates shall be based on the Operating Agent's system-wide expenses for the preceding calendar

year; provided, that by agreement of the Auditing Committee, such rates may be adjusted to more nearly reflect the expenses of the current year because of tax legislation, labor contract negotiations, or other factors not reflected in the prior year's costs.

E.10.2 As soon as practicable after the end of each calendar year the actual Payroll Tax Ratio, Benefits Ratio, Operation and Maintenance A & G Ratio, Compensation Insurance Ratio, O & M Ratio, Construction Ratio and Capital A & G Ratio for such year shall be determined in accordance with the method set forth in Sections E.4, E.5, E.6, E.7, E.8, and E.9[,] respectively, by using said year's actual system-wide expenses of the Operating Agent. Using said actual ratios, the portions of the Operating Agent's Payroll Taxes, workmen's compensation expenses, employee pensions and benefits expenses, and administrative and general expenses for which the Participants are obligated hereunder for costs of Operating Work and Capital Improvements shall be determined for such year. To the extent that such expenses are more than or less than those already paid by the Participants during said year, the Operating Agent shall bill or reimburse the Participants for the amount of such difference.

E.11 Modifications of Rate Computations and Application

E.11.1 If any Participant believes that the application of or the method used in determining the Payroll Tax Ratio, Benefit Ratio, Operation and Maintenance A & G Ratio, Construction Insurance Ratio, O & M Ratio, Construction Ratio or Capital A & G Ratio results in an unreasonable burden on said Participant, that Participant may request that such application or method be submitted to the Auditing Committee for review; provided, that such review shall not be requested prior to June 1, 1983, and thereafter at intervals of not less than two (2) years each. After any such request, subject to the time limitations set forth above, the Auditing Committee shall review such application or method and shall endeavor to agree upon whether or not said believed unreasonable burden does actually exist. If after such review, the Auditing Committee determines that such application or method does result in an unreasonable burden on one or more of the Participants, the Auditing Committee shall determine and recommend a modified application or method to the Administrative Committee so that such unreasonable burden would be eliminated if such modified application or method is adopted by the Administrative Committee.

E.11.2 The Administrative Committee shall review the recommendations submitted by the Auditing Committee, and if as a result of such review, the Administrative Committee agrees that such unreasonable burden does exist and that said modified application or method eliminates such unreasonable burden, then the Administrative Committee shall adopt said modified application or method. If the Auditing Committee has not submitted a recommendation and the Administrative Committee agrees that such unreasonable burden does exist, the Administrative Committee shall endeavor to agree on a modified application or method. If the Administrative Committee is unable to agree on any matter brought before it under this Section E.11.2, then any Participant may call for arbitration of such matter pursuant to

Section 24 provided the procedures set forth in Section 6.10 of the Participation Agreement shall have been first invoked.

E.11.3 Any modified method adopted by the Administrative Committee or determined through arbitration shall be retroactive to the first day of the month in which the unreasonable burden began except that the retroactive period can be no more than two (2) years from the date of the requested review. Said modified method shall stay in effect until a new modified method is approved, but in no event less than two (2) years from the date of such adoption or determination.

# APPENDIX F

#7

# INVESTMENTS IN AND ACCOUNTING FOR NUCLEAR FUEL

F.1 **General Principles.** The principles set forth in this Section F.1 shall govern (i) the responsibilities of the Operating Agent, (ii) the responsibilities of the Administrative Committee and the Engineering and Operating Committee, (iii) the rights and obligations of the Participants and (iv) the financing of Nuclear Fuel investments by the Participants. Such principles recognize that (a) investments in Nuclear Fuel will be made considerably in advance of its use, (b) some elements affecting Fuel Expense may not be known until several years after the related Nuclear Fuel is used, (c) the FERC Accounts impose certain requirements respecting Nuclear Fuel cost accounting, (d) the responsibilities for furnishing Uranium Concentrates are governed by Appendix K to the Participation Agreement, and (e) in the event any Participant (non-scheduling-Participant) fails to fully schedule its Generation Entitlement Share of the Available Generating Capability of any Generating Unit and one or more other Participants (scheduling-Participant(s)) have fully scheduled its (or their) Generation Entitlement Share(s) of such capability, then the scheduling-Participant(s) will in certain circumstances be utilizing the portion of the Nuclear Fuel owned by the non-scheduling Participant. If the event described in (e) above should occur (except in cases where the failure to fully schedule results in underutilizaton of the Nuclear Fuel), then this Appendix F provides that the scheduling-Participants(s) shall reimburse the non-scheduling Participant for its share of the direct costs of the Nuclear Fuel used by scheduling-Participant(s). Such reimbursements shall exclude the non-scheduling Participant's indirect costs, including carrying charges on its investment in such Nuclear Fuel. The Participants agree that this treatment is warranted because, among other reasons, during the foreseeable future the occurrence of the event is considered to be remote, the duration short and the risk equal for all Participants. Additionally, each Participant has the right under Section 5.2 of the Participation Agreement to schedule Generation up to its Generation Entitlement Share subject to the provisions of Appendix K. Under the circumstances described in (e) above, the additional accounting and auditing complexities which would be required to provide for reimbursement of indirect costs, including carrying charges, are not justified. Such principles and their application as hereinafter set forth are subject to such changes as the Administrative Committee may from time to time determine.

F.1.1 **Responsibilities of the Operating Agent**

F.1.1.1 Subject to Sections 7.3 and 8.3 of the Participation Agreement and Appendix K thereto, the Operating Agent shall make and be responsible for all arrangements for the supply and disposal of Nuclear Fuel and the development and implementation of Nuclear Fuel management plans. In the event of any dispute among the Participants respecting any matter affecting the supply, disposal or management of Nuclear Fuel or in the event the Administrative Committee or Engineering and Operating Committee is unable or fails to approve, modify or otherwise act in a timely manner on any Nuclear Fuel Agreement or Nuclear Fuel management plan pursuant to Sections 6.2.7 and 6.3.2 of the Participa-

tion Agreement, the Operating Agent is authorized and obligated, pending the resolution of such dispute or action by the Administrative Committee or the Engineering and Operating Committee, to take such action, including without limitation, the execution and performance of any Nuclear Fuel Agreement, as it may in its discretion determine to be necessary to assure an adequate supply or appropriate disposition of Nuclear Fuel for the operation of each Generating Unit at its Maximum Generating Capability.

F.1.1.2 In the event any materials are recovered from the reprocessing of any irradiated Nuclear Fuel discharged from a Reactor and are suitable for recycling or sale, such recovered materials shall be recycled in one or more of the Generating Units unless the Engineering and Operating Committee shall otherwise determine. If the Engineering and Operating Committee determines that such recovered materials should not be recycled, such recovered materials shall be disposed of by the Operating Agent subject to Section 6.2.7 of the Participation Agreement.

F.1.1.3 The Operating Agent shall provide to the Participants (i) those forecasts, determinations, estimates and reports as may be required to comply with Sections F.3 and F.4 hereof and (ii) any other information requested by a Participant which is necessary to fulfill its reporting requirements.

F.1.1.4 The Operating Agent shall collect and record such data and take such other action as the Operating Agent shall determine to be necessary to furnish the forecasts, determinations, estimates, reports and information as required by Section F.1.1.3 hereof.

F.1.1.5 In the event with respect to any Fuel Assembly any changes are made in any factor which affects the determination of the Adjusted Assigned Fuel Expense or any Fuel Expense Credits or Debits associated with such assembly, the Operating Agent shall make adjustments as may be appropriate to reflect such changes in the manner provided by Section F.4.4 hereof. Such adjustments made by the Operating Agent with respect to any Fuel Assembly shall be final and subject to correction only as may be required by subsequent audit; provided that no such audit may require a change in the Operating Agent's estimate of Net Salvage Values made at the time of discharge of such assembly in accordance with criteria approved by the Engineering and Operating Committee.

F.1.1.6 The Operating Agent shall determine and account for investments in Nuclear Fuel, Assigned Fuel Expenses and Adjusted Assigned Fuel Expenses, and Net Salvage Values on a Fuel Assembly basis and shall keep such records and follow such procedures as may be required to determine as

accurately as is reasonably feasible the thermal output from each Fuel Assembly inserted into a Reactor.

F.1.2 **Responsibilities of the Administrative Committee and the Engineering and Operating Committee**

F.1.2.1 The Administrative Committee is authorized, in addition to those authorities and responsibilities delegated to it pursuant to Sections 6.2.2, 6.2.7, 6.9 and 15.4 of the Participation Agreement, to make (i) any change in the principles set forth in this Section F.1 as may be proposed by the Operating Agent or any other Participant and the manner of implementation of any such principle as provided in this Appendix F and (ii) findings pursuant to Section F.1.4.2 hereof with respect to any fuel financing arrangement entered into or proposed to be entered into by any Participant.

F.1.2.2 The Engineering and Operating Committee, in addition to those authorities and responsibilities delegated to it pursuant to Section 6.3 of the Participation Agreement, is authorized to (i) approve, modify or otherwise act on criteria recommended by the Operating Agent for estimating Net Salvage Values, (ii) determine from time to time whether reprocessing of Fuel Assemblies is feasible, (iii) approve changes in the Estimated Thermal Output or Net Salvage Value of one or more Fuel Assembly(ies) at times other than as provided in this Appendix F and (iv) make determinations that materials recovered from reprocessing any Fuel Assembly should or should not be recycled in one or more of the Generating Units.

F.1.3 **Participants' Rights and Obligations**

F.1.3.1 The Participants shall own undivided interests equal to their respective Generation Entitlement Shares (i) in all Nuclear Fuel in any form used or held for use for any Generating Unit, including Nuclear Fuel in storage, in process of conversion and in fabrication and materials recovered by reprocessing, but excluding any Additional Uranium Concentrates prior to delivery to a conversion facility by any Participant pursuant to Appendix K to the Participation Agreement, and (ii) in any monetary balance in any joint account of the Participants maintained under any Nuclear Fuel Agreement unless otherwise determined by the Administrative Committee.

F.1.3.2 The Participants shall share in accordance with their respective Generation Entitlement Shares (i) all costs to obtain and transport Nuclear Fuel to the Nuclear Plant Site in a form ready for use in a Reactor other than costs incurred by the Participants to obtain and deliver Uranium Concentrates to a conversion facility pursuant to Appendix K to the Participation Agreement, (ii) Fuel Handling Expenses, (iii) Fuel Management Expenses, (iv) all costs incurred in con-

nection with the shipment, storage, disposal or reprocessing of irradiated Nuclear Fuel and (v) the value of any materials recovered from reprocessing, but excluding from the costs described in (i) through (v) above any Participant's costs for interest on advanced funds, rental, carrying or use charges and, except as provided in Section 13.3 of the Participation Agreement, any ad valorem taxes or payments in lieu thereof.

F.1.3.3 Each Participant shall pay its share of all Nuclear Fuel Expenditures in advance pursuant to Section F.3 hereof.

F.1.3.4 The Participants' respective investments in Nuclear Fuel, including the Project Uranium Costs, less the related Net Salvage Values, shall be amortized during those periods when the Nuclear Fuel is in a Reactor on the basis of the thermal energy produced in such periods to start up the Reactor and to generate Energy.

F.1.3.5 The amortization charges referred to in Section F.1.3.4 hereof shall be considered Fuel Expense which shall be shared by the Participants in accordance with the ratio of the Nuclear Fuel's thermal output used by them, respectively, to the total thermal output from the Nuclear Fuel.

F.1.3.6 To the extent that the thermal output of any Fuel Assembly used by any Participant exceeds that Participant's Generation Entitlement Share of the total thermal output of such assembly, such Participant shall compensate the other Participants, subject to Section F.1.3.7 hereof, for the use of such excess thermal output. Such compensation shall be determined upon removal from a Reactor of such assembly for reprocessing or disposal or at other times as the Audit Committee shall establish. Such compensation shall be made by payment of the Assigned Fuel Expense Debits therefor to the Operating Agent who shall reimburse said other Participants as appropriate from such payments received for their respective Nuclear Fuel Expenditures and Project Uranium Costs.

F.1.3.7 In the event the then current Estimated Thermal Output of any Fuel Assembly is not fully utilized prior to its discharge from a Reactor due to the failure of one or more Participants to schedule operation of the associated Generating Unit up to its or their Generation Entitlement Share or Shares, then such Participant or Participants shall be entitled to compensation, but only in the event that the total thermal output actually utilized plus the additional thermal output which would have been utilized if such Participant or Participants had scheduled operation of such Generating Unit up to its or their respective Generation Entitlement Share or Shares exceeds the Estimated Thermal Output.

F.1.3.8 For the purpose of determining with respect to one or more Fuel Assemblies the amount of the Fuel Expense to be charged prior to the discharge of such Fuel Assembly(ies) from a Reactor for reprocessing or disposal, estimates of thermal output and salvage values shall be used. Such estimates shall be subject to change from time to time up to 30 days after such discharge or at such other times as the Engineering and Operating Committee shall direct.

F.1.4 **Participant Financing of Nuclear Fuel**

F.1.4.1 Any Participant may, subject to Section F.1.4.2 hereof and Section 15.4 of the Participation Agreement, arrange for the financing of all or any portion of its investment in Nuclear Fuel on such terms and conditions as it determines in its sole discretion to be acceptable, including without limitation, the conveyance and assignment of its undivided joint ownership interest in the Nuclear Fuel to its Fuel Financer.

F.1.4.2 No finacncing arrangement shall relieve such Participant from any obligations under this Appendix F or any other provision of the Participation Agreement. No such financing arrangement shall give nor purport to give the Fuel Financer any different rights or obligations under the Participation Agreement than would be possessed or imposed upon such Participant in the absence of such financing arrangement. No such financing arrangement nor the rights of any Fuel Financer thereunder shall be valid or enforceable against the Operating Agent or any other Participant until such arrangement has been found by the Administrative Committee to be consistent with this Appendix F and all other provisions of the Participation Agreement.

F.2 **Definitions.** The following terms, when used herein shall have the meanings hereinafter specified. Such terms have been separated into certain functional groupings to permit better understanding.

F.2.1 **Amortized Costs**

F.2.1.1 Assembly Cost (AC): The total costs incurred for a complete new Fuel Assembly ready for insertion into a Reactor and recorded in FERC Account 120.3, including the Project Uranium Costs for the Uranium Concentrates incorporated in such assembly or utilized or consumed in any and all processes involved in the manufacture of such assembly, less its estimated Net Salvage Value. Such total costs shall exclude (i) any Participant's costs for interest on advanced funds, rental, carrying or use charges and, except as provided in Section 13.3 of the Participation Agreement, any ad valorem taxes or payments in lieu thereof and (ii) all Fuel Handling Expenses and all Fuel Management Expenses.

F.2.1.2 **Assigned Assembly Cost (AAC):** The portion of the Assembly Cost assignable to each Participant for any Fuel Assembly which shall be equal to the product of (i) such Participant's Generation Entitlement Share multiplied by (ii) the Assembly Cost for such assembly.

F.2.1.3 **Net Salvage Value (NSV):** The amount, which may be either positive or negative, estimated for each Fuel Assembly by the Operating Agent in accordance with criteria approved by the Engineering and Operating Committee, including (i) all estimated costs of handling, transportation, offsite storage and disposal of such assembly or any portions thereof after its removal from a Reactor, but excluding all Fuel Handling Expenses and (ii) if such committee determines that reprocessing of such assembly is feasible, the estimated costs of reprocessing, including without limitation, the costs of waste disposal associated therewith, and the estimated value of any materials expected to be recoverable therefrom for reuse in any Reactor or for sale.

F.2.1.4 **Project Uranium Costs (PUC):** The total costs of obtaining and delivering Uranium Concentrates properly chargeable to FERC Account 120.1 which would have been incurred if all Uranium Concentrates required in the manufacture of a Fuel Assembly had been supplied at the average cost of those concentrates delivered in satisfaction of contracts to which the Operating Agent is a party pursuant to Appendix K to the Participation Agreement. Such average cost shall be determined by the Operating Agent using the weighted average inventory allocation method in accordance with Accounting Practice or such other method as the Audit Committee may establish.

F.2.2 **Thermal Output - Estimated, Actual and Presumed**

F.2.2.1 **Estimated Thermal Output (ETO):** The total thermal energy, expressed in megawatt-days (MWD), expected to be produced from one or more Fuel Assemblies as specified in the applicable Nuclear Fuel management plan(s) in effect from time to time as proposed by the Operating Agent and approved by the Engineering and Operating Committee pursuant to Section 6.3.2 of the Participation Agreement.

F.2.2.2 **Assigned Estimated Thermal Output (AETO):** The portion of the Estimated Thermal Output from one or more Fuel Assembly(ies) that is (are) assignable to each Participant, which is equal to the product of (i) such Participant's Generation Entitlement Share multiplied by (ii) the Estimated Thermal Output of such assembly(ies).

F.2.2.3 **Actual Thermal Output (ATO):** The recorded thermal energy expressed in megawatt-days (MWD) produced from one or more Fuel Assemblies during any given period or

periods of residence in a Reactor or Reactors which has or have been used to start up and operate such Reactor or Reactors at any Power level or levels.

F.2.2.4 **Assigned Actual Thermal Output (AATO):** The portion of the Actual Thermal Output of one or more Fuel Assemblies during any given period assignable to each Participant which shall be equal to the sum of (i) the product computed separately for each resident Fuel Assembly of (a) its total Actual Thermal Output during such period required for start-up and during operation of the Reactor in which such assembly(ies) is (are) residing at any Power level up to and including that required for such Reactor's Generating Unit to produce its Zero Net Load, multiplied by (b) such Participant's Generation Entitlement Share, and (ii) the product computed separately for each resident Fuel Assembly of (a) its total Actual Thermal Output during such period used for Net Energy Generation multiplied by (b) the percentage of the total Net Energy Generation from such Generating Unit during such period delivered to such Participant.

F.2.2.5 **Presumed Thermal Output (PTO):** The thermal output presumed to have been utilized by any Participant for the purpose of computing its Presumed Thermal Output Expense, if any, with respect to any Fuel Assembly whose Actual Thermal Output at the time of its discharge from a Reactor is less than its Estimated Thermal Output (as established at the time of its first insertion into a Reactor or such other time as the Engineering and Operating Committee shall specify) because such Participant, or such Participant and one or more other Participants, shall have failed to schedule operation of the associated Generating Unit up to its or their respective Generation Entitlement Share or Shares. Such Presumed Thermal Output shall be equal to the product of (i) the amount by which the Estimated Thermal Output for such assembly exceeded its Actual Thermal Output multiplied by (ii) the quotient of (a) the amount by which such Participant's Assigned Estimated Thermal Output exceeded such Participant's Assigned Actual Thermal Output divided by (b) the total of such amounts for all Participants whose respective Assigned Estimated Thermal Outputs exceeded their respective Assigned Actual Thermal Output.

F.2.3 **Fuel Expenses Chargeable to FERC Account 518**

F.2.3.1 **Assigned Fuel Expense (AFE):** The portion of the Fuel Expense assignable to each Participant in any month for one or more Fuel Assembly(ies) determined by multiplying (i) such Participant's Assigned Assembly Cost for such assembly(ies) by (ii) the quotient of (a) such Participant's Assigned Actual Thermal Output from such assembly(ies) in such month divided by (b) such Participant's

Assigned Estimated Thermal Output from such assembly(ies).

F.2.3.2 **Adjusted Assigned Fuel Expense (AAFE):** The amount determined for each Participant for one or more Fuel Assemblies at the time such assembly(ies) is (are) removed from a Reactor for reprocessing or other disposal, equal to the summation of such Participant's (i) Assigned Fuel Expenses for assembly(ies) during all periods such assembly(ies) was (were) utilized in a Reactor and (ii) Presumed Thermal Output Expense, if any, during such period.

F.2.3.3 **Presumed Thermal Output Expense (PTOE):** The expense assignable to any Participant for the purpose of computing such Participant's Adjusted Assigned Fuel Expense for one or more Fuel Assembly(ies), which shall be equal to the product of (i) such Participant's Assigned Assembly Cost multiplied by (ii) the quotient of such Participant's Presumed Thermal Output (see Section F.2.2.5 hereof) divided by its Assigned Estimated Thermal Output of such assembly(ies).

F.2.4 **Fuel Expense Credits and Debits**

F.2.4.1 **Fuel Expense Credit (FEC):** The amount, if any, determined for any Participant by which such Participant's Assigned Assembly Cost for such assembly(ies) exceeds such Participant's Adjusted Assigned Fuel Expense for such assembly(ies). This amount shall be determined upon the removal of one or more Fuel Assemblies from a Reactor for reprocessing or other disposal or at other times as the Audit Committee shall establish.

F.2.4.2 **Assigned Fuel Expense Debits (AFED):** With respect to one or more Fuel Assemblies, the portion of the sum of all Fuel Expense Credits chargeable to each Participant whose Assigned Actual Thermal Output from such assembly(ies) exceeds such Participant's Generation Entitlement Share of the Actual Thermal Output from such assembly(ies). This amount shall be equal to the amount determined by multiplying (i) the sum of all the Fuel Expense Credits for such assmebly(ies) by (ii) the quotient of (a) the amount that such Participant's Assigned Actual Thermal Output from such assembly(ies) exceeds such Participant's Assigned Estimated Thermal Output from such assembly(ies) divided by (b) the sum of all such amounts for all such Participants.

F.2.5 **Expenses Not Chargeable to FERC Account 518**

F.2.5.1 **Fuel Handling Expense (FHE):** All costs incurred by the Operating Agent in connection with the receipt, inspection, storage, insertion, removal, preparation for shipment

and other handling of Nuclear Fuel at the Nuclear Plant Site, but excluding any costs which shall be capitalized in accordance with Accounting Practice.

F.2.5.2 **Fuel Management Expense (FME):** All costs incurred by the Operating Agent in connection with planning and ordering of, contracting, accounting for, and scheduling and managing the use of Nuclear Fuel, including any computer charges, consultant's fees, costs of any advisory or management services furnished by any Nuclear Fuel supplier, payroll and associated costs of the Operating Agent's personnel and an allowance for administrative and general expense of the Operating Agent, but excluding Fuel Handling Expenses and any expense incurred by the Project Manager in connection with contracting for nuclear steam supply systems and for each Reactor's initially purchased supply of Fuel Assemblies, which expense shall be capitalized in accordance with Accounting Practice.

F.2.6 **Miscellaneous**

F.2.6.1 **Nuclear Fuel Expenditures (NFE):** All expenditures which are made or scheduled pursuant to any Nuclear Fuel Agreement, but excluding (i) any expenditures payable to a Fuel Financer and (ii) all Project Uranium Costs.

F.3 **Forecasts of Cash Requirements and Advances of Funds.**

F.3.1 On or before the beginning of each quarter commencing on the first day of January, April, July and October, the Operating Agent shall furnish to each Participant, and, at the written request of such Participant, to its Fuel Financer, if any, a ten-year forecast of such Participant's cash requirements for its share of all Nuclear Fuel Expenditures, including all payments to become due under each Nuclear Fuel Agreement then in effect (including without limitation the contracts identified in Section K.3.1 of Appendix K to the Participation Agreement, but excluding all other contracts to purchase Additional Uranium Concentrates), and estimates of all other expenditures, including without limitation, shipping charges, cask rentals, charges for storage at places other than the Nuclear Plant Site, reprocessing costs, enrichment services and conversion costs, of the character chargeable to FERC Account 120.5. Such forecast shall set forth such cash requirements (i) for each month of the first two years following the date of the forecast and (ii) for each year of the last eight years of the forecast.

F.3.2 At least ten (10) days in advance of the date on which any Nuclear Fuel Expenditure shall become due the Operating Agent shall send a request for funds to each Participant and, upon request of a Participant, a copy of such request for funds to its Fuel Financer for such Participant's share of such Nuclear Fuel Expenditure. Each Participant shall advance or cause to be advanced to the Operating Agent the funds so requested on or before said due date. In the event the amount advanced by any Participant shall exceed such Participant's share of the amount of Nuclear Fuel Ex-

penditures actually made, then any such excess advance shall be promptly returned to such Participant.

F.3.3 Funds not advanced to the Operating Agent as required pursuant to Section F.3.2 hereof shall be payable with interest from and after said due date at the rate provided in Section 23.3 of the Participation Agreement.

F.3.4 If a Participant shall dispute any portion of any amount specified in a forecast of Nuclear Fuel Expenditures or a request for funds, it shall make the total payment or advance specified in the request for funds and follow the procedures set forth in Section 23.4 of the Participation Agreement.

## F.4 Determinations, Estimates and Reports

F.4.1 **Upon receipt of Fuel Assemblies:** Promptly after receipt of the last Fuel Assembly of the initial core and subsequently of each reload batch for any Generating Unit, the Operating Agent shall determine for each Participant, when applicable, for each Fuel Assembly of such initial core or reload batch, and for all such Fuel Assemblies the totals of, the following:

F.4.1.1 Assembly Cost, including costs of the individual Nuclear Fuel cost components comprising the Assembly Cost with the dates when such cost components were paid.

F.4.1.2 Estimate of the Net Salvage Value.

F.4.1.3 Assigned Assembly Cost for each Participant.

F.4.1.4 Estimated Thermal Output.

F.4.1.5 Assigned Estimated Thermal Output.

F.4.2 **Upon Initial Fuel Loading:** At the time of the initial loading of Fuel Assemblies into a Reactor the Operating Agent shall update its determinations made in accordance with Section F.4.1 hereof making such adjustments as may be warranted due to changes in any factor affecting the Assigned Estimated Thermal Outputs or Assembly Cost.

F.4.3 **Monthly Determinations:** Not later than ten (10) days after the end of each month after the initial Nuclear Fuel loading, the Operating Agent shall determine with respect to each Fuel Assembly.

F.4.3.1 Actual Thermal Output and Assigned Actual Thermal Outputs during such month (i) for Reactor operation at any Power level up to that required for Zero Net Load and (ii) for Net Energy Generation.

F.4.3.2 Actual Thermal Output and Assigned Actual Thermal Outputs during entire period of residence in a Reactor or Reactors to the end of such month.

F.4.3.3 Assigned Fuel Expense for each Participant for such month.

F.4.3.4 The summation of the Assigned Fuel Expenses for each Participant as of the beginning and the end of such month.

F.4.3.5 In the event the Actual Thermal Output determined pursuant to Section F.4.3.2 hereof shall exceed the Estimated Thermal Output, net adjustments to be made in the Assigned Fuel Expenses for each Participant.

F.4.4 **Upon Shutdown of a Reactor for Removal of Fuel Assemblies for Reprocessing or Other Disposal:** Within thirty (30) days after the removal of any Fuel Assembly for reprocessing or other disposal, the Operating Agent shall determine on the basis of the best information then available with respect to such Fuel Assembly:

F.4.4.1 Assembly Cost.

F.4.4.2 Estimate of the Net Salvage Value.

F.4.4.3 Assigned Assembly Cost.

F.4.4.4 Actual Thermal Output during entire period of residence in a Reactor or Reactors.

F.4.4.5 Assigned Actual Thermal Output during such period for each Participant.

F.4.4.6 Presumed Thermal Output, if any, for each Participant.

F.4.4.7 Adjusted Assigned Fuel Expense for each Participant.

F.4.4.8 Net adjustments, for each annual reporting period affected, to the Assigned Fuel Expense for each Participant due to (i) differences between Estimated and Actual Thermal Output and (ii) changes in any factor affecting the estimate of the Net Salvage Value.

F.4.4.9 Fuel Expense Credits and Assigned Fuel Expense Debits applicable to such removed Fuel Assembly after making the net adjustments determined pursuant to Section F.4.4.8 hereof in the event the sum of the Actual Thermal Output and all Presumed Thermal Outputs, if any, determined for such Fuel Assembly is equal to or greater than its Estimated Thermal Output used to compute such Presumed Thermal Outputs.

F.4.5 **Prior to Reactor Start-up after Refueling:** Prior to start-up of a Reactor after any refueling, the Operating Agent shall determine with respect to each new Fuel Assembly inserted and each partially irradiated Fuel Assembly reinserted into the Reactor during such refueling the same data as that required under Section F.4.2 hereof.

F.4.6 The Operating Agent shall furnish to each Participant a report of each determination made pursuant to this Section F.4 promptly after such determination is made in a form and manner as may be recommended by the Operating Agent and approved by the Engineering and Operating Committee.

## F.5 Bills for Assigned Fuel Expense Debits and Adjustments

F.5.1 Within fifteen (15) days after making the determinations required under Section F.4.4.9 hereof, the Operating Agent shall bill each Participant having aggregate Assigned Fuel Expense Debits for the purpose of reimbursing those Participants having aggregate Fuel Expense Credits.

F.5.2 Promptly upon receipt of payment of any such bills for Assigned Fuel Expense Debits or net adjustments, including any interest thereon pursuant to Section F.5.3 hereof, the Operating Agent shall pay the amounts so received to those Participants entitled thereto pro rata.

F.5.3 Bills rendered pursuant to Section F.5.1 hereof shall be due and payable fifteen (15) days after receipt. Any bill not paid on its due date shall bear interest from and after said due date at the rate provided in Section 23.3 of the Participation Agreement.

F.5.4 If any Participant shall dispute any determination made by the Operating Agent pursuant to Section F.4 hereof or any bill rendered pursuant to this Secton F.5, the disputant shall make the total payment billed or accept the payment rendered and follow the procedures set forth in Section 23.4 of the Participation Agreement.

## F.6 Example Calculations

F.6.1 The following examples illustrate the manner in which calculations of Assigned Fuel Expenses, Fuel Expense Credits and Assigned Fuel Expense Debits are made under four scenarios with differing assumptions.

F.6.2 If a conflict arises between this Appendix F and the examples attached hereto, then this Appendix F shall govern.

# SCENARIO 1
## SAMPLE CALCULATION OF APPENDIX F
## ALL PARTICIPANTS USE THEIR ENERGY ALLOTMENT

| Participant | GES % | AAC $ | AETO MWD | AATO MWD | AFE $ | PTO MWD | PTOE $ | AAFE $ | FEC $ | AFED $ |
|---|---|---|---|---|---|---|---|---|---|---|
| A | 10 | 100,000 | 3,000 | 3,000 | 100,000 | —0— | —0— | 100,000 | —0— | —0— |
| B | 20 | 200,000 | 6,000 | 6,000 | 200,000 | —0— | —0— | 200,000 | —0— | —0— |
| C | 30 | 300,000 | 9,000 | 9,000 | 300,000 | —0— | —0— | 300,000 | —0— | —0— |
| D | 40 | 400,000 | 12,000 | 12,000 | 400,000 | —0— | —0— | 400,000 | —0— | —0— |
| Total | 100 | 1,000,000 | 30,000 | 30,000 | 1,000,000 | —0— | —0— | 1,000,000 | —0— | —0— |

Notes:

1. ATO = ETO = 30,000 MWD
2. AC = $1,000,000

CALCULATIONS:

1. GES Given
2. AAC = GES X AC
3. AETO = GES X ETO
   a. AETO (A) = 3,000 MWD = .10 X 30,000 MWD
   b. AETO (B) = 6,000 MWD = .20 X 30,000 MWD
   c. AETO (C) = 9,000 MWD = .30 X 30,000 MWD
   d. AETO (A) = 12,000 MWD = .40 X 30,000 MWD
4. AATO Given
5. AFE = AAC X (AATO ÷ AETO)
   a. AFE (A) = $100,000 = $100,000 X (3,000 MWD ÷ 3,000 MWD)
   b. AFE (B) = $200,000 = $200,000 X (6,000 MWD ÷ 6,000 MWD)
   c. AFE (C) = $300,000 = $300,000 X (9,000 MWD ÷ 9,000 MWD)
   d. AFE (D) = $400,000 = $400,000 X (12,000 MWD ÷ 12,000 MWD)
6. $$PTO = (ETO - ATO) \times \frac{(AETO - AATO)}{\Sigma (AETO - AATO)}$$
   Where ETO > ATO and AETO > AATO
   ETO = ATO. Therefore PTO for each Participant is zero.
   "*E*" denotes a summation for all Participants.
7. PTOE = AAC X (PTO ÷ AETO)
   PTO = 0 for each Participant. Therefore PTOE for each Participant is zero.
8. AAFE = AFE + PTOE
   a. AAFE (A) = $100,000 = $100,000 + 0
   b. AAFE (B) = $200,000 = $200,000 + 0
   c. AAFE (C) = $300,000 = $300,000 + 0
   d. AAFE (D) = $400,000 = $400,000 + 0
9. FEC = AAC — AAFE if AAC ≥ AAFE
   a. FEC (A) = 0 = $100,000 - $100,000
   b. FEC (B) = 0 = $200,000 - $200,000
   c. FEC (C) = 0 = $300,000 - $300,000
   d. FEC (D) = 0 = $400,000 - $400,000
10. $$AFED = \mathit{E}FEC \times \frac{(AATO - AETO)}{\Sigma (AATO - AETO)}$$
    Where AATO > AETO
    FEC (A) + FEC (B) + FEC (C) + FEC (D) = 0.
    Therefore AFED for each Participant is zero.

# SCENARIO 2
## SAMPLE CALCULATION OF APPENDIX F
## PARTICIPANTS A AND B USE ENERGY OF C AND D - NO PRESUMED THERMAL OUTPUT

| Participant | GES % | AAC $ | AETO MWD | AATO MWD | AFE $ | PTO MWD | PTOE $ | AAFE $ | FEC $ | AFED $ |
|---|---|---|---|---|---|---|---|---|---|---|
| A | 10 | 100,000 | 3,000 | 3,300 | 110,000 | —0— | —0— | 110,000 | —0— | 10,000 |
| B | 20 | 200,000 | 6,000 | 6,600 | 220,000 | —0— | —0— | 220,000 | —0— | 20,000 |
| C | 30 | 300,000 | 9,000 | 8,700 | 290,000 | —0— | —0— | 290,000 | 10,000 | —0— |
| D | 40 | 400,000 | 12,000 | 11,400 | 380,000 | —0— | —0— | 380,000 | 20,000 | —0— |
| Total | 100 | 1,000,000 | 30,000 | 30,000 | 1,000,000 | —0— | —0— | 1,000,000 | 30,000 | 30,000 |

Notes:

1. ATO = ETO =.30,000 MWD
2. AC = $1,000,000

CALCULATIONS:

1. GES Given
2. AAC = GES X AC
3. AETO = GES X ETO
   a. AETO (A) = 3,000 MWD = .10 X 30,000 MWD
   b. AETO (B) = 6,000 MWD = .20 X 30,000 MWD
   c. AETO (C) = 9,000 MWD = .30 X 30,000 MWD
   d. AETO (D) = 12,000 MWD = .40 X 30,000 MWD
4. AATO Given
   a. A uses 300 MWD more than its allotment
   b. B uses 600 MWD more than its allotment
   c. C loses 300 MWD of its allotment
   d. D loses 600 MWD of its allotment
5. AFE = AAC X (AATO ÷ AETO)
   a. AFE (A) = $110,000 = $100,000 X (3,300 MWD ÷ 3,000 MWD)
   b. AFE (B) = $220,000 = $200,000 X (6,600 MWD ÷ 6,000 MWD)
   c. AFE (C) = $290,000 = $300,000 X (8,700 MWD ÷ 9,000 MWD)
   d. AFE (D) = $380,000 = $400,000 X (11,400 MWD ÷ 12,000 MWD)
6. $$PTO = (ETO - ATO) \times \frac{(AETO - AATO)}{\Sigma (AETO - AATO)}$$
   Where ETO > ATO and AETO > AATO
   ETO = ATO. Therefore PTO for each Participant is zero.
   "*E*" denotes a summation for all Participants.
7. PTOE = AAC X (PTO ÷ AETO)
   PTO = 0 for each Participant. Therefore PTOE for each Participant is zero.
8. AAFE = AFE + PTOE
   a. AAFE (A) = $110,000 = $110,000 + 0
   b. AAFE (B) = $220,000 = $220,000 + 0
   c. AAFE (C) = $290,000 = $290,000 + 0
   d. AAFE (D) = $380,000 = $380,000 + 0
9. FEC = AAC — AAFE if AAC ≥ AAFE
   a. FEC (A) = 0 = $100,000 — $100,000
   b. FEC (B) = 0 = $200,000 — $200,000
   c. FEC (C) = 0 = $10,000 = $300,000 — $290,000
   d. FEC (D) = 0 = $20,000 = $400,000 — $380,000
10. $$AFED = \Sigma FEC \times \frac{(AATO - AETO)}{\Sigma (AATO - AETO)}$$
    Where AATO > AETO
    a. AFED (A) = $10,000 = $30,000 X (300 MWD ÷ 900 MWD)
    b. AFED (B) = $20,000 = $30,000 X (600 MWD ÷ 900 MWD)
    c. AFED (C) = 0
    d. AFED (D) = 0

# SCENARIO 3
## SAMPLE CALCULATION OF APPENDIX F
## PARTICIPANTS A AND B LOSE PART OF THEIR ENERGY ALLOTMENT AND HAVE PRESUMED THERMAL OUTPUT - PARTICIPANTS C AND D USE ALL OF THEIR ENERGY ALLOTMENT

| Participant | GES % | AAC $ | AETO MWD | AATO MWD | AFE $ | PTO MWD | PTOE $ | AAFE $ | FEC $ | AFED $ |
|---|---|---|---|---|---|---|---|---|---|---|
| A | 10 | 100,000 | 3,000 | 2,700 | 90,000 | 300 | 10,000 | 100,000 | —0— | —0— |
| B | 20 | 200,000 | 6,000 | 5,400 | 180,000 | 600 | 20,000 | 200,000 | —0— | —0— |
| C | 30 | 300,000 | 9,000 | 9,000 | 300,000 | —0— | —0— | 300,000 | —0— | —0— |
| D | 40 | 400,000 | 12,000 | 12,000 | 400,000 | —0— | —0— | 400,000 | —0— | —0— |
| Total | 100 | 1,000,000 | 30,000 | 29,100 | 970,000 | 900 | 30,000 | 1,000,000 | —0— | —0— |

Notes:

1. ETO = 30,000 MWD
2. ATO = 29,100 MWD
3. AC = $1,000,000

CALCULATIONS:

1. GES Given
2. AAC = GES X AC
3. AETO = GES X ETO
   a. AETO (A) = 3,000 MWD = .10 X 30,000 MWD
   b. AETO (B) = 6,000 MWD = .20 X 30,000 MWD
   c. AETO (C) = 9,000 MWD = .30 X 30,000 MWD
   d. AETO (D) = 12,000 MWD = .40 X 30,000 MWD

4. AATO Given
   a. A used 300 MWD less than its allotment
   b. B used 600 MWD less than its allotment
   c. C used exactly its allotment
   d. D used exactly its allotment .

5. AFE = AAC X (AATO ÷ AETO)
   a. AFE (A) = $ 90,000 = $100,000 X (2,700 MWD ÷ 3,000 MWD)
   b. AFE (B) = $180,000 = $200,000 X (5,400 MWD ÷ 6,000 MWD)
   c. AFE (C) = $300,000 = $300,000 X (9,000 MWD ÷ 9,000 MWD)
   d. AFE (D) = $400,000 = $400,000 X (12,000 MWD ÷ 12,000 MWD)

6. $$PTO = (ETO - ATO) \times \frac{(AETO - AATO)}{\Sigma(AETO - AATO)}$$
   Where ETO > ATO and AETO > AATO
   a. PTO (A) = 300 MWD = (30,000 MWD — 29,100 MWD) X ((3,000 MWD — 2,700 MWD) ÷ 900 MWD)
   b. PTO (B) = 600 MWD = (30,000 MWD — 29,100 MWD) X ((6,000 MWD — 5,400 MWD) ÷ 900 MWD)
   c. PTO (C) = 0
   d. PTO (D) = 0

7. PTOE = AAC X (PTO — AETO)
   a. PTOE (A) = $10,000 = $100,000 X (300 MWD ÷ 3,000 MWD)
   b. PTOE (B) = $20,000 = $200,000 X (600 MWD ÷ 6,000 MWD)
   c. PTOE (C) = 0
   d. PTOE (D) = 0

8. AAFE = AFE + PTOE
   a. AAFE (A) = $100,000 = $ 90,000 + $10,000
   b. AAFE (B) = $200,000 = $180,000 + $20,000
   c. AAFE (C) = $300,000 = $300,000 + 0
   d. AAFE (D) = $400,000 = $400,000 + 0

9. FEC = AAC — AAFE if AAC ≥ AAFE
   FEC = 0 for each Participant

10. $$AFED = \Sigma FEC \times \frac{(AATO - AETO)}{\Sigma(AATO - AETO)}$$
    Where AATO > AETO
    AFED = 0 for each Participant

Reformed Copy

# SCENARIO 4

## SAMPLE CALCULATION OF APPENDIX F
## PARTICIPANTS A AND B USE MORE THAN THEIR ALLOTMENT
## PARTICIPANTS C AND D HAVE A PRESUMED THERMAL OUTPUT

| Participant | GES % | AAC $ | AETO MWD | AATO MWD | AFE $ | PTO MWD | PTOE $ | AAFE $ | FEC $ | AFED $ |
|---|---|---|---|---|---|---|---|---|---|---|
| A | 10 | 100,000 | 3,000 | 3,300 | 110,000 | —0— | —0— | 110,000 | —0— | 10,000 |
| B | 20 | 200,000 | 6,000 | 6,600 | 220,000 | —0— | —0— | 220,000 | —0— | 20,000 |
| C | 30 | 300,000 | 9,000 | 8,100 | 270,000 | 692 | 23,067 | 293,067 | 6,933 | —0— |
| D | 40 | 400,000 | 12,000 | 9,000 | 300,000 | 2,308 | 76,933 | 376,933 | 23,067 | —0— |
| Total | 100 | 1,000,000 | 30,000 | 27,000 | 900,000 | 3,000 | 100,000 | 1,000,000 | 30,000 | 30,000 |

Notes:

1. ETO = 30,000 MWD
2. ATO = 27,000 MWD
3. AC = $1,000,000

CALCULATIONS:

1. GES Given
2. AAC = GES X AC
3. AETO = GES X ETO
   a. AETO (A) = 3,000 MWD = .10 X 30,000 MWD
   b. AETO (B) = 6,000 MWD = .20 X 30,000 MWD
   c. AETO (C) = 9,000 MWD = .30 X 30,000 MWD
   d. AETO (D) = 12,000 MWD = .40 X 30,000 MWD
4. AATO Given
   a. A used 300 MWD more than its allotment
   b. B used 600 MWD more than its allotment
   c. C used 900 MWD less than its allotment
   d. D used 3,000 MWD less than its allotment
5. AFE = AAC X (AATO ÷ AETO)
   a. AFE (A) = $110,000 = $100,000 X (3,300 MWD ÷ 3,000 MWD)
   b. AFE (B) = $220,000 = $200,000 X (6,600 MWD ÷ 6,000 MWD)
   c. AFE (C) = $270,000 = $300,000 X (8,100 MWD ÷ 9,000 MWD)
   d. AFE (D) = $300,000 = $400,000 X (9,000 MWD ÷ 12,000 MWD)
6. $$PTO = (ETO - ATO) \times \frac{(AETO - AATO)}{\Sigma(AETO - AATO)}$$
   Where ETO > ATO and AETO > AATO
   a. PTO (A) = 0
   b. PTO (B) = 0
   c. PTO (C) = 692 MWD = (30,000 MWD — 27,000 MWD) X (( 9,000 MWD — 8,100 MWD) ÷ 3,900 MWD)
   d. PTO (D) = 2,308 MWD = (30,000 MWD — 27,000 MWD) X ((12,000 MWD — 9,000 MWD) ÷ 3,900 MWD)
7. PTOE = AAC X (PTO ÷ AETO)
   a. PTOE (A) = 0
   b. PTOE (B) = 0
   c. PTOE (C) = $23,067 = $300,000 X ( 692 MWD ÷ 9,000 MWD)
   d. PTOE (D) = $76,933 = $400,000 X (2,308 MWD — 12,000 MWD)
8. AAFE = AFE + PTOE
   a. AAFE (A) = $110,000 = $110,000 + 0
   b. AAFE (B) = $220,000 = $220,000 + 0
   c. AAFE (C) = $293,067 = $270,000 + 23,067
   d. AAFE (D) = $376,933 = $300,000 + 76,933
9. FEC = AAC — AAFE if AAC ≥ AAFE
   a. FEC (A) = 0 = $100,000 — $100,000
   b. FEC (B) = 0 = $200,000 — $200,000
   c. FEC (C) = 6,933 = $300,000 — $293,067
   d. FEC (D) = 23,067 = $400,000 — $376,933
10. $$AFED = EFEC \times \frac{(AATO - AETO)}{\Sigma(AATO - AETO)}$$
    Where AATO > AETO
    a. AFED (A) = $10,000 = $30,000 X ((3,300 MWD — 3,000 MWD) ÷ 900 MWD)
    b. AFED (B) = $20,000 = $30,000 X ((6,600 MWD — 6,000 MWD) ÷ 900 MWD)
    c. AFED (C) = 0
    d. AFED (D) = 0

# APPENDIX G

## PRE-OPERATIONAL OPERATING WORK

### G.1 Training

G.1.1 The Operating Agent shall be responsible for the recruitment, employment, training and licensing of all personnel required for the operation and maintenance of ANPP, including without limitation senior reactor operators, reactor operators, equipment and maintenance personnel, fuel handling crews, engineering, nuclear, radiation protection and other supporting staff personnel and supervisors.

G.1.2 Within 90 days after execution of the contract for one or more nuclear steam supply systems, the Operating Agent shall prepare an ANPP operating and maintenance organization chart and a program, schedule and budget of employment, training and licensing requirements. Such organization chart, program, schedule and budget shall be submitted to the Administrative Committee for its review and approval. Following such review the Operating Agent shall proceed with the implementation thereof with such changes as may be directed by the Administrative Committee.

### G.2 Monitoring Programs

G.2.1 From and after the issuance of a construction permit by the U. S. Atomic Energy Commission the Operating Agent shall assume responsibility for the conduct of all on-site and off-site environmental monitoring programs, including those continuing environmental monitoring programs initiated by the Project Manager, relevant to the protection of the environment, the implementation of Section 29 of the Participation Agreement or as required by law.

G.2.2 In carrying out the responsibilities set forth in Section G.2.1 hereof the Operating Agent shall coordinate its activities, including those performed by any contractor, with the Project Manager so as to avoid or minimize any interference with any Construction Work.

G.2.3 The transfer of responsibility for environmental monitoring programs to the Operating Agent shall not relieve the Project Manager of its responsibilities of conducting Construction Work in compliance with Section 29 of the Participation Agreement.

### G.3 Pre-Operational Testing

G.3.1 The Operating Agent shall participate in and furnish the personnel required for the pre-operational testing of all systems and components of each Generating Unit as such systems are turned over to ANPP for such testing.

G.3.2 Such activities of the Operating Agent shall be coordinated with the Project Manager, and the Project Manager shall not accept any such systems or components without the consent of the Operating Agent.

G.4 **Acceptance, Storage and Loading of Nuclear Fuel.** In coordination with the Project Manager the Operating Agent shall be responsible, subject to the terms of any Nuclear Fuel Agreement, for delivery, schedules, inspection, acceptance and storage of Nuclear Fuel to or at the Nuclear Plant Site.

G.5 **Operating Procedures and Equipment.** The Operating Agent shall review, comment on and approve all operating procedures and equipment manuals prepared by any contractor or supplier of any system or component of each Generating Unit.

G.6 **Fuel Loading and Initial Start-up.** In coordination with the Project Manager and subject to the provisions of any Construction Agreement, the Operating Agent shall furnish such personnel as may be required to load Nuclear Fuel into each Reactor, conduct the initial start-up of each Generating Unit, including all operational testing of the systems and components thereof and all subsequent operation of the Generating Unit or any portion thereof prior to the Date of Firm Operation.

G.7 **Pre-Operational and Training Expenses**

G.7.1 The Operating Agent shall establish a separate account for accumulation of all charges incurred (except training expenses) relating to the operation of each Generating Unit prior to its Date of Firm Operation. Charges to this separate account shall include (a) the Estimated Fuel Expense and other consumable supplies, items and equipment incidental to start-up and (b) the cost of all operation and maintenance expenses (exclusive of the cost of all operation and maintenance performed by start-up crews furnished by any contractor) determined in accordance with Section 11 of the Participation Agreement.

G.7.2 The Project Manager shall charge all costs accumulated in such separate account to Construction Costs.

G.7.3 The initial training expenses shall consist of labor (except for maintenance personnel engaged in actual construction), material, transportation, services and any other costs applicable to hiring and training, including any relocation of personnel, for Operating Work.

G.7.4 Initial training expenses shall also include departmental overheads, time-off allowances, Payroll Taxes, employee pensions and benefits, workmen's compensation expenses and administrative and general expenses determined in accordance with Section 11 of the Participation Agreement.

G.7.5 The Operating Agent shall accumulate the initial training expenses up to but not beyond the Date of Firm Operation in a manner to provide identification and basis for the monthly billing to the Participants in accordance with Section G.7.6 hereof.

G.7.6 The Operating Agent shall bill each Participant and each Participant shall advance funds to the Operating Agent for the payment of training expenses in the manner set forth in Section 12 of the Participation Agreement.

# APPENDIX H

## OPERATING EMERGENCY

H.1 In the event of an Operating Emergency, the Operating Agent shall, in addition to the action required to be taken pursuant to Section 8.3.26 of the Participation Agreement, take such steps as are required in this Appendix H.

H.2 As soon as practicable after the commencement of an Operating Emergency, the Operating Agent shall advise each Participant of the occurrence of the Operating Emergency, its nature and the steps taken or to be taken to terminate the Operating Emergency.

H.3 As soon as practicable after giving the advice required pursuant to Section H.2 hereof, the Operating Agent shall submit an estimate of expenses, incurred and projected, required to terminate the Operating Emergency and to restore the availability of each Generating Unit affected and the estimated time schedule within which such measures can be accomplished. In the event the uninsured cost of restoring the availability of such Generating Unit to its Rated Capacity shall exceed 10% of its original cost as defined in the FPC Accounts, the Operating Agent shall obtain the approval of the Administrative Committee before committing any expenditures therefor; provided however, that nothing herein shall prevent the Operating Agent from incurring any expense it deems in its sole discretion necessary to protect the health and safety of the public.

H.4 Subject to Section H.3 hereof and Section 16 of the Participation Agreement, costs incurred in terminating an Operating Emergency and restoring the availability of each Generating Unit affected may be billed to the Participants by the Operating Agent on the basis of its estimate of such costs with adjustment to be made in accordance with Sections H.6 and H.7 hereof when a final cost determination has been made.

H.5 Following the termination of the Operating Emergency, the Operating Agent shall submit to each Participant a report containing a summary of the costs incurred and expenditures made in connection with the repair, restoration or reconstruction and such other information as may be required by the Administrative Committee.

H.6 The Operating Agent shall allocate to the Participants, in accordance with Section 11 of the Participation Agreement, the costs incurred or expenditures made in such repair, restoration or reconstruction which are charged as maintenance expense.

H.7 The Operating Agent shall allocate to the Participants, in accordance with their respective Generation Entitlement Shares[,] the costs incurred or expenditures made in such repair, restoration or reconstruction which are capitalized.

# APPENDIX I

## PRINCIPLES FOR OWNERSHIP, CONSTRUCTION AND OPERATION OF THE ANPP HIGH VOLTAGE SWITCHYARD(S)

I.1 **Components of ANPP High Voltage Switchyard(s).** The ANPP High Voltage Switchyard(s) shall consist, as generally depicted on Exhibit I-1 attached to this Appendix I, of a basic breaker-and-a-half scheme, comprising the termination facilities for the transmission lines, generator step-up transformer high voltage leads and auxiliaries, including, but not limited to, the high voltage busses, structures, power circuit breakers, disconnect switches, control building, switchyard auxiliary and protection systems and fencing.

I.2 **Ownership, Titles and Cost Responsibilities.** The Participants shall acquire firm entitlement and shall acquire and own undivided interest as tenants in common in the components of the ANPP High Voltage Switchyard(s) as follows:

I.2.1 Description of facilities associated with generator and auxiliary terminations to be developed, which facilities shall be owned and the cost responsibility shared by the Participants in proportion to their respective Generation Entitlement Shares.

I.2.2 Description of facilities associated with outgoing lines to be developed which facilities shall be owned and the cost responsibility shared by the Participants on the basis of the ratio of the number of their respective bay positions to the total number of bay positions.

I.3 **Project Manager and Operating Agent**

I.3.1 Salt River Project shall be the "project manager" and "operating agent" for the ANPP High Voltage Switchyard(s), shall carry out the duties and responsibilities associated therewith pursuant to the provisions of the Participation Agreement applicable to the Project Manager and Operating Agent except as such provisions shall be inappropriate to a high voltage switchyard(s).

I.3.2 The system studies, engineering, design, construction, operation and maintenance of the ANPP High Voltage Switchyard(s) performed by the "project manager" and "operating agent" shall be coordinated with ANPP and shall meet all requirements, including without limitation, reliability and quality assurance criteria, imposed by industry codes and standards and Federal and state regulatory agencies.

I.3.3 The "project manager" for the ANPP High Voltage Switchyard(s) shall provide the Project Manager with such information, studies and documents respecting the ANPP High Voltage Switchyard(s) as it may request for the purpose of obtaining any requisite permit, license, certificate or authority to construct and operate ANPP, and shall make available to the Project Manager for ANPP qualified personnel for appearance at any meetings, conferences or hearings with or before any regulatory agency.

## I.4 Use of High Voltage Switchyard(s)

I.4.1 Each Participant shall have the right to use its firm entitlement in the ANPP High Voltage Switchyard(s) according to its cost responsibility to transmit to or from its designated delivery points under normal operating conditions Power in an amount equivalent to the sum of its Power entitlements in each Generating Unit when operated at its Target Capacity and to reserve the ANPP High Voltage Switchyard(s) for such other equivalent transmission capacity without regard to the origin, source, ownership or type of generation used to produce such Power.

I.4.2 Any Participant may acquire firm entitlement, including additional delivery points, in and the right to use the ANPP High Voltage Switchyard(s) in addition to that provided for in Section I.4.1 hereof, upon the written agreement of all Participants having cost responsibility under the Participation Agreement for the facilities over which such firm entitlement is sought, provided that said firm entitlement does not materially interfere with the right of any other Participant to utilize its entitlement as provided in Section I.4.1 hereof. Such written agreement shall specify the amount of monetary compensation to be paid to and the allocation among the Participants for such firm entitlement.

I.4.3 Any Participant may make non-firm use of ANPP High Voltage Switchyard(s) capacity in addition to its uses under Sections I.4.1 and I.4.2 hereof to the extent that such capacity is determined to be available by the "operating agent" for the ANPP High Voltage Switchyard(s) in accordance with criteria to be approved by the Administrative Committee.

I.4.4 If two or more Participants concurrently desire to make non-firm use of ANPP High Voltage Switchyard(s) capacity in the same segment of the ANPP High Voltage Switchyard(s) pursuant to Section I.4.3 hereof and the available capacity in such segment is not adequate to satisfy all such requests, then, unless otherwise agreed, the available capacity will be shared by those Participants concurrently requesting such capacity in proportion to their respective cost responsibilities in such segment.

I.4.5 The Participant's designated points of delivery shall be determined by system studies; however, each Participant shall have at least one designated delivery point at the ANPP High Voltage Switchyard(s).

I.4.6 Each Participant shall be entitled to interconnect its transmission system with the ANPP High Voltage Switchyard(s), and the costs of such interconnection shall be paid by such Participant.

I.4.7 It is not the intention of the Participants to dedicate any capacity in the ANPP High Voltage Switchyard(s) for use by third parties.

## I.5 Additions to ANPP High Voltage Switchyard(s)

I.5.1 In the event a Participant desires an additional bay position(s) in the ANPP High Voltage Switchyard(s), the ownership ratios prescribed in Section I.2.2 hereof, and the cost responsibility associated therewith, shall be reallocated among all Participants having an interest therein

based upon the ratio of the "revised" number of their respective bay positions to the "revised" total number of bay positions.

I.5.2 A Participant desiring an additional bay position in the ANPP High Voltage Switchyard(s) pursuant to this Section I.5, shall furnish, at its own expense, sufficient breakers to maintain the basic breaker-and-a-half scheme, and such other facilities as are necessary to provide an additional bay position, which facilities upon installation shall become part of the ANPP High Voltage Switchyard(s).

I.5.3 The design of switchyard additions shall be approved by the "operating agent".

## I.6 Transfer or Assignment of Interest

I.6.1 The provisions of Section 15 of the Participation Agreement shall apply to the ANPP High Voltage Switchyard(s) subject to the following:

I.6.1.1 Any transfer or assignment by a Participant of all or part of its Generation Entitlement Share, together with an equal interest in the ownership of ANPP and in the Project Agreements, shall include the transfer or assignment, as the case may be, of an equal interest in that portion of the ANPP High Voltage Switchyard(s) described in Section I.2.1 hereof attributable to said Participant.

I.6.1.2 In the event of a transfer or assignment by a Participant of part of its ownership interest in that portion of the ANPP High Voltage Switchyard(s) described in Section I.2.2 hereof, the ownership ratios and cost responsibilities associated therewith shall be reallocated among all Participants having an ownership interest therein, said reallocation to be based on the ratio of the "revised" number of their respective pay positions to the "revised" total number of bay positions.

I.6.1.3 Any transferee or assignee of that portion of the ANPP High Voltage Switchyard(s) described in Section I.2.2 hereof, shall furnish, if necessary, at its own expense, sufficient breakers to maintain the basic breaker-and-a-half scheme, and such other facilities as are necessary to provide said transferee or assignee a bay position within the ANPP High Voltage Switchyard(s), which facilities, upon installation, shall become part of the ANPP High Voltage Switchyard(s).

# EXHIBIT I-1

## ANPP HIGH VOLTAGE SWITCHYARD

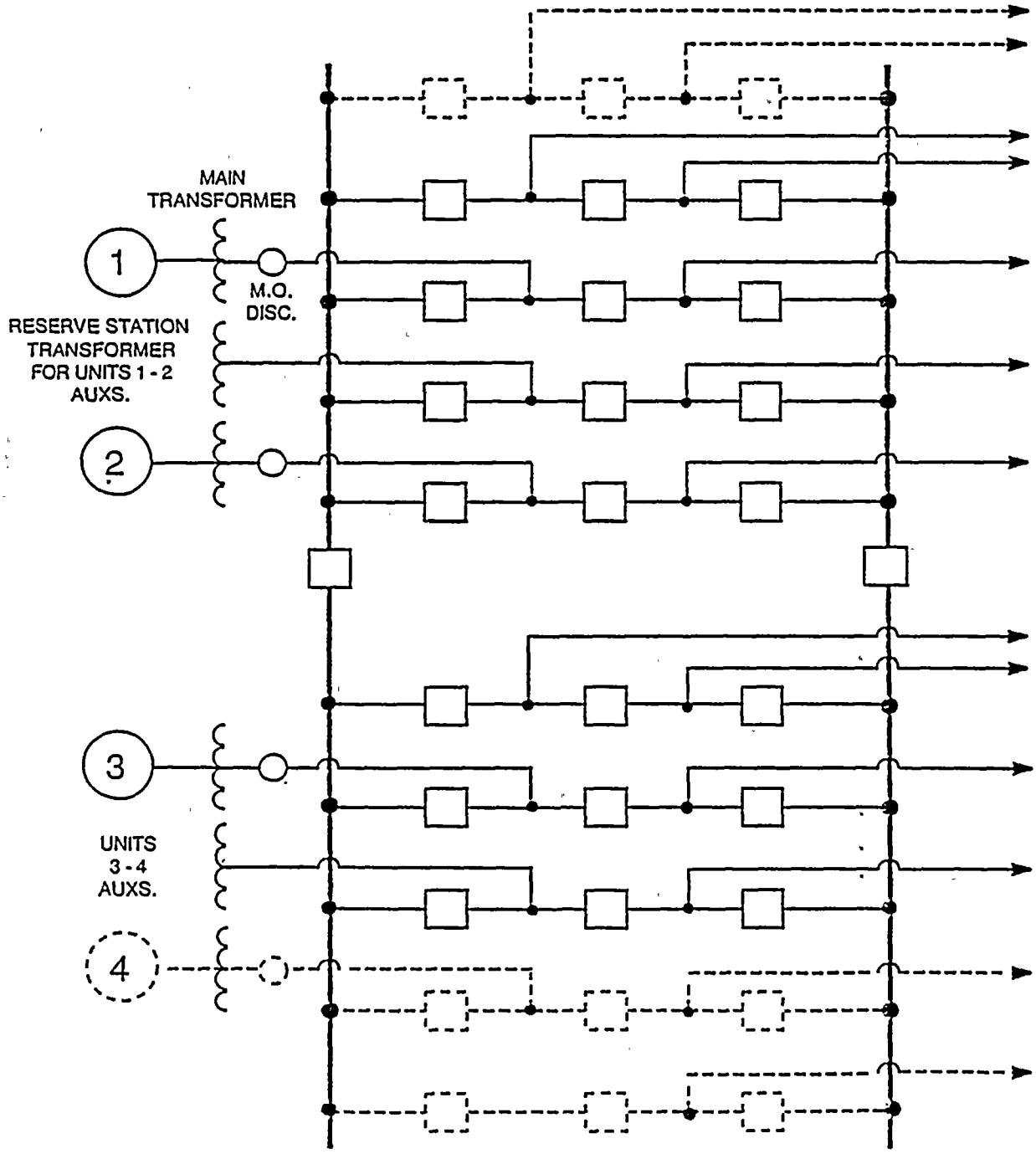

# APPENDIX J

## PRINCIPLES OF INTERCONNECTED OPERATION FOR FOUR CORNERS INTERCONNECTION AGREEMENT

The following principles with respect to Forecast Capacity Resources Margin, Spinning Reserve Capacity, Emergency Service, Interruptible Load as a substitute for Spinning Reserve Capacity, and System Operations are agreed to and shall be incorporated in the Four Corners Interconnection Agreement:

### 1.0 Forecast Capacity Resources Margin

1.1 The Forecast Capacity Resources Margin of each Participant for any month is the difference between its Capacity Resources for that month and its Estimated Peak Demand for that month where:

1.1.1 Except as provided in Section 1.9 hereof, Capacity Resources are the sum of such Participant's Existing Capacity Resources and Planned Capacity Resources which have been accredited by the Interconnection Committee under the criteria set forth in Exhibit I hereto.

1.1.2 Except as provided in Section 1.3 hereof, Estimated Peak Demand shall be based on historical Peak Demands and shall include provisions for such things as anticipated load growth and anticipated additions or deletions of large loads.

1.2 The Participants recognize that it is prudent practice that each provide a Forecast Capacity Resources Margin at least equal to 15% of the Estimated Peak Demand for each month of each calendar year, but the Interconnection Agreement shall not obligate any Participant to do so.

1.3 Except for uncontrollable forces, if any Participant is unable to provide an Actual Capacity Resources Margin at least equal to 15% of the Peak Demand for each month of any three consecutive calendar years when its Forecast Capacity Resources Margin has been 15% or greater for each month of the same three years, the Estimated Peak Demand to be submitted by such Participant during the next three consecutive calendar years shall be at least equal to the Estimated Peak Demand computed using the arithmetic average of such Participant's electric system load growth rate in per cent for the immediate preceding five years.

1.4 The Forecast Capacity Resources Margin factor of 15% referred to in Sections 1.2 and 1.3 hereof shall be subject to review by the Interconnection Committee at any time upon the request of any Participant and may be changed only by unanimous agreement of the Participants, acting through the Interconnection Committee.

1.5 Except as provided in Section 1.6 hereof, on or before November 1 of each calendar year until termination of the Interconnection Agreement, each Participant (hereinafter referred to as "First Participant") shall, and at any other time may, prepare for its electric system and submit to each other Participant (hereinafter referred to as "Second Participant") for review, its history and

forecast, prepared on a monthly basis, of (i) Peak Demands, Existing Capacity Resources and Actual Capacity Resources Margin for the preceding calendar year, and (ii) Estimated Peak Demands, Existing Capacity Resources and Planned Capacity Resources for the next three consecutive calendar years (such history and forecast are hereinafter referred to as "Program"). Each Program shall contain such detailed information, be based on such assumptions and be in such form as the Interconnection Committee may from time to time specify. The three-year period may be changed only by unanimous agreement of the Participants, acting through the Interconnection Committee.

1.6 The initial Program submitted by each First Participant in accordance with Section 1.5 hereof shall contain information for the calendar year 1969 and the next three consecutive calendar years. Such initial Program of each First Participant shall not be subject to objection by any Second Participant.

1.7 Each Participant shall take all steps reasonably necessary to carry out its most recently submitted Program. Each First Participant shall promptly submit to each Second Participant a new Program if at any time such First Participant (i) establishes a new forecast of Estimated Peak Demand which differs from that in its most recently submitted Program, or (ii) determines it will be unable to retain the Existing Capacity Resources or provide the Planned Capacity Resources shown in its most recently submitted Program, or (iii) chooses to change its Capacity Resources as shown in its most recently submitted Program. Such new Program shall reflect such differences or changes and shall state the reasons therefor. The Program previously accepted will stay in force for sixty (60) days after submittal of the revised Program.

1.8 Each Program submitted in accordance with Section 1.5 hereof and each revised Program submitted in accordance with Section 1.7 hereof shall be reviewed by each Second Participant; provided, however, that:

1.8.1 For any Program submitted in accordance with Section 1.5 hereof, only the new information submitted for the calendar year furthest in the future in each Program shall be subject to acceptance or objection by each Second Participant. Each First Participant's Program shall be deemed to have been accepted by each Second Participant which has not notified such First Participant and all other Second Participants of an objection within sixty (60) days following submittal of the Program.

1.8.2 For any revised Program submitted in accordance with Section 1.7 hereof, only that portion of the original Program which has been revised shall be subject to acceptance or objection by any Second Participant. Each revised Program shall be deemed to have been accepted by each Second Participant which has not notified the First Participant submitting such revised Program and all other Second Participants of an objection within sixty (60) days following submittal of the revised Program.

1.8.3 If any Second Participant objects to the Program or the revised Program of any First Participant and so notifies such First Participant and all other Second Participants within sixty (60) days,

such Second Participant shall be relieved of its obligation specified under Section 3.2 hereof to provide Emergency Service to such First Participant during the calendar year or portion thereof, as the case may be, corresponding to the part of the Program or revised Program to which the objection was made by such Second Participant. Such First Participant shall also be relieved of its obligation specified under Section 3.3 hereof to schedule Emergency Service from such Second Participant during such calendar year or such portion thereof.

1.8.4 Except for uncontrollable forces, if under the revised Program submitted in accordance with Section 1.7 hereof, any First Participant (i) defers construction of a Planned Capacity Resource, or (ii) retires an Existing Capacity Resource included in its Program during the period of applicability of such revised Program, or (iii) terminates or fails to effect any purchase of a Capacity Resource during the period of applicability of such revised Program, which in any case causes such revised Program to result in a Forecast Capacity Resources Margin of less than 15% of the Estimated Peak Demand in any month, and such deficiency has not been waived by all Second Participants, the rate to such First Participant for purchasing Emergency Service from any Second Participant scheduled under this Interconnection Agreement during the period of applicability of such revised Program shall be as provided in Section 3.4.2 hereof.

1.8.5 If under any revised Program submitted in accordance with Section 1.7 hereof, such First Participant's Capacity Resources are reduced because of uncontrollable forces, resulting in a Forecast Capacity Resources Margin of less than 15%, the rate to a First Participant for purchasing Emergency Service scheduled under this Interconnection Agreement during the period of such deficiency shall be as provided in Section 3.4.1 hereof.

1.9 If a Second Participant objects to a Planned Capacity Resource of a First Participant, the matter shall not be resolved until such Planned Capacity Resource under dispute is, in the opinion of such First Participant, capable of becoming an Existing Capacity Resource. At that time the Second Participant may request that the Interconnection Committee accredit the Existing Capacity Resource. If the Interconnection Committee is unable to make such accreditation, then either the First Participant or the Second Participant may submit the matter to arbitration. Prior to and during the dispute, and during arbitration, the Capacity Resource shall be deemed to have been accredited by the Interconnection Committee in accordance with Section 1.1.1 hereof as claimed by the First Participant submitting the Program.

1.10 When a Participant is involved in a future multiple-ownership Planned Capacity Resource, to the extent that such resource is planned for service at a date later within the same calendar year than such Participant would have been able to place an alternative resource in service on its own electric system during such calendar year, such Participant shall be allowed to include the amount of its participation in such resource in its Planned Capacity Resources beginning with the date it can demonstrate it would have been capable of placing such alternative resource in service.

## 2.0 Spinning Reserve Capacity

2.1 Except as provided in Section 3.3.1 hereof, each Participant shall at all times be obligated to maintain a minimum amount of Spinning Reserve Capacity equal to the larger of:

2.1.1 Seven per cent (7%) of its electric system Demand for the then-current clock-hour; or

2.1.2 The Existing Capacity Resources associated with the largest single contingency loss of generation due to the loss of any single synchronized generating unit or single transmission circuit on or serving its electric system.

2.2 During any period in any day when a Participant is receiving energy from any other Participant and/or third party pursuant to a contract which provides that such energy is interruptible at the discretion of the supplier, such receiving Participant shall maintain, in addition to the Spinning Reserve Capacity required under Section 2.1 hereof, an amount of Spinning Reserve Capacity equivalent to that generating capacity which would be required to generate such interruptible energy on the electric system of such receiving Participant.

2.3 The following constitutes Spinning Reserve Capacity or shall be considered a substitute for Spinning Reserve Capacity:

2.3.1 Unloaded generating capacity synchronized to an electric system on units and at locations whereby governor, load frequency response or other control action will cause such generating capacity to assume load.

2.3.2 Interruptible Load meeting the criteria set forth in Exhibit II hereto but not to exceed 15% of a Participant's obligation to maintain Spinning Reserve Capacity, as set forth in Section 2.1 hereof.

2.3.3 Existing Capacity Resources which are loaded with energy being supplied to another Participant and/or third party pursuant to contracts which provide that such energy is interruptible without notice at the discretion of such supplying Participant, and for which the purchaser is carrying an amount of Spinning Reserve Capacity equivalent to the amount of generating capacity required to generate such energy, in addition to the purchaser's other obligations to carry Spinning Reserve Capacity.

2.4 The obligation of each Participant to maintain the amount of Spinning Reserve Capacity set forth in Section 2.1 hereof shall be met:

2.4.1 By such Participant maintaining Spinning Reserve Capacity on its own electric system which is not contractually committed to other Participants and/or third parties as Spinning Reserve Capacity;

2.4.2 By such Participant purchasing Spinning Reserve Capacity from any other Participant or third party which is not being used by the

seller to meet its obligation to maintain Spinning Reserve Capacity and which is not contractually committed to other Participants or third parties as Spinning Reserve Capacity; provided that sufficient unloaded transmission capacity and/or transmission capacity loaded with energy which is interruptible exists and is available between the electric systems of such Participant and the seller to enable such Participant to meet the obligation of Section 2.1 hereof;

2.4.3 By such Participant sharing Spinning Reserve Capacity with other Participants and/or third parties under contractual arrangements in full force; provided that the total amount of Spinning Reserve Capacity available to the sharing Participants and/or third parties must be at least equal to the greater of (i) 7% of the coincident clock-hour Demand on the combined electric systems of the sharing Participants and/or third parties for the then-current clock-hour, or (ii) the generating capacity associated with the largest single contingency loss of generation due to the loss of any single, synchronized generating unit or single transmission circuit on the combined electric systems of the sharing Participants and/or third parties or serving the combined electric systems of the sharing Participants and/or third parties for the purpose of transmitting generating capacity to which such sharing Participants and/or third parties are entitled from other electric systems; provided further, that sufficient unloaded transmission capacity and/or transmission capacity loaded with energy which is interruptible exists and is available between the electric systems of such Participant and the seller to enable such Participant to meet the obligation of Section 2.1 hereof; or

2.4.4 By any combination of Sections 2.4.1, 2.4.2 and 2.4.3 hereof.

## 3.0 Emergency Service

3.1 Emergency Service under this Interconnection Agreement shall consist of:

3.1.1 Spinning Reserve Capacity (without energy) scheduled and purchased by a Participant from other Participants to meet the obligation of the purchasing Participant to maintain Spinning Reserve Capacity.

3.1.2 Capacity Resources and associated energy scheduled and purchased by a Participant from another Participant to meet a part of the purchasing Participant's electric system load requirements.

3.2 Except as provided in Section 1.8.3 hereof, in the event of an Emergency affecting the electric system of any Participant, each other Participant shall make every reasonable effort to schedule requested Emergency Service to such Participant during the period of the Emergency as requested by such Participant; provided, that the supplying Participant shall be the sole judge of its ability to provide such Emergency Service without impairing reliability of service to its customers and its ability to fulfill its obligations to others.

3.3 Except as provided in Section 1.8.3 hereof, each Participant suffering an Emergency on its electric system shall be obligated to schedule Emergency Service under this Interconnection Agreement or similar service under contracts or arrangements with others as follows:

3.3.1 Such Participant shall be relieved of its obligation to maintain the amount of Spinning Reserve Capacity set forth in Section 2.1 hereof, but not the obligation set forth in Section 2.2 hereof, for a period equal to the longer of (i) 12 hours or (ii) the remainder of that calendar day. Due diligence shall be used by such Participant to restore its Spinning Reserve Capacity and meet its obligation for maintaining Spinning Reserve Capacity as soon as practicable after the commencement of such Emergency. If such Participant, by utilizing Spinning Reserve Capacity on its own electric system and/or Spinning Reserve Capacity of the other Participants and/or third parties with which it has contractual arrangements in full force to share Spinning Reserve Capacity, is unable to meet its obligation under Section 2.1 hereof by the time of the expiration of the aforesaid period of (i) 12 hours or (ii) the remainder of that calendar day, then such Participant shall purchase and schedule from other Participants and/or third parties the Spinning Reserve Capacity required to meet its obligation under Section 2.1 hereof.

3.3.2 Notwithstanding Section 3.3.1 hereof, if such Emergency causes Existing Capacity Resources to be less than load plus minimum regulating margin on a Participant's electric system, such Participant shall within one-half hour (i) schedule Emergency Service or similar service and/or (ii) reduce load on its electric system, in amounts sufficient to provide at least a minimum regulating margin on its electric system.

3.4 The rates of Emergency Service scheduled by a Participant under this Interconnection Agreement shall be as follows:

3.4.1 Except as provided in Section 3.4.2 hereof, if Emergency Service is scheduled by any Participant with any other Participant under this Interconnection Agreement, the receiving Participant shall pay the supplying Participant at a rate of $0.10 per day for each kilowatt of demand scheduled up to a maximum of $2.00 per kilowatt-month. The minimum rate for any Emergency Service scheduled for less than one day under this Section 3.4.1 shall be $0.10 per kilowatt.

3.4.2 If Emergency Service shall be scheduled at any time during the calendar year for which the scheduling Participant has submitted a Program, in accordance with Section 1.5 hereof, or a revised Program in accordance with Section 1.7 hereof which shows the Forecast Capacity Resources Margin to be less than 15% of its Estimated Peak Demand for any month of the said calendar year, then the receiving Participant shall pay the supplying Participant at a rate of $1.00 per kilowatt per week for each week in such calendar year in which it schedules Emergency Service under this Section 3. The minimum rate for any Emergency Service sched-

uled for less than one week under this Section 3.4.2 shall be $1.00 per kilowatt.

3.4.3 The Participant furnishing energy with said Emergency Service shall receive payment for such energy at the rate of 115% of the Incremental Cost incurred by such Participant in furnishing such energy.

3.5 If an Emergency on a Participant's electric system causes its Existing Capacity Resources available to meet load to be less than load plus minimum regulating margin and such Participant has not within one-half hour (i) scheduled Emergency Service under this Interconnection Agreement or similar service under other contracts in full force and/or (ii) reduced load on its electric system in amounts sufficient to provide at least a minimum regulating margin on its electric system, then such Participant shall be deemed to have scheduled Emergency Service from the other Participants for the duration of such period in an amount equal to that which would have been required to meet its load and maintain such minimum regulating margin. Such Participant shall pay the other Participants at a rate of $1.00 per kilowatt per week for each week in such calendar year in which such Emergency Service was deemed to have been scheduled. The minimum period for any such Emergency Service so deemed to have been scheduled shall be at least one week.

3.6 Payments made by a Participant under Section 3.5 hereof shall be distributed among the other Participants in proportion to their respective Participation Shares; provided, that, if any Participant has entered into any other interconnection agreement containing provisions similar to Section 3.5 hereof, the payment of $1.00 per kilowatt per week shall be divided equally among each of such interconnection agreements, including this Interconnection Agreement, and the total of such payments shall be $1.00 per kilowatt per week.

## 4.0 Interruptible Load as a Substitute for Spinning Reserve Capacity

4.1 The amount of Interruptible Load which any Participant may use for Spinning Reserve Capacity shall not exceed 15% of such Participant's obligation to maintain Spinning Reserve Capacity in accordance with Section 2.1 hereof. The factor of 15% shall be reviewed from time to time by the Interconnection Committee and may be changed only by unanimous agreement of the Participants acting through the Interconnection Committee.

4.2 Interruptible Load shall meet the criteria set forth in Exhibit II hereto to be includible as a substitute for Spinning Reserve Capacity; provided, however, that each Participant shall submit evidence to the Interconnection Committee to verify that the proposed Interruptible Load meets the criteria set forth in Exhibit II hereto before such Participant may use Interruptible Load to meet a portion of its obligation to maintain Spinning Reserve Capacity. If none of the members of the Interconnection Committee object to such evidence within sixty (60) days of its submission, it shall be deemed to have met such criteria. If one or more members object and the matter cannot be resolved, then the matter of whether or not such criteria has been met by a Participant shall be submitted to arbitration. Such disputed Interruptible

Load shall not be included as Spinning Reserve Capacity prior to completion of arbitration in this matter.

4.3 Interruptible Load shall not be included in Estimated Peak Demands or as a substitute for a Capacity Resource.

## 5.0 Systems Operations

5.1 The Participants shall operate their electric systems continuously in parallel; provided, however, each Participant shall have the right to separate the wholly-owned facilities of its electric system from the electric system of any other Participant(s):

5.1.1 If, in the judgment of the separating Participant, abnormal operating conditions exist which require such separation to prevent damage to its facilities, injuries to personnel or unsatisfactory service to its customers; or

5.1.2 Under certain conditions of high or low frequency or voltage, which conditions shall have been reviewed and coordinated by the Participants acting through the Interconnection Committee; or

5.1.3 For necessary inspection, maintenance, repair or replacement of its facilities, or additional construction; provided, however, that reasonable advance notice of any scheduled outage of such facilities and the estimated duration thereof is given to the other Participant(s), if practicable, so as to minimize interference with the electric system operations of such other Participant(s).

5.2 Unless otherwise mutually agreed, each Participant shall provide the reactive power requirements of its own electric system, and each Participant shall cooperate to control the flow of such reactive power to prevent the introduction of objectionable operating conditions on the electric system of any Participant(s).

5.3 Each Participant shall use its best efforts to regulate continuously the generation of power within its Control Area so that the measured amount of net interchange of power between its Control Area and those Control Areas with which it is interconnected is equal to the scheduled amount of such net interchange of power, taking into account the frequency regulation contribution of its Control Area.

5.4 Operating procedures pertaining to interconnected system operations shall be established by the Participants acting through the Interconnection Committee.

# EXHIBIT I

## CRITERIA FOR ACCREDITING CAPACITY RESOURCES

### 1.0 Purchased Power

1.1 A purchased power source must be available to the purchasing Participant in a manner which is at least equivalent to a generating unit of equal size on the electric system of such purchasing Participant.

1.2 A purchased seasonal power source which meets the criteria of Section 1.1 shall be accredited to the extent it is capable of being used to meet electric system load requirements.

1.3 A power source which is secondary or interruptible will not be considered as a Capacity Resource.

### 2.0 Generation

2.1 Generating resources must meet the following requirements:

2.1.1 All essential equipment is available for service, except during planned maintenance or Emergencies.

2.1.2 The amount of capacity to be accredited is at that kilowatt rating for individual generating units which the owner is willing to use for continuous full-load operation as shown by each Participant's plant logs or documents issued to system dispatchers authorizing such unit loadings.

2.1.3 Shall not be shut down or taken out of service without anticipation of being used again for any purpose, including cold stand-by.

2.1.4 If a hydro resource, it shall be accredited to the extent it is capable of being used to meet electric system load requirements.

# EXHIBIT II

## CRITERIA FOR INTERRUPTIBLE LOAD

Interruptible Load can be used as Spinning Reserve Capacity when:

1.0 The Participant is legally entitled, and has made or will make a practice of curtailing such Interruptible Load, and is willing to so curtail for an Emergency on its own or another Participant's system.

2.0 All Interruptible Loads are isolated from firm loads on a separate circuit with appropriate circuit breakers.

3.0 Adequate telemetering equipment is available at the Participant's dispatching office for continuous recording of power on the interruptible circuit.

4.0 Underfrequency relays are in service at all times such that the Interruptible Load will be instantaneously tripped under predetermined conditions.

5.0 The necessary equipment is in service at all times such that the Interruptible Load will be automatically tripped for rapid changes in system area requirements of a predetermined magnitude as sensed by the automatic generating dispatching equipment on the Participant's electric system. The automatic tripping equipment shall respond at least as fast as generation under control.

6.0 The necessary equipment is provided for remote tripping and indication of the status of the circuit breakers on the customer's Interruptible Load.

7.0 The necessary facilities are installed to prevent unauthorized customer closure of the circuit breakers associated with the Interruptible Load.

# APPENDIX K

#6

## URANIUM CONCENTRATES ACQUISITION PROGRAM

K.1 **Purpose.** This Appendix K sets forth the responsibilities and authority of the Operating Agent and each of the Participants to arrange for an adequate supply of Uranium Concentrates when needed to permit the timely fabrication of Fuel Assemblies required for operation of the Generating Units. It is intended that the arrangements for securing such supply of Uranium Concentrates shall provide the maximum flexibility for each Participant, should it elect to do so, to obtain and furnish to the Operating Agent all or part of its Generation Entitlement Share of the requisite Additional Uranium Concentrates from such sources and on such terms and conditions as such Participant in its own discretion and circumstances deems prudent. At the same time, it is intended to grant to the Operating Agent the requisite responsibility and authority to act for and on behalf of each Participant with its consent as provided herein to assure that the Short Term Requirements and delivery schedules of Uranium Concentrates are satisfied and the operation of any of the Generating Units is not curtailed or jeopardized due to a failure in the timely supply of Uranium Concentrates.

K.2 **Responsibilities and Authorities of the Operating Agent.**

K.2.1 On or before November 30 of each year, and at such other times as the Operating Agent deems appropriate, the Operating Agent shall provide to the Participants a Uranium Concentrates report which shall include:

K.2.1.1 The amount of Uranium Concentrates received and to be received during the current year.

K.2.1.2 The current status of the Uranium Concentrates inventory.

K.2.1.3 An analysis of the Short Term Requirements for Uranium Concentrates, including the designation of the conversion facility(ies) to which Uranium Concentrates are to be delivered and the required schedules by months for the deliveries.

K.2.1.4 A forecast of the annual requirements for Uranium Concentrates during each of the subsequent fourth through thirteenth years consistent with current inventory, conversion and enrichment contract schedule commitments.

K.2.1.5 A summary of all current commitments or undertakings made by the Operating Agent and each other Participant for the supply of Uranium Concentrates for the periods covered by Sections K.2.1.3 and K.2.1.4 hereof, including without limitation data and evaluations relevant to the security of supply for each such commitment or undertaking.

K.2.1.6 The projected prices or costs of Uranium Concentrates to be delivered under each current commitment or undertaking.

K.2.1.7 The evaluation of the Operating Agent, together with any current evaluation from any consultants, respecting the availability of Uranium Concentrates in the future and projected market prices therefor.

K.2.1.8 Such other information as the Operating Agent deems relevant or, to the extent available, as may be requested by any Participant.

K.2.2 The Operating Agent has the responsibility to insure that the Uranium Concentrates necessary for the operation of all of the Generating Units are available when required. In order to meet this responsibility, the Operating Agent shall make all reasonable efforts to maintain an assured source(s) of supply sufficient to meet current Short Term Requirements for Uranium Concentrates in accordance with a delivery schedule of Uranium Concentrates established pursuant to the procedures in Section 6.3.2.7 of the Participation Agreement.

K.2.2.1 In the event the Operating Agent determines at any time that the then existing commitments made on behalf of all Participants for the supply of Uranium Concentrates are not sufficient for any reason to provide an assured source of supply of such commitments' share of Uranium Concentrates required to meet the then current Short Term Requirements, written notice shall be provided to the Participants outlining the deficiency. Any Participant, within 45 days of the receipt of such notice, may elect to supply all or part of its Generation Entitlement Share of such deficiency by giving written notice of its election to the Operating Agent; provided that if the Operating Agent elects to supply all or any part of the Operating Agent's Generation Entitlement Share of such deficiency from a source other than an offer or proposal accepted by it pursuant to Sections K.2.3 to K.2.9 hereof, inclusive, then each other Participant shall have the right to elect to supply all or any part of its Generation Entitlement Share of such deficiency from such source in proportion to its Generation Entitlement Share to the total Generation Entitlement Shares of all Participants who elect to utilize such source.

K.2.2.2 The Operating Agent is authorized and directed to solicit, negotiate and execute, on behalf of all Participants who have not elected to supply all of their respective shares of the deficiency noticed in Section K.2.2.1 hereof, such contracts for the purchase of Uranium Concentrates as may be required to make up the balance of such deficiency in the assured source of supply required to meet Short Term Requirements, including such additional quantities of Uranium Concentrates to be delivered during or subsequent to the period covered by the Short Term Requirements if the Operating Agent determines that it is necessary to purchase such additional quantities in order to obtain Uranium Concentrates to make up any such deficiency.

K.2.2.3 Notwithstanding Section 6.2.7.2 of the Participation Agreement, the authority and direction granted and given to the Operating Agent under Section K.2.2.2 hereof shall constitute the sole authorization and direction required to obligate all of the Participants on behalf of which the Operating Agent is acting, and no further authorization or approval of any such contract by the Administrative Committee shall be required except that, if any Participant has any direct or indirect interest in the Uranium Concentrates to be purchased under any such contract, unanimous approval of the purchase by the Administrative Committee will be required. A copy of any such contract upon its execution by the Operating Agent shall be promptly furnished to each Participant.

K.2.3 In addition to the efforts which the Operating Agent is obligated to make pursuant to Section K.2.2 hereof to maintain an assured source(s) of supply to meet current Short Term Requirements, the Operating Agent shall also make reasonable efforts to solicit and negotiate viable offers and proposals for the supply of Uranium Concentrates during all or part of the period covered by Section K.2.1.4 hereof for and on behalf of any Participant who shall not have elected pursuant to Section K.3.2 hereof to furnish all of its Generation Entitlement Share of Uranium Concentrates as may be required during said period. The Operating Agent shall from time to time notify all Participants of such offers or proposals as it may receive which it deems are viable alternatives for the supply of Uranium Concentrates to ANPP which have not been accepted or executed in compliance with Section K.2.2 hereof, including without limitation offers or proposals of any of the following categories:

K.2.3.1 Offers for immediate spot purchases of a fixed quantity of Uranium Concentrates.

K.2.3.2 Offers for deliveries of specified quantities of Uranium Concentrates over any period of time.

K.2.3.3 Proposals providing for rights to purchase Uranium Concentrates from any developed or undeveloped sources which would require advance funding.

K.2.3.4 Proposals for the acquisition of an ownership interest by participation in a joint venture or otherwise in mined or unmined uranium reserves.

With respect to each such offer or proposal, the Operating Agent shall provide the other Participants with its evaluation thereof, its recommendations, if any, and a statement of its intent as a Participant to reject or to accept and participate with other Participants in such offer or proposal.

K.2.4 Within the earlier of 45 days after the Operating Agent's notification of any offer or proposal similar in nature to the categories described in Section K.2.3 hereof or seven days prior to the expiration date, if any, of such offer or proposal, each Participant shall advise the Operating Agent of the Participant's (i) rejection of the offer or proposal, (ii) acceptance of

the offer or proposal and the extent of its intended participation therein with any other Participants, or (iii) with respect to any proposal similar in nature to the categories described in Section K.2.3.3 or K.2.3.4 hereof its desire that the Operating Agent proceed with further specific negotiations, studies or analyses. A failure by any Participant to so advise the Operating Agent within the time specified shall be deemed a rejection by such Participant of the offer or proposal submitted.

K.2.5 Upon receipt of the advice from all Participants with respect to any offer or proposal similar in nature to the categories described in Section K.2.3 hereof, the Operating Agent shall take such action as may be appropriate to comply therewith, provided that in no event shall any Participant be bound by any contract resulting therefrom without its written consent.

K.2.6 In the event any two or more Participants shall decide to accept and participate in any offer or proposal similar in nature to the categories described in Section K.2.3 hereof, their respective shares therein shall be as they may agree or, in the absence of such agreement, equal to the ratio of their respective Generation Entitlement Shares to the sum of the Generation Entitlement Shares of all Participants accepting and participating in such offer or proposal.

K.2.7 If the Operating Agent accepts and participates in any offer or proposal similar in nature to the categories described in Section K.2.3 hereof, it shall negotiate and execute a contract in connection therewith for and on behalf of all other Participants that may accept and participate therein. In the event the Operating Agent shall not accept and participate in any such offer or proposal which is accepted by one or more other Participants, then the Operating Agent shall, as directed by the accepting Participant(s), either finalize and execute a contract on behalf of such accepting Participant(s) or turn the matter over to such accepting Participant(s) for such action as it (they) may elect.

K.2.8 In the event one or more Participants desires to pursue further studies and analyses of any proposal ("sharing-Participants") similar in nature to the categories described in Section K.2.3.3 or K.2.3.4 hereof, then the costs of any such studies or analyses shall be shared by the sharing-Participants in the proportion of their respective Generation Entitlement Shares to the total of the Generation Entitlement Shares of all sharing-Participants unless all such sharing-Participants shall otherwise agree. If the Operating Agent is not a sharing-Participant, then the sharing-Participants shall designate a Participant to interact and negotiate with the originator of the proposal on behalf of all sharing-Participants. Any sharing-Participant may, upon completion of such studies or analyses, accept such proposal, with such modifications as may have been negotiated with the originator of the proposal, provided that unless the sharing-Participants shall otherwise agree, (i) such sharing-Participant shall have promptly given written notice of its acceptance of such proposal or modified proposal and the terms thereof and (ii) for a period of 45 day after receipt of such written notice each other sharing-Participant shall have the option to participate in the accepted proposal or modified proposal in any amount not greater than the ratio of its share in the costs of such studies and analyses to the total shares of all sharing-Participants who shall have accepted or shall have exercised their respective options

to participate in such accepted proposal or modified proposal, which option shall be exercised by delivery within such 45-day period of written notice of its exercise to all other sharing-Participants.

K.2.9 In the event (i) any Participant shall have rejected one or more of such offers or proposals and shall not have committed to furnish its Generation Entitlement Share of the Uranium Concentrates pursuant to Section K.3.2 hereof and (ii) one year prior to a date that Uranium Concentrates are required to be delivered pursuant to procedures in Section 6.3.2.7 of the Participation Agreement the Operating Agent determines that the quantity of Uranium Concentrates to be delivered on such date for and on behalf of such Participant from any and all sources is less than such Participant's Generation Entitlement Share of the total quantity of Uranium Concentrates required to be delivered on such date, then the Operating Agent is authorized to and shall, after giving written notice 10 days in advance to such Participant, purchase on behalf of such Participant that quantity of Uranium Concentrates required to provide such Participant's full Generation Entitlement Share of such total quantity required to be delivered on such date (hereinafter "insufficient-Uranium Concentrates") on any terms and conditions as may be available or required to obtain delivery of the insufficient-Uranium Concentrates on such date. Additionally, any such Participant shall be obligated to reimburse each other Participant for its fixed charges on its investment in any Uranium Concentrates inventory used to provide substitute Uranium Concentrates and penalty costs, if any, and such Participant's right to schedule Power and associated Energy shall be subject to restriction to the same extent and manner provided in Section K.3.7 hereof with respect to those Participants who shall have committed to provide Additional Uranium Concentrates. For purposes of this Appendix K, "penalties" shall include without limitation any charges imposed under any Nuclear Fuel Agreement for conversion, enrichment and fabrication of Nuclear Fuel arising from a failure to deliver Nuclear Fuel as required thereunder and any other costs incurred to implement the then current fuel management plan.

## K.3 Responsibilities and Authorities of the Participants.

K.3.1 Each Participant shall advance Operating Funds to the Operating Account in the manner specified in Appendix F to the Participation Agreement (i) for its Generation Entitlement Share of all payments due under the agreement with The Anaconda Company identified in Section 3.1A added by Amendment No. 6 of the Participation Agreement, (ii) for its proportionate share of all payments due under each contract to purchase Uranium Concentrates executed by the Operating Agent pursuant to Section K.2.2 hereof and (iii) its proportionate share of all payments made under each contract for Uranium Concentrates executed and administered by the Operating Agent under Section K.2.7 hereof.

K.3.2 Each Participant shall have the right to furnish all or part of its Generation Entitlement Share of Additional Uranium Concentrates upon the terms set forth in this Section K.3. The acceptance and participation of any Participant in an offer similar in nature to the categories described in Sections K.2.3.1 and K.2.3.2 hereof shall constitute an exercise by such Participant of such right. In addition, any Participant may exercise such right at any time by giving to the Operating Agent its written commitment

to furnish all or a stated portion of its share of the Additional Uranium Concentrates required for operation of the Generating Units in any year or years from any source as such Participant may elect, including without limitation any proposal similar in nature to the categories described in Sections K.2.3.3 and K.2.3.4 hereof which such Participant has accepted in whole or in part.

K.3.3 If the quantities or delivery dates of Uranium Concentrates change due to fuel management decisions of the Operating Agent, operating circumstances, or changes in government policies or practices governing enrichment services or the recycle of Recovered Materials as defined in Appendix F to the Participation Agreement, then each Participant who shall have exercised its right to furnish all or any portion of its share of Additional Uranium Concentrates shall be responsible for supplying its share of any resulting increase in the requirements of Additional Uranium Concentrates or for inventorying and storing its share of any resulting decrease in such requirements not delivered to a conversion facility for the account of ANPP. In the event the responsibilities of any Participant under this Section K.3.3 arise in connection with a contract executed by the Operating Agent pursuant to Section K.2.7 hereof, the Operating Agent shall make on behalf of such Participant such arrangements as may be required to enable such Participant to meet such responsibilities.

K.3.4 On or before March 1 of each year, each Participant shall provide the Operating Agent with information regarding the manner by which such Participant intends to provide all or any portion of its share of the Additional Uranium Concentrates for delivery to a conversion facility during such year and any of the subsequent three years. On or before September 30 of each year, each Participant shall also provide to the Operating Agent a summary of all of its commitments to provide Additional Uranium Concentrates, schedules for the delivery thereof, and other information as may be requested by the Operating Agent.

K.3.5 In the event that any Participant, which has committed to supply Additional Uranium Concentrates, shall consider in its discretion that its ability to deliver such concentrates on the schedules established by the Operating Agent pursuant to Section K.2.1.3 hereof may be in jeopardy, such Participant shall promptly notify the Operating Agent of the nature and basis of such Participant's concerns and of any remedial actions under consideration.

K.3.6 In the event that, one year prior to a scheduled delivery date of Uranium Concentrates, the Operating Agent reasonably concludes that any Participant's ability to provide Uranium Concentrates as committed pursuant to Section K.2.2.1 or K.3.2 hereof is in doubt, and the failure of such Participant to provide such Uranium Concentrates on the delivery schedule established pursuant to the procedures in Section 6.3.2.7 of the Participation Agreement (i) could cause a reduction in the inventory of Uranium Concentrates or (ii) could lead to the breach of or the incurrence of any penalties under any Nuclear Fuel Agreement providing for the conversion, enrichment or fabrication of Nuclear Fuel, then the Operating Agent is authorized to and shall, after giving written notice 10 days in advance to such Participant, purchase on behalf of such Participant that quantity of Uranium Concentrates required to replace the Uranium Concentrates

as to which delivery is in doubt on such terms as may be required to obtain delivery of substitute Uranium Concentrates in accordance with such schedule or at the earliest possible time thereafter, and such Participant shall be obligated to pay all costs incurred by the Operating Agent to obtain the substitute Uranium Concentrates. In the event such Participant (deficient-Participant) and the Operating Agent are unable to obtain delivery of the substitute Uranium Concentrates on or before the scheduled date, the Operating Agent is authorized to utilize the Uranium Concentrates inventory as a source of the substitute Uranium Concentrates if required to implement the then current fuel management plan; provided that the deficient-Participant shall reimburse each other Participant for its fixed charges on its investment in the Uranium Concentrates inventory used to provide the substitute Uranium Concentrates. If the inventory of Uranium Concentrates is insufficient to provide all of the substitute Uranium Concentrates and as a result any penalties are incurred, the deficient-Participant shall be obligated to pay all such penalties. In the event the obligations of one or more Participants under this Section K.3.6 arise as a result of a failure in the delivery of Uranium Concentrates under any contract executed by the Operating Agent pursuant to Section K.2.7 hereof, then such obligations shall be shared by the Participants who are participating in such contract in proportion to their respective obligations to pay for Uranium Concentrates delivered thereunder.

K.3.7 In the event (i) any Participant shall have failed for any reason to deliver its entire share of the Uranium Concentrates required for the subsequent operation of any Generating Unit at its Target Capacity and (ii) the Operating Agent shall have been unable to obtain Uranium Concentrates to make up such Participant's deficiency, and as a result thereof the Maximum Generating Capability of such unit is reduced during any Refueling Cycle, as defined in Appendix F to the Participation Agreement, in which the deficient amount of Uranium Concentrates would have been utilized in such unit's Reactor, then such Participant's right to schedule Power and associated Energy from such unit during each such Refueling Cycle shall be subject to reduction in amount or restricted in time in proportion to such deficiency or such lesser amount as the representatives on the Engineering and Operating Committee, excluding the representative of such Participant, shall determine. In the event one or more Participants shall become subject to a reduction(s) in its (their) right to schedule Power and associated Energy pursuant to this Section K.3.7 as a result of the failure in the delivery of Uranium Concentrates under any contract executed by the Operating Agent pursuant to Section K.2.7 hereof, then any such reduction shall be shared by such Participant(s) in proportion to their respective obligations to pay for Uranium Concentrates delivered under such contract.

K.3.8 Notwithstanding the provisions of Section 30 of the Participation Agreement, the provisions of this Section K.3 shall be fully applicable and enforceable against any Participant who shall fail to deliver the quantities of Uranium Concentrates which it has committed to deliver pursuant to this Section K.3 because of any uncontrollable force, foreseeable or unforeseeable, adversely affecting such Participant or any of its agents, contractors or suppliers.

K.4 **Existing Properties of the Operating Agent's Subsidiary.** Malapai Resources Company (Malapai), a wholly owned subsidiary of the Operating Agent, as of October 16, 1981, has an ownership interest in certain properties, consisting of fee leases, state leases and mining claims, referred to as Christensen Ranch, located in Townships 44 and 45 North, Ranges 75, 76, and 77 West, Johnson and Campbell Counties, Wyoming, and Peterson Property, located in Townships 33 and 34 North, Ranges 72 and 73 West, Converse County, Wyoming. Such properties may become viable alternatives for a supply of Uranium Concentrates to ANPP and Malapai may offer its interest in the properties, or Uranium Concentrates from the properties, to the Operating Agent who shall then transmit such offer to the Participants pursuant to Section K.2.3 hereof. The principles by which such offer may be made are as follows:

K.4.1 If Uranium Concentrates are being mined, Uranium Concentrates shall be offered at a price that is the same for all Participants, including the Operating Agent.

K.4.2 If Uranium Concentrates have not been mined, a proposal for a joint ownership interest shall be offered. The price for such a proposal shall be on the same basis for all Participants, including the Operating Agent, and mutually agreed upon by those Participants, including the Operating Agent, who ultimately accept the proposal.

# APPENDIX L

## #11 START-UP AND PRE-OPERATION ADMINISTRATIVE AND GENERAL EXPENSE

### L.1 Calculation of Start-Up and Pre-Operation A & G Expense

L.1.1 For the period from October 1, 1984 through completion of start-up and pre-operation activities for ANPP, the administrative and general expense associated with such activities for each Generating Unit shall be determined by the following formula: (An example calculation is shown in Exhibit L-A.)

$$AGE = [(SUPO) \times (OMF) \times (OMAG)] + [(SUPO) \times (1\text{-}OMF) \times (CFAG)]$$

where:

AGE = Monthly start-up and pre-operation administrative and general expenses for each Generating Unit.

SUPO = Monthly Start-Up and Pre-Operation Costs for each Generating Unit.

OMF = Percent (expressed as a decimal) of the total monthly Start-Up and Pre-Operation Costs for each Generating Unit to be allocated to the operation and maintenance administrative and general expense formula, as determined in Section L.1.3.

OMAG = Operation and maintenance administrative and general expense percentages as determined and applied in Sections E.1.7 and E.1.9 of the Participation Agreement.

CFAG = Construction administrative and general expense percentage of one percent (1%) as applied pursuant to Section D.1.14 of the Agreement.

L.1.2 Start-Up and Pre-Operation Costs for ANPP common facilities shall be allocated by apportioning one-third (1/3) of these expenses to each ANPP Generating Unit prior to determining the administrative and general expense associated with each Generating Unit.

L.1.3 To determine start-up and pre-operation administrative and general expense (AGE) in Section L.1.1 the monthly total Start-Up and Pre-Operation Costs for each ANPP Generating Unit, including its common facilities share, shall be allocated between construction and operation & maintenance in accordance with the benchmark time periods and percentages shown below. If a benchmark time period begins in the middle of a month, the change in percentage allocation to construction and operation & maintenance expenses shall take place on the first day of the calendar month following such benchmark.

| | Benchmark Time Period for Each Generating Unit | Percent Allocation Between Operation & Maintenance and Construction OMF/(1-OMF) |
|---|---|---|
| a. | 10/1/84 to eight (8) months prior to Beginning of Generating Unit Precore Hot Functional Test. | 25% O&M/75% Construction |
| b. | Eight (8) months prior to Beginning of Generating Unit Precore Hot Functional Test to Beginning of Generating Unit Precore Hot Functional Test. | 50% O&M/50% Construction |
| c. | Beginning of Generating Unit Precore Hot Functional Test to Beginning of Generating Unit Fuel Load. | 70% O&M/30% Construction |
| d. | Beginning of Generating Unit Fuel Load to satisfactory completion of Power Ascension Level 50% | 90% O&M/10% Construction |
| e. | Satisfactory completion of Power Ascension Level 50% to completion of start-up and pre-operation. | 100% O&M |

## L.2 Adjustments

L.2.1 The benchmark time periods in Items L.1.3a and L.1.3b require an estimate of the Beginning of Generating Unit Precore Hot Functional Test for a Generating Unit. Should the actual date for the Beginning of Generating Unit Precore Hot Functional Test for a Generating Unit be different than estimated, adjustments shall be made to the amount of administrative and general expense actually charged based on the appropriate allocation of Start-Up and Pre-Operation Costs to construction and operation & maintenance expenses.

L.2.2 Amounts of administrative and general expense determined pursuant to the Letter of Understanding for the period October 1, 1984 through March, 1985 that were different than the amount actually paid for the same period have, pursuant to the Letter of Understanding appeared as a credit on the request for advancement of Operating Funds for ANPP dated June 14, 1985, Request No. PV0-093. Such expense differences accrued interest at the rate from time to time publicly announced by Citibank, N. A., New York, New York, as its prime interest rate less two percent (2%), from the date of payment of such difference to the date of mailing of the request for advancement of Operating Funds. Any such amounts were allocated to each Participant in accordance with its Gener-

ation Entitlement Share, and were clearly delineated on the Operating Agent's requests for advancement of Operating Funds.

## L.3 Credit to Future Requests for Advancement of Operating Funds for ANPP

L.3.1 The Operating Agent shall credit to future requests for advancement of Operating Funds, thirteen million dollars ($13,000,000) plus interest, determined pursuant to Section L.3.2 of this Appendix L, for administrative and general expense charged to Start-Up and Pre-Operation Costs through September 30, 1984. Such credit will be allocated to each Participant in accordance with its Generation Entitlement Share, and is separate and in addition to any adjustment to administrative and general expense necessitated by the routine annual adjustment to the Operation and Maintenance A & G Ratio pursuant to Section E.10.2 of the Participation Agreement. No other adjustments shall be made to change administrative and general expense charged to Start-Up and Pre-Operation Costs through September 30, 1984, except for those related to any future adjustments made to Start-Up and Pre-Operation Costs incurred through such date.

L.3.2 Interest will be charged on the unpaid balance of the thirteen million dollars ($13,000,000) credit beginning on October 1, 1984. The interest rate to be applied will be the rate from time to time publicly announced by Citibank, N.A., New York, New York, as its prime interest rate, less two percent (2%). The initial credit shall include all interest accrued from September 30, 1984, and subsequent monthly credits will be applied first against accrued interest. In addition to such monthly payments of all accrued interest, the principal balance shall be amortized by crediting monthly an amount equal to not less than one twenty-fourth (1/24) of such amount until the full thirteen million dollars ($13,000,000) principal amount has been credited. Pursuant to the Letter of Understanding, the initial credit hereunder occurred with the first request for the advancement of Operating Funds dated March 1, 1985.

# EXHIBIT L-A

## SAMPLE CALCULATION OF MONTHLY ADMINISTRATIVE AND GENERAL EXPENSE FOR START-UP AND PRE-OPERATION COSTS FOR ANPP GENERATING UNIT NO. 1

AGE = [(SUPO) x (OMF) x (OMAG)] + [(SUPO) x (1-OMF) x (CFAG)]

## ASSUMPTIONS:

SUPO = $9,500,000 (1)

OMF = 90%

OMAG = 16.442% of Project Manager's/Operating Agent's ANPP labor, plus 1% of contractor's costs, plus 0% of other costs.

CFAG = 1%

Project Manager's/Operating Agent's ANPP Labor Costs = $4,750,000

CONTRACTOR COSTS = $3,800,000

OTHER COSTS = $950,000

## CALCULATION:

AGE = [($9,500,000) x (.9) x (0MAG)] + ($9,500,000)(1-.9) x (CFAG)]

$$[(\$9{,}500{,}000) \times (.9) \times (OMAG)] = \begin{array}{l} (4{,}750{,}000)(.9)(.16442) \\ +(3{,}800{,}000)(.9)(.01) \\ +(950{,}000)(.9)(0.0) \end{array} = \$737{,}096$$

[($9,500,000) x (1-.9) x (CFAG)] = ($9,500,000)(.1)(.01) = $9,500

AGE = $737,096 + $9,500

AGE = $746,596

(1) Includes 1/3 of Start-Up and Pre-Operation Costs for common facilities.

(2) The OMAG rate will be applied to only the Project Manager's/Operating Agent's ANPP labor incurred for Start-Up and Pre-Operation Costs times the OMF factor in effect.

ARIZONA CORPORATION COMMISSION

May 1, 1990

Jonathan Katz, Secretary
Securities and Exchange Commission
450 Fifth Street, N.W.
Washington, D.C. 20004

Dear Mr. Katz:

Enclosed please find ten (10) copies plus the original of The Arizona Corporation Commission's Complaint, Petition for Revocation or Modification of Pinnacle West Capital Corporation's Exemption, Request for Hearing and Petition to Intervene. Please time-stamp two copies and return to the undersigned in the enclosed stamped envelope.

Sincerely,

TIMOTHY M. HOGAN
Chief Counsel

TMH/amt

Enclosures

1200 WEST WASHINGTON, PHOENIX, ARIZONA 85007 / 402 WEST CONGRESS STREET, TUCSON, ARIZONA 85701

UNITED STATES OF AMERICA
BEFORE THE
SECURITIES AND EXCHANGE COMMISSION

Pinnacle West Capital Corporation ) Admin. Proc. No. _____

# THE ARIZONA CORPORATION COMMISSION'S COMPLAINT, PETITION FOR REVOCATION OR MODIFICATION OF PINNACLE WEST CAPITAL CORPORATION'S EXEMPTION, REQUEST FOR HEARING AND PETITION TO INTERVENE

ARIZONA CORPORATION COMMISSION
1200 West Washington Avenue
Phoenix, Arizona 85007

May 1, 1990

TABLE OF CONTENTS


I. INTRODUCTION . . . . . 1

A. Summary of Concerns . . . . . 1

B. Appearance of Counsel . . . . . 4

C. Description of the Relevant Entities . . . . . 4

1. Arizona Corporation Commission ("ACC"). . . . 4

2. Pinnacle West Capital Corporation ("Pinnacle West"). . . . . 5

3. Arizona Public Service Company ("APS"). . . . 5

4. MeraBank. . . . . 6

D. Overview of this Pleading . . . . . 7

1. Description. . . . . 7

2. Structure of the Pleading . . . . . 8

E. The Role of Pinnacle West's Creditors. . . . . 8

II. CHRONOLOGY OF THE DECLINE OF PINNACLE WEST . . . . . 10

III. PINNACLE WEST'S EXEMPTION HAS BECOME "DETRIMENTAL TO THE PUBLIC INTEREST OR THE INTEREST OF INVESTORS OR CONSUMERS". . . . . 19

A. The Legal Standard: Under Section 3, Congress Directed the Commission To Prevent "Detrimental" Diversification. . . . . 20

B. Pinnacle West's Diversification Experience Has Been Dismal. . . . . 22

1. Introduction: Pinnacle West has left a trail of broken assurances. . . . . 23

a. Pinnacle West's Eight Assurances. . . . . 23

b. What Pinnacle West Delivered. . . . . 26

2. The Diversification-Induced Financial Pressures on Pinnacle West Are Harming APS Directly. . . 28

a. Introduction. . . . . 28

b. The Financing Agreements, Including the Pledge Covenant, Limit the Indebtedness APS Can Incur Directly. . . . . 29

c. Pinnacle West May Have Difficulty Raising New Equity for APS. . . . . 30

3. The Interaction Between APS' Palo Verde Problems and Pinnacle West's Financial Problems Leaves APS Dangerously Weakened. . . . . 31

a. Summary of the Palo Verde Problems. . . . 31

b. The Palo Verde Problems Diminish APS' Ability To Keep Pinnacle West From Defaulting On Its Long-Term Loans. . . . 33

c. The Pinnacle West Pressures Render APS Less Capable of Resolving Its Palo Verde Problems. . . . . 34

d. The Pinnacle West Pressures Are An Independent Contributor to the Palo Verde Problems. . . . . 34

4. The Pinnacle West Debacle Has Jeopardized the Effectiveness of State Regulation. . . . . 35

a. ACC Cannot Carry Out Its Ratemaking Activities Normally, For Fear of Triggering Pinnacle West's Bankruptcy and Causing Financial Institutions to Take Control of APS. . . . . 35

b. ACC May Not Be Able To Prevent APS From Paying Excess Dividends To The Detriment Of Utility Operations. . . . . 37

IV. THE PINNACLE WEST SYSTEM DOES NOT SATISFY THE SPECIFIC REQUIREMENTS OF THE "INTRASTATE" EXEMPTION OF SECTION 3(a)(1) . . . . . 38

A. The "Intrastate" Standard of Section 3(a)(1) . . . 38

1. The First Requirement: Is the Holding Company Predominantly Intrastate in Character? . . . . 39

2. The Second Requirement: Is the Holding Company Doing Business Substantially In a Single State? . . . . . 39

B. Pinnacle West's Business -- The Business Of Raising Funds To Repay Its MeraBank Debt -- Is A National Business . . . . . 40

V. THE COMMISSION MUST REPLACE PINNACLE WEST'S EXEMPTION WITH CONDITIONS WHICH PROTECT CONSUMERS AND MAINTAIN REGULATORY EFFECTIVENESS. . . . . 41

A. The Commission Has Authority To Revoke Pinnacle West's Exemption. . . . . 41

B. Conditions Necessary To Protect Consumers And Maintain Regulatory Effectiveness. . . . . 44

1. Condition No. 1: Divestiture of the Remaining Nonutility Subsidiaries and Prohibition Against Investments in New Nonutility Businesses. . . 44

2. Condition No. 2: Prohibition on Borrowing By Pinnacle West From Its Affiliates. . . . . 46

3. Condition No. 3: Prohibition on Any Further Pledging Of Pinnacle West's APS Stock as Security for Any Future Loan To Pinnacle West. . . . . 47

4. Condition No. 4: Advance Approval of Other Financial Transactions. . . . . 48

5. Condition No. 5: Treatment of "Routine" Financing. . . . . 50

6. Condition No. 6: Prohibition on Provision of Services, Sales or Construction Contracts for Nonaffiliates. . . . . 51

7. Condition No. 7: Complaint Procedure. . . . . 51

8. Condition No. 8: Changes in the Conditions. . 51

CONCLUSION . . . . . 53

## I. INTRODUCTION.

### A. Summary of Concerns.

The Arizona Corporation Commission ("ACC") hereby files this Complaint, Petition for Revocation or Modification of Exemption, Request for Hearing and Petition to Intervene concerning the exemption of Pinnacle West Capital Corporation ("Pinnacle West") from the Public Utility Holding Company Act, Ch. 687, 49 Stat. 803 et seq. (1935) (codified at 15 U.S.C. sec. 79 et seq. ("the Act").

Since April 1985, Pinnacle West has been exempt from the Act under the "intrastate" exemption of Section 3(a)(1).[1/] Under this exemption, Pinnacle West, the corporate parent of Arizona Public Service Company ("APS"), has engaged in an extensive and reckless program of diversification into nonutility ventures. The complete failure of this diversification now (1) hampers the ACC's ability to carry out its constitutional and statutory obligations to regulate APS effectively, and (2) endangers APS and its ratepayers. For example:

1. In 1988, Pinnacle West suffered a 98% decline in net income compared with 1987, largely because a $209 million loss from its investment in MeraBank, a savings and loan institution, cancelled out the holding company's income from APS.

2. In December 1989, as a result of its mounting MeraBank debt, Pinnacle West sought "temporary forbearance from certain of its lenders to avoid possible action upon defaults under certain of [Pinnacle West's] financing

---

1/ All references to "Sections" 1 through 24 are to sections of the Public Utility Holding Company Act, and correspond to 15 U.S.C. sections 79a through 79x, unless otherwise noted.

agreements." Form 8-K Report to the Securities and Exchange Commission (Dec. 7, 1989).

3. In 1990, federal banking regulators placed MeraBank in receivership, and required Pinnacle West to inject $312 million cash and a note for an additional $150 million into the bank. To raise the cash, Pinnacle West arranged an extension of its existing debt and borrowed an additional $312 million from a consortium of insurance companies. <u>These creditors have required Pinnacle West to pledge as collateral its full stock ownership in APS</u>. This pledge, along with other aspects of the loan agreement, directly or indirectly restricts APS' ability to finance its operation, directly or indirectly, restricts the ACC's ability to protect electricity consumers in Arizona through its regulation of APS.

4. Pinnacle West's other nonutility ventures -- land development, uranium mining, among others -- all have lost millions of dollars.

Before embarking on its unfortunate journey into nonutility business, Pinnacle West made many optimistic predictions. Mr. Jaron Norberg, APS' Senior Vice-President at the time, stated:

> [T]he acquisition of a conservatively run, strong financial institution in the State of Arizona at this time in its growth, and in the potential that acquisition represents, not just to [Pinnacle West] but to keep that financial institution under Arizona control and to have that institution help in the growth of Arizona, just really was a "once-in-a-lifetime opportunity."

<u>In the Matter of the Special Open Meeting Re Discussion of AZP's Proposed Acquisition of MeraBank</u>, Transcript of Public Hearing ("Tr.") at 20. Only one of these predictions proved true. MeraBank was not conservatively run and it did not help in the growth of Arizona. Nor did Pinnacle West keep MeraBank under Arizona control; it ceded control to the federal Resolution Trust Corporation ("RTC"). But Mr. Norberg was right about one thing:

the acquisition was a "once-in-a-lifetime opportunity" and this Commission must make sure that Pinnacle West is never tempted by such an opportunity again.

Without its exemption from the Act, Pinnacle West never could have never invested in its nonutility ventures.[2/] Consequently, the ACC believes that Pinnacle West's exemption is "detrimental to the public interest, [and] the interest of investors or consumers," in violation of Section 3(a). Given the unprecedented circumstances set forth in detail below, the ACC urges the Commission to take the following actions:

1. Notify Pinnacle West, pursuant to Rule 6 of the Commission's rules under the Public Utility Holding Company Act, 17 C.F.R. sec. 250.6, that "a question exists as to whether the exemption . . . may be detrimental to the public interest or the interest of investors or consumers."

2. Further notify Pinnacle West, as required by Rule 6, that 30 days after such notification its exemption shall terminate automatically and that, as a consequence of the loss of exemption, Pinnacle West will become a "registered" holding company subject to the full requirements of the Act.

3. Issue an order setting forth the precise requirements which will apply immediately to Pinnacle West in its "registered" status, including clear deadlines by which those requirements must be met.[3/]

---

2/ Section 11(b)(1) of the Act, from which Pinnacle West has been exempt, precludes investment by a utility holding company in nonutilty businesses except those which are "reasonably incidental, or economically necessary or appropriate to the operations of one or more integrated public-utility systems." None of Pinnacle West, nonutility investments satisfy this test.

3/ For the convenience of the Commission, we describe those requirements in Part V of this pleading, <u>infra</u>.

4. Initiate a proceeding, including hearing procedures, in which interested parties, including the ACC, may assist in the design of long-term conditions which will return APS to the financial health it enjoyed before the formation of Pinnacle West.[4]

B. Appearance of Counsel.

Pursuant to 17 C.F.R. sec. 201.2(d), the following counsel hereby file their Notice of Appearance on behalf of the Arizona Corporation Commission:

Timothy M. Hogan, Chief Counsel
Janice M. Alward, Attorney
Arizona Corporation Commission
1200 West Washington
Phoenix, Arizona 85007
Telephone: (602) 542-3402

C. Description of the Relevant Entities.

1. Arizona Corporation Commission ("ACC").

The ACC is the state regulatory body created by the Arizona Constitution to govern the State's public service corporations. Pursuant to the Arizona Constitution, Article 15, Section 3, the ACC has sole and exclusive power to regulate and set rates for Arizona public utilities. The ACC is an agency of the

---

[4] By requesting a hearing, we do not suggest that a hearing is necessary. If Pinnacle West obtained its exemption through Rule 2, 17 C.F.R. sec. 250.2, without a Commission order, Pinnacle West can lose its exemption through Rule 6, again without a Commission order. (We assume the exemption exists by virtue of a "Rule 2" filing, because we can find no record of a Commission order approving Pinnacle West's exemption.) It is our understanding that under Rule 6, the Commission may merely notify Pinnacle West that "any question exists" as to whether the exemption has become "detrimental," and the exemption will terminate automatically after 30 days. However, we assume that Pinnacle West then would request an order formally reinstating the exemption, and that upon such request the ACC and others could request a hearing and intervene in any proceeding ordered by the Commission on the exemption question. Our request for a hearing at this point is based on that assumption.

State of Arizona, within the meaning of section 201.9(a) of this Commission's regulations, 17 C.F.R. sec. 201.9(a). Under that rule, the ACC by filing its notice of appearance herein is automatically a party to any proceeding ordered by this Commission.

2. Pinnacle West Capital Corporation ("Pinnacle West").

Pinnacle West is a "public utility holding company" currently exempt under Section 3(a)(1) of the Act. Originally known as AZP Group, Inc., Pinnacle West changed its name from AZP Group, Inc. in April 1987. AZP Group became the corporate parent of Arizona Public Service and its three subsidiaries in April 1985. Pinnacle West is based in Phoenix, Arizona and has consolidated assets of more than $7 billion. Besides MeraBank and Arizona Public Service (described below), Pinnacle West's other subsidiaries are Malapai Resources (uranium mining and development), SunCor Development Company (real estate development) and El Dorado Investment Company (venture capital).

Before the recent changes in MeraBank's status (see below), Pinnacle West and its subsidiaries employed approximately 11,200 persons, of which 2,100 were employees of MeraBank and its subsidiaries. Of the remaining number of employees, approximately 8,300 are employees of APS, its subsidiaries, or are employees assigned to joint projects in which APS serves as a project manager; and, approximately 800 are employees of Pinnacle West and its other subsidiaries.

3. Arizona Public Service Company ("APS").

APS is an Arizona public service corporation providing electric service in Phoenix and nearly 200 other communities in 11

of Arizona's 15 counties, serving a population of 1,500,000, almost one-half the population of the State. In 1989, APS had total assets of $6.3 billion, electric operating revenues of $1.45 billion, and net income of $212 million. APS' generating facilities have an accredited capacity aggregating 3964 MW. Its peak demand in 1989 was 3647 MW.

4. MeraBank.

MeraBank, until its recent demise, was a Federal Savings Bank. It was principally engaged in obtaining deposits and using those deposits, together with borrowings, proceeds of loan sales and other funds, to originate and purchase real estate loans, mortgage-backed securities and other investments. MeraBank had 68 branch offices in Arizona, and 7 in Texas. In addition, subsidiaries of MeraBank had mortgage and consumer lending offices in Arizona, California, New Mexico, Nevada, Colorado and Utah.[5/]

On January 31, 1990, MeraBank was placed in receivership by the federal Office of Thrift Supervision ("OTS"). As part of this change in MeraBank's status, New MeraBank was formed, and the Resolution Trust Corporation ("RTC") was appointed its conservator.

---

[5/] Before the restructure of federal banking regulation, MeraBank was subject to regulation by the Federal Home Loan Bank Board ("FHLBB"), the Federal Savings and Loan Insurance Corporation ("FSLIC"), and the Federal Reserve.

Pursuant to the Financial Institutions Reform, Recovery, and Enforcement Act (the "FIRRE Act"), P.L. 101-73 (Aug. 9, 1989), 103 Stat. 183 et seq., the Office of Thrift Supervision ("OTS") succeeded the FHLBB as the primary federal regulator of thrifts and the Federal Deposit Insurance Corporation ("FDIC") succeeded the FSLIC as the insurer of thrifts. The RTC manages and resolves all cases involving depository institutions formerly insured by the FSLIC for which a conservator or receiver is appointed from January 1, 1989 to August 9, 1989.

MeraBank remains in existence with limited assets and certain remaining liabilities not transferred by the receiver to New MeraBank.

D. Overview of this Pleading.

1. Description.

Section 3(a)(1) provides as follows (emphasis added):

> The Commission, by rules and regulations upon its own motion, or by order upon application, shall exempt any holding company, and every subsidiary company thereof as such, from any provision or provisions of this chapter, unless and except insofar as it finds the exemption detrimental to the public interest or the interest of investors or consumers, if --
>
> > (1) such holding company, and every subsidiary company thereof which is a public-utility company from which such holding company derives, directly or indirectly, any material part of its income, are predominantly intrastate in character and carry on their business substantially in a single State in which such holding company and every such subsidiary company thereof are organized.

To maintain an exemption under Section 3, a holding company must satisfy two distinct conditions. First, the exemption must not be "detrimental to the public interest or the interest of investors or consumers." Section 3(a). Second, it must meet one of the five specific tests set forth at Section 3(a)(1)-(5). If the holding company fails either of these two conditions, it is no longer entitled to an exemption. Cf. Rule 6, 17 C.F.R. sec. 250.6 (distinguishing between question whether holding company is "within the exemption" from question whether "the exemption . . . may be detrimental"); Cities Service Co. v. SEC, 247 F.2d 646, 651 (2d Cir. 1957) (compliance with formal requirements of an exemption

not sufficient; Commission still may deny an exemption which is detrimental), aff'g, Cities Service, 37 S.E.C. 342 (1956), cert. denied, 355 U.S. 912 (1958).[6]

2. Structure of the Pleading.

Part II presents a chronology of the decline of Pinnacle West.

Part III explains that Pinnacle West is no longer entitled to an exemption under the Act because the exemption is "detrimental to the public interest, or the interests of investors or consumers." Section 3(a).

Part IV asserts an alternative ground for revoking Pinnacle West's exemption: that Pinnacle West fails the "intrastate" test of Section 3(a)(1).

Part V explains that upon revocation, Pinnacle West automatically would become subject to the provisions of the Act. We then describe the specific conditions upon which this Commission should center enforcement, to prevent any recurrence of the events of the past three years.

E. The Role of Pinnacle West's Creditors.

As discussed in this complaint, Pinnacle West's creditors have demanded, and obtained, a security interest in all of the stock of APS in return for either extending existing loans or loaning money to Pinnacle West. At this time, we are not challenging the status of the creditors under the Act. Our pleading today focuses on Pinnacle West only. But we note that the creditors might be "holding companies" subject to regulation under the Act, for two distinct reasons:

. . .

---

[6] See also Long Island Lighting Company, Holding Company Release No. 5746 (April 21, 1945) (because there was "detriment," it was immaterial whether the system was intrastate).

1. By taking a security interest in APS' stock, each may be a "holding company" as defined by Section 2(a)(7)(A) (defining a "holding company" to mean "any company which directly or indirectly owns, controls, or holds with the power to vote, 10 per centum or more of the outstanding voting securities of a public-utility company . . ."). Cf. Rubin v. United States, 449 U.S. 424 (1981) (pledge of stock to a bank for a loan is an "offer or sale" of a security under Section 17(a) of Securities Act of 1933).

2. Each creditor, by virtue of its rights under Pinnacle West's financing agreements to restrict certain activities of Pinnacle West or APS, may be a "holding company" under Section 2(a)(7)(B), because the creditor may exercise "such a controlling influence over the management or policies of any public-utility or holding company as to make it necessary or appropriate in the public interest or for the protection of investors or consumers that such person be subject to the obligations, duties and liabilities imposed in this chapter upon holding companies."

We reiterate that we are not challenging the creditors' status in this pleading. We only wish to bring to the Commission's attention an issue that may require further investigation.[7/]

---

[7/] See, e.g., Report of the National Power Policy Committee, S.Rep. 621, 74th Cong. 1st Sess. at p. 58 ("In destroying the abuses of holding companies, the government must not leave great groups of helpless investors to the certain abuses of extensive corporate reorganizations. The dominant groups who have ruthlessly plucked the investor in permitting some of these holding companies must not be allowed to pluck him again as reorganization managers."); Section 18(a) of the Act ("The Commission, in its discretion, may investigate any facts, conditions, practices, or matters which it may deem necessary or appropriate to determine whether any person has violated or is about to violate any provision of this chapter, . . . or to aid in the enforcement of the provisions of this chapter"); Section 18(f) ("Whenever it shall appear to the Commission that any person is engaged or about to engage in any acts or practices which constitute or will constitute a violation of the provisions of this chapter, or of any rule, regulation, or order thereunder, it may in its discretion bring an action in the proper district court . . . to enjoin such acts or practices and to enforce compliance . . . . The Commission may

(continued...)

## II. CHRONOLOGY OF THE DECLINE OF PINNACLE WEST.

April 1985: AZP Group, Inc. becomes corporate parent of APS and three of APS' existing subsidiaries.

July-August 1986: SEC inquires into rationale supporting AZP's continued exemption under the Act, in light of proposed acquisition of MeraBank. AZP responds that "MeraBank has an established record of continuing growth which will contribute favorably to the AZP corporate group." AZP further alleges that "in no event may APS' financial resources be directly or indirectly committed or pledged to accomplish the acquisition."

December 1986: AZP Group effectively doubles the size of its operations by acquiring MeraBank, a Federal Savings Bank, for $426,000,000, a price two times MeraBank's book value. Approximately $325 million of the purchase price was debt financed; the remaining financing was equity from previously issued stock from internal stock plans. About 80% of the acquisition cost, or $339 million, represented the excess of the aggregate acquisition cost over the fair value of net assets acquired, and was recorded as goodwill.[8/]

. . .

---

[7/](...continued)
transmit such evidence as may be available concerning such acts or practices to the Attorney General, who, in his discretion, may institute the appropriate criminal proceedings under this chapter.").

[8/] Cf. Long Island Lighting Company, Holding Company Release No. 5746 (April 21, 1945) (revoking exemption on grounds of, inter alia, the "excess of the cost of securities of subsidiary companies held by Long Island over the underlying book values at the dates of acquisition").

December 10, 1986: Stipulation of AZP Group (otherwise referred to as the "Keep Well" Agreement) in favor of FSLIC and FHLBB to cause the regulatory capital of MeraBank to be maintained at the level required by certain federal regulations and, as necessary, to infuse sufficient additional equity capital to effect compliance with such requirement. (Detailed in 10-Q for quarter ended 9/30/89). The execution of the "Keep Well" Agreement was not discussed with the ACC at the time. Its existence was not even disclosed until MeraBank's financial problems became the subject of formal action by federal regulatory agencies. See June 16, 1989, supra.

April 1987: AZP Group changes its name to Pinnacle West Capital Corporation ("Pinnacle West").

December 31, 1987: Malapai records loss of $6.2 million for 1987.

December 31, 1988: Malapai records loss of $23.6 million for 1988.

December 31, 1988: MeraBank records loss of $209 million, virtually cancelling out APS net income and causing a 98% decline in Pinnacle West net income compared with 1987.

December 31, 1988: As of year end 1988, APS pays out almost 90% of its net income ($211 million) in dividends to Pinnacle West. Pinnacle West pays out $242 million in common stock dividends, despite recorded net income of only $4 million.

March 1989: Extended outages at APS' Palo Verde Units

1, 2 and 3 begin and continue throughout 1989 into 1990.[9]

June 16, 1989: Federal Home Loan Bank of San Francisco ("FHLBSF") initiates individual minimum capital requirement proceeding.

July 13, 1989: ACC enters order restricting dividend payments from APS to Pinnacle West.

July 24, 1989: FHLBSF imposes individual minimum capital requirement ("IMCR") on MeraBank.

August 15, 1989: ACC, Arizona Residential Utility Consumer Office ("RUCO"),[10] APS, Pinnacle West and the Pinnacle West Shareholders Association enter into settlement under which APS will not, "without prior ACC approval, transfer any funds to Pinnacle West or any of its subsidiaries, directly or indirectly, except for regular quarterly dividend payments not in excess of that declared and paid immediately prior to July 13, 1989 . . . . APS also agrees to report . . . all transfers . . . to Pinnacle West or any of its subsidiaries by APS in excess of $1,000,000 within five days of such payment or transfer." ACC Decision No. 56603. By its terms, the Settlement Agreement would remain in effect until the sooner of March 1, 1990, or such time as Pinnacle

---

9/ Palo Verde Nuclear Generating Station is located in Arizona and is the largest nuclear generating station in the United States. APS owns a 370 MW share of each of Palo Verde's three 1270 MW units. By agreement with other participating utilities, APS operates and manages Palo Verde Units 1, 2 and 3.

10/ The Residential Utility Consumer Office, created by Arizona statutes, A.R.S. §40-462, was established to represent the interests of the residential utility consumers in regulatory proceedings involving public service corporations before the ACC.

West resolved its difficulties with MeraBank. The ACC reserved the right to initiate proceedings during the term of the Settlement Agreement to effectuate changes in APS' dividend policy if, and only if, catastrophic and disastrous events occur which could significantly adversely affect APS' financial condition or prevent APS from financing at reasonable costs its capital requirements necessary to meet customer service needs. 1989 APS Shareholder Report at 13-14.

October 18, 1989: Pinnacle West's Board of Directors suspends Pinnacle West's quarterly dividend on common stock.

November 6, 1989: Moody's lowers ratings on certain APS securities and indicates it will keep APS' securities on credit watch, direction uncertain. Moody's cites, among other factors, the potential for decreasing financial flexibility at APS due to the continuing liquidity problems of Pinnacle West and Pinnacle West's dependence on common stock dividends.

November 8, 1989: PacifiCorp offers to purchase outstanding APS stock for $1.7 billion.

December 6, 1989: Agreement between OTS and Pinnacle West releasing Pinnacle West from obligations under December 10, 1986 "Keep Well" Agreement in return for Pinnacle West delivering to MeraBank a cash payment of $300 million plus interest, and a MeraBank Note in the principal amount of $150 million (subject to adjustment). Pinnacle West waives any right it has to challenge the appointment of a conservator or a receiver with respect to MeraBank by OTS. The Note contains a series of covenants described in more detail below.

December 6, 1989: Pinnacle West executes commitment letter with Citibank, Chase Manhattan, Chemical Bank and Morgan Guaranty Trust Company of New York for interim financing, under which the banks agree to lend up to $312 million to Pinnacle West for use in satisfying its cash payment obligation regarding MeraBank. Borrowings would be secured by a first priority pledge lien in favor of the banks, covering all APS common stock. Borrowing would mature on December 21, 1990. Pinnacle West would seek long-term financing prior to the maturation date. Conditions on the short-term borrowing include (1) prohibition against any additional limitations on the APS common stock dividend (including any limitations imposed by ACC), and (2) restructuring of Pinnacle West's existing loan agreements. Pinnacle West expects that any long-term financing will contain covenants similar to those in the MeraBank Note and the Bank Agreement, including a requirement that APS stock be pledged as collateral for the loan.[11/]

December 7, 1989: New savings and loan capital requirements take effect under the Financial Institutions Reform, Recovery, and Enforcement Act (the "FIRRE Act"). These new requirements are, according to Pinnacle West's 8-K (12/7/89), more stringent than the capital requirements previously in effect.

December 7, 1989: In Form 8-K, Pinnacle West discloses to SEC that it requires "temporary forbearance from certain of its lenders to avoid possible action upon defaults under certain of

---

11/ These interim funds were never used, because long-term financing arrangement was arranged before these funds were necessary. See March 22, 1990, infra. The covenants associated with these long-term loans resembled those in the MeraBank note.

Pinnacle West's financing agreements." Events that could cause default include the insolvency of MeraBank or the appointment of a receiver or conservator for MeraBank. Pinnacle West indicates that based on MeraBank's November 15, 1989 operating results, MeraBank may be considered insolvent. Pinnacle West notes that "[i]f it appears that the Company will be unable to obtain these modifications from its lenders, the Company may be forced to seek the restructuring of its existing indebtedness in a bankruptcy proceeding."

December 31, 1989: Pinnacle West records as a loss from operation and disposal of savings bank operations the following items: the $310 million cash payment (see March 22, 1990, infra), the MeraBank Note, additional costs related to the OTS Agreement and Pinnacle West's investment in MeraBank as of December 31, 1988.

December 31, 1989: APS records 9.4% return on common equity, 25% below the 12.5% return authorized by ACC. Sales (in kilowatthours) decreased by 1.5%; in part because Palo Verde outages limited APS' access to wholesale markets. APS' Rating Agencies Presentation, January 1990.

December 31, 1989: Pinnacle West's consolidated financial statements exclude MeraBank.

January 11, 1990: APS files application with ACC for increase in retail rates for at least $271 million, to be implemented in three consecutive annual increases of 6.8%.

January 18, 1990: Pinnacle West announces it has retained a financial advisor to assist in the divestiture of Malapai.

January 30, 1990: Standard & Poor's lowers ratings on certain APS securities. Standard & Poor's cites, among other factors, the potential for decreasing financial flexibility at APS due to the continuing liquidity problems of Pinnacle West and Pinnacle West's dependence on common stock dividends.

January 31, 1990: Pinnacle West and its existing major lenders restructure most of Pinnacle West's existing long-term debt. The restructure extends the maturity dates of applicable financing agreements for two years, but requires debt prepayment by Pinnacle West of not less than $65 million on or before June 30, 1990. The principal terms of the restructuring were as follows (see Pinnacle West 1989 Annual Report at 31):

1. The respective financing agreements were amended so that certain events (e.g., if MeraBank were placed in receivership) would not constitute an event of default.

2. Pinnacle West and Citibank, N.A. as Collateral Agent, execute Pledge Agreement granting certain lenders to Pinnacle West a security interest in all of APS' outstanding common stock.

3. Pinnacle West agreed not to incur new indebtedness except generally for borrowings to reduce, refinance or prepay existing indebtedness or to comply with the OTS Agreement (including, for example, the MeraBank Note).

4. Pinnacle West's ability to pay dividends or make other corporate distributions is dependent upon the satisfaction of specified interest coverage ratios. In particular, the amount of permitted dividends or other corporate distributions may not exceed 50% of the Company's net income calculated from and after April 1, 1990.

5. Until all the lenders are repaid, Pinnacle West may not invest more than $15 million in its subsidiaries, excluding APS.

6. Pinnacle West may not invest any more than $20 million in new investments until all lenders are repaid, no new investments may be made until Pinnacle West can meet the dividend test referred to in clause (4) above.

7. Pinnacle West must maintain certain interest coverage ratios and meet certain funded debt tests.

January 31, 1990: Pinnacle West finalizes interim credit agreement with four banks to satisfy OTS Agreement. The restrictions closely resemble the covenants contained in the MeraBank Note. See December 6, 1989, supra.

January 31, 1990: MeraBank is placed in receivership by OTS; New MeraBank is formed; RTC appointed as conservator of New MeraBank; MeraBank remains in existence with limited assets and certain remaining liabilities not transferred by the receiver to New MeraBank. Effective December 31, 1989 and forward, Pinnacle West's consolidated financial statements will not consolidate MeraBank.

February 14, 1990: Duff & Phelps lowers ratings on certain APS securities. Duff & Phelps' cites, among other factors, the potential for decreasing financial flexibility at APS due to the continuing liquidity problems of Pinnacle West and Pinnacle West's dependence on common stock dividends.

March 1, 1990: Agreement among the ACC Staff, RUCO, APS, Pinnacle West and Pinnacle West Shareholders Association extending dividend restriction agreement of August 15, 1989 to "December 31, 1990; thereafter the terms and conditions of the Agreement shall continue in effect until the earlier of September 30, 1991 or the issuance of a final order by the [ACC] setting rates for APS in

Docket No. U-1345-90-007." The Agreement also amends the August 15, 1989 Agreement "to the limited extent that the parties in Docket No. U-1345-90-007 are not prohibited from filing otherwise relevant testimony in that docket which discusses the subject matter of the Agreement or presents recommendations for future Commission action to be effective upon expiration of the Agreement as amended...."

March 14, 1990: ACC issues Decision No. 56833, approving, retroactive to March 1, 1990, the agreement of March 1, 1990 among ACC Staff, RUCO, APS, Pinnacle West and Pinnacle West Shareholders Association.

March 16, 1990: Nuclear Regulatory Commission finds that "[o]rganizational instability, uncertainty, and insecurity were evident at Palo Verde due in part to the financial difficulties and declining stock values of the Pinnacle West Capital Corporation . . . ."

March 22, 1990: Pinnacle West puts $450 million in capital into MeraBank. The transferred funds, which included accrued interest, consisted of approximately $310.5 million in cash; and an unsecured note, payable in 12 years, for approximately $155 million. This brings Pinnacle West's debt to $1.1 billion.

March 22, 1990: Pinnacle West closes agreement with a consortium of insurance companies to provide permanent long-term financing for the $310.5 million.

March 22, 1990: Office of Thrift Supervision, Federal Deposit Insurance Corporation and Resolution Trust Corporation release Pinnacle West from any obligations under the "Keep Well"

Agreement.

March 30, 1990: Pinnacle West announces in its 1989 Annual Report that it will conclude a sale of its stock in Malapai in 1990. "As a result of the decision to divest, a charge representing disposal costs, a loss on disposal and accrued operating losses from January 1, 1990 through the estimated disposal date of Malapai has been recorded."[12/]

April 19, 1990: Pinnacle West reports income from continuing operations for the quarter ended March 31, 1990 was $13.1 million, or $0.15 per share of common stock; compared to $40.9 million, or $0.47 per share, for the same period in 1989. Chairman Richard Snell announced that the decline in earnings was attributed to (1) increased operating and maintenance expenses at Palo Verde; (2) higher purchased power and fuel costs incurred by APS due to outages of Palo Verde Units 1 and 2; (3) loss of revenues from Unit 4 at the Cholla Power Plant (due to expiration of sales agreement with Southern California Edison); and (4) $13 million increase in Pinnacle West's interest expense resulting from the $450 million "capital infusion" into MeraBank last month.

## III. PINNACLE WEST'S EXEMPTION HAS BECOME "DETRIMENTAL TO THE PUBLIC INTEREST OR THE INTEREST OF INVESTORS OR CONSUMERS".

In this Part III, we explain the first of two legal bases for revoking Pinnacle West's exemption: i.e., that the exemption has become "detrimental to the public interest or the interest of

---

12/ A sale of Malapai was announced on April 26, 1990 although the specific terms and conditions of the sale were not disclosed.

investors or consumers." Section 3(a).[13] Part III.A explains the legal standard of Section 3(a); in particular, Congress' mandate that the Commission prevent "detrimental" diversification into speculative nonutility ventures. Part III.B then applies these legal principles to Pinnacle West, and asserts that Pinnacle West's dismal diversification experience is more than sufficient cause for revoking its exemption.

A. The Legal Standard: Under Section 3, Congress Directed the Commission To Prevent "Detrimental" Diversification.

A brief review of the legislative history and case law under the Act demonstrates that Pinnacle West's activities and experience fall squarely within the type of diversification that provoked Congress' ire.

Congress believed that utility diversification adventures could weaken utility finances and endanger maintenance programs. As the Senate Report (cited supra at footnote 7) stated (at 30-31): "Utility funds should be conserved for the development of the utility enterprise and not subjected to the hazards of speculative investments." Accordingly, the Senate Report concluded (at 11) that each holding company "will control the management of only a single system of operating companies, which single system is not mixed up with any extraneous businesses such as real estate,

. . .

. . .

---

[13] The second legal basis, that Pinnacle West does not meet the "intrastate" test of Section 3(a)(1), is discussed in Part IV, infra.

hotels, and operations in foreign countries . . . ."[14] Yet that is precisely what Pinnacle West did: Mixed a healthy APS with speculation in savings and loan institutions, real estate, luxury resorts and uranium mines.

Congress also noted that:

> [T]he holding company in the past has confused the function of control and management with that of investment and in consequence has more frequently than not failed in both functions . . . . An investment company ceases to be an investment company when it embarks into business and management. Investment judgment requires the judicial appraisal of other people's management.

Senate Report at 12 (quoting Presidential message transmitting Report of National Power Policy Committee to Congress). That concern aptly applies to Pinnacle West, which clearly confused its primary function as the owner of a utility having a monopoly privilege to serve retail customers, with its aspiration to be a wealthy investor in speculative ventures. Pinnacle West certainly "failed in both functions."

Sen. Wheeler, the Senate sponsor of the Act, asserted that the Act was "designed to prevent the grabbing up of new properties and securities at fantastic prices which bear no

---

[14] See also Report of the National Power Policy Commission, House Doc. No. 137, 74th Congr., 1st Sess. at 10 (expressing need to prevent consumers from supporting "the top heavy [holding company] structure by paying high rates and by enduring poor service from inadequately maintained plants"); North American Co. v. SEC, 327 U.S. 686, 697 (1946) (under the Act, "other holdings may be retained only if their retention is related to the operations of the retained utility properties") (emphasis added); 79 Cong. Rec. at 10324 (Section 11's nondiversification rule for registered holding companies "should go a long way toward preventing the wanton waste of the investors' and the consumers' money.") (Rep. Rayburn, the House sponsor, in introducing the predecessors of Sections 9 and 10).

relation to the value of the thing acquired, and to prevent bringing into the system totally unrelated properties which do not further the development of an integrated utility system." 79 Cong. Rec. 8437-38 (1935). Pinnacle West's acquisition of MeraBank at twice its book value (claiming that the excess portion of the price was "goodwill") was a precise reenactment of Sen. Wheeler's concern.

In Pacific Lighting Corp., 45 S.E.C. 152 (1973), Commissioners Casey and Loomis formulated guidelines under which exempt holding company diversification would not be "detrimental" under Section 3 of the Act. Among the guidelines, concurred in by the other two Commissioners,[15] were the following:

> 1. Nonutility investments should constitute only a relatively small component of the entire holding company system.
>
> 2. Nonutility activities should be either complementary in a significant way to the utility operations or have an established successful (i.e., profitable) record for a reasonable period of time.

Id. at 161-62. Under either of these tests, Pinnacle West should have lost its exemption long before the present harm accrued.

B. Pinnacle West's Diversification Experience Has Been Dismal.

In this Part III.B, we explain how Pinnacle West's diversification experience falls far outside the standards for permissible diversification. Part III.B has four subsections. Part III.B.1, by way of introduction, describes eight assurances

---

[15] Those two Commissioners stated they would have required more stringent standards.

agreements do. As a result, APS will have less internal cash available for its capital needs; and less income available for interest coverages should APS wish to access the bond market. APS necessarily will face more difficulty raising money.

c. Pinnacle West May Have Difficulty Raising New Equity for APS.

In return for the extension of existing loans and the provisions of new long-term loans, Pinnacle West has agreed to tight restrictions on its financial activities. For example, Pinnacle West's ability to pay dividends or make other corporate distributions is dependent upon the satisfaction of specified interest coverage ratios. Under this dividend test, it is "unlikely" that Pinnacle West will be able to pay cash dividends for the foreseeable future. Pinnacle West 1989 Annual Report at 15.

If Pinnacle West cannot pay cash dividends, its stock will become less attractive to prospective stock purchasers. Indeed, the sales price for the stock likely would be below book value, thereby diluting the value held by existing shareholders. Under the long-term financing agreements, Pinnacle West's creditors could block those sales, because they have the power to block any vote by the Pinnacle West Board which, in the creditors' sole judgment, will reduce the value of Pinnacle West's common stock.

The point is that APS (1) may need more cash for expansion or maintenance, (2) find the debt markets unfriendly, and (3) therefore look to Pinnacle West for an equity infusion. Pinnacle West's creditors could block any stock dilution, even as a short term measure necessary to restore APS' financial strength,

Pinnacle West had made to head off regulatory opposition to its diversification plans and then contrasts these assurances with what actually happened, as conceded by Pinnacle West and as published by well-known financial analysts. Part III.B.2 analyzes the diversification-induced financial pressures on Pinnacle West, and describes how those pressures are harming APS directly. Part III.B.3 explains that the interaction between two problems -- Pinnacle West's financial pressures and APS' Palo Verde experience -- has left APS dangerously weakened. Finally, Part III.B.4 asserts that the Pinnacle West debacle has jeopardized the effectiveness of state regulation.

1. Introduction: Pinnacle West has left a trail of broken assurances.

In order to head off regulatory opposition to its diversification plans, Pinnacle West made a series of eight assurances. It has kept none of them. Before explaining how Pinnacle West's activities are harming the public interest, we contrast what Pinnacle West promised with what it delivered.

a. Pinnacle West's Eight Assurances.

<u>Assurance No. 1:</u> Any financial problems from diversification would be nipped in the bud by the lenders.

> [B]efore we got ourselves in a position where we were looking at giant write-offs, there would be problems with the banks . . . . [B]anks will come to boards of directors and say: We want our people on this board. We are going to change the people in the management of the company, because we want to see this thing turned around . . . .

Statement of AZP's Executive Vice-President Henry Sargent, <u>In the Matter of the Open Meeting on APS' Planned Corporate Restructuring</u> (April 4, 1985), Tr. 23-24, 64.

Assurance No. 2: APS' financial strength would never be pledged, directly or indirectly, to support the MeraBank acquisition.

> [AZP would not buy MeraBank] if there is any condition or any requirement imposed upon us by the Federal Home Loan Bank Board, who has jurisdiction, that in any way APS assets, credit, or ultimately obviously its ratepayers would be required to pledge to support the acquisition.

Statement of then Chairman Keith Turley, In the Matter of the Special Open Meeting Re Discussion of AZP's Proposed Acquisition of MeraBank, Tr. at 9 (Ariz.Corp.Comm. June 12, 1986).

> This transaction with MeraBank could be financed solely and exclusively on the basis of . . . the input that AZP shareholders have made, and bank financing which is available to AZP without any way relying on the credit or guarantees or anything else of APS.

Statement of APS Senior Vice-President Jaron Norberg (Id. at 31) (emphasis added).

> AZP and MeraBank have conditioned the transaction so that in no event may APS' financial resources be directly or indirectly committed or pledged to accomplish the acquisition.

Letter from AZP to Kathryn B. McGrath, Director, Division of Investment Management of the Securities and Exchange Commission at 3-4 (August 7, 1986).

Assurance No. 3: The ACC, through its regulatory influence over APS, always would be able to prevent diversification problems before they became too large.

> If you see us starting to get enormous investments in single enterprises, that in your opinion are risky, you know, the Commission has so much authority over our principal assets, which is APS, that, you know, I would doubt if we want to -- I

> mean, I think the Commission would have a great deal of influence over how the company was managed if it came to something like that.

Statement of Mr. Turley, In The Matter of the Open Meeting on APS' Planned Corporate Restructuring, (April 4, 1985), Tr. 24.

Assurance No. 4: The holding company would never borrow money.

> [Q.] [D]o you intend to issue debt, too at the AZP level?
>
> [A.] No.

Statement of AZP Vice-President Henry Sargent, Id. at 71.

Assurance No. 5: Pinnacle West would not diversify into areas of which it was ignorant:

> So I would say a guiding principal, [sic] at least in the near future is not trying to get into something that we don't know something about, but to try to find things where either the management of the company or some sizable staff of the company has some specific knowledge that would be useful in evaluating it.

Id. at 66.

Assurance No. 6: APS' bond ratings would never reflect Pinnacle West's diversification risk.

> [Q.] You indicated [that] the bond market is going to hold them separate, MeraBank and APS, but in reality it is all under AZP on the market, and your downgrading will depend upon AZP, not MeraBank or APS, whatever their particular earnings are.
>
> [A.] I don't agree with your premise, because the rating agencies, Standard & Poor's, will rate APS and its bonds, it will not be rating AZP when it makes those judgments. So we don't agree on that one.

Statement of AZP's then Chairman Keith Turley, In the Matter of the Special Open Meeting Re Discussion of AZP's Proposed Acquisition

of MeraBank, Tr. at 25 (Ariz.Corp.Comm. June 12, 1986).

Two assurances are particularly relevant to the requested revocation of Pinnacle West's exemption from the Act, because they were made in a letter intended to maintain that exemption:

Assurance No. 7: "AZP's anticipated investment in MeraBank represents a relatively small component as compared with its utility subsidiary." Letter to Kathryn B. McGrath, supra, at 3-4 (August 7, 1986).

Assurance No. 8: "MeraBank has an established record of continuing growth which will contribute favorably to the AZP corporate group." Id.

As we make clear below, Pinnacle West delivered on none of these assurances.

b. What Pinnacle West Delivered.

The verdict on Pinnacle West's diversification experience -- handed down by Pinnacle West itself, bond rating agencies and other observers in the financial community -- is unanimous: Pinnacle West has failed dismally. All eight assurances were illusory. Excerpts follow.

From Pinnacle West: Pinnacle West's 1989 Annual Report stated (at 15):

> As a result of deterioration of the Southwest real estate market, MeraBank recorded significant losses in 1988 which precluded the payment of any dividends to Pinnacle West by MeraBank. SunCor was also adversely affected by this downturn and its ability to generate cash flow was restricted. Continued weakness in the market for uranium concentrates hampered Malapai's ability to achieve its revenue goals. Because of the uncertainties associated with these market conditions, Pinnacle West reduced its annual dividend to shareholders from $2.80 to $1.60 per share beginning in the first quarter of 1989.

> As the real estate and uranium concentrates markets continued to deteriorate in 1989, MeraBank, SunCor and Malapai continued to record operating losses. As a result, in the fourth quarter of 1989, Pinnacle West suspended its quarterly dividend to shareholders.

From the rating agencies: Three major rating agencies -- Moody's, Standard & Poor's and Duff & Phelps -- lowered APS' bond ratings in late 1989 and early 1990. The agencies cited, among other factors, the potential for decreasing financial flexibility at APS due to the continuing liquidity problems of Pinnacle West and Pinnacle West's dependence on common stock dividends. APS has admitted that it "expects that the downgradings . . . may adversely affect [APS'] ability to access the financial markets and will raise the cost of external capital." 1989 APS Annual Report at 9.[16/]

From Other Financial Observers: Other observers in the financial community have been equally critical of Pinnacle West's diversification:

> [A]ny sales of possibly mining or real estate would have to be on a fire-sale basis. In fact, either or both of these two segments could in fact produce more red ink soon if auditors force any markdowns of real estate or uranium inventories . . . . Spin off some of these subsidiaries? At the present time, it would appear that the opportunity to do this at anything resembling an attractive price would probably be pretty limited, in addition to the fact that it would also be an admission by corporate management that diversification was a mistake.

The First Boston Corporation, (October 4, 1988).

---

16/ Pinnacle West's 10-Q Report for September 30, 1989 (at p. 16) was less tentative: "The downgrading by Moody's and the credit watch status are expected to impact APS' ability to access the financial markets and will raise the cost of APS' external capital."

> We view the MeraBank acquisition as an unfortunate event for [Pinnacle West's] shareholders . . . . Stockholders could be faced with a black hole in the loan portfolio of MeraBank, depending on the level of non-performing assets . . . . We believe the most prudent strategy for [Pinnacle West] to undertake may be to divest MeraBank even if it sustains a write off of its net investment of $229 million in MeraBank . . . . We reemphasize our high level of discomfort with management's diversification strategy and see no upside in the stock until management takes action to address its diversification problems.

Drexel Burnham Lambert, (March 10, 1989).

2. The Diversification-Induced Financial Pressures on Pinnacle West Are Harming APS Directly.

a. Introduction.

APS is strapped. According to APS' Annual Report for 1989 (at 3), the utility faces "serious financial challenges." These challenges "underscore the need for the rate increases [it] filed with the Arizona Corporation Commission . . . ." Id.[17] APS "has a degree of flexibility in adjusting its construction program to its financing capability; however, that flexibility is somewhat limited and its long-term liquidity will depend on its access to the capital markets, which in turn will depend on sufficiency of rates to provide adequate coverages on senior securities and an adequate rate of return on common stock equity." Id. at 7.

Pinnacle West's diversification-induced financial problems are exacerbating APS' plight, by constricting APS' access to debt and equity. Although theoretically APS can issue its own debt, certain elements in Pinnacle West's long-term financing

---

[17] That January 11, 1990 filing requests three 6.8% rate increases, to take effect in 1991, 1992 and 1993, respectively. Id.

agreements, including the pledge of APS stock, limit the indebtedness which APS can incur. As for equity, APS is completely dependent on Pinnacle West, and Pinnacle West faces difficulty in issuing new equity. Each of these two points is discussed further below.

b. The Financing Agreements, Including the Pledge Covenant, Limit the Indebtedness APS can Incur Directly.

Pinnacle West's problems have made it more difficult for APS to raise money for its own needs. APS has stated:

> Provisions in certain financing agreements of Pinnacle West . . . limit the aggregate amount of additional long-term indebtedness that may be incurred by Pinnacle West and its subsidiaries, including [APS], to a specified percentage of consolidated capitalization (as defined).

1989 APS Annual Report at 8. APS claims that "based on certain assumptions regarding consolidated earnings [of Pinnacle West], it is not expected that these provisions will limit [APS'] ability to meet its capital requirements." Id.

The ACC does not know what these "certain assumptions regarding consolidated earnings" are. The ACC does know that Pinnacle West's only significant source of "earnings" is APS, and that the chief determinant of those earnings is the ACC. Yet no one at APS or Pinnacle West consulted the ACC before making these "assumptions." If these "assumptions" turn out to be wrong, APS will not have access to enough outside capital.

Moreover, to support $1.1 billion in debt and avoid default under its long-term financing agreements, Pinnacle West must receive a certain amount of money each year from APS in the form of dividends. That requirement lasts as long as the loan

on the grounds that it conflicts with the creditors' short-term goal of being paid back.

3. The Interaction Between APS' Palo Verde Problems and Pinnacle West's Financial Problems Leaves APS Dangerously Weakened.

APS' problems at Palo Verde are significant to this proceeding for three reasons. First, the Palo Verde problems are creating financial pressures on APS, and those pressures reduce APS' ability to pay the dividends that keep Pinnacle West from defaulting. Second, the Pinnacle West situation diminishes APS' ability to deal with its Palo Verde problems. Third, the Pinnacle West pressures are an independent contributor to the Palo Verde problems. In short, the Pinnacle West "resolution" has left APS less able to deal with its own problems. After summarizing the recent history at Palo Verde, we discuss each problem separately.

a. Summary of the Palo Verde Problems.

APS has stated: "In March 1989, all three units began experiencing a variety of equipment failures which would, in combination with subsequent regulatory action, take them out of service." The Nuclear Regulatory Commission ("NRC") instructed APS to obtain NRC permission before restarting each unit. 1989 Annual Report of Arizona Public Service at 2.

On March 16, 1990, the Executive Director for Operations of the NRC, James M. Taylor, sent to APS a Diagnostic Evaluation Team Report for Palo Verde Nuclear Generating Station (hereinafter, "NRC Deficiency Letter"). Based on an "extensive evaluation onsite and thorough subsequent analysis," the NRC Deficiency Letter found that "Palo Verde had several substantial management, organizational

and technical problems that were caused by a number of longstanding deficiencies . . . ." The NRC Deficiency Letter also found "several positive attributes and strengths." Id. at 1-2. Among the deficiencies (emphasis added):

1. "[L]ack of praise and financial rewards for performance that exceeded expectations or for achieving the desired results . . . . [N]umerous individuals said that they knew of no one who had been rewarded for taking problems to their superiors, recommending solid long-term solutions over short-term quick fixes, and doing the job right the first time." Id. at 39.

2. The NRC concluded that a "new management team understands the major management issues that affected plant performance and had begun implementing improvement initiatives." But "the rate at which major issues were being resolved was being limited by a number of factors. These included: (1) insufficient top level improvement program integration, (2) a lack of systematic/complete programs[,] plans and implementing strategies for all issues, (3) insufficient management oversight of improvement efforts, and (4) organizational instability, uncertainty, and insecurity." Id. at 13.

3. "Organizational instability, uncertainty, and insecurity were evident at Palo Verde due in part to the financial difficulties and declining stock values of the Pinnacle West Capital Corporation, whose assets included the Arizona Public Service Company ("APS")." (Emphasis added). Id. at 14.

4. "Personnel, as members of the employee savings plan, received matching funds in the form of Pinnacle West common stock. Additionally, personnel could increase their holdings by participating in the stock purchase plan. As the Pinnacle West stock values declined, so did the net worth of these plans, especially to longstanding members. Many individuals believed that Palo Verde was the most successful operation among the Pinnacle West subsidiaries, and that if financial difficulties lowered their stock values, their

programs and future salary increases could also be impaired." (Emphasis added). Id. at 25.[18]

5. "With the exception of identifying problems concerning management issues, problem identification was ineffective at Palo Verde. Plant personnel identified material and hardware deficiencies inadequately and in an untimely manner . . . . Systems were ineffective for determining problems, analyzing root causes, making timely decisions concerning corrective actions, prioritizing corrective actions, and controlling the work to achieve the desired results on schedule." Id. at 14.

b. The Palo Verde Problems Diminish APS' Ability To Keep Pinnacle West From Defaulting On Its Long-Term Loans.

The Palo Verde outages required increased reliance on APS' coal-fired plants and eliminated energy sales opportunities. Pinnacle West 1989 Annual Report at 3. Pinnacle West explained: "The extended outage at Palo Verde had a significant impact on the financial fortunes of APS in 1989." Id. For example, the outages were cited by Moody's, Standard & Poor's and Duff & Phelps as among the reasons for lowering APS' bond ratings. 1989 Annual Report of Arizona Public Service Company at 9. APS' decline in net income in 1989 as compared with 1988 "was primarily due to higher fuel and purchased power costs incurred as a result of the extended Palo Verde outages." Id. at 10. Because of the Palo Verde-induced financial pressures, APS' ability to pay Pinnacle West the dividends necessary to keep Pinnacle West from defaulting on its loans is uncertain.

---

18/ The NRC did find "no evidence to suggest that financial difficulties at Pinnacle West or APS appropriation levels had jeopardized safety systems or the safe operation of the units." Id. at 25.

c. The Pinnacle West Pressures Render APS Less Capable of Resolving Its Palo Verde Problems.

As discussed above, the long-term financing agreements indirectly restrict APS' access to debt markets, as well as Pinnacle West's access to equity and debt markets on behalf of APS. The relationship between the MeraBank disaster, Palo Verde's problems and the welfare of Arizona's electricity consumers is direct and powerful. Given Palo Verde's distressingly poor operational history, it is not inconceivable that the plant could be shut down for long periods of time, either of its own accord or by order of the NRC. Such a shutdown would impose large additional capital requirements on APS. Pinnacle West is hindered in its ability to raise more money for APS, at least through the sale of new stock. APS, of course, cannot issue its own equity; only Pinnacle West can issue new stock, and any such move can be vetoed by the creditors. As for APS debt, APS's own bond ratings have been lowered due to Pinnacle West's problems. Pinnacle West's diversification has rendered APS defenseless to protect itself and its customers.

d. The Pinnacle West Pressures Are An Independent Contributor to the Palo Verde Problems.

This linkage was made clear by the NRC Deficiency Letter, supra.

Conclusion: Pinnacle West's diversification has robbed APS of its ability to weather jolts to its financial well-being. Those same events have robbed the ACC of its ability to administer those jolts when the ACC deems them necessary to ensure efficient

and economical management. With that introduction, we turn to the effect of Pinnacle West's diversification on the effectiveness of state regulation.

4. The Pinnacle West Debacle Has Jeopardized the Effectiveness of State Regulation.

The Public Utility Holding Company Act has a central concern to protect effective State regulation. See Sections 1(a), 1(b)(2), 1(b)(5). The Pinnacle West problems have restricted ACC regulation in two ways. First, as discussed above, Pinnacle West's ability to repay its loans depends on the level of dividends received from APS. If the ACC's ratemaking decisions somehow leave APS with insufficient dollars to pay the required dividends, Pinnacle West will default on its loans and its creditors would become the owners of APS and Pinnacle West likely would enter bankruptcy. Neither result is desirable. Second, the ACC may be unable to prohibit the payment of excess dividends to Pinnacle West by APS even if such payments are detrimental to the health and well-being of the utility and its customers.

a. ACC Cannot Carry Out Its Ratemaking Activities Normally, For Fear of Triggering Pinnacle West's Bankruptcy and Causing Financial Institutions to Take Control of APS.

Pinnacle West has stated:

> Pinnacle West will remain primarily dependent upon the receipt of dividends form APS to meet its cash requirements. As a result, Pinnacle West's liquidity may be significantly affected by the outcome of certain matters currently pending before the [ACC], which has regulatory authority over APS in matters relating to retail electric rates and the issuance of securities. Management believes that under its current operating conditions, Pinnacle West will have sufficient cash flow to meet its debt obligations and fund its future operations.

Pinnacle West 1989 Annual Report at 15. In other words: unless the ACC awards sufficient rate increases, Pinnacle West may go bankrupt.

APS has filed a major rate increase request to recover its investment in Palo Verde. Docket No. U-1345-90-007. In determining how much of that investment APS may recover, the ACC must determine what share of these costs was incurred reasonably or prudently. The ACC may not permit recovery of imprudent or excessive costs. But what happens if the amount that the ACC determines is proper for APS to recover is less than the amount required to maintain the dividend payments Pinnacle West needs to meet its obligations under the long-term loans? As a direct result of Pinnacle West's diversification, the ACC may face a thankless choice between (1) authorizing recovery of unreasonable costs and (2) guaranteeing Pinnacle West's bankruptcy and transferring control of the company.

The risks to APS go beyond the outcome of APS' Palo Verde case. What if there is an economic downturn that reduces APS' revenue stream? What if Arizona consumers choose to conserve more and consume less? What if unanticipated demands for capital arise? The ACC, as the state governmental body charged by the Arizona Constitution to set just and reasonable rates for Arizona's consumers, is not inclined to discourage conservation or sacrifice service standards to protect Pinnacle West. But the financing agreements pressure the ACC to do just that, or trigger a Pinnacle West bankruptcy, with its unknown and potentially devastating effects on APS, not to mention a transfer of ownership and control

of APS to miscellaneous banks and insurance companies.

b. ACC May Not Be Able To Prevent APS From Paying Excess Dividends To The Detriment Of Utility Operations.

On July 13, 1989, the ACC issued Decision No. 56548, which (1) prohibited any increase in the current level of APS dividends; (2) prohibited all other transfers of funds except as payment for services "historically" rendered to APS by Pinnacle West; and (3) imposed certain transactional reporting requirements.

APS and Pinnacle West immediately challenged the ACC's jurisdiction to issue the order. Challenges were undertaken both before the Commission and in state court.

In settlement of these challenges, the ACC withdrew its Decision No. 56548; APS and Pinnacle West agreed that APS will not, without prior ACC approval, "transfer any funds to Pinnacle West or any of its subsidiaries, directly or indirectly, except for regular quarterly dividend payments not in excess of that declared and paid immediately prior to July 13, 1989 and also excepting reasonable amounts for the payment of services historically rendered to APS by Pinnacle West transfers of funds to Pinnacle West or any of its subsidiaries. APS also agrees to report to the Commission all payments or transfers of funds in excess of $1 million, within five (5) days of such payment or transfer." The settlement agreement was to terminate on the earlier of the "resolution of the MeraBank Issue" or March 1, 1990. ACC Decision No. 56603.

On March 14, 1990, the ACC issued Decision No. 56833, extending the agreement to "December 31, 1990; thereafter the terms

and conditions of the Agreement shall continue in effect until the earlier of September 30, 1991 or the issuance of a final order by the [ACC] setting rates for APS in Docket No. U-1345-90-007."

This agreement does not settle the dividend issue, it merely defers to some future date the present dispute over the ACC's authority to restrict dividends.

If the ACC is unable to restrict APS dividends and APS' financial distress continues, the dangers are evident. Concerns about Palo Verde and its safe and efficient operation may take a back seat to the financial health of Pinnacle West. Necessary maintenance and construction may be foregone or deferred at the expense of APS' customers.

## IV. THE PINNACLE WEST SYSTEM DOES NOT SATISFY THE SPECIFIC REQUIREMENTS OF THE "INTRASTATE" EXEMPTION OF SECTION 3(a)(1).

As explained in Part I, supra, Pinnacle West currently holds an exemption from the Act as an "intrastate" system under Section 3(a)(1) of the Act. In Part III, supra, we discussed one legal basis for revoking Pinnacle West's exemption: that the exemption had become "detrimental to the public interest, or the interests of investors or consumers." Section 3(a). This Part IV sets forth an independent basis for revocation: that the Pinnacle West system is not an "intrastate" system. Part IV.A discusses the legal standard, Part IV.B applies that standard to this case.

### A. The "Intrastate" Standard of Section 3(a)(1).

Under Section 3(a)(1), a holding company must meet two distinct tests to meet the "intrastate" standard. It must (a) be predominantly intrastate in character and (b) carry on its business

substantially in a single state only. The first requirement focuses on the company itself; the second requirement focuses on the business activities of the company. See Washington Railway and Electric Co., 4 S.E.C. 191, 192-94 (1938). We describe each requirement below.

1. The First Requirement: Is the Holding Company Predominantly Intrastate in Character?

In North American Co. v. SEC, 327 U.S. 686, 701-03 (1946), the Supreme Court held that the "dominant characteristic of a holding company is the ownership of securities by which it is possible to control or substantially to influence the policies and management of one or more operating companies in a particular field or enterprise . . . ." And in Houston Natural Gas Corp., 3 S.E.C. 664, 667 (1938), a gas utility subsidiary's essentially local character was not conclusive of the nature of applicant holding company's business: "The applicant is essentially a financing enterprise; its main function is to supply funds to the subsidiaries whenever the need arises. As such, the public distribution of securities, which in the past, at least, has been effected in interstate commerce, is the very essence of applicant's business . . . . [T]he payment of interest and dividends by the applicant to its widely scattered bondholders and stockholders necessitate employment of the mails and other instrumentalities of interstate commerce." Id. at 667-68. (Emphasis added).

2. The Second Requirement: Is the Holding Company Doing Business Substantially In a Single State?

What makes the typical holding company interstate in character is its ownership of utility stock. See North American

Co. v. SEC, supra, 327 U.S. at 701-03 ("Congressional statements in Section 1 about holding company abuses would be utterly meaningless in the light of reality were they not premised upon the ownership of securities by holding companies and the use of that ownership to burden and affect the channels of interstate commerce").

In describing why the "very nature of the business of a holding company puts it in interstate commerce," Sen. Wheeler stated: ". . . [A]nd there is the further fact that these financial holding companies all distribute their securities in interstate commerce and affect investors all over the Nation. It is of the utmost importance to them that they be able to attract investors from every State." 79 Cong.Rec. 8394 (1935).[19]

B. Pinnacle West's Business -- The Business Of Raising Funds To Repay Its MeraBank Debt -- Is A National Business.

In order to settle with the federal savings and loan regulators, Pinnacle West sent its principal asset -- the stock of APS -- to banks and insurance companies all over the country. Under the covenants, major decisions affecting APS, such as whether

---

[19] Sen. Wheeler also stated: "There is a further provision that a holding company which has already distributed its securities by public offerings through the channels of interstate commerce must also register if its securities are presently outstanding among security holders in the several States. This provision covers the case where a holding company has started in motion, through the channels of interstate commerce, a series of securities transactions which are being continued by others as the securities change hands in interstate commerce in the way contemplated and expected by the holding companies when they were first issued in interstate commerce. In such cases the holding company issuing the securities persists in a continuing interstate relationship with the holders of its securities." 79 Cong.Rec. 8397.

Pinnacle West can issue new stock to finance APS' needs, now are under the control of non-Arizona entities. Under these special circumstances, Pinnacle West cannot maintain its intrastate exemption. The holding company -- as distinct from APS itself -- is no longer "predominantly intrastate in character." And Pinnacle West's business activities do not take place in a single state only. Pinnacle West's business is now the business of raising funds to repay its MeraBank debt. That business is a national business.

## V. THE COMMISSION MUST REPLACE PINNACLE WEST'S EXEMPTION WITH CONDITIONS WHICH PROTECT CONSUMERS AND MAINTAIN REGULATORY EFFECTIVENESS.

### A. The Commission Has Authority To Revoke Pinnacle West's Exemption.

Under Section 3 of the Act, "the Commission is charged with not permitting the creation of a situation where undue risks to investors and consumers or the potentiality of abuse are presented as a result of expansion into non-utility activities". Pacific Lighting Corp., supra, 45 S.E.C. at 161 (1973).[20] Thus Section 3(c) states, in relevant part:

> Whenever the Commission, on its own motion, or upon application by the holding company or any subsidiary company thereof exempted by any order issued under subsection (a) of this section, . . . finds that the circumstances which gave rise to the issuance of such order no longer exist, the Commission shall by order revoke such order.

---

[20] See also Senate Report at 24 (exemption not "beyond the power of the Commission to correct when abused or used to circumvent the purposes of the title"); Colonial Gas Energy System, Holding Company Act Release No. 22144 (July 30, 1981)(exemption revoked because financial changes rendered exempt entity less able to raise capital and harmed utility subsidiaries).

In particular, the Commission must revoke an exemption which has become "detrimental to the public interest or the interest of investors or consumers." Section 3(a).[21]

This Commission has revoked exemptions on a number of occasions. In Long Island Lighting Company, Holding Company Act Release No. 5746 (April 21, 1945), the Commission, in response to a Petition from a committee of Preferred Stockholders, revoked an exemption due to "overcapitalized structure with resultant lack of economies in the raising of capital," and "large accumulations of arrearages on the preferred stocks of the company and its subsidiaries." The Commission ordered adherence to the following provisions from which Long Island had been exempt: Sections 4 and 5 (requiring registration); 6 and 7 (requiring advance approval of certain securities issuances or changes in voting power); 12(c), 12(d), 12(e), 12(f) (banning certain interaffiliate transactions and mandating advance approval for others).

Another example was Colonial Gas Energy System. Colonial was a holding company with two gas subsidiaries and a "factoring" subsidiary which financed plant additions for lease to the gas utilities. In 1977, "reports filed with the Commission under the federal securities law disclosed complexities in the financial

---

21/ The Commission's authority to modify or revoke an exemption is confirmed by several other provisions of the Act. Section 1(c), stating Congress' goal "to compel the simplification of public-utility holding company systems" is an independent source of exemption modification authority. See International Utilities Corp., Holding Company Act Release No. 6181 (November 3, 1945). Finally, Section 20 of the Act authorizes the Commission "from time to time to make, issue, amend, and rescind . . . such orders as it may deem necessary or appropriate to carry out the provisions of this title." "Such orders" include orders granting exemptions.

structure of Colonial and its subsidiaries which impaired Colonial's ability to raise needed capital and adversely affected its operating subsidiaries." The Commission invoked Rule 6, thereby automatically terminating the exemption after 30 days. Then Colonial and the Commission Staff subsequently entered into a Stipulation under which Colonial and its subsidiaries agreed to comply with Sections 6, 7 and 12(b) of the Act until the disposition of the exemption application. See Colonial Gas Energy System, Holding Company Act Release No. 22, 144 (July 30, 1981).[22/]

That MeraBank has departed Pinnacle West's corporate structure does not obviate registration requirements. Pinnacle West remains saddled with the MeraBank debt. In Cities Service Co. v. SEC, supra, Cities Service had been registered as a holding company and controlled more than 125 companies, both utility and nonutility. In 1944, the Commission ordered Cities to limit its operations to those of a single integrated gas utility system, as required by Section 11(b)(1) of the Act. Cities then applied for an exemption from the Act, asserting that it no longer was a "holding company" under Section 2(a)(7) of the Act. The Commission denied the request, explaining that a minority voting interest remained, in violation of Section 11(b)(2)'s ban on inequitable distributions of voting power. The Court emphasized that the rearrangement of Cities' corporate structure did not terminate the Commission's authority; rather, the Commission had a duty to

---

22/ Ultimately Colonial ended its corporate existence, liquidated the factoring subsidiary and the two gas utilities merged into a single operating company. Id.

"eradicate disclosed abuses;" and the Commission had "the power to deal with abuses even though it chooses to do so after the divestiture." Id. at 651-52.

B. Conditions Necessary To Protect Consumers And Maintain Regulatory Effectiveness.

Upon revoking Pinnacle West's exemption, the Commission should impose conditions in eight areas, as discussed below.[23]

1. Condition No. 1: Divestiture of the Remaining Nonutility Subsidiaries and Prohibition Against Investments in New Nonutility Businesses.

Pinnacle West should be precluded from investing in nonutility businesses. Under Section 11(b)(1) of the Act, registered holding companies may not undertake nonutility activities unless they meet three tests: (1) "reasonably incidental, or economically necessary or appropriate to the

---

[23] Based on the following colloquy, we expect that Pinnacle West will not oppose these conditions:

> [Q.] . . . We had showed to a certain extent it is impossible to make shareholders bear the full brunt of these [nonutility] failures if they turned out to be business mistakes. Is there any way ratepayers can be absolutely insulated?
>
> [A.] I think the only thing that can insulate the ratepayers over our lifetime is the restrictions that the SEC has on utility holding companies, the percentage of investment that they can make, the percentage of their total business. When it gets over 15 or 20 percent of something like that, you start worrying about the serious risk of losing your exemption for utility public holdings. So you have to invest 20% awful stupidly in order to make a drastic increase in the cost of capital of a utility.

Statement of AZP Executive Vice-President Henry Sargent, In The Matter Of The Open Meeting On APS' Planned Corporate Restructuring, supra, Tr. 72-73.

operations of one or more integrated public-utility systems," (2) "necessary or appropriate in the public interest or for the protection of investors or consumers," and (3) "not detrimental to the proper functioning of such systems or systems." Section 11(b)(1). None of the Pinnacle West's remaining nonutility subsidiaries meets this test. The Commission should order their divestiture, and prohibit any additional nonutility investments.

On March 14, 1990, the ACC issued rules and regulations concerning utility investment in nonutility businesses. ACC Decision No. 56844. Those rules operate on a prospective basis only and would not allow the ACC itself to order divestiture of an existing holding company or its affiliates. The rules merely provide that approval must be obtained from the ACC prior to the reorganization of an existing holding company. In any event, the rules have come under intense attack by virtually all the affected utilities in Arizona, including Pinnacle West and APS. The ACC expects that the rules will be the subject of protracted litigation and will offer no immediate relief from the abuses described herein. That relief can come only from this Commission.

If the Commission does permit Pinnacle West to preserve its present investment in nonutility businesses, the Commission at least should require Pinnacle West to certify, on an annual basis and based on substantial evidence (as opposed to speculation, hopes or guesses, which is what Pinnacle West has offered in the past; <u>see</u> Part III.B.1, <u>supra</u>) that none of these investments has had, nor is likely to have during the next year, any effect on the utility's cost of capital. Such certification should trigger a

Federal Register notice and public opportunity to comment. This Commission must issue an order adopting or rejecting the certification. Such order must be based on substantial evidence, and be subject to judicial review under Section 24 of the Act.

If this Commission does prohibit Pinnacle West's existing and future investment in nonutility businesses, we would see no reason for the continued existence of the holding company structure. Under normal circumstances, the Commission would have to order Pinnacle West's termination. See Section 1(c) (Congressional policy is "to provide as soon as possible for the elimination of public-utility holding companies except as otherwise expressly provided in this chapter").[24/] But we do not seek this additional relief at this time, because we assume that the continued existence of Pinnacle West is necessary to prevent default under the long-term financing agreements. We reserve the right to alter this position should we, or this Commission, determine that Pinnacle West's continued existence is no longer necessary to prevent default. In particular, at that fortunate time when Pinnacle West pays off the loans, we expect that such a determination would be in order.

2. Condition No. 2: Prohibition on Borrowing By Pinnacle West From Its Affiliates.

Section 12(a) of the Act provides: "It shall be unlawful for any registered holding company . . . directly or indirectly,

---

24/ Cf. Colonial Gas Energy System, Holding Company Act Release No. 22, 144 (July 30, 1981) (after Commission issued a "Rule 6" order revoking exemption, company prepared a plan which terminated holding company and left only the utility).

to borrow, or to receive any extension of credit or indemnity, from any public-utility company in the same holding-company system or from any subsidiary company of such holding company . . . ."

Although Pinnacle West has not borrowed from its subsidiaries up to this point, there is a substantial risk of such borrowing taking place if Pinnacle West has difficulty meeting its payments under the loan agreements. Therefore, the prohibition of Section 12(a) should apply to Pinnacle West.

3. Condition No. 3: Prohibition on Any Further Pledging Of Pinnacle West's APS Stock as Security for Any Future Loan To Pinnacle West.

For the reasons set forth in Part III, supra, Pinnacle West's pledging of APS stock in return for a loan to bail out its MeraBank investment is per se "detrimental" and therefore sufficient grounds alone for revoking Pinnacle West's exemption. That pledge came to the ACC as a fait accompli. The ACC has chosen at this time not to ask this Commission to undo that particular damage, due to ACC's estimate that the resulting financial harm, including Pinnacle West's bankruptcy, might be worse than the violation itself.[25] The ACC decided to cut its losses.

The ACC wants no repeat of this situation. We hereby ask this Commission to impose, as one of the post-revocation conditions, a prohibition against any additional pledge of APS stock by Pinnacle West.

. . .

---

[25] Thus, the ACC has granted Pinnacle West a waiver from its new interaffiliate transaction rules and is not challenging the loan agreements at this time.

4. Condition No. 4: Advance Approval of Other Financial Transactions.

Congress expressed great skepticism about the ability of holding companies to conduct financial transactions in a manner protective of their subsidiaries and the ultimate consumer. Congress singled out at least three types of financial transactions for special treatment.

Loans to Subsidiaries: Section 12(b) provides that "[i]t shall be unlawful for any registered holding company or subsidiary company thereof . . . directly or indirectly, to lend or in any manner extend its credit to or indemnify any company in the same holding-company system in contravention of such rules and regulations or orders as the Commission deems necessary or appropriate . . . ."

Dividends and Internal Stock Purchases: Section 12(c) provides that "it shall be unlawful for any registered holding company or any subsidiary company thereof, . . . to declare or pay any dividend on any security of such company or to acquire, retire or redeem any security of such company, in contravention of such rules and regulations or orders as the Commission deems necessary or appropriate to protect the financial integrity of companies in holding-company systems, to safeguard the working capital of public-utility companies, to prevent the payment of dividends out of capital or unearned surplus, or to prevent the circumvention of the provisions of this chapter . . . ."

Sales of Utility Securities or Assets: Section 12(d) provides that "it shall be unlawful for any registered holding company or any subsidiary company thereof, . . . to sell any

security which it owns of any public-utility company, or any utility assets, in contravention of such rules and regulations or orders regarding the consideration to be received for such sale, maintenance of competitive conditions, fees and commissions, accounts, disclosure of interest, and similar matters as the Commission deems necessary or appropriate . . . ."

The Commission should require that Pinnacle West and APS adhere to the rules listed below along with any others the Commission deems necessary. Where a rule requires advance approval for a particular transaction, and Pinnacle West or APS requests such approval, the Commission should notify the ACC and the public through a notice in the Federal Register, requesting comments and providing an opportunity for a hearing.

Rule 42: Prohibition against any acquisition, retirement or redemption of securities without advance notice and approval.

Rule 43: Prohibition against any sale of securities or assets among affiliates without advance notice and approval.

Rule 44: Prohibition against any sale of securities by registered holding company to a nonaffiliate without advance notice and approval.[26/]

Rule 45: Prohibition against any loans, extensions of credit, donations or capital contributions to associate companies without advance notice and approval.

Rule 46(a): Prohibition against any declaration of dividend out of capital or unearned surplus without advance notice and approval.

---

26/ The ACC assumes that this prohibition includes the issuance of any new debt by Pinnacle West.

Rule 46(b): Prohibition against any payment of principal or interest on certain indebtedness without advance notice and approval.

Rule 50: Requirement of competitive bidding for the purchase or underwriting of certain securities.

Rules 62-65: Requirement of advance notice for solicitations of any authorization in connection with transactions which are the subject of an application before the Commission.

5. Condition No. 5: Treatment of "Routine" Financing.

We do not intend to suggest that the proposed oversight should apply to every routine financing. The question, of course, is what is "routine." As the guardian of the "public interest, and the interest of investors and consumers," the Commission must accommodate two needs: (1) Pinnacle West's and APS' need to obtain routine financing without undue delay; and (2) the need for consumers and state regulators to test a company's characterization of its financing proposal as routine. We propose a compromise solution that accommodates both interests comfortably, by permitting automatic approval of financing when no one has protested. When there is a protest, we would suggest expedited treatment.

More specifically, financing proposals should be noticed for comment in the Federal Register. If there is no challenge to the proposed financing, the proposal could go into effect on the day following the due date for comments. If there is a challenge, the Commission could rule within 30 days as to whether the challenge is a legitimate one. If the Commission rules the

challenge not legitimate, that is the end of the matter, unless the intervenor seeks judicial review under Section 24 of the Act. If the Commission rules the challenge legitimate, it can decide the issues on the pleadings if there are no issues of fact; or, if there are issues of fact, set the matter for expedited hearing. At this point, most disputes can be settled. Otherwise, the disputes can go on to hearing.

6. Condition No. 6: Prohibition on Provision of Services, Sales or Construction Contracts for Nonaffiliates.

Section 13(f) provides:

> It shall be unlawful for any person whose principal business is the performance of service, sales, or construction contracts for public-utility or holding companies . . . to enter into or take any step in the performance of any . . . service, sales, or construction contract with any public-utility company, or for any such person . . . to enter into or take any step in the performance of any . . . service, sales, or construction contract with any public-utility company, or with any registered holding company or any subsidiary company of a registered holding company

in contravention of Commission rules or orders. To ensure that Pinnacle West devotes its entire attention to its core utility business, we urge the Commission to impose this rule on Pinnacle West.

7. Condition No. 7: Complaint Procedure.

The Commission should create an explicit complaint procedure, including deadlines within which the Commission will act on a complaint, for the purposes of any challenges to Pinnacle West's compliance with the conditions set forth herein.

8. Condition No. 8: Changes in the Conditions.

The Commission also should make clear that there will be

no change in any of these conditions without a notice in the Federal Register, and an opportunity for comment and requests for a hearing. Any Commission order changing the conditions should be subject to judicial review under Section 24.

. . .

. . .

. . .

. . .

. . .

. . .

. . .

. . .

. . .

. . .

. . .

. . .

. . .

. . .

. . .

. . .

. . .

. . .

. . .

. . .

. . .

. . .

## CONCLUSION

This Commission is charged with the duty to protect the regulatory effectiveness of state commissions. Action is long overdue. There is no better evidence of the need for Commission action than the candid request of a state regulatory authority for such action. The ACC believes that Pinnacle West's exemption must be revoked because Pinnacle West should no longer be free to escape the monitoring prescribed by Congress when it passed the Act.

We emphasize that we do not want to block the resolution of the MeraBank problem and the return of Pinnacle West to financial health. We do want to protect Arizona ratepayers during and after the resolution process, and we want to ensure that the sorry events of the past three years never repeat themselves.

WHEREFORE, for the foregoing reasons, the Arizona Corporation Commission hereby asks this Commission to notify Pinnacle West under Rule 6 that its exemption shall terminate within 30 days, and to provide the other relief as set forth above. the ACC seeks party status in any proceeding ordered by the Commission.

RESPECTFULLY SUBMITTED this 1st day of May, 1990.

ARIZONA CORPORATION COMMISSION

TIMOTHY M. HOGAN, Chief Counsel
JANICE M. ALWARD, Attorney
1200 West Washington
Phoenix, Arizona 85007

Attorneys for the Arizona
Corporation Commission

CERTIFICATE OF SERVICE

I hereby certify that I have this 1st day of May, 1990 filed with the Secretary of the Securities and Exchange Commission an Original and seven copies of The Arizona Corporation Commission's Complaint, Petition for Revocation or Modification of Pinnacle West Capital Corporation's Exemption, Request for Hearing and Petition to Intervene; I further certify that I have served one copy of the foregoing by hand delivery to Pinnacle West Capital Corporation and Arizona Public Service Company.

TIMOTHY M. HOGAN
Chief Counsel
Arizona Corporation Commission
1200 West Washington Avenue
Phoenix, Arizona 85007

SUBSCRIBED and SWORN to before me this 30th day of April, 1990.

NOTARY PUBLIC

My Commission expires:

My Commission Expires May 12, 1990