REGULATORY INFORMATION DISTRIBUTION SYSTEM (RIDS)

ACCESSION NBR: 8512040021 DOC. DATE: 85/11/25 NOTARIZED: YES DOCKET #
FACIL: STN-50-528 Palo Verde Nuclear Station, Unit 1, Arizona Publi 05000528
STN-50-529 Palo Verde Nuclear Station, Unit 2, Arizona Publi 05000529
STN-50-530 Palo Verde Nuclear Station, Unit 3, Arizona Publi 05000530
AUTH. NAME AUTHOR AFFILIATION
VAN BRUNT, E. E. Arizona Nuclear Power Project (formerly Arizona Public Serv
RECIP. NAME RECIPIENT AFFILIATION
KNIGHTON, G. W. PWR Project Directorate 7

SUBJECT: Forwards addl info requested in 851120 telcon re auxiliary pressurizer spray sys, including pressurizer vent sys description & charging pump operation to permit issuance of Unit 2 OL.

DISTRIBUTION CODE: A001D COPIES RECEIVED: LTR 1 ENCL 1 SIZE: 8
TITLE: OR Submittal: General Distribution

NOTES: Standardized plant. 05000528
OL: 12/31/84
Standardized plant. 05000529
Standardized plant. 05000530

	RECIPIENT ID CODE/NAME		COPIES LTTR	COPIES ENCL	RECIPIENT ID CODE/NAME		COPIES LTTR	COPIES ENCL
	PWR-B PD7 PD	01	5	5				
INTERNAL:	ACRS	09	6	6	ADM/LFMB		1	0
	ELD/HDS3		1	0	NRR BWR EB		1	1
	NRR BWR PD1		1	1	NRR PWR-A EB		1	1
	NRR PWR-B EB		1	1	NRR/DHFT/TSCB		1	1
	NRR/DSI/METB		1	1	NRR/DSRO DIR		1	1
	NRR/DSRO/RRAB		1	1	NRR/ORAS		1	0
	REG FILE	04	1	1	RGN5		1	1
EXTERNAL:	24X		1	1	EG&G BRUSKE, S		1	1
	LPDR	03	1	1	NRC PDR	02	1	1
	NSIC	05	1	1				

TOTAL NUMBER OF COPIES REQUIRED: LTTR 29 ENCL 26

[illegible]

Arizona Nuclear Power Project
P.O. BOX 52034 • PHOENIX, ARIZONA 85072-2034

November 25, 1985
ANPP 34103 EEVB/BJA

Director of Nuclear Reactor Regulation
Attention: Mr. George W. Knighton, Chief
PWR Project Directorate #7
Division of Pressurized Water Reactor Licensing - B
U. S. Nuclear Regulatory Commission
Washington, D. C. 20555

Subject: Palo Verde Nuclear Generating Station (PVNGS)
Units 1, 2, and 3
Docket Nos. STN 50-528 (License No. NPF-41)/529/530
Additional Information on the PVNGS Auxiliary Pressurizer Spray System (APSS)
File: 85-056-026; G.1.01.10

References: (A) Letter from E. E. Van Brunt, Jr., ANPP, to G. W. Knighton, NRC, dated November 4, 1985 (ANPP-33905). Subject: Information Concerning the PVNGS Auxiliary Pressurizer Spray System.
(B) Letter from E. E. Van Brunt, Jr., ANPP, to Director of Nuclear Reactor Regulation, NRC, dated May 24, 1982 (ANPP-20853). Subject: Amendment 3 to the PVNGS Lessons Learned Implementation Report
(C) Telephone Conversation between M. Ley and C. Liang of the NRC Staff and B. J. Albert and K. L. McCandless of ANPP dated November 20, 1985. Subject: NRC Request for Additional Information on the PVNGS APSS.

Dear Mr. Knighton:

The NRC Staff forwarded a request for additional information on the PVNGS Auxiliary Pressurizer Spray System (APSS) to ANPP during the telecon of Reference (C). This information was requested to enable the NRC Staff to complete their review of the PVNGS APSS prior to issuance of an Operating License for PVNGS Unit 2. The requested information is contained in the attachments of this letter as follows:

Attachment 1 - Description of the Pressurizer Vent System
Attachment 2 - Operation of the Charging Pumps
Attachment 3 - Refueling Water Tank High Point Suction
Attachment 4 - Equipment Qualification

A001
1/1

ANPP believes that the information provided in this submittal, as well as additional information supplied in separate submittals, addresses the NRC concerns of the Reference (C) telecon. If you have any additional questions on this matter, please contact Mr. W. F. Quinn of my staff.

Very truly yours,

E. E. Van Brunt

E. E. Van Brunt, Jr.
Executive Vice President
Project Director

EEVB/BJA/jle
Attachments

cc: E. A. Licitra (all w/attach.)
R. P. Zimmerman
M. Ley
A. C. Gehr
C. Liang

STATE OF ARIZONA)
) ss.
COUNTY OF MARICOPA)

I, Edwin E. Van Brunt, Jr., represent that I am Executive Vice President, Arizona Nuclear Power Project, that the foregoing document has been signed by me on behalf of Arizona Public Service Company with full authority to do so, that I have read such document and know its contents, and that to the best of my knowledge and belief, the statements made therein are true.

Edwin E. Van Brunt Jr.
Edwin E. Van Brunt, Jr.

Sworn to before me this 25 day of November, 1985.

Nora E. Meador
Notary Public

My Commission Expires:

My Commission Expires April 6, 1987

Attachment 1
Description of Pressurizer Vent System

The pressurizer vent portion of the reactor coolant system vents is shown in the figure included within this package. The system includes all piping and components from the pressurized steam space up to and including valves RC-105 and RC-106. As shown on the attached figure, the system consists of two flow paths from the pressurizer steam space. The first of the flow paths is composed of two remotely operated solenoid valves (RC-108 and RC-109) which are powered from B-train power supplies. The second flow path consists of a 7/32-inch orifice and one remotely operated solenoid valve (RC-103) which is supplied by A-train power supplies. Either of these flow paths from the pressurizer steam space is capable of relieving directly to the containment atmosphere or to the Reactor Drain Tank (RDT) through one remotely operated solenoid valve from each direction.

The pressurizer vent system is a safety grade system with the exception of pressure transmitter PT-138. This pressure transmitter is a non-safety related instrument which is not required for the safe operation of the system. This pressure indication in the vent line downstream of the reactor vessel head and pressurizer isolation valves is provided to detect leakage past any of these valves during normal power operations and alarm to alert the operator of the leakage. For a further description of the pressurizer vent system, please refer to Item II.B.1 of Reference (B).

PRESSURIZER VENT SYSTEM

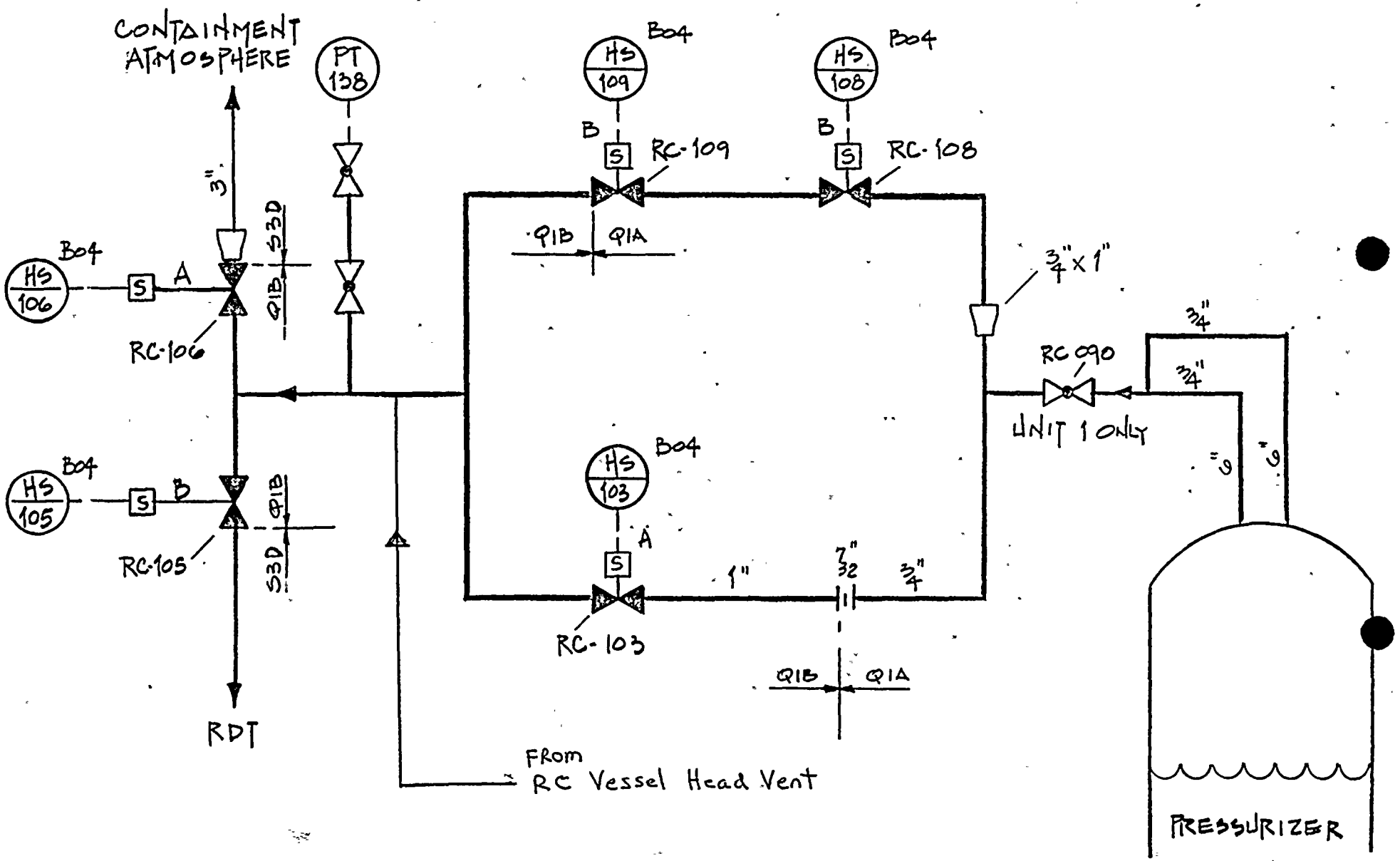

Attachment 2
Operation of the Charging Pumps

During the Reference (C) telecon, the NRC Staff asked ANPP to address several items concerned with the introduction of the VCT hydrogen cover gas into the charging pump suction piping. The NRC Staff concerns are as follows: i) potential for a hydrogen explosion during venting, ii) operator safety during the venting, and iii) the potential for damaging the charging pumps by gas binding. The NRC Staff concerns are addressed in the following paragraphs.

The operator actions, which could be taken to restore the charging pump suction supply after the VCT hydrogen cover gas has been introduced into the charging pump suction piping, have been previously addressed by ANPP in the submittal of October 22, 1985 (ANPP-33771). The potential for a hydrogen explosion while venting the charging pump suction piping is eliminated because the vent valves that the operator will utilize for this process are located in close proximity to the HVAC return vents for the area. Therefore, the vented hydrogen will be quickly carried into the HVAC system and dispersed in the high volume air flow of the HVAC system. The charging pump rooms are supplied HVAC from the normal HVAC system. The operator also has the option of using tygon tubing to directly connect the vent valves to the HVAC system. Additionally, the operators have portable detectors available which can warn them of the presence of hydrogen in the work area. These measures will eliminate the potential for a hydrogen explosion and ensure operator safety during the venting process.

The potential for damage to the charging pumps while running with entrained hydrogen was reviewed with the pump vendor and Combustion Engineering. It was determined that operation of the pumps with gas or a gas/water mixture could result in the generation of internal pressure spikes sufficient to crack the pump casing block. Subsequent inspection and performance tests have determined that the PVNGS Unit 1 pumps were not damaged in this manner during the September 12, 1985 event. In addition, the pump vendor has indicated, and industry experience has verified, that a cracked casing block is not a catastrophic failure and does not cause the pump to fail to operate. Small amounts of leakage would occur but the pump's ability to deliver flow would not be significantly compromised.

Attachment 3
Refueling Water Tank High Point Suction

ANPP described the availability of the water above the Refueling Water Tank (RWT) high suction nozzle for the Steam Generator Tube Rupture (SGTR) scenario in the previous submittal of Reference (A). For this particular SGTR analysis scenario, the operators would have to realign the charging pump suction to the lower nozzle on the RWT at 5-1/2 hours into the event. The NRC Staff has asked ANPP to verify that an adequate water supply exists above the RWT high suction nozzle for the BTP RSB 5-1 scenario.

ANPP has confirmed that an adequate inventory of water exists above the RWT high suction nozzle to satisfy the usage during the BTP RSB 5-1 event. Previous analysis submitted by Combustion Engineering and reviewed in Supplement 6 of the PVNGS SER indicates that a natural circulation cooldown from power operation to shutdown cooling entry conditions requires approximately 10.5 hours (this includes 4 hours at hot standby). The analysis assumes the use of two charging pumps. If it is assumed that both of the charging pumps operate continuously for the full 10.5 hour duration of the cooldown, only 55,440 gallons of makeup water from the RWT will be consumed. This is significantly below the available inventory of more than 100,000 gallons above the RWT high suction nozzle. Therefore, no operator action is necessary during the BTP RSB 5-1 event to realign the charging pump suction supply.

Attachment 4
Equipment Qualification Questions

The NRC Staff expressed concerns on the equipment qualification status of the regenerative heat exchanger and the charging loop isolation valves during the Reference (C) telecon. The following responses address the NRC concerns:

Regenerative Heat Exchanger

ANPP has previously discussed the qualification of the regenerative heat exchanger in our previous submittal dated November 4, 1985 (ANPP-33905). In this submittal, ANPP states that the regenerative heat exchanger meets the requirements of the mechanical equipment and seismic qualification programs. The NRC Staff has questioned why this equipment is not included in the environmental qualification program. This equipment is not included within the scope of the environmental qualification program because this program only includes important to safety electrical equipment. The qualification of the degradable parts of the regenerative heat exchanger is addressed in the mechanical equipment qualification program.

Charging Loop Isolation Valves (CH-239 and CH-240)

ANPP confirms that valves CH-239 and CH-240 are included with the applicable portions of the environmental, mechanical, and seismic qualification programs. These valves are fully qualified to perform their function in the normal as well as accident environments. Additionally, the qualification status of these valves has been previously addressed by ANPP in letters dated September 10, 1984 (ANPP-30476) and November 4, 1985 (ANPP-33905).