U. E. & C.

DRAWING NO. 9321-F-20043

INDIAN POINT UNIT NO. 201803

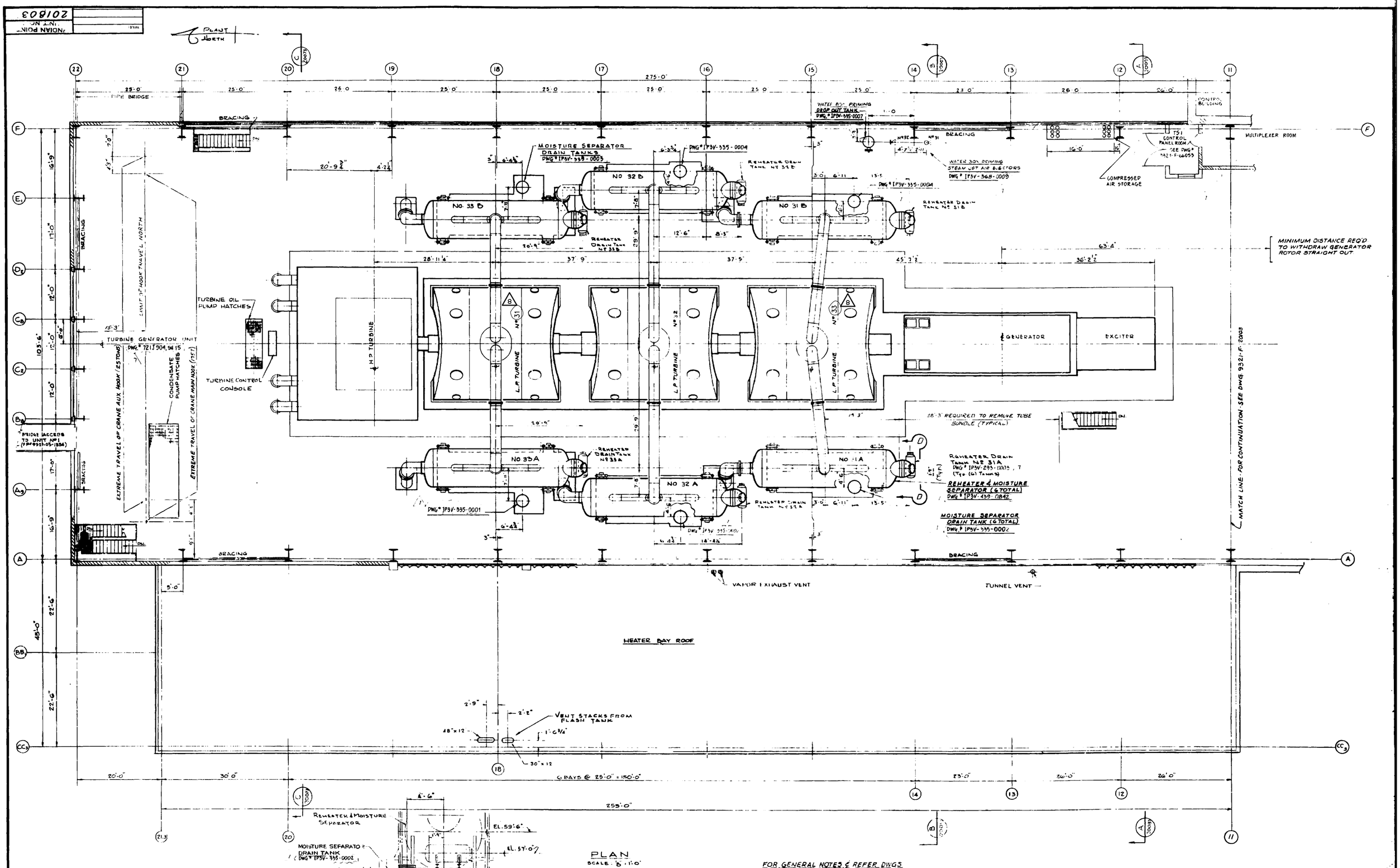

FOR GENERAL NOTES & REFER DWGS SEE DWG. Nº 9321-F-20063.

REV	DESCRIPTION	DATE	BY	CHK'D	APPR.
8	INCORPORATED EC-18077	10/19/09	AI	APPROVAL SIGNATURES ON FILE	

REV	DATE	DESCRIPTION	CHK'D	APP'D
6	7-8-99	REV. PER AS BUILT CONDIT. ADDED CO2 & AIR STORAGE		
5	11-17-78	FINAL ISSUE		
4	7-26-78	REVISED PER REQ'S FOR PRELIM. REVIEW & ISSUE		
3	7-6-78	ADDED JANITORS CLOSET & BRIDGE BETWEEN UNITS 1&3		
2				
1	4-5-73	AS BUILT PER WORK 86-05-06		
0	2-20-73	ISSUED FOR APPROVAL		

ENGINEER
DATE 1968 NEW YORK NO. 44132

UNITED ENGINEERS & CONSTRUCTORS INC.

WESTINGHOUSE ELECTRIC CORPORATION

TURBINE BUILDING & HEATER BAY GENERAL ARRANGEMENT OPERATING FLOOR - PLAN AT ELEV. 53'-0"

FOR

Entergy Nuclear Northeast

INDIAN POINT GENERATING STATION UNIT NO. 3

U. E. & C. DWG. NO. 9321-F-20043-8

CON. ED. CO. DWG. NO. A 201803

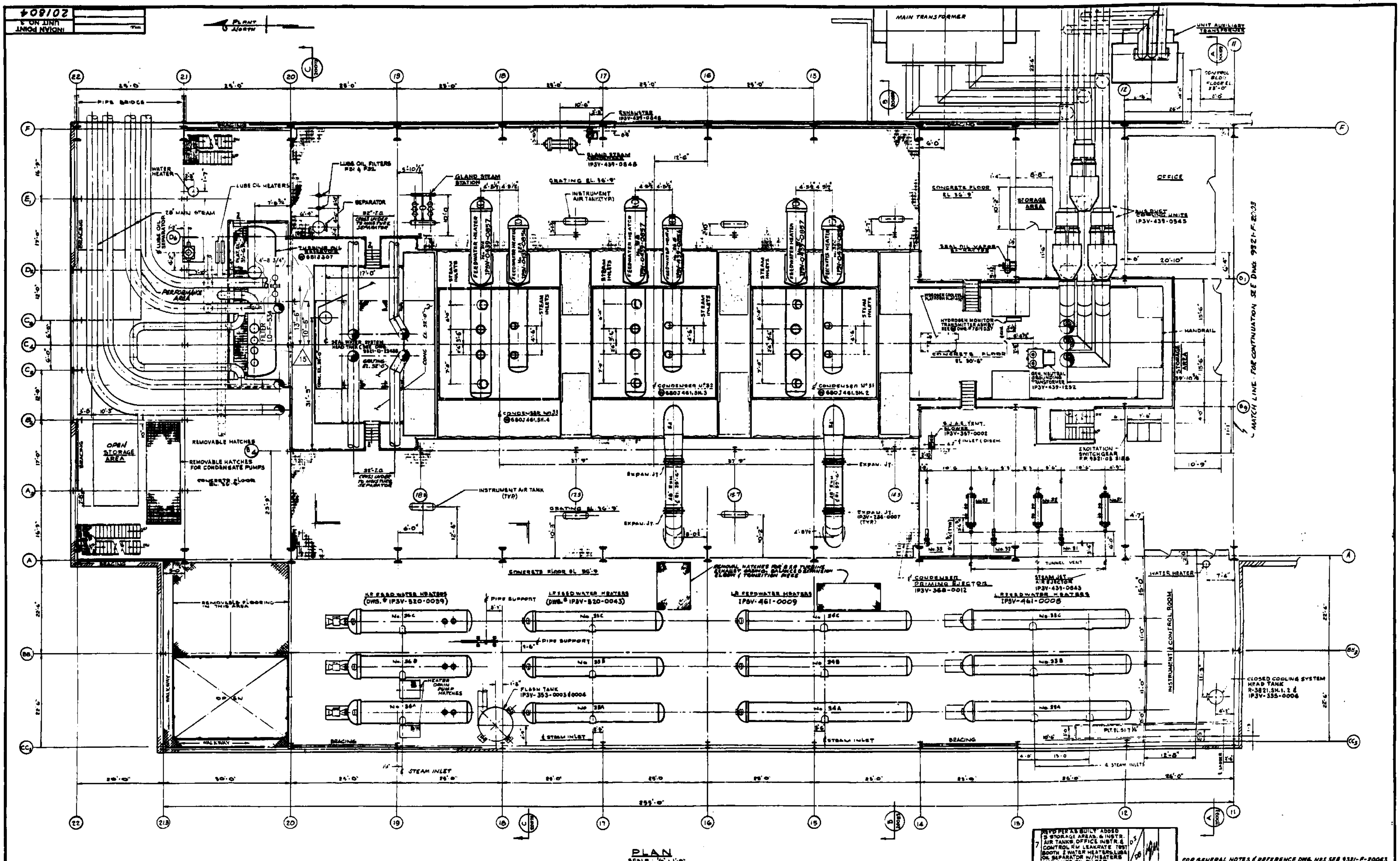

FOR GENERAL NOTES & REFERENCE DWG. NOS SEE 9321-F-20063

No.	Date	Description
15		AS BUILT PER MOD 95-3-254
14		AS BUILT PER ...
13		[illegible]
12		AS BUILT PER MOD ...
11		AS BUILT PER MOD. # 87-03-067 LO
10		AS BUILT PER MOD. # 86-08-067 FW
9		AS BUILT PER MOD # 85-03-070 COND.
8		INCORPORATED MODIFICATIONS PER MOD. 85-3-075 FW
7		REV'D PER "AS BUILT" ADDED 5 STORAGE AREAS, 6 INSTR. AIR TANKS, OFFICE INSTR. & CONTROL RM LEAKRATE TEST BOOTH, 2 WATER HEATERS, LUBE OIL SEPARATOR W/HEATERS AND LUBE OIL FILTER.
6		AS PER MAINTENANCE MOD
5		FINAL ISSUE
4		ADDED HYDROGEN COOLERS PLATE
3		ADDED GEN. NEUTRAL GROUNDING TRANSFORMER.
2		[illegible]
1		DIM. 4'-2" WAS 4'-4"
0		ISSUED FOR APPROVAL

NEW YORK
UNITED ENGINEERS & CONSTRUCTORS INC.

WESTINGHOUSE ELECTRIC CORPORATION

TURBINE BUILDING & HEATER BAY GENERAL ARRANGEMENT MEZZANINE FLOOR - PLAN AT ELEV. 36'-9"

FOR

CONSOLIDATED EDISON COMPANY
INDIAN POINT GENERATING STATION
UNIT NO. 3

U.E.&C. DWG. NO. 9321-F-20053-15
CON. ED. CO. DWG. NO. A 201804

TYPE B

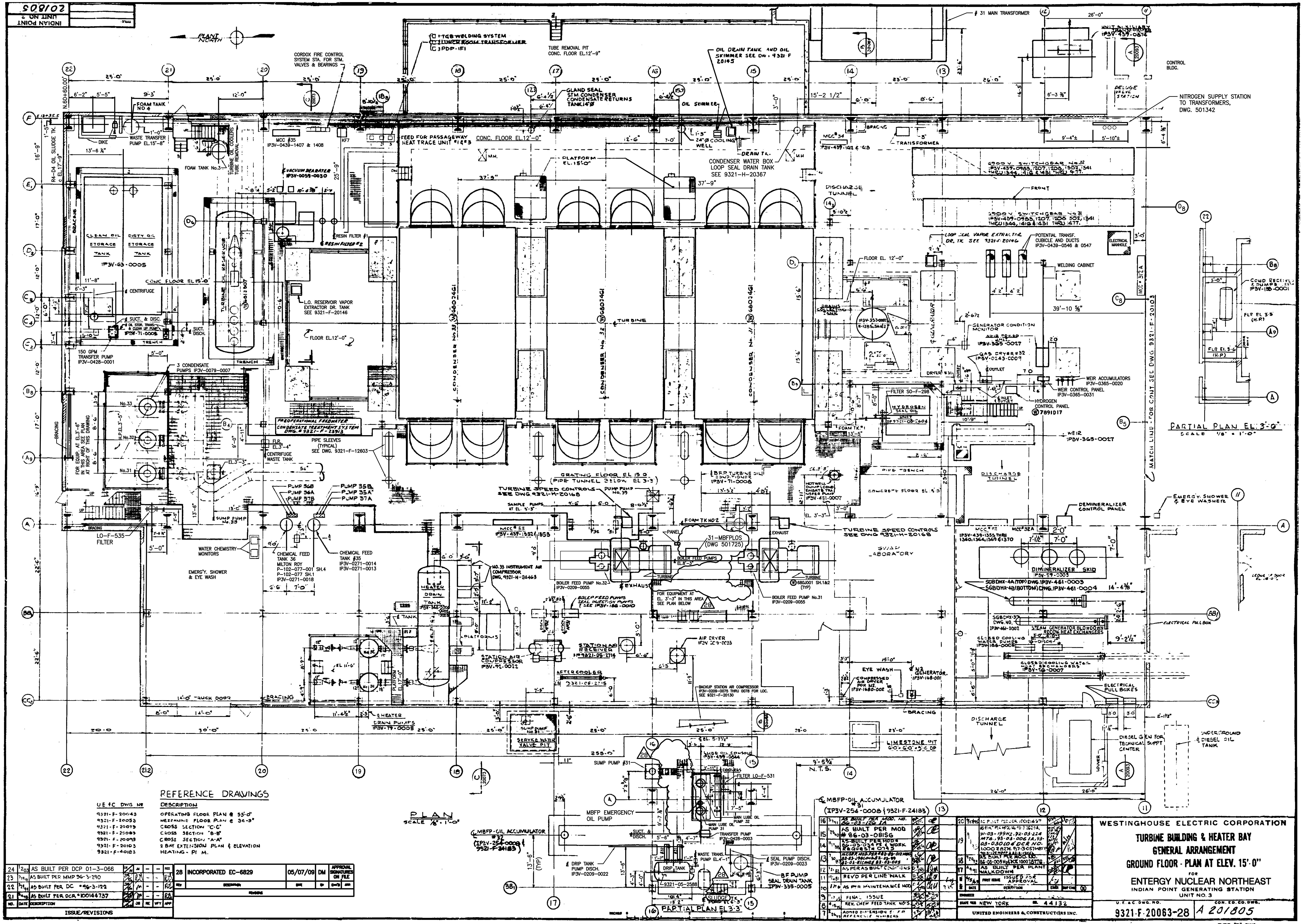
INDIAN POINT UNIT NO. 3
201805
PLANT NORTH
PLAN
SCALE 1/8" = 1'-0"
PARTIAL PLAN EL. 3'-3"
PARTIAL PLAN EL. 3'-0"
CONDENSER No. 33
CONDENSER No. 32
CONDENSER No. 31
TURBINE
CLEAN OIL STORAGE TANK
DIRTY OIL STORAGE TANK
TURBINE OIL RESERVOIR
HEATER DRAIN TANK
BOILER FEED PUMPS
DEMINERALIZER SKID
SWAP LABORATORY
DISCHARGE TUNNEL
6900 V. SWITCHGEAR No. 32
6900 V. SWITCHGEAR No. 31
MBFP EMERGENCY OIL PUMP
MBFP-OIL ACCUMULATOR #31 (IP3V-254-0008 & 9321-F-24183)
N.T.S.
MATCH LINE - FOR CONT. SEE DWG. 9321-F-20103
REFERENCE DRAWINGS
UE & C DWG No
DESCRIPTION
9321-F-20043 OPERATING FLOOR PLAN @ 53'-0"
9321-F-20053 MEZZANINE FLOOR PLAN @ 36-3"
9321-F-20073 CROSS SECTION "C-C"
9321-F-20083 CROSS SECTION "B-B"
9321-F-20093 CROSS SECTION "A-A"
9321-F-20103 2 BAY EXTENSION PLAN & ELEVATION
9321-F-40183 HEATING - PI M.
24 1/2/03 AS BUILT PER DCP 01-3-066
23 7/19/01 AS BUILT PER MMP 96-3-290
22 3/29/99 AS BUILT PER DC #96-3-122
21 5/4/98 AS BUILT PER DCR #100144737
NO. DATE DESCRIPTION DS RE VFY APP
ISSUE/REVISIONS
28 INCORPORATED EC-6829 05/07/09 DM APPROVAL SIGNATURES ON FILE
REV DESCRIPTION DATE BY CHK'D APP
REVISIONS
16 3/7/91 AS BUILT PER MOD. NO. 86-03-126 IA
15 1/25/90 AS BUILT PER MOD #86-03-081SG
14 11/17/88 AS-BUILT PER MOD# 86-03-034 FE & WORK REQUEST# 0743
13 7/30/87 ACCORD. MOD PER #82-03-012 MOD, 82-03-098 COND, 82-03-99, 82-03-41 COND, 83-03-005
12 AS PER AS BUILT CONDITIONS
11 REV'D PER LINE WALK
10 AS PER MAINTENANCE MOD
9 FINAL ISSUE
8 REV. CHEM FEED TANK NO'S
7 ADDED DIMENSION & F.P. REFERENCE NUMBERS
20 AS BUILT PER DCR 100121467
19 AS-BUILT PER MOD No 93-3-262 SA, 91-03-199H2, 92-03-224 MTG., 93-03-006 IA, 93-03-030 LO & DCR NO. 100028276 87-3-057MBFP
18 9/20/93 AS BUILT PER MOD. NO. 86-03-005 H2 & DCR 100028276.
17 4/4/91 AS BUILT PER PLANT WALKDOWN
FIRST ISSUE ISSUED FOR APPROVAL
DATE DESCRIPTION
ENGINEER
STATE REG NEW YORK NO. 44132
UNITED ENGINEERS & CONSTRUCTORS INC.
WESTINGHOUSE ELECTRIC CORPORATION
TURBINE BUILDING & HEATER BAY
GENERAL ARRANGEMENT
GROUND FLOOR - PLAN AT ELEV. 15'-0"
FOR
ENTERGY NUCLEAR NORTHEAST
INDIAN POINT GENERATING STATION
UNIT NO. 3
U.E.&C. DWG. NO.
9321-F-20063-28
CON. ED. CO. DWG.
A 201805
TYPE "B" DWG.

INDIAN POINT UNIT NO. 3	201606

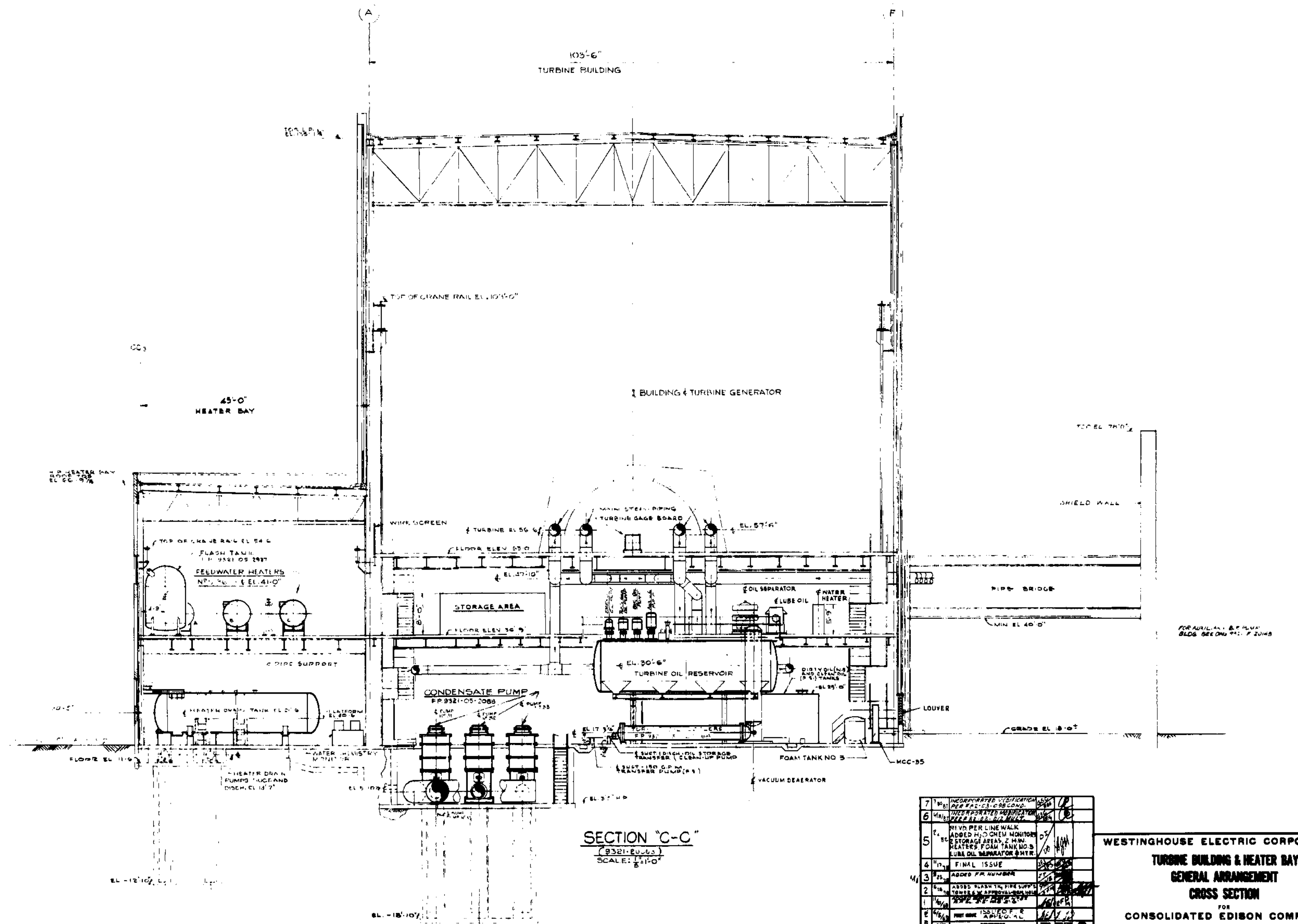

7	7/30/81	INCORPORATED MODIFICATION PER #82-C3-098 COND.		
6	4/18/81	INCORPORATED MODIFICATION PER #82-02-012 MULT.		
5		REVD. PER LINE WALK ADDED H₂O CHEM MONITOR 2 STORAGE AREAS, 2 H.W. HEATERS, FOAM TANK NO.3 LUBE OIL SEPARATOR & HTR.		
4		FINAL ISSUE		
3		ADDED F.P. NUMBER		
2		ADDED FLASH TK, PIPE SUPP'T TOWER & W APPROVAL		
1				
	6/5/69	ISSUED FOR APPROVAL		
	DATE	DESCRIPTION		

NEW YORK 44132

UNITED ENGINEERS & CONSTRUCTORS INC.

WESTINGHOUSE ELECTRIC CORPORATION

TURBINE BUILDING & HEATER BAY
GENERAL ARRANGEMENT
CROSS SECTION

FOR

CONSOLIDATED EDISON COMPANY
INDIAN POINT GENERATING STATION
UNIT NO. 3

U.E.&C. DWG. NO.	CON. ED. CO. DWG. NO.
9321-F-20073-7	A 201606

INDIAN POINT UNIT NO. 3 201807

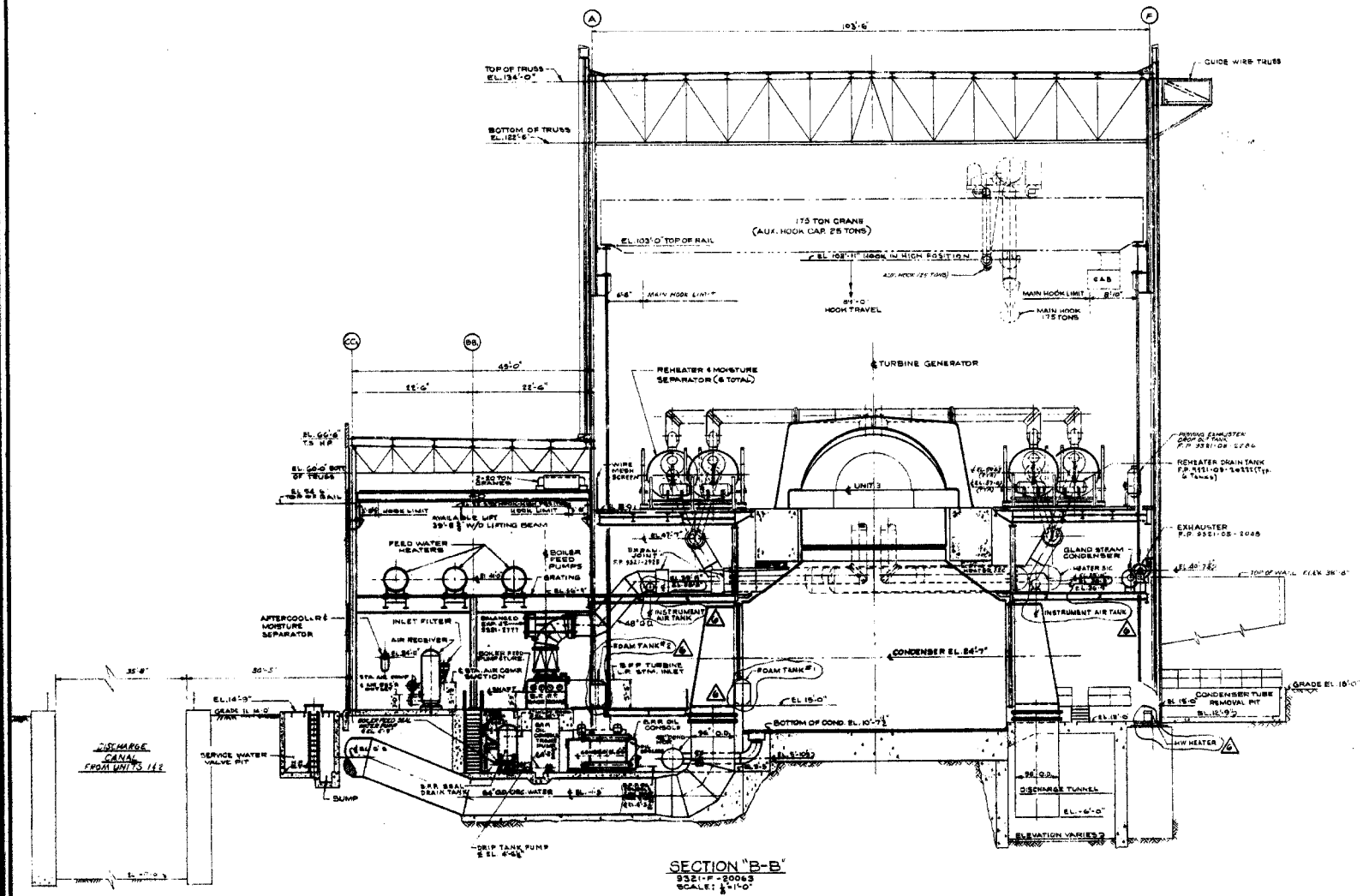

SECTION "B-B"
9321-F-20063
SCALE: 1/8"=1'-0"

6	12-5-62	REVISED AS PER AS BUILT CONDITIONS, ADD FOAM TANKS, ADD HTR. GRDS. & INST. AIR TANKS.	DT		
5	8-11-61	FINAL ISSUE			
4	6-14-61	ISSUED FOR REVIEW & ESTIMATE			
3	6-6-61	ADD BOILER FEED PUMPS, ADD AIR RECEIVER, ADD SERVICE WATER VALVE PIT			
2	5-11-61	ADDED D.F.P. DRIP TANK, CHANGED D.F.P. DISCH.			
1	4-28-61	ADDED D.F.P. & D.F.P. DRIP TANK			
0	3-30-61	ISSUED FOR APPROVAL			

NEW YORK EL 44188

UNITED ENGINEERS & CONSTRUCTORS INC.

WESTINGHOUSE ELECTRIC CORPORATION
TURBINE BUILDING & HEATER BAY
GENERAL ARRANGEMENT
CROSS SECTION
FOR
CONSOLIDATED EDISON COMPANY
INDIAN POINT GENERATING STATION
UNIT NO 3

U.E.&C. DWG. NO. 9321-F-20063-6

CON. ED. DR. NO. A 201807

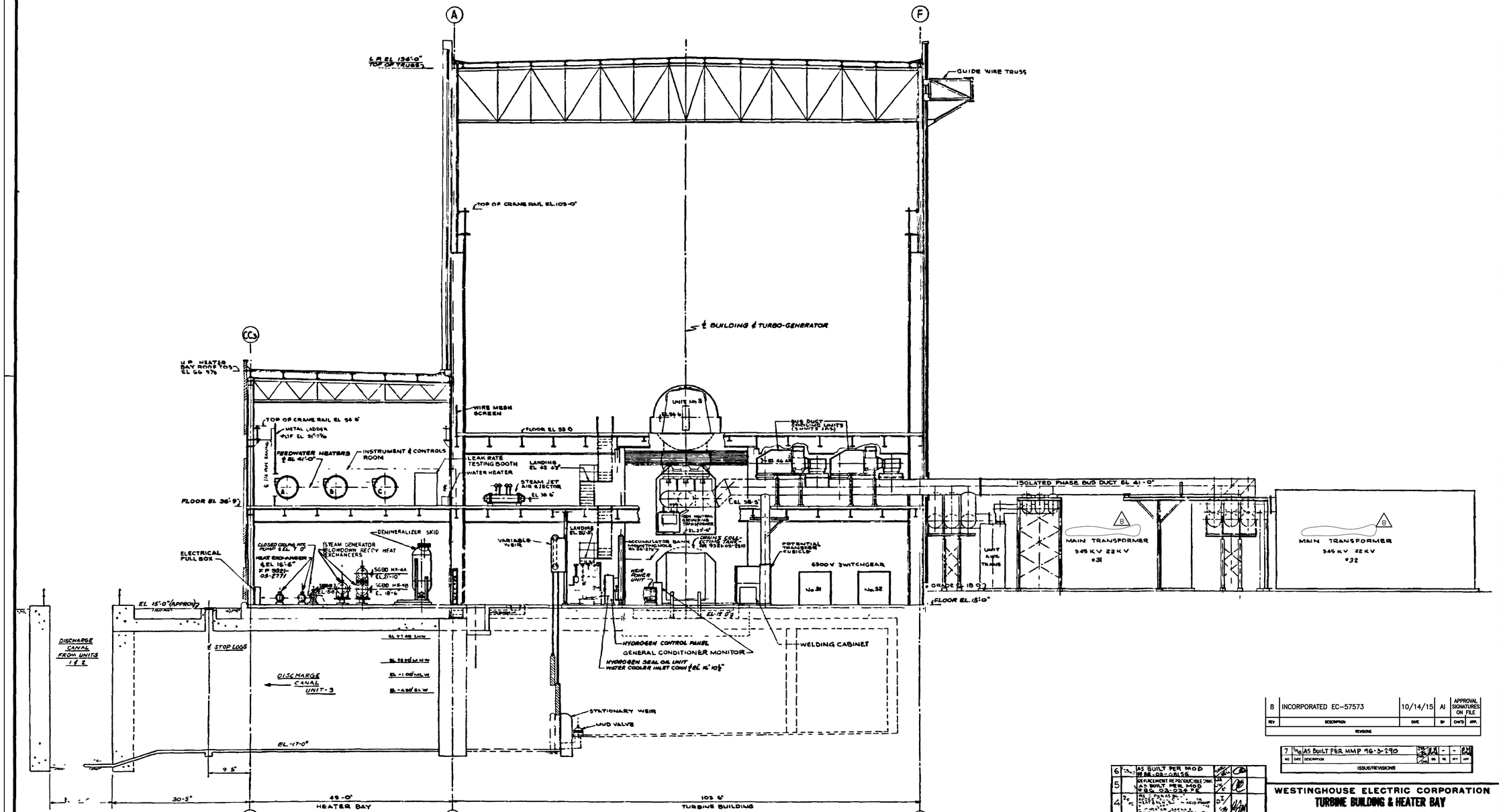

SECTION "A"-"A"
(LOOKING NORTH)
(9321-F-20063)

SCALE 1/8" = 1'-0"

REV	DESCRIPTION	DATE	BY	CHK'D	APR.
8	INCORPORATED EC-57573	10/14/15	AI	APPROVAL SIGNATURES ON FILE	

REVISIONS

NO	DATE	DESCRIPTION	DR	CK	SUP	APP
7	12/96	AS BUILT PER MMP 96-3-290				

ISSUE/REVISIONS

6	12/96	AS BUILT PER MOD 96-03-0815G			
5		REPLACEMENT REPRODUCIBLE DWG AS BUILT PER MOD 90-03-034 FE			
4	9/90	REV. PANEL DR. & NEGES [illegible] - ADD PLANT [illegible]			
3	11/75	FINAL ISSUE			
2	5/71	ADDED GEN. NEUTRAL GROUNDING TRANSFORMER			
1	4/70	RELEASED FOR APPROVAL			
0	12/69	ISSUED FOR APPROVAL			
REV	DATE	DESCRIPTION	CHKD	SUP	APP

ENGINEER
LICENSE NO. NEW YORK EL. 44 32
UNITED ENGINEERS & CONSTRUCTORS INC.

WESTINGHOUSE ELECTRIC CORPORATION
TURBINE BUILDING & HEATER BAY
GENERAL ARRANGEMENT
CROSS SECTION
FOR
Entergy
Nuclear Northeast
INDIAN POINT GENERATING STATION
UNIT NO 3

U E & C DWG NO 9321-F-20093-8
CON ED CO DWG. NO. A 201808

DRAWING NUMBER

9321-F-20103

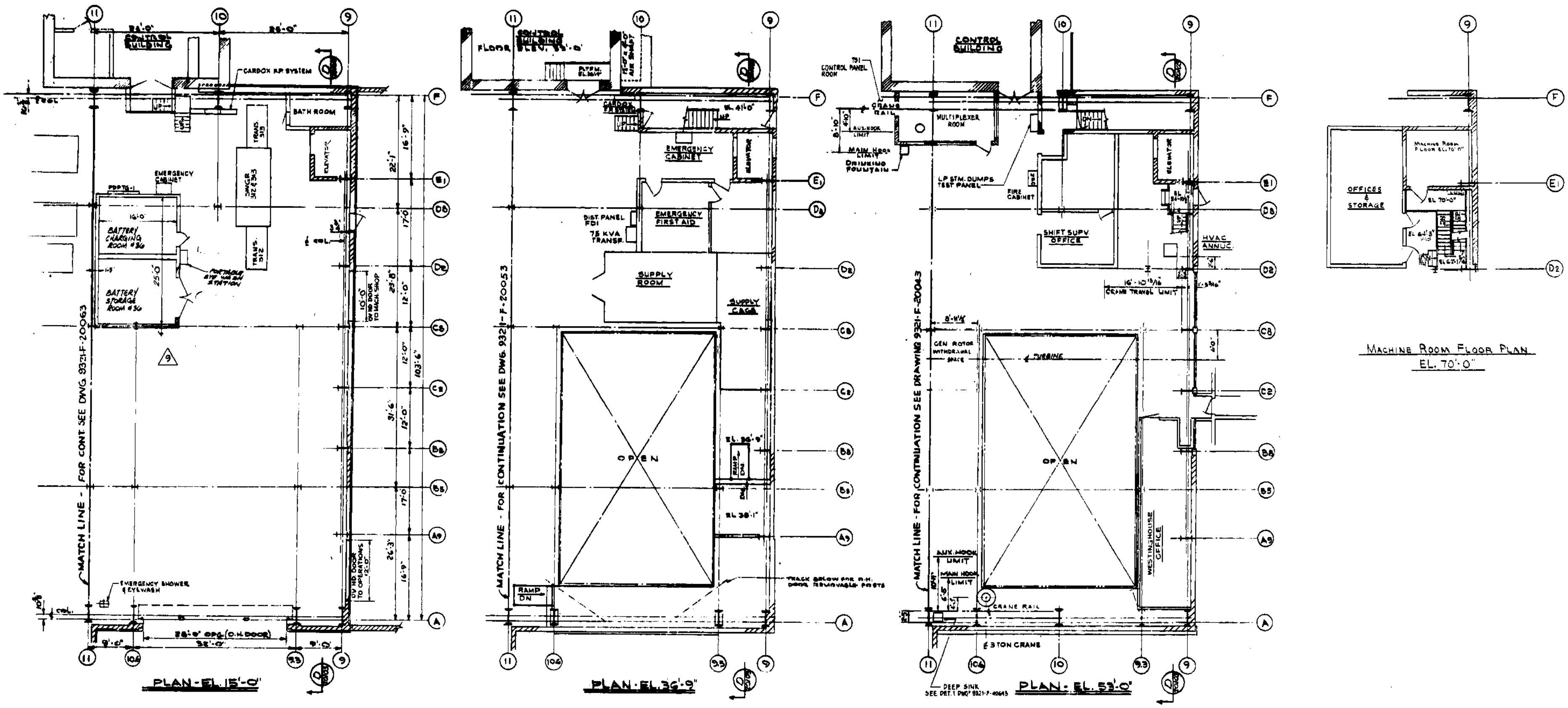

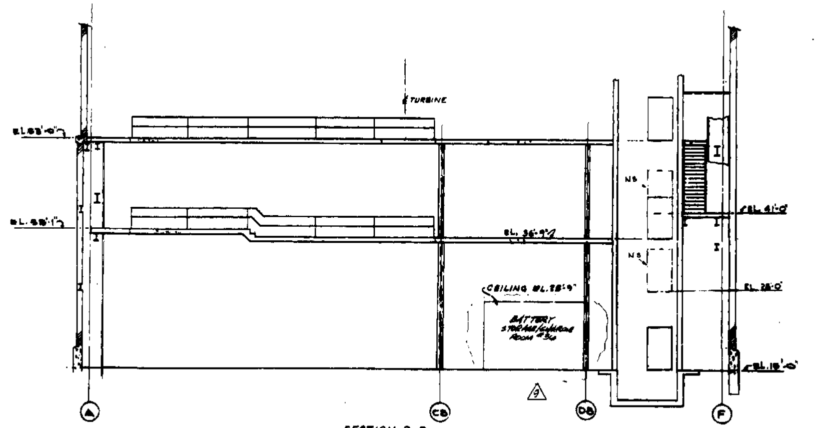

SECTION D-D
SEE DWG. 9321-F-20103

SCALE 1/8" = 1'-0"

6		REV'D PER LINE WALK	
5		FINAL ISSUE	
9			
8			
7			
		ISSUED FOR APPROVAL	

NEW YORK

UNITED ENGINEERS & CONSTRUCTORS INC.

WESTINGHOUSE ELECTRIC CORPORATION

TURBINE BUILDING - TWO BAY EXTENSION
GENERAL ARRANGEMENT
PLANS & ELEVATION
FOR
CONSOLIDATED EDISON COMPANY
INDIAN POINT GENERATING STATION
UNIT NO. 2

U.E.&C. DWG. NO. 9321-F-20103-9
CON. ED. DWG. NO. 1201809

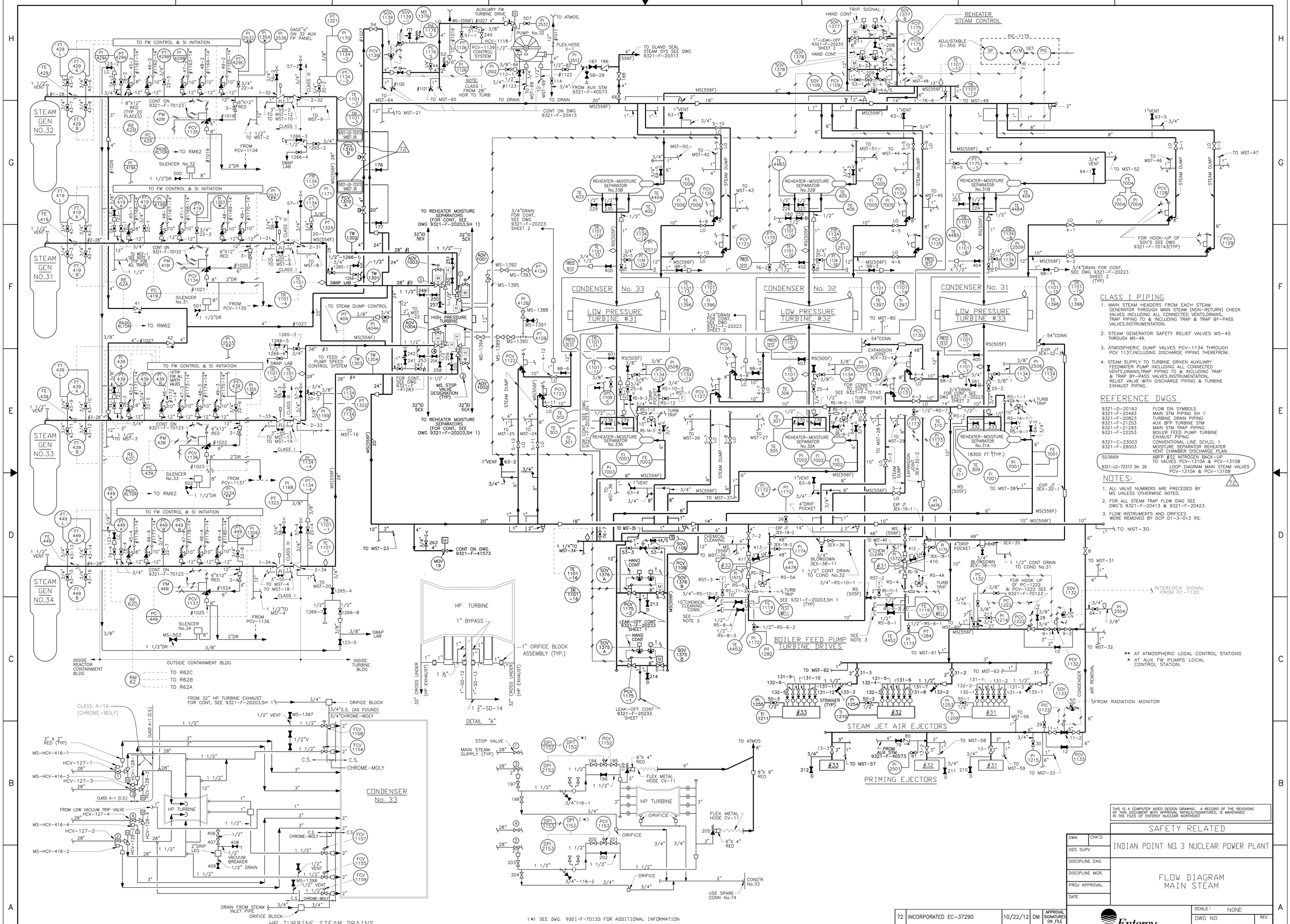

THIS IS A COMPUTER AIDED DESIGN DRAWING. A RECORD OF THE REVISIONS OF THIS DOCUMENT WITH APPROVAL INITIALS/SIGNATURES, IS MAINTAINED IN THE FILES OF ENTERGY NUCLEAR NORTHEAST

SAFETY RELATED

DWN	CHK'D
DES SUPV	
DISCIPLINE ENG	
DISCIPLINE MGR.	
PROJ APPROVAL	
DATE	

INDIAN POINT NO. 3 NUCLEAR POWER PLANT

FLOW DIAGRAM
MAIN STEAM

Entergy
Nuclear Northeast

SCALE: NONE

DWG NO 9321-F-20173 REV 72

SHEET

REV	DESCRIPTION	DATE	BY	CHK'D	APP.
72	INCORPORATED EC-37290	10/22/12	DM	APPROVAL SIGNATURES ON FILE	

REVISIONS

1 TYPE A/ISI/FSAR

NOTES:

1. FOR NOTES & REFERENCE DWGS SEE DWG.9321-F-20183,SH.2.
2. TEMP. STRAINERS WERE INSTALLED FOR INITIAL SYSTEM FLUSH, SCREENS HAVE BEEN REMOVED PER MWR 93-10011 & 93-10012
3. DISCS OF THESE CHECK VALVES WERE REMOVED. (ZONES E-7 & F-7)

AUXILIARY FEEDWATER PUMPS (CLASS-I)

NOTE: FC-1135S,FC-1136S SET TO OPEN AUX.FEED PUMPS RECIRC.VALVES FCV-1121, FCV-1123 AT DECREASING FC-1135AS, FC-1136AS ARE SET TO CLOSE RECIRC. VALVES AT INCREASING AND TO ALARM AT DECREASING.

VACUUM DEGASIFIER SYSTEM

CONDENSATE PUMPS 7860 GPM

CONDENSER NO.33

CONDENSER NO.32

CONDENSER NO.31

HOTWELL

DRAIN COLLECTING TANK #31

400 GPM HOTWELL DUMP & CONDENSATE TRANSFER PUMP

STEAM JET AIR EJECTORS CONDENSERS

HOUSE SERVICE BOILER BUILDING

MAKE-UP WATER RESIN FILTERS

DWN MG	CHK'D
DES SUPV	
DISCIPLINE ENG	
DISCIPLINE MGR.	
PROJ APPROVAL	
DATE	

INDIAN POINT NO.3 NUCLEAR POWER PLANT

FLOW DIAGRAM CONDENSATE & BOILER FEED PUMP SUCTION

Entergy Nuclear Northeast

SCALE: NONE

DWG NO 9321-F-20183 REV 65

SHEET 1

TYPE A/ISI/FSAR/EC

REV	DESCRIPTION	DATE	BY	CHK'D	APP.
65	INCORPORATED EC-65840	11/22/16	AR	APPROVAL SIGNATURES ON FILE	

REVISIONS

THIS IS A COMPUTER AIDED DESIGN DRAWING. A RECORD OF THE REVISIONS OF THIS DOCUMENT WITH APPROVAL INITIALS/SIGNATURES, IS MAINTAINED IN THE FILES OF ENTERGY NUCLEAR NORTHEAST

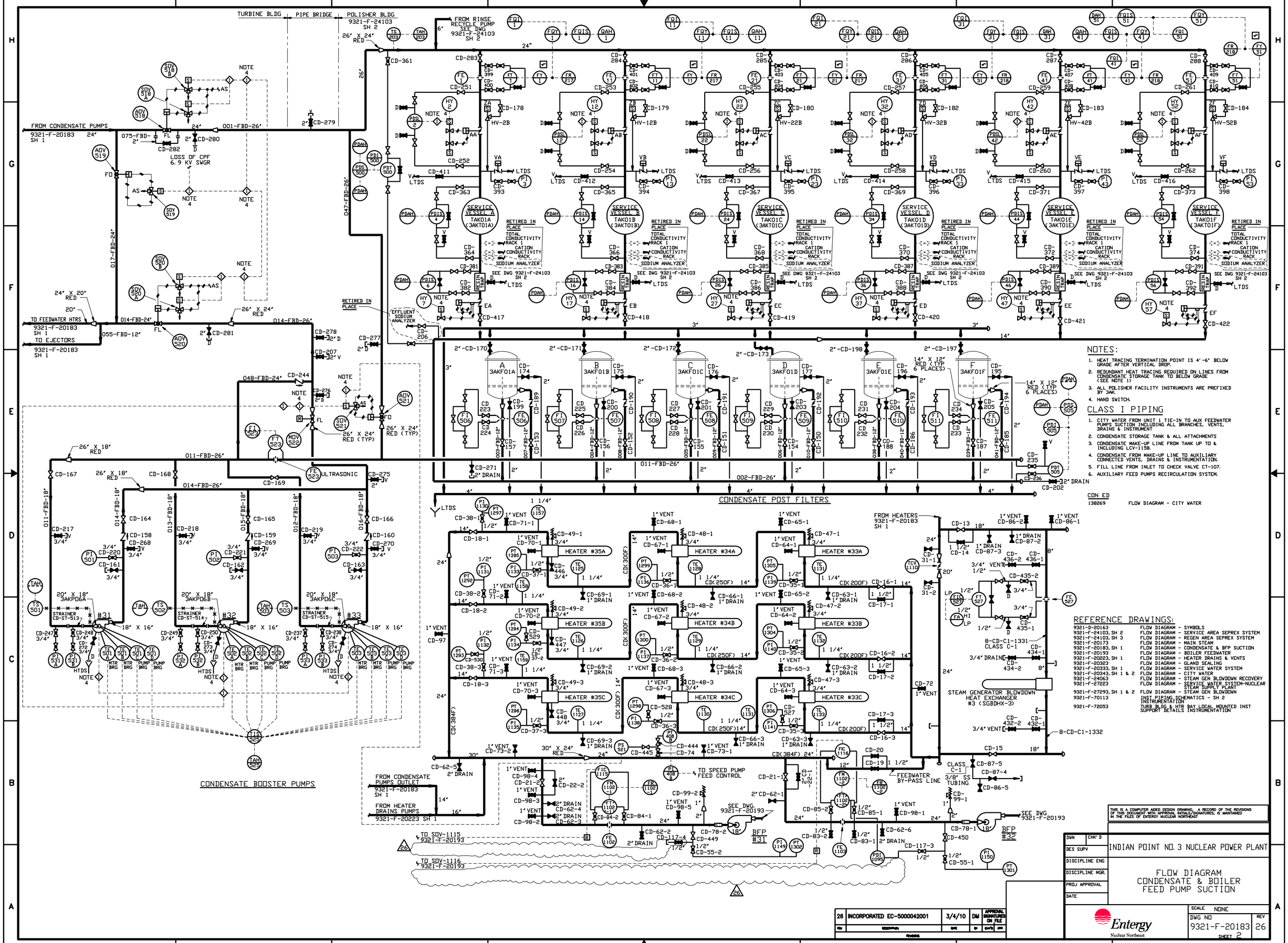

NOTES:

1. HEAT TRACING TERMINATION POINT IS 4'-6" BELOW GRADE AFTER VERTICAL DROP.
2. REDUNDANT HEAT TRACING REQUIRED ON LINES FROM CONDENSATE STORAGE TANK TO BELOW GRADE (SEE NOTE 1)
3. ALL POLISHER FACILITY INSTRUMENTS ARE PREFIXED BY 3AK.
4. HAND SWITCH.

CLASS I PIPING

1. CITY WATER FROM UNIT 1 TIE-IN TO AUX FEEDWATER PUMPS SUCTION INCLUDING ALL BRANCHES, VENTS, DRAINS & INSTRUMENT
2. CONDENSATE STORAGE TANK & ALL ATTACHMENTS
3. CONDENSATE MAKE-UP LINE FROM TANK UP TO & INCLUDING LCV-1158.
4. CONDENSATE FROM MAKE-UP LINE TO AUXILIARY CONNECTED VENTS, DRAINS & INSTRUMENTATION.
5. FILL LINE FROM INLET TO CHECK VALVE CT-107.
6. AUXILIARY FEED PUMPS RECIRCULATION SYSTEM.

REFERENCE DRAWINGS:

9321-D-20163	FLOW DIAGRAM - SYMBOLS
9321-F-24103, SH 2	FLOW DIAGRAM - SERVICE AREA SEPREX SYSTEM
9321-F-24103, SH 3	FLOW DIAGRAM - REGEN AREA SEPREX SYSTEM
9321-F-20173	FLOW DIAGRAM - MAIN STEAM
9321-F-20183, SH 1	FLOW DIAGRAM - CONDENSATE & BFP SUCTION
9321-F-20193	FLOW DIAGRAM - BOILER FEEDWATER
9321-F-20223, SH 1	FLOW DIAGRAM - HEATER DRAINS & VENTS
9321-F-20323	FLOW DIAGRAM - GLAND SEALING
9321-F-20333, SH 1	FLOW DIAGRAM - SERVICE WATER SYSTEM
9321-F-20343, SH 1 & 2	FLOW DIAGRAM - CITY WATER
9321-F-24063	FLOW DIAGRAM - STEAM GEN BLOWDOWN RECOVERY
9321-F-27223	FLOW DIAGRAM - SERVICE WATER SYSTEM-NUCLEAR STEAM SUPPLY PLANT
9321-F-27293, SH 1 & 2	FLOW DIAGRAM - STEAM GEN BLOWDOWN
9321-F-70113	INST PIPING SCHEMATICS - SH 2 INSTRUMENTATION
9321-F-72053	TURB BLDG & HTR BAY LOCAL MOUNTED INST SUPPORT DETAILS INSTRUMENTATION

REV	DESCRIPTION	DATE	BY	CHK'D	APP.
26	INCORPORATED EC-5000042001	3/4/10	DM	APPROVAL SIGNATURES ON FILE	

THIS IS A COMPUTER AIDED DESIGN DRAWING. A RECORD OF THE REVISIONS OF THIS DOCUMENT WITH APPROVAL INITIALS/SIGNATURES, IS MAINTAINED IN THE FILES OF ENTERGY NUCLEAR NORTHEAST

DWN	CHK'D	INDIAN POINT NO. 3 NUCLEAR POWER PLANT
DES SUPV		FLOW DIAGRAM CONDENSATE & BOILER FEED PUMP SUCTION
DISCIPLINE ENG		
DISCIPLINE MGR.		
PROJ APPROVAL		
DATE		

Entergy Nuclear Northeast

SCALE NONE

DWG NO 9321-F-20183 REV 26

SHEET 2

TYPE A/FSAR/EC

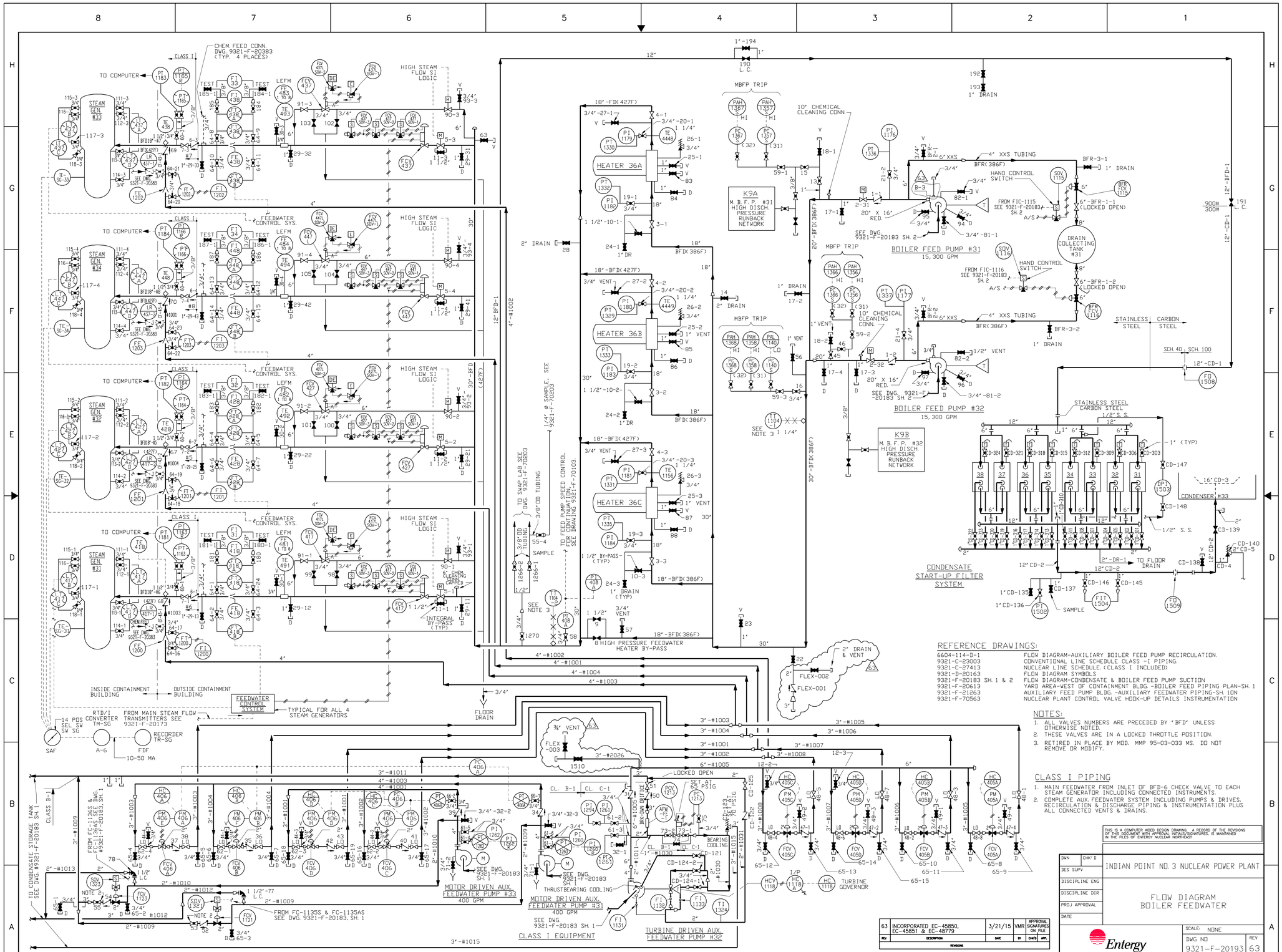

REFERENCE DRAWINGS:

6604-114-D-1	FLOW DIAGRAM-AUXILIARY BOILER FEED PUMP RECIRCULATION.
9321-C-23003	CONVENTIONAL LINE SCHEDULE CLASS -I PIPING.
9321-C-27413	NUCLEAR LINE SCHEDULE. (CLASS I INCLUDED)
9321-D-20163	FLOW DIAGRAM SYMBOLS.
9321-F-20183 SH. 1 & 2	FLOW DIAGRAM-CONDENSATE & BOILER FEED PUMP SUCTION
9321-F-20613	YARD AREA-WEST OF CONTAINMENT BLDG. -BOILER FEED PIPING PLAN-SH. 1
9321-F-21263	AUXILIARY FEED PUMP BLDG. -AUXILIARY FEEDWATER PIPING-SH. 1DN
9321-F-70563	NUCLEAR PLANT CONTROL VALVE HOOK-UP DETAILS INSTRUMENTATION

NOTES:

1. ALL VALVES NUMBERS ARE PRECEDED BY 'BFD' UNLESS OTHERWISE NOTED.
2. THESE VALVES ARE IN A LOCKED THROTTLE POSITION.
3. RETIRED IN PLACE BY MOD. MMP 95-03-033 MS. DO NOT REMOVE OR MODIFY.

CLASS I PIPING

1. MAIN FEEDWATER FROM INLET OF BFD-6 CHECK VALVE TO EACH STEAM GENERATOR INCLUDING CONNECTED INSTRUMENTS.
2. COMPLETE AUX. FEEDWATER SYSTEM INCLUDING PUMPS & DRIVES. RECIRCULATION & DISCHARGE PIPING & INSTRUMENTATION PLUS ALL CONNECTED VENTS & DRAINS.

REV	DESCRIPTION	DATE	BY	CHK'D	APP.
63	INCORPORATED EC-45850, EC-45851 & EC-48779	3/21/15	VMR	APPROVAL SIGNATURES ON FILE	

REVISIONS

THIS IS A COMPUTER AIDED DESIGN DRAWING. A RECORD OF THE REVISIONS OF THIS DOCUMENT WITH APPROVAL INITIALS/SIGNATURES, IS MAINTAINED IN THE FILES OF ENTERGY NUCLEAR NORTHEAST

DWN	CHK'D
DES SUPV	
DISCIPLINE ENG	
DISCIPLINE DIR	
PROJ APPROVAL	
DATE	

INDIAN POINT NO. 3 NUCLEAR POWER PLANT

FLOW DIAGRAM
BOILER FEEDWATER

Entergy
Nuclear Northeast

SCALE: NONE

DWG NO 9321-F-20193 SHEET

REV 63

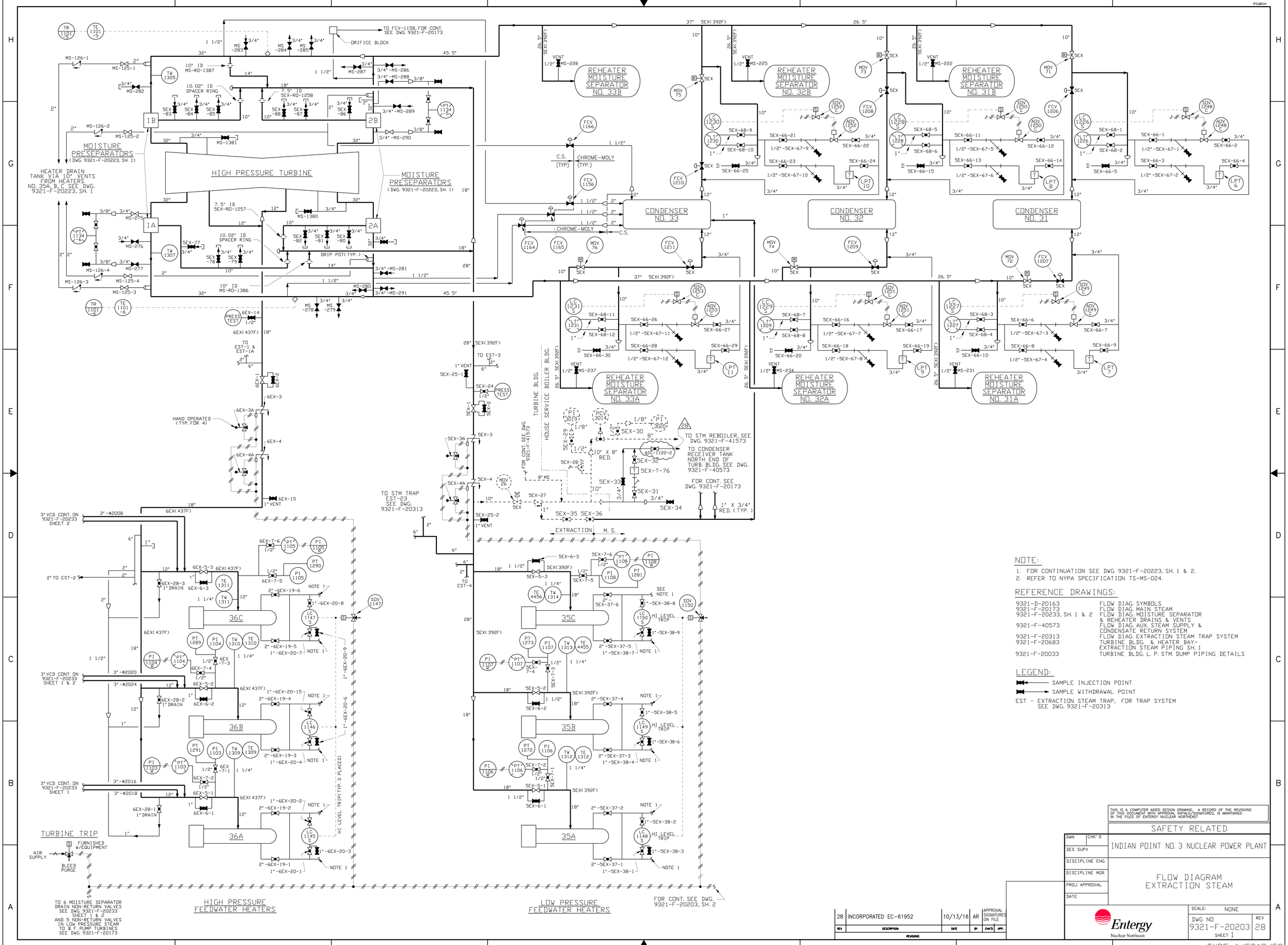

NOTE:

1. FOR CONTINUATION SEE DWG. 9321-F-20223, SH. 1 & 2.
2. REFER TO NYPA SPECIFICATION TS-MS-024.

REFERENCE DRAWINGS:

9321-D-20163	FLOW DIAG. SYMBOLS
9321-F-20173	FLOW DIAG. MAIN STEAM
9321-F-20233, SH. 1 & 2	FLOW DIAG. MOISTURE SEPARATOR & REHEATER DRAINS & VENTS
9321-F-40573	FLOW DIAG. AUX. STEAM SUPPLY & CONDENSATE RETURN SYSTEM
9321-F-20313	FLOW DIAG. EXTRACTION STEAM TRAP SYSTEM
9321-F-20683	TURBINE BLDG. & HEATER BAY-EXTRACTION STEAM PIPING SH. 1
9321-F-20033	TURBINE BLDG. L. P. STM. DUMP PIPING DETAILS

LEGEND:

SAMPLE INJECTION POINT

SAMPLE WITHDRAWAL POINT

EST - EXTRACTION STEAM TRAP, FOR TRAP SYSTEM SEE DWG. 9321-F-20313

REV	DESCRIPTION	DATE	BY	APPROVAL SIGNATURES ON FILE CHK'D	APP.
28	INCORPORATED EC-61952	10/13/16	AR		

REVISIONS

THIS IS A COMPUTER AIDED DESIGN DRAWING. A RECORD OF THE REVISIONS OF THIS DOCUMENT WITH APPROVAL INITIALS/SIGNATURES, IS MAINTAINED IN THE FILES OF ENTERGY NUCLEAR NORTHEAST

SAFETY RELATED

DWN | CHK' D

DES SUPV

DISCIPLINE ENG

DISCIPLINE MGR.

PROJ APPROVAL

DATE

INDIAN POINT NO. 3 NUCLEAR POWER PLANT

FLOW DIAGRAM
EXTRACTION STEAM

Entergy
Nuclear Northeast

SCALE: NONE

DWG NO 9321-F-20203 | REV 28

SHEET 1

TYPE A/FSAR/EC

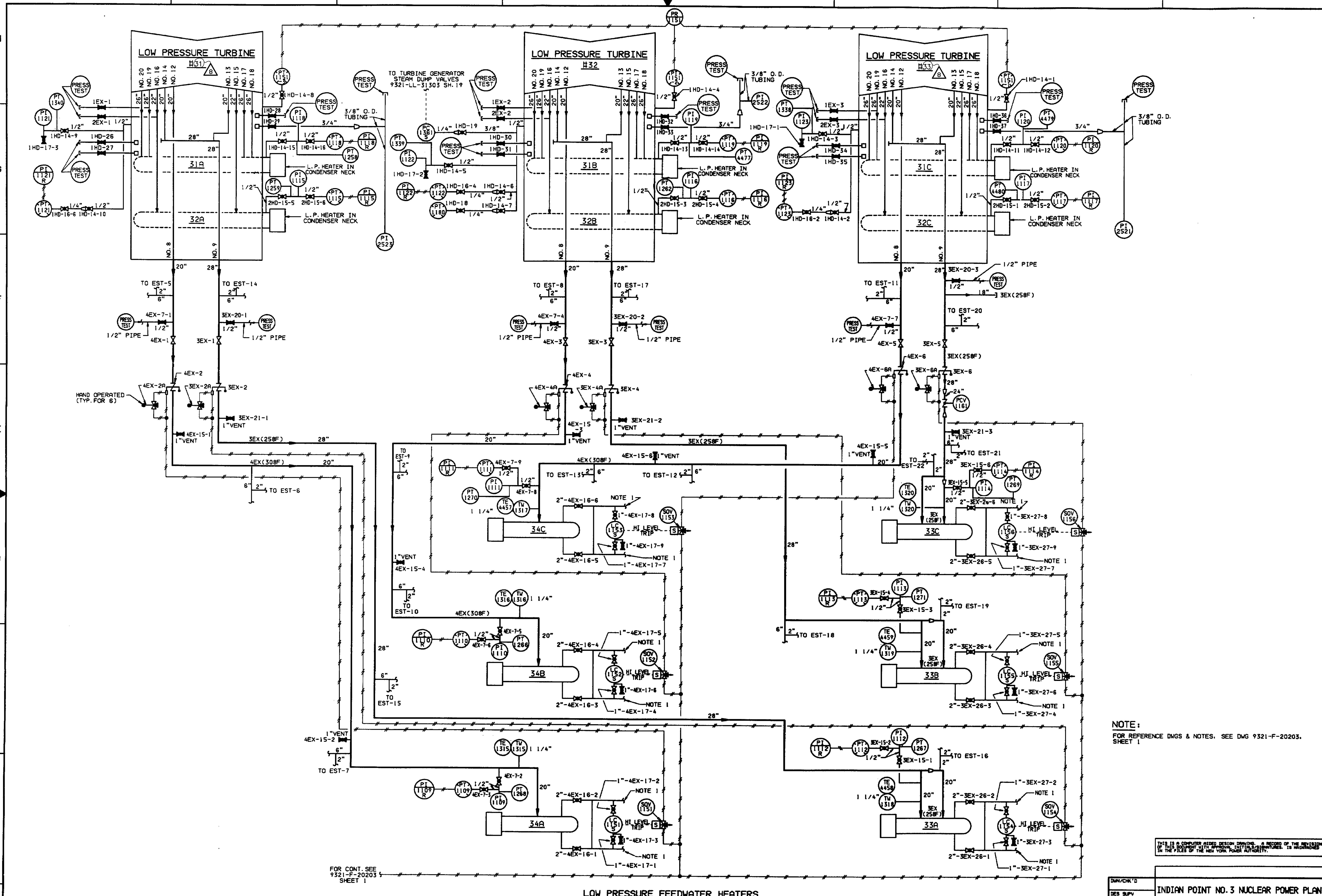

LOW PRESSURE FEEDWATER HEATERS

NOTE:

FOR REFERENCE DWGS & NOTES, SEE DWG 9321-F-20203, SHEET 1

THIS IS A COMPUTER AIDED DESIGN DRAWING. A RECORD OF THE REVISIONS OF THIS DOCUMENT WITH APPROVAL INITIALS/SIGNATURES, IS MAINTAINED IN THE FILES OF THE NEW YORK POWER AUTHORITY.

REV	DESCRIPTION	DATE	BY	APPROVAL SIGNATURES ON FILE
8	INCORPORATED EC-18077	10/19/09	AI	

REVISIONS

REV NO	DATE	DESCRIPTION	DWN/CHK	DS	DE/DD	PROJ MGR
7	6/7/00	AS-BUILT PER DCP 98-3-127 FW	JF		-	

REV NO	DATE	DESCRIPTION	DWN/CHK	DS	DE/DD	PROJ MGR
6	[illegible]	AS BUILT PER DCR 100141598	IS/RH	LM	-	REG
5	[illegible]	AS BUILT PER MOD 93-03-169CAR, DCR 100073623 & 100028276	AL/ED	REG	-/BY	AE
4	[illegible]	AS BUILT PER DCR 100047615	PM/REG	-	-/AE	-
3	[illegible]	AS BUILT PER PLANT WALKDOWN	PM/REG	-	-/AE	-
2	8/3/89	AS BUILT PER MOD 89-03-001MTG	TD/REG	-	-/AE	-
1	6/21/89	AS-BUILT PER VALVE NUMBERING CHECK	AL/REG	-	-/AE	-

REVISIONS

DWN/CHK'D	
DES SUPV	INDIAN POINT NO. 3 NUCLEAR POWER PLANT
DISCIPLINE ENG	
DISCIPLINE DIR	FLOW DIAGRAM EXTRACTION STEAM
PROJ APPROVAL	
DATE	

Entergy Nuclear Northeast

SCALE NONE

DWG NO 9321-F-20203 REV 8

SHEET 2

TYPE A/FSAR/EC

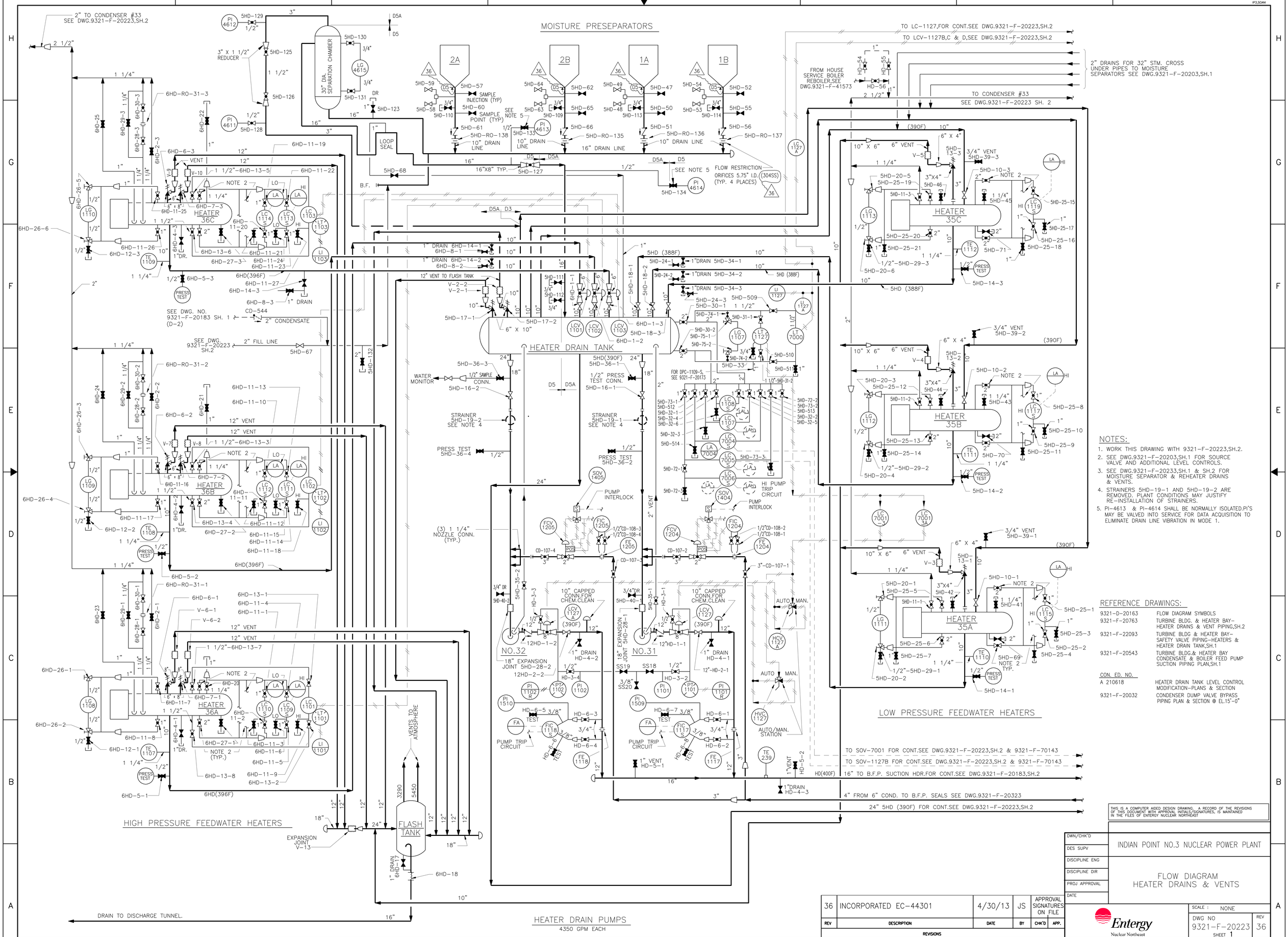

NOTES:

1. WORK THIS DRAWING WITH 9321-F-20223,SH.2.
2. SEE DWG.9321-F-20203,SH.1 FOR SOURCE VALVE AND ADDITIONAL LEVEL CONTROLS.
3. SEE DWG.9321-F-20233,SH.1 & SH.2 FOR MOISTURE SEPARATOR & REHEATER DRAINS & VENTS.
4. STRAINERS 5HD-19-1 AND 5HD-19-2 ARE REMOVED. PLANT CONDITIONS MAY JUSTIFY RE-INSTALLATION OF STRAINERS.
5. PI-4613 & PI-4614 SHALL BE NORMALLY ISOLATED.PI'S MAY BE VALVED INTO SERVICE FOR DATA ACQUISITION TO ELIMINATE DRAIN LINE VIBRATION IN MODE 1.

REFERENCE DRAWINGS:

9321-D-20163	FLOW DIAGRAM SYMBOLS
9321-F-20763	TURBINE BLDG. & HEATER BAY-HEATER DRAINS & VENT PIPING,SH.2
9321-F-22093	TURBINE BLDG & HEATER BAY-SAFETY VALVE PIPING-HEATERS & HEATER DRAIN TANK,SH.1
9321-F-20543	TURBINE BLDG.& HEATER BAY CONDENSATE & BOILER FEED PUMP SUCTION PIPING PLAN,SH.1
CON. ED. NO.	
A 210618	HEATER DRAIN TANK LEVEL CONTROL MODIFICATION-PLANS & SECTION
9321-F-20032	CONDENSER DUMP VALVE BYPASS PIPING PLAN & SECTION @ EL.15'-0"

THIS IS A COMPUTER AIDED DESIGN DRAWING. A RECORD OF THE REVISIONS OF THIS DOCUMENT WITH APPROVAL INITIALS/SIGNATURES, IS MAINTAINED IN THE FILES OF ENTERGY NUCLEAR NORTHEAST

REV	DESCRIPTION	DATE	BY	CHK'D	APP.
36	INCORPORATED EC-44301	4/30/13	JS	APPROVAL SIGNATURES ON FILE	

REVISIONS

DWN/CHK'D
DES SUPV
DISCIPLINE ENG
DISCIPLINE DIR
PROJ APPROVAL
DATE

INDIAN POINT NO.3 NUCLEAR POWER PLANT

FLOW DIAGRAM
HEATER DRAINS & VENTS

Entergy
Nuclear Northeast

SCALE : NONE

DWG NO 9321-F-20223 REV 36

SHEET 1

TYPE A/FSAR/EC

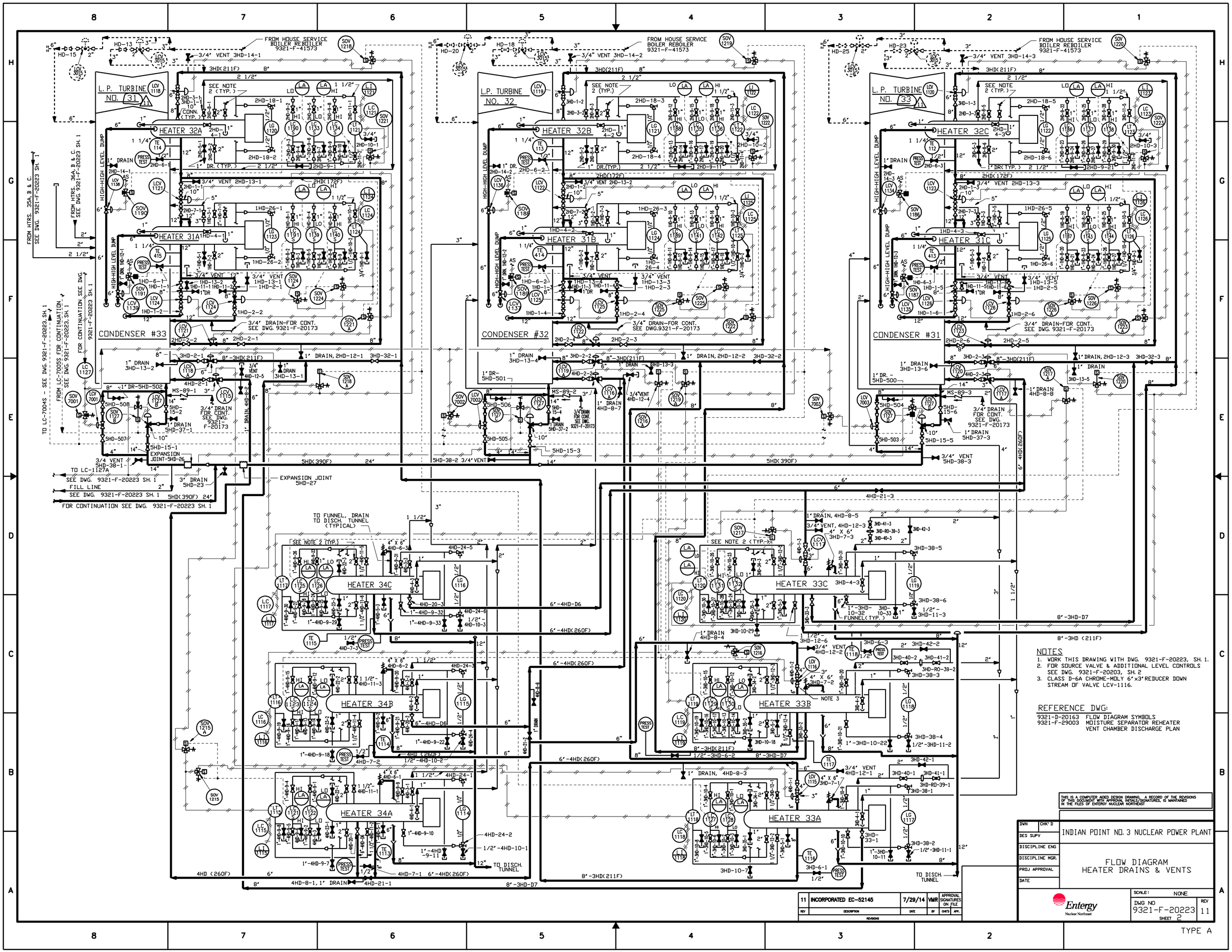
L.P. TURBINE NO. 31
L.P. TURBINE NO. 32
L.P. TURBINE NO. 33
HEATER 32A
HEATER 31A
HEATER 32B
HEATER 31B
HEATER 32C
HEATER 31C
CONDENSER #33
CONDENSER #32
CONDENSER #31
HEATER 34C
HEATER 34B
HEATER 34A
HEATER 33C
HEATER 33B
HEATER 33A
FROM HOUSE SERVICE BOILER REBOILER 9321-F-41573
TO FUNNEL, DRAIN TO DISCH. TUNNEL (TYPICAL)
TO DISCH. TUNNEL
EXPANSION JOINT 5HD-27
FILL LINE
FOR CONTINUATION SEE DWG. 9321-F-20223 SH. 1
NOTES
1. WORK THIS DRAWING WITH DWG. 9321-F-20223, SH. 1.
2. FOR SOURCE VALVE & ADDITIONAL LEVEL CONTROLS SEE DWG. 9321-F-20203, SH. 2
3. CLASS D-6A CHROME-MOLY 6"x3" REDUCER DOWN STREAM OF VALVE LCV-1116.
REFERENCE DWG:
9321-D-20163 FLOW DIAGRAM SYMBOLS
9321-F-29003 MOISTURE SEPARATOR REHEATER VENT CHAMBER DISCHARGE PLAN
THIS IS A COMPUTER AIDED DESIGN DRAWING. A RECORD OF THE REVISIONS OF THIS DOCUMENT WITH APPROVAL INITIALS/SIGNATURES, IS MAINTAINED IN THE FILES OF ENTERGY NUCLEAR NORTHEAST
11 INCORPORATED EC-52145 7/29/14 VMR APPROVAL SIGNATURES ON FILE
REV DESCRIPTION DATE BY CHK'D APP.
REVISIONS
DWN CHK'D
DES SUPV
DISCIPLINE ENG
DISCIPLINE MGR.
PROJ APPROVAL
DATE
INDIAN POINT NO. 3 NUCLEAR POWER PLANT
FLOW DIAGRAM
HEATER DRAINS & VENTS
Entergy
Nuclear Northeast
SCALE: NONE
DWG NO 9321-F-20223
SHEET 2
REV 11
TYPE A

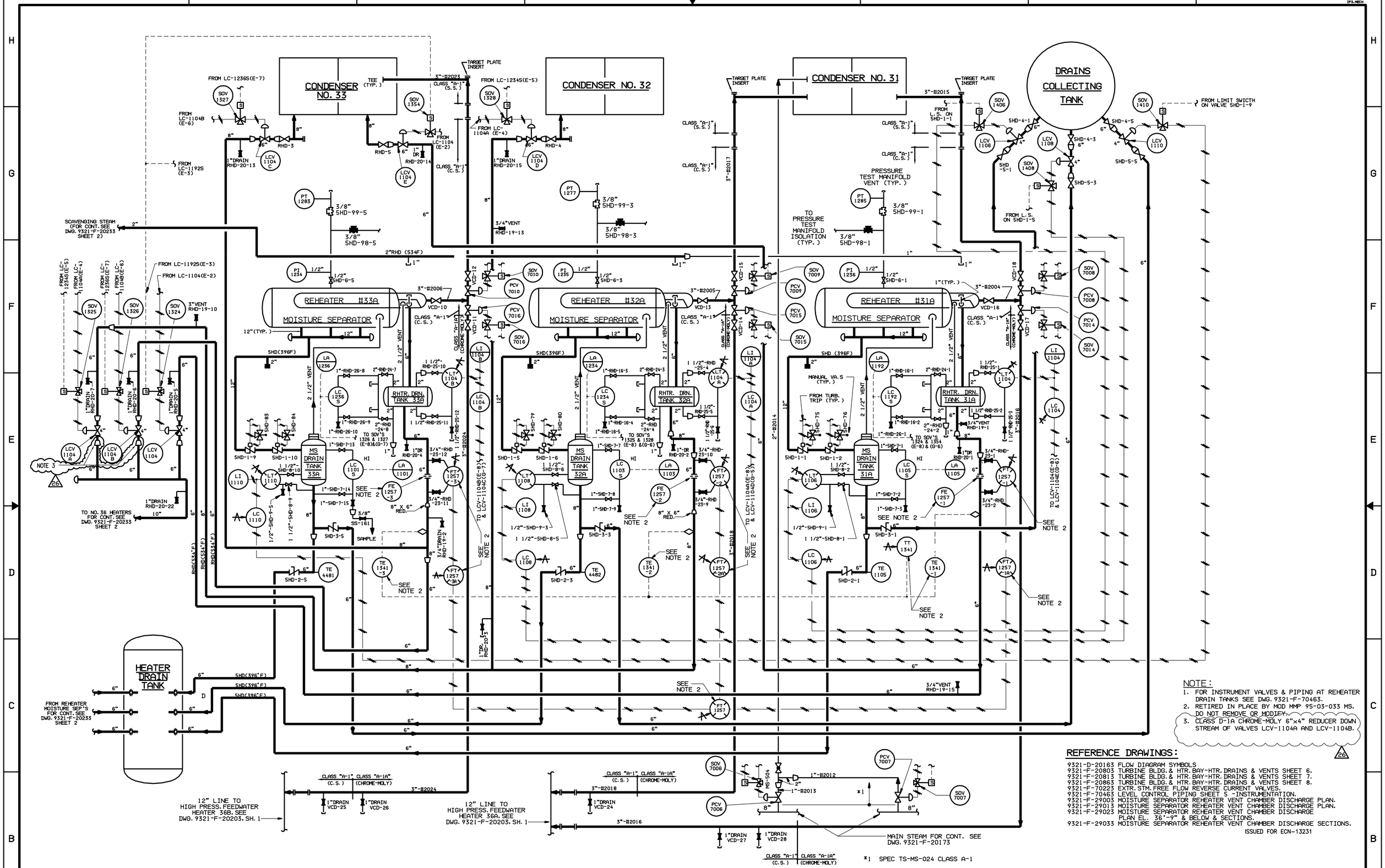

NOTE:

1. FOR INSTRUMENT VALVES & PIPING AT REHEATER DRAIN TANKS SEE DWG. 9321-F-70463.
2. RETIRED IN PLACE BY MOD MMP 95-03-033 MS. DO NOT REMOVE OR MODIFY.
3. CLASS D-1A CHROME-MOLY 6"×4" REDUCER DOWN STREAM OF VALVES LCV-1104A AND LCV-1104B. 26

REFERENCE DRAWINGS:

9321-D-20163 FLOW DIAGRAM SYMBOLS
9321-F-20803 TURBINE BLDG. & HTR. BAY-HTR. DRAINS & VENTS SHEET 6.
9321-F-20813 TURBINE BLDG. & HTR. BAY-HTR. DRAINS & VENTS SHEET 7.
9321-F-20863 TURBINE BLDG. & HTR. BAY-HTR. DRAINS & VENTS SHEET 8.
9321-F-70223 EXTR. STM. FREE FLOW REVERSE CURRENT VALVES.
9321-F-70463 LEVEL CONTROL PIPING SHEET 5 -INSTRUMENTATION.
9321-F-29003 MOISTURE SEPARATOR REHEATER VENT CHAMBER DISCHARGE PLAN.
9321-F-29013 MOISTURE SEPARATOR REHEATER VENT CHAMBER DISCHARGE PLAN.
9321-F-29023 MOISTURE SEPARATOR REHEATER VENT CHAMBER DISCHARGE PLAN EL. 36'-9" & BELOW & SECTIONS.
9321-F-29033 MOISTURE SEPARATOR REHEATER VENT CHAMBER DISCHARGE SECTIONS.

ISSUED FOR ECN-13231

REV	DESCRIPTION	DATE	BY	CHK'D	APP.
26	INCORPORATED EC-77783	4/3/10	RM	APPROVAL SIGNATURES ON FILE	

REVISIONS

DWN | CHK'D
DES SUPV
DISCIPLINE ENG
DISCIPLINE DIR
PROJ APPROVAL
DATE

INDIAN POINT NO. 3 NUCLEAR POWER PLANT

FLOW DIAGRAM
MOISTURE SEPARATOR AND
REHEATER DRAINS & VENTS

Entergy Nuclear Northeast

SCALE: NONE

DWG NO 9321-F-20233 REV 26

SHEET 1

TYPE A

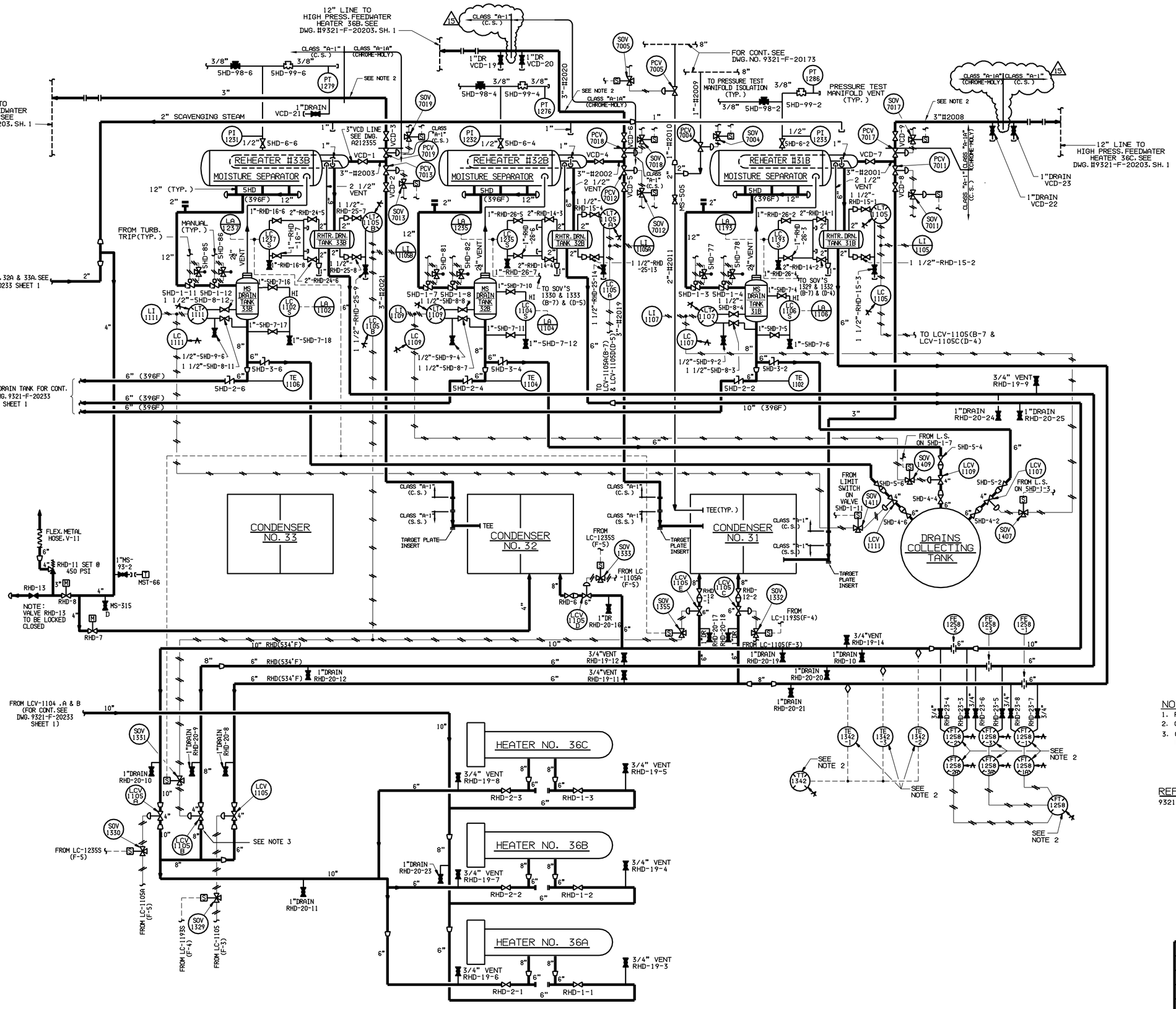

NOTE:

1. FOR NOTES & REF. DWG'S SEE DWG. 9321-F-20233 SHEET 1.
2. CHROME-MOLY CLASS A-1A PIPE REPLACED CARBON STEEL PIPE.
3. CLASS D-1A CHROME-MOLY 8"×4" REDUCER AND 3" W.N. FLANGE DOWN STREAM OF VALVE LCV-1105B

REFERENCE DWG.:

9321-F-29003 - MOISTURE SEPARATOR REHEATER VENT CHAMBER DISCHARGE PLAN

REV	DESCRIPTION	DATE	BY	CHK'D	APP.
15	INCORPORATED EC-43387	4/23/13	VMR	APPROVAL SIGNATURES ON FILE	

REVISIONS

DWN | CHK'D
DES SUPV
DISCIPLINE ENG
DISCIPLINE MGR.
PROJ APPROVAL
DATE

INDIAN POINT NO. 3 NUCLEAR POWER PLANT

FLOW DIAGRAM
MOISTURE SEPARATOR AND
REHEATER DRAINS & VENTS

Entergy
Nuclear Northeast

SCALE: NONE

DWG NO 9321-F-20233 | REV 15

SHEET 2

TYPE A

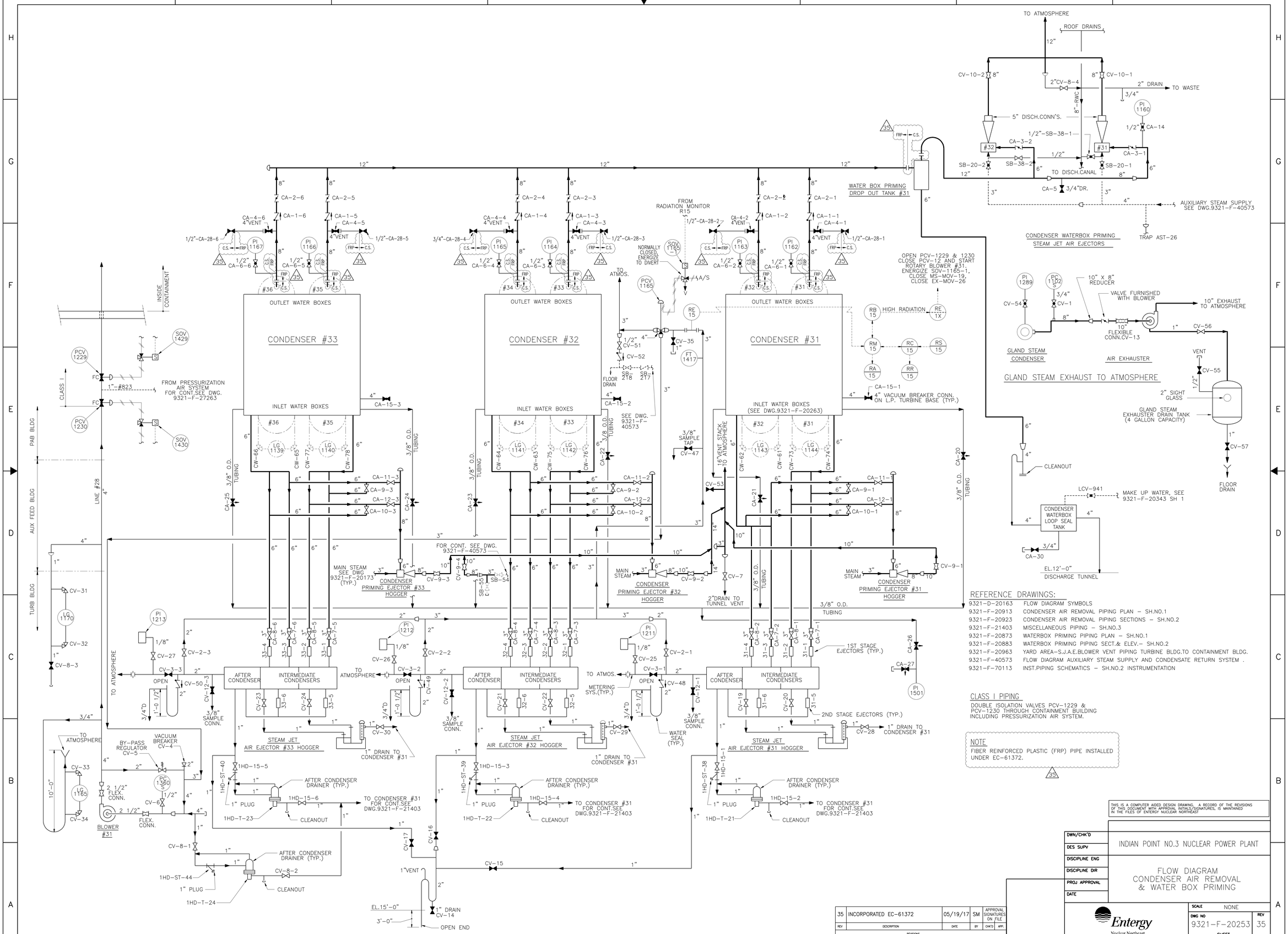

REFERENCE DRAWINGS:

9321-D-20163	FLOW DIAGRAM SYMBOLS
9321-F-20913	CONDENSER AIR REMOVAL PIPING PLAN – SH.NO.1
9321-F-20923	CONDENSER AIR REMOVAL PIPING SECTIONS – SH.NO.2
9321-F-21403	MISCELLANEOUS PIPING – SH.NO.3
9321-F-20873	WATERBOX PRIMING PIPING PLAN – SH.NO.1
9321-F-20883	WATERBOX PRIMING PIPING SECT.& ELEV.– SH.NO.2
9321-F-20963	YARD AREA–S.J.A.E.BLOWER VENT PIPING TURBINE BLDG.TO CONTAINMENT BLDG.
9321-F-40573	FLOW DIAGRAM AUXILIARY STEAM SUPPLY AND CONDENSATE RETURN SYSTEM .
9321-F-70113	INST.PIPING SCHEMATICS – SH.NO.2 INSTRUMENTATION

CLASS I PIPING

DOUBLE ISOLATION VALVES PCV-1229 & PCV-1230 THROUGH CONTAINMENT BUILDING INCLUDING PRESSURIZATION AIR SYSTEM.

NOTE

FIBER REINFORCED PLASTIC (FRP) PIPE INSTALLED UNDER EC-61372.

35

REV	DESCRIPTION	DATE	BY	CHK'D	APP.
35	INCORPORATED EC-61372	05/19/17	SM	APPROVAL SIGNATURES ON FILE	

REVISIONS

THIS IS A COMPUTER AIDED DESIGN DRAWING. A RECORD OF THE REVISIONS OF THIS DOCUMENT WITH APPROVAL INITIALS/SIGNATURES, IS MAINTAINED IN THE FILES OF ENTERGY NUCLEAR NORTHEAST

DWN/CHK'D
DES SUPV
DISCIPLINE ENG
DISCIPLINE DIR
PROJ APPROVAL
DATE

INDIAN POINT NO.3 NUCLEAR POWER PLANT

FLOW DIAGRAM
CONDENSER AIR REMOVAL
& WATER BOX PRIMING

Entergy
Nuclear Northeast

SCALE NONE
DWG NO 9321-F-20253
REV 35
SHEET

TYPE A/FSAR

NOTE
OUTLET WATER BOXES LEVEL CONTROLLERS LC-1177S LC-1178S & LC-1173S ARE 'RETIRED IN PLACE'

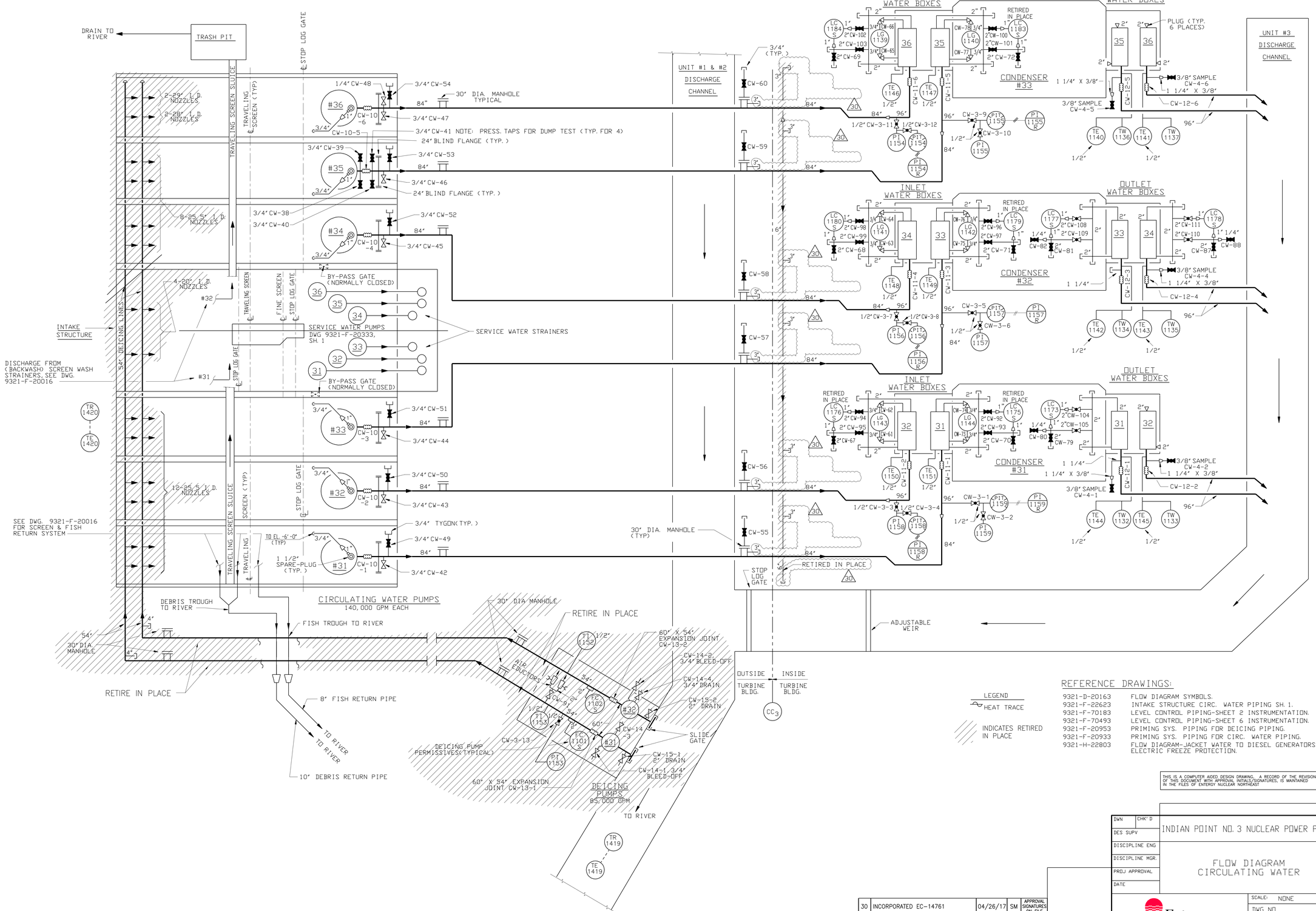

REFERENCE DRAWINGS:

9321-D-20163	FLOW DIAGRAM SYMBOLS.
9321-F-22623	INTAKE STRUCTURE CIRC. WATER PIPING SH. 1.
9321-F-70183	LEVEL CONTROL PIPING-SHEET 2 INSTRUMENTATION.
9321-F-70493	LEVEL CONTROL PIPING-SHEET 6 INSTRUMENTATION.
9321-F-20953	PRIMING SYS. PIPING FOR DEICING PIPING.
9321-F-20933	PRIMING SYS. PIPING FOR CIRC. WATER PIPING.
9321-H-22803	FLOW DIAGRAM-JACKET WATER TO DIESEL GENERATORS. ELECTRIC FREEZE PROTECTION.

LEGEND
HEAT TRACE
INDICATES RETIRED IN PLACE

THIS IS A COMPUTER AIDED DESIGN DRAWING. A RECORD OF THE REVISIONS OF THIS DOCUMENT WITH APPROVAL INITIALS/SIGNATURES, IS MAINTANED IN THE FILES OF ENTERGY NUCLEAR NORTHEAST

REV	DESCRIPTION	DATE	BY	CHK'D	APP.
30	INCORPORATED EC-14761	04/26/17	SM	APPROVAL SIGNATURES ON FILE	

REVISIONS

DWN | CHK'D
DES SUPV
DISCIPLINE ENG
DISCIPLINE MGR.
PROJ APPROVAL
DATE

INDIAN POINT NO. 3 NUCLEAR POWER PLANT

FLOW DIAGRAM
CIRCULATING WATER

Entergy
Nuclear Northeast

SCALE: NONE
DWG NO 9321-F-20263
REV 30
SHEET

TYPE A

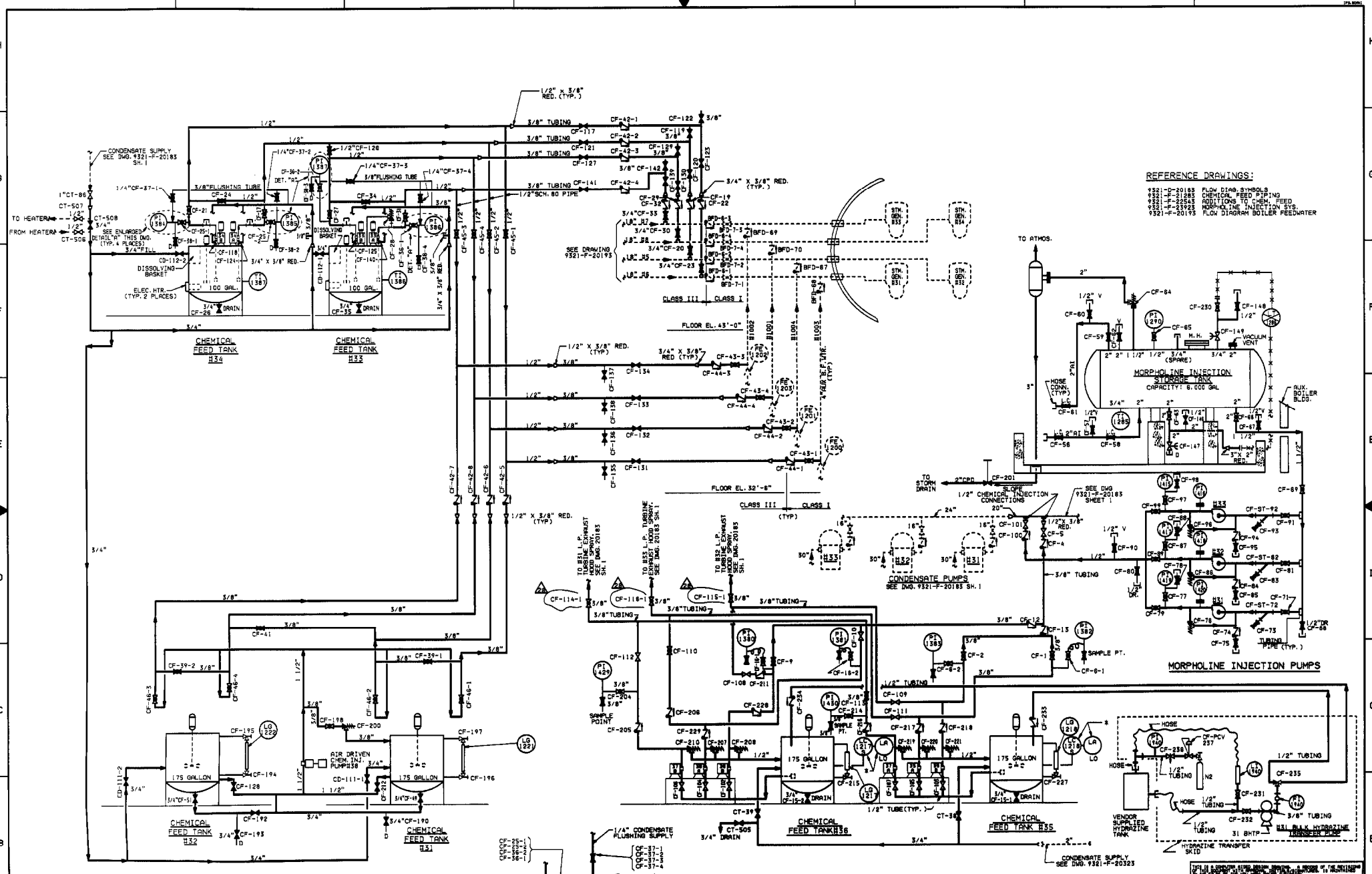
REFERENCE DRAWINGS:
9321-D-20183 FLOW DIAG.SYMBOLS
9321-F-21283 CHEMICAL FEED PIPING
9321-F-22543 ADDITIONS TO CHEM. FEED
9321-F-23923 MORPHOLINE INJECTION SYS.
9321-F-20193 FLOW DIAGRAM BOILER FEEDWATER
CHEMICAL FEED TANK H34
CHEMICAL FEED TANK H33
CHEMICAL FEED TANK H32
CHEMICAL FEED TANK H31
CHEMICAL FEED TANK H36
CHEMICAL FEED TANK H35
MORPHOLINE INJECTION STORAGE TANK
CAPACITY: 6,000 GAL
MORPHOLINE INJECTION PUMPS
CONDENSATE PUMPS
SEE DWG. 9321-F-20183 SH. 1
CONDENSATE SUPPLY SEE DWG. 9321-F-20183 SH. 1
CONDENSATE SUPPLY SEE DWG. 9321-F-20323
SEE DRAWING 9321-F-20193
CLASS III CLASS I
FLOOR EL. 43'-0"
FLOOR EL. 32'-8"
TO ATMOS.
TO STORM DRAIN
VENDOR SUPPLIED HYDRAZINE TANK
HYDRAZINE TRANSFER SKID
31 BHTP
H31 BULK HYDRAZINE TRANSFER PUMP
AIR DRIVEN CHEM. INJ. PUMP H38
* ABANDONED IN PLACE
ENLARGED DETAIL "A" OF PRESSURE GUAGE & DIAPHRAGM SEAL ASSEMBLY AT CHEMICAL FEED TANKS 33 & 34
REVISIONS
28 AS BUILT PER DCP 98-3-167 MTG
27 AS BUILT PER MMP 98-3-161 HA
26 AS BUILT PER DCR 100158705
25 AS BUILT PER DCR 100157169
24 AS BUILT PER DCR 100123472.
23 AS BUILT PER DCR 100082118.
22 AS BUILT PER DCR 100092493.
INDIAN POINT NO. 3 NUCLEAR POWER PLANT
FLOW DIAGRAM CHEMICAL FEED
New York Power Authority
SCALE NONE
DWG NO 9321-F-20383
REV 28
TYPE A/FSAR

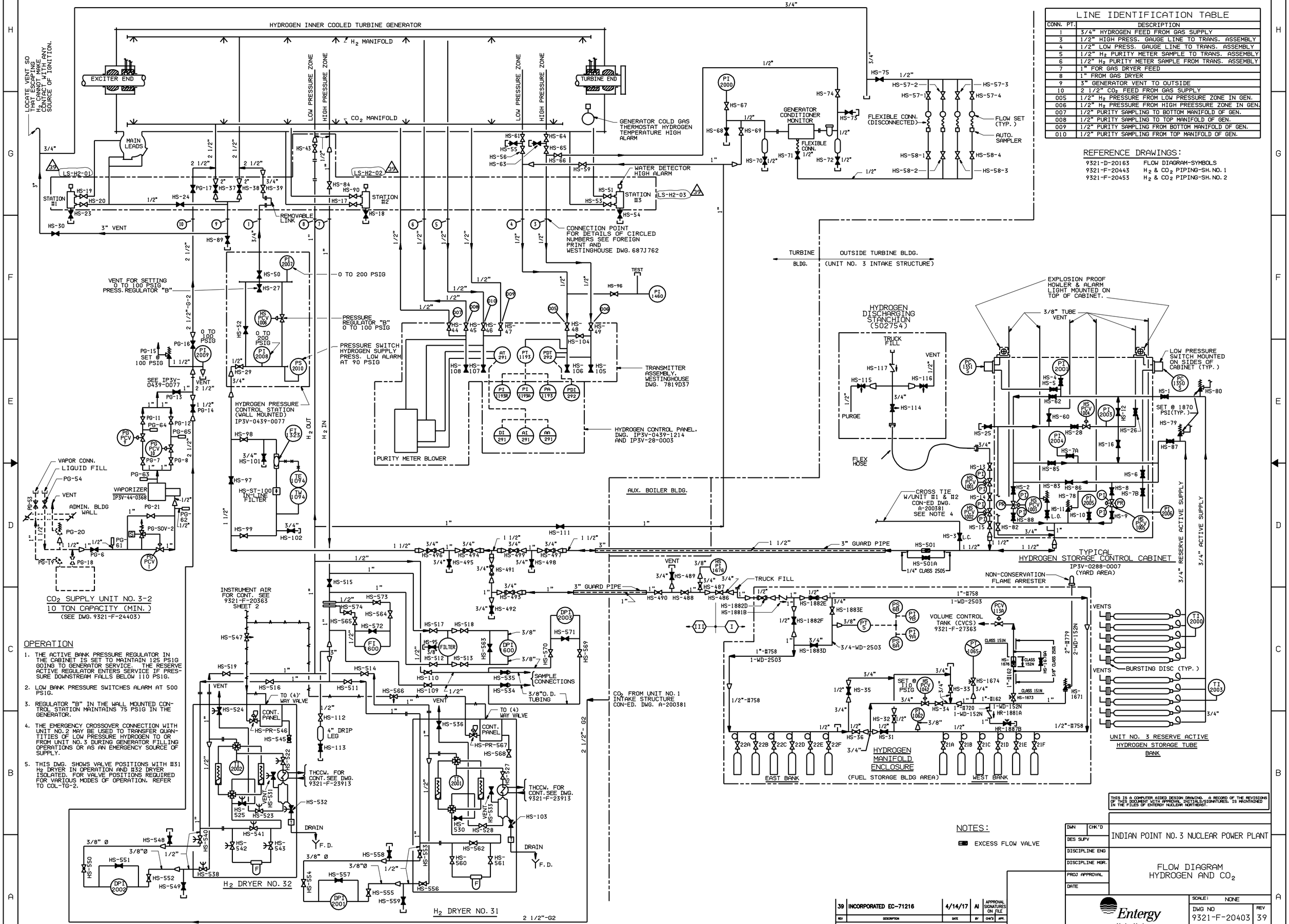

LINE IDENTIFICATION TABLE

CONN. PT.	DESCRIPTION
1	3/4" HYDROGEN FEED FROM GAS SUPPLY
3	1/2" HIGH PRESS. GAUGE LINE TO TRANS. ASSEMBLY
4	1/2" LOW PRESS. GAUGE LINE TO TRANS. ASSEMBLY
5	1/2" H_2 PURITY METER SAMPLE TO TRANS. ASSEMBLY
6	1/2" H_2 PURITY METER SAMPLE FROM TRANS. ASSEMBLY
7	1" FOR GAS DRYER FEED
8	1" FROM GAS DRYER
9	3" GENERATOR VENT TO OUTSIDE
10	2 1/2" CO_2 FEED FROM GAS SUPPLY
005	1/2" H_2 PRESSURE FROM LOW PRESSURE ZONE IN GEN.
006	1/2" H_2 PRESSURE FROM HIGH PREESSURE ZONE IN GEN.
007	1/2" PURITY SAMPLING TO BOTTOM MANIFOLD OF GEN.
008	1/2" PURITY SAMPLING TO TOP MANIFOLD OF GEN.
009	1/2" PURITY SAMPLING FROM BOTTOM MANIFOLD OF GEN.
010	1/2" PURITY SAMPLING FROM TOP MANIFOLD OF GEN.

REFERENCE DRAWINGS:

9321-D-20163	FLOW DIAGRAM-SYMBOLS
9321-F-20443	H_2 & CO_2 PIPING-SH. NO. 1
9321-F-20453	H_2 & CO_2 PIPING-SH. NO. 2

OPERATION

1. THE ACTIVE BANK PRESSURE REGULATOR IN THE CABINET IS SET TO MAINTAIN 125 PSIG GOING TO GENERATOR SERVICE. THE RESERVE ACTIVE REGULATOR ENTERS SERVICE IF PRESSURE DOWNSTREAM FALLS BELOW 110 PSIG.
2. LOW BANK PRESSURE SWITCHES ALARM AT 500 PSIG.
3. REGULATOR "B" IN THE WALL MOUNTED CONTROL STATION MAINTAINS 75 PSIG IN THE GENERATOR.
4. THE EMERGENCY CROSSOVER CONNECTION WITH UNIT NO. 2 MAY BE USED TO TRANSFER QUANTITIES OF LOW PRESSURE HYDROGEN TO OR FROM UNIT NO. 3 DURING GENERATOR FILLING OPERATIONS OR AS AN EMERGENCY SOURCE OF SUPPLY.
5. THIS DWG. SHOWS VALVE POSITIONS WITH #31 H_2 DRYER IN OPERATION AND #32 DRYER ISOLATED. FOR VALVE POSITIONS REQUIRED FOR VARIOUS MODES OF OPERATION. REFER TO COL-TG-2.

NOTES:

EXCESS FLOW VALVE

REV	DESCRIPTION	DATE	BY	CHK'D	APP.
39	INCORPORATED EC-71216	4/14/17	AI	APPROVAL SIGNATURES ON FILE	

REVISIONS

THIS IS A COMPUTER AIDED DESIGN DRAWING. A RECORD OF THE REVISIONS OF THIS DOCUMENT WITH APPROVAL INITIALS/SIGNATURES. IS MAINTAINED IN THE FILES OF ENTERGY NUCLEAR NORTHEAST.

DWN | CHK'D
DES SUPV
DISCIPLINE ENG
DISCIPLINE MGR.
PROJ APPROVAL
DATE

INDIAN POINT NO. 3 NUCLEAR POWER PLANT

FLOW DIAGRAM
HYDROGEN AND CO_2

Entergy
Nuclear Northeast

SCALE: NONE
DWG NO 9321-F-20403
REV 39
SHEET

TYPE A/FSAR

DRAWING NUMBER 9321-F 20443

DRAWING NUMBER UF&G

9321-20443

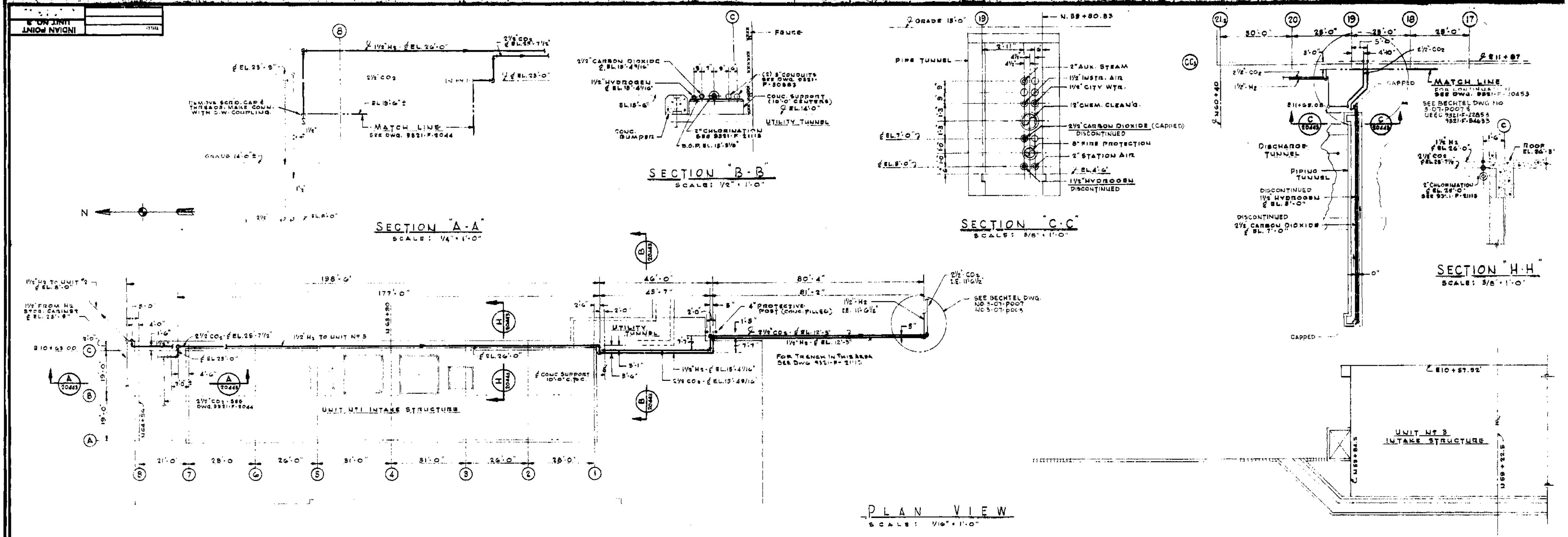

GENERAL NOTES:

1. SUBCONTRACTOR OF BULK HYDROGEN SYSTEM SHALL FURNISH STORAGE TUBES, PREFABRICATED CONTROL CABINET & PREFABRICATED STORAGE TUBE MANIFOLDS. HE SHALL ALSO FURNISH PIPING BETWEEN STORAGE TUBES & CONTROL CABINET & BURSTING DISC VENT PIPING IN BULK QUANTITIES FOR FIELD FABRICATION. 1½" SUPPLY PIPING SHALL BE FURNISHED BY FIELD.
2. PIPING SHALL BE IN ACCORDANCE WITH *NYPA SPECIFICATION TS-MS-024* △9
3. ALL PIPING FURNISHED BY SUB-CONTRACTOR (H_2 SYSTEM) WILL BE BRASS PIPE OR COPPER TUBING.
4. (48) INDICATES WALL PENETRATION: NUMBERS SHOWN ON 9321-F-21453

LEGEND:

———— PIPING SUPPLIED BY FIELD

— — — — PIPING SUPPLIED BY SUB-CONTRACTOR (HYDROGEN SYSTEM)

REFERENCE DWG'S:

9321-F-20405	FLOW DIAGRAM - H_2 & CO_2
9321-F-20453	INTAKE STRUCT.- H_2 & CO_2 PIPING - SHT. 2
9321-F-21113	INTAKE STRUCT.- CHLORINATION PIPING
9321-F-22853	YARD AREA - COMPOSITE PIPING
9321-F-21453	TURB. & HTR BAY FLOOR PENETRATIONS.
9321-F-2044	INTAKE STRUCT. (UNIT #1) H_2 & CO_2 PIPING.
5-07-P007	YARD SERVICE PIPING H_2 & CO_2
5-07-P0 5	YARD SERVICE PIPING H_2 & CO_2

FOREIGN PRINTS:

9321-05-20102	H_2 BOTTLE.
9321-05-20099	H_2 CONTROL CABINET.
9321-05-20101	H_2 VENT TUBING & MANIFOLD.

NO.	DATE	DESCRIPTION
9	6/26/00	AS BUILT PER DCR 100157089
8	6/4/99	REVISED DWG. TO INDICATE LATEST VALVE NOS.
7	[illegible]	REV'D. PER MOD. 81-05-012 MULT. REV'D. H_2 & CO_2 PIPING ROUTE.
6	[illegible]	AS PER LINE WALK
5	[illegible]	FINAL ISSUE
4	5/29/73	REV'D PIPING [illegible] "AS BUILT"
3	[illegible]	REVISED PER FIELD [illegible] FIELD SKETCH [illegible]
2	[illegible]	[illegible]
1	[illegible]	[illegible]
0	3/16/70	FIRST ISSUE RELEASED FOR CONSTRUCTION

ENGINEER [signature] STATE NEW YORK NO. 45194

UNITED ENGINEERS & CONSTRUCTORS INC.

WESTINGHOUSE ELECTRIC CORPORATION

YARD AREA
H_2 AND CO_2 PIPING
SHEET NO. 1

FOR

CONSOLIDATED EDISON COMPANY
INDIAN POINT GENERATING STATION
UNIT NO. 3

U.E.&C. DWG. NO. 9321-F-20443-9

CON. ED. CO. DWG. NO. A-201843

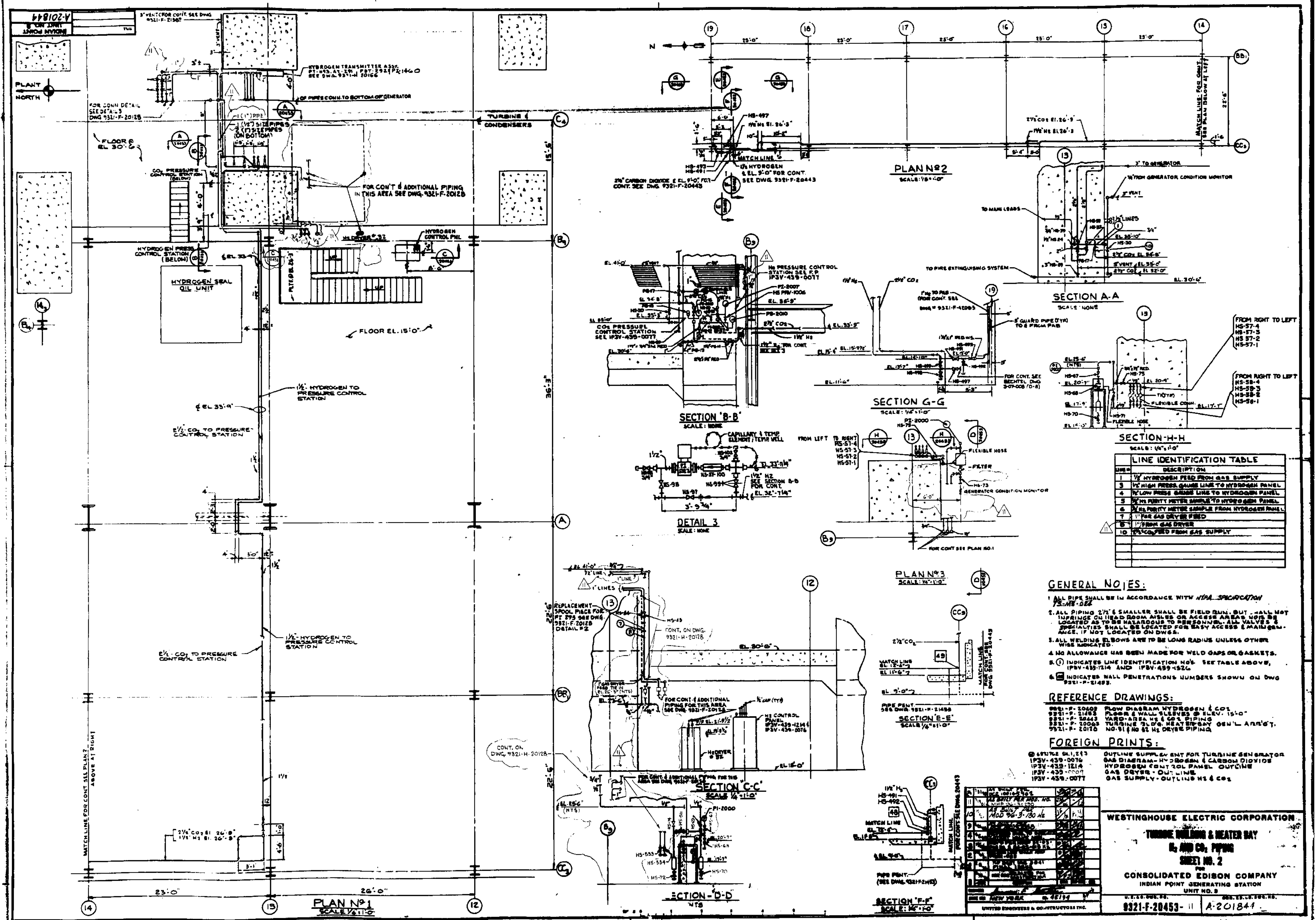

LINE #	LINE IDENTIFICATION TABLE DESCRIPTION
1	½" HYDROGEN FEED FROM GAS SUPPLY
3	½" HIGH PRESS. GAUGE LINE TO HYDROGEN PANEL
4	½" LOW PRESS. GAUGE LINE TO HYDROGEN PANEL
5	½" H2 PURITY METER SAMPLE TO HYDROGEN PANEL
6	½" H2 PURITY METER SAMPLE FROM HYDROGEN PANEL
7	1" FOR GAS DRYER FEED
8	1" FROM GAS DRYER
10	2½" CO_2 FEED FROM GAS SUPPLY

GENERAL NOTES:

1. ALL PIPE SHALL BE IN ACCORDANCE WITH NYPA SPECIFICATION 75-ME-024
2. ALL PIPING 2½" & SMALLER SHALL BE FIELD RUN, BUT SHALL NOT INFRINGE ON HEAD ROOM AISLES OR ACCESS AREAS NOR BE LOCATED AS TO BE HAZARDOUS TO PERSONNEL. ALL VALVES & SPECIALTIES SHALL BE LOCATED FOR EASY ACCESS & MAINTENANCE, IF NOT LOCATED ON DWGS.
3. ALL WELDING ELBOWS ARE TO BE LONG RADIUS UNLESS OTHERWISE INDICATED.
4. NO ALLOWANCE HAS BEEN MADE FOR WELD GAPS OR GASKETS.
5. (1) INDICATES LINE IDENTIFICATION NO'S. SEE TABLE ABOVE, IP3V-439-1214 AND IP3V-439-1526
6. [48] INDICATES WALL PENETRATIONS NUMBERS SHOWN ON DWG 9321-F-21493.

REFERENCE DRAWINGS:

9321-F-20402 FLOW DIAGRAM HYDROGEN & CO2
9321-F-21483 FLOOR & WALL SLEEVES @ ELEV. 15'-0"
9321-F-20443 YARD-AREA H2 & CO2 PIPING
9321-F-20063 TURBINE BLD'G. HEATER BAY GEN'L ARR'G'T.
9321-F-20128 NO. 31 & NO 32 H2 DRYER PIPING

FOREIGN PRINTS:

@ 6514762 SH.1,2&3 OUTLINE SUPPLEMENT FOR TURBINE GENERATOR
IP3V-439-0076 GAS DIAGRAM-HYDROGEN & CARBON DIOXIDE
IP3V-439-1214 HYDROGEN CONTROL PANEL OUTLINE
IP3V-439-0009 GAS DRYER - OUTLINE
IP3V-439-0077 GAS SUPPLY - OUTLINE H2 & CO2

12	7/31/	AS BUILT PER DCR 10216-2902	
11	7/19/01	AS BUILT PER MOD. NO. MMP 96-3-290	
10		AS BUILT PER MOD 96-3-180 H2	
9		[illegible]	
4		[illegible]	
3		[illegible]	
2		[illegible]	
1		[illegible]	
0		[illegible]	

NEW YORK 48194
UNITED ENGINEERS & CONSTRUCTORS INC.

WESTINGHOUSE ELECTRIC CORPORATION
TURBINE BUILDING & HEATER BAY
H_2 AND CO_2 PIPING
SHEET NO. 2
FOR
CONSOLIDATED EDISON COMPANY
INDIAN POINT GENERATING STATION
UNIT NO. 3

9321-F-20453-11 | A-201844

REV	DESCRIPTION	DATE	BY	CHK'D	APP.
12	INCORPORATED EC-32015	9/23/11	RM	APPROVAL SIGNATURES ON FILE	

REVISIONS

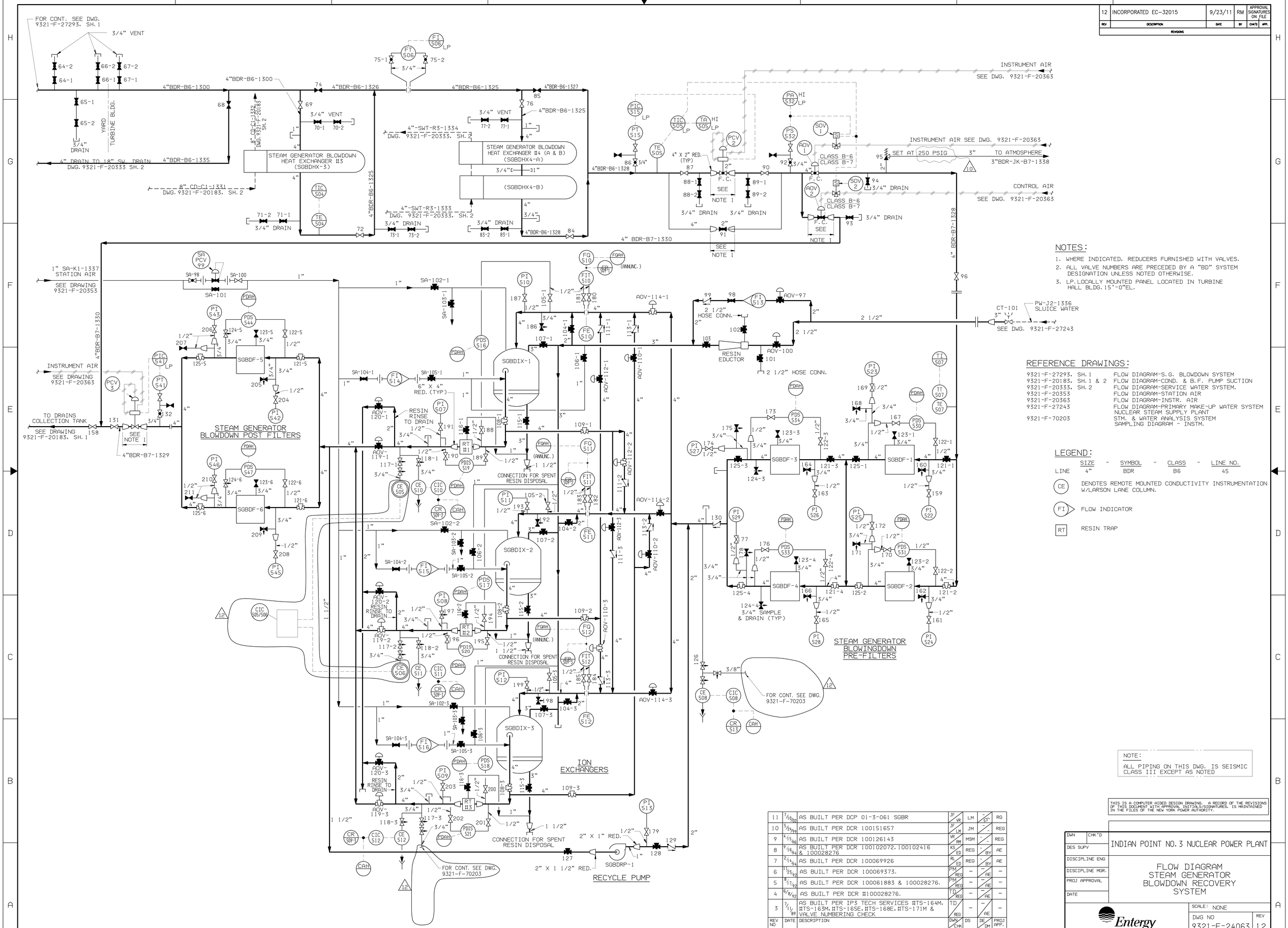

NOTES:

1. WHERE INDICATED, REDUCERS FURNISHED WITH VALVES.
2. ALL VALVE NUMBERS ARE PRECEDED BY A "BD" SYSTEM DESIGNATION UNLESS NOTED OTHERWISE.
3. LP. LOCALLY MOUNTED PANEL LOCATED IN TURBINE HALL BLDG. 15'-0"EL.

REFERENCE DRAWINGS:

9321-F-27293, SH. 1	FLOW DIAGRAM-S.G. BLOWDOWN SYSTEM
9321-F-20183, SH. 1 & 2	FLOW DIAGRAM-COND. & B.F. PUMP SUCTION
9321-F-20333, SH. 2	FLOW DIAGRAM-SERVICE WATER SYSTEM.
9321-F-20353	FLOW DIAGRAM-STATION AIR
9321-F-20363	FLOW DIAGRAM-INSTR. AIR
9321-F-27243	FLOW DIAGRAM-PRIMARY MAKE-UP WATER SYSTEM NUCLEAR STEAM SUPPLY PLANT
9321-F-70203	STM. & WATER ANALYSIS SYSTEM SAMPLING DIAGRAM - INSTM.

LEGEND:

	SIZE	-	SYMBOL	-	CLASS	-	LINE NO.
LINE	4"		BDR		B6		45

(CE) DENOTES REMOTE MOUNTED CONDUCTIVITY INSTRUMENTATION W/LARSON LANE COLUMN.

(FI) FLOW INDICATOR

(RT) RESIN TRAP

NOTE:

ALL PIPING ON THIS DWG. IS SEISMIC CLASS III EXCEPT AS NOTED

REV NO	DATE	DESCRIPTION	DWN/CHK	DS	DE/DM	PROJ APP.
11	7/10/02	AS BUILT PER DCP 01-3-061 SGBR	JF/VR	LM	CP	RG
10	5/24/99	AS BUILT PER DCR 100151657	JF/LM	JM	-/-	REG
9	4/15/96	AS BUILT PER DCR 100126143	VR/RM	MSM	-/-	REG
8	9/16/94	AS BUILT PER DCR 100102072, 100102416 & 100028276	KS/ED	REG	-/BY	AE
7	2/14/94	AS BUILT PER DCR 100069926	RL/ED	REG	-/BY	AE
6	11/23/92	AS BUILT PER DCR 100069373.	PM/REG	—	—/AE	—
5	8/17/92	AS BUILT PER DCR 100061883 & 100028276.	PM/REG	—	—/AE	—
4	6/8/92	AS BUILT PER DCR #100028276.	TD/REG	—	—/AE	—
3	7/11/89	AS BUILT PER IP3 TECH SERVICES #TS-164M, #TS-163M, #TS-165E, #TS-168E, #TS-171M & VALVE NUMBERING CHECK	TD/REG	—	—/AE	—

REVISIONS

THIS IS A COMPUTER AIDED DESIGN DRAWING. A RECORD OF THE REVISIONS OF THIS DOCUMENT WITH APPROVAL INITIALS/SIGNATURES, IS MAINTAINED IN THE FILES OF THE NEW YORK POWER AUTHORITY.

DWN / CHK'D	
DES SUPV	INDIAN POINT NO. 3 NUCLEAR POWER PLANT
DISCIPLINE ENG	FLOW DIAGRAM STEAM GENERATOR BLOWDOWN RECOVERY SYSTEM
DISCIPLINE MGR.	
PROJ APPROVAL	
DATE	

Entergy Nuclear Northeast

SCALE: NONE

DWG NO 9321-F-24063 REV 12

SHEET

TYPE A/FSAR

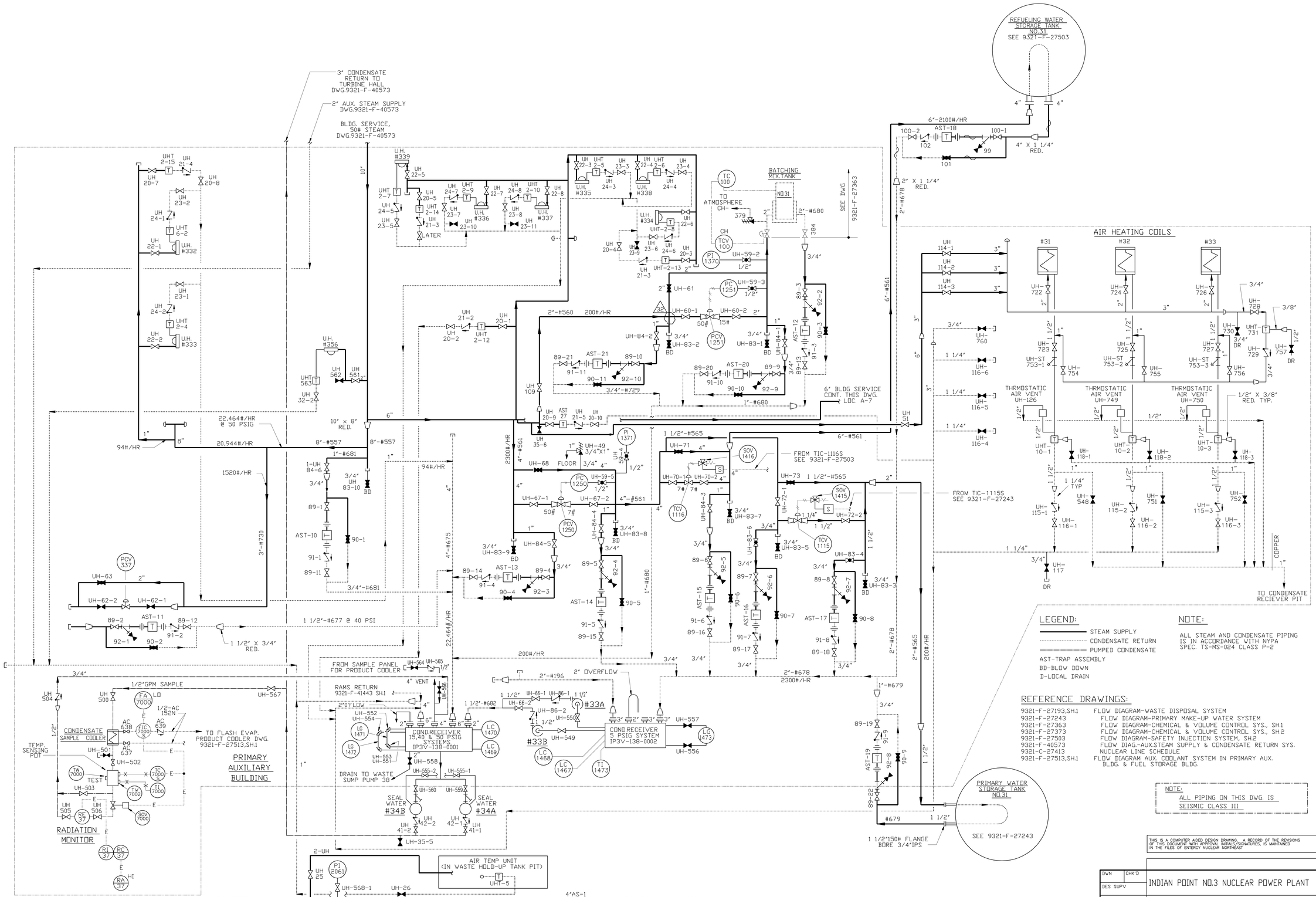
3" CONDENSATE RETURN TO TURBINE HALL DWG.9321-F-40573
2" AUX. STEAM SUPPLY DWG.9321-F-40573
BLDG. SERVICE, 50# STEAM DWG.9321-F-40573
REFUELING WATER STORAGE TANK NO.31 SEE 9321-F-27503
BATCHING MIX.TANK
NO.31
TO ATMOSPHERE
SEE DWG 9321-F-27363
AIR HEATING COILS
#31
#32
#33
THRMOSTATIC AIR VENT UH-126
THRMOSTATIC AIR VENT UH-749
THRMOSTATIC AIR VENT UH-750
1/2" X 3/8" RED. TYP.
TO CONDENSATE RECIEVER PIT
6" BLDG SERVICE CONT. THIS DWG. LOC. A-7
FROM TIC-1116S SEE 9321-F-27503
FROM TIC-1115S SEE 9321-F-27243
22,464#/HR @ 50 PSIG
20,944#/HR
1520#/HR
94#/HR
1 1/2"-#677 @ 40 PSI
1 1/2" X 3/4" RED.
FROM SAMPLE PANEL FOR PRODUCT COOLER
1/2"GPM SAMPLE
CONDENSATE SAMPLE COOLER
TEMP. SENSING POT
TO FLASH EVAP. PRODUCT COOLER DWG. 9321-F-27513,SH.1
PRIMARY AUXILIARY BUILDING
RADIATION MONITOR
RAMS RETURN 9321-F-41443 SH.1
2" OVERFLOW
4" VENT
COND.RECEIVER 15,40 & 50 PSIG SYSTEMS IP3V-138-0001
COND.RECEIVER 5 PSIG SYSTEM IP3V-138-0002
DRAIN TO WASTE SUMP PUMP 3B
SEAL WATER #34B
SEAL WATER #34A
AIR TEMP UNIT (IN WASTE HOLD-UP TANK PIT)
FROM THIS DWG. LOC. E-3
TO STEAM HEATING COILS IN RADIOACTIVE MACHINE SHOP
9321-F-41443 SH.1
TO STEAM TRAP
PRIMARY WATER STORAGE TANK NO.31
SEE 9321-F-27243
1 1/2"150# FLANGE BORE 3/4"IPS
LEGEND:
STEAM SUPPLY
CONDENSATE RETURN
PUMPED CONDENSATE
AST-TRAP ASSEMBLY
BD-BLOW DOWN
D-LOCAL DRAIN
NOTE:
ALL STEAM AND CONDENSATE PIPING IS IN ACCORDANCE WITH NYPA SPEC. TS-MS-024 CLASS P-2
REFERENCE DRAWINGS:
9321-F-27193,SH.1 FLOW DIAGRAM-WASTE DISPOSAL SYSTEM
9321-F-27243 FLOW DIAGRAM-PRIMARY MAKE-UP WATER SYSTEM
9321-F-27363 FLOW DIAGRAM-CHEMICAL & VOLUME CONTROL SYS., SH.1
9321-F-27373 FLOW DIAGRAM-CHEMICAL & VOLUME CONTROL SYS., SH.2
9321-F-27503 FLOW DIAGRAM-SAFETY INJECTION SYSTEM, SH.2
9321-F-40573 FLOW DIAG.-AUX.STEAM SUPPLY & CONDENSATE RETURN SYS.
9321-C-27413 NUCLEAR LINE SCHEDULE
9321-F-27513,SH.1 FLOW DIAGRAM AUX. COOLANT SYSTEM IN PRIMARY AUX. BLDG. & FUEL STORAGE BLDG.
NOTE:
ALL PIPING ON THIS DWG. IS SEISMIC CLASS III
THIS IS A COMPUTER AIDED DESIGN DRAWING. A RECORD OF THE REVISIONS OF THIS DOCUMENT WITH APPROVAL INITIALS/SIGNATURES, IS MAINTAINED IN THE FILES OF ENTERGY NUCLEAR NORTHEAST
INDIAN POINT NO.3 NUCLEAR POWER PLANT
FLOW DIAGRAM AUXILIARY STEAM & CONDENSATE FOR PRIMARY AUXILIARY BUILDING
Entergy Nuclear Northeast
SCALE: NONE
DWG NO 9321-F-27273
REV 32
32 INCORPORATED EC-69812 02/14/17 SM
APPROVAL SIGNATURES ON FILE
REVISIONS
TYPE A/FSAR

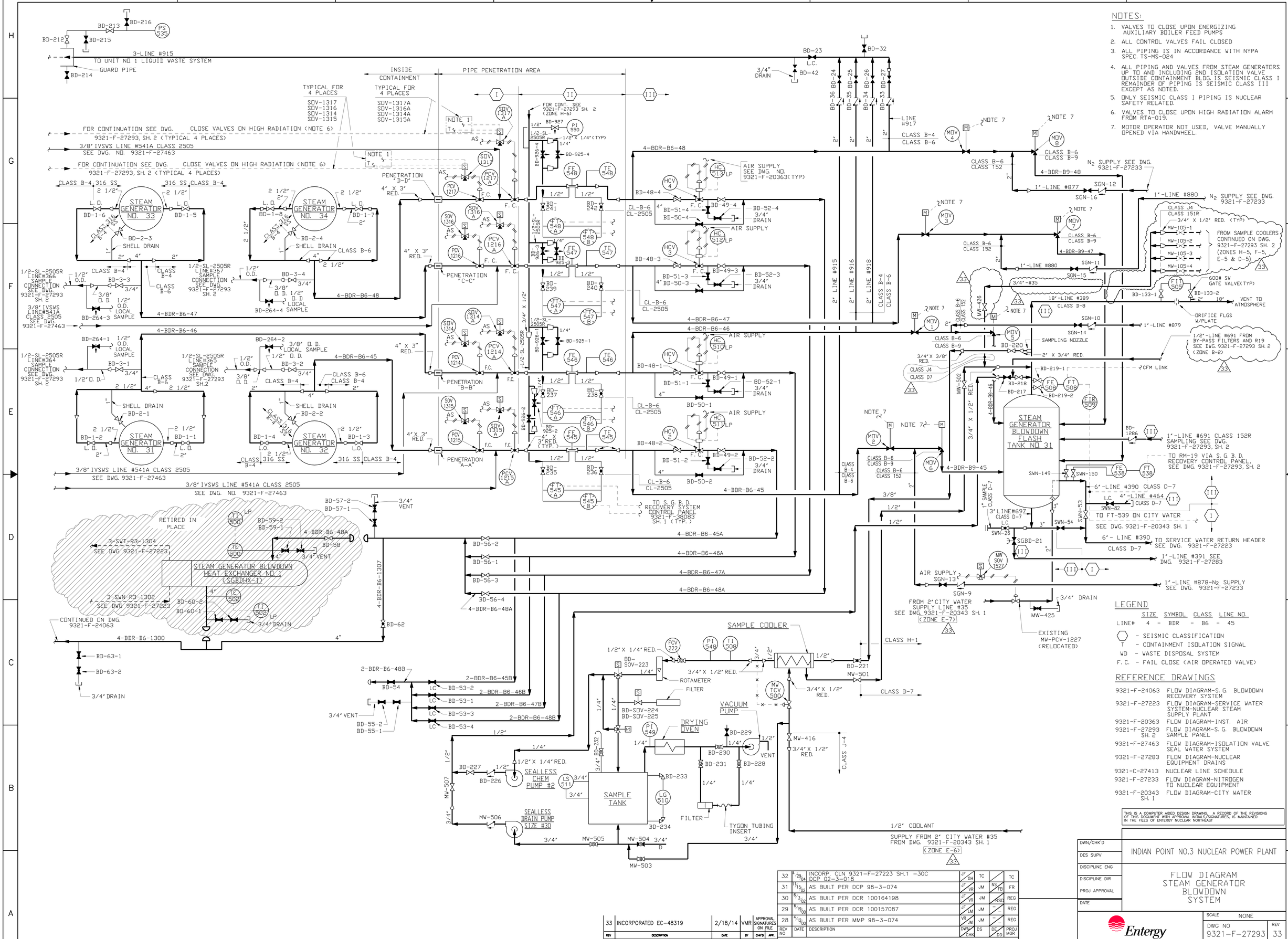

NOTES:

1. VALVES TO CLOSE UPON ENERGIZING AUXILIARY BOILER FEED PUMPS
2. ALL CONTROL VALVES FAIL CLOSED
3. ALL PIPING IS IN ACCORDANCE WITH NYPA SPEC. TS-MS-024
4. ALL PIPING AND VALVES FROM STEAM GENERATORS UP TO AND INCLUDING 2ND ISOLATION VALVE OUTSIDE CONTAINMENT BLDG. IS SEISMIC CLASS I REMAINDER OF PIPING IS SEISMIC CLASS III EXCEPT AS NOTED.
5. ONLY SEISMIC CLASS I PIPING IS NUCLEAR SAFETY RELATED.
6. VALVES TO CLOSE UPON HIGH RADIATION ALARM FROM RTA-019.
7. MOTOR OPERATOR NOT USED, VALVE MANUALLY OPENED VIA HANDWHEEL.

LEGEND

	SIZE	SYMBOL	CLASS	LINE NO.
LINE#	4 -	BDR	- B6	- 45

- ⬡ - SEISMIC CLASSIFICATION
- T - CONTAINMENT ISOLATION SIGNAL
- WD - WASTE DISPOSAL SYSTEM
- F.C. - FAIL CLOSE (AIR OPERATED VALVE)

REFERENCE DRAWINGS

9321-F-24063	FLOW DIAGRAM-S.G. BLOWDOWN RECOVERY SYSTEM
9321-F-27223	FLOW DIAGRAM-SERVICE WATER SYSTEM-NUCLEAR STEAM SUPPLY PLANT
9321-F-20363	FLOW DIAGRAM-INST. AIR
9321-F-27293 SH. 2	FLOW DIAGRAM-S.G. BLOWDOWN SAMPLE PANEL
9321-F-27463	FLOW DIAGRAM-ISOLATION VALVE SEAL WATER SYSTEM
9321-F-27283	FLOW DIAGRAM-NUCLEAR EQUIPMENT DRAINS
9321-C-27413	NUCLEAR LINE SCHEDULE
9321-F-27233	FLOW DIAGRAM-NITROGEN TO NUCLEAR EQUIPMENT
9321-F-20343 SH. 1	FLOW DIAGRAM-CITY WATER

THIS IS A COMPUTER AIDED DESIGN DRAWING. A RECORD OF THE REVISIONS OF THIS DOCUMENT WITH APPROVAL INITIALS/SIGNATURES, IS MAINTAINED IN THE FILES OF ENTERGY NUCLEAR NORTHEAST

REV	DATE	DESCRIPTION	DWN/CHK	DS	DE/DD	PROJ MGR
32	4/29/04	INCORP. CLN 9321-F-27223 SH.1 -30C DCP 02-3-018	JF/SH	TC	/	TC
31	11/15/02	AS BUILT PER DCP 98-3-074	JF/VR	JM	NS/FB	FR
30	5/3/02	AS BUILT PER DCR 100164198	JF/VR	JM	RSD	REG
29	5/19/00	AS BUILT PER DCR 100157087	JF/LM	JM	—	REG
28	4/12/00	AS BUILT PER MMP 98-3-074	VR/JM	JM	—	REG

REVISIONS

REV	DESCRIPTION	DATE	BY	CHK'D	APPROVAL SIGNATURES ON FILE APP.
33	INCORPORATED EC-48319	2/18/14	VMR		

REVISIONS

DWN/CHK'D
DES SUPV
DISCIPLINE ENG
DISCIPLINE DIR
PROJ APPROVAL
DATE

INDIAN POINT NO.3 NUCLEAR POWER PLANT

FLOW DIAGRAM
STEAM GENERATOR
BLOWDOWN
SYSTEM

Entergy
Nuclear Northeast

SCALE NONE
DWG NO 9321-F-27293
REV 33
SHEET 1

TYPE A/ISI/FSAR

IMECH

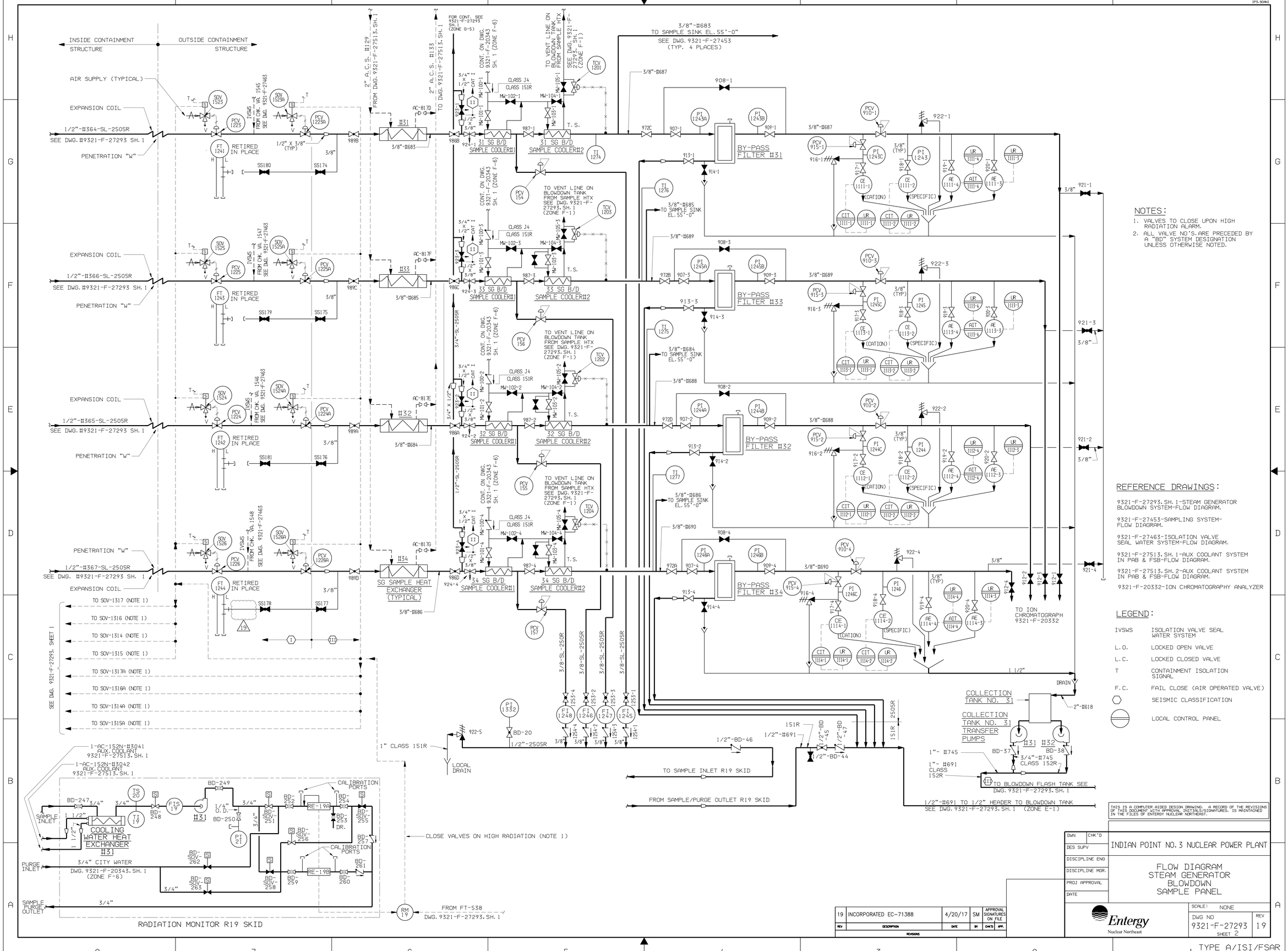

NOTES:

1. VALVES TO CLOSE UPON HIGH RADIATION ALARM.
2. ALL VALVE NO'S. ARE PRECEDED BY A "BD" SYSTEM DESIGNATION UNLESS OTHERWISE NOTED.

REFERENCE DRAWINGS:

9321-F-27293. SH. 1-STEAM GENERATOR BLOWDOWN SYSTEM-FLOW DIAGRAM.

9321-F-27453-SAMPLING SYSTEM-FLOW DIAGRAM.

9321-F-27463-ISOLATION VALVE SEAL WATER SYSTEM-FLOW DIAGRAM.

9321-F-27513. SH. 1-AUX COOLANT SYSTEM IN PAB & FSB-FLOW DIAGRAM.

9321-F-27513. SH. 2-AUX COOLANT SYSTEM IN PAB & FSB-FLOW DIAGRAM.

9321-F-20332-ION CHROMATOGRAPHY ANALYZER

LEGEND:

IVSWS	ISOLATION VALVE SEAL WATER SYSTEM
L.O.	LOCKED OPEN VALVE
L.C.	LOCKED CLOSED VALVE
T	CONTAINMENT ISOLATION SIGNAL
F.C.	FAIL CLOSE (AIR OPERATED VALVE)
⬡	SEISMIC CLASSIFICATION
⊖	LOCAL CONTROL PANEL

THIS IS A COMPUTER AIDED DESIGN DRAWING. A RECORD OF THE REVISIONS OF THIS DOCUMENT WITH APPROVAL INITIALS/SIGNATURES. IS MAINTAINED IN THE FILES OF ENTERGY NUCLEAR NORTHEAST.

REV	DESCRIPTION	DATE	BY	CHK'D	APP.
19	INCORPORATED EC-71388	4/20/17	SM	APPROVAL SIGNATURES ON FILE	

REVISIONS

DWN | CHK'D
DES SUPV
DISCIPLINE ENG
DISCIPLINE MGR.
PROJ APPROVAL
DATE

INDIAN POINT NO. 3 NUCLEAR POWER PLANT

FLOW DIAGRAM
STEAM GENERATOR
BLOWDOWN
SAMPLE PANEL

Entergy
Nuclear Northeast

SCALE: NONE

DWG NO 9321-F-27293 SHEET 2 | REV 19

TYPE A/ISI/FSAR

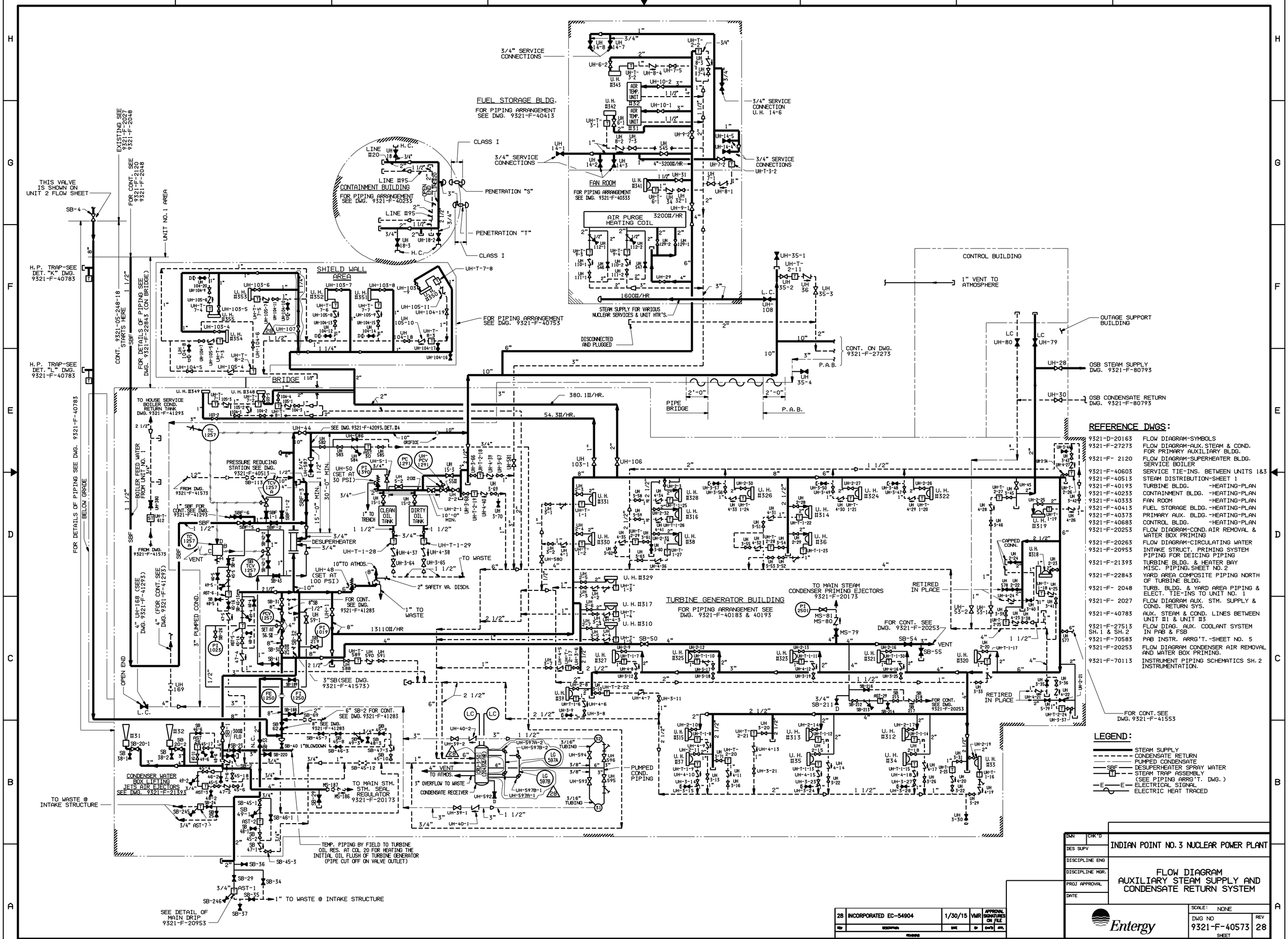
FUEL STORAGE BLDG.
FOR PIPING ARRANGEMENT SEE DWG. 9321-F-40413
CONTAINMENT BUILDING
FOR PIPING ARRANGEMENT SEE DWG. 9321-F-40233
FAN ROOM
FOR PIPING ARRANGEMENT SEE DWG. 9321-F-40333
AIR PURGE HEATING COIL
3200#/HR
1600#/HR
STEAM SUPPLY FOR VARIOUS NUCLEAR SERVICES & UNIT HTR'S.
DISCONNECTED AND PLUGGED
3/4" SERVICE CONNECTIONS
3/4" SERVICE CONNECTION U.H. 14-6
CLASS I
PENETRATION "S"
PENETRATION "T"
THIS VALVE IS SHOWN ON UNIT 2 FLOW SHEET
EXISTING SEE 9321-F-2027 9321-F-2048
FOR CONT. SEE 9321-F-2120 9321-F-2048
UNIT NO.1 AREA
H.P. TRAP-SEE DET. "K" DWG. 9321-F-40783
H.P. TRAP-SEE DET. "L" DWG. 9321-F-40783
CONT. 9321-05-248-18 STARTS HERE
FOR DETAILS OF PIPING SEE DWG. 9321-F-22843 (ON BRIDGE)
SHIELD WALL AREA
FOR PIPING ARRANGEMENT SEE DWG. 9321-F-40753
BRIDGE
TO HOUSE SERVICE BOILER COND. RETURN TANK DWG. 9321-F-41293
PRESSURE REDUCING STATION SEE DWG. 9321-F-40513
SEE DWG. 9321-F-42093, DET. #4
10" ORIFICE
UH-50 (SET AT 30 PSI)
CLEAN OIL TANK
DIRTY OIL TANK
DESUPERHEATER
TO WASTE
10" TO ATMOS.
2" SAFETY VA. DISCH.
1" TO WASTE
FOR CONT. SEE DWG. 9321-F-41283
13110#/HR
380.1#/HR.
54.3#/HR.
3" SB (SEE DWG. 9321-F-41573)
6" SB-2 FOR CONT. SEE DWG. 9321-F-41283
8" SEE DWG. 9321-F-41283
1" BLOWDOWN
CONDENSER WATER BOX LIFTING JETS AIR EJECTORS SEE DWG. 9321-F-21392
TO WASTE @ INTAKE STRUCTURE
TO MAIN STM. STM. SEAL REGULATOR 9321-F-20173
4" VENT TO ATMOS.
3" OVERFLOW TO WASTE
CONDENSATE RECEIVER
PUMPED COND. PIPING
TEMP. PIPING BY FIELD TO TURBINE OIL RES. AT COL 20 FOR HEATING THE INITIAL OIL FLUSH OF TURBINE GENERATOR (PIPE CUT OFF ON VALVE OUTLET)
SEE DETAIL OF MAIN DRIP 9321-F-20953
1" TO WASTE @ INTAKE STRUCTURE
TURBINE GENERATOR BUILDING
FOR PIPING ARRANGEMENT SEE DWG. 9321-F-40183 & 40193
TO MAIN STEAM CONDENSER PRIMING EJECTORS 9321-F-20173
RETIRED IN PLACE
FOR CONT. SEE DWG. 9321-F-20253
FOR CONT. SEE DWG. 9321-F-41553
CONT. ON DWG. 9321-F-27273
P.A.B.
PIPE BRIDGE
CONTROL BUILDING
1" VENT TO ATMOSPHERE
OUTAGE SUPPORT BUILDING
OSB STEAM SUPPLY DWG. 9321-F-80793
OSB CONDENSATE RETURN DWG. 9321-F-80793
REFERENCE DWGS:
9321-D-20163 FLOW DIAGRAM-SYMBOLS
9321-F-27273 FLOW DIAGRAM-AUX. STEAM & COND. FOR PRIMARY AUXILIARY BLDG.
9321-F- 2120 FLOW DIAGRAM-SUPERHEATER BLDG. SERVICE BOILER
9321-F-40603 SERVICE TIE-INS. BETWEEN UNITS 1&3
9321-F-40513 STEAM DISTRIBUTION-SHEET 1
9321-F-40193 TURBINE BLDG. -HEATING-PLAN
9321-F-40233 CONTAINMENT BLDG. -HEATING-PLAN
9321-F-40333 FAN ROOM -HEATING-PLAN
9321-F-40413 FUEL STORAGE BLDG. -HEATING-PLAN
9321-F-40373 PRIMARY AUX. BLDG. -HEATING-PLAN
9321-F-40683 CONTROL BLDG. -HEATING-PLAN
9321-F-20253 FLOW DIAGRAM-COND. AIR REMOVAL & WATER BOX PRIMING
9321-F-20263 FLOW DIAGRAM-CIRCULATING WATER
9321-F-20953 INTAKE STRUCT. PRIMING SYSTEM PIPING FOR DEICING PIPING
9321-F-21393 TURBINE BLDG. & HEATER BAY MISC. PIPING, SHEET NO. 2
9321-F-22843 YARD AREA COMPOSITE PIPING NORTH OF TURBINE BLDG.
9321-F- 2048 TURB. BLDG. & YARD AREA PIPING & ELECT. TIE-INS TO UNIT NO. 1
9321-F- 2027 FLOW DIAGRAM AUX. STM. SUPPLY & COND. RETURN SYS.
9321-F-40783 AUX. STEAM & COND. LINES BETWEEN UNIT #1 & UNIT #3
9321-F-27513 SH. 1 & SH. 2 FLOW DIAG. AUX. COOLANT SYSTEM IN PAB & FSB
9321-F-70583 PAB INSTR. ARRG'T. -SHEET NO. 5
9321-F-20253 FLOW DIAGRAM CONDENSER AIR REMOVAL AND WATER BOX PRIMING.
9321-F-70113 INSTRUMENT PIPING SCHEMATICS SH. 2 INSTRUMENTATION.
LEGEND:
STEAM SUPPLY
CONDENSATE RETURN
PUMPED CONDENSATE
SBF DESUPERHEATER SPRAY WATER
STEAM TRAP ASSEMBLY (SEE PIPING ARRG'T. DWG.)
ELECTRICAL SIGNAL
ELECTRIC HEAT TRACED
28 INCORPORATED EC-54904 1/30/15 VMR
INDIAN POINT NO. 3 NUCLEAR POWER PLANT
FLOW DIAGRAM AUXILIARY STEAM SUPPLY AND CONDENSATE RETURN SYSTEM
Entergy
SCALE: NONE
DWG NO 9321-F-40573
REV 28
TYPE A/ISI/FSAR