REGULATORY INFORMATION DISTRIBUTION SYSTEM (RIDS)

ACCESSION NBR:8410170045 DOC.DATE: 84/10/15 NOTARIZED: YES DOCKET #
FACIL:STN-50-528 Palo Verde Nuclear Station, Unit 1, Arizona Publi 05000528
STN-50-529 Palo Verde Nuclear Station, Unit 2, Arizona Publi 05000529
STN-50-530 Palo Verde Nuclear Station, Unit 3, Arizona Publi 05000530
AUTH.NAME AUTHOR AFFILIATION
VAN BRUNT,E.E. Arizona Public Service Co.
RECIP.NAME RECIPIENT AFFILIATION
KNIGHTON,G. Licensing Branch 3

SUBJECT: Forwards Certificate of analysis,request for matl transfer, weld procedure qualification records,bills of matl & C-E. 840424 ltr omitted from 840815 ltr to NRC re control element shroud assembly designation.

DISTRIBUTION CODE: B001D COPIES RECEIVED:LTR 1 ENCL 1 SIZE: 58
TITLE: Licensing Submittal: PSAR/FSAR Amdts & Related Correspondence

NOTES:Standardized plant. 05000528
Standardized plant. 05000529
Standardized plant. 05000530

	RECIPIENT ID CODE/NAME	COPIES LTTR	COPIES ENCL	RECIPIENT ID CODE/NAME	COPIES LTTR	COPIES ENCL
	NRR/DL/ADL	1	0	NRR LB3 BC	1	0
	NRR LB3 LA	1	0	LICITRA,E 01	1	1
INTERNAL:	ADM/LFMB	1	0	ELD/HDS3	1	0
	IE FILE	1	1	IE/DEPER/EPB 36	3	3
	IE/DEPER/IRB 35	1	1	IE/DQASIP/QAB21	1	1
	NRR ROE,M.L	1	1	NRR/DE/AEAB	1	0
	NRR/DE/CEB 11	1	1	NRR/DE/EHEB	1	1
	NRR/DE/EQB 13	2	2	NRR/DE/GB 28	2	2
	NRR/DE/MEB 18	1	1	NRR/DE/MTEB 17	1	1
	NRR/DE/SAB 24	1	1	NRR/DE/SGEB 25	1	1
	NRR/DHFS/HFEB40	1	1	NRR/DHFS/LQB 32	1	1
	NRR/DHFS/PSRB	1	1	NRR/DL/SSPB	1	0
	NRR/DSI/AEB 26	1	1	NRR/DSI/ASB	1	1
	NRR/DSI/CPB 10	1	1	NRR/DSI/CSB 09	1	1
	NRR/DSI/ICSB 16	1	1	NRR/DSI/METB 12	1	1
	NRR/DSI/PSB 19	1	1	NRR/DSI/RAB 22	1	1
	NRR/DSI/RSB 23	1	1	REG FILE 04	1	1
	RGN5	3	3	RM/DDAMI/MIB	1	0
EXTERNAL:	ACRS 41	6	6	BNL(AMDTS ONLY)	1	1
	DMB/DSS (AMDTS)	1	1	FEMA-REP DIV 39	1	1
	LPDR 03	1	1	NRC PDR 02	1	1
	NSIC 05	1	1	NTIS	1	1

TOTAL NUMBER OF COPIES REQUIRED: LTTR 55 ENCL 47

Arizona Public Service Company

October 15, 1984
ANPP-30845 TFQ/KLM

Director Of Nuclear Reactor Regulation
Attention: Mr. George Knighton, Chief
Licensing Branch No. 3
Division of Licensing
U.S. Nuclear Regulatory Commission
Washington, D.C. 20555

Subject: Palo Verde Nuclear Generating Station (PVNGS)
Units 1, 2 and 3
CEA Shroud Assembly
Docket Nos. STN 50-528/529/530
File: 84-056-026; G.1.01.10

Reference: Letter from E.E. Van Brunt, Jr., APS, to G.W. Knighton, NRC, dated August 15, 1984; Subject: Palo Verde CEA Shroud Assembly Designation

Dear Mr. Knighton:

Mr. Licitra, of your staff, has indicated that the non-proprietary attachments to the letter referenced above were not received by the NRC.

The following documents are attached and are non-proprietary:

- C-E Letter V-CE-30130, dated April 24, 1984
- Certificate of Analysis (Customer Order No. 548)
- Request for Material Transfer No. 5989
- Weld Procedure Qualification Records
- Bills of Material:

729-0000	907-1579
729-1000	907-1580
907-1583	907-1581
907-1575	907-1582
907-1576	907-1528
907-1577	729-3601
907-1578	

B001
1/1

If you should have any questions, please contact me.

Very truly yours,

E. E. Van Brunt

E. E. Van Brunt, Jr.
APS Vice President
Nuclear Production
ANPP Project Director

EEVBJr/KLM/nmo
Attachments

cc: E. A. Licitra (w/a)
A. C. Gehr (w/a)

ANPP-30845

STATE OF ARIZONA)
) ss.
COUNTY OF MARICOPA)

I, Edwin E. Van Brunt, Jr., represent that I am Vice President, Nuclear Production of Arizona Public Service Company, that the foregoing document has been signed by me on behalf of Arizona Public Service Company with full authority to do so, that I have read such document and know its contents, and that to the best of my knowledge and belief, the statements made therein are true.

Edwin E. Van Brunt

Edwin E. Van Brunt, Jr.

Sworn to before me this 15th day of October, 1984.

Nora E. Meador

Notary Public

My Commission Expires:

My Commission Expires April 6, 1987

C-E Power Systems
Combustion Engineering, Inc.
1000 Prospect Hill Road
Windsor, Connecticut 06095

Tel. 203/688-1911
Telex 99297

POWER SYSTEMS

April 24, 1984
V-CE-30130

Mr. E. E. VanBrunt, Jr.
Arizona Nuclear Power Project
P.O. Box 2166-STA-3003
Phoenix, AR 85036

Subject: Responses to NRC Questions of March 20, 1984 meeting

Reference: Interim Report on the Performance Evaluation of the Palo Verde Control Element Assembly Shroud, CEN-267.

Dear Mr. VanBrunt,

The NRC staff raised two questions related to the CEA shroud lateral support modifications (Reference) during the March 20, 1984 APS-NRC meeting in Bethesda, Maryland. The questions were answered by Mr. J. Gibbons, Mr. C. Ferguson, and Mr. R. Adams of C-E. The purpose of this letter is to document and clarify the responses and provide copies of requested procedures.

Mr. Halapatz of the NRC expressed concern over the use of Stellite hardface and its effect on decarburization of the stainless steel base material in the melted interface zone. Mr. Halapatz also requested that the hardface overlay procedures be provided for review.

In the response provided, Stellite No. 6 was incorrectly referenced as the hardface material used in the CEA shroud lateral support modification. The material used is Haynes Alloy No. 25. Haynes Alloy No. 25 has been used in hardfacing applications in all of C-E operating plants with many years of successful service. The specific applications are summarized later.

The Haynes Alloy and the stainless steel base material content used in the CEA shroud lateral support modification are nearly identical except for the Tungsten and Cobalt found in the Haynes Alloy. Cobalt is not a carbide former and therefore not of concern with respect to decarburization. Tungsten is a carbide former. However, the carbon content in the 304 stainless steel base material is controlled to a .065% maximum limit which is lower than Haynes Alloy No. 25 carbon content and therefore the concern of decarburization of the base material is without basis.

Examination of the results of the tests performed on the hardface process qualification samples show, as expected, the decarburization of the base material does not occur. The hardface deposit composition was analyzed above and at the level of the base plate surface and also .042 inch below the plate surface.

Copies of the hardface welding procedure requests are attached.

The NRC staff also asked about C-E experience in prior use of close fitting snubbers (keys and keyways) as described in the CEA shroud lateral support modifications.

The close fitting key and keyway snubber type design is not a new concept or a unique application as used in the CEA shroud lateral support modifications. The key and keyway snubber design provides lateral support yet allows free axial and radial movement between the key and keyway. The design concept has been employed in all of C-E operating reactors with many years of successful operation. This type of design has provided lateral support of the lower end of core support barrels mating with the pressure vessel wall and also had provided lateral support between the fuel alignment plate and the top of the core shroud in a significant number of operating plants. The core barrel to pressure vessel lateral support utilizes a Haynes Alloy No. 25 and Inconnel 750X material combination with a nominal gap of .013 inch between mating surfaces. The alignment plate to core shroud lateral support utilizes a Haynes Alloy No. 25 and Haynes Alloy No. 25 or Stellite No. 6 material combination with a nominal gap of .008 inch between mating surfaces.

This type of snubber design is not unique to C-E reactors.

Very truly yours,

C. Ferguson
Project Manager

CF/PFM
Enclosure
cc: Messrs:
G. C. Andognini - w/e
J. Vorees - w/e
W. H. Wilson
W. G. Bingham - w/e
R. H. Holm
J. W. Dilk
G. A. Butterworth
S. N. Mager
D. B. Amerine - w/e
W. L. MacDonald
J. R Bynum
W. F. Quinn - w/e

Attn: D. Farris

WELDING PROCEDURE QUALIFICATION RECORD

/ 29

GE POWER SYSTEMS

From: R. H. Kruger

Date 1-25-77 Procedure Qualification Record No. SMA-(L605).8-HS-2

WPS No. SMA-(L605).8-HS-2

Welding Process(es) Shielded Metal Arc

Type (Manual, Automatic, Semi-Auto.) Manual

JOINTS (QW-402)

WELD ENG.
JOB # [illegible]
DATE RELEASED
JUL 3 0 1976

Groove Design Used

BASE METALS (QW-403)
Material Spec. SA240
Type or Grade 304
P No. N/A to P No. 8
Thickness 1/8 Min./Multiple Layer
Diameter N/A
Other

POSTWELD HEAT TREATMENT (QW-407)
Temperature N/A
Time N/A
Other

GAS (QW-408)
Type of Gas or Gases N/A
Composition of Gas Mixture N/A
Other

FILLER METALS (QW-404)
Weld Metal Analysis A No. None
Size of Electrode 5/32
Filler Metal F No. None
SFA Specification None
AWS Classification None
Other Stellite Alloy No. 25 (AMS 5797) for weld filler metal chemical composition, see "Deposit Analysis"

ELECTRICAL CHARACTERISTICS (QW-409)
Current Direct
Polarity Reverse
Amps. 125 - 175 Volts 22 - 26
Other:

POSITION (QW-405)
Position of Groove Horizontal (2G)
Weld Progression (Uphill, Downhill) N/A
Other

TECHNIQUE (QW-410)
Travel Speed 6 - 8 I.P.M.
String or Weave Bead String
Oscillation N/A
Multipass or Single Pass (per side) Multipass
Single or Multiple Electrodes Single
Other

PREHEAT (QW-406)
Preheat Temp. 65°F
Interpass Temp. 150°F
Other

Tensile Test (QW-150)

Specimen No.	Width	Thickness	Area	Ultimate Total Load lb.	Ultimate Unit Stress psi	Character of Failure & Location

Guided Bend Tests (QW-160)

Type and Figure No.	Result

Toughness Tests (QW-170)

Specimen No.	Notch Location	Notch Type	Test Temp.	Impact Values	Lateral Exp.		Drop Weight	
					% Shear	Mils	Break	No Break

Fillet Weld Test (QW-180)

Result — Satisfactory: Yes _____ No _____ Penetration into Parent Metal: Yes X No _____

Type and Character of Failure _____ Macro—Results See other

Other Tests

Type of Test Sample was sectioned in accordance with NG 4384 (b), polished, etched and examined at 5X magnification with no cracks, lack of fusion, or other defects observed.

DEPOSIT ANALYSIS

C .05-0.15 M_N 1.0-2.0 P 0.04 max S 0.03 max. Si 1.0 max W _____

C_R 19.0-21.0 N_i 9.0-11.0 M_o _____ C_u Bal. N_2 _____ V _____ C_b+T_a _____

N/A % Ferrite in Austenitic Weld Deposit Other W: 13.0-16.0 Fe: 5.0 max.

Other See attached for liquid penetrant and hardness results

Welder's Name P. Gillis (Weld Lab) Clock No. _____ Stamp No. _____

Tests conducted by: Weld Eng. Laboratory Test No. 9160952

We certify that the statements in this record are correct and that the test welds were prepared, welded and tested in accordance with the requirements of Section IX of the ASME Code.

P. F. AVERY CORPORATION
A Subsidiary of Combustion Engineering, Inc.

Date 12/30/76 By Richard H. Keyes

241 West Boylston Street
West Boylston, Massachusetts 01583

379

P. F. AVERY CORP.

Date: January 25, 1977

P. F. Avery Corporation

Old Dover Road

Newington, New Hampshire 03801

P. O. No. 913-0950-52

Attention: Mary Griffin

MMR No. D151-20

Report of tests:

Sample Identification: Chips taken from PFAC Weld Procedure Qualificatio for Hard Surfacing. SMA-(L605).8-HS-2
P.O. No. 913-0950-52

Element	Composition (%)
Carbon	.14
Manganese	1.57
Silicon	.41
Phosphorus	.020
Sulfur	.010
Chromium	19.25
Nickel	10.32
Tungsten	13.26
Iron	3.93
Cobalt	49.97

Yield at 0.2% offset, unless otherwise noted

% Elongation in 2" gage length, unless otherwise noted

Sworn to and subscribed
before me this ..... day
of ..... 19 ....

.....
Notary Public

MASSACHUSETTS MATERIALS RESEARCH, Inc.

JOB NO. 9160952

HARDNESS READINGS

SAMPLE #1

END VIEW

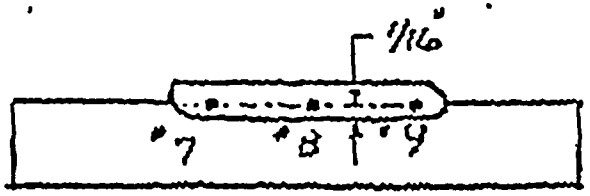

TOP VIEW

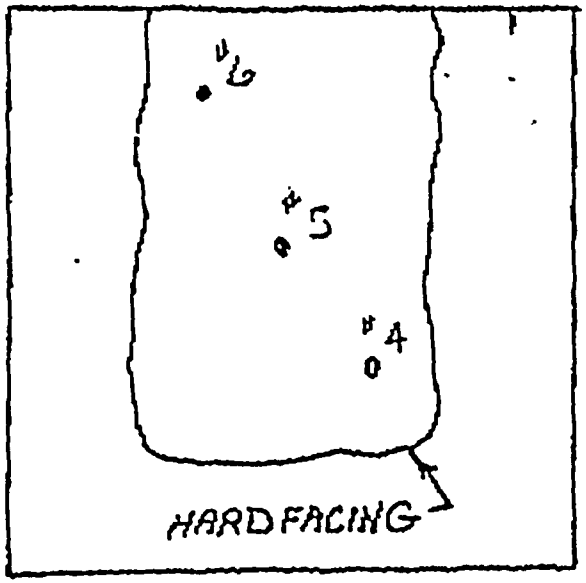

SAMPLE #2

END VIEW

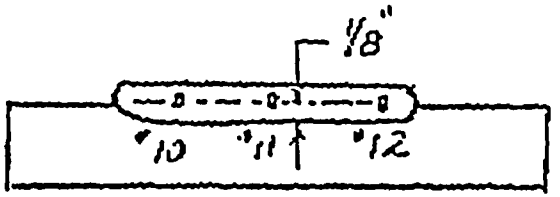

TOP VIEW

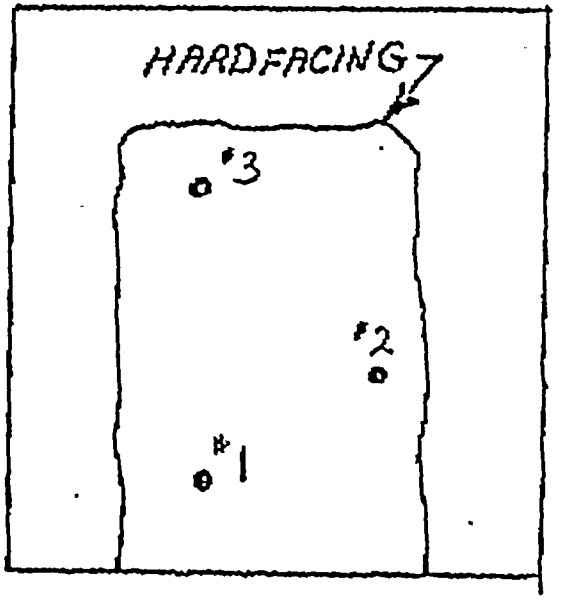

READING NUMBER	SIZE	BRINELL	ROCKWELL C
1	3.60	286	29
2	3.70	269	27
3	3.70	269	27
4	3.60	286	29
5	3.65	277	28
6	3.60	286	29
7	4.0	228	21
8	3.90	241	23
9	4.0	228	21
10	3.80	255	25
11	3.75	262	26
12	3.80	255	25

NOTE: TESTING DONE ON KING TESTER BRINELL 3000 Kg
INSPECTION DUE DATE 4/2/77

JOB 729

WELD MATERIAL

440
506
507
660
735
740
752

CHEMETRON CORPORATION
WELDING PRODUCTS DIVISION

CERTIFICATE OF ANALYSIS

P.O.1-121-001-75

Customer Order No. 548

Order No. 114776

Shipped

P. F. Avery Corp
Combusion Eng Inc
Old Dover Road
Newington, N.H. 03801

This material conforms to Specification ASME SFA5.4 SEC II PART C & SEC 5

Type E 308-16

Test No. 923

Trade Name or Trademark: Arcaloy 308 AC DC

Diameter Size: 3/32"
1,650 lb.

Lot Number: 1E607K1BC
Heat Number: 35801C

Concentricity 4%
Type Steel A-285

Carbon	.06
Manganese	1.92
Chromium	20.38
Nickel	9.50
Silicon	.62
Columbium + Tantalum	.02
Molybdenum	.26
Tungsten	
Copper	.16
Titanium	.01
Phosphorus	.037
Sulphur	.016
Vanadium	.08
Ferrite	9% Schaeffler Diagram

Test No.	Full	Split	Volts	Amps
Tensile	1	5	22	75

Test Results: AS Welded

Tensile 96,100
Elongation 46.0%

Fillets: OK Vertical-1 Overhead-1

APPROVED
JUN 23 1976
PFAC Q. A.

State of Penna.)
County of York) SS

Subscribed and sworn to before me this 18th day of June 1976

SEAL
Notary Public

My commission expires: 3-21-78

The undersigned certifies that this report is correct and that no significant change has been made in any of the elements described in the qualification approval.

CHEMETRON CORPORATION
WELDING PRODUCTS DIVISION

BY
L. J. Jacoby

PFAC CODE 440

ALLOY RODS DIVISION
CHEMETRON CORPORATION
WILSON AVENUE HANOVER, PA 17331 717/637-8911

RECEIVED
JAN 2 - 1983
CEI PURCHASING

January 18, 1983

Mr. George Coburn
Manager, Purchasing
P. F. Avery Division
Combustion Engineering
P.O. Box 630
Portsmouth, NH 03801

Re: P. F. Avery PO# I-121-001-75
Arcaloy 308 AC-DC
3/32" 308-16
Lot: 1E607K1BC Heat: 35801C Weight: 1,650 lbs.
Test No. 923

Dear Mr. Coburn:

Confirming our telephone conversation today, be advised that the above referenced material was manufactured at the Chemetron Hanover Facility, located at Wilson Avenue and Karen Lane, Hanover, PA 17331.

Please let us know when we can assist you again.

Very truly yours,

D. J. Jacoby
Manager, Quality Assurance

DJJ:del
cc: Mr. Peter Anderson
Combustion Engineering, Inc.

Quality Assurance File

POWER SYSTEMS
Combustion Engineering, Inc.
C-E Wire
4224 Shackleford Road
Norcross, Georgia 30093

MANUFACTURERS OF HIGH QUALITY NICKEL ALLOY, STAINLESS STEEL AND LOW ALLOY WIRE FOR WELDING, FORMING AND OTHER APPLICATIONS. CERTIFIED TO ASTM, ASME, AWS, SECTION II AND SECTION III NUCLEAR SPECIFICATIONS.

SHIP TO: C.E. Avery
Old Dover Road
Newington, New Hampshire 03801

DATE SHIPPED: 4-28-77
Revised Copy 3-26-82
MARKED:

CERTIFICATE OF QUALITY CONFORMANCE TESTS

CUSTOMER PURCHASE ORDER NO. 1401-0249-11 SHOP ORDER NO.: 2315

SPECIFICATIONS: This material was manufactured to a Quality Systems Program meeting the requirement of Section III, and SFA 5.9 Section II, Part C. of the ASME Code.

ITEM	HEAT NUMBER	SIZE	TYPE	POUNDS SHIPPED	
1	73771	.094"Dia.	ER308L SS Wire	2,050#	42 Coils shipped (2 skids) Coil# 1 through 42
2					
3					
4					

CHEMICAL ANALYSIS

ITEM	C	Mn	Si	S	P	Cr	Ni	Cu	Al	Mo	N_2	Co.			
1	.01	1.76	.35	.002	.014	20.56	9.70	.10		.10	.043	.09			
2															
3															
4															

ITEM	TENSILE STRENGTH	YIELD STRENGTH	ELONGATION	ADDITIONAL TESTS
1	Welding Temper			Ferrite- 14 FN
2				
3				
4				

APPROVED
MAR 30 1982
C.E.A.Q.A.
AA 5/5/77

JOB-PART
CODE 606
RR. NO. 84637

WE HEREBY CERTIFY THAT MATERIAL REFERRED TO ABOVE CONFORMS TO THE PHYSICAL AND CHEMICAL TESTS AND IS IN ACCORDANCE WITH SPECIFICATIONS.

Notary Public, Georgia, State at Large
My Commission Expires Aug. 15, 1982

Sue Kelley
NOTARY

Combustion Engineering, Inc.

Lucy Cox
AUTHORIZED OFFICIAL

POWER SYSTEMS
Combustion Engineering, Inc.
C-E Wire
4224 Shackleford Road
Norcross, Georgia 30071

MANUFACTURERS OF TECHNICALLY CONTROLLED WIRE
STAINLESS STEEL, NICKEL, MONEL, INCONEL, INCONEL X
LOW ALLOY STEELS, WELDING ALLOYS, LOW, MEDIUM, HIGH

CUSTOMER'S ORDER NO.	SHOP ORDER NO.	DATE SHIPPED	SPECIFICATION
1401-0249-11	2306	4-30-77	.062" Dia. Type: ER308 Weld Wire CE Spec. SFA 5.9 MARKED:

SHIPPED TO
CE Avery
Old Dover Road
Newington, New Hampshire

ITEM CONSISTING OF 1,030#
41 Spools(1 skid)
Spools 1 thru 41

GENTLEMEN: WE HEREBY CERTIFY THAT MATERIAL REFERRED TO ABOVE CONFORMS TO THE PHYSICAL AND CHEMICAL TESTS AS FOLLOWS AND IS IN ACCORDANCE WITH SPECIFICATIONS:-

HEAT	C.	Mn.	Si.	S.	P.	Cr.	Ni.	Cu.	Mg.	Fe.	Al.	Ti.	Cb. + Ta.	Mo.	Va. XXXX
02033	.07	1.76	.46	.007	.024	19.88	9.58	.16				.06	.03	.35	.01

ITEM	TENSILE STRENGTH	YIELD STRENGTH	ELON.	GRAIN SIZE	ROCKWELL	SHEAR
	Welding Temper			HSB ANI		

APPROVED
JUN 06 1977
P.F.A.C.Q.A.

YOU REQUESTED THIS IMPORTANT INFORMATION. MP 7/20/82

Very Truly Yours,
COMBUSTION ENGINEERING, INC.

Lucy Cox
AUTHORIZED OFFICIAL

Sue Leeley
NOTARY

Notary Public, Georgia, State at Large
My Commission Expires May 14, 1978

PLEASE GIVE TO YOUR PURCHASING AGENT.

HSB ANI

DELTA FERRITE: 7 FN

APPROVED
DEC 1 1981
WELD. ENG. RH Keyer

PFAC CODE 502

RR. NO. 8513

ALLOY RODS DIVISION
CHEMETRON CORPORATION
P.O. BOX 517 · HANOVER, PA 17331 717/637-8911

CERTIFICATE OF ANALYSIS

CERTIFIED MATERIALS TEST REPORT

P.O.# 1401-0249-92
Customer Order No. 002

Combustion Engineering
C-E Avery Div.
Old Dover Road
Newington, N.H. 03801

Order No. 173737-1

Shipped

This material conforms to Specification
ASME SFA 5.4 Sec.II Part C
& ASME Sec.III

Type E 308-16

Test No. 3290 Mix 1

Trade Name or Trademark: Arcaloy 308 AC DC

Diameter Size: 1/8"
4,730 lbs.

Lot Number: 1E916M07

Heat Number: 04967

Carbon	.06
Manganese	1.77
Chromium	20.24
Nickel	9.44
Silicon	.43
Columbium +	.02
Tantalum	.01
Molybdenum	.23
Tungsten	
Copper	.23
Titanium	.03
Phosphorus	.019
Sulphur	.017
Vanadium	.06
Cobalt	
Ferrite	8.0FN Magne Gage

Concentricity 4%
Type Steel A-285

Test No.	Full	Split	Volts	Amps
Tensiles	1	6	22	110

Test Results:	As Welded
Yield	------
Tensile	95,800
Elongation	39.0%
Red.of Area	------

Fillets: OK Vertical Overhead

PFAC CODE 969 AR MA 12363

APPROVED
JUN 04 1979
PFAC Q.A.

Quality Systems Certification No.: N-1224
Expiration Date: September 8,1981

State of Penna.)
County of York) SS

Subscribed and sworn to before me
this 30th day of May 1979

SEAL Notary Public

My commission expires: 11/22/82

The undersigned certifies that the contents of this report are correct and accurate and that all operations performed by the undersigned or sub contractors are in compliance with requirements of the material specification and ASME Boiler and Pressure Vessel Code Section III Division I Subsection NCA-3800

ALLOY RODS DIVISION
CHEMETRON CORPORATION

BY D. G. Flohr

GVT-120

POWER SYSTEMS

Combustion Engineering, Inc.
C-E Wire
4224 Shackleford Road
Norcross, Georgia 30093

MANUFACTURERS OF HIGH QUALITY NICKEL ALLOY, STAINLESS STEEL AND LOW ALLOY WIRE FOR WELDING, FORMING AND OTHER APPLICATIONS. CERTIFIED TO ASTM, ASME, AWS, SECTION II AND SECTION III NUCLEAR SPECIFICATIONS.

SHIP TO: C.E. Avery Corporation
Old Dover Road
Newington, New Hampshire 03810

DATE SHIPPED: 11-2-81
Corrected copy 11-9-81
MARKED:

CERTIFICATE OF QUALITY CONFORMANCE TESTS

CUSTOMER PURCHASE ORDER NO. 99-0000-3154 SHOP ORDER NO.: 5985

SPECIFICATIONS: SFA 5.9 MSR-014 Rev. 00 , ASME Section III, 1980 Edition through the Summer 1981 Ad
This material was manufactured to a Quality Program meeting the requirements of the 1980 ASME Cod through 1981 Summer Addenda, and Section III NCA-3800.

ITEM	HEAT NUMBER	SIZE	TYPE	POUNDS SHIPPED	
1	1442-57	.045"Dia.	308L SS Wire	5,507#	232 Spools shipped ~~8~~ (9 skids) Spool# 1 through 232
2					
3					
4					

CHEMICAL ANALYSIS

* Less Than

ITEM	C	Mn	Si	S	P	Cr	Ni	Cu	Al	Mo	N_2	Va.	Co.	Cb+Ta.	Ti.
1	.02	1.73	.44	.016	.019	19.86	9.75	.07		.15	.048	.06	.09	*.01	*.01
2															
3															
4															

APPROVED
NOV 13 1981
L Plante
CEA Q. A.

ITEM	TENSILE STRENGTH	YIELD STRENGTH	ELONGATION	ADDITIONAL TESTS
1	Welding Temper			Ferrite 10 FN
2				
3				
4				

JOB-PART
CEA CODE 1985
PR. NO. 19947

WE HEREBY CERTIFY THAT MATERIAL REFERRED TO ABOVE CONFORMS TO THE PHYSICAL AND CHEMICAL TESTS AND IS IN ACCORDANCE WITH SPECIFICATIONS.

Notary Public, Georgia, State at Large
My Commission Expires Aug. 15, 1982

Sue Keeley
NOTARY

Combustion Engineering, Inc.

Lucy Cox
AUTHORIZED OFFICIAL

WEAR TECHNOLOGY DIVISION
CABOT CORPORATION
1020 W. PARK AVE., KOKOMO, IND. 46901, (PH. 317-457-8411)
13808 E. IMPERIAL HIGHWAY, SANTA FE SPRINGS, CA 90670 (PH. 213-921-4455)

DATE: 11-30-81

CERTIFICATION NO: 1130-B

CUSTOMER NO: 99-0000-3159

S.O. NO: 82175

COMBUSTION ENGINEERING DIV.
C-E AVERY DIVISION
OLD DOVER RD.
NEWINGTON, NEW HAMPSHIRE 03801

ITEM	PRODUCT NAME	LOT	HEAT	F-MIX	C-MIX	WEIGHT
	5/32 STELLITE (HAYNES) alloy 25 cast coated electrodes to AMS 5797 (chemistry only)		1-2215		9000	560#

JOB-PART 5/32

CEA

CODE 740

RR. NO. 3006-8

*CHEMICAL ANALYSIS - WEIGHT PERCENT

ITEM	B	C	Co	Cr	Fe	Mn	Mo	NI	P	S	SI	W	OTHERS
		.06	Bal.	20.97	2.23	1.38	.19	10.23	.006	.003	.51	15.75	

*Analysis from all-weld deposit on 410SS made in compliance with procedure described in AWS A5.4. This rod was cast and coated per Quality System outlined in Quality Control Manual Rev. 9, dated 9/24/81. The electrodes are marked "HAYNES 25".

APPROVED
DEC 11 1981
CEA Q. A.

J.E. Redman
Manager, Quality Control

SANDVIK

MATERIAL CERTIFICATE

SANDVIK, INC. SCRANTON WORKS
P.O. BOX 1220, SCRANTON, PA. 18501 PH: 717 - 587-5191
PLANT LOCATION: INTERSTATE 81, WAVERLY EXIT 59

CUSTOMER PURCHASE ORDER NO.	SANDVIK ORDER NO.	ITEM	SPECIAL CODE	MARKS	CERTIFICATE DATE
1401-0249-153	251832	01	HEAT #467011	6610#	3/16/82

SOLD TO: WELDERS SUPPLY
BILLERICA MA

C E AVERY
NEWINGTON NH

SPECIFICATION AND MATERIAL:

ASME SECTION II: SFA5.4; ASME SECTION III: PARA. NX2400 1980 EDITION THRU WINTER 1980 ADD. MSR-011, REV 00

SANDVIK STAINLESS STEEL COATED ELECTRODE TYPE E 308L-16 5/32"

Actual Weld Deposit Analysis, %

Lot	C	Si	Mn	P	S	Cr
11104-1	.028	.48	1.47	.015	.003	20.67
	Ni	Mo	Cb	Ta	Ti	V
	9.76	.06	.02	.01	.02	.09
	Cu					
	.07					

APPROVED
APR 26 1982
CEA Q.A.

Delta Ferrite content as determined from above analysis per Fig. NB2433.1-1
WRC Ferrite No. 14FN
Corresponding ferrite percent 12%
Ferrite by Magna Gage 12FN

This is to certify that the contents of this certificate are correct and accurate, as contained in Sandvik's records, and that all above test results and operations performed are in compliance with the requirements of the purchase order and the applicable sections of the Code and specifications as designated by the purchase order.

ASME Quality System Certificate(materials) No. N-1400. Expiration Date: June 11, 1982.

For Benet H. Berg, Quality Assurance Manager

(W-C-SFA-1, REV. 5)kc

JOB-PART
CODE 153
RR. NO. 20216

HSB ANI

LP 9/9/82

SL 5030

CUSTOMER ORIGINAL

POWER SYSTEMS

COMBUSTION ENGINEERING, INC
C-E Avery Division
Post Office Box 630
Portsmouth, New Hampshire 03801

BEAR DOWN WHEN COMPLETING FORM

REQUEST FOR MATERIAL TRANSFER

BY P. BRYANT DATE 10/18/83 Nº 5989

MATERIAL TO BE USED ON

JOB NO.	PART NO.	QTY.	DESCRIPTION	IDENT. NO.	SPECIFICATION
729	14273-164-846	1	CEA SHROUD ASSY (MODIFIED)		

SPECIAL INSTRUCTIONS: ATTACHED DCR-9330905-88 For REFERANCE

MATERIAL TO BE TRANSFERRED FROM

JOB NO.	PART NO.	QTY.	DESCRIPTION	IDENT. NO.	SPECIFICATION
907	-002-1583	1	SAME		

P. O. NO. R. R. NO.

Material requires upgrading — Yes (No) (Circle One) If yes, must be upgraded prior to transfer.
Any existing RAR's, TCR's, and DCR's — ~~Yes~~ (No) (Circle One) If yes, must be approved for New Contract prior to transfer.

SPECIAL INSTRUCTIONS:

FINANCIAL IMPACT (YES) NO (CIRCLE ONE) IF YES, COMPLETE FIMT.

SIGNATURE AND DATE	APPROVED	DISAPPROVED	COMMENTS
QUALITY ASSURANCE [signature] 11-28-31	✓		
ENGINEERING PCB 10/31/83	✓		
ENGINEERING PCB 10/31/83	✓		
GENERAL SERVICES [signature] 11-28-83	✓		
CONSULTING ACTIVITY [signature] 11/28/83	✓		

QUALITY ASSURANCE

FORM 178 REV. 6-7

WELDING PROCEDURE QUALIFICATION RECORD

AVERY

Date 11-9-72 Procedure Qualification No. SMA-8.8-1G-1

Sheet 1 of 2

Material Spec. and Grade SA 240, Type 304 L To SA 240, Type 304 L

For Welding P-No. 8 To P-No. 8

Welding Process Shielded Metal Arc

☒ Manual ☐ Semi-Auto. ☐ Auto.

Thickness (& Dia. if Pipe) 4.500

Thickness Range Test Qualifies 3/16 - 9 in.

Filler Metal Group No. F- 5

Weld Metal Analysis No. A- 7

Spec. or Analysis SFA-5.4 Class E308L-15

Filler Wire – Diameter 5/32

Trade Name

Shielding Gas(es) & Composition None

Trade Name N/A Flow Rate N/A

Type Weld Joint Double "U" - Butt

Position Test Weld Flat (1G)

Single or Multiple Pass Multiple

Single or Multiple Arc Single

No. of Layers (If Clad) N/A

Flux Trade Name or Composition N/A

Backing Requirements None

Joint Dimensions and Welding Techniques in Accord With Procedure Sketch, Sh. 2

Preheat Temp. Range 65° F Min.

Max. Interpass Temp. 350° F

Heat Input (Kj/In.) 37

Post Heat Treatment None

Other

DEPOSIT ANALYSIS

C .025 % M_N 1.48 % P .010 % S .009 % S_i .53 % W

C_R 19.13 % N_i 11.35 % M_o C_o N_2 V C_b

% Ferrite in Austenitic Weld Deposit T_a Other

GUIDED BEND TESTS			CHARPY V-NOTCH IMPACT TESTS				
TYPE AND FIGURE NO.	RESULT	MACRO	LOCATION	TEMP	FT/LBS	MILS LAT EXP	% SHEAR FRACTURE
Side 1-2-3	All 3 Satisfactory						
Side 1-2-3	All 3 Satisfactory						
Side 1-2-3	All 3 Satisfactory						
Side 1-2-3	All 3 Satisfactory						

REDUCED SECTION TENSILE TEST

SPECIMEN NO.	DIMENSIONS WIDTH	DIMENSIONS THICKNESS	AREA	ULTIMATE TOTAL LOAD, LB.	ULTIMATE UNIT STRESS, PSI	CHARACTER OF FAILURE AND LOCATION
1	.501Dia		.197		79,000	Base Metal
2	.503Dia		.200		82,000	Base Metal
3	.504Dia		.200		81,000	Base Metal
4	.502Dia		.198		81,000	Base Metal

Welder's Name C. Yelverton Symbol No. 4

Who by virtue of these tests meets welder performance requirements.

Test Conducted By J. G. Sylvester Assoc., Inc. Laboratory-Test No. 2-20-68

Per J. G. Sylvester

We certify that the statements in this record are correct and that the test welds were prepared, welded and tested in accordance with the requirements of Section III and IX of the ASME Code

P.F. AVERY CORPORATION

A Subsidiary of Combustion Engineering, Inc.

By R. H. Kenyon

WELDING PROCEDURE QUALIFICATION RECORD

AVERY

DATE 11-9-72 PROCEDURE QUALIFICATION NO. SMA - 8.8 - 1G - 1

SHEET 2 OF

WELDING MATERIALS

Specification:
S.M.A. SFA-5.4 G.T.A.
S.A. G.M.A.

Electrode:
[X] Consumable [ ] Non-Consumable

Consumable Insert:
Type - Size -

Flux:
Type - Mesh -
Shielding Gas(es)
& Composition -

Backup Gas -

Nonfusing Metal Retainer:
[ ] Yes [X] No
Type

Backing Strip:
[ ] Yes [X] No
Material Spec. & Grade
[ ] Integral [ ] Continuous
Back Coping (Gouging) [X] Yes [ ] No

JOINT CONFIGURATION

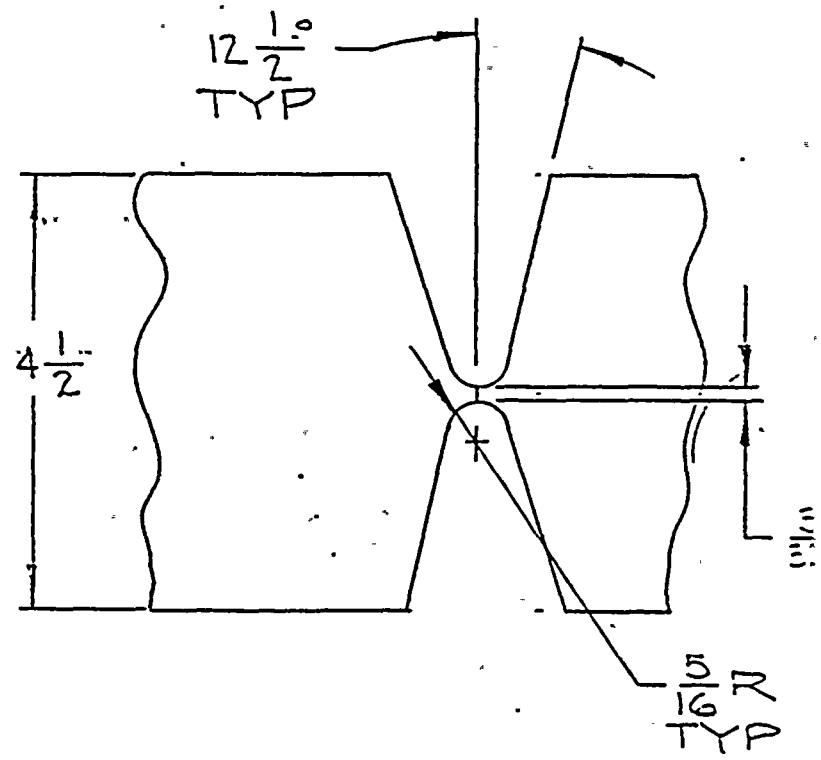

Additional Requirements:

PROCESS PARAMETERS

Welding Process	SMA		
Position	Flat		
Pass. No.	All		
Electrode Polarity	D.C.R.P.		
Torch Gas (CFH)	-		
Backup Gas (CFH)	-		
Trailing Shield (CFH)	-		
Cup Size	-		
Electrode Ext.	-		
Tungsten Type (GTA)	-		
Oscillation	-		
Dwell Time (Sec.)	-		

WELDING PARAMETERS

Pass No.	Max. Electrode Size & Type	Current (AMPS)	Voltage (Volts)	Travel In./Min
GTA	Tungsten Dia: Filler Wire:			
SMA All	5/32(E308L-15)	120-145	23-26	6-8
GMA		Wire Feed Speed		
SA				

WELDING PROCEDURE QUALIFICATION RECORD

AVERY

Date 11-9-72 Procedure Qualification No. SMA-8.8-2G-1

Sheet 1 of 2

Material Spec. and Grade SA 240, Type 304 To SA 240, Type 304

For Welding P-No. 8 To P-No. 8

Welding Process Shielded Metal Arc

☒ Manual ☐ Semi-Auto. ☐ Auto.

Thickness (& Dia. if Pipe) 1.0 in.

Thickness Range Test Qualifies 3/16 - 2.0 in.

Filler Metal Group No. F- 5

Weld Metal Analysis No. A- 7

Spec. or Analysis SFA-5.4 Class E308-15

Filler Wire – Diameter 1/8 and 5/32

Trade Name

Shielding Gas(es) & Composition None

Trade Name N/A Flow Rate N/A

Type Weld Joint Double "V" - Butt

Position Test Weld Horizontal (2G)

Single or Multiple Pass Multiple

Single or Multiple Arc Single

No. of Layers (If Clad) N/A

Flux Trade Name or Composition N/A

Backing Requirements None

Joint Dimensions and Welding Techniques in Accord With Procedure Sketch, Sh. 2

Preheat Temp. Range 65° F Min.

Max. Interpass Temp. 350° F

Heat Input (Kj/In.) 36

Post Heat Treatment None

Other

DEPOSIT ANALYSIS

C ____ M_N ____ P ____ S ____ S_i ____ W ____

C_R ____ N_i ____ M_o ____ C_o ____ N_2 ____ V ____ C_b ____

____ % Ferrite in Austenitic Weld Deposit T_a ____ Other ____

GUIDED BEND TESTS			CHARPY V-NOTCH IMPACT TESTS				
TYPE AND FIGURE NO.	RESULT	MACRO	LOCATION	TEMP	FT/LBS	MILS LAT EXP	% SHEAR FRACTURE
Side Bend	Satisfactory						
Side Bend	Satisfactory						
Side Bend	Satisfactory						
Side Bend	Satisfactory						

REDUCED SECTION TENSILE TEST

SPECIMEN NO.	DIMENSIONS		AREA	ULTIMATE TOTAL LOAD, LB.	ULTIMATE UNIT STRESS, PSI	CHARACTER OF FAILURE AND LOCATION
	WIDTH	THICKNESS				
1	.505Dia		.200	17,500	87,500	Base Metal
2	.505Dia		.200	17,800	87,000	Base Metal

Welder's Name V. Comperchio Symbol No. 22

Who by virtue of these tests meets welder performance requirements.

Test Conducted By J. G. Sylvester Assoc., Inc. Laboratory-Test No. 9-5-68

Per J. G. Sylvester

We certify that the statements in this record are correct and that the test welds were prepared, welded and tested in accordance with the requirements of Section IX of the ASME Code

P.F. AVERY CORPORATION

A Subsidiary of Combustion Engineering, Inc.

By R. H. Kaufer

P.F.A.C. 199

WELDING PROCEDURE QUALIFICATION RECORD

AVERY

DATE 11-9-72 PROCEDURE QUALIFICATION NO. SMA - 8.8 - 2G - 1

SHEET 2 OF

WELDING MATERIALS

Specification:
S.M.A. SFA-5.4 G.T.A. -
S.A. - G.M.A. -

Electrode:
[X] Consumable [ ] Non-Consumable

Consumable Insert:
Type - Size -

Flux:
Type - Mesh -
Shielding Gas(es) & Composition -

Backup Gas -

Nonfusing Metal Retainer:
[ ] Yes [X] No
Type

Backing Strip:
[ ] Yes [X] No
Material Spec. & Grade
[ ] Integral [ ] Continuous
Back Coping (Gouging) [X] Yes [ ] No

JOINT CONFIGURATION

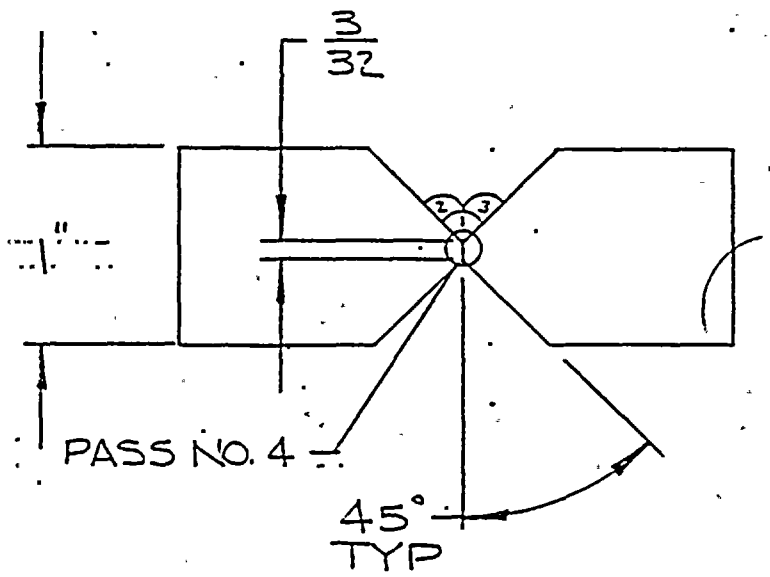

Additional Requirements:

PROCESS PARAMETERS

Welding Process	SMA		
Position	Horiz.		
Pass. No.	All		
Electrode Polarity	D.C.R.P.		
Torch Gas (CFH)	-		
Backup Gas (CFH)	-		
Trailing Shield (CFH)	-		
Cup Size	-		
Electrode Ext.	-		
Tungsten Type (GTA)	-		
Oscillation	-		
Dwell Time (Sec.)	-		

WELDING PARAMETERS

Pass No.	Max. Electrode Size & Type	Current (AMPS)	Voltage (Volts)	Travel In./Min
GTA	Tungsten Dia: Filler Wire:			
SMA 1-7 Bal.	 1/8(E308-15) 5/32(E308-15)	 85-105 120-140	 23-26 23-26	 6-8 6-8
GMA		Wire Feed Speed		
SA				

WELDING PROCEDURE QUALIFICATION RECORD

AVERY

Date 11-13-72 Procedure Qualification No. GMA-8.8-1G-3

Sheet 1 of 2

Material Spec. and Grade SA 240, Type 304 To SA 240, Type 304

For Welding P-No. 8 To P-No. 8

Welding Process Gas Metal Arc

☐ Manual ☐ Semi-Auto. ☒ Auto.

Thickness (& Dia. if Pipe) 11/32 in.

Thickness Range Test Qualifies XX 1/16 - 11/16 in.

Filler Metal Group No. F- 7

Weld Metal Analysis No. A- 7

Spec. or Analysis SFA-5.9

Class ER 308

Filler Wire — Diameter 1/16

Trade Name

Shielding Gas(es) & Composition Argon plus 1% oxygen

Trade Name Flow Rate 40 C.F.H.

Type Weld Joint Single "V" - Butt

Position Test Weld Flat

Single or Multiple Pass Multiple

Single or Multiple Arc Single

No. of Layers (If Clad) N/A

Flux Trade Name or Composition N/A

Backing Requirements Gas Purge

Joint Dimensions and Welding Techniques in Accord With Procedure Sketch

Preheat Temp. Range 65° F Min.

Max. Interpass Temp. 350° F

Heat Input (Kj/In.) 15

Post Heat Treatment None

Other

DEPOSIT ANALYSIS

C ____ M_N ____ P ____ S ____ S_i ____ W ____

C_R ____ N_i ____ M_o ____ C_o ____ N_2 ____ V ____ C_b ____

____ % Ferrite in Austenitic Weld Deposit T_a ____ Other ____

GUIDED BEND TESTS			CHARPY V-NOTCH IMPACT TESTS				
TYPE AND FIGURE NO.	RESULT	MACRO	LOCATION	TEMP	FT/LBS	MILS LAT EXP	% SHEAR FRACTURE
Face	Satisfactory						
Face	Satisfactory						
Root	Satisfactory						
Root	Satisfactory						

REDUCED SECTION TENSILE TEST

SPECIMEN NO.	DIMENSIONS		AREA	ULTIMATE TOTAL LOAD, LB.	ULTIMATE UNIT STRESS, PSI	CHARACTER OF FAILURE AND LOCATION
	WIDTH	THICKNESS				
1	1.500	.321	.481	42,560	88,400	Base Metal
2	1.500	.272	.408	35,940	88,100	Base Metal

Welder's Name C. Yelverton Symbol No. 4

Who by virtue of these tests meets welder performance requirements.

Test Conducted By J. G. Sylvester Assoc., Inc. Laboratory-Test No. 3-5-70

Per J. G. Sylvester

We certify that the statements in this record are correct and that the test welds were prepared, welded and tested in accordance with the requirements of Section IX of the ASME Code

P.F. AVERY CORPORATION

A Subsidiary of Combustion Engineering, Inc.

By R. H. Kayer

P.F.A.C. 199

WELDING PROCEDURE QUALIFICATION RECORD

AVERY

DATE 11-13-72 PROCEDURE QUALIFICATION NO. GMA-8.8-IG-3

SHEET 2 OF

WELDING MATERIALS

Specification:
S.M.A. - G.T.A. -
S.A. - G.M.A. SFA-5.9

Electrode:
[X] Consumable [ ] Non-Consumable

Consumable Insert:
Type - Size -

Flux:
Type - Mesh -

Shielding Gas(es) & Composition Argon plus 1% oxygen

Backup Gas 99.9 % pure Argon

Nonfusing Metal Retainer:
[ ] Yes [X] No
Type

Backing Strip:
[ ] Yes [X] No
Material Spec. & Grade
[ ] Integral [ ] Continuous
Back Coping (Gouging) [ ] Yes [X] No

JOINT CONFIGURATION

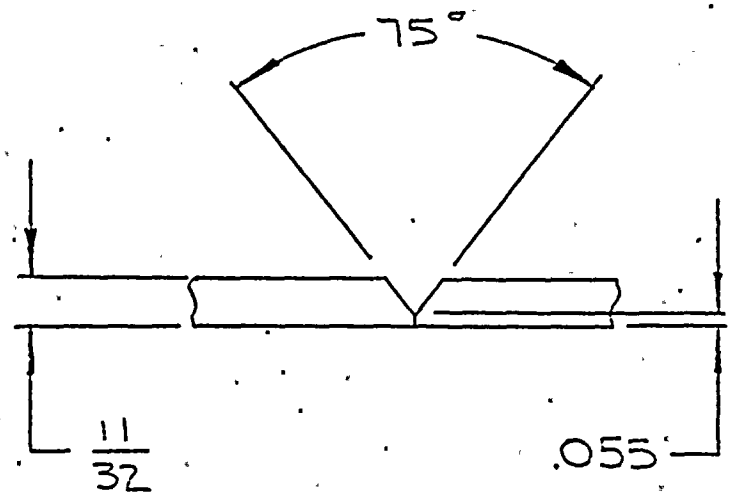

Additional Requirements:

PROCESS PARAMETERS

Welding Process	GMA		
Position	Flat		
Pass. No.	All		
Electrode Polarity	DCRP		
Torch Gas (CFH)	40		
Backup Gas (CFH)	A/R		
Trailing Shield (CFH)	-		
Cup Size	3/4		
Electrode Ext.	½-3/4		
Tungsten Type (GTA)	-		
Oscillation	-		
Dwell Time (Sec.)	-		

WELDING PARAMETERS

Pass No.	Max. Electrode Size & Type	Current (AMPS)	Voltage (Volts)	Travel In./Min
GTA	Tungsten Dia: Filler Wire:			
SMA				
GMA		Wire Feed Speed		
All	1/16 (ER308)	240-260	30-32	32-35
SA				

WELDING PROCEDURE QUALIFICATION RECORD

AVERY

Date 11-13-72 Procedure Qualification No. GTA-8.8-2G-3

Sheet 1 of 2

Material Spec. and Grade SA-240, Type 304 To SA-240, Type 304

For Welding P-No. 8 To P-No. 8

Welding Process Gas Tungsten Arc

☒ Manual ☐ Semi-Auto. ☐ Auto.

Thickness (& Dia. if Pipe) .250 in.

Thickness Range Test Qualifies 1/16 - .500 in.

Filler Metal Group No. F- 7

Weld Metal Analysis No. A- 7

Spec. or Analysis SFA-5.9

Class ER308

Filler Wire – Diameter 3/32

Trade Name

Shielding Gas(es) & Composition 99.9% Pure Argon

Trade Name Flow Rate 15-20 C.F.H.

Type Weld Joint Single "V" - Butt

Position Test Weld Horizontal

Single or Multiple Pass Multiple

Single or Multiple Arc Single

No. of Layers (If Clad) N/A

Flux Trade Name or Composition N/A

Backing Requirements Gas Purge

Joint Dimensions and Welding Techniques in Accord With Procedure Sketch

Preheat Temp. Range 65° F Min.

Max. Interpass Temp. 350° F

Heat Input (Kj/In.) 41

Post Heat Treatment None

Other

DEPOSIT ANALYSIS

C ____ M_N ____ P ____ S ____ S_i ____ W ____

C_R ____ N_i ____ M_o ____ C_o ____ N_2 ____ V ____ C_b ____

____ % Ferrite in Austenitic Weld Deposit T_a ____ Other ____

GUIDED BEND TESTS			CHARPY V-NOTCH IMPACT TESTS				
TYPE AND FIGURE NO.	RESULT	MACRO	LOCATION	TEMP	FT/LBS	MILS LAT EXP	% SHEAR FRACTURE
Face	Satisfactory						
Face	Satisfactory						
Root	Satisfactory						
Root	Satisfactory						

REDUCED SECTION TENSILE TEST

SPECIMEN NO.	DIMENSIONS		AREA	ULTIMATE TOTAL LOAD, LB.	ULTIMATE UNIT STRESS, PSI	CHARACTER OF FAILURE AND LOCATION
	WIDTH	THICKNESS				
1	1.500	.240			82,400	Base Metal
2	1.500	.240			82,300	Base Metal

Welder's Name D. DeRaps Symbol No. 93

Who by virtue of these tests meets welder performance requirements.

Test Conducted By J. G. Sylvester Assoc., Inc. Laboratory-Test No. 11-12-70

Per J. G. Sylvester

We certify that the statements in this record are correct and that the test welds were prepared, welded and tested in accordance with the requirements of Section IX of the ASME Code

P.F. AVERY CORPORATION

A Subsidiary of Combustion Engineering, Inc.

By R. H. Kayer

P.F.A.C. 199

WELDING PROCEDURE QUALIFICATION RECORD

AVERY

DATE 11/13/72 PROCEDURE QUALIFICATION NO. GTA-8.8-2G-3

SHEET 2 OF

WELDING MATERIALS

Specification:
S.M.A. - G.T.A. SFA-5.9
S.A. - G.M.A. -

Electrode:
☐ Consumable ☒ Non-Consumable

Consumable Insert:
Type - Size -

Flux:
Type - Mesh -

Shielding Gas(es) & Composition 99.9% Pure Argon

Backup Gas 99.9% Pure Argon

Nonfusing Metal Retainer:
☐ Yes ☒ No
Type

Backing Strip:
☐ Yes ☒ No
Material Spec. & Grade
☐ Integral ☐ Continuous
Back Coping (Gouging) ☐ Yes ☒ No

JOINT CONFIGURATION

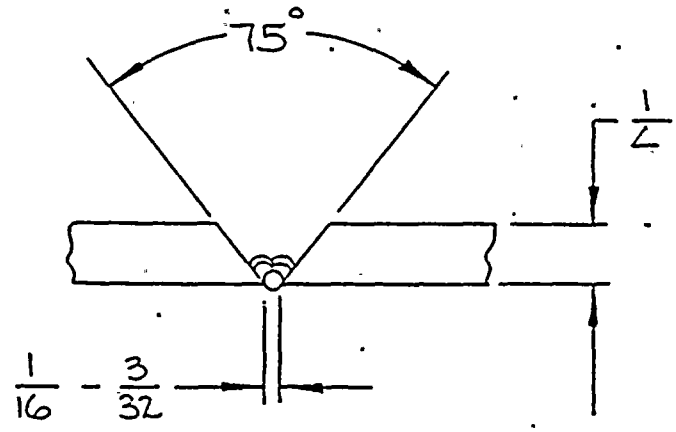

Additional Requirements:

PROCESS PARAMETERS

Welding Process	GTA		
Position	Horiz.		
Pass. No.	All		
Electrode Polarity	DCSP		
Torch Gas (CFH)	15-20		
Backup Gas (CFH)	10-15		
Trailing Shield (CFH)	-		
Cup Size	3/8		
Electrode Ext.	1/8-3/16		
Tungsten Type (GTA)	2% Thoria		
Oscillation	-		
Dwell Time (Sec.)	-		

WELDING PARAMETERS

Pass No.	Max. Electrode Size & Type	Current (AMPS)	Voltage (Volts)	Travel In./Min.
GTA All	Tungsten Dia: 3/32 Filler Wire: 3/32(ER308)	90-115	10-12	2-4
SMA				
GMA		Wire Feed Speed		
SA				

WELDING PROCEDURE QUALIFICATION RECORD

AVERY

Date 11-13-72 Procedure Qualification No. GTA-8.8-2G-4

Sheet 1 of 2

Material Spec. and Grade SA 240, Type 304 To SA 240, Type 304

For Welding P-No. 8 To P-No. 8

Welding Process Gas Tungsten Arc

☒ Manual ☐ Semi-Auto. ☐ Auto.

Thickness (& Dia. if Pipe) 1/2 in.

Thickness Range Test Qualifies 3/16 - 1.0 in.

Filler Metal Group No. F- 7

Weld Metal Analysis No. A- 7

Spec. or Analysis SFA-5.9

Class ER308

Filler Wire – Diameter 3/32

Trade Name

Shielding Gas(es) & Composition 99.9% Pure Argon

Trade Name Flow Rate 10-15 C.F.H.

Type Weld Joint Single "V" - Butt

Position Test Weld Horizontal

Single or Multiple Pass Multiple

Single or Multiple Arc Single

No. of Layers (If Clad) N/A

Flux Trade Name or Composition N/A

Backing Requirements Gas Purge

Joint Dimensions and Welding Techniques in Accord With Procedure Sketch

Preheat Temp. Range 65° F Min.

Max. Interpass Temp. 350° F

Heat Input (Kj/In.) 41

Post Heat Treatment None

Other

DEPOSIT ANALYSIS

C ____ M_N ____ P ____ S ____ S_i ____ W ____

C_R ____ N_i ____ M_o ____ C_o ____ N_2 ____ V ____ C_b ____

____ % Ferrite in Austenitic Weld Deposit T_a ____ Other ____

GUIDED BEND TESTS			CHARPY V-NOTCH IMPACT TESTS				
TYPE AND FIGURE NO.	RESULT	MACRO	LOCATION	TEMP	FT/LBS	MILS LAT EXP	% SHEAR FRACTURE
Side	Satisfactory						
Side	Satisfactory						
Side	Satisfactory						
Side	Satisfactory						

REDUCED SECTION-TENSILE TEST

SPECIMEN NO.	DIMENSIONS WIDTH	DIMENSIONS THICKNESS	AREA	ULTIMATE TOTAL LOAD, LB.	ULTIMATE UNIT STRESS, PSI	CHARACTER OF FAILURE AND LOCATION
1	.505Dia		.200	16,480	82,400	Base Metal
2	.505Dia		.200	16,800	84,000	Base Metal

Welder's Name P. Kapsimalis Symbol No. 97

Who by virtue of these tests meets welder performance requirements.

Test Conducted By J. G. Sylvester Assoc., Inc. Laboratory-Test No. 4-8-71

Per J. G. Sylvester

We certify that the statements in this record are correct and that the test welds were prepared, welded and tested in accordance with the requirements of Section IX of the ASME Code

P.F. AVERY CORPORATION

A Subsidiary of Combustion Engineering, Inc.

By R. H. Kaya

P.F.A.C. 199

WELDING PROCEDURE QUALIFICATION RECORD

AVERY

DATE 11/13/72 PROCEDURE QUALIFICATION NO. GTA-8.8-2G-4

SHEET 2 OF 4

WELDING MATERIALS

Specification:
S.M.A. - G.T.A. SFA-5.9
S.A. - G.M.A. -

Electrode:
☐ Consumable ☒ Non-Consumable

Consumable Insert:
Type - Size -

Flux:
Type - Mesh -

Shielding Gas(es) & Composition 99.9% Pure Argon

Backup Gas 99.9% Pure Argon

Nonfusing Metal Retainer:
☐ Yes ☒ No
Type

Backing Strip:
☐ Yes ☒ No
Material Spec. & Grade
☐ Integral ☐ Continuous
Back Coping (Gouging) ☐ Yes ☒ No

JOINT CONFIGURATION

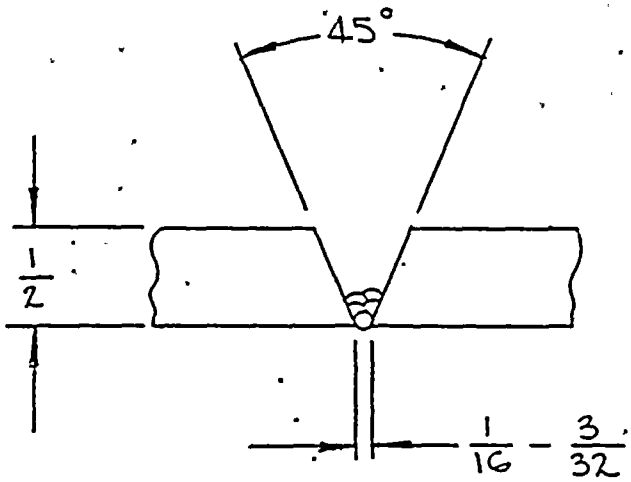

Additional Requirements:

PROCESS PARAMETERS

Welding Process	GTA		
Position	Horiz.		
Pass. No.	All		
Electrode Polarity	DCSP		
Torch Gas (CFH)	15-20		
Backup Gas (CFH)	10-15		
Trailing Shield (CFH)	-		
Cup Size	3/8		
Electrode Ext.	1/8-3/16		
Tungsten Type (GTA)	2% Thoria		
Oscillation	-		
Dwell Time (Sec.)	-		

WELDING PARAMETERS

Pass No.	Max. Electrode Size & Type	Current (AMPS)	Voltage (Volts)	Travel In./Min
GTA All	Tungsten Dia: 3/32 Filler Wire: 3/32 (ER308)	90-115	10-12	2-4
SMA				
GMA		Wire Feed Speed		
SA				

BILL OF MATERIAL NOTES

5. Chemistry modifications:

   5.1 0.065% maximum carbon.
   5.2 0.20% maximum cobalt.
   5.3 Product analysis.

6. Special tests:

   6.2 Ultrasonic examination.
   6.3 ASTM-A262, Practice E.
   6.4 Fluid penetrant examination.
   6.5 Magnetic particle examination
   6.6 Radiographic examination.
   6.7 Delete the eddy current test.
   6.8 Only the hardness test is required.
   6.9 Customer review of radiographs.
   6.10 Etch test per the supplementary requirements of the material specification.
   6.11 Delete the hydrostatic test requirements.
   6.12 ASTM-A262, Practice B.
   6.13 Axial and tangential tensile tests (minimum of 2 sets per heat).

7. Condition:

   7.1 Fully hardened.
   7.2 Annealed.
   7.3 Annealed 30 minutes minimum prior to quench.
   7.4 Annealed 1900°-2000°F for 1 hour per inch maximum section thickness, 1 hour minimum and water quench.
   7.5 Hot finished, annealed and pickled.
   7.6 Cold finished and annealed.
   7.7 Annealed and pickled.
   7.9 Water quenched.
   7.11 Normalized.
   7.13 Quenched and tempered.

8. Tubing and Pipe:

   8.1 Seamless or welded.
   8.2 Seamless.

9. The ID must be clean and shall have a finish of 32 RMS or better. End caps are required.

11. Chrome plate per QQ-C-320 , Class 2B.

13. Hardface per Appendix 4 of SYS80-RCE-0400.

14. Manufacturing procedures per SPS-B-186 or equivalent. Head to shank fillet cold worked. Threads rolled per MIL-S-8879 after age hardening. Concentricity and straightness per ASA-B-18.3.

15. Hardface per Appendix 4 of SYS80-RCE-0400 followed by heat treatment at 1950°F for 2 hours and an air cool at a minimum rate of 50°F per minute.

16. Random or circumferential flow lines.

21. AISI type 403 modified.

    21.1 Code Case N-4 applies except the minimum tempering temperature shall be 1150°F.
    21.2 Charpy V-notch tests shall average 30 ft-lbs. minimum with no more than one individual specimen at 25 ft-lbs. minimum.
    21.3 Mechanical test coupons shall be at 120° intervals.

28. 4 directional ultrasonic testing with 100% volumetric coverage.

29. The reference specimen for the ultrasonic test shall contain transverse as well as longitudinal notches.

30. Either solution treatment is acceptable prior to precipitation hardening.

31. 5-30% delta ferrite by volume.

32. Code Case N-124 applies.

33. Impact testing is required.

34. Heat treat at 1805 to 1855°F for 1 hour per inch section thickness, 1 hour minimum, air cool or oil quench and temper at least twice at 1050 to 1100°F for 1 hour per inch section thickness, 4 hours minimum 12 hours maximum.

38. Code Case N-71 applies.

39. Type 1 solution treatment prior to precipitation hardening.

40. Material properties: Hardness: Rockwell "C" 28 maximum. Charpy V-Notch impact properties at 40°F: 20 mils minimum lateral expansion. Absorbed energy and percent shear fracture shall be reported for information.

BILL OF MATERIAL

JOB TITLE MODIFIED UCS ASSY

BILL OF MAT'L NO. 729-0000

PAGE 1 OF 2

PREP. MLP 11-3-83

CHKD. RJG 11-14-83

REV.	00						
DATE	12/2/83						
MFG. ENG.	PCB						
MAT'L ENG.	TSA						

RECORD OF REVISIONS

Q. C.

JOB # 729

DATE RELEASED

DEC 2 1983

C-E Avery Form #313

BILL OF MATERIAL LISTING

JOB TITLE: MODIFIED UGS ASSY

BILL OF MAT'L NO. 729-0000

ITEM NO	BILL OF MAT'L NO.	TITLE	ITEM NO	BILL OF MAT'L NO.	TITLE
1	729-1000	MODIFIED UGS ASSY LOOSE PARTS			
2	729-1588	MODIFIED CEA SHROUD ASSY			
3	729-3601	PRE-CRITICAL INSTR. INSTAL.-UGS-(PERMANENT-CEA)			
4	729-3602	COVER ASSY			

NOTES:

C-E Avery Form #319

BILL OF MATERIAL

JOB TITLE MODIFIED UGS ASSY-LOOSE PARTS

BILL OF MAT'L NO: 729-1000

PAGE 1 OF 2

PREP. MLF 11-8-83

CHKD. RJG 11-14-83

REV.	00						
DATE	12-2-83						
MFG. ENG.	PCB						
MAT'L ENG.	PGA						

RECORD OF REVISIONS

Q. C.

JOB # 729

DATE RELEASED

DEC 2 1983

C-E Avery Form #313

REF ASSY NO. N/A

BILL OF MATERIAL

JOB TITLE MODIFIED UGS ASSY LOOSE PARTS

The Quantity listed for each line item is based on the quantity required for one unit.

BILL OF MAT'L NO. 729-1000

NUMBER OF UNITS PER JOB N/A

PAGE 2 OF 2

ITEM NO	DWG. NO. AVERY P/N	CUSTOMER P/N	PART NAME	QTY	DESCRIPTION	MATERIAL	REF.
1	N/A	E-14273-164 -848-3	FLANGE BLOCK	4	4 x 5 5/16 x 24	ASTM A240 T304 NOTES 5, 6.2, 6.3, 6.4 & 7.5 OR 7.6	14-636404-2334 Y
2	N/A	E-14273-164 -849-11	SOC HEAD CAP SCREW	16	1/2-13UNC-2A x 1 3/4 LG	ASTM A193 GR. B8M NOTES 5.1, 5.2 & 11	70-E407- MT 6008
3	N/A	E-14273-164 -849-6	SOC. HD. CAP SCREW	8	2-12UN-2A x 4 LG	ASTM A193 GR. B6 NOTES 6.2 & 40	17-J5057 RR23660 S 17-J5058 RR23660 S
4	N/A	E-14273-164 -848-4	GEAR FAN	8	2 DIA x 4 LG	ASME SA 638 GR. 660 NOTES 6.2 6.4 & 39	24-HH287- MT5999
5	N/A	E-14273-164 -848-6	SHIM	8	1 5/8 x 3 x 5 5/16	ASTM A240 TYPE XM-29 NOTES 5, 6.2, 6.3 & 6.4	28-61239-1B- RR23543 12
6	N/A	E-14273-164 -848-5	PLUG	8	1 3/4 x 2 1/2 DIA	ASTM A479 TYPE 304 NOTES 5, 6.3, 7.5 OR 7.6	A/R-CE67- MT6007
7	N/A	E-14273-164 -849-12	PIN	16	1/4 DIA x 1 3/8 LG	ASTM A479 300 SERIES S.S. NOTES 5 & 6.3	N/R-85399-2314 Y
8	N/A	E-14273-164 -849-13	PIN	8	1/4 DIA x 2 3/8 LG	ASTM A479 300 SERIES S.S. NOTES 5 & 6.3	A/R-85399-235

C-E Avery Form #271

BILL OF MATERIAL

JOB TITLE CEA Shroud Assy

ASME B & PV Code, Section III, Subsection NG, 1974 Edition

BILL OF MAT'L NO. 907-1583

PAGE 1 OF 2

PREP. DWD 2-2-82

CHKD. MLP 2-2-82

REV.	00						
DATE	2/4/82						
MFG. ENG.	DWG						
MAT'L ENG.	MLP						

RECORD OF REVISIONS

Q. C.

JOB # 907

DATE RELEASED

FEB 16 1982

C-E Avery Form #313

REF ASSY NO. E-STD-164-828-1

BILL OF MATERIAL

JOB TITLE CEA Shroud Assy

The Quantity listed for each line item is based on the quantity required for one unit.

BILL OF MAT'L NO. 907-1583

NUMBER OF UNITS PER JOB 1

PAGE 2 OF 2

ITEM NO	DWG. NO. AVERY P/N	CUSTOMER P/N	PART NAME	QTY	DESCRIPTION	MATERIAL	REF.
1	E-STD-002-1583	E-STD-164-828-1	CEA Shroud Assy	X	-------	-------	
2	B/M 907-1575	N/A	Tube & Web Assy	4	See Details	See Details	
3	B/M 907-1576	N/A	Tube & Web Assy	23	See Details	See Details	
4	B/M 907-1577	N/A	Tube & Web Assy	8	See Details	See Details	
5	B/M 907-1578	N/A	Tube & Web Assy	12	See Details	See Details	
6	B/M 907-1579	N/A	Tube & Web Assy	2	See Details	See Details	
7	B/M 907-1580	N/A	Tube & Web Assy	2	See Details	See Details	
8	B/M 907-1581	N/A	Tube & Web Assy	2	See Details	See Details	
9	B/M 907-1582	N/A	Tube & Web Assy	8	See Details	See Details	
10	C-907-1510 P/N 907-1510	E-STD-164-828-7	Shroud Corner Web	4	1/4 STK x 4 5/8 x 16 7/8 x 160 (formed)	ASME SA240 T304 Notes 5,6.3&7.5(IS)	5-G207-13508 1-22-218-01159 43
11	C-STD-002-1517 P/N 907-1517	E-STD-164-828-8	Shroud Corner Web	4	1/4 STK x 4 5/8 x 16 7/8 x 160 (formed)	ASME SA240 T304 Notes 5,6.3&7.5(IS)	3-G212 2-G213 13508 43
12	B-907 1511 P/N 907-1511	E-STD-164-828-10	Top Plate	8	9 3/8 DIA x 2	ASME SA240 T304 Notes 5,6.2,6.3 &7.5 (IS)	8-G15-12155 6

C-E Avery Form #271

BILL OF MATERIAL

JOB TITLE Tube & Web Assy

ASME B & PV Code, Section III, Subsection NG, 1974 Edition

BILL OF MAT'L NO. 907-1575

PAGE 1 OF 2

PREP. 1-28-82

CHKD. MLP 1-28-82

REV.	00						
DATE	JAN 28 1982						
MFG. ENG.	DMG						
MAT'L ENG.	PA						

RECORD OF REVISIONS

Q. C.

JOB # 907

DATE RELEASED

FEB 2 1982

C-E Avery Form #313

REF ASSY NO. N/A

BILL OF MATERIAL

JOB TITLE Tube & Web Assy

The Quantity listed for each line item is based on the quantity required for one unit.

BILL OF MAT'L NO. 907-1575

NUMBER OF UNITS PER JOB 4

PAGE 2 OF 2

ITEM NO	DWG. NO. AVERY P/N	CUSTOMER P/N	PART NAME	QTY	DESCRIPTION	MATERIAL	REF.
1	C-STD-002-1575	N/A	Tube & Web Assy	X	-------	-----	
2	C-STD-002-1508 P/N 907-1508	E-STD-164-828-2	CEA Shroud Tube Rej: BIM -1576, -1578, -1577 -1577	1	9 ID x 3/16 Wall x 160 LG	ASME SA240 T304 Notes 5,6.3&7.5 (IS)	* see below
3	B-907-1515 P/N 907-1515	E-STD-164-828-6	Shroud Web	1	1/4 x 7 x 157 1/4 LG	ASME SA240 T304 Notes 5,6.3&7.5 (IS)	S-G197-13447 43
4	B-907-1516 P/N 907-1516	E-STD-164-828-4	Shroud Web Rej: BIM -1578, -1582, -1577	1	3/16 x 7 x 157 1/4 LG	ASME SA240 T304 Notes 5,6.3&7.5 (IS)	13-G198, 36-G199, 1-G200 } 13447 43
						* 1-G202, 9-G203, 5-G204, 9-G205 } 13508	
						9-G206, 9-G207, 9-G208	

C-F Avery Form 5271

BILL OF MATERIAL

JOB TITLE Tube & Web Assy

ASME B & PV Code, Section III, Subsection NG, 1974 Edition

BILL OF MAT'L NO. 907 -1576

PAGE 1 OF 2

REV.	00						
DATE	JAN 28 1982						
MFG. ENG.	DMS						
MAT'L ENG.	RA						

PREP. DWD 1-28-82

CHKD. MLP 1-28-82

RECORD OF REVISIONS

Q. C.

JOB # 347

DATE RELEASED

FEB 2 1982

C-E Avery Form #313

REF ASSY NO. N/A

BILL OF MATERIAL

JOB TITLE Tube & Web Assy

The Quantity listed for each line item is based on the quantity required for one unit.

BILL OF MAT'L NO. 907-1576

NUMBER OF UNITS PER JOB 23

PAGE 2 OF 2

ITEM NO	DWG. NO. / AVERY P/N	CUSTOMER P/N	PART NAME	QTY	DESCRIPTION	MATERIAL	REF.
1	C-STD-002-1576	N/A	Tube & Web Assy	X	-------	------	
2	C-STD-002-1508 P/N 907-1508	E-STD-164-828-2	CEA Shroud Tube	1	9 ID x 3/16 Wall x 160 LG	ASME SA240 T304 Notes 5,6.3&7.5 (IS)	See B/M -1575
3	B-907-1509 P/N 907-1509	E-STD-164-828-3	Shroud Web. Ref. B/M-1571	2	3/16 x 7 x 160 LG	ASME SA240 T304 Notes 5,6.3&7.5 (IS)	15-G154 35-G155 13447 43

C-F Avery Form #271

BILL OF MATERIAL

JOB TITLE Tube & Web Assy

ASME B & PV Code, Section III, Subsection NG, 1974 Edition

BILL OF MAT'L NO. 907-1577

PAGE 1 OF 2

REV.	00						
DATE	JAN 28 1982						
MFG. ENG.	DMG						
MAT'L ENG.	RGA						

PREP. DWD 1-28-82

CHKD. MLP 1-28-82

RECORD OF REVISIONS

Q. C.

JOB # 842

DATE RELEASED

FEB 23 1982

C-E Avery Form #313

REF ASSY NO. N/A

BILL OF MATERIAL

JOB TITLE Tube & Web Assy

The Quantity listed for each line item is based on the quantity required for one unit.

BILL OF MAT'L NO. 907-1577

NUMBER OF UNITS PER JOB 8

PAGE 2 OF 2

ITEM NO	DWG. NO. AVERY P/N	CUSTOMER P/N	PART NAME	QTY	DESCRIPTION	MATERIAL	REF.
1	C-STD-002-1577	N/A	Tube & Web Assy	X	-------	------	
2	C-STD-002-1508 P/N 907-1508	E-STD-164-828-2	CEA Shroud Tube	1	9 ID x 3/16 Wall x 160 LG	ASME SA240 T304 Notes 5,6.3&7.5 (IS)	See B/M -1575
3	B-907 -1516 P/N 907 -1516	E-STD-164-828-4	Shroud Web	2	3/16 x 7 x 157 1/4 LG.	ASME SA240 T304 Notes 5,6.3&7.5 (IS)	See B/M -1515

C-F Avery Form #271

BILL OF MATERIAL

JOB TITLE Tube & Web Assy

ASME B & PV Code, Section III, Subsection NG, 1974 Edition

BILL OF MAT'L NO. 907-1578

PAGE 1 OF 2

REV.	00	01					
DATE	JAN 28 1982	12/8/83					
MFG. ENG.	DMG	PCB					
MAT'L ENG.	PA	PA					

PREP. DWF 1-28-82

CHKD. MLP 1-28-82

RECORD OF REVISIONS

Rev. 01 Page 2 Item 3: Qty was 2 (per DWR 892)

Q. C.

JOB # 907

DATE RELEASED

DEC 9 1983

C-E Avery Form #313

REF ASSY NO. N/A

BILL OF MATERIAL

JOB TITLE Tube & Web Assy

The Quantity listed for each line item is based on the quantity required for one unit.

BILL OF MAT'L NO. 907-1578

NUMBER OF UNITS PER JOB 12

PAGE 2 OF 2

ITEM NO	DWG. NO. AVERY P/N	CUSTOMER P/N	PART NAME	QTY	DESCRIPTION	MATERIAL	REF.
1	C-STD-002-1578	N/A	Tube & Web Assy	X	------	------	
2	C-STD-002-1508 P/N 907-1508	E-STD-164-828-2	CEA Shroud Tube	1	9 ID x 3/16 Wall x 160 LG	ASME SA240 T304 Notes 5,6.3,7.5 (IS)	SEE B/M -1575
3	B-907-1516 P/N 907-1516	E-STD-164-828-4	Shroud Web	1	3/16 x 7 x 157 1/4 LG	ASME SA240 T304 Notes 5,6.3,7.5 (IS)	SEE B/M -1575

C-F Avery Form #271

BILL OF MATERIAL

JOB TITLE Tube & Web Assy

ASME B & PV Code, Section III, Subsection NG, 1974 Edition

BILL OF MAT'L NO. 907-1579

PAGE 1 OF 2

PREP. DWD 2-2-82

CHKD. MLP 2-2-82

REV.	00						
DATE	2/9/82						
MFG. ENG.	DWG						
MAT'L ENG.	MA						

RECORD OF REVISIONS

Q. C.

JOB # 907

DATE RELEASED
FEB 16 1982

C-E Avery Form #313

REF ASSY NO. N/A

BILL OF MATERIAL

JOB TITLE Tube & Web Assy

The Quantity listed for each line item is based on the quantity required for one unit.

BILL OF MAT'L NO. 907-1579

NUMBER OF UNITS PER JOB 2

PAGE 2 OF 2

ITEM NO	DWG. NO. AVERY P/N	CUSTOMER P/N	PART NAME	QTY	DESCRIPTION	MATERIAL	REF.
1	C-STD-002-1579	N/A	Tube & Web Assy	X	-------	----	
2	C-STD-002-1508 P/N 907-1508	E-STD-164-828-2	CEA Shroud Tube	1	9 ID x 3/16 Wall x 160 LG	ASME SA240 T304 Notes 5,6.3&7.5 (IS)	See B/M -1575
3	B-907-1509 P/N 907-1509	E-STD-164-828-3	Shroud Web	1	3/16 x 7 x 160 LG	ASME SA240 T304 Notes 5,6.3&7.5 (IS)	See B/M -1576

C-F Avery Form #271

BILL OF MATERIAL

JOB TITLE Tube & Web Assy

ASME B & PV Code, Section III, Subsection NG, 1974 Edition

BILL OF MAT'L NO. 907-1580

PAGE 1 OF 2

REV.	00	01					
DATE	2/4/82	12/8/83					
MFG. ENG.	DHS	PCB					
MAT'L ENG.	RA	RA					

PREP. DHS 7-2-82

CHKD. MLP 7-2-82

RECORD OF REVISIONS

Rev. 01 Page 2 Item 3: Cust. P/N was E-STD-164-828-3 (per DWR 892)

Q. C.

JOB # 907

DATE RELEASED

DEC 9 1983

C-E Avery Form #313

REF ASSY NO. N/A

BILL OF MATERIAL

JOB TITLE Tube & Web Assy

The Quantity listed for each line item is based on the quantity required for one unit.

BILL OF MAT'L NO. 907-1580

NUMBER OF UNITS PER JOB 2

PAGE 2 OF 2

ITEM NO	DWG. NO. AVERY P/N	CUSTOMER P/N	PART NAME	QTY	DESCRIPTION	MATERIAL	REF.
1	C-STD-002-1580	N/A	Tube & Web Assy	X	-------	------	
2	C-STD-002-1518 P/N 907-1518	E-STD-164-828-2	CEA Shroud Tube	1	9 ID x 3/16 Wall x 160 LG	ASME SA240 T304 Notes 5,6.3&7.5 (IS)	2-G214-1359 1-22310-MT572 1-HH357-MT5776
3	B-907-1512 P/N 907-1512	E-STD-164-828-5	Shroud Web REF: B/M-1581	1	1/4 x 7 x 160 LG	ASME SA240 T304 Notes 5,6.3&7.5 (IS)	5-G196-13447 HT 6267-2C

C-E Avery Form #271

BILL OF MATERIAL

JOB TITLE Tube & Web Assy

ASME B & PV Code, Section III, Subsection NG, 1974 Edition

BILL OF MAT'L NO. 907 -1581

PAGE 1 OF 2

PREP. [illegible]

CHKD. [illegible]

REV.	00	01					
DATE	2/4/82	12/8/83					
MFG. ENG.	DRG	PGB					
MAT'L ENG.	[illegible]	[illegible]					

RECORD OF REVISIONS

Rev. 01 Page 2 Item 3: Cust. P/N was E-STD-164-828-3 (per DWR 892)

Q. C.

JOB # 707

DATE RELEASED

DEC 9 1985

C-E Avery Form #313

REF ASSY NO. N/A

BILL OF MATERIAL

JOB TITLE Tube & Web Assy.

The Quantity listed for each line item is based on the quantity required for one unit.

BILL OF MAT'L NO. 907 -1581

NUMBER OF UNITS PER JOB 2

PAGE 2 OF 2

ITEM NO	DWG. NO. AVERY P/N	CUSTOMER P/N	PART NAME	QTY	DESCRIPTION	MATERIAL	REF.
1	C-STD-002-1581	N/A	Tube & Web Assy	X	----------	-------	
2	C-STD-002-1519 P/N 907-1519	E-STD-164-828-2	CEA Shroud Tube	1	9 ID x 3/16 Wall x 160 LG	ASME SA240 T304 Notes 5,6.3&7.5 (IS)	2-6267-13551 43 1-22312 MT5727 1-1M 2521 MT571 1-1M 2521 MT571
3	B-907-1512 P/N 907-1512	E-STD-164-828-5	Shroud Web	1	1/4 x 7 x 160 LG	ASME SA240 T304 Notes 5,6.3&7.5 (IS)	See B/M -1580 MT*16267-2E MT*16267-2E

C-E Avery Form #271

BILL OF MATERIAL

JOB TITLE Tube & Web Assy

ASME B & PV Code, Section III, Subsection NG, 1974 Edition

BILL OF MAT'L NO. 907-1582

PAGE 1 OF 2

PREP. DWA 2-2-82

CHKD. MLP 2-2-82

REV.	00						
DATE	2/4/82						
MFG. ENG.	DKS						
MAT'L ENG.	RA						

RECORD OF REVISIONS

Q. C.

JOB # 907

DATE RELEASED

FEB 16 1982

C-E Avery Form #313

REF ASSY NO. N/A

BILL OF MATERIAL

JOB TITLE Tube & Web Assy

The Quantity listed for each line item is based on the quantity required for one unit.

BILL OF MAT'L NO. 907-1582

NUMBER OF UNITS PER JOB 8

PAGE 2 OF 2

ITEM NO	DWG. NO. / AVERY P/N	CUSTOMER P/N	PART NAME	QTY	DESCRIPTION	MATERIAL	REF.
1	C-STD-002-1582	N/A	Tube & Web Assy	X	------	----	
2	B/M 907-1528	N/A	CEA Shroud Tube Assy	1	See Details	See Details	
3	B-907-1516 P/N 907-1516	E-STD-164-828-4	Shroud Web	2	3/16 x 7 x 157 1/4	ASME SA240 T304 Notes 5,6.3&7.5 (IS)	See B/M -1575

C-F Avery Form #271

BILL OF MATERIAL

JOB TITLE CEA Shroud Tube Assy

ASME B & PV Code, Section III, Subsection NG, 1974 Edition

BILL OF MAT'L NO. 907-1528

PAGE 1 OF 2

REV.	00						
DATE	JAN 28 1982						
MFG. ENG.	DWG						
MAT'L ENG.	PA						

PREP. [illegible] 1-28-82

CHKD. MLP 1-28-82

RECORD OF REVISIONS

Q. C.

JOB # 917

DATE RELEASED

FEB 2 1982

C-E Avery Form #313

REF ASSY NO. N/A

BILL OF MATERIAL

JOB TITLE CEA Shroud Tube Assy

The Quantity listed for each line item is based on the quantity required for one unit.

BILL OF MAT'L NO. 907-1528

NUMBER OF UNITS PER JOB 8

PAGE 2 OF 2

ITEM NO	DWG. NO. AVERY P/N	CUSTOMER P/N	PART NAME	QTY	DESCRIPTION	MATERIAL	REF.
1	B-STD-002-1528	N/A	CEA Shroud Tube Assy	X	-----	-----	
2	B-907-1513 P/N 907-1513	E-STD-164-828-11	Bottom Plate	1	9 3/8 DIA x 3 3/16	ASME SA240 T304 Notes 5,6.2,6.3 & 7.5 (IS)	8-G13-12217 6
3	B-STD-002-1514 P/N 907-1514	E-STD-164-828-12	Tie Rod Tube	1	9 ID x 3/16 Wall x 158	ASME SA240 T304 Notes 5,6.3&7.5 (IS)	8-G210 2-G211 13 43

C-F Avery Form 8271

BILL OF MATERIAL

JOB TITLE PRE-CRITICAL INSTRUMENTATION INSTALLATION-UGS (PERMANENT-CEA)

BILL OF MAT'L NO. 729-3601

PAGE 1 OF 3

PREP. MLP 11-30-83

CHKD. RJG 12-1-83

REV.	00						
DATE	12/2/83						
MFG. ENG.	PCB						
MAT'L ENG.	PCA						

RECORD OF REVISIONS

Q. C.

JOB # 729

DATE RELEASED

DEC 2 1983

C-E Avery Form #313

REF ASSY NO. N/A

JOB TITLE PRE-CRITICAL INSTRUMENTATION INSTALLATION - LGS - (PERMANENT-CEA)

The Quantity listed for each line item is based on the quantity required for one unit.

BILL OF MAT'L NO. 729-3601

*** NUMBER OF UNITS PER JOB 1

ITEM NO	DWG. NO. AVERY P/N	CUSTOMER P/N	PART NAME	QTY	DESCRIPTION	MATERIAL	REF.
1	N/A	N/A	PRE-CRITICAL INSTRUMENTATION INSTALLED ON CEA SHROUD	X	— — —	— — —	
2	B/M 729-1583	E-14273-164-846-1	MODIFIED CEA SHROUD ASSY	1	SEE DETAILS	SEE DETAILS	
3	B/M 729-3602	E-14273-164-807-50	COVER ASSY	2	SEE DETAILS	SEE DETAILS	
4	N/A	-15	TUBING	A/R	.625 O.D X .065 WALL	ASME SA 213 OR SA 249 T304 NOTES 5, 6.3	N/R-585747-23582 2
5	N/A	-17	UNION - SOC. WELD (FOR 5/8 O.D. TUBE)	3	1 1/4 O.D X 1" LG	ASTM A479 T304 OR T304L OR NOTES 5, 6.3	CAJON 5/8 TUBE 304-10-TSW-6 ALT MATL 304L A/R-QQIY-MT6006
6	N/A	-26	MOUNTING PLATE (CURVE)	2	3/8 X 1" SQ	ASME SA 240 OR ASTM A240 T304 NOTES 5, 6.3	A/R-F30757-23354-3
7	N/A	-37	BAR	2	1/2 SQ X 1/4 LG	ASME SA479 OR ASTM A479 T304 NOTES 5, 6.3	A/R-QQIY-MT6006
8	N/A	-40	PLUG	1	2 DIA X 4 LONG	ASME SA479 OR ASTM A479 T304 NOTES 5, 6.3	A/R-CC67-MT6007
9	N/A	-41	NUT - RETAINER 1 1/4-12UNF-2A	1	1 1/4 O.D. X .360 THK	ASME SA479 OR ASTM A479 T304 NOTES 5, 6.3	A/R-QQIY-MT6006
10	N/A	-43	RING - 3/8-24UNF-2B	1	.750 O.D. X .200 THK	ASME SA479 OR ASTM A479 T304 NOTES 5, 6.3	↓
11	N/A	-44	PIN	1	1/16 DIA X 7/32 LG.	ASME SA479 OR ASTM A479 T304 NOTES 5, 6.3	↓
12	N/A	-48	TUBE	A/R	.875 O.D X .065 WALL	ASME SA213 OR SA249 T304 NOTES 5, 6.3	N/R-365363-23582 2

REF ASSY NO. N/A

BILL OF MATERIAL

JOB TITLE PRE-CRITAL INSTRUMENTATION INSTALLATION-UGS-(PERMANENT-CEA)

The Quantity listed for each line item is based on the quantity required for one unit.

BILL OF MAT'L NO. 727-3601

NUMBER OF UNITS PER JOB 1

PAGE 3 OF 3

ITEM NO	DWG. NO. AVERY P/N	CUSTOMER P/N	PART NAME	QTY	DESCRIPTION	MATERIAL	REF.
13	N/A	E-14273-164-807-53	COUPLING (5/8 TO 7/8 TUBE)	2	1 1/4 O.D x 1" LG	ASME SA479 OR ASTM A 479 T304 NOTES 5,6.3	A/R. QPIY.MD6006

C-E Avery Form #271

BILL OF MATERIAL NOTES

5. Chemistry modifications:

   5.1 0.065% maximum carbon.
   5.2 0.20% maximum cobalt.
   5.3 Product analysis.

6. Special tests:

   6.2 Ultrasonic examination.
   6.3 ASTM-A262, Practice E.
   6.4 Fluid penetrant examination.
   6.5 Magnetic particle examination
   6.6 Radiographic examination.
   6.7 Delete the eddy current test.
   6.8 Only the hardness test is required.
   6.9 Customer review of radiographs.
   6.10 Etch test per the supplementary requirements of the material specification.
   6.11 Delete the hydrostatic test requirements.
   6.12 ASTM-A262, Practice B.
   6.13 Axial and tangential tensile tests (minimum of 2 sets per heat).

7. Condition:

   7.1 Fully hardened.
   7.2 Annealed.
   7.3 Annealed 30 minutes minimum prior to quench.
   7.4 Annealed 1900°-2000°F for 1 hour per inch maximum section thickness, 1 hour minimum and water quench.
   7.5 Hot finished, annealed and pickled.
   7.6 Cold finished and annealed.
   7.7 Annealed and pickled.
   7.9 Water quenched.
   7.11 Normalized.
   7.13 Quenched and tempered.

8. Tubing and Pipe:

   8.1 Seamless or welded.
   8.2 Seamless.

9. The ID must be clean and shall have a finish of 32 RMS or better. End caps are required.

11. Chrome plate per QQ-C-320b, Class 2B.

13. Hardface per Appendix 4 of SYS80-RCE-0400.

14. Manufacturing procedures per SPS-B-186 or equivalent. Head to shank fillet cold worked. Threads rolled per MIL-S-8879 after age hardening. Concentricity and straightness per ASA-B-18.3.

15. Hardface per Appendix 4 of SYS80-RCE-0400 followed by heat treatment at 1950°F for 2 hours and an air cool at a minimum rate of 50°F per minute.

16. Random or circumferential flow lines.

21. AISI type 403 modified.

   21.1 Code Case N-4 applies except the minimum tempering temperature shall be 1150°F.
   21.2 Charpy V-notch tests shall average 30 ft-lbs. minimum with no more than one individual specimen at 25 ft-lbs. minimum.
   21.3 Mechanical test coupons shall be at 120° intervals.

28. 4 directional ultrasonic testing with 100% volumetric coverage.

29. The reference specimen for the ultrasonic test shall contain transverse as well as longitudinal notches.

30. Either solution treatment is acceptable prior to precipitation hardening.

31. 5-30% delta ferrite by volume.

32. Code Case N-124 applies.

33. Impact testing is required.

34. Heat treat at 1805 to 1855°F for 1 hour per inch section thickness, 1 hour minimum, air cool or oil quench and temper at least twice at 1050 to 1100°F for 1 hour per inch section thickness, 4 hours minimum 12 hours maximum.

38. Code Case N-71 applies.

39. Type 1 solution treatment prior to precipitation hardening.

40. Material properties: Hardness: Rockwell "C" 28 maximum. Charpy V-Notch impact properties at 40°F: 20 mils minimum lateral expansion. Absorbed energy and percent shear fracture shall be reported for information.