FIELD
PRE-SERVICE INSPECTION PROGRAM PLAN
for
ARIZONA NUCLEAR POWER PROJECT

Unit No. 1

DOCUMENT No. TR - ESS - 069
Revision No. 2

Original Issue Date: AUGUST 15, 1979
Revision Dates: FEBRUARY 1, 1980
OCTOBER 30, 1981

Originator: Mary Ann Gutton
Engineer

Approvals: Christopher C. Sipple
Supervisor, Inservice Inspection

Manager, Inservice Inspection

Prepared by:
INSERVICE INSPECTION
POWER SYSTEMS GROUP
COMBUSTION ENGINEERING, Inc.
Windsor, Connecticut

POWER SYSTEMS

ABSTRACT

The Preservice Examinations of the Class 1, Class 2, and Class 3 systems of the Arizona Nuclear Power Project, Palo Verde Units 1, 2 and 3 Nuclear Generating Station will be performed at the plant site during the interval between January 14, 1980 and (later). The examinations will be conducted in accordance with Section XI of the ASME Boiler and Pressure Vessel Code.

In the performance of this examination, Combustion Engineering and subcontractor will operate in the role of examiners, and Lumberman's Mutual Insurance Co., will serve as inspectors, as defined in IWA-2110 of Section XI. By this arrangement, Lumberman's Mutual Insurance Co., will review the applicable procedures, witness the examinations, review examiner qualifications and check for general code compliance, as specified in IWA-2120 of Section XI. The Authorized Nuclear Inspector will be continuously informed of the examination schedules so that he can witness any examination or operation which is required in the performance of his function as inspector.

The Field Preservice Examination Program is presented in two volumes:

Volume 1 - Field Program Plan Book

Volume 2 - Field Examination Procedures

This volume, Volume 1, contains the program defining the examinations which will be conducted as well as the techniques which are used to perform the specific examinations on the subject components.

Document No.: TR-ESS-069
Revision No.: 2

CERTIFICATE OF COMPLIANCE

PRESERVICE INSPECTION

OF

NUCLEAR POWER PLANT COMPONENTS

Date: _____

Owner: Arizona Public Service Company
SALT RIVER PROJECT
*1 Southern California Edison Company
El Paso Electric Company
Public Service Company of New Mexico

Plant: Palo Verde Nuclear Generating Station Unit 1

Commercial Service Date 5-01-83
Reactor Vessel Number 78173
(State)

Capacity 3817MWT 1307MWe
National Board No. Vessel - 22253
SG#1 - 22499
SG#2 - 22500 Head - 22253
Press.-22234
Mfg. By Combustion Engineering, Inc.

Approved _____

_____
(Title)

_____
Authorized Nuclear Inspector Concurrence

*1 Arizona Nuclear Power Project is Project Manager and Operating Agent.

PROGRAM SUMMARY

The program presented within details the examination requirements necessary to comply with the 1974 Edition of the ASME Boiler and Pressure Vessel Code, Section XI through the Summer of 1975 Addenda for the preservice examination of reactor power plant components. Section V, of this program, implements the requirements of Section XI on the Class 1, Class 2 and Class 3 systems and components of the Palo Verde Generating Station, Unit No. 1. Section VI of this program identifies areas where exclusions and exceptions to the 1974 Edition through Summer 1975 Addenda of the Code are employed.

INTRODUCTION

This document comprises Combustion Engineering's Field Preservice Examination Plan covering Palo Verde Unit 1. The requirements for this program are outlined in the ASME Boiler and Pressure Vessel Code, Section XI: "Rules for Inservice Inspection of Nuclear Power Plant Components" (1974 Edition through Summer 1975 Addenda, Appendix III of Winter 1975 Addenda for Class I and II BOP Piping).

The Shop Preservice Program covered most of the exam areas as required by ASME Section XI, for the NSSS components. This portion of the program is intended to cover those examination items of the NSSS components which, for various reasons, were not done in the Shop as well as providing for the examination of the "balance-of-plant" piping and components.

This document therefore contains zone drawings and corresponding program plan tables which describe all the remaining areas subject to Section XI examinations.

Subsections are provided which include definitions of the examination areas, exclusions and exceptions, quality control/quality assurance documents, report submission guidelines, descriptions of the various UT calibration standards, examination procedure philosophy, and a copy of Section XI of the ASME Boiler and Pressure Vessel Code including the applicable addenda.

The Preservice Examination Program is presented in two volumes:

Volume 1 — Program Plan Book

Volume 2 — Procedures

This volume, Volume 1, contains the program which describes the areas subject to Section XI examinations.

TABLE OF CONTENTS

TABLE OF CONTENTS
(continued)

PLAN AND SCHEDULE SHEETS

TABLE OF CONTENTS
(continued)

TABLE OF CONTENTS
(continued)

TABLE OF CONTENTS
(continued)

TABLE OF CONTENTS
(continued)

TABLE OF CONTENTS
(continued)

TABLE OF CONTENTS
(continued)

TABLE OF CONTENTS
(continued)

TABLE OF CONTENTS
(continued)

TABLE OF CONTENTS
(continued)

RECORD OF REVISIONS

REV.	DATE	PAGES INVOLVED	PURPOSE OF REVISION	REVISION APPROVED BY
0	8-15-79	All	Original Issue	R.W.Pritchard R.W. Pritchard F.J.Cannito
1	2-1-80	(see list of effective pages)	General Revisions: A. Incorporated Bechtel comments. (Package No. 17558 dated 11-2-79) B. Incorporated additional technical information (i.e. upgraded program plan sheets and zone drawings to latest spool piece drawings) C. Addition of available hanger information to zone drawings D. Edited zone titles for consistency throughout program plan E. Upgraded zone drawings and calibration block drawings per drawing revision descriptions F. Adjusted verbage to include Units 1, 2 and 3 G. Upgraded quality assurance section to latest QA document.	R.W.Pritchard R. W. Pritchard C.C.Szulc CCSzulc 2-25-80 E.R. D'Amaddio 2/25

RECORD OF REVISIONS

NO.	DATE	DESCRIPTION	REASON	ORIGINATOR	APPROVAL
1	2-01-80	(see list of effective pages)	H. Revised certificate of compliance to include information (i.e. component National Board numbers)		
2	10-30-81	Every page affected	Generally revise and incorporate Engineering Notices: PV: 71, 85, 89, 93, 94, 109, 111, 117, 118, 120, 121, 122, 126, 129, 131, 133, 139, 145, 146, 148, 150, 153, 156, 157, 160, 163, 164, 168, 169, 170, 171, 173, 174, 175, 176, 178, 179, 180	H. Jutton	G. Bloomquist C. Szulc E. Amaddio

LIST OF EFFECTIVE PAGES TR-ESS-069 2-1-80

e following pages are those that are in effect on date above. Superseded pages should removed and replaced by those that are in effect. Refer to the Revision Status Sheet r changes and notations. Missing pages may be obtained from:

Combustion Engineering Inc.
Nuclear Power Systems Division, Development Department
Manager, Field Inspection Services
1000 Prospect Hill Road
Windsor, Connecticut 06095

Section	Page No.	Rev. No.	Date
Abstract	i	1	2-1-80
Certificate of Compliance	ii	1	2-1-80
I. Introduction	I-1	1	2-1-80
II. Table of Content	II-1	1	2-1-80
	II-2	1	2-1-80
	II-3	1	2-1-80
	II-4	1	2-1-80
	II-5	1	2-1-80
	II-6	1	2-1-80
	II-7	1	2-1-80
	II-8	1	2-1-80
	II-9	1	2-1-80
	II-10	1	2-1-80
III. Revision Record	III-1.1	1	2-1-80
	III-1.2	1	2-1-80
	III-1.3	1	2-1-80
	III-1.4	1	2-1-80
	III-1.5	1	2-1-80
	III-2.1	1	2-1-80
	III-2.2	1	2-1-80
IV. Program Description	IV-1	1	2-1-80
	IV-2	1	2-1-80
V. Examination Area	V-1	1	2-1-80
	V-2	1	2-1-80
	V-3	1	2-1-80
V-1 Zone 1	V1.1	1	2-1-80
	V1.2	1	2-1-80
	V1.3	1	2-1-80
V-2 Zone 2	V2.1	1	2-1-80
V-3 Zone 3	V3.1	0	8-15-79
	V3.2	0	8-15-79
V-4 Zone 4	V4.1	0	8-15-79
	V4.2	0	8-15-79
V-5 Zone 5	V5.1	0	8-15-79
	V5.2	1	2-1-80
	V5.3	1	2-1-80
	V5.4	1	2-1-80
V-6 Zone 6	V6.1	1	2-1-80
	V6.2		2-1-80
V-7 Zone 7	V7.1	1	2-1-80
V-8 Zone 8	V8.1	1	2-1-80
V-9 Zone 9	V9.1	1	2-1-80
V-10 Zone 10	V10.1	1	2-1-80
V-11 Zone 11	V11.1	1	2-1-80
V-12 Zone 12	V12.1	1	2-1-80
V-13 Zone 13	V13.1	1	2-1-80
V-14 Zone 14	V14.1	1	2-1-80
V-15 Zone 15	V15.1	1	2-1-80
V-16 Zone 16	V16.1	1	2-1-80
	V16.2	1	2-1-80
V-17 Zone 17	V17.1	1	2-1-80
	V17.2	1	2-1-80
V-18 Zone 18	V18.1	1	2-1-80
	V18.2	1	2-1-80
V-19 Zone 19	V19.1	1	2-1-80
	V19.2	1	2-1-80
V-20 Zone 20	V20.1	1	2-1-80
	V20.2	1	2-1-80
V-21 Zone 21	V21.1	1	2-1-80
	V21.2	1	2-1-80
V-22 Zone 22	V22.1	1	2-1-80
	V22.2	1	2-1-80
	V22.3	1	2-1-80
V-23 Zone 23	V23.1	1	2-1-80
	V23.2	1	2-1-80
	V23.3	1	2-1-80
V-24 Zone 24	V24.1	1	2-1-80
	V24.2	1	2-1-80
	V24.3	1	2-1-80
V-25 Zone 25	V25.1	1	2-1-80
	V25.2	1	2-1-80
	V25.3	1	2-1-80
V-26 Zone 26	V26.1	1	2-1-80
	V26.2	1	2-1-80
	V26.3	1	2-1-80
V-27 Zone 27	V27.1	1	2-1-80
	V27.2	1	2-1-80
	V27.3	1	2-1-80
	V27.4	1	2-1-80
V-28 Zone 28	V28.1	1	2-1-80
	V28.2	1	2-1-80
	V28.3	1	2-1-80
	V28.4	1	2-1-80
V-29 Zone 29	V29.1	1	2-1-80
V-30 Zone 30	V30.1	1	2-1-80
V-31 Zone 31	V31.1	1	2-1-80
	V31.2	1	2-1-80
V-32 Zone 32	V32.1	1	2-1-80
V-33 Zone 33	V33.1	1	2-1-80
V-34 Zone 34	V34.1	1	2-1-80
V-35 Zone 35	V35.1	1	2-1-80
V-36 Zone 36	V36.1	1	2-1-80
	V36.2	1	2-1-80
	V36.3	1	2-1-80
	V36.4	1	2-1-80
	V36.5	1	2-1-80
	V36.6	1	2-1-80
V-37 Zone 37	V37.1	1	2-1-80
	V37.2	1	2-1-80
	V37.3	1	2-1-80
	V37.4	1	2-1-80
	V37.5	1	2-1-80
V-38 Zone 38	V38.1	1	2-1-80

LIST OF EFFECTIVE PAGES
(continued)

Section	Page No.	Rev. No.	Date
-39 Zone39	V39.1	1	2-1-80
	V39.2	1	2-1-80
	V39.3	1	2-1-80
-40 Zone40	V40.1	1	2-1-80
	V40.2	1	2-1-80
-41 Zone41	V41.1	1	2-1-80
	V41.2	1	2-1-80
	V41.3	1	2-1-80
-42 Zone42	V42.1	1	2-1-80
	V42.2	1	2-1-80
	V42.3	1	2-1-80
-43 Zone43	V43.1	1	2-1-80
	V43.2	1	2-1-80
	V43.3	1	2-1-80
-44 Zone44	V44.1	1	2-1-80
	V44.2	1	2-1-80
	V44.3	1	2-1-80
-45 Zone45	V45.1	1	2-1-80
	V45.2	1	2-1-80
	V45.3	1	2-1-80
-46 Zone46	V46.1	1	2-1-80
	V46.2	1	2-1-80
	V46.3	1	2-1-80
-47 Zone47	V47.1	1	2-1-80
	V47.2	1	2-1-80
	V47.3	1	2-1-80
-48 Zone48	V48.1	1	2-1-80
	V48.2	1	2-1-80
	V48.3	1	2-1-80
	V48.4	1	2-1-80
-49 Zone49	V49.1	1	2-1-80
	V49.2	1	2-1-80
	V49.3	1	2-1-80
	V49.4	1	2-1-80
-50 Zone50	V50.1	1	2-1-80
	V50.2	1	2-1-80
	V50.3	1	2-1-80
-51 Zone51	V51.1	1	2-1-80
	V51.2	1	2-1-80
	V51.3	1	2-1-80
	V51.4	1	2-1-80
-52 Zone52	V52.1	1	2-1-80
	V52.2	1	2-1-80
	V52.3	1	2-1-80
	V52.4	1	2-1-80
V-53Zone53	V53.1	1	2-1-80
	V53.2	1	2-1-80
	V53.3	1	2-1-80
V-54Zone54	V54.1	1	2-1-80
	V54.2	1	2-1-80
	V54.3	1	2-1-80
	V54.4	1	2-1-80
	V54.5	1	2-1-80
V-55Zone55	V55.1	1	2-1-80
	V55.2	1	2-1-80
	V55.3	1	2-1-80
	V55.4	1	2-1-80
	V55.5	1	2-1-80
V-56Zone56	V56.1	1	2-1-80
V-57Zone57	V57.1	1	2-1-80
V-58Zone58	V58.1	1	2-1-80
	V58.2	1	2-1-80
	V58.3	1	2-1-80
V-59Zone59	V59.1	1	2-1-80
	V59.2	1	2-1-80
	V59.3	1	2-1-80
V-60Zone60	V60.1	1	2-1-80
	V60.2	1	2-1-80
V-61Zone61	V61.1	1	2-1-80
	V61.2	1	2-1-80
V-62Zone62	V62.1	1	2-1-80
	V62.2	1	2-1-80
V-63Zone63	V63.1	1	2-1-80
	V63.2	1	2-1-80
	V63.3	1	2-1-80
V-64Zone64	V64.1	1	2-1-80
	V64.2	1	2-1-80
	V64.3	1	2-1-80
	V64.4	1	2-1-80
V-65Zone65	V65.1	1	2-1-80
	V65.2	1	2-1-80
	V65.3	1	2-1-80
	V65.4	1	2-1-80
V-66Zone66	V66.1	1	2-1-80
	V66.2	1	2-1-80
V-67Zone67	V67.1	1	2-1-80
	V67.2	1	2-1-80
V-68Zone68	V68.1	1	2-1-80
	V68.2	1	2-1-80
V-69Zone69	V69.1	1	2-1-80
V-70 Zone70	V70.1	1	2-1-80
	V70.2	1	2-1-80
	V70.3	1	2-1-80
	V70.4	1	2-1-80
	V70.5	1	2-1-80
	V70.6	1	2-1-80
	V70.7	1	2-1-80
	V70.8	1	2-1-80
	V70.9	1	2-1-80
	V70.10	1	2-1-80
	V70.11	1	2-1-80
	V70.12	1	2-1-80
V-71 Zone71	V71.1	1	2-1-80
	V71.2	1	2-1-80
	V71.3	1	2-1-80
	V71.4	1	2-1-80
	V71.5	1	2-1-80
	V71.6	1	2-1-80
	V71.7	1	2-1-80
	V71.8	1	2-1-80
	V71.9	1	2-1-80
	V71.10	1	2-1-80
	V71.11	1	2-1-80
	V71.12	1	2-1-80
	V71.13	1	2-1-80
	V71.14	1	2-1-80
V-72 Zone72	V72.1	1	2-1-80
	V72.2	1	2-1-80
	V72.3	1	2-1-80
	V72.4	1	2-1-80
	V72.5	1	2-1-80
	V72.6	1	2-1-80
V-73 Zone73	V73.1	1	2-1-80
	V73.2	1	2-1-80
	V73.3	1	2-1-80
	V73.4	1	2-1-80
	V73.5	1	2-1-80
	V73.6	1	2-1-80
	V73.7	1	2-1-80
V-74 Zone74	V74.1	1	2-1-80
	V74.2	1	2-1-80
	V74.3	1	2-1-80
	V74.4	1	2-1-80
	V74.5	1	2-1-80
	V74.6	1	2-1-80
	V74.7	1	2-1-80
	V74.8	1	2-1-80
	V74.9	1	2-1-80
	V74.10	1	2-1-80
	V74.11	1	2-1-80
	V74.12	1	2-1-80

LIST OF EFFECTIVE PAGES
(continued)

Section	Page No.	Rev. No.	Date
V-75 Zone75	V75.1	1	2-1-80
	V75.2	1	2-1-80
	V75.3	1	2-1-80
	V75.4	1	2-1-80
	V75.5	1	2-1-80
	V75.6	1	2-1-80
	V75.7	1	2-1-80
	V75.8	1	2-1-80
	V75.9	1	2-1-80
	V75.10	1	2-1-80
V-76 Zone76	V76.1	1	2-1-80
	V76.2	1	2-1-80
	V76.3	1	2-1-80
	V76.4	1	2-1-80
	V76.5	1	2-1-80
V-77 Zone77	V76.1	1	2-1-80
	V76.2	1	2-1-80
	V76.3	1	2-1-80
	V76.4	1	2-1-80
	V76.5	1	2-1-80
	V76.6	1	2-1-80
V-78 Zone78	V78.1	1	2-1-80
	V78.2	1	2-1-80
	V78.3	1	2-1-80
	V78.4	1	2-1-80
	V78.5	1	2-1-80
	V78.6	1	2-1-80
	V78.7	1	2-1-80
V-79 Zone79	V79.1	1	2-1-80
	V79.2	1	2-1-80
	V79.3	1	2-1-80
	V79.4	1	2-1-80
	V79.5	1	2-1-80
VI. Exclusions & Exceptions	VI-1	1	2-1-80
	VI-2	1	2-1-80
	VI-3	1	2-1-80
VII Quality Assurance	VII-1	1	2-1-80

Section	Page No.	Rev. No.	Date
VIII. Report Submissions	VIII-1	0	8-15-79
IX. UT Calibration Standards	IX-1	0	8-15-79
	IX-2	1	2-1-80
	IX-3	1	2-1-80
	IX-4	1	2-1-80
	IX-5	1	2-1-80
	IX-6	1	2-1-80
X. Remote Equipment	X-1	0	8-15-79
XI. Procedures	XI-1	1	2-1-80
	XI-2	0	8-15-79
	XI-3	0	8-15-79
	XI-4	0	8-15-79
	XI-5	0	8-15-79
XII. Evaluation Criteria	XII-1	1	2-1-80
Attach 1 Zone Dwgs Zone Designation	E-026	2	2-7-80
Class 1 Boundary	E-001	1	11-21-79
Class 1&2 Boundary	E-093	1	11-21-79
Class 2 Boundary	E-083	1	11-21-79
Class 2 Boundary	E-086	1	11-21-79
Class 2 Boundary	E-087 (1of2)	1	11-21-79
	E-087 (1of2)	1	11-21-79

Section	Page No.	Rev. No.	Date
Class 2 Boundary	E-092	1	11-27-79
Class 2 Boundary	E-166	1	2-22-80
Zone 1	E-002 (1of3)	2	2-22-80
	E-002 (2of3)	2	2-22-80
	E-002 (3of3)	2	2-22-80
Zone 2	E-001	1	12-15-77
Zone 3	E-013	1	12-15-77
Zone 4	E-014	1	12-15-77
Zone 5	E-016	3	8-1-79
Zone 6	C-008	1	12-15-77
Zone 7	C-009	1	12-15-77
Zone 8	C-003	2	11-3-78
Zone 9	C-012	1	12-15-77
Zone 10	C-005	2	11-3-78
Zone 11	C-011	1	12-15-77
Zone 12	C-006	2	11-3-78
Zone 13	C-010	1	12-15-77
Zone 14	C-004	2	11-3-78
Zone 15	C-007	1	12-15-77
Zone 16	E-022 (1of2)	3	2-8-80
	E-022 (2of2)	3	2-8-80

LIST OF EFFECTIVE PAGES
(continued)

Section	Page No.	Rev. No.	Date
Zone 17	E-023 (1of2)	3	2-8-80
	E-023 (2of2)	3	2-8-80
Zone 18	E-024 (1of2)	3	2-8-80
	E-024 (2of2)	3	2-8-80
Zone 19	E-025 (1of2)	3	2-8-80
	E-025 (2of2)	3	2-8-80
Zone 20	D-088	2	2-6-80
Zone 21	E-076	2	2-6-80
Zone 22	E-075	2	2-6-80
Zone 23	D-077	3	2-6-80
Zone 24	D-078	3	2-6-80
Zone 25	E-074	3	2-6-80
Zone 26	E-073	3	2-6-80
Zone 27	D-036	3	2-6-80
Zone 28	D-035	3	2-6-80
Zone 29	D-034	3	2-6-80
Zone 30	C-070	3	1-29-80
Zone 31	C-069	2	1-29-80
Zone 32	C-068	3	1-29-80
Zone 33	C-067	3	1-29-80
Zone 34	C-066	3	1-29-80
Zone 35	C-065	3	1-29-80
Zone 36	E-060	3	2-6-80
Zone 37	E-100	2	2-6-80
Zone 38	D-101	2	2-6-80
Zone 39	E-102	2	2-6-80
Zone 40	E-105	2	2-7-80
Zone 41	E-017	3	2-8-80
Zone 42	E-015	3	2-8-80
Zone 43	D-064	3	2-6-80
Zone 44	D-063	3	2-6-80
Zone 45	D-062	3	2-6-80
Zone 46	D-061	3	2-6-80
Zone 47	E-056	2	2-6-80
Zone 48	E-057	2	2-6-80
Zone 49	E-058	2	2-6-80
Zone 50	E-059	2	2-6-80
Zone 51	E-054	2	2-6-80
Zone 52	E-053	2	2-6-80
Zone 53	D-055	2	2-6-80
Zone 54	E-052	3	2-6-80
Zone 55	E-051	3	2-6-80
Zone 56	D-050	3	2-6-80
Zone 57	D-049	3	2-6-80
Zone 58	E-045	2	2-6-80
Zone 59	E-046	2	2-6-80
Zone 60	D-048	2	2-6-80
Zone 61	D-043	2	2-6-80
Zone 62	D-081	2	2-6-80
Zone 63	D-047	2	2-6-80
Zone 64	E-042	2	2-6-80
Zone 65	E-041	2	2-6-80
Zone 66	D-040	2	2-6-80
Zone 67	D-039	2	2-6-80
Zone 68	D-109	1	8-17-79
Zone 69	D-106	1	8-17-79
Zone 70	E-037	2	2-6-80
Zone 71	E-038	2	2-6-80
Zone 72	E-044	2	2-6-80
	D-090	3	2-6-80
Zone 73	E-084	2	2-6-80
	D-089	3	2-6-80
Zone 74	E-082	2	2-6-80
	D-108	2	2-6-80
Zone 75	E-085	2	2-6-80
	D-107	2	2-6-80
Zone 76	E-080	2	2-6-80
Zone 77	E-079	2	2-6-80
Zone 78	E-094	2	2-6-80
Zone 79	D-071	2	2-6-80
Attach 2	158-1718	0	9-13-79
	158-1719	0	9-13-79
UT Calibration Standard Drawings	158-1720	1	11-7-79
	196-001	6	10-10-78
	196-002	4	2-7-78
	196-003	3	9-30-77
	296-001	2	2-14-80
	296-002	4	6-27-78
	296-003	3	6-27-78
	696-001	4	2-1-79
	696-002	3	2-1-79
	796-001	3	6-9-78
	796-002	4	4-26-78
	796-003	1	1-16-78
	E-002	1	8-14-79
	E-003	2	11-29-79
	E-004	3	11-7-79
	E-005	1	8-14-79
	E-006	1	8-14-79
	E-007	2	11-29-79
	E-008	2	11-29-79
	E-009	2	11-7-79
	E-010	2	11-29-79
	E-011	1	8-14-79
	E-012	2	11-29-79
	E-013	3	1-29-80
	E-014	2	11-29-79
	E-015	2	11-29-79
	E-016	3	1-29-80
	E-017	2	11-29-79
	E-018	2	11-29-79
	E-019	2	11-29-79

LIST OF EFFECTIVE PAGES
(continued)

Section	Page No.	Rev. No.	Date
	E-020	2	11-29-79
	E-021	2	11-29-79
	E-022	1	8-14-79
	E-024	3	11-29-79
	E-025	1	8-14-79
	E-026	1	8-14-79
	E-027	2	1-29-80
	E-028	2	1-29-80
	E-029	2	11-29-79
	E-030	3	11-29-79
	E-031	3	11-29-79
	E-032	3	1-23-80
	E-033	2	11-29-79
	E-095	1	8-14-79
	E-096	2	11-29-79
	D-098	1	(LATER)
	D-099	1	(LATER)
	E-103	1	(LATER)
	D-104	1	(LATER)

PROGRAM DESCRIPTION

This program has been prepared for the preservice examination of the major components of the Arizona Nuclear Power Project, Palo Verde Units 1, 2 and 3 Nuclear Generating Station. All examinations will be performed after field erection of the component in question. The program plan sheets in Section V list the examinations to be performed.

The program has been divided into smaller areas of interest called zones. Each zone is depicted on a drawing which locates all the welds and other examination areas for that component. The applicable plan and schedule sheets accompany each zone drawing and provide all the information necessary for qualified examiners to perform the various required examinations. This includes the program drawing number, procedure to be used in performing the examination, method of examination, and a brief summary of the examination requirements as defined by the ASME Boiler and Pressure Vessel Code, Section XI, Rules for Inservice Inspection of Nuclear Power Plant Components.

Each weld or other area of interest has been given a unique designation number. For most examination areas the number consists of three parts: (1) a two-digit number which identifies the plant; (2) a three-digit number which identifies a specific component and is identical with the zone number for the component; (3) a sequence number which identifies the area individually. The numbering system is more than fully described in Section V of this volume. A description of the program for each component follows:

Reactor Pressure Vessel

The longitudinal seam welds, the upper shell to middle shell circumferential weld, the middle shell to lower shell circumferential weld, the shell side of the flange to shell weld, the nozzle to shell welds, the nozzle to inner radii, the lower shell to bottom head circumferential weld, and the bottom head welds were examined from the inside (ID) surface, using remote equipment described in Section X of this volume. The flange to upper shell circumferential weld was examined with remote equipment described in Section X of this volume from the upper flange surface.

The examinations listed above were performed at the Chattanooga facility and are documented in Volume 1 of the Shop Preservice Inspection Program. The reactor vessel nozzle to extension piece weld and the closure studs and nuts will be examined manually. Reactor vessel internals, snubber lugs will be examined visually using television equipment mounted on the same remote equipment used to perform the ultrasonic examinations of the vessel shell welds.

Reactor Pressure Vessel Closure Head

Ultrasonic examinations will be performed manually on the ID for CEDM nozzle housing and extension welds.

Steam Generators

All of the volumetric (UT) examinations on the primary head, secondary shell and nozzle attachment welds were performed at the fabrication shop. Additional shop examinations already performed include visual examinations on primary head clad patches, visual and surface examinations on secondary manway bolting and surface examinations on the key and snubber lugs. Examinations which are included in this program for performance in the field include volumetric (UT) examinations on the stay cylinder welds and nozzle extension piece welds. Visual examinations on the primary head manway bolting and visual examinations for leakage during hydrostatic test on various nozzle penetrations, handholes and manways.

The inservice examinations of the stay cylinder welds will be done with remote equipment since the cylinders are installed in high radiation areas with difficult access. Consequently, the preservice examination must use the same equipment.

Pressurizer

All shell, support skirt and nozzle volumetric examinations and the visual examination on the cladding patch were performed at the fabrication shop. Examinations which are included in this program for performance in the field are the visual examinations on the manway bolting and visual examinations for leakage during system hydrostatic test on various nozzle and heater penetrations.

Reactor Coolant Pumps

Ultrasonic examinations will be performed manually on the nozzle to extension piece welds. Examinations which are included in this program for performance in the field are the visual examinations on the pump supports and visual examinations for leakage during system hydrostatic test on instrument nozzles.

The reactor coolant pump flywheels are required to be examined by Regulatory Guide 1.14. This requires a 100 percent volumetric examination and a surface examination for defects in areas of high stress concentration.

Primary Piping

The areas to be examined include all extension piece welds as well as all nozzle safe-end welds.

Class I and Class II Piping

Examination of Class I and Class II piping, including valves and fittings will be performed as defined by Section XI, ASME Boiler and Pressure Vessel Code, and NRC SRP 6.6.

EXAMINATION AREA DESIGNATION CODE
Field Program Plan
Palo Verde Units 1, 2 and 3

Identification of the inspection areas becomes important to implement record keeping and to permit rapid location of the inspection areas. To achieve this, all welds and other inspection areas have been assigned a unique numerical identification. For most examination areas the number consists of three parts: (1) a two-digit number which identifies the plant (e.g., 01 for Unit 1); (2) a three-digit number which identifies a specific component or piping region, and is identical with the zone number for the component; (3) a sequence number which identifies the area individually. The weld or other examination area is referenced to a specific component or area by numerical zone designations which are listed on the following two pages.

Some examination areas receive a four part identification number. These are utilized where a group of items have the same examination requirements. The first three parts of the identification number functions as previously described and the fourth part serves as an identification within that group. For example, the heaters on the pressurizer for Unit 1 might be assigned the identification number 01-005-036-XX, where XX is the number of the individual heater.

In instances where a multiplicity of parts of the same configuration exist and where their ultimate zone locations cannot be determined, a temporary designation number, such as shop serial numbers, will be used. Certain segments of the primary coolant piping and the reactor coolant pumps are examples of such items.

CLASS 1 ZONES

Zone	Title
001	Reactor Pressure Vessel
002	Reactor Vessel Closure Head
003	Steam Generator #1 - Primary Side
004	Steam Generator #2 - Primary Side
005	Pressurizer
006	Loop 1 Reactor Coolant Piping Hot Leg
007	Loop 2 Reactor Coolant Piping Hot Leg
008	Loop 1A Reactor Coolant Piping Steam Generator to Pump 1A
009	Loop 1A Reactor Coolant Piping Pump 1A to Reactor Vessel
010	Loop 1B Reactor Coolant Piping Steam Generator to Pump 1B
011	Loop 1B Reactor Coolant Piping Pump 1B to Reactor Vessel
012	Loop 2A Reactor Coolant Piping Steam Generator to Pump 2A
013	Loop 2A Reactor Coolant Piping Pump 2A to Reactor Vessel
014	Loop 2B Reactor Coolant Piping Steam Generator to Pump 2B
015	Loop 2B Reactor Coolant Piping Pump 2B to Reactor Vessel
016	Reactor Coolant Pump 1A and Motor Flywheels
017	Reactor Coolant Pump 1B and Motor Flywheels
018	Reactor Coolant Pump 2A and Motor Flywheels
019	Reactor Coolant Pump 2B and Motor Flywheels
020	Pressurizer Surge Line
021	Loop 1 Shutdown Cooling Line
022	Loop 2 Shutdown Cooling Line
023	Loop 1A Safety Injection Line
024	Loop 1B Safety Injection Line
025	Loop 2A Safety Injection Line
026	Loop 2B Safety Injection Line
027	Loop 1A Pressurizer Spray Line
028	Loop 1B Pressurizer Spray Line
029	Combined Pressurizer Spray Line
030	Auxiliary Pressurizer Spray Line
031	Pressurizer Safeties
032	Loop 1A Drain Line
033	Loop 1B Drain Line
034	Loop 2A Drain Line
035	Loop 2B Drain Line
036	Letdown Line
037	Charging Line
038	Shutdown Cooling System
039	Loop 1 HPSI Supply Line
040	Loop 2 HPSI Supply Line

CLASS 2 ZONES

Zone	Title
041	Steam Generator #1 - Secondary Side
042	Steam Generator #2 - Secondary Side
043	Main Steam, Steam Generator No. 1 (East) Inside Containment
044	Main Steam, Steam Generator No. 1 (West) Inside Containment
045	Main Steam, Steam Generator No. 2 (East) Inside Containment
046	Main Steam, Steam Generator No. 2 (West) Inside Containment
047	Main Steam, Steam Generator No. 1 (West) Outside Containment
048	Main Steam, Steam Generator No. 1 (East) Outside Containment
049	Main Steam, Steam Generator No. 2 (East) Outside Containment
050	Main Steam, Steam Generator No. 2 (West) Outside Containment
051	Main Steam, Steam Generator No. 1 Atmospheric Dump
052	Main Steam, Steam Generator No. 2 Atmospheric Dump
053	Steam to Auxiliary Feedwater System
054	Main Feedwater Steam Generator No. 1 Inside Containment
055	Main Feedwater Steam Generator No. 2 Inside Containment
056	Main Feedwater Steam Generator No. 1 Outside Containment
057	Main Feedwater Steam Generator No. 2 Outside Containment
058	Auxiliary Feedwater to Steam Generator No. 1 Inside Containment
059	Auxiliary Feedwater to Steam Generator No. 2 Inside Containment
060	Downcomer Feedwater Steam Generator No. 1 Outside Containment
061	Downcomer Feedwater Steam Generator No. 2 Outside Containment
062	Auxiliary Feedwater Steam Generator No. 1 Outside Containment
063	Auxiliary Feedwater Steam Generator No. 2 Outside Containment
064	Steam Generator No. 1 Blowdown Piping Inside Containment
065	Steam Generator No. 2 Blowdown Piping Inside Containment
066	Blowdown Steam Generator No. 1 Outside Containment
067	Blowdown Steam Generator No. 2 Outside Containment
068	Regenerative Heat Exchanger
069	Letdown Heat Exchanger
070	Shutdown Cooling Loop 1 to LPSI Pump Suction
071	Shutdown Cooling Loop 2 to LPSI Pump Suction
072	LPSI Pump Discharge to S/D Cooling HX - Train A
073	LPSI Pump Discharge to S/D Cooling HX - Train B
074	S/D Cooling HX Outlet to LPSI Header - Loop 1
075	S/D Cooling HX Outlet to LPSI Header - Loop 2
076	LPSI Header Loop 1A
077	LPSI Header Loop 1B
078	LPSI Header Loop 2A
079	LPSI Header Loop 2B
080	Containment Spray Pump #1 Suction Line
081	Containment Spray Pump #2 Suction Line
082	Containment Spray Discharge Train A
083	Containment Spray Discharge Train B

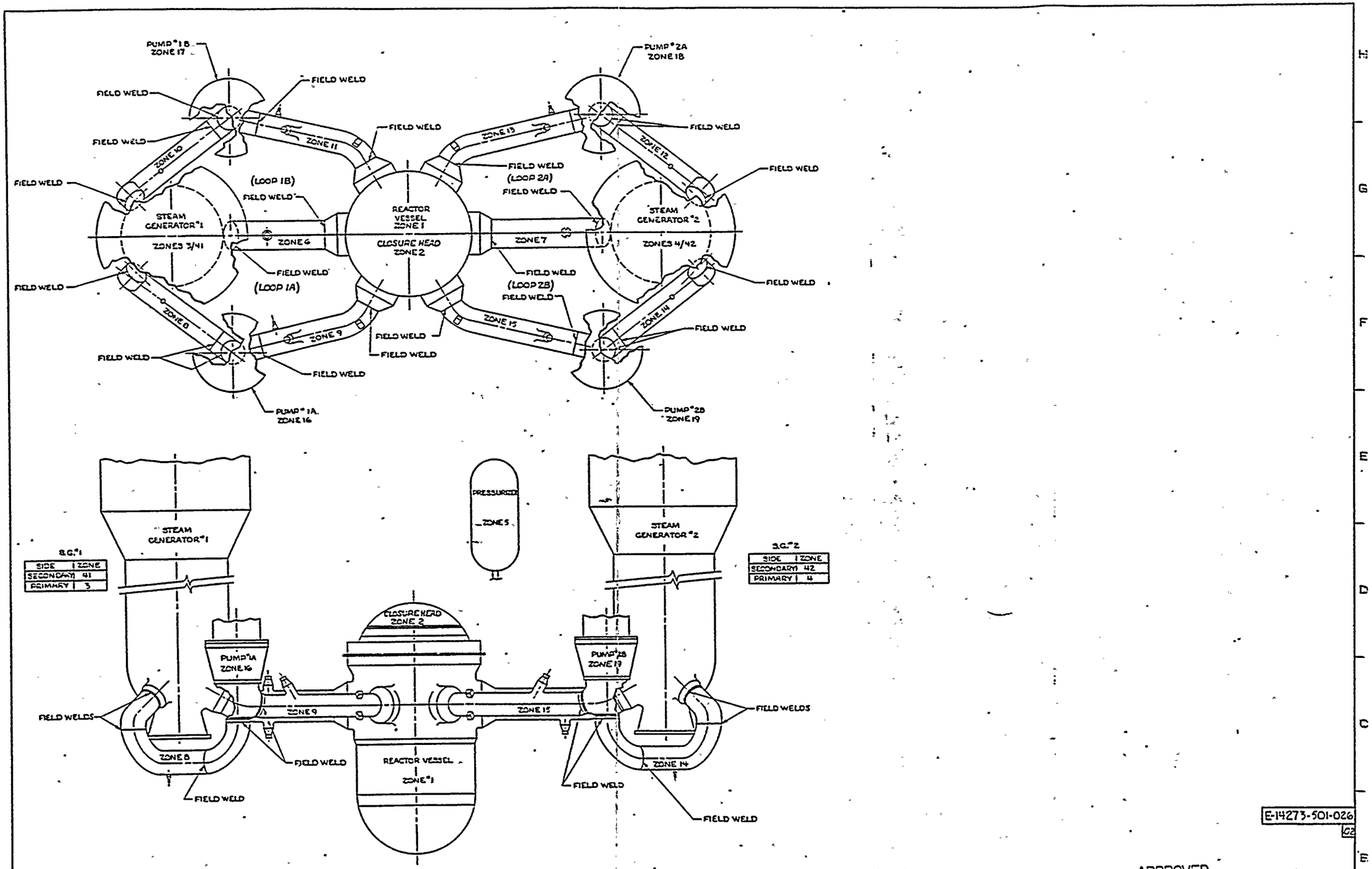

E-14273-501-026
02

APPROVED
REFERENCE
DESIGN

REV	DESCRIPTION	DATE
V	CERTIFIED FOR APPROVED REF DESIGN PER REV REQ #14273-95	
V	ZONE 6 & 8 ADDED "ZONE 19" PER REQ 9678-503	

POWER SYSTEMS

ARIZONA NUCLEAR POWER PROJECT
PALO VERDE NUCLEAR GENERATING STATION

ZONE DESIGNATIONS GENERAL ARRANGEMENT ANPP 1

E-14273-501-026 | 02

NONE

1 DNA 78

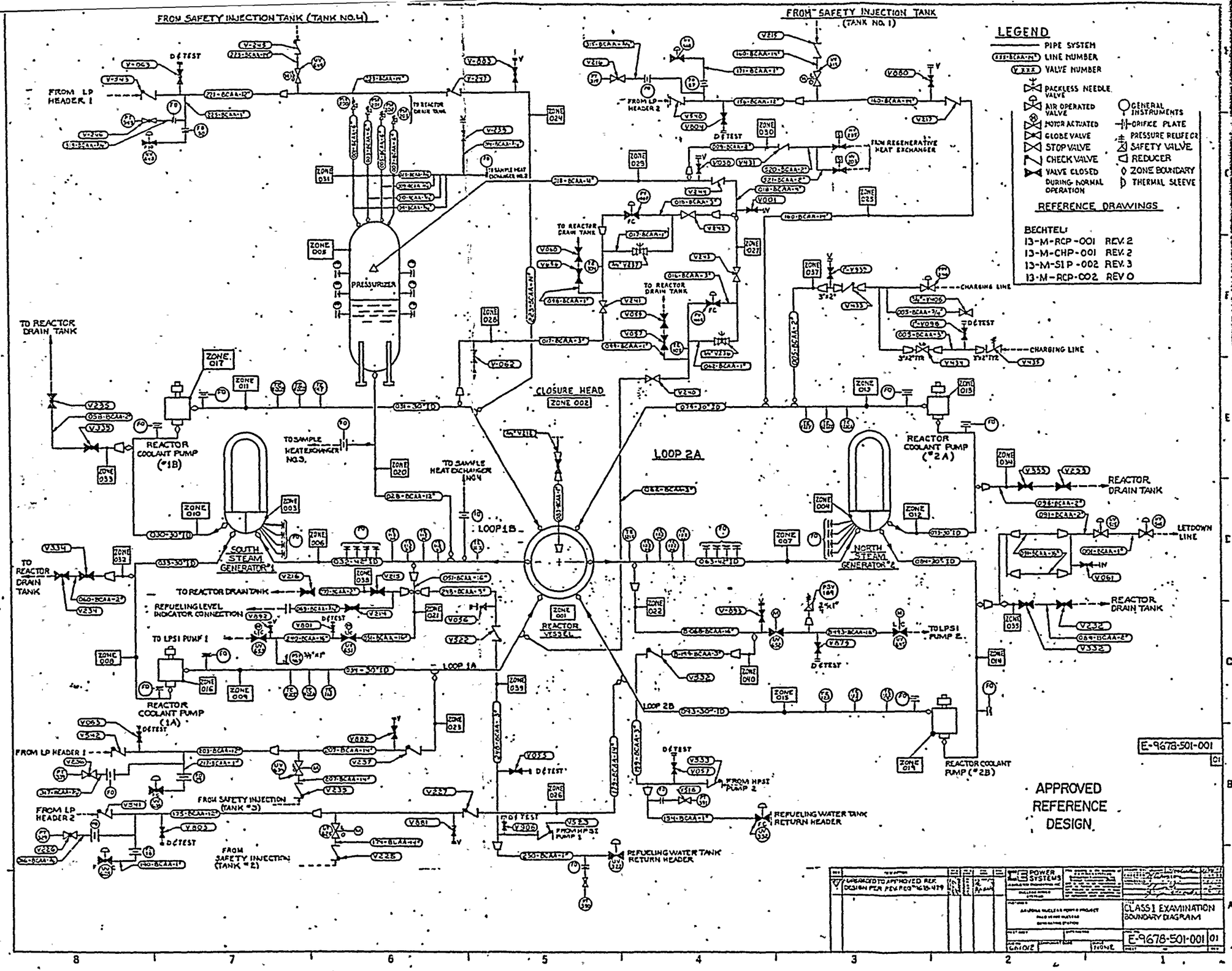
FROM SAFETY INJECTION TANK (TANK NO.4)
FROM SAFETY INJECTION TANK (TANK NO. 1)
LEGEND
PIPE SYSTEM
LINE NUMBER
VALVE NUMBER
PACKLESS NEEDLE VALVE
AIR OPERATED VALVE
MOTOR ACTUATED
GLOBE VALVE
STOP VALVE
CHECK VALVE
VALVE CLOSED DURING NORMAL OPERATION
GENERAL INSTRUMENTS
ORIFICE PLATE
PRESSURE RELIEF CR
SAFETY VALVE
REDUCER
ZONE BOUNDARY
THERMAL SLEEVE
REFERENCE DRAWINGS
BECHTEL:
13-M-RCP-001 REV. 2
13-M-CHP-001 REV. 2
13-M-SIP-002 REV. 3
13-M-RCP-002 REV 0
FROM LP HEADER 1
FROM LP HEADER 2
D/E TEST
TO REACTOR DRAIN TANK
PRESSURIZER
CLOSURE HEAD
ZONE 002
LOOP 2A
LOOP 1B
LOOP 1A
LOOP 2B
REACTOR COOLANT PUMP (#1B)
REACTOR COOLANT PUMP (#2A)
REACTOR COOLANT PUMP (1A)
REACTOR COOLANT PUMP (#2B)
SOUTH STEAM GENERATOR #1
NORTH STEAM GENERATOR #2
REACTOR VESSEL
TO SAMPLE HEAT EXCHANGER NO.3
TO SAMPLE HEAT EXCHANGER NO.4
TO SAMPLE HEAT EXCHANGER NO.2
TO REACTOR DRAIN TANK
REFUELING LEVEL INDICATOR CONNECTION
TO LPSI PUMP 1
TO LPSI PUMP 2
FROM REGENERATIVE HEAT EXCHANGER
CHARGING LINE
REACTOR DRAIN TANK
LETDOWN LINE
FROM SAFETY INJECTION (TANK #3)
FROM SAFETY INJECTION (TANK #2)
FROM HPSI PUMP 1
FROM HPSI PUMP 2
REFUELING WATER TANK RETURN HEADER
APPROVED REFERENCE DESIGN.
E-9678-501-001
CLASS 1 EXAMINATION BOUNDARY DIAGRAM
POWER SYSTEMS

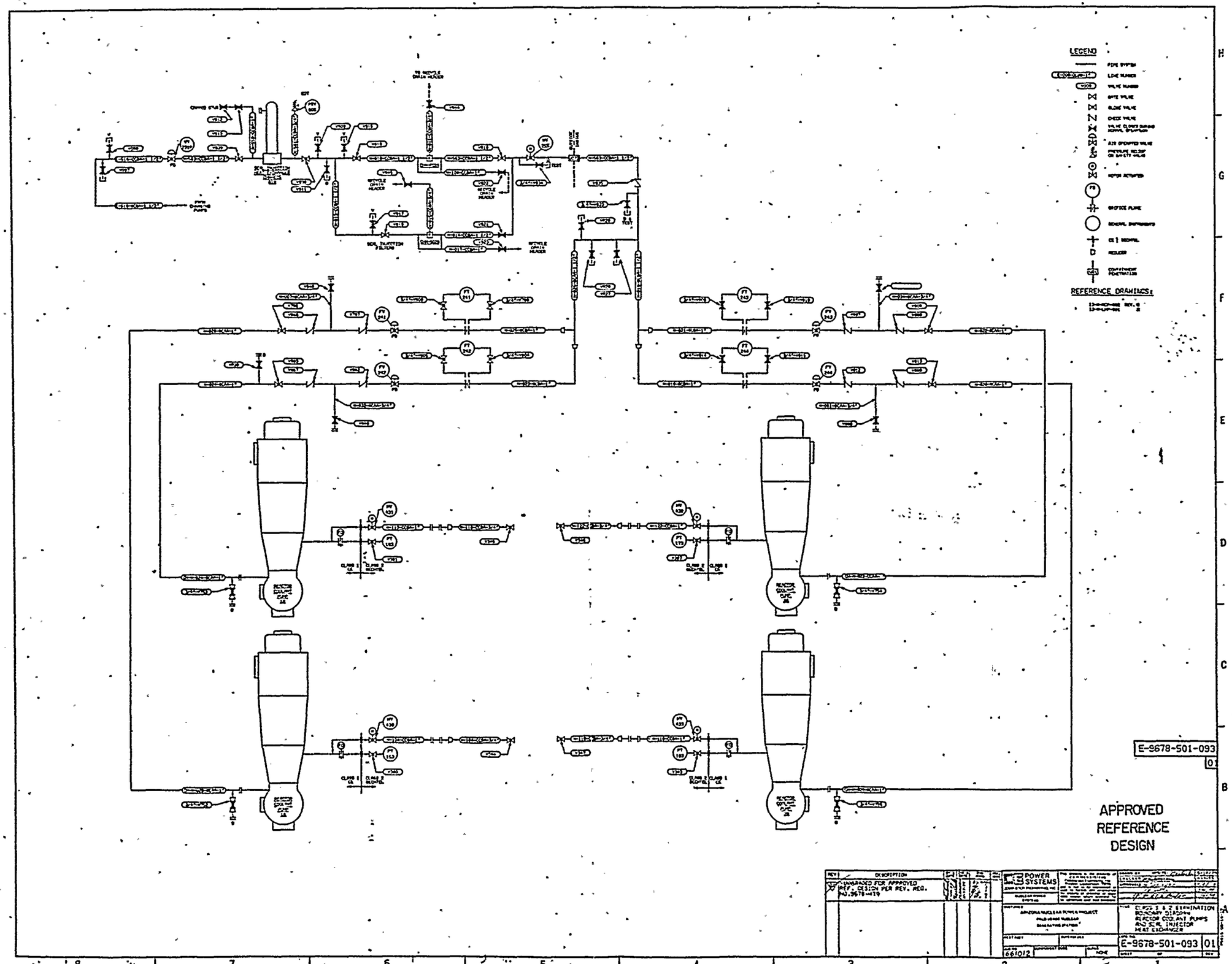
LEGEND
REFERENCE DRAWINGS:
E-9678-501-093
01
APPROVED
REFERENCE
DESIGN
POWER SYSTEMS
CLASS 1 & 2 EXAMINATION
BOUNDARY DIAGRAM
REACTOR COOLANT PUMPS
AND SCR INJECTOR
HEAT EXCHANGER
E-9678-501-093
01

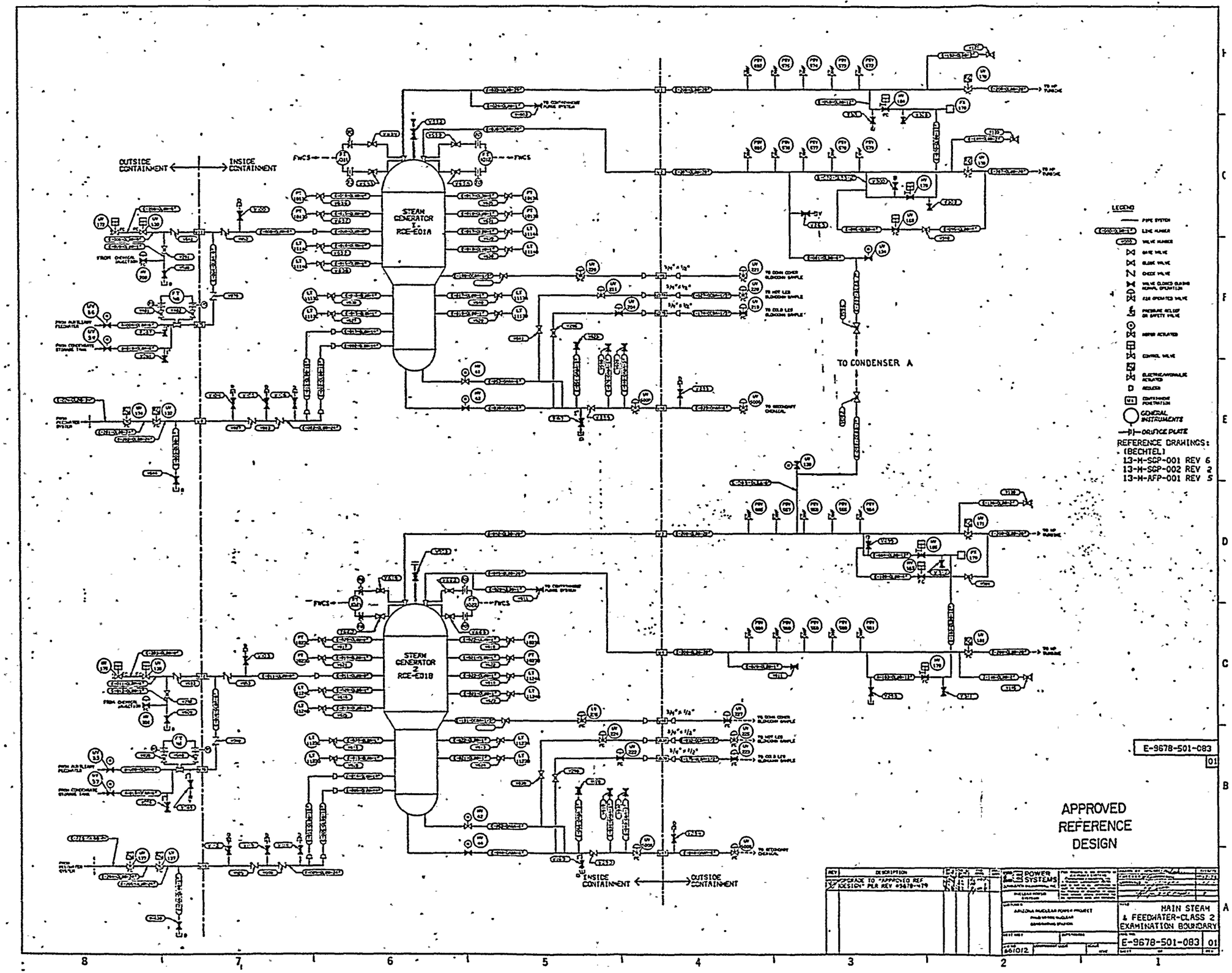
OUTSIDE CONTAINMENT
INSIDE CONTAINMENT
STEAM GENERATOR 1 RCE-E01A
STEAM GENERATOR 2 RCE-E01B
TO CONDENSER A
LEGEND
GENERAL INSTRUMENTS
ORIFICE PLATE
REFERENCE DRAWINGS:
(BECHTEL)
13-M-SGP-001 REV 6
13-M-SGP-002 REV 2
13-M-AFP-001 REV 5
E-9678-501-083
01
APPROVED
REFERENCE
DESIGN
DESCRIPTION
UPGRADE TO APPROVED REF DESIGN PER REV #9678-479
POWER SYSTEMS
ARIZONA NUCLEAR POWER PROJECT
MAIN STEAM & FEEDWATER-CLASS 2 EXAMINATION BOUNDARY
E-9678-501-083
01

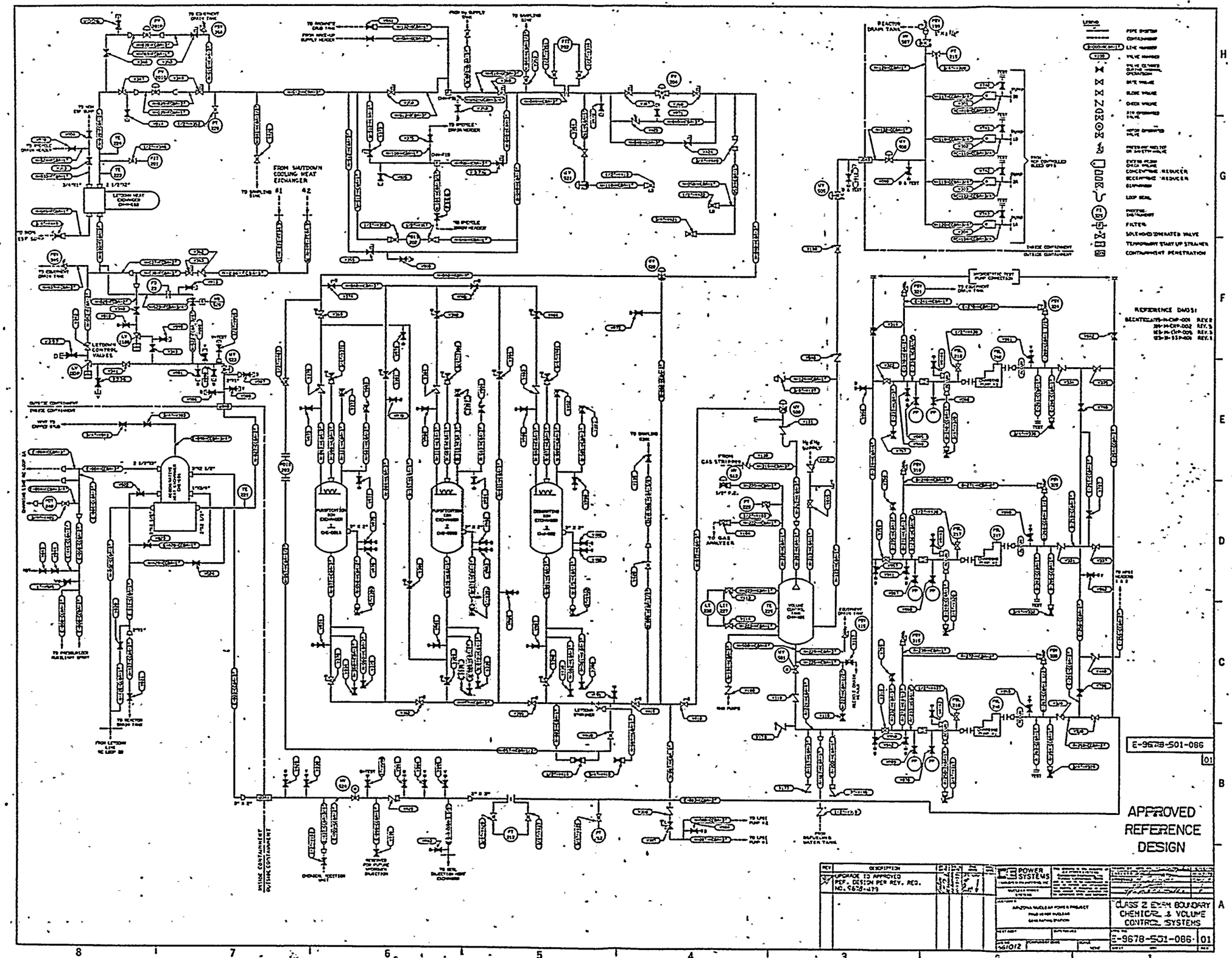
FROM SHUTDOWN COOLING HEAT EXCHANGER
LETDOWN HEAT EXCHANGER
LETDOWN CONTROL VALVES
REGENERATIVE HEAT EXCHANGER
REACTOR DRAIN TANK
VOLUME CONTROL TANK
LETDOWN STRAINER
CHARGING PUMP
REFERENCE DWGS:
E-9678-S01-086
01
APPROVED REFERENCE DESIGN
POWER SYSTEMS
CLASS 2 EXAM BOUNDARY CHEMICAL & VOLUME CONTROL SYSTEMS
E-9678-S01-086
01
INSIDE CONTAINMENT
OUTSIDE CONTAINMENT

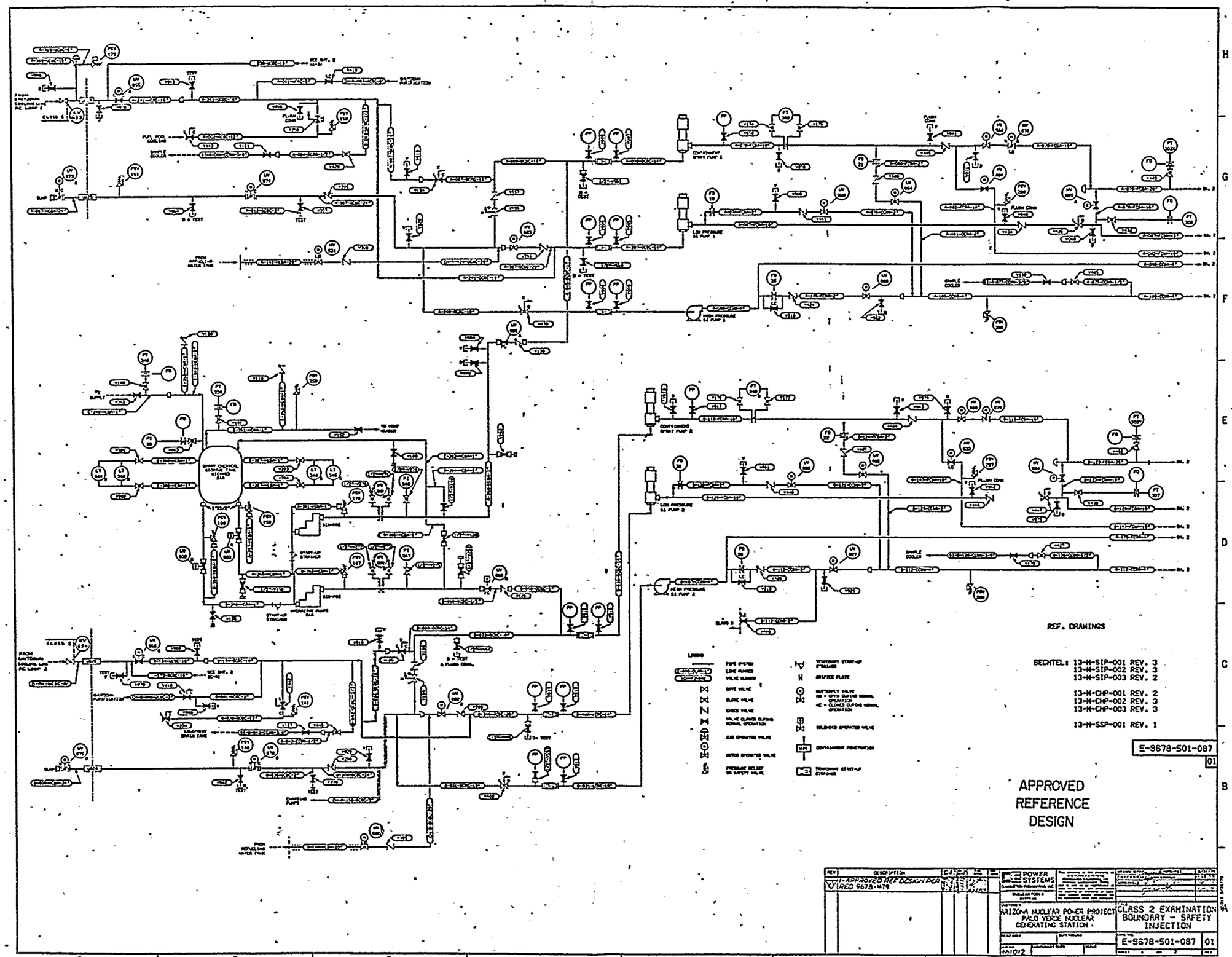
REF. DRAWINGS
BECHTEL: 13-H-SIP-001 REV. 3
13-H-SIP-002 REV. 3
13-H-SIP-003 REV. 2
13-H-CHP-001 REV. 2
13-H-CHP-002 REV. 3
13-H-CHP-003 REV. 3
13-H-SSP-001 REV. 1
E-9678-501-087
01
APPROVED
REFERENCE
DESIGN
POWER SYSTEMS
ARIZONA NUCLEAR POWER PROJECT
PALO VERDE NUCLEAR
GENERATING STATION
CLASS 2 EXAMINATION
BOUNDARY - SAFETY
INJECTION
E-9678-501-087
01

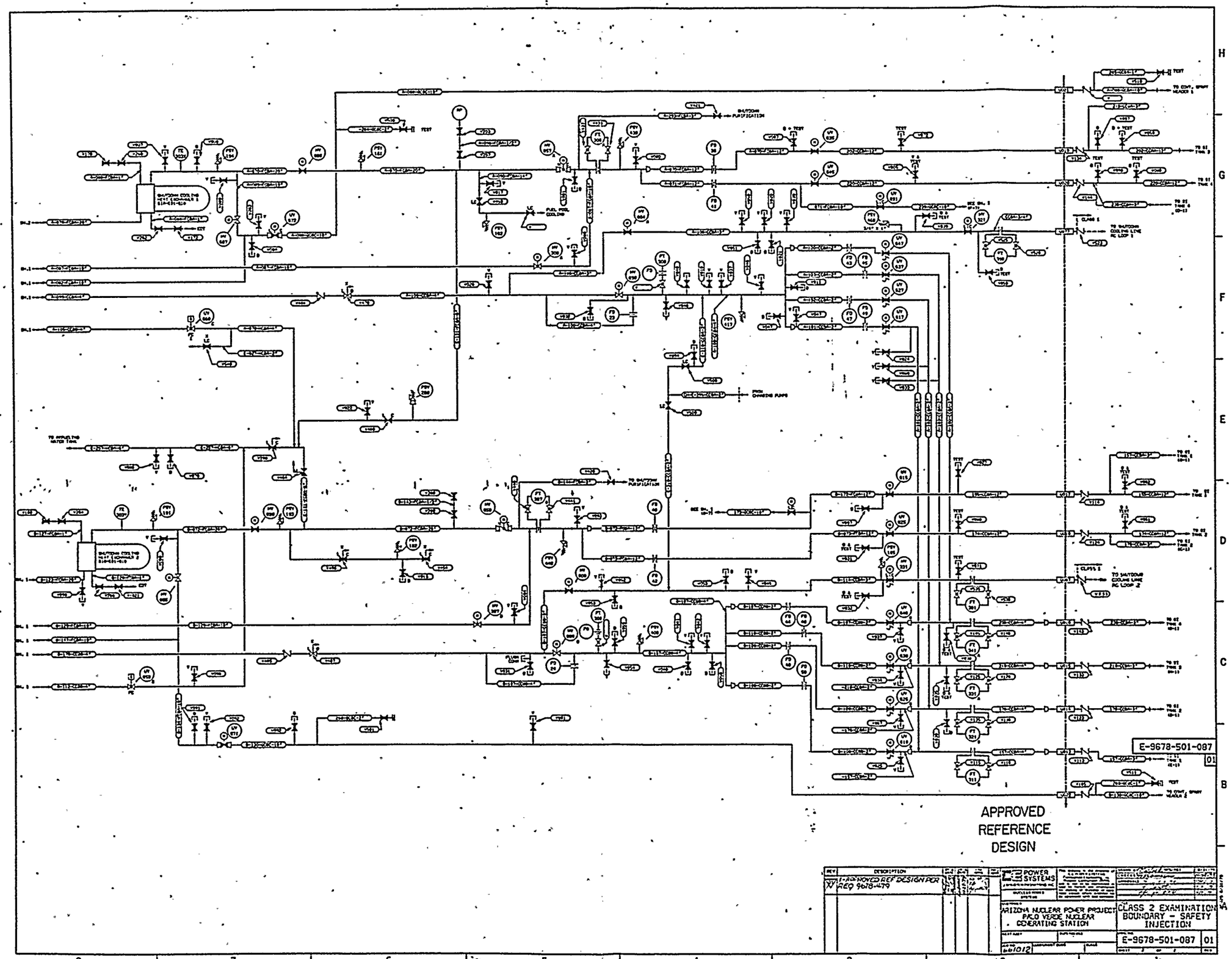
E-9678-501-087
01
APPROVED
REFERENCE
DESIGN
REV
DESCRIPTION
1-APPROVED REF DESIGN PER REQ 9678-479
POWER SYSTEMS
ARIZONA NUCLEAR POWER PROJECT
PALO VERDE NUCLEAR GENERATING STATION
CLASS 2 EXAMINATION BOUNDARY - SAFETY INJECTION
E-9678-501-087
01

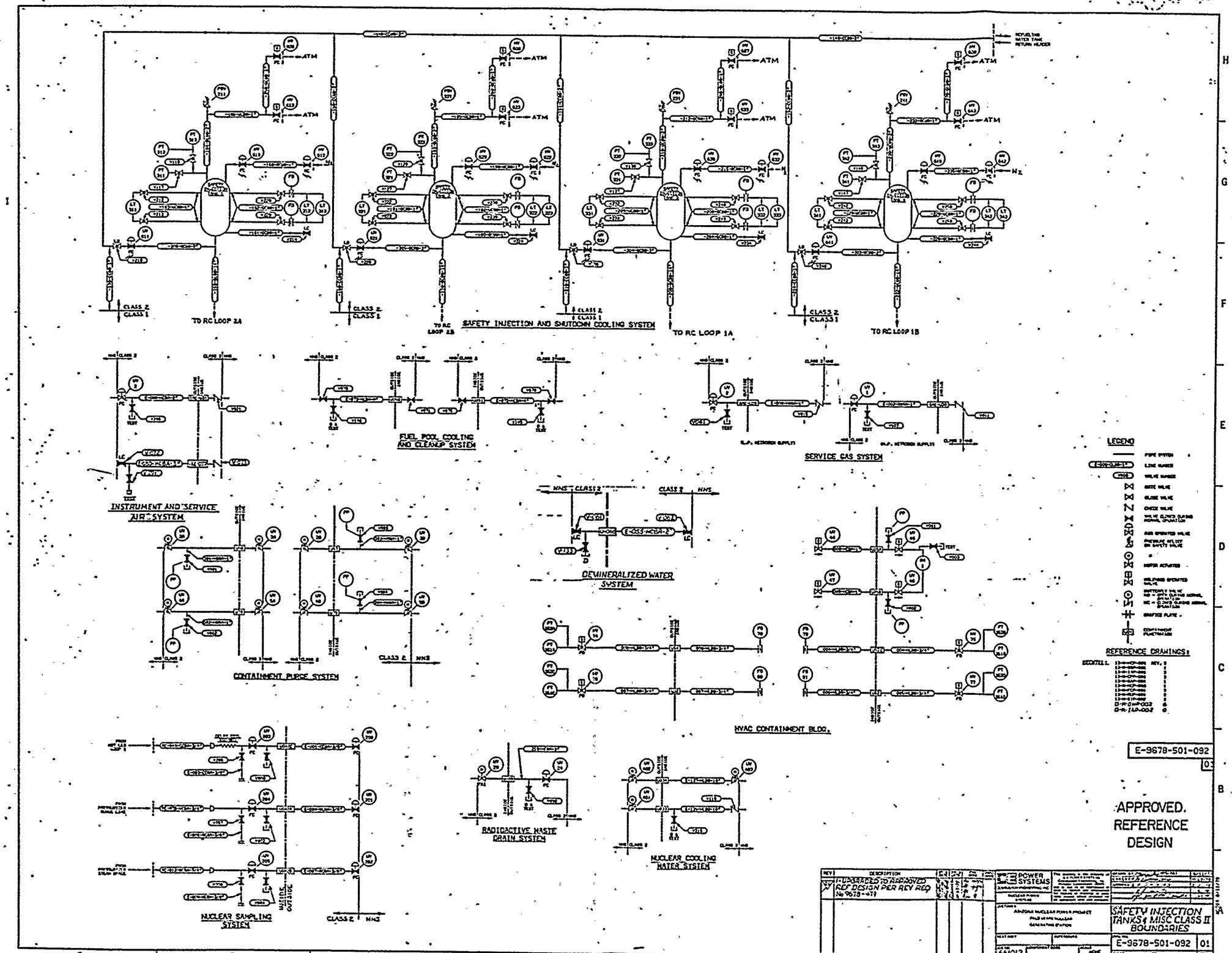
SAFETY INJECTION AND SHUTDOWN COOLING SYSTEM
TO RC LOOP 2A
TO RC LOOP 2B
TO RC LOOP 1A
TO RC LOOP 1B
CLASS 2
CLASS 1
ATM
FUEL POOL COOLING AND CLEANUP SYSTEM
SERVICE GAS SYSTEM
INSTRUMENT AND SERVICE AIR SYSTEM
CONTAINMENT PURGE SYSTEM
DEMINERALIZED WATER SYSTEM
HVAC CONTAINMENT BLDG.
RADIOACTIVE WASTE DRAIN SYSTEM
NUCLEAR COOLING WATER SYSTEM
NUCLEAR SAMPLING SYSTEM
LEGEND
REFERENCE DRAWINGS:
E-9678-501-092
APPROVED REFERENCE DESIGN
UPGRADED TO APPROVED REF DESIGN PER REV REQ
POWER SYSTEMS
SAFETY INJECTION TANKS & MISC CLASS II BOUNDARIES
E-9678-501-092
01

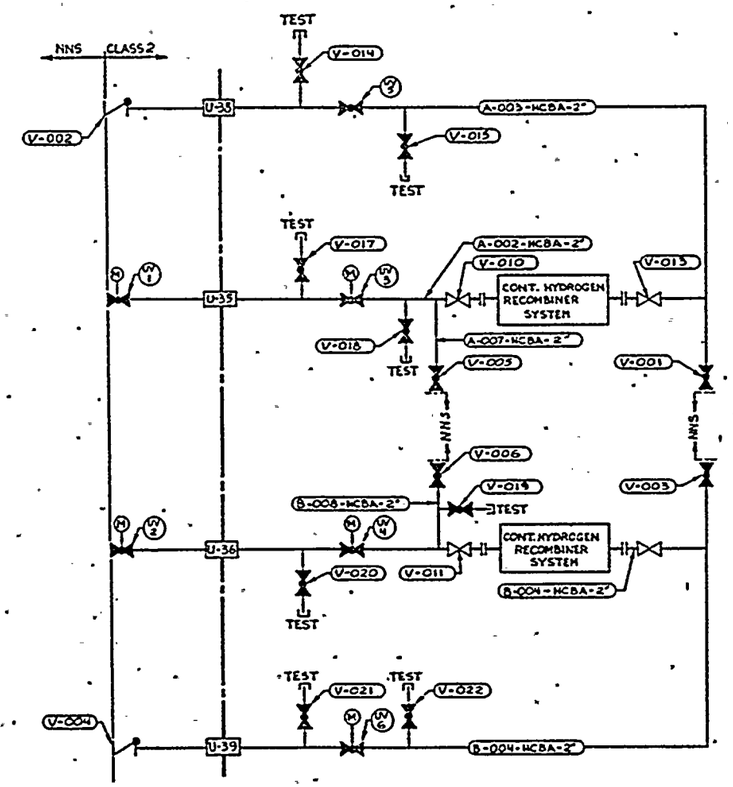

CONTAINMENT HYDROGEN CONTROL

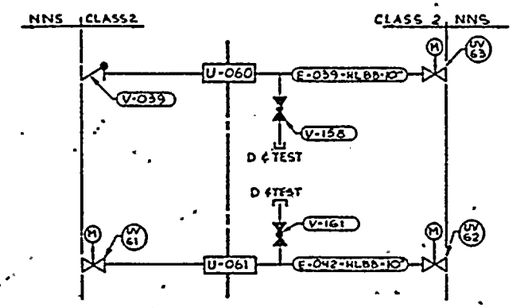

NORMAL CHILLED WATER SYSTEM

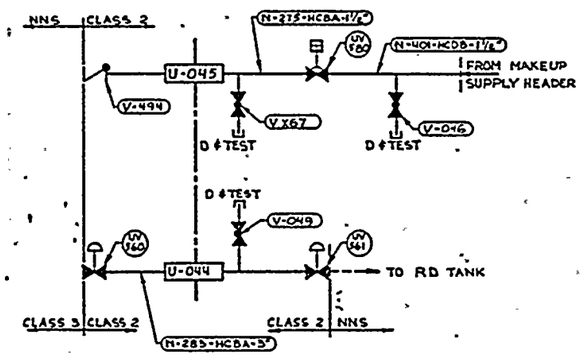

CHEMICAL VOLUME CONTROL SYSTEM

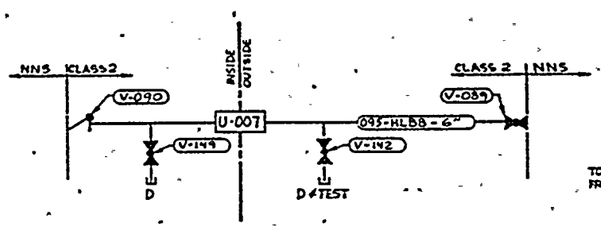

FIRE PROTECTION SYSTEM

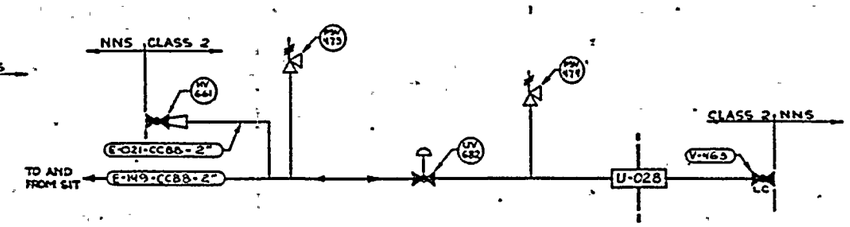

SAFETY INJECTION & SHUTDOWN COOLING SYSTEM

REFERENCE DRAWINGS:

BECHTEL: 13-M-SIP-001 REV 3
13-M-CHP-003 REV 3
13-M-WCP-001 REV 5
13-M-HPP-001 REV 2
13-M-FPP-006 REV 3

E-9678-501-166 01

APPROVED REFERENCE DESIGN

REV	DESCRIPTION				
01	UPGRADED TO APPROVED REF DESIGN PER REV REQ#9678-6				

ARIZONA NUCLEAR POWER PROJECT
PALO VERDE NUCLEAR GENERATING STATION

POWER SYSTEMS

MISC. CLASS II BOUNDARIES

E-9678-501-166 01

SCALE NONE

8 7 6 5 4 3 2 1

POWER SYSTEMS
COMBUSTION ENGINEERING, INC.

ZONE 1 CLASS 1
PROGRAM PLAN

DOCUMENT NO.: TR-ESS-069

REFERENCE DRAWING NO.: E-14273-501-002 Rev. 02

TITLE: REACTOR PRESSURE VESSEL

AREA DESIGNATION	AREA DESCRIPTION	MANUFACTURER'S OR INSTALLER'S WELD NUMBER	EXAMINATION CATEGORY IWB-2500	EXAMINATION METHOD IWB-2600	EXAMINATION PROCEDURE NUMBER	CALIBRATION BLOCK NO.
01-001-027	Inlet Nozzle-to-Intermediate Extension Piece Weld at 60 Degrees	201-128A	B-J	UT	9878-ISI-006	UT-22
01-001-028	Inlet Nozzle-to-Intermediate Extension Piece Weld at 120 Degrees	201-128B	B-J	UT	9878-ISI-006	UT-22
01-001-029	Inlet Nozzle-to-Intermediate Extension Piece Weld at 240 Degrees	201-128C	B-J	UT	9878-ISI-006	UT-22
01-001-030	Inlet Nozzle-to-Intermediate Extension Piece Weld at 300 Degrees	201-128D	B-J	UT	9878-ISI-006	UT-22
01-001-031	Outlet Nozzle-to-Extension Piece Weld at 0 Degrees	401-128A	B-J	UT	NIP-937	UT-22
01-001-032	Inlet Nozzle-to-Extension Piece Weld at 60 Degrees	202-128A	B-J	UT	NIP-937	UT-22
01-001-033	Inlet Nozzle-to-Extension Piece Weld at 120 Degrees	202-128B	B-J	UT	NIP-937	UT-22

N/A NOT APPLICABLE
(H) DURING HYDROTEST

Note: Any welds appearing on the reference drawing, but not in the zone tables, were done in the shop.

REVISION: 2

C-E 0090285 (Rev. 7/80)

POWER SYSTEMS
COMBUSTION ENGINEERING, INC.

ZONE 1 CLASS 1
PROGRAM PLAN

DOCUMENT NO.: TR-ESS-069
REFERENCE DRAWING NO.: E-14273-501-002 Rev. 02
TITLE: REACTOR PRESSURE VESSEL

AREA DESIGNATION	AREA DESCRIPTION	MANUFACTURER'S OR INSTALLER'S WELD NUMBER	EXAMINATION CATEGORY IWB-2500	EXAMINATION METHOD IWB-2600	EXAMINATION PROCEDURE NUMBER	CALIBRATION BLOCK NO.
01-001-034	Outlet Nozzle-to-Extension Piece Weld at 180 Degrees	401-128B	B-J	UT	NIP-937	UT-22
01-001-035	Inlet Nozzle-to-Extension Piece Weld at 240 Degrees	202-128C	B-J	UT	NIP-937	UT-22
01-001-036	Inlet Nozzle-to-Extension Piece Weld at 300 Degrees	202-128D	B-J	UT	NIP-937	UT-22
01-001-051-01 through 01-001-051-54	Stud	N/A	B-G-1	UT Surf.	NIP-941 525115-ESS-093	UT-20 N/A
01-001-052-01 through 01-001-052-54	Nut	N/A	B-G-1	UT Surf.	NIP-941 525115-ESS-093	UT-21 N/A
01-001-053-01 through 01-001-053-54	Washer	N/A	B-G-1	Vis.	525115-ESS-091	N/A

N/A NOT APPLICABLE
(H) DURING HYDROTEST

Note: Any welds appearing on the reference drawing, but not in the zone tables, were done in the shop.

REVISION: 2

C-E 0090285 (Rev. 7/80)

POWER SYSTEMS
COMBUSTION ENGINEERING, INC.

ZONE 1 CLASS 1
PROGRAM PLAN

DOCUMENT NO.: TR-ESS-069
REFERENCE DRAWING NO.: E-14273-501-002 Rev. 02
TITLE: REACTOR PRESSURE VESSEL

AREA DESIGNATION	AREA DESCRIPTION	MANUFACTURER'S OR INSTALLER'S WELD NUMBER	EXAMINATION CATEGORY IWB-2500	EXAMINATION METHOD IWB-2600	EXAMINATION PROCEDURE NUMBER	CALIBRATION BLOCK NO.
01-001-054	Capsule Holder at 38 Degrees	N/A	B-N-1	Vis.	525115-ESS-092	N/A
01-001-055	Capsule Holder at 43 Degrees	N/A	B-N-1	Vis.	525115-ESS-092	N/A
01-001-056	Capsule Holder at 137 Degrees	N/A	B-N-1	Vis.	525115-ESS-092	N/A
01-001-057	Capsule Holder at 142 Degrees	N/A	B-N-1	Vis.	525115-ESS-092	N/A
01-001-058	Capsule Holder at 230 Degrees	N/A	B-N-1	Vis.	525115-ESS-092	N/A
01-001-059	Capsule Holder at 310 Degrees	N/A	B-N-1	Vis.	525115-ESS-092	N/A
01-001-060	Flow Baffle	N/A	B-N-1	Vis.	525115-ESS-092	N/A
01-001-071	Core Support Barrel	N/A	B-N-3	Vis.	525115-ESS-091	N/A
01-001-072	Upper Guide Structure	N/A	B-N-3	Vis.	525115-ESS-091	N/A

N/A NOT APPLICABLE
(H) DURING HYDROTEST

Note: Any welds appearing on the reference drawing, but not in the zone tables, were done in the shop.

REVISION: 2

C-E 0090285 (Rev. 7/80)

POWER SYSTEMS
COMBUSTION ENGINEERING, INC.

ZONE 1 CLASS 1
PROGRAM PLAN

DOCUMENT NO.: TR-ESS-069
REFERENCE DRAWING NO.: E-14273-501-002 Rev. 02
TITLE: REACTOR PRESSURE VESSEL

AREA DESIGNATION	AREA DESCRIPTION	MANUFACTURER'S OR INSTALLER'S WELD NUMBER	EXAMINATION CATEGORY IWB-2500	EXAMINATION METHOD IWB-2600	EXAMINATION PROCEDURE NUMBER	CALIBRATION BLOCK NO.
01-001-073	Alignment Key at 0 Degrees	N/A	B-N-3	Vis.	525115-ESS-091	N/A
01-001-074	Alignment Key at 90 Degrees	N/A	B-N-3	Vis.	525115-ESS-091	N/A
01-001-075	Alignment Key at 180 Degrees	N/A	B-N-3	Vis.	525115-ESS-091	N/A
01-001-076	Alignment Key at 270 Degrees	N/A	B-N-3	Vis.	525115-ESS-091	N/A
01-001-077	Guide Lug at 0 Degrees	N/A	B-N-3	Vis.	525115-ESS-091	N/A
01-001-078	Guide Lug at 90 Degrees	N/A	B-N-3	Vis.	525115-ESS-091	N/A
01-001-079	Guide Lug at 180 Degrees	N/A	B-N-3	Vis.	525115-ESS-091	N/A
01-001-080	Guide Lug at 270 Degrees	N/A	B-N-3	Vis.	525115-ESS-091	N/A

N/A NOT APPLICABLE
(H) DURING HYDROTEST

Note: Any welds appearing on the reference drawing, but not in the zone tables, were done in the shop.

REVISION: 2

C-E 0090285 (Rev. 7/80)

POWER SYSTEMS
COMBUSTION ENGINEERING, INC.

ZONE 1 CLASS 1
PROGRAM PLAN

DOCUMENT NO.: TR-ESS-069
REFERENCE DRAWING NO.: E-14273-501-002 Rev. 02
TITLE: REACTOR PRESSURE VESSEL

AREA DESIGNATION	AREA DESCRIPTION	MANUFACTURER'S OR INSTALLER'S WELD NUMBER	EXAMINATION CATEGORY IWB-2500	EXAMINATION METHOD IWB-2600	EXAMINATION PROCEDURE NUMBER	CALIBRATION BLOCK NO.
01-001-081-01 through 01-001-081-61	Instrument Nozzle Penetrations - Bottom Head	N/A	B-E	Vis. (H)	525115-ESS-091	N/A

N/A NOT APPLICABLE
(H) DURING HYDROTEST

Note: Any welds appearing on the reference drawing, but not in the zone tables, were done in the shop.

REVISION: 2

C-E 0090285 (Rev. 7/80)

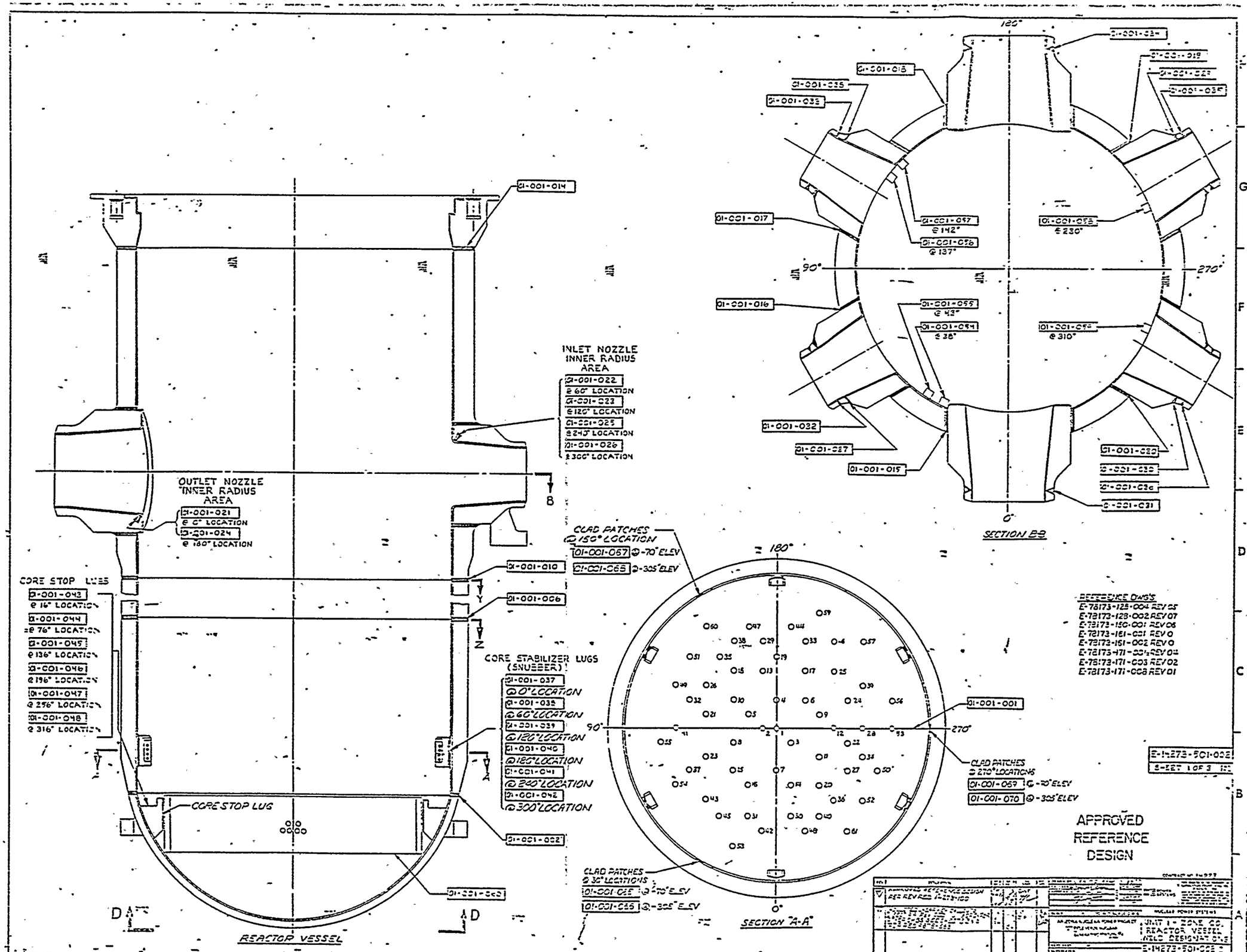
01-001-014
INLET NOZZLE INNER RADIUS AREA
01-001-022 @ 60° LOCATION
01-001-023 @ 120° LOCATION
01-001-025 @ 240° LOCATION
01-001-026 @ 300° LOCATION
OUTLET NOZZLE INNER RADIUS AREA
01-001-021 @ 0° LOCATION
01-001-024 @ 180° LOCATION
CORE STOP LUGS
01-001-043 @ 16° LOCATION
01-001-044 @ 76° LOCATION
01-001-045 @ 136° LOCATION
01-001-046 @ 196° LOCATION
01-001-047 @ 256° LOCATION
01-001-048 @ 316° LOCATION
01-001-010
01-001-006
CORE STABILIZER LUGS (SNUBBER)
01-001-037 @ 0° LOCATION
01-001-038 @ 60° LOCATION
01-001-039 @ 120° LOCATION
01-001-040 @ 180° LOCATION
01-001-041 @ 240° LOCATION
01-001-042 @ 300° LOCATION
CORE STOP LUG
01-001-002
01-001-003
REACTOR VESSEL
CLAD PATCHES @ 150° LOCATION
01-001-067 @ -70° ELEV
01-001-065 @ -305° ELEV
CLAD PATCHES @ 270° LOCATIONS
01-001-069 @ -70° ELEV
01-001-070 @ -305° ELEV
CLAD PATCHES @ 30° LOCATIONS
01-001-068 @ -70° ELEV
01-001-066 @ -305° ELEV
01-001-001
SECTION "A-A"
SECTION B-B
01-001-018
01-001-035
01-001-033
01-001-017
01-001-016
01-001-032
01-001-027
01-001-015
01-001-019
01-001-029
01-001-030
01-001-031
01-001-057 @ 142°
01-001-056 @ 137°
01-001-058 @ 230°
01-001-055 @ 43°
01-001-054 @ 38°
01-001-059 @ 310°
REFERENCE DWG'S
E-78173-128-004 REV 05
E-78173-128-002 REV 07
E-78173-150-001 REV 06
E-78173-161-001 REV 0
E-78173-161-002 REV 0
E-78173-171-004 REV 04
E-78173-171-003 REV 02
E-78173-171-008 REV 01
E-14273-501-002
SHEET 1 OF 3
APPROVED REFERENCE DESIGN
UNIT 1 - ZONE CO.
REACTOR VESSEL
WELD DESIGNATORS
E-14273-501-002

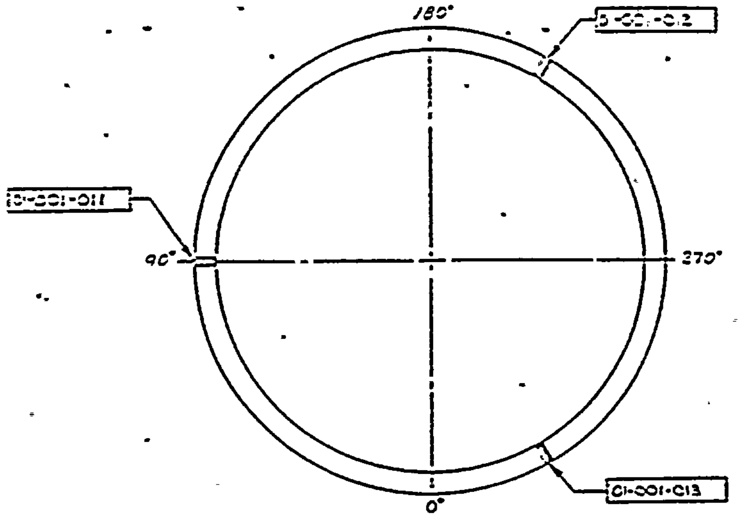

UPPER SHELL SEGMENT
SECTION "X-X"
SCALE: NONE

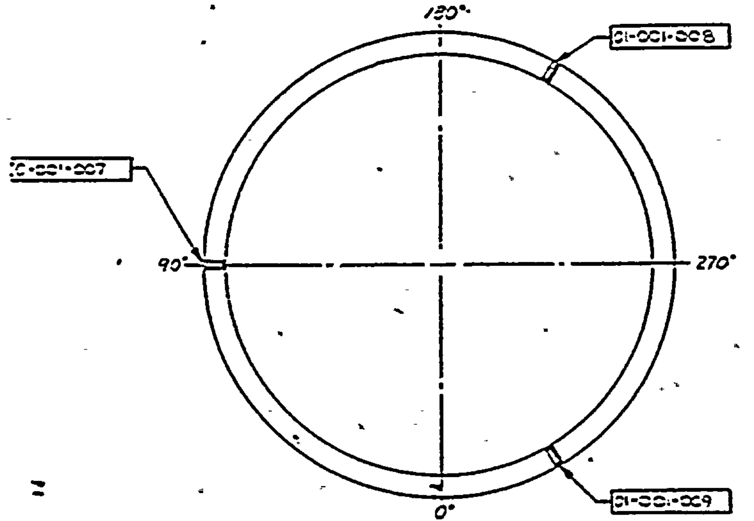

MIDDLE SHELL SEGMENT
SECTION "Y-Y"
SCALE: NONE

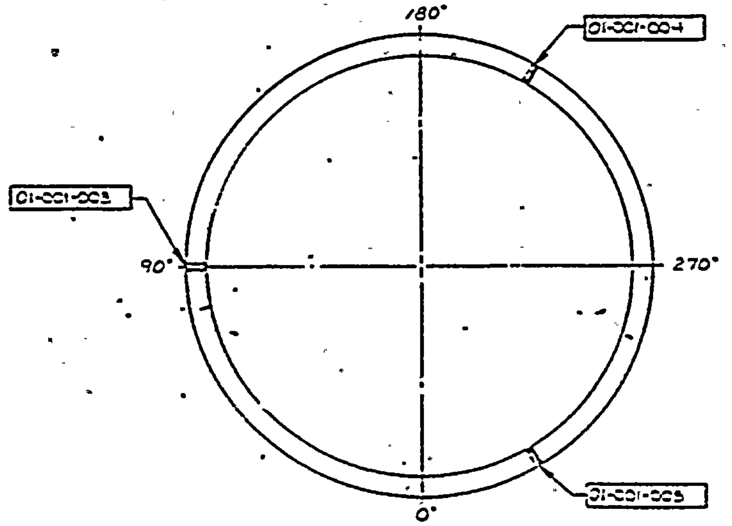

LOWER SHELL SEGMENT
SECTION "Z-Z"
SCALE: NONE

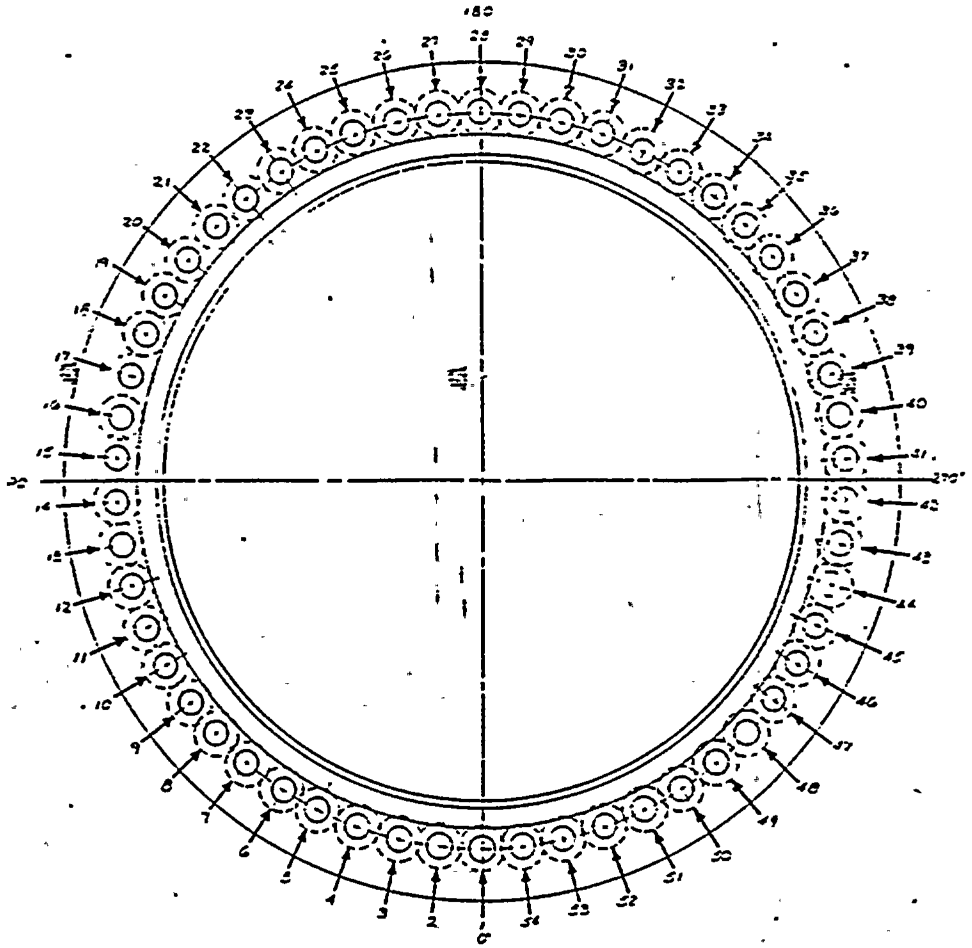

REACTOR VESSEL FLANGE
PLAN VIEW

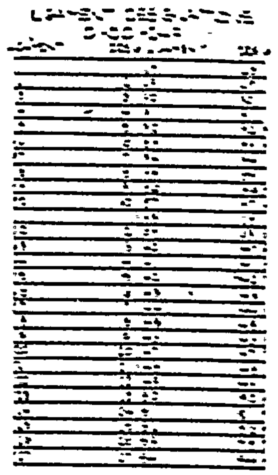

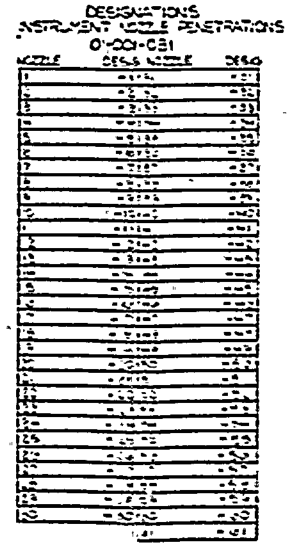
DESIGNATIONS
INSTRUMENT NOZZLE PENETRATIONS
01-001-031

REFERENCE DWGS
E-78173-151-002 REV
E-78173-112-001 REV
E-78173-124-001 REV
E-78173-122-001 REV

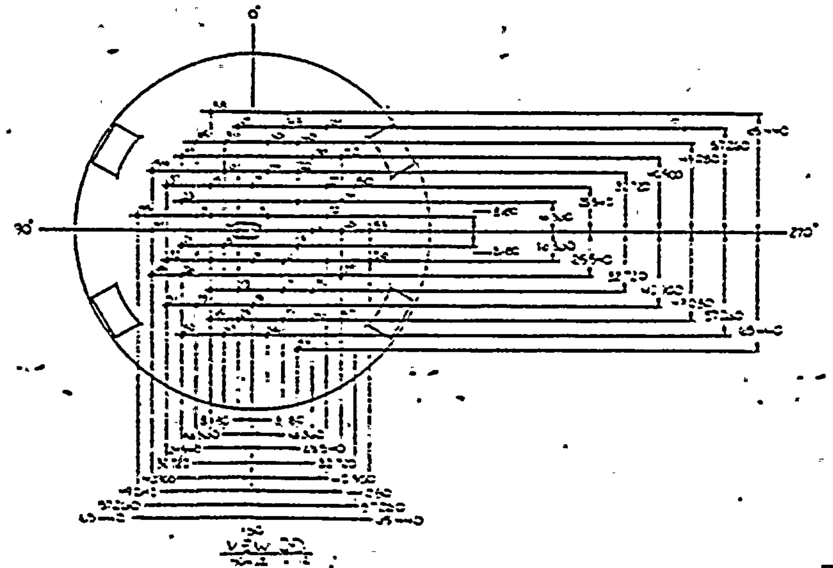

VIEW D-D
BOTTOM HEAD
LOOKING UP FROM OUTSIDE

E-78173-501-001

APPROVED
REFERENCE
DESIGN

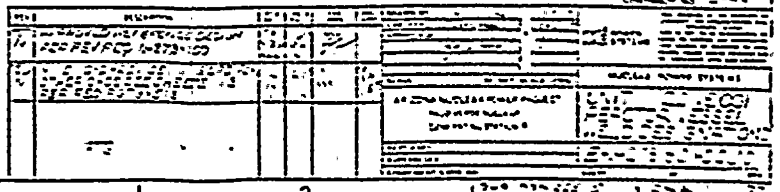

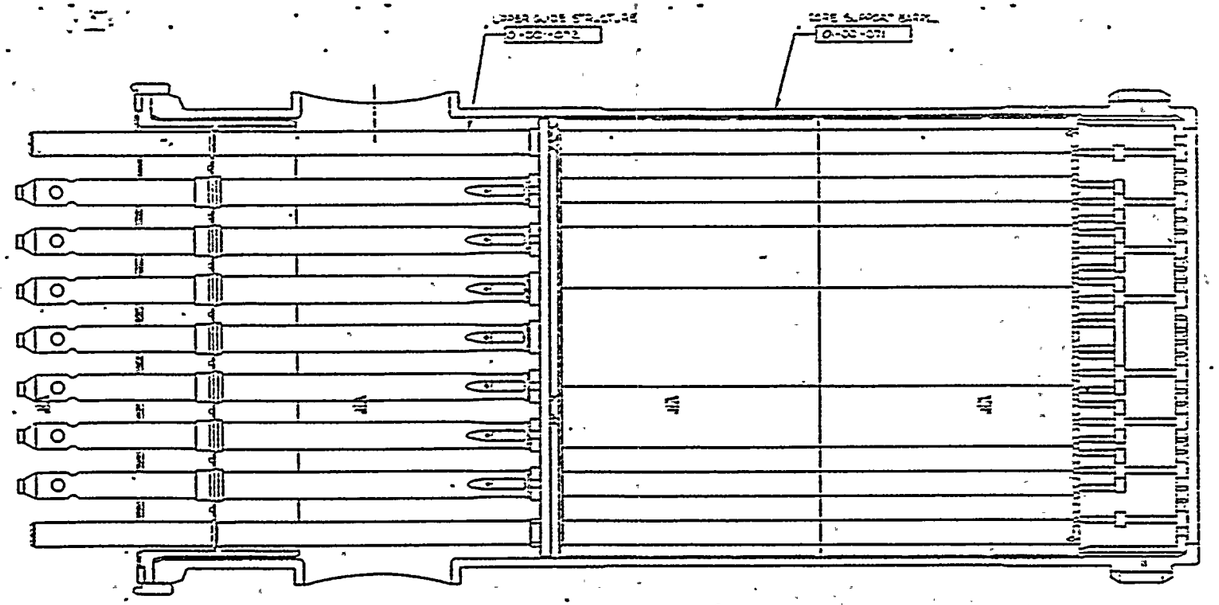

REACTOR INTERNALS ASSEMBLY

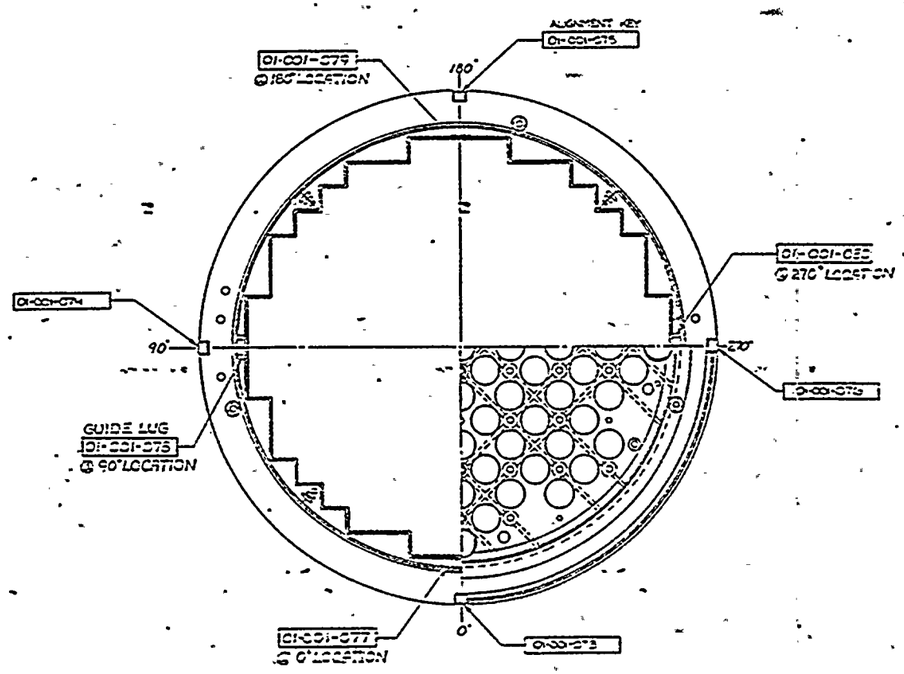

TOP VIEW

REFERENCE DWG'S

APPROVED
REFERENCE
DESIGN

POWER SYSTEMS
COMBUSTION ENGINEERING, INC.

ZONE 2 CLASS 1
PROGRAM PLAN

DOCUMENT NO.: TR-ESS-069
REFERENCE DRAWING NO.: E-14273-501-001 Rev. 01
TITLE: REACTOR PRESSURE VESSEL CLOSURE HEAD

AREA DESIGNATION	AREA DESCRIPTION	MANUFACTURER'S OR INSTALLER'S WELD NUMBER	EXAMINATION CATEGORY IWB-2500	EXAMINATION METHOD IWB-2600	EXAMINATION PROCEDURE NUMBER	CALIBRATION BLOCK NO.
01-002-006	Vent Pipe-to-Head Weld	301-101	B-P	Vis. (H)	525115-ESS-091	N/A
01-002-007-01 through 01-002-007-97	CEDM Nozzle-to-Head Weld #1 through #97	N/A	B-E	Vis. (H)	525115-ESS-091	N/A
01-002-008-01 through 01-002-008-32	CEDM Lower Housing Weld #66 through #97	N/A	B-O	UT	NIP-940	UT-86
01-002-009-01 through 01-002-009-32	CEDM Upper Housing Weld #66 through #97	N/A	B-O	UT	NIP-940	UT-85
01-002-010-01 through 01-002-010-32	CEDM Lower Tube Weld #66 through #97	N/A	B-O	UT	NIP-954	UT-84
01-002-011-01 through 01-002-011-32	CEDM Upper Tube Weld #66 through #97	N/A	B-O	UT	NIP-954	UT-84

N/A NOT APPLICABLE
(H) DURING HYDROTEST

Note: Any welds appearing on the reference drawing, but not in the zone tables, were done in the shop.

REVISION: 2

C-E 0090285 (Rev. 7/80)

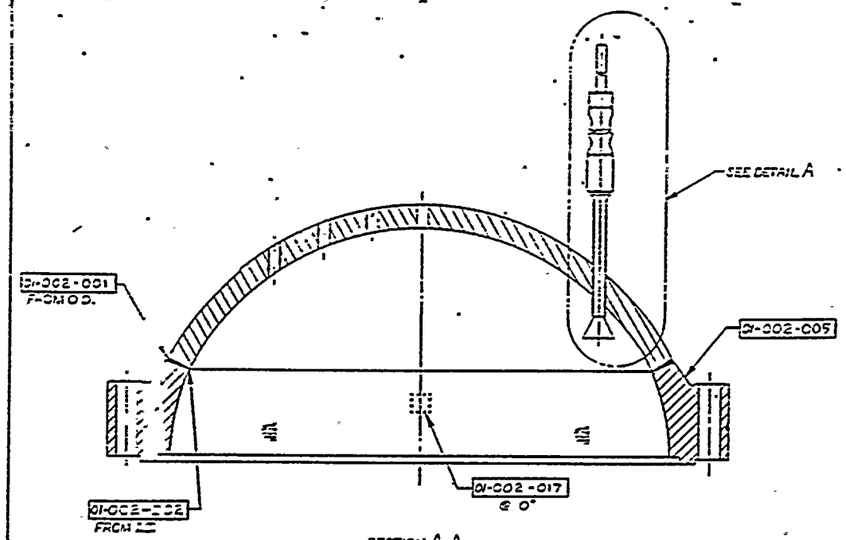

SECTION A-A
SCALE: 3/4"=1'-0"

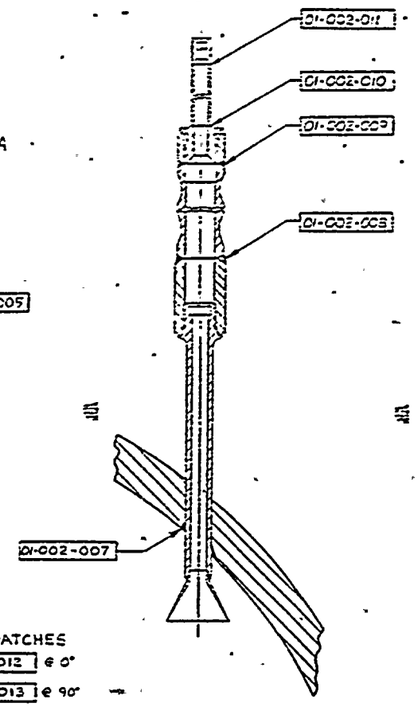

DETAIL A
SCALE: 1/2"=1'-0"

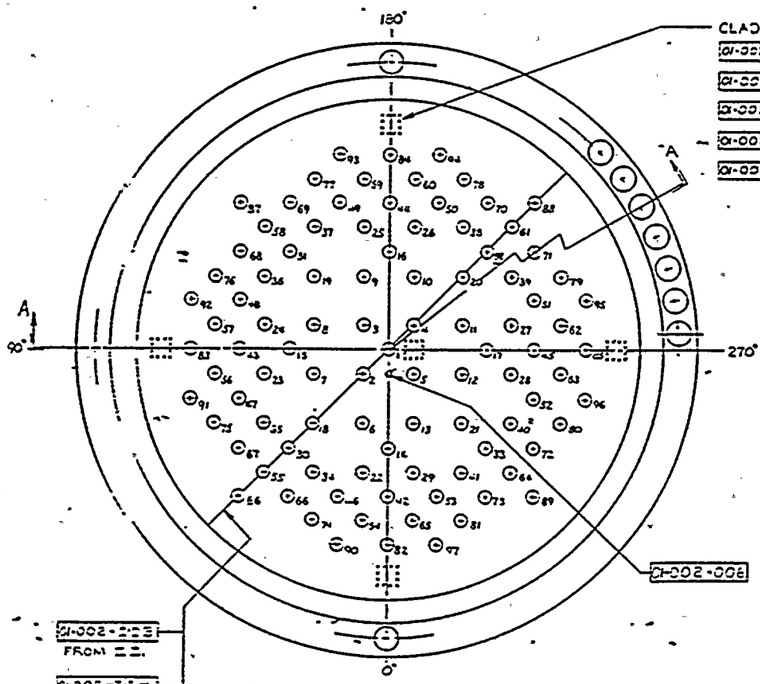

CLOSURE HEAD
TOP VIEW
SCALE: 3/4"=1'-0"

01-002-006	01-002-007	01-002-008	01-002-009
[illegible]	[illegible]	[illegible]	[illegible]

CEDM WELD DESIGNATIONS

02-002-007	02-002-007	02-002-007
[illegible]	[illegible]	[illegible]

REFERENCE DRAWINGS
(COMBUSTION ENG.)

E-78173-101-001	REV 03
E-78173-101-003	REV 00
E-78173-102-001	REV 06
E-78173-101-002	REV 00
E-78173-171-003	REV 01

E-14273-501-001

APPROVED
REFERENCE
DESIGN

UNIT 1 [illegible]
CLOSURE HEAD
WELD DESIGNATIONS

POWER SYSTEMS
COMBUSTION ENGINEERING, INC.

ZONE 3 CLASS 1
PROGRAM PLAN

DOCUMENT NO.: TR-ESS-069
REFERENCE DRAWING NO.: E-14273-501-013 Rev. 01
TITLE: STEAM GENERATOR #1 - PRIMARY SIDE

AREA DESIGNATION	AREA DESCRIPTION	MANUFACTURER'S OR INSTALLER'S WELD NUMBER	EXAMINATION CATEGORY IWB-2500	EXAMINATION METHOD IWB-2600	EXAMINATION PROCEDURE NUMBER	CALIBRATION BLOCK NO.
01-003-017	Stay Base-to-Stay Cylinder Weld	302-252	B-B	UT	9878-ISI-056	UT-27
01-003-018	Stay Cylinder-to-Stay Cylinder Extension Weld	1604-271	B-B	UT	9878-ISI-056	UT-27
01-003-019	Stay Cylinder Extension-to-Tube Sheet Weld	204-246	B-B	UT	9878-ISI-056	UT-27
01-003-020	Primary Instrument Nozzle at 21 Degrees	1711-271A	B-P	Vis. (H)	525115-ESS-091	N/A
01-003-021	Primary Instrument Nozzle at 33 Degrees	1711-271B	B-P	Vis. (H)	525115-ESS-091	N/A
01-003-022	Primary Instrument Nozzle at 327 Degrees	1711-271C	B-P	Vis. (H)	525115-ESS-091	N/A
01-003-023	Primary Instrument Nozzle at 339 Degrees	1711-271D	B-P	Vis. (H)	525115-ESS-091	N/A

N/A NOT APPLICABLE
(H) DURING HYDROTEST

Note: Any welds appearing on the reference drawing, but not in the zone tables, were done in the shop.

REVISION: 2

C-E 0090285 (Rev. 7/80)

POWER SYSTEMS
COMBUSTION ENGINEERING, INC.

ZONE 3 CLASS 1
PROGRAM PLAN

DOCUMENT NO.: TR-ESS-069
REFERENCE DRAWING NO.: E-14273-501-013 Rev. 01
TITLE: STEAM GENERATOR #1 - PRIMARY SIDE

AREA DESIGNATION	AREA DESCRIPTION	MANUFACTURER'S OR INSTALLER'S WELD NUMBER	EXAMINATION CATEGORY IWB-2500	EXAMINATION METHOD IWB-2600	EXAMINATION PROCEDURE NUMBER	CALIBRATION BLOCK NO.
01-003-024-01 through 01-003-024-20	Primary Manway Studs at 0 Degrees	N/A	B-G-2	Vis.	525115-ESS-091	N/A
01-003-025-01 through 01-003-025-20	Primary Manway Nuts at 0 Degrees	N/A	B-G-2	Vis.	525115-ESS-091	N/A
01-003-026-01 through 01-003-026-20	Primary Manway Studs at 112 Degrees - 30 Minutes	N/A	B-G-2	Vis.	525115-ESS-091	N/A
01-003-027-01 through 01-003-027-20	Primary Manway Nuts at 112 Degrees - 30 Minutes	N/A	B-G-2	Vis.	525115-ESS-091	N/A
01-003-028	Inlet Nozzle-to-Extension Piece Weld	201-258	B-J	UT	NIP-955	UT-22A
01-003-029	Outlet Nozzle-to-Extension Piece Weld at 45 Degrees	401-258A	B-J	UT	NIP-955	UT-26A

N/A NOT APPLICABLE
(H) DURING HYDROTEST

Note: Any welds appearing on the reference drawing, but not in the zone tables, were done in the shop.

REVISION: 2

C-E 0090285 (Rev. 7/80)

POWER SYSTEMS
COMBUSTION ENGINEERING, INC.

ZONE 3 CLASS 1
PROGRAM PLAN

DOCUMENT NO.: TR-ESS-069
REFERENCE DRAWING NO.: E-14273-501-013 Rev. 01
TITLE: STEAM GENERATOR #1 - PRIMARY SIDE

AREA DESIGNATION	AREA DESCRIPTION	MANUFACTURER'S OR INSTALLER'S WELD NUMBER	EXAMINATION CATEGORY IWB-2500	EXAMINATION METHOD IWB-2600	EXAMINATION PROCEDURE NUMBER	CALIBRATION BLOCK NO.
01-003-030	Outlet Nozzle-to-Extension Piece Weld at 315 Degrees	401-258B	B-J	UT	NIP-955	UT-26A
01-003-031	Manway at 0 Degrees (Weld and Mechanical Joint)	N/A	B-P	Vis. (H)	525115-ESS-091	N/A
01-003-032	Manway at 112 Degrees - 30 Minutes (Weld and Mechanical Joint)	N/A	B-P	Vis. (H)	525115-ESS-091	N/A

N/A NOT APPLICABLE
(H) DURING HYDROTEST

Note: Any welds appearing on the reference drawing, but not in the zone tables, were done in the shop.

REVISION: 2

C-E 0090285 (Rev. 7/80)

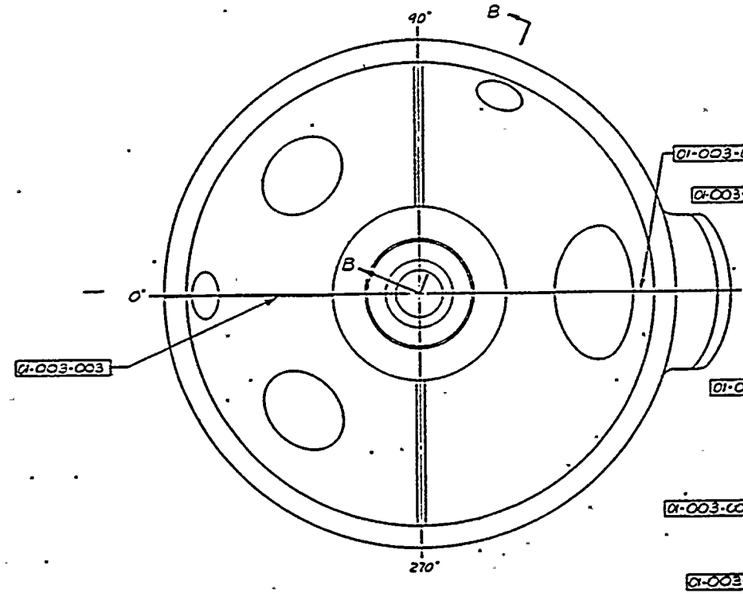

SECTION A-A

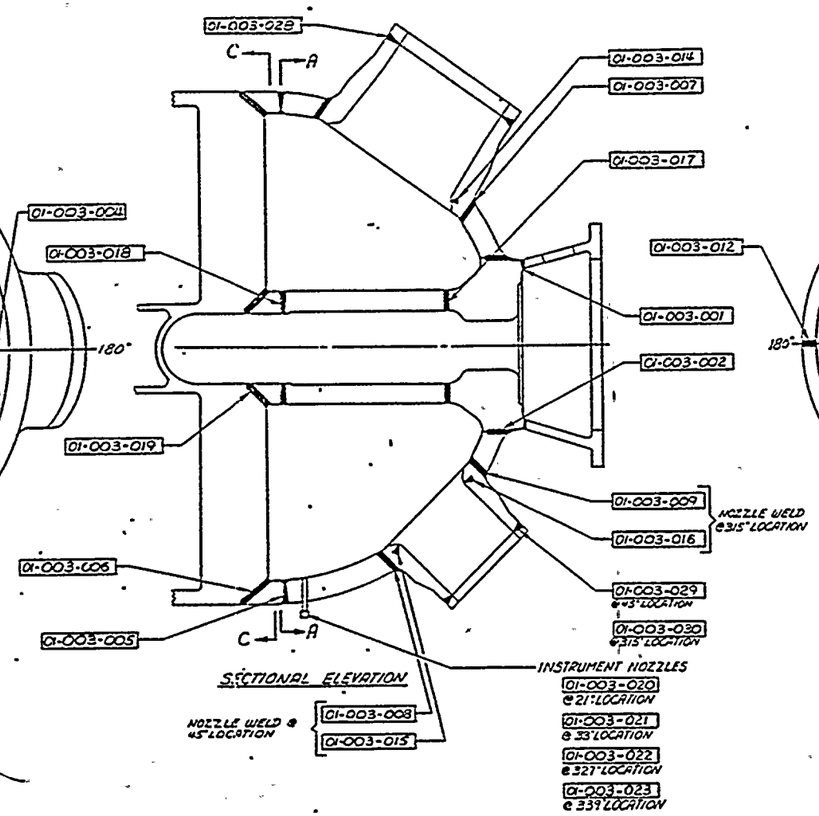

SECTIONAL ELEVATION

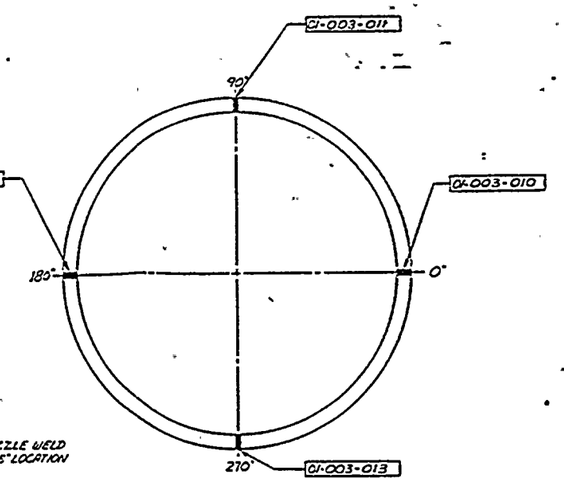

"SECTION C-C"
LOWER EXTENSION RING

REFERENCE DRAWING LIST-C.E.CHATT

- E-78273-246-002 REV 09
- E-78273-271-003 REV 04
- E-78273-271-004 REV 04
- E-78273-271-017 REV 0
- E-78273-271-027 REV 0

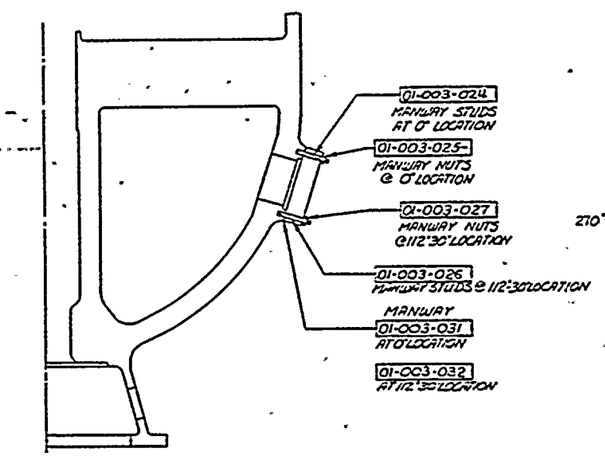

SECTION B-B
(SCALE - NONE)

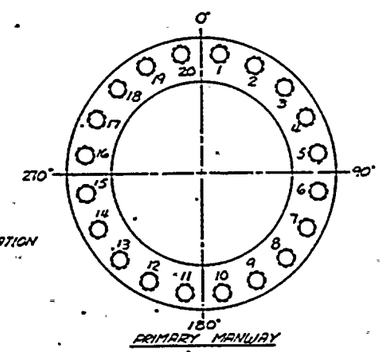

PRIMARY MANWAY

MANWAY @ 0° LOCATION
AREA DESIGNATION

NO.	STUD	NUT
1	01-003-024-1	01-003-025-1
2	-2	-2
3	-3	-3
4	-4	-4
5	-5	-5
6	-6	-6
7	-7	-7
8	-8	-8
9	-9	-9
10	-10	-10
11	-11	-11
12	-12	-12
13	-13	-13
14	-14	-14
15	-15	-15
16	-16	-16
17	-17	-17
18	-18	-18
19	-19	-19
20	01-003-024-20	01-003-025-20

MANWAY @ 112°30' LOCATION
AREA DESIGNATION

NO.	STUD	NUT
1	01-003-026-1	01-003-027-1
2	-2	-2
3	-3	-3
4	-4	-4
5	-5	-5
6	-6	-6
7	-7	-7
8	-8	-8
9	-9	-9
10	-10	-10
11	-11	-11
12	-12	-12
13	-13	-13
14	-14	-14
15	-15	-15
16	-16	-16
17	-17	-17
18	-18	-18
19	-19	-19
20	01-003-026-20	01-003-027-20

E-14273-501-013
01

APPROVED
REFERENCE
DESIGN

REV	DESCRIPTION	DATE	BY	CHK	APP
01	APPROVED REFERENCE DESIGN PER CHANGE REQ No 14273-100				

COMPANY NO. ALCTY

DRAWN BY MASCHOWITZ 12-1-77
CHECKED
APPROVED
SCALE NONE
DO NOT SCALE DRAWING

COMBUSTION ENGINEERING

ARIZONA NUCLEAR POWER PROJECT
PALO VERDE NUCLEAR
GENERATING STATION NO. 1

UNIT 1 - ZONE 3
STEAM GENERATOR #1
I.E.D. DESIGNATIONS

E-14273-501-013 01

525115

POWER SYSTEMS
COMBUSTION ENGINEERING, INC.

ZONE 4 CLASS 1
PROGRAM PLAN

DOCUMENT NO.: TR-ESS-069
REFERENCE DRAWING NO.: E-14273-501-014 Rev. 01
TITLE: STEAM GENERATOR #2 - PRIMARY SIDE

AREA DESIGNATION	AREA DESCRIPTION	MANUFACTURER'S OR INSTALLER'S WELD NUMBER	EXAMINATION CATEGORY IWB-2500	EXAMINATION METHOD IWB-2600	EXAMINATION PROCEDURE NUMBER	CALIBRATION BLOCK NO.
01-004-017	Stay Base-to-Stay Cylinder Weld	302-252	B-B	UT	9878-ISI-056	UT-27
01-004-018	Stay Cylinder-to-Stay Cylinder Extension Weld	1604-271	B-B	UT	9878-ISI-056	UT-27
01-004-019	Stay Cylinder Extension-to-Tube Sheet Weld	204-246	B-B	UT	9878-ISI-056	UT-27
01-004-020	Primary Instrument Nozzle at 21 Degrees	1711-271A	B-P	Vis. (H)	525115-ESS-091	N/A
01-004-021	Primary Instrument Nozzle at 33 Degrees	1711-271B	B-P	Vis. (H)	525115-ESS-091	N/A
01-004-022	Primary Instrument Nozzle at 327 Degrees	1711-271C	B-P	Vis. (H)	525115-ESS-091	N/A
01-004-023	Primary Instrument Nozzle at 339 Degrees	1711-271D	B-P	Vis. (H)	525115-ESS-091	N/A

N/A NOT APPLICABLE
(H) DURING HYDROTEST

Note: Any welds appearing on the reference drawing, but not in the zone tables, were done in the shop.

REVISION: 2

C-E 0090285 (Rev. 7/80)

POWER SYSTEMS
COMBUSTION ENGINEERING, INC.

ZONE 4 CLASS 1
PROGRAM PLAN

DOCUMENT NO.: TR-ESS-069
REFERENCE DRAWING NO.: E-14273-501-014 Rev. 01
TITLE: STEAM GENERATOR #2 - PRIMARY SIDE

AREA DESIGNATION	AREA DESCRIPTION	MANUFACTURER'S OR INSTALLER'S WELD NUMBER	EXAMINATION CATEGORY IWB-2500	EXAMINATION METHOD IWB-2600	EXAMINATION PROCEDURE NUMBER	CALIBRATION BLOCK NO.
01-004-024-01 through 01-004-024-20	Primary Manway Studs at 0 Degrees	N/A	B-G-2	Vis.	525115-ESS-091	N/A
01-004-025-01 through 01-004-025-20	Primary Manway Nuts at 0 Degrees	N/A	B-G-2	Vis.	525115-ESS-091	N/A
01-004-026-01 through 01-004-026-20	Primary Manway Studs at 112 Degrees - 30 Minutes	N/A	B-G-2	Vis.	525115-ESS-091	N/A
01-004-027-01 through 01-004-027-20	Primary Manway Nuts at 112 Degrees - 30 Minutes	N/A	B-G-2	Vis.	525115-ESS-091	N/A
01-004-028	Inlet Nozzle-to-Extension Piece Weld	201-258	B-J	UT	NIP-955	UT-22A
01-004-029	Outlet Nozzle-to-Extension Piece Weld at 45 Degrees	401-258A	B-J	UT	NIP-955	UT-26A

N/A NOT APPLICABLE
(H) DURING HYDROTEST

Note: Any welds appearing on the reference drawing, but not in the zone tables, were done in the shop.

REVISION: 2

C-E 0090285 (Rev. 7/80)

POWER SYSTEMS
COMBUSTION ENGINEERING, INC.

ZONE 4 CLASS 1
PROGRAM PLAN

DOCUMENT NO.: TR-ESS-069
REFERENCE DRAWING NO.: E-14273-501-014 Rev. 01
TITLE: STEAM GENERATOR #2 - PRIMARY SIDE

AREA DESIGNATION	AREA DESCRIPTION	MANUFACTURER'S OR INSTALLER'S WELD NUMBER	EXAMINATION CATEGORY IWB-2500	EXAMINATION METHOD IWB-2600	EXAMINATION PROCEDURE NUMBER	CALIBRATION BLOCK NO.
01-004-030	Outlet Nozzle-to-Extension Piece Weld at 315 Degrees	401-258B	B-J	UT	NIP-955	UT-26A
01-004-031	Manway at 0 Degrees (Weld and Mechanical Joint)	N/A	B-P	Vis. (H)	525115-ESS-091	N/A
01-004-032	Manway at 112 Degrees - 30 Minutes (Weld and Mechanical Joint)	N/A	B-P	Vis. (H)	525115-ESS-091	N/A

N/A NOT APPLICABLE
(H) DURING HYDROTEST

Note: Any welds appearing on the reference drawing, but not in the zone tables, were done in the shop.

REVISION: 2

C-E 0090285 (Rev. 7/80)

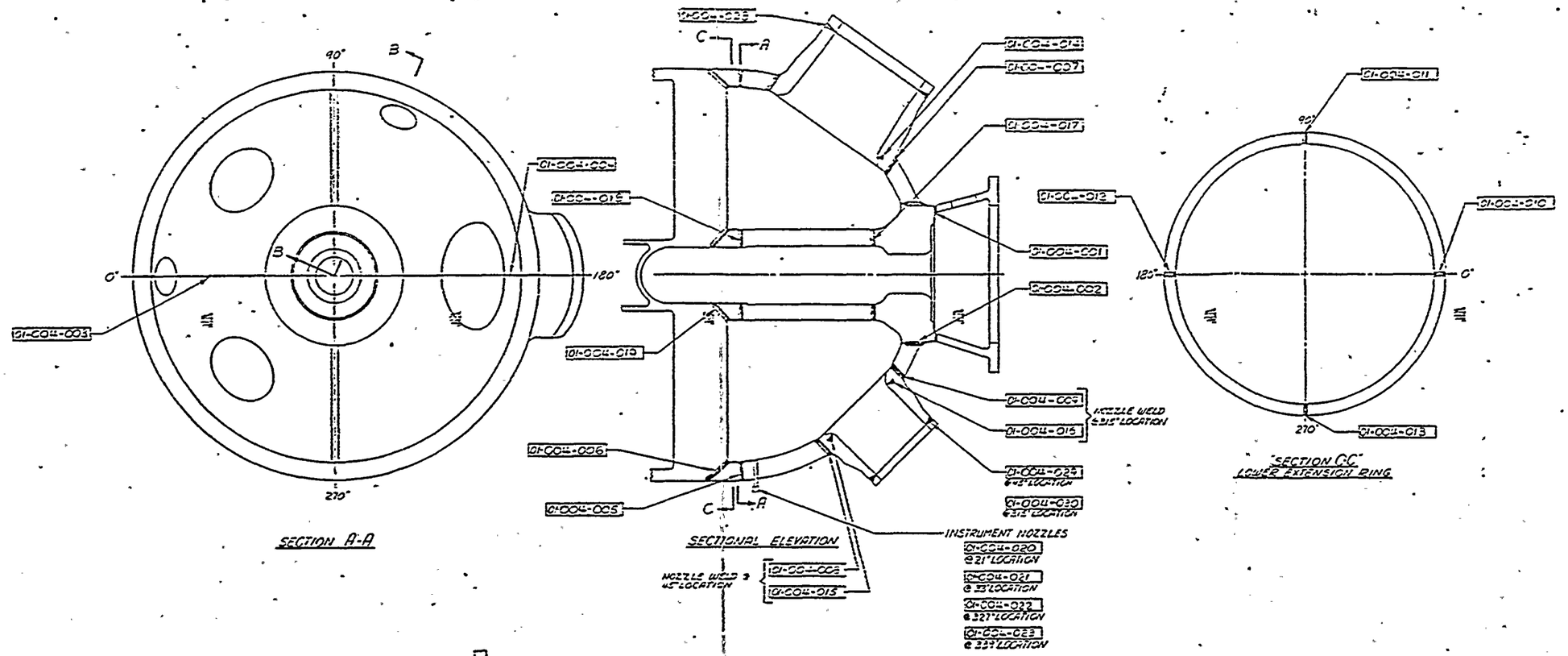

REFERENCE DRAWING LIST-CE CRIT

E-78273-246-002 REV 09
E-78273-271-003 REV 04
E-78273-271-004 REV 04
E-78273-271-017 REV 0
E-78273-271-027 REV 0

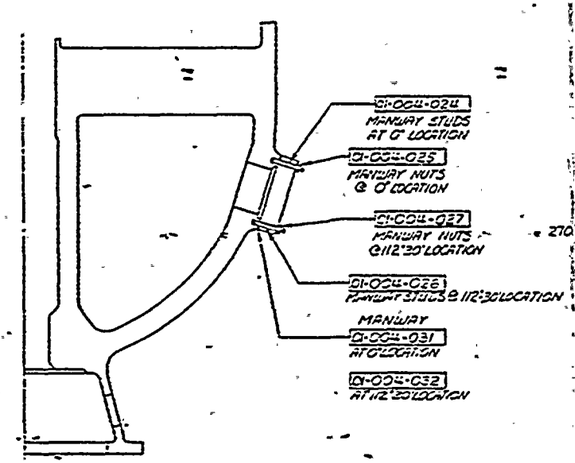

SECTION B-B
(SCALE: NONE)

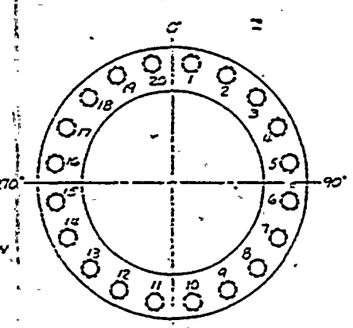

PRIMARY MANWAY

MANWAY @ 0° LOCATION
AREA DESIGNATION

NO.	STUD	NUT
1	01-004-024-1	01-004-025-1
2	-2	-2
3	-3	-3
4	-4	-4
5	-5	-5
6	-6	-6
7	-7	-7
8	-8	-8
9	-9	-9
10	-10	-10
11	-11	-11
12	-12	-12
13	-13	-13
14	-14	-14
15	-15	-15
16	-16	-16
17	-17	-17
18	-18	-18
19	-19	-19
20	-20	-20

MANWAY @ 112°30' LOCATION
AREA DESIGNATION

NO.	STUD	NUT
1	01-004-026-1	01-004-027-1
2	-2	-2
3	-3	-3
4	-4	-4
5	-5	-5
6	-6	-6
7	-7	-7
8	-8	-8
9	-9	-9
10	-10	-10
11	-11	-11
12	-12	-12
13	-13	-13
14	-14	-14
15	-15	-15
16	-16	-16
17	-17	-17
18	-18	-18
19	-19	-19
20	-20	-20

E-14273-SCI-014

APPROVED
REFERENCE
DESIGN

REV	DESCRIPTION	DATE	APPR.	CHK.
V	APPROVED REFERENCE DESIGN REV. RED AS NOTED			

UNIT 1 — ZONE 4
STEAM GENERATOR #2
WELD DESIGNATIONS
E-14273-SCI-014 V1

POWER SYSTEMS
COMBUSTION ENGINEERING, INC.

ZONE 5 CLASS 1

PROGRAM PLAN

DOCUMENT NO.: TR-ESS-069

REFERENCE DRAWING NO.: E-14273-501-016 Rev. 03

TITLE: PRESSURIZER

AREA DESIGNATION	AREA DESCRIPTION	MANUFACTURER'S OR INSTALLER'S WELD NUMBER	EXAMINATION CATEGORY IWB-2500	EXAMINATION METHOD IWB-2600	EXAMINATION PROCEDURE NUMBER	CALIBRATION BLOCK NO.
01-005-021	Primary Manway Bolting (20 Studs and 20 Nuts)	N/A	B-G-2	Vis.	525115-ESS-091	N/A
01-005-022	Bottom Head Instrument Nozzle at 0 Degrees	202-641A	B-P	Vis. (H)	525115-ESS-091	N/A
01-005-023	Bottom Head Instrument Nozzle at 180 Degrees	202-641B	B-P	Vis. (H)	525115-ESS-091	N/A
01-005-024	Temperature Nozzle at 0 Degrees	312-671	B-P	Vis. (H)	525115-ESS-091	N/A
01-005-025	Instrument Nozzle Top Head at 7 1/2 Degrees	308-671A	B-P	Vis. (H)	525115-ESS-091	N/A
01-005-026	Instrument Nozzle at 172 1/2 Degrees	308-671B	B-P	Vis. (H)	525115-ESS-091	N/A
01-005-027	Instrument Nozzle at 187 1/2 Degrees	308-671C	B-P	Vis. (H)	525115-ESS-091	N/A

N/A NOT APPLICABLE
(H) DURING HYDROTEST

Note: Any welds appearing on the reference drawing, but not in the zone tables, were done in the shop.

REVISION: 2

C-E 0090285 (Rev. 7/80)

POWER SYSTEMS
COMBUSTION ENGINEERING, INC.

ZONE 5 CLASS 1
PROGRAM PLAN

DOCUMENT NO.: TR-ESS-069
REFERENCE DRAWING NO.: E-14273-501-016 Rev. 03
TITLE: PRESSURIZER

AREA DESIGNATION	AREA DESCRIPTION	MANUFACTURER'S OR INSTALLER'S WELD NUMBER	EXAMINATION CATEGORY IWB-2500	EXAMINATION METHOD IWB-2600	EXAMINATION PROCEDURE NUMBER	CALIBRATION BLOCK NO.
01-005-028	Instrument Nozzle Top Head at 352 1/2 Degrees	308-671D	B-P	Vis. (H)	525115-ESS-091	N/A
01-005-029	Safety Nozzle-to-Safe End Weld at 45 Degrees	303-671A	B-F	UT PT	NIP-963 525115-ESS-093	UT-17 N/A
01-005-030	Safety Nozzle-to-Safe End Weld at 225 Degrees	303-671B	B-F	UT PT	NIP-963 525115-ESS-093	UT-17 N/A
01-005-031	Safety Nozzle-to-Safe End Weld at 270 Degrees	303-671C	B-F	UT PT	NIP-963 525115-ESS-093	UT-17 N/A
01-005-032	Safety Nozzle-to-Safe End Weld at 315 Degrees	303-671D	B-F	UT PT	NIP-963 525115-ESS-093	UT-17 N/A
01-005-033	Spray Nozzle-to-Safe End Weld	304-671	B-F	UT PT	NIP-963 525115-ESS-093	UT-19 N/A
01-005-034	Surge Nozzle-to-Safe End Weld	313-671	B-F	UT PT	NIP-963 525115-ESS-093	UT-16 N/A

N/A NOT APPLICABLE
(H) DURING HYDROTEST

Note: Any welds appearing on the reference drawing, but not in the zone tables, were done in the shop.

REVISION: 2

C-E 0090285 (Rev. 7/80)

COMBUSTION ENGINEERING, INC.

ZONE 5 CLASS 1

PROGRAM PLAN

DOCUMENT NO.: TR-ESS-069

REFERENCE DRAWING NO.: E-14273-501-016 Rev. 03

TITLE: PRESSURIZER

AREA DESIGNATION	AREA DESCRIPTION	MANUFACTURER'S OR INSTALLER'S WELD NUMBER	EXAMINATION CATEGORY IWB-2500	EXAMINATION METHOD IWB-2600	EXAMINATION PROCEDURE NUMBER	CALIBRATION BLOCK NO.
01-005-035	Primary Manway (Weld and Mechanical Joint)	105-601	B-P	Vis. (H)	525115-ESS-091	N/A
01-005-036-01	Heater A1	204-641-A1	B-E	Vis. (H)	525115-ESS-091	N/A
01-005-036-02	Heater A2	204-641-A2	B-E	Vis. (H)	525115-ESS-091	N/A
01-005-036-03	Heater A3	204-641-A3	B-E	Vis. (H)	525115-ESS-091	N/A
01-005-036-04	Heater A4	204-641-A4	B-E	Vis. (H)	525115-ESS-091	N/A
01-005-036-05	Heater A5	204-641-A5	B-E	Vis. (H)	525115-ESS-091	N/A
01-005-036-06	Heater A6	204-641-A6	B-E	Vis. (H)	525115-ESS-091	N/A

N/A NOT APPLICABLE
(H) DURING HYDROTEST

Note: Any welds appearing on the reference drawing, but not in the zone tables, were done in the shop.

REVISION: 2

C-E 0090285 (Rev. 7/80)

POWER SYSTEMS
COMBUSTION ENGINEERING, INC.

ZONE 5 CLASS 1
PROGRAM PLAN

DOCUMENT NO.: TR-ESS-069
REFERENCE DRAWING NO.: E-14273-501-016 Rev. 03
TITLE: PRESSURIZER

AREA DESIGNATION	AREA DESCRIPTION	MANUFACTURER'S OR INSTALLER'S WELD NUMBER	EXAMINATION CATEGORY IWB-2500	EXAMINATION METHOD IWB-2600	EXAMINATION PROCEDURE NUMBER	CALIBRATION BLOCK NO.
01-005-036-07	Heater A7	204-641-A7	B-E	Vis. (H)	525115-ESS-091	N/A
01-005-036-08	Heater A8	204-641-A8	B-E	Vis. (H)	525115-ESS-091	N/A
01-005-036-09	Heater A9	204-641-A9	B-E	Vis. (H)	525115-ESS-091	N/A
01-005-036-10	Heater A10	204-641-A10	B-E	Vis. (H)	525115-ESS-091	N/A
01-005-036-11	Heater A11	204-641-A11	B-E	Vis. (H)	525115-ESS-091	N/A
01-005-036-12	Heater A12	204-641-A12	B-E	Vis. (H)	525115-ESS-091	N/A
01-005-036-13	Heater A13	204-641-A13	B-E	Vis. (H)	525115-ESS-091	N/A

N/A NOT APPLICABLE
(H) DURING HYDROTEST

Note: Any welds appearing on the reference drawing, but not in the zone tables, were done in the shop.

REVISION: 2

PAGE:

C-E 0090285 (Rev. 7/80)

POWER SYSTEMS
COMBUSTION ENGINEERING, INC.

ZONE 5 CLASS 1
PROGRAM PLAN

DOCUMENT NO.: TR-ESS-069

REFERENCE DRAWING NO.: E-14273-501-016 Rev. 03

TITLE: PRESSURIZER

AREA DESIGNATION	AREA DESCRIPTION	MANUFACTURER'S OR INSTALLER'S WELD NUMBER	EXAMINATION CATEGORY IWB-2500	EXAMINATION METHOD IWB-2600	EXAMINATION PROCEDURE NUMBER	CALIBRATION BLOCK NO.
01-005-036-14	Heater A14	204-641-A14	B-E	Vis. (H)	525115-ESS-091	N/A
01-005-036-15	Heater A15	204-641-A15	B-E	Vis. (H)	525115-ESS-091	N/A
01-005-036-16	Heater A16	204-641-A16	B-E	Vis. (H)	525115-ESS-091	N/A
01-005-036-17	Heater A17	204-641-A17	B-E	Vis. (H)	525115-ESS-091	N/A
01-005-036-18	Heater A18	204-641-A18	B-E	Vis. (H)	525115-ESS-091	N/A
01-005-036-19	Heater B1	204-641-B1	B-E	Vis. (H)	525115-ESS-091	N/A
01-005-036-20	Heater B2	204-641-B2	B-E	Vis. (H)	525115-ESS-091	N/A

N/A NOT APPLICABLE
(H) DURING HYDROTEST

Note: Any welds appearing on the reference drawing, but not in the zone tables, were done in the shop.

REVISION: 2

C-E 0090285 (Rev. 7/80)

POWER SYSTEMS
COMBUSTION ENGINEERING, INC.

ZONE 5 CLASS 1
PROGRAM PLAN

DOCUMENT NO.: TR-ESS-069
REFERENCE DRAWING NO.: E-14273-501-016 Rev. 03
TITLE: PRESSURIZER

AREA DESIGNATION	AREA DESCRIPTION	MANUFACTURER'S OR INSTALLER'S WELD NUMBER	EXAMINATION CATEGORY IWB-2500	EXAMINATION METHOD IWB-2600	EXAMINATION PROCEDURE NUMBER	CALIBRATION BLOCK NO.
01-005-036-21	Heater B3	204-641-B3	B-E	Vis. (H)	525115-ESS-091	N/A
01-005-036-22	Heater B4	204-641-B4	B-E	Vis. (H)	525115-ESS-091	N/A
01-005-036-23	Heater B5	204-641-B5	B-E	Vis. (H)	525115-ESS-091	N/A
01-005-036-24	Heater B6	204-641-B6	B-E	Vis. (H)	525115-ESS-091	N/A
01-005-036-25	Heater B7	204-641-B7	B-E	Vis. (H)	525115-ESS-091	N/A
01-005-036-26	Heater B8	204-641-B8	B-E	Vis. (H)	525115-ESS-091	N/A
01-005-036-27	Heater B9	204-641-B9	B-E	Vis. (H)	525115-ESS-091	N/A

N/A NOT APPLICABLE
(H) DURING HYDROTEST

Note: Any welds appearing on the reference drawing, but not in the zone tables, were done in the shop.

REVISION: 2

C-E 0090285 (Rev. 7/80)

POWER SYSTEMS
COMBUSTION ENGINEERING, INC.

ZONE 5 CLASS 1
PROGRAM PLAN

DOCUMENT NO.: TR-ESS-069
REFERENCE DRAWING NO.: E-14273-501-016 Rev. 03
TITLE: PRESSURIZER

AREA DESIGNATION	AREA DESCRIPTION	MANUFACTURER'S OR INSTALLER'S WELD NUMBER	EXAMINATION CATEGORY IWB-2500	EXAMINATION METHOD IWB-2600	EXAMINATION PROCEDURE NUMBER	CALIBRATION BLOCK NO.
01-005-036-28	Heater B10	204-641-B10	B-E	Vis. (H)	525115-ESS-091	N/A
01-005-036-29	Heater B11	204-641-B11	B-E	Vis. (H)	525115-ESS-091	N/A
01-005-036-30	Heater B12	204-641-B12	B-E	Vis. (H)	525115-ESS-091	N/A
01-005-036-31	Heater B13	204-641-B13	B-E	Vis. (H)	525115-ESS-091	N/A
01-005-036-32	Heater B14	204-641-B14	B-E	Vis. (H)	525115-ESS-091	N/A
01-005-036-33	Heater B15	204-641-B15	B-E	Vis. (H)	525115-ESS-091	N/A
01-005-036-34	Heater B16	204-641-B16	B-E	Vis. (H)	525115-ESS-091	N/A

N/A NOT APPLICABLE
(H) DURING HYDROTEST

Note: Any welds appearing on the reference drawing, but not in the zone tables, were done in the shop.

REVISION: 2

C-E 0090285 (Rev. 7/80)

POWER SYSTEMS
COMBUSTION ENGINEERING, INC.

ZONE 5 CLASS 1
PROGRAM PLAN

DOCUMENT NO.: TR-ESS-069

REFERENCE DRAWING NO.: E-14273-501-016 Rev. 03

TITLE: PRESSURIZER

AREA DESIGNATION	AREA DESCRIPTION	MANUFACTURER'S OR INSTALLER'S WELD NUMBER	EXAMINATION CATEGORY IWB-2500	EXAMINATION METHOD IWB-2600	EXAMINATION PROCEDURE NUMBER	CALIBRATION BLOCK NO.
01-005-036-35	Heater B17	204-641-B17	B-E	Vis. (H)	525115-ESS-091	N/A
01-005-036-36	Heater B18	204-641-B18	B-E	Vis. (H)	525115-ESS-091	N/A
01-005-037	Clad Patch (Near Manway)	N/A	B-I-2	Vis.	525115-ESS-091	N/A

N/A NOT APPLICABLE
(H) DURING HYDROTEST

Note: Any welds appearing on the reference drawing, but not in the zone tables, were done in the shop.

REVISION: 2

C-E 0090285 (Rev. 7/80)

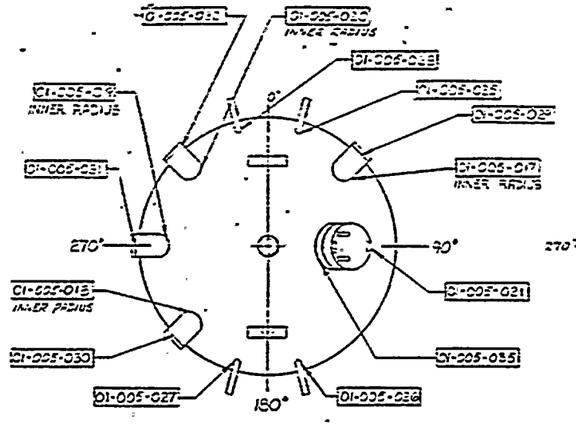

TOP HEAD PENETRATIONS
VIEW D-D

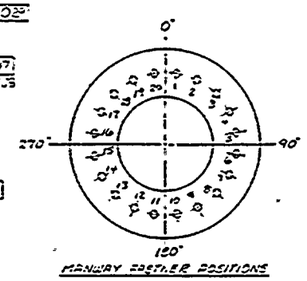

PRIMARY HEATER POSITIONS

HEATER CONNECTION WELD DESIGNATIONS			
A1-01-005-038-01 A3	C1-005-038-13	5°	01-005-038-23
A21	-02 A4	-14 35	-25
A31	-03 A3	-15 34	-27
A41	-04 A5	-16 35	-29
A51	-05 A2	-17 34	-29
A61	-06 A5	-18 35	-30
A71	-07 B1	-19 B5	-31
A81	-08 B5	-20 B4	-32
A91	-09 B4	-21 B5	-33
A10	-10 B2	-22 B6	-34
A11	-11 B5	-23 B7	-35
A12	-12 B6	-24 B8	-36

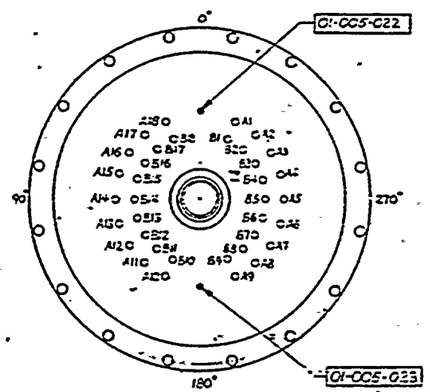

HEATER CONNECTIONS
VIEW E-E

REFERENCE DWG LIST - C.E. CHART
E-78373-601-001 REV 04
E-78373-651-001 REV 02
E-78373-622-001 REV 03
E-78373-621-001 REV 01
E-78373-621-001 REV 0
E-78373-671-002 REV 0
E-78373-671-001 REV 01
E-78373-641-002 REV 01

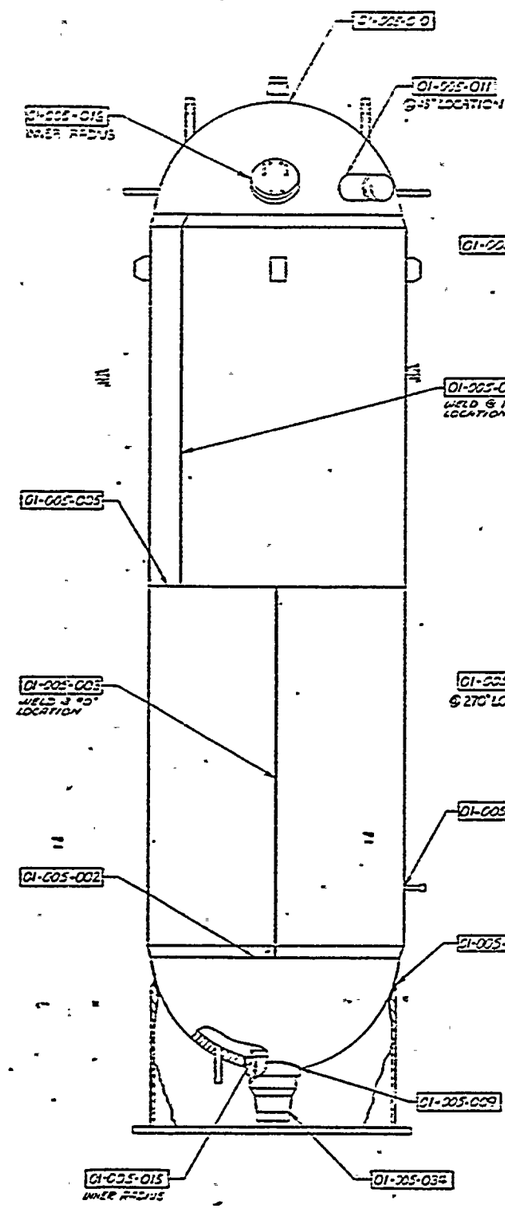

90° SIDE

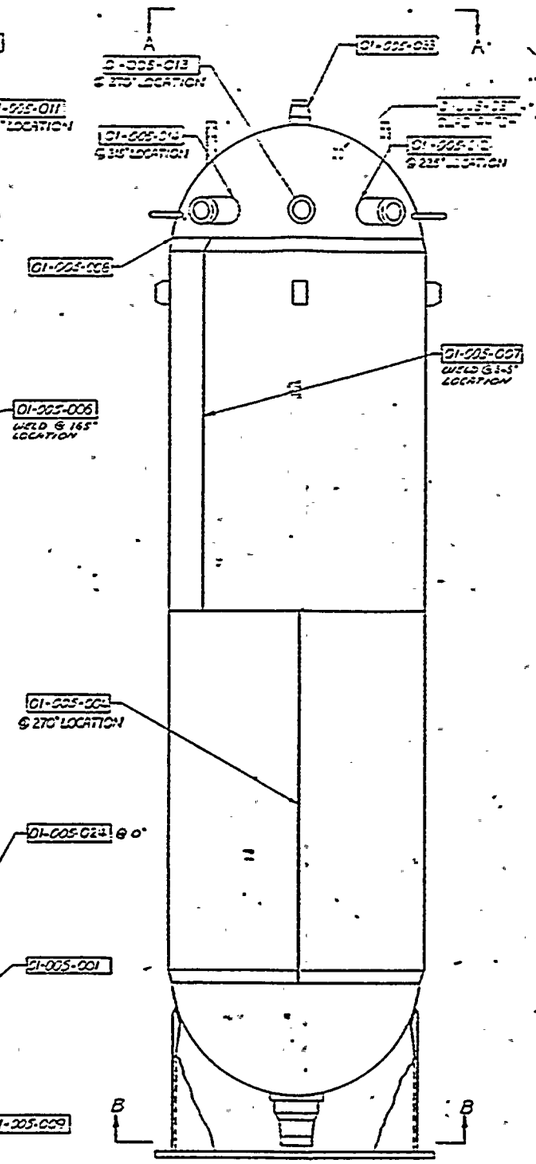

270° SIDE

E-14273-501-015

APPROVED
REFERENCE
DESIGN

ZONE 005
PRESSURIZER
WELD DESIGNATIONS

E-14273-501-0 6

COMBUSTION ENGINEERING, INC.

ZONE 6 CLASS 1

PROGRAM PLAN

DOCUMENT NO.: TR-ESS-069

REFERENCE DRAWING NO.: C-14273-501-008 Rev. 01

TITLE: LOOP 1 REACTOR COOLANT PIPING HOT LEG

AREA DESIGNATION	AREA DESCRIPTION	MANUFACTURER'S OR INSTALLER'S WELD NUMBER	EXAMINATION CATEGORY IWB-2500	EXAMINATION METHOD IWB-2600	EXAMINATION PROCEDURE NUMBER	CALIBRATION BLOCK NO.
01-006-001	Steam Generator #1 Inlet Nozzle Extension Piece-to-Elbow Weld	RC-032-W-002	B-J	UT	NIP-955	UT-22A
01-006-002	Elbow Longitudinal Weld - Long (Note (1))	101-742A	B-J	UT	NIP-955	UT-22A
01-006-003	Elbow Longitudinal Weld - Short (Note (1))	101-742B	B-J	UT	NIP-955	UT-22A
01-006-005	Longitudinal Seam	N/A	B-J	UT	NIP-937	UT-22
01-006-006	Longitudinal Seam	N/A	B-J	UT	NIP-937	UT-22
01-006-007	Pipe-to-Reactor Vessel Outlet Nozzle Extension Piece Weld	RC-032-W-001	B-J	UT	NIP-955 NIP-937	UT-22A UT-22
01-006-010	Surge Nozzle-to-Safe End Weld	301-771	B-F	UT PT	NIP-963 525115-ESS-093	UT-16 N/A
01-006-011	Shutdown Cooling Nozzle-to-Safe End Weld	302-771	B-F	UT PT	NIP-963 525115-ESS-093	UT-15 N/A

N/A NOT APPLICABLE
(H) DURING HYDROTEST

Note: Any welds appearing on the reference drawing, but not in the zone tables, were done in the shop.

Note (1): 0 degree beam examination only, 45 degree and 60 degree examination completed during shop preservice inspection.

REVISION: 2

PAGE: V-6.1

C-E 0090285 (Rev. 7/80)

POWER SYSTEMS
COMBUSTION ENGINEERING, INC.

ZONE 6 CLASS 1
PROGRAM PLAN

DOCUMENT NO.: TR-ESS-069
REFERENCE DRAWING NO.: C-14273-501-008 Rev. 01
TITLE: LOOP 1 REACTOR COOLANT PIPING HOT LEG

AREA DESIGNATION	AREA DESCRIPTION	MANUFACTURER'S OR INSTALLER'S WELD NUMBER	EXAMINATION CATEGORY IWB-2500	EXAMINATION METHOD IWB-2600	EXAMINATION PROCEDURE NUMBER	CALIBRATION BLOCK NO.
01-006-012	RTD Nozzle-to-Pipe Weld	304-771A	B-P	Vis. (H)	525115-ESS-091	N/A
01-006-013	Instrument Nozzle-to-Pipe Weld	303-771A	B-P	Vis. (H)	525115-ESS-091	N/A
01-006-014	RTD Nozzle-to-Pipe Weld.	304-771B	B-P	Vis. (H)	525115-ESS-091	N/A
01-006-015	RTD Nozzle-to-Pipe Weld	304-771C	B-P	Vis. (H)	525115-ESS-091	N/A
01-006-016	Instrument Nozzle-to-Pipe Weld	303-771B	B-P	Vis. (H)	525115-ESS-091	N/A
01-006-017	RTD Nozzle-to-Pipe Weld	304-771D	B-P	Vis. (H)	525115-ESS-091	N/A
01-006-018	Instrument Nozzle-to-Pipe Weld	303-771C	B-P	Vis. (H)	525115-ESS-091	N/A

N/A NOT APPLICABLE
(H) DURING HYDROTEST

Note: Any welds appearing on the reference drawing, but not in the zone tables, were done in the shop.

REVISION: 2

C-E 0090285 (Rev. 7/80)

POWER SYSTEMS
COMBUSTION ENGINEERING, INC.

ZONE 6 CLASS 1
PROGRAM PLAN

DOCUMENT NO.: TR-ESS-069
REFERENCE DRAWING NO.: C-14273-501-008 Rev. 01
TITLE: LOOP 1 REACTOR COOLANT PIPING HOT LEG

AREA DESIGNATION	AREA DESCRIPTION	MANUFACTURER'S OR INSTALLER'S WELD NUMBER	EXAMINATION CATEGORY IWB-2500	EXAMINATION METHOD IWB-2600	EXAMINATION PROCEDURE NUMBER	CALIBRATION BLOCK NO.
01-006-019	RTD Nozzle-to-Pipe Weld	304-771E	B-P	Vis. (H)	525115-ESS-091	N/A
01-006-020	Instrument Nozzle-to-Pipe Weld	303-771D	B-P	Vis. (H)	525115-ESS-091	N/A
01-006-021	Instrument Nozzle-to-Pipe Weld	303-771E	B-P	Vis. (H)	525115-ESS-091	N/A

N/A NOT APPLICABLE
(H) DURING HYDROTEST

Note: Any welds appearing on the reference drawing, but not in the zone tables, were done in the shop.

REVISION: 2

C-E 0090285 (Rev. 7/80)

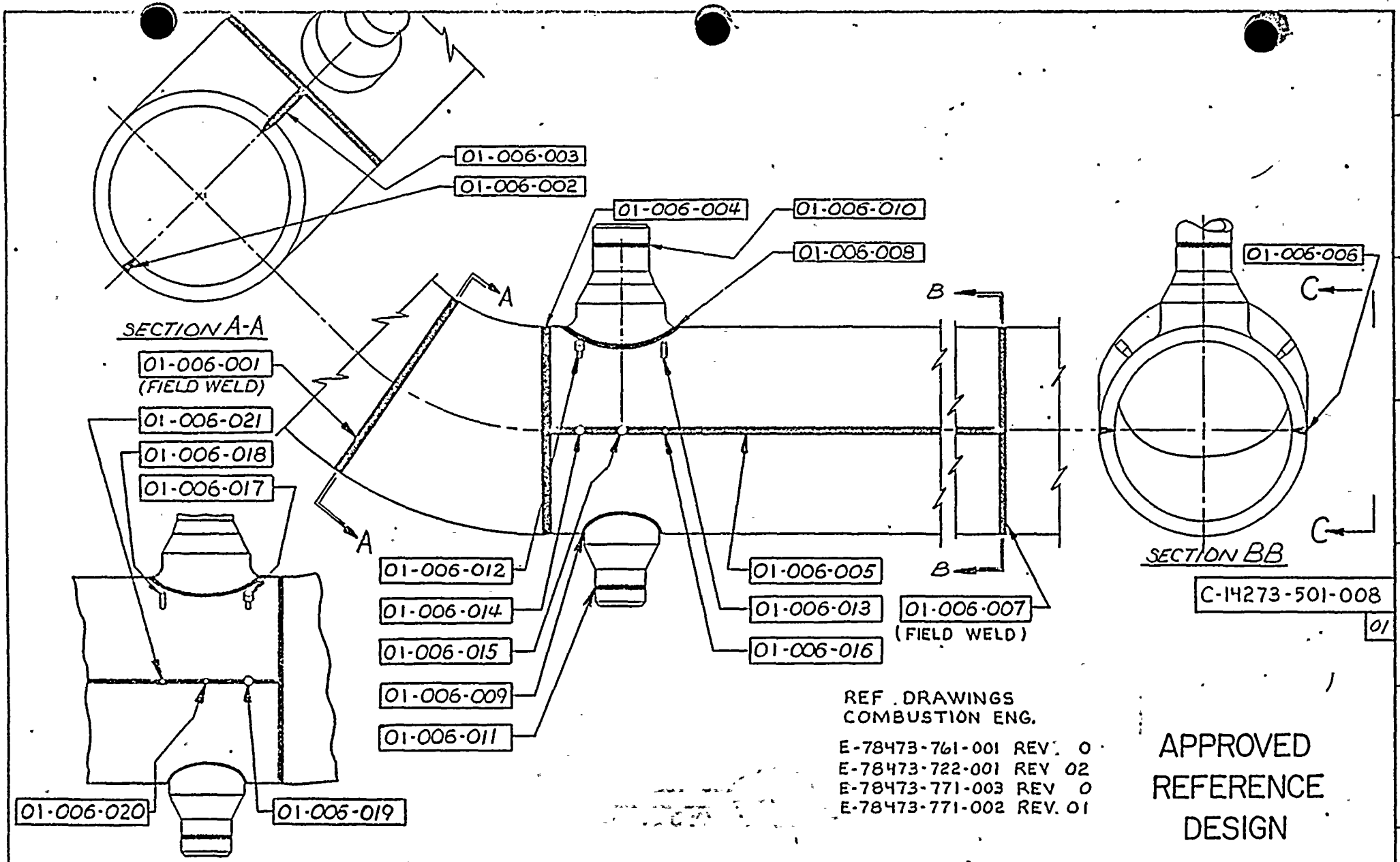

HOT LEG #1

REV.	DESCRIPTION	BY & DATE	CHK & DATE	ENG APPD	PROJ APPD
01	APPROVED REFERENCE DESIGN PER REV REQ No 14273-100	T.M. 12-13-77	12-15-77	12-15-77	

CONTRACT NO. 14273

		DATE
DRAWN BY. L. FRITZ		11-29-77
CHECKER		12-15-77
APPROVALS.		12-15-77
		12-15-77
		12/15/77

SCALE. 3/4"=1'-0" DO NOT SCALE DWG.

ARIZONA NUCLEAR POWER PROJECT
PALO VERDE NUCLEAR
GENERATING STATION #1

NEXT ASSY:
SUPERSEDES
COMPONENT CODE NO

COMBUSTION DIVISION

HOT LEG - ZONE 006
STEAM GENERATOR
#1 TO REACTOR VESSEL

C-14273-501-008 | 01

SHEET 1 OF 1 REV

POWER SYSTEMS
COMBUSTION ENGINEERING, INC.

ZONE 7 CLASS 1
PROGRAM PLAN

DOCUMENT NO.: TR-ESS-069
REFERENCE DRAWING NO.: C-14273-501-009 Rev. 01
TITLE: LOOP 2 REACTOR COOLANT PIPING HOT LEG

AREA DESIGNATION	AREA DESCRIPTION	MANUFACTURER'S OR INSTALLER'S WELD NUMBER	EXAMINATION CATEGORY IWB-2500	EXAMINATION METHOD IWB-2600	EXAMINATION PROCEDURE NUMBER	CALIBRATION BLOCK NO.
01-007-001	Steam Generator #2 Inlet Nozzle Extension Piece-to-Elbow Weld	RC-063-W-002	B-J	UT	NIP-955	UT-22A
01-007-005	Longitudinal Seam	N/A	B-J	UT	NIP-937	UT-22
01-007-006	Longitudinal Seam	N/A	B-J	UT	NIP-937	UT-22
01-007-007	Pipe-to-Reactor Vessel Outlet Nozzle Extension	RC-063-W-001	B-J	UT	NIP-955 NIP-937	UT-22A UT-22
01-007-009	Shutdown Cooling Nozzle-to-Safe End Weld	501-771	B-F	UT PT	NIP-963 525115-ESS-093	UT-15 N/A
01-007-010	RTD Nozzle-to-Pipe Weld	503-771A	B-P	Vis. (H)	525115-ESS-091	N/A
01-007-011	Instrument Nozzle-to-Pipe Weld	502-771A	B-P	Vis. (H)	525115-ESS-091	N/A

N/A NOT APPLICABLE
(H) DURING HYDROTEST

Note: Any welds appearing on the reference drawing, but not in the zone tables, were done in the shop.

REVISION: 2

PAGE:

C-E 0090285 (Rev. 7/80)

POWER SYSTEMS
COMBUSTION ENGINEERING, INC.

ZONE 7 CLASS 1
PROGRAM PLAN

DOCUMENT NO.: TR-ESS-069
REFERENCE DRAWING NO.: C-14273-501-009 Rev. 01
TITLE: LOOP 2 REACTOR COOLANT PIPING HOT LEG

AREA DESIGNATION	AREA DESCRIPTION	MANUFACTURER'S OR INSTALLER'S WELD NUMBER	EXAMINATION CATEGORY IWB-2500	EXAMINATION METHOD IWB-2600	EXAMINATION PROCEDURE NUMBER	CALIBRATION BLOCK NO.
01-007-012	RTD Nozzle-to-Pipe Weld	503-771B	B-P	Vis. (H)	525115-ESS-091	N/A
01-007-013	RTD Nozzle-to-Pipe Weld	503-771C	B-P	Vis. (H)	525115-ESS-091	N/A
01-007-014	Instrument Nozzle-to-Pipe Weld	502-771B	B-P	Vis. (H)	525115-ESS-091	N/A
01-007-015	Instrument Nozzle-to-Pipe Weld	502-771C	B-P	Vis. (H)	525115-ESS-091	N/A
01-007-016	RTD Nozzle-to-Pipe Weld	503-771D	B-P	Vis. (H)	525115-ESS-091	N/A
01-007-017	Instrument Nozzle-to-Pipe Weld	502-771D	B-P	Vis. (H)	525115-ESS-091	N/A
01-007-018	RTD Nozzle-to-Pipe Weld	503-771E	B-P	Vis. (H)	525115-ESS-091	N/A

N/A NOT APPLICABLE
(H) DURING HYDROTEST

Note: Any welds appearing on the reference drawing, but not in the zone tables, were done in the shop.

REVISION: 2

C-E 0090285 (Rev. 7/80)

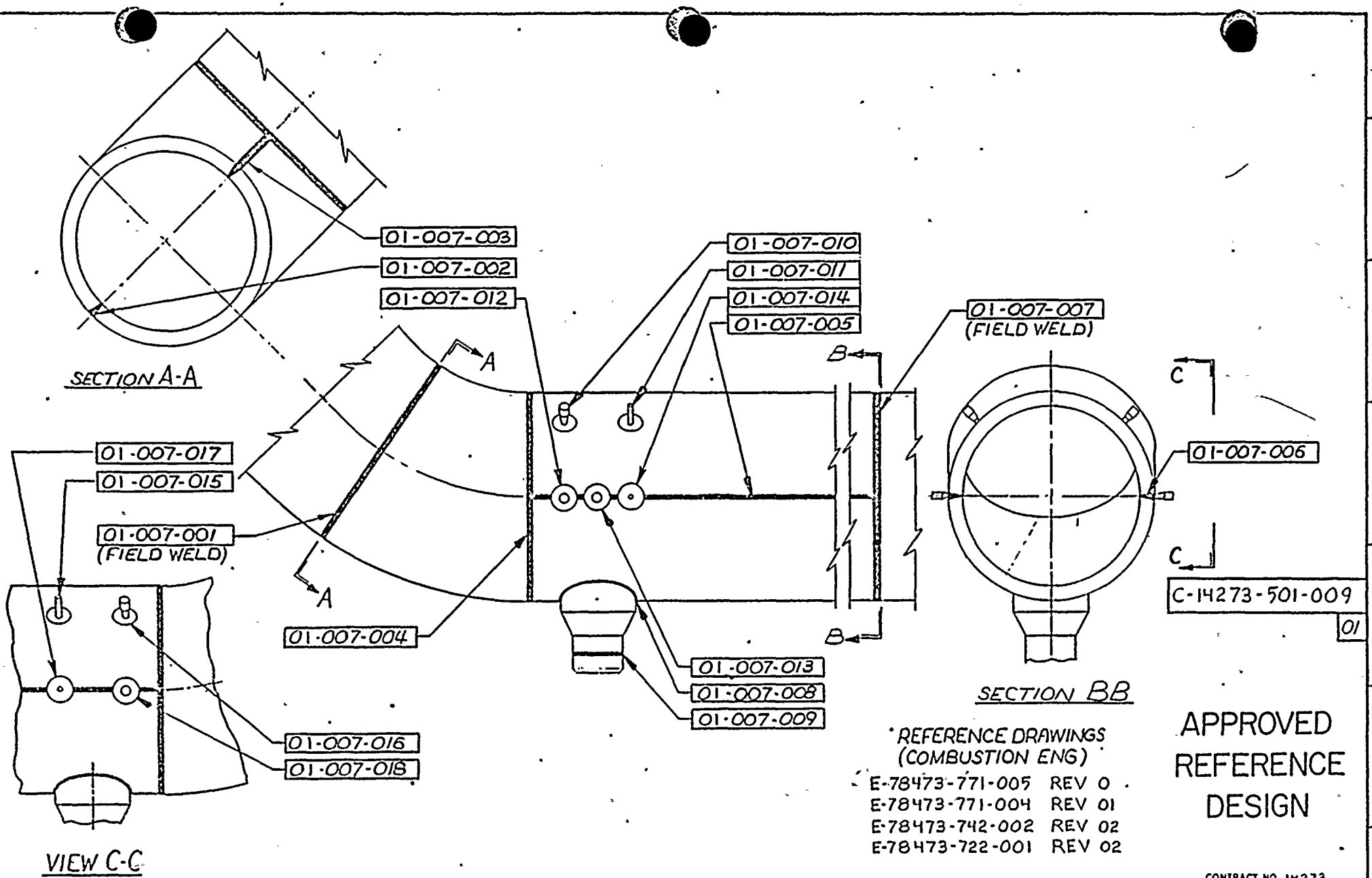

REFERENCE DRAWINGS
(COMBUSTION ENG)

E-78473-771-005 REV 0
E-78473-771-004 REV 01
E-78473-742-002 REV 02
E-78473-722-001 REV 02

APPROVED
REFERENCE
DESIGN

HOT LEG #2

REV	DESCRIPTION	BY & DATE	CHK & DATE	ENG APPD	PROJ APPD
01	APPROVED REFERENCE DESIGN PER REV REQ No 14273-100	T.H.			

CONTRACT NO. 14273

DRAWN BY L. FRITZ 11-29-77
CHECKED 12-15-77
APPROVALS 12-15-77
12-15-77
12/15/77

SCALE 3/4" = 1'-0" DO NOT SCALE DWG

ARIZONA NUCLEAR POWER PROJECT
PALO VERDE NUCLEAR
GENERATING STATION #1

NEXT ASSY.
SUPERSEDES.
COMPONENT CODE NO

COMBUSTION DIVISION

HOT LEG - ZONE 007
STEAM GENERATOR #2
TO REACTOR VESSEL

C-14273-501-009 01

SHEET 1 OF 1 REV

POWER SYSTEMS
COMBUSTION ENGINEERING, INC.

ZONE 8 CLASS 1

DOCUMENT NO.: TR-ESS-069 PROGRAM PLAN

REFERENCE DRAWING NO.: C-14273-501-003 Rev. 02 TITLE: LOOP 1A REACTOR COOLANT PIPING STEAM GENERATOR TO PUMP 1A

AREA DESIGNATION	AREA DESCRIPTION	MANUFACTURER'S OR INSTALLER'S WELD NUMBER	EXAMINATION CATEGORY IWB-2500	EXAMINATION METHOD IWB-2600	EXAMINATION PROCEDURE NUMBER	CALIBRATION BLOCK NO.
01-008-001	Pipe-to-Pump Suction Nozzle Weld	RC-033-W-004	B-J	UT	NIP-955	UT-26A
01-008-004	Elbow-to-Pipe Weld	RC-033-W-003	B-J	UT	NIP-955	UT-26A
01-008-013	Pipe-to-Elbow Weld	RC-033-W-002	B-J	UT	NIP-955	UT-26A UT-22A
01-008-016	Elbow-to-Steam Generator Nozzle Extension Piece Weld	RC-033-W-001	B-J	UT	NIP-955	UT-26A
01-008-018	Drain Nozzle-to-Safe End Weld	201-711	B-F	UT PT	NIP-963 525115-ESS-093	UT-33 N/A

N/A NOT APPLICABLE
(H) DURING HYDROTEST

Note: Any welds appearing on the reference drawing, but not in the zone tables, were done in the shop.

REVISION: 2

PAGE: V-8.1

C-E 0090285 (Rev. 7/80)

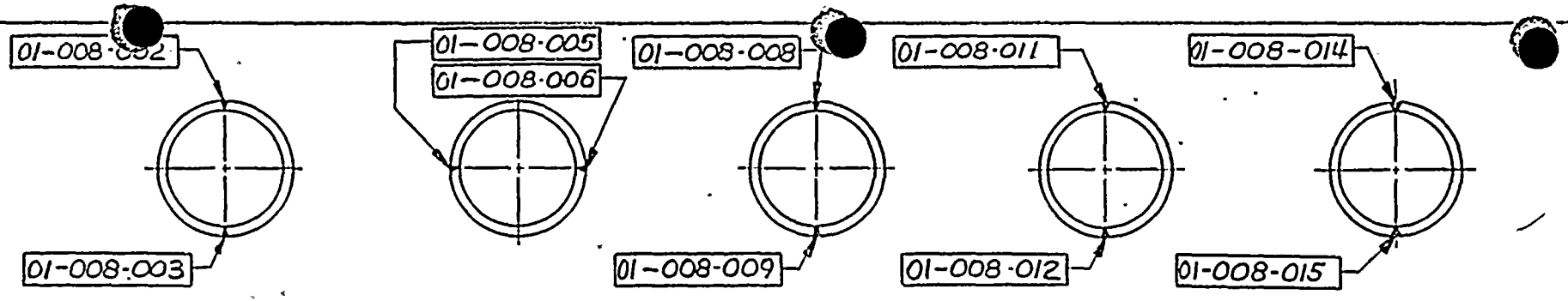

SECTION A-A SECTION B-B SECTION C-C SECTION D-D SECTION E-E

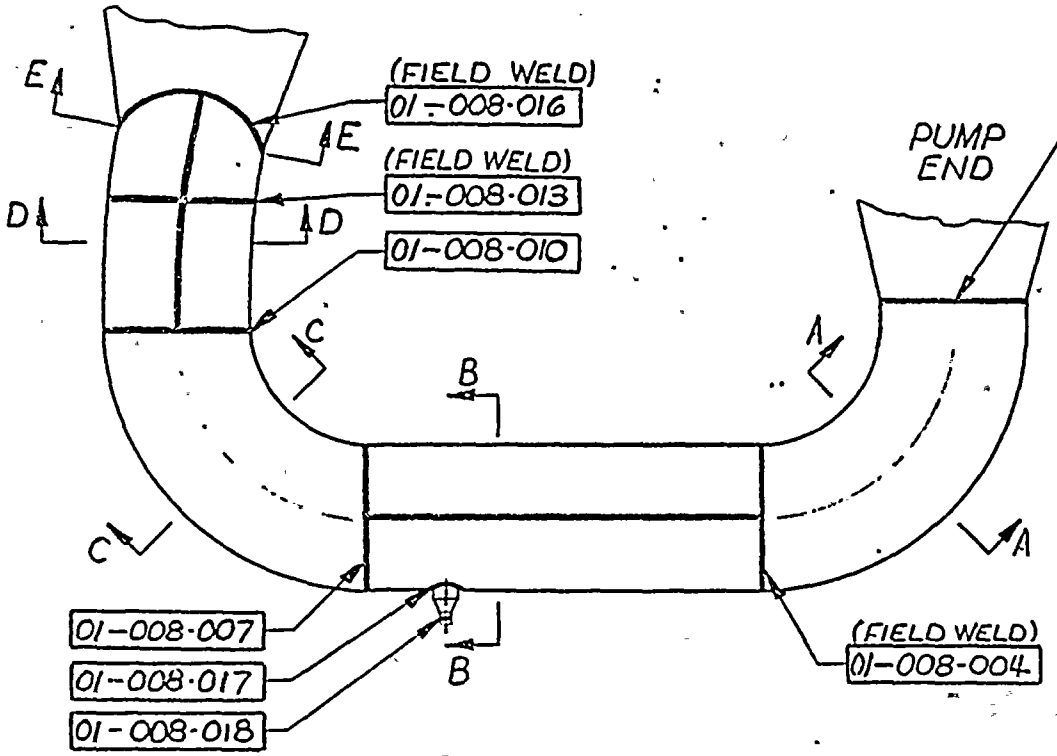

COLD LEG TO PUMP 1A

REFERENCE DRAWINGS
(COMBUSTION ENG)
E-78473-711-001 REV 0
E-78473-711-002 REV 0
E-78473-722-001 REV 02
E-78473-742-002 REV 02

C-14273-501-003
02

APPROVED
REFERENCE
DESIGN

CONTRACT NO. 14273

REV.	DESCRIPTION	BY & DATE	CHK. & DATE	ENG. & APPD.	PROJ. APPD.
01	APPROVED REFERENCE DESIGN RER REV REQ 14273-100	TM			
02	DELETED FIELD WELD FROM 01-008-010 PER REV REQ No 14273-73	T.M. 0376			

POWER SYSTEMS

This drawing is the property of C-E Power Systems. Combustion Engineering, Inc. and is not to be reproduced or used for furnish any information for anything not pertaining to Combustion Engineering, Inc. except when permitted by the agreement under which furnished.

NUCLEAR POWER SYSTEMS

ARIZONA NUCLEAR POWER PROJECT
PALO VERDE NUCLEAR
GENERATING STATION #1

DRAWN BY: MASLOSKI 11-28-77
CHECKED 12-12-77
APPROVALS 12-15-77
12-15-77
12/15/77

SCALE: DO NOT SCALE DWG

COLD LEG-ZONE 008
STEAM GENERATOR
#1 TO PUMP 1A

C-14273-501-003 02

NEXT ASSY.
SUPERSEDES
COMPONENT CODE NO.

POWER SYSTEMS
COMBUSTION ENGINEERING, INC.

ZONE 9 CLASS 1

DOCUMENT NO.: TR-ESS-069

PROGRAM PLAN

REFERENCE DRAWING NO.: C-14273-501-012 Rev. 01

TITLE: LOOP 1A REACTOR COOLANT PIPING PUMP 1A TO REACTOR VESSEL

AREA DESIGNATION	AREA DESCRIPTION	MANUFACTURER'S OR INSTALLER'S WELD NUMBER	EXAMINATION CATEGORY IWB-2500	EXAMINATION METHOD IWB-2600	EXAMINATION PROCEDURE NUMBER	CALIBRATION BLOCK NO.
01-009-001	Pump Extension Piece-to-Pipe Weld	RC-034-W-001	B-J	UT	NIP-955	UT-26A
01-009-005	Longitudinal Seam	N/A	B-J	UT	NIP-937	UT-22
01-009-006	Longitudinal Seam	N/A	B-J	UT	NIP-937	UT-22
01-009-007	Elbow-to-Reactor Vessel Nozzle Weld	RC-034-W-002	B-J	UT PT	NIP-955 NIP-937	UT-26A UT-22
01-009-010	Safety Injection Nozzle-to-Safe End Weld	201-741	B-F	UT PT	NIP-963 525115-ESS-093	UT-27A N/A
01-009-011	Spray Nozzle-to-Safe End Weld	202-741	B-F	UT PT	NIP-963 525115-ESS-093	UT-34 N/A
01-009-012	RTD Nozzle-to-Pipe Weld	203-741A	B-P	Vis. (H)	525115-ESS-091	N/A

N/A NOT APPLICABLE
(H) DURING HYDROTEST

Note: Any welds appearing on the reference drawing, but not in the zone tables, were done in the shop.

REVISION: 2

C-E 0090285 (Rev. 7/80)

POWER SYSTEMS
COMBUSTION ENGINEERING, INC.

ZONE 9 CLASS 1

DOCUMENT NO.: TR-ESS-069

PROGRAM PLAN LOOP 1A REACTOR COOLANT PIPING PUMP 1A TO REACTOR VESSEL

REFERENCE DRAWING NO.: C-14273-501-012 Rev. 01

TITLE:

AREA DESIGNATION	AREA DESCRIPTION	MANUFACTURER'S OR INSTALLER'S WELD NUMBER	EXAMINATION CATEGORY IWB-2500	EXAMINATION METHOD IWB-2600	EXAMINATION PROCEDURE NUMBER	CALIBRATION BLOCK NO.
01-009-013	RTD Nozzle-to-Pipe Weld	203-741B	B-P	Vis. (H)	525115-ESS-091	N/A
01-009-014	RTD Nozzle-to-Pipe Weld	203-741C	B-P	Vis. (H)	525115-ESS-091	N/A

N/A NOT APPLICABLE
(H) DURING HYDROTEST

Note: Any welds appearing on the reference drawing, but not in the zone tables, were done in the shop.

REVISION: 2

C-E 0090285 (Rev. 7/80)

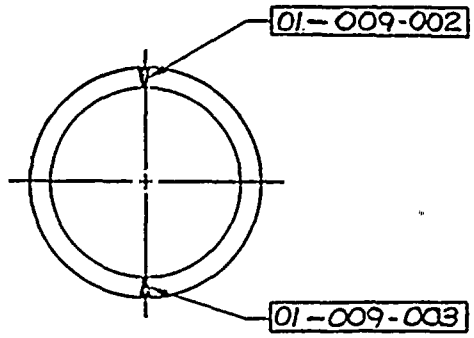

SECTION BB

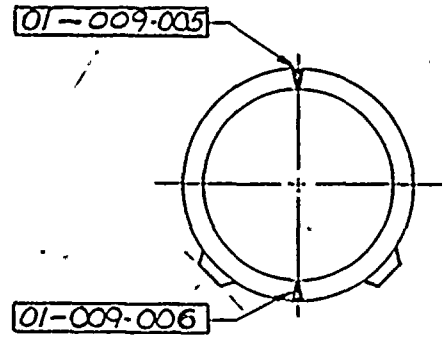

SECTION A-A.

REFERENCE DRAWINGS
(COMBUSTION ENG)

E-78473-741-001 REV 02
E-78473-741-002 REV 01
E-78473-722-001 REV 02
E-78473-742-002 REV 02

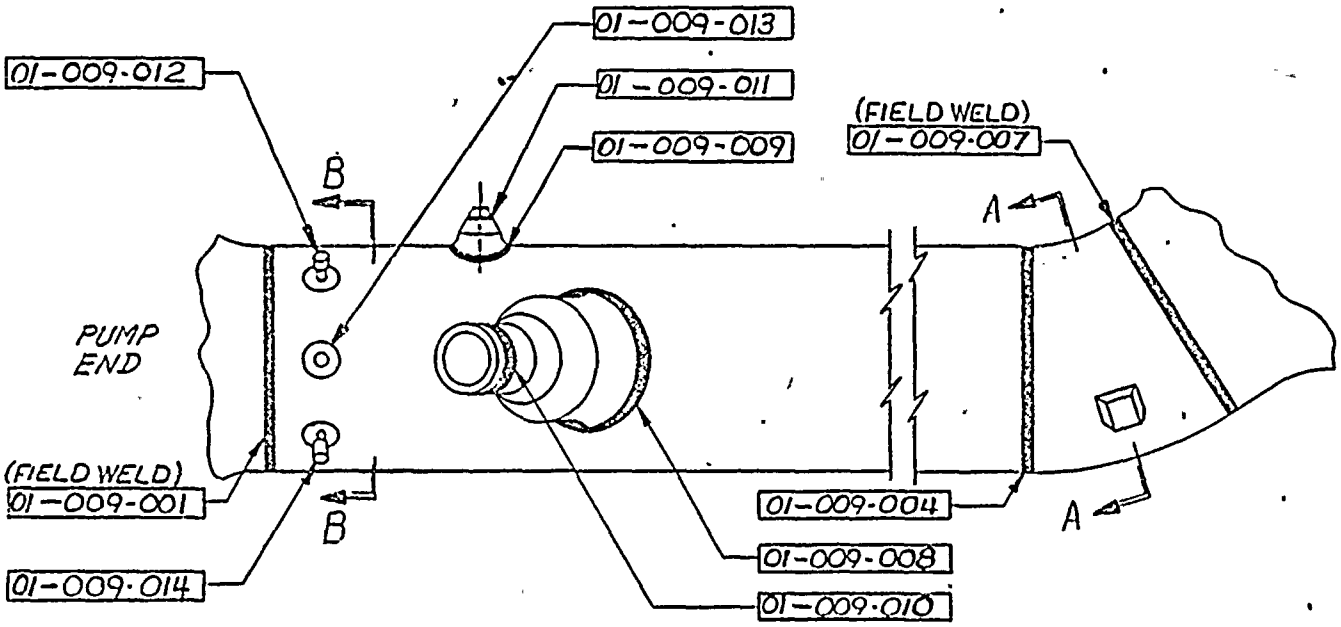

C-14273-501-012
01

APPROVED
REFERENCE
DESIGN

CONTRACT NO.. 14273

REV	DESCRIPTION	BY & DATE	CHK & DATE	ENG. APPD	PROJ APPD
01	APPROVED REFERENCE DESIGN PER REV REQ 14273-100	T.M. 12-17-77		EWP	

DRAWN BY. MASLOSKI 11-28-77
CHECKED 12-15-77
APPROVALS 12-15-77
11-15-77
11-14-77

SCALE: 3/8" = 1'-0" DO NOT SCALE DWG

ARIZONA NUCLEAR POWER PROJECT
PALO VERDE NUCLEAR
GENERATING STATION #1

NEXT ASSY.
SUPERSEDES
COMPONENT CODE NO

COMBUSTION DIVISION

COLD LEG-ZONE 009
PUMP 1A TO
REACTOR VESSEL

C-14273-501-012 | 01
SHEET OF REV

POWER SYSTEMS
COMBUSTION ENGINEERING, INC.

ZONE 10 CLASS 1

DOCUMENT NO.: TR-ESS-069

PROGRAM PLAN

REFERENCE DRAWING NO.: C-14273-501-005 Rev. 02

TITLE: LOOP 1B REACTOR COOLANT PIPING STEAM GENERATOR TO PUMP 1B

AREA DESIGNATION	AREA DESCRIPTION	MANUFACTURER'S OR INSTALLER'S WELD NUMBER	EXAMINATION CATEGORY IWB-2500	EXAMINATION METHOD IWB-2600	EXAMINATION PROCEDURE NUMBER	CALIBRATION BLOCK NO.
01-010-001	Pipe-to-Pump Suction Nozzle Weld	RC-030-W-004	B-J	UT	NIP-955	UT-26A
01-010-004	Elbow-to-Pipe Weld	RC-030-W-003	B-J	UT	NIP-955	UT-26A
01-010-013	Elbow-to-Pipe Weld	RC-030-W-002	B-J	UT	NIP-955	UT-26A
01-010-016	Pipe-to-Steam Generator Nozzle Extension Piece Weld	RC-030-W-001	B-J	UT	NIP-955	UT-26A
01-010-018	Drain Nozzle-to-Safe End Weld	201-711	B-F	UT PT	NIP-963 525115-ESS-093	UT-33 N/A

N/A NOT APPLICABLE
(H) DURING HYDROTEST

Note: Any welds appearing on the reference drawing, but not in the zone tables, were done in the shop.

REVISION: 2

PAGE: V-10.1

C-E 0090285 (Rev. 7/80)

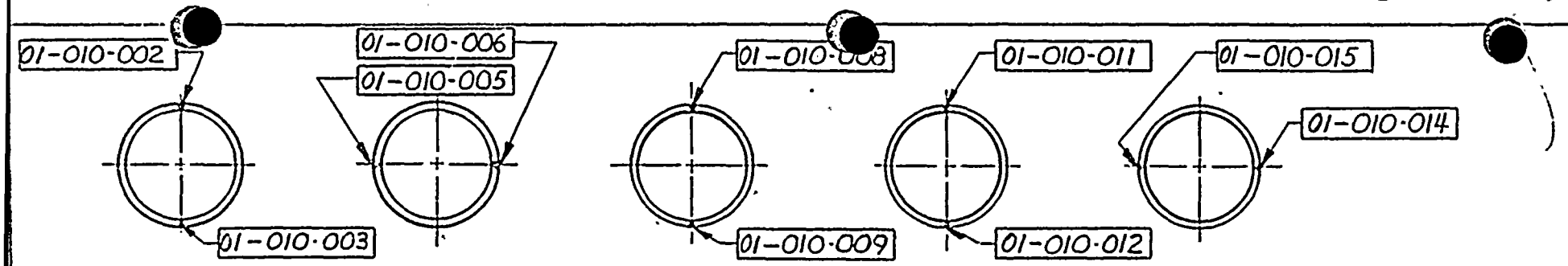

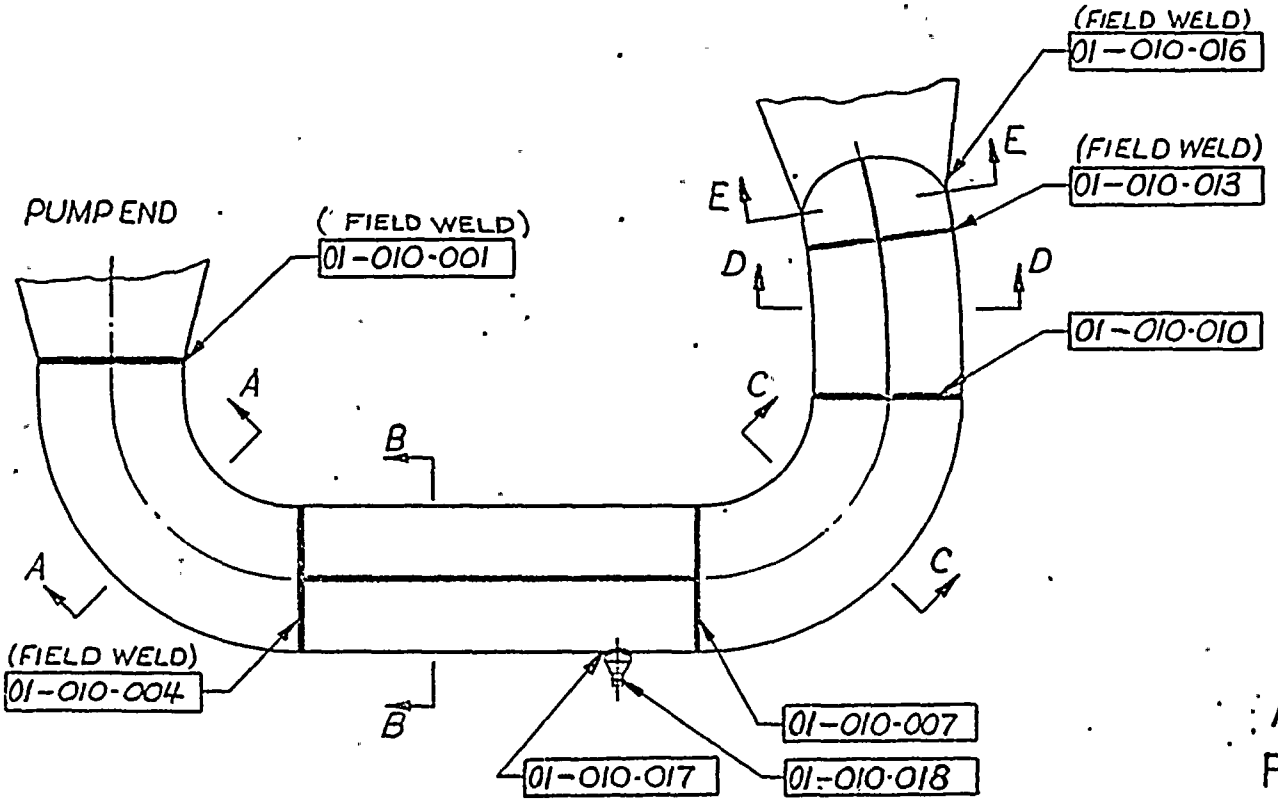

COLD LEG TO PUMP 1B

REFERENCE DWG'S
(COMB. ENG)
E-78473-711-001 REV 0
E-78473-711-002 REV 0
E-78473-722-001 REV 02
E-78473-742-002 REV 02

C-14273-501-005
02

APPROVED
REFERENCE
DESIGN

CONTRACT NO 14273

REV	DESCRIPTION	BY & DATE	CHK & DATE	ENG APPD	PROJ APPD
01	APPROVED REFERENCE DESIGN PER REV REQ 14273-100	T.M. 12/6/77		EWP	
02	DELETED "FIELD WELD" FROM 01-010-010 PER REV REQ No 14273-73	T.M. 9-3-78		EWP	

POWER SYSTEMS

NUCLEAR POWER SYSTEMS

ARIZONA NUCLEAR POWER PROJECT
PALO VERDE NUCLEAR
GENERATING STATION #1

C-14273-501-005 | 02

DRAWN BY MASLOSKI		11-28-77
CHECKER		12-15-77
APPROVALS		12-15-77
		12-15-77
		12-15-77

SCALE. DO NOT SCALE DWG

COLD LEG - ZONE 010
STEAM GENERATOR
#1 TO PUMP 1B

NEXT ASSY.
SUPERSEDES
COMPONENT & DWG NO

POWER SYSTEMS
COMBUSTION ENGINEERING, INC.

ZONE 11 CLASS 1

DOCUMENT NO.: TR-ESS-069

PROGRAM PLAN

REFERENCE DRAWING NO.: C-14273-501-011 Rev. 01

TITLE: LOOP 1B REACTOR COOLANT PIPING PUMP 1B TO REACTOR VESSEL

AREA DESIGNATION	AREA DESCRIPTION	MANUFACTURER'S OR INSTALLER'S WELD NUMBER	EXAMINATION CATEGORY IWB-2500	EXAMINATION METHOD IWB-2600	EXAMINATION PROCEDURE NUMBER	CALIBRATION BLOCK NO.
01-011-001	Pump Extension Piece-to-Pipe Weld	RC-031-W-001	B-J	UT	NIP-955	UT-26A
01-011-005	Longitudinal Seam	N/A	B-J	UT	NIP-937	UT-22
01-011-006	Longitudinal Seam	N/A	B-J	UT	NIP-937	UT-22
01-011-007	Elbow-to-Reactor Vessel Nozzle Weld	RC-031-W-002	B-J	UT	NIP-955 NIP-937	UT-26A UT-22
01-011-010	Safety Injection Nozzle-to-Safe End Weld	601-741	B-F	UT PT	NIP-963 525115-ESS-093	UT-27A N/A
01-011-011	Spray Nozzle-to-Safe End Weld	602-741	B-F	UT PT	NIP-963 525115-ESS-093	UT-34 N/A
01-011-012	RTD Nozzle-to-Pipe Weld	603-741A	B-P	Vis. (H)	525115-ESS-091	N/A

N/A NOT APPLICABLE
(H) DURING HYDROTEST

Note: Any welds appearing on the reference drawing, but not in the zone tables, were done in the shop.

REVISION: 2

PAGE: V-11.1

C-E 0090285 (Rev. 7/80)

POWER SYSTEMS
COMBUSTION ENGINEERING, INC.

ZONE 11 CLASS 1

DOCUMENT NO.: TR-ESS-069

PROGRAM PLAN LOOP 1B REACTOR COOLANT PIPING PUMP 1B TO REACTOR VESSEL

REFERENCE DRAWING NO.: C-14273-501-011 Rev. 01

TITLE:

AREA DESIGNATION	AREA DESCRIPTION	MANUFACTURER'S OR INSTALLER'S WELD NUMBER	EXAMINATION CATEGORY IWB-2500	EXAMINATION METHOD IWB-2600	EXAMINATION PROCEDURE NUMBER	CALIBRATION BLOCK NO.
01-011-013	RTD Nozzle-to-Pipe Weld	603-741B	B-P	Vis. (H)	525115-ESS-091	N/A
01-011-014	RTD Nozzle-to-Pipe Weld	603-741C	B-P	Vis. (H)	525115-ESS-091	N/A

N/A NOT APPLICABLE
(H) DURING HYDROTEST

Note: Any welds appearing on the reference drawing, but not in the zone tables, were done in the shop.

REVISION: 2

PAGE: V-11.2

C-E 0090285 (Rev. 7/80)

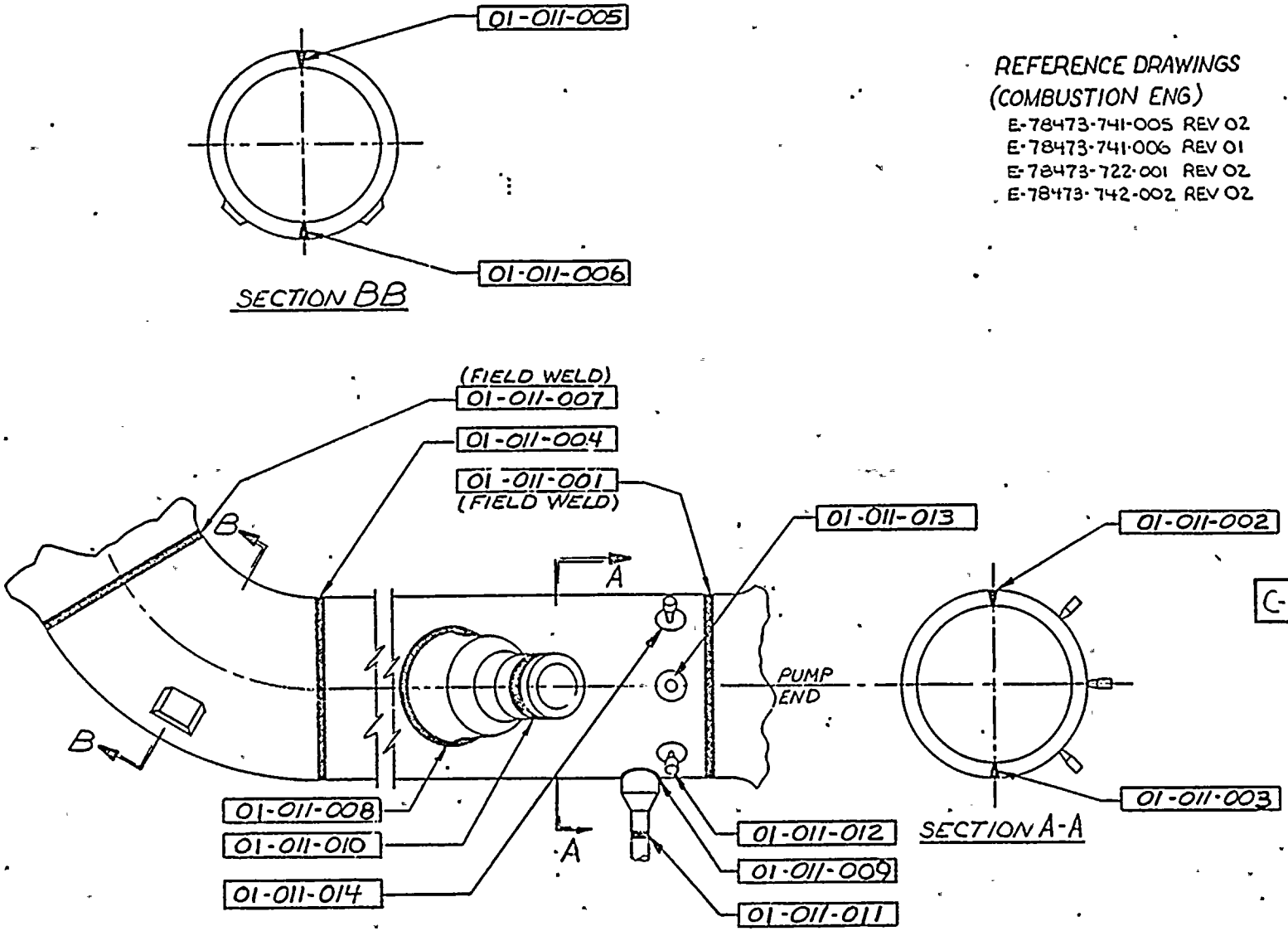

REFERENCE DRAWINGS
(COMBUSTION ENG)
E-78473-741-005 REV 02
E-78473-741-006 REV 01
E-78473-722-001 REV 02
E-78473-742-002 REV 02

C-14273-501-011
01

APPROVED
REFERENCE
DESIGN

CONTRACT NO 14273

REV.	DESCRIPTION	BY & DATE	CHK. & DATE	ENG. APPD	PROJ APPD
01	APPROVED REFERENCE DESIGN PER REV REQ 14273-100	T.M. 12-15-77		EWP	

DRAWN BY N ALDRICH 11-29-77
CHECKER 12-15-77
APPROVALS 12-15-77
12-15-77
12/15/77

SCALE 3/4 = 1'-0 DO NOT SCALE DWG

ARIZONA NUCLEAR POWER PROJECT
PALO VERDE NUCLEAR
GENERATING STATION #1

NEXT ASSY:
SUPERSEDES
COMPONENT CODE NO

COMBUSTION DIVISION

COLD LEG-ZONE 011
PUMP 1B TO
REACTOR VESSEL

C-14273-501-011 | 01

SHEET OF REV

POWER SYSTEMS
COMBUSTION ENGINEERING, INC.

ZONE 12 CLASS 1

DOCUMENT NO.: TR-ESS-069

PROGRAM PLAN LOOP 2A REACTOR COOLANT PIPING STEAM GENERATOR TO PUMP 2A

REFERENCE DRAWING NO.: C-14273-501-006 Rev. 02

TITLE:

AREA DESIGNATION	AREA DESCRIPTION	MANUFACTURER'S OR INSTALLER'S WELD NUMBER	EXAMINATION CATEGORY IWB-2500	EXAMINATION METHOD IWB-2600	EXAMINATION PROCEDURE NUMBER	CALIBRATION BLOCK NO.
01-012-001	Pipe-to-Pump Suction Nozzle Weld	RC-073-W-004	B-J	UT	NIP-955	UT-26A
01-012-004	Elbow-to-Pipe Weld	RC-073-W-003	B-J	UT	NIP-955	UT-26A
01-012-013	Pipe-to-Elbow Weld	RC-073-W-002	B-J	UT	NIP-955	UT-26A
01-012-016	Elbow-to-Steam Generator Nozzle Extension Piece Weld	RC-073-W-001	B-J	UT	NIP-955	UT-26A
01-012-018	Drain Nozzle-to-Safe End Weld	201-711	B-F	UT PT	NIP-963 525115-ESS-093	UT-33 N/A

N/A NOT APPLICABLE
(H) DURING HYDROTEST

Note: Any welds appearing on the reference drawing, but not in the zone tables, were done in the shop.

REVISION: 2

C-E 0090285 (Rev. 7/80)

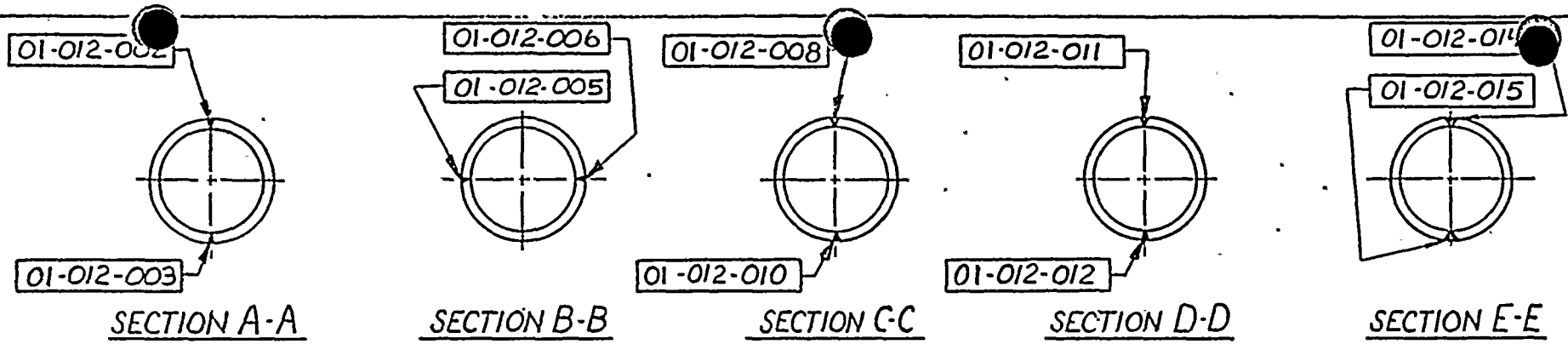

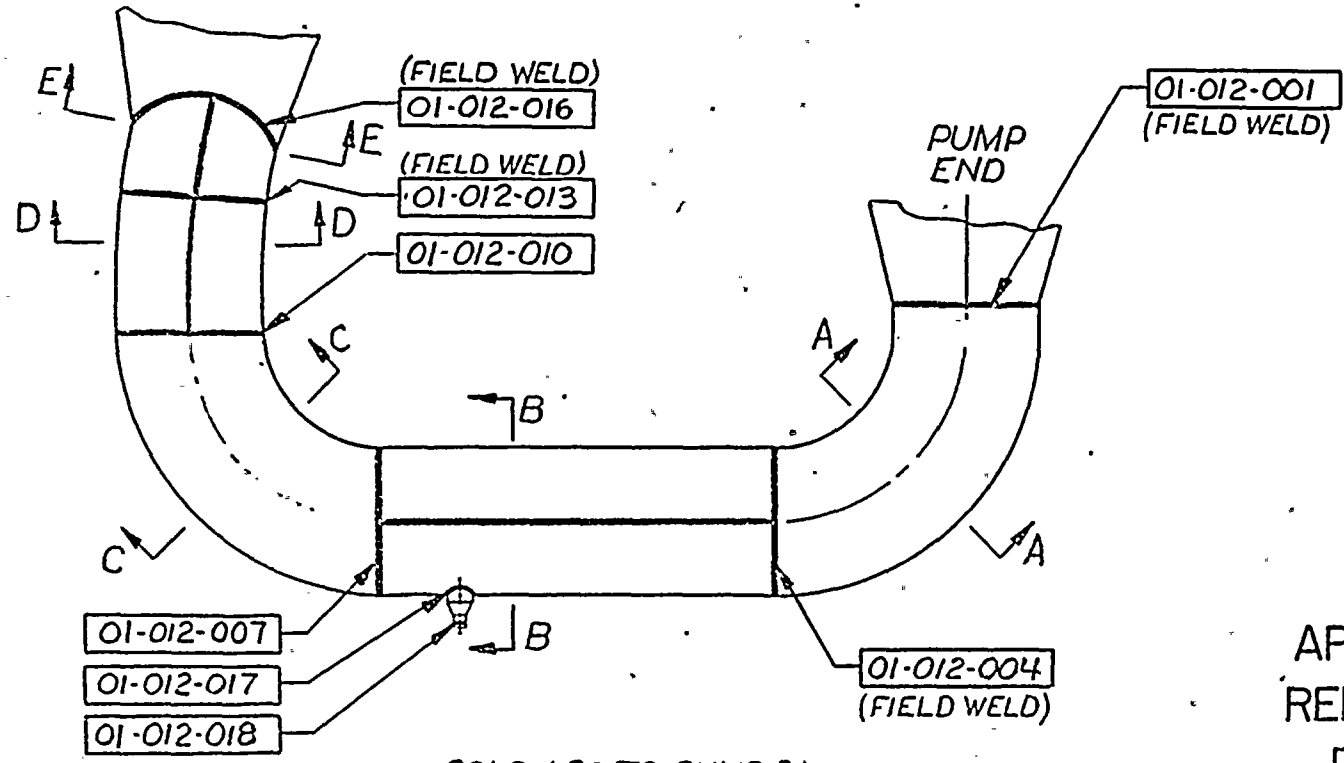

COLD LEG TO PUMP 2A

REFERENCE DRAWINGS (COMBUSTION ENG)

E-78473-711-001-REV-0
E-78473-711-002-REV-0
E-78473-722-001-REV-2
E-78473-742-002-REV-2

C-14273-501-006
02

APPROVED REFERENCE DESIGN

CONTRACT NO. 14273

REV.	DESCRIPTION	BY & DATE	CHK & DATE	ENG APPD	PROJ APPD
01	APPROVED REFERENCE DESIGN PER REV REQ 14273-100	T.A.I. 12-15-77			
02	DELETED "FIELD WELD" FROM 01-012-010 PER REV REQ No 14273-73	T.A.I. 0 3 20			

POWER SYSTEMS

NUCLEAR POWER SYSTEMS

ARIZONA NUCLEAR POWER PROJECT
PALO VERDE NUCLEAR GENERATING STATION #1

C-14273-501-006 02

DRAWN BY N ADRCH 11-28-77
CHECKED 12-15-77
APPROVALS 12-15-77
12-15-77
3-14-78

SCALE DO NOT SCALE DWG

COLD LEG-ZONE 012 STEAM GENERATOR #2 TO PUMP A

NEXT ASSY:
SUPERSEDES

POWER SYSTEMS
COMBUSTION ENGINEERING, INC.

ZONE 13 CLASS 1

DOCUMENT NO.: TR-ESS-069

PROGRAM PLAN

REFERENCE DRAWING NO.: C-14273-501-010 Rev. 01

TITLE: LOOP 2A REACTOR COOLANT PIPING PUMP 2A TO REACTOR VESSEL

AREA DESIGNATION	AREA DESCRIPTION	MANUFACTURER'S OR INSTALLER'S WELD NUMBER	EXAMINATION CATEGORY IWB-2500	EXAMINATION METHOD IWB-2600	EXAMINATION PROCEDURE NUMBER	CALIBRATION BLOCK NO.
01-013-001	Pump Extension Piece-to-Pipe Weld	RC-079-W-001	B-J	UT	NIP-955	UT-26A
01-013-005	Longitudinal Seam	N/A	B-J	UT	NIP-937	UT-22
01-013-006	Longitudinal Seam	N/A	B-J	UT	NIP-937	UT-22
01-013-007	Elbow-to-Reactor Vessel Nozzle Weld	RC-079-W-002	B-J	UT	NIP-955 NIP-937	UT-26A UT-22
01-013-010	Safety Injection Nozzle-to-Safe End Weld	401-741	B-F	UT PT	NIP-963 525115-ESS-093	UT-27A N/A
01-013-011	Charging Nozzle-to-Safe End Weld	402-741	B-F	UT PT	NIP-963 525115-ESS-093	UT-18 N/A
01-013-012	RTD Nozzle-to-Pipe Weld	403-741A	B-P	Vis. (H)	525115-ESS-091	N/A

N/A NOT APPLICABLE
(H) DURING HYDROTEST

Note: Any welds appearing on the reference drawing, but not in the zone tables, were done in the shop.

REVISION: 2

C-E 0090285 (Rev. 7/80)

POWER SYSTEMS
COMBUSTION ENGINEERING, INC.

ZONE 13 CLASS 1

DOCUMENT NO.: TR-ESS-069

PROGRAM PLAN LOOP 2A REACTOR COOLANT PIPING PUMP 2A TO REACTOR VESSEL

REFERENCE DRAWING NO.: C-14273-501-010 Rev. 01

TITLE:

AREA DESIGNATION	AREA DESCRIPTION	MANUFACTURER'S OR INSTALLER'S WELD NUMBER	EXAMINATION CATEGORY IWB-2500	EXAMINATION METHOD IWB-2600	EXAMINATION PROCEDURE NUMBER	CALIBRATION BLOCK NO.
01-013-013	RTD Nozzle-to-Pipe Weld	403-741B	B-P	Vis. (H)	525115-ESS-091	N/A
01-013-014	RTD Nozzle-to-Pipe Weld	403-741C	B-P	Vis. (H)	525115-ESS-091	N/A

N/A NOT APPLICABLE
(H) DURING HYDROTEST

Note: Any welds appearing on the reference drawing, but not in the zone tables, were done in the shop.

REVISION: 2

PAGE: V-13.2

C-E 0090285 (Rev. 7/80)

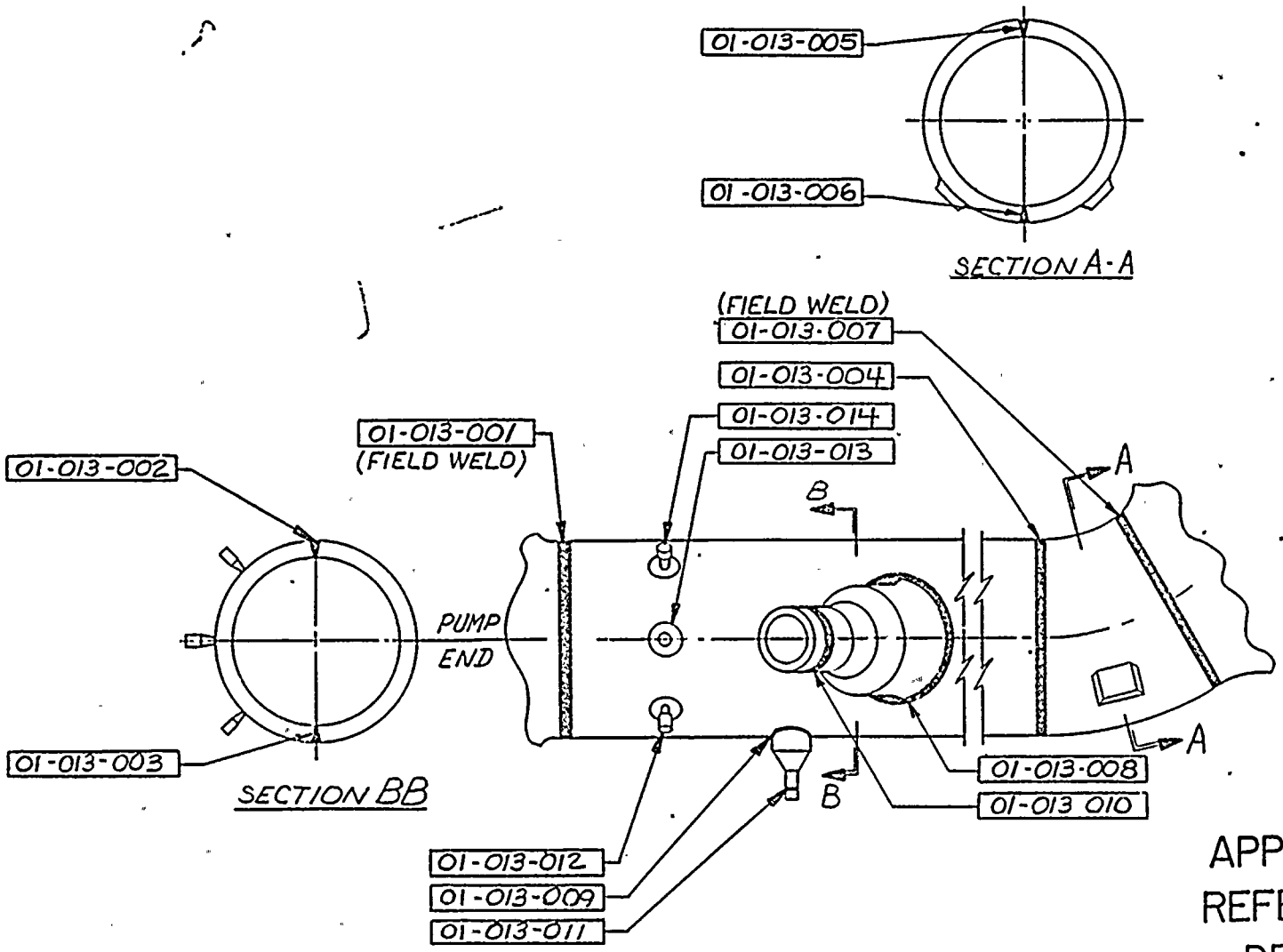

REFERENCE DRAWINGS
(COMBUSTION ENG)

E-78473-741-004 REV01
E-78473-741-003 REV02
E-78473-722-001 REV02
E-78473-742-002 REV02

C-14273-501-010
01

APPROVED
REFERENCE
DESIGN

CONTRACT NO 14273

REV.	DESCRIPTION	BY & DATE	CHK & DATE	ENG APPD	PROJ APPD
01	APPROVED REFERENCE DESIGN PER REV REQ 14273-100	T.M. 12-4-77			

DRAWN BY: [illegible] 11-29-77
CHECKER: [illegible] 12-5-77
APPROVALS: [illegible] 12-15-77
[illegible] 12-15-77
[illegible] 01-11-77

SCALE: 3/4" = 1'-0" DO NOT SCALE DWG.

ARIZONA NUCLEAR POWER PROJECT
PALO VERDE NUCLEAR
GENERATING STATION #1

NEXT ASSY:
SUPERSEDES
COMPONENT CODE NO

COMBUSTION DIVISION

COLD LEG ZONE 013
PUMP 2A TO
REACTOR VESSEL

C-14273-501-010 | 01.
SHEET OF REV

POWER SYSTEMS
COMBUSTION ENGINEERING, INC.

ZONE 14 CLASS 1

DOCUMENT NO.: TR-ESS-069

PROGRAM PLAN LOOP 2B REACTOR COOLANT PIPING STEAM GENERATOR TO PUMP 2B

REFERENCE DRAWING NO.: C-14273-501-004 Rev. 02

TITLE:

AREA DESIGNATION	AREA DESCRIPTION	MANUFACTURER'S OR INSTALLER'S WELD NUMBER	EXAMINATION CATEGORY IWB-2500	EXAMINATION METHOD IWB-2600	EXAMINATION PROCEDURE NUMBER	CALIBRATION BLOCK NO.
01-014-001	Pipe-to-Pump Suction Nozzle Weld	RC-084-W-004	B-J	UT	NIP-955	UT-26A
01-014-004	Elbow-to-Pipe Weld	RC-084-W-003	B-J	UT	NIP-955	UT-26A
01-014-013	Pipe-to-Elbow Weld	RC-084-W-002	B-J	UT	NIP-955	UT-26A UT-22A
01-014-016	Elbow-to-Steam Generator Nozzle Extension Piece Weld	RC-084-W-001	B-J	UT	NIP-955	UT-26A
01-014-018	Drain Nozzle-to-Safe End Weld	201-711	B-F	UT PT	NIP-955 525115-ESS-093	UT-33 N/A

N/A NOT APPLICABLE
(H) DURING HYDROTEST

Note: Any welds appearing on the reference drawing, but not in the zone tables, were done in the shop.

REVISION: 2

PAGE: V-14.1

C-E 0090285 (Rev. 7/80)

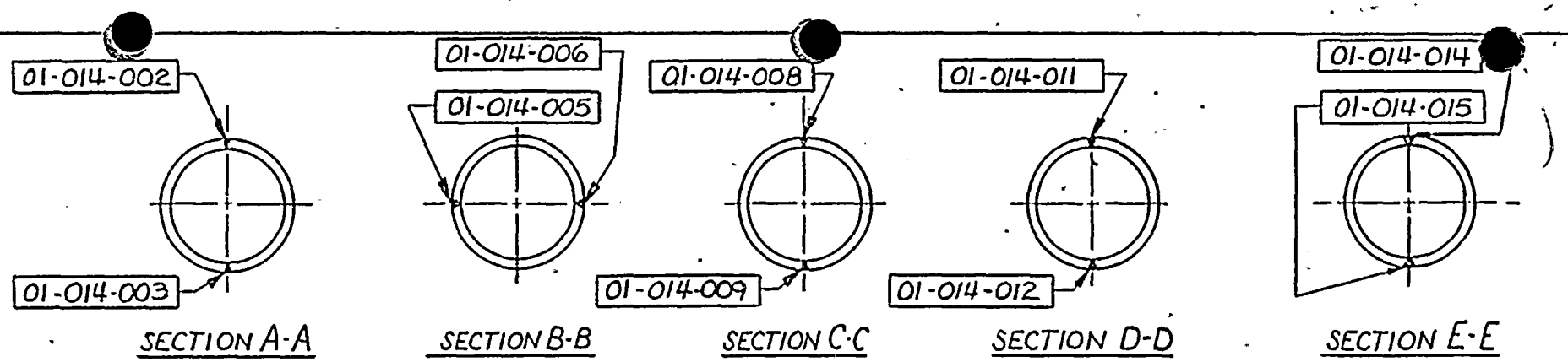

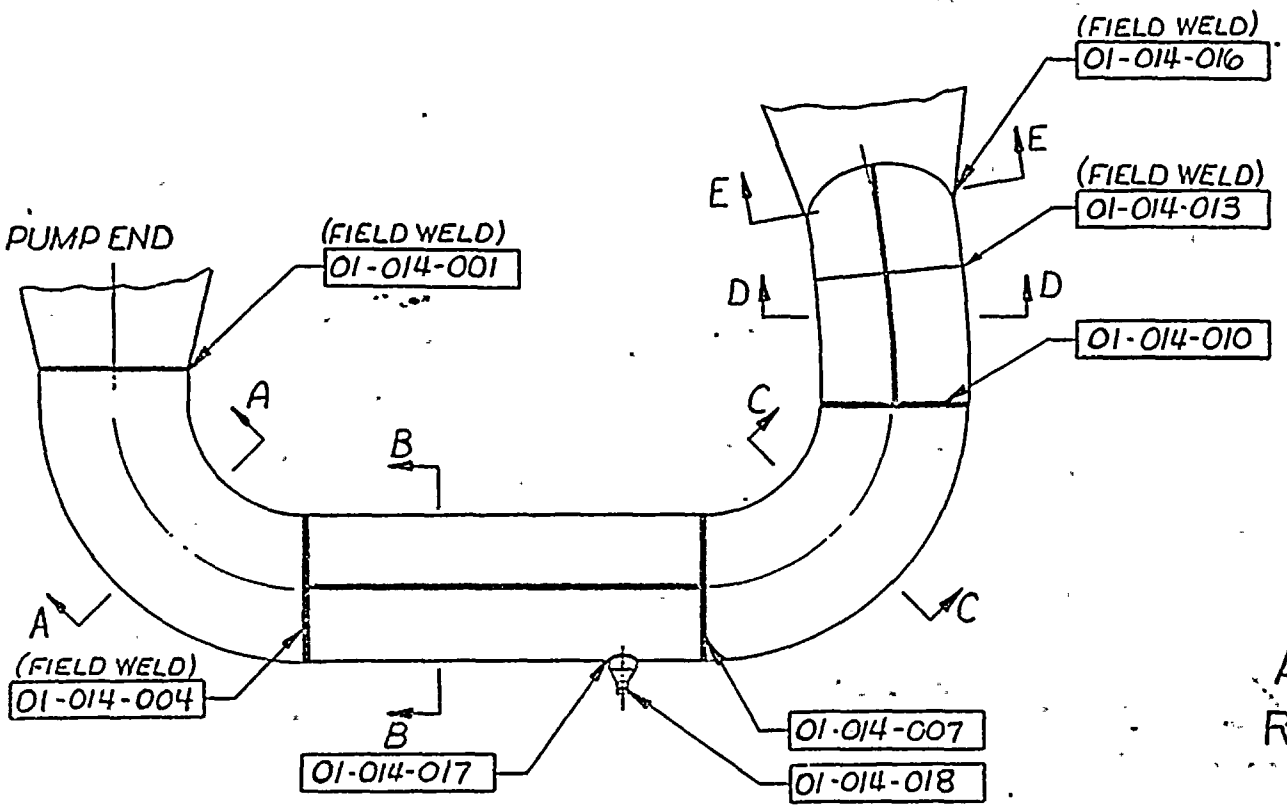

COLD LEG TO PUMP 2-B

REFERENCE DRAWINGS
(COMBUSTION ENG)
E-78473-711-001-REV-0
E-78473-711-002-REV-0
E-78473-722001-REV-2
E-78473-742-002-REV-2

C-14273-501-004
02

APPROVED
REFERENCE
DESIGN

CONTRACT NO. 14273

REV	DESCRIPTION	BY & DATE	CHK & DATE	ENG APPD	PROJ APPD
01	APPROVED REFERENCE DESIGN PER REV REQ 14237-100	T.M.			
02	DELETED FIELD WELD FROM 01-014-010 PER REV REQ No 14273-73	T.M.			

POWER SYSTEMS

NUCLEAR POWER SYSTEMS

ARIZONA NUCLEAR POWER PROJECT
PALO VERDE NUCLEAR
GENERATING STATION #1

		DATE
DRAWN BY N. ALDRICH		11-25-77
CHECKER		12-15-77
APPROVALS		12-15-77
		12-15-77
		12-15-77

SCALE: DO NOT SCALE DWG

COLD LEG-ZONE 014
STEAM GENERATOR
#2 TO PUMP 2B

NEXT ASSY:
SUPERSEDES:
EQUIPMENT CODE NO

C-14273-501-004 | 02
SHEET OF REV

POWER SYSTEMS
COMBUSTION ENGINEERING, INC.

ZONE 15 CLASS 1

DOCUMENT NO.: TR-ESS-069

PROGRAM PLAN LOOP 2B REACTOR COOLANT PIPING PUMP 2B TO REACTOR VESSEL

REFERENCE DRAWING NO.: C-14273-501-007 Rev. 01

TITLE:

AREA DESIGNATION	AREA DESCRIPTION	MANUFACTURER'S OR INSTALLER'S WELD NUMBER	EXAMINATION CATEGORY IWB-2500	EXAMINATION METHOD IWB-2600	EXAMINATION PROCEDURE NUMBER	CALIBRATION BLOCK NO.
01-015-001	Pump Extension Piece-to-Pipe Weld	RC-093-W-001	B-J	UT	NIP-955	UT-26A
01-015-005	Longitudinal Seam	N/A	B-J	UT	NIP-937	UT-22
01-015-006	Longitudinal Seam	N/A	B-J	UT	NIP-937	UT-22
01-015-007	Elbow-to-Reactor Vessel Nozzle Weld	RC-093-W-002	B-J	UT	NIP-955 NIP-937	UT-26A UT-22
01-015-009	Safety Injection Nozzle-to-Safe End Weld	801-741	B-F	UT PT	NIP-963 525115-ESS-093	UT-27A N/A
01-015-010	RTD Nozzle-to-Pipe Weld	802-741A	B-P	Vis. (H)	525115-ESS-091	N/A
01-015-011	RTD Nozzle-to-Pipe Weld	802-741B	B-P	Vis. (H)	525115-ESS-091	N/A

N/A NOT APPLICABLE
(H) DURING HYDROTEST

Note: Any welds appearing on the reference drawing, but not in the zone tables, were done in the shop.

REVISION: 2

PAGE:

C-E 0090285 (Rev. 7/80)

POWER SYSTEMS
COMBUSTION ENGINEERING, INC.

ZONE 15 CLASS 1

DOCUMENT NO.: TR-ESS-069

PROGRAM PLAN LOOP 2B REACTOR COOLANT PIPING

REFERENCE DRAWING NO.: C-14273-501-007 Rev. 01

TITLE: PUMP 2B TO REACTOR VESSEL

AREA DESIGNATION	AREA DESCRIPTION	MANUFACTURER'S OR INSTALLER'S WELD NUMBER	EXAMINATION CATEGORY IWB-2500	EXAMINATION METHOD IWB-2600	EXAMINATION PROCEDURE NUMBER	CALIBRATION BLOCK NO.
01-015-012	RTD Nozzle-to-Pipe Weld	802-741C	B-P	Vis. (H)	525115-ESS-091	N/A

N/A NOT APPLICABLE
(H) DURING HYDROTEST

Note: Any welds appearing on the reference drawing, but not in the zone tables, were done in the shop.

REVISION: 2

PAGE: V-15.2

C-E 0090285 (Rev. 7/80)

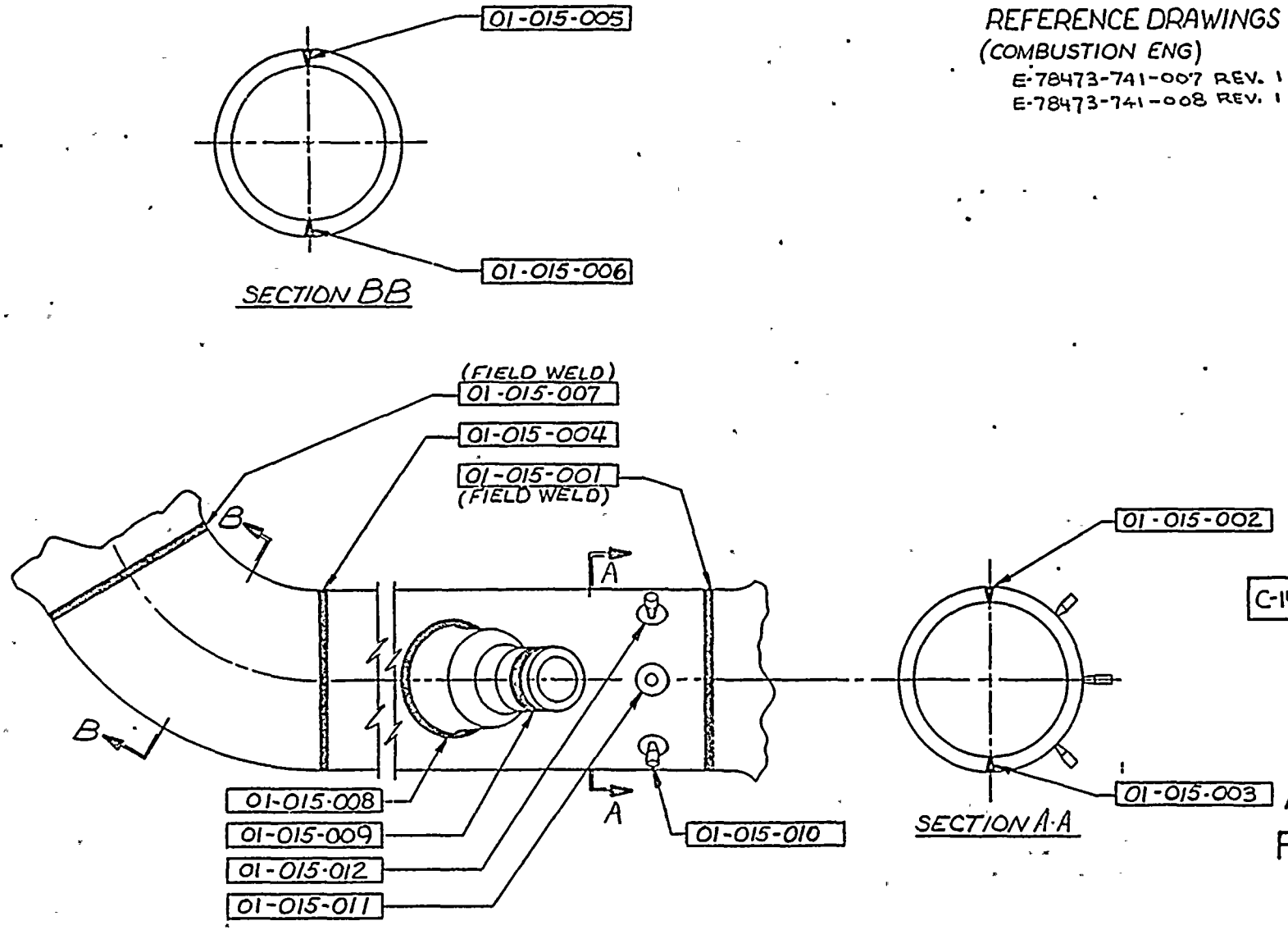

REFERENCE DRAWINGS
(COMBUSTION ENG)
E-78473-741-007 REV. 1
E-78473-741-008 REV. 1

C-14273-501-007
01

APPROVED
REFERENCE
DESIGN

CONTRACT NO 14273

REV.	DESCRIPTION	BY & DATE	CHK & DATE	ENG APPD	PROJ APPD
1	APPROVED REFERENCE DESIGN PER REV REQ 14273-100	T.M. 12-6		EWP	

		DATE
DRAWN BY	NALDRICH	11-28-77
CHECKER		12-15-77
APPROVALS		12-15-77
		12-15-77
		12/15/77

SCALE 3/4" = 1'-0" DO NOT SCALE DWG

ARIZONA NUCLEAR POWER PROJECT
PALO VERDE NUCLEAR
GENERATING STATION #1

NEXT ASSY:
SUPERSEDES:
COMPONENT CODE NO

COMBUSTION DIVISION

COLD LEG-ZONE 015
PUMP 2B TO
REACTOR VESSEL

C-14273-501-007 | 01

SHEET OF REV

POWER SYSTEMS
COMBUSTION ENGINEERING, INC.

ZONE 16 CLASS 1

DOCUMENT NO.: TR-ESS-069

PROGRAM PLAN REACTOR COOLANT PUMP 1A AND MOTOR FLYWHEELS

REFERENCE DRAWING NO.: E-14273-501-022 Rev. 04

TITLE:

AREA DESIGNATION	AREA DESCRIPTION	MANUFACTURER'S OR INSTALLER'S WELD NUMBER	EXAMINATION CATEGORY IWB-2500	EXAMINATION METHOD IWB-2600	EXAMINATION PROCEDURE NUMBER	CALIBRATION BLOCK NO.
01-016-001	Outlet Nozzle to Extension Piece Weld	158-0015-1	B-J	Vol.	NIP-966	UT-38
01-016-002	Inlet Nozzle to Extension Piece Weld	158-0016-2	B-J	Vol.	NIP-966	UT-38
01-016-005	Instrument Nozzle - Pump Outlet	N/A	B-P	Vis. (H)	525115-ESS-091	N/A
01-016-006-01	Instrument Nozzle - Pump Inlet	N/A	B-P	Vis. (H)	525115-ESS-091	N/A
01-016-007-16	Pump Ligaments - Motor Face	N/A	B-G-1	Vis.	525115-ESS-091	N/A
01-016-008-01 through 01-016-008-16	Studs - Motor	N/A	B-G-1	Vol. Vis. Surf.	NIP-952 525115-ESS-091 525115-ESS-093	UT-6,6A N/A N/A
01-016-009-01 through 01-016-009-16	Nuts - Motor	N/A	B-G-1	Vis.	525115-ESS-091	N/A

N/A NOT APPLICABLE
(H) DURING HYDROTEST

Note: Any welds appearing on the reference drawing, but not in the zone tables, were done in the shop.

REVISION: 2

C-E 0090285 (Rev. 7/80)

POWER SYSTEMS
COMBUSTION ENGINEERING, INC.

ZONE 16 CLASS 1

DOCUMENT NO.: TR-ESS-069

PROGRAM PLAN REACTOR COOLANT PUMP 1A AND MOTOR FLYWHEELS

REFERENCE DRAWING NO.: E-14273-501-022 Rev. 04

TITLE:

AREA DESIGNATION	AREA DESCRIPTION	MANUFACTURER'S OR INSTALLER'S WELD NUMBER	EXAMINATION CATEGORY IWB-2500	EXAMINATION METHOD IWB-2600	EXAMINATION PROCEDURE NUMBER	CALIBRATION BLOCK NO.
01-016-010	Motor Flywheel - Bore and Keyway	N/A	Reg. Guide 1.14	Vol.	NIP-953	N/A
01-016-011	Motor Flywheel - Entire Flywheel	N/A	Reg. Guide 1.14	Vol. Surf.	NIP-953 9678-ISI-038	N/A CE-ET-9678-ISI-038-2
01-016-012	Pump Support #1, Vertical Column Assembly	N/A	B-K-2	Vis.	525115-ESS-091	N/A
01-016-013	Pump Support #2, Vertical Column Assembly	N/A	B-K-2	Vis.	525115-ESS-091	N/A
01-016-014	Pump Support #3, Vertical Column Assembly	N/A	B-K-2	Vis.	525115-ESS-091	N/A
01-016-015	Pump Support #4, Vertical Column Assembly	N/A	B-K-2	Vis.	525115-ESS-091	N/A
01-016-016-01 through 01-016-016-16	Pump Ligament - Threads	N/A	B-G-1	Vis.	525115-ESS-091	N/A

N/A NOT APPLICABLE
(H) DURING HYDROTEST

Note: Any welds appearing on the reference drawing, but not in the zone tables, were done in the shop.

REVISION: 2

PAGE:

C-E 0090285 (Rev. 7/80)

POWER SYSTEMS
COMBUSTION ENGINEERING, INC.

ZONE 16 CLASS 1

DOCUMENT NO.: TR-ESS-069 PROGRAM PLAN

REFERENCE DRAWING NO.: E-14273-501-022 Rev. 04 TITLE: REACTOR COOLANT PUMP 1A AND MOTOR FLYWHEELS

AREA DESIGNATION	AREA DESCRIPTION	MANUFACTURER'S OR INSTALLER'S WELD NUMBER	EXAMINATION CATEGORY IWB-2500	EXAMINATION METHOD IWB-2600	EXAMINATION PROCEDURE NUMBER	CALIBRATION BLOCK NO.
01-016-017	Pump Support #5, Snubber	N/A	B-K-2	Vis.	525115-ESS-091	N/A
01-016-018	Pump Support #6, Snubber	N/A	B-K-2	Vis.	525115-ESS-091	N/A
01-016-019	Pump Support #7, Horizontal Column	N/A	B-K-2	Vis.	525115-ESS-091	N/A
01-016-020	Pump Support #8, Horizontal Column	N/A	B-K-2	Vis.	525115-ESS-091	N/A
01-016-021	Pump Support #9, Horizontal Column	N/A	B-K-2	Vis.	525115-ESS-091	N/A
01-016-022	Pump Support #10, Horizontal Column	N/A	B-K-2	Vis.	525115-ESS-091	N/A
01-016-023	Pump Casing Internal Boundary Surfaces	N/A	B-L-2	Vis.	525115-ESS-091	N/A

N/A NOT APPLICABLE
(H) DURING HYDROTEST

Note: Any welds appearing on the reference drawing, but not in the zone tables, were done in the shop.

REVISION: 2

C-E 0090285 (Rev. 7/80)

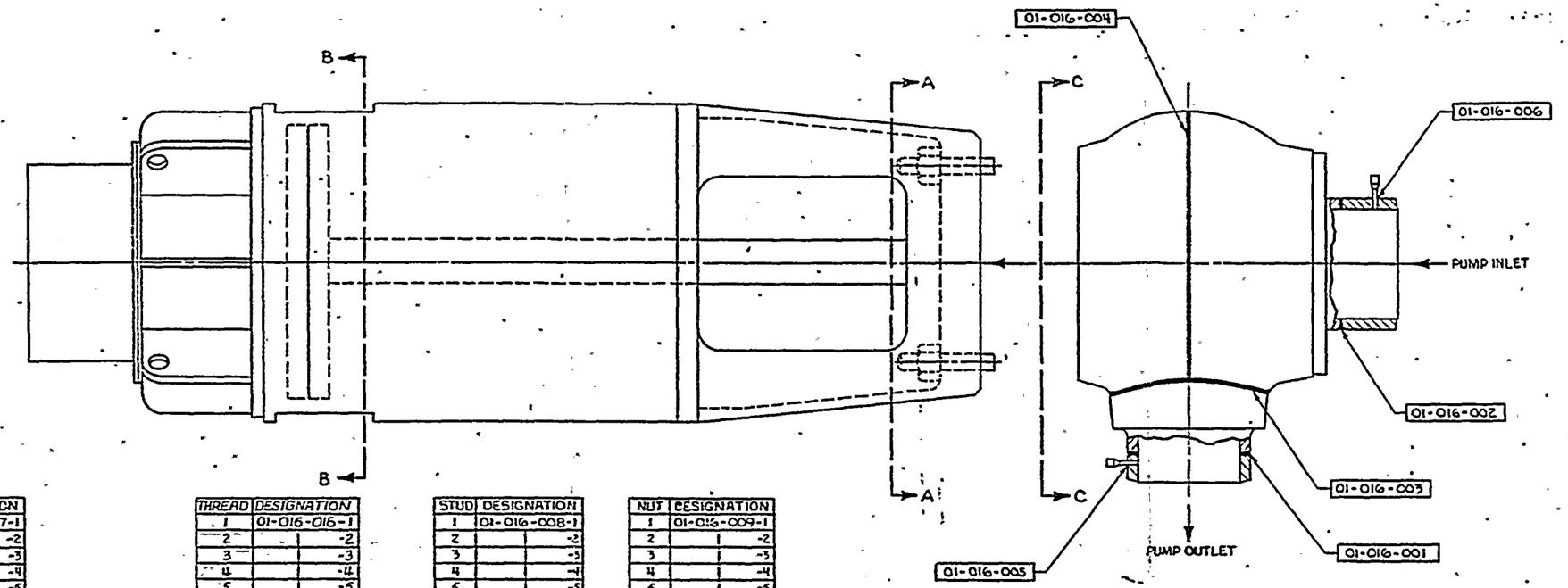

LIGAMENT	DESIGNATION	
1	01-016-007-1	
2		-2
3		-3
4		-4
5		-5
6		-6
7		-7
8		-8
9		-9
10		-10
11		-11
12		-12
13		-13
14		-14
15		-15
16		-16

THREAD	DESIGNATION	
1	01-016-016-1	
2		-2
3		-3
4		-4
5		-5
6		-6
7		-7
8		-8
9		-9
10		-10
11		-11
12		-12
13		-13
14		-14
15		-15
16		-16

STUD	DESIGNATION	
1	01-016-008-1	
2		-2
3		-3
4		-4
5		-5
6		-6
7		-7
8		-8
9		-9
10		-10
11		-11
12		-12
13		-13
14		-14
15		-15
16		-16

NUT	DESIGNATION	
1	01-016-009-1	
2		-2
3		-3
4		-4
5		-5
6		-6
7		-7
8		-8
9		-9
10		-10
11		-11
12		-12
13		-13
14		-14
15		-15
16		-16

REFERENCE DRAWINGS:

CE-KSB
E-8109-101-2002 REV 04

CE-AVERU
D-158-0003 REV 03
D-158-0004 REV 03
D-158-0005 REV 01
D-158-0008 REV 03
D-158-0015 REV 00

ALLIS-CHALMERS
05-223-684-014
05-417-586-401

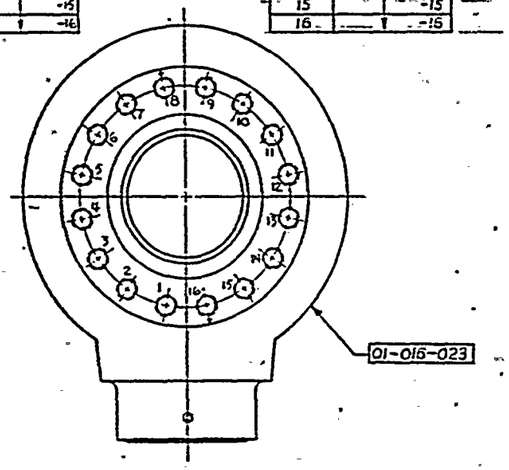

SECTION C-C

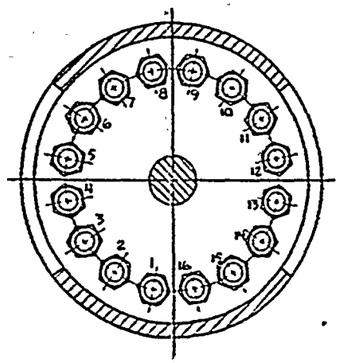

SECTION A-A

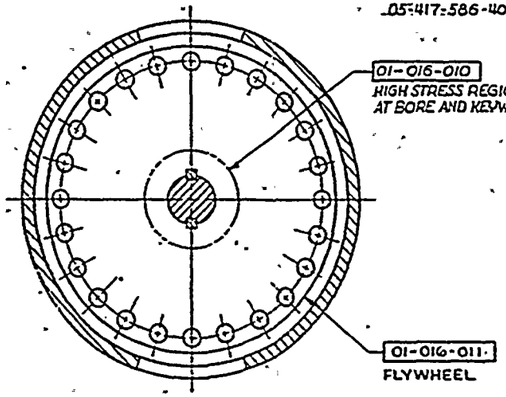

SECTION B-B

E-14273-501-022
SHT 1 OF 2
04

APPROVED.
REFERENCE
DESIGN

REV	DESCRIPTION				
03	CERTIFIED FOR APPROVED REFERENCE DESIGN PER ECN 556 & ECN 14273-137				
04	ADDED 005 WAS 004-SHT 2 ADDED PER REV REQ 14273-73				
05	ADDED TWO DESIGNATIONS TO ADDED REF DRAWINGS OTHER THAN SHEET 1 (REF REV 04-73 SO)				
06	SHEET 8-B: REVISED TO SHOW 24 HOLES & 2 KEYWAYS PER REV REQ 14273-715				

UNLESS OTHERWISE SPECIFIED
DIMENSIONS & TOLERANCES PER ASME Y14.5 1966
DIMENSIONS APPLY AT 68°F (20°C)
DO NOT SCALE DRAWING
DIMENSIONS SHOWN IN: IN. | MM
ON ORDER ± .0 MM ± .005 ± .010
FINAL TOUR ± .0 MM ± 1/32 ± 0.5 MM
BREAK CORNERS & EDGES .0 OR CHAM × FILLETS 1 MM FOR 1/32" R
FINISH AS ASTM A480 M

POWER SYSTEMS
CONSULTING ENGINEERING INC.
DESIGN OF PRESS SYSTEMS

ARIZONA NUCLEAR POWER PROJECT
PALO VERDE NUCLEAR GENERATING STATION

DRAWN 523115

14273

REACTOR COOLANT PUMP
UNIT 1 ZONE 016
WELD DESIGNATIONS

E-14273-501-022 04

SHEET 1 OF 2

DNA 78

8 7 6 5 4 3 2 1

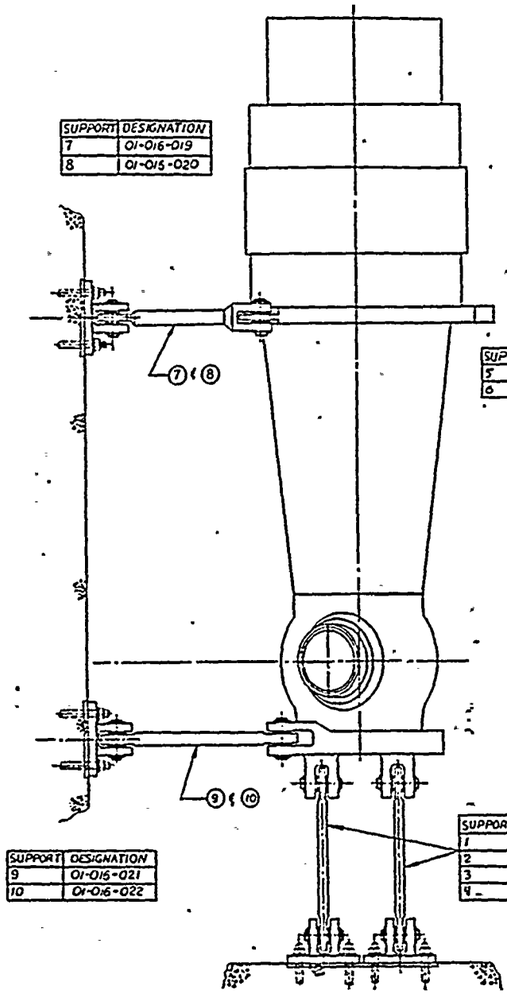

SUPPORT	DESIGNATION
7	01-016-019
8	01-015-020

SUPPORT	DESIGNATION
5	01-016-017
6	01-016-018

SUPPORT	DESIGNATION
1	01-016-012
2	01-016-013
3	01-016-014
4	01-016-015

SUPPORT	DESIGNATION
9	01-016-021
10	01-016-022

VIEW A-A

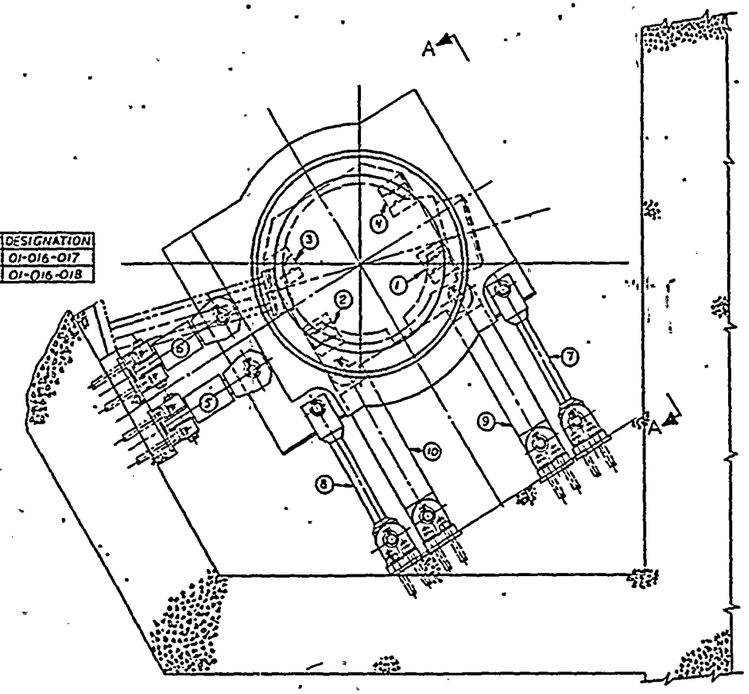

PLAN VIEW
① REACTOR COOLANT PUMP ARRGMT INSTALL
SCALE: ½"=1'-0"

REFERENCE DRAWING
COMBUSTION ENGINEERING
E-14273-321-030 REV 01

APPROVED
REFERENCE
DESIGN

E-14273-501-022
SHT 6 OF 6 ~ 104

REV	DESCRIPTION				
04	THIS SHEET ADDED PER. REV REQ. No 14273-73				
03	1-ADDED REF DWG-FOR OTHER REVS SEE SHEET 1 PER REQ 7678-503				
02	1-SEE SHT 1 FOR REVS PER REV REQ 14273-715				

POWER SYSTEMS

REACTOR COOLANT PUMP. UNIT 1 ZONE D16 WELD DESIGNATIONS.

E-14273-501-022 04

523115
2/66/012

/ER SYSTEMS
COMBUSTION ENGINEERING, INC.

ZONE 17 CLASS 1

DOCUMENT NO.: TR-ESS-069 PROGRAM PLAN REACTOR COOLANT PUMP 1B AND MOTOR FLYWHEELS

REFERENCE DRAWING NO.: E-14273-501-023 Rev. 04 TITLE:

AREA DESIGNATION	AREA DESCRIPTION	MANUFACTURER'S OR INSTALLER'S WELD NUMBER	EXAMINATION CATEGORY IWB-2500	EXAMINATION METHOD IWB-2600	EXAMINATION PROCEDURE NUMBER	CALIBRATION BLOCK NO.
01-017-001	Outlet Nozzle to Extension Piece Weld	158-0015-1	B-J	Vol.	NIP-966	UT-38
01-017-002	Inlet Nozzle to Extension Piece Weld	158-0016-2	B-J	Vol.	NIP-966	UT-38
01-017-005	Instrument Nozzle - Pump Outlet	N/A	B-P	Vis. (H)	525115-ESS-091	N/A
01-017-006	Instrument Nozzle - Pump Inlet	N/A	B-P	Vis. (H)	525115-ESS-091	N/A
01-017-008-01 through 01-017-008-16	Studs - Motor	N/A	B-G-1	Vol. Vis. Surf.	NIP-952 525115-ESS-091 525115-ESS-093	UT-6,6A N/A N/A
01-017-009-01 through 01-017-009-16	Nuts - Motor	N/A	B-G-1	Vis.	525115-ESS-091	N/A
01-017-010	Motor Flywheel - Bore and Keyway	N/A	Reg. Guide 1.14	Vol.	NIP-953	N/A

N/A NOT APPLICABLE
(H) DURING HYDROTEST

Note: Any welds appearing on the reference drawing, but not in the zone tables, were done in the shop.

REVISION: 2

C-E 0090285 (Rev. 7/80)

POWER SYSTEMS
COMBUSTION ENGINEERING, INC.

ZONE 17 CLASS 1

DOCUMENT NO.: TR-ESS-069

PROGRAM PLAN REACTOR COOLANT PUMP 1B AND MOTOR FLYWHEELS

REFERENCE DRAWING NO.: E-14273-501-023 Rev. 04

TITLE:

AREA DESIGNATION	AREA DESCRIPTION	MANUFACTURER'S OR INSTALLER'S WELD NUMBER	EXAMINATION CATEGORY IWB-2500	EXAMINATION METHOD IWB-2600	EXAMINATION PROCEDURE NUMBER	CALIBRATION BLOCK NO.
01-017-011	Motor Flywheel - Entire Flywheel	N/A	Reg. Guide 1.14	Vol. Surf.	NIP-953 9678-ISI-038	N/A CE-ET-9678-ISI-038-2
01-017-012	Pump Support #1, Vertical Column Assembly	N/A	B-K-2	Vis.	525115-ESS-091	N/A
01-017-013	Pump Support #2, Vertical Column Assembly	N/A	B-K-2	Vis.	525115-ESS-091	N/A
01-017-014	Pump Support #3, Vertical Column Assembly	N/A	B-K-2	Vis.	525115-ESS-091	N/A
01-017-015	Pump Support #4, Vertical Column Assembly	N/A	B-K-2	Vis.	525115-ESS-091	N/A
01-017-016-01 through 01-017-016-16	RC Pump Ligament Threads	N/A	B-G-1	Vis.	525115-ESS-091	N/A
01-017-017	Pump Support #5, Snubber	N/A	B-K-2	Vis.	525115-ESS-091	N/A

N/A NOT APPLICABLE
(H) DURING HYDROTEST

Note: Any welds appearing on the reference drawing, but not in the zone tables, were done in the shop.

REVISION: 2

PAGE:

C-E 0090285 (Rev. 7/80)

/ER SYSTEMS
COMBUSTION ENGINEERING, INC.

ZONE 17 CLASS 1

DOCUMENT NO.: TR-ESS-069

PROGRAM PLAN

REFERENCE DRAWING NO.: E-14273-501-023 Rev. 04

TITLE: REACTOR COOLANT PUMP 1B AND MOTOR FLYWHEELS

AREA DESIGNATION	AREA DESCRIPTION	MANUFACTURER'S OR INSTALLER'S WELD NUMBER	EXAMINATION CATEGORY IWB-2500	EXAMINATION METHOD IWB-2600	EXAMINATION PROCEDURE NUMBER	CALIBRATION BLOCK NO.
01-017-018	Pump Support #6, Snubber	N/A	B-K-2	Vis.	525115-ESS-091	N/A
01-017-019	Pump Support #7, Horizontal Column	N/A	B-K-2	Vis.	525115-ESS-091	N/A
01-017-020	Pump Support #8, Horizontal Column	N/A	B-K-2	Vis.	525115-ESS-091	N/A
01-017-021	Pump Support #9, Horizontal Column	N/A	B-K-2	Vis.	525115-ESS-091	N/A
01-017-022	Pump Support #10, Horizontal Column	N/A	B-K-2	Vis.	525115-ESS-091	N/A
01-017-023	Pump Casing Internal Boundary Surfaces	N/A	B-L-2	Vis.	525115-ESS-091	N/A

N/A NOT APPLICABLE
(H) DURING HYDROTEST

Note: Any welds appearing on the reference drawing, but not in the zone tables, were done in the shop.

REVISION: 2

C-E 0090285 (Rev. 7/80)

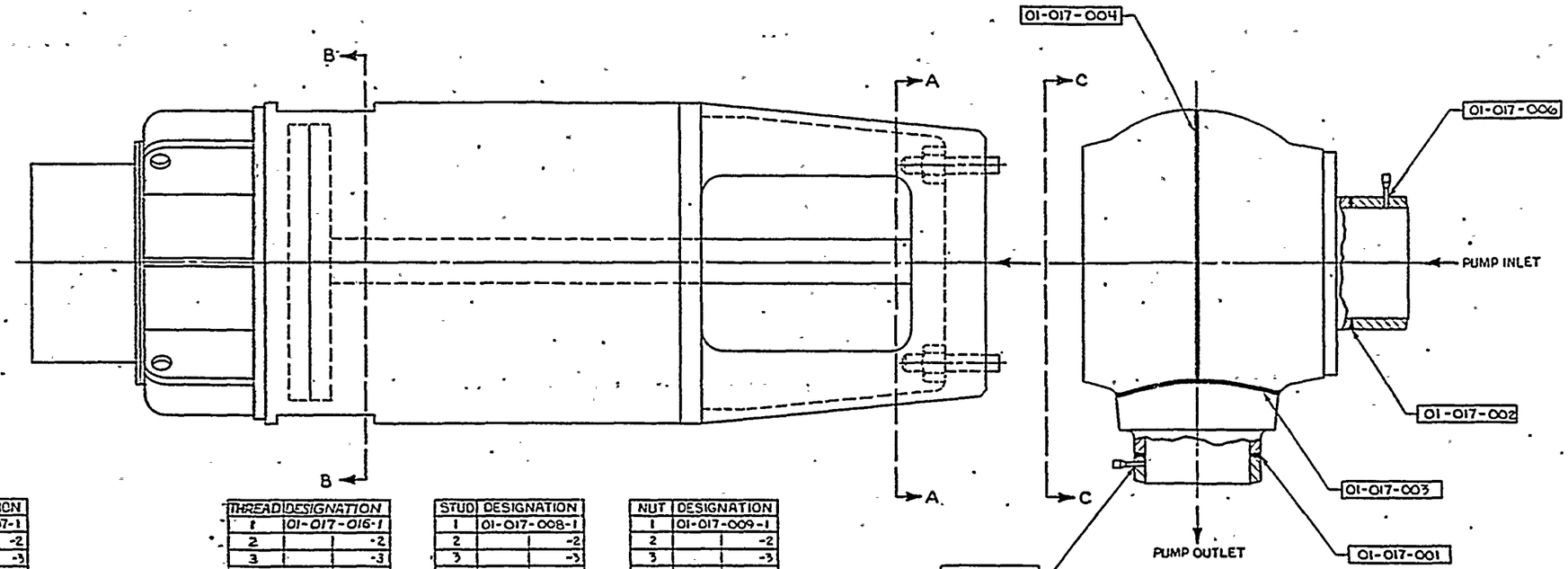

LIGAMENT	DESIGNATION
1	01-017-007-1
2	-2
3	-3
4	-4
5	-5
6	-6
7	-7
8	-8
9	-9
10	-10
11	-11
12	-12
13	-13
14	-14
15	-15
16	-16

THREAD	DESIGNATION
1	01-017-016-1
2	-2
3	-3
4	-4
5	-5
6	-6
7	-7
8	-8
9	-9
10	-10
11	-11
12	-12
13	-13
14	-14
15	-15
16	-16

STUD	DESIGNATION
1	01-017-008-1
2	-2
3	-3
4	-4
5	-5
6	-6
7	-7
8	-8
9	-9
10	-10
11	-11
12	-12
13	-13
14	-14
15	-15
16	-16

NUT	DESIGNATION
1	01-017-009-1
2	-2
3	-3
4	-4
5	-5
6	-6
7	-7
8	-8
9	-9
10	-10
11	-11
12	-12
13	-13
14	-14
15	-15
16	-16

REFERENCE DRAWINGS
CE-KSB
E-8109-101-2002 REV 04
CE-AVERY
D-158-0003 REV 03
D-158-0004 REV 03
D-158-0005 REV 01
D-158-0008 REV 03
D-158-0015 REV 00
ALLIS-CHALMERS
05-223-684-014
05-417-586-401

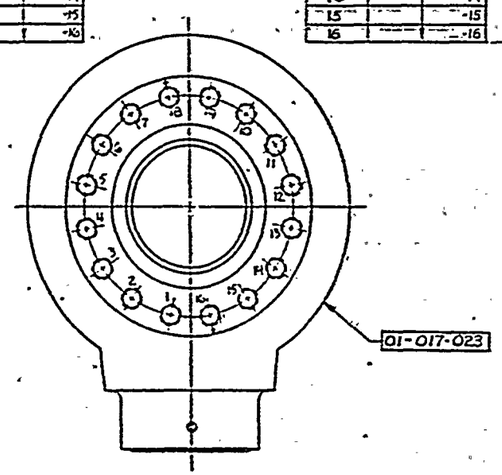

SECTION C-C

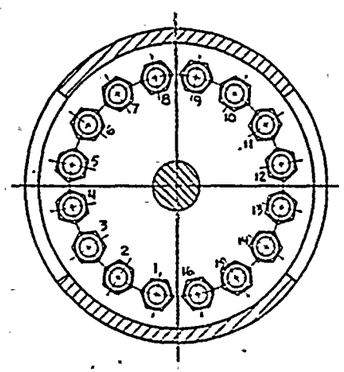

SECTION A-A

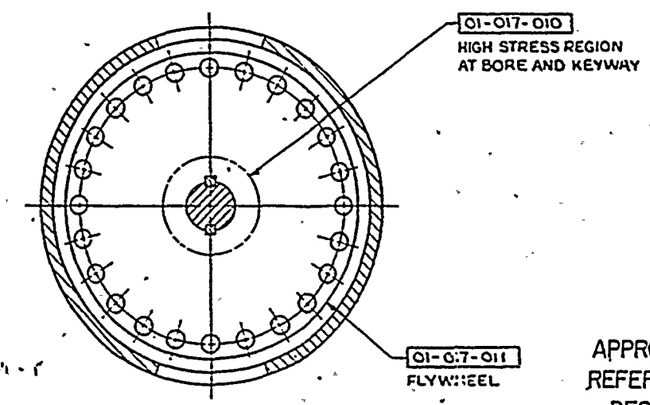

SECTION B-B

E-14273-501-023 04

APPROVED REFERENCE DESIGN

REV	DESCRIPTION	DATE	BY	CHK	APP
V	CERTIFIED FOR ANNOTATED REFERENCE DESIGN PER REV REQ No 14273-37				
V	SHEET 2 ADDED PER REV REQ No 14273-73				
V	ADDED NOTE CONCERNING ASS. REQ'DWGS FOR OTHER CHGS SEE SHEET 2 REV REQ No 73 503				
V	SECT B B. REVISED DIMS 24 HOLES & 2 KEYWAYS PER REV REQ 14273-715				

UNLESS OTHERWISE SPECIFIED
DIMENSIONS & TOLERANCING PER ASME Y14.5 1966
DIMENSIONS APPLY AT DEPT COATS
(DO NOT SCALE DRAWING)
DIMENSIONING ANGLES ± 0° 10' OVER 10"
DECIMAL ± 0.005 ± 0.005 ± 0.010
FRACTION ± 1/64 ± 1/32 ± 1/16
BREAK CORNERS 0.010 APPROX. R
OR CHAM = FILLETS 1/16 TO 1/32 R
FINISH AS NOTED SHOWN IN
ANGLES ± 0° ± 0°30' ± 1°

POWER SYSTEMS

ARIZONA NUCLEAR POWER PROJECT
PALO VERDE NUCLEAR GENERATING STATION

REACTOR COOLANT PUMP
UNIT 1 ZONE 017
WELD DESIGNATIONS

14273

E-14273-501-023 04

525115 661012 DNA 78 1

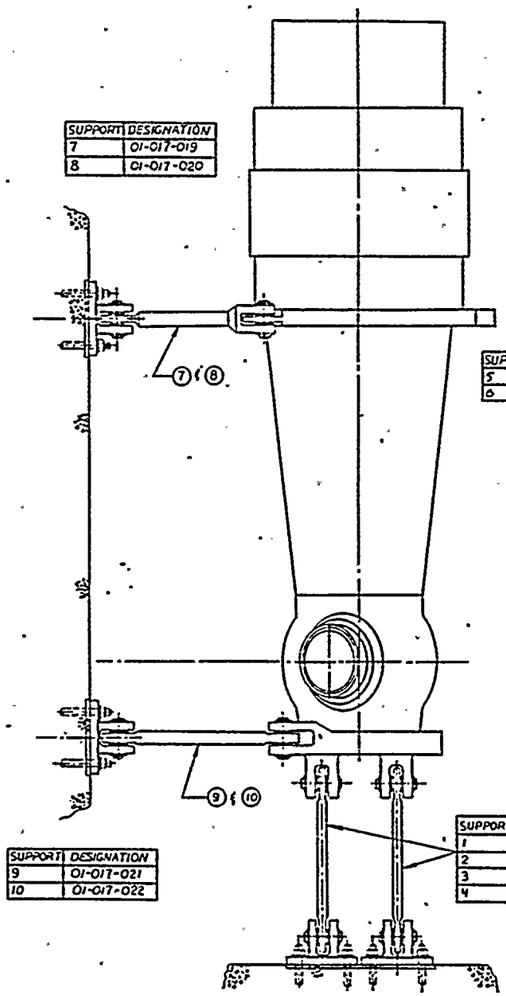

SUPPORT	DESIGNATION
7	01-017-019
8	01-017-020

SUPPORT	DESIGNATION
9	01-017-021
10	01-017-022

VIEW A-A

SUPPORT	DESIGNATION
5	01-017-017
6	01-017-018

SUPPORT	DESIGNATION
1	01-017-012
2	01-017-013
3	01-017-014
4	01-017-015

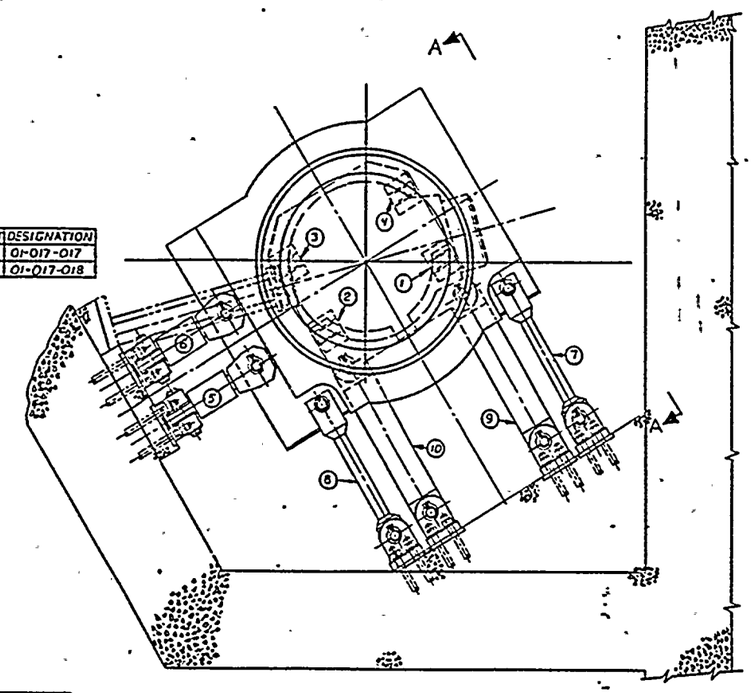

PLAN VIEW
① REACTOR COOLANT PUMP ARRGMT INSTALL.
SCALE: ½"=1'-0"

APPROVED
REFERENCE
DESIGN

REFERENCE DRAWINGS
COMBUSTION ENGINEERING
E-14273-321-030 REV 01

E-14273-501-023

REV	DESCRIPTION				
V	THIS SHEET ADDED PER REV REQ. № 14273-73				
V	1-ADDED REF DWGS - FOR CHGS SEE SHT 1 PER REQ 9679-503				
V	1-SEE SHT 1 FOR REVS PER REV REQ 14273-715				

POWER SYSTEMS

ARIZONA NUCLEAR POWER PROJECT

REACTOR COOLANT PUMP, UNIT 1, ZONE 017 WELD DESIGNATIONS.

E-14273-501-023 04

525115 66/012

POWER SYSTEMS
COMBUSTION ENGINEERING, INC

ZONE 18 CLASS 1

DOCUMENT NO.: TR-ESS-069

PROGRAM PLAN

REFERENCE DRAWING NO.: E-14273-501-024 Rev. 04

TITLE: REACTOR COOLANT PUMP 2A AND MOTOR FLYWHEELS

AREA DESIGNATION	AREA DESCRIPTION	MANUFACTURER'S OR INSTALLER'S WELD NUMBER	EXAMINATION CATEGORY IWB-2500	EXAMINATION METHOD IWB-2600	EXAMINATION PROCEDURE NUMBER	CALIBRATION BLOCK NO.
01-018-001	Outlet Nozzle to Extension Piece Weld	158-0015-1	B-J	Vol.	NIP-966	UT-38
01-018-002	Inlet Nozzle to Extension Piece Weld	158-0016-2	B-J	Vol.	NIP-966	UT-38
01-018-005	Instrument Nozzle - Pump Outlet	N/A	B-P	Vis. (H)	525115-ESS-091	N/A
01-018-006	Instrument Nozzle - Pump Inlet	N/A	B-P	Vis. (H)	525115-ESS-091	N/A
01-018-008-01 through 01-018-008-16	Studs - Motor	N/A	B-G-1	Vol. Vis. Surf.	NIP-952 525115-ESS-091 525115-ESS-093	UT-6,6A N/A N/A
01-018-009-01 through 01-018-009-16	Nuts - Motor	N/A	B-G-1	Vis.	525115-ESS-091	N/A
01-018-010	Motor Flywheel - Bore and Keyway	N/A	Reg. Guide 1.14	Vol.	NIP-953	N/A

N/A NOT APPLICABLE
(H) DURING HYDROTEST

Note: Any welds appearing on the reference drawing, but not in the zone tables, were done in the shop.

REVISION: 2

PAGE: V-18.1

C-E 0090285 (Rev. 7/80)

POWER SYSTEMS
COMBUSTION ENGINEERING, INC.

ZONE 18 CLASS 1

DOCUMENT NO.: TR-ESS-069

PROGRAM PLAN REACTOR COOLANT PUMP 2A AND MOTOR FLYWHEELS

REFERENCE DRAWING NO.: E-14273-501-024 Rev. 04

TITLE:

AREA DESIGNATION	AREA DESCRIPTION	MANUFACTURER'S OR INSTALLER'S WELD NUMBER	EXAMINATION CATEGORY IWB-2500	EXAMINATION METHOD IWB-2600	EXAMINATION PROCEDURE NUMBER	CALIBRATION BLOCK NO.
01-018-011	Motor Flywheel - Entire Flywheel	N/A	Reg. Guide 1.14	Vol. Surf.	NIP-953 9678-ISI-038	N/A CE-ET-9678-ISI-038-2
01-018-012	Pump Support #1, Vertical Column Assembly	N/A	B-K-2	Vis.	525115-ESS-091	N/A
01-018-013	Pump Support #2, Vertical Column Assembly	N/A	B-K-2	Vis.	525115-ESS-091	N/A
01-018-014	Pump Support #3, Vertical Column Assembly	N/A	B-K-2	Vis.	525115-ESS-091	N/A
01-018-015	Pump Support #4, Vertical Column Assembly	N/A	B-K-2	Vis.	525115-ESS-091	N/A
01-018-017	Pump Support #5, Snubber	N/A	B-K-2	Vis.	525115-ESS-091	N/A
01-018-018	Pump Support #6, Snubber	N/A	B-K-2	Vis.	525115-ESS-091	N/A
01-018-019	Pump Support #7, Horizontal Column	N/A	B-K-2	Vis.	525115-ESS-091	N/A

N/A NOT APPLICABLE
(H) DURING HYDROTEST

Note: Any welds appearing on the reference drawing, but not in the zone tables, were done in the shop.

REVISION: 2

C-E 0090285 (Rev. 7/80)

POWER SYSTEMS
COMBUSTION ENGINEERING, INC.

ZONE 18 CLASS 1

DOCUMENT NO.: TR-ESS-069

PROGRAM PLAN REACTOR COOLANT PUMP 2A AND MOTOR FLYWHEELS

REFERENCE DRAWING NO.: E-14273-501-024 Rev. 04

TITLE:

AREA DESIGNATION	AREA DESCRIPTION	MANUFACTURER'S OR INSTALLER'S WELD NUMBER	EXAMINATION CATEGORY IWB-2500	EXAMINATION METHOD IWB-2600	EXAMINATION PROCEDURE NUMBER	CALIBRATION BLOCK NO.
01-018-020	Pump Support #8, Horizontal Column	N/A	B-K-2	Vis.	525115-ESS-091	N/A
01-018-021	Pump Support #9, Horizontal Column	N/A	B-K-2	Vis.	525115-ESS-091	N/A
01-018-022	Pump Support #10, Horizontal Column	N/A	B-K-2	Vis.	525115-ESS-091	N/A
01-018-023	Pump Casing Internal Boundary Surfaces	N/A	B-L-2	Vis.	525115-ESS-091	N/A

N/A NOT APPLICABLE
(H) DURING HYDROTEST

Note: Any welds appearing on the reference drawing, but not in the zone tables, were done in the shop.

REVISION: 2

C-E 0090285 (Rev. 7/80)

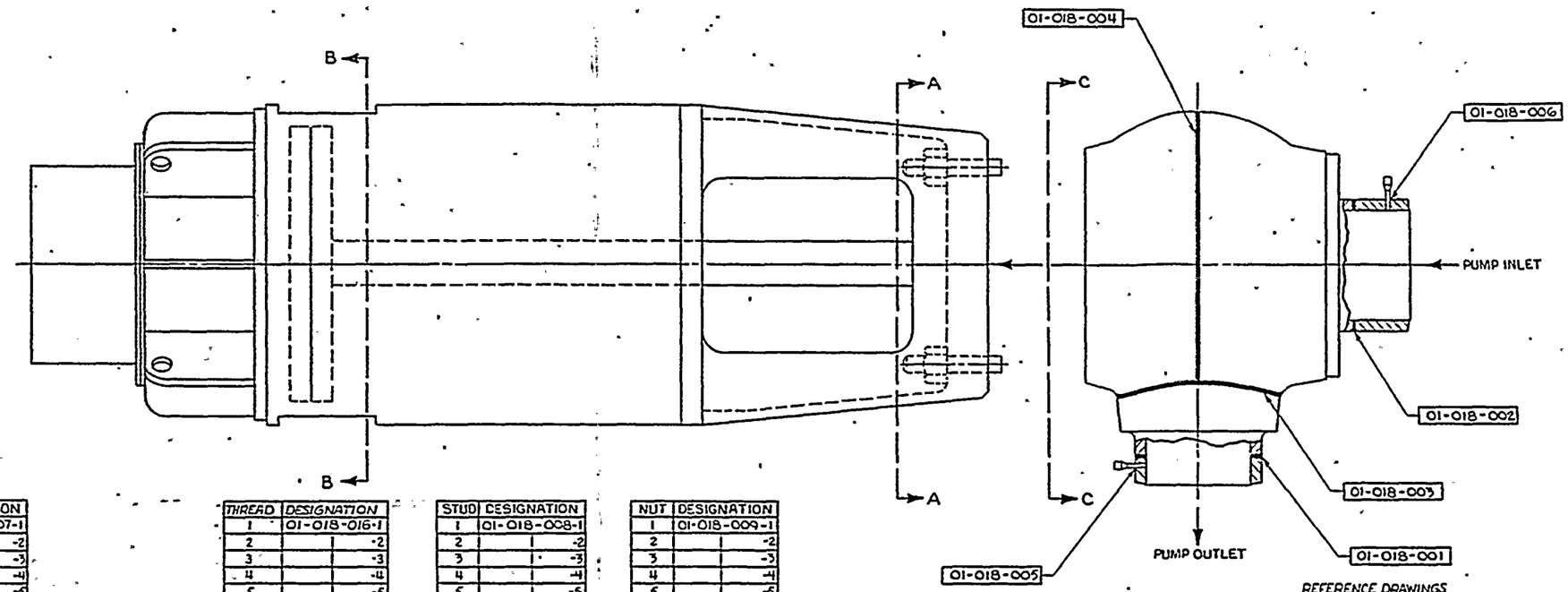

LIGAMENT	DESIGNATION
1	01-018-007-1
2	-2
3	-3
4	-4
5	-5
6	-6
7	-7
8	-8
9	-9
10	-10
11	-11
12	-12
13	-13
14	-14
15	-15
16	-16

THREAD	DESIGNATION
1	01-018-016-1
2	-2
3	-3
4	-4
5	-5
6	-6
7	-7
8	-8
9	-9
10	-10
11	-11
12	-12
13	-13
14	-14
15	-15
16	-16

STUD	DESIGNATION
1	01-018-008-1
2	-2
3	-3
4	-4
5	-5
6	-6
7	-7
8	-8
9	-9
10	-10
11	-11
12	-12
13	-13
14	-14
15	-15
16	-16

NUT	DESIGNATION
1	01-018-009-1
2	-2
3	-3
4	-4
5	-5
6	-6
7	-7
8	-8
9	-9
10	-10
11	-11
12	-12
13	-13
14	-14
15	-15
16	-16

REFERENCE DRAWINGS
CE-KSB
E-8109-101-2002 REV 04

CE-AVERY
D-158-0003 REV 03
D-158-0004 REV 03
D-158-0005 REV 01
D-158-0008 REV 03
D-158-0015 REV 00

ALLIS-CHALMERS
05-223-684-014
05-417-566-401

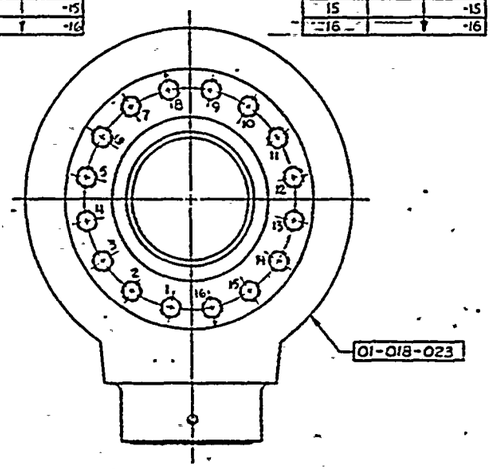

SECTION C-C

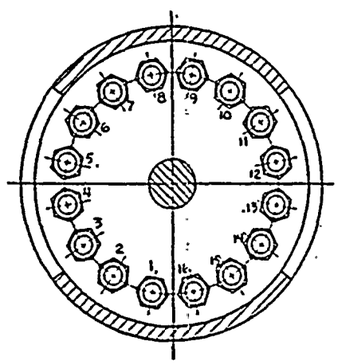

SECTION A-A

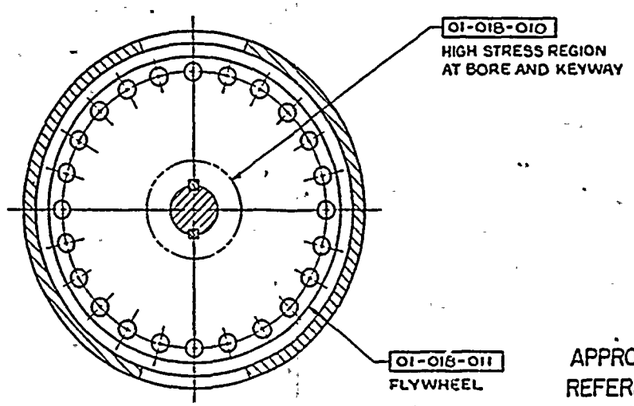

SECTION B-B

E-14273-501-024
SHT 1 OF 2
04

APPROVED
REFERENCE
DESIGN

REV	DESCRIPTION				
03	CERTIFIED FOR APPROVED REFERENCE DESIGN PER REV REQ No. H273-37				
04	SHEET 2 ADDED PER REV REQ No. H273-73				
05	1) ADDED THREAD DESIGNATIONS 2) ADDED REF DWG SSCE SHT 2 FOR OTHER CHGS PER REV. 9375-523				
06	SHEET 2 B-B: REVISED TO SHOW NEW KEYWAY PER REV REQ H273-77				

UNLESS OTHERWISE SPECIFIED
DIMENSIONING & TOLERANCING PER ASME Y14.5 1966
DIMENSIONS APPLY AT 68°F (20°C)
DO NOT SCALE DRAWING

DIMENSIONS	SINGLE	DUAL
DECIMAL	± .005	± .010
FRACTION	± 1/64	± 1/32

BREAK CORNERS 1/64 APPROX. R
OR CHAM = FILLETS 1/64 TO 1/32 R
FIN 64 AA AS RECD UN

ANGLES: 1° 30'

POWER SYSTEMS
ARIZONA NUCLEAR POWER PROJECT
PALO VERDE NUCLEAR GENERATING STATION

REACTOR COOLANT PUMP
UNIT 1 ZONE 01B
WELD DESIGNATIONS

525115

E-14273-501-024 04

H273

DNA 78

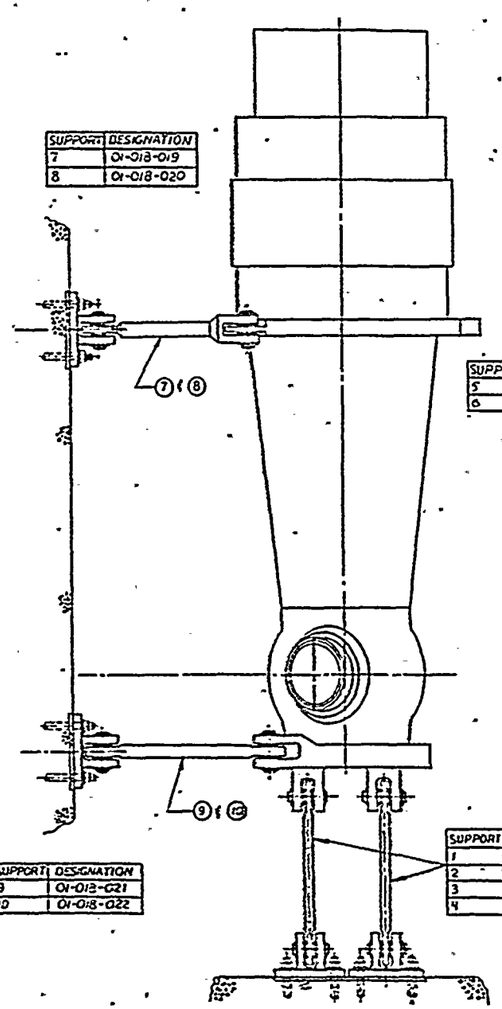

SUPPORT	DESIGNATION
7	01-018-019
8	01-018-020

SUPPORT	DESIGNATION
9	01-018-021
10	01-018-022

SUPPORT	DESIGNATION
1	01-018-012
2	01-018-013
3	01-018-014
4	01-018-015

VIEW- A-A

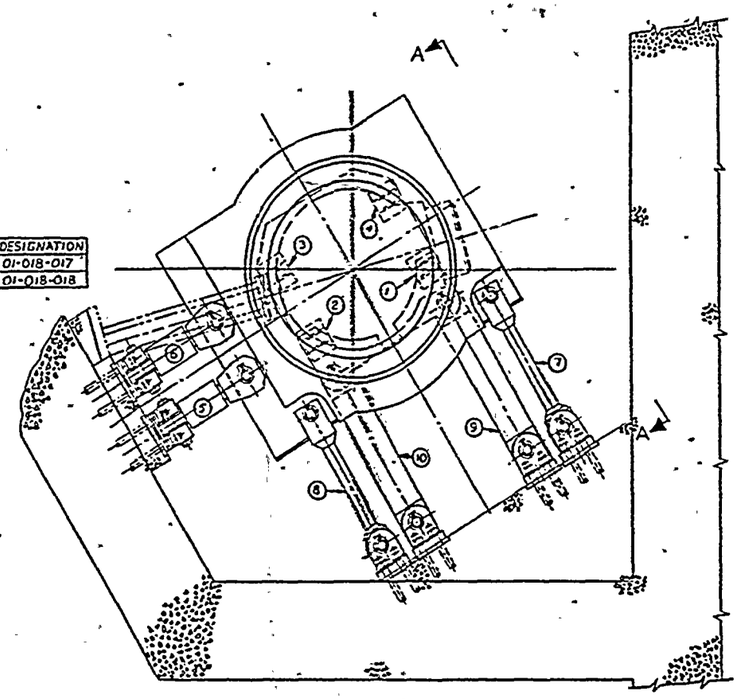

SUPPORT	DESIGNATION
5	01-018-017
6	01-018-018

PLAN VIEW
① REACTOR COOLANT PUMP ARRGMT INSTALL
SCALE: ½"=1'-0"

APPROVED
REFERENCE
DESIGN

E-14273-501-024
SHT 2 OF 2 04

DATE	DESCRIPTION				
	THIS SHEET ADDED PER REV REQ. N. 14273-73				
	1-ADDED REF DWG - FOR OTHER CHGS SEE SHT 1 PER REQ 9678-503				
	1-SEE SHT 1 FOR REVS PER REV REQ 14273-715				

POWER SYSTEMS

ARIZONA NUCLEAR POWER PROJECT
PALO VERDE NUCLEAR GENERATING STATION

REACTOR COOLANT PUMP, UNIT 1, ZONE 018 WELD DESIGNATIONS.

E-14273-501-024 04

525115

8 7 6 5 4 3

/ER SYSTEMS
COMBUSTION ENGINEERING, INC.

ZONE 19 CLASS 1

DOCUMENT NO.: TR-ESS-069

PROGRAM PLAN

REFERENCE DRAWING NO.: E-14273-501-025 Rev. 04

TITLE: REACTOR COOLANT PUMP 2B AND MOTOR FLYWHEELS

AREA DESIGNATION	AREA DESCRIPTION	MANUFACTURER'S OR INSTALLER'S WELD NUMBER	EXAMINATION CATEGORY IWB-2500	EXAMINATION METHOD IWB-2600	EXAMINATION PROCEDURE NUMBER	CALIBRATION BLOCK NO.
01-019-001	Outlet Nozzle to Extension Piece Weld	158-0015-1	B-J	Vol.	NIP-966	UT-38
01-019-002	Inlet Nozzle to Extension Piece Weld	158-0016-2	B-J	Vol.	NIP-966	UT-38
01-019-005	Instrument Nozzle - Pump Outlet	N/A	B-P	Vis. (H)	525115-ESS-091	N/A
01-019-006	Instrument Nozzle - Pump Inlet	N/A	B-P	Vis. (H)	525115-ESS-091	N/A
01-019-008-01 through 01-019-008-16	Studs - Motor	N/A	B-G-1	Vol. Vis. Surf.	NIP-952 525115-ESS-091 525115-ESS-093	UT-6,6A N/A N/A
01-019-009-01 through 01-019-009-16	Nuts - Motor	N/A	B-G-1	Vis.	525115-ESS-091	N/A
01-019-010	Motor Flywheel - Bore and Keyway	N/A	Reg. Guide 1.14	Vol.	NIP-953	N/A

N/A NOT APPLICABLE
(H) DURING HYDROTEST

Note: Any welds appearing on the reference drawing, but not in the zone tables, were done in the shop.

REVISION: 2

C-E 0090285 (Rev. 7/80)

COMBUSTION ENGINEERING, INC.

ZONE 19 CLASS 1

DOCUMENT NO.: TR-ESS-069

PROGRAM PLAN

REFERENCE DRAWING NO.: E-14273-501-025 Rev. 04

TITLE: REACTOR COOLANT PUMP 2B AND MOTOR FLYWHEELS

AREA DESIGNATION	AREA DESCRIPTION	MANUFACTURER'S OR INSTALLER'S WELD NUMBER	EXAMINATION CATEGORY IWB-2500	EXAMINATION METHOD IWB-2600	EXAMINATION PROCEDURE NUMBER	CALIBRATION BLOCK NO.
01-019-011	Motor Flywheel - Entire Flywheel	N/A	Reg. Guide 1.14	Vol. Surf.	NIP-953 9678-ISI-038	N/A CE-ET-9678-ISI-038-2
01-019-012	Pump Support #1, Vertical Column Assembly	N/A	B-K-2	Vis.	525115-ESS-091	N/A
01-019-013	Pump Support #2, Vertical Column Assembly	N/A	B-K-2	Vis.	525115-ESS-091	N/A
01-019-014	Pump Support #3, Vertical Column Assembly	N/A	B-K-2	Vis.	525115-ESS-091	N/A
01-019-015	Pump Support #4, Vertical Column Assembly	N/A	B-K-2	Vis.	525115-ESS-091	N/A
01-019-017	Pump Support #5, Snubber	N/A	B-K-2	Vis.	525115-ESS-091	N/A
01-019-018	Pump Support #6, Snubber	N/A	B-K-2	Vis.	525115-ESS-091	N/A
01-019-019	Pump Support #7, Horizontal Column	N/A	B-K-2	Vis.	525115-ESS-091	N/A

N/A NOT APPLICABLE
(H) DURING HYDROTEST

Note: Any welds appearing on the reference drawing, but not in the zone tables, were done in the shop.

REVISION: 2

C-E 0090285 (Rev. 7/80)

COMBUSTION ENGINEERING, INC.

ZONE 19 CLASS 1

DOCUMENT NO.: TR-ESS-069

PROGRAM PLAN

REFERENCE DRAWING NO.: E-14273-501-025 Rev. 04

TITLE: REACTOR COOLANT PUMP 2B AND MOTOR FLYWHEELS

AREA DESIGNATION	AREA DESCRIPTION	MANUFACTURER'S OR INSTALLER'S WELD NUMBER	EXAMINATION CATEGORY IWB-2500	EXAMINATION METHOD IWB-2600	EXAMINATION PROCEDURE NUMBER	CALIBRATION BLOCK NO.
01-019-020	Pump Support #8, Horizontal Column	N/A	B-K-2	Vis.	525115-ESS-091	N/A
01-019-021	Pump Support #9, Horizontal Column	N/A	B-K-2	Vis.	525115-ESS-091	N/A
01-019-022	Pump Support #10, Horizontal Column	N/A	B-K-2	Vis.	525115-ESS-091	N/A
01-019-023	Pump Casing Internal Boundary Surfaces	N/A	B-L-2	Vis.	525115-ESS-091	N/A

N/A NOT APPLICABLE
(H) DURING HYDROTEST

Note: Any welds appearing on the reference drawing, but not in the zone tables, were done in the shop.

REVISION: 2

C-E 0090285 (Rev. 7/80)

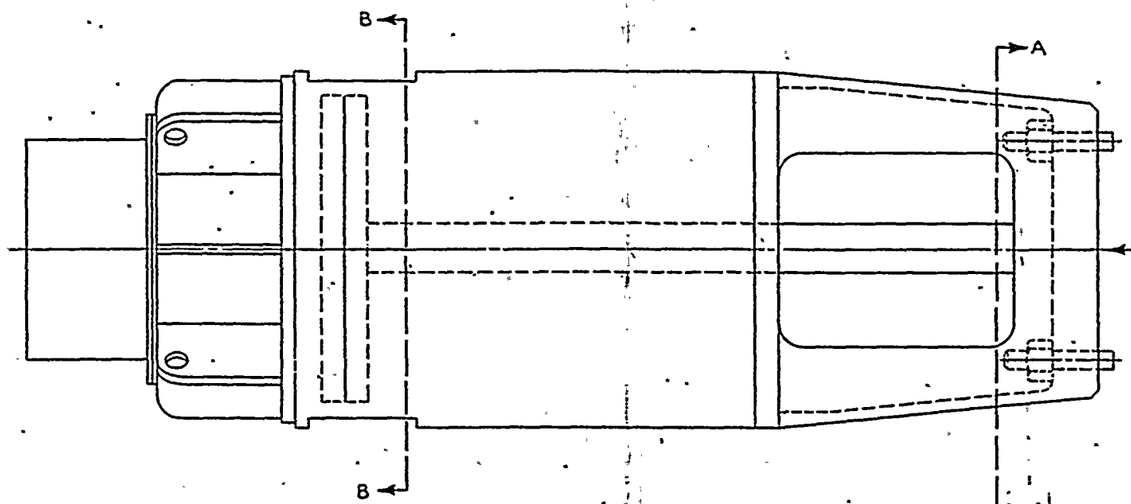

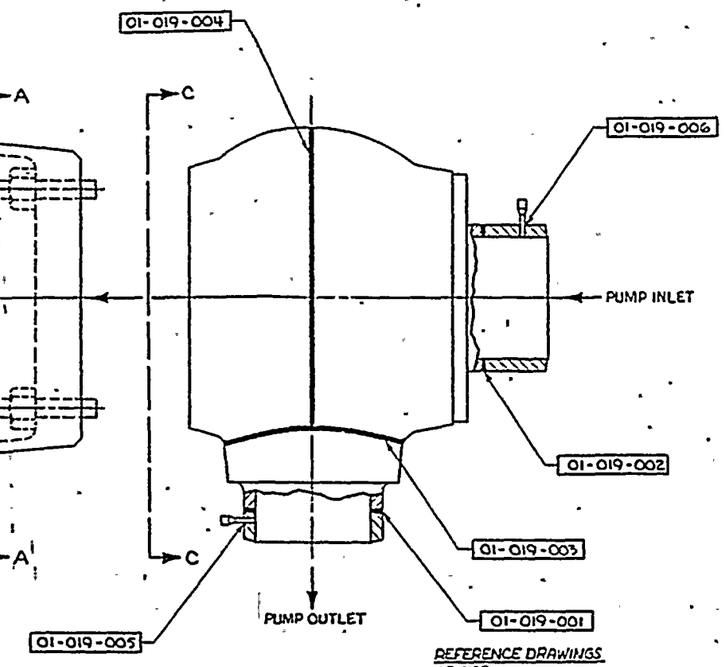

LIGAMENT	DESIGNATION
1	01-019-007-1
2	-2
3	-3
4	-4
5	-5
6	-6
7	-7
8	-8
9	-9
10	-10
11	-11
12	-12
13	-13
14	-14
15	-15
16	-16

THREAD	DESIGNATION
1	01-019-016-1
2	-2
3	-3
4	-4
5	-5
6	-6
7	-7
8	-8
9	-9
10	-10
11	-11
12	-12
13	-13
14	-14
15	-15
16	-16

STUD	DESIGNATION
1	01-019-008-1
2	-2
3	-3
4	-4
5	-5
6	-6
7	-7
8	-8
9	-9
10	-10
11	-11
12	-12
13	-13
14	-14
15	-15
16	-16

NUT	DESIGNATION
1	01-019-009-1
2	-2
3	-3
4	-4
5	-5
6	-6
7	-7
8	-8
9	-9
10	-10
11	-11
12	-12
13	-13
14	-14
15	-15
16	-16

REFERENCE DRAWINGS
CE-KSB
E-8109-101-2002 REV 04

CE-AVERY
D-158-0003 REV 03
D-158-0004 REV 03
D-158-0005 REV 01
D-158-0008 REV 03
D-158-0015 REV 00

ALLIS-CHALMERS
05-223-684-014
05-417-586-401

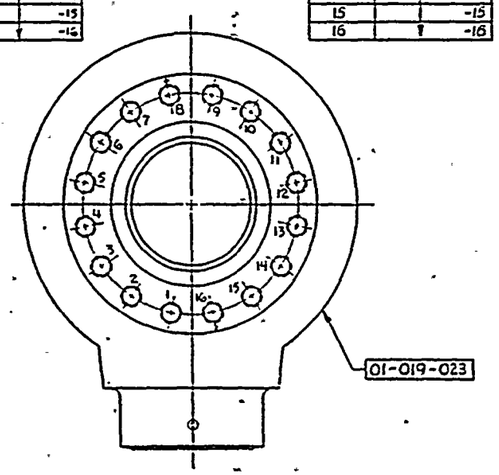

SECTION C-C

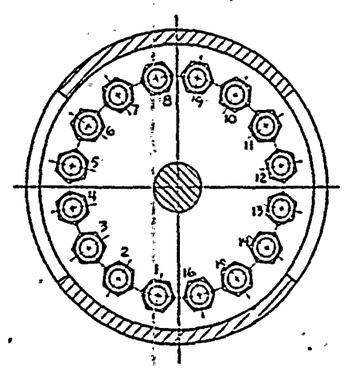

SECTION A-A

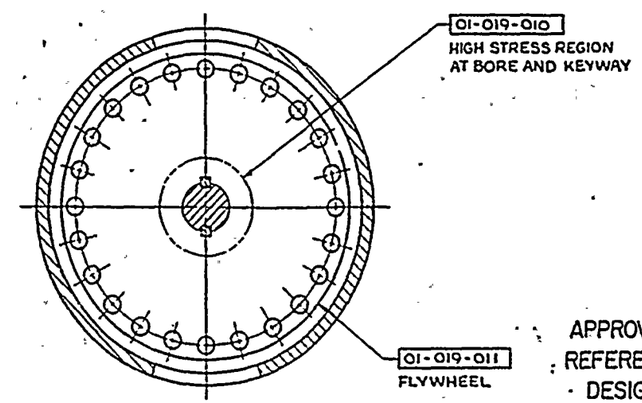

SECTION B-B

E-14273-501-025
04

APPROVED
REFERENCE
DESIGN

REV	DESCRIPTION				
03	CERTIFIED FOR APPROVED REFERENCE DESIGN PER REV REQ No 14273-37				
04	SHEET 2 ADDED PER REV REQ No 14273-73				
05	1. ADDED THREAD DESIGNATIONS 2. ADDED REF DWG'S FOR OTHER DWGS SEE SHT 2 PER REQ 96-78 533				
06	1. SECT B-B: REVISED TO SHOW 24 HOLES & 2 KEYWAYS PER REV REQ 14273-715				

UNLESS OTHERWISE SPECIFIED

POWER SYSTEMS

ARIZONA NUCLEAR POWER PROJECT

REACTOR COOLANT PUMP
UNIT 1 ZONE 019
WELD DESIGNATIONS

E-14273-501-025 04

14273

DNA 7A

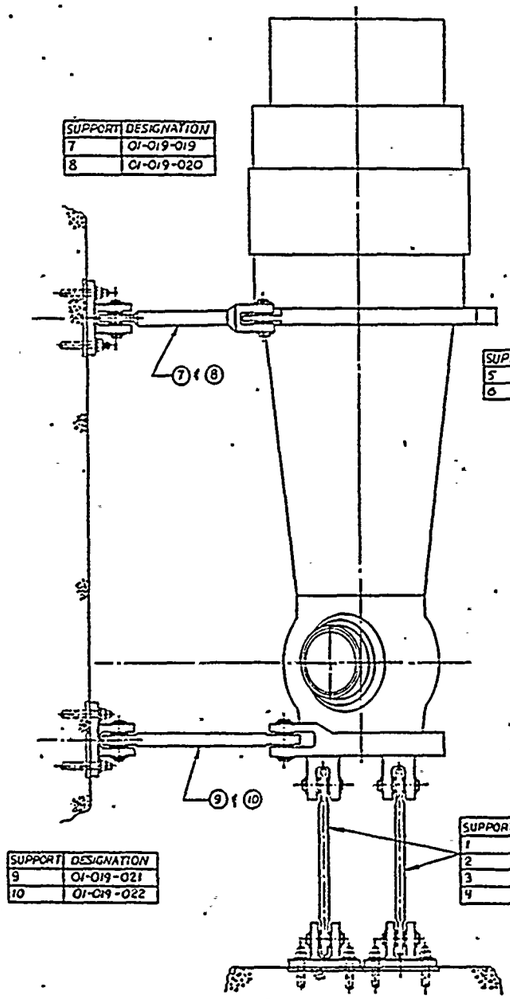

SUPPORT	DESIGNATION
7	01-019-019
8	01-019-020

SUPPORT	DESIGNATION
9	01-019-021
10	01-019-022

VIEW A-A

SUPPORT	DESIGNATION
5	01-019-017
6	01-019-018

SUPPORT	DESIGNATION
1	01-019-012
2	01-019-013
3	01-019-014
4	01-019-015

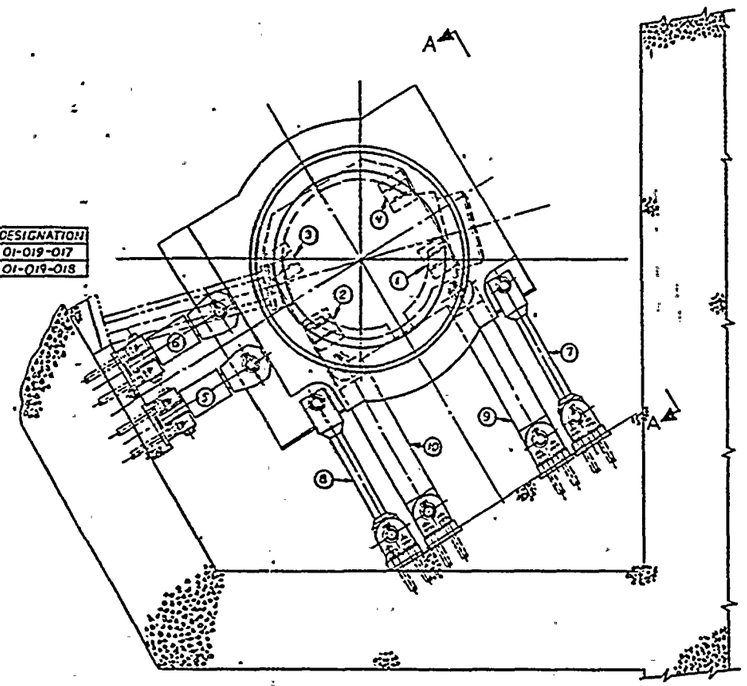

PLAN VIEW
① REACTOR COOLANT PUMP ARRGMT INSTALL
SCALE: 3/8"=1'-0"

APPROVED
REFERENCE
DESIGN

REFERENCE DRAWING
COMBUSTION ENGINEERING
E-14273-321-030 REV 01

E-14273-501-025
SHT 2 OF 2 04

04	THIS SHEET ADDED PER REV REQ. No 14273-73				
03	1-ADDED REF DWG - ENGINEERING SEE SHT 1 PER REQ D-78-503				
02	1-SEE SHT 1 PER REVISION REV REQ 14273-73				

COMBUSTION ENGINEERING POWER SYSTEMS

ARKANSAS NUCLEAR POWER PROJECT

TITLE: REACTOR COOLANT PUMP. UNIT 1. ZONE 01 WELD DESIGNATIONS.

E-14273-501-025 04

525115

SHEET 2 OF 2

8 7 6 5 4 3 2 1

POWER SYSTEMS
COMBUSTION ENGINEERING, INC.

ZONE 20 CLASS 1
PROGRAM PLAN

DOCUMENT NO.: TR-ESS-069
REFERENCE DRAWING NO.: D-9678-501-088 Rev. 03
TITLE: PRESSURIZER SURGE LINE

AREA DESIGNATION	AREA DESCRIPTION	MANUFACTURER'S OR INSTALLER'S WELD NUMBER	EXAMINATION CATEGORY IWB-2500	EXAMINATION METHOD IWB-2600	EXAMINATION PROCEDURE NUMBER	CALIBRATION BLOCK NO.
01-020-001	Pressurizer Nozzle-to-12" Sch 160 Pipe	RC-028-W006	B-J	UT	NIP-954	UT-54
01-020-002	12" Sch 160 Pipe-to-Elbow	RC-028-S005-A	B-J	UT	NIP-954	UT-54
01-020-003	12" Sch 160 Elbow-to-Pipe	RC-028-W005	B-J	UT	NIP-954	UT-54
01-020-004	12" Sch 160 Pipe-to-Pipe	RC-028-W004	B-J	UT	NIP-954	UT-54
01-020-005	12" Sch 160 Pipe-to-Elbow	RC-028-S002-C	B-J	UT	NIP-954	UT-54
01-020-006	12" Sch 160 Elbow-to-Pipe	RC-028-S002-B	B-J	UT	NIP-954	UT-54
01-020-007	12" Sch 160 Pipe-to-Elbow	RC-028-S002-A	B-J	UT	NIP-954	UT-54
01-020-008	12" Sch 160 Elbow-to-Pipe	RC-028-W002	B-J	UT	NIP-954	UT-54
01-020-009	12" Sch 160 Pipe-to-Elbow	RC-028-S001-A	B-J	UT	NIP-954	UT-54

N/A NOT APPLICABLE
(H) DURING HYDROTEST

REVISION: 2

C-E 0090285 (Rev. 7/80)

POWER SYSTEMS
COMBUSTION ENGINEERING, INC.

ZONE 20 CLASS 1
PROGRAM PLAN

DOCUMENT NO.: TR-ESS-069
REFERENCE DRAWING NO.: D-9678-501-088 Rev. 03
TITLE: PRESSURIZER SURGE LINE

AREA DESIGNATION	AREA DESCRIPTION	MANUFACTURER'S OR INSTALLER'S WELD NUMBER	EXAMINATION CATEGORY IWB-2500	EXAMINATION METHOD IWB-2600	EXAMINATION PROCEDURE NUMBER	CALIBRATION BLOCK NO.
01-020-010	12" Sch 160 Elbow-to-Pipe	RC-028-S001-B	B-J	UT	NIP-954	UT-54
01-020-011	12" Sch 160 Pipe-to-Nozzle	RC-028-W001	B-J	UT	NIP-954	UT-54

N/A NOT APPLICABLE
(H) DURING HYDROTEST

REVISION: 2

C-E 0090285 (Rev. 7/80)

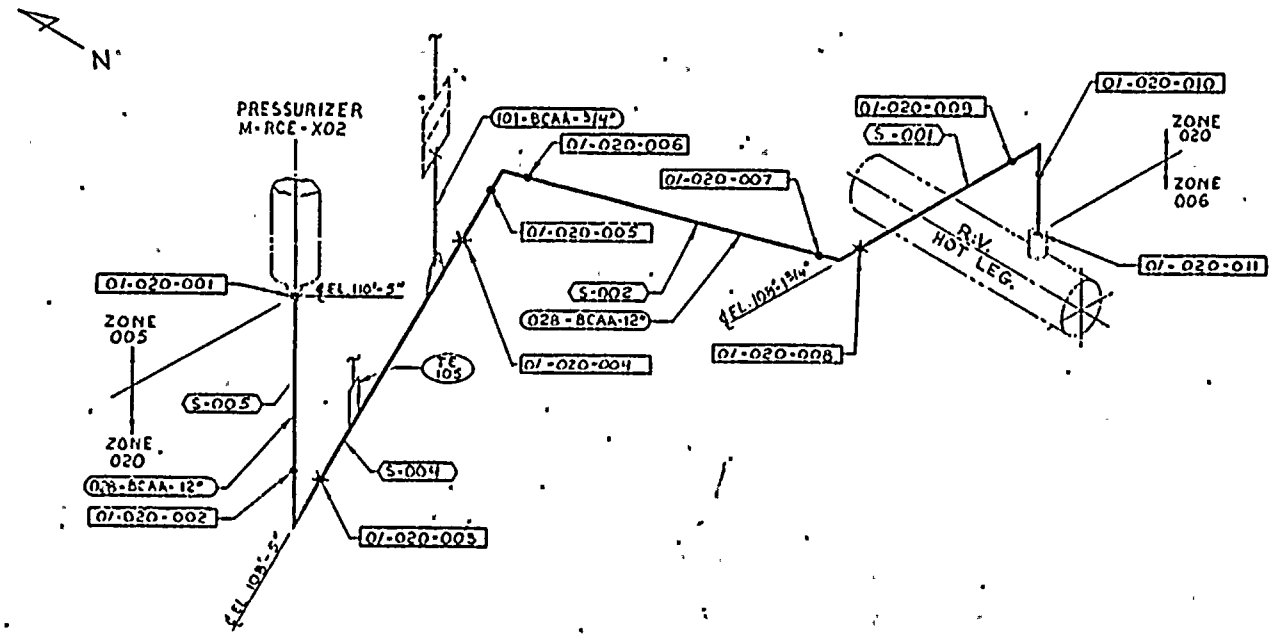

LEGEND

- • SHOP WELD
- X FIELD WELD
- (028-8CAA-12") LINE DESIGNATION
- (S-001) SPOOL # NUMBER
- (01-020-XXX) EXAMINATION AREA DESIGNATION

PULLMAN-KELLOGG

ZONE 20			
LINE #	SIZE	SPOOL #	
028	12"	S-001	F-316
		-002	F-317
		-004	F-319
		-005	F-320

D-9678-501-088 03

REFERENCE DRAWINGS
SK-H-RCF-101 REV 4
DECHTEL 13-P-RCF-101 REV 4
13-RC-028-H001 REV 1
13-RC-028-H002 REV 1
13-RC-028-H003 REV 1
13-RC-028-H004 REV 1

APPROVED REFERENCE DESIGN

UNIT 1 ZONE 20

REV	DESCRIPTION					
03	UPGRADE TO APPROVED REF DESIGN PER REV REQ #9678-250					
02	1 ADDED HANGERS, HANGER CALL OUTS & HANGER LEGEND. 2. ADDED REF DWGS] PER REV REQ 9678-503					
01	1. GENERALLY REVISED PER REV REQ #9678-262					

POWER SYSTEMS

ARIZONA NUCLEAR POWER PROJECT
PALO VERDE NUCLEAR GENERATING STATION

PRESSURIZER SURGE LINE. ZONE 20

D-9678-501-088 03

SCALE NONE

8 7 6 5 4 3 2 1
A B C D E F G H

POWER SYSTEMS
COMBUSTION ENGINEERING, INC.

ZONE 21 CLASS 1

PROGRAM PLAN

DOCUMENT NO.: TR-ESS-069

REFERENCE DRAWING NO.: E-9678-501-076 Rev. 03

TITLE: LOOP 1 SHUTDOWN COOLING LINE

AREA DESIGNATION	AREA DESCRIPTION	MANUFACTURER'S OR INSTALLER'S WELD NUMBER	EXAMINATION CATEGORY IWB-2500	EXAMINATION METHOD IWB-2600	EXAMINATION PROCEDURE NUMBER	CALIBRATION BLOCK NO.
01-021-001	16" Sch 160 Pipe-to-Valve	SI-240-W004	B-J	UT	NIP-954	UT-56
01-02[illegible]-001A	16" Sch 160 Sweepolet to 16" Sch 160 Pipe	RC-051-S003-H	B-J	UT	NIP-954	UT-56
01-021-002	Valve UV-651 (S/N 26233)	N/A	B-M-2	Vis.	525115-ESS-091	N/A
01-021-003	Valve-to-16" Sch 160 Pipe	SI-240-W005	B-J	UT	NIP-954	UT-56
01-021-004	16" Sch 160 Pipe-to-Elbow	SI-240-S004-A	B-J	UT	NIP-954	UT-56
01-021-005	16" Sch 160 Elbow-to-Pipe	SI-240-W006	B-J	UT	NIP-954	UT-56
01-021-006	16" Sch 160 Pipe-to-Pipe	SI-240-S005-A	B-J	UT	NIP-954	UT-56
01-021-007	16" Sch 160 Pipe-to-Elbow	SI-240-W007	B-J	UT	NIP-954	UT-56
01-021-008	16" Sch 160 Elbow-to-Pipe	SI-240-S006-A	B-J	UT	NIP-954	UT-56

N/A NOT APPLICABLE
(H) DURING HYDROTEST

REVISION: 2

C-E 0090285 (Rev. 7/80)

COMBUSTION ENGINEERING, INC.

ZONE 21 CLASS 1

PROGRAM PLAN

DOCUMENT NO.: TR-ESS-069

REFERENCE DRAWING NO.: E-9678-501-076 Rev. 03

TITLE: LOOP 1 SHUTDOWN COOLING LINE

AREA DESIGNATION	AREA DESCRIPTION	MANUFACTURER'S OR INSTALLER'S WELD NUMBER	EXAMINATION CATEGORY IWB-2500	EXAMINATION METHOD IWB-2600	EXAMINATION PROCEDURE NUMBER	CALIBRATION BLOCK NO.
01-021-009	16" Sch 160 Pipe-to-Elbow	SI-240-W008	B-J	UT	NIP-954	UT-56
01-021-010	16" Sch 160 Elbow-to-Pipe	SI-240-S007-A	B-J	UT	NIP-954	UT-56
01-021-011	16" Sch 160 Pipe-to-Pipe	SI-240-S007-D	B-J	UT	NIP-954	UT-56
01-021-011A	16" Sch 160 Pipe-to-Pipe	SI-240-S007-C	B-J	UT	NIP-954	UT-56
01-021-012	16" Sch 160 Pipe-to-Valve	SI-240-W009	B-J	UT	NIP-954	UT-56
01-021-012A	16" Sch 160 Pipe-to-Pipe	RC-051-S003-G	B-J	UT	NIP-954	UT-56
01-021-013	16" Sch 160 Pipe-to-Pipe	RC-051-W005	B-J	UT	NIP-954	UT-56
01-021-013A	16" Sch 160 Pipe-to-Pipe	RC-051-S005-D	B-J	UT	NIP-954	UT-56
01-021-013B	16" Sch 160 Sweepolet to 16" Sch 160 Pipe	RC-051-S005-B	B-J	UT	NIP-954	UT-56

N/A NOT APPLICABLE
(H) DURING HYDROTEST

REVISION: 2

C-E 0090285 (Rev. 7/80)

POWER SYSTEMS
COMBUSTION ENGINEERING, INC.

ZONE 21 CLASS 1
PROGRAM PLAN

DOCUMENT NO.: TR-ESS-069
REFERENCE DRAWING NO.: E-9678-501-076 Rev. 03
TITLE: LOOP 1 SHUTDOWN COOLING LINE

AREA DESIGNATION	AREA DESCRIPTION	MANUFACTURER'S OR INSTALLER'S WELD NUMBER	EXAMINATION CATEGORY IWB-2500	EXAMINATION METHOD IWB-2600	EXAMINATION PROCEDURE NUMBER	CALIBRATION BLOCK NO.
01-021-014	16" Sch 160 Elbow-to-Pipe	RC-051-S005-A	B-J	UT	NIP-954	UT-56
01-021-015	16" Sch 160 Pipe-to-Elbow	RC-051-W003	B-J	UT	NIP-954	UT-56
01-021-016	16" Sch 160 Elbow-to-Pipe	RC-051-S002-A	B-J	UT	NIP-954	UT-56
01-021-017	16" Sch 160 Pipe-to-Elbow	RC-051-W002	B-J	UT	NIP-954	UT-56
01-021-018	16" Sch 160 Elbow-to-Pipe	RC-051-S001-B	B-J	UT	NIP-954	UT-56
01-021-019	16" Sch 160 Pipe-to-Elbow	RC-051-S001-A	B-J	UT	NIP-954	UT-56
01-021-020	16" Sch 160 Pipe-to-Safe End	RC-051-W001	B-J	UT	NIP-954	UT-56
01-021-021	Valve UV-653 (S/N 26235)	N/A	B-M-2	Vis.	525115-ESS-091	N/A
01-021-022	Valve UV-653 Bolting	N/A	B-G-2	Vis.	525115-ESS-091	N/A

N/A NOT APPLICABLE
(H) DURING HYDROTEST

REVISION: 2

C-E 0090285 (Rev. 7/80)

POWER SYSTEMS
COMBUSTION ENGINEERING, INC.

ZONE 21 CLASS 1
PROGRAM PLAN

DOCUMENT NO.: TR-ESS-069
REFERENCE DRAWING NO.: E-9678-501-076 Rev. 03
TITLE: LOOP 1 SHUTDOWN COOLING LINE

AREA DESIGNATION	AREA DESCRIPTION	MANUFACTURER'S OR INSTALLER'S WELD NUMBER	EXAMINATION CATEGORY IWB-2500	EXAMINATION METHOD IWB-2600	EXAMINATION PROCEDURE NUMBER	CALIBRATION BLOCK NO.
01-021-023	Valve UV-651 Bolting	N/A	B-G-2	Vis.	525115-ESS-091	N/A

N/A NOT APPLICABLE
(H) DURING HYDROTEST

REVISION: 2

C-E 0090285 (Rev. 7/80)

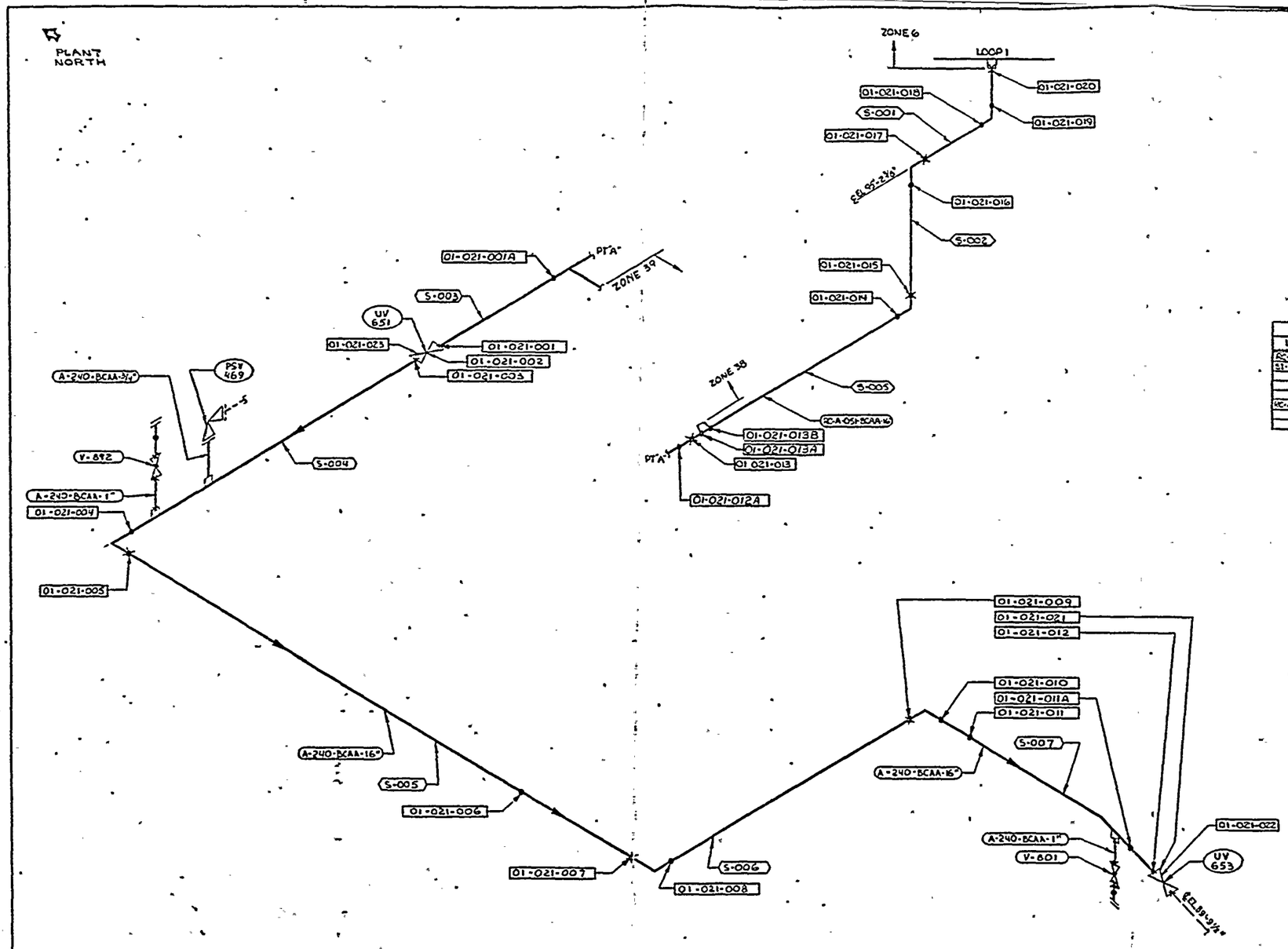

LEGEND

- ● —— SHOP WELD
- X —— FIELD WELD
- (A-240-BCAA-16") —— LINE DESIGNATION
- (S-003) —— SPOOL Pc NUMBER
- (01-021-XXX) —— EXAMINATION AREA
- (V-892) / (UV 651) —— VALVE DESIGNATION

REFERENCE DRAWINGS:

BECHTEL: 01-P-SIF-105 REV 3
23-P-SIF-105 REV 3
3K-H-SIF-105 REV 3

PULLMAN-KELLOGG:

ZONE 21 LINE & SIZE	SPOOL PIECE	
RC-A-051-BCAA-16"	S-003	F-312
S1-A-240-BCAA-16"	004	F-254
	005	F-350
	006	F-337
	007	F-315
RC-A-051-BCAA-16"	001	F-1128
	002	F-5-56
	003	F-1802

E-9678-501-076 Q3

APPROVED REFERENCE DESIGN

UNIT 1 ZONE 21

REV	DESCRIPTION
V	UPGRADE TO APPROVED REF DESIGN PER REV REQ No 9678-253
V	GENERALLY REVISED PER REV. REQ. No. 9678-503
V	GENERALLY REVISED PER REV REQ No. 9678-252

POWER SYSTEMS

ARIZONA NUCLEAR POWER PROJECT PALO VERDE NUCLEAR GENERATING STATION

ZONE 21 LOOP 1 SHUTDOWN COOLING LINE

E-9678-501-076 Q3

8/10/12 NONE

POWER SYSTEMS
COMBUSTION ENGINEERING, INC.

ZONE 22 CLASS 1
PROGRAM PLAN

DOCUMENT NO.: TR-ESS-069

REFERENCE DRAWING NO.: E-9678-501-075 Rev. 03

TITLE: LOOP 2 SHUTDOWN COOLING LINE

AREA DESIGNATION	AREA DESCRIPTION	MANUFACTURER'S OR INSTALLER'S WELD NUMBER	EXAMINATION CATEGORY IWB-2500	EXAMINATION METHOD IWB-2600	EXAMINATION PROCEDURE NUMBER	CALIBRATION BLOCK NO.
01-022-001	Nozzle-to-16" Sch 160 Pipe	RC-068-W001	B-J	UT	NIP-954	UT-56
01-022-002	16" Sch 160 Pipe-to-Elbow	RC-068-S001-FW300	B-J	UT	NIP-954	UT-56
01-022-003	16" Sch 160 Elbow-to-Pipe	RC-068-S001-A	B-J	UT	NIP-954	UT-56
01-022-003A	16" Sch 160 Pipe-to-Pipe	RC-068-S001-F	B-J	UT	NIP-954	UT-56
01-022-004	16" Sch 160 Pipe-to-Elbow	RC-068-W002	B-J	UT	NIP-954	UT-56
01-022-005	16" Sch 160 Elbow-to-Pipe	RC-068-S002-A	B-J	UT	NIP-954	UT-56
01-022-006	16" Sch 160 Pipe-to-Elbow	RC-068-W003	B-J	UT	NIP-954	UT-56
01-022-007	16" Sch 160 Elbow-to-Pipe	RC-068-S005-A	B-J	UT	NIP-954	UT-56

N/A NOT APPLICABLE
(H) DURING HYDROTEST

REVISION: 2

C-E 0090285 (Rev. 7/80)

POWER SYSTEMS
COMBUSTION ENGINEERING, INC.

ZONE 22 CLASS 1
PROGRAM PLAN

DOCUMENT NO.: TR-ESS-069

REFERENCE DRAWING NO.: E-9678-501-075 Rev. 03

TITLE: LOOP 2 SHUTDOWN COOLING LINE

AREA DESIGNATION	AREA DESCRIPTION	MANUFACTURER'S OR INSTALLER'S WELD NUMBER	EXAMINATION CATEGORY IWB-2500	EXAMINATION METHOD IWB-2600	EXAMINATION PROCEDURE NUMBER	CALIBRATION BLOCK NO.
01-022-007A	16" Sch 160 Sweepolet-to-16" Sch 160 Pipe	RC-068-S003-H	B-J	UT	NIP-954	UT-56
01-022-008	16" Sch 160 Pipe-to-Pipe	RC-068-S003-J	B-J	UT	NIP-954	UT-56
01-022-009	16" Sch 160 Pipe-to-Valve	RC-068-W004	B-J	UT	NIP-954	UT-56
01-022-010	Valve UV-652 (S/N 26234)	N/A	B-M-2	Vis.	525115-ESS-091	N/A
01-022-011	Valve-to-16" Sch 160 Pipe	RC-068-W005	B-J	UT	NIP-954	UT-56
01-022-012	Valve UV-652 Bolting	N/A	B-G-2	Vis.	525115-ESS-091	N/A
01-022-013	16" Sch 160 Pipe-to-Pipe	SI-193-S004-F	B-J	UT	NIP-954	UT-56
01-022-014	16" Sch 160 Pipe-to-Elbow	SI-193-S004-A	B-J	UT	NIP-954	UT-56
01-022-015	16" Sch 160 Elbow-to-Pipe	SI-193-S004-B	B-J	UT	NIP-954	UT-56

N/A NOT APPLICABLE
(H) DURING HYDROTEST

REVISION: 2

C-E 0090285 (Rev. 7/80)

POWER SYSTEMS
COMBUSTION ENGINEERING, INC.

ZONE 22 CLASS 1
PROGRAM PLAN

DOCUMENT NO.: TR-ESS-069

REFERENCE DRAWING NO.: E-9678-501-075 Rev. 03

TITLE: LOOP 2 SHUTDOWN COOLING LINE

AREA DESIGNATION	AREA DESCRIPTION	MANUFACTURER'S OR INSTALLER'S WELD NUMBER	EXAMINATION CATEGORY IWB-2500	EXAMINATION METHOD IWB-2600	EXAMINATION PROCEDURE NUMBER	CALIBRATION BLOCK NO.
01-022-016	Valve UV-654 (S/N 26236)	N/A	B-M-2	Vis.	525115-ESS-091	N/A
01-022-017	16" Sch 160 Pipe-to-Elbow	SI-193-W006	B-J	UT	NIP-954	UT-56
01-022-018	16" Sch 160 Elbow-to-Pipe	SI-193-S005-A	B-J	UT	NIP-954	UT-56
01-022-019	16" Sch 160 Pipe-to-Pipe	SI-193-S005-D	B-J	UT	NIP-954	UT-56
01-022-020	16" Sch 160 Pipe-to-Pipe	SI-193-W008	B-J	UT	NIP-954	UT-56
01-022-021	16" Sch 160 Pipe-to-Elbow	SI-193-S007-A	B-J	UT	NIP-954	UT-56
01-022-022	16" Sch 160 Elbow-to-Pipe	SI-193-S007-B	B-J	UT	NIP-954	UT-56
01-022-023	16" Sch 160 Pipe-to-Valve	SI-193-W007	B-J	UT	NIP-954	UT-56
01-022-024	Valve UV-654 Bolting	N/A	B-G-2	Vis.	525115-ESS-091	N/A

N/A NOT APPLICABLE
(H) DURING HYDROTEST

REVISION: 2

C-E 0090285 (Rev. 7/80)

POWER SYSTEMS
COMBUSTION ENGINEERING, INC.

ZONE 22 CLASS 1
PROGRAM PLAN

DOCUMENT NO.: TR-ESS-069

REFERENCE DRAWING NO.: E-9678-501-075 Rev. 03

TITLE: LOOP 2 SHUTDOWN COOLING LINE

AREA DESIGNATION	AREA DESCRIPTION	MANUFACTURER'S OR INSTALLER'S WELD NUMBER	EXAMINATION CATEGORY IWB-2500	EXAMINATION METHOD IWB-2600	EXAMINATION PROCEDURE NUMBER	CALIBRATION BLOCK NO.
01-022-025	16" Sch 160 Pipe-to-Pipe	RC-068-W008	B-J	UT	NIP-954	UT-56
01-022-026	16" Sch 160 Pipe-to-Pipe	RC-068-S005-B	B-J	UT	NIP-954	UT-56
01-022-027	16" Sch 160 Pipe-to-Pipe	RC-068-S003-F	B-J	UT	NIP-954	UT-56
01-022-028	16" Sch 160 Pipe-to-Pipe	SI-193-S007-D	B-J	UT	NIP-954	UT-56
01-022-029	16" Sch 160 Pipe-to-Pipe	SI-193-S004-G	B-J	UT	NIP-954	UT-56
01-022-030	16" Sch 160 Pipe-to-Pipe	SI-193-S005-F	B-J	UT	NIP-954	UT-56

N/A NOT APPLICABLE
(H) DURING HYDROTEST

REVISION: 2

C-E 0090285 (Rev. 7/80)

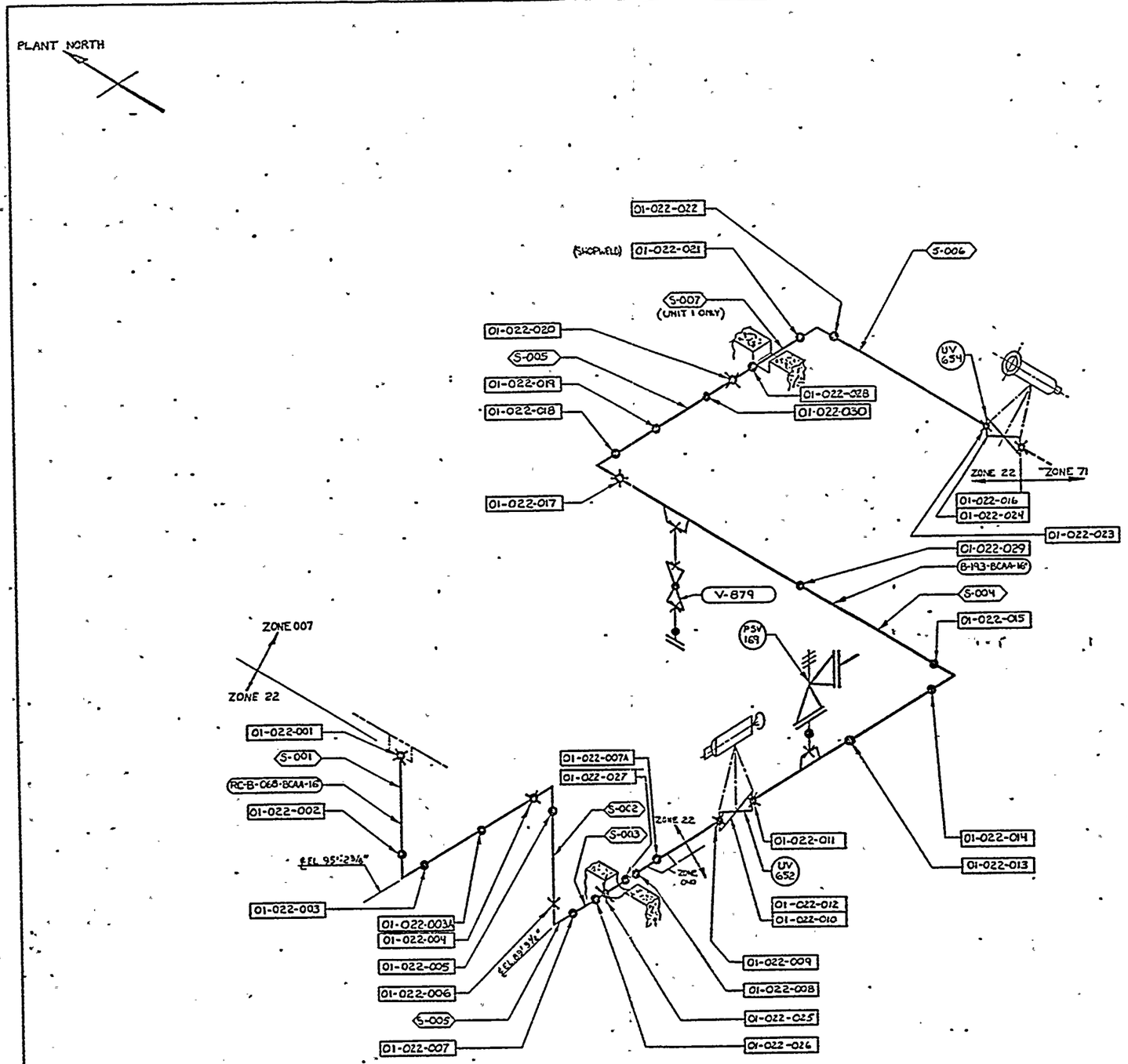

LEGEND

- O SHOP WELD
- X FIELD WELD
- B-193-BCAA-16" — LINE DESIGNATION
- S-001 — SPOOL PC NUMBER
- 01-022-XXX — EXAMINATION AREA DESIGNATION
- V-532 / UV 625 — VALVE DESIGNATION

REFERENCE DRAWINGS

BECHTEL: 01-P-SIF-105 REV.3
SK-H-SIF-105 REV.3
23-P-SIF-105 REV.3

PULLMAN KELLOGG:

ZONE 22		
LINE & SIZE	SPOOL PC	
RC-068 16"	S-001	F-189
	-002	F-190
	-003	F-191 REV 4
SI-193 16"	-004	F-257 REV 4
	-005	F-255 REV 3
	-007	F-1485 REV 1
RC-068 16"	S-005	F-2022 REV 0
SI-193 16"	S-006	N/A

E-9678-501-07

APPROVED
REFERENCE
DESIGN

UNIT 1 ZONE 22

REV	DESCRIPTION
V	GENERALLY REVISED PER REV REQ NO. 9678-252
V	UPGRADED TO APPROVED REF DESIGN PER REVISION REQ NO 9678-253

POWER SYSTEMS

ARIZONA NUCLEAR POWER PROJECT
PALO VERDE NUCLEAR GENERATING STATION

ZONE 22
LOOP 2
SHUTDOWN COOLING LINE

E-9678-501-075

NONE

8 7 6 5 4 3 2 1

POWER SYSTEMS
COMBUSTION ENGINEERING, INC.

ZONE 23 CLASS 1
PROGRAM PLAN

DOCUMENT NO.: TR-ESS-069
REFERENCE DRAWING NO.: D-9678-501-077 Rev. 04
TITLE: LOOP 1A SAFETY INJECTION LINE

AREA DESIGNATION	AREA DESCRIPTION	MANUFACTURER'S OR INSTALLER'S WELD NUMBER	EXAMINATION CATEGORY IWB-2500	EXAMINATION METHOD IWB-2600	EXAMINATION PROCEDURE NUMBER	CALIBRATION BLOCK NO.
01-023-001	14" Sch 160 Elbow-to-RC Loop 1A Safe End	SI-207-W008	B-J	UT	NIP-954	UT-55
01-023-002	14" Sch 160 Elbow-to-Pipe	SI-207-S005-A	B-J	UT	NIP-954	UT-55
01-023-003	14" Sch 160 Pipe-to-Pipe	SI-207-FW300	B-J	UT	NIP-954	UT-55
01-023-004	14" Sch 160 Pipe-to-Valve	SI-207-W007	B-J	UT	NIP-954	UT-55
01-023-005	Valve Body V-237	N/A	B-M-2	Vis.	525115-ESS-091	N/A
01-023-006	Valve-to-14" Sch 160 Pipe	SI-207-W006	B-J	UT	NIP-954	UT-55
01-023-007	14" Sch 160 Pipe-to-Elbow	SI-207-S004-A	B-J	UT	NIP-954	UT-55
01-023-008	14" Sch 160 Elbow-to-Pipe	SI-207-W005	B-J	UT	NIP-954	UT-55
01-023-009	14" Sch 160 Pipe-to-Pipe	SI-207-W004	B-J	UT	NIP-954	UT-55

N/A NOT APPLICABLE
(H) DURING HYDROTEST

REVISION: 2

C-E 0090285 (Rev. 7/80)

POWER SYSTEMS
COMBUSTION ENGINEERING, INC.

ZONE 23 CLASS 1
PROGRAM PLAN

DOCUMENT NO.: TR-ESS-069
REFERENCE DRAWING NO.: D-9678-501-077 Rev. 04

TITLE: LOOP 1A SAFETY INJECTION LINE

AREA DESIGNATION	AREA DESCRIPTION	MANUFACTURER'S OR INSTALLER'S WELD NUMBER	EXAMINATION CATEGORY IWB-2500	EXAMINATION METHOD IWB-2600	EXAMINATION PROCEDURE NUMBER	CALIBRATION BLOCK NO.
01-023-010	NOT USED					
01-023-011	NOT USED					
01-023-012	14" Sch 160 Pipe-to-Reducing Tee	SI-207-S002-D	B-J	UT	NIP-954	UT-55
01-023-013	NOT USED					
01-023-014	Reducing Tee-to-14" Sch 160 Pipe	SI-207-S002-C	B-J	UT	NIP-954	UT-55
01-023-015	14" Sch 160 Pipe-to-Elbow	SI-207-S002-B	B-J	UT	NIP-954	UT-55
01-023-016	14" Sch 160 Elbow-to-Pipe	SI-207-S002-A	B-J	UT	NIP-954	UT-55
01-023-017	14" Sch 160 Pipe-to-Valve	SI-207-W003	B-J	UT	NIP-954	UT-55
01-023-018	NOT USED					

N/A NOT APPLICABLE
(H) DURING HYDROTEST

REVISION: 2

C-E 0090285 (Rev. 7/80)

POWER SYSTEMS
COMBUSTION ENGINEERING, INC.

ZONE 23 CLASS 1
PROGRAM PLAN

DOCUMENT NO.: TR-ESS-069
REFERENCE DRAWING NO.: D-9678-501-077 Rev. 04
TITLE: LOOP 1A SAFETY INJECTION LINE

AREA DESIGNATION	AREA DESCRIPTION	MANUFACTURER'S OR INSTALLER'S WELD NUMBER	EXAMINATION CATEGORY IWB-2500	EXAMINATION METHOD IWB-2600	EXAMINATION PROCEDURE NUMBER	CALIBRATION BLOCK NO.
01-023-019	Valve-to-14" Sch 160 Pipe	SI-207-W002	B-J	UT	NIP-954	UT-55
01-023-020	14" Sch 160 Pipe-to-Valve	SI-207-W001	B-J	UT	NIP-954	UT-55
01-023-021	Valve Body Bolting V-235	N/A	B-G-2	Vis.	525115-ESS-091	N/A
01-023-022	Reducing Tee-to-12" Sch 160 Pipe	SI-203-W002	B-J	UT	NIP-954	UT-54
01-023-023	12" Sch 160 Pipe-to-Elbow	SI-203-S001-B	B-J	UT	NIP-954	UT-54
01-023-024	12" Sch 160 Elbow-to-Pipe	SI-203-S001-A	B-J	UT	NIP-954	UT-54
01-023-025	NOT USED					
01-023-026	12" Sch 160 Pipe-to-Valve	SI-203-W001	B-J	UT	NIP-954	UT-54
01-023-027	Valve Body V-542	N/A	B-M-2	Vis.	525115-ESS-091	N/A

N/A NOT APPLICABLE
(H) DURING HYDROTEST

REVISION: 2

C-E 0090285 (Rev. 7/80)

NER SYSTEMS
COMBUSTION ENGINEERING, INC.

ZONE 23 CLASS 1
PROGRAM PLAN

DOCUMENT NO.: TR-ESS-069
REFERENCE DRAWING NO.: D-9678-501-077 Rev. 04
TITLE: LOOP 1A SAFETY INJECTION LINE

AREA DESIGNATION	AREA DESCRIPTION	MANUFACTURER'S OR INSTALLER'S WELD NUMBER	EXAMINATION CATEGORY IWB-2500	EXAMINATION METHOD IWB-2600	EXAMINATION PROCEDURE NUMBER	CALIBRATION BLOCK NO.
01-023-028	Valve Body UV-634	N/A	B-M-2	Vis.	525115-ESS-091	N/A
01-023-029	Valve Body V-235	N/A	B-M-2	Vis.	525115-ESS-091	N/A
01-023-030	Valve Body Bolting UV-634	N/A	B-G-2	Vis.	525115-ESS-091	N/A
01-023-031	Valve Body Bolting V-542	N/A	B-G-2	Vis.	525115-ESS-091	N/A
01-023-032	Valve Body Bolting V-237	N/A	B-G-2	Vis.	525115-ESS-091	N/A

N/A NOT APPLICABLE
(H) DURING HYDROTEST

REVISION: 2

C-E 0090285 (Rev. 7/80)

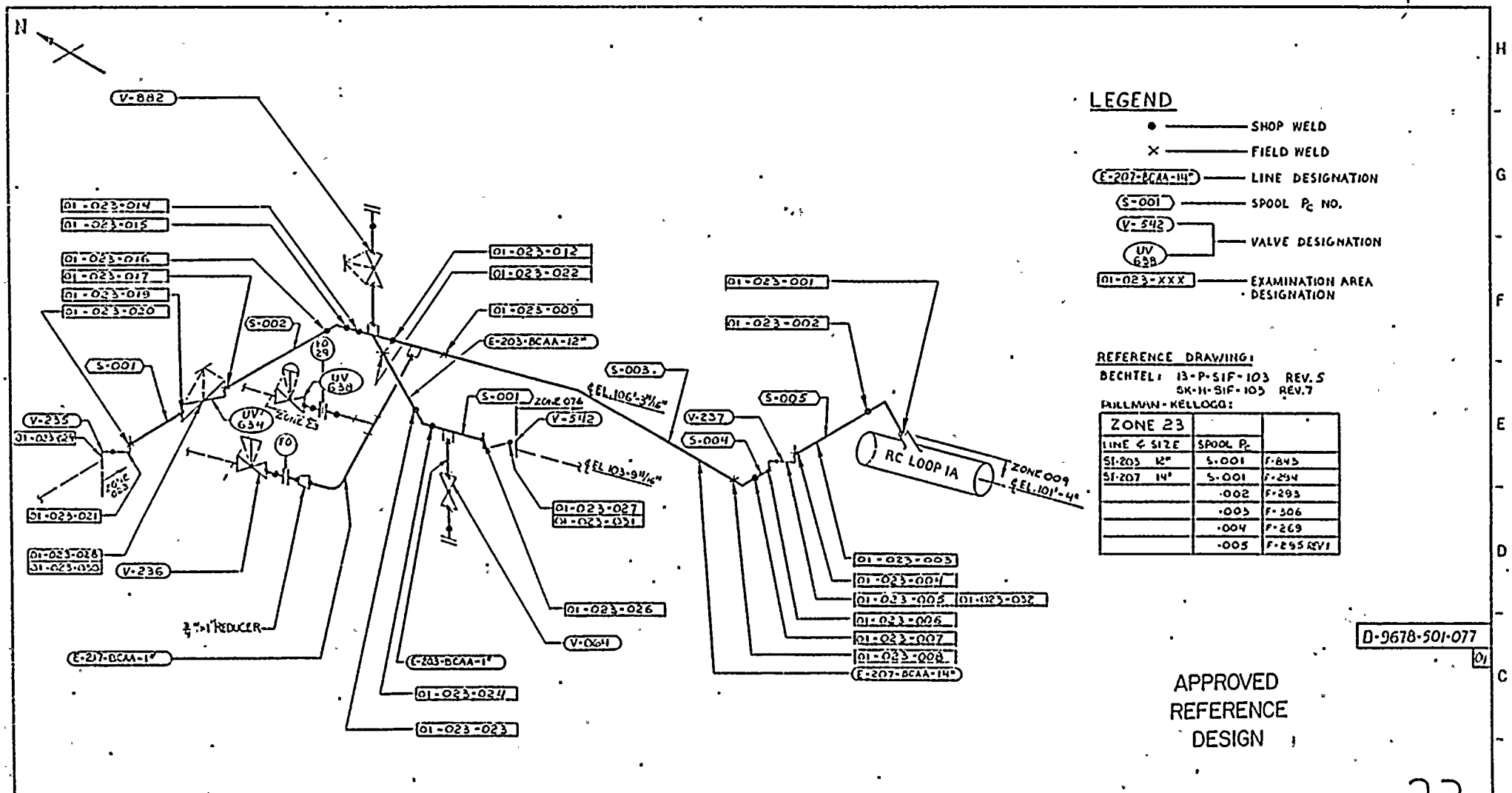

LEGEND

- ● — SHOP WELD
- × — FIELD WELD
- (E-207-BCAA-14") — LINE DESIGNATION
- (S-001) — SPOOL P_C NO.
- (V-542) / (UV 638) — VALVE DESIGNATION
- (01-023-XXX) — EXAMINATION AREA DESIGNATION

REFERENCE DRAWING:

BECHTEL: 13-P-SIF-103 REV. 5
SK-11-SIF-105 REV. 7

PULLMAN-KELLOGG:

ZONE 23		
LINE & SIZE	SPOOL P_C	
SI-203 12"	S-001	F-845
SI-207 14"	S-001	F-294
	-002	F-293
	-003	F-306
	-004	F-269
	-005	F-295 REV 1

D-9678-501-077 01

APPROVED
REFERENCE
DESIGN

UNIT 1 - ZONE 23

REV	DESCRIPTION
03	ADDED REF. DWG No., MADE CHGS TO LINE & SIZES, & ADDED EXAM AREA DESIGNATIONS -030, -031 & -032 PER REV. REQ. No. 9678-303
02	GENERALLY REVISED PER REV. REQ. # 9678-262
01	UPGRADE TO APPROVED REF DESIGN PER REV REQ No 9678-384
00	REVISED Nos & ADDED REF LINE SIZES; DELETED EXAM AREA DESIGNATIONS -010, -011, -013, -025, -030, -031 PER REV REQ # 9678-417

POWER SYSTEMS

ARKANSAS NUCLEAR POWER PROJECT
PULLMAN KELLOGG
GENERATING STATION #1

ZONE 23, LOOP 1A
SAFETY INJECTION LINE

D-9678-501-077 04

NONE

POWER SYSTEMS
COMBUSTION ENGINEERING, INC.

ZONE 24 CLASS 1
PROGRAM PLAN

DOCUMENT NO.: TR-ESS-069
REFERENCE DRAWING NO.: D-9678-501-078 Rev. 04

TITLE: LOOP 1B SAFETY INJECTION LINE

AREA DESIGNATION	AREA DESCRIPTION	MANUFACTURER'S OR INSTALLER'S WELD NUMBER	EXAMINATION CATEGORY IWB-2500	EXAMINATION METHOD IWB-2600	EXAMINATION PROCEDURE NUMBER	CALIBRATION BLOCK NO.
01-024-001	14" Sch 160 Elbow-to-RC Loop 1B Safe End	SI-223-W008	B-J	UT	NIP-954	UT-55
01-024-002	14" Sch 160 Elbow-to-Pipe	SI-223-S005-A	B-J	UT	NIP-954	UT-55
01-024-003	14" Sch 160 Pipe-to-Pipe	SI-223-FW301	B-J	UT	NIP-954	UT-55
01-024-004	14" Sch 160 Pipe-to-Valve	SI-223-W007	B-J	UT	NIP-954	UT-55
01-024-005	Valve Body V-247	N/A	B-M-2	Vis.	525115-ESS-091	N/A
01-024-006	Valve-to-14" Sch 160 Pipe	SI-223-W006	B-J	UT	NIP-954	UT-55
01-024-007	14" Sch 160 Pipe-to-Elbow	SI-223-S004-A	B-J	UT	NIP-954	UT-55
01-024-008	14" Sch 160 Elbow-to-Pipe	SI-223-W005	B-J	UT	NIP-954	UT-55
01-024-009	14" Sch 160 Pipe-to-Reducing Tee	SI-223-W004	B-J	UT	NIP-954	UT-55

N/A NOT APPLICABLE
(H) DURING HYDROTEST

REVISION: 2

C-E 0090285 (Rev. 7/80)

POWER SYSTEMS
COMBUSTION ENGINEERING, INC.

ZONE 24 CLASS 1
PROGRAM PLAN

DOCUMENT NO.: TR-ESS-069

REFERENCE DRAWING NO.: D-9678-501-078 Rev. 04

TITLE: LOOP 1B SAFETY INJECTION LINE

AREA DESIGNATION	AREA DESCRIPTION	MANUFACTURER'S OR INSTALLER'S WELD NUMBER	EXAMINATION CATEGORY IWB-2500	EXAMINATION METHOD IWB-2600	EXAMINATION PROCEDURE NUMBER	CALIBRATION BLOCK NO.
01-024-010	NOT USED					
01-024-011	Reducing Tee-to-14" Sch 160 Pipe	SI-223-S002-A	B-J	UT	NIP-954	UT-55
01-024-012	NOT USED					
01-024-013	NOT USED					
01-024-014	14" Sch 160 Pipe-to-Valve	SI-223-W003	B-J	UT	NIP-954	UT-55
01-024-015	Valve Body UV-644	N/A	B-M-2	Vis.	525115-ESS-091	N/A
01-024-016	Valve-to-14" Sch 160 Pipe	SI-223-W002	B-J	UT	NIP-954	UT-55
01-024-017	14" Sch 160 Pipe-to-Elbow	SI-223-S001-A	B-J	UT	NIP-954	UT-55
01-024-018	14" Sch 160 Elbow-to-Pipe	SI-223-S001-B	B-J	UT	NIP-954	UT-55

N/A NOT APPLICABLE
(H) DURING HYDROTEST

REVISION: 2

C-E 0090285 (Rev. 7/80)

POWER SYSTEMS
COMBUSTION ENGINEERING, INC.

ZONE 24 CLASS 1
PROGRAM PLAN

DOCUMENT NO.: TR-ESS-069
REFERENCE DRAWING NO.: D-9678-501-078 Rev. 04
TITLE: LOOP 1B SAFETY INJECTION LINE

AREA DESIGNATION	AREA DESCRIPTION	MANUFACTURER'S OR INSTALLER'S WELD NUMBER	EXAMINATION CATEGORY IWB-2500	EXAMINATION METHOD IWB-2600	EXAMINATION PROCEDURE NUMBER	CALIBRATION BLOCK NO.
01-024-019	14" Sch 160 Pipe-to-Valve	SI-223-W001	B-J	UT	NIP-954	UT-55
01-024-020	Valve Body V-245	N/A	B-M-2	Vis.	525115-ESS-091	N/A
01-024-021	Reducing Tee-to-12" Sch 160 Pipe	SI-221-W002	B-J	UT	NIP-954	UT-54
01-024-022	12" Sch 160 Pipe-to-Elbow	SI-221-S001-B	B-J	UT	NIP-954	UT-5
01-024-023	12" Sch 160 Elbow-to-Pipe	SI-221-S001-A	B-J	UT	NIP-954	UT-54
01-024-024	NOT USED					
01-024-025	12" Sch 160 Pipe-to-Valve	SI-221-W001	B-J	UT	NIP-954	UT-54
01-024-026	Valve Body V-543	N/A	B-M-2	Vis.	525115-ESS-091	N/A
01-024-027	Valve V-245 Bolting	N/A	B-G-2	Vis.	525115-ESS-091	N/A

N/A NOT APPLICABLE
(H) DURING HYDROTEST

REVISION: 2

C-E 0090285 (Rev. 7/80)

COMBUSTION ENGINEERING, INC

ZONE 24 CLASS 1

PROGRAM PLAN

DOCUMENT NO.: TR-ESS-069

REFERENCE DRAWING NO.: D-9678-501-078 Rev. 04

TITLE: LOOP 1B SAFETY INJECTION LINE

AREA DESIGNATION	AREA DESCRIPTION	MANUFACTURER'S OR INSTALLER'S WELD NUMBER	EXAMINATION CATEGORY IWB-2500	EXAMINATION METHOD IWB-2600	EXAMINATION PROCEDURE NUMBER	CALIBRATION BLOCK NO.
01-024-028	Valve V-247 Bolting	N/A	B-G-2	Vis.	525115-ESS-091	N/A
01-024-029	Valve V-543 Bolting	N/A	B-G-2	Vis.	525115-ESS-091	N/A
01-024-030	Valve UV-644 Bolting	N/A	B-G-2	Vis.	525115-ESS-091	N/A

N/A NOT APPLICABLE
(H) DURING HYDROTEST

REVISION: 2

C-E 0090285 (Rev. 7/80)

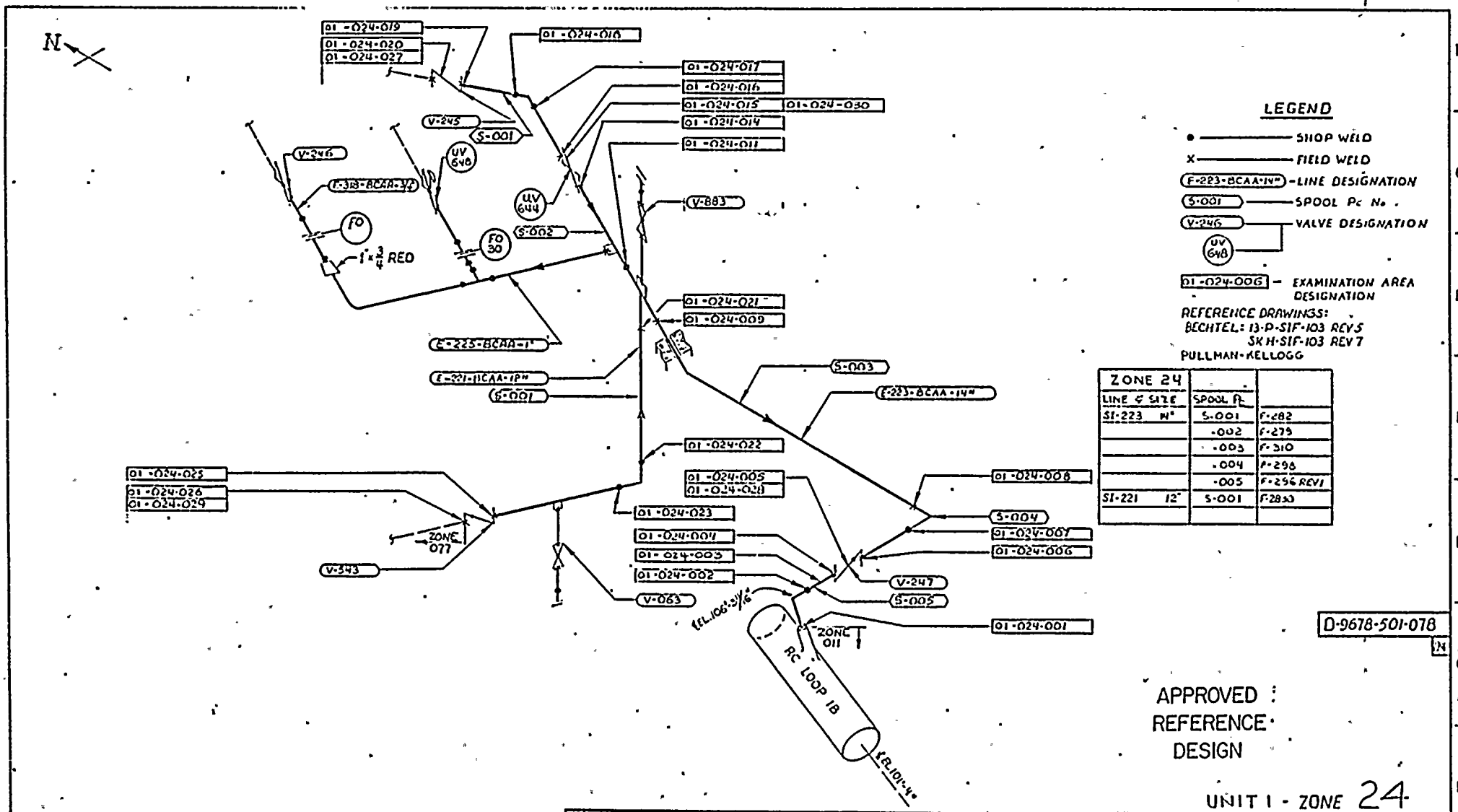
N
01-024-019
01-024-020
01-024-027
01-024-018
01-024-017
01-024-016
01-024-015
01-024-030
01-024-014
01-024-011
V-245
S-001
V-246
UV 648
E-223-BCAA-14"
UV 644
V-883
FO
FO 30
S-002
1"x3/4 RED
01-024-021
01-024-009
E-225-BCAA-1"
E-221-BCAA-12"
S-001
S-003
E-223-BCAA-14"
01-024-022
01-024-025
01-024-026
01-024-029
01-024-005
01-024-028
01-024-008
01-024-023
S-004
01-024-007
01-024-006
01-024-004
01-024-003
01-024-002
ZONE 077
V-343
V-247
S-005
V-063
EL.106'-3 1/16"
ZONE 011
01-024-001
RC LOOP 1B
EL.101'-4"
LEGEND
SHOP WELD
FIELD WELD
E-223-BCAA-14" - LINE DESIGNATION
S-001 - SPOOL Pc No.
V-246 - VALVE DESIGNATION
UV 648
01-024-006 - EXAMINATION AREA DESIGNATION
REFERENCE DRAWINGS:
BECHTEL: 13-P-SIF-103 REV 5
SK H-SIF-103 REV 7
PULLMAN-KELLOGG
ZONE 24
LINE & SIZE
SPOOL PL
SI-223 14"
S-001
F-282
-002
F-279
-003
F-310
-004
F-298
-005
F-296 REV1
SI-221 12"
S-001
F-283
D-9678-501-078
APPROVED REFERENCE DESIGN
UNIT 1 - ZONE 24
1-ADDED EXAM AREA DESIGS 027 THRU 030 & ADDED REF DWG PER REQ 9678-503
GENERALLY REVISED PER REV. REQ. 9678-282
UPGRADE TO APPROVED REF DESIGN. PER REV REQ No 9678-354
REVISED No'S & ADDED REF LINE SIZES; DELETED EXAM AREA DESIGNATIONS -010, -012, -015, -024, -027, -028, -029 PER REV REQ 9678-417.
POWER SYSTEMS
ARIZONA NUCLEAR POWER PROJECT
PALO VERDE NUCLEAR GENERATING STATION
ZONE 24 LOOP 1B SAFETY INJECTION LINE
D-9678-501-078
04
NONE
8
7
6
5
4
3
2
1
H
G
F
E
D
C
B
A

POWER SYSTEMS
COMBUSTION ENGINEERING, INC.

ZONE 25 CLASS 1
PROGRAM PLAN

DOCUMENT NO.: TR-ESS-069
REFERENCE DRAWING NO.: E-9678-501-074 Rev. 04

TITLE: LOOP 2A SAFETY INJECTION LINE

AREA DESIGNATION	AREA DESCRIPTION	MANUFACTURER'S OR INSTALLER'S WELD NUMBER	EXAMINATION CATEGORY IWB-2500	EXAMINATION METHOD IWB-2600	EXAMINATION PROCEDURE NUMBER	CALIBRATION BLOCK NO.
01-025-001	Loop 2A Safe End-to-14" Sch 160 Elbow	SI-160-W008	B-J	UT	NIP-954	UT-55
01-025-002	14" Sch 160 Elbow-to-Pipe	SI-160-S005-A	B-J	UT	NIP-954	UT-55
01-025-003	14" Sch 160 Pipe-to-Pipe	SI-160-S005-C	B-J	UT	NIP-954	UT-55
01-025-004	14" Sch 160 Pipe-to-Valve	SI-160-W007	B-J	UT	NIP-954	UT-55
01-025-005	Valve Body V-217	N/A	B-M-2	Vis.	525115-ESS-091	N/A
01-025-006	Valve-to-14" Sch 160 Pipe	SI-160-W006	B-J	UT	NIP-954	UT-55
01-025-007	14" Sch 160 Pipe-to-Elbow	SI-160-S004-A	B-J	UT	NIP-954	UT-55
01-025-008	14" Sch 160 Elbow-to-Pipe	SI-160-W005	B-J	UT	NIP-954	UT-55
01-025-009	14" Sch 160 Pipe-to-Reducing Tee	SI-160-W004	B-J	UT	NIP-954	UT-55

N/A NOT APPLICABLE
(H) DURING HYDROTEST

REVISION: 2

C-E 0090285 (Rev. 7/80)

COMBUSTION ENGINEERING, INC

ZONE 25 CLASS 1

PROGRAM PLAN

DOCUMENT NO.: TR-ESS-069

REFERENCE DRAWING NO.: E-9678-501-074 Rev. 04

TITLE: LOOP 2A SAFETY INJECTION LINE

AREA DESIGNATION	AREA DESCRIPTION	MANUFACTURER'S OR INSTALLER'S WELD NUMBER	EXAMINATION CATEGORY IWB-2500	EXAMINATION METHOD IWB-2600	EXAMINATION PROCEDURE NUMBER	CALIBRATION BLOCK NO.
01-025-010	Reducing Tee-to-14" Sch 160 Pipe	SI-160-S002-A	B-J	UT	NIP-954	UT-55
01-025-011	14" Sch 160 Pipe-to-Valve	SI-160-W003	B-J	UT	NIP-954	UT-55
01-025-012	Valve Body UV-614	N/A	B-M-2	Vis.	525115-ESS-091	N/A
01-025-013	Valve-to-14" Sch 160 Pipe	SI-160-W002	B-J	UT	NIP-954	UT-55
01-025-014	14" Sch 160 Pipe-to-Elbow	SI-160-S001-B	B-J	UT	NIP-954	UT-55
01-025-015	14" Sch 160 Elbow-to-Pipe	SI-160-S001-A	B-J	UT	NIP-954	UT-55
01-025-016	14" Sch 160 Pipe-to-Valve	SI-160-W001	B-J	UT	NIP-954	UT-55
01-025-017	Valve Body V-215	N/A	B-M-2	Vis.	525115-ESS-091	N/A
01-025-018	Reducing Tee-to-12" Sch 160 Pipe	SI-156-W002	B-J	UT	NIP-954	UT-54

N/A NOT APPLICABLE
(H) DURING HYDROTEST

REVISION: 2

C-E 0090285 (Rev. 7/80)

POWER SYSTEMS
COMBUSTION ENGINEERING, INC.

ZONE 25 CLASS 1
PROGRAM PLAN

DOCUMENT NO.: TR-ESS-069
REFERENCE DRAWING NO.: E-9678-501-074 Rev. 04
TITLE: LOOP 2A SAFETY INJECTION LINE

AREA DESIGNATION	AREA DESCRIPTION	MANUFACTURER'S OR INSTALLER'S WELD NUMBER	EXAMINATION CATEGORY IWB-2500	EXAMINATION METHOD IWB-2600	EXAMINATION PROCEDURE NUMBER	CALIBRATION BLOCK NO.
01-025-019	12" Sch 160 Pipe-to-Elbow	SI-156-S001-F	B-J	UT	NIP-954	UT-54
01-025-020	12" Sch 160 Elbow-to-Pipe	SI-156-S001-E	B-J	UT	NIP-954	UT-54
01-025-021	NOT USED					
01-025-022	12" Sch 160 Pipe-to-Elbow	SI-156-S001-D	B-J	UT	NIP-954	UT-54
01-025-023	12" Sch 160 Elbow-to-Pipe	SI-156-S001-C	B-J	UT	NIP-954	UT-54
01-025-024	NOT USED					
01-025-025	NOT USED					
01-025-026	12" Sch 160 Pipe-to-Elbow	SI-156-S001-A	B-J	UT	NIP-954	UT-54
01-025-027	12" Sch 160 Elbow-to-Pipe	SI-156-S001-H	B-J	UT	NIP-954	UT-54

N/A NOT APPLICABLE
(H) DURING HYDROTEST

REVISION: 2

C-E 0090285 (Rev. 7/80)

WER SYSTEMS
COMBUSTION ENGINEERING, INC

ZONE 25 CLASS 1
PROGRAM PLAN

DOCUMENT NO.: TR-ESS-069
REFERENCE DRAWING NO.: E-9678-501-074 Rev. 04
TITLE: LOOP 2A SAFETY INJECTION LINE

AREA DESIGNATION	AREA DESCRIPTION	MANUFACTURER'S OR INSTALLER'S WELD NUMBER	EXAMINATION CATEGORY IWB-2500	EXAMINATION METHOD IWB-2600	EXAMINATION PROCEDURE NUMBER	CALIBRATION BLOCK NO.
01-025-028	NOT USED					
01-025-029	12" Sch 160 Pipe-to-Valve	SI-156-W001	B-J	UT	NIP-954	UT-54
01-025-030	Valve Body V-540	N/A	B-M-2	Vis.	525115-ESS-091	N/A
01-025-031	NOT USED					
01-025-032	NOT USED					
01-025-033	Valve V-215 Bolting	N/A	B-G-2	Vis.	525115-ESS-091	N/A
01-025-034	Valve V-540 Bolting	N/A	B-G-2	Vis.	525115-ESS-091	N/A
01-025-035	Valve UV-614 Bolting	N/A	B-G-2	Vis.	525115-ESS-091	N/A
01-025-036	Valve V-217 Bolting	N/A	B-G-2	Vis.	525115-ESS-091	N/A

N/A NOT APPLICABLE
(H) DURING HYDROTEST

REVISION: 2

C-E 0090285 (Rev. 7/80)

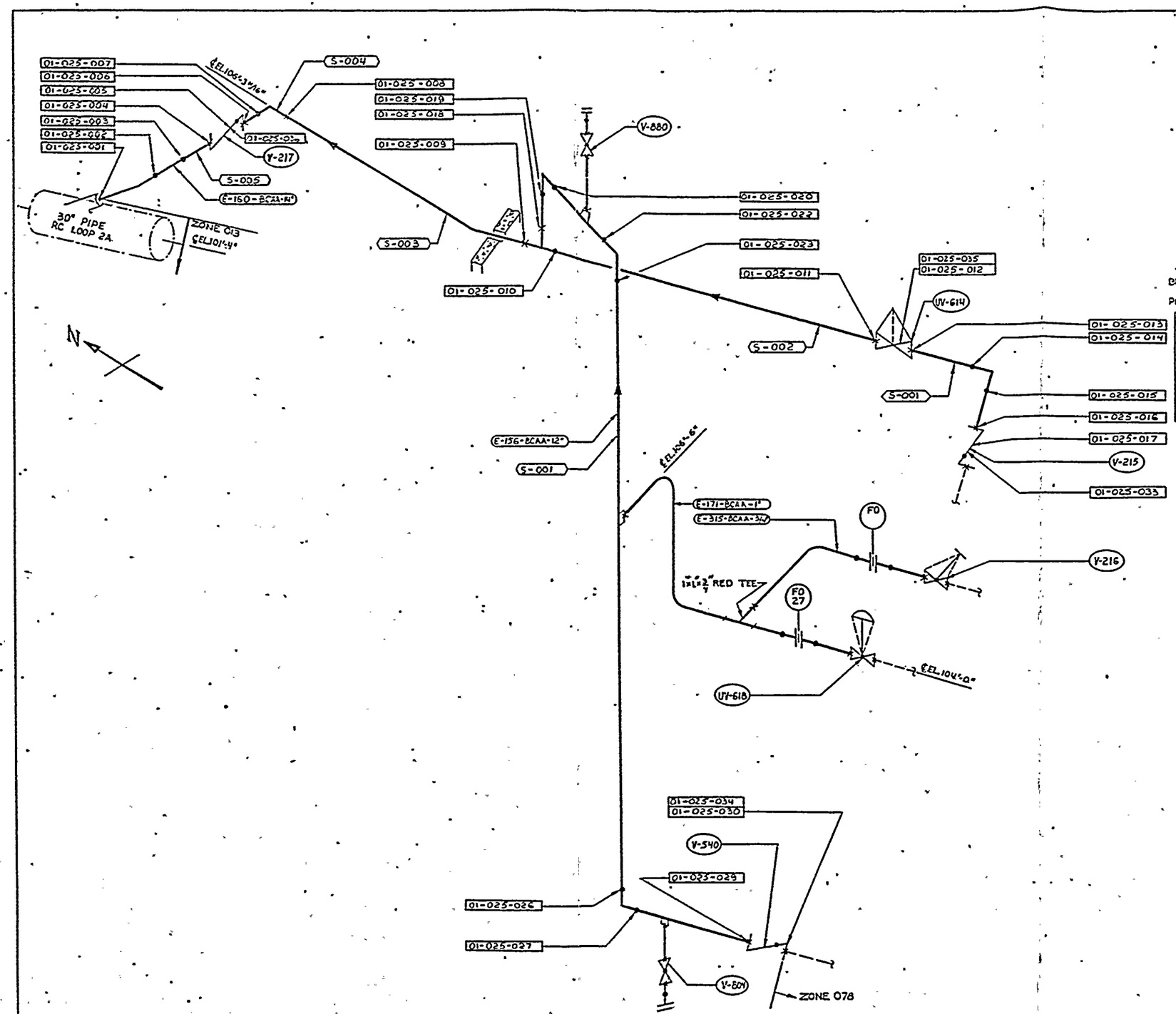

LEGEND

- ● —— SHOP WELD
- X —— FIELD WELD
- 01-025-XXX —— EXAMINATION AREA DESIGNATION
- E-160-BCAA-14" —— LINE DESIGNATION
- S-001 —— SPOOL Pc NO.
- V-217 —— VALVE DESIGNATION

REFERENCE DRAWING:
BECHTEL: 13-P-SIF-136 REV. 5
SK-H-SIF-136 REV. 6
PULLMAN-KELLOGG:

ZONE 25		
LINE & SIZE	SPOOL Pc	
SI 156 12"	S-001	F-354
SI 160 14"	S-001	F-351
	S-002	F-330
	S-003	F-288
	S-004	F-344
	S-005	F-304 REV 1

E-9678-501-074
04

APPROVED
REFERENCE
DESIGN

UNIT 1 ZONE 25

DATE	DESCRIPTION												
	4-GENERALLY REVISED PER REV REQ No 9678-222												
	UPGRADE TO APPROVED REF DESIGN PER REV REQ No 9678-334												
	3-REVISED NO'S & ADDED REF LINE SIZES (2-DELETED EXAM AREA NO'S 021, 024, 025, 029 & 031 & 032 PER REV REQ NO 9678-[illegible]												
	2-ADDED EXAM AREA DES 033-036 (2-ADDED REF DWG) PER REQ [illegible]												

POWER SYSTEMS

ARIZONA NUCLEAR POWER PROJECT
PALO VERDE NUCLEAR GENERATING STATION

ZONE 25 LOOP 2A
SAFETY INJECTION LINE

E-9678-501-074 04

FEB 1982 NOVE

COMBUSTION ENGINEERING, INC

ZONE 26 CLASS 1

PROGRAM PLAN

DOCUMENT NO.: TR-ESS-069

REFERENCE DRAWING NO.: E-9678-501-073 Rev. 04

TITLE: LOOP 2B SAFETY INJECTION LINE

AREA DESIGNATION	AREA DESCRIPTION	MANUFACTURER'S OR INSTALLER'S WELD NUMBER	EXAMINATION CATEGORY IWB-2500	EXAMINATION METHOD IWB-2600	EXAMINATION PROCEDURE NUMBER	CALIBRATION BLOCK NO.
01-026-001	Loop 2B Safe End-to-14" Sch 160 Elbow	SI-179-W008	B-J	UT	NIP-954	UT-55
01-026-002	14" Sch 160 Elbow-to-Pipe	SI-179-S005-A	B-J	UT	NIP-954	UT-55
01-026-003	14" Sch 160 Pipe-to-Pipe	SI-179-S005-C	B-J	UT	NIP-954	UT-55
01-026-004	14" Sch 160 Pipe-to-Valve	SI-179-W007	B-J	UT	NIP-954	UT-55
01-026-005	Valve Body V-227	N/A	B-M-2	Vis.	525115-ESS-091	N/A
01-026-006	Valve-to-14" Sch 160 Pipe	SI-179-W006	B-J	UT	NIP-954	UT-55
01-026-007	14" Sch 160 Pipe-to-Elbow	SI-179-S004-A	B-J	UT	NIP-954	UT-55
01-026-008	14" Sch 160 Elbow-to-Pipe	SI-179-W005	B-J	UT	NIP-954	UT-55
01-026-008A	14" Sch 160 Pipe-to-Pipe	SI-179-S003	B-J	UT	NIP-954	UT-55

N/A NOT APPLICABLE
(H) DURING HYDROTEST

REVISION: 2

C-E 0090285 (Rev. 7/80)

POWER SYSTEMS
COMBUSTION ENGINEERING, INC

ZONE 26 CLASS 1
PROGRAM PLAN

DOCUMENT NO.: TR-ESS-069

REFERENCE DRAWING NO.: E-9678-501-073 Rev. 04

TITLE: LOOP 2B SAFETY INJECTION LINE

AREA DESIGNATION	AREA DESCRIPTION	MANUFACTURER'S OR INSTALLER'S WELD NUMBER	EXAMINATION CATEGORY IWB-2500	EXAMINATION METHOD IWB-2600	EXAMINATION PROCEDURE NUMBER	CALIBRATION BLOCK NO.
01-026-009	14" Sch 160 Pipe-to-Reducing Tee	SI-179-W004	B-J	UT	NIP-954	UT-55
01-026-010	NOT USED					
01-026-011	Reducing Tee-to-14" Sch 160 Pipe	SI-179-S002-FW300	B-J	UT	NIP-954	UT-55
01-026-011A	14" Sch 160 Pipe-to-14" Sch 160 Pipe	SI-179-S002-FW301	B-J	UT	NIP-954	UT-55
01-026-012	14" Sch 160 Pipe-to-Valve	SI-179-W003	B-J	UT	NIP-954	UT-55
01-026-013	Valve Body UV-624	N/A	B-M-2	Vis.	525115-ESS-091	N/A
01-026-014	Valve-to-14" Sch 160 Pipe	SI-179-W002	B-J	UT	NIP-954	UT-55
01-026-015	14" Sch 160 Pipe-to-Elbow	SI-179-S001-A	B-J	UT	NIP-954	UT-55

N/A NOT APPLICABLE
(H) DURING HYDROTEST

REVISION: 2

C-E 0090285 (Rev. 7/80)

WER SYSTEMS
COMBUSTION ENGINEERING, INC.

ZONE 26 CLASS 1
PROGRAM PLAN

DOCUMENT NO.: TR-ESS-069
REFERENCE DRAWING NO.: E-9678-501-073 Rev. 04
TITLE: LOOP 2B SAFETY INJECTION LINE

AREA DESIGNATION	AREA DESCRIPTION	MANUFACTURER'S OR INSTALLER'S WELD NUMBER	EXAMINATION CATEGORY IWB-2500	EXAMINATION METHOD IWB-2600	EXAMINATION PROCEDURE NUMBER	CALIBRATION BLOCK NO.
01-026-016	14" Sch 160 Elbow-to-Pipe	SI-179-S001-B	B-J	UT	NIP-954	UT-55
01-026-017	14" Sch 160 Pipe-to-Valve	SI-179-W001	B-J	UT	NIP-954	UT-55
01-026-018	Valve Body V-225	N/A	B-M-2	Vis.	525115-ESS-091	N/A
01-026-019	Reducing Tee-to-12" Sch 160 Pipe	SI-175-W002	B-J	UT	NIP-954	UT-54
01-026-020	NOT USED					
01-026-021	NOT USED					
01-026-022	12" Sch 160 Pipe-to-Elbow	SI-175-S001-B	B-J	UT	NIP-954	UT-54
01-026-023	12" Sch 160 Elbow-to-Pipe	SI-175-S001-A	B-J	UT	NIP-954	UT-54
01-026-024	NOT USED					

N/A NOT APPLICABLE
(H) DURING HYDROTEST

REVISION: 2

C-E 0090285 (Rev. 7/80)

NER SYSTEMS
COMBUSTION ENGINEERING INC

ZONE 26 CLASS 1
PROGRAM PLAN

DOCUMENT NO.: TR-ESS-069
REFERENCE DRAWING NO.: E-9678-501-073 Rev. 04
TITLE: LOOP 2B SAFETY INJECTION LINE

AREA DESIGNATION	AREA DESCRIPTION	MANUFACTURER'S OR INSTALLER'S WELD NUMBER	EXAMINATION CATEGORY IWB-2500	EXAMINATION METHOD IWB-2600	EXAMINATION PROCEDURE NUMBER	CALIBRATION BLOCK NO.
01-026-025	12" Sch 160 Pipe-to-Valve	SI-175-W001	B-J	UT	NIP-954	UT-54
01-026-026	Valve Body V-541	N/A	B-M-2	Vis.	525115-ESS-091	N/A
01-026-027	Valve V-225 Bolting	N/A	B-G-2	Vis.	525115-ESS-091	N/A
01-026-028	Valve V-227 Bolting	N/A	B-G-2	Vis.	525115-ESS-091	N/A
01-026-029	Valve UV-624 Bolting	N/A	B-G-2	Vis.	525115-ESS-091	N/A
01-026-030	Valve V-541 Bolting	N/A	B-G-2	Vis.	525115-ESS-091	N/A

N/A NOT APPLICABLE
(H) DURING HYDROTEST

REVISION: 2

C-E 0090285 (Rev. 7/80)

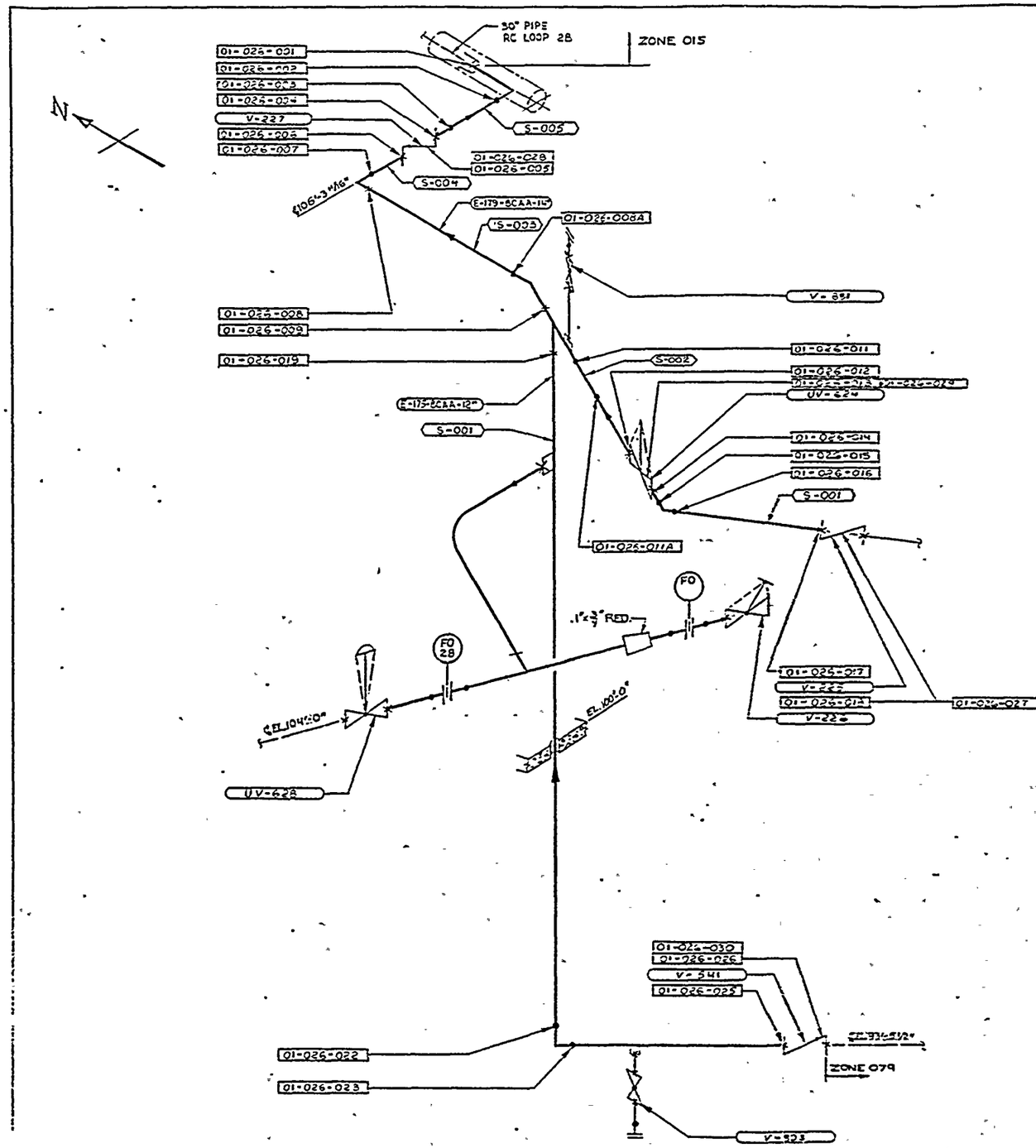

LEGEND

- ● ——— SHOP WELD
- ·x ——— FIELD WELD
- (E-175-8CAA-12") — LINE DESIGNATION
- (S-001) — SPOOL P/C NO.
- [01-026-XXX] — EXAMINATION AREA DESIGNATION
- (V-451) — VALVE DESIGNATION

REFERENCE DRAWINGS

BECHTEL: 13-P-SI-F-136 REV. 5
SK-H-SI-F-136 REV. 6
PULLMAN-KELLOGG:

ZONE 26		
LINE & SIZE	SPOOL P/C	
SI 175 2"	S-001	F-322
SI 179 14"	S-001	F-346
	S-002	F-342
	S-003	F-355
	S-004	F-345
	S-005	F-301 REV 1

E-9678-501-073 04

APPROVED
REFERENCE
DESIGN

UNIT 1 ZONE 26

REV	DESCRIPTION
V	GENERALLY REVISED PER REV REQ. No. 9678-[illegible]
V	UPGRADE TO APPROVED REF DESIGN PER REV REQ No. 9678-[illegible]
V	REVISED NOTE & ADDED REF LINE SIZES (2) DELETED EXAM AREA NO'S 010, 020, 021, 024, 027 & 028 PER REV REQ No. 9678-[illegible]
V	ADDED EXAM AREA DES DESIGNATE EXAM AREA DES WAS DESIGNATED REVISED REF DWG DES DWG [illegible]

POWER SYSTEMS

ARIZONA NUCLEAR POWER PROJECT
PALO VERDE NUCLEAR GENERATING STATION

ZONE 26 LOOP 2B SAFETY INJECTION LINE

E-9678-501-073 04

DIMENSIONS IN INCHES UNLESS OTHERWISE SPECIFIED

NONE

WER SYSTEMS
COMBUSTION ENGINEERING, INC.

ZONE 27 CLASS 1
PROGRAM PLAN

DOCUMENT NO.: TR-ESS-069
REFERENCE DRAWING NO.: D-9678-501-036 Rev. 04
TITLE: LOOP 1A PRESSURIZER SPRAY LINE

AREA DESIGNATION	AREA DESCRIPTION	MANUFACTURER'S OR INSTALLER'S WELD NUMBER	EXAMINATION CATEGORY IWB-2500	EXAMINATION METHOD IWB-2600	EXAMINATION PROCEDURE NUMBER	CALIBRATION BLOCK NO.
01-027-001	Reducing Tee-to-3" Sch 160 Pipe	RC-016-W004	B-J	UT	NIP-954	UT-51
01-027-001A	3" Sch 160 Pipe-to-Pipe	RC-016-FW300	B-J	UT	NIP-954	UT-51
01-027-002	3" Sch 160 Pipe-to-Elbow	RC-016-S002-D	B-J	UT	NIP-954	UT-51
01-027-003	3" Sch 160 Elbow-to-Pipe	RC-016-S002-C	B-J	UT	NIP-954	UT-51
01-027-004	3" Sch 160 Pipe-to-Elbow	RC-016-S002-B	B-J	UT	NIP-954	UT-51
01-027-005	3" Sch 160 Elbow-to-Pipe	RC-016-S002-A	B-J	UT	NIP-954	UT-51
01-027-006	3" Sch 160 Pipe-to-Valve V-243	RC-016-W003	B-J	UT	NIP-954	UT-51
01-027-007	NOT USED					
01-027-008	Valve-to-3" Sch 160 Pipe	RC-016-W002	B-J	UT	NIP-954	UT-51

N/A NOT APPLICABLE
(H) DURING HYDROTEST

REVISION: 2

C-E 0090285 (Rev. 7/80)

NER SYSTEMS
COMBUSTION ENGINEERING, INC.

ZONE 27 CLASS 1
PROGRAM PLAN

DOCUMENT NO.: TR-ESS-069
REFERENCE DRAWING NO.: D-9678-501-036 Rev. 04
TITLE: LOOP 1A PRESSURIZER SPRAY LINE

AREA DESIGNATION	AREA DESCRIPTION	MANUFACTURER'S OR INSTALLER'S WELD NUMBER	EXAMINATION CATEGORY IWB-2500	EXAMINATION METHOD IWB-2600	EXAMINATION PROCEDURE NUMBER	CALIBRATION BLOCK NO.
01-027-009	NOT USED					
01-027-010	3" Sch 160 Pipe-to-Valve PV100E	RC-016-W001	B-J	UT	NIP-954	UT-51
01-027-011	NOT USED					
01-027-012	Valve-to-3" Sch 160 Pipe	RC-062-W007	B-J	UT	NIP-954	UT-51
01-027-013	3" Sch 160 Pipe-to-Elbow	RC-062-S005-D	B-J	UT	NIP-954	UT-51
01-027-014	3" Sch 160 Elbow-to-Pipe	RC-062-S005-C	B-J	UT	NIP-954	UT-51
01-027-015	3" Sch 160 Pipe-to-Elbow	RC-062-S005-B	B-J	UT	NIP-954	UT-51
01-027-016	3" Sch 160 Elbow-to-Pipe	RC-062-S005-A	B-J	UT	NIP-954	UT-51
01-027-017	NOT USED					

N/A NOT APPLICABLE
(H) DURING HYDROTEST

REVISION: 2

C-E 0090285 (Rev. 7/80)

WER SYSTEMS
COMBUSTION ENGINEERING, INC

ZONE 27 CLASS 1
PROGRAM PLAN

DOCUMENT NO.: TR-ESS-069
REFERENCE DRAWING NO.: D-9678-501-036 Rev. 04
TITLE: LOOP 1A PRESSURIZER SPRAY LINE

AREA DESIGNATION	AREA DESCRIPTION	MANUFACTURER'S OR INSTALLER'S WELD NUMBER	EXAMINATION CATEGORY IWB-2500	EXAMINATION METHOD IWB-2600	EXAMINATION PROCEDURE NUMBER	CALIBRATION BLOCK NO.
01-027-018	3" Sch 160 Pipe-to-Valve V-240	RC-062-W006	B-J	UT	NIP-954	UT-51
01-027-019	NOT USED					
01-027-020	Valve-to-3" Sch 160 Pipe	RC-062-W005	B-J	UT	NIP-954	UT-51
01-027-021	3" Sch 160 Pipe-to-Elbow	RC-062-S004-A	B-J	UT	NIP-954	UT-51
01-027-022	3" Sch 160 Elbow-to-Pipe	RC-062-S004-B	B-J	UT	NIP-954	UT-51
01-027-023	3" Sch 160 Pipe-to-Elbow	RC-062-W004	B-J	UT	NIP-954	UT-51
01-027-024	3" Sch 160 Elbow-to-Pipe	RC-062-S003-F	B-J	UT	NIP-954	UT-51
01-027-025	3" Sch 160 Pipe-to-Elbow	RC-062-S003-E	B-J	UT	NIP-954	UT-51
01-027-026	3" Sch 160 Elbow-to-Pipe	RC-062-S003-D	B-J	UT	NIP-954	UT-51

N/A NOT APPLICABLE
(H) DURING HYDROTEST

REVISION: 2

C-E 0090285 (Rev. 7/80)

POWER SYSTEMS
COMBUSTION ENGINEERING, INC

ZONE 27 CLASS 1
PROGRAM PLAN

DOCUMENT NO.: TR-ESS-069
REFERENCE DRAWING NO.: D-9678-501-036 Rev. 04
TITLE: LOOP 1A PRESSURIZER SPRAY LINE

AREA DESIGNATION	AREA DESCRIPTION	MANUFACTURER'S OR INSTALLER'S WELD NUMBER	EXAMINATION CATEGORY IWB-2500	EXAMINATION METHOD IWB-2600	EXAMINATION PROCEDURE NUMBER	CALIBRATION BLOCK NO.
01-027-027	3" Sch 160 Pipe-to-Elbow	RC-062-S003-C	B-J	UT	NIP-954	UT-51
01-027-028	3" Sch 160 Elbow-to-Pipe	RC-062-S003-B	B-J	UT	NIP-954	UT-51
01-027-029	3" Sch 160 Pipe-to-Elbow	RC-062-S003-A	B-J	UT	NIP-954	UT-51
01-027-030	3" Sch 160 Elbow-to-Pipe	RC-062-W003	B-J	UT	NIP-954	UT-51
01-027-031	3" Sch 160 Pipe-to-Elbow	RC-062-S002-FW303	B-J	UT	NIP-954	UT-51
01-027-032	3" Sch 160 Elbow-to-Pipe	RC-062-S002-FW302	B-J	UT	NIP-954	UT-51
01-027-033	3" Sch 160 Pipe-to-Elbow	RC-062-S002-FW301	B-J	UT	NIP-954	UT-51
01-027-034	3" Sch 160 Elbow-to-Pipe	RC-062-S002-FW300	B-J	UT	NIP-954	UT-51

N/A NOT APPLICABLE
(H) DURING HYDROTEST

REVISION: 2

C-E 0090285 (Rev. 7/80)

WER SYSTEMS
COMBUSTION ENGINEERING, INC

ZONE 27 CLASS 1
PROGRAM PLAN

DOCUMENT NO.: TR-ESS-069

REFERENCE DRAWING NO.: D-9678-501-036 Rev. 04

TITLE: LOOP 1A PRESSURIZER SPRAY LINE

AREA DESIGNATION	AREA DESCRIPTION	MANUFACTURER'S OR INSTALLER'S WELD NUMBER	EXAMINATION CATEGORY IWB-2500	EXAMINATION METHOD IWB-2600	EXAMINATION PROCEDURE NUMBER	CALIBRATION BLOCK NO.
01-027-035	3" Sch 160 Pipe-to-Pipe	RC-062-S002-C	B-J	UT	NIP-954	UT-51
01-027-036	3" Sch 160 Pipe-to-Elbow	RC-062-S002-B	B-J	UT	NIP-954	UT-51
01-027-037	3" Sch 160 Elbow-to-Pipe	RC-062-S002-A	B-J	UT	NIP-954	UT-51
01-027-038	3" Sch 160 Pipe-to-Elbow	RC-062-W002	B-J	UT	NIP-954	UT-51
01-027-039	3" Sch 160 Elbow-to-Pipe	RC-062-FW305	B-J	UT	NIP-954	UT-51
01-027-040	3" Sch 160 Pipe-to-Elbow	RC-062-S001-D	B-J	UT	NIP-954	UT-51
01-027-041	3" Sch 160 Elbow-to-Pipe	RC-062-S001-C	B-J	UT	NIP-954	UT-51
01-027-042	3" Sch 160 Pipe-to-Elbow	RC-062-S001-B	B-J	UT	NIP-954	UT-51
01-027-043	3" Sch 160 Elbow-to-Pipe	RC-062-S001-A	B-J	UT	NIP-954	UT-51

N/A NOT APPLICABLE
(H) DURING HYDROTEST

REVISION: 2

C-E 0090285 (Rev. 7/80)

WER SYSTEMS
COMBUSTION ENGINEERING, INC

ZONE 27 CLASS 1
PROGRAM PLAN

DOCUMENT NO.: TR-ESS-069
REFERENCE DRAWING NO.: D-9678-501-036 Rev. 04
TITLE: LOOP 1A PRESSURIZER SPRAY LINE

AREA DESIGNATION	AREA DESCRIPTION	MANUFACTURER'S OR INSTALLER'S WELD NUMBER	EXAMINATION CATEGORY IWB-2500	EXAMINATION METHOD IWB-2600	EXAMINATION PROCEDURE NUMBER	CALIBRATION BLOCK NO.
01-027-044	3" Sch 160 Pipe-to-Safe End	RC-062-W001	B-J	UT	NIP-954	UT-51
01-027-045	Valve V-243 Bolting	N/A	B-G-2	Vis.	525115-ESS-091	N/A
01-027-046	Valve V-240 Bolting	N/A	B-G-2	Vis.	525115-ESS-091	N/A
01-027-047	Valve PV-100E Bolting	N/A	B-G-2	Vis.	525115-ESS-091	N/A

N/A NOT APPLICABLE
(H) DURING HYDROTEST

REVISION: 2

C-E 0090285 (Rev. 7/80)

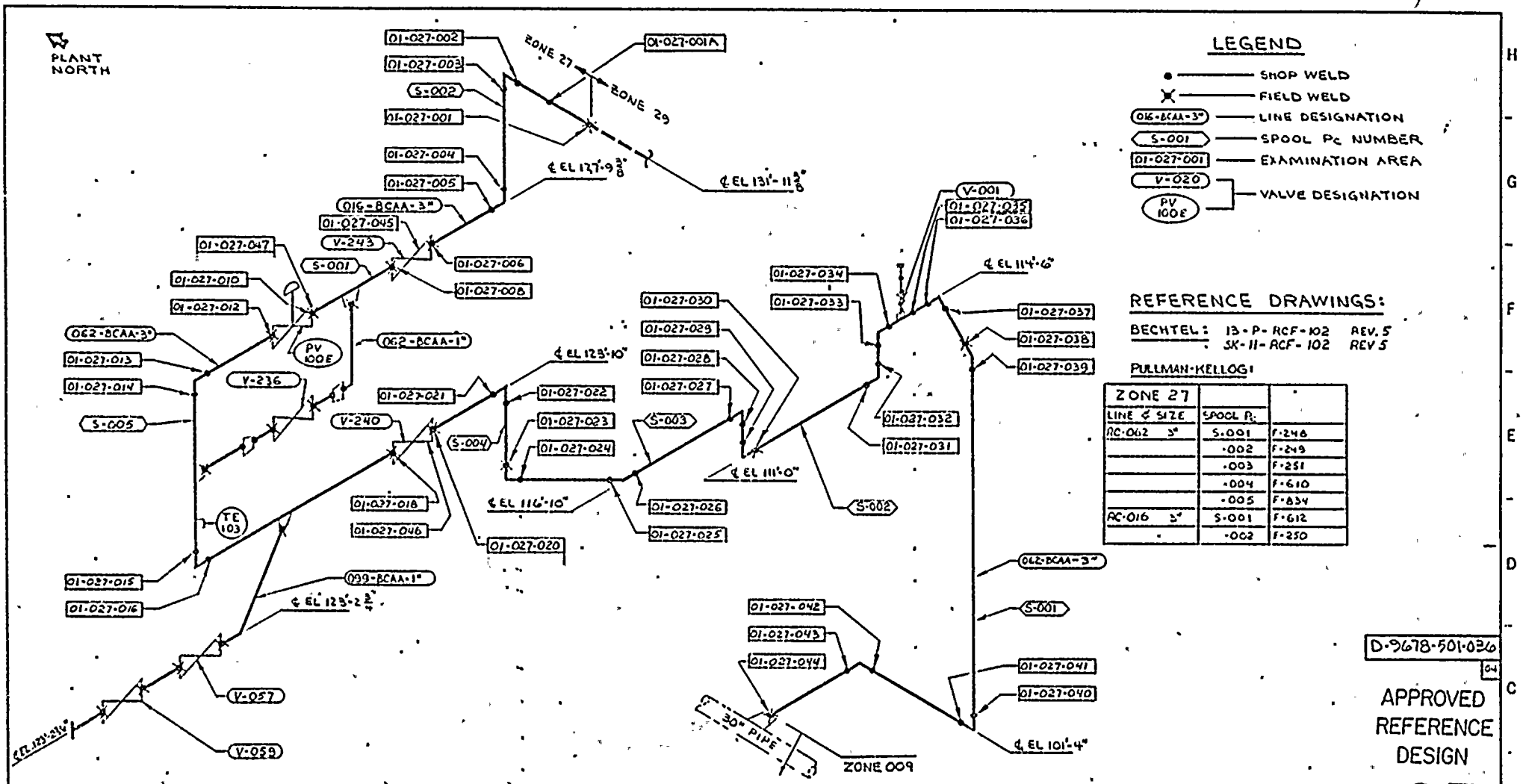

LEGEND

- SHOP WELD
- FIELD WELD
- 016-BCAA-3" — LINE DESIGNATION
- S-001 — SPOOL Pc NUMBER
- 01-027-001 — EXAMINATION AREA
- V-020, PV 100E — VALVE DESIGNATION

REFERENCE DRAWINGS:

BECHTEL: 13-P-RCF-102 REV. 5
SK-11-RCF-102 REV 5

PULLMAN-KELLOGG

ZONE 27		
LINE & SIZE	SPOOL Pc	
RC-062 3"	S-001	F-248
	-002	F-249
	-003	F-251
	-004	F-610
	-005	F-834
RC-016 3"	S-001	F-612
	-002	F-250

D-9678-501-036 04

APPROVED REFERENCE DESIGN

UNIT 1 ZONE 27

REV	DESCRIPTION
1	GENERALLY REVISED PER REV. REQ # 9678-262
2	UP GRADED TO APPROVED REFERENCE DESIGN PER REV REQ 9678-334
3	REVISED No'S & ADDED REF LINE SIZES PER REV REQ NO 9678-417
4	1-ADDED EXAM AREAS 045, 046, 047 2-ADDED REF DWG PER REV REQ 9678-503

POWER SYSTEMS

ARIZONA NUCLEAR POWER PROJECT PALO VERDE NUCLEAR GENERATING STATION

ZONE 27 LOOP-1A PRESSURIZER SPRAY LINE

D-9678-501-036 04

DNA 79 1

POWER SYSTEMS
COMBUSTION ENGINEERING, INC.

ZONE 28 CLASS 1
PROGRAM PLAN

DOCUMENT NO.: ~~TR-ESS-069~~
REFERENCE DRAWING NO.: D-9678-501-035 Rev. 04

TITLE: LOOP 1B PRESSURIZER SPRAY LINE

AREA DESIGNATION	AREA DESCRIPTION	MANUFACTURER'S OR INSTALLER'S WELD NUMBER	EXAMINATION CATEGORY IWB-2500	EXAMINATION METHOD IWB-2600	EXAMINATION PROCEDURE NUMBER	CALIBRATION BLOCK NO.
01-028-001	4" Sch 160 Pipe-to-Elbow	RC-018-S003-C	B-J	UT	NIP-954	UT-52
01-028-002	4" Sch 160 Elbow-to-Pipe	RC-018-S003-B	B-J	UT	NIP-954	UT-52
01-028-003	4" Sch 160 Pipe-to-Concentric Reducer	RC-018-S003-A	B-J	UT	NIP-954	UT-52
01-028-004	Concentric Reducer-to-3" Sch 160 Pipe	RC-018-W004	B-J	UT	NIP-954	UT-51
01-028-005	3" Sch 160 Pipe-to-Elbow	RC-018-FW300	B-J	UT	NIP-954	UT-51
01-028-006	3" Sch 160 Elbow-to-Pipe	RC-018-S002-A	B-J	UT	NIP-954	UT-51
01-028-007	3" Sch 160 Pipe-to-Valve	RC-018-W003	B-J	UT	NIP-954	UT-51
01-028-008	NOT USED					
01-028-009	Valve-to-3" Sch 160 Pipe	RC-018-W002	B-J	UT	NIP-954	UT-51

N/A NOT APPLICABLE
(H) DURING HYDROTEST

REVISION: 2

C-E 0090285 (Rev. 7/80)

POWER SYSTEMS
COMBUSTION ENGINEERING, INC.

ZONE 28 CLASS 1
PROGRAM PLAN

DOCUMENT NO.: TR-ESS-069

REFERENCE DRAWING NO.: D-9678-501-035 Rev. 04

TITLE: LOOP 1B PRESSURIZER SPRAY LINE

AREA DESIGNATION	AREA DESCRIPTION	MANUFACTURER'S OR INSTALLER'S WELD NUMBER	EXAMINATION CATEGORY IWB-2500	EXAMINATION METHOD IWB-2600	EXAMINATION PROCEDURE NUMBER	CALIBRATION BLOCK NO.
01-028-010	NOT USED					
01-028-011	3" Sch 160 Pipe-to-Valve	RC-018-W001	B-J	UT	NIP-954	UT-51
01-028-012	NOT USED					
01-028-013	Valve-to-3" Sch 160 Pipe	RC-017-W008	B-J	UT	NIP-954	UT-51
01-028-014	3" Sch 160 Pipe-to-Elbow	RC-017-S006-D	B-J	UT	NIP-954	UT-51
01-028-015	3" Sch 160 Elbow-to-Pipe	RC-017-S006-C	B-J	UT	NIP-954	UT-51
01-028-016	NOT USED					
01-028-017	3" Sch 160 Pipe-to-Elbow	RC-017-S006-B	B-J	UT	NIP-954	UT-51
01-028-018	3" Sch 160 Elbow-to-Pipe	RC-017-S006-A	B-J	UT	NIP-954	UT-51

N/A NOT APPLICABLE
(H) DURING HYDROTEST

REVISION: 2

C-E 0090285 (Rev. 7/80)

POWER SYSTEMS
COMBUSTION ENGINEERING, INC

ZONE 28 CLASS 1
PROGRAM PLAN

DOCUMENT NO.: TR-ESS-069

REFERENCE DRAWING NO.: D-9678-501-035 Rev. 04

TITLE: LOOP 1B PRESSURIZER SPRAY LINE

AREA DESIGNATION	AREA DESCRIPTION	MANUFACTURER'S OR INSTALLER'S WELD NUMBER	EXAMINATION CATEGORY IWB-2500	EXAMINATION METHOD IWB-2600	EXAMINATION PROCEDURE NUMBER	CALIBRATION BLOCK NO.
01-028-019	NOT USED					
01-028-020	3" Sch 160 Pipe-to-Valve	RC-017-W007	B-J	UT	NIP-954	UT-51
01-028-021	NOT USED					
01-028-022	Valve-to-3" Sch 160 Pipe	RC-017-W006	B-J	UT	NIP-954	UT-51
01-028-023	3" Sch 160 Pipe-to-Elbow	RC-017-S005-B	B-J	UT	NIP-954	UT-51
01-028-024	3" Sch 160 Elbow-to-Pipe	RC-017-S005-A	B-J	UT	NIP-954	UT-51
01-028-025	3" Sch 160 Pipe-to-Elbow	RC-017-W005-C	B-J	UT	NIP-954	UT-51
01-028-026	3" Sch 160 Elbow-to-Pipe	RC-017-S004-F	B-J	UT	NIP-954	UT-51
01-028-027	3" Sch 160 Pipe-to-Elbow	RC-017-S004-E	B-J	UT	NIP-954	UT-51

N/A NOT APPLICABLE
(H) DURING HYDROTEST

REVISION: 2

C-E 0090285 (Rev. 7/80)

POWER SYSTEMS
COMBUSTION ENGINEERING, INC

ZONE 28 CLASS 1
PROGRAM PLAN

DOCUMENT NO.: TR-ESS-069

REFERENCE DRAWING NO.: D-9678-501-035 Rev. 04

TITLE: LOOP 1B PRESSURIZER SPRAY LINE

AREA DESIGNATION	AREA DESCRIPTION	MANUFACTURER'S OR INSTALLER'S WELD NUMBER	EXAMINATION CATEGORY IWB-2500	EXAMINATION METHOD IWB-2600	EXAMINATION PROCEDURE NUMBER	CALIBRATION BLOCK NO.
01-028-028	3" Sch 160 Elbow-to-Pipe	RC-017-S004-D	B-J	UT	NIP-954	UT-51
01-028-029	3" Sch 160 Pipe-to-Elbow	RC-017-S004-C	B-J	UT	NIP-954	UT-51
01-028-030	3" Sch 160 Elbow-to-Pipe	RC-017-S004-B	B-J	UT	NIP-954	UT-51
01-028-031	3" Sch 160 Pipe-to-Elbow	RC-017-S004-A	B-J	UT	NIP-954	UT-51
01-028-032	3" Sch 160 Elbow-to-Pipe	RC-017-S004-A	B-J	UT	NIP-954	UT-51
01-028-033	3" Sch 160 Pipe-to-Elbow	RC-017-S003-B	B-J	UT	NIP-954	UT-51
01-028-034	3" Sch 160 Elbow-to-Pipe	RC-017-S003-A	B-J	UT	NIP-954	UT-51
01-028-035	3" Sch 160 Elbow-to-Pipe	RC-017-S003-FW300	B-J	UT	NIP-954	UT-51

N/A NOT APPLICABLE
(H) DURING HYDROTEST

REVISION: 2

C-E 0090285 (Rev. 7/80)

POWER SYSTEMS
COMBUSTION ENGINEERING, INC

ZONE 28 CLASS 1
PROGRAM PLAN

DOCUMENT NO.: TR-ESS-069

REFERENCE DRAWING NO.: D-9678-501-035 Rev. 04

TITLE: LOOP 1B PRESSURIZER SPRAY LINE

AREA DESIGNATION	AREA DESCRIPTION	MANUFACTURER'S OR INSTALLER'S WELD NUMBER	EXAMINATION CATEGORY IWB-2500	EXAMINATION METHOD IWB-2600	EXAMINATION PROCEDURE NUMBER	CALIBRATION BLOCK NO.
01-028-036	3" Sch 160 Elbow-to-Pipe	RC-017-S003-FW301	B-J	UT	NIP-954	UT-51
01-028-037	3" Sch 160 Pipe-to-Pipe	RC-017-W003	B-J	UT	NIP-954	UT-51
01-028-038	NOT USED					
01-028-039	3" Sch 160 Pipe-to-Elbow	RC-017-S002-A	B-J	UT	NIP-954	UT-51
01-028-039A	3" Sch 160 Pipe-to-Pipe	RC-017-S002-A	B-J	UT	NIP-954	UT-51
01-028-040	3" Sch 160 Elbow-to-Pipe	RC-017-W002	B-J	UT	NIP-954	UT-51
01-028-041	3" Sch 160 Pipe-to-Elbow	RC-017-S001-FW303	B-J	UT	NIP-954	UT-51
01-028-042	3" Sch 160 Elbow-to-Pipe	RC-017-S001-FW302	B-J	UT	NIP-954	UT-51

N/A NOT APPLICABLE
(H) DURING HYDROTEST

REVISION: 2

C-E 0090285 (Rev. 7/80)

POWER SYSTEMS
COMBUSTION ENGINEERING, INC

ZONE 28 CLASS 1
PROGRAM PLAN

DOCUMENT NO.: TR-ESS-069

REFERENCE DRAWING NO.: D-9678-501-035 Rev. 04

TITLE: LOOP 1B PRESSURIZER SPRAY LINE

AREA DESIGNATION	AREA DESCRIPTION	MANUFACTURER'S OR INSTALLER'S WELD NUMBER	EXAMINATION CATEGORY IWB-2500	EXAMINATION METHOD IWB-2600	EXAMINATION PROCEDURE NUMBER	CALIBRATION BLOCK NO.
01-028-043	3" Sch 160 Pipe-to-Elbow	RC-017-S001-C	B-J	UT	NIP-954	UT-51
01-028-044	3" Sch 160 Elbow-to-Pipe	RC-017-S001-D	B-J	UT	NIP-954	UT-51
01-028-045	3" Sch 160 Pipe-to-Loop 1B Safe End	RC-017-W001	B-J	UT	NIP-954	UT-51
01-028-046	3" Sch 160 Pipe-to-Pipe	RC-017-S002-B	B-J	UT	NIP-954	UT-51
01-028-047	Valve V-241 Bolting	N/A	B-G-2	Vis.	525115-ESS-091	N/A
01-028-048	Valve V-242 Bolting	N/A	B-G-2	Vis.	525115-ESS-091	N/A
01-028-049	Valve PV-100F Bolting	N/A	B-G-2	Vis.	525115-ESS-091	N/A

N/A NOT APPLICABLE
(H) DURING HYDROTEST

REVISION: 2

C-E 0090285 (Rev. 7/80)

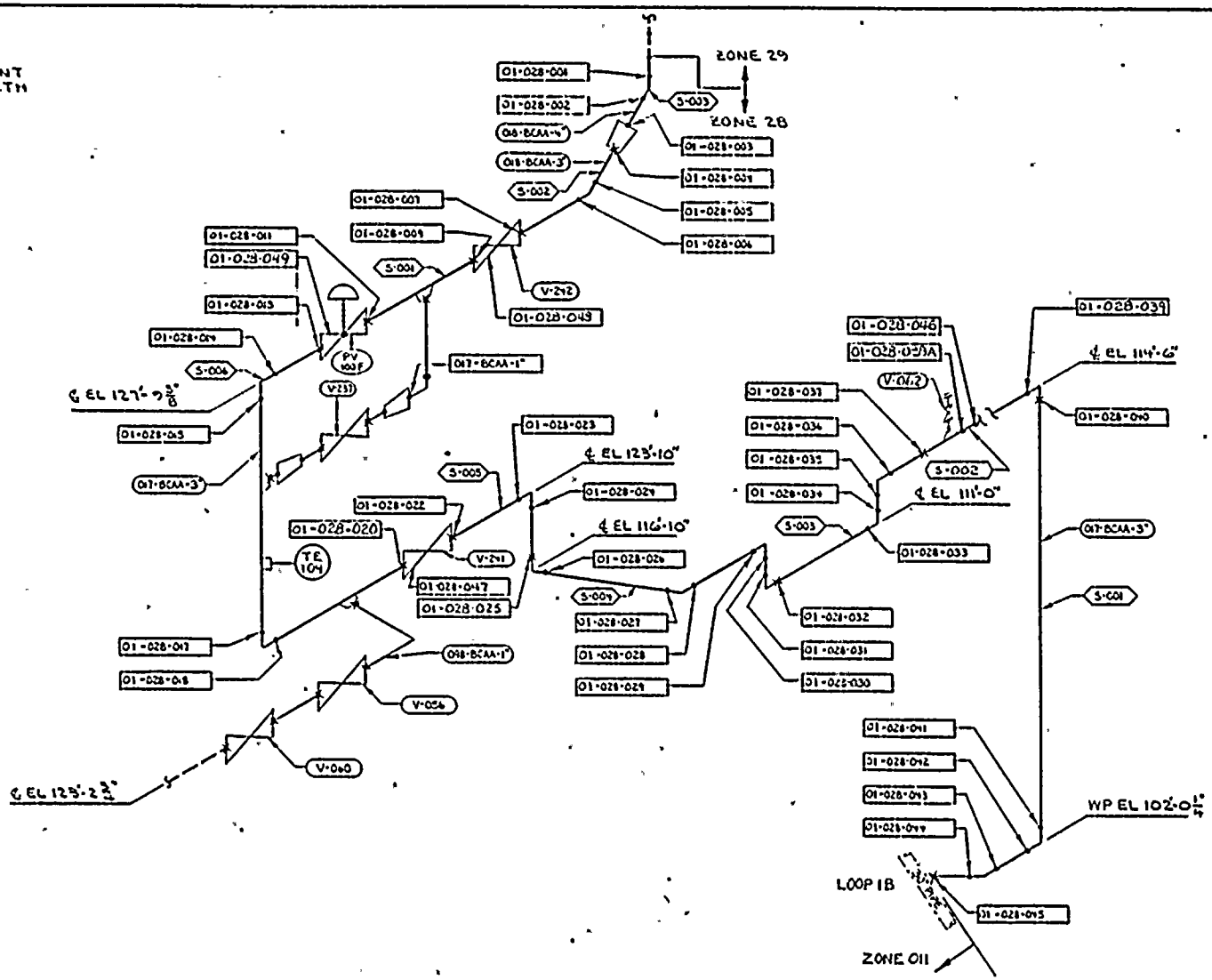

LEGEND

- SHOP WELD
- FIELD WELD
- 048-BCAA-4" — LINE DESIGNATION
- S-001 — SPOOL Pc NUMBER
- 01-028-XXX — EXAMINATION AREA
- V-242 / PV 100F — VALVE DESIGNATION

REFERENCE DRAWINGS:

BECHTEL: 13-P-RCF-102 REV.5
SK-11-RCF-102 REV.5

PULLMAN-KELLOG:

ZONE 28			
LINE ℄	SIZE	SPOOL Pc	
RC-017	3"	S-001	F-246
		S-002	F-243
		S-003	F-244
		S-004	F-245
		S-005	F-252
		S-006	F-611
RC-018	3"	S-001	F-613
		S-002	F-247
	4"	S-003	F-290

D-9678-501-035 04

APPROVED REFERENCE DESIGN

UNIT 1 ZONE 28

REV	DESCRIPTION
01	1-GENERALLY REVISED PER REV REQ # 9678-262
02	UP GRADED TO APPROVED REFERENCE DESIGN PER REV REQ #9678-384
03	REVISED NO'S & ADDED REF LINE SIZES PER REV REQ No 9678-417
04	1 ADDED EXAMINATION DESIGN'S (ONE THIRD ONE) 2 ADDED REFDWG PER REQ 9678-503

POWER SYSTEMS

ARIZONA NUCLEAR POWER PROJECT
PALO VERDE NUCLEAR GENERATING STATION

ZONE 28 LOOP 1B PRESSURIZER SPRAY LINE

D-9678-501-035 04

DNA-79 1

POWER SYSTEMS
COMBUSTION ENGINEERING, INC

ZONE 29 CLASS 1
PROGRAM PLAN

DOCUMENT NO.: TR-ESS-069

REFERENCE DRAWING NO.: D-9678-501-034 Rev. 04

TITLE: COMBINED PRESSURIZER SPRAY LINE

AREA DESIGNATION	AREA DESCRIPTION	MANUFACTURER'S OR INSTALLER'S WELD NUMBER	EXAMINATION CATEGORY IWB-2500	EXAMINATION METHOD IWB-2600	EXAMINATION PROCEDURE NUMBER	CALIBRATION BLOCK NO.
01-029-001	4" Sch 160 Pipe-to-Pressurizer Nozzle Safe End	RC-018-W008	B-J	UT	NIP-954	UT-52
01-029-002	4" Sch 160 Pipe-to-Reducing Tee	RC-018-S005-D	B-J	UT	NIP-954	UT-52
01-029-003	4" Sch 160 Reducing Tee-to-Pipe	RC-018-S005-C	B-J	UT	NIP-954	UT-52
01-029-004	4" Sch 160 Pipe-to-Elbow	RC-018-S005-B	B-J	UT	NIP-954	UT-52
01-029-005	4" Sch 160 Elbow-to-Pipe	RC-018-S005-A	B-J	UT	NIP-954	UT-52
01-029-006	NOT USED					
01-029-007	4" Sch 160 Pipe-to-Valve	RC-018-W007	B-J	UT	NIP-954	UT-52
01-029-008	Valve V-244 Body Weld	N/A	B-M-1	Vol.	See Note	N/A

Note: Section III RT Records will be utilized for PSE.

N/A NOT APPLICABLE
(H) DURING HYDROTEST

REVISION: 2

C-E 0090285 (Rev. 7/80)

POWER SYSTEMS
COMBUSTION ENGINEERING, INC

ZONE 29 CLASS 1
PROGRAM PLAN

DOCUMENT NO.: TR-ESS-069

REFERENCE DRAWING NO.: D-9678-501-034 Rev. 04

TITLE: COMBINED PRESSURIZER SPRAY LINE

AREA DESIGNATION	AREA DESCRIPTION	MANUFACTURER'S OR INSTALLER'S WELD NUMBER	EXAMINATION CATEGORY IWB-2500	EXAMINATION METHOD IWB-2600	EXAMINATION PROCEDURE NUMBER	CALIBRATION BLOCK NO.
01-029-009	Valve-to-4" Sch 160 Pipe	RC-018-W006	B-J	UT	NIP-954	UT-52
01-029-009A	4" Sch 160 Pipe-to-Pipe	RC-018-S003-C	B-J	UT	NIP-954	UT-52
01-029-010	4" Sch 160 Pipe-to-Elbow	RC-018-W005	B-J	UT	NIP-954	UT-52
01-029-011	4" Sch 160 Pipe-to-Pipe	RC-018-S003-K	B-J	UT	NIP-954	UT-52
01-029-011A	4" Sch 160 Pipe-to-Pipe	RC-018-S003-D	B-J	UT	NIP-954	UT-52
01-029-011B	4" Sch 160 Pipe-to-Pipe	RC-018-S003-J	B-J	UT	NIP-954	UT-52
01-029-012	4" Sch 160 Pipe-to-Reducing Tee	RC-018-S003-C	B-J	UT	NIP-954	UT-52
01-029-013	4" Sch 160 Reducing Tee-to-Pipe	RC-018-S003-B	B-J	UT	NIP-954	UT-52
01-029-014	Valve V-244 Bolting	N/A	B-G-2	Vis.	525115-ESS-091	N/A

N/A NOT APPLICABLE
(H) DURING HYDROTEST

REVISION: 2

C-E 0090285 (Rev. 7/80)

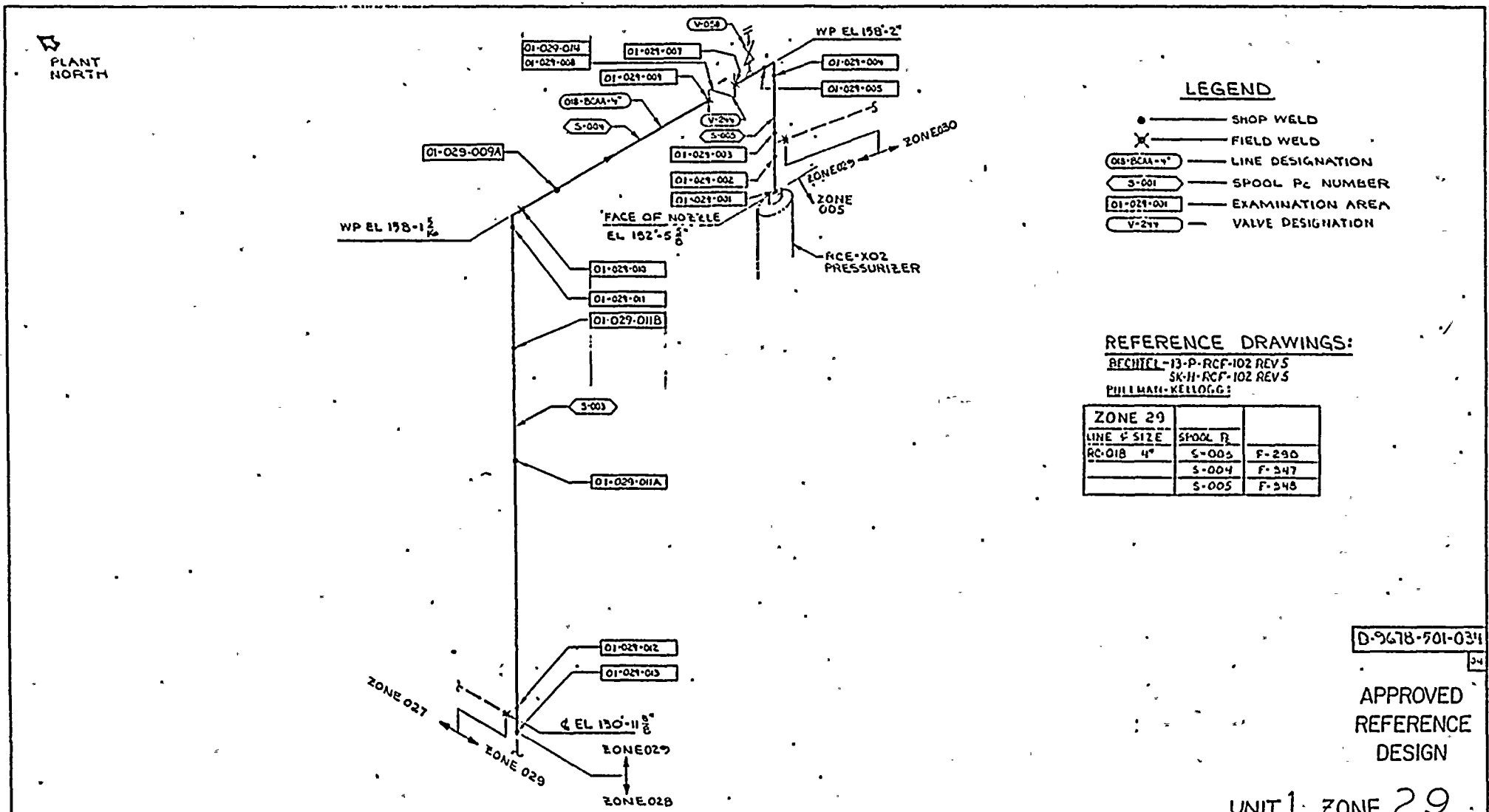
PLANT NORTH
WP EL 158'-2"
01-029-014
01-029-008
01-029-007
01-029-009
01-029-004
01-029-005
V-058
018-BCAA-4"
S-004
V-299
S-005
01-029-009A
01-029-003
01-029-002
01-029-001
ZONE 030
ZONE 025
ZONE 005
FACE OF NOZZLE
EL 152'-5 5/8"
WP EL 158-1 5/16
RCE-X02 PRESSURIZER
01-029-013
01-029-011
01-029-011B
S-003
01-029-011A
01-029-012
01-029-013
ZONE 027
ZONE 029
℄ EL 150'-11 5/8"
ZONE 029
ZONE 028
LEGEND
SHOP WELD
FIELD WELD
018-BCAA-4" — LINE DESIGNATION
S-001 — SPOOL Pc NUMBER
01-029-001 — EXAMINATION AREA
V-299 — VALVE DESIGNATION
REFERENCE DRAWINGS:
BECHTEL-13-P-RCF-102 REV 5
SK-H-RCF-102 REV 5
PULLMAN-KELLOGG:
ZONE 29
LINE & SIZE | SPOOL Pc
RC-018 4" | S-003 | F-290
S-004 | F-347
S-005 | F-348
D-9678-501-034
04
APPROVED REFERENCE DESIGN
UNIT 1 ZONE 29
1-GENERALLY REVISED PER REV REQ #9678-262
UP GRADED TO APPROVED REFERENCE DESIGN PER REV REQ 9678-385
REVISED NO'S & ADDED REF LINE SIZES PER REV REQ #9678-417
1-ADDED EXAM NO. 014 (RANGE) BECHTEL REF DWG PER REQ 9678-503
POWER SYSTEMS
ZONE 29 COMBINED PRESSURIZER SPRAY LINE
D-9678-501-034
04
DNA-79 1

/ER SYSTEMS
COMBUSTION ENGINEERING, INC

ZONE 30 CLASS 1
PROGRAM PLAN

DOCUMENT NO.: TR-ESS-069
REFERENCE DRAWING NO.: C-9678-501-070 Rev. 04
TITLE: AUXILIARY PRESSURIZER SPRAY LINE

AREA DESIGNATION	AREA DESCRIPTION	MANUFACTURER'S OR INSTALLER'S WELD NUMBER	EXAMINATION CATEGORY IWB-2500	EXAMINATION METHOD IWB-2600	EXAMINATION PROCEDURE NUMBER	CALIBRATION BLOCK NO.
01-030-001	Reducing Tee-to-2" Sch 160 Pipe	CH-009-W00B	B-J	UT	NIP-954	UT-50
01-030-002	2" Sch 160 Pipe-to-Valve	CH-009-W00A	B-J	UT	NIP-954	UT-50
01-030-003	NOT USED					
01-030-004	Valve-to-2" Sch 160 Pipe	CH-520-W00C	B-J	UT	NIP-954	UT-50
01-030-005	2" Sch 160 Pipe-to-Tee	CH-520-N00A	B-J	UT	NIP-954	UT-50
01-030-006	2" Sch 160 Tee-to-Pipe	CH-520-N00A-FW-A00	B-J	UT	NIP-954	UT-50
01-030-007	2" Sch 160 Pipe-to-Valve	CH-520-W00B	B-J	UT	NIP-954	UT-50
01-030-008	NOT USED					

N/A NOT APPLICABLE
(H) DURING HYDROTEST

REVISION: 2

C-E 0090285 (Rev. 7/80)

/ER SYSTEMS
COMBUSTION ENGINEERING, INC.

ZONE 30 CLASS 1
PROGRAM PLAN

DOCUMENT NO.: TR-ESS-069

REFERENCE DRAWING NO.: C-9678-501-070 Rev. 04

TITLE: AUXILIARY PRESSURIZER SPRAY LINE

AREA DESIGNATION	AREA DESCRIPTION	MANUFACTURER'S OR INSTALLER'S WELD NUMBER	EXAMINATION CATEGORY IWB-2500	EXAMINATION METHOD IWB-2600	EXAMINATION PROCEDURE NUMBER	CALIBRATION BLOCK NO.
01-030-009	2" Sch 160 Tee-to-Pipe	CH-520-N00A-FW-C00-P-66	B-J	UT	NIP-954	UT-50
01-030-010	2" Sch 160 Pipe-to-Elbow	CH-521-N00A-FW-D00-P-66	B-J	UT	NIP-954	UT-50
01-030-011	2" Sch 160 Elbow-to-Pipe	CH-521-N00A-FW-E00-P-66	B-J	UT	NIP-954	UT-50
01-030-012	2" Sch 160 Pipe-to-Valve	CH-521-W00A	B-J	UT	NIP-954	UT-50

N/A NOT APPLICABLE
(H) DURING HYDROTEST

REVISION: 2

C-E 0090285 (Rev. 7/80)

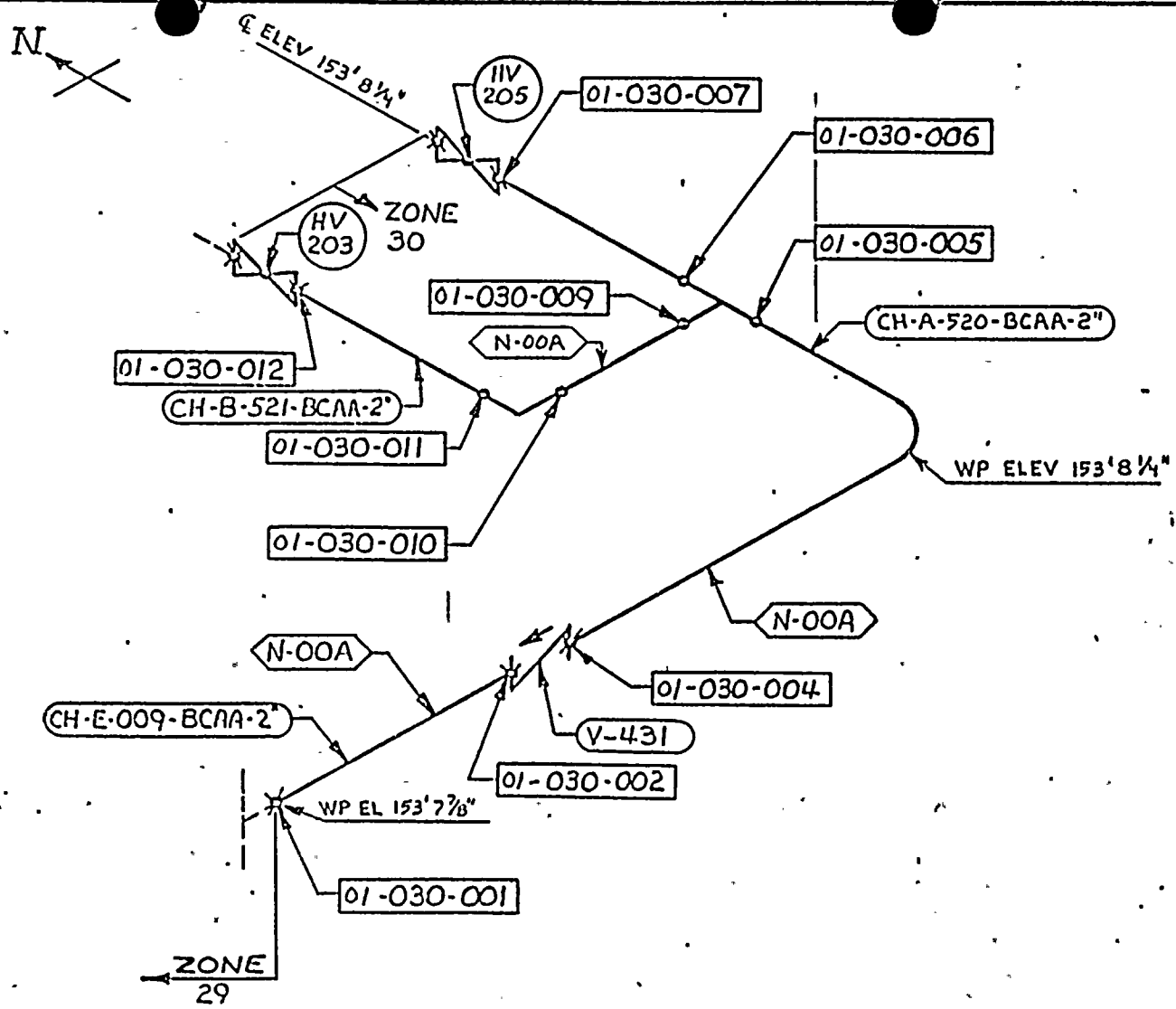

LEGEND

- ● SHOP WELD
- ⊗ FIELD WELD
- 01-030-001 — EXAMINATION AREA DESIGNATION
- CH-E-009-BCAA-2" — LINE DESIGNATION
- N-00A — SPOOL PIECE No
- V-431 — VALVE DESIGNATION
- HV 205 — VALVE DESIGNATION

REFERENCE DRAWINGS
BECHTEL: 13-P-CHF-107 REV 3
SK-H-CHF-107 REV 5

C-9678-501-070
04

APPROVED REFERENCE DESIGN

UNIT 1 ZONE 30

REV	DESCRIPTION	DR'D DATE	CHK'D DATE	ENG APPD	PROJ APPD
01	1-GENERALLY REVISED PER REV. REQ.# 9678-262	[illegible]	[illegible]	[illegible]	[illegible]
01	UPGRADE TO APPROVED REF DESIGN PER REV REQ# 9678-379	[illegible]	[illegible]	[illegible]	[illegible]
02	1-ADDED GENERAL NOTE [2-EXAM AREA NO'S WERE 01] 3-ADDED CHART PER REV REQ NO. 9678-417	[illegible]	[illegible]	[illegible]	[illegible]
03	1-ADDED REF DWG SK-H-CHF-107 & LINE 520 PER REV REQ 9678-503	[illegible]	[illegible]	[illegible]	[illegible]

POWER SYSTEMS
COMBUSTION ENGINEERING INC
NUCLEAR POWER SYSTEMS

DRAWN BY [illegible] 4-2-79
CHECKER [illegible] 5-11-79
APPROVALS [illegible]

CUSTOMER
ARIZONA NUCLEAR POWER PROJECT
PALO VERDE NUCLEAR GENERATING STATION

TITLE ZONE 30 AUX PRESSURIZER SPRAY LINE

NEXT ASSY | SUPERSEDES
JOB NO 661012 | COMPONENT CODE | SCALE
DWG NO C-9678-501-070 04
SHEET 1 OF 1 REV

8 7 6 5 4 3 2 1

POWER SYSTEMS
COMBUSTION ENGINEERING, INC

ZONE 31 CLASS 1
PROGRAM PLAN

DOCUMENT NO.: TR-ESS-069

REFERENCE DRAWING NO.: C-9678-501-069 Rev. 03

TITLE: PRESSURIZER SAFETIES

AREA DESIGNATION	AREA DESCRIPTION	MANUFACTURER'S OR INSTALLER'S WELD NUMBER	EXAMINATION CATEGORY IWB-2500	EXAMINATION METHOD IWB-2600	EXAMINATION PROCEDURE NUMBER	CALIBRATION BLOCK NO.
01-031-001	Pressurizer Safe End to 6" Sch 160 Elbow	RC-001-W001	B-J	UT	NIP-954	UT-53
01-031-002	6" Sch 160 Elbow to Pipe	RC-001-S001-A	B-J	UT	NIP-954	UT-53
01-031-003	6" Sch 160 Pipe to Flange	RC-001-S001-B	B-J	UT	NIP-954	UT-53
01-031-004	Valve PSV-200	N/A	B-M-2	Vis.	525115-ESS-091	N/A
01-031-005	Pressurizer Safe End to 6" Sch 160 Elbow	RC-003-W001	B-J	UT	NIP-954	UT-53
01-031-006	6" Sch 160 Elbow-to-Pipe	RC-003-S001-A	B-J	UT	NIP-954	UT-53
01-031-007	6" Sch 160 Pipe to Flange	RC-003-S001-B	B-J	UT	NIP-954	UT-53
01-031-008	Valve PSV-201	N/A	B-M-2	Vis.	525115-ESS-091	N/A
01-031-009	Pressurizer Safe End to 6" Sch 160 Elbow	RC-005-W001	B-J	UT	NIP-954	UT-53

N/A NOT APPLICABLE
(H) DURING HYDROTEST

REVISION: 2

C-E 0090285 (Rev. 7/80)

POWER SYSTEMS
COMBUSTION ENGINEERING, INC

ZONE 31 CLASS 1
PROGRAM PLAN

DOCUMENT NO.: TR-ESS-069

REFERENCE DRAWING NO.: C-9678-501-069 Rev. 03

TITLE: PRESSURIZER SAFETIES

AREA DESIGNATION	AREA DESCRIPTION	MANUFACTURER'S OR INSTALLER'S WELD NUMBER	EXAMINATION CATEGORY IWB-2500	EXAMINATION METHOD IWB-2600	EXAMINATION PROCEDURE NUMBER	CALIBRATION BLOCK NO.
01-031-010	6" Sch 160 Elbow-to-Pipe	RC-005-S001-A	B-J	UT	NIP-954	UT-53
01-031-011	6" Sch 160 Pipe-to-Flange	RC-005-S001-B	B-J	UT	NIP-954	UT-53
01-031-012	Valve PSV-202	N/A	B-M-2	Vis.	525115-ESS-091	N/A
01-031-013	Pressurizer Safe End to 6" Sch 160 Elbow	RC-007-W001	B-J	UT	NIP-954	UT-53
01-031-014	6" Sch 160 Elbow-to-Pipe	SI-007-S001-A	B-J	UT	NIP-954	UT-53
01-031-015	6" Sch 160 Pipe-to-Flange	SI-007-S001-B	B-J	UT	NIP-954	UT-53
01-031-016	Valve PSV-203	N/A	B-M-2	Vis.	525115-ESS-091	N/A
01-031-017	Flange Bolting	N/A	B-G-2	Vis.	525115-ESS-091	N/A
01-031-018	Flange Bolting	N/A	B-G-2	Vis.	525115-ESS-091	N/A

N/A NOT APPLICABLE
(H) DURING HYDROTEST

REVISION: 2

C-E 0090285 (Rev. 7/80)

POWER SYSTEMS
COMBUSTION ENGINEERING, INC

ZONE 31 CLASS 1
PROGRAM PLAN

DOCUMENT NO.: TR-ESS-069

REFERENCE DRAWING NO.: C-9678-501-069 Rev. 03

TITLE: PRESSURIZER SAFETIES

AREA DESIGNATION	AREA DESCRIPTION	MANUFACTURER'S OR INSTALLER'S WELD NUMBER	EXAMINATION CATEGORY IWB-2500	EXAMINATION METHOD IWB-2600	EXAMINATION PROCEDURE NUMBER	CALIBRATION BLOCK NO.
01-031-019	Flange Bolting	N/A	B-G-2	Vis.	525115-ESS-091	N/A
01-031-020	Flange Bolting	N/A	B-G-2	Vis.	525115-ESS-091	N/A
01-031-021	Valve PSV-200 Bolting	N/A	B-G-2	Vis.	525115-ESS-091	N/A
01-031-022	Valve PSV-201 Bolting	N/A	B-G-2	Vis.	525115-ESS-091	N/A
01-031-023	Valve PSV-202 Bolting	N/A	B-G-2	Vis.	525115-ESS-091	N/A
01-031-024	Valve PSV-203 Bolting	N/A	B-G-2	Vis.	525115-ESS-091	N/A

N/A NOT APPLICABLE
(H) DURING HYDROTEST

REVISION: 2

C-E 0090285 (Rev. 7/80)

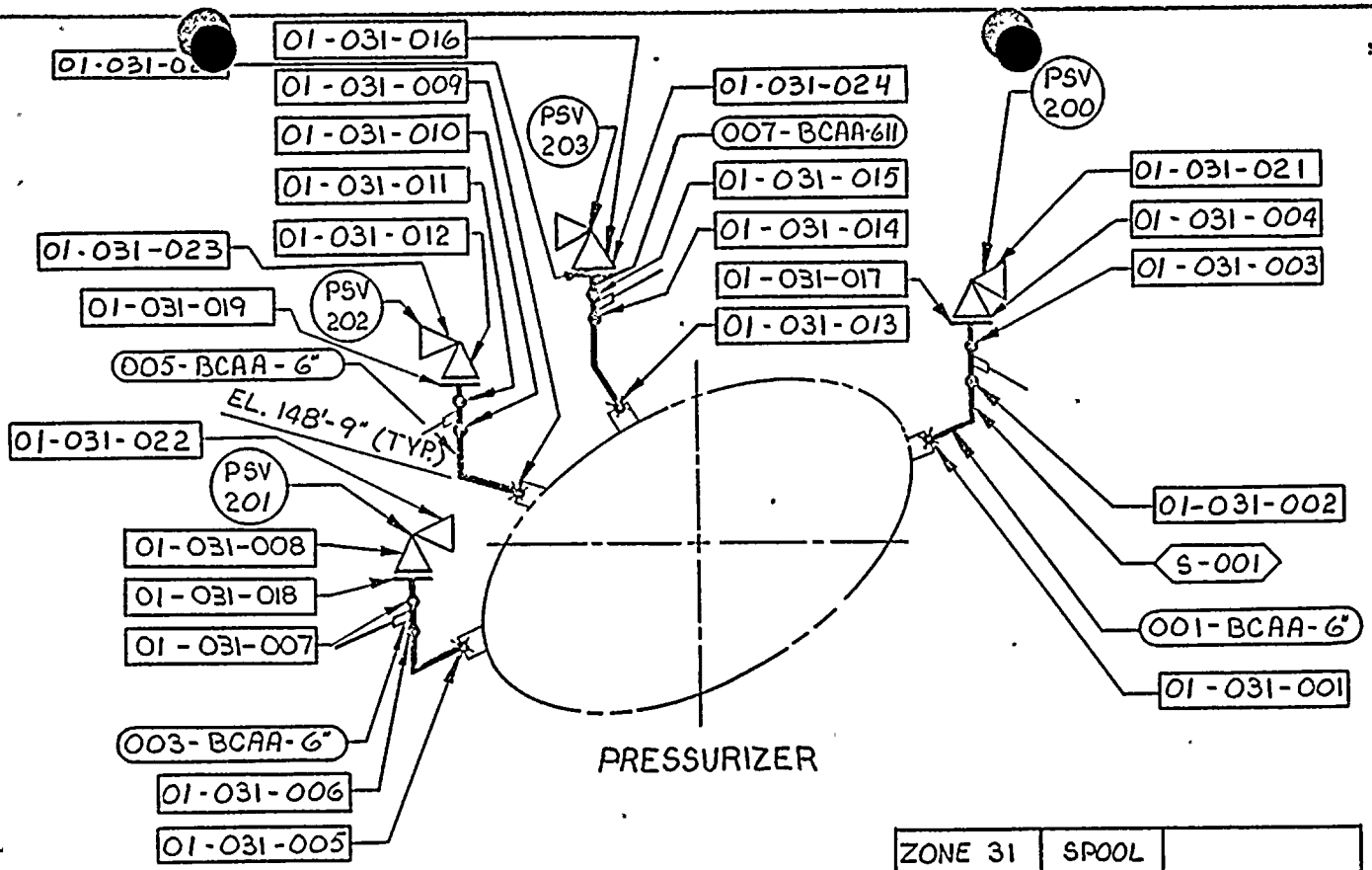

LEGEND

- SHOP WELD
- FIELD WELD
- 01-031-001 — EXAMINATION AREA DESIGNATION
- 001-BCAA-6" — LINE DESIGNATION
- S-001 — SPOOL PIECE NO
- V-276 / PSV 200 — VALVE DESIGNATION

REFERENCE DRAWINGS

BECHTEL : 13-P-RCF-114 REV. 4

PULLMAN-KELLOGG

ZONE 31		SPOOL	
LINE & SIZE		PIECE	1
001	6"	S-001	F-687 REV. 1
003	6"	S-001	F-688 REV. 1
005	6"	S-001	F-690 REV. 1
007	6"	S-001	F-689 REV. 1

C-9678-501-069 03

APPROVED REFERENCE DESIGN

UNIT 1 ZONE 31

REV	DESCRIPTION	BY & DATE	CHK & DATE	ENG APPD	PROJ APPD
01	UPGRADE TO APPROVED REF DESIGN PER REV REQ NO. 9678-258				
03	1-ADDED EXAM AREA CALLOUTS -021, -022, -023 & -024 PER REV REQ # 9678-503				
03	1-GENERALLY REVISED PER REV REQ # 9678-262				

POWER SYSTEMS
COMBUSTION ENGINEERING INC
NUCLEAR POWER SYSTEMS

CUSTOMER: ARIZONA NUCLEAR POWER PROJECT, PALO VERDE NUCLEAR GENERATING STATION

NEXT ASSY | SUPERSEDES | JOB NO. 661012 | COMPONENT CODE | SCALE

DRAWN BY N. Mobeli 7-30-79
CHECKER 8-13-79
APPROVALS 8-12-79

TITLE: ZONE 31 PRESSURIZER SAFETY

DWG. NO. C-9678-501-069 03

SHEET 1 OF 1

NER SYSTEMS
COMBUSTION ENGINEERING, INC.

ZONE 32 CLASS 1
PROGRAM PLAN

DOCUMENT NO.: TR-ESS-069

REFERENCE DRAWING NO.: C-9678-501-068 Rev. 04

TITLE: LOOP 1A DRAIN LINE

AREA DESIGNATION	AREA DESCRIPTION	MANUFACTURER'S OR INSTALLER'S WELD NUMBER	EXAMINATION CATEGORY IWB-2500	EXAMINATION METHOD IWB-2600	EXAMINATION PROCEDURE NUMBER	CALIBRATION BLOCK NO.
01-032-001	2" Sch 160 Pipe to Safe End	RC-060-W00A	B-J	UT	NIP-954	UT-50
01-032-002	2" Sch 160 Pipe to Elbow	RC-060-WA00-C	B-J	UT	NIP-954	UT-50
01-032-003	Elbow to 2" Sch 160 Pipe	RC-060-WB00-C	B-J	UT	NIP-954	UT-50
01-032-004	2" Sch 160 Pipe to Elbow	RC-060-WC00	B-J	UT	NIP-954	UT-50
01-032-005	Elbow to 2" Sch 160 Pipe	RC-060-W000	B-J	UT	NIP-954	UT-50
01-032-006	2" Sch 160 Pipe to Valve	RC-060-W00B	B-J	Surf.	525115-ESS-093	N/A
01-032-007	NOT USED					
01-032-008	Valve to 2" Sch 160 Pipe	RC-060-W00C	B-J	Surf.	525115-ESS-093	N/A
01-032-009	2" Sch 160 Pipe to Valve	RC-060-W00D	B-J	Surf.	525115-ESS-093	N/A

N/A NOT APPLICABLE
(H) DURING HYDROTEST

REVISION: 2

C-E 0090285 (Rev. 7/80)

POWER SYSTEMS
COMBUSTION ENGINEERING, INC.

ZONE 32 CLASS 1
PROGRAM PLAN

DOCUMENT NO.: TR-ESS-069

REFERENCE DRAWING NO.: C-9678-501-068 Rev. 04

TITLE: LOOP 1A DRAIN LINE

AREA DESIGNATION	AREA DESCRIPTION	MANUFACTURER'S OR INSTALLER'S WELD NUMBER	EXAMINATION CATEGORY IWB-2500	EXAMINATION METHOD IWB-2600	EXAMINATION PROCEDURE NUMBER	CALIBRATION BLOCK NO.
01-032-010	NOT USED					
01-032-011	Valve to 2" Sch 160 Pipe	RC-060-W00E	B-J	Surf.	525115-ESS-093	N/A

N/A NOT APPLICABLE
(H) DURING HYDROTEST

REVISION: 2

C-E 0090285 (Rev. 7/80)

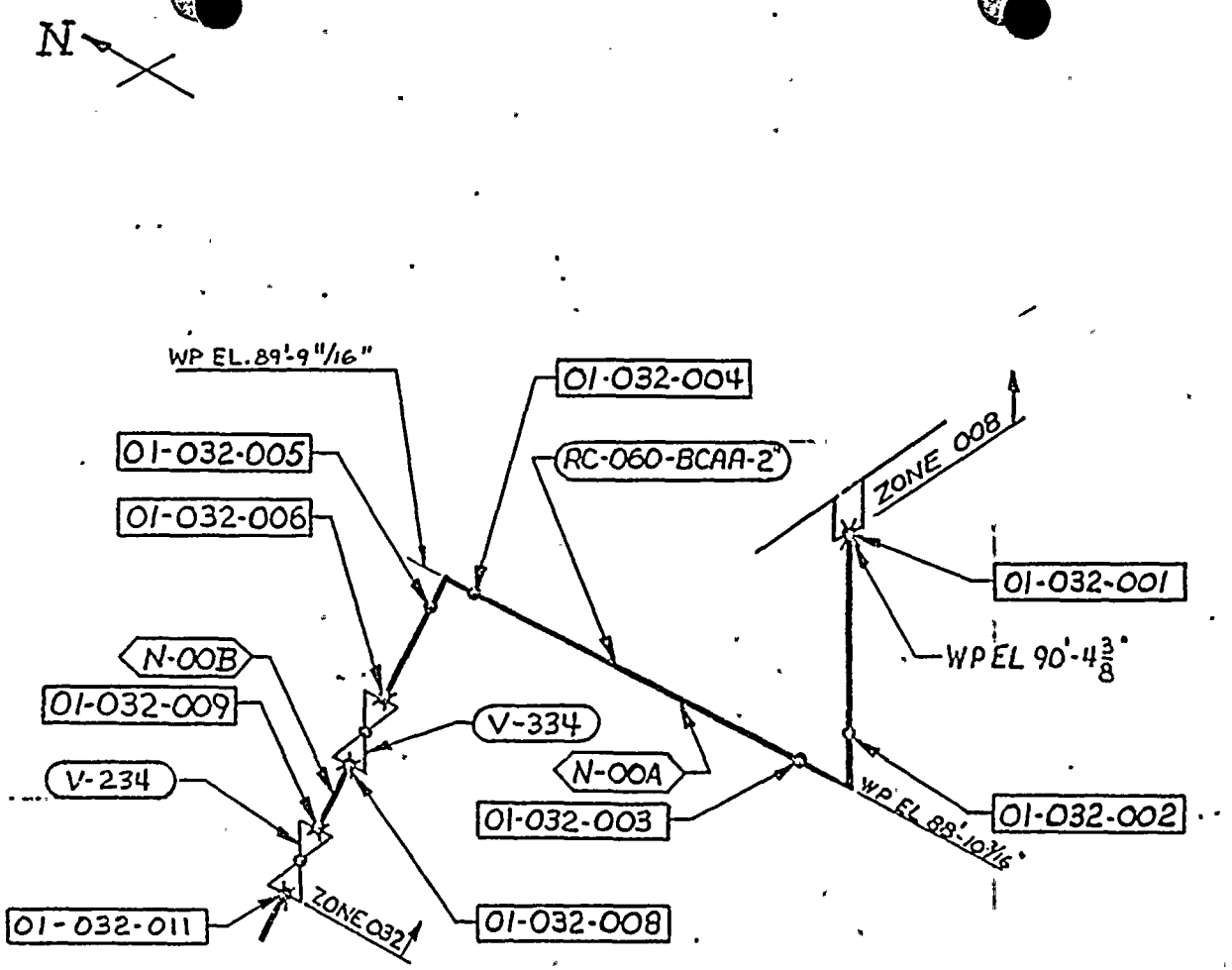

LEGEND

- SHOP WELD
- FIELD WELD
- 01-032-XXX — EXAMINATION AREA DESIGNATION
- RC-060-BCAA-2" — LINE DESIGNATION
- N-00A — SPOOL PIECE No
- V-234 — VALVE DESIGNATION

REFERENCE DRAWINGS:
BECHTEL: 13-P-CHF-110 REV.3
SK-H-CHF-110 REV.5

C-9678-501-068
04

APPROVED
REFERENCE
DESIGN

UNIT 1 ZONE 32

REV	DESCRIPTION	BY & DATE	CHK & DATE	ENG APPD	PROJ APPD
04	1-GENERALLY REVISED PER REV REQ. # 9678-262				

REV	DESCRIPTION	BY & DATE	CHK & DATE	ENG APPD	PROJ APPD
01	UPGRADED TO APPROVED REF DESIGN PER REV REQ No 9678-378				
02	1-EXAM AREA No3 WAS 01-032-2-ADDED NOTE 3-ADDED EL No3 PER REV REQ No 9678-417				
03	1-DELETED EXAM AREA CALL-OUTS-007 & -010 [2-ADDED REF DWG SK-H-CHF-110] PER REV REQ # 9678-503				

POWER SYSTEMS
COMBUSTION ENGINEERING INC
NUCLEAR POWER SYSTEMS

This drawing is the property of CE POWER SYSTEMS Combustion Engineering Inc Windsor, Connecticut 06095 and is not to be reproduced or used to furnish any information for making of drawings or apparatus except where provided for by agreement with said company.

CUSTOMER
ARIZONA NUCLEAR POWER PROJECT
PALO VERDE NUCLEAR GENERATING STATION

NEXT ASSY | SUPERSEDES
JOB NO. 661012 | COMPONENT CODE | SCALE

DRAWN BY 4-5-79
CHECKER 5-17-79
APPROVALS

TITLE
ZONE 32 LOOP 1A DRAIN LINE

DWG. NO. C-9678-501-068 REV 04
SHEET 1 OF 1

POWER SYSTEMS
COMBUSTION ENGINEERING, INC.

ZONE 33 CLASS 1
PROGRAM PLAN

DOCUMENT NO.: TR-ESS-069

REFERENCE DRAWING NO.: C-9678-501-067 Rev. 04

TITLE: LOOP 1B DRAIN LINE

AREA DESIGNATION	AREA DESCRIPTION	MANUFACTURER'S OR INSTALLER'S WELD NUMBER	EXAMINATION CATEGORY IWB-2500	EXAMINATION METHOD IWB-2600	EXAMINATION PROCEDURE NUMBER	CALIBRATION BLOCK NO.
01-033-001	2" Sch 160 Pipe to Safe End	RC-058-W00A	B-J	UT	NIP-954	UT-50
01-033-002	2" Sch 160 Pipe to Elbow	RC-058-FWA00C	B-J	UT	NIP-954	UT-50
01-033-003	Elbow to 2" Sch 160 Pipe	RC-058-FWB00	B-J	UT	NIP-954	UT-50
01-033-004	2" Sch 160 Pipe-to-Elbow	RC-058-FWC00	B-J	UT	NIP-954	UT-50
01-033-005	Elbow to 2" Sch 160 Pipe	RC-058-FWD00	B-J	UT	NIP-954	UT-50
01-033-006	2" Sch 160 Pipe to Valve	RC-058-W00B	B-J	Surf.	525115-ESS-093	N/A
01-033-007	NOT USED					
01-033-008	Valve to 2" Sch 160 Pipe	RC-058-W00C	B-J	Surf.	525115-ESS-093	N/A
01-033-009	2" Sch 160 Pipe to Valve	RC-058-W00D	B-J	Surf.	525115-ESS-093	N/A

N/A NOT APPLICABLE
(H) DURING HYDROTEST

REVISION: 2

C-E 0090285 (Rev. 7/80)

POWER SYSTEMS
COMBUSTION ENGINEERING, INC

ZONE 33 CLASS 1
PROGRAM PLAN

DOCUMENT NO.: TR-ESS-069

REFERENCE DRAWING NO.: C-9678-501-067 Rev. 04

TITLE: LOOP 1B DRAIN LINE

AREA DESIGNATION	AREA DESCRIPTION	MANUFACTURER'S OR INSTALLER'S WELD NUMBER	EXAMINATION CATEGORY IWB-2500	EXAMINATION METHOD IWB-2600	EXAMINATION PROCEDURE NUMBER	CALIBRATION BLOCK NO.
01-033-010	NOT USED					
01-033-011	Valve to 2" Sch 160 Pipe	RC-058-W00E	B-J	Surf.	525115-ESS-093	N/A

N/A NOT APPLICABLE
(H) DURING HYDROTEST

REVISION: 2

C-E 0090285 (Rev. 7/80)

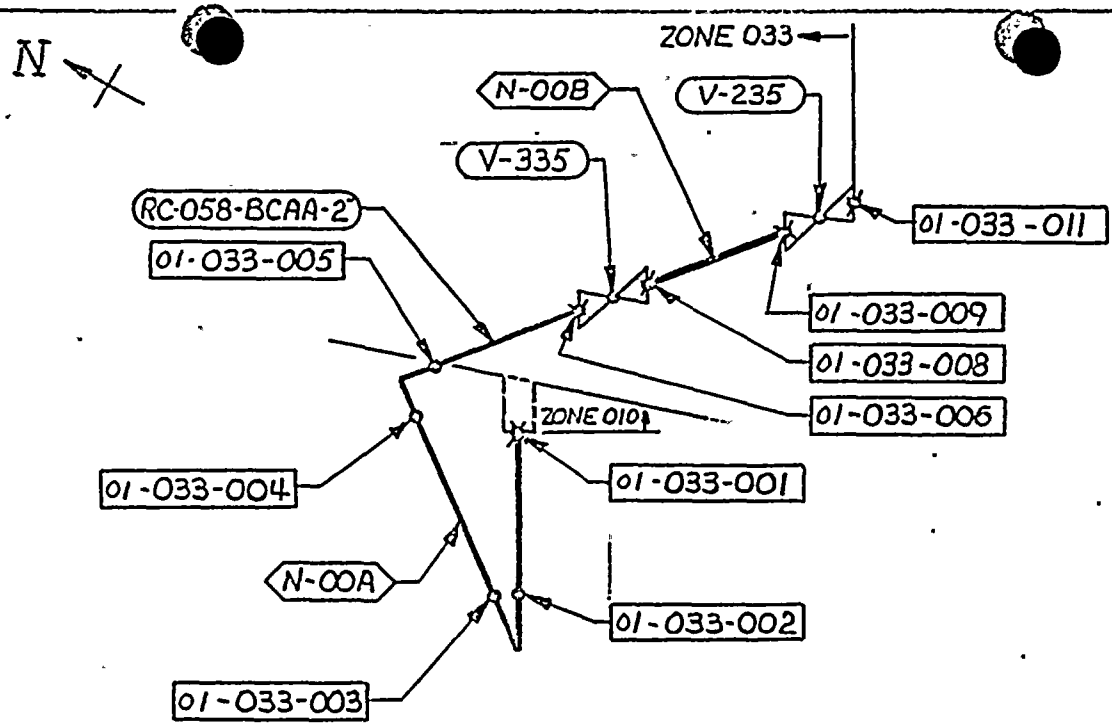

LEGEND

- ○ SHOP WELD
- ⌘ FIELD WELD
- 01-033-XXX — EXAMINATION AREA DESIGNATION
- RC-058-BCAA-2" — LINE DESIGNATION
- N-00A — SPOOL PIECE No
- V-235 — VALVE DESIGNATION

REFERENCE DRAWINGS

BECHTEL 13-P-CHF-110 REV 3
SK-H-CHF-110 REV 5

C-9678-501-067
04

APPROVED
REFERENCE
DESIGN

UNIT 1 ZONE 33

REV.	DESCRIPTION	BY & DATE	CHK & DATE	ENG APPD	PROJ APPD
04	1-GENERALLY REVISED PER REV. REQ. # 9678-262				

REV	DESCRIPTION	BY & DATE	CHK & DATE	ENG APPD	PROJ APPD
01	UPGRADED TO APPROVED REF DESIGN PER REV REQ No 9678-378				
02	1-ADDED GENERAL NOTE [2-EXAM AREA NO'S WERE 01] 3-ADDED CHART PER REV REQ NO. 9678-417				
03	1-DELETED EXAM AREA CALL-OUTS -007 & -010 [2-ADDED REF DWG SK-H-CHF-110] PER REV REQ #9678-503				

POWER SYSTEMS
COMBUSTION ENGINEERING INC
NUCLEAR POWER SYSTEMS

DRAWN BY 11-5-79
CHECKER
APPROVALS

CUSTOMER
ARIZONA NUCLEAR POWER PROJECT
PALO VERDE NUCLEAR GENERATING STATION

TITLE
ZONE 33 LOOP 1B DRAIN LINE

NEXT ASSY | SUPERSEDES
JOB NO. 661012 | COMPONENT CODE | SCALE

DWG. NO C-9678-501-067 04
SHEET 1 OF 1 REV

POWER SYSTEMS
COMBUSTION ENGINEERING, INC.

ZONE 34 CLASS 1
PROGRAM PLAN

DOCUMENT NO.: TR-ESS-069

REFERENCE DRAWING NO.: C-9678-501-066 Rev. 04

TITLE: LOOP 2A DRAIN LINE

AREA DESIGNATION	AREA DESCRIPTION	MANUFACTURER'S OR INSTALLER'S WELD NUMBER	EXAMINATION CATEGORY IWB-2500	EXAMINATION METHOD IWB-2600	EXAMINATION PROCEDURE NUMBER	CALIBRATION BLOCK NO.
01-034-001	2" Sch 160 Pipe-to-Safe End	RC-096-W00A	B-J	UT	NIP-954	UT-50
01-034-002	2" Sch 160 Pipe-to-Elbow	RC-096-FWA00	B-J	UT	NIP-954	UT-50
01-034-003	Elbow-to-2" Sch 160 Pipe	RC-096-FWC00-C	B-J	UT	NIP-954	UT-50
01-034-004	2" Sch 160 Pipe-to-Elbow	RC-096-FWB00-C	B-J	UT	NIP-954	UT-50
01-034-005	Elbow-to-2" Sch 160 Pipe	RC-096-FWD00	B-J	UT	NIP-954	UT-50
01-034-006	2" Sch 160 Pipe-to-Valve	RC-096-W00B	B-J	Surf.	525115-ESS-093	N/A
01-034-007	NOT USED					
01-034-008	Valve-to-2" Sch 160 Pipe	RC-096-W00C	B-J	Surf.	525115-ESS-093	N/A
01-034-009	2" Sch 160 Pipe-to-Valve	RC-096-W00D	B-J	Surf.	525115-ESS-093	N/A

N/A NOT APPLICABLE
(H) DURING HYDROTEST

REVISION: 2

C-E 0090285 (Rev. 7/80)

POWER SYSTEMS
COMBUSTION ENGINEERING, INC.

ZONE 34 CLASS 1
PROGRAM PLAN

DOCUMENT NO.: TR-ESS-069

REFERENCE DRAWING NO.: C-9678-501-066 Rev. 04

TITLE: LOOP 2A DRAIN LINE

AREA DESIGNATION	AREA DESCRIPTION	MANUFACTURER'S OR INSTALLER'S WELD NUMBER	EXAMINATION CATEGORY IWB-2500	EXAMINATION METHOD IWB-2600	EXAMINATION PROCEDURE NUMBER	CALIBRATION BLOCK NO.
01-034-010	NOT USED					
01-034-011	Valve-to-2" Sch 160 Pipe	RC-096-W00E	B-J	Surf.	525115-ESS-093	N/A

N/A NOT APPLICABLE
(H) DURING HYDROTEST

REVISION: 2

C-E 0090285 (Rev. 7/80)

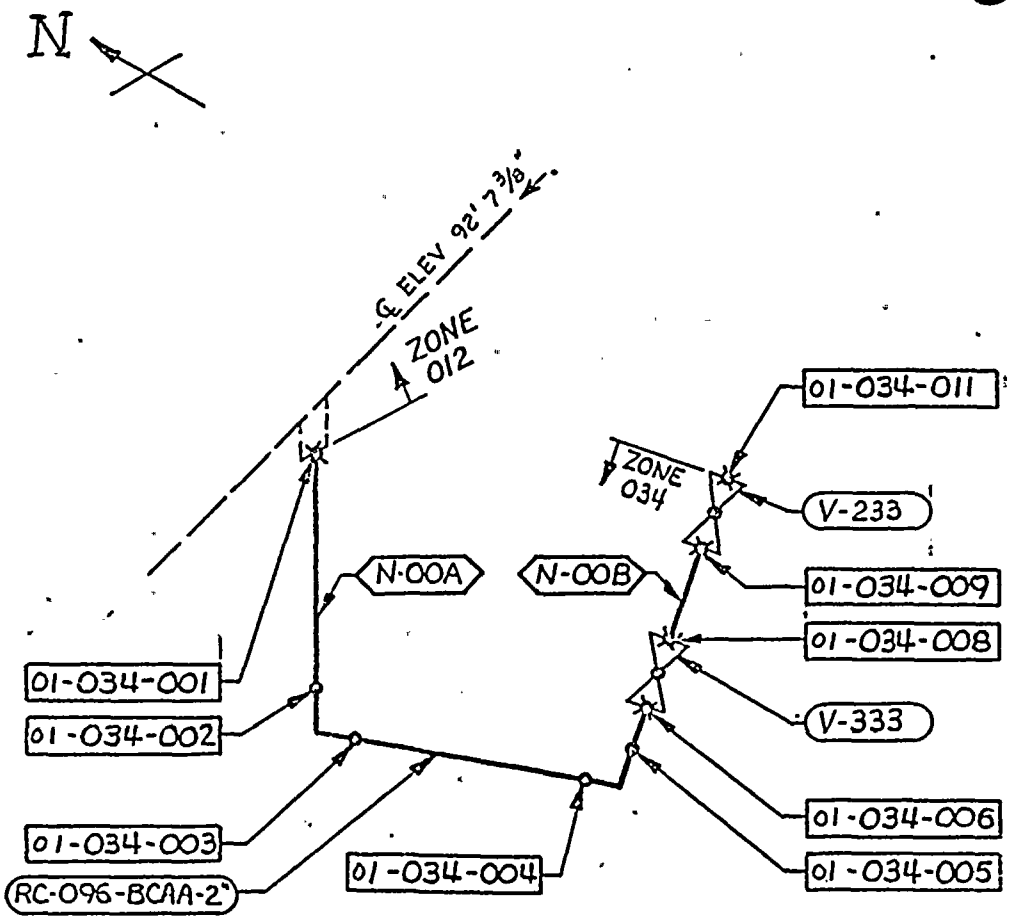

LEGEND

- SHOP WELD
- FIELD WELD
- 01-034-XXX — EXAMINATION AREA DESIGNATION
- RC-096-BCAA-2" — LINE DESIGNATION
- N-00A — SPOOL PIECE No
- V-233 — VALVE DESIGNATION

REFERENCE DRAWINGS

BECHTEL: 13-P-CHF-110 REV 3
SK-H-CHF-110 REV 5

C-9678-501-066
04

APPROVED
REFERENCE
DESIGN

UNIT 1 ZONE 34

REV.	DESCRIPTION	BY & DATE	CHK & DATE	ENG APPD	PROJ APPD
04	1-GENERALLY REVISED PER REV REQ # 9678-262				

REV.	DESCRIPTION	BY & DATE	CHK & DATE	ENG APPD	PROJ APPD
01	UPGRADED TO APPROVED REF DESIGN PER REV REQ #9678-378				
02	1-ADDED GENERAL NOTE [2-EXAM AREA NO'S WERE 01] 3-ADDED CHART PER REV REQ NO. 9678-417				
03	1-DELETED EXAM AREA CALL-OUTS -007 & -010 [2-ADDED REF DWG SK-H-CHF-110] PER REV REQ # 9678-503				

POWER SYSTEMS
COMBUSTION ENGINEERING INC
NUCLEAR POWER SYSTEMS

CUSTOMER
ARIZONA NUCLEAR POWER PROJECT
PALO VERDE NUCLEAR GENERATING STATION

NEXT ASSY | SUPERSEDES
XRD NO 661012 | COMPONENT CODE | SCALE

DRAWN BY 4-24-79
CHECKER 5/17/79
APPROVALS 5-16-79
6-8-79
5/17/79
4-24-79

TITLE
ZONE 34 LOOP 2A DRAIN LINE

DWG NO C-9678-501-066 | 04
SHEET 1 OF 1 | REV

POWER SYSTEMS
COMBUSTION ENGINEERING, INC.

ZONE 35 CLASS 1
PROGRAM PLAN

DOCUMENT NO.: TR-ESS-069

REFERENCE DRAWING NO.: C-9678-501-065 Rev. 04

TITLE: LOOP 2B DRAIN LINE

AREA DESIGNATION	AREA DESCRIPTION	MANUFACTURER'S OR INSTALLER'S WELD NUMBER	EXAMINATION CATEGORY IWB-2500	EXAMINATION METHOD IWB-2600	EXAMINATION PROCEDURE NUMBER	CALIBRATION BLOCK NO.
01-035-001	2" Sch 160 Pipe-to-Safe End	RC-089-W00A	B-J	UT	NIP-954	UT-50
01-035-002	2" Sch 160 Pipe-to-Elbow	RC-089-FWA00	B-J	UT	NIP-954	UT-50
01-035-003	Elbow-to-2" Sch 160 Pipe	RC-089-FWB00	B-J	UT	NIP-954	UT-50
01-035-004	2" Sch 160 Pipe-to-Elbow	RC-089-FWC00	B-J	UT	NIP-954	UT-50
01-035-005	Elbow-to-2" Sch 160 Pipe	RC-089-FWD00	B-J	UT	NIP-954	UT-50
01-035-006	2" Sch 160 Pipe-to-Valve	RC-089-W00B	B-J	Surf.	525115-ESS-093	N/A
01-035-007	NOT USED					
01-035-008	Valve-to-2" Sch 160 Pipe	RC-089-W00C	B-J	Surf.	525115-ESS-093	N/A
01-035-009	2" Sch 160 Pipe-to-Valve	RC-089-W00D	B-J	Surf.	525115-ESS-093	N/A

N/A NOT APPLICABLE
(H) DURING HYDROTEST

REVISION: 2

C-E 0090285 (Rev. 7/80)

POWER SYSTEMS
COMBUSTION ENGINEERING, INC

ZONE 35 CLASS 1
PROGRAM PLAN

DOCUMENT NO.: TR-ESS-069

REFERENCE DRAWING NO.: C-9678-501-065 Rev. 04

TITLE: LOOP 2B DRAIN LINE

AREA DESIGNATION	AREA DESCRIPTION	MANUFACTURER'S OR INSTALLER'S WELD NUMBER	EXAMINATION CATEGORY IWB-2500	EXAMINATION METHOD IWB-2600	EXAMINATION PROCEDURE NUMBER	CALIBRATION BLOCK NO.
01-035-010	NOT USED					
01-035-011	Valve-to-2" Sch 160 Pipe	RC-089-W00E	B-J	Surf.	525115-ESS-093	N/A

N/A NOT APPLICABLE
(H) DURING HYDROTEST

REVISION: 2

C-E 0090285 (Rev. 7/80)

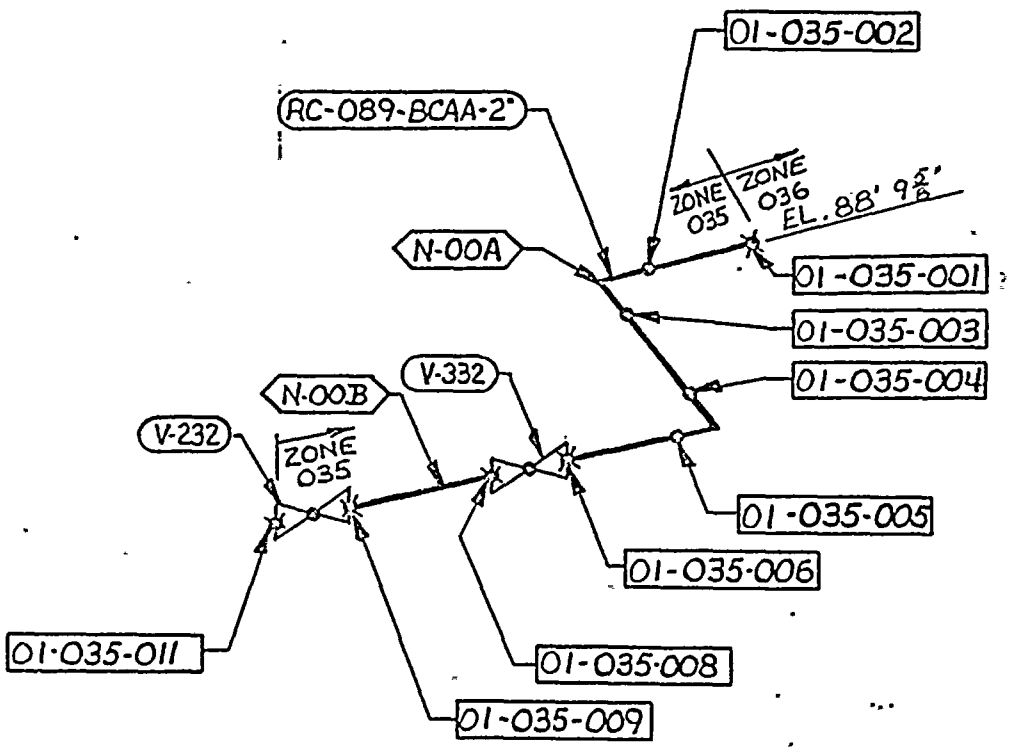

LEGEND

- SHOP WELD
- FIELD WELD
- 01-035-XXX — EXAMINATION AREA DESIGNATION
- RC-089-BCAA-2" — LINE DESIGNATION
- N-00A — SPOOL PIECE No
- V-232 — VALVE DESIGNATION

REFERENCE DRAWINGS
BECHTEL: 13-P-CHF-110 REV 3
SK-H-CHF-110 REV 5

C-9678-501-065
04

APPROVED
REFERENCE
DESIGN

UNIT 1. ZONE 35

REV	DESCRIPTION	BY & DATE	CHK & DATE	ENG APPD	PROJ APPD
04	1-GENERALLY REVISED PER REV REQ. # 9678-262				

REV	DESCRIPTION	BY & DATE	CHK & DATE	ENG APPD	PROJ APPD
01	UPGRADED TO APPROVED REF DESIGN PER REV REQ #9678-378				
02	1- EXAM AREA CALLOUT WAS 01-XXX-XXX [2- ADDED CHART] 3- ADDED NOTE PER REV REQ No 9678-417				
03	1-DELETED EXAM AREA CALL-OUTS -007 & -010 [2-ADDED REF DWG SK-H-CHF-110] PER REV REQ #9678-203				

POWER SYSTEMS
COMBUSTION ENGINEERING INC
NUCLEAR POWER SYSTEMS

CUSTOMER
ARIZONA NUCLEAR POWER PROJECT
PALO VERDE NUCLEAR GENERATING STATION

NEXT ASSY | SUPERSEDES
JOB NO 681012 | COMPONENT CODE | SCALE

DRAWN BY 4-4-77
CHECKER
APPROVALS

TITLE
ZONE 35 LOOP 2B DRAIN LINE

DWG NO C-9678-501-065 REV 04
SHEET 1 OF 1

POWER SYSTEMS
COMBUSTION ENGINEERING, INC

ZONE 36 CLASS 1
PROGRAM PLAN

DOCUMENT NO.: TR-ESS-069

REFERENCE DRAWING NO.: E-9678-501-060 Rev. 04

TITLE: LETDOWN LINE

AREA DESIGNATION	AREA DESCRIPTION	MANUFACTURER'S OR INSTALLER'S WELD NUMBER	EXAMINATION CATEGORY IWB-2500	EXAMINATION METHOD IWB-2600	EXAMINATION PROCEDURE NUMBER	CALIBRATION BLOCK NO.
01-036-001	2" Sch 160 Pipe-to-Safe End	RC-091-WOOA	B-J	UT	NIP-954	UT-50
01-036-002	2" Sch 160 Pipe-to-Elbow	RC-091-WOOB	B-J	UT	NIP-954	UT-50
01-036-003	2" Sch 160 Elbow-to-Pipe	RC-091-WOOC	B-J	UT	NIP-954	UT-50
01-036-004	2" Sch 160 Pipe-to-Tee	RC-091-WOOD	B-J	UT	NIP-954	UT-50
01-036-005	2" Sch 160 Tee-to-Pipe	RC-091-WOOE	B-J	UT	NIP-954	UT-50
01-036-006	2" Sch 160 Pipe-to-Elbow	RC-091-WOOF	B-J	UT	NIP-954	UT-50
01-036-007	2" Sch 160 Elbow-to-Pipe	RC-091-WOOG	B-J	UT	NIP-954	UT-50
01-036-008	2" Sch 160 Pipe-to-Elbow	RC-091-WOOH	B-J	UT	NIP-954	UT-50
01-036-009	2" Sch 160 Elbow-to-Pipe	RC-091-WOOI	B-J	UT	NIP-954	UT-50

N/A NOT APPLICABLE
(H) DURING HYDROTEST

REVISION: 2

C-E 0090285 (Rev. 7/80)

POWER SYSTEMS
COMBUSTION ENGINEERING, INC

ZONE 36 CLASS 1
PROGRAM PLAN

DOCUMENT NO.: TR-ESS-069

REFERENCE DRAWING NO.: E-9678-501-060 Rev. 04

TITLE: LETDOWN LINE

AREA DESIGNATION	AREA DESCRIPTION	MANUFACTURER'S OR INSTALLER'S WELD NUMBER	EXAMINATION CATEGORY IWB-2500	EXAMINATION METHOD IWB-2600	EXAMINATION PROCEDURE NUMBER	CALIBRATION BLOCK NO.
01-036-010	2" Sch 160 Pipe-to-Elbow	RC-091-WOOJ	B-J	UT	NIP-954	UT-50
01-036-011	2" Sch 160 Elbow-to-Pipe	RC-091-WOOK	B-J	UT	NIP-954	UT-50
01-036-012	2" Sch 160 Pipe-to-Elbow	RC-091-WOOL	B-J	UT	NIP-954	UT-50
01-036-013	2" Sch 160 Elbow-to-Pipe	RC-091-WOOM	B-J	UT	NIP-954	UT-50
01-036-014	2" Sch 160 Pipe-to-Elbow	RC-091-WOON	B-J	UT	NIP-954	UT-50
01-036-015	2" Sch 160 Elbow-to-Pipe	RC-091-WOOP	B-J	UT	NIP-954	UT-50
01-036-016	2" Sch 160 Pipe-to-Elbow	RC-091-WOOQ	B-J	UT	NIP-954	UT-50
01-036-017	2" Sch 160 Elbow-to-Pipe	RC-091-WOOR	B-J	UT	NIP-954	UT-50
01-036-018	2" Sch 160 Pipe-to-Elbow	RC-091-WOOS	B-J	UT	NIP-954	UT-50

N/A NOT APPLICABLE
(H) DURING HYDROTEST

REVISION: 2

C-E 0090285 (Rev. 7/80)

POWER SYSTEMS
COMBUSTION ENGINEERING, INC

ZONE 36 CLASS 1
PROGRAM PLAN

DOCUMENT NO.: TR-ESS-069

REFERENCE DRAWING NO.: E-9678-501-060 Rev. 04

TITLE: LETDOWN LINE

AREA DESIGNATION	AREA DESCRIPTION	MANUFACTURER'S OR INSTALLER'S WELD NUMBER	EXAMINATION CATEGORY IWB-2500	EXAMINATION METHOD IWB-2600	EXAMINATION PROCEDURE NUMBER	CALIBRATION BLOCK NO.
01-036-019	2" Sch 160 Elbow-to-Pipe	RC-091-WOOT	B-J	UT	NIP-954	UT-50
01-036-020	2" Sch 160 Pipe-to-Elbow	RC-091-WOOU	B-J	UT	NIP-954	UT-50
01-036-021	2" Sch 160 Elbow-to-Pipe	RC-091-WOOV	B-J	UT	NIP-954	UT-50
01-036-022	2" Sch 160 Pipe-to-Tee	RC-091-WOOW	B-J	UT	NIP-954	UT-50
01-036-023	2" Sch 160 Tee-to-Pipe	RC-091-WOOY	B-J	UT	NIP-954	UT-50
01-036-024	2" Sch 160 Pipe-to-Reducing Tee	RC-091-WOOZ	B-J	UT	NIP-954	UT-50
01-036-025	NOT USED					
01-036-026	2" Sch 160 Reducing Tee-to-Pipe	RC-091-WOAE	B-J	UT	NIP-954	UT-50
01-036-027	2" Sch 160 Pipe-to-Elbow	RC-091-WOAF	B-J	UT	NIP-954	UT-50

N/A NOT APPLICABLE
(H) DURING HYDROTEST

REVISION: 2

C-E 0090285 (Rev. 7/80)

POWER SYSTEMS
COMBUSTION ENGINEERING, INC.

ZONE 36 CLASS 1
PROGRAM PLAN

DOCUMENT NO.: TR-ESS-069

REFERENCE DRAWING NO.: E-9678-501-060 Rev. 04

TITLE: LETDOWN LINE

AREA DESIGNATION	AREA DESCRIPTION	MANUFACTURER'S OR INSTALLER'S WELD NUMBER	EXAMINATION CATEGORY IWB-2500	EXAMINATION METHOD IWB-2600	EXAMINATION PROCEDURE NUMBER	CALIBRATION BLOCK NO.
01-036-028	2" Sch 160 Elbow-to-Letdown Delay Mechanism Nozzle	RC-091-W0AG	B-J	UT	NIP-954	UT-50
01-036-029	Letdown Delay Mechanism Cap-to-16" Sch 160 Pipe	RC-091-S002-A	B-J	UT	NIP-954	UT-56
01-036-030	16" Sch 160 Pipe-to-Letdown Delay Mechanism Cap	RC-091-S002-B	B-J	UT	NIP-954	UT-56
01-036-031	Letdown Delay Mechanism Nozzle-to-2" Sch 160 Tee	RC-091-W0AI	B-J	UT	NIP-954	UT-50
01-036-032	2" Sch 160 Tee-to-Letdown Delay Mechanism Nozzle	RC-091-W0AH	B-J	UT	NIP-954	UT-50
01-036-033	Letdown Delay Mechanism Cap-to-16" Sch 160 Pipe	RC-091-S001-A	B-J	UT	NIP-954	UT-56
01-036-034	16" Sch 160 Pipe-to-Letdown Delay Mechanism Cap	RC-091-S001-B	B-J	UT	NIP-954	UT-56

N/A NOT APPLICABLE
(H) DURING HYDROTEST

REVISION: 2

C-E 0090285 (Rev. 7/80)

POWER SYSTEMS
COMBUSTION ENGINEERING, INC.

ZONE 36 CLASS 1
PROGRAM PLAN

DOCUMENT NO.: TR-ESS-069

REFERENCE DRAWING NO.: E-9678-501-060 Rev. 04

TITLE: LETDOWN LINE

AREA DESIGNATION	AREA DESCRIPTION	MANUFACTURER'S OR INSTALLER'S WELD NUMBER	EXAMINATION CATEGORY IWB-2500	EXAMINATION METHOD IWB-2600	EXAMINATION PROCEDURE NUMBER	CALIBRATION BLOCK NO.
01-036-035	Letdown Delay Mechanism Nozzle-to-2" Sch 160 Elbow	RC-091-W0AJ	B-J	UT	NIP-954	UT-50
01-036-036	2" Sch 160 Elbow-to-Pipe	RC-091-W0AK	B-J	UT	NIP-954	UT-50
01-036-037	2" Sch 160 Pipe-to-Tee	RC-091-W0AL	B-J	UT	NIP-954	UT-50
01-036-038	2" Sch 160 Tee-to-Pipe	RC-091-W0AM	B-J	UT	NIP-954	UT-50
01-036-039	2" Sch 160 Pipe-to-Elbow	RC-091-W0AN	B-J	UT	NIP-954	UT-50
01-036-040	2" Sch 160 Elbow-to-Pipe	RC-091-W0AP	B-J	UT	NIP-954	UT-50
01-036-041	2" Sch 160 Pipe-to-Elbow	RC-091-W0AQ	B-J	UT	NIP-954	UT-50
01-036-042	2" Sch 160 Elbow-to-Pipe	RC-091-W0AR	B-J	UT	NIP-954	UT-50

N/A NOT APPLICABLE
(H) DURING HYDROTEST

REVISION: 2

C-E 0090285 (Rev. 7/80)

POWER SYSTEMS
COMBUSTION ENGINEERING, INC.

ZONE 36 CLASS 1
PROGRAM PLAN

DOCUMENT NO.: TR-ESS-069

REFERENCE DRAWING NO.: E-9678-501-060 Rev. 04

TITLE: LETDOWN LINE

AREA DESIGNATION	AREA DESCRIPTION	MANUFACTURER'S OR INSTALLER'S WELD NUMBER	EXAMINATION CATEGORY IWB-2500	EXAMINATION METHOD IWB-2600	EXAMINATION PROCEDURE NUMBER	CALIBRATION BLOCK NO.
01-036-043	2" Sch 160 Pipe-to-Elbow	RC-091-W0AS	B-J	UT	NIP-954	UT-50
01-036-044	2" Sch 160 Elbow-to-Pipe	RC-091-W0AT	B-J	UT	NIP-954	UT-50
01-036-045	2" Sch 160 Pipe-to-Elbow	RC-091-W0AU	B-J	UT	NIP-954	UT-50
01-036-046	2" Sch 160 Elbow-to-Pipe	RC-091-W0AV	B-J	UT	NIP-954	UT-50
01-036-047	2" Sch 160 Pipe-to-Elbow	RC-091-W0AW	B-J	UT	NIP-954	UT-50
01-036-048	2" Sch 160 Elbow-to-Pipe	RC-091-W0AX	B-J	UT	NIP-954	UT-50
01-036-049	2" Sch 160 Pipe-to-Elbow	RC-091-W0AY	B-J	UT	NIP-954	UT-50
01-036-050	2" Sch 160 Elbow-to-Pipe	RC-091-W0AZ	B-J	UT	NIP-954	UT-50
01-036-051	2" Sch 160 Pipe-to-Elbow	RC-091-W0BA	B-J	UT	NIP-954	UT-50

N/A NOT APPLICABLE
(H) DURING HYDROTEST

REVISION: 2

C-E 0090285 (Rev. 7/80)

POWER SYSTEMS
COMBUSTION ENGINEERING, INC

ZONE 36 CLASS 1
PROGRAM PLAN

DOCUMENT NO.: TR-ESS-069

REFERENCE DRAWING NO.: E-9678-501-060 Rev. 04

TITLE: LETDOWN LINE

AREA DESIGNATION	AREA DESCRIPTION	MANUFACTURER'S OR INSTALLER'S WELD NUMBER	EXAMINATION CATEGORY IWB-2500	EXAMINATION METHOD IWB-2600	EXAMINATION PROCEDURE NUMBER	CALIBRATION BLOCK NO.
01-036-052	2" Sch 160 Elbow-to-Pipe	RC-091-W0BB	B-J	UT	NIP-954	UT-50
01-036-053	2" Sch 160 Pipe-to-Elbow	RC-091-W0BC	B-J	UT	NIP-954	UT-50
01-036-054	2" Sch 160 Elbow-to-Pipe	RC-091-W0BD	B-J	UT	NIP-954	UT-50
01-036-055	2" Sch 160 Pipe-to-Elbow	RC-091-W0BE	B-J	UT	NIP-954	UT-50
01-036-056	2" Sch 160 Elbow-to-Pipe	RC-091-W0BF	B-J	UT	NIP-954	UT-50
01-036-057	2" Sch 160 Pipe-to-Valve	RC-091-W0BG	B-J	UT	NIP-954	UT-50
01-036-058	Valve UV-515 Bolting	N/A	B-G-2	Vis.	525115-ESS-091	N/A
01-036-059	Valve-to-2" Sch 160 Pipe	CH-001-W00A	B-J	UT	NIP-954	UT-50
01-036-060	2" Sch 160 Pipe-to-Reducing Tee	CH-001-W00B	B-J	UT	NIP-954	UT-50

N/A NOT APPLICABLE
(H) DURING HYDROTEST

REVISION: 2

C-E 0090285 (Rev. 7/80)

POWER SYSTEMS
COMBUSTION ENGINEERING, INC.

ZONE 36 CLASS 1
PROGRAM PLAN

DOCUMENT NO.: TR-ESS-069

REFERENCE DRAWING NO.: E-9678-501-060 Rev. 04

TITLE: LETDOWN LINE

AREA DESIGNATION	AREA DESCRIPTION	MANUFACTURER'S OR INSTALLER'S WELD NUMBER	EXAMINATION CATEGORY IWB-2500	EXAMINATION METHOD IWB-2600	EXAMINATION PROCEDURE NUMBER	CALIBRATION BLOCK NO.
01-036-061	Valve UV-516 Bolting	N/A	B-G-2	Vis.	525115-ESS-091	N/A
01-036-062	2" Sch 160 Reducing Tee-to-Pipe	CH-001-W00C	B-J	UT	NIP-954	UT-50
01-036-063	2" Sch 160 Pipe-to-Valve	CH-001-W00D	B-J	UT	NIP-954	UT-50
01-036-064	16" Sch 160 Weld Cap to 2" Sweepolet	RC-091-S001-C	B-J	UT	NIP-954	UT-56
01-036-065	16" Sch 160 Weld Cap to 2" Sweepolet	RC-091-S001-D	B-J	UT	NIP-954	UT-56
01-036-066	16" Sch 160 Weld Cap to 2" Sweepolet	RC-091-S002-D	B-J	UT	NIP-954	UT-56
01-036-067	16" Sch 160 Weld Cap to 2" Sweepolet	RC-091-S002-C	B-J	UT	NIP-954	UT-56

N/A NOT APPLICABLE
(H) DURING HYDROTEST

REVISION: 2

C-E 0090285 (Rev. 7/80)

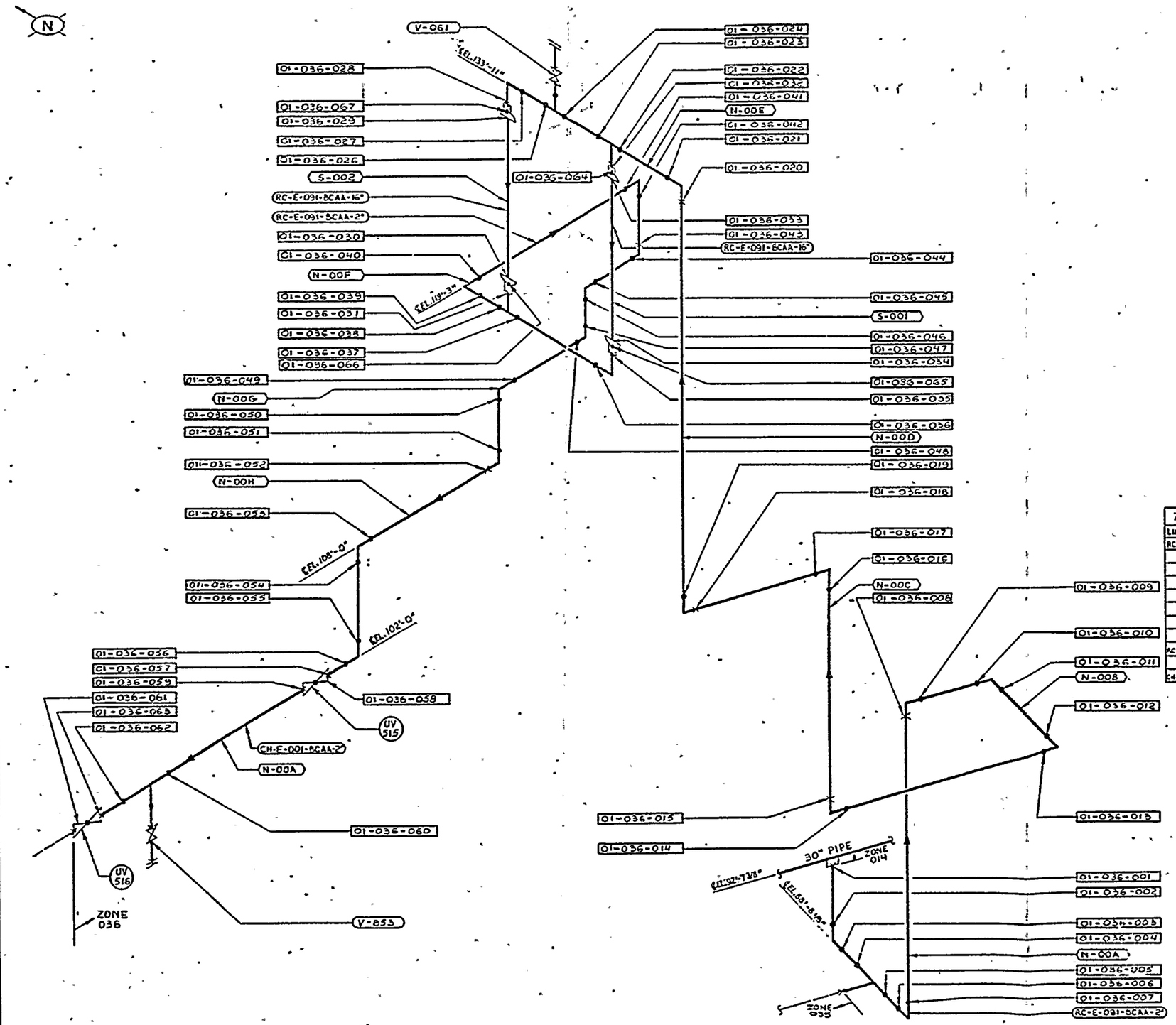

LEGEND

- ● — SHOP WELD
- × — FIELD WELD
- (RC-E-091-BCAA-2") — LINE DESIGNATION
- (N-00A) — SPOOL Pc NO.
- (V-853) / (UV 515) — VALVE DESIGNATION
- [01-036-001] — EXAMINATION AREA DESIGNATION

REFERENCE DRAWINGS
BECHTEL: 13-P-CHF-142 REV 2
SK-H-CHF-142 REV 4

PULLMAN-KELLOGG

ZONE 36		
LINE & SIZE	SPOOL Pc	
RC-E-091-BCAA-2"	N-00A	
	N-00B	
	N-00C	
	N-00D	
	N-00E	
	N-00F	
	N-00G	
	N-00H	
RC-E-091-BCAA-16"	S-001	F-1057 REV 0
	S-002	F-1058 REV 0
CH-E-001-BCAA-2"	N-00A	

E-9678-501-060

APPROVED
REFERENCE
DESIGN

ZONE 36

UNIT 1

REV	DESCRIPTION
V	GENERALLY REVISED PER REV REQ NO 9678-222
V	UPGRADE TO "APPROVED REF DESIGN" PER REV REQ N-9678-385
V	1-ALL EXAMINATION AREAS WERE 01-[2-ADDED NOTE] PER REV REQ NO 9678-417
V	1-ADDED CALLOUTS 053, 061 & 064 THRU 067 2-ADDED REF DWG 3-ADDED ANS TO PAS BLOCK PER REQ 9678-503

POWER SYSTEMS

ARIZONA NUCLEAR POWER PROJECT
PALO VERDE NUCLEAR GENERATING STATION

ZONE 36
LETDOWN LINE

E-9678-501-060 0

6810121 NONE

8 7 6 5 4 3 2 1

POWER SYSTEMS
COMBUSTION ENGINEERING, INC.

ZONE 37 CLASS 1
PROGRAM PLAN

DOCUMENT NO.: TR-ESS-069

REFERENCE DRAWING NO.: E-9678-501-100 Rev. 03

TITLE: CHARGING LINE

AREA DESIGNATION	AREA DESCRIPTION	MANUFACTURER'S OR INSTALLER'S WELD NUMBER	EXAMINATION CATEGORY IWB-2500	EXAMINATION METHOD IWB-2600	EXAMINATION PROCEDURE NUMBER	CALIBRATION BLOCK NO.
01-037-001	3" Sch 160 Pipe-to-Pipe	CH-005-W003	B-J	UT	NIP-954	UT-51
01-037-002	3" Sch 160 Pipe-to-Elbow	CH-005-S003-A	B-J	UT	NIP-954	UT-51
01-037-003	3" Sch 160 Elbow-to-Pipe	CH-005-S003-B	B-J	UT	NIP-954	UT-51
01-037-004	3" Sch 160 Pipe-to-Elbow	CH-005-S003-C	B-J	UT	NIP-954	UT-51
01-037-005	3" Sch 160 Elbow-to-Pipe	CH-005-S003-D	B-J	UT	NIP-954	UT-51
01-037-006	3" Sch 160 Pipe-to-Concentric Reducer	CH-005-S003-E	B-J	UT	NIP-954	UT-51
01-037-007	2" Concentric Reducer-to-2" Sch 160 Pipe	CH-005-W00L	B-J	UT	NIP-954	UT-50
01-037-008	2" Sch 160 Pipe-to-Valve V-433	CH-005-W00M	B-J	UT	NIP-954	UT-50
01-037-009	Valve V-433-to-2" Sch 160 Pipe	CH-005-W00N	B-J	UT	NIP-954	UT-50

N/A NOT APPLICABLE
(H) DURING HYDROTEST

REVISION: 2

C-E 0090285 (Rev. 7/80)

POWER SYSTEMS
COMBUSTION ENGINEERING, INC.

ZONE 37 CLASS 1
PROGRAM PLAN

DOCUMENT NO.: TR-ESS-069

REFERENCE DRAWING NO.: E-9678-501-100 Rev. 03

TITLE: CHARGING LINE

AREA DESIGNATION	AREA DESCRIPTION	MANUFACTURER'S OR INSTALLER'S WELD NUMBER	EXAMINATION CATEGORY IWB-2500	EXAMINATION METHOD IWB-2600	EXAMINATION PROCEDURE NUMBER	CALIBRATION BLOCK NO.
01-037-010	2" Sch 160 Pipe-to-Concentric Reducer	CH-005-W00P	B-J	UT	NIP-954	UT-50
01-037-011	Concentric Reducer-to-3" Sch 160 Pipe	CH-005-S004-A	B-J	UT	NIP-954	UT-51
01-037-012	3" Sch 160 Pipe-to-Elbow	CH-005-S004-B	B-J	UT	NIP-954	UT-51
01-037-013	3" Sch 160 Elbow-to-Pipe	CH-005-S004-C	B-J	UT	NIP-954	UT-51
01-037-014	3" Sch 160 Pipe-to-Elbow	CH-005-S004-D	B-J	UT	NIP-954	UT-51
01-037-015	3" Sch 160 Elbow-to-Pipe	CH-005-S004-E	B-J	UT	NIP-954	UT-51
01-037-016	NOT USED					
01-037-017	3" Sch 160 Pipe-to-Elbow	CH-005-S004-F	B-J	UT	NIP-954	UT-51
01-037-018A	3" Sch 160 Elbow-to-Pipe	CH-005-S004-H	B-J	UT	NIP-954	UT-51

N/A NOT APPLICABLE
(H) DURING HYDROTEST

REVISION: 2

C-E 0090285 (Rev. 7/80)

POWER SYSTEMS
COMBUSTION ENGINEERING, INC.

ZONE 37 CLASS 1
PROGRAM PLAN

DOCUMENT NO.: TR-ESS-069

REFERENCE DRAWING NO.: E-9678-501-100 Rev. 03

TITLE: CHARGING LINE

AREA DESIGNATION	AREA DESCRIPTION	MANUFACTURER'S OR INSTALLER'S WELD NUMBER	EXAMINATION CATEGORY IWB-2500	EXAMINATION METHOD IWB-2600	EXAMINATION PROCEDURE NUMBER	CALIBRATION BLOCK NO.
01-037-018B	3" Sch 160 Pipe-to-Elbow	CH-005-S004-G	B-J	UT	NIP-954	UT-51
01-037-019	3" Sch 160 Elbow-to-Pipe	CH-005-W004	B-J	UT	NIP-954	UT-51
01-037-020	3" Sch 160 Pipe-to-Pipe	CH-005-S005-A	B-J	UT	NIP-954	UT-51
01-037-021	3" Sch 160 Pipe-to-Pipe	CH-005-W005	B-J	UT	NIP-954	UT-51
01-037-022	3" Sch 160 Pipe-to-Elbow	CH-005-S006-A	B-J	UT	NIP-954	UT-51
01-037-023	3" Sch 160 Elbow-to-Pipe	CH-005-W006	B-J	UT	NIP-954	UT-51
01-037-024	3" Sch 160 Pipe-to-Elbow	CH-005-S007-A	B-J	UT	NIP-954	UT-51
01-037-025	3" Sch 160 Elbow-to-Pipe	CH-005-S007-B	B-J	UT	NIP-954	UT-51
01-037-026	3" Sch 160 Pipe-to-Elbow	CH-005-S007-C	B-J	UT	NIP-954	UT-51

N/A NOT APPLICABLE
(H) DURING HYDROTEST

REVISION: 2

C-E 0090285 (Rev. 7/80)

POWER SYSTEMS
COMBUSTION ENGINEERING, INC

ZONE 37 CLASS 1
PROGRAM PLAN

DOCUMENT NO.: TR-ESS-069

REFERENCE DRAWING NO.: E-9678-501-100 Rev. 03

TITLE: CHARGING LINE

AREA DESIGNATION	AREA DESCRIPTION	MANUFACTURER'S OR INSTALLER'S WELD NUMBER	EXAMINATION CATEGORY IWB-2500	EXAMINATION METHOD IWB-2600	EXAMINATION PROCEDURE NUMBER	CALIBRATION BLOCK NO.
01-037-027	3" Sch 160 Elbow-to-Pipe	CH-005-W007	B-J	UT	NIP-954	UT-51
01-037-028	3" Sch 160 Pipe-to-Elbow	CH-005-S008-A	B-J	UT	NIP-954	UT-51
01-037-029	3" Sch 160 Elbow-to-Pipe	CH-005-S008-B	B-J	UT	NIP-954	UT-51
01-037-030	3" Sch 160 Pipe-to-Elbow	CH-005-S008-C	B-J	UT	NIP-954	UT-51
01-037-031	3" Sch 160 Elbow-to-Pipe	CH-005-S008-D	B-J	UT	NIP-954	UT-51
01-037-032	3" Sch 160 Pipe-to-Concentric Reducer	CH-005-S008-E	B-J	UT	NIP-954	UT-51
01-037-033	2" Sch 160 Concentric Reducer-to-Pipe	CH-005-W0AC	B-J	UT	NIP-954	UT-50
01-037-034	2" Sch 160 Pipe-to-Safe End Loop 2A	CH-005-W0AD	B-J	UT	NIP-954	UT-50
01-037-035	2" Sch 160 Pipe-to-Valve PDV-240	CH-005-W00F	B-J	UT	NIP-954	UT-50

N/A NOT APPLICABLE
(H) DURING HYDROTEST

REVISION: 2

C-E 0090285 (Rev. 7/80)

POWER SYSTEMS
COMBUSTION ENGINEERING, INC

ZONE 37 CLASS 1
PROGRAM PLAN

DOCUMENT NO.: TR-ESS-069

REFERENCE DRAWING NO.: E-9678-501-100 Rev. 03

TITLE: CHARGING LINE

AREA DESIGNATION	AREA DESCRIPTION	MANUFACTURER'S OR INSTALLER'S WELD NUMBER	EXAMINATION CATEGORY IWB-2500	EXAMINATION METHOD IWB-2600	EXAMINATION PROCEDURE NUMBER	CALIBRATION BLOCK NO.
01-037-036	Valve PDV-240-to-2" Sch 160 Pipe	CH-005-W00A	B-J	UT	NIP-954	UT-50
01-037-037	2" Sch 160 Pipe-to-Concentric Reducer	CH-005-W00B	B-J	UT	NIP-954	UT-50
01-037-038	3" Sch 160 Concentric Reducer-to-Pipe	CH-005-S001-A	B-J	UT	NIP-954	UT-51
01-037-039	3" Sch 160 Pipe-to-Elbow	CH-005-S001-B	B-J	UT	NIP-954	UT-51
01-037-040	3" Sch 160 Elbow-to-Pipe	CH-005-S001-C	B-J	UT	NIP-954	UT-51
01-037-041	3" Sch 160 Pipe-to-Elbow	CH-005-S001-D	B-J	UT	NIP-954	UT-51
01-037-042	3" Sch 160 Elbow-to-Pipe	CH-005-S001-E	B-J	UT	NIP-954	UT-51
01-037-043	3" Sch 160 Pipe-to-Elbow	CH-005-S001-F	B-J	UT	NIP-954	UT-51
01-037-044	3" Sch 160 Elbow-to-Pipe	CH-005-W001	B-J	UT	NIP-954	UT-51

N/A NOT APPLICABLE
(H) DURING HYDROTEST

REVISION: 2

C-E 0090285 (Rev. 7/80)

POWER SYSTEMS
COMBUSTION ENGINEERING, INC.

ZONE 37 CLASS 1
PROGRAM PLAN

DOCUMENT NO.: TR-ESS-069

REFERENCE DRAWING NO.: E-9678-501-100 Rev. 03

TITLE: CHARGING LINE

AREA DESIGNATION	AREA DESCRIPTION	MANUFACTURER'S OR INSTALLER'S WELD NUMBER	EXAMINATION CATEGORY IWB-2500	EXAMINATION METHOD IWB-2600	EXAMINATION PROCEDURE NUMBER	CALIBRATION BLOCK NO.
01-037-045	3" Sch 160 Pipe-to-Tee	CH-005-S002-A	B-J	UT	NIP-954	UT-51
01-037-047	3" Sch 160 Tee-to-Pipe	CH-005-W002	B-J	UT	NIP-954	UT-51
01-037-048	3" Sch 160 Pipe-to-Elbow	CH-005-S010-G	B-J	UT	NIP-954	UT-51
01-037-049	3" Sch 160 Elbow-to-Pipe	CH-005-S010-F	B-J	UT	NIP-954	UT-51
01-037-050	3" Sch 160 Pipe-to-Elbow	CH-005-S010-E	B-J	UT	NIP-954	UT-51
01-037-051	3" Sch 160 Elbow-to-Pipe	CH-005-S010-D	B-J	UT	NIP-954	UT-51
01-037-052	3" Sch 160 Pipe-to-Elbow	CH-005-S010-C	B-J	UT	NIP-954	UT-51
01-037-053	3" Sch 160 Elbow-to-Pipe	CH-005-S010-B	B-J	UT	NIP-954	UT-51
01-037-054	3" Sch 160 Pipe-to-Concentric Reducer	CH-005-S010-A	B-J	UT	NIP-954	UT-51

N/A NOT APPLICABLE
(H) DURING HYDROTEST

REVISION: 2

C-E 0090285 (Rev. 7/80)

POWER SYSTEMS
COMBUSTION ENGINEERING, INC.

ZONE 37 CLASS 1
PROGRAM PLAN

DOCUMENT NO.: TR-ESS-069

REFERENCE DRAWING NO.: E-9678-501-100 Rev. 03

TITLE: CHARGING LINE

AREA DESIGNATION	AREA DESCRIPTION	MANUFACTURER'S OR INSTALLER'S WELD NUMBER	EXAMINATION CATEGORY IWB-2500	EXAMINATION METHOD IWB-2600	EXAMINATION PROCEDURE NUMBER	CALIBRATION BLOCK NO.
01-037-055	2" Sch 160 Reducer-to-Pipe	CH-005-W0AB	B-J	UT	NIP-954	UT-50
01-037-056	2" Sch 160 Pipe-to-Valve V-434	CH-005-W0AA	B-J	UT	NIP-954	UT-50
01-037-057	Valve V-434-to-2" Sch 160 Pipe	CH-005-W00Z	B-J	UT	NIP-954	UT-50
01-037-058	2" Sch 160 Pipe-to-Concentric Reducer	CH-005-W00Y	B-J	UT	NIP-954	UT-50
01-037-059	3" Sch 160 Reducer-to-Pipe	CH-005-S009-B	B-J	UT	NIP-954	UT-51
01-037-060	3" Sch 160 Pipe-to-Concentric Reducer	CH-005-S009-A	B-J	UT	NIP-954	UT-51
01-037-061	2" Sch 160 Concentric Reducer-to-Pipe	CH-005-W00X	B-J	UT	NIP-954	UT-50
01-037-062	2" Sch 160 Pipe-to-Flange	CH-005-W00W	B-J	UT	NIP-954	UT-50
01-037-063	Flange Bolting (8 places)	N/A	B-G-2	Vis.	525115-ESS-091	N/A

N/A NOT APPLICABLE
(H) DURING HYDROTEST

REVISION: 2

C-E 0090285 (Rev. 7/80)

POWER SYSTEMS
COMBUSTION ENGINEERING, INC

ZONE 37 CLASS 1
PROGRAM PLAN

DOCUMENT NO.: TR-ESS-069

REFERENCE DRAWING NO.: E-9678-501-100 Rev. 03

TITLE: CHARGING LINE

AREA DESIGNATION	AREA DESCRIPTION	MANUFACTURER'S OR INSTALLER'S WELD NUMBER	EXAMINATION CATEGORY IWB-2500	EXAMINATION METHOD IWB-2600	EXAMINATION PROCEDURE NUMBER	CALIBRATION BLOCK NO.
01-037-064A	Valve V-435 Body Weld (upstream)	Target Rock 2CKH-S-1	B-M-1	Vol.	See Note	N/A
01-037-064B	Valve V-435 Body Weld (downstream)	Target Rock 2CKH-S-1	B-M-1	Vol.	See Note	N/A
01-037-065	Valve V-435 Bolting	N/A	B-G-2	Vis.	525115-ESS-091	N/A
01-037-066	Valve PDV-240 Bolting	N/A	B-G-2	Vis.	525115-ESS-091	N/A

Note: Section III RT records will be utilized for PSE.

N/A NOT APPLICABLE
(H) DURING HYDROTEST

REVISION: 2

C-E 0090285 (Rev. 7/80)

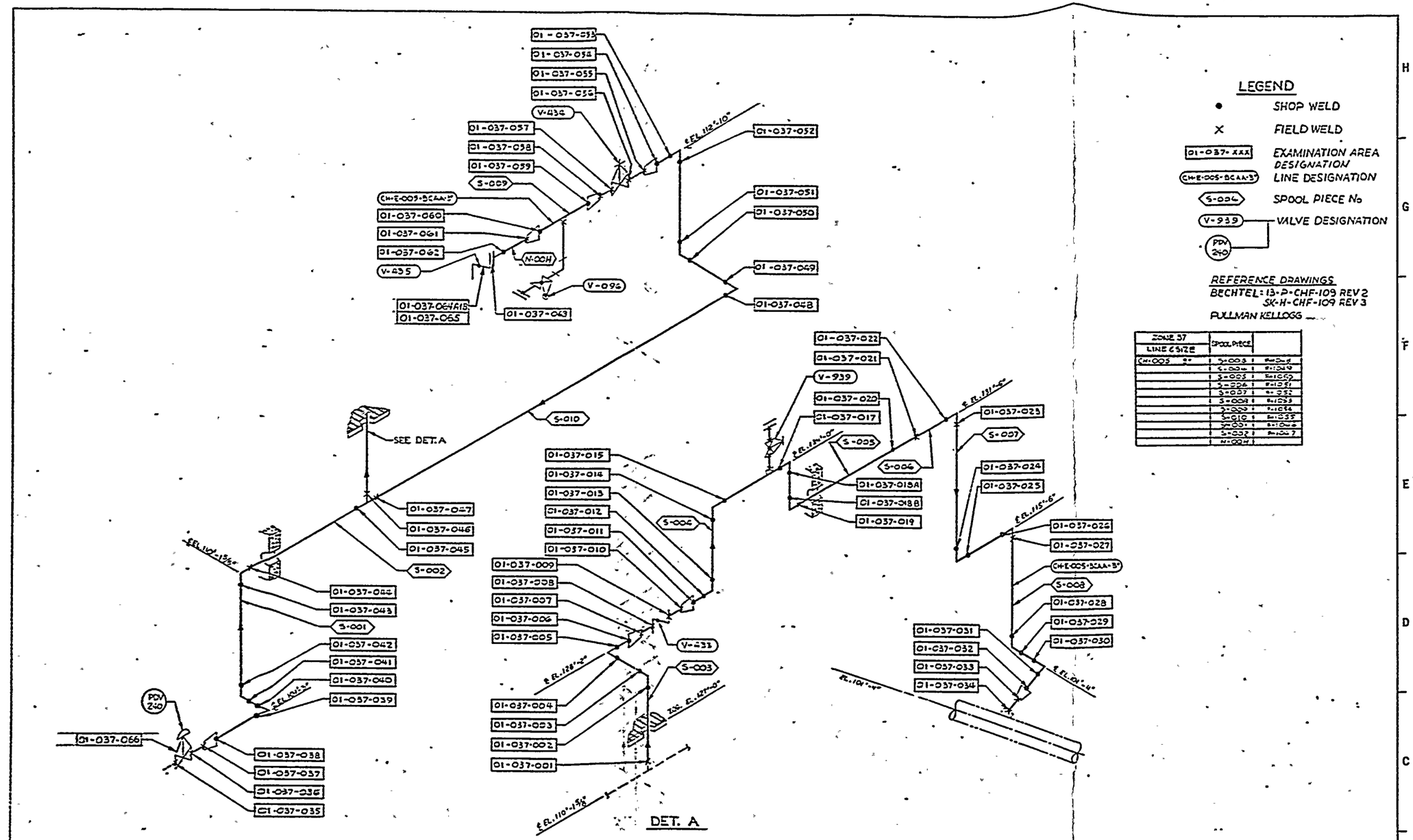

LEGEND

•	SHOP WELD
X	FIELD WELD
01-037-XXX	EXAMINATION AREA DESIGNATION
CH-E-005-BCAA-3"	LINE DESIGNATION
S-004	SPOOL PIECE No
V-939	VALVE DESIGNATION
PDV 240	

REFERENCE DRAWINGS
BECHTEL: 13-P-CHF-109 REV 2
SK-H-CHF-109 REV 3
PULLMAN KELLOGG

ZONE 37 LINE & SIZE	SPOOL PIECE	
CH-005 2"	S-003	[illegible]
	S-004	[illegible]
	S-005	[illegible]
	S-006	[illegible]
	S-007	[illegible]
	S-008	[illegible]
	S-009	[illegible]
	S-010	[illegible]
	S-001	[illegible]
	S-002	[illegible]
	N-004H	

E-9678-501-100 03

APPROVED REFERENCE DESIGN

ZONE 37

UNIT 1

REV	DESCRIPTION				
3	UPGRADE TO APPROVED REF DESIGN PER REV REQ # 9678-503				
2	REVISED CALLOUTS ON DWG. REVISED DWG. 7 & ADDED REF DWG. & ADDED SPOOL PIECE N 004 PER REQ 9678-503				
1	GENERALLY REVISED PER REV REQ # 9678-[illegible]				

POWER SYSTEMS

CHEMICAL VOLUME CONTROL SYSTEM CHARGING LINE

E-9678-501-100 03

NONE

8 7 6 5 4 3 2 1

H G F E D C B A

POWER SYSTEMS
COMBUSTION ENGINEERING, INC

ZONE 38 CLASS 1
PROGRAM PLAN

DOCUMENT NO.: TR-ESS-069

REFERENCE DRAWING NO.: D-9678-501-101 Rev. 02

TITLE: SHUTDOWN COOLING SYSTEM

AREA DESIGNATION	AREA DESCRIPTION	MANUFACTURER'S OR INSTALLER'S WELD NUMBER	EXAMINATION CATEGORY IWB-2500	EXAMINATION METHOD IWB-2600	EXAMINATION PROCEDURE NUMBER	CALIBRATION BLOCK NO.
01-038-001	2" Sch 160 Reducing Tee-to-Pipe	RC-070-W00A	B-J	UT	NIP-954	UT-50
01-038-002	2" Sch 160 Pipe-to-Tee	RC-070-WA00	B-J	UT	NIP-954	UT-50
01-038-003	2" Sch 160 Tee-to-Pipe	RC-070-WD00	B-J	UT	NIP-954	UT-50
01-038-004	2" Sch 160 Pipe-to-Valve	RC-070-W00G	B-J	Surf.	525115-ESS-093	N/A
01-038-005	Valve V-215-to-Pipe	RC-070-W00H	B-J	Surf.	525115-ESS-093	N/A
01-038-006	2" Sch 160 Pipe-to-Valve V-216	RC-070-W00J	B-J	Surf.	525115-ESS-093	N/A
01-038-007	2" Sch 160 Pipe-to-Reducing Tee	RC-070-WB00	B-J	UT	NIP-954	UT-50

N/A NOT APPLICABLE
(H) DURING HYDROTEST

REVISION: 2

C-E 0090285 (Rev. 7/80)

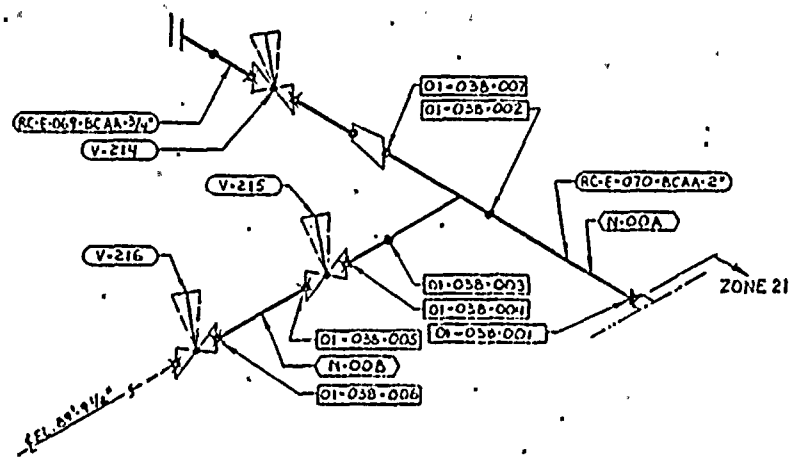

LEGEND

- SHOP WELD
- FIELD WELD
- 01-038-XXX — EXAMINATION AREA
- RC-E-070-BCAA-2" — LINE DESIGNATION
- S-001 — SPOOL PIECE No
- V-216 — VALVE DESIGNATION

REFERENCE DRAWINGS:
BECHTEL: 23-P-SIF-105 REV 3
01-P-SIF-105 REV 3
PULLMAN-KELLOGG:

D-9678-501-101
03

APPROVED
REFERENCE
DESIGN

UNIT 1 - ZONE 38

REV	DESCRIPTION					
03	UPGRADED TO APPROVED REF DESIGN PER REV REQ No 9678-250					
02	1-GENERALLY REVISED PER REQ 9678-503					
01	1-GENERALLY REVISED PER REV. REQ No 9678-262					

POWER SYSTEMS

ARIZONA NUCLEAR POWER PROJECT
PALO VERDE NUCLEAR GENERATING STATION

LOOP 1
DRAIN LINE

D-9678-501-101 03

NONE

POWER SYSTEMS
COMBUSTION ENGINEERING, INC

ZONE 39 CLASS 1
PROGRAM PLAN

DOCUMENT NO.: TR-ESS-069

REFERENCE DRAWING NO.: E-9678-501-102 Rev. 03

TITLE: LOOP 1 HPSI SUPPLY LINE

AREA DESIGNATION	AREA DESCRIPTION	MANUFACTURER'S OR INSTALLER'S WELD NUMBER	EXAMINATION CATEGORY IWB-2500	EXAMINATION METHOD IWB-2600	EXAMINATION PROCEDURE NUMBER	CALIBRATION BLOCK NO.
01-039-001	Valve V-523 to 3" Sch 160 Pipe	SI-248-W001	B-J	UT	NIP-954	UT-51
01-039-002	3" Sch 160 Pipe to Tee	SI-248-S011-C	B-J	UT	NIP-954	UT-51
01-039-003	3" Sch 160 Tee to Reducer	SI-248-S011-B	B-J	UT	NIP-954	UT-51
01-039-004	NOT USED					
01-039-005	3" Sch 160 Tee to 3" Sch 160 Pipe	SI-248-S011-A	B-J	UT	NIP-954	UT-51
01-039-006	3" Sch 160 Pipe to Elbow	SI-248-W002	B-J	UT	NIP-954	UT-51
01-039-007	3" Sch 160 Elbow to Pipe	SI-248-S012-A	B-J	UT	NIP-954	UT-51
01-039-008	NOT USED					
01-039-009	3" Sch 160 Pipe to 3" Sch 160 Pipe	SI-248-S012-G	B-J	UT	NIP-954	UT-51

N/A NOT APPLICABLE
(H) DURING HYDROTEST

REVISION: 2

C-E 0090285 (Rev. 7/80)

POWER SYSTEMS
COMBUSTION ENGINEERING INC

ZONE 39 CLASS 1
PROGRAM PLAN

DOCUMENT NO.: TR-ESS-069

REFERENCE DRAWING NO.: E-9678-501-102 Rev. 03

TITLE: LOOP 1 HPSI SUPPLY LINE

AREA DESIGNATION	AREA DESCRIPTION	MANUFACTURER'S OR INSTALLER'S WELD NUMBER	EXAMINATION CATEGORY IWB-2500	EXAMINATION METHOD IWB-2600	EXAMINATION PROCEDURE NUMBER	CALIBRATION BLOCK NO.
01-039-010	3" Sch 160 Pipe to 3" Sch 160 Pipe	SI-248-W004	B-J	UT	NIP-954	UT-51
01-039-010A	3" Sch 160 Pipe to 3" Sch 160 Pipe	SI-248-W004	B-J	UT	NIP-954	UT-51
01-039-011	3" Sch 160 Pipe to 3" Sch 160 Pipe	SI-248-S003-B	B-J	UT	NIP-954	UT-51
01-039-012	3" Sch 160 Pipe to Elbow	SI-248-S003-A	B-J	UT	NIP-954	UT-51
01-039-013	3" Sch 160 Elbow to 3" Sch 160 Pipe	SI-248-W005	B-J	UT	NIP-954	UT-51
01-039-014	3" Sch 160 Pipe to Elbow	SI-248-S007-A	B-J	UT	NIP-954	UT-51
01-039-015	3" Sch 160 Elbow to Pipe	SI-248-S007-B	B-J	UT	NIP-954	UT-51
01-039-016	3" Sch 160 Pipe to Elbow	SI-248-S007-C	B-J	UT	NIP-954	UT-51
01-039-017	3" Sch 160 Elbow to Pipe	SI-248-S007-D	B-J	UT	NIP-954	UT-51

N/A NOT APPLICABLE
(H) DURING HYDROTEST

REVISION: 2

C-E 0090285 (Rev. 7/80)

POWER SYSTEMS
COMBUSTION ENGINEERING, INC

ZONE 39 CLASS 1
PROGRAM PLAN

DOCUMENT NO.: TR-ESS-069

REFERENCE DRAWING NO.: E-9678-501-102 Rev. 03

TITLE: LOOP 1 HPSI SUPPLY LINE

AREA DESIGNATION	AREA DESCRIPTION	MANUFACTURER'S OR INSTALLER'S WELD NUMBER	EXAMINATION CATEGORY IWB-2500	EXAMINATION METHOD IWB-2600	EXAMINATION PROCEDURE NUMBER	CALIBRATION BLOCK NO.
01-039-018	3" Sch 160 Pipe to Elbow	SI-248-S007-E	B-J	UT	NIP-954	UT-51
01-039-019	3" Sch 160 Elbow to Pipe	SI-248-S007-F	B-J	UT	NIP-954	UT-51
01-039-020	3" Sch 160 Pipe to Elbow	SI-248-S007-G	B-J	UT	NIP-954	UT-51
01-039-021	3" Sch 160 Elbow to Pipe	SI-248-S007-H	B-J	UT	NIP-954	UT-51
01-039-022	3" Sch 160 Pipe to Elbow	SI-248-S007-J	B-J	UT	NIP-954	UT-51
01-039-023	3" Sch 160 Elbow to Pipe	SI-248-S007-K	B-J	UT	NIP-954	UT-51
01-039-024	3" Sch 160 Pipe to Valve V-522	SI-248-W006	B-J	UT	NIP-954	UT-51
01-039-025	V-522 to 3" Sch 160 Pipe	SI-248-W007	B-J	UT	NIP-954	UT-51
01-039-026	3" Sch 160 Pipe to Elbow	SI-248-S008-H	B-J	UT	NIP-954	UT-51

N/A NOT APPLICABLE
(H) DURING HYDROTEST

REVISION: 2

C-E 0090285 (Rev. 7/80)

POWER SYSTEMS
COMBUSTION ENGINEERING, INC

ZONE 39 CLASS 1
PROGRAM PLAN

DOCUMENT NO.: TR-ESS-069

REFERENCE DRAWING NO.: E-9678-501-102 Rev. 03

TITLE: LOOP 1 HPSI SUPPLY LINE

AREA DESIGNATION	AREA DESCRIPTION	MANUFACTURER'S OR INSTALLER'S WELD NUMBER	EXAMINATION CATEGORY IWB-2500	EXAMINATION METHOD IWB-2600	EXAMINATION PROCEDURE NUMBER	CALIBRATION BLOCK NO.
01-039-027	3" Sch 160 Elbow to Pipe	SI-248-S008-J	B-J	UT	NIP-954	UT-51
01-039-028	3" Sch 160 Pipe to Elbow	SI-248-S008-K	B-J	UT	NIP-954	UT-51
01-039-029	3" Sch 160 Elbow to Pipe	SI-248-W008	B-J	UT	NIP-954	UT-51
01-039-030	3" Sch 160 Pipe to Elbow	SI-248-S009-A	B-J	UT	NIP-954	UT-51
01-039-031	3" Sch 160 Elbow to Pipe	SI-248-S009-B	B-J	UT	NIP-954	UT-51
01-039-032	3" Sch 160 Pipe to Elbow	SI-248-S009-C	B-J	UT	NIP-954	UT-51
01-039-033	3" Sch 160 Elbow to Pipe	SI-248-S009-D	B-J	UT	NIP-954	UT-51
01-039-033A	3" Sch 160 Pipe to Sweepolet	SI-248-W009	B-J	UT	NIP-954	UT-51
01-039-034	3" Sch 160 Pipe to Pipe	SI-248-S012-C	B-J	UT	NIP-954	UT-51

N/A NOT APPLICABLE
(H) DURING HYDROTEST

REVISION: 2

C-E 0090285 (Rev. 7/80)

POWER SYSTEMS
COMBUSTION ENGINEERING, INC

ZONE 39 CLASS 1
PROGRAM PLAN

DOCUMENT NO.: TR-ESS-069

REFERENCE DRAWING NO.: E-9678-501-102 Rev. 03

TITLE: LOOP 1 HPSI SUPPLY LINE

AREA DESIGNATION	AREA DESCRIPTION	MANUFACTURER'S OR INSTALLER'S WELD NUMBER	EXAMINATION CATEGORY IWB-2500	EXAMINATION METHOD IWB-2600	EXAMINATION PROCEDURE NUMBER	CALIBRATION BLOCK NO.
01-039-035	Valve V-523 Bolting	N/A	B-G-2	Vis.	525115-ESS-091	N/A
01-039-036	Valve V-522 Bolting	N/A	B-G-2	Vis.	525115-ESS-091	N/A

N/A NOT APPLICABLE
(H) DURING HYDROTEST

REVISION: 2

PAGE: V-39.5

C-E 0090285 (Rev. 7/80)

/ER SYSTEMS
COMBUSTION ENGINEERING, INC

ZONE 40 CLASS 1
PROGRAM PLAN

DOCUMENT NO.: TR-ESS-069
REFERENCE DRAWING NO.: E-9678-501-105 Rev. 03
TITLE: LOOP 2 HPSI SUPPLY LINE

AREA DESIGNATION	AREA DESCRIPTION	MANUFACTURER'S OR INSTALLER'S WELD NUMBER	EXAMINATION CATEGORY IWB-2500	EXAMINATION METHOD IWB-2600	EXAMINATION PROCEDURE NUMBER	CALIBRATION BLOCK NO.
01-040-017	3" Sch 160 Pipe-to-Elbow	SI-199-S006-C	B-J	UT	NIP-954	UT-51
01-040-018	3" Sch 160 Elbow-to-Pipe	SI-199-S006-B	B-J	UT	NIP-954	UT-51
01-040-019	3" Sch 160 Pipe-to-Elbow	SI-199-S006-A	B-J	UT	NIP-954	UT-51
01-040-020	3" Sch 160 Elbow-to-Pipe	SI-199-W002	B-J	UT	NIP-954	UT-51
01-040-021	3" Sch 160 Pipe-to-Elbow	SI-199-S005-B	B-J	UT	NIP-954	UT-51
01-040-022	3" Sch 160 Elbow-to-Pipe	SI-199-S005-C	B-J	UT	NIP-954	UT-51
01-040-023	3" Sch 160 Pipe-to-Valve V-533	SI-114-W027	B-J	UT	NIP-954	UT-51
01-040-024	Valve V-533 Bolting	N/A	B-G-2	Vis.	525115-ESS-091	N/A
01-040-025	NOT USED					

N/A NOT APPLICABLE
(H) DURING HYDROTEST

REVISION: 2

C-E 0090285 (Rev. 7/80)

POWER SYSTEMS
COMBUSTION ENGINEERING, INC

ZONE 40 CLASS 1
PROGRAM PLAN

DOCUMENT NO.: TR-ESS-069
REFERENCE DRAWING NO.: E-9678-501-105 Rev. 03
TITLE: LOOP 2 HPSI SUPPLY LINE

AREA DESIGNATION	AREA DESCRIPTION	MANUFACTURER'S OR INSTALLER'S WELD NUMBER	EXAMINATION CATEGORY IWB-2500	EXAMINATION METHOD IWB-2600	EXAMINATION PROCEDURE NUMBER	CALIBRATION BLOCK NO.
01-040-001	Forged Nozzle-to-3" Sch 160 Pipe	SI-199-W006	B-J	UT	NIP-954	UT-51
01-040-002	3" Sch 160 Pipe-to-Elbow	SI-199-W008	B-J	UT	NIP-954	UT-51
01-040-003	3" Sch 160 Elbow-to-Pipe	SI-199-S007-A	B-J	UT	NIP-954	UT-51
01-040-004	3" Sch 160 Pipe-to-Elbow	SI-199-S007-B	B-J	UT	NIP-954	UT-51
01-040-005	3" Sch 160 Elbow-to-Pipe	Si-199-W007	B-J	UT	NIP-954	UT-51
01-040-006	3" Sch 160 Pipe-to-Elbow	SI-199-S004-FW302	B-J	UT	NIP-954	UT-51
01-040-007	3" Sch 160 Elbow-to-Pipe	SI-199-S004-C	B-J	UT	NIP-954	UT-51
01-040-007A	3" Sch 160 Pipe-to-Pipe	SI-199-S004-F	B-J	UT	NIP-954	UT-51

N/A NOT APPLICABLE
(H) DURING HYDROTEST

REVISION: 2

C-E 0090285 (Rev. 7/80)

POWER SYSTEMS
COMBUSTION ENGINEERING, INC

ZONE 40 CLASS 1
PROGRAM PLAN

DOCUMENT NO.: TR-ESS-069
REFERENCE DRAWING NO.: E-9678-501-105 Rev. 03
TITLE: LOOP 2 HPSI SUPPLY LINE

AREA DESIGNATION	AREA DESCRIPTION	MANUFACTURER'S OR INSTALLER'S WELD NUMBER	EXAMINATION CATEGORY IWB-2500	EXAMINATION METHOD IWB-2600	EXAMINATION PROCEDURE NUMBER	CALIBRATION BLOCK NO.
01-040-008	3" Sch 160 Pipe-to-Elbow	SI-199-S004-E	B-J	UT	NIP-954	UT-51
01-040-009	3" Sch 160 Elbow-to-Pipe	SI-199-S004-D	B-J	UT	NIP-954	UT-51
01-040-010	3" Sch 160 Pipe-to-Valve V-532	SI-199-W005	B-J	UT	NIP-954	UT-51
01-040-011	Valve V-532 Bolting	N/A	B-G-2	Vis.	525115-ESS-091	N/A
01-040-012	Valve V-532-to-3" Sch 160 Pipe	SI-199-W003	B-J	UT	NIP-954	UT-51
01-040-013	3" Sch 160 Pipe-to-Elbow	SI-199-S006-G	B-J	UT	NIP-954	UT-51
01-040-014	3" Sch 160 Elbow-to-Pipe	SI-199-S006-F	B-J	UT	NIP-954	UT-51
01-040-015	3" Sch 160 Pipe-to-Elbow	SI-199-S006-E	B-J	UT	NIP-954	UT-51
01-040-016	3" Sch 160 Elbow-to-Pipe	SI-199-S006-D	B-J	UT	NIP-954	UT-51

N/A NOT APPLICABLE
(H) DURING HYDROTEST

REVISION: 2

C-E 0090285 (Rev. 7/80)

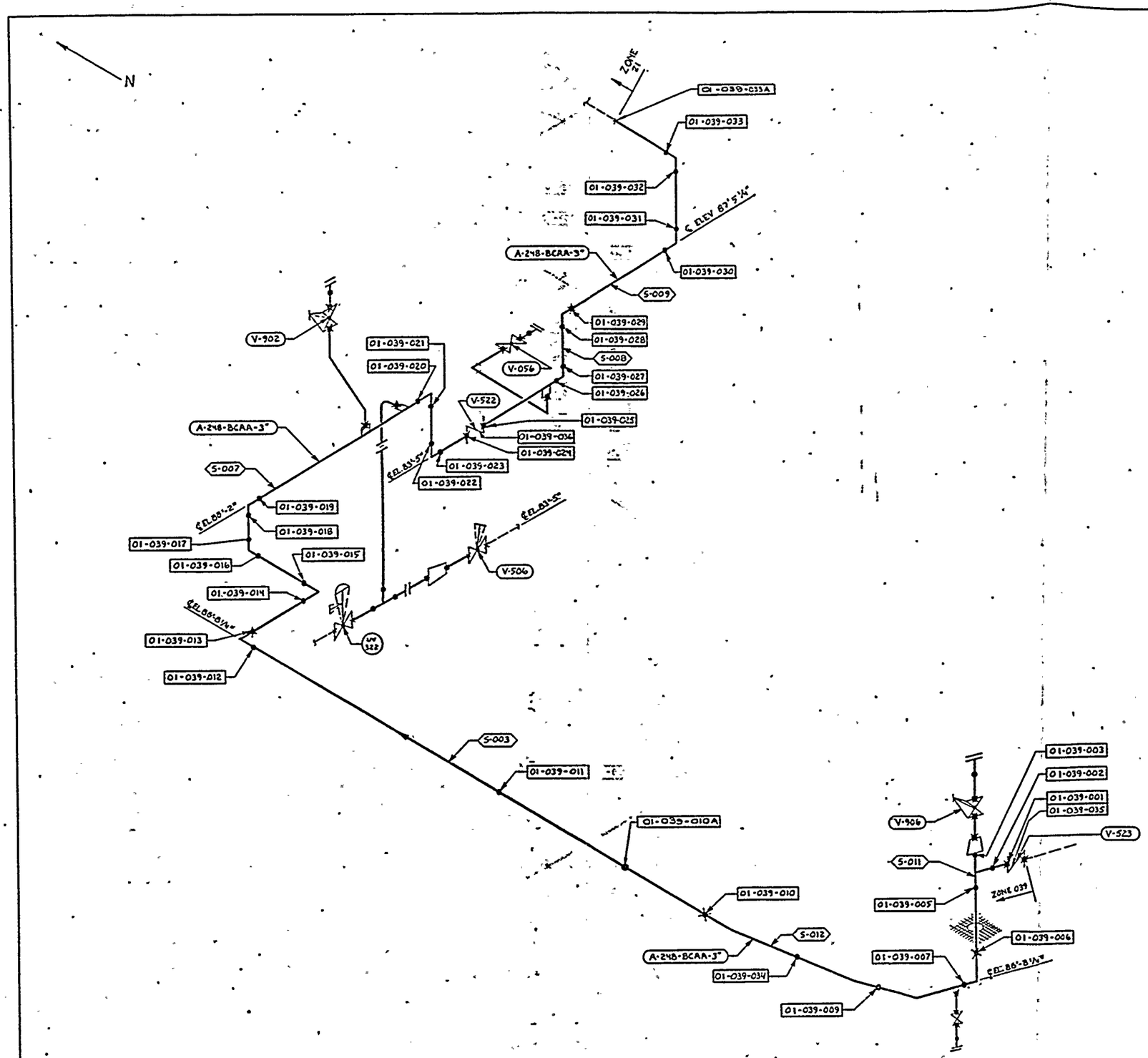

LEGEND

- ● SHOP WELD
- X FIELD WELD
- 01-039-001 — EXAMINATION AREA DESIGNATION
- A-248-BCAA-3" — LINE DESIGNATION
- S-001 — SPOOL PIECE No.
- V-906 — VALVE DESIGNATION
- VV 322

REFERENCE DRAWINGS

BECHTEL: 01-P-SIF-105 REV 3
BECHTEL: 23-P-SIF-105 REV. 3
PULLMAN-KELLOGG:

ZONE 39 LINE & SIZE		SPOOLPIECE	
248	3"	S-003	F-333
		S-007	F-253
		008	F-262
		009	F-267
		011	F-315
		012	F-263

E-9678-501-102
03

APPROVED
REFERENCE
DESIGN

UNIT 1 ZONE 39

REV	DESCRIPTION				
03	UPGRADED TO APPROVED REF DESIGN/YR REV REQ NO 9678-256				
02	ADDED EXAM AREA DES. 034-01 PER REV REQ. 9678-503				
01	GENERALLY REVISED PER REV REQ # 9678-242				

POWER SYSTEMS

ARIZONA NUCLEAR POWER PROJECT

ZONE 39
LOOP 1
HPSI SUPPLY LINE

E-9678-501-102 03

8/10/12 NONE

POWER SYSTEMS
COMBUSTION ENGINEERING, INC

ZONE 40 CLASS 1

PROGRAM PLAN

DOCUMENT NO.: TR-ESS-069

REFERENCE DRAWING NO.: E-9678-501-105 Rev. 03

TITLE: LOOP 2 HPSI SUPPLY LINE

AREA DESIGNATION	AREA DESCRIPTION	MANUFACTURER'S OR INSTALLER'S WELD NUMBER	EXAMINATION CATEGORY IWB-2500	EXAMINATION METHOD IWB-2600	EXAMINATION PROCEDURE NUMBER	CALIBRATION BLOCK NO.
01-040-026	3" Sch 160 Pipe-to-Pipe	SI-199-S004-G	B-J	UT	NIP-954	UT-51
01-040-027	3" Sch 160 Pipe-to-Pipe	SI-199-S004-FW303	B-J	UT	NIP-954	UT-51

N/A NOT APPLICABLE
(H) DURING HYDROTEST

REVISION: 2

C-E 0090285 (Rev. 7/80)

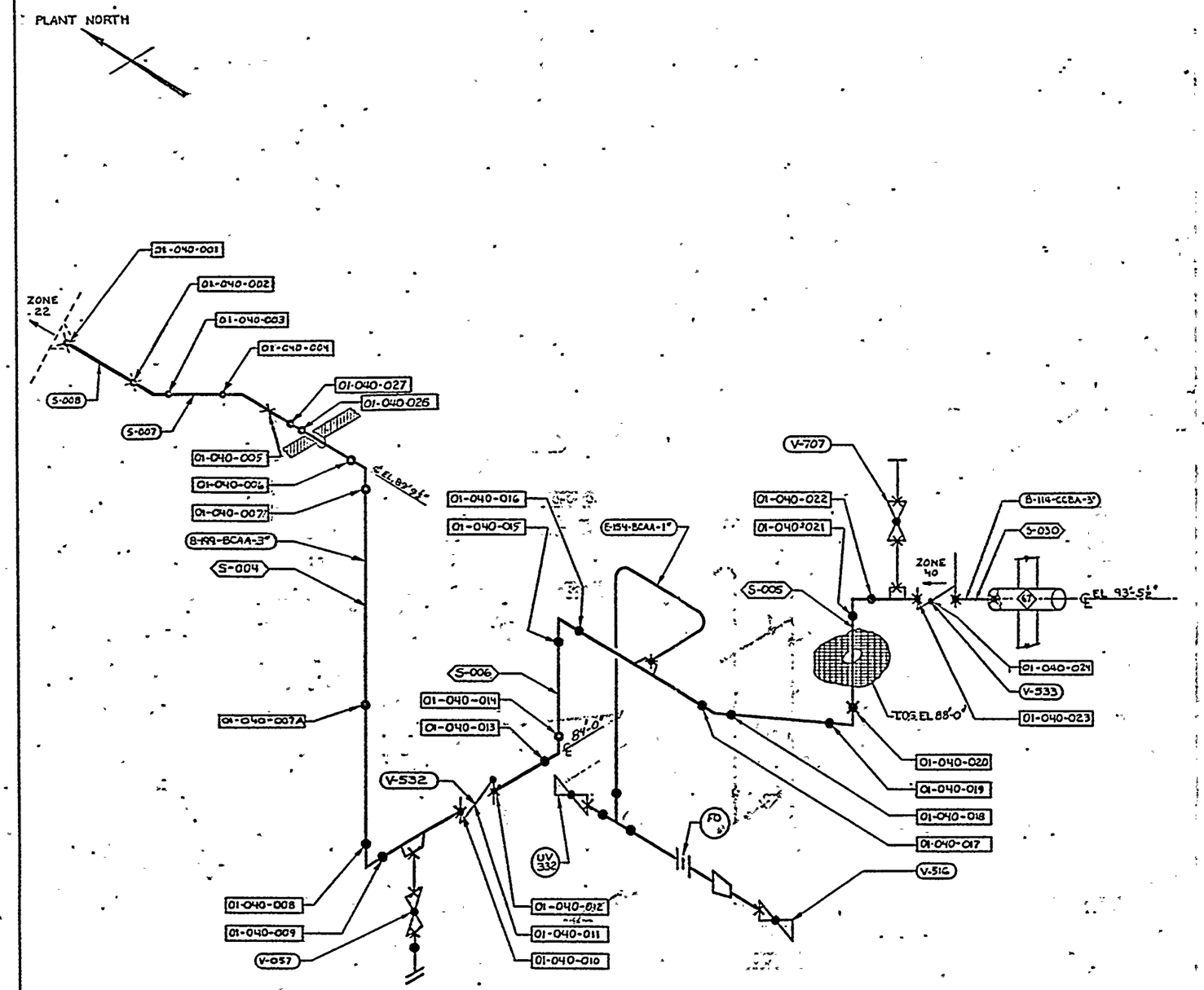

LEGEND

- ● SHOP WELD
- × FIELD WELD
- (B-199-BCAA-3") LINE DESIGNATION
- ⟨S-001⟩ SPOOL PC NUMBER
- [01-040-XXX] EXAMINATION AREA DESIGNATION
- (V532) / (UV 332) — VALVE DESIGNATION
- ⟨47⟩ PENETRATION NO.

REFERENCE DRAWINGS

BECHTEL: 01-P-SIF-105 REV. 3 : UNIT 1 ONLY
23-P-SIF-105 REV. 3 : UNITS 2 & 3
PULLMAN KELLOGG:

ZONE 40 LINE & SIZE	SPOOL PIECE	
B-199-BCAA-3"	S-004	[illegible]
	S-005	[illegible]
	S-006	[illegible]
	S-007	[illegible]
	S-008	[illegible]

E-9678-501-105 03

APPROVED REFERENCE DESIGN

UNIT 1 ZONE 40

REV	DESCRIPTION				
3	UPGRADED TO APPROVED REF. DESIGN PER REQ NO 255 #9678				
2	ADDED UNIT DWG No TO SPOOL PCS-008 PER REQ 9678-503				
1	GENERALLY REVISED PER REV. REQ # 9678-222				

ARIZONA POWER SYSTEMS

ARIZONA NUCLEAR POWER PROJECT
PALO VERDE NUCLEAR GENERATING STATION

ZONE 40
LOOP 2
HPSI SUPPLY LINE

E-9678-501-105 03

NONE

8 7 6 5 4 3 2 1