U.S.NRC
United States Nuclear Regulatory Commission
Protecting People and the Environment

NUREG-2214 Managing Aging Processes in Storage (MAPS) Report

John Wise
U.S. NRC

REG CON 2017
October 31, 2017
U.S. NRC HQ, Rockville, MD

NUREG-2214, Draft Report for Comment

U.S.NRC
United States Nuclear Regulatory Commission
Protecting People and the Environment

- ADAMS ML17289A237

- Public Comment Period
  - 60 days: October 24 (FRN) – December 23
  - Docket ID: NRC-2016-0238
  - Comment via website: http://www.regulations.gov or mail
  - Questions: John.Wise@nrc.gov

- Public Meeting: December

U.S.NRC

Managing Aging Processes In Storage (MAPS) Report

Draft Report for Comment

NMSS
Division of
Spent Fuel
Management

Storage License/Certificate Renewal Applications

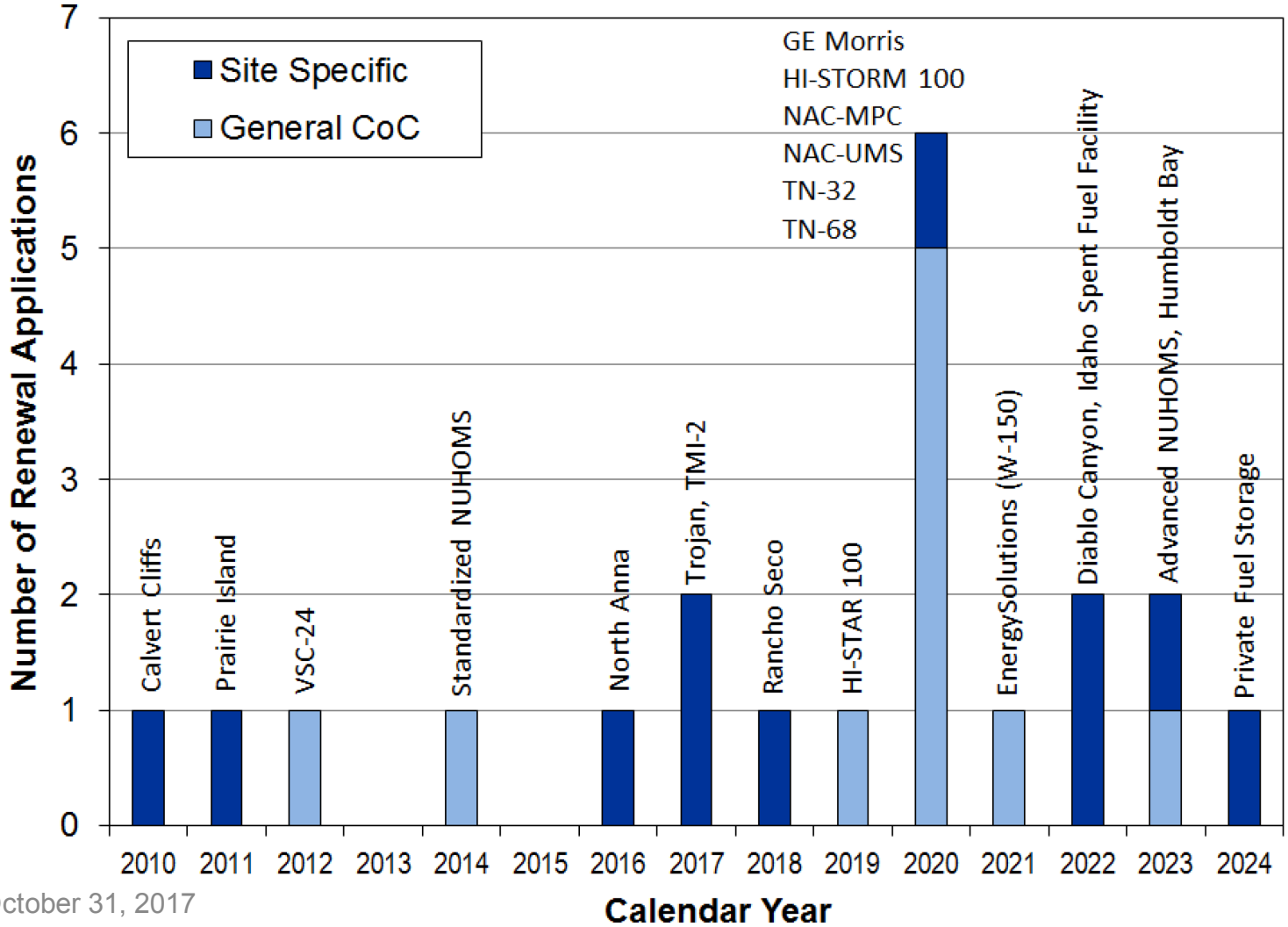

Storage Renewal Framework

U.S.NRC
United States Nuclear Regulatory Commission
Protecting People and the Environment

SRP
NUREG-1927, R1

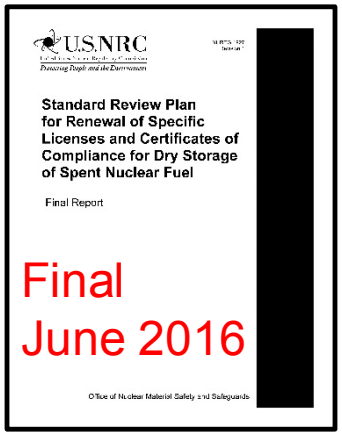
U.S.NRC

Standard Review Plan for Renewal of Specific Licenses and Certificates of Compliance for Dry Storage of Spent Nuclear Fuel

Final Report

Office of Nuclear Material Safety and Safeguards

Final
June 2016

MAPS
NUREG-2214

U.S.NRC

Managing Aging Processes In Storage (MAPS) Report

Draft Report for Comment

Draft
Oct 2017

Inspection Manual
TI 2690/001 → IP

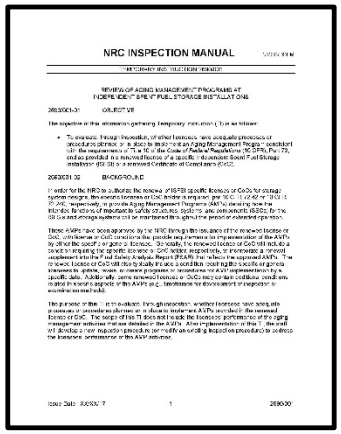
NRC INSPECTION MANUAL

ASME Code

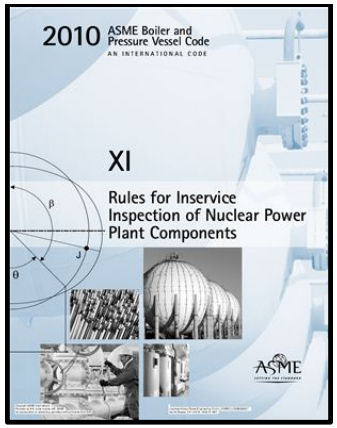
2010 ASME Boiler and Pressure Vessel Code
AN INTERNATIONAL CODE

XI

Rules for Inservice Inspection of Nuclear Power Plant Components

ASME

NEI 14-03, R2

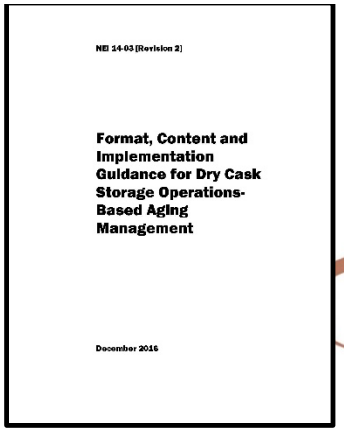
NEI 14-03 (Revision 2)

Format, Content and Implementation Guidance for Dry Cask Storage Operations-Based Aging Management

December 2016

NMSS
Division of Spent Fuel Management

MAPS Report Changes Since Draft for 2016 ACRS meeting

U.S.NRC
United States Nuclear Regulatory Commission
Protecting People and the Environment

- Evaluated additional storage system designs
- Refined technical basis discussions
- Guidance on time-limited aging analyses
- Minor revisions to aging management programs

NMSS
Division of
Spent Fuel
Management

Renewal Application Process

U.S.NRC
United States Nuclear Regulatory Commission
Protecting People and the Environment

Scoping Evaluation

Identify SSCs within the Scope of Renewal

(MAPS Chapter 4)

Aging Management Review

Define materials and environments	(MAPS Chapter 2)
Evaluate aging mechanisms and effects	(MAPS Chapter 3)
Tabulate aging evaluation results	(MAPS Chapter 4)
Identify aging management activities	(MAPS Chapter 4)

Time-Limited Aging Analyses or Other Supporting Analyses

Evaluate TLAAs

Provide other supporting analyses

(MAPS Chapter 5)

Aging Management Programs

Describe programs for the management of aging issues

(MAPS Chapter 6)

Storage Systems Evaluated

Storage System		License/CoC	Renewal Submittal Date
Draft MAPS for ACRS Review	Standardized NUHOMS	1004 (CoC) Rancho Seco	in progress 6/2018
	HI-STORM 100	Trojan Diablo Canyon Humboldt Bay 1014 (CoC)	in progress 3/2022 11/2023 4/2020
	HI-STAR 100	1008 (CoC)	9/2019
	TN-32/68	North Anna 1021 (CoC) 1027 (CoC)	in progress 3/2020 4/2020
Additions for Final Draft	NAC MPC	1025 (CoC)	3/2020
	NAC UMS	1015 (CoC)	10/2020
	EnergySolutions W-150	1026 (CoC)	1/2021
	Advanced NUHOMS	1029 (CoC)	1/2023
	NAC MAGNASTOR	1031 (CoC)	1/2029

Use of MAPS: Example

U.S.NRC
United States Nuclear Regulatory Commission
Protecting People and the Environment

HI-STORM 100

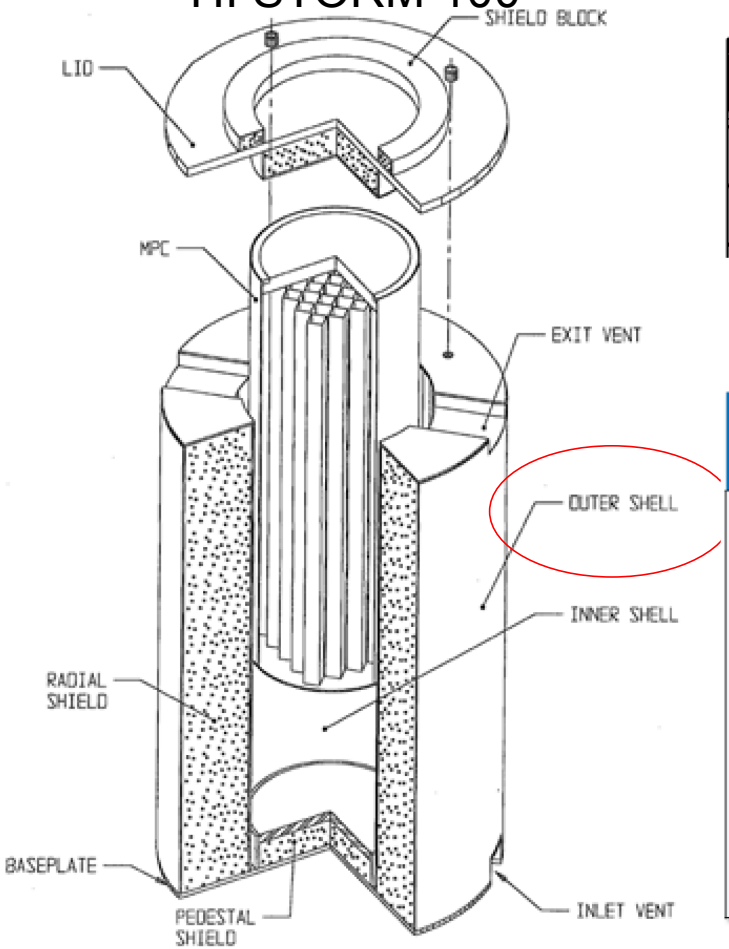

HI-STORM safety analysis report

Primary Function	Component (3)	Safety Class (4)	Codes/Standards (as applicable to component)	Material
Structural Integrity	Baseplate	B	ASME Section III; Subsection NF	SA516-70
Structural Integrity	Outer Shell	B	ASME Section III; Subsection NF	SA516-70
Structural Integrity	Inner Shell	B	ASME Section III;	SA516-70

MAPS aging management table

Structure, System, or Component	Intended Safety Function	Material	Environment	Aging Mechanism	Aging Effect	Aging Management
Outer shell	SR	Steel	Air - outdoor	General corrosion	Loss of material	External Surfaces Monitoring of Metallic Components AMP ✓
				Pitting and crevice corrosion	Loss of material	External Surfaces Monitoring of Metallic Components AMP ✓
				Microbiologically influenced corrosion	Loss of material	No
				Fatigue	Cracking	A TLAA or a supporting calculation may be needed

Example (cont.)

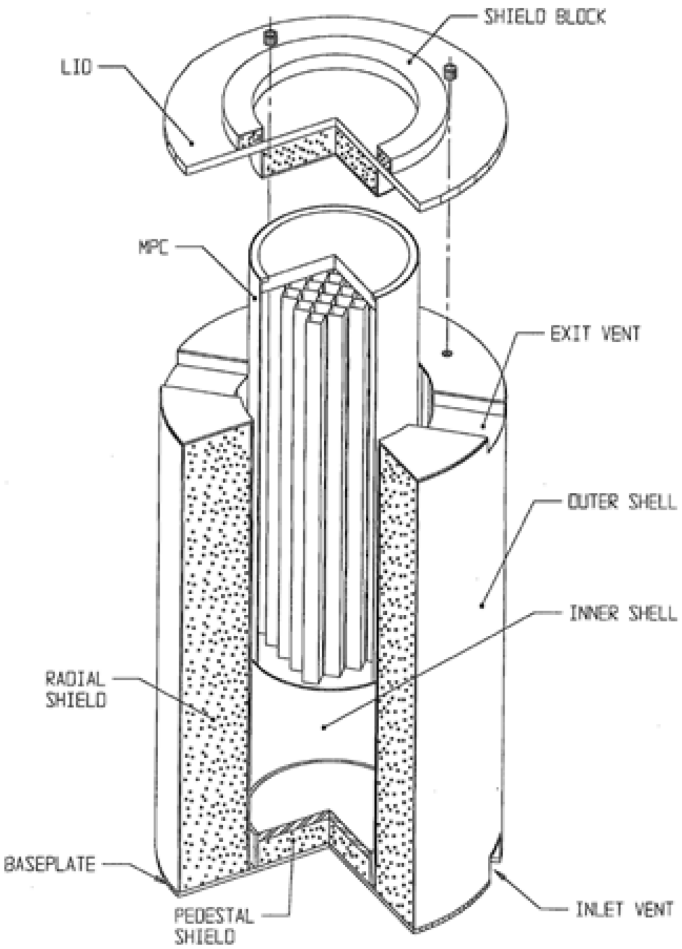

External Surfaces Monitoring Example Aging Management Program

- Inspection Method:
  - Visual inspections in accordance with ASME Code Section XI for VT-3
- Coverage:
  - All accessible external surfaces
- Sample Size:
  - All casks
- Frequency:
  - At least once every 5 years
- Acceptance Criteria
  - No detectable loss of material, corrosion products, or coating defects

Next Steps

- Comment Period: 60 days, ends December 23
- Public Meeting: Early December
- Publish Final: Spring 2018

Abbreviations

- ACRS – Advisory Committee on Reactor Safeguards
- AMP – Aging Management Program
- ASME – American Society of Mechanical Engineers
- CoC – Certificate of Compliance
- FRN – Federal Register Notice
- IP – Inspection Procedure
- MAPS – Managing Aging Processes in Storage
- NEI – Nuclear Energy Institute
- SRP – Standard Review Plan
- SSC – Structure, System, and Component
- TI – Temporary Instruction
- TLAA – Time-Limiting Aging Analyses