92 WM 059-6 EC

ADJUSTABLE-SPEED DRIVE RETROFIT FOR ORMOND BEACH FD FANS

J. A. Oliver
Bechtel Corporation

R. K. McCluskey
Southern California Edison Co.

H. W. Weiss
General Electric Co.

M. J. Samotyj
Electric Power Research Institute

Abstract - The boiler on Southern California Edison's 750 MW Ormond Beach Unit 2 was extensively modified to reduce minimum load from 250 MW to 36 MW. With the unit operating at minimum load frequently at night, it became economically attractive to install adjustable-speed drives (ASDs) on each of the 6250 hp Forced Draft Fan Motors.

The ASD technology that was used is a fourth generation current-source, GTO-PWM inverter that is used in a configuration fostered by a series of five ASD field tests conducted for EPRI by Bechtel in the period from 1984 to 1989. This ASD concept has features that ensure the high degree of reliability that is needed in these high capacity utility power plant applications. These features are as follows:

- 12 pulse inverter to minimize harmonics to the utility bus.
- UPS for ASD control power to eliminate outside influences on the operation of the ASD.
- Input transformer and ground at the motor side of the inverter to prevent high line-to-neutral voltage on the motor.
- Selective harmonic elimination inverter control to preclude electrical resonance between output filter and motor.
- Liquid cooling of thyristors to prevent temperature-related failures.

The Ormond Beach ASD system is the world's largest and most sophisticated of its kind. These 7200hp ASDs have operated for 3 years with no backup system, attesting to the reliability that can be achieved with this approach.

This paper describes the application concept that has evolved from the EPRI tests, the GTO-PWM ASD technology, field test results of power savings, measured harmonics at utility bus and at the motor, effect of THD reduction by using an input harmonic filter, and operating experience to date. Fan inlet vanes have been removed, and no ASD bypass was provided.

92 WM 059-6 EC A paper recommended and approved by the IEEE Electric Machinery Committee of the IEEE Power Engineering Society for presentation at the IEEE/PES 1992 Winter Meeting, New York, New York, January 26-30, 1992. Manuscript submitted July 12, 1991; made available for printing January 15, 1992.

INTRODUCTION

The technology for the adjustable-speed drives (ASDs) used for the Ormond Beach Generating Station Unit 2 Forced Draft Fans resulted from the experience gained in five EPRI-supported ASD field tests that were conducted by Bechtel for utilities between 1984 and 1988. This fourth-generation induction motor ASD technology is now being reported to industry because of the reliability that is being demonstrated by this high-power, high technology power electronics speed control system. The 7200 hp ASDs have been in operation for three years at Ormond Beach. The 6250 hp, 890 rpm, 13.2 kv, 1.15 service factor induction motors that drive the Unit 2 Forced Draft Fans are among the highest horsepower motors in any of the Southern California Edison generating stations. The Ormond Beach plant, located in Oxnard, California, has two 750 MW supercritical pressure boilers. Because the supercritical, once-through boiler design does not lend itself to frequent on-off cycling in an economic manner, the units are not typically shut down at night even though the output may not be needed during those hours.

The Unit 2 boiler has been extensively modified to allow operation at reduced minimum load which is now 36 MW, down from the 250 MW design value for minimum load. Studies were made in 1985 of the savings in unit auxiliary power that could be achieved if ASDs were used to reduce fan speed at night with the unit output reduced to as low as 36 MW. These studies showed that the fan horsepower at minimum load with inlet vane control was 3000 hp per fan and that it could be reduced to 250 hp per fan with ASD control. The value of the energy saved was estimated at up to $1.5 million annually depending on the annual load curve and the future cost of fuel.

EPRI SPONSORED ASD TESTS

In the meantime, EPRI conducted field tests at the five following locations with four different inverter technologies:

1984 1. Sierra Pacific Power Co., Ft. Churchill Plant. 1-2000 hp Boiler Feed Pump ASD with 12-pulse current source inverter, air cooled.

9604150092 960404
PDR ADOCK 05000397
P PDR

© 1992 IEEE

Feed Pump ASD with 12-pulse current source inverter, air cooled.

1985 2. Gulf States Utilities, Willow Glen Plant. 1-2250 hp Boiler Feed Pump ASD with 6-pulse modified load-commutated inverter (SCR type), water cooled.

1988 3. Iowa Public Service Co., Neal Plant. 2-6300 hp Boiler Feed Pump ASDs, modified load-commutated inverter (GTO type), air cooled.

1987 4. Oklahoma Gas & Electric Co., Seminole Plant. 2-5000 hp FD Fan ASDs, current-source GTO-PWM inverter, air cooled.

1988 5. Sierra Pacific Power Tracy Plant 1-2000 hp Boiler Feed Pump ASD, current source GTO-PWM inverter, air cooled.

From the experience gained in these field tests, EPRI fostered a concept for an advanced high-horsepower utility type induction motor ASD. General features that were identified for this ASD are as follows:

- Twelve-pulse input to minimize harmonics to the power system.
- Input transformer and system ground on the motor-side of the inverter to control line-to-ground voltage at the motor.
- Water cooling of thyristors for more effective heat removal.
- UPS system for ASD controls to eliminate outside influences that could affect operation of ASD firing circuits.
- Means to prevent resonance between the output filter capacitor and the motor that can happen near half frequency and below. This electrical resonance has caused high lateral and torsional vibration in some ASD installations.

ORMOND BEACH ASD TECHNOLOGY

The EPRI concept is depicted in Figure 1 and was strictly applied in the Ormond Beach installation. The ASDs are a fourth generation in technology development as compared to the Ft. Churchill ASD. Specific development features in the new ASDs are as follows:

- Water-cooled rectifier thyristors, water-cooled inverter GTO thyristors and water-cooled snubber resistors.
- Symmetrical GTO thyristors, eliminating the need for blocking

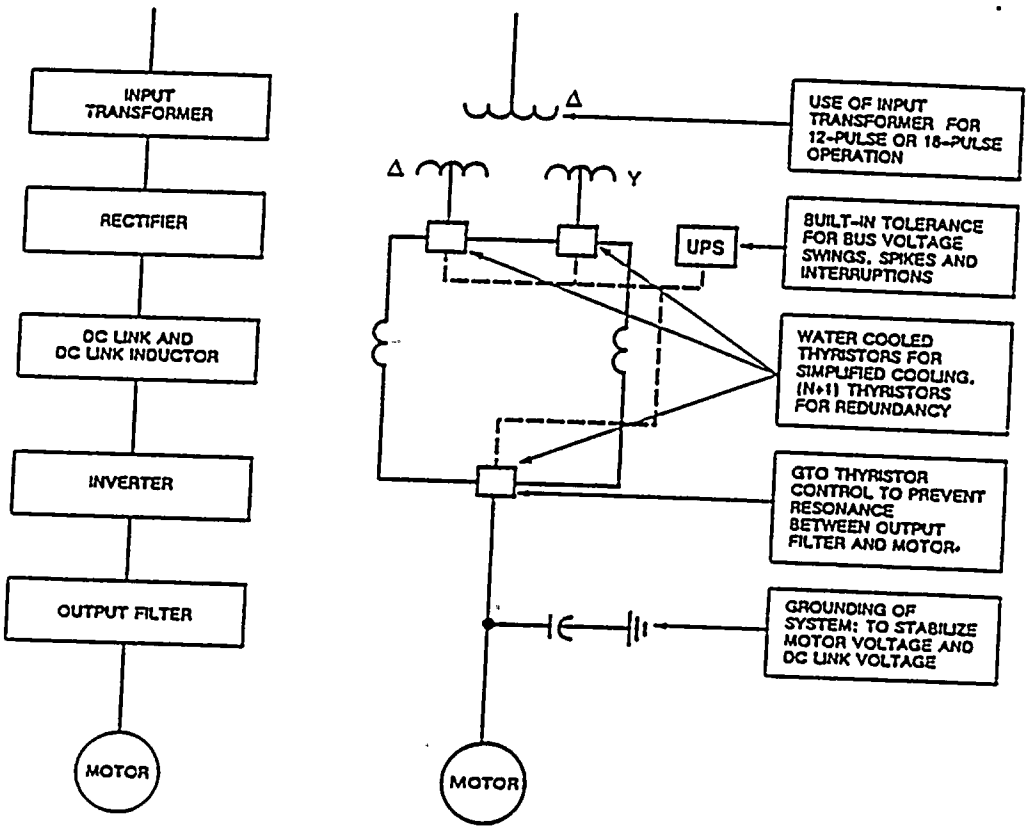

Figure 1
PREFERRED CONFIGURATION FOR LARGE POWER PLANT ASD
TYPICAL 4160 VOLT SYSTEM

diodes used at Seminole and Tracy.

- Current-source GTO-PWM inverter technology to prevent any resonance between output filter and motor.
- Single microprocessor to control both rectifier and inverter.
- Output filter kVA reduced to 85 percent of motor rating (down from 100%) with use of GTO current-source inverter technology.
- Advanced microprocessor system to control volts/hertz profile, motor voltage, vars to motor and harmonics to power system.

ASD DESIGN CONSIDERATIONS

The power converter circuit is shown in some detail in Figure 2.

The two source-side converters are connected in series and each fed from separate transformer windings at 2300 volts. The windings are delta and wye to achieve the harmonic cancellation of a 12 pulse converter. Each leg of the 3-phase bridge converter has three 53 mm thyristors in series, each having a peak repetitive voltage (PRV) rating of 3200 volts. The maximum peak voltage applied by the circuit is 3600 volts, thus permitting full capability with two thyristors operational and the third shorted (N+1 capability). The thyristor devices operate at 95°C junction temperature maximum, considerably below the design junction temperature of 125°C which ensures long life and MTBF. Each thyristor device has an R-C snubber network, voltage equalizer resistor and gate isolation transformer. One gate driver circuit is used to provide pulses to the three series connected thyristors.

The load-side converter is driven by the dc link at 5045 volts at rated speed and supplies ac power to the output transformer at 4160 volts at rated speed. Each leg of the three phase bridge converter has four 77 mm GTO

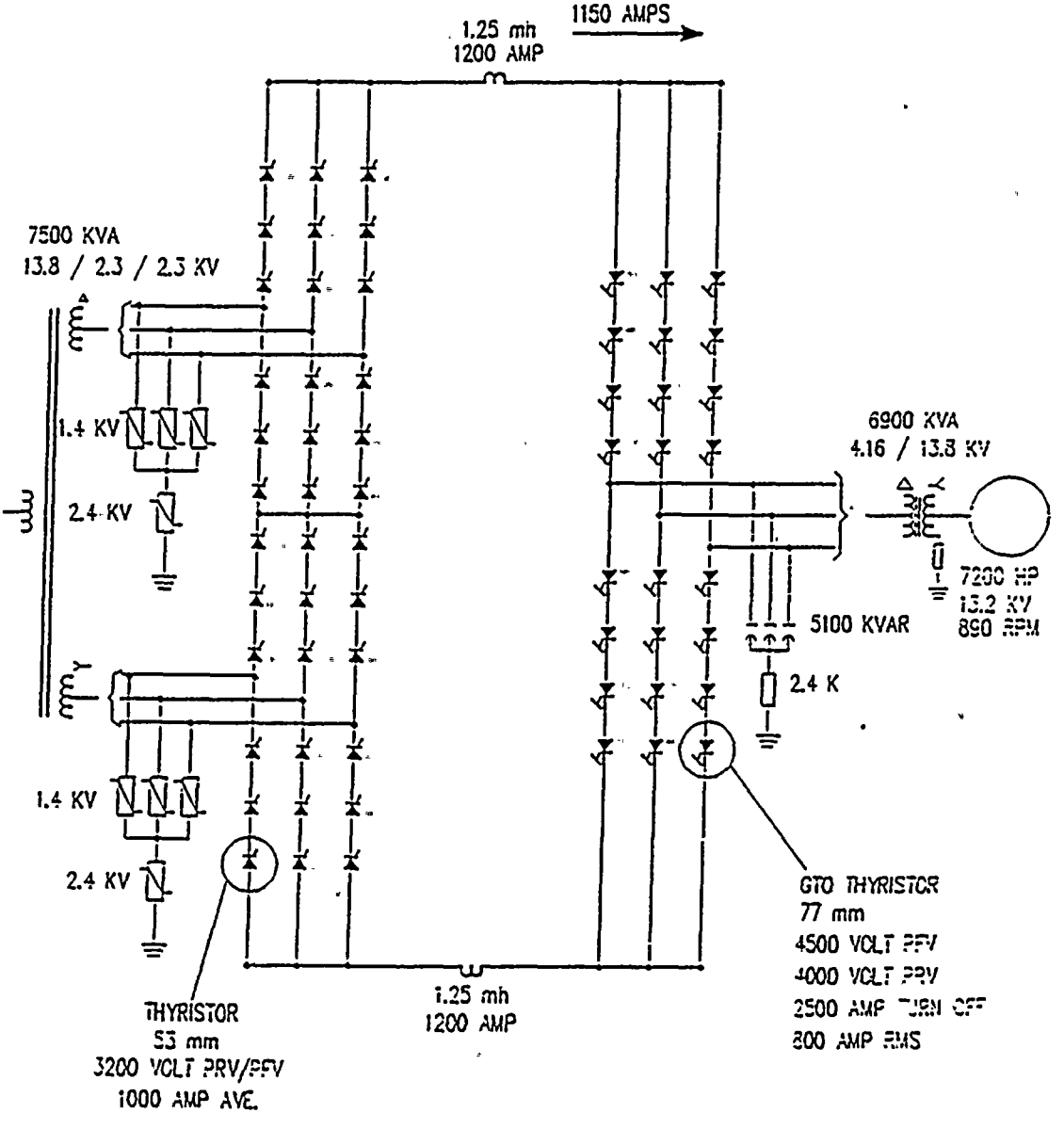

FIGURE 2 – Power Converter Circuit

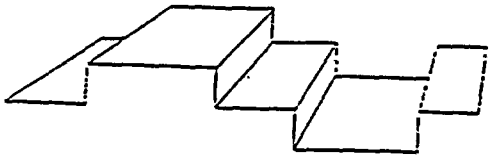

Normal inverter output current

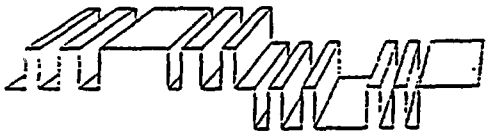

PWM inverter output current
for elimination of 5th and 7th
harmonic current

FIGURE 3 – Selective Harmonic Elimination

thyristors in series, each having a peak repetitive forward voltage rating of 4500 volts and peak reverse voltage rating of 4000 volts. The peak maximum voltage applied by the circuit is 5900 volts, again permitting full capability with three GTO's operational and one shorted. The GTO devices operate at 105°C maximum, again below the design junction temperature of 125°C. Each thyrsitor device has an R-C snubber network, voltage equalizer resistor and a gate driver which is optically coupled to the low voltage control system.

The control is implemented by one 80286 microprocessor which provides the regulator, protective and diagnostic functions and a self-checking diagnostic program at power up. The regulator functions include a outer speed loop with inner control loops for motor torque, current and flux. In addition, a SHE (Selective Harmonic Elimination) function is implemented by PWM (pulse width modulation of the inverter output current to prevent high current and torque at the resonant frequency of the LC load circuit. Figure 3 shows an example of the PWM pattern for SHE.

The liquid cooling system is a self-ventilating closed loop system using a deionized water/glycol mixture with forced circulation and liquid to air heat exchanger for 50°C ambient air. Redundant full capacity pumps and heat exchanger fans with automatic change-over are supplied. The cooling system removes the losses of the thyristor devices and snubber resistors.

FIELD TESTS AT ORMOND BEACH

After start-up of the ASD equipment in June, 1988, tests were conducted to verify the fan power over the speed and load range with ASD control. Tests had been made before the installation of the ASDs to obtain fan power measurements with vane control. The results of the tests, shown in Figure 4, verified calculations made before the start of the project. Motor input frequency and motor speed for different MW loading are shown in Table 1.

The manufacturer of the FD fans recommended fan rotor replacement with a new rotor design with less propensity to develop fatigue cracks. Calculations and tests were performed with old and new rotors (Figure 4).

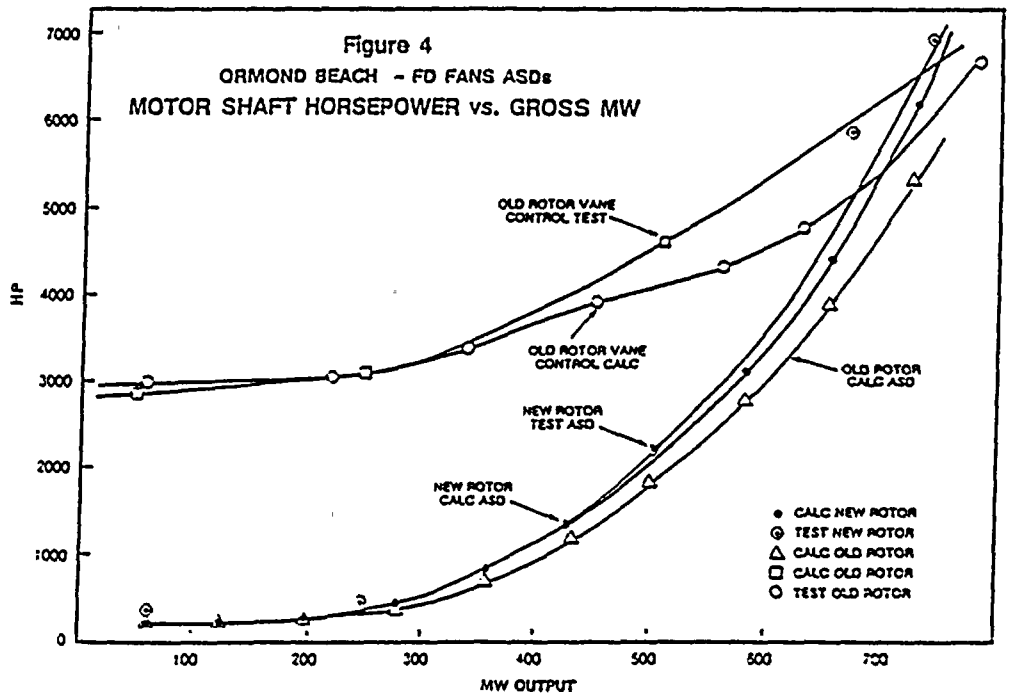

Figure 5
THD-V INPUT

PERCENT THD					
% RPM	CALC NO FILTER	CALC FILTER	% RPM	TEST NO FILTER	TEST FILTER
100	4.98	1.3	97.5	3.67	0.6
75	5.3	2.25	93.7	3.27	0.7
50	4.3	1.9	67	3.1	0.5
25	3.14	1.35	40 36	2.2 1.9	1.0

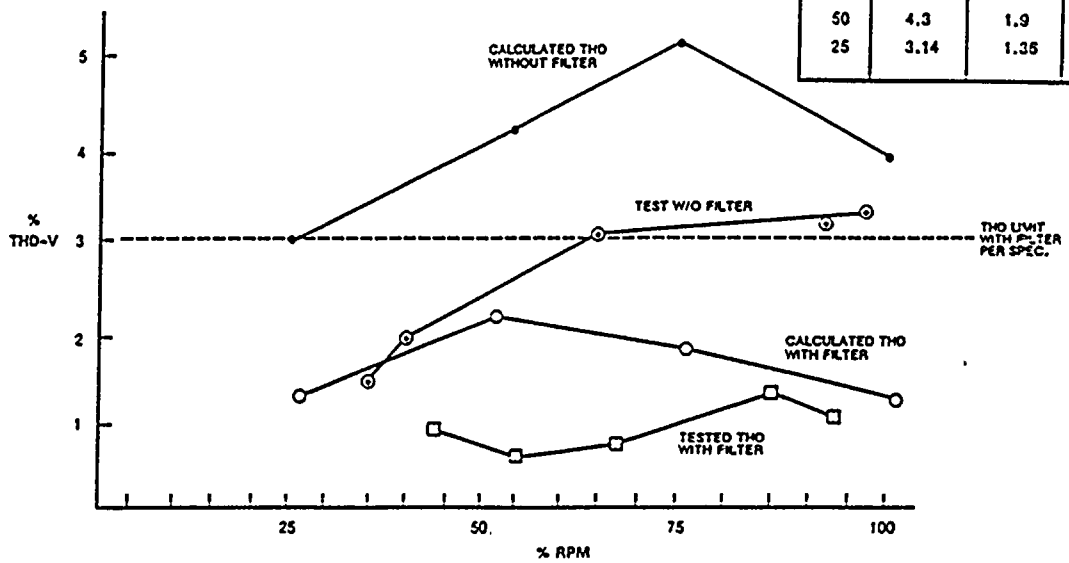

TABLE 1
ASD CONTROL OF FD AIR AT
ORMOND BEACH

MW	hz	RPM	AIR FLOW CFM
750	58.5	833	930,000
667	56.25	802	900,000
500	40.68	580	660,000
250	24.02	342	400,000
62	21.76	310	350,000

Original calculations had shown a maximum voltage total harmonic distortion of 5.2% at the 13.2 kV bus because of the rectifier harmonics. Because of concern for the possible effect of these harmonics on other plant components, an input harmonic filter was installed on the bus. Tests showed harmonics levels as in Figure 5 with and without the filter. Without the filter, input THD at full load was 3.2 percent. With the filters in service, maximum input voltage THD was 1.3 percent. Harmonics have not been a problem, with or without the filter, and the filter itself has not caused any problems. ASD efficiency at full load was measured at 97.5% as consistent with the manufacturer's expectations.

OPERATING EXPERIENCE 1988 - 1991

The ASDs went into service in June, 1988 with relatively few problems. The ASDs carry an availability guarantee and a multiyear parts and labor warranty. Since installing the ASDs, the plant operators have chosen to operate these fans without inlet vanes. Thus, the fans have operated without a backup control system in case of ASD failure.

Initial problems were as follows; but it should be stressed that neither of these ASDs has ever caused a critical shutdown of a fan or a shutdown of the generating unit since its first day of in-service operation:

1. The output voltage, current, and volts per hertz profiles required field adjustment to allow rated output voltage of the ASDs.
2. The transformer taps on one input transformer were set on the lowest tap and required adjustment.
3. An intermittent internal electrical noise source caused an extra zero crossing in the control voltage to the ASD causing erroneous operation.
4. The input transformers had a damaged sudden pressure relay and developed oil leaks at the oil level gauge.
5. Leaks developed in the external copper water piping from poor brazing.
6. The cooling fans on the water-to-air heat exchangers are noisier than expected.
7. A delayed auxiliary bus transfer because the bus voltage was maintained by the input harmonic filter capacitors.
8. Input capacitor liquid leaks from shipping damage.
9. A few isolated electronic component failures from unknown causes during start-up.
10. Nuisance ground tripping during start-up from an overly sensitive ground detector and feeder cable capacitance.
11. Cooling water conductivity alarms during initial system cleanup.
12. ASD cabinet wiring errors.

Solutions to all these problems except the noisy heat exchanger fans have been implemented.

Operation of the forced draft fans with ASD control received immediate acceptance by the control room operators. Problems of inlet vanes freezing in one position have been eliminated. The fine control offered by the ASDs has been far superior to the inlet vane control which had a long tradition of problems at this site.

The heat rate improvement resulting from the FD fans ASDs is shown in Table 2.

TABLE 2
CULATED HEAT RATE IMPROVEMENT FROM ASDS

MW	HEAT RATE	HEAT RATE IMPROVEMENT
60	19,771	1038
272	10,111	138
348	9,834	105
425	9,656	91
502	9,506	79
578	9,522	39
655	9,538	14
732	9,645	10

EFFECT OF ASD'S ON MOTOR PERFORMANCE

There was no observable effect of the ASD causing degradation of motor performance. Motor line-to-line voltage and line current wave shapes with the Unit at 750 MW are shown in Figure 6. Operating at about 6695 horsepower and 58.5 Hz, voltage and current harmonics were as follows:

TABLE 3
HARMONICS TO THE MOTOR AT 750 MW

Harmonics	Freq(Hz)	VAB(volts)	IA(amperes)
1	58.5	11,549	306
5	291	658	13
7	410	263	4
11	640	103	1
13	760	68	1

output wave shape of the ASD contains no tage spikes. There was no evidence of additional motor heating or vibration at any operating speed.

Figure 6
VOLTAGE AND CURRENT WAVESHAPES
6695 HP, 58.2 Hz

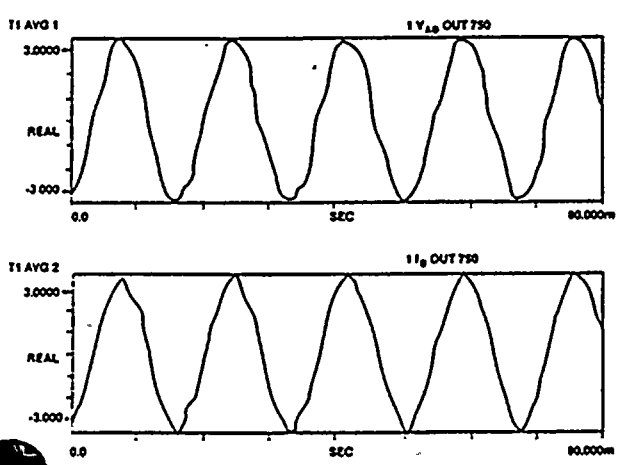

CONCLUSION

The experience with these two 7200 hp induction motor ASDs demonstrates that highly reliable ASDs for power plants are available. By using the application engineering approach outlined in this paper and by taking advantage of these new developments in high power ASD design, utilities and their industrial customers can now gain the benefits of this advanced technology without the concerns for reliability of power electronics.

REFERENCES

"Application of Adjustable-Speed Drives for Large Power Plant Motors", J. A. Oliver and R. A. Martinson. Pacific Coast Electrical Association, Engineering and Operating Conference, March 17, 1983.

"Conversion of Boiler Feed Pump to Adjustable Operation", Wilbur Montgomery, James A. Oliver, Ralph J. Ferraro. Pacific Coast Electric Association, Engineering and Operating Conference, March 20, 1985.

"Retrofitting for Variable Load and Sliding Throttle Operation: Adjustable Speed Drives", James A. Oliver, Ralph J. Ferraro, Wilbur Montgomery, Eugene K. Kempers. American Power Conference, April 24, 1984.

"Converting Motors in Power Plants To Adjustable Speed Operation with Power Electronics", J. A. Oliver and R. J. Ferraro. CIGRE International Conference on Large High Voltage Electric Systems, September 1, 1986.

"Power Measurement and Harmonic Analysis of Large Adjustable Speed Drives", J. A. Oliver and B. Ben Banerjee. IEEE Summer Power Meeting, San Francisco, July 15, 1987.

"Symmetrical GTO Current Source Inverter for Wide Speed Range Control of 5300 to 4160 volt, 350 to 7000 hp Induction Motors." Paul Espelage, James M. Nowak, Loren H. Walker. IEEE-IAS Annual Conference, October 2-7, 1988, Pittsburgh, PA.

"Proven Criteria Imperative to the Application of ASDs to Large Power Plant Motor Systems", James A. Oliver and Marek J. Samotyj. IEEE Summer Power Meeting Minneapolis, July 15-19, 1990.

"Lessons Learned From Field Tests of Large Induction Motor Adjustable Speed Drives, 1984-1989", J. A. Oliver and M. J. Samotyj CIGRE Conference, August 26-30, 1990, Paris.

Mr. James A. Oliver - S.M. received the B.S.E.E. (1950) from the University of Maine and the M.E.E. (1960) from the Polytechnic Institute of Brooklyn.
He is the Product Line Manager for Adjustable Speed Drives for Bechtel Corporation in Norwalk, California, and he managed the EPRI ASD power plant retrofit project starting in 1982.

His prior experience includes Vice-President of Engineering for the National Electric Coil Division of the McGraw Edison (1971-1978) and Rotating Machinery Specialist for American Electric Power Service Corporation (1950-1971).

Mr. Oliver is Vice-Chairman of the IEEE Electric Machinery Committee, A U.S. Expert on CIGRE Committee 11 - Rotating Machines and a member of the ANSI C50 Rotating Machinery Committee. He has authored a number of papers related to rotating electrical machinery and adjustable speed drives.

Marek Jan Samotyj is a Senior Project Manager in the Power Electronics and Controls Program, of the Customer Systems Division, at the Electric Power Research Institute (EPRI) in Palo Alto, California. During 1984, Mr. Samotyj was a Consultant for Power Electronic Systems at the Institute. He joined the Institute as an employee in 1985.

Before coming to EPRI, Mr. Samotyj was a Research Assistant for the Energy Modeling Forum at Stanford University (1982-1985). From 1980 to 1981, Mr. Samotyj was a Consulting Member of the Scientific Board of the Future Research Center at Technical University in Wroclaw, Poland, and a Consultant for R&D planning strategy with the Commission on the National Economic Reform in Warsaw, Poland. From 1971 to 1975, he was a Consulting Staff Engineer and Project Manager for the Polish Ministry of Mining and Energy.

Mr. Samotyj received his B.S. (1969) and M.S. (1971) degrees in Electrical Engineering from Silesian Polytechnical University of Gliwice, Poland, He received an M.S. in Engineering-Economics Systems from Stanford University in 1985. From 1981 to 1982, Mr. Samotyj was a Fulbright Senior Scholar, and the Fellow of the Professional Journalism Program at Stanford University.

He is a member of the Institute of Electrical and Electronics Engineers and a member of CIGRE, International Conference on Large High Voltage Electric Systems.

Herbert W. Weiss - Received the BSEE degree from Lehigh University, Bethlehem, Pennsylvania in 1952. He joined General Electric Company in 1952 and has worked in various capacities related to the installation and design of power electronic equipments and systems for adjustable speed motor drives.

He is presently Manager, Advanced System Engineering for AC and Special Process Drives at the GE Drive Systems Plant in Salem, Virginia.

Mr. Weiss has authored six technical papers on adjustable speed ac drives and holds seven patents. He is a Senior Member of IEEE.

Mr. R. K. (Bob) McCluskey - is currently a Senior Research Engineer and Project Manger in Southern California Edison's Research Division and responsible for Electronic Controls and Diagnostics, Power Quality Analysis, and Technology Transfer.

His professional background includes a Bachelor of Science degree in Electrical Engineering from Iowa State University of Science and Technology and nineteen years in the electric utility industry. He has work experience in the planning, siting, design, construction and startup of major steam electric generating plants, energy service facilities, and pollution control apparatus, as well as research and development associated with emerging advanced technologies including fuel cells, bulk energy storage, electric transportation, ground-fault detection, energy metering, adjustable speed drives, variable speed generation, expert monitoring and diagnostics, and most recently utility regulatory policy matters.

Mr. McCluskey has served as a utility advisor to the Electric Power Research Institute, and is a member in good standing of Tau Beta Pi, Eta Kappa Nu, and the Air and Waste Management Association.

Discussion of: ADJUSTABLE SPEED DRIVE RETROFIT FOR ORMOND BEACH FD FANS

By: J. A. Oliver, et al.

N. E. Nilsson (Ohio Edison Company, Akron, Ohio)
The authors are to be congratulated for their development of another excellent paper in a series of papers on adjustable speed drives (ASDs). Perhaps the most important information in this paper is the tabulation of possible problem areas. This reviewer recalls the problems experienced with the isolating transformers installed as part of the ASD system at the Ohio Edison Company R. E. Burger Plant due to harmonic heating which had not been factored into the original design.

Would the authors elaborate on what was done to address the problems identified. Were the cooling fans on the water-to-air heat exchangers noisier than expected because they were defective, or was it due to a differently designed fan than specified? Were defective fans replaced? Was the fan design modified?

What specifically were the electronic failures? What impact did the changed bus transfer time have on the system? What kinds of wiring errors were discovered? How long did it take to correct them?

The features applied as a result of field experience appear to be very beneficial. How has the control system with a UPS performed in relation to controllers powered from standard plant electrical systems based on the authors' experience? What was the means used to prevent resonance between the output filter capacitor and the motor? How much reduction in lateral vibration has been realized?

Discussion Question for:

ADJUSTABLE-SPEED DRIVE RETROFIT FOR
ORMOND BEACH FD FANS

This is an interesting paper on a timely subject. I was especially pleased to see the comments from the operations people concerning the improvement in unit operation.

We are evaluating a project to retrofit FD fans at one of our larger power plants. We are well aware of the efficiency gains, the reduced maintenance, the operation benefits, and the long term improvement in equipment life. Cost to benefit ratios are attractive which means the economic consideration is favorable. However, a question comes to mind concerning the investment. Was there dialogue with the PUC on this project before or after its completion? How did Southern California Edison Co. address this expense with regards to the rate base. I believe it would be interesting to the readers to hear more information on this aspect of the project; perhaps Mr. McCluskey could comment.

J.R. Michalec
American Electric Power
Columbus, Ohio

DISCUSSION

OF

91JPGC 559-5 PWRS

ADJUSTABLE-SPEED DRIVE RETROFIT

FOR

ORMOND BEACH FD FANS

BY

J.A. Oliver
H.W. Weiss
R.K. McCluskey
M.J. Samotyj

DISCUSSION

BY

Newell S. Porter
Washington Public Power Supply System
P.O. Box 968, MS 580
Richland, WA 99352

Discussion

N.S. Porter (Washington Public Power Supply System): The success of the Ormond Beach Project has prompted us at the Supply System to accelerate the application of adjustable speed drives (ASDs) in two areas, megawatt savings and improved plant performance. Our first application will apply this technology to drive the reactor recirculation coolant (RRC) pumps. The design of the RRC system relies on two 8900 HP induction motor driven centrifugal pumps to force coolant through the reactor core. Varying the core coolant flow rate is a primary means of controlling reactor power level. This is accomplished by using a 15Hz motor-generator set to drive the motors at a slow speed and then switching to 60Hz for fast speed. Flow adjustment is accomplished by using hydraulically operated flow control valves, a method analogous to driving ones automobile with the engine at constant RPM and controlling speed using the brakes! Not only is this a waste of energy, but the resulting turbulence causes excessive vibration in the piping systems. The ASD will control flow and reactor power with motor speed, thus conserving energy, eliminating excessive vibration, and reducing mechanical stresses during startups, shutdowns and control rod sequence exchanges.

Our equipment will be similar to that reported in this paper. The motors are rated for 6900 volts so input and output transformers will be used for the 4160 volt ASDs. A significant development will be a two-train system, as shown in Figure 1, for each ASD with the capability to operate with either one. For two-train operation, the ASD will be 12-pulse input, 12-pulse output. For single train operation, the ASD will be 6-pulse input, 6-pulse output. The capacity of a single train is 7200 HP or 80 percent of the RRC pump rating. In addition to the two-train capability, the ASDs have one extra SCR thyristor in each inverter leg and one extra GTO thyristor in each inverter leg (N+1). Based on the high degree of reliability achieved at Ormond Beach and the redundancy of the two-train system, along with the (N+1) feature, the existing valve control systems and 15 Hz motor-generator sets will be removed at WNP-2 when the RRC pump ASDs are installed.

It is noted that the paper does not discuss another positive aspect of ASD application, the soft starting of motors. The drives essentially eliminate the high inrush currents typical of motor starting, thus reducing thermal and mechanical stresses.

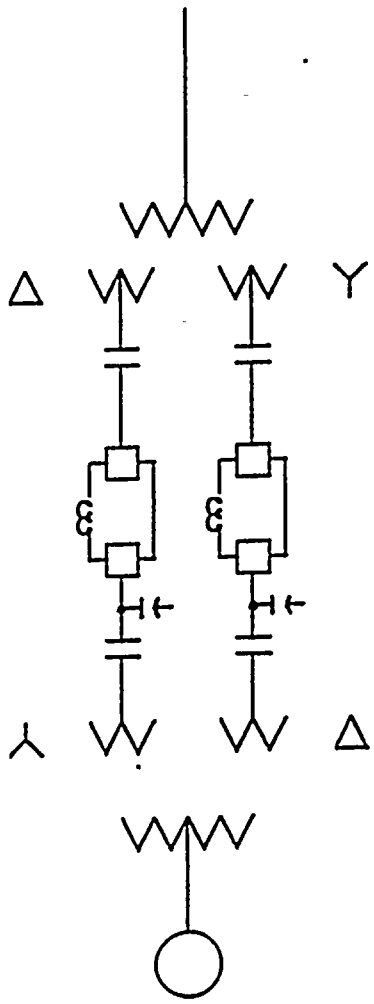

Figure 1
WNP-2 RRC ASD

CLOSURE FOR

"ADJUSTABLE-SPEED DRIVE RETROFIT FOR ORMOND BEACH FD FANS"

The authors wish to thank the discussers for their contributions which add considerably to the breath of the paper.

In response to Mr. Nilsson, the 2 hp cooling fans on the air-to-water heat exchangers are still noisier than the 6000 hp FD fans when the FD fans are operated at reduced speed. The problem exists because the ASD specification did not address a noise limit on the cooling fans. Without contract language, the ASD manufacturer does not recognize this as a problem.

The isolated electronic failures mentioned in the paper was one GTO and one circuit board failure during the start-up period. Replacements were quickly made. Wiring errors in the ASD cabinet were related to relays added as part of the system interface.

Once the effect of the harmonic filter in maintaining bus voltage during bus transfer was seen, the transfer scheme was modified to trip the filter before initiating transfer.

Four major reliability enhancements used with the Ormond Beach ASD installation are as follows:

- Grounding of the motor side of the ASD to let line-to ground voltage excursions occur within the input transformer

- Supplying ASD control power from a UPS

- Water cooling of the thyristors

- N + 1 thyristors and GTO's in each circuit

As a result of these features there have been no ASD related trips of the FD fans or of the Unit. Several of the 5 ASD EPRI sponsored field test installations have continued to experience thyristor failures that are either related to high operating temperature or control voltage problems. It appears from experience that the Ormond Beach reliability features significantly improve performance.

Resonance between the output filter and the motor leakage reactance is totally eliminated by the selective harmonic elimination feature of the ASD. In the PWM algorithm, harmonics are eliminated when they can produce a frequency of 150 hz so that there is no resonance. The harmonics that are eliminated are as follows:

fundamental frequency, hz	harmonic order	frequency eliminated
11.5	13	150hz
13.6	11	150hz
21.4	7	150hz
30.0	5	150hz

There has been no motor vibration, lateral or otherwise, as a result of operating with these ASDs.

Mr. Porter has pointed out that the approach used to engineer reliability into the ASD system at Ormond Beach has led directly to the decision by Washington Public Power System to install ASDs on their 8900 hp Reactor Recirculating Pumps (RRC) at WNP-2. They have decided to remove the hydraulically operated RRC system control valve and replace it with a spool piece. According to Reference 1, with the dual train system proposed for WNP-2 there would be significant increase in reliability. From Reference 1, the mean time before failure (MTBF) for Ormond Beach would be 48,000 hours and for WNP-2, 137,000 hours.

In response to Mr. Michalec's inquiry, discussions were held with a representative of the Public Utilities Commission after the ASDs went into service (at the request of the PUC). Because of the annual fuel cost savings, which were calculated to be over $500,000 per year, and which were verified by tests, before and after the ASD installation, the cost of the ASD installation was allowed in the rate base.

1. P. K. Steiner and A. B. Giesecke "Increased Availability of Large AC Adjustable-Speed Drive Systems" American Power Conference Chicago, April 1991.

Mr. McCluskey is presently a Senior Research Engineer and Project Manager in Southern California Edison's Research Division Quality Analysis. His professional background includes a Bachelor of Science degree in Electrical Engineering from Iowa State University of Science and Technology and twenty years in the electric utility industry. He has work experience in the planning, siting, design, construction and startup of major steam electric generating plants, energy service facilities, and pollution control apparatus, as well as research and development associated with emerging advanced technologies including fuel cells, bulk energy storage, electric transportation, ground-fault detection, energy metering, adjustable speed drives, variable speed generation, expert monitoring and diagnostics, and most recently utility regulatory policy matters.

Mr. McCluskey has served as a utility advisor to the Electric Power Research Institute, and is a member in good standing of Tau Beta Pi, Eta Kappa Nu, and the Air and Waste Management Association.

DISCUSSION OF PROJECTS

Ormond Beach FD Fan ASD's

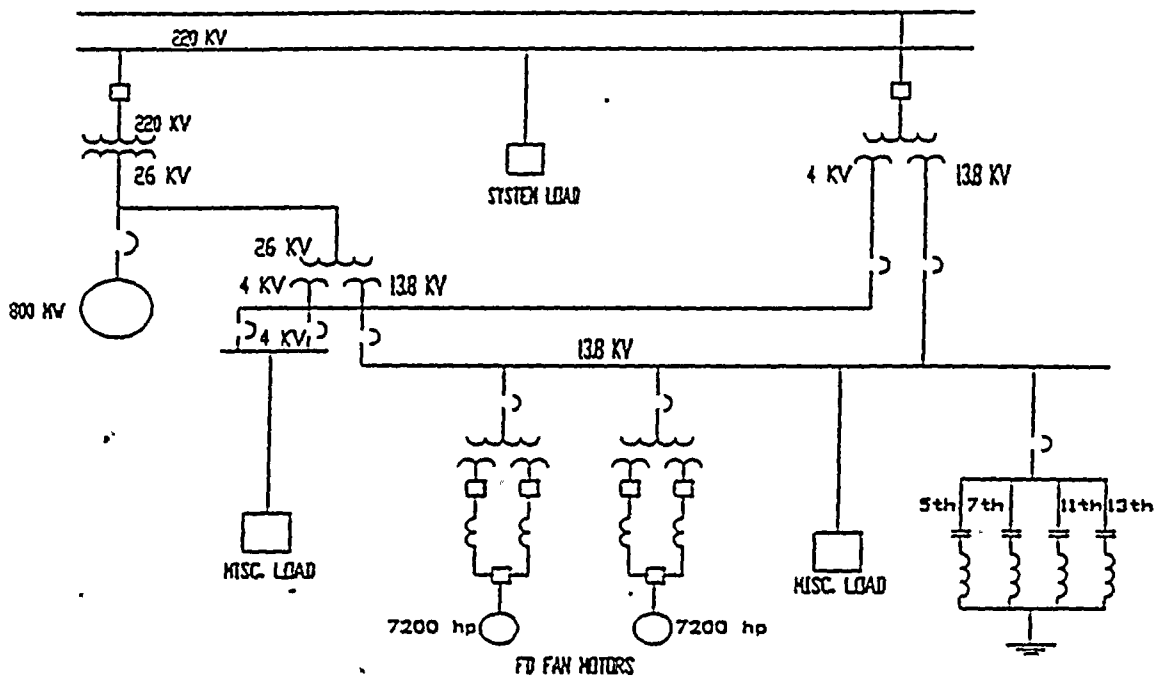

Figure 6 ORMOND BEACH FD FAN ASD's

Measured harmonic data had been obtained prior to testing the two 7200 hp adjustable speed drives (ASD's) at Southern California Edison's Ormond Beach Plant in 1989. The first use of V-Harm was to calculate the harmonics produced by the ASD rectifier and compare it to test data. Because of the advanced engineering content of the program and the brief instructions supplied by Cooper, three to four weeks were required to develop proficiency in using the program. The Ormond Beach calculations were carried out with close approximation to the field test data. The program's output data was simplified by using an auxiliary program.

Figure 6 shows the simplified single line diagram used in modeling the Ormond Beach Plant, Unit 2. Figure 7 provides some additional detail for the two 7200 hp ASD's that were installed on the Unit 2 Forced Draft Fans. As can be seen in Figure 7, three-winding

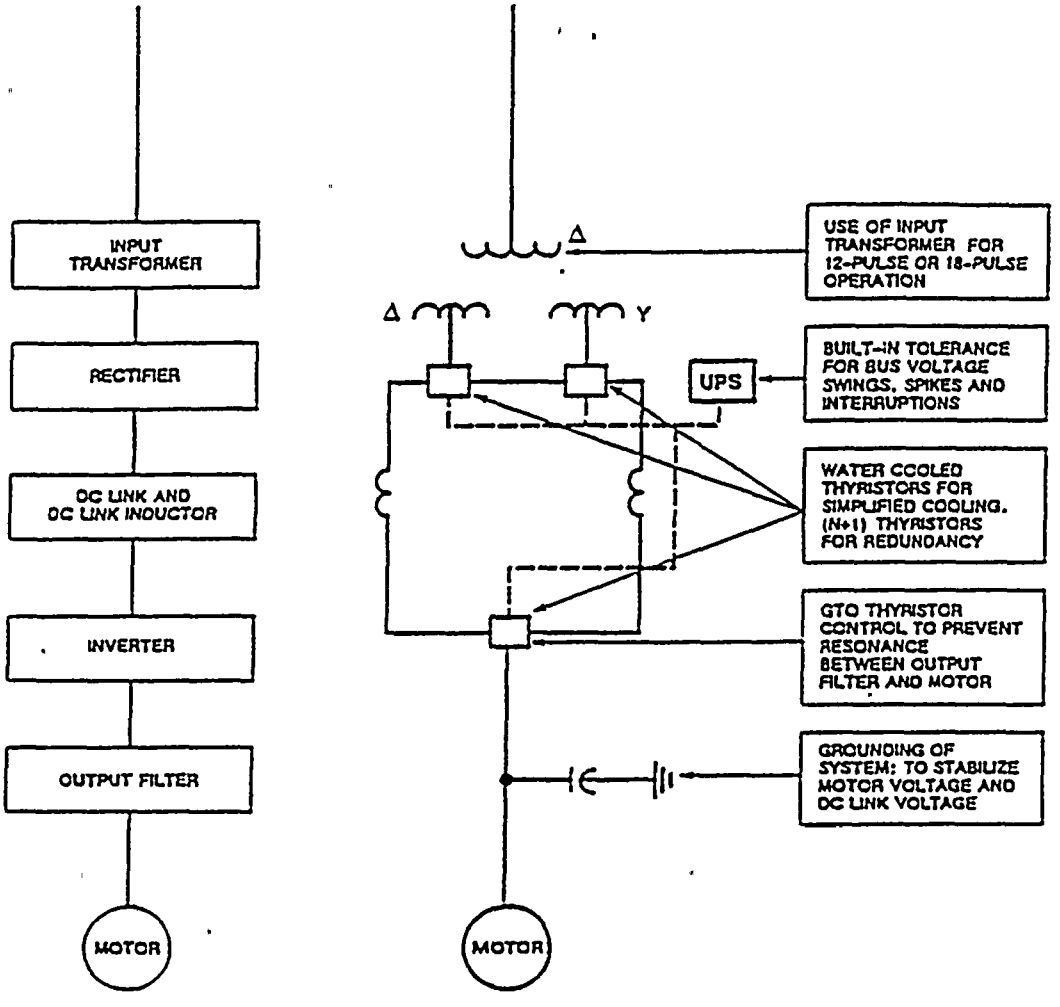

Figure 7 DETAILS OF ORMOND BEACH ASD's

transformers were used for each of the fans. The use of such transformers is a common practice on larger ASD's because they provide cancellation of 5th and 7th harmonics by the 30° phase shift difference between the low voltage delta and wye windings. The 4kV bus input voltage and current wave shapes recorded during testing of these ASD's after installation at Ormond Beach are shown in Figure 8.

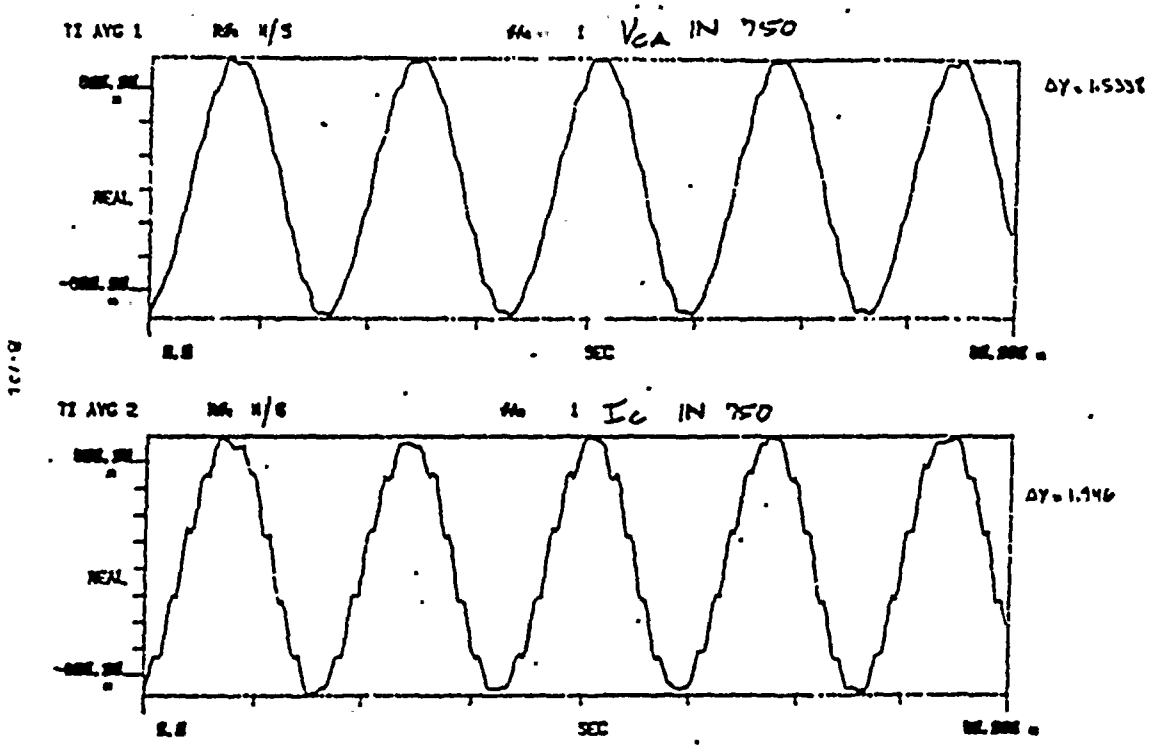

Figure 8 ASD CURRENTS AND VOLTAGES MEASURED AT ORMOND BEACH

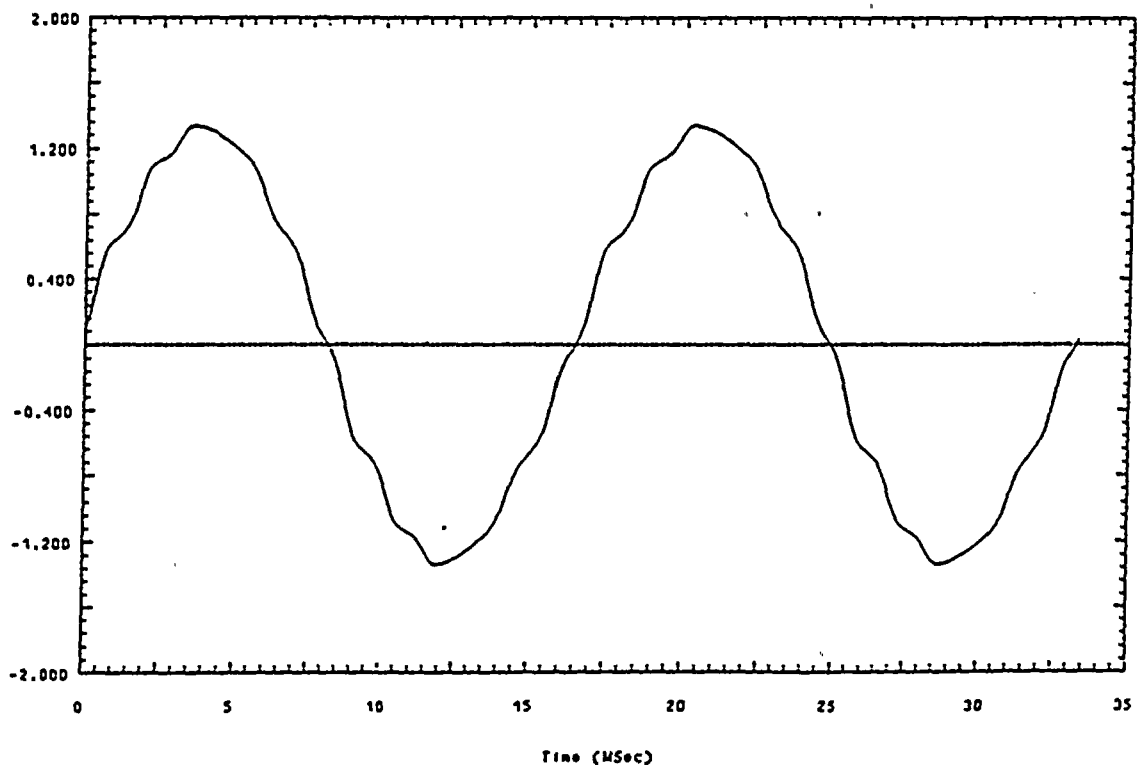

Figure 9 CALCULATED CURRENT FOR ORMOND BEACH 7200hp ASD

The calculated current wave shape for Ormond Beach is shown in Figure 9. Table 1 shows a comparison of calculated and measured harmonics for the installation.

ORMOND BEACH HARMONIC VOLTAGE COMPARISON Plant Power Level of 750 MW Input					
Frequency	Measured Voltage	Measured Current	Calculated Voltage	Calculated Current	Percent Diff. (V)
60	13052	268	12997	275	0.4
300	44	3.9	43	3.9	1.6
420	42.5	3.2	40	3.4	6.3
660	340	16.2	338	15.7	0.7
780	280	11.4	293	11.7	4.5
1380	36	1.2	92	3.0	* 255
1500	36	1.1	87	1.9	* 241

Table 1

* While the correlation between measured and calculated THD at the 23rd and 25th harmonic level was not good percentage wise, the harmonic voltage difference at the power circuit level was not significant considering the frequency effect on impedance.

At the time we were performing the Ormond Beach calculations, we contacted Southern California Edison (SCE) and the Los Angeles Department of Water and Power (LADWP), informed them of our capability to calculate system harmonics and offered to provide a free evaluation if they could provide us with a real world problem.