PRIORITY 1
(ACCELERATED RIDS PROCESSING)

REGULATORY INFORMATION DISTRIBUTION SYSTEM (RIDS)

ACCESSION NBR:9410200151 DOC.DATE: 94/10/13 NOTARIZED: NO DOCKET #
FACIL:50-397 WPPSS Nuclear Project, Unit 2, Washington Public Powe 05000397
AUTH.NAME AUTHOR AFFILIATION
PARRISH,J.V. Washington Public Power Supply System
RECIP.NAME RECIPIENT AFFILIATION
Document Control Branch (Document Control Desk) See Reports

SUBJECT: Forwards "WNP-2 Response To Request For Addl Info On Emergency Classification."

DISTRIBUTION CODE: A045D COPIES RECEIVED:LTR 1 ENCL 1 SIZE: 2+400
TITLE: OR Submittal: Emergency Preparedness Plans, Implement'g Procedures, c

NOTES:

	RECIPIENT ID CODE/NAME	COPIES LTTR	COPIES ENCL	RECIPIENT ID CODE/NAME	COPIES LTTR	COPIES ENCL
	PD4-2 PD	1	1	CLIFFORD,J	1	1
INTERNAL:	FILE CENTER 01	1	1	NRR/DRSS/PEPB	1	1
	NUDOCS-ABSTRACT	1	1			
EXTERNAL:	NOAC	1	1	NRC PDR	1	1

P R I O R I T Y 1 D O C U M E N T

NOTE TO ALL "RIDS" RECIPIENTS:

PLEASE HELP US TO REDUCE WASTE! CONTACT THE DOCUMENT CONTROL DESK, ROOM P1-37 (EXT. 504-2083) TO ELIMINATE YOUR NAME FROM DISTRIBUTION LISTS FOR DOCUMENTS YOU DON'T NEED!

TOTAL NUMBER OF COPIES REQUIRED: LTTR 7 ENCL 7

WASHINGTON PUBLIC POWER SUPPLY SYSTEM

P.O. Box 968 • 3000 George Washington Way • Richland, Washington 99352-0968 • (509) 372-5000

October 13, 1994
GO2-94-235

Docket No. 50-397

U.S. Nuclear Regulatory Commission
Attn: Document Control Desk
Washington, D.C. 20555

Gentlemen:

Subject: **WNP-2 OPERATING LICENSE NPF-21**
RESPONSE TO NRC REQUEST FOR ADDITIONAL INFORMATION REGARDING WNP-2 EMERGENCY ACTION LEVELS

References:

1) Letter G02-93-302, dated December 30, 1993, JV Parrish (SS) to RJ Pate (NRC), "WNP-2 Operating License NPF-21 WNP-2 Emergency Plan Implementing Procedures"

2) Letter GI2-94-179, dated June 24, 1994, JW Clifford (NRC) to JV Parrish (SS), "Request for Additional Information (RAI Regarding Emergency Action Levels (TAC NO. M88504)"

With Reference 1, The Supply System transmitted for review a revised WNP-2 procedure on emergency classification based on NUMARC/NESP-007 Revision 2. Reference 2 requested additional information relative to that submittal. Enclosed with this letter are Supply System responses to that request along with document changes considered to be appropriate in light of the requested information.

The enclosure includes the following:

Responses to Requests for Additional Information
Supporting Information for Responses
Procedure 13.1.1, "Classifying the Emergency"
Procedure 13.1.1A, "Classifying the Emergency - Technical Bases"

170104

A045 1/1

Following NRC approval of procedure content, the Supply System will initiate the necessary actions for effective implementation of the procedure including human factors optimization, Operator and Emergency Response Organization Training, revision of the WNP-2 Emergency Preparedness Plan, and alignment of other impacted procedures.

Should you have any questions or desire additional information regarding this matter, please call me or Mr. G.J. Reed at (509) 377-8568.

Sincerely,

J.V. Parrish (Mail Drop 1023)
Assistant Managing Director, Operations

DEL/ml
Attachments

cc: LJ Callan - NRC RIV
KE Perkins, Jr. - NRC RIV, Walnut Creek Field Office
NS Reynolds - Winston & Strawn
JW Clifford - NRC
DL Williams - BPA/399
NRC Sr. Resident Inspector - 927N

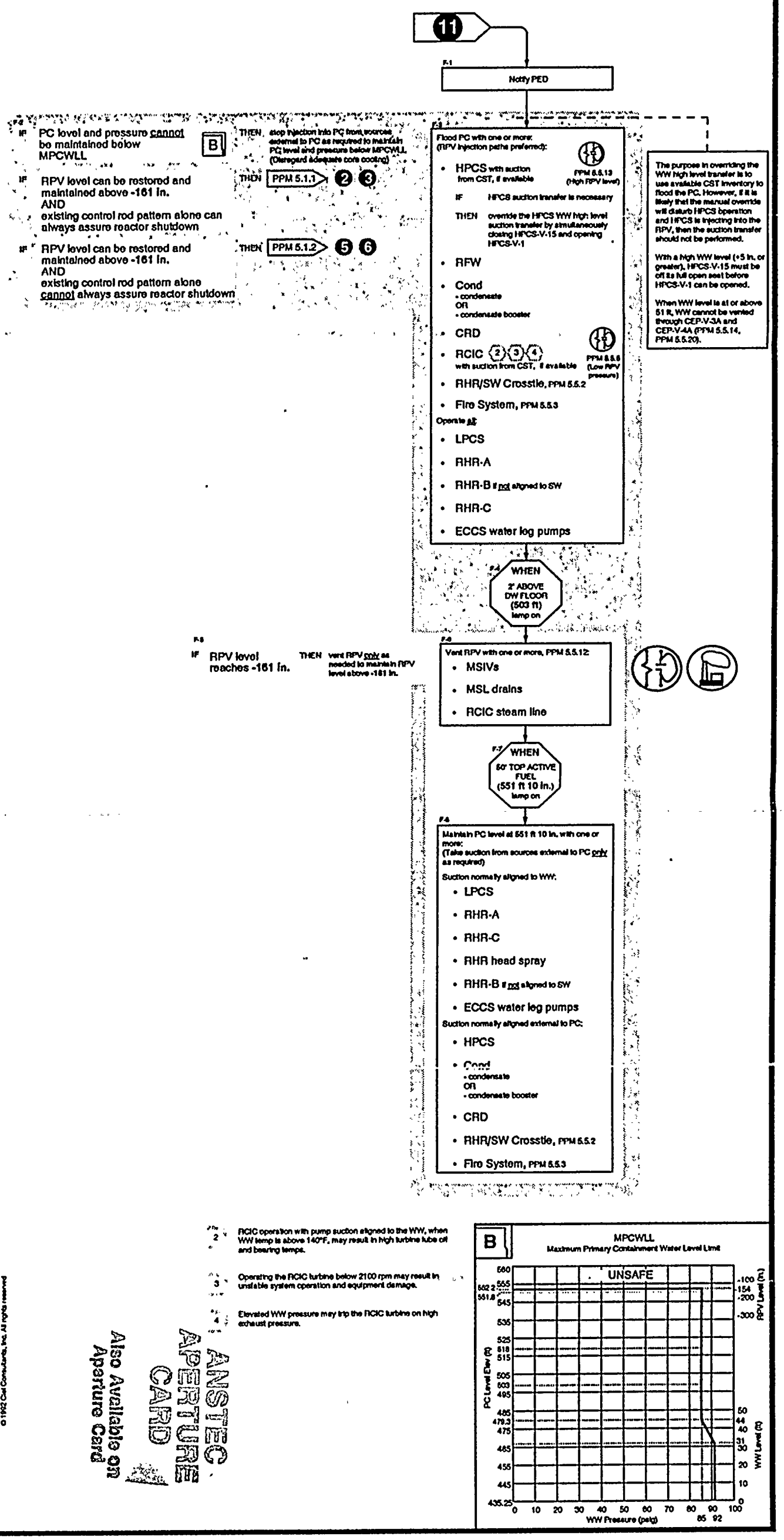

2 RCIC operation with pump suction aligned to the WW, when WW temp is above 140°F, may result in high turbine lube oil and bearing temps.

3 Operating the RCIC turbine below 2100 rpm may result in unstable system operation and equipment damage.

4 Elevated WW pressure may trip the RCIC turbine on high exhaust pressure.

ENGINEERING CALCULATION NO.

NE-02-94-57

RESPONSE OF CONTAINMENT RADIATION MONITORS

The computer print-outs associated with this calculation are available in WNP-2 files.

WASHINGTON PUBLIC POWER SUPPLY SYSTEM

CALCULATION COVER SHEET

BDC Page: --.----.--.---

Equipment Piece No.	Project	Page	Cont'd On Page
CMS-RE-27A	WNP-2	1.000	1.100
CMS-RE-27B	Discipline: NUCLEAR	Calculation No.: NE-02-94-57	
CMS-RE-27E		Quality Class: I	
CMS-RE-27F	Remarks		

TITLE/SUBJECT/PURPOSE

Title/Subject: Response of CMS-RE-27A, 27B, 27E & 27F to NUMARC EALs (Emergency Action Levels).

Purpose: This calculation provides response of containment LOCA monitors CMS-RE-27A, 27B, 27E and 27F to various accident source terms for NUMARC EALs and to provide a basis for revision to DPM 9.3.22.

CALCULATION REVISION RECORD

REVISION NO.	STATUS/ F,P, OR S	REVISION DESCRIPTION	INITIATING DOCUMENTS	TRANSMITTAL NO.
0	F	Initial Issue	RFTS 94-08-096	15998
1	F	Revision 1 incorporates containment source volume	RFTS 94-08-096	16069

PERFORMANCE VERIFICATION RECORD

REVISION NO.	PERFORMED BY/DATE	VERIFIED BY/DATE	APPROVED BY/DATE
0	[illegible] 8/29/94	[illegible] 9/1/94	SR Kirkendall 9/1/94
1	[illegible] 9/15/94	[illegible] 9/16/94	[illegible] 9/19/94

- Study calculations shall be used only for the purpose of evaluating alternate design options or assisting the engineer in performing assessments.

968-18645 R2 (6/93)

WASHINGTON PUBLIC POWER SUPPLY SYSTEM

CALCULATION INDEX

Page	Cont'd On Page
1.100	1.200

Calculation No. NE-02-94-57

Revision No. 0

ITEM	PAGE NO. SEQUENCE
Calculation Cover Sheet	1.000 - NA
Calculation Index	1.100 - NA
Verification Checklist for Calculations and CMR's	1.200 - ~~NA~~ 1.201
Calculation Reference List	1.300 - NA
Calculation Output Interface Document Revision Index	~~1.400 - NA~~
Calculation Output Summary	2.000 - NA
Calculation Method	3.000 - ~~NA~~ 3.001
Sketches	~~4.000 - None~~
Manual Calculation	5.000 - ~~5.043~~ 5.101

APPENDICES:

Computer Runs	Appendix A	1 - ~~226~~ 294	Pages
	Appendix B	-	Pages
	Appendix C	-	Pages
	Appendix D	-	Pages
Historical / Information	Appendix H	N/A	Pages
Superseded Pages	Appendix S	N/A	Pages
Vendor Data	Appendix E	9	Pages
	Appendix		Pages
	Appendix		Pages

WASHINGTON PUBLIC POWER SUPPLY SYSTEM	VERIFICATION CHECKLIST FOR CALCULATIONS AND CMRs	Page 1.200	Cont'd On Page 1.201 ~~1.300~~

Calculation/CMR NE-02-94-57 Revision 0 was verified using the following methods:

☒ Checklist Below ☐ Alternate Calculations

Checklist Item	Initial
Clear statement of purpose of analysis	
Methodology clearly stated and sufficiently detailed and appropriate to proposed application	
Logical consistency of analysis	
• Completeness of documenting references	
• Completeness of documenting and updating output interface documents	
Completeness of input	
Accuracy of input data	
Consistency of input data with approved criteria	
Completeness in stating assumptions	
Validity of assumptions	
Calculation sufficiently detailed	
• Arithmetical accuracy	
• Physical units specified and correctly used	
Reasonableness of output conclusion	
Supervisor independency check (if acting as Verifier)	
- Did not specify analysis approach	
- Did not rule out specific analysis options	
- Did not establish analysis inputs	
• If a computer program was used:	
- Is the program appropriate for the proposed application?	
- Have the program error notices been reviewed to determine if they pose any limitations for this application?	
- Is the program name, revision number and date of run inscribed on the output?	
- Is the program identified on the Calculation Method form? If so, is it listed in chapter 10 of the Engineering Standards Manual?	
Other Elements Considered	
NONE	

• If a separate verifier was used for validating these functions or a portion of these functions, sign and initial below.

Based on the foregoing, the calculation is adequate for the purpose intended.

Verifier Signature(s)/Date	Verifier Initials
Loren Sharp 8/20/94	

WASHINGTON PUBLIC POWER SUPPLY SYSTEM	VERIFICATION CHECKLIST FOR CALCULATIONS AND CMRs	Page 1.201 ~~1.200~~	Cont'd On Page 1.300

Calculation/CMR NE-02-94-57 Revision 1 was verified using the following methods:

☒ Checklist Below ☐ Alternate Calculations

Checklist Item	Initial
Clear statement of purpose of analysis	GDB
Methodology clearly stated and sufficiently detailed and appropriate to proposed application	GDB
Logical consistency of analysis	GDB
• Completeness of documenting references	GDB
• Completeness of documenting and updating output interface documents	GDB
Completeness of input	GDB
Accuracy of input data	GDB
Consistency of input data with approved criteria	
Completeness in stating assumptions	GDB
Validity of assumptions	GDB
Calculation sufficiently detailed	GDB
• Arithmetical accuracy	GDB
• Physical units specified and correctly used	GDB
Reasonableness of output conclusion	GDB
Supervisor independency check (if acting as Verifier)	
- Did not specify analysis approach	
- Did not rule out specific analysis options	
- Did not establish analysis inputs	N/A
• If a computer program was used:	
- Is the program appropriate for the proposed application?	GDB
- Have the program error notices been reviewed to determine if they pose any limitations for this application?	
- Is the program name, revision number and date of run inscribed on the output?	
- Is the program identified on the Calculation Method form? If so, is it listed in chapter 10 of the Engineering Standards Manual?	Yes GDB

Other Elements Considered

• If a separate verifier was used for validating these functions or a portion of these functions, sign and initial below.

Based on the foregoing, the calculation is adequate for the purpose intended.

Verifier Signature(s)/Date	Verifier Initials
[signature] 4/16/94	GDB

968-25280 (6/93)

WASHINGTON PUBLIC POWER SUPPLY SYSTEM

CALCULATION REFERENCE LIST

Page 1.300 Cont'd On Page ~~1.400~~ 2.0

Calculation No. NE-02-94-57

Revision No. 0

SEQUENCE NO.	AUTHOR	ISSUE DATE, EDITION OR REVISION	TITLE	DOCUMENT NO.
%				
1	Supply System Calc	1	Six month integrated Accident Dose to Safety Relief Valves	5.01.78
2	Chapman, C., et al		QAD-CG/MS & Multiple Source, Combinational Geometry Version of QAD-P5A	SAI 25083-1263
3	Supply System	April 1993	QAD 2 Input Manual	Chapter 10 Eng Standards
4	Grove Engineering	Nov. 1990	RADDECAY - Radioactive Decay for Radiological Assessments (RSIC distribution)	DLC-134
5	Flanders, et al	1976	Calculus	Academic Press, Inc.
6	Supply System	rev 1	Control Room, TSC and offsite dose using NUREG 0788 source	NE-02-88-27
7	NUMARC	rev 2	Methodology for Development of Emergency Action Levels	NUMARC/NESP-007
8	Supply System	rev 0	Radiation Source Term Correction Factor due to Power Uprate	NE-02-93-37
9	NRC	10/88	Source Term Estimation During Incidence Response to Severe NPP Accidents	NUREG 1228
10	SS.	21	Process Radiation Monitors Schedule	M 8935X-3
11	S.S	5	Primary Containment LOCA Radiation Monitors (CNS-RE-27A,B,E,F) Correlation Method	PPM 11.2.10.6
12	S.S.	6	WPPSS Primary Containmen Vessel Shell elevations & Shell dimensions	CVI 02-213-00, 108
13	S.S.	8	Core Damage Evaluation	PPM 9.3.22
14	NRC	Rev 1	Interim Staff Position on Environmental Qualification of [illegible]	NUREG-0588
15	NRC	Rev 2	Assumptions used for Evaluating the Potential Radiological Consequences of a LOCA	Regulatory Guide 1.3

968-25281 (6/93)

Calculation of Results

Results for each of the cases are presented below (Power uprate values in parenthesis).

Detector	4 µCi/gm (R/hr)	300 µCi/gm (R/hr)	20% Clad Damage (R/hr)	0.1% Clad Damage (R/hr)	2% Clad Damage (R/hr)	5% Clad Damage (R/hr)
CMS-RE-27A	.005	.37	51.4 (54.1)	.26 (.27)	5.1 (5.4)	12.8 (13.5)
CMS-RE-27B	.006	.43	58.4 (61.5)	.29 (.31)	5.8 (6.1)	14.6 (15.4)
CMS-RE-27E	3.3	248	18500 (19500)	92.5 (97.4)	1850 (1950)	4630 (4870)
CMS-RE-27F	2.6	197	14700 (15500)	73.3 (77.2)	1470 (1550)	3660 (3850)

Detectors CMS-RE-27E and 27F provide acceptable results for use in monitoring EAL limits for all three required levels (RCS barrier, Fuel Clad Barrier, and Containment Barrier). Detectors CMS-RE-27A and 27B will provide reasonable response somewhere between the 0.1% and 2% clad failure case. Review of historical data indicate that detector response during full power operation has been approximately:

Detector	Reading (R/hr)
CMS-RE-27A	0.4
CMS-RE-27B	0.4
CMS-RE-27E	1.0
CMS-RE-27F	1.5

The following Table presents detector response for release of RG 1.3 source term within primary containment:

Detector	100% Clad Damage (R/hr)
CMS-RE-27A	10,800 (11,370)
CMS-RE-27B	12,300 (12,950)
CMS-RE-27E	3.96e+6 (4.17e+6)
CMS-RE-27F	3.13e+6 (3.30e+6)

Conclusions

It is recommended that detectors CMS-RE-27E and 27F be used for determining EALs during an accident scenario. The following table indicates the recommended response levels for each of the required EALs:

Action Level	% Clad Failure	Detector Response (R/hr)	Classification
RCS barrier	0.1	70	Alert
Fuel Clad Barrier	5.0	3600	Site Area Emergency
Containment Barrier	20.0	14700	General Emergency

The response for detector CMS-RE-27F was selected for the EALs since it provided the lowest response to a given source. These values will provide conservative results for power uprate. The values for the action levels were rounded for operator use and readability of the instrument.

WASHINGTON PUBLIC POWER SUPPLY SYSTEM	CALCULATION METHOD	Page 3.000	Cont'd On Page
		Calculation No. NE-02-94-57	
Prepared by/Date J. Haynes 8/24/94	Verified by/Date [signature] 8/30/94	Revision No. 0	

Analysis Method (Check appropriate boxes)

- ☒ Manual (As required, document source of equations in Reference List)
- ☒ Computer ☐ Main Frame ☐ Personal
  - ☐ In-House Program
  - ☐ Computer Service Bureau Program
    - ☐ BCS ☐ CDC ☐ PCC ☐ Other _____
  - ☒ Verified Program: Code name/Revision QAD 2
  - ☐ Unverified Program: Document in Appendix B

Approach/Methodology

REV. BAR

This calculation will determine response of detectors CMS-RE-27A,D,E&F to various source terms based on EALs (emergency action level). The source terms are based on (See References 7 and 9):

1) Tech Spec Limits of 4μCi/cc in the coolant (I-131 equivalent)

2) 300μci/gm dose equivalent I-131 (~ 2 to 5% core damage).

3) 20% clad damage.

Detector response will be determined for a 1μCi/cc source of each of 13 noble gasses and 5 halogens. Using the generated detector response for a 1μCi/cc source within containment the response for each of the required EAL sources will be determined:

1) Tech Spec limits (4μCi/gm I-131 equivalent) approximated by 0.1% clad failure, and 4μCi/cc I-131 run.

2) 300μCi/gm I-131 dose equivalent, approximated by 2 and 5% clad failure runs, and a 300μCi/gm I-131 run

3) 20% clad failure.

⚠ v/3 9/16/94

Case 1 - performed for RCS barrier EALs.
and case 4 This case represents release of reactor coolant to the containment.

Case 2, - Performed for Fuel Clad Barrier EALs.
case 5 & This case represents a release of reactor
case 6* coolant with elevated activity indicative of fuel damage into containment.

Case 3 - Performed for Primary Containment Barrier EALs. This case represents release of reactor coolant to containment with a major release of radioactivity. This case indicates significant core damage has occurred and may require offsite protective actions.

Case 7 - Performed to determine detector response to NUREG-0588 & Reg Guide 1.3 Source term for inclusion in PPM 9.3.22. (References 13, 14, 15)

WASHINGTON PUBLIC POWER SUPPLY SYSTEM	MANUAL CALCULATION	PAGE 5.000	CONT'D ON PAGE
		CALCULATION NO. NE-02-94-57	
PREPARED BY / DATE S. J. Haynes 8/24/94	VERIFIED BY / DATE [illegible] 8/30/94	REVISION NO. 0	REV. BAR

Assumptions

1) Piping and shielding ignored inside containment for this evaluation

2) Source is smeared within drywell, including sacrificial shield wall, vessel and vessel internals

3) Detectors CMS-RE-27 A & B will be modeled along containment wall within steel sphere the thickness of containment wall. The resultant dose will be corrected to the source cone angle of the detector.

4) The Fuel matrix will release 2% iodines and 3% Kr & Xe during a gap release (Reference 9)

5) Energy groups below 40 keV were not considered since detectors CMS-RE-27 A, B, E & F would not respond to γ's below this value

WASHINGTON PUBLIC POWER SUPPLY SYSTEM	MANUAL CALCULATION	PAGE 5.001	CONT'D ON PAGE
		CALCULATION NO. NE-02-94-57	
PREPARED BY / DATE S. J. Haynes 8/24/94	VERIFIED BY / DATE [signature] 8/30/94	REVISION NO. 0	REV. BAR

Purpose

This calculation is performed to determine the response of detectors CMS-RE-27 A,B, E, F to Source released into containment.

QAD MODEL

The QAD model developed in Reference 1 (5.01.78) will be used as the base model for this analysis. A Sketch of the model is provided on the following page. Reference 1 developed a detailed model of primary Containment including the RPV and SAC steel wall. The model will be modified to include accurate detector geometry within the drywell.

A. COMBINATORIAL GEOMETRY

The combinatorial geometry portion of the model is essentially identical to that in Reference 1 except that bodies 16 through 25 have been removed.

Composition input is somewhat different with the addition of Lead. Also the steel is no longer smeared throughout the drywell. Concrete is modeled as type 04 (Reference 2). Steam is modeled as water with a reduced volume % based on density ratio

for water @ 14.7psig	Temp	Density (lb/ft³)	Ratio to 68°F
	68°F	62.325	1.0
	212°F	59.812	.9597
Steam @	212°F	.037324	.000599

A density for lead of 1.0 e 10 is selected to eleminate source on the outside of the drywell model.

Material zones

The material zones are essentially the same as Ref. 1 with the exclusion of bodies 16 through 25.

CALC. No.: NE-02-94-57 page: 5.00
Rev No.: 0
Prepared By: S.J. Haynes 8/24/9.
Verified By Glenn Sharp 8/30/95

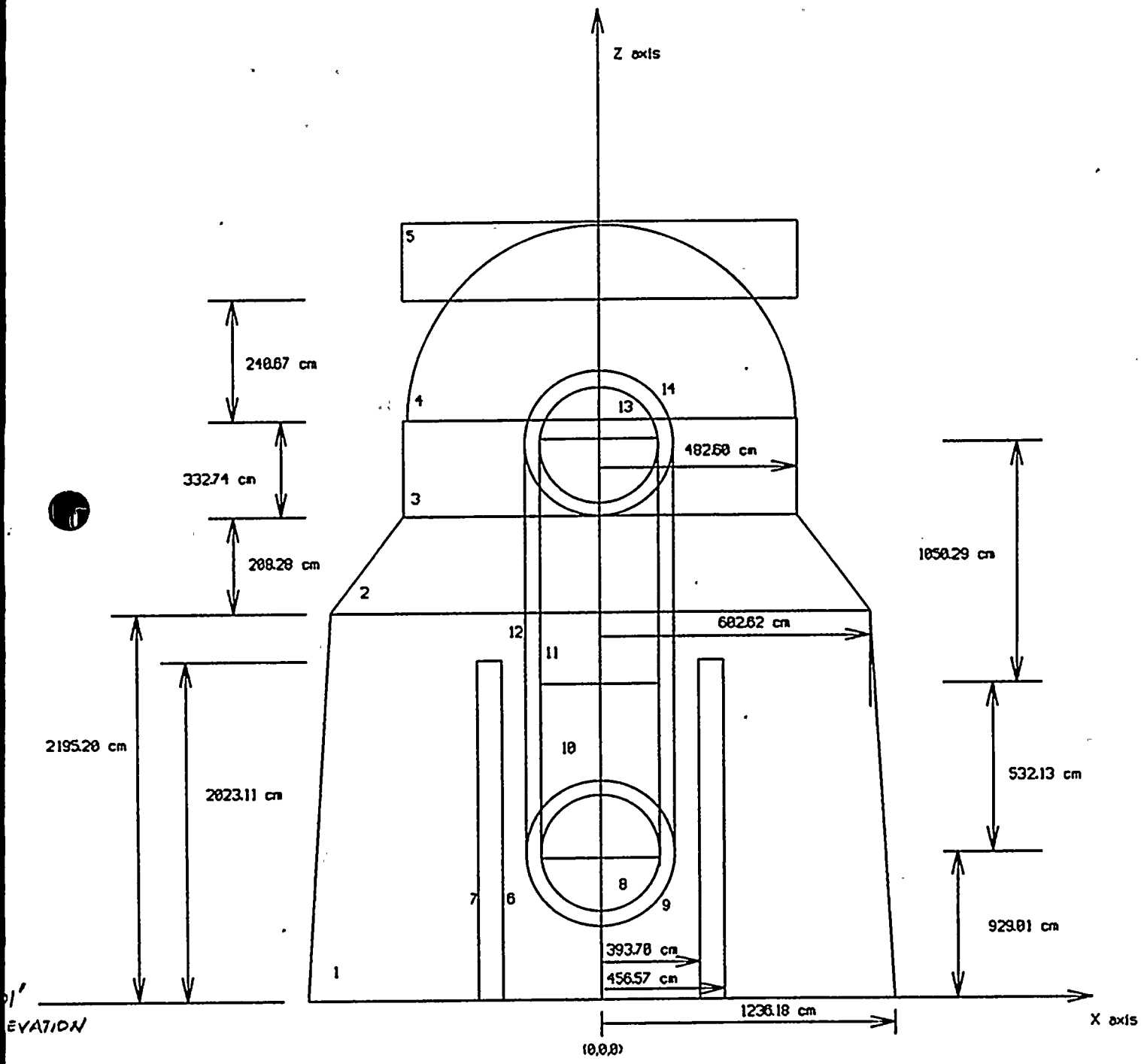

91'
EVATION

B. Source Description

The source will be defined using an encompassing cylinder around the drywell model. (body # 15). The source strength will be adjusted using the AS1 parameter to assure a correct concentration is maintained.

Model drywell Volume - determine volume within drywell structure

Lower Truncated cone

$$V = \pi/3\, h\,(R^2 + Rr + r^2)$$

$$V = \pi/3\,(2195.20)(1236.18^2 + 1236.18 \cdot 602.62 + 602.62^2)$$

$$V = \cancel{9.09031 \times 10^9}\ cm^3$$
$$6.06021 \times 10^9\ cm^3$$

Upper Truncated cone

$$V = \pi/3\,(208.28)(602.62^2 + 602.62 \cdot 482.60 + 482.60^2)$$

$$V = \cancel{2.90156 \times 10^8}\ cm^3$$
$$1.93437 \times 10^8$$

Cylinder

$$V = \pi r^2 h = \pi (482.60)^2 (332.74)$$

$$V = 2.43461 \times 10^8\ cm^3$$

1 V's 9/16/94

WASHINGTON PUBLIC POWER SUPPLY SYSTEM	MANUAL CALCULATION	PAGE 5.004	CONT'D ON PAGE
		CALCULATION NO. NE-02-94-57	
PREPARED BY / DATE S. J. Haynes 8/24/94	VERIFIED BY / DATE [signature] 8/30/94	REVISION NO. 0	REV. BAR

upper sphere

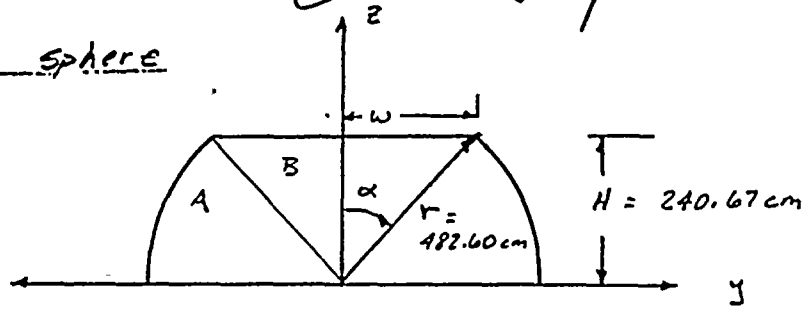

The volume can be determined by adding the volume of a cone in volume B to the integrated area of volume A.

$$V_B = \pi/3\, w^2 h : \qquad \alpha = \cos^{-1}(H/r) = 60.086^\circ$$

$$w = r \sin\alpha = 418.31 \text{ cm}$$

$$V_B = \pi/3\,(418.31)^2(240.67)$$

$$V_B = 44.1002 \times 10^7 \text{ cm}^3$$

Volume A determined by integration. The volume is bounded by

$$\alpha \le \phi \le \pi/2$$
$$0 \le \theta \le 2\pi$$
$$0 \le \rho \le r$$

$$V_A = \int_0^{2\pi}\int_\alpha^{\pi/2}\int_0^r \rho^2 \sin\phi \, d\rho\, d\phi\, d\theta$$

$$V_A = \int_0^{2\pi}\int_0^{\pi/2} \frac{r^3}{3} \sin\phi \, d\phi\, d\theta = \int_0^{2\pi} \frac{r^3}{3} \cos(\alpha)\, d\theta$$

$$V_A = 2\pi\, r^3/3 \cos\alpha$$

$$V_A = 2\pi \frac{(482.60)^3}{3} \cos(60.086)$$

$$V_A = 1.17398 \times 10^8 \text{ cm}^3$$

$$V_S = V_A + V_B = 1.61498 \times 10^8 \text{ cm}^3$$

TOTAL VOLUME = ~~9.78543 x10^9~~ 6.658606×10^9 cm³ = ~~345,621.21~~ 245,700 ft³

968-18694 R1 (2/90)

Source Body Volume

$$V_{SB} = \pi r^2 h = \pi (1236.18)^2 (3218.82)$$

$$V_{SB} = 1.54529 \times 10^{10} \text{ cm}^3$$

Ratio of Containment to Source $= \dfrac{1.54529 \times 10^{10}}{\cancel{9.78543 \times 10^{9}}\ 6.658606 \times 10^{9}}$

Ratio $= \cancel{1.579}\ 2.321$

Source concentration

using the same geometry model, the source for each isotope will be used to generate detector response per isotope. Using the probability per decay per gamma energy from the RADDECAY Program (Reference 4) The following pages present the data for each of the 13 noble gas isotopes and the 5 Halogen isotopes. The first data block is source strength (γ/s) and the second block is γ energy in MeV.

The source strength in the table is determined by multiplying probability/decay x volume x 1 μCi/cc.

$$\text{Source} = (\text{Prob})(1.54529 \times 10^{10} \text{ cm}^3)(\cancel{1.579}\ 2.321)(1\,\mu\text{Ci/cc})(10^{-6})\left(3.7 \times 10^{10} \frac{\gamma/s}{Ci}\right)$$

$$\text{Source} = (\text{Prob})(\cancel{9.02805 \times 10^{14}}\ 1.32705 \times 10^{15}) \quad \text{photons/s}$$

The following pages present a computer program which reads the RADDECAY Photon data file and outputs a file ready to read into QAD. The output follows the computer program.

```
      program qpho
      dimension prob(200)
      real nrg(200)
      character name*7
      open(unit=1,file='photon.dat',status='old')
      open(unit=2,file='qpho.dat',status='unknown')
c modified following line per Rev 1 of NE-02-94-57
csjh  src=9.02805e14
      src=1.32705e15
 99   continue
      read(1,*,end=109) ndat

      do 10 i=1,ndat
      read(1,1000) prob(i),nrg(i),name
      prob(i)=prob(i)*src
1000 format(1x,f8.2,2x,f8.2,1x,a7)
10    continue

      write(2,'(a)') name

c determine if energy is above 40 keV
      do 20 i=1,ndat
      if (nrg(i) .lt. 0.04 ) goto 20
      lz=i
      goto 21
20    continue
21    continue

      write(6,*) lz

      write(2,1001) (prob(i), i=lz,ndat)
      write(2,*) ' '
      write(2,1001) (nrg(i), i=lz,ndat)

1001 format(6(1pe12.4))
      write(2,*) ' '
      goto 99
109   continue
      stop
      end
```

OUTPUT FILE - used for QAD source and energy group data

```
I-131
 3.4745E+13  3.5140E+12  8.0314E+13  3.3269E+12  1.0771E+15  4.7840E+12
 9.6350E+13  2.9129E+12  2.3920E+13  3.0575E+12

 8.0183E-02  1.7721E-01  2.8430E-01  3.2578E-01  3.6448E-01  5.0299E-01
 6.3697E-01  6.4270E-01  7.2289E-01  3.2939E-01
```

I-132

3.1438E+12	1.8340E+12	2.4882E+12	1.9123E+13	9.5614E+12	1.8340E+12
6.5490E+12	3.9294E+12	6.2876E+12	6.4176E+12	7.9902E+12	2.3582E+12
1.9654E+12	5.5006E+12	6.6800E+13	2.1350E+14	6.9418E+12	1.4412E+12
1.6635E+13	1.8340E+12	5.2392E+12	2.0957E+13	1.8206E+14	3.5365E+13
5.2392E+12	1.3098E+15	6.5490E+13	6.9419E+13	4.1914E+13	2.8816E+13
1.4408E+13	5.2392E+12	1.0112E+15	1.6373E+13	5.6320E+12	3.7984E+13
7.4659E+13	7.7274E+12	1.4276E+13	1.2181E+13	5.5006E+12	2.3969E+14
7.4660E+12	6.2876E+12	3.9294E+13	1.7944E+13	3.6680E+12	1.4408E+13
2.3582E+12	1.5063E+13	2.6196E+13	1.1788E+13	1.5712E+12	3.2745E+13
9.4305E+13	1.8861E+13	1.7942E+12	3.9294E+12	1.5718E+13	1.4408E+13
3.1438E+12	2.6196E+12	1.5712E+12	2.2268E+12	4.2394E+13	

1.4720E-01	1.8330E-01	2.5480E-01	2.6270E-01	2.8480E-01	3.1650E-01
3.6350E-01	3.8780E-01	4.1680E-01	4.3190E-01	4.4600E-01	4.7390E-01
4.7850E-01	4.8820E-01	5.0590E-01	5.2265E-01	5.3550E-01	5.4000E-01
5.4710E-01	6.0000E-01	6.2080E-01	6.2120E-01	6.3022E-01	6.5060E-01
6.5900E-01	6.6769E-01	6.6980E-01	6.7160E-01	7.2700E-01	7.2720E-01
7.2850E-01	7.6450E-01	7.7261E-01	7.8020E-01	7.8450E-01	8.0980E-01
8.1220E-01	8.6330E-01	8.7680E-01	9.1030E-01	9.2760E-01	9.5455E-01
9.8370E-01	1.0347E+00	1.1360E+00	1.1434E+00	1.1474E+00	1.1732E+00
1.2727E+00	1.2907E+00	1.2953E+00	1.2976E+00	1.3178E+00	1.3721E+00
1.3986E+00	1.4426E+00	1.4768E+00	1.7575E+00	1.9211E+00	2.0022E+00
2.0868E+00	2.1727E+00	2.2232E+00	2.3905E+00	1.0146E+00	

I-133

4.7309E+12	1.5460E+12	1.3748E+12	1.4890E+12	2.0277E+12	4.1006E+12
2.4055E+13	1.1455E+15	7.1594E+12	8.5568E+12	1.9817E+13	6.0593E+12
2.0397E+12	1.6381E+13	5.9338E+13	2.8187E+12	7.3200E+12	1.8220E+12
1.9817E+13	3.0928E+13	1.9707E+12	8.0578E+12		

2.6270E-01	2.6717E-01	3.4543E-01	3.6108E-01	4.1805E-01	4.2291E-01
5.1053E-01	5.2987E-01	6.1797E-01	6.8025E-01	7.0658E-01	7.6838E-01
8.2051E-01	8.5628E-01	8.7533E-01	9.0967E-01	1.0523E+00	1.0601E+00
1.2364E+00	1.2982E+00	1.3504E+00	5.3524E-01		

I-134

4.9886E+13	9.1155E+12	1.4053E+12	3.4185E+12	9.2429E+12	3.2924E+12
2.6335E+13	1.7345E+12	6.8370E+12	6.5835E+12	9.7493E+13	8.1030E+12
5.5583E+13	1.7220E+13	4.8119E+12	1.8739E+13	3.1020E+13	1.0382E+14
1.1649E+13	2.7855E+12	1.5067E+14	1.4055E+14	3.1401E+13	1.1269E+14
1.1016E+13	2.5323E+13	1.0129E+13	5.4444E+13	6.9644E+12	1.2661E+15
9.2428E+13	2.5320E+12	8.6603E+14	1.8990E+12	5.3557E+13	4.6845E+12
6.2041E+13	2.5323E+13	2.0259E+14	9.1155E+12	9.6224E+12	1.2915E+14
4.6845E+12	1.7729E+12	4.6845E+12	2.7855E+12	7.4700E+12	1.3934E+12
1.8990E+12	5.9505E+12	2.9115E+12	2.2785E+12	2.2785E+12	3.0387E+13
1.0255E+13	1.5195E+12	6.7109E+12	5.7862E+13	3.4185E+12	5.3175E+12
3.0389E+12	3.5452E+13	7.5968E+13	2.4059E+12	2.2785E+12	2.7855E+12
3.1650E+12	2.0264E+12	1.7713E+13			

1.3540E-01 1.3903E-01 1.5198E-01 1.6248E-01 1.8847E-01 2.1700E-01
2.3547E-01 2.7880E-01 3.1981E-01 3.5108E-01 4.0545E-01 4.1100E-01
4.3335E-01 4.5892E-01 4.6550E-01 4.8888E-01 5.1440E-01 5.4083E-01
5.6552E-01 5.7075E-01 5.9536E-01 6.2179E-01 6.2796E-01 6.7734E-01
7.0665E-01 7.3074E-01 7.3918E-01 7.6668E-01 8.1638E-01 8.4702E-01
8.5729E-01 8.6400E-01 8.8409E-01 9.2260E-01 9.4786E-01 9.6690E-01
9.7467E-01 1.0403E+00 1.0726E+00 1.1001E+00 1.1032E+00 1.1362E+00
1.1591E+00 1.1640E+00 1.1900E+00 1.2390E+00 1.2695E+00 1.3224E+00
1.3360E+00 1.3526E+00 1.4143E+00 1.4282E+00 1.4314E+00 1.4552E+00
1.4700E+00 1.5055E+00 1.5415E+00 1.6138E+00 1.6292E+00 1.6443E+00
1.6552E+00 1.7415E+00 1.8068E+00 1.9259E+00 2.0206E+00 2.1599E+00
2.3124E+00 2.4674E+00 1.7872E+00

I-135

2.3160E+13 3.0748E+12 2.4418E+12 4.1005E+13 4.0249E+12 2.4683E+12
3.0748E+12 3.9865E+12 4.6699E+13 4.0249E+12 7.3280E+12 4.1762E+12
9.4538E+13 1.7092E+12 6.0368E+12 1.7092E+12 8.7320E+12 2.0118E+12
2.2785E+12 8.8462E+13 1.9362E+12 1.1770E+13 1.5946E+13 2.0503E+12
1.0517E+14 2.1262E+13 4.7839E+13 2.9880E+14 1.3669E+12 1.1580E+13
1.1959E+13 3.7967E+14 8.0486E+12 4.1762E+12 1.1466E+14 1.4238E+13
1.7086E+13 1.2643E+14 5.4292E+13 1.0213E+14 7.6690E+12 3.9108E+12
1.1541E+13 8.1255E+12 1.2643E+13 1.9837E+13

2.2050E-01 2.2972E-01 2.6426E-01 2.8845E-01 2.9027E-01 3.6185E-01
4.0303E-01 4.1483E-01 4.1763E-01 4.2993E-01 4.3374E-01 4.5163E-01
5.4656E-01 5.7597E-01 6.4985E-01 6.9013E-01 7.0792E-01 7.8548E-01
7.9771E-01 8.3680E-01 9.6146E-01 9.7196E-01 9.7261E-01 9.9509E-01
1.0388E+00 1.1016E+00 1.1240E+00 1.1315E+00 1.1599E+00 1.1690E+00
1.2405E+00 1.2604E+00 1.3679E+00 1.4484E+00 1.4576E+00 1.5028E+00
1.5664E+00 1.6780E+00 1.7065E+00 1.7912E+00 1.8307E+00 1.9273E+00
2.0459E+00 2.2555E+00 2.4087E+00 1.0734E+00

Kr-83m

2.9963E+13 6.7281E+11

1.4100E-02 3.2160E-02

Kr-85

5.7594E+12

5.1399E-01

Kr-85m

1.8564E+14 7.7765E+11 8.1162E+12 1.5699E+13 4.1205E+12 3.9957E+12
9.9898E+14 2.8001E+11

3.0487E-01 1.6900E-03 1.3336E-02 1.3395E-02 1.5000E-02 1.2985E-01
1.5118E-01 5.8128E-01

Kr-87

6.5689E+14 2.5291E+13 2.2334E+12 9.9847E+12 9.6563E+13 1.8393E+12
1.4912E+13 8.6046E+12 3.8100E+12 1.6416E+12 4.7296E+12 1.7079E+12
1.3801E+12 2.7195E+13 1.8393E+12 3.8427E+13 2.8253E+12 1.2350E+14
5.1894E+13 4.2041E+12 5.9770E+12 8.6245E+12

4.0258E-01 6.7387E-01 8.1425E-01 8.3637E-01 8.4543E-01 9.4664E-01
1.1754E+00 1.3380E+00 1.3825E+00 1.3899E+00 1.5312E+00 1.5780E+00
1.6112E+00 1.7405E+00 1.8426E+00 2.0119E+00 2.4085E+00 2.5548E+00
2.5581E+00 2.8114E+00 3.3085E+00 1.6201E+00

Kr-88

2.6169E+12 4.1186E+13 3.4483E+14 3.3521E+12 1.4239E+12 1.9282E+12
2.9845E+13 8.5409E+12 1.6986E+12 9.6423E+12 3.1225E+12 7.0705E+12
1.6535E+12 1.7218E+14 2.2958E+12 8.9072E+12 3.9029E+12 1.7448E+13
1.8831E+12 6.4282E+12 1.8831E+12 1.7035E+13 1.3224E+13 9.1367E+12
1.8831E+12 1.8366E+12 4.8212E+12 1.4876E+13 2.1127E+12 2.1127E+12
1.9606E+13 2.8930E+12 1.5155E+12 2.8559E+13 1.4510E+14 6.0606E+12
8.8156E+12 1.8366E+12 1.3310E+12 6.0103E+13 4.9589E+13 3.8113E+12
1.7495E+14 4.4998E+13 9.6888E+12 4.5916E+14 1.3775E+12 8.2649E+12
1.9747E+12 2.5071E+13

1.2227E-01 1.6598E-01 1.9632E-01 2.4071E-01 3.1169E-01 3.3471E-01
3.6223E-01 3.9054E-01 4.2170E-01 4.7180E-01 6.7734E-01 7.8828E-01
7.9032E-01 8.3483E-01 8.5034E-01 8.6233E-01 9.4492E-01 9.8578E-01
9.9009E-01 1.0396E+00 1.0495E+00 1.1413E+00 1.1795E+00 1.1850E+00
1.2098E+00 1.2127E+00 1.2452E+00 1.2507E+00 1.3250E+00 1.3523E+00
1.3695E+00 1.4069E+00 1.4648E+00 1.5184E+00 1.5298E+00 1.6038E+00
1.6856E+00 1.8928E+00 1.9087E+00 2.0298E+00 2.0354E+00 2.1865E+00
2.1958E+00 2.2318E+00 2.3521E+00 2.3921E+00 2.4089E+00 2.5484E+00
2.7710E+00 1.0001E+00

Kr-89

2.9195E+12 2.4152E+13 1.6455E+12 2.6541E+14 8.7585E+12 4.5385E+12
1.5659E+13 5.4940E+13 1.1943E+13 1.8313E+13 4.2200E+12 3.3972E+13
1.2740E+13 1.0616E+13 4.2731E+12 8.8116E+13 1.5128E+13 2.1233E+12
7.4846E+13 2.2029E+14 7.9623E+12 4.5385E+12 1.5128E+12 1.4067E+12
3.0788E+12 2.3621E+13 6.6087E+12 1.0351E+13 3.9281E+12 5.5736E+13
1.5128E+12 5.3082E+12 1.2209E+13 1.4863E+13 1.0086E+13 1.4598E+13
3.7954E+12 7.8561E+13 2.1233E+12 9.5282E+13 8.2277E+12 2.1764E+12
1.4067E+12 4.2731E+12 1.3005E+13 8.7585E+12 1.4332E+12 5.4144E+12
3.1318E+12 4.7508E+12 1.1943E+13 3.8750E+13 2.2029E+13 2.1233E+12
2.8399E+12 1.3005E+13 2.2029E+12 2.4418E+12 1.9110E+12 7.8827E+12
1.8048E+13 1.3271E+12 4.0608E+13 1.7517E+12 2.5745E+12 1.9640E+12
1.6721E+12 3.5034E+12 2.9726E+12 1.6190E+12 2.3621E+12 2.4949E+12
9.1301E+13 1.7517E+13 1.4863E+12 4.4058E+13 6.7945E+13 2.0171E+12
2.5214E+12 1.0882E+13 4.4854E+12 1.6986E+12 1.8579E+12 1.7517E+12
3.4503E+12 5.8125E+13 2.9726E+12 1.0086E+13 1.4067E+12 1.8579E+12
1.5659E+12 4.6447E+12 2.6010E+12 2.0967E+12 1.3801E+13 8.4931E+12
1.7517E+12 1.5659E+12 2.0702E+13 3.2380E+12 3.4769E+12 1.2474E+13
7.0068E+12 1.6986E+12 2.7072E+12 1.0616E+13 9.5548E+12 1.4332E+12
5.5736E+12 1.6455E+12 1.0086E+13 9.0239E+12 1.7517E+12 3.1849E+12

2.3091E+13 4.2996E+12 3.3707E+12 3.5830E+12 2.5745E+12 1.3801E+13
1.3271E+12 5.6798E+12 1.3801E+13 8.2277E+12 1.8048E+12 1.7782E+13
3.4238E+12 1.1147E+13 1.8313E+12 1.7517E+12 1.8313E+12 1.4598E+12
1.7782E+12 5.4940E+12 2.7603E+12 3.5830E+12 1.8844E+12 1.5394E+12
1.3801E+12 1.7782E+12 9.4459E+13

1.9620E-01 1.9750E-01 2.0503E-01 2.2090E-01 2.6411E-01 3.3820E-01
3.4503E-01 3.5606E-01 3.6488E-01 3.6930E-01 4.0225E-01 4.1142E-01
4.3808E-01 4.6613E-01 4.9076E-01 4.9750E-01 4.9860E-01 5.5730E-01
5.7696E-01 5.8580E-01 6.2620E-01 6.2975E-01 6.6572E-01 6.7140E-01
6.7411E-01 6.9624E-01 7.0701E-01 7.1005E-01 7.2963E-01 7.3839E-01
7.4740E-01 7.6290E-01 7.6290E-01 7.7649E-01 8.2675E-01 8.3553E-01
8.5737E-01 8.6708E-01 8.7042E-01 9.0427E-01 9.3095E-01 9.4419E-01
9.5318E-01 9.6042E-01 9.7439E-01 9.9737E-01 1.0108E+00 1.0444E+00
1.0765E+00 1.0881E+00 1.1032E+00 1.1078E+00 1.1166E+00 1.1315E+00
1.1625E+00 1.1723E+00 1.1824E+00 1.1865E+00 1.2288E+00 1.2356E+00
1.2737E+00 1.3027E+00 1.3243E+00 1.3354E+00 1.3406E+00 1.3675E+00
1.3722E+00 1.4126E+00 1.4216E+00 1.4613E+00 1.4642E+00 1.4685E+00
1.4728E+00 1.5010E+00 1.5062E+00 1.5300E+00 1.5337E+00 1.5553E+00
1.5738E+00 1.6341E+00 1.6438E+00 1.6675E+00 1.6769E+00 1.6838E+00
1.6920E+00 1.6937E+00 1.7213E+00 1.7776E+00 1.7882E+00 1.8107E+00
1.8375E+00 1.8397E+00 1.8685E+00 1.8798E+00 1.9034E+00 1.9391E+00
1.9666E+00 1.9986E+00 2.0122E+00 2.0210E+00 2.0465E+00 2.1006E+00
2.1600E+00 2.1958E+00 2.2802E+00 2.3774E+00 2.4010E+00 2.5979E+00
2.6453E+00 2.7509E+00 2.7821E+00 2.7938E+00 2.8196E+00 2.8533E+00
2.8662E+00 2.8787E+00 3.0179E+00 3.0292E+00 3.1073E+00 3.1403E+00
3.1721E+00 3.2198E+00 3.3617E+00 3.3711E+00 3.3999E+00 3.5329E+00
3.5839E+00 3.7178E+00 3.7325E+00 3.7814E+00 3.8274E+00 3.8427E+00
3.9018E+00 3.9230E+00 3.9655E+00 3.9775E+00 3.9960E+00 4.0480E+00
4.3411E+00 4.4892E+00 2.1811E+00

Xe-131m
2.6010E+13

1.6393E-01

Xe-133
2.8731E+12 4.8415E+14 9.4486E+11

7.9621E-02 8.0997E-02 1.7770E-01

Xe-133m
1.3669E+14

2.3322E-01

Xe-135
3.8299E+12 1.1930E+15 2.9235E+12 4.7482E+12 3.8415E+13 2.7775E+12

1.5820E-01 2.4979E-01 3.5839E-01 4.0799E-01 6.0819E-01 6.8433E-01

Xe-135m

1.0749E+15

5.2656E-01

Xe-137

1.5487E+12 1.8327E+12 4.0740E+14 8.1481E+12 2.7297E+12 1.3974E+12
2.9739E+12 1.3443E+12 1.6296E+12 5.4183E+12 2.4033E+12 1.7451E+13

2.9800E-01 3.9335E-01 4.5549E-01 8.4895E-01 9.8225E-01 1.1193E+00
1.2732E+00 1.5768E+00 1.6125E+00 1.7834E+00 2.8498E+00 1.4906E+00

Xe-138

7.9006E+13 4.6400E+13 4.1802E+14 5.6851E+12 1.4213E+12 6.6472E+12
8.3604E+13 2.8843E+13 2.6963E+14 4.8066E+12 3.3442E+12 1.5473E+12
1.5473E+12 4.0541E+12 1.6296E+12 1.9229E+12 3.9294E+12 8.2357E+12
1.7557E+12 4.3474E+12 1.2206E+13 1.7982E+12 3.0509E+12 5.4343E+12
2.8425E+12 1.4213E+12 1.9563E+13 6.8131E+12 1.7557E+12 3.5114E+12
3.1358E+12 2.2198E+14 2.3834E+12 1.8895E+13 7.4832E+12 7.1064E+13
1.6262E+14 1.9145E+13 3.0348E+13 8.2357E+12 4.1391E+12 2.2998E+12
3.5281E+13

1.5375E-01 2.4256E-01 2.5831E-01 2.8251E-01 3.3528E-01 3.7144E-01
3.9643E-01 4.0136E-01 4.3449E-01 5.0022E-01 5.3007E-01 5.3776E-01
5.5595E-01 5.6853E-01 5.8884E-01 6.5408E-01 8.6582E-01 8.6935E-01
8.9687E-01 9.1251E-01 9.1713E-01 9.3636E-01 9.4125E-01 1.0939E+00
1.0988E+00 1.1022E+00 1.1143E+00 1.1416E+00 1.1454E+00 1.5718E+00
1.6146E+00 1.7683E+00 1.8125E+00 1.8509E+00 1.9254E+00 2.0048E+00
2.0158E+00 2.0792E+00 2.2523E+00 2.3219E+00 2.4753E+00 2.4976E+00
1.1186E+00

C. DETECTOR LOCATIONS

CMS-RE-27A&B

elevation -522' = (522-501)30.48 = 640.08 cm

Ref's PPM 11.2.10.6
M 893 Sht. 3

Located 15.3" inside bioshield wall
21.2' from sac shield wall

Model detector as a point on containment wall surrounded by 3" diameter sphere of steel (CVI 02-213-00, 108 indicates containment shell is ~1.5" thick near detector location).

Model dimensions

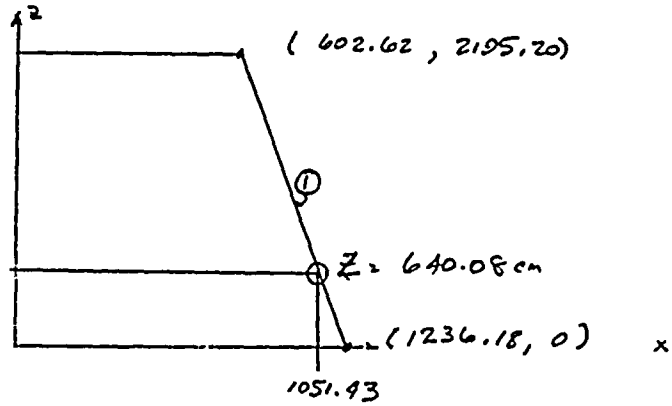

$Z = mx + b$

$m = \frac{(2195.0)}{(602.62 - 1236.18)}$

$m = -3.4649$

for $Z=0, x = 1236.18$
$b = 4283.1971$

$\therefore \quad Z = -3.4649x + 4283.197 \quad @ \; Z = 640.08 \quad X = 1051.43$

Verifier comments [illegible]

Azimuth

A – 255°
B – 60°

Detector Location

$R = 1051.43$ cm

$\theta = 0$

$Z = 640.08$ cm

Azimuth for detectors is NOT important to this model and results, only relative distance from sac shield wall.

The surrounding sphere will be located around the detector point as body # 16

WASHINGTON PUBLIC POWER SUPPLY SYSTEM	MANUAL CALCULATION	PAGE 5.013	CONT'D ON PAGE
		CALCULATION NO. NE-02-94-57	
PREPARED BY / DATE S.J. Haynes 8/24/94	VERIFIED BY / DATE [signature] 8/30/94	REVISION NO. 0	REV. BAR

Sphere location / detector location

$V_x = 1051.43$
$V_y = 0.0$
$V_z = 640.08$

Radius = (1.5)(2.54) = 3.81 cm

To correct the QAD detector response to the source cone angle the source cone volume to hemisphere ratio will be used

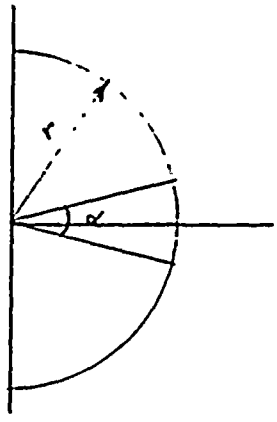

α = source cone angle

for CMS-RE-27A α = 15° APM 11.2.10.6
CMS-RE-27B α = 16°

$$\text{Correction Factor} = \frac{\text{Volume of cone}}{\text{Volume of sphere}}$$

$$\text{Volume of cone} = \frac{2\pi r^3}{3}\left(1-\cos\frac{\alpha}{2}\right)$$

see Reference 5 page 854

$$\text{Volume of hemisphere} = \frac{2}{3}\pi r^3$$

$$\text{Correction factor} = \frac{\frac{2}{3}\pi r^3\left(1-\cos\frac{\alpha}{2}\right)}{\frac{2}{3}\pi r^3} = \left(1-\cos\frac{\alpha}{2}\right)$$

Detector	α	correction factor
CMS-RE-27A	15	0.00856
CMS-RE-27B	16	0.00973

Verifier comment
when α = 180° then $(1-\cos\frac{\alpha}{2}) = 1$. and ratio is valid [initials]

968-18694 R1 (2/90)

CMS-RE-27E & F

detector elevation E - 516' 0" M 893 sh 3
F - 515' 8"

distance from SAC SHIELD

E = 15' PPM 11.2.10.06
F = 20'

Azimuth

E - 300
F - 45

Since internals are not modeled the azimuth for the detectors is not important to the results, only relative distance within containment

detector	Z (cm)	θ	R
CMS-RE-27E	457.2	.19635*	913.77
CMS-RE-27F	447.04	.19635*	1066.17

* see note on bottom of page 5.016

The following pages contain the QAD input file with the source term for I-131

note: For all cases Energies below 40 keV are deleted since they will not contribute to detector response (see Appendix E for detector response curves).

Verifier comment
Due to radial difference in placement of E and F monitors the E detector should see more of the drywell volume and result in higher values than F detector.

```
2 DRYWELL MODEL/CMS-RE-27A,27B,27E,2F (1.e-6 Ci/cc I-131 source)
* set up one source for drywell volume ******************************
* mat ncomp nrgy ineut nsrcs nrcvrs nflage
   6    6  10    0    1    3    1
* as1 as2  as3
   2   0  0.0
* CG body number for source
    15
* nsopt  nx  ny  nz   ngpf   ngpl   ngpi
    0  40  60  80     1     10     5
* source strength ( data from RADDECAY probability/decay*total source )
 3.4745E+13  3.5140E+12  8.0314E+13  3.3269E+12  1.0771E+15  4.7840E+12
 9.6350E+13  2.9129E+12  2.3920E+13  3.0575E+12
* Combinatorial Geometry ******************************************
  0   0        WNP-2 COMPLETE DRYWELL MODEL
 TRC   1     0.0      0.0      0.0      0.0      0.0   2195.20
         1236.18    602.62
 TRC   2     0.0      0.0   2195.20     0.0      0.0    208.28
         602.62    482.60
 RCC   3     0.0      0.0   2403.48     0.0      0.0    332.74
         482.60
 SPH   4     0.0      0.0   2736.22   482.60
 RCC   5     0.0      0.0   2976.89     0.0      0.0    241.93
         482.60
 RCC   6     0.0      0.0      0.0      0.0      0.0   2023.11
         393.70
 RCC   7     0.0      0.0      0.0      0.0      0.0   2023.11
         456.57
 SPH   8     0.0      0.0    929.01   318.77
 SPH   9     0.0      0.0    929.01   334.01
 RCC  10     0.0      0.0    929.01     0.0      0.0    532.13
         318.77
 RCC  11     0.0      0.0   1461.14     0.0      0.0   1050.29
         318.77
 RCC  12     0.0      0.0    929.01     0.0      0.0   1582.42
         334.01
 SPH  13     0.0      0.0   2511.43   318.77
 SPH  14     0.0      0.0   2511.43   334.01
 RCC  15     0.0      0.0      0.0      0.0      0.0   3218.82
         1236.18
 SPH  16  1051.43     0.0    640.08     3.81
 END
* CGC cards to describe material zones ******************************
 air  50OR   1    -7   -12   -16
      OR     2   -12
      OR     3   -12   -14
      OR     4    -5   -14
      OR     6    -9   -12
*
 con  50OR   7    -6
*
 stl  50OR   9    -8   -10
```

```
        OR  12   -10   -11
        OR  14   -13   -11
        OR  1    16
*
 Rw1  50OR   8OR  10
 Rs1  50OR  11OR  13
*
  Pb  50OR  15    -1    -2    -3    -4    -5
      OR  5
 END
* CGD cards - not used in QAD ************************************
  1   1   1   1   1   1
* CGE cards - composition # to zone # ******************************
  1   2   3   4   5   6
*nbld  h2o        N        O   con. 04       Fe     Pb
  3  101        7        8      106       26     82
     0.0   0.00086   0.00025      0.0      0.0    0.0 --- air
     0.0      0.0      0.0      1.0      0.0    0.0 --- concrete
     0.0      0.0      0.0      0.0    7.860    0.0 --- steel
     0.9597   0.0      0.0      0.0    3.390    0.0 --- water+steel
     0.000599 0.0      0.0      0.0    1.572    0.0 --- steam+steel
     0.0      0.0      0.0      0.0      0.0   1.e8 --- lead
* EBAR - gamma energy groups ****************************************
 8.0183E-02  1.7721E-01  2.8430E-01  3.2578E-01  3.6448E-01  5.0299E-01
 6.3697E-01  6.4270E-01  7.2289E-01  3.2939E-01
* DETECTOR locations ************************************************
 1051.43    0.0       640.08    0  - CMS-RE-27A & 27B
  913.77    0.19635   457.20    0  - CMS-RE-27E
 1066.17    0.19635   447.04    0  - CMS-RE-27F
```

NOTE: The azimuthal angle for the E&F detectors are set off of the X axis line at an angle of 0.19635 radians. ~~The~~ This will not impact the results due to model symmetry.

D. QAD RUNS

18 QAD runs will be made to determine detector response to a 1 μCi/cc source

Once detector response is determined for a given 1 μCi/cc source the accident source term from calculation NE-02-88-27 times a given % clad damage will be used to generate detector response

Isotope	Input Files **	
I-131	I131	✓
I-132	I132a	✓
	I132b	✓
	I132c	✓
	I132d	✓
I-133	I133a	✓
	I133b	✓
I-134	I134a	✓
	I134b	✓
	I134c	✓
	I134d	✓
I-135	I135a	✓
	I135b	✓
	I135c	✓
Kr-83m*	—	
Kr-85	Kr85	✓
Kr-85m	Kr85m	✓
Kr-87	Kr87a	✓
	Kr87b	✓
Kr-88	Kr88a	✓
	Kr88b	✓
	Kr88c	✓

** Output files in Appendix A (input name with .out extension)

* energy from Kr-83m γ is below detector response, no run made.

WASHINGTON PUBLIC POWER SUPPLY SYSTEM

MANUAL CALCULATION

PAGE 5.018 CONT'D ON PAGE

CALCULATION NO. NE-02-94-57

PREPARED BY / DATE S. J. Haynes 8/25/94

VERIFIED BY / DATE [illegible] 8/30/94

REVISION NO. 0

REV. BAR

ISOTOPE	INPUT FILES
Kr - 89	Kr89a ✓
	Kr89b ✓
	Kr89c ✓
	Kr89d ✓
	Kr89e ✓
	Kr89f ✓
Xe-131m	Xe131m ✓
Xe-133	Xe133 ✓
Xe-133m	Xe133m ✓
Xe-135	Xe135 ✓
Xe-135m	Xe135m ✓
Xe-138	Xe138a ✓
	Xe138b ✓
	Xe138c ✓
Kr-89	Kr89g
	Kr89h
Xe-137	Xe137 ✓

968-18694 R1 (2/90)

E. DETECTOR RESPONSE

The QAD results for each isotope energy group (R/hr including buildup) will be combined with detector response (see Appendix E for vendor data) and EALs to produce detector response.

Three spreadsheets will be used, 1 for CMS-RE-27A & 27B and the other 2 for CMS-RE-27E & 27F. The spreadsheet will take the 1 μCi/cc source data, times the detector efficiency/energy group, and times the EAL source.

Source Term

The design basis source term from Reference 6 (NE-02-88-27) will be used for the Halogen & Noble gas source contained in the fuel matrix. For each EAL a given % of this source will be released into the containment instantaneously. The EALs are (see Reference 7):

1) Technical Specification reactor coolant activity limits of 4 μCi/cc dose equivalent I-131 (approximately 0.1% clad failure)

2) Release of reactor coolant Noble gas and iodine inventory associated with a concentration of approximately 300 μCi/gm dose equivalent I-131 (approximately 2-5% core damage).

3) 20% core damage.

The following table presents the core inventory of Halogens & Noble gas at time=0

WASHINGTON PUBLIC POWER SUPPLY SYSTEM	MANUAL CALCULATION	PAGE 5.020	CONT'D ON PAGE
		CALCULATION NO. NE-02-94-57	
PREPARED BY / DATE S. J. Haynes 8/26/94	VERIFIED BY / DATE [signature] 9/1/94	REVISION NO. 0	REV. BAR

	Isotope	Source (Ci)
HALOGENS	I-131	2.422×10^7
	I-132	3.466×10^7
	I-133	4.747×10^7
	I-134	5.183×10^7
	I-135	4.470×10^7
NOBLE GAS	Kr-83m	9.938×10^6
	Kr-85	8.915×10^5
	Kr-85m	1.976×10^7
	Kr-87	3.671×10^7
	Kr-88	5.139×10^7
	Kr-89	6.082×10^7
	Xe-131m	9.762×10^5
	Xe-133	~~1.902×10^7~~ 1.902×10^8
	Xe-133m	6.044×10^6
	Xe-135	4.723×10^7
	Xe-135m	3.905×10^7
	Xe-137	1.656×10^8
	Xe-138	1.506×10^8

Net Free Volume Drywell = 200,540 ft^3 FSAR Table 6.2-1
= 5.6787×10^9 cm^3

Volume of water in Vessel = 12,743 ft^3 FSAR Table 6.2-4
" Recirc Loops = 670 ft^3
Total release = 13,413 ft^3
= 3.7981×10^8 cm^3

Release fraction for gap release Xe, Kr = 0.03 NUREG-1228
I = 0.02

CASE 1 - Technical Specification limit 4 μCi/gm I-131 dose equivalent

normal operating condition $T = 534\,°F$
$P = 1035$ psia

$\rho = 47.061 \frac{lb_m}{ft^3} \times .01602 = 0.7539 \frac{gm}{cm^3}$

Curies Released $= (3.7981 \times 10^8\ cm^3)(.7539 \frac{gm}{cm^3})(4\ \mu Ci/gm)$

$= 1.1454 \times 10^9\ \mu Ci$ I-131 ✓

Concentration in drywell $= \frac{1.1454 \times 10^9\ \mu Ci}{5.6787 \times 10^9\ cm^3} = 0.202\ \frac{\mu Ci}{cc}$

CASE 2 - 300 μCi/cc I-131 dose equivalent

Curies released $= (3.7981 \times 10^8\ cm^3)(.7539 \frac{gm}{cm^3})(300\ \mu Ci/gm)$

$= 8.5901 \times 10^{10}\ Ci$ ✓

Concentration in Drywell $= \frac{8.5901 \times 10^{10}\ Ci}{5.6787 \times 10^9\ cm^3} = 15.1269\ \frac{\mu Ci}{cc}$

CASE 3 - 20% core damage

NUREG 1228 specifies a gap release fraction of .03 for Xe & Kr and .02 for I

Case 4 - 0.1% core damage
Case 5 - 2 % core damage
Case 6 - 5 % core damage

EXCEL Spreadsheets will be created to determine detector response for each case. MathCad was used to determine detector efficiency for each of the isotope gamma energy groups. The data of detector efficiency from Appendix E was input into MathCad and used to interpolate detector efficiency for each energy group. The results were read into the EXCEL Spreadsheet.

The following pages present the MathCad Calculation and the EXCEL Spread Sheet results.

Power Uprate

Power uprate will not impact either Case 1 or case 2. For case three the reported detector response can be increased by a factor of 1.0528 (see calculation in Reference 8)

$j := 1..501$ Number of Isotopes

$i := 1..18$ Number of Data Points for Detector CMS-RE-27E&F

$k := 1..17$ Number of Data Points for Detector CMS-RE-27A&B

$MeV_i :=$	$Eff27EF_i :=$	$Mab_k :=$	$Eff27AB_k :=$
.038	0.0	0.04	0.0
.050	.20	.061	.35
.060	.38	.070	.53
.070	.50	.080	.71
.071	.80	.090	.83
.080	.90	.100	.91
.100	1.0	.105	1.0
.120	1.02	.130	1.05
.130	1.02	.200	1.05
.150	1.0	.250	1.04
.200	.975	.300	1.01
.300	.96	.400	1.00
.400	.95	.500	.99
.6617	1.0	.6617	1.0
1.0	1.01	1.00	1.01
1.1732	1.0	2.00	1.1
2.0	.97	3.00	1.2
3.0	.9		

Detector CMS-RE-27A,B,E,F Efficiency

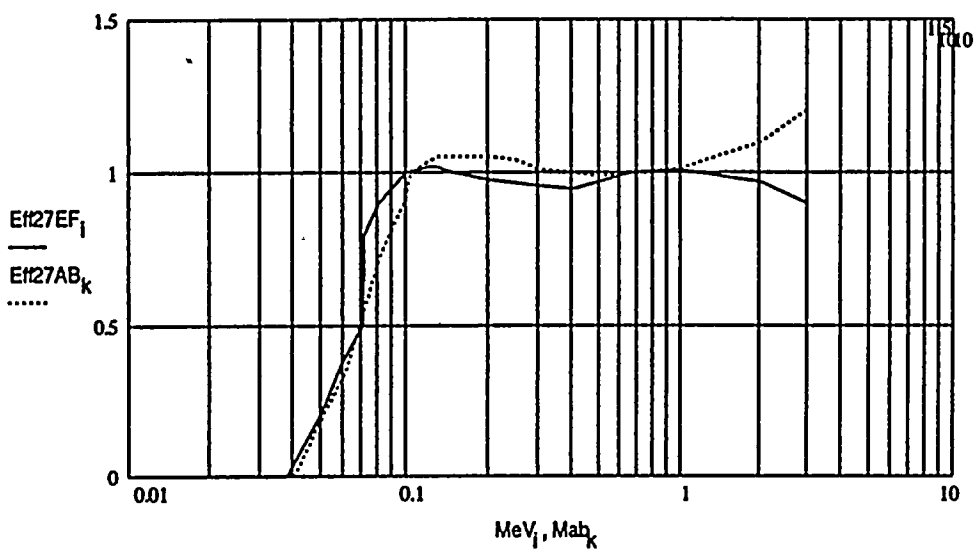

$Energy_j := READ(mev)$

$vs := cspline(MeV, Eff27EF)$

$vs1 := cspline(Mab, Eff27AB)$

$RES_j := interp(vs, MeV, Eff27EF, Energy_j)$

$RESA_j := interp(vs1, Mab, Eff27AB, Energy_j)$

$WRITE(r27ef) := RES_j$

$WRITE(r27ab) := RESA_j$

The following Tables are representative of the output files generated for input into the EXCEL spreadsheet calculations

Ver. Fied: [signature] 8/30/94

kk := 1..10

$Energy_{kk}$	RES_{kk}	$RESA_{kk}$
0.08018	0.88417	0.71288
0.17721	0.9756	1.01957
0.2843	0.96336	1.01753
0.32578	0.95537	1.0028
0.36448	0.95096	1.00011
0.50299	0.96321	0.98982
0.63697	0.99497	0.99744
0.6427	0.9962	0.99806
0.72289	1.00909	1.00471
0.32939	0.95482	1.00223

Verified Lorer Sharp 9/1/94

Isotope	Photon Energy (MeV)	Probability	Drywell Concentration (uCi/cc)	Energy Group Concentration (uCi/cc)	CMS-RE-27A&B QAD Detector Response (Rad/hr)	CMS-RE-27A&B Efficiency	CMS-RE-27A&B Response (Rad/hr)
I-131	0.080183	0.026182	0.202	0.005288764	2.18E-07	0.71	8.18219E-10
I-131	0.17721	0.002648		0.000534896	1.18E-03	1.02	6.42546E-07
I-131	0.2843	0.060521		0.012225242	1.44E-01	1.02	0.001797514
I-131	0.32578	0.002507		0.000506414	8.46E-03	1.00	4.28578E-06
I-131	0.36448	0.81164		0.16395128	3.48E+00	1.00	0.570763591
I-131	0.50299	0.003605		0.00072821	3.42E-02	0.99	2.46615E-05
I-131	0.63697	0.072605		0.01466621	1.05E+00	1.00	0.015340856
I-131	0.6427	0.002195		0.00044339	3.19E-02	1.00	1.41552E-05
I-131	0.72289	0.018025		0.00364105	2.95E-01	1.00	0.001073163
I-131	0.32939	0.002304		0.000465408	7.96E-03	1.00	3.70632E-06
						Sum	0.587945707

Cone Factor 0.00856 CMS-RE-27A Response = 0.005032815 Rad/hr
Cone Factor 0.00973 CMS-RE-27B Respones= 0.005720712

photon Energy (Mev)	CMS-RE-27E QAD Detector Response (Rad/hr)	CMS-RE-27F QAD Detector Response (Rad/hr)	CMS-RE-27E&F Efficiency	CMS-RE-27E Response (Rad/hr)	CMS-RE-27E Response (Rad/hr)
0.080183	1.22E-01	9.65E-02	0.88	0.000568174	0.00044921
0.17721	2.70E-02	2.13E-02	0.98	1.4135E-05	1.11832E-05
0.2843	1.16E+00	9.17E-01	0.96	0.013597599	0.010761773
0.32578	5.67E-02	4.49E-02	0.96	2.75831E-05	2.18328E-05
0.36448	2.09E+01	1.65E+01	0.95	3.248399501	2.571338097
0.50299	1.51E-01	1.20E-01	0.96	0.000105778	8.3757E-05
0.63697	3.38E+00	2.68E+00	0.99	0.049121083	0.038942879
0.6427	1.03E-01	8.17E-02	1.00	4.57091E-05	3.62365E-05
0.72289	9.44E-01	7.48E-01	1.01	0.003470787	0.002750262
0.32939	5.28E-02	4.18E-02	0.95	2.33577E-05	1.84884E-05

CMS-RE-27E
Response = 3.315373706 Rad/hr
CMS-RE-27F
Response= 2.62441372 Rad/hr

CMS-RE-27A,B,E,F Response to [illegible] uCi/cc Source In RPV Liquid

Verified [illegible] 9/1/94

Isotope	Photon Energy (MeV)	Probability	Drywell Concentration (uCi/cc)	Energy Group Concentration (uCi/cc)	CMS-RE-27A&B QAD Detector Response (Rad/hr)	CMS-RE-27A&B Efficiency	CMS-RE-27A&B Response (Rad/hr)
I-131	0.080183	0.026182	15.1269	0.396052496	2.18E-07	0.71	6.12729E-08
I-131	0.17721	0.002648		0.040056031	1.18E-03	1.02	4.81175E-05
I-131	0.2843	0.060521		0.915495115	1.44E-01	1.02	0.134607993
I-131	0.32578	0.002507		0.037923138	8.46E-03	1.00	0.000320944
I-131	0.36448	0.81164		12.27759712	3.48E+00	1.00	42.74199884
I-131	0.50299	0.003605		0.054532475	3.42E-02	0.99	0.001846792
I-131	0.63697	0.072605		1.098288575	1.05E+00	1.00	1.148809849
I-131	0.6427	0.002195		0.033203546	3.19E-02	1.00	0.001060023
I-131	0.72289	0.018025		0.272662373	2.95E-01	1.00	0.080364508
I-131	0.32939	0.002304		0.034852378	7.96E-03	1.00	0.00027755
						Sum =	44.02869262

Cone Factor 0.00856 CMS-RE-27A Response = 0.376885609 Rad/hr
Cone Factor 0.00973 CMS-RE-27B Respones = 0.428399179 Rad/hr

photon Energy (Mev)	CMS-RE-27E QAD Detector Response (Rad/hr)	CMS-RE-27F QAD Detector Response (Rad/hr)	CMS-RE-27E&F Efficiency	CMS-RE-27E Response (Rad/hr)	CMS-RE-27E Response (Rad/hr)
0.080183	1.22E-01	9.65E-02	0.88	0.042548078	0.0336394
0.17721	2.70E-02	2.13E-02	0.98	0.001058509	0.000837464
0.2843	1.16E+00	9.17E-01	0.96	1.018264935	0.805902293
0.32578	5.67E-02	4.49E-02	0.96	0.002065579	0.001634967
0.36448	2.09E+01	1.65E+01	0.95	243.2584872	192.5563082
0.50299	1.51E-01	1.20E-01	0.96	0.007921256	0.006272194
0.63697	3.38E+00	2.68E+00	0.99	3.678463876	2.916262588
0.6427	1.03E-01	8.17E-02	1.00	0.003422954	0.002713593
0.72289	9.44E-01	7.48E-01	1.01	0.259912135	0.205955169
0.32939	5.28E-02	4.18E-02	0.95	0.001749155	0.001384518

CMS-RE-27E
Response = 248.2738937 Rad/hr
CMS-RE-27F
Response = 196.5309104 Rad/hr

Isotope	Energy (MeV)	Probability	Design Basis Source (Ci)	Gap Release Fraction	Cont. Conc. (uCi/cc)	27A&B QAD Det. Response (Rad/hr)	27A&B Eff.	27A&B Response (Rad/hr)	27E QAD Det. Response (Rad/hr)	27F QAD Det. Response (Rad/hr)	27E&F Eff.	27E Response (Rad/hr)	27F Response (Rad/hr)
I-131	0.080183	0.026182	2.422E+07	0.0200	4.47E-01	3.20E-07	0.71	1.015E-07	1.79E-01	1.42E-01	0.88	7.05E-02	5.58E-02
	0.17721	0.002648	2.422E+07	0.0200	4.52E-02	1.73E-03	1.02	7.975E-05	3.96E-02	3.14E-02	0.98	1.75E-03	1.39E-03
	0.2843	0.060521	2.422E+07	0.0200	1.03E+00	2.12E-01	1.02	2.231E-01	1.70E+00	1.35E+00	0.96	1.69E+00	1.34E+00
	0.32578	0.002507	2.422E+07	0.0200	4.28E-02	1.24E-02	1.00	5.321E-04	8.34E-02	6.60E-02	0.96	3.42E-03	2.71E-03
	0.36448	0.81164	2.422E+07	0.0200	1.38E+01	5.12E+00	1.00	7.085E+01	3.07E+01	2.43E+01	0.95	4.03E+02	3.19E+02
	0.50299	0.003605	2.422E+07	0.0200	6.15E-02	5.03E-02	0.99	3.061E-03	2.22E-01	1.76E-01	0.96	1.31E-02	1.04E-02
	0.63697	0.072605	2.422E+07	0.0200	1.24E+00	1.54E+00	1.00	1.904E+00	4.97E+00	3.94E+00	0.99	6.10E+00	4.83E+00
	0.6427	0.002195	2.422E+07	0.0200	3.74E-02	4.69E-02	1.00	1.757E-03	1.52E-01	1.20E-01	1.00	5.67E-03	4.50E-03
	0.72289	0.018025	2.422E+07	0.0200	3.08E-01	4.33E-01	1.00	1.333E-01	1.39E+00	1.10E+00	1.01	4.31E-01	3.41E-01
	0.32939	0.002304	2.422E+07	0.0200	3.93E-02	1.17E-02	1.00	4.602E-04	7.77E-02	6.15E-02	0.95	2.90E-03	2.30E-03
I-132	0.1472	0.002369	3.466E+07	0.0200	5.78E-02	5.60E-04	1.01	3.273E-05	2.80E-02	2.21E-02	1.01	1.63E-03	1.29E-03
	0.1833	0.001382	3.466E+07	0.0200	3.37E-02	1.07E-03	1.03	3.719E-05	2.16E-02	1.71E-02	0.97	7.08E-04	5.60E-04
	0.2548	0.001875	3.466E+07	0.0200	4.58E-02	4.65E-03	1.04	2.215E-04	4.57E-02	3.62E-02	0.97	2.03E-03	1.61E-03
	0.2627	0.01441	3.466E+07	0.0200	3.52E-01	3.93E-02	1.03	1.424E-02	3.66E-01	2.90E-01	0.97	1.25E-01	9.88E-02
	0.2848	0.007205	3.466E+07	0.0200	1.76E-01	2.54E-02	1.02	4.551E-03	2.03E-01	1.61E-01	0.96	3.43E-02	2.72E-02
	0.3165	0.001382	3.466E+07	0.0200	3.37E-02	6.45E-03	1.00	2.176E-04	4.44E-02	3.52E-02	0.96	1.44E-03	1.14E-03
	0.3635	0.004935	3.466E+07	0.0200	1.20E-01	3.09E-02	1.00	3.727E-03	1.86E-01	1.47E-01	0.95	2.13E-02	1.68E-02
	0.3878	0.002961	3.466E+07	0.0200	7.23E-02	2.13E-02	1.00	1.539E-03	1.19E-01	9.44E-02	0.95	8.19E-03	6.49E-03
	0.4168	0.004738	3.466E+07	0.0200	1.16E-01	3.90E-02	1.00	4.512E-03	2.05E-01	1.62E-01	0.95	2.25E-02	1.78E-02
	0.4319	0.004836	3.466E+07	0.0200	1.18E-01	4.22E-02	1.00	4.988E-03	2.16E-01	1.71E-01	0.95	2.42E-02	1.91E-02
	0.446	0.006021	3.466E+07	0.0200	1.47E-01	5.55E-02	1.00	8.151E-03	2.76E-01	2.18E-01	0.95	3.85E-02	3.05E-02
	0.4739	0.001777	3.466E+07	0.0200	4.34E-02	1.80E-02	0.99	7.752E-04	8.54E-02	6.76E-02	0.96	3.56E-03	2.81E-03
	0.4785	0.001481	3.466E+07	0.0200	3.62E-02	1.53E-02	0.99	5.467E-04	7.16E-02	5.67E-02	0.96	2.49E-03	1.97E-03
	0.4882	0.004145	3.466E+07	0.0200	1.01E-01	4.41E-02	0.99	4.421E-03	2.03E-01	1.61E-01	0.96	1.98E-02	1.56E-02
	0.5059	0.050337	3.466E+07	0.0200	1.23E+00	7.14E-01	0.99	8.690E-01	3.10E+00	2.46E+00	0.96	3.66E+00	2.90E+00
	0.52265	0.16088	3.466E+07	0.0200	3.93E+00	2.49E+00	0.99	9.682E+00	9.89E+00	7.83E+00	0.97	3.77E+01	2.98E+01
	0.5355	0.005231	3.466E+07	0.0200	1.28E-01	8.55E-02	0.99	1.081E-02	3.23E-01	2.56E-01	0.97	4.00E-02	3.17E-02
	0.54	0.001086	3.466E+07	0.0200	2.65E-02	1.81E-02	0.99	4.742E-04	6.71E-02	5.32E-02	0.97	1.73E-03	1.37E-03
	0.5471	0.012535	3.466E+07	0.0200	3.06E-01	2.14E-01	0.99	6.481E-02	7.77E-01	6.16E-01	0.97	2.31E-01	1.83E-01
	0.6	0.001382	3.466E+07	0.0200	3.37E-02	2.74E-02	0.99	9.143E-04	9.02E-02	7.15E-02	0.99	3.01E-03	2.39E-03
	0.6208	0.003948	3.466E+07	0.0200	9.64E-02	8.13E-02	1.00	7.838E-03	2.65E-01	2.10E-01	0.99	2.53E-02	2.00E-02
	0.6212	0.015792	3.466E+07	0.0200	3.86E-01	3.26E-01	1.00	1.255E-01	1.06E+00	8.40E-01	0.99	4.04E-01	3.21E-01
	0.63022	0.13719	3.466E+07	0.0200	3.35E+00	2.87E+00	1.00	9.623E+00	9.31E+00	7.38E+00	0.99	3.09E+01	2.45E+01

Isotope	Energy (MeV)	Probability	Design Basis Source (Ci)	Gap Release Fraction	Cont. Conc. (uCi/cc)	27A&B QAD Det. Response (Rad/hr)	27A&B Eff.	27A&B Response (Rad/hr)	27E QAD Det. Response (Rad/hr)	27F QAD Det. Response (Rad/hr)	27E&F Eff.	27E Response (Rad/hr)	27F Response (Rad/hr)
	0.6506	0.026649	3.466E+07	0.0200	6.51E-01	5.77E-01	1.00	3.753E-01	1.86E+00	1.47E+00	1.00	1.21E+00	9.59E-01
	0.659	0.003948	3.466E+07	0.0200	9.64E-02	8.66E-02	1.00	8.345E-03	2.79E-01	2.21E-01	1.00	2.69E-02	2.13E-02
	0.66769	0.987	3.466E+07	0.0200	2.41E+01	2.19E+01	1.00	5.286E+02	7.05E+01	5.59E+01	1.00	1.70E+03	1.35E+03
	0.6698	0.04935	3.466E+07	0.0200	1.20E+00	1.10E+00	1.00	1.325E+00	3.54E+00	2.80E+00	1.00	4.26E+00	3.38E+00
	0.6716	0.052311	3.466E+07	0.0200	1.28E+00	1.17E+00	1.00	1.493E+00	3.76E+00	2.98E+00	1.00	4.80E+00	3.80E+00
	0.727	0.031584	3.466E+07	0.0200	7.71E-01	7.64E-01	1.00	5.887E-01	2.44E+00	1.94E+00	1.01	1.90E+00	1.51E+00
	0.7272	0.021714	3.466E+07	0.0200	5.30E-01	5.25E-01	1.00	2.784E-01	1.68E+00	1.33E+00	1.01	9.00E-01	7.13E-01
	0.7285	0.010857	3.466E+07	0.0200	2.65E-01	2.63E-01	1.01	7.042E-02	8.42E-01	6.67E-01	1.01	2.25E-01	1.79E-01
	0.7645	0.003948	3.466E+07	0.0200	9.64E-02	1.00E-01	1.01	9.777E-03	3.21E-01	2.54E-01	1.01	3.12E-02	2.47E-02
	0.77261	0.76196	3.466E+07	0.0200	1.86E+01	1.96E+01	1.01	3.681E+02	6.25E+01	4.95E+01	1.01	1.17E+03	9.30E+02
	0.7802	0.012338	3.466E+07	0.0200	3.01E-01	3.21E-01	1.01	9.751E-02	1.02E+00	8.09E-01	1.01	3.11E-01	2.46E-01
	0.7845	0.004244	3.466E+07	0.0200	1.04E-01	1.11E-01	1.01	1.161E-02	3.53E-01	2.80E-01	1.01	3.70E-02	2.93E-02
	0.8098	0.028623	3.466E+07	0.0200	6.99E-01	7.72E-01	1.01	5.448E-01	2.45E+00	1.94E+00	1.01	1.73E+00	1.37E+00
	0.8122	0.056259	3.466E+07	0.0200	1.37E+00	1.52E+00	1.01	2.110E+00	4.84E+00	3.83E+00	1.01	6.71E+00	5.32E+00
	0.8633	0.005823	3.466E+07	0.0200	1.42E-01	1.66E-01	1.01	2.390E-02	5.30E-01	4.19E-01	1.02	7.68E-02	6.08E-02
	0.8768	0.010758	3.466E+07	0.0200	2.63E-01	3.12E-01	1.01	8.280E-02	9.92E-01	7.86E-01	1.02	2.66E-01	2.11E-01
	0.9103	0.009179	3.466E+07	0.0200	2.24E-01	2.76E-01	1.01	6.251E-02	8.75E-01	6.93E-01	1.01	1.98E-01	1.57E-01
	0.9276	0.004145	3.466E+07	0.0200	1.01E-01	1.27E-01	1.01	1.299E-02	4.02E-01	3.18E-01	1.01	4.11E-02	3.25E-02
	0.95455	0.18062	3.466E+07	0.0200	4.41E+00	5.71E+00	1.01	2.541E+01	1.79E+01	1.42E+01	1.01	7.99E+01	6.33E+01
	0.9837	0.005626	3.466E+07	0.0200	1.37E-01	1.84E-01	1.01	2.546E-02	5.73E-01	4.54E-01	1.01	7.95E-02	6.30E-02
	1.0347	0.004738	3.466E+07	0.0200	1.16E-01	1.62E-01	1.01	1.895E-02	5.03E-01	3.99E-01	1.01	5.88E-02	4.66E-02
	1.136	0.02961	3.466E+07	0.0200	7.23E-01	1.11E+00	1.01	8.075E-01	3.39E+00	2.68E+00	1.00	2.45E+00	1.94E+00
	1.1434	0.013522	3.466E+07	0.0200	3.30E-01	5.08E-01	1.01	1.694E-01	1.55E+00	1.23E+00	1.00	5.13E-01	4.06E-01
	1.1474	0.002764	3.466E+07	0.0200	6.75E-02	1.04E-01	1.01	7.106E-03	3.18E-01	2.52E-01	1.00	2.15E-02	1.70E-02
	1.1732	0.010857	3.466E+07	0.0200	2.65E-01	4.19E-01	1.02	1.132E-01	1.27E+00	1.01E+00	1.00	3.37E-01	2.67E-01
	1.2727	0.001777	3.466E+07	0.0200	4.34E-02	7.44E-02	1.02	3.292E-03	2.21E-01	1.75E-01	0.99	9.50E-03	7.52E-03
	1.2907	0.011351	3.466E+07	0.0200	2.77E-01	4.82E-01	1.02	1.363E-01	1.43E+00	1.13E+00	0.99	3.91E-01	3.10E-01
	1.2953	0.01974	3.466E+07	0.0200	4.82E-01	8.42E-01	1.02	4.139E-01	2.49E+00	1.97E+00	0.99	1.19E+00	9.40E-01
	1.2976	0.008883	3.466E+07	0.0200	2.17E-01	3.80E-01	1.02	8.397E-02	1.12E+00	8.88E-01	0.99	2.41E-01	1.91E-01
	1.3178	0.001184	3.466E+07	0.0200	2.89E-02	5.14E-02	1.02	1.516E-03	1.51E-01	1.20E-01	0.99	4.32E-03	3.42E-03
	1.3721	0.024675	3.466E+07	0.0200	6.02E-01	1.12E+00	1.03	6.943E-01	3.24E+00	2.57E+00	0.99	1.93E+00	1.53E+00
	1.3986	0.071064	3.466E+07	0.0200	1.73E+00	3.29E+00	1.03	5.879E+00	9.46E+00	7.49E+00	0.99	1.62E+01	1.29E+01
	1.4426	0.014213	3.466E+07	0.0200	3.47E-01	6.81E-01	1.04	2.457E-01	1.93E+00	1.53E+00	0.99	6.64E-01	5.26E-01
	1.4768	0.001352	3.466E+07	0.0200	3.30E-02	6.65E-02	1.04	2.281E-03	1.87E-01	1.48E-01	0.99	6.11E-03	4.84E-03

Isotope	Energy (MeV)	Probability	Design Basis Source (Ci)	Gap Release Fraction	Cont. Conc. (uCi/cc)	27A&B QAD Det. Response (Rad/hr)	27A&B Eff.	27A&B Response (Rad/hr)	27E QAD Det. Response (Rad/hr)	27F QAD Det. Response (Rad/hr)	27E&F Eff.	27E Response (Rad/hr)	27F Response (Rad/hr)
	1.7575	0.002961	3.466E+07	0.0200	7.23E-02	1.70E-01	1.07	1.315E-02	4.60E-01	3.64E-01	0.98	3.26E-02	2.58E-02
	1.9211	0.011844	3.466E+07	0.0200	2.89E-01	7.37E-01	1.09	2.322E-01	1.95E+00	1.54E+00	0.97	5.47E-01	4.33E-01
	2.0022	0.010857	3.466E+07	0.0200	2.65E-01	7.01E-01	1.10	2.045E-01	1.84E+00	1.45E+00	0.97	4.72E-01	3.74E-01
	2.0868	0.002369	3.466E+07	0.0200	5.78E-02	1.58E-01	1.11	1.011E-02	4.12E-01	3.26E-01	0.97	2.31E-02	1.83E-02
	2.1727	0.001974	3.466E+07	0.0200	4.82E-02	1.35E-01	1.12	7.292E-03	3.52E-01	2.79E-01	0.96	1.63E-02	1.29E-02
	2.2232	0.001184	3.466E+07	0.0200	2.89E-02	8.23E-02	1.13	2.690E-03	2.14E-01	1.70E-01	0.96	5.95E-03	4.71E-03
	2.3905	0.001678	3.466E+07	0.0200	4.10E-02	1.23E-01	1.15	5.794E-03	3.18E-01	2.52E-01	0.95	1.24E-02	9.80E-03
	1.0146	0.031946	3.466E+07	0.0200	7.80E-01	1.07E+00	1.01	8.465E-01	3.34E+00	2.64E+00	1.01	2.63E+00	2.08E+00
I-133	0.2627	0.003565	4.747E+07	0.0200	1.19E-01	9.73E-03	1.03	1.194E-03	9.06E-02	7.17E-02	0.97	1.05E-02	8.29E-03
	0.26717	0.001165	4.747E+07	0.0200	3.90E-02	3.35E-03	1.03	1.344E-04	3.03E-02	2.39E-02	0.97	1.14E-03	9.05E-04
	0.34543	0.001036	4.747E+07	0.0200	3.46E-02	5.83E-03	1.00	2.018E-04	3.69E-02	2.92E-02	0.95	1.21E-03	9.61E-04
	0.36108	0.001122	4.747E+07	0.0200	3.75E-02	6.93E-03	1.00	2.601E-04	4.20E-02	3.32E-02	0.95	1.50E-03	1.18E-03
	0.41805	0.001528	4.747E+07	0.0200	5.11E-02	1.26E-02	1.00	6.459E-04	6.62E-02	5.24E-02	0.95	3.21E-03	2.54E-03
	0.42291	0.00309	4.747E+07	0.0200	1.03E-01	2.61E-02	1.00	2.693E-03	1.35E-01	1.07E-01	0.95	1.33E-02	1.05E-02
	0.51053	0.018127	4.747E+07	0.0200	6.06E-01	2.64E-01	0.99	1.585E-01	1.12E+00	8.83E-01	0.96	6.49E-01	5.14E-01
	0.52987	0.8632	4.747E+07	0.0200	2.89E+01	1.38E+01	0.99	3.939E+02	5.31E+01	4.21E+01	0.97	1.49E+03	1.18E+03
	0.61797	0.005395	4.747E+07	0.0200	1.80E-01	1.11E-01	1.00	1.994E-02	3.60E-01	2.86E-01	0.99	6.43E-02	5.10E-02
	0.68025	0.006448	4.747E+07	0.0200	2.16E-01	1.46E-01	1.00	3.147E-02	4.69E-01	3.71E-01	1.00	1.01E-01	8.01E-02
	0.70658	0.014933	4.747E+07	0.0200	4.99E-01	3.51E-01	1.00	1.753E-01	1.13E+00	8.92E-01	1.01	5.67E-01	4.50E-01
	0.76838	0.004566	4.747E+07	0.0200	1.53E-01	1.17E-01	1.01	1.800E-02	3.73E-01	2.95E-01	1.01	5.75E-02	4.55E-02
	0.82051	0.001537	4.747E+07	0.0200	5.14E-02	4.19E-02	1.01	2.177E-03	1.33E-01	1.06E-01	1.02	7.00E-03	5.54E-03
	0.85628	0.012344	4.747E+07	0.0200	4.13E-01	3.50E-01	1.01	1.459E-01	1.11E+00	8.83E-01	1.02	4.69E-01	3.72E-01
	0.87533	0.044714	4.747E+07	0.0200	1.50E+00	1.29E+00	1.01	1.955E+00	4.12E+00	3.26E+00	1.02	6.28E+00	4.97E+00
	0.90967	0.002124	4.747E+07	0.0200	7.10E-02	6.39E-02	1.01	4.582E-03	2.02E-01	1.60E-01	1.01	1.45E-02	1.15E-02
	1.0523	0.005516	4.747E+07	0.0200	1.84E-01	1.92E-01	1.01	3.572E-02	5.94E-01	4.70E-01	1.01	1.11E-01	8.76E-02
	1.0601	0.001373	4.747E+07	0.0200	4.59E-02	4.80E-02	1.01	2.228E-03	1.49E-01	1.18E-01	1.01	6.90E-03	5.46E-03
	1.2364	0.014933	4.747E+07	0.0200	4.99E-01	6.07E-01	1.02	3.091E-01	1.82E+00	1.44E+00	1.00	9.09E-01	7.19E-01
	1.2982	0.023306	4.747E+07	0.0200	7.79E-01	9.96E-01	1.02	7.919E-01	2.94E+00	2.33E+00	0.99	2.27E+00	1.80E+00
	1.3504	0.001485	4.747E+07	0.0200	4.97E-02	6.62E-02	1.03	3.386E-03	1.93E-01	1.53E-01	0.99	9.48E-03	7.51E-03
	0.53524	0.006072	4.747E+07	0.0200	2.03E-01	9.92E-02	0.99	1.994E-02	3.74E-01	2.97E-01	0.97	7.37E-02	5.84E-02
I-134	0.1354	0.037592	5.183E+07	0.0200	1.37E+00	3.23E-03	1.03	4.568E-03	4.01E-01	3.18E-01	1.02	5.62E-01	4.44E-01
	0.13903	0.006869	5.183E+07	0.0200	2.51E-01	8.09E-04	1.02	2.069E-04	7.56E-02	5.98E-02	1.02	1.93E-02	1.53E-02
	0.15198	0.001059	5.183E+07	0.0200	3.87E-02	3.36E-04	1.00	1.298E-05	1.30E-02	1.03E-02	1.00	5.02E-04	3.98E-04
	0.16248	0.002576	5.183E+07	0.0200	9.40E-02	1.11E-03	1.00	1.042E-04	3.44E-02	2.72E-02	0.98	3.17E-03	2.51E-03

Isotope	Energy (MeV)	Probability	Design Basis Source (Ci)	Gap Release Fraction	Cont. Conc. (uCi/cc)	27A&B QAD Det. Response (Rad/hr)	27A&B Eff.	27A&B Response (Rad/hr)	27E QAD Det. Response (Rad/hr)	27F QAD Det. Response (Rad/hr)	27E&F Eff.	27E Response (Rad/hr)	27F Response (Rad/hr)
	0.18847	0.006965	5.183E+07	0.0200	2.54E-01	6.22E-03	1.04	1.644E-03	1.13E-01	8.95E-02	0.97	2.79E-02	2.21E-02
	0.217	0.002481	5.183E+07	0.0200	9.06E-02	3.81E-03	1.06	3.659E-04	4.88E-02	3.86E-02	0.97	4.29E-03	3.39E-03
	0.23547	0.019845	5.183E+07	0.0200	7.25E-01	3.88E-02	1.05	2.949E-02	4.36E-01	3.45E-01	0.97	3.06E-01	2.42E-01
	0.2788	0.001307	5.183E+07	0.0200	4.77E-02	4.30E-03	1.02	2.093E-04	3.59E-02	2.84E-02	0.96	1.64E-03	1.30E-03
	0.31981	0.005152	5.183E+07	0.0200	1.88E-01	2.46E-02	1.00	4.623E-03	1.68E-01	1.33E-01	0.96	3.03E-02	2.40E-02
	0.35108	0.004961	5.183E+07	0.0200	1.81E-01	2.89E-02	1.00	5.231E-03	1.80E-01	1.42E-01	0.95	3.09E-02	2.45E-02
	0.40545	0.073466	5.183E+07	0.0200	2.68E+00	5.77E-01	1.00	1.548E+00	3.09E+00	2.45E+00	0.95	7.88E+00	6.24E+00
	0.411	0.006106	5.183E+07	0.0200	2.23E-01	4.91E-02	1.00	1.094E-02	2.60E-01	2.06E-01	0.95	5.51E-02	4.36E-02
	0.43335	0.041885	5.183E+07	0.0200	1.53E+00	3.68E-01	1.00	5.626E-01	1.87E+00	1.48E+00	0.95	2.72E+00	2.15E+00
	0.45892	0.012976	5.183E+07	0.0200	4.74E-01	1.25E-01	0.99	5.871E-02	6.08E-01	4.82E-01	0.96	2.77E-01	2.19E-01
	0.4655	0.003626	5.183E+07	0.0200	1.32E-01	3.58E-02	0.99	4.691E-03	1.72E-01	1.36E-01	0.96	2.18E-02	1.73E-02
	0.48888	0.014121	5.183E+07	0.0200	5.16E-01	1.51E-01	0.99	7.688E-02	6.94E-01	5.49E-01	0.96	3.43E-01	2.72E-01
	0.5144	0.023375	5.183E+07	0.0200	8.53E-01	3.48E-01	0.99	2.936E-01	1.44E+00	1.14E+00	0.97	1.19E+00	9.42E-01
	0.54083	0.078236	5.183E+07	0.0200	2.86E+00	1.31E+00	0.99	3.691E+00	4.83E+00	3.83E+00	0.97	1.34E+01	1.06E+01
	0.56552	0.008778	5.183E+07	0.0200	3.20E-01	1.59E-01	0.99	5.044E-02	5.52E-01	4.38E-01	0.98	1.73E-01	1.38E-01
	0.57075	0.002099	5.183E+07	0.0200	7.66E-02	3.86E-02	0.99	2.927E-03	1.33E-01	1.05E-01	0.98	9.96E-03	7.90E-03
	0.59536	0.11354	5.183E+07	0.0200	4.15E+00	2.22E+00	0.99	9.130E+00	7.37E+00	5.85E+00	0.99	3.03E+01	2.40E+01
	0.62179	0.10591	5.183E+07	0.0200	3.87E+00	2.19E+00	1.00	8.453E+00	7.11E+00	5.64E+00	0.99	2.72E+01	2.16E+01
	0.62796	0.023662	5.183E+07	0.0200	8.64E-01	4.94E-01	1.00	4.263E-01	1.60E+00	1.27E+00	0.99	1.37E+00	1.09E+00
	0.67734	0.084915	5.183E+07	0.0200	3.10E+00	1.91E+00	1.00	5.935E+00	6.15E+00	4.87E+00	1.00	1.91E+01	1.51E+01
	0.70665	0.008301	5.183E+07	0.0200	3.03E-01	1.95E-01	1.00	5.915E-02	6.26E-01	4.96E-01	1.01	1.91E-01	1.52E-01
	0.73074	0.019082	5.183E+07	0.0200	6.97E-01	4.64E-01	1.01	3.262E-01	1.48E+00	1.18E+00	1.01	1.04E+00	8.27E-01
	0.73918	0.007633	5.183E+07	0.0200	2.79E-01	1.88E-01	1.01	5.281E-02	6.00E-01	4.76E-01	1.01	1.69E-01	1.34E-01
	0.76668	0.041026	5.183E+07	0.0200	1.50E+00	1.05E+00	1.01	1.583E+00	3.34E+00	2.65E+00	1.01	5.05E+00	4.00E+00
	0.81638	0.005248	5.183E+07	0.0200	1.92E-01	1.43E-01	1.01	2.758E-02	4.53E-01	3.59E-01	1.02	8.86E-02	7.02E-02
	0.84702	0.9541	5.183E+07	0.0200	3.48E+01	2.68E+01	1.01	9.424E+02	8.53E+01	6.75E+01	1.02	3.03E+03	2.40E+03
	0.85729	0.069649	5.183E+07	0.0200	2.54E+00	1.98E+00	1.01	5.079E+00	6.29E+00	4.99E+00	1.02	1.63E+01	1.29E+01
	0.864	0.001908	5.183E+07	0.0200	6.97E-02	5.46E-02	1.01	3.840E-03	1.74E-01	1.38E-01	1.02	1.23E-02	9.77E-03
	0.88409	0.6526	5.183E+07	0.0200	2.38E+01	1.91E+01	1.01	4.591E+02	6.06E+01	4.80E+01	1.01	1.46E+03	1.16E+03
	0.9226	0.001431	5.183E+07	0.0200	5.22E-02	4.36E-02	1.01	2.303E-03	1.38E-01	1.09E-01	1.01	7.28E-03	5.77E-03
	0.94786	0.040358	5.183E+07	0.0200	1.47E+00	1.27E+00	1.01	1.883E+00	3.99E+00	3.16E+00	1.01	5.93E+00	4.70E+00
	0.9669	0.00353	5.183E+07	0.0200	1.29E-01	1.13E-01	1.01	1.472E-02	3.55E-01	2.81E-01	1.01	4.62E-02	3.65E-02
	0.97467	0.046751	5.183E+07	0.0200	1.71E+00	1.51E+00	1.01	2.603E+00	4.73E+00	3.74E+00	1.01	8.15E+00	6.45E+00
	1.0403	0.019082	5.183E+07	0.0200	6.97E-01	6.56E-01	1.01	4.618E-01	2.04E+00	1.61E+00	1.01	1.43E+00	1.13E+00

Isotope	Energy (MeV)	Probability	Design Basis Source (Ci)	Gap Release Fraction	Cont. Conc. (uCi/cc)	27A&B QAD Det. Response (Rad/hr)	27A&B Eff.	27A&B Response (Rad/hr)	27E QAD Det. Response (Rad/hr)	27F QAD Det. Response (Rad/hr)	27E&F Eff.	27E Response (Rad/hr)	27F Response (Rad/hr)
	1.0726	0.15266	5.183E+07	0.0200	5.57E+00	5.40E+00	1.01	3.040E+01	1.67E+01	1.32E+01	1.01	9.40E+01	7.44E+01
	1.1001	0.006869	5.183E+07	0.0200	2.51E-01	2.49E-01	1.01	6.302E-02	7.66E-01	6.07E-01	1.00	1.92E-01	1.52E-01
	1.1032	0.007251	5.183E+07	0.0200	2.65E-01	2.63E-01	1.01	7.041E-02	8.10E-01	6.42E-01	1.00	2.15E-01	1.70E-01
	1.1362	0.097318	5.183E+07	0.0200	3.55E+00	3.64E+00	1.01	1.305E+01	1.11E+01	8.81E+00	1.00	3.96E+01	3.13E+01
	1.1591	0.00353	5.183E+07	0.0200	1.29E-01	1.34E-01	1.01	1.751E-02	4.10E-01	3.25E-01	1.00	5.28E-02	4.18E-02
	1.164	0.001336	5.183E+07	0.0200	4.88E-02	5.11E-02	1.02	2.543E-03	1.56E-01	1.23E-01	1.00	7.59E-03	6.01E-03
	1.19	0.00353	5.183E+07	0.0200	1.29E-01	1.38E-01	1.02	1.815E-02	4.18E-01	3.31E-01	1.00	5.39E-02	4.27E-02
	1.239	0.002099	5.183E+07	0.0200	7.66E-02	8.55E-02	1.02	6.681E-03	2.56E-01	2.03E-01	1.00	1.96E-02	1.55E-02
	1.2695	0.005629	5.183E+07	0.0200	2.06E-01	2.35E-01	1.02	4.927E-02	6.99E-01	5.54E-01	1.00	1.44E-01	1.14E-01
	1.3224	0.00105	5.183E+07	0.0200	3.83E-02	4.58E-02	1.03	1.807E-03	1.34E-01	1.06E-01	0.99	5.10E-03	4.03E-03
	1.336	0.001431	5.183E+07	0.0200	5.22E-02	6.31E-02	1.03	3.393E-03	1.84E-01	1.46E-01	0.99	9.54E-03	7.55E-03
	1.3526	0.004484	5.183E+07	0.0200	1.64E-01	2.00E-01	1.03	3.376E-02	5.83E-01	4.62E-01	0.99	9.45E-02	7.48E-02
	1.4143	0.002194	5.183E+07	0.0200	8.01E-02	1.03E-01	1.03	8.481E-03	2.94E-01	2.33E-01	0.99	2.33E-02	1.85E-02
	1.4282	0.001717	5.183E+07	0.0200	6.27E-02	8.14E-02	1.03	5.252E-03	2.32E-01	1.84E-01	0.99	1.44E-02	1.14E-02
	1.4314	0.001717	5.183E+07	0.0200	6.27E-02	8.16E-02	1.03	5.265E-03	2.32E-01	1.84E-01	0.99	1.44E-02	1.14E-02
	1.4552	0.022898	5.183E+07	0.0200	8.36E-01	1.11E+00	1.04	9.629E-01	3.13E+00	2.48E+00	0.99	2.59E+00	2.05E+00
	1.47	0.007728	5.183E+07	0.0200	2.82E-01	3.78E-01	1.04	1.108E-01	1.06E+00	8.43E-01	0.99	2.97E-01	2.35E-01
	1.5055	0.001145	5.183E+07	0.0200	4.18E-02	5.75E-02	1.04	2.499E-03	1.60E-01	1.27E-01	0.99	6.64E-03	5.26E-03
	1.5415	0.005057	5.183E+07	0.0200	1.85E-01	2.59E-01	1.04	4.972E-02	7.20E-01	5.70E-01	0.98	1.30E-01	1.03E-01
	1.6138	0.043602	5.183E+07	0.0200	1.59E+00	2.32E+00	1.05	3.882E+00	6.40E+00	5.07E+00	0.98	9.99E+00	7.91E+00
	1.6292	0.002576	5.183E+07	0.0200	9.40E-02	1.38E-01	1.05	1.367E-02	3.81E-01	3.01E-01	0.98	3.51E-02	2.78E-02
	1.6443	0.004007	5.183E+07	0.0200	1.46E-01	2.17E-01	1.06	3.364E-02	5.96E-01	4.72E-01	0.98	8.54E-02	6.76E-02
	1.6552	0.00229	5.183E+07	0.0200	8.36E-02	1.25E-01	1.06	1.105E-02	3.42E-01	2.71E-01	0.98	2.80E-02	2.22E-02
	1.7415	0.026715	5.183E+07	0.0200	9.75E-01	1.52E+00	1.07	1.588E+00	4.13E+00	3.27E+00	0.98	3.94E+00	3.12E+00
	1.8068	0.057246	5.183E+07	0.0200	2.09E+00	3.37E+00	1.08	7.603E+00	9.06E+00	7.17E+00	0.98	1.86E+01	1.47E+01
	1.9259	0.001813	5.183E+07	0.0200	6.62E-02	1.13E-01	1.09	8.153E-03	2.99E-01	2.37E-01	0.97	1.92E-02	1.52E-02
	2.0206	0.001717	5.183E+07	0.0200	6.27E-02	1.12E-01	1.10	7.697E-03	2.92E-01	2.31E-01	0.97	1.78E-02	1.41E-02
	2.1599	0.002099	5.183E+07	0.0200	7.66E-02	1.43E-01	1.12	1.227E-02	3.73E-01	2.95E-01	0.96	2.74E-02	2.17E-02
	2.3124	0.002385	5.183E+07	0.0200	8.71E-02	1.71E-01	1.14	1.694E-02	4.43E-01	3.51E-01	0.96	3.70E-02	2.93E-02
	2.4674	0.001527	5.183E+07	0.0200	5.57E-02	1.15E-01	1.16	7.405E-03	2.95E-01	2.34E-01	0.95	1.56E-02	1.24E-02
	1.7872	0.013348	5.183E+07	0.0200	4.87E-01	7.78E-01	1.07	4.055E-01	2.10E+00	1.66E+00	0.98	1.00E+00	7.93E-01
I-135	0.2205	0.017452	4.470E+07	0.0200	5.49E-01	2.81E-02	1.06	1.636E-02	3.51E-01	2.77E-01	0.97	1.87E-01	1.48E-01
	0.22972	0.002317	4.470E+07	0.0200	7.30E-02	4.20E-03	1.05	3.221E-04	4.92E-02	3.89E-02	0.97	3.48E-03	2.76E-03
	0.26426	0.00184	4.470E+07	0.0200	5.79E-02	5.11E-03	1.03	3.051E-04	4.71E-02	3.73E-02	0.97	2.65E-03	2.10E-03

Isotope	Energy (MeV)	Probability	Design Basis Source (Ci)	Gap Release Fraction	Cont. Conc. (uCi/cc)	27A&B QAD Det. Response (Rad/hr)	27A&B Eff.	27A&B Response (Rad/hr)	27E QAD Det. Response (Rad/hr)	27F QAD Det. Response (Rad/hr)	27E&F Eff.	27E Response (Rad/hr)	27F Response (Rad/hr)
	0.28845	0.030899	4.470E+07	0.0200	9.73E-01	1.13E-01	1.02	1.125E-01	8.86E-01	7.01E-01	0.96	8.27E-01	6.55E-01
	0.29027	0.003033	4.470E+07	0.0200	9.55E-02	1.14E-02	1.01	1.095E-03	8.76E-02	6.94E-02	0.96	8.03E-03	6.36E-03
	0.36185	0.00186	4.470E+07	0.0200	5.86E-02	1.15E-02	1.00	6.761E-04	6.97E-02	5.52E-02	0.95	3.88E-03	3.07E-03
	0.40303	0.002317	4.470E+07	0.0200	7.30E-02	1.80E-02	1.00	1.315E-03	9.70E-02	7.68E-02	0.95	6.72E-03	5.32E-03
	0.41483	0.003004	4.470E+07	0.0200	9.46E-02	2.45E-02	1.00	2.321E-03	1.29E-01	1.02E-01	0.95	1.16E-02	9.19E-03
	0.41763	0.03519	4.470E+07	0.0200	1.11E+00	2.91E-01	1.00	3.220E-01	1.52E+00	1.21E+00	0.95	1.60E+00	1.27E+00
	0.42993	0.003033	4.470E+07	0.0200	9.55E-02	2.63E-02	1.00	2.511E-03	1.35E-01	1.07E-01	0.95	1.22E-02	9.67E-03
	0.43374	0.005522	4.470E+07	0.0200	1.74E-01	4.86E-02	1.00	8.446E-03	2.47E-01	1.96E-01	0.95	4.08E-02	3.23E-02
	0.45163	0.003147	4.470E+07	0.0200	9.91E-02	2.96E-02	1.00	2.931E-03	1.46E-01	1.15E-01	0.95	1.37E-02	1.09E-02
	0.54656	0.071239	4.470E+07	0.0200	2.24E+00	1.21E+00	0.99	2.696E+00	4.42E+00	3.50E+00	0.97	9.61E+00	7.62E+00
	0.57597	0.001288	4.470E+07	0.0200	4.06E-02	2.40E-02	0.99	9.644E-04	8.18E-02	6.49E-02	0.98	3.25E-03	2.58E-03
	0.64985	0.004549	4.470E+07	0.0200	1.43E-01	9.84E-02	1.00	1.409E-02	3.17E-01	2.51E-01	1.00	4.54E-02	3.60E-02
	0.69013	0.001288	4.470E+07	0.0200	4.06E-02	2.96E-02	1.00	1.199E-03	9.49E-02	7.52E-02	1.00	3.85E-03	3.05E-03
	0.70792	0.00658	4.470E+07	0.0200	2.07E-01	1.55E-01	1.00	3.210E-02	4.97E-01	3.93E-01	1.01	1.04E-01	8.23E-02
	0.78548	0.001516	4.470E+07	0.0200	4.77E-02	3.97E-02	1.01	1.913E-03	1.26E-01	1.00E-01	1.01	6.09E-03	4.82E-03
	0.79771	0.001717	4.470E+07	0.0200	5.41E-02	4.57E-02	1.01	2.495E-03	1.45E-01	1.15E-01	1.01	7.93E-03	6.28E-03
	0.8368	0.066661	4.470E+07	0.0200	2.10E+00	1.85E+00	1.01	3.924E+00	5.89E+00	4.67E+00	1.02	1.26E+01	9.99E+00
	0.96146	0.001459	4.470E+07	0.0200	4.59E-02	4.64E-02	1.01	2.155E-03	1.46E-01	1.15E-01	1.01	6.77E-03	5.36E-03
	0.97196	0.008869	4.470E+07	0.0200	2.79E-01	2.86E-01	1.01	8.056E-02	8.95E-01	7.08E-01	1.01	2.52E-01	2.00E-01
	0.97261	0.012016	4.470E+07	0.0200	3.78E-01	3.87E-01	1.01	1.480E-01	1.21E+00	9.61E-01	1.01	4.64E-01	3.67E-01
	0.99509	0.001545	4.470E+07	0.0200	4.86E-02	5.10E-02	1.01	2.507E-03	1.59E-01	1.26E-01	1.01	7.81E-03	6.18E-03
	1.0388	0.07925	4.470E+07	0.0200	2.50E+00	2.72E+00	1.01	6.864E+00	8.45E+00	6.69E+00	1.01	2.13E+01	1.69E+01
	1.1016	0.016022	4.470E+07	0.0200	5.04E-01	5.81E-01	1.01	2.961E-01	1.79E+00	1.42E+00	1.00	9.02E-01	7.14E-01
	1.124	0.036049	4.470E+07	0.0200	1.14E+00	1.33E+00	1.01	1.528E+00	4.09E+00	3.24E+00	1.00	4.64E+00	3.67E+00
	1.1315	0.22516	4.470E+07	0.0200	7.09E+00	8.38E+00	1.01	5.999E+01	2.57E+01	2.03E+01	1.00	1.82E+02	1.44E+02
	1.1599	0.00103	4.470E+07	0.0200	3.24E-02	3.93E-02	1.02	1.299E-03	1.20E-01	9.47E-02	1.00	3.88E-03	3.07E-03
	1.169	0.008726	4.470E+07	0.0200	2.75E-01	3.35E-01	1.02	9.394E-02	1.02E+00	8.07E-01	1.00	2.80E-01	2.22E-01
	1.2405	0.009012	4.470E+07	0.0200	2.84E-01	3.68E-01	1.02	1.064E-01	1.10E+00	8.72E-01	1.00	3.12E-01	2.47E-01
	1.2604	0.2861	4.470E+07	0.0200	9.01E+00	1.19E+01	1.02	1.090E+02	3.54E+01	2.80E+01	1.00	3.19E+02	2.52E+02
	1.3679	0.006065	4.470E+07	0.0200	1.91E-01	2.74E-01	1.03	5.392E-02	7.95E-01	6.29E-01	0.99	1.50E-01	1.19E-01
	1.4484	0.003147	4.470E+07	0.0200	9.91E-02	1.51E-01	1.04	1.560E-02	4.29E-01	3.40E-01	0.99	4.21E-02	3.33E-02
	1.4576	0.086402	4.470E+07	0.0200	2.72E+00	4.19E+00	1.04	1.185E+01	1.18E+01	9.38E+00	0.99	3.19E+01	2.52E+01
	1.5028	0.010729	4.470E+07	0.0200	3.38E-01	5.38E-01	1.04	1.889E-01	1.50E+00	1.19E+00	0.99	5.02E-01	3.98E-01
	1.5664	0.012875	4.470E+07	0.0200	4.05E-01	6.69E-01	1.05	2.846E-01	1.85E+00	1.47E+00	0.98	7.36E-01	5.83E-01

Isotope	Energy (MeV)	Probability	Design Basis Source (Ci)	Gap Release Fraction	Cont. Conc. (uCi/cc)	27A&B QAD Det. Response (Rad/hr)	27A&B Eff.	27A&B Response (Rad/hr)	27E QAD Det. Response (Rad/hr)	27F QAD Det. Response (Rad/hr)	27E&F Eff.	27E Response (Rad/hr)	27F Response (Rad/hr)
	1.678	0.095271	4.470E+07	0.0200	3.00E+00	5.25E+00	1.06	1.669E+01	1.44E+01	1.14E+01	0.98	4.22E+01	3.34E+01
	1.7065	0.040912	4.470E+07	0.0200	1.29E+00	2.29E+00	1.06	3.125E+00	6.24E+00	4.94E+00	0.98	7.87E+00	6.23E+00
	1.7912	0.076961	4.470E+07	0.0200	2.42E+00	4.49E+00	1.07	1.165E+01	1.21E+01	9.58E+00	0.98	2.88E+01	2.28E+01
	1.8307	0.005779	4.470E+07	0.0200	1.82E-01	3.44E-01	1.08	6.762E-02	9.23E-01	7.30E-01	0.98	1.64E-01	1.30E-01
	1.9273	0.002947	4.470E+07	0.0200	9.28E-02	1.84E-01	1.09	1.859E-02	4.87E-01	3.85E-01	0.97	4.38E-02	3.47E-02
	2.0459	0.008697	4.470E+07	0.0200	2.74E-01	5.70E-01	1.11	1.733E-01	1.49E+00	1.18E+00	0.97	3.96E-01	3.14E-01
	2.2555	0.006123	4.470E+07	0.0200	1.93E-01	4.30E-01	1.13	9.374E-02	1.12E+00	8.86E-01	0.96	2.07E-01	1.64E-01
	2.4087	0.009527	4.470E+07	0.0200	3.00E-01	7.02E-01	1.15	2.421E-01	1.82E+00	1.44E+00	0.95	5.17E-01	4.09E-01
	1.0734	0.014948	4.470E+07	0.0200	4.71E-01	5.29E-01	1.01	2.516E-01	1.64E+00	1.29E+00	1.01	7.77E-01	6:16E-01
Kr-85	0.51399	0.00434	8.915E+05	0.0300	4.09E-03	6.44E-02	0.99	2.606E-04	2.67E-01	2.11E-01	0.97	1.06E-03	8.38E-04
Kr-85m	0.30487	0.13989	1.976E+07	0.0300	2.92E+00	6.03E-01	1.01	1.777E+00	4.30E+00	3.40E+00	0.96	1.20E+01	9.53E+00
	0.00169	0.000586	1.976E+07	0.0300	1.22E-02	0.00E+00	0	0.000E+00	9.00E+10	7.10E+10	0	0.00E+00	0.00E+00
	0.013336	0.006116	1.976E+07	0.0300	1.28E-01	0.00E+00	0	0.000E+00	2.48E+00	1.95E+00	0	0.00E+00	0.00E+00
	0.013395	0.01183	1.976E+07	0.0300	2.47E-01	0.00E+00	0	0.000E+00	4.66E+00	3.68E+00	0	0.00E+00	0.00E+00
	0.015	0.003105	1.976E+07	0.0300	6.48E-02	0.00E+00	0	0.000E+00	6.42E-01	5.06E-01	0	0.00E+00	0.00E+00
	0.12985	0.003011	1.976E+07	0.0300	6.29E-02	1.59E-04	1.05	1.051E-05	3.06E-02	2.42E-02	1.02	1.97E-03	1.55E-03
	0.15118	0.75278	1.976E+07	0.0300	1.57E+01	2.33E-01	1.00	3.665E+00	9.18E+00	7.26E+00	1.00	1.44E+02	1.14E+02
	0.58128	0.000211	1.976E+07	0.0300	4.41E-03	3.99E-03	0.99	1.741E-05	1.35E-02	1.07E-02	0.98	5.82E-05	4.62E-05
Kr-87	0.40258	0.495	3.671E+07	0.0300	1.92E+01	3.84E+00	1.00	7.377E+01	2.07E+01	1.64E+01	0.95	3.77E+02	2.99E+02
	0.67387	0.019058	3.671E+07	0.0300	7.39E-01	4.27E-01	1.00	3.159E-01	1.37E+00	1.09E+00	1.00	1.01E+00	8.04E-01
	0.81425	0.001683	3.671E+07	0.0300	6.53E-02	4.56E-02	1.01	3.006E-03	1.45E-01	1.15E-01	1.02	9.66E-03	7.65E-03
	0.83637	0.007524	3.671E+07	0.0300	2.92E-01	2.09E-01	1.01	6.156E-02	6.65E-01	5.27E-01	1.02	1.98E-01	1.57E-01
	0.84543	0.072765	3.671E+07	0.0300	2.82E+00	2.04E+00	1.01	5.814E+00	6.49E+00	5.14E+00	1.02	1.87E+01	1.48E+01
	0.94664	0.001386	3.671E+07	0.0300	5.38E-02	4.34E-02	1.01	2.356E-03	1.37E-01	1.08E-01	1.01	7.42E-03	5.88E-03
	1.1754	0.011237	3.671E+07	0.0300	4.36E-01	4.34E-01	1.02	1.929E-01	1.32E+00	1.04E+00	1.00	5.75E-01	4.55E-01
	1.338	0.006484	3.671E+07	0.0300	2.51E-01	2.86E-01	1.03	7.413E-02	8.37E-01	6.62E-01	0.99	2.08E-01	1.65E-01
	1.3825	0.002871	3.671E+07	0.0300	1.11E-01	1.31E-01	1.03	1.505E-02	3.79E-01	3.00E-01	0.99	4.18E-02	3.31E-02
	1.3899	0.001237	3.671E+07	0.0300	4.80E-02	5.69E-02	1.03	2.812E-03	1.64E-01	1.30E-01	0.99	7.79E-03	6.17E-03
	1.5312	0.003564	3.671E+07	0.0300	1.38E-01	1.81E-01	1.04	2.609E-02	5.05E-01	4.00E-01	0.98	6.84E-02	5.42E-02
	1.578	0.001287	3.671E+07	0.0300	4.99E-02	6.72E-02	1.05	3.525E-03	1.86E-01	1.47E-01	0.98	9.11E-03	7.21E-03
	1.6112	0.00104	3.671E+07	0.0300	4.03E-02	5.53E-02	1.05	2.343E-03	1.53E-01	1.21E-01	0.98	6.03E-03	4.77E-03
	1.7405	0.020493	3.671E+07	0.0300	7.95E-01	1.17E+00	1.07	9.922E-01	3.16E+00	2.51E+00	0.98	2.47E+00	1.95E+00
	1.8426	0.001386	3.671E+07	0.0300	5.38E-02	8.30E-02	1.08	4.818E-03	2.22E-01	1.76E-01	0.97	1.16E-02	9.17E-03
	2.0119	0.028957	3.671E+07	0.0300	1.12E+00	1.88E+00	1.10	2.318E+00	4.92E+00	3.89E+00	0.97	5.36E+00	4.24E+00

Isotope	Energy (MeV)	Probability	Design Basis Source (Ci)	Gap Release Fraction	Cont. Conc. (uCi/cc)	27A&B QAD Det. Response (Rad/hr)	27A&B Eff.	27A&B Response (Rad/hr)	27E QAD Det. Response (Rad/hr)	27F QAD Det. Response (Rad/hr)	27E&F Eff.	27E Response (Rad/hr)	27F Response (Rad/hr)
	2.4085	0.002129	3.671E+07	0.0300	8.26E-02	1.57E-01	1.15	1.490E-02	4.06E-01	3.21E-01	0.95	3.18E-02	2.52E-02
	2.5548	0.09306	3.671E+07	0.0300	3.61E+00	7.16E+00	1.17	3.024E+01	1.84E+01	1.46E+01	0.94	6.25E+01	4.95E+01
	2.5581	0.039105	3.671E+07	0.0300	1.52E+00	3.01E+00	1.17	5.345E+00	7.74E+00	6.13E+00	0.94	1.10E+01	8.74E+00
	2.8114	0.003168	3.671E+07	0.0300	1.23E-01	2.62E-01	1.19	3.831E-02	6.66E-01	5.27E-01	0.92	7.53E-02	5.96E-02
	3.3085	0.004504	3.671E+07	0.0300	1.75E-01	4.15E-01	1.20	8.707E-02	1.05E+00	8.31E-01	0.85	1.56E-01	1.23E-01
	1.6201	0.006499	3.671E+07	0.0300	2.52E-01	3.47E-01	1.05	9.194E-02	9.57E-01	7.57E-01	0.98	2.36E-01	1.87E-01
Kr-88	0.12227	0.001972	5.139E+07	0.0300	1.07E-01	5.33E-05	1.08	6.158E-06	1.88E-02	1.49E-02	1.01	2.03E-03	1.61E-03
	0.16598	0.031036	5.139E+07	0.0300	1.69E+00	1.48E-02	1.01	2.513E-02	4.26E-01	3.37E-01	0.98	7.04E-01	5.57E-01
	0.19632	0.25985	5.139E+07	0.0300	1.41E+01	2.87E-01	1.05	4.253E+00	4.46E+00	3.53E+00	0.97	6.10E+01	4.83E+01
	0.24071	0.002526	5.139E+07	0.0300	1.37E-01	5.27E-03	1.05	7.590E-04	5.71E-02	4.52E-02	0.97	7.60E-03	6.01E-03
	0.31169	0.001073	5.139E+07	0.0300	5.83E-02	4.85E-03	1.01	2.852E-04	3.39E-02	2.68E-02	0.96	1.89E-03	1.50E-03
	0.33471	0.001453	5.139E+07	0.0300	7.89E-02	7.64E-03	1.00	6.026E-04	4.99E-02	3.95E-02	0.95	3.74E-03	2.96E-03
	0.36223	0.02249	5.139E+07	0.0300	1.22E+00	1.40E-01	1.00	1.709E-01	8.44E-01	6.68E-01	0.95	9.79E-01	7.75E-01
	0.39054	0.006436	5.139E+07	0.0300	3.49E-01	4.70E-02	1.00	1.642E-02	2.61E-01	2.07E-01	0.95	8.67E-02	6.86E-02
	0.4217	0.00128	5.139E+07	0.0300	6.95E-02	1.07E-02	1.00	7.469E-04	5.59E-02	4.42E-02	0.95	3.69E-03	2.92E-03
	0.4718	0.007266	5.139E+07	0.0300	3.95E-01	7.33E-02	0.99	2.862E-02	3.48E-01	2.75E-01	0.96	1.32E-01	1.04E-01
	0.67734	0.002353	5.139E+07	0.0300	1.28E-01	5.30E-02	1.00	6.775E-03	1.70E-01	1.35E-01	1.00	2.18E-02	1.72E-02
	0.78828	0.005328	5.139E+07	0.0300	2.89E-01	1.40E-01	1.01	4.090E-02	4.45E-01	3.53E-01	1.01	1.30E-01	1.03E-01
	0.79032	0.001246	5.139E+07	0.0300	6.77E-02	3.28E-02	1.01	2.243E-03	1.04E-01	8.27E-02	1.01	7.14E-03	5.65E-03
	0.83483	0.12975	5.139E+07	0.0300	7.05E+00	3.60E+00	1.01	2.559E+01	1.14E+01	9.07E+00	1.02	8.23E+01	6.51E+01
	0.85034	0.00173	5.139E+07	0.0300	9.39E-02	4.88E-02	1.01	4.626E-03	1.55E-01	1.23E-01	1.02	1.49E-02	1.18E-02
	0.86233	0.006712	5.139E+07	0.0300	3.64E-01	1.92E-01	1.01	7.054E-02	6.10E-01	4.83E-01	1.02	2.27E-01	1.80E-01
	0.94492	0.002941	5.139E+07	0.0300	1.60E-01	9.19E-02	1.01	1.483E-02	2.90E-01	2.29E-01	1.01	4.67E-02	3.70E-02
	0.98578	0.013148	5.139E+07	0.0300	7.14E-01	4.30E-01	1.01	3.100E-01	1.34E+00	1.06E+00	1.01	9.68E-01	7.66E-01
	0.99009	0.001419	5.139E+07	0.0300	7.70E-02	4.66E-02	1.01	3.628E-03	1.45E-01	1.15E-01	1.01	1.13E-02	8.96E-03
	1.0396	0.004844	5.139E+07	0.0300	2.63E-01	1.67E-01	1.01	4.424E-02	5.17E-01	4.09E-01	1.01	1.37E-01	1.09E-01
	1.0495	0.001419	5.139E+07	0.0300	7.70E-02	4.92E-02	1.01	3.829E-03	1.52E-01	1.21E-01	1.01	1.19E-02	9.39E-03
	1.1413	0.012837	5.139E+07	0.0300	6.97E-01	4.82E-01	1.01	3.392E-01	1.47E+00	1.17E+00	1.00	1.03E+00	8.13E-01
	1.1795	0.009965	5.139E+07	0.0300	5.41E-01	3.86E-01	1.02	2.131E-01	1.17E+00	9.28E-01	1.00	6.34E-01	5.02E-01
	1.185	0.006885	5.139E+07	0.0300	3.74E-01	2.68E-01	1.02	1.022E-01	8.13E-01	6.44E-01	1.00	3.04E-01	2.41E-01
	1.2098	0.001419	5.139E+07	0.0300	7.70E-02	5.64E-02	1.02	4.433E-03	1.70E-01	1.35E-01	1.00	1.31E-02	1.04E-02
	1.2127	0.001384	5.139E+07	0.0300	7.51E-02	5.52E-02	1.02	4.228E-03	1.66E-01	1.32E-01	1.00	1.25E-02	9.89E-03
	1.2452	0.003633	5.139E+07	0.0300	1.97E-01	1.49E-01	1.02	2.992E-02	4.45E-01	3.52E-01	1.00	8.78E-02	6.95E-02
	1.2507	0.01121	5.139E+07	0.0300	6.09E-01	4.61E-01	1.02	2.863E-01	1.38E+00	1.09E+00	1.00	8.39E-01	6.64E-01

Isotope	Energy (MeV)	Probability	Design Basis Source (Ci)	Gap Release Fraction	Cont. Conc. (uCi/cc)	27A&B QAD Det. Response (Rad/hr)	27A&B Eff.	27A&B Response (Rad/hr)	27E QAD Det. Response (Rad/hr)	27F QAD Det. Response (Rad/hr)	27E&F Eff.	27E Response (Rad/hr)	27F Response (Rad/hr)
	1.325	0.001592	5.139E+07	0.0300	8.64E-02	6.95E-02	1.03	6.192E-03	2.04E-01	1.62E-01	0.99	1.75E-02	1.38E-02
	1.3523	0.001592	5.139E+07	0.0300	8.64E-02	7.11E-02	1.03	6.329E-03	2.07E-01	1.64E-01	0.99	1.77E-02	1.40E-02
	1.3695	0.014774	5.139E+07	0.0300	8.02E-01	6.69E-01	1.03	5.525E-01	1.94E+00	1.53E+00	0.99	1.54E+00	1.22E+00
	1.4069	0.00218	5.139E+07	0.0300	1.18E-01	1.02E-01	1.03	1.238E-02	2.91E-01	2.31E-01	0.99	3.42E-02	2.70E-02
	1.4648	0.001142	5.139E+07	0.0300	6.20E-02	5.56E-02	1.04	3.587E-03	1.57E-01	1.24E-01	0.99	9.63E-03	7.63E-03
	1.5184	0.021521	5.139E+07	0.0300	1.17E+00	1.09E+00	1.04	1.322E+00	3.03E+00	2.40E+00	0.98	3.47E+00	2.75E+00
	1.5298	0.10934	5.139E+07	0.0300	5.94E+00	5.56E+00	1.04	3.435E+01	1.55E+01	1.23E+01	0.98	9.01E+01	7.13E+01
	1.6038	0.004567	5.139E+07	0.0300	2.48E-01	2.42E-01	1.05	6.301E-02	6.68E-01	5.29E-01	0.98	1.62E-01	1.28E-01
	1.6856	0.006643	5.139E+07	0.0300	3.61E-01	7.37E-01	1.06	2.819E-01	1.00E+00	7.95E-01	0.98	3.55E-01	2.81E-01
	1.8928	0.001384	5.139E+07	0.0300	7.51E-02	1.66E-01	1.09	1.358E-02	2.26E-01	1.79E-01	0.97	1.65E-02	1.30E-02
	1.9087	0.001003	5.139E+07	0.0300	5.45E-02	1.21E-01	1.09	7.172E-03	1.65E-01	1.30E-01	0.97	8.69E-03	6.88E-03
	2.0298	0.045291	5.139E+07	0.0300	2.46E+00	5.68E+00	1.10	1.536E+01	7.73E+00	6.12E+00	0.97	1.84E+01	1.46E+01
	2.0354	0.037368	5.139E+07	0.0300	2.03E+00	4.69E+00	1.10	1.048E+01	6.39E+00	5.06E+00	0.97	1.26E+01	9.96E+00
	2.1865	0.002872	5.139E+07	0.0300	1.56E-01	3.78E-01	1.12	6.596E-02	5.14E-01	4.07E-01	0.96	7.70E-02	6.10E-02
	2.1958	0.13183	5.139E+07	0.0300	7.16E+00	1.74E+01	1.13	1.407E+02	2.37E+01	1.88E+01	0.96	1.63E+02	1.29E+02
	2.2318	0.033908	5.139E+07	0.0300	1.84E+00	4.52E+00	1.13	9.401E+00	6.15E+00	4.87E+00	0.96	1.09E+01	8.61E+00
	2.3521	0.007301	5.139E+07	0.0300	3.96E-01	1.01E+00	1.14	4.547E-01	1.37E+00	1.08E+00	0.96	5.21E-01	4.13E-01
	2.3921	0.346	5.139E+07	0.0300	1.88E+01	4.82E+01	1.15	1.041E+03	6.56E+01	5.20E+01	0.95	1.17E+03	9.27E+02
	2.4089	0.001038	5.139E+07	0.0300	5.64E-02	1.45E-01	1.15	9.418E-03	1.98E-01	1.57E-01	0.95	1.06E-02	8.39E-03
	2.5484	0.006228	5.139E+07	0.0300	3.38E-01	9.03E-01	1.17	3.574E-01	1.23E+00	9.74E-01	0.94	3.91E-01	3.10E-01
	2.771	0.001488	5.139E+07	0.0300	8.08E-02	2.28E-01	1.19	2.189E-02	3.10E-01	2.45E-01	0.93	2.33E-02	1.84E-02
	1.0001	0.018892	5.139E+07	0.0300	1.03E+00	1.43E+00	1.01	1.485E+00	1.95E+00	1.55E+00	1.01	2.02E+00	1.60E+00
Kr-89	0.1962	0.0022	6.082E+07	0.0300	1.41E-01	2.42E-03	1.05	3.597E-04	3.77E-02	2.99E-02	0.97	5.18E-03	4.10E-03
	0.1975	0.0182	6.082E+07	0.0300	1.17E+00	2.08E-02	1.05	2.549E-02	3.15E-01	2.49E-01	0.97	3.57E-01	2.83E-01
	0.20503	0.00124	6.082E+07	0.0300	7.97E-02	1.62E-03	1.05	1.356E-04	2.26E-02	1.79E-02	0.98	1.76E-03	1.40E-03
	0.2209	0.2	6.082E+07	0.0300	1.29E+01	3.24E-01	1.06	4.407E+00	4.03E+00	3.19E+00	0.97	5.02E+01	3.97E+01
	0.26411	0.0066	6.082E+07	0.0300	4.24E-01	1.83E-02	1.03	7.997E-03	1.69E-01	1.34E-01	0.97	6.95E-02	5.50E-02
	0.3382	0.00342	6.082E+07	0.0300	2.20E-01	1.84E-02	1.00	4.041E-03	1.19E-01	9.41E-02	0.95	2.48E-02	1.96E-02
	0.34503	0.0118	6.082E+07	0.0300	7.58E-01	6.62E-02	1.00	5.019E-02	4.20E-01	3.32E-01	0.95	3.02E-01	2.39E-01
	0.35606	0.0414	6.082E+07	0.0300	2.66E+00	2.48E-01	1.00	6.607E-01	1.52E+00	1.21E+00	0.95	3.85E+00	3.05E+00
	0.36488	0.009	6.082E+07	0.0300	5.78E-01	5.69E-02	1.00	3.288E-02	3.40E-01	2.69E-01	0.95	1.87E-01	1.48E-01
	0.3693	0.0138	6.082E+07	0.0300	8.87E-01	8.94E-02	1.00	7.932E-02	5.28E-01	4.18E-01	0.95	4.45E-01	3.52E-01
	0.40225	0.00318	6.082E+07	0.0300	2.04E-01	2.46E-02	1.00	5.037E-03	1.33E-01	1.05E-01	0.95	2.58E-02	2.04E-02
	0.41142	0.0256	6.082E+07	0.0300	1.65E+00	2.06E-01	1.00	3.391E-01	1.09E+00	8.65E-01	0.95	1.71E+00	1.35E+00

Isotope	Energy (MeV)	Probability	Design Basis Source (Ci)	Gap Release Fraction	Cont. Conc. (uCi/cc)	27A&B QAD Det. Response (Rad/hr)	27A&B Eff.	27A&B Response (Rad/hr)	27E QAD Det. Response (Rad/hr)	27F QAD Det. Response (Rad/hr)	27E&F Eff.	27E Response (Rad/hr)	27F Response (Rad/hr)
	0.43808	0.0096	6.082E+07	0.0300	6.17E-01	8.59E-02	1.00	5.296E-02	4.33E-01	3.43E-01	0.95	2.54E-01	2.01E-01
	0.46613	0.008	6.082E+07	0.0300	5.14E-01	7.92E-02	0.99	4.029E-02	3.80E-01	3.01E-01	0.96	1.87E-01	1.48E-01
	0.49076	0.00322	6.082E+07	0.0300	2.07E-01	3.46E-02	0.99	7.079E-03	1.59E-01	1.26E-01	0.96	3.15E-02	2.49E-02
	0.4975	0.0664	6.082E+07	0.0300	4.27E+00	7.28E-01	0.99	3.075E+00	3.30E+00	2.61E+00	0.96	1.35E+01	1.07E+01
	0.4986	0.0114	6.082E+07	0.0300	7.33E-01	1.25E-01	0.99	9.095E-02	5.67E-01	4.49E-01	0.96	3.99E-01	3.16E-01
	0.5573	0.0016	6.082E+07	0.0300	1.03E-01	2.83E-02	0.99	2.876E-03	1.00E-01	7.92E-02	0.98	1.01E-02	7.98E-03
	0.57696	0.0564	6.082E+07	0.0300	3.62E+00	1.05E+00	0.99	3.785E+00	3.59E+00	2.85E+00	0.98	1.27E+01	1.01E+01
	0.5858	0.166	6.082E+07	0.0300	1.07E+01	3.18E+00	0.99	3.355E+01	1.07E+01	8.45E+00	0.98	1.11E+02	8.84E+01
	0.6262	0.006	6.082E+07	0.0300	3.86E-01	1.25E-01	1.00	4.810E-02	4.05E-01	3.21E-01	0.99	1.55E-01	1.23E-01
	0.62975	0.00342	6.082E+07	0.0300	2.20E-01	7.16E-02	1.00	1.573E-02	2.32E-01	1.84E-01	0.99	5.05E-02	4.00E-02
	0.66572	0.00114	6.082E+07	0.0300	7.33E-02	2.53E-02	1.00	1.850E-03	8.12E-02	6.44E-02	1.00	5.95E-03	4.72E-03
	0.6714	0.00106	6.082E+07	0.0300	6.81E-02	2.37E-02	1.00	1.614E-03	7.61E-02	6.03E-02	1.00	5.18E-03	4.11E-03
	0.67411	0.00232	6.082E+07	0.0300	1.49E-01	5.21E-02	1.00	7.760E-03	1.67E-01	1.33E-01	1.00	2.49E-02	1.98E-02
	0.69624	0.0178	6.082E+07	0.0300	1.14E+00	4.12E-01	1.00	4.716E-01	1.32E+00	1.05E+00	1.01	1.53E+00	1.21E+00
	0.70701	0.00498	6.082E+07	0.0300	3.20E-01	1.17E-01	1.00	3.748E-02	3.75E-01	2.97E-01	1.01	1.21E-01	9.61E-02
	0.71005	0.0078	6.082E+07	0.0300	5.01E-01	1.84E-01	1.00	9.232E-02	5.90E-01	4.68E-01	1.01	2.99E-01	2.37E-01
	0.72963	0.00296	6.082E+07	0.0300	1.90E-01	7.18E-02	1.01	1.380E-02	2.30E-01	1.82E-01	1.01	4.42E-02	3.50E-02
	0.73839	0.042	6.082E+07	0.0300	2.70E+00	1.03E+00	1.01	2.812E+00	3.30E+00	2.61E+00	1.01	8.99E+00	7.13E+00
	0.7474	0.00114	6.082E+07	0.0300	7.33E-02	2.83E-02	1.01	2.097E-03	9.06E-02	7.18E-02	1.01	6.70E-03	5.31E-03
	0.7629	0.004	6.082E+07	0.0300	2.57E-01	1.02E-01	1.01	2.636E-02	3.24E-01	2.57E-01	1.01	8.42E-02	6.67E-02
	0.7629	0.0092	6.082E+07	0.0300	5.91E-01	2.34E-01	1.01	1.395E-01	7.46E-01	5.91E-01	1.01	4.45E-01	3.53E-01
	0.77649	0.0112	6.082E+07	0.0300	7.20E-01	2.90E-01	1.01	2.104E-01	9.23E-01	7.31E-01	1.01	6.71E-01	5.31E-01
	0.82675	0.0076	6.082E+07	0.0300	4.88E-01	2.09E-01	1.01	1.030E-01	6.65E-01	5.26E-01	1.02	3.31E-01	2.62E-01
	0.83553	0.011	6.082E+07	0.0300	7.07E-01	3.05E-01	1.01	2.178E-01	9.71E-01	7.69E-01	1.02	7.00E-01	5.55E-01
	0.85737	0.00286	6.082E+07	0.0300	1.84E-01	8.12E-02	1.01	1.507E-02	2.58E-01	2.05E-01	1.02	4.85E-02	3.84E-02
	0.86708	0.0592	6.082E+07	0.0300	3.80E+00	1.70E+00	1.01	6.528E+00	5.41E+00	4.28E+00	1.02	2.10E+01	1.66E+01
	0.87042	0.0016	6.082E+07	0.0300	1.03E-01	4.61E-02	1.01	4.785E-03	1.47E-01	1.16E-01	1.02	1.54E-02	1.22E-02
	0.90427	0.0718	6.082E+07	0.0300	4.61E+00	2.15E+00	1.01	1.000E+01	6.81E+00	5.39E+00	1.01	3.17E+01	2.51E+01
	0.93095	0.0062	6.082E+07	0.0300	3.98E-01	1.91E-01	1.01	7.680E-02	6.03E-01	4.77E-01	1.01	2.43E-01	1.92E-01
	0.94419	0.00164	6.082E+07	0.0300	1.05E-01	5.12E-02	1.01	5.451E-03	1.61E-01	1.28E-01	1.01	1.72E-02	1.36E-02
	0.95318	0.00106	6.082E+07	0.0300	6.81E-02	3.34E-02	1.01	2.301E-03	1.05E-01	8.33E-02	1.01	7.24E-03	5.73E-03
	0.96042	0.00322	6.082E+07	0.0300	2.07E-01	1.02E-01	1.01	2.140E-02	3.22E-01	2.55E-01	1.01	6.72E-02	5.32E-02
	0.97439	0.0098	6.082E+07	0.0300	6.30E-01	3.16E-01	1.01	2.012E-01	9.90E-01	7.84E-01	1.01	6.30E-01	4.99E-01
	0.99737	0.0066	6.082E+07	0.0300	4.24E-01	2.19E-01	1.01	9.363E-02	6.80E-01	5.39E-01	1.01	2.91E-01	2.31E-01

Isotope	Energy (MeV)	Probability	Design Basis Source (Ci)	Gap Release Fraction	Cont. Conc. (uCi/cc)	27A&B QAD Det. Response (Rad/hr)	27A&B Eff.	27A&B Response (Rad/hr)	27E QAD Det. Response (Rad/hr)	27F QAD Det. Response (Rad/hr)	27E&F Eff.	27E Response (Rad/hr)	27F Response (Rad/hr)
	1.0108	0.00108	6.082E+07	0.0300	6.94E-02	3.62E-02	1.01	2.538E-03	1.13E-01	8.91E-02	1.01	7.89E-03	6.25E-03
	1.0444	0.00408	6.082E+07	0.0300	2.62E-01	1.41E-01	1.01	3.730E-02	4.37E-01	3.46E-01	1.01	1.16E-01	9.16E-02
	1.0765	0.00236	6.082E+07	0.0300	1.52E-01	8.38E-02	1.01	1.283E-02	2.59E-01	2.05E-01	1.01	3.96E-02	3.14E-02
	1.0881	0.00358	6.082E+07	0.0300	2.30E-01	1.28E-01	1.01	2.983E-02	3.96E-01	3.13E-01	1.00	9.11E-02	7.21E-02
	1.1032	0.009	6.082E+07	0.0300	5.78E-01	3.27E-01	1.01	1.909E-01	1.01E+00	7.96E-01	1.00	5.82E-01	4.61E-01
	1.1078	0.0292	6.082E+07	0.0300	1.88E+00	1.06E+00	1.01	2.018E+00	3.27E+00	2.59E+00	1.00	6.14E+00	4.86E+00
	1.1166	0.0166	6.082E+07	0.0300	1.07E+00	6.10E-01	1.01	6.571E-01	1.87E+00	1.48E+00	1.00	2.00E+00	1.58E+00
	1.1315	0.0016	6.082E+07	0.0300	1.03E-01	5.95E-02	1.01	6.182E-03	1.82E-01	1.44E-01	1.00	1.88E-02	1.48E-02
	1.1625	0.00214	6.082E+07	0.0300	1.38E-01	8.18E-02	1.02	1.147E-02	2.49E-01	1.97E-01	1.00	3.42E-02	2.71E-02
	1.1723	0.0098	6.082E+07	0.0300	6.30E-01	3.77E-01	1.02	2.424E-01	1.15E+00	9.08E-01	1.00	7.23E-01	5.72E-01
	1.1824	0.00166	6.082E+07	0.0300	1.07E-01	6.45E-02	1.02	7.018E-03	1.96E-01	1.55E-01	1.00	2.09E-02	1.65E-02
	1.1865	0.00184	6.082E+07	0.0300	1.18E-01	7.17E-02	1.02	8.652E-03	2.17E-01	1.72E-01	1.00	2.57E-02	2.04E-02
	1.2288	0.00144	6.082E+07	0.0300	9.25E-02	5.82E-02	1.02	5.489E-03	1.75E-01	1.38E-01	1.00	1.62E-02	1.28E-02
	1.2356	0.00594	6.082E+07	0.0300	3.82E-01	2.41E-01	1.02	9.393E-02	7.24E-01	5.73E-01	1.00	2.76E-01	2.19E-01
	1.2737	0.0136	6.082E+07	0.0300	8.74E-01	5.70E-01	1.02	5.081E-01	1.69E+00	1.34E+00	0.99	1.47E+00	1.16E+00
	1.3027	0.001	6.082E+07	0.0300	6.43E-02	4.29E-02	1.02	2.812E-03	1.27E-01	1.00E-01	0.99	8.05E-03	6.37E-03
	1.3243	0.0306	6.082E+07	0.0300	1.97E+00	1.34E+00	1.03	2.706E+00	3.92E+00	3.10E+00	0.99	7.63E+00	6.04E+00
	1.3354	0.00132	6.082E+07	0.0300	8.48E-02	5.81E-02	1.03	5.080E-03	1.70E-01	1.35E-01	0.99	1.43E-02	1.13E-02
	1.3406	0.00194	6.082E+07	0.0300	1.25E-01	8.58E-02	1.03	1.102E-02	2.51E-01	1.98E-01	0.99	3.09E-02	2.45E-02
	1.3675	0.00148	6.082E+07	0.0300	9.51E-02	6.69E-02	1.03	6.550E-03	1.94E-01	1.54E-01	0.99	1.83E-02	1.45E-02
	1.3722	0.00126	6.082E+07	0.0300	8.10E-02	5.71E-02	1.03	4.765E-03	1.65E-01	1.31E-01	0.99	1.33E-02	1.05E-02
	1.4126	0.00264	6.082E+07	0.0300	1.70E-01	1.24E-01	1.03	2.159E-02	3.54E-01	2.80E-01	0.99	5.94E-02	4.71E-02
	1.4216	0.00224	6.082E+07	0.0300	1.44E-01	1.06E-01	1.03	1.565E-02	3.02E-01	2.39E-01	0.99	4.30E-02	3.40E-02
	1.4613	0.00122	6.082E+07	0.0300	7.84E-02	5.93E-02	1.04	4.833E-03	1.67E-01	1.33E-01	0.99	1.30E-02	1.03E-02
	1.4642	0.00178	6.082E+07	0.0300	1.14E-01	8.67E-02	1.04	1.031E-02	2.45E-01	1.94E-01	0.99	2.77E-02	2.19E-02
	1.4685	0.00188	6.082E+07	0.0300	1.21E-01	9.19E-02	1.04	1.154E-02	2.59E-01	2.05E-01	0.99	3.10E-02	2.45E-02
	1.4728	0.0688	6.082E+07	0.0300	4.42E+00	3.37E+00	1.04	1.550E+01	9.49E+00	7.52E+00	0.99	4.16E+01	3.29E+01
	1.501	0.0132	6.082E+07	0.0300	8.48E-01	6.61E-01	1.04	5.830E-01	1.85E+00	1.46E+00	0.99	1.55E+00	1.23E+00
	1.5062	0.00112	6.082E+07	0.0300	7.20E-02	5.62E-02	1.04	4.208E-03	1.57E-01	1.24E-01	0.99	1.12E-02	8.85E-03
	1.53	0.0332	6.082E+07	0.0300	2.13E+00	1.69E+00	1.04	3.748E+00	4.70E+00	3.72E+00	0.98	9.83E+00	7.78E+00
	1.5337	0.0512	6.082E+07	0.0300	3.29E+00	2.61E+00	1.04	8.932E+00	7.26E+00	5.75E+00	0.98	2.34E+01	1.85E+01
	1.5553	0.00152	6.082E+07	0.0300	9.77E-02	7.84E-02	1.05	8.044E-03	2.18E-01	1.72E-01	0.98	2.08E-02	1.65E-02
	1.5738	0.0019	6.082E+07	0.0300	1.22E-01	9.90E-02	1.05	1.270E-02	2.74E-01	2.17E-01	0.98	3.28E-02	2.60E-02
	1.6341	0.0082	6.082E+07	0.0300	5.27E-01	4.42E-01	1.05	2.443E-01	1.21E+00	9.61E-01	0.98	6.27E-01	4.96E-01

Isotope	Energy (MeV)	Probability	Design Basis Source (Ci)	Gap Release Fraction	Cont. Conc. (uCi/cc)	27A&B QAD Det. Response (Rad/hr)	27A&B Eff.	27A&B Response (Rad/hr)	27E QAD Det. Response (Rad/hr)	27F QAD Det. Response (Rad/hr)	27E&F Eff.	27E Response (Rad/hr)	27F Response (Rad/hr)
	1.6438	0.00338	6.082E+07	0.0300	2.17E-01	1.83E-01	1.06	4.212E-02	5.02E-01	3.98E-01	0.98	1.07E-01	8.47E-02
	1.6675	0.00128	6.082E+07	0.0300	8.23E-02	7.02E-02	1.06	6.119E-03	1.92E-01	1.52E-01	0.98	1.55E-02	1.23E-02
	1.6769	0.0014	6.082E+07	0.0300	9.00E-02	7.71E-02	1.06	7.355E-03	2.11E-01	1.67E-01	0.98	1.86E-02	1.47E-02
	1.6838	0.00132	6.082E+07	0.0300	8.48E-02	7.30E-02	1.06	6.562E-03	1.99E-01	1.58E-01	0.98	1.66E-02	1.31E-02
	1.692	0.0026	6.082E+07	0.0300	1.67E-01	1.44E-01	1.06	2.556E-02	3.94E-01	3.12E-01	0.98	6.45E-02	5.11E-02
	1.6937	0.0438	6.082E+07	0.0300	2.81E+00	2.43E+00	1.06	7.262E+00	6.64E+00	5.26E+00	0.98	1.83E+01	1.45E+01
	1.7213	0.00224	6.082E+07	0.0300	1.44E-01	1.26E-01	1.06	1.927E-02	3.43E-01	2.72E-01	0.98	4.84E-02	3.83E-02
	1.7776	0.0076	6.082E+07	0.0300	4.88E-01	4.41E-01	1.07	2.304E-01	1.19E+00	9.42E-01	0.98	5.70E-01	4.51E-01
	1.7882	0.00106	6.082E+07	0.0300	6.81E-02	6.18E-02	1.07	4.505E-03	1.67E-01	1.32E-01	0.98	1.11E-02	8.81E-03
	1.8107	0.0014	6.082E+07	0.0300	9.00E-02	8.25E-02	1.08	8.020E-03	2.22E-01	1.76E-01	0.98	1.96E-02	1.55E-02
	1.8375	0.00118	6.082E+07	0.0300	7.58E-02	7.05E-02	1.08	5.773E-03	1.89E-01	1.49E-01	0.98	1.40E-02	1.11E-02
	1.8397	0.0035	6.082E+07	0.0300	2.25E-01	2.09E-01	1.08	5.085E-02	5.61E-01	4.44E-01	0.97	1.22E-01	9.68E-02
	1.8685	0.00196	6.082E+07	0.0300	1.26E-01	1.19E-01	1.08	1.617E-02	3.17E-01	2.51E-01	0.97	3.87E-02	3.07E-02
	1.8798	0.00158	6.082E+07	0.0300	1.02E-01	9.64E-02	1.08	1.057E-02	2.57E-01	2.03E-01	0.97	2.53E-02	2.00E-02
	1.9034	0.0104	6.082E+07	0.0300	6.68E-01	6.41E-01	1.09	4.672E-01	1.70E+00	1.35E+00	0.97	1.10E+00	8.74E-01
	1.9391	0.0064	6.082E+07	0.0300	4.11E-01	4.01E-01	1.09	1.800E-01	1.06E+00	8.40E-01	0.97	4.23E-01	3.35E-01
	1.9666	0.00132	6.082E+07	0.0300	8.48E-02	8.39E-02	1.10	7.827E-03	2.21E-01	1.75E-01	0.97	1.82E-02	1.44E-02
	1.9986	0.00118	6.082E+07	0.0300	7.58E-02	7.61E-02	1.10	6.347E-03	1.99E-01	1.58E-01	0.97	1.47E-02	1.16E-02
	2.0122	0.0156	6.082E+07	0.0300	1.00E+00	1.01E+00	1.10	1.115E+00	2.65E+00	2.10E+00	0.97	2.58E+00	2.04E+00
	2.021	0.00244	6.082E+07	0.0300	1.57E-01	1.59E-01	1.10	2.736E-02	4.15E-01	3.29E-01	0.97	6.32E-02	5.00E-02
	2.0465	0.00262	6.082E+07	0.0300	1.68E-01	1.72E-01	1.11	3.211E-02	4.50E-01	3.56E-01	0.97	7.34E-02	5.81E-02
	2.1006	0.0094	6.082E+07	0.0300	6.04E-01	6.28E-01	1.11	4.209E-01	1.64E+00	1.30E+00	0.97	9.61E-01	7.61E-01
	2.16	0.00528	6.082E+07	0.0300	3.39E-01	3.60E-01	1.12	1.367E-01	9.38E-01	7.43E-01	0.96	3.06E-01	2.42E-01
	2.1958	0.00128	6.082E+07	0.0300	8.23E-02	8.83E-02	1.13	8.204E-03	2.30E-01	1.82E-01	0.96	1.82E-02	1.44E-02
	2.2802	0.00204	6.082E+07	0.0300	1.31E-01	1.44E-01	1.14	2.159E-02	3.75E-01	2.97E-01	0.96	4.72E-02	3.74E-02
	2.3774	0.008	6.082E+07	0.0300	5.14E-01	5.84E-01	1.15	3.454E-01	1.51E+00	1.20E+00	0.95	7.39E-01	5.85E-01
	2.401	0.0072	6.082E+07	0.0300	4.63E-01	5.29E-01	1.15	2.817E-01	1.37E+00	1.08E+00	0.95	6.02E-01	4.76E-01
	2.5979	0.00108	6.082E+07	0.0300	6.94E-02	8.41E-02	1.17	6.832E-03	2.16E-01	1.71E-01	0.94	1.41E-02	1.12E-02
	2.6453	0.0042	6.082E+07	0.0300	2.70E-01	3.32E-01	1.18	1.056E-01	8.50E-01	6.73E-01	0.94	2.16E-01	1.71E-01
	2.7509	0.00124	6.082E+07	0.0300	7.97E-02	1.01E-01	1.19	9.567E-03	2.57E-01	2.04E-01	0.93	1.91E-02	1.51E-02
	2.7821	0.0076	6.082E+07	0.0300	4.88E-01	6.24E-01	1.19	3.625E-01	1.59E+00	1.26E+00	0.92	7.14E-01	5.65E-01
	2.7938	0.0068	6.082E+07	0.0300	4.37E-01	5.60E-01	1.19	2.910E-01	1.42E+00	1.13E+00	0.92	5.73E-01	4.53E-01
	2.8196	0.00132	6.082E+07	0.0300	8.48E-02	1.09E-01	1.19	1.105E-02	2.78E-01	2.20E-01	0.92	2.17E-02	1.72E-02
	2.8533	0.0024	6.082E+07	0.0300	1.54E-01	2.01E-01	1.19	3.685E-02	5.09E-01	4.03E-01	0.92	7.23E-02	5.72E-02

Isotope	Energy (MeV)	Probability	Design Basis Source (Ci)	Gap Release Fraction	Cont. Conc. (uCi/cc)	27A&B QAD Det. Response (Rad/hr)	27A&B Eff.	27A&B Response (Rad/hr)	27E QAD Det. Response (Rad/hr)	27F QAD Det. Response (Rad/hr)	27E&F Eff.	27E Response (Rad/hr)	27F Response (Rad/hr)
	2.8662	0.0174	6.082E+07	0.0300	1.12E+00	1.46E+00	1.19	1.943E+00	3.70E+00	2.93E+00	0.92	3.81E+00	3.02E+00
	2.8787	0.00324	6.082E+07	0.0300	2.08E-01	2.73E-01	1.19	6.762E-02	6.92E-01	5.48E-01	0.91	1.31E-01	1.04E-01
	3.0179	0.00254	6.082E+07	0.0300	1.63E-01	2.22E-01	1.20	4.344E-02	5.59E-01	4.42E-01	0.90	8.21E-02	6.50E-02
	3.0292	0.0027	6.082E+07	0.0300	1.74E-01	2.36E-01	1.20	4.918E-02	5.95E-01	4.71E-01	0.90	9.30E-02	7.36E-02
	3.1073	0.00194	6.082E+07	0.0300	1.25E-01	1.72E-01	1.20	2.577E-02	4.35E-01	3.44E-01	0.89	4.82E-02	3.82E-02
	3.1403	0.0104	6.082E+07	0.0300	6.68E-01	9.29E-01	1.20	7.454E-01	2.35E+00	1.86E+00	0.88	1.38E+00	1.09E+00
	3.1721	0.001	6.082E+07	0.0300	6.43E-02	8.99E-02	1.20	6.933E-03	2.27E-01	1.80E-01	0.88	1.28E-02	1.02E-02
	3.2198	0.00428	6.082E+07	0.0300	2.75E-01	3.88E-01	1.20	1.282E-01	9.81E-01	7.76E-01	0.87	2.35E-01	1.86E-01
	3.3617	0.0104	6.082E+07	0.0300	6.68E-01	9.68E-01	1.20	7.765E-01	2.45E+00	1.94E+00	0.84	1.37E+00	1.09E+00
	3.3711	0.0062	6.082E+07	0.0300	3.98E-01	5.78E-01	1.20	2.765E-01	1.46E+00	1.16E+00	0.84	4.89E-01	3.87E-01
	3.3999	0.00136	6.082E+07	0.0300	8.74E-02	1.28E-01	1.20	1.337E-02	3.23E-01	2.55E-01	0.83	2.34E-02	1.85E-02
	3.5329	0.0134	6.082E+07	0.0300	8.61E-01	1.29E+00	1.18	1.307E+00	3.25E+00	2.58E+00	0.80	2.24E+00	1.77E+00
	3.5839	0.00258	6.082E+07	0.0300	1.66E-01	2.50E-01	1.18	4.888E-02	6.32E-01	5.01E-01	0.79	8.28E-02	6.56E-02
	3.7178	0.0084	6.082E+07	0.0300	5.40E-01	8.32E-01	1.16	5.213E-01	2.11E+00	1.67E+00	0.76	8.65E-01	6.84E-01
	3.7325	0.00138	6.082E+07	0.0300	8.87E-02	1.37E-01	1.16	1.410E-02	3.47E-01	2.75E-01	0.75	2.31E-02	1.83E-02
	3.7814	0.00132	6.082E+07	0.0300	8.48E-02	1.32E-01	1.15	1.290E-02	3.35E-01	2.65E-01	0.74	2.10E-02	1.66E-02
	3.8274	0.00138	6.082E+07	0.0300	8.87E-02	1.39E-01	1.14	1.408E-02	3.52E-01	2.79E-01	0.72	2.25E-02	1.78E-02
	3.8427	0.0011	6.082E+07	0.0300	7.07E-02	1.11E-01	1.14	8.970E-03	2.82E-01	2.23E-01	0.72	1.43E-02	1.13E-02
	3.9018	0.00134	6.082E+07	0.0300	8.61E-02	1.37E-01	1.12	1.320E-02	3.46E-01	2.74E-01	0.70	2.09E-02	1.65E-02
	3.923	0.00414	6.082E+07	0.0300	2.66E-01	4.24E-01	1.12	1.265E-01	1.07E+00	8.50E-01	0.69	1.97E-01	1.56E-01
	3.9655	0.00208	6.082E+07	0.0300	1.34E-01	2.15E-01	1.11	3.186E-02	5.43E-01	4.30E-01	0.68	4.94E-02	3.91E-02
	3.9775	0.0027	6.082E+07	0.0300	1.74E-01	2.79E-01	1.10	5.330E-02	7.06E-01	5.59E-01	0.67	8.21E-02	6.50E-02
	3.996	0.00142	6.082E+07	0.0300	9.13E-02	1.47E-01	1.10	1.479E-02	3.73E-01	2.95E-01	0.67	2.28E-02	1.80E-02
	4.048	0.00116	6.082E+07	0.0300	7.45E-02	1.21E-01	1.09	9.846E-03	3.07E-01	2.43E-01	0.65	1.49E-02	1.18E-02
	4.3411	0.00104	6.082E+07	0.0300	6.68E-02	1.13E-01	0.98	7.395E-03	2.87E-01	2.27E-01	0.52	9.98E-03	7.90E-03
	4.4892	0.00134	6.082E+07	0.0300	8.61E-02	1.48E-01	0.91	1.161E-02	3.78E-01	2.99E-01	0.45	1.46E-02	1.16E-02
	2.1811	0.07118	6.082E+07	0.0300	4.57E+00	4.88E+00	1.12	2.502E+01	1.27E+01	1.01E+01	0.96	5.59E+01	4.42E+01
Xe-131m	0.16393	0.0196	9.762E+05	0.0300	2.02E-02	8.79E-03	1.00	1.777E-04	2.65E-01	2.10E-01	0.98	5.25E-03	4.15E-03
Xe-133	0.079621	0.002165	1.902E+08	0.0300	4.35E-01	1.86E-08	0.70	5.678E-09	1.48E-02	1.17E-02	0.93	5.98E-03	4.73E-03
	0.080997	0.36483	1.902E+08	0.0300	7.33E+01	5.66E-06	0.73	3.027E-04	2.51E+00	1.99E+00	0.82	1.51E+02	1.19E+02
	0.1777	0.000712	1.902E+08	0.0300	1.43E-01	4.72E-04	1.02	6.886E-05	1.07E-02	8.46E-03	0.98	1.50E-03	1.19E-03
Xe-133m	0.23322	0.103	6.044E+06	0.0300	6.58E-01	1.96E-01	1.05	1.350E-01	2.23E+00	1.77E+00	0.97	1.42E+00	1.13E+00
Xe-135	0.1582	0.002886	4.723E+07	0.0300	1.44E-01	1.10E-03	1.00	1.580E-04	3.73E-02	2.95E-02	0.99	5.31E-03	4.20E-03
	0.24979	0.899	4.723E+07	0.0300	4.49E+01	2.10E+00	1.04	9.793E+01	2.14E+01	1.69E+01	0.97	9.30E+02	7.36E+02

Isotope	Energy (MeV)	Probability	Design Basis Source (Ci)	Gap Release Fraction	Cont. Conc. (uCi/cc)	27A&B QAD Det. Response (Rad/hr)	27A&B Eff.	27A&B Response (Rad/hr)	27E QAD Det. Response (Rad/hr)	27F QAD Det. Response (Rad/hr)	27E&F Eff.	27E Response (Rad/hr)	27F Response (Rad/hr)
	0.35839	0.002203	4.723E+07	0.0300	1.10E-01	1.34E-02	1.00	1.473E-03	8.17E-02	6.47E-02	0.95	8.53E-03	6.75E-03
	0.40799	0.003578	4.723E+07	0.0300	1.79E-01	2.84E-02	1.00	5.072E-03	1.51E-01	1.20E-01	0.95	2.57E-02	2.03E-02
	0.60819	0.028948	4.723E+07	0.0300	1.44E+00	5.83E-01	0.99	8.333E-01	1.91E+00	1.51E+00	0.99	2.73E+00	2.17E+00
	0.68433	0.002093	4.723E+07	0.0300	1.04E-01	4.77E-02	1.00	4.979E-03	1.53E-01	1.21E-01	1.00	1.60E-02	1.27E-02
Xe-135m	0.52656	0.80997	3.905E+07	0.0300	3.34E+01	1.28E+01	0.99	4.222E+02	4.98E+01	3.95E+01	0.97	1.61E+03	1.28E+03
Xe-137	0.298	0.001167	1.656E+08	0.0300	2.04E-01	4.76E-03	1.01	9.807E-04	3.49E-02	2.76E-02	0.96	6.83E-03	5.41E-03
	0.39335	0.001381	1.656E+08	0.0300	2.42E-01	1.02E-02	1.00	2.473E-03	5.64E-02	4.47E-02	0.95	1.30E-02	1.03E-02
	0.45549	0.307	1.656E+08	0.0300	5.37E+01	2.93E+00	0.99	1.556E+02	1.43E+01	1.13E+01	0.95	7.30E+02	5.78E+02
	0.84895	0.00614	1.656E+08	0.0300	1.07E+00	1.73E-01	1.01	1.875E-01	5.50E-01	4.36E-01	1.02	6.03E-01	4.77E-01
	0.98225	0.002057	1.656E+08	0.0300	3.60E-01	6.70E-02	1.01	2.436E-02	2.09E-01	1.66E-01	1.01	7.61E-02	6.03E-02
	1.1193	0.001053	1.656E+08	0.0300	1.84E-01	3.88E-02	1.01	7.214E-03	1.19E-01	9.42E-02	1.00	2.19E-02	1.74E-02
	1.2732	0.002241	1.656E+08	0.0300	3.92E-01	9.39E-02	1.02	3.754E-02	2.79E-01	2.21E-01	0.99	1.08E-01	8.57E-02
	1.5768	0.001013	1.656E+08	0.0300	1.77E-01	5.29E-02	1.05	9.842E-03	1.46E-01	1.16E-01	0.98	2.54E-02	2.01E-02
	1.6125	0.001228	1.656E+08	0.0300	2.15E-01	6.54E-02	1.05	1.475E-02	1.80E-01	1.43E-01	0.98	3.80E-02	3.00E-02
	1.7834	0.004083	1.656E+08	0.0300	7.14E-01	2.37E-01	1.07	1.815E-01	6.41E-01	5.07E-01	0.98	4.49E-01	3.55E-01
	2.8498	0.001811	1.656E+08	0.0300	3.17E-01	1.51E-01	1.19	5.706E-02	3.84E-01	3.04E-01	0.92	1.12E-01	8.86E-02
	1.4906	0.01315	1.656E+08	0.0300	2.30E+00	6.53E-01	1.04	1.563E+00	1.83E+00	1.45E+00	0.99	4.17E+00	3.30E+00
Xe-138	0.15375	0.059535	1.506E+08	0.0300	9.47E+00	1.99E-02	1.00	1.884E-01	7.42E-01	5.87E-01	0.99	6.95E+00	5.50E+00
	0.24256	0.034965	1.506E+08	0.0300	5.56E+00	7.47E-02	1.05	4.362E-01	7.99E-01	6.32E-01	0.97	4.31E+00	3.41E+00
	0.25831	0.315	1.506E+08	0.0300	5.01E+01	8.15E-01	1.03	4.210E+01	7.83E+00	6.19E+00	0.97	3.80E+02	3.01E+02
	0.28251	0.004284	1.506E+08	0.0300	6.82E-01	1.47E-02	1.02	1.022E-02	1.20E-01	9.46E-02	0.96	7.83E-02	6.19E-02
	0.33528	0.001071	1.506E+08	0.0300	1.70E-01	5.65E-03	1.00	9.629E-04	3.68E-02	2.92E-02	0.95	5.96E-03	4.72E-03
	0.37144	0.005009	1.506E+08	0.0300	7.97E-01	3.29E-02	1.00	2.620E-02	1.93E-01	1.53E-01	0.95	1.46E-01	1.16E-01
	0.39643	0.063	1.506E+08	0.0300	1.00E+01	4.75E-01	1.00	4.757E+00	2.59E+00	2.05E+00	0.95	2.47E+01	1.96E+01
	0.40136	0.021735	1.506E+08	0.0300	3.46E+00	1.68E-01	1.00	5.804E-01	9.06E-01	7.17E-01	0.95	2.98E+00	2.36E+00
	0.43449	0.20318	1.506E+08	0.0300	3.23E+01	1.79E+00	1.00	5.795E+01	9.11E+00	7.21E+00	0.95	2.80E+02	2.21E+02
	0.50022	0.003622	1.506E+08	0.0300	5.76E-01	4.97E-02	0.99	2.833E-02	2.24E-01	1.77E-01	0.96	1.24E-01	9.80E-02
	0.53007	0.00252	1.506E+08	0.0300	4.01E-01	4.03E-02	0.99	1.600E-02	1.55E-01	1.23E-01	0.97	6.03E-02	4.78E-02
	0.53776	0.001166	1.506E+08	0.0300	1.86E-01	1.92E-02	0.99	3.532E-03	7.20E-02	5.70E-02	0.97	1.29E-02	1.03E-02
	0.55595	0.001166	1.506E+08	0.0300	1.86E-01	2.05E-02	0.99	3.765E-03	7.28E-02	5.77E-02	0.98	1.32E-02	1.05E-02
	0.56853	0.003055	1.506E+08	0.0300	4.86E-01	5.58E-02	0.99	2.686E-02	1.93E-01	1.53E-01	0.98	9.18E-02	7.28E-02
	0.58884	0.001228	1.506E+08	0.0300	1.95E-01	2.37E-02	0.99	4.582E-03	7.92E-02	6.28E-02	0.98	1.52E-02	1.20E-02
	0.65408	0.001449	1.506E+08	0.0300	2.31E-01	3.15E-02	1.00	7.272E-03	1.02E-01	8.05E-02	1.00	2.34E-02	1.86E-02
	0.86582	0.002961	1.506E+08	0.0300	4.71E-01	8.49E-02	1.01	4.038E-02	2.70E-01	2.14E-01	1.02	1.30E-01	1.03E-01

Isotope	Energy (MeV)	Probability	Design Basis Source (Ci)	Gap Release Fraction	Cont. Conc. (uCi/cc)	27A&B QAD Det. Response (Rad/hr)	27A&B Eff.	27A&B Response (Rad/hr)	27E QAD Det. Response (Rad/hr)	27F QAD Det. Response (Rad/hr)	27E&F Eff.	27E Response (Rad/hr)	27F Response (Rad/hr)
	0.86935	0.006206	1.506E+08	0.0300	9.88E-01	1.79E-01	1.01	1.781E-01	5.68E-01	4.50E-01	1.02	5.72E-01	4.53E-01
	0.89687	0.001323	1.506E+08	0.0300	2.11E-01	3.92E-02	1.01	8.342E-03	1.25E-01	9.86E-02	1.01	2.65E-02	2.10E-02
	0.91251	0.003276	1.506E+08	0.0300	5.21E-01	9.88E-02	1.01	5.202E-02	3.13E-01	2.48E-01	1.01	1.65E-01	1.30E-01
	0.91713	0.009198	1.506E+08	0.0300	1.46E+00	2.79E-01	1.01	4.123E-01	8.83E-01	6.99E-01	1.01	1.31E+00	1.03E+00
	0.93636	0.001355	1.506E+08	0.0300	2.16E-01	4.20E-02	1.01	9.136E-03	1.32E-01	1.05E-01	1.01	2.88E-02	2.28E-02
	0.94125	0.002299	1.506E+08	0.0300	3.66E-01	7.16E-02	1.01	2.644E-02	2.26E-01	1.79E-01	1.01	8.34E-02	6.60E-02
	1.0939	0.004095	1.506E+08	0.0300	6.52E-01	1.48E-01	1.01	9.710E-02	4.55E-01	3.60E-01	1.00	2.96E-01	2.35E-01
	1.0988	0.002142	1.506E+08	0.0300	3.41E-01	7.75E-02	1.01	2.669E-02	2.39E-01	1.89E-01	1.00	8.14E-02	6.44E-02
	1.1022	0.001071	1.506E+08	0.0300	1.70E-01	3.89E-02	1.01	6.689E-03	1.20E-01	9.47E-02	1.00	2.04E-02	1.61E-02
	1.1143	0.014742	1.506E+08	0.0300	2.35E+00	5.40E-01	1.01	1.281E+00	1.66E+00	1.31E+00	1.00	3.90E+00	3.08E+00
	1.1416	0.005134	1.506E+08	0.0300	8.17E-01	1.93E-01	1.01	1.590E-01	5.89E-01	4.67E-01	1.00	4.81E-01	3.81E-01
	1.1454	0.001323	1.506E+08	0.0300	2.11E-01	4.98E-02	1.01	1.059E-02	1.52E-01	1.21E-01	1.00	3.21E-02	2.54E-02
	1.5718	0.002646	1.506E+08	0.0300	4.21E-01	1.38E-01	1.05	6.091E-02	3.82E-01	3.02E-01	0.98	1.57E-01	1.25E-01
	1.6146	0.002363	1.506E+08	0.0300	3.76E-01	1.26E-01	1.05	4.973E-02	3.47E-01	2.75E-01	0.98	1.28E-01	1.01E-01
	1.7683	0.16727	1.506E+08	0.0300	2.66E+01	9.66E+00	1.07	2.750E+02	2.61E+01	2.07E+01	0.98	6.81E+02	5,39E+02
	1.8125	0.001796	1.506E+08	0.0300	2.86E-01	1.06E-01	1.08	3.270E-02	2.85E-01	2.25E-01	0.98	7.98E-02	6.31E-02
	1.8509	0.014238	1.506E+08	0.0300	2.27E+00	8.56E-01	1.08	2.094E+00	2.29E+00	1.81E+00	0.97	5.03E+00	3.98E+00
	1.9254	0.005639	1.506E+08	0.0300	8.97E-01	3.51E-01	1.09	3.437E-01	9.30E-01	7.36E-01	0.97	8.10E-01	6.41E-01
	2.0048	0.05355	1.506E+08	0.0300	8.52E+00	3.46E+00	1.10	3.244E+01	9.07E+00	7.18E+00	0.97	7.50E+01	5.93E+01
	2.0158	0.12254	1.506E+08	0.0300	1.95E+01	7.95E+00	1.10	1.705E+02	2.08E+01	1.65E+01	0.97	3.94E+02	3.12E+02
	2.0792	0.014427	1.506E+08	0.0300	2.30E+00	9.57E-01	1.11	2.437E+00	2.50E+00	1.98E+00	0.97	5.57E+00	4.41E+00
	2.2523	0.022869	1.506E+08	0.0300	3.64E+00	1.61E+00	1.13	6.603E+00	4.18E+00	3.30E+00	0.96	1.46E+01	1.15E+01
	2.3219	0.006206	1.506E+08	0.0300	9.88E-01	4.45E-01	1.14	5.014E-01	1.16E+00	9.15E-01	0.96	1.10E+00	8.67E-01
	2.4753	0.003119	1.506E+08	0.0300	4.96E-01	2.34E-01	1.16	1.350E-01	6.05E-01	4.79E-01	0.95	2.85E-01	2.26E-01
	2.4976	0.001733	1.506E+08	0.0300	2.76E-01	1.31E-01	1.16	4.196E-02	3.38E-01	2.68E-01	0.95	8.85E-02	7.01E-02
	1.1186	0.026586	1.506E+08	0.0300	4.23E+00	9.78E-01	1.01	4.181E+00	3.00E+00	2.38E+00	1.00	1.27E+01	1.27E+01
							SUM =	6.003E+03				1.85E+04	1.46E+04

27A = 51.385 Rad/hr 27E = 1.85E+04 Rad/hr
27B = 58.408 Rad/hr 27F = 1.47E+04 Rad/hr

Con. Vol=	5.68E+09 cm**3
27A Cone Factor	0.00856
27B Cone Factor	0.00973
Release Frac.	0.2

Isotope	Energy (MeV)	Probability	Design Basis Source (Ci)	Gap Release Fraction	Cont. Conc. (uCi/cc)	27A&B QAD Det. Response (Rad/hr)	27A&B Eff.	27A&B Response (Rad/hr)	27E QAD Det. Response (Rad/hr)	27F QAD Det. Response (Rad/hr)	27E&F Eff.	27E Response (Rad/hr)	27F Response (Rad/hr)
I-131	0.080183	0.026182	2.422E+07	0.0200	2.23E-03	3.20E-07	0.71	5.077E-10	1.794E-01	1.418E-01	0.88	3.53E-04	2.79E-04
	0.17721	0.002648	2.422E+07	0.0200	2.26E-04	1.73E-03	1.02	3.988E-07	3.963E-02	3.135E-02	0.98	8.77E-06	6.94E-06
	0.2843	0.060521	2.422E+07	0.0200	5.16E-03	2.12E-01	1.02	1.116E-03	1.703E+00	1.348E+00	0.96	8.44E-03	6.68E-03
	0.32578	0.002507	2.422E+07	0.0200	2.14E-04	1.24E-02	1.00	2.661E-06	8.341E-02	6.603E-02	0.96	1.71E-05	1.36E-05
	0.36448	0.81164	2.422E+07	0.0200	6.92E-02	5.12E+00	1.00	3.542E-01	3.065E+01	2.426E+01	0.95	2.02E+00	1.60E+00
	0.50299	0.003605	2.422E+07	0.0200	3.08E-04	5.03E-02	0.99	1.531E-05	2.224E-01	1.761E-01	0.96	6.56E-05	5.20E-05
	0.63697	0.072605	2.422E+07	0.0200	6.19E-03	1.54E+00	1.00	9.522E-03	4.973E+00	3.942E+00	0.99	3.05E-02	2.42E-02
	0.6427	0.002195	2.422E+07	0.0200	1.87E-04	4.69E-02	1.00	8.785E-06	1.515E-01	1.201E-01	1.00	2.84E-05	2.25E-05
	0.72289	0.018025	2.422E+07	0.0200	1.54E-03	4.33E-01	1.00	6.663E-04	1.388E+00	1.100E+00	1.01	2.15E-03	1.71E-03
	0.32939	0.002304	2.422E+07	0.0200	1.97E-04	1.17E-02	1.00	2.301E-06	7.767E-02	6.148E-02	0.95	1.45E-05	1.15E-05
I-132	0.1472	0.002369	3.466E+07	0.0200	2.89E-04	5.60E-04	1.01	1.637E-07	2.796E-02	2.211E-02	1.01	8.16E-06	6.46E-06
	0.1833	0.001382	3.466E+07	0.0200	1.69E-04	1.07E-03	1.03	1.860E-07	2.163E-02	1.712E-02	0.97	3.54E-06	2.80E-06
	0.2548	0.001875	3.466E+07	0.0200	2.29E-04	4.65E-03	1.04	1.108E-06	4.574E-02	3.620E-02	0.97	1.02E-05	8.04E-06
	0.2627	0.01441	3.466E+07	0.0200	1.76E-03	3.93E-02	1.03	7.121E-05	3.660E-01	2.896E-01	0.97	6.24E-04	4.94E-04
	0.2848	0.007205	3.466E+07	0.0200	8.80E-04	2.54E-02	1.02	2.276E-05	2.032E-01	1.608E-01	0.96	1.72E-04	1.36E-04
	0.3165	0.001382	3.466E+07	0.0200	1.69E-04	6.45E-03	1.00	1.088E-06	4.443E-02	3.516E-02	0.96	7.19E-06	5.69E-06
	0.3635	0.004935	3.466E+07	0.0200	6.02E-04	3.09E-02	1.00	1.864E-05	1.859E-01	1.471E-01	0.95	1.06E-04	8.42E-05
	0.3878	0.002961	3.466E+07	0.0200	3.61E-04	2.13E-02	1.00	7.696E-06	1.193E-01	9.443E-02	0.95	4.10E-05	3.24E-05
	0.4168	0.004738	3.466E+07	0.0200	5.78E-04	3.90E-02	1.00	2.256E-05	2.046E-01	1.620E-01	0.95	1.12E-04	8.90E-05
	0.4319	0.004836	3.466E+07	0.0200	5.90E-04	4.22E-02	1.00	2.494E-05	2.156E-01	1.707E-01	0.95	1.21E-04	9.57E-05
	0.446	0.006021	3.466E+07	0.0200	7.35E-04	5.55E-02	1.00	4.076E-05	2.759E-01	2.184E-01	0.95	1.93E-04	1.52E-04
	0.4739	0.001777	3.466E+07	0.0200	2.17E-04	1.80E-02	0.99	3.876E-06	8.537E-02	6.759E-02	0.96	1.78E-05	1.41E-05
	0.4785	0.001481	3.466E+07	0.0200	1.81E-04	1.53E-02	0.99	2.733E-06	7.164E-02	5.672E-02	0.96	1.24E-05	9.84E-06
	0.4882	0.004145	3.466E+07	0.0200	5.06E-04	4.41E-02	0.99	2.210E-05	2.034E-01	1.611E-01	0.96	9.88E-05	7.82E-05
	0.5059	0.050337	3.466E+07	0.0200	6.14E-03	7.14E-01	0.99	4.345E-03	3.101E+00	2.456E+00	0.96	1.83E-02	1.45E-02
	0.52265	0.16088	3.466E+07	0.0200	1.96E-02	2.49E+00	0.99	4.841E-02	9.888E+00	7.835E+00	0.97	1.88E-01	1.49E-01
	0.5355	0.005231	3.466E+07	0.0200	6.39E-04	8.55E-02	0.99	5.407E-05	3.226E-01	2.556E-01	0.97	2.00E-04	1.58E-04
	0.54	0.001086	3.466E+07	0.0200	1.33E-04	1.81E-02	0.99	2.371E-06	6.709E-02	5.318E-02	0.97	8.63E-06	6.84E-06
	0.5471	0.012535	3.466E+07	0.0200	1.53E-03	2.14E-01	0.99	3.241E-04	7.774E-01	6.162E-01	0.97	1.15E-03	9.15E-04
	0.6	0.001382	3.466E+07	0.0200	1.69E-04	2.74E-02	0.99	4.572E-06	9.024E-02	7.155E-02	0.99	1.51E-05	1.19E-05
	0.6208	0.003948	3.466E+07	0.0200	4.82E-04	8.13E-02	1.00	3.919E-05	2.646E-01	2.098E-01	0.99	1.26E-04	1.00E-04
	0.6212	0.015792	3.466E+07	0.0200	1.93E-03	3.26E-01	1.00	6.276E-04	1.059E+00	8.399E-01	0.99	2.02E-03	1.60E-03
	0.63022	0.13719	3.466E+07	0.0200	1.67E-02	2.87E+00	1.00	4.812E-02	9.314E+00	7.384E+00	0.99	1.54E-01	1.22E-01

Isotope	Energy (MeV)	Probability	Design Basis Source (Ci)	Gap Release Fraction	Cont. Conc. (uCi/cc)	27A&B QAD Det. Response (Rad/hr)	27A&B Eff.	27A&B Response (Rad/hr)	27E QAD Det. Response (Rad/hr)	27F QAD Det. Response (Rad/hr)	27E&F Eff.	27E Response (Rad/hr)	27F Response (Rad/hr)
	0.6506	0.026649	3.466E+07	0.0200	3.25E-03	5.77E-01	1.00	1.876E-03	1.859E+00	1.474E+00	1.00	6.05E-03	4.79E-03
	0.659	0.003948	3.466E+07	0.0200	4.82E-04	8.66E-02	1.00	4.173E-05	2.786E-01	2.209E-01	1.00	1.34E-04	1.06E-04
	0.66769	0.987	3.466E+07	0.0200	1.20E-01	2.19E+01	1.00	2.643E+00	7.051E+01	5.589E+01	1.00	8.50E+00	6.73E+00
	0.6698	0.04935	3.466E+07	0.0200	6.02E-03	1.10E+00	1.00	6.627E-03	3.535E+00	2.802E+00	1.00	2.13E-02	1.69E-02
	0.6716	0.052311	3.466E+07	0.0200	6.39E-03	1.17E+00	1.00	7.466E-03	3.757E+00	2.978E+00	1.00	2.40E-02	1.90E-02
	0.727	0.031584	3.466E+07	0.0200	3.86E-03	7.64E-01	1.00	2.944E-03	2.444E+00	1.937E+00	1.01	9.52E-03	7.54E-03
	0.7272	0.021714	3.466E+07	0.0200	2.65E-03	5.25E-01	1.00	1.392E-03	1.681E+00	1.332E+00	1.01	4.50E-03	3.57E-03
	0.7285	0.010857	3.466E+07	0.0200	1.33E-03	2.63E-01	1.01	3.521E-04	8.421E-01	6.673E-01	1.01	1.13E-03	8.93E-04
	0.7645	0.003948	3.466E+07	0.0200	4.82E-04	1.00E-01	1.01	4.888E-05	3.206E-01	2.540E-01	1.01	1.56E-04	1.24E-04
	0.77261	0.76196	3.466E+07	0.0200	9.30E-02	1.96E+01	1.01	1.841E+00	6.249E+01	4.951E+01	1.01	5.87E+00	4.65E+00
	0.7802	0.012338	3.466E+07	0.0200	1.51E-03	3.21E-01	1.01	4.875E-04	1.021E+00	8.091E-01	1.01	1.55E-03	1.23E-03
	0.7845	0.004244	3.466E+07	0.0200	5.18E-04	1.11E-01	1.01	5.803E-05	3.532E-01	2.798E-01	1.01	1.85E-04	1.46E-04
	0.8098	0.028623	3.466E+07	0.0200	3.49E-03	7.72E-01	1.01	2.724E-03	2.454E+00	1.944E+00	1.01	8.66E-03	6.86E-03
	0.8122	0.056259	3.466E+07	0.0200	6.87E-03	1.52E+00	1.01	1.055E-02	4.838E+00	3.832E+00	1.01	3.36E-02	2.66E-02
	0.8633	0.005823	3.466E+07	0.0200	7.11E-04	1.66E-01	1.01	1.195E-04	5.296E-01	4.194E-01	1.02	3.84E-04	3.04E-04
	0.8768	0.010758	3.466E+07	0.0200	1.31E-03	3.12E-01	1.01	4.140E-04	9.925E-01	7.860E-01	1.02	1.33E-03	1.05E-03
	0.9103	0.009179	3.466E+07	0.0200	1.12E-03	2.76E-01	1.01	3.125E-04	8.752E-01	6.930E-01	1.01	9.90E-04	7.84E-04
	0.9276	0.004145	3.466E+07	0.0200	5.06E-04	1.27E-01	1.01	6.496E-05	4.018E-01	3.182E-01	1.01	2.05E-04	1.63E-04
	0.95455	0.18062	3.466E+07	0.0200	2.20E-02	5.71E+00	1.01	1.271E-01	1.795E+01	1.421E+01	1.01	4.00E-01	3.16E-01
	0.9837	0.005626	3.466E+07	0.0200	6.87E-04	1.84E-01	1.01	1.273E-04	5.733E-01	4.540E-01	1.01	3.98E-04	3.15E-04
	1.0347	0.004738	3.466E+07	0.0200	5.78E-04	1.62E-01	1.01	9.476E-05	5.034E-01	3.985E-01	1.01	2.94E-04	2.33E-04
	1.136	0.02961	3.466E+07	0.0200	3.61E-03	1.11E+00	1.01	4.038E-03	3.385E+00	2.680E+00	1.00	1.22E-02	9.69E-03
	1.1434	0.013522	3.466E+07	0.0200	1.65E-03	5.08E-01	1.01	8.472E-04	1.554E+00	1.230E+00	1.00	2.56E-03	2.03E-03
	1.1474	0.002764	3.466E+07	0.0200	3.37E-04	1.04E-01	1.01	3.553E-05	3.185E-01	2.521E-01	1.00	1.07E-04	8.51E-05
	1.1732	0.010857	3.466E+07	0.0200	1.33E-03	4.19E-01	1.02	5.659E-04	1.272E+00	1.007E+00	1.00	1.69E-03	1.34E-03
	1.2727	0.001777	3.466E+07	0.0200	2.17E-04	7.44E-02	1.02	1.646E-05	2.212E-01	1.751E-01	0.99	4.75E-05	3.76E-05
	1.2907	0.011351	3.466E+07	0.0200	1.39E-03	4.82E-01	1.02	6.815E-04	1.427E+00	1.130E+00	0.99	1.96E-03	1.55E-03
	1.2953	0.01974	3.466E+07	0.0200	2.41E-03	8.42E-01	1.02	2.069E-03	2.489E+00	1.970E+00	0.99	5.94E-03	4.70E-03
	1.2976	0.008883	3.466E+07	0.0200	1.08E-03	3.80E-01	1.02	4.199E-04	1.121E+00	8.878E-01	0.99	1.20E-03	9.53E-04
	1.3178	0.001184	3.466E+07	0.0200	1.45E-04	5.14E-02	1.02	7.579E-06	1.511E-01	1.196E-01	0.99	2.16E-05	1.71E-05
	1.3721	0.024675	3.466E+07	0.0200	3.01E-03	1.12E+00	1.03	3.472E-03	3.241E+00	2.566E+00	0.99	9.67E-03	7.65E-03
	1.3986	0.071064	3.466E+07	0.0200	8.67E-03	3.29E+00	1.03	2.939E-02	9.460E+00	7.489E+00	0.99	8.12E-02	6.43E-02
	1.4426	0.014213	3.466E+07	0.0200	1.73E-03	6.81E-01	1.04	1.228E-03	1.933E+00	1.531E+00	0.99	3.32E-03	2.63E-03
	1.4768	0.001352	3.466E+07	0.0200	1.65E-04	6.65E-02	1.04	1.141E-05	1.869E-01	1.480E-01	0.99	3.05E-05	2.42E-05

V/B 9/16/94

Isotope	Energy (MeV)	Probability	Design Basis Source (Ci)	Gap Release Fraction	Cont. Conc. (uCi/cc)	27A&B QAD Det. Response (Rad/hr)	27A&B Eff.	27A&B Response (Rad/hr)	27E QAD Det. Response (Rad/hr)	27F QAD Det. Response (Rad/hr)	27E&F Eff.	27E Response (Rad/hr)	27F Response (Rad/hr)
	1.7575	0.002961	3.466E+07	0.0200	3.61E-04	1.70E-01	1.07	6.574E-05	4.601E-01	3.642E-01	0.98	1.63E-04	1.29E-04
	1.9211	0.011844	3.466E+07	0.0200	1.45E-03	7.37E-01	1.09	1.161E-03	1.952E+00	1.545E+00	0.97	2.74E-03	2.17E-03
	2.0022	0.010857	3.466E+07	0.0200	1.33E-03	7.01E-01	1.10	1.022E-03	1.838E+00	1.455E+00	0.97	2.36E-03	1.87E-03
	2.0868	0.002369	3.466E+07	0.0200	2.89E-04	1.58E-01	1.11	5.057E-05	4.118E-01	3.260E-01	0.97	1.16E-04	9.14E-05
	2.1727	0.001974	3.466E+07	0.0200	2.41E-04	1.35E-01	1.12	3.646E-05	3.522E-01	2.788E-01	0.96	8.15E-05	6.45E-05
	2.2232	0.001184	3.466E+07	0.0200	1.45E-04	8.23E-02	1.13	1.345E-05	2.143E-01	1.697E-01	0.96	2.97E-05	2.35E-05
	2.3905	0.001678	3.466E+07	0.0200	2.05E-04	1.23E-01	1.15	2.897E-05	3.183E-01	2.519E-01	0.95	6.19E-05	4.90E-05
	1.0146	0.031946	3.466E+07	0.0200	3.90E-03	1.07E+00	1.01	4.232E-03	3.340E+00	2.644E+00	1.01	1.32E-02	1.04E-02
I-133	0.2627	0.003565	4.747E+07	0.0200	5.96E-04	9.73E-03	1.03	5.971E-06	9.055E-02	7.167E-02	0.97	5.24E-05	4.14E-05
	0.26717	0.001165	4.747E+07	0.0200	1.95E-04	3.35E-03	1.03	6.721E-07	3.025E-02	2.394E-02	0.97	5.72E-06	4.52E-06
	0.34543	0.001036	4.747E+07	0.0200	1.73E-04	5.83E-03	1.00	1.009E-06	3.689E-02	2.920E-02	0.95	6.07E-06	4.80E-06
	0.36108	0.001122	4.747E+07	0.0200	1.88E-04	6.93E-03	1.00	1.301E-06	4.195E-02	3.321E-02	0.95	7.48E-06	5.92E-06
	0.41805	0.001528	4.747E+07	0.0200	2.55E-04	1.26E-02	1.00	3.230E-06	6.618E-02	5.240E-02	0.95	1.61E-05	1.27E-05
	0.42291	0.00309	4.747E+07	0.0200	5.17E-04	2.61E-02	1.00	1.347E-05	1.352E-01	1.071E-01	0.95	6.64E-05	5.25E-05
	0.51053	0.018127	4.747E+07	0.0200	3.03E-03	2.64E-01	0.99	7.923E-04	1.115E+00	8.834E-01	0.96	3.24E-03	2.57E-03
	0.52987	0.8632	4.747E+07	0.0200	1.44E-01	1.38E+01	0.99	1.970E+00	5.310E+01	4.208E+01	0.97	7.43E+00	5.89E+00
	0.61797	0.005395	4.747E+07	0.0200	9.02E-04	1.11E-01	1.00	9.971E-05	3.603E-01	2.857E-01	0.99	3.22E-04	2.55E-04
	0.68025	0.006448	4.747E+07	0.0200	1.08E-03	1.46E-01	1.00	1.574E-04	4.686E-01	3.714E-01	1.00	5.05E-04	4.00E-04
	0.70658	0.014933	4.747E+07	0.0200	2.50E-03	3.51E-01	1.00	8.764E-04	1.125E+00	8.915E-01	1.01	2.84E-03	2.25E-03
	0.76838	0.004566	4.747E+07	0.0200	7.63E-04	1.17E-01	1.01	9.002E-05	3.726E-01	2.952E-01	1.01	2.87E-04	2.28E-04
	0.82051	0.001537	4.747E+07	0.0200	2.57E-04	4.19E-02	1.01	1.089E-05	1.334E-01	1.057E-01	1.02	3.50E-05	2.77E-05
	0.85628	0.012344	4.747E+07	0.0200	2.06E-03	3.50E-01	1.01	7.297E-04	1.114E+00	8.825E-01	1.02	2.35E-03	1.86E-03
	0.87533	0.044714	4.747E+07	0.0200	7.48E-03	1.29E+00	1.01	9.777E-03	4.118E+00	3.261E+00	1.02	3.14E-02	2.49E-02
	0.90967	0.002124	4.747E+07	0.0200	3.55E-04	6.39E-02	1.01	2.291E-05	2.024E-01	1.603E-01	1.01	7.26E-05	5.75E-05
	1.0523	0.005516	4.747E+07	0.0200	9.22E-04	1.92E-01	1.01	1.786E-04	5.940E-01	4.703E-01	1.01	5.53E-04	4.38E-04
	1.0601	0.001373	4.747E+07	0.0200	2.30E-04	4.80E-02	1.01	1.114E-05	1.487E-01	1.178E-01	1.01	3.45E-05	2.73E-05
	1.2364	0.014933	4.747E+07	0.0200	2.50E-03	6.07E-01	1.02	1.546E-03	1.820E+00	1.441E+00	1.00	4.54E-03	3.60E-03
	1.2982	0.023306	4.747E+07	0.0200	3.90E-03	9.96E-01	1.02	3.960E-03	2.943E+00	2.330E+00	0.99	1.14E-02	8.99E-03
	1.3504	0.001485	4.747E+07	0.0200	2.48E-04	6.62E-02	1.03	1.693E-05	1.929E-01	1.527E-01	0.99	4.74E-05	3.75E-05
	0.53524	0.006072	4.747E+07	0.0200	1.02E-03	9.92E-02	0.99	9.968E-05	3.744E-01	2.967E-01	0.97	3.69E-04	2.92E-04
I-134	0.1354	0.037592	5.183E+07	0.0200	6.86E-03	3.23E-03	1.03	2.284E-05	4.014E-01	3.175E-01	1.02	2.81E-03	2.22E-03
	0.13903	0.006869	5.183E+07	0.0200	1.25E-03	8.09E-04	1.02	1.034E-06	7.565E-02	5.984E-02	1.02	9.67E-05	7.65E-05
	0.15198	0.001059	5.183E+07	0.0200	1.93E-04	3.36E-04	1.00	6.491E-08	1.300E-02	1.028E-02	1.00	2.51E-06	1.99E-06
	0.16248	0.002576	5.183E+07	0.0200	4.70E-04	1.11E-03	1.00	5.212E-07	3.442E-02	2.723E-02	0.98	1.59E-05	1.25E-05

Isotope	Energy (MeV)	Probability	Design Basis Source (Ci)	Gap Release Fraction	Cont. Conc. (uCi/cc)	27A&B QAD Det. Response (Rad/hr)	27A&B Eff.	27A&B Response (Rad/hr)	27E QAD Det. Response (Rad/hr)	27F QAD Det. Response (Rad/hr)	27E&F Eff.	27E Response (Rad/hr)	27F Response (Rad/hr)
	0.18847	0.006965	5.183E+07	0.0200	1.27E-03	6.22E-03	1.04	8.222E-06	1.132E-01	8.954E-02	0.97	1.40E-04	1.10E-04
	0.217	0.002481	5.183E+07	0.0200	4.53E-04	3.81E-03	1.06	1.830E-06	4.877E-02	3.859E-02	0.97	2.14E-05	1.70E-05
	0.23547	0.019845	5.183E+07	0.0200	3.62E-03	3.88E-02	1.05	1.474E-04	4.358E-01	3.449E-01	0.97	1.53E-03	1.21E-03
	0.2788	0.001307	5.183E+07	0.0200	2.39E-04	4.30E-03	1.02	1.047E-06	3.588E-02	2.840E-02	0.96	8.22E-06	6.50E-06
	0.31981	0.005152	5.183E+07	0.0200	9.40E-04	2.46E-02	1.00	2.312E-05	1.677E-01	1.327E-01	0.96	1.51E-04	1.20E-04
	0.35108	0.004961	5.183E+07	0.0200	9.06E-04	2.89E-02	1.00	2.615E-05	1.799E-01	1.424E-01	0.95	1.55E-04	1.22E-04
	0.40545	0.073466	5.183E+07	0.0200	1.34E-02	5.77E-01	1.00	7.740E-03	3.092E+00	2.448E+00	0.95	3.94E-02	3.12E-02
	0.411	0.006106	5.183E+07	0.0200	1.11E-03	4.91E-02	1.00	5.471E-05	2.603E-01	2.061E-01	0.95	2.76E-04	2.18E-04
	0.43335	0.041885	5.183E+07	0.0200	7.65E-03	3.68E-01	1.00	2.813E-03	1.873E+00	1.483E+00	0.95	1.36E-02	1.08E-02
	0.45892	0.012976	5.183E+07	0.0200	2.37E-03	1.25E-01	0.99	2.936E-04	6.084E-01	4.817E-01	0.96	1.38E-03	1.10E-03
	0.4655	0.003626	5.183E+07	0.0200	6.62E-04	3.58E-02	0.99	2.345E-05	1.719E-01	1.361E-01	0.96	1.09E-04	8.65E-05
	0.48888	0.014121	5.183E+07	0.0200	2.58E-03	1.51E-01	0.99	3.844E-04	6.936E-01	5.492E-01	0.96	1.72E-03	1.36E-03
	0.5144	0.023375	5.183E+07	0.0200	4.27E-03	3.48E-01	0.99	1.468E-03	1.437E+00	1.138E+00	0.97	5.95E-03	4.71E-03
	0.54083	0.078236	5.183E+07	0.0200	1.43E-02	1.31E+00	0.99	1.846E-02	4.835E+00	3.832E+00	0.97	6.70E-02	5.31E-02
	0.56552	0.008778	5.183E+07	0.0200	1.60E-03	1.59E-01	0.99	2.522E-04	5.524E-01	4.379E-01	0.98	8.67E-04	6.88E-04
	0.57075	0.002099	5.183E+07	0.0200	3.83E-04	3.86E-02	0.99	1.464E-05	1.327E-01	1.052E-01	0.98	4.98E-05	3.95E-05
	0.59536	0.11354	5.183E+07	0.0200	2.07E-02	2.22E+00	0.99	4.565E-02	7.374E+00	5.847E+00	0.99	1.51E-01	1.20E-01
	0.62179	0.10591	5.183E+07	0.0200	1.93E-02	2.19E+00	1.00	4.226E-02	7.111E+00	5.638E+00	0.99	1.36E-01	1.08E-01
	0.62796	0.023662	5.183E+07	0.0200	4.32E-03	4.94E-01	1.00	2.132E-03	1.601E+00	1.269E+00	0.99	6.85E-03	5.43E-03
	0.67734	0.084915	5.183E+07	0.0200	1.55E-02	1.91E+00	1.00	2.967E-02	6.147E+00	4.872E+00	1.00	9.53E-02	7.55E-02
	0.70665	0.008301	5.183E+07	0.0200	1.52E-03	1.95E-01	1.00	2.958E-04	6.256E-01	4.957E-01	1.01	9.57E-04	7.59E-04
	0.73074	0.019082	5.183E+07	0.0200	3.48E-03	4.64E-01	1.01	1.631E-03	1.484E+00	1.176E+00	1.01	5.22E-03	4.14E-03
	0.73918	0.007633	5.183E+07	0.0200	1.39E-03	1.88E-01	1.01	2.641E-04	6.003E-01	4.756E-01	1.01	8.45E-04	6.69E-04
	0.76668	0.041026	5.183E+07	0.0200	7.49E-03	1.05E+00	1.01	7.917E-03	3.341E+00	2.647E+00	1.01	2.53E-02	2.00E-02
	0.81638	0.005248	5.183E+07	0.0200	9.58E-04	1.43E-01	1.01	1.379E-04	4.534E-01	3.591E-01	1.02	4.43E-04	3.51E-04
	0.84702	0.9541	5.183E+07	0.0200	1.74E-01	2.68E+01	1.01	4.712E+00	8.528E+01	6.754E+01	1.02	1.51E+01	1.20E+01
	0.85729	0.069649	5.183E+07	0.0200	1.27E-02	1.98E+00	1.01	2.540E-02	6.295E+00	4.985E+00	1.02	8.16E-02	6.47E-02
	0.864	0.001908	5.183E+07	0.0200	3.48E-04	5.46E-02	1.01	1.920E-05	1.737E-01	1.375E-01	1.02	6.17E-05	4.89E-05
	0.88409	0.6526	5.183E+07	0.0200	1.19E-01	1.91E+01	1.01	2.296E+00	6.064E+01	4.802E+01	1.01	7.30E+00	5.78E+00
	0.9226	0.001431	5.183E+07	0.0200	2.61E-04	4.36E-02	1.01	1.151E-05	1.381E-01	1.093E-01	1.01	3.64E-05	2.88E-05
	0.94786	0.040358	5.183E+07	0.0200	7.37E-03	1.27E+00	1.01	9.417E-03	3.986E+00	3.156E+00	1.01	2.97E-02	2.35E-02
	0.9669	0.00353	5.183E+07	0.0200	6.44E-04	1.13E-01	1.01	7.358E-05	3.546E-01	2.808E-01	1.01	2.31E-04	1.83E-04
	0.97467	0.046751	5.183E+07	0.0200	8.53E-03	1.51E+00	1.01	1.302E-02	4.727E+00	3.743E+00	1.01	4.07E-02	3.23E-02
	1.0403	0.019082	5.183E+07	0.0200	3.48E-03	6.56E-01	1.01	2.309E-03	2.036E+00	1.612E+00	1.01	7.16E-03	5.67E-03

V/B 9/16/94

Isotope	Energy (MeV)	Probability	Design Basis Source (Ci)	Gap Release Fraction	Cont. Conc. (uCi/cc)	27A&B QAD Det. Response (Rad/hr)	27A&B Eff.	27A&B Response (Rad/hr)	27E QAD Det. Response (Rad/hr)	27F QAD Det. Response (Rad/hr)	27E&F Eff.	27E Response (Rad/hr)	27F Response (Rad/hr)
	1.0726	0.15266	5.183E+07	0.0200	2.79E-02	5.40E+00	1.01	1.520E-01	1.669E+01	1.322E+01	1.01	4.70E-01	3.72E-01
	1.1001	0.006869	5.183E+07	0.0200	1.25E-03	2.49E-01	1.01	3.151E-04	7.661E-01	6.065E-01	1.00	9.61E-04	7.61E-04
	1.1032	0.007251	5.183E+07	0.0200	1.32E-03	2.63E-01	1.01	3.521E-04	8.105E-01	6.417E-01	1.00	1.07E-03	8.49E-04
	1.1362	0.097318	5.183E+07	0.0200	1.78E-02	3.64E+00	1.01	6.526E-02	1.113E+01	8.815E+00	1.00	1.98E-01	1.57E-01
	1.1591	0.00353	5.183E+07	0.0200	6.44E-04	1.34E-01	1.01	8.753E-05	4.099E-01	3.245E-01	1.00	2.64E-04	2.09E-04
	1.164	0.001336	5.183E+07	0.0200	2.44E-04	5.11E-02	1.02	1.271E-05	1.556E-01	1.232E-01	1.00	3.80E-05	3.00E-05
	1.19	0.00353	5.183E+07	0.0200	6.44E-04	1.38E-01	1.02	9.073E-05	4.181E-01	3.310E-01	1.00	2.69E-04	2.13E-04
	1.239	0.002099	5.183E+07	0.0200	3.83E-04	8.55E-02	1.02	3.340E-05	2.561E-01	2.028E-01	1.00	9.81E-05	7.77E-05
	1.2695	0.005629	5.183E+07	0.0200	1.03E-03	2.35E-01	1.02	2.464E-04	6.993E-01	5.536E-01	1.00	7.19E-04	5.69E-04
	1.3224	0.00105	5.183E+07	0.0200	1.92E-04	4.58E-02	1.03	9.033E-06	1.343E-01	1.063E-01	0.99	2.55E-05	2.02E-05
	1.336	0.001431	5.183E+07	0.0200	2.61E-04	6.31E-02	1.03	1.697E-05	1.844E-01	1.460E-01	0.99	4.77E-05	3.78E-05
	1.3526	0.004484	5.183E+07	0.0200	8.19E-04	2.00E-01	1.03	1.688E-04	5.830E-01	4.615E-01	0.99	4.72E-04	3.74E-04
	1.4143	0.002194	5.183E+07	0.0200	4.00E-04	1.03E-01	1.03	4.241E-05	2.943E-01	2.330E-01	0.99	1.17E-04	9.24E-05
	1.4282	0.001717	5.183E+07	0.0200	3.13E-04	8.14E-02	1.03	2.626E-05	2.320E-01	1.837E-01	0.99	7.20E-05	5.70E-05
	1.4314	0.001717	5.183E+07	0.0200	3.13E-04	8.16E-02	1.03	2.633E-05	2.324E-01	1.839E-01	0.99	7.21E-05	5.71E-05
	1.4552	0.022898	5.183E+07	0.0200	4.18E-03	1.11E+00	1.04	4.814E-03	3.134E+00	2.481E+00	0.99	1.30E-02	1.03E-02
	1.47	0.007728	5.183E+07	0.0200	1.41E-03	3.78E-01	1.04	5.542E-04	1.065E+00	8.427E-01	0.99	1.49E-03	1.18E-03
	1.5055	0.001145	5.183E+07	0.0200	2.09E-04	5.75E-02	1.04	1.249E-05	1.605E-01	1.270E-01	0.99	3.32E-05	2.63E-05
	1.5415	0.005057	5.183E+07	0.0200	9.23E-04	2.59E-01	1.04	2.486E-04	7.200E-01	5.700E-01	0.98	6.51E-04	5.16E-04
	1.6138	0.043602	5.183E+07	0.0200	7.96E-03	2.32E+00	1.05	1.941E-02	6.402E+00	5.068E+00	0.98	4.99E-02	3.95E-02
	1.6292	0.002576	5.183E+07	0.0200	4.70E-04	1.38E-01	1.05	6.833E-05	3.807E-01	3.014E-01	0.98	1.75E-04	1.39E-04
	1.6443	0.004007	5.183E+07	0.0200	7.31E-04	2.17E-01	1.06	1.682E-04	5.957E-01	4.716E-01	0.98	4.27E-04	3.38E-04
	1.6552	0.00229	5.183E+07	0.0200	4.18E-04	1.25E-01	1.06	5.526E-05	3.420E-01	2.708E-01	0.98	1.40E-04	1.11E-04
	1.7415	0.026715	5.183E+07	0.0200	4.88E-03	1.52E+00	1.07	7.938E-03	4.126E+00	3.267E+00	0.98	1.97E-02	1.56E-02
	1.8068	0.057246	5.183E+07	0.0200	1.04E-02	3.37E+00	1.08	3.802E-02	9.060E+00	7.172E+00	0.98	9.28E-02	7.35E-02
	1.9259	0.001813	5.183E+07	0.0200	3.31E-04	1.13E-01	1.09	4.077E-05	2.992E-01	2.369E-01	0.97	9.60E-05	7.60E-05
	2.0206	0.001717	5.183E+07	0.0200	3.13E-04	1.12E-01	1.10	3.848E-05	2.924E-01	2.315E-01	0.97	8.89E-05	7.04E-05
	2.1599	0.002099	5.183E+07	0.0200	3.83E-04	1.43E-01	1.12	6.137E-05	3.729E-01	2.953E-01	0.96	1.37E-04	1.09E-04
	2.3124	0.002385	5.183E+07	0.0200	4.35E-04	1.71E-01	1.14	8.469E-05	4.428E-01	3.505E-01	0.96	1.85E-04	1.46E-04
	2.4674	0.001527	5.183E+07	0.0200	2.79E-04	1.15E-01	1.16	3.703E-05	2.954E-01	2.339E-01	0.95	7.82E-05	6.19E-05
	1.7872	0.013348	5.183E+07	0.0200	2.44E-03	7.78E-01	1.07	2.028E-03	2.097E+00	1.660E+00	0.98	5.01E-03	3.96E-03
I-135	0.2205	0.017452	4.470E+07	0.0200	2.75E-03	2.81E-02	1.06	8.179E-05	3.506E-01	2.775E-01	0.97	9.34E-04	7.39E-04
	0.22972	0.002317	4.470E+07	0.0200	3.65E-04	4.20E-03	1.05	1.610E-06	4.921E-02	3.894E-02	0.97	1.74E-05	1.38E-05
	0.26426	0.00184	4.470E+07	0.0200	2.90E-04	5.11E-03	1.03	1.526E-06	4.711E-02	3.728E-02	0.97	1.32E-05	1.05E-05

Isotope	Energy (MeV)	Probability	Design Basis Source (Ci)	Gap Release Fraction	Cont. Conc. (uCi/cc)	27A&B QAD Det. Response (Rad/hr)	27A&B Eff.	27A&B Response (Rad/hr)	27E QAD Det. Response (Rad/hr)	27F QAD Det. Response (Rad/hr)	27E&F Eff.	27E Response (Rad/hr)	27F Response (Rad/hr)
	0.28845	0.030899	4.470E+07	0.0200	4.86E-03	1.13E-01	1.02	5.624E-04	8.857E-01	7.010E-01	0.96	4.14E-03	3.27E-03
	0.29027	0.003033	4.470E+07	0.0200	4.77E-04	1.14E-02	1.01	5.474E-06	8.763E-02	6.936E-02	0.96	4.02E-05	3.18E-05
	0.36185	0.00186	4.470E+07	0.0200	2.93E-04	1.15E-02	1.00	3.381E-06	6.969E-02	5.517E-02	0.95	1.94E-05	1.53E-05
	0.40303	0.002317	4.470E+07	0.0200	3.65E-04	1.80E-02	1.00	6.573E-06	9.697E-02	7.676E-02	0.95	3.36E-05	2.66E-05
	0.41483	0.003004	4.470E+07	0.0200	4.73E-04	2.45E-02	1.00	1.160E-05	1.292E-01	1.023E-01	0.95	5.80E-05	4.60E-05
	0.41763	0.03519	4.470E+07	0.0200	5.54E-03	2.91E-01	1.00	1.610E-03	1.523E+00	1.205E+00	0.95	8.01E-03	6.34E-03
	0.42993	0.003033	4.470E+07	0.0200	4.77E-04	2.63E-02	1.00	1.256E-05	1.347E-01	1.066E-01	0.95	6.11E-05	4.84E-05
	0.43374	0.005522	4.470E+07	0.0200	8.69E-04	4.86E-02	1.00	4.223E-05	2.471E-01	1.956E-01	0.95	2.04E-04	1.62E-04
	0.45163	0.003147	4.470E+07	0.0200	4.95E-04	2.96E-02	1.00	1.466E-05	1.457E-01	1.153E-01	0.95	6.86E-05	5.43E-05
	0.54656	0.071239	4.470E+07	0.0200	1.12E-02	1.21E+00	0.99	1.348E-02	4.418E+00	3.502E+00	0.97	4.81E-02	3.81E-02
	0.57597	0.001288	4.470E+07	0.0200	2.03E-04	2.40E-02	0.99	4.822E-06	8.185E-02	6.489E-02	0.98	1.63E-05	1.29E-05
	0.64985	0.004549	4.470E+07	0.0200	7.16E-04	9.84E-02	1.00	7.044E-05	3.171E-01	2.514E-01	1.00	2.27E-04	1.80E-04
	0.69013	0.001288	4.470E+07	0.0200	2.03E-04	2.96E-02	1.00	5.996E-06	9.486E-02	7.518E-02	1.00	1.92E-05	1.52E-05
	0.70792	0.00658	4.470E+07	0.0200	1.04E-03	1.55E-01	1.00	1.605E-04	4.965E-01	3.935E-01	1.01	5.19E-04	4.12E-04
	0.78548	0.001516	4.470E+07	0.0200	2.39E-04	3.97E-02	1.01	9.563E-06	1.263E-01	1.001E-01	1.01	3.05E-05	2.41E-05
	0.79771	0.001717	4.470E+07	0.0200	2.70E-04	4.57E-02	1.01	1.247E-05	1.452E-01	1.150E-01	1.01	3.96E-05	3.14E-05
	0.8368	0.066661	4.470E+07	0.0200	1.05E-02	1.85E+00	1.01	1.962E-02	5.893E+00	4.667E+00	1.02	6.31E-02	5.00E-02
	0.96146	0.001459	4.470E+07	0.0200	2.30E-04	4.64E-02	1.01	1.077E-05	1.458E-01	1.155E-01	1.01	3.38E-05	2.68E-05
	0.97196	0.008869	4.470E+07	0.0200	1.40E-03	2.86E-01	1.01	4.028E-04	8.948E-01	7.085E-01	1.01	1.26E-03	9.99E-04
	0.97261	0.012016	4.470E+07	0.0200	1.89E-03	3.87E-01	1.01	7.400E-04	1.213E+00	9.606E-01	1.01	2.32E-03	1.84E-03
	0.99509	0.001545	4.470E+07	0.0200	2.43E-04	5.10E-02	1.01	1.254E-05	1.589E-01	1.259E-01	1.01	3.90E-05	3.09E-05
	1.0388	0.07925	4.470E+07	0.0200	1.25E-02	2.72E+00	1.01	3.432E-02	8.448E+00	6.689E+00	1.01	1.06E-01	8.43E-02
	1.1016	0.016022	4.470E+07	0.0200	2.52E-03	5.81E-01	1.01	1.480E-03	1.789E+00	1.416E+00	1.00	4.51E-03	3.57E-03
	1.124	0.036049	4.470E+07	0.0200	5.68E-03	1.33E+00	1.01	7.640E-03	4.089E+00	3.237E+00	1.00	2.32E-02	1.84E-02
	1.1315	0.22516	4.470E+07	0.0200	3.54E-02	8.38E+00	1.01	3.000E-01	2.567E+01	2.032E+01	1.00	9.10E-01	7.20E-01
	1.1599	0.00103	4.470E+07	0.0200	1.62E-04	3.93E-02	1.02	6.495E-06	1.197E-01	9.474E-02	1.00	1.94E-05	1.54E-05
	1.169	0.008726	4.470E+07	0.0200	1.37E-03	3.35E-01	1.02	4.697E-04	1.020E+00	8.074E-01	1.00	1.40E-03	1.11E-03
	1.2405	0.009012	4.470E+07	0.0200	1.42E-03	3.68E-01	1.02	5.318E-04	1.101E+00	8.715E-01	1.00	1.56E-03	1.24E-03
	1.2604	0.2861	4.470E+07	0.0200	4.50E-02	1.19E+01	1.02	5.449E-01	3.536E+01	2.799E+01	1.00	1.59E+00	1.26E+00
	1.3679	0.006065	4.470E+07	0.0200	9.55E-04	2.74E-01	1.03	2.696E-04	7.949E-01	6.293E-01	0.99	7.51E-04	5.95E-04
	1.4484	0.003147	4.470E+07	0.0200	4.95E-04	1.51E-01	1.04	7.801E-05	4.293E-01	3.398E-01	0.99	2.11E-04	1.67E-04
	1.4576	0.086402	4.470E+07	0.0200	1.36E-02	4.19E+00	1.04	5.924E-02	1.184E+01	9.375E+00	0.99	1.59E-01	1.26E-01
	1.5028	0.010729	4.470E+07	0.0200	1.69E-03	5.38E-01	1.04	9.445E-04	1.502E+00	1.189E+00	0.99	2.51E-03	1.99E-03
	1.5664	0.012875	4.470E+07	0.0200	2.03E-03	6.69E-01	1.05	1.423E-03	1.853E+00	1.467E+00	0.98	3.68E-03	2.91E-03

v/13 9/16/94

Isotope	Energy (MeV)	Probability	Design Basis Source (Ci)	Gap Release Fraction	Cont. Conc. (uCi/cc)	27A&B QAD Det. Response (Rad/hr)	27A&B Eff.	27A&B Response (Rad/hr)	27E QAD Det. Response (Rad/hr)	27F QAD Det. Response (Rad/hr)	27E&F Eff.	27E Response (Rad/hr)	27F Response (Rad/hr)
	1.678	0.095271	4.470E+07	0.0200	1.50E-02	5.25E+00	1.06	8.346E-02	1.436E+01	1.136E+01	0.98	2.11E-01	1.67E-01
	1.7065	0.040912	4.470E+07	0.0200	6.44E-03	2.29E+00	1.06	1.562E-02	6.235E+00	4.936E+00	0.98	3.94E-02	3.12E-02
	1.7912	0.076961	4.470E+07	0.0200	1.21E-02	4.49E+00	1.07	5.824E-02	1.211E+01	9.585E+00	0.98	1.44E-01	1.14E-01
	1.8307	0.005779	4.470E+07	0.0200	9.10E-04	3.44E-01	1.08	3.381E-04	9.225E-01	7.303E-01	0.98	8.22E-04	6.51E-04
	1.9273	0.002947	4.470E+07	0.0200	4.64E-04	1.84E-01	1.09	9.296E-05	4.866E-01	3.852E-01	0.97	2.19E-04	1.73E-04
	2.0459	0.008697	4.470E+07	0.0200	1.37E-03	5.70E-01	1.11	8.666E-04	1.492E+00	1.181E+00	0.97	1.98E-03	1.57E-03
	2.2555	0.006123	4.470E+07	0.0200	9.64E-04	4.30E-01	1.13	4.687E-04	1.119E+00	8.856E-01	0.96	1.04E-03	8.20E-04
	2.4087	0.009527	4.470E+07	0.0200	1.50E-03	7.02E-01	1.15	1.211E-03	1.815E+00	1.437E+00	0.95	2.59E-03	2.05E-03
	1.0734	0.014948	4.470E+07	0.0200	2.35E-03	5.29E-01	1.01	1.258E-03	1.636E+00	1.295E+00	1.01	3.89E-03	3.08E-03
Kr-85	0.51399	0.00434	8.915E+05	0.0300	2.04E-05	6.44E-02	0.99	1.303E-06	2.668E-01	2.113E-01	0.97	5.29E-06	4.19E-06
Kr-85m	0.30487	0.13989	1.976E+07	0.0300	1.46E-02	6.03E-01	1.01	8.887E-03	4.296E+00	3.400E+00	0.96	6.02E-02	4.77E-02
	0.00169	0.000586	1.976E+07	0.0300	6.12E-05	0.00E+00	0	0.000E+00	9.001E+10	7.101E+10	0	0.00E+00	0.00E+00
	0.013336	0.006116	1.976E+07	0.0300	6.38E-04	0.00E+00	0	0.000E+00	2.476E+00	1.954E+00	0	0.00E+00	0.00E+00
	0.013395	0.01183	1.976E+07	0.0300	1.23E-03	0.00E+00	0	0.000E+00	4.664E+00	3.681E+00	0	0.00E+00	0.00E+00
	0.015	0.003105	1.976E+07	0.0300	3.24E-04	0.00E+00	0	0.000E+00	6.416E-01	5.064E-01	0	0.00E+00	0.00E+00
	0.12985	0.003011	1.976E+07	0.0300	3.14E-04	1.59E-04	1.05	5.255E-08	3.065E-02	2.424E-02	1.02	9.83E-06	7.77E-06
	0.15118	0.75278	1.976E+07	0.0300	7.86E-02	2.33E-01	1.00	1.833E-02	9.181E+00	7.263E+00	1.00	7.21E-01	5.71E-01
	0.58128	0.000211	1.976E+07	0.0300	2.20E-05	3.99E-03	0.99	8.704E-08	1.348E-02	1.069E-02	0.98	2.91E-07	2.31E-07
Kr-87	0.40258	0.495	3.671E+07	0.0300	9.60E-02	3.84E+00	1.00	3.688E-01	2.069E+01	1.638E+01	0.95	1.89E+00	1.49E+00
	0.67387	0.019058	3.671E+07	0.0300	3.70E-03	4.27E-01	1.00	1.580E-03	1.373E+00	1.088E+00	1.00	5.07E-03	4.02E-03
	0.81425	0.001683	3.671E+07	0.0300	3.26E-04	4.56E-02	1.01	1.503E-05	1.450E-01	1.149E-01	1.02	4.83E-05	3.82E-05
	0.83637	0.007524	3.671E+07	0.0300	1.46E-03	2.09E-01	1.01	3.078E-04	6.648E-01	5.266E-01	1.02	9.89E-04	7.84E-04
	0.84543	0.072765	3.671E+07	0.0300	1.41E-02	2.04E+00	1.01	2.907E-02	6.493E+00	5.143E+00	1.02	9.35E-02	7.40E-02
	0.94664	0.001386	3.671E+07	0.0300	2.69E-04	4.34E-02	1.01	1.178E-05	1.367E-01	1.082E-01	1.01	3.71E-05	2.94E-05
	1.1754	0.011237	3.671E+07	0.0300	2.18E-03	4.34E-01	1.02	9.646E-04	1.319E+00	1.044E+00	1.00	2.87E-03	2.27E-03
	1.338	0.006484	3.671E+07	0.0300	1.26E-03	2.86E-01	1.03	3.707E-04	8.366E-01	6.623E-01	0.99	1.04E-03	8.25E-04
	1.3825	0.002871	3.671E+07	0.0300	5.57E-04	1.31E-01	1.03	7.527E-05	3.791E-01	3.001E-01	0.99	2.09E-04	1.65E-04
	1.3899	0.001237	3.671E+07	0.0300	2.40E-04	5.69E-02	1.03	1.406E-05	1.640E-01	1.298E-01	0.99	3.89E-05	3.08E-05
	1.5312	0.003564	3.671E+07	0.0300	6.91E-04	1.81E-01	1.04	1.305E-04	5.051E-01	3.999E-01	0.98	3.42E-04	2.71E-04
	1.578	0.001287	3.671E+07	0.0300	2.50E-04	6.72E-02	1.05	1.762E-05	1.862E-01	1.474E-01	0.98	4.55E-05	3.60E-05
	1.6112	0.00104	3.671E+07	0.0300	2.02E-04	5.53E-02	1.05	1.172E-05	1.525E-01	1.208E-01	0.98	3.01E-05	2.39E-05
	1.7405	0.020493	3.671E+07	0.0300	3.97E-03	1.17E+00	1.07	4.961E-03	3.165E+00	2.506E+00	0.98	1.23E-02	9.76E-03
	1.8426	0.001386	3.671E+07	0.0300	2.69E-04	8.30E-02	1.08	2.409E-05	2.222E-01	1.759E-01	0.97	5.79E-05	4.59E-05
	2.0119	0.028957	3.671E+07	0.0300	5.62E-03	1.88E+00	1.10	1.159E-02	4.916E+00	3.892E+00	0.97	2.68E-02	2.12E-02

U/G [illegible] 9/16/94

Isotope	Energy (MeV)	Probability	Design Basis Source (Ci)	Gap Release Fraction	Cont. Conc. (uCi/cc)	27A&B QAD Det. Response (Rad/hr)	27A&B Eff.	27A&B Response (Rad/hr)	27E QAD Det. Response (Rad/hr)	27F QAD Det. Response (Rad/hr)	27E&F Eff.	27E Response (Rad/hr)	27F Response (Rad/hr)
	2.4085	0.002129	3.671E+07	0.0300	4.13E-04	1.57E-01	1.15	7.449E-05	4.056E-01	3.211E-01	0.95	1.59E-04	1.26E-04
	2.5548	0.09306	3.671E+07	0.0300	1.80E-02	7.16E+00	1.17	1.512E-01	1.841E+01	1.458E+01	0.94	3.12E-01	2.47E-01
	2.5581	0.039105	3.671E+07	0.0300	7.58E-03	3.01E+00	1.17	2.672E-02	7.743E+00	6.129E+00	0.94	5.52E-02	4.37E-02
	2.8114	0.003168	3.671E+07	0.0300	6.14E-04	2.62E-01	1.19	1.916E-04	6.662E-01	5.274E-01	0.92	3.77E-04	2.98E-04
	3.3085	0.004504	3.671E+07	0.0300	8.73E-04	4.15E-01	1.20	4.354E-04	1.050E+00	8.310E-01	0.85	7.79E-04	6.17E-04
	1.6201	0.006499	3.671E+07	0.0300	1.26E-03	3.47E-01	1.05	4.597E-04	9.567E-01	7.574E-01	0.98	1.18E-03	9.36E-04
Kr-88	0.12227	0.001972	5.139E+07	0.0300	5.35E-04	5.33E-05	1.08	3.079E-08	1.879E-02	1.486E-02	1.01	1.02E-05	8.04E-06
	0.16598	0.031036	5.139E+07	0.0300	8.43E-03	1.48E-02	1.01	1.256E-04	4.263E-01	3.373E-01	0.98	3.52E-03	2.78E-03
	0.19632	0.25985	5.139E+07	0.0300	7.05E-02	2.87E-01	1.05	2.126E-02	4.460E+00	3.529E+00	0.97	3.05E-01	2.42E-01
	0.24071	0.002526	5.139E+07	0.0300	6.86E-04	5.27E-03	1.05	3.795E-06	5.712E-02	4.521E-02	0.97	3.80E-05	3.01E-05
	0.31169	0.001073	5.139E+07	0.0300	2.91E-04	4.85E-03	1.01	1.426E-06	3.386E-02	2.680E-02	0.96	9.47E-06	7.50E-06
	0.33471	0.001453	5.139E+07	0.0300	3.94E-04	7.64E-03	1.00	3.013E-06	4.989E-02	3.949E-02	0.95	1.87E-05	1.48E-05
	0.36223	0.02249	5.139E+07	0.0300	6.11E-03	1.40E-01	1.00	8.545E-04	8.439E-01	6.680E-01	0.95	4.89E-03	3.87E-03
	0.39054	0.006436	5.139E+07	0.0300	1.75E-03	4.70E-02	1.00	8.208E-05	2.612E-01	2.067E-01	0.95	4.33E-04	3.43E-04
	0.4217	0.00128	5.139E+07	0.0300	3.48E-04	1.07E-02	1.00	3.735E-06	5.589E-02	4.424E-02	0.95	1.84E-05	1.46E-05
	0.4718	0.007266	5.139E+07	0.0300	1.97E-03	7.33E-02	0.99	1.431E-04	3.479E-01	2.755E-01	0.96	6.59E-04	5.22E-04
	0.67734	0.002353	5.139E+07	0.0300	6.39E-04	5.30E-02	1.00	3.388E-05	1.703E-01	1.350E-01	1.00	1.09E-04	8.62E-05
	0.78828	0.005328	5.139E+07	0.0300	1.45E-03	1.40E-01	1.01	2.045E-04	4.455E-01	3.529E-01	1.01	6.51E-04	5.16E-04
	0.79032	0.001246	5.139E+07	0.0300	3.38E-04	3.28E-02	1.01	1.122E-05	1.045E-01	8.275E-02	1.01	3.57E-05	2.83E-05
	0.83483	0.12975	5.139E+07	0.0300	3.52E-02	3.60E+00	1.01	1.279E-01	1.145E+01	9.066E+00	1.02	4.11E-01	3.26E-01
	0.85034	0.00173	5.139E+07	0.0300	4.70E-04	4.88E-02	1.01	2.313E-05	1.552E-01	1.229E-01	1.02	7.44E-05	5.89E-05
	0.86233	0.006712	5.139E+07	0.0300	1.82E-03	1.92E-01	1.01	3.527E-04	6.098E-01	4.830E-01	1.02	1.13E-03	8.98E-04
	0.94492	0.002941	5.139E+07	0.0300	7.98E-04	9.19E-02	1.01	7.414E-05	2.897E-01	2.294E-01	1.01	2.34E-04	1.85E-04
	0.98578	0.013148	5.139E+07	0.0300	3.57E-03	4.30E-01	1.01	1.550E-03	1.342E+00	1.063E+00	1.01	4.84E-03	3.83E-03
	0.99009	0.001419	5.139E+07	0.0300	3.85E-04	4.66E-02	1.01	1.814E-05	1.454E-01	1.151E-01	1.01	5.66E-05	4.48E-05
	1.0396	0.004844	5.139E+07	0.0300	1.32E-03	1.67E-01	1.01	2.212E-04	5.165E-01	4.090E-01	1.01	6.86E-04	5.43E-04
	1.0495	0.001419	5.139E+07	0.0300	3.85E-04	4.92E-02	1.01	1.914E-05	1.525E-01	1.207E-01	1.01	5.93E-05	4.70E-05
	1.1413	0.012837	5.139E+07	0.0300	3.49E-03	4.82E-01	1.01	1.696E-03	1.474E+00	1.167E+00	1.00	5.14E-03	4.07E-03
	1.1795	0.009965	5.139E+07	0.0300	2.71E-03	3.86E-01	1.02	1.065E-03	1.172E+00	9.279E-01	1.00	3.17E-03	2.51E-03
	1.185	0.006885	5.139E+07	0.0300	1.87E-03	2.68E-01	1.02	5.111E-04	8.129E-01	6.436E-01	1.00	1.52E-03	1.20E-03
	1.2098	0.001419	5.139E+07	0.0300	3.85E-04	5.64E-02	1.02	2.216E-05	1.701E-01	1.347E-01	1.00	6.55E-05	5.19E-05
	1.2127	0.001384	5.139E+07	0.0300	3.76E-04	5.52E-02	1.02	2.114E-05	1.663E-01	1.316E-01	1.00	6.25E-05	4.95E-05
	1.2452	0.003633	5.139E+07	0.0300	9.86E-04	1.49E-01	1.02	1.496E-04	4.450E-01	3.523E-01	1.00	4.39E-04	3.47E-04
	1.2507	0.01121	5.139E+07	0.0300	3.04E-03	4.61E-01	1.02	1.431E-03	1.378E+00	1.091E+00	1.00	4.19E-03	3.32E-03

Isotope	Energy (MeV)	Probability	Design Basis Source (Ci)	Gap Release Fraction	Cont. Conc. (uCi/cc)	27A&B QAD Det. Response (Rad/hr)	27A&B Eff.	27A&B Response (Rad/hr)	27E QAD Det. Response (Rad/hr)	27F QAD Det. Response (Rad/hr)	27E&F Eff.	27E Response (Rad/hr)	27F Response (Rad/hr)
	1.325	0.001592	5.139E+07	0.0300	4.32E-04	6.95E-02	1.03	3.096E-05	2.040E-01	1.615E-01	0.99	8.73E-05	6.91E-05
	1.3523	0.001592	5.139E+07	0.0300	4.32E-04	7.11E-02	1.03	3.164E-05	2.070E-01	1.639E-01	0.99	8.86E-05	7.01E-05
	1.3695	0.014774	5.139E+07	0.0300	4.01E-03	6.69E-01	1.03	2.763E-03	1.938E+00	1.535E+00	0.99	7.70E-03	6.09E-03
	1.4069	0.00218	5.139E+07	0.0300	5.92E-04	1.02E-01	1.03	6.192E-05	2.914E-01	2.307E-01	0.99	1.71E-04	1.35E-04
	1.4648	0.001142	5.139E+07	0.0300	3.10E-04	5.56E-02	1.04	1.793E-05	1.570E-01	1.243E-01	0.99	4.82E-05	3.81E-05
	1.5184	0.021521	5.139E+07	0.0300	5.84E-03	1.09E+00	1.04	6.611E-03	3.033E+00	2.401E+00	0.98	1.74E-02	1.37E-02
	1.5298	0.10934	5.139E+07	0.0300	2.97E-02	5.56E+00	1.04	1.717E-01	1.549E+01	1.226E+01	0.98	4.51E-01	3.57E-01
	1.6038	0.004567	5.139E+07	0.0300	1.24E-03	2.42E-01	1.05	3.151E-04	6.678E-01	5.287E-01	0.98	8.11E-04	6.42E-04
	1.6856	0.006643	5.139E+07	0.0300	1.80E-03	7.37E-01	1.06	1.410E-03	1.004E+00	7.950E-01	0.98	1.77E-03	1.41E-03
	1.8928	0.001384	5.139E+07	0.0300	3.76E-04	1.66E-01	1.09	6.792E-05	2.259E-01	1.788E-01	0.97	8.23E-05	6.52E-05
	1.9087	0.001003	5.139E+07	0.0300	2.72E-04	1.21E-01	1.09	3.586E-05	1.645E-01	1.303E-01	0.97	4.35E-05	3.44E-05
	2.0298	0.045291	5.139E+07	0.0300	1.23E-02	5.68E+00	1.10	7.680E-02	7.733E+00	6.122E+00	0.97	9.22E-02	7.30E-02
	2.0354	0.037368	5.139E+07	0.0300	1.01E-02	4.69E+00	1.10	5.238E-02	6.392E+00	5.060E+00	0.97	6.29E-02	4.98E-02
	2.1865	0.002872	5.139E+07	0.0300	7.80E-04	3.78E-01	1.12	3.298E-04	5.144E-01	4.072E-01	0.96	3.85E-04	3.05E-04
	2.1958	0.13183	5.139E+07	0.0300	3.58E-02	1.74E+01	1.13	7.033E-01	2.368E+01	1.875E+01	0.96	8.14E-01	6.44E-01
	2.2318	0.033908	5.139E+07	0.0300	9.21E-03	4.52E+00	1.13	4.701E-02	6.154E+00	4.872E+00	0.96	5.44E-02	4.31E-02
	2.3521	0.007301	5.139E+07	0.0300	1.98E-03	1.01E+00	1.14	2.274E-03	1.370E+00	1.085E+00	0.96	2.61E-03	2.06E-03
	2.3921	0.346	5.139E+07	0.0300	9.39E-02	4.82E+01	1.15	5.207E+00	6.565E+01	5.197E+01	0.95	5.86E+00	4.64E+00
	2.4089	0.001038	5.139E+07	0.0300	2.82E-04	1.45E-01	1.15	4.709E-05	1.979E-01	1.567E-01	0.95	5.30E-05	4.19E-05
	2.5484	0.006228	5.139E+07	0.0300	1.69E-03	9.03E-01	1.17	1.787E-03	1.230E+00	9.739E-01	0.94	1.96E-03	1.55E-03
	2.771	0.001488	5.139E+07	0.0300	4.04E-04	2.28E-01	1.19	1.095E-04	3.101E-01	2.455E-01	0.93	1.17E-04	9.22E-05
	1.0001	0.018892	5.139E+07	0.0300	5.13E-03	1.43E+00	1.01	7.425E-03	1.952E+00	1.545E+00	1.01	1.01E-02	8.01E-03
Kr-89	0.1962	0.0022	6.082E+07	0.0300	7.07E-04	2.42E-03	1.05	1.799E-06	3.774E-02	2.986E-02	0.97	2.59E-05	2.05E-05
	0.1975	0.0182	6.082E+07	0.0300	5.85E-03	2.08E-02	1.05	1.274E-04	3.149E-01	2.492E-01	0.97	1.79E-03	1.41E-03
	0.20503	0.00124	6.082E+07	0.0300	3.98E-04	1.62E-03	1.05	6.782E-07	2.258E-02	1.787E-02	0.98	8.82E-06	6.98E-06
	0.2209	0.2	6.082E+07	0.0300	6.43E-02	3.24E-01	1.06	2.204E-02	4.028E+00	3.187E+00	0.97	2.51E-01	1.99E-01
	0.26411	0.0066	6.082E+07	0.0300	2.12E-03	1.83E-02	1.03	3.999E-05	1.688E-01	1.336E-01	0.97	3.47E-04	2.75E-04
	0.3382	0.00342	6.082E+07	0.0300	1.10E-03	1.84E-02	1.00	2.020E-05	1.189E-01	9.409E-02	0.95	1.24E-04	9.82E-05
	0.34503	0.0118	6.082E+07	0.0300	3.79E-03	6.62E-02	1.00	2.510E-04	4.195E-01	3.321E-01	0.95	1.51E-03	1.20E-03
	0.35606	0.0414	6.082E+07	0.0300	1.33E-02	2.48E-01	1.00	3.303E-03	1.524E+00	1.207E+00	0.95	1.93E-02	1.52E-02
	0.36488	0.009	6.082E+07	0.0300	2.89E-03	5.69E-02	1.00	1.644E-04	3.402E-01	2.693E-01	0.95	9.35E-04	7.40E-04
	0.3693	0.0138	6.082E+07	0.0300	4.43E-03	8.94E-02	1.00	3.966E-04	5.285E-01	4.184E-01	0.95	2.23E-03	1.76E-03
	0.40225	0.00318	6.082E+07	0.0300	1.02E-03	2.46E-02	1.00	2.518E-05	1.328E-01	1.052E-01	0.95	1.29E-04	1.02E-04
	0.41142	0.0256	6.082E+07	0.0300	8.23E-03	2.06E-01	1.00	1.696E-03	1.092E+00	8.648E-01	0.95	8.54E-03	6.76E-03

V/B 90-8-5 9/6/94

Isotope	Energy (MeV)	Probability	Design Basis Source (Ci)	Gap Release Fraction	Cont. Conc. (uCi/cc)	27A&B QAD Det. Response (Rad/hr)	27A&B Eff.	27A&B Response (Rad/hr)	27E QAD Det. Response (Rad/hr)	27F QAD Det. Response (Rad/hr)	27E&F Eff.	27E Response (Rad/hr)	27F Response (Rad/hr)
	0.43808	0.0096	6.082E+07	0.0300	3.08E-03	8.59E-02	1.00	2.648E-04	4.333E-01	3.430E-01	0.95	1.27E-03	1.01E-03
	0.46613	0.008	6.082E+07	0.0300	2.57E-03	7.92E-02	0.99	2.015E-04	3.797E-01	3.007E-01	0.96	9.37E-04	7.42E-04
	0.49076	0.00322	6.082E+07	0.0300	1.03E-03	3.46E-02	0.99	3.539E-05	1.586E-01	1.256E-01	0.96	1.57E-04	1.25E-04
	0.4975	0.0664	6.082E+07	0.0300	2.13E-02	7.28E-01	0.99	1.537E-02	3.300E+00	2.613E+00	0.96	6.76E-02	5.35E-02
	0.4986	0.0114	6.082E+07	0.0300	3.66E-03	1.25E-01	0.99	4.547E-04	5.675E-01	4.493E-01	0.96	2.00E-03	1.58E-03
	0.5573	0.0016	6.082E+07	0.0300	5.14E-04	2.83E-02	0.99	1.438E-05	9.996E-02	7.925E-02	0.98	5.04E-05	3.99E-05
	0.57696	0.0564	6.082E+07	0.0300	1.81E-02	1.05E+00	0.99	1.892E-02	3.588E+00	2.845E+00	0.98	6.37E-02	5.05E-02
	0.5858	0.166	6.082E+07	0.0300	5.33E-02	3.18E+00	0.99	1.678E-01	1.066E+01	8.454E+00	0.98	5.57E-01	4.42E-01
	0.6262	0.006	6.082E+07	0.0300	1.93E-03	1.25E-01	1.00	2.405E-04	4.051E-01	3.211E-01	0.99	7.73E-04	6.13E-04
	0.62975	0.00342	6.082E+07	0.0300	1.10E-03	7.16E-02	1.00	7.863E-05	2.320E-01	1.839E-01	0.99	2.52E-04	2.00E-04
	0.66572	0.00114	6.082E+07	0.0300	3.66E-04	2.53E-02	1.00	9.252E-06	8.122E-02	6.438E-02	1.00	2.97E-05	2.36E-05
	0.6714	0.00106	6.082E+07	0.0300	3.41E-04	2.37E-02	1.00	8.069E-06	7.612E-02	6.034E-02	1.00	2.59E-05	2.05E-05
	0.67411	0.00232	6.082E+07	0.0300	7.45E-04	5.21E-02	1.00	3.880E-05	1.672E-01	1.325E-01	1.00	1.25E-04	9.88E-05
	0.69624	0.0178	6.082E+07	0.0300	5.72E-03	4.12E-01	1.00	2.358E-03	1.322E+00	1.048E+00	1.01	7.64E-03	6.05E-03
	0.70701	0.00498	6.082E+07	0.0300	1.60E-03	1.17E-01	1.00	1.874E-04	3.753E-01	2.975E-01	1.01	6.07E-04	4.81E-04
	0.71005	0.0078	6.082E+07	0.0300	2.51E-03	1.84E-01	1.00	4.616E-04	5.902E-01	4.677E-01	1.01	1.49E-03	1.18E-03
	0.72963	0.00296	6.082E+07	0.0300	9.51E-04	7.18E-02	1.01	6.899E-05	2.299E-01	1.822E-01	1.01	2.21E-04	1.75E-04
	0.73839	0.042	6.082E+07	0.0300	1.35E-02	1.03E+00	1.01	1.406E-02	3.300E+00	2.615E+00	1.01	4.50E-02	3.56E-02
	0.7474	0.00114	6.082E+07	0.0300	3.66E-04	2.83E-02	1.01	1.048E-05	9.061E-02	7.179E-02	1.01	3.35E-05	2.66E-05
	0.7629	0.004	6.082E+07	0.0300	1.29E-03	1.02E-01	1.01	1.318E-04	3.242E-01	2.568E-01	1.01	4.21E-04	3.33E-04
	0.7629	0.0092	6.082E+07	0.0300	2.96E-03	2.34E-01	1.01	6.973E-04	7.457E-01	5.908E-01	1.01	2.23E-03	1.76E-03
	0.77649	0.0112	6.082E+07	0.0300	3.60E-03	2.90E-01	1.01	1.052E-03	9.229E-01	7.312E-01	1.01	3.35E-03	2.66E-03
	0.82675	0.0076	6.082E+07	0.0300	2.44E-03	2.09E-01	1.01	5.151E-04	6.647E-01	5.265E-01	1.02	1.66E-03	1.31E-03
	0.83553	0.011	6.082E+07	0.0300	3.53E-03	3.05E-01	1.01	1.089E-03	9.712E-01	7.692E-01	1.02	3.50E-03	2.77E-03
	0.85737	0.00286	6.082E+07	0.0300	9.19E-04	8.12E-02	1.01	7.537E-05	2.585E-01	2.047E-01	1.02	2.42E-04	1.92E-04
	0.86708	0.0592	6.082E+07	0.0300	1.90E-02	1.70E+00	1.01	3.264E-02	5.405E+00	4.281E+00	1.02	1.05E-01	8.31E-02
	0.87042	0.0016	6.082E+07	0.0300	5.14E-04	4.61E-02	1.01	2.393E-05	1.466E-01	1.161E-01	1.02	7.69E-05	6.09E-05
	0.90427	0.0718	6.082E+07	0.0300	2.31E-02	2.15E+00	1.01	5.001E-02	6.806E+00	5.390E+00	1.01	1.59E-01	1.26E-01
	0.93095	0.0062	6.082E+07	0.0300	1.99E-03	1.91E-01	1.01	3.840E-04	6.029E-01	4.774E-01	1.01	1.21E-03	9.60E-04
	0.94419	0.00164	6.082E+07	0.0300	5.27E-04	5.12E-02	1.01	2.726E-05	1.614E-01	1.278E-01	1.01	8.59E-05	6.80E-05
	0.95318	0.00106	6.082E+07	0.0300	3.41E-04	3.34E-02	1.01	1.150E-05	1.052E-01	8.330E-02	1.01	3.62E-05	2.87E-05
	0.96042	0.00322	6.082E+07	0.0300	1.03E-03	1.02E-01	1.01	1.070E-04	3.216E-01	2.546E-01	1.01	3.36E-04	2.66E-04
	0.97439	0.0098	6.082E+07	0.0300	3.15E-03	3.16E-01	1.01	1.006E-03	9.903E-01	7.842E-01	1.01	3.15E-03	2.49E-03
	0.99737	0.0066	6.082E+07	0.0300	2.12E-03	2.19E-01	1.01	4.681E-04	6.803E-01	5.387E-01	1.01	1.46E-03	1.15E-03

V/B 3/16/94

Isotope	Energy (MeV)	Probability	Design Basis Source (Ci)	Gap Release Fraction	Cont. Conc. (uCi/cc)	27A&B QAD Det. Response (Rad/hr)	27A&B Eff.	27A&B Response (Rad/hr)	27E QAD Det. Response (Rad/hr)	27F QAD Det. Response (Rad/hr)	27E&F Eff.	27E Response (Rad/hr)	27F Response (Rad/hr)
	1.0108	0.00108	6.082E+07	0.0300	3.47E-04	3.62E-02	1.01	1.269E-05	1.126E-01	8.911E-02	1.01	3.94E-05	3.12E-05
	1.0444	0.00408	6.082E+07	0.0300	1.31E-03	1.41E-01	1.01	1.865E-04	4.367E-01	3.457E-01	1.01	5.78E-04	4.58E-04
	1.0765	0.00236	6.082E+07	0.0300	7.58E-04	8.38E-02	1.01	6.416E-05	2.588E-01	2.049E-01	1.01	1.98E-04	1.57E-04
	1.0881	0.00358	6.082E+07	0.0300	1.15E-03	1.28E-01	1.01	1.491E-04	3.959E-01	3.134E-01	1.00	4.55E-04	3.61E-04
	1.1032	0.009	6.082E+07	0.0300	2.89E-03	3.27E-01	1.01	9.545E-04	1.006E+00	7.963E-01	1.00	2.91E-03	2.30E-03
	1.1078	0.0292	6.082E+07	0.0300	9.38E-03	1.06E+00	1.01	1.009E-02	3.275E+00	2.593E+00	1.00	3.07E-02	2.43E-02
	1.1166	0.0166	6.082E+07	0.0300	5.33E-03	6.10E-01	1.01	3.286E-03	1.873E+00	1.483E+00	1.00	9.99E-03	7.91E-03
	1.1315	0.0016	6.082E+07	0.0300	5.14E-04	5.95E-02	1.01	3.091E-05	1.824E-01	1.444E-01	1.00	9.38E-05	7.42E-05
	1.1625	0.00214	6.082E+07	0.0300	6.88E-04	8.18E-02	1.02	5.734E-05	2.491E-01	1.972E-01	1.00	1.71E-04	1.36E-04
	1.1723	0.0098	6.082E+07	0.0300	3.15E-03	3.77E-01	1.02	1.212E-03	1.147E+00	9.083E-01	1.00	3.61E-03	2.86E-03
	1.1824	0.00166	6.082E+07	0.0300	5.33E-04	6.45E-02	1.02	3.509E-05	1.957E-01	1.549E-01	1.00	1.04E-04	8.26E-05
	1.1865	0.00184	6.082E+07	0.0300	5.91E-04	7.17E-02	1.02	4.326E-05	2.175E-01	1.722E-01	1.00	1.29E-04	1.02E-04
	1.2288	0.00144	6.082E+07	0.0300	4.63E-04	5.82E-02	1.02	2.745E-05	1.747E-01	1.383E-01	1.00	8.08E-05	6.40E-05
	1.2356	0.00594	6.082E+07	0.0300	1.91E-03	2.41E-01	1.02	4.696E-04	7.235E-01	5.728E-01	1.00	1.38E-03	1.09E-03
	1.2737	0.0136	6.082E+07	0.0300	4.37E-03	5.70E-01	1.02	2.540E-03	1.694E+00	1.341E+00	0.99	7.33E-03	5.80E-03
	1.3027	0.001	6.082E+07	0.0300	3.21E-04	4.29E-02	1.02	1.406E-05	1.266E-01	1.002E-01	0.99	4.03E-05	3.19E-05
	1.3243	0.0306	6.082E+07	0.0300	9.83E-03	1.34E+00	1.03	1.353E-02	3.919E+00	3.103E+00	0.99	3.82E-02	3.02E-02
	1.3354	0.00132	6.082E+07	0.0300	4.24E-04	5.81E-02	1.03	2.540E-05	1.701E-01	1.347E-01	0.99	7.14E-05	5.65E-05
	1.3406	0.00194	6.082E+07	0.0300	6.23E-04	8.58E-02	1.03	5.508E-05	2.506E-01	1.984E-01	0.99	1.55E-04	1.22E-04
	1.3675	0.00148	6.082E+07	0.0300	4.76E-04	6.69E-02	1.03	3.275E-05	1.939E-01	1.535E-01	0.99	9.13E-05	7.23E-05
	1.3722	0.00126	6.082E+07	0.0300	4.05E-04	5.71E-02	1.03	2.382E-05	1.655E-01	1.310E-01	0.99	6.63E-05	5.25E-05
	1.4126	0.00264	6.082E+07	0.0300	8.48E-04	1.24E-01	1.03	1.079E-04	3.539E-01	2.801E-01	0.99	2.97E-04	2.35E-04
	1.4216	0.00224	6.082E+07	0.0300	7.20E-04	1.06E-01	1.03	7.827E-05	3.017E-01	2.388E-01	0.99	2.15E-04	1.70E-04
	1.4613	0.00122	6.082E+07	0.0300	3.92E-04	5.93E-02	1.04	2.417E-05	1.675E-01	1.326E-01	0.99	6.50E-05	5.14E-05
	1.4642	0.00178	6.082E+07	0.0300	5.72E-04	8.67E-02	1.04	5.155E-05	2.446E-01	1.937E-01	0.99	1.39E-04	1.10E-04
	1.4685	0.00188	6.082E+07	0.0300	6.04E-04	9.19E-02	1.04	5.770E-05	2.589E-01	2.050E-01	0.99	1.55E-04	1.23E-04
	1.4728	0.0688	6.082E+07	0.0300	2.21E-02	3.37E+00	1.04	7.752E-02	9.494E+00	7.516E+00	0.99	2.08E-01	1.64E-01
	1.501	0.0132	6.082E+07	0.0300	4.24E-03	6.61E-01	1.04	2.915E-03	1.846E+00	1.461E+00	0.99	7.75E-03	6.14E-03
	1.5062	0.00112	6.082E+07	0.0300	3.60E-04	5.62E-02	1.04	2.104E-05	1.569E-01	1.242E-01	0.99	5.59E-05	4.43E-05
	1.53	0.0332	6.082E+07	0.0300	1.07E-02	1.69E+00	1.04	1.874E-02	4.703E+00	3.723E+00	0.98	4.92E-02	3.89E-02
	1.5337	0.0512	6.082E+07	0.0300	1.65E-02	2.61E+00	1.04	4.466E-02	7.264E+00	5.750E+00	0.98	1.17E-01	9.27E-02
	1.5553	0.00152	6.082E+07	0.0300	4.88E-04	7.84E-02	1.05	4.022E-05	2.177E-01	1.723E-01	0.98	1.04E-04	8.25E-05
	1.5738	0.0019	6.082E+07	0.0300	6.10E-04	9.90E-02	1.05	6.348E-05	2.743E-01	2.171E-01	0.98	1.64E-04	1.30E-04
	1.6341	0.0082	6.082E+07	0.0300	2.63E-03	4.42E-01	1.05	1.221E-03	1.214E+00	9.610E-01	0.98	3.13E-03	2.48E-03

V/B [illegible] 9/16/94

Isotope	Energy (MeV)	Probability	Design Basis Source (Ci)	Gap Release Fraction	Cont. Conc. (uCi/cc)	27A&B QAD Det. Response (Rad/hr)	27A&B Eff.	27A&B Response (Rad/hr)	27E QAD Det. Response (Rad/hr)	27F QAD Det. Response (Rad/hr)	27E&F Eff.	27E Response (Rad/hr)	27F Response (Rad/hr)
	1.6438	0.00338	6.082E+07	0.0300	1.09E-03	1.83E-01	1.06	2.106E-04	5.024E-01	3.977E-01	0.98	5.35E-04	4.23E-04
	1.6675	0.00128	6.082E+07	0.0300	4.11E-04	7.02E-02	1.06	3.059E-05	1.922E-01	1.521E-01	0.98	7.74E-05	6.13E-05
	1.6769	0.0014	6.082E+07	0.0300	4.50E-04	7.71E-02	1.06	3.677E-05	2.109E-01	1.670E-01	0.98	9.30E-05	7.36E-05
	1.6838	0.00132	6.082E+07	0.0300	4.24E-04	7.30E-02	1.06	3.281E-05	1.994E-01	1.579E-01	0.98	8.29E-05	6.56E-05
	1.692	0.0026	6.082E+07	0.0300	8.35E-04	1.44E-01	1.06	1.278E-04	3.940E-01	3.119E-01	0.98	3.23E-04	2.55E-04
	1.6937	0.0438	6.082E+07	0.0300	1.41E-02	2.43E+00	1.06	3.631E-02	6.643E+00	5.259E+00	0.98	9.16E-02	7.25E-02
	1.7213	0.00224	6.082E+07	0.0300	7.20E-04	1.26E-01	1.06	9.633E-05	3.434E-01	2.719E-01	0.98	2.42E-04	1.92E-04
	1.7776	0.0076	6.082E+07	0.0300	2.44E-03	4.41E-01	1.07	1.152E-03	1.191E+00	9.425E-01	0.98	2.85E-03	2.26E-03
	1.7882	0.00106	6.082E+07	0.0300	3.41E-04	6.18E-02	1.07	2.253E-05	1.667E-01	1.319E-01	0.98	5.56E-05	4.40E-05
	1.8107	0.0014	6.082E+07	0.0300	4.50E-04	8.25E-02	1.08	4.010E-05	2.219E-01	1.757E-01	0.98	9.78E-05	7.74E-05
	1.8375	0.00118	6.082E+07	0.0300	3.79E-04	7.05E-02	1.08	2.887E-05	1.888E-01	1.495E-01	0.98	7.02E-05	5.55E-05
	1.8397	0.0035	6.082E+07	0.0300	1.12E-03	2.09E-01	1.08	2.542E-04	5.606E-01	4.438E-01	0.97	6.11E-04	4.84E-04
	1.8685	0.00196	6.082E+07	0.0300	6.30E-04	1.19E-01	1.08	8.084E-05	3.171E-01	2.510E-01	0.97	1.94E-04	1.53E-04
	1.8798	0.00158	6.082E+07	0.0300	5.08E-04	9.64E-02	1.08	5.283E-05	2.567E-01	2.032E-01	0.97	1.26E-04	1.00E-04
	1.9034	0.0104	6.082E+07	0.0300	3.34E-03	6.41E-01	1.09	2.336E-03	1.703E+00	1.348E+00	0.97	5.52E-03	4.37E-03
	1.9391	0.0064	6.082E+07	0.0300	2.06E-03	4.01E-01	1.09	8.998E-04	1.061E+00	8.398E-01	0.97	2.12E-03	1.68E-03
	1.9666	0.00132	6.082E+07	0.0300	4.24E-04	8.39E-02	1.10	3.913E-05	2.208E-01	1.748E-01	0.97	9.09E-05	7.19E-05
	1.9986	0.00118	6.082E+07	0.0300	3.79E-04	7.61E-02	1.10	3.174E-05	1.995E-01	1.579E-01	0.97	7.34E-05	5.81E-05
	2.0122	0.0156	6.082E+07	0.0300	5.01E-03	1.01E+00	1.10	5.574E-03	2.648E+00	2.097E+00	0.97	1.29E-02	1.02E-02
	2.021	0.00244	6.082E+07	0.0300	7.84E-04	1.59E-01	1.10	1.368E-04	4.154E-01	3.289E-01	0.97	3.16E-04	2.50E-04
	2.0465	0.00262	6.082E+07	0.0300	8.42E-04	1.72E-01	1.11	1.606E-04	4.497E-01	3.560E-01	0.97	3.67E-04	2.91E-04
	2.1006	0.0094	6.082E+07	0.0300	3.02E-03	6.28E-01	1.11	2.105E-03	1.640E+00	1.299E+00	0.97	4.81E-03	3.80E-03
	2.16	0.00528	6.082E+07	0.0300	1.70E-03	3.60E-01	1.12	6.836E-04	9.384E-01	7.428E-01	0.96	1.53E-03	1.21E-03
	2.1958	0.00128	6.082E+07	0.0300	4.11E-04	8.83E-02	1.13	4.102E-05	2.299E-01	1.820E-01	0.96	9.08E-05	7.19E-05
	2.2802	0.00204	6.082E+07	0.0300	6.55E-04	1.44E-01	1.14	1.080E-04	3.753E-01	2.971E-01	0.96	2.36E-04	1.87E-04
	2.3774	0.008	6.082E+07	0.0300	2.57E-03	5.84E-01	1.15	1.727E-03	1.512E+00	1.197E+00	0.95	3.69E-03	2.92E-03
	2.401	0.0072	6.082E+07	0.0300	2.31E-03	5.29E-01	1.15	1.408E-03	1.369E+00	1.084E+00	0.95	3.01E-03	2.38E-03
	2.5979	0.00108	6.082E+07	0.0300	3.47E-04	8.41E-02	1.17	3.416E-05	2.159E-01	1.709E-01	0.94	7.04E-05	5.58E-05
	2.6453	0.0042	6.082E+07	0.0300	1.35E-03	3.32E-01	1.18	5.282E-04	8.496E-01	6.726E-01	0.94	1.08E-03	8.53E-04
	2.7509	0.00124	6.082E+07	0.0300	3.98E-04	1.01E-01	1.19	4.783E-05	2.573E-01	2.036E-01	0.93	9.53E-05	7.54E-05
	2.7821	0.0076	6.082E+07	0.0300	2.44E-03	6.24E-01	1.19	1.813E-03	1.588E+00	1.257E+00	0.92	3.57E-03	2.82E-03
	2.7938	0.0068	6.082E+07	0.0300	2.18E-03	5.60E-01	1.19	1.455E-03	1.424E+00	1.128E+00	0.92	2.86E-03	2.27E-03
	2.8196	0.00132	6.082E+07	0.0300	4.24E-04	1.09E-01	1.19	5.524E-05	2.782E-01	2.202E-01	0.92	1.09E-04	8.59E-05
	2.8533	0.0024	6.082E+07	0.0300	7.71E-04	2.01E-01	1.19	1.842E-04	5.095E-01	4.033E-01	0.92	3.61E-04	2.86E-04

v/13 [illegible] 9/16/94

Isotope	Energy (MeV)	Probability	Design Basis Source (Ci)	Gap Release Fraction	Cont. Conc. (uCi/cc)	27A&B QAD Det. Response (Rad/hr)	27A&B Eff.	27A&B Response (Rad/hr)	27E QAD Det. Response (Rad/hr)	27F QAD Det. Response (Rad/hr)	27E&F Eff.	27E Response (Rad/hr)	27F Response (Rad/hr)
	2.8662	0.0174	6.082E+07	0.0300	5.59E-03	1.46E+00	1.19	9.717E-03	3.704E+00	2.932E+00	0.92	1.91E-02	1.51E-02
	2.8787	0.00324	6.082E+07	0.0300	1.04E-03	2.73E-01	1.19	3.381E-04	6.917E-01	5.476E-01	0.91	6.55E-04	5.19E-04
	3.0179	0.00254	6.082E+07	0.0300	8.16E-04	2.22E-01	1.20	2.172E-04	5.588E-01	4.423E-01	0.90	4.10E-04	3.25E-04
	3.0292	0.0027	6.082E+07	0.0300	8.68E-04	2.36E-01	1.20	2.459E-04	5.954E-01	4.713E-01	0.90	4.65E-04	3.68E-04
	3.1073	0.00194	6.082E+07	0.0300	6.23E-04	1.72E-01	1.20	1.289E-04	4.346E-01	3.440E-01	0.89	2.41E-04	1.91E-04
	3.1403	0.0104	6.082E+07	0.0300	3.34E-03	9.29E-01	1.20	3.727E-03	2.346E+00	1.857E+00	0.88	6.90E-03	5.46E-03
	3.1721	0.001	6.082E+07	0.0300	3.21E-04	8.99E-02	1.20	3.467E-05	2.270E-01	1.797E-01	0.88	6.42E-05	5.08E-05
	3.2198	0.00428	6.082E+07	0.0300	1.38E-03	3.88E-01	1.20	6.408E-04	9.808E-01	7.763E-01	0.87	1.17E-03	9.29E-04
	3.3617	0.0104	6.082E+07	0.0300	3.34E-03	9.68E-01	1.20	3.883E-03	2.448E+00	1.938E+00	0.84	6.87E-03	5.44E-03
	3.3711	0.0062	6.082E+07	0.0300	1.99E-03	5.78E-01	1.20	1.382E-03	1.462E+00	1.158E+00	0.84	2.45E-03	1.94E-03
	3.3999	0.00136	6.082E+07	0.0300	4.37E-04	1.28E-01	1.20	6.687E-05	3.225E-01	2.553E-01	0.83	1.17E-04	9.26E-05
	3.5329	0.0134	6.082E+07	0.0300	4.31E-03	1.29E+00	1.18	6.534E-03	3.254E+00	2.576E+00	0.80	1.12E-02	8.87E-03
	3.5839	0.00258	6.082E+07	0.0300	8.29E-04	2.50E-01	1.18	2.444E-04	6.324E-01	5.006E-01	0.79	4.14E-04	3.28E-04
	3.7178	0.0084	6.082E+07	0.0300	2.70E-03	8.32E-01	1.16	2.606E-03	2.107E+00	1.668E+00	0.76	4.32E-03	3.42E-03
	3.7325	0.00138	6.082E+07	0.0300	4.43E-04	1.37E-01	1.16	7.049E-05	3.469E-01	2.746E-01	0.75	1.15E-04	9.13E-05
	3.7814	0.00132	6.082E+07	0.0300	4.24E-04	1.32E-01	1.15	6.448E-05	3.347E-01	2.649E-01	0.74	1.05E-04	8.31E-05
	3.8274	0.00138	6.082E+07	0.0300	4.43E-04	1.39E-01	1.14	7.038E-05	3.524E-01	2.790E-01	0.72	1.13E-04	8.91E-05
	3.8427	0.0011	6.082E+07	0.0300	3.53E-04	1.11E-01	1.14	4.485E-05	2.817E-01	2.230E-01	0.72	7.17E-05	5.67E-05
	3.9018	0.00134	6.082E+07	0.0300	4.31E-04	1.37E-01	1.12	6.601E-05	3.464E-01	2.742E-01	0.70	1.04E-04	8.26E-05
	3.923	0.00414	6.082E+07	0.0300	1.33E-03	4.24E-01	1.12	6.324E-04	1.074E+00	8.501E-01	0.69	9.86E-04	7.80E-04
	3.9655	0.00208	6.082E+07	0.0300	6.68E-04	2.15E-01	1.11	1.593E-04	5.432E-01	4.300E-01	0.68	2.47E-04	1.95E-04
	3.9775	0.0027	6.082E+07	0.0300	8.68E-04	2.79E-01	1.10	2.665E-04	7.065E-01	5.592E-01	0.67	4.11E-04	3.25E-04
	3.996	0.00142	6.082E+07	0.0300	4.56E-04	1.47E-01	1.10	7.393E-05	3.726E-01	2.949E-01	0.67	1.14E-04	9.01E-05
	4.048	0.00116	6.082E+07	0.0300	3.73E-04	1.21E-01	1.09	4.923E-05	3.068E-01	2.429E-01	0.65	7.43E-05	5.88E-05
	4.3411	0.00104	6.082E+07	0.0300	3.34E-04	1.13E-01	0.98	3.698E-05	2.873E-01	2.274E-01	0.52	4.99E-05	3.95E-05
	4.4892	0.00134	6.082E+07	0.0300	4.31E-04	1.48E-01	0.91	5.807E-05	3.780E-01	2.992E-01	0.45	7.32E-05	5.80E-05
	2.1811	0.07118	6.082E+07	0.0300	2.29E-02	4.88E+00	1.12	1.251E-01	1.273E+01	1.008E+01	0.96	2.79E-01	2.21E-01
Xe-131m	0.16393	0.0196	9.762E+05	0.0300	1.01E-04	8.79E-03	1.00	8.886E-07	2.649E-01	2.096E-01	0.98	2.62E-05	2.08E-05
Xe-133	0.079621	0.002165	1.902E+08	0.0300	2.18E-03	1.86E-08	0.70	2.839E-11	1.479E-02	1.169E-02	0.93	2.99E-05	2.37E-05
	0.080997	0.36483	1.902E+08	0.0300	3.67E-01	5.66E-06	0.73	1.514E-06	2.511E+00	1.986E+00	0.82	7.55E-01	5.97E-01
	0.1777	0.000712	1.902E+08	0.0300	7.15E-04	4.72E-04	1.02	3.443E-07	1.070E-02	8.462E-03	0.98	7.50E-06	5.93E-06
Xe-133m	0.23322	0.103	6.044E+06	0.0300	3.29E-03	1.96E-01	1.05	6.751E-04	2.233E+00	1.767E+00	0.97	7.12E-03	5.64E-03
Xe-135	0.1582	0.002886	4.723E+07	0.0300	7.20E-04	1.10E-03	1.00	7.901E-07	3.727E-02	2.948E-02	0.99	2.66E-05	2.10E-05
	0.24979	0.899	4.723E+07	0.0300	2.24E-01	2.10E+00	1.04	4.897E-01	2.136E+01	1.691E+01	0.97	4.65E+00	3.68E+00

U/B [illegible] 7/16/94

Isotope	Energy (MeV)	Probability	Design Basis Source (Ci)	Gap Release Fraction	Cont. Conc. (uCi/cc)	27A&B QAD Det. Response (Rad/hr)	27A&B Eff.	27A&B Response (Rad/hr)	27E QAD Det. Response (Rad/hr)	27F QAD Det. Response (Rad/hr)	27E&F Eff.	27E Response (Rad/hr)	27F Response (Rad/hr)
	0.35839	0.002203	4.723E+07	0.0300	5.50E-04	1.34E-02	1.00	7.364E-06	8.168E-02	6.466E-02	0.95	4.27E-05	3.38E-05
	0.40799	0.003578	4.723E+07	0.0300	8.93E-04	2.84E-02	1.00	2.536E-05	1.515E-01	1.199E-01	0.95	1.28E-04	1.02E-04
	0.60819	0.028948	4.723E+07	0.0300	7.22E-03	5.83E-01	0.99	4.166E-03	1.910E+00	1.514E+00	0.99	1.37E-02	1.08E-02
	0.68433	0.002093	4.723E+07	0.0300	5.22E-04	4.77E-02	1.00	2.489E-05	1.530E-01	1.213E-01	1.00	7.99E-05	6.33E-05
Xe-135m	0.52656	0.80997	3.905E+07	0.0300	1.67E-01	1.28E+01	0.99	2.111E+00	4.982E+01	3.948E+01	0.97	8.07E+00	6.40E+00
Xe-137	0.298	0.001167	1.656E+08	0.0300	1.02E-03	4.76E-03	1.01	4.903E-06	3.485E-02	2.759E-02	0.96	3.42E-05	2.70E-05
	0.39335	0.001381	1.656E+08	0.0300	1.21E-03	1.02E-02	1.00	1.237E-05	5.645E-02	4.469E-02	0.95	6.48E-05	5.13E-05
	0.45549	0.307	1.656E+08	0.0300	2.69E-01	2.93E+00	0.99	7.780E-01	1.431E+01	1.133E+01	0.95	3.65E+00	2.89E+00
	0.84895	0.00614	1.656E+08	0.0300	5.37E-03	1.73E-01	1.01	9.373E-04	5.500E-01	4.356E-01	1.02	3.01E-03	2.39E-03
	0.98225	0.002057	1.656E+08	0.0300	1.80E-03	6.70E-02	1.01	1.218E-04	2.094E-01	1.658E-01	1.01	3.81E-04	3.01E-04
	1.1193	0.001053	1.656E+08	0.0300	9.21E-04	3.88E-02	1.01	3.607E-05	1.190E-01	9.422E-02	1.00	1.10E-04	8.68E-05
	1.2732	0.002241	1.656E+08	0.0300	1.96E-03	9.39E-02	1.02	1.877E-04	2.790E-01	2.209E-01	0.99	5.42E-04	4.29E-04
	1.5768	0.001013	1.656E+08	0.0300	8.86E-04	5.29E-02	1.05	4.921E-05	1.464E-01	1.159E-01	0.98	1.27E-04	1.01E-04
	1.6125	0.001228	1.656E+08	0.0300	1.07E-03	6.54E-02	1.05	7.376E-05	1.803E-01	1.427E-01	0.98	1.90E-04	1.50E-04
	1.7834	0.004083	1.656E+08	0.0300	3.57E-03	2.37E-01	1.07	9.076E-04	6.406E-01	5.072E-01	0.98	2.24E-03	1.78E-03
	2.8498	0.001811	1.656E+08	0.0300	1.58E-03	1.51E-01	1.19	2.853E-04	3.841E-01	3.041E-01	0.92	5.60E-04	4.43E-04
	1.4906	0.01315	1.656E+08	0.0300	1.15E-02	6.53E-01	1.04	7.815E-03	1.830E+00	1.449E+00	0.99	2.08E-02	1.65E-02
Xe-138	0.15375	0.059535	1.506E+08	0.0300	4.74E-02	1.99E-02	1.00	9.419E-04	7.416E-01	5.866E-01	0.99	3.48E-02	2.75E-02
	0.24256	0.034965	1.506E+08	0.0300	2.78E-02	7.47E-02	1.05	2.181E-03	7.989E-01	6.322E-01	0.97	2.16E-02	1.71E-02
	0.25831	0.315	1.506E+08	0.0300	2.51E-01	8.15E-01	1.03	2.105E-01	7.825E+00	6.193E+00	0.97	1.90E+00	1.51E+00
	0.28251	0.004284	1.506E+08	0.0300	3.41E-03	1.47E-02	1.02	5.110E-05	1.196E-01	9.464E-02	0.96	3.91E-04	3.10E-04
	0.33528	0.001071	1.506E+08	0.0300	8.52E-04	5.65E-03	1.00	4.814E-06	3.684E-02	2.916E-02	0.95	2.98E-05	2.36E-05
	0.37144	0.005009	1.506E+08	0.0300	3.99E-03	3.29E-02	1.00	1.310E-04	1.930E-01	1.528E-01	0.95	7.31E-04	5.78E-04
	0.39643	0.063	1.506E+08	0.0300	5.01E-02	4.75E-01	1.00	2.379E-02	2.594E+00	2.054E+00	0.95	1.24E-01	9.78E-02
	0.40136	0.021735	1.506E+08	0.0300	1.73E-02	1.68E-01	1.00	2.902E-03	9.058E-01	7.171E-01	0.95	1.49E-02	1.18E-02
	0.43449	0.20318	1.506E+08	0.0300	1.62E-01	1.79E+00	1.00	2.897E-01	9.105E+00	7.208E+00	0.95	1.40E+00	1.11E+00
	0.50022	0.003622	1.506E+08	0.0300	2.88E-03	4.97E-02	0.99	1.417E-04	2.238E-01	1.772E-01	0.96	6.19E-04	4.90E-04
	0.53007	0.00252	1.506E+08	0.0300	2.00E-03	4.03E-02	0.99	7.999E-05	1.551E-01	1.229E-01	0.97	3.02E-04	2.39E-04
	0.53776	0.001166	1.506E+08	0.0300	9.28E-04	1.92E-02	0.99	1.766E-05	7.195E-02	5.703E-02	0.97	6.47E-05	5.13E-05
	0.55595	0.001166	1.506E+08	0.0300	9.28E-04	2.05E-02	0.99	1.883E-05	7.276E-02	5.768E-02	0.98	6.61E-05	5.24E-05
	0.56853	0.003055	1.506E+08	0.0300	2.43E-03	5.58E-02	0.99	1.343E-04	1.927E-01	1.528E-01	0.98	4.59E-04	3.64E-04
	0.58884	0.001228	1.506E+08	0.0300	9.77E-04	2.37E-02	0.99	2.291E-05	7.916E-02	6.276E-02	0.98	7.58E-05	6.01E-05
	0.65408	0.001449	1.506E+08	0.0300	1.15E-03	3.15E-02	1.00	3.636E-05	1.016E-01	8.053E-02	1.00	1.17E-04	9.28E-05
	0.86582	0.002961	1.506E+08	0.0300	2.36E-03	8.49E-02	1.01	2.019E-04	2.700E-01	2.138E-01	1.02	6.49E-04	5.14E-04

V/B 9/16/94

Isotope	Energy (MeV)	Probability	Design Basis Source (Ci)	Gap Release Fraction	Cont. Conc. (uCi/cc)	27A&B QAD Det. Response (Rad/hr)	27A&B Eff.	27A&B Response (Rad/hr)	27E QAD Det. Response (Rad/hr)	27F QAD Det. Response (Rad/hr)	27E&F Eff.	27E Response (Rad/hr)	27F Response (Rad/hr)
	0.86935	0.006206	1.506E+08	0.0300	4.94E-03	1.79E-01	1.01	8.905E-04	5.680E-01	4.499E-01	1.02	2.86E-03	2.27E-03
	0.89687	0.001323	1.506E+08	0.0300	1.05E-03	3.92E-02	1.01	4.171E-05	1.245E-01	9.862E-02	1.01	1.32E-04	1.05E-04
	0.91251	0.003276	1.506E+08	0.0300	2.61E-03	9.88E-02	1.01	2.601E-04	3.130E-01	2.479E-01	1.01	8.24E-04	6.52E-04
	0.91713	0.009198	1.506E+08	0.0300	7.32E-03	2.79E-01	1.01	2.062E-03	8.831E-01	6.993E-01	1.01	6.53E-03	5.17E-03
	0.93636	0.001355	1.506E+08	0.0300	1.08E-03	4.20E-02	1.01	4.568E-05	1.324E-01	1.048E-01	1.01	1.44E-04	1.14E-04
	0.94125	0.002299	1.506E+08	0.0300	1.83E-03	7.16E-02	1.01	1.322E-04	2.257E-01	1.787E-01	1.01	4.17E-04	3.30E-04
	1.0939	0.004095	1.506E+08	0.0300	3.26E-03	1.48E-01	1.01	4.855E-04	4.547E-01	3.600E-01	1.00	1.48E-03	1.17E-03
	1.0988	0.002142	1.506E+08	0.0300	1.70E-03	7.75E-02	1.01	1.334E-04	2.387E-01	1.890E-01	1.00	4.07E-04	3.22E-04
	1.1022	0.001071	1.506E+08	0.0300	8.52E-04	3.89E-02	1.01	3.344E-05	1.196E-01	9.470E-02	1.00	1.02E-04	8.07E-05
	1.1143	0.014742	1.506E+08	0.0300	1.17E-02	5.40E-01	1.01	6.403E-03	1.661E+00	1.315E+00	1.00	1.95E-02	1.54E-02
	1.1416	0.005134	1.506E+08	0.0300	4.08E-03	1.93E-01	1.01	7.949E-04	5.893E-01	4.665E-01	1.00	2.41E-03	1.91E-03
	1.1454	0.001323	1.506E+08	0.0300	1.05E-03	4.98E-02	1.01	5.297E-05	1.523E-01	1.206E-01	1.00	1.60E-04	1.27E-04
	1.5718	0.002646	1.506E+08	0.0300	2.11E-03	1.38E-01	1.05	3.045E-04	3.817E-01	3.021E-01	0.98	7.87E-04	6.23E-04
	1.6146	0.002363	1.506E+08	0.0300	1.88E-03	1.26E-01	1.05	2.486E-04	3.471E-01	2.748E-01	0.98	6.40E-04	5.06E-04
	1.7683	0.16727	1.506E+08	0.0300	1.33E-01	9.66E+00	1.07	1.375E+00	2.610E+01	2.066E+01	0.98	3.40E+00	2.69E+00
	1.8125	0.001796	1.506E+08	0.0300	1.43E-03	1.06E-01	1.08	1.635E-04	2.848E-01	2.255E-01	0.98	3.99E-04	3.16E-04
	1.8509	0.014238	1.506E+08	0.0300	1.13E-02	8.56E-01	1.08	1.047E-02	2.289E+00	1.812E+00	0.97	2.51E-02	1.99E-02
	1.9254	0.005639	1.506E+08	0.0300	4.49E-03	3.51E-01	1.09	1.718E-03	9.303E-01	7.365E-01	0.97	4.05E-03	3.21E-03
	2.0048	0.05355	1.506E+08	0.0300	4.26E-02	3.46E+00	1.10	1.622E-01	9.070E+00	7.180E+00	0.97	3.75E-01	2.97E-01
	2.0158	0.12254	1.506E+08	0.0300	9.75E-02	7.95E+00	1.10	8.526E-01	2.083E+01	1.649E+01	0.97	1.97E+00	1.56E+00
	2.0792	0.014427	1.506E+08	0.0300	1.15E-02	9.57E-01	1.11	1.219E-02	2.501E+00	1.980E+00	0.97	2.78E-02	2.20E-02
	2.2523	0.022869	1.506E+08	0.0300	1.82E-02	1.61E+00	1.13	3.301E-02	4.175E+00	3.305E+00	0.96	7.29E-02	5.77E-02
	2.3219	0.006206	1.506E+08	0.0300	4.94E-03	4.45E-01	1.14	2.507E-03	1.155E+00	9.145E-01	0.96	5.48E-03	4.33E-03
	2.4753	0.003119	1.506E+08	0.0300	2.48E-03	2.34E-01	1.16	6.750E-04	6.048E-01	4.788E-01	0.95	1.43E-03	1.13E-03
	2.4976	0.001733	1.506E+08	0.0300	1.38E-03	1.31E-01	1.16	2.098E-04	3.380E-01	2.676E-01	0.95	4.43E-04	3.50E-04
	1.1186	0.026586	1.506E+08	0.0300	2.12E-02	9.78E-01	1.01	2.090E-02	3.004E+00	2.378E+00	1.00	6.35E-02	6.35E-02
							SUM =	3.001E+01				9.25E+01	7.32E+01

27A = 0.257 Rad/hr 27E = 92.535 Rad/hr
27B = 0.292 Rad/hr 27F = 73.299 Rad/hr

Con. Vol=	5.68E+09 cm**3
27A Cone Factor	0.00856
27B Cone Factor	0.00973
Release Frac.	0.001

Isotope	Energy (MeV)	Probability	Design Basis Source (Ci)	Gap Release Fraction	Cont. Conc. (uCi/cc)	27A&B QAD Det. Response (Rad/hr)	27A&B Eff.	27A&B Response (Rad/hr)	27E QAD Det. Response (Rad/hr)	27F QAD Det. Response (Rad/hr)	27E&F Eff.	27E Response (Rad/hr)	27F Response (Rad/hr)
I-131	0.080183	0.026182	2.422E+07	0.0200	4.47E-02	3.20E-07	0.71	1.015E-08	1.794E-01	1.418E-01	0.88	7.05E-03	5.58E-03
	0.17721	0.002648	2.422E+07	0.0200	4.52E-03	1.73E-03	1.02	7.975E-06	3.963E-02	3.135E-02	0.98	1.75E-04	1.39E-04
	0.2843	0.060521	2.422E+07	0.0200	1.03E-01	2.12E-01	1.02	2.231E-02	1.703E+00	1.348E+00	0.96	1.69E-01	1.34E-01
	0.32578	0.002507	2.422E+07	0.0200	4.28E-03	1.24E-02	1.00	5.321E-05	8.341E-02	6.603E-02	0.96	3.42E-04	2.71E-04
	0.36448	0.81164	2.422E+07	0.0200	1.38E+00	5.12E+00	1.00	7.085E+00	3.065E+01	2.426E+01	0.95	4.03E+01	3.19E+01
	0.50299	0.003605	2.422E+07	0.0200	6.15E-03	5.03E-02	0.99	3.061E-04	2.224E-01	1.761E-01	0.96	1.31E-03	1.04E-03
	0.63697	0.072605	2.422E+07	0.0200	1.24E-01	1.54E+00	1.00	1.904E-01	4.973E+00	3.942E+00	0.99	6.10E-01	4.83E-01
	0.6427	0.002195	2.422E+07	0.0200	3.74E-03	4.69E-02	1.00	1.757E-04	1.515E-01	1.201E-01	1.00	5.67E-04	4.50E-04
	0.72289	0.018025	2.422E+07	0.0200	3.08E-02	4.33E-01	1.00	1.333E-02	1.388E+00	1.100E+00	1.01	4.31E-02	3.41E-02
	0.32939	0.002304	2.422E+07	0.0200	3.93E-03	1.17E-02	1.00	4.602E-05	7.767E-02	6.148E-02	0.95	2.90E-04	2.30E-04
I-132	0.1472	0.002369	3.466E+07	0.0200	5.78E-03	5.60E-04	1.01	3.273E-06	2.796E-02	2.211E-02	1.01	1.63E-04	1.29E-04
	0.1833	0.001382	3.466E+07	0.0200	3.37E-03	1.07E-03	1.03	3.719E-06	2.163E-02	1.712E-02	0.97	7.08E-05	5.60E-05
	0.2548	0.001875	3.466E+07	0.0200	4.58E-03	4.65E-03	1.04	2.215E-05	4.574E-02	3.620E-02	0.97	2.03E-04	1.61E-04
	0.2627	0.01441	3.466E+07	0.0200	3.52E-02	3.93E-02	1.03	1.424E-03	3.660E-01	2.896E-01	0.97	1.25E-02	9.88E-03
	0.2848	0.007205	3.466E+07	0.0200	1.76E-02	2.54E-02	1.02	4.551E-04	2.032E-01	1.608E-01	0.96	3.43E-03	2.72E-03
	0.3165	0.001382	3.466E+07	0.0200	3.37E-03	6.45E-03	1.00	2.176E-05	4.443E-02	3.516E-02	0.96	1.44E-04	1.14E-04
	0.3635	0.004935	3.466E+07	0.0200	1.20E-02	3.09E-02	1.00	3.727E-04	1.859E-01	1.471E-01	0.95	2.13E-03	1.68E-03
	0.3878	0.002961	3.466E+07	0.0200	7.23E-03	2.13E-02	1.00	1.539E-04	1.193E-01	9.443E-02	0.95	8.19E-04	6.49E-04
	0.4168	0.004738	3.466E+07	0.0200	1.16E-02	3.90E-02	1.00	4.512E-04	2.046E-01	1.620E-01	0.95	2.25E-03	1.78E-03
	0.4319	0.004836	3.466E+07	0.0200	1.18E-02	4.22E-02	1.00	4.988E-04	2.156E-01	1.707E-01	0.95	2.42E-03	1.91E-03
	0.446	0.006021	3.466E+07	0.0200	1.47E-02	5.55E-02	1.00	8.151E-04	2.759E-01	2.184E-01	0.95	3.85E-03	3.05E-03
	0.4739	0.001777	3.466E+07	0.0200	4.34E-03	1.80E-02	0.99	7.752E-05	8.537E-02	6.759E-02	0.96	3.56E-04	2.81E-04
	0.4785	0.001481	3.466E+07	0.0200	3.62E-03	1.53E-02	0.99	5.467E-05	7.164E-02	5.672E-02	0.96	2.49E-04	1.97E-04
	0.4882	0.004145	3.466E+07	0.0200	1.01E-02	4.41E-02	0.99	4.421E-04	2.034E-01	1.611E-01	0.96	1.98E-03	1.56E-03
	0.5059	0.050337	3.466E+07	0.0200	1.23E-01	7.14E-01	0.99	8.690E-02	3.101E+00	2.456E+00	0.96	3.66E-01	2.90E-01
	0.52265	0.16088	3.466E+07	0.0200	3.93E-01	2.49E+00	0.99	9.682E-01	9.888E+00	7.835E+00	0.97	3.77E+00	2.98E+00
	0.5355	0.005231	3.466E+07	0.0200	1.28E-02	8.55E-02	0.99	1.081E-03	3.226E-01	2.556E-01	0.97	4.00E-03	3.17E-03
	0.54	0.001086	3.466E+07	0.0200	2.65E-03	1.81E-02	0.99	4.742E-05	6.709E-02	5.318E-02	0.97	1.73E-04	1.37E-04
	0.5471	0.012535	3.466E+07	0.0200	3.06E-02	2.14E-01	0.99	6.481E-03	7.774E-01	6.162E-01	0.97	2.31E-02	1.83E-02
	0.6	0.001382	3.466E+07	0.0200	3.37E-03	2.74E-02	0.99	9.143E-05	9.024E-02	7.155E-02	0.99	3.01E-04	2.39E-04
	0.6208	0.003948	3.466E+07	0.0200	9.64E-03	8.13E-02	1.00	7.838E-04	2.646E-01	2.098E-01	0.99	2.53E-03	2.00E-03
	0.6212	0.015792	3.466E+07	0.0200	3.86E-02	3.26E-01	1.00	1.255E-02	1.059E+00	8.399E-01	0.99	4.04E-02	3.21E-02
	0.63022	0.13719	3.466E+07	0.0200	3.35E-01	2.87E+00	1.00	9.623E-01	9.314E+00	7.384E+00	0.99	3.09E+00	2.45E+00

V/B 9/16/94

Isotope	Energy (MeV)	Probability	Design Basis Source (Ci)	Gap Release Fraction	Cont. Conc. (uCi/cc)	27A&B QAD Det. Response (Rad/hr)	27A&B Eff.	27A&B Response (Rad/hr)	27E QAD Det. Response (Rad/hr)	27F QAD Det. Response (Rad/hr)	27E&F Eff.	27E Response (Rad/hr)	27F Response (Rad/hr)
	0.6506	0.026649	3.466E+07	0.0200	6.51E-02	5.77E-01	1.00	3.753E-02	1.859E+00	1.474E+00	1.00	1.21E-01	9.59E-02
	0.659	0.003948	3.466E+07	0.0200	9.64E-03	8.66E-02	1.00	8.345E-04	2.786E-01	2.209E-01	1.00	2.69E-03	2.13E-03
	0.66769	0.987	3.466E+07	0.0200	2.41E+00	2.19E+01	1.00	5.286E+01	7.051E+01	5.589E+01	1.00	1.70E+02	1.35E+02
	0.6698	0.04935	3.466E+07	0.0200	1.20E-01	1.10E+00	1.00	1.325E-01	3.535E+00	2.802E+00	1.00	4.26E-01	3.38E-01
	0.6716	0.052311	3.466E+07	0.0200	1.28E-01	1.17E+00	1.00	1.493E-01	3.757E+00	2.978E+00	1.00	4.80E-01	3.80E-01
	0.727	0.031584	3.466E+07	0.0200	7.71E-02	7.64E-01	1.00	5.887E-02	2.444E+00	1.937E+00	1.01	1.90E-01	1.51E-01
	0.7272	0.021714	3.466E+07	0.0200	5.30E-02	5.25E-01	1.00	2.784E-02	1.681E+00	1.332E+00	1.01	9.00E-02	7.13E-02
	0.7285	0.010857	3.466E+07	0.0200	2.65E-02	2.63E-01	1.01	7.042E-03	8.421E-01	6.673E-01	1.01	2.25E-02	1.79E-02
	0.7645	0.003948	3.466E+07	0.0200	9.64E-03	1.00E-01	1.01	9.777E-04	3.206E-01	2.540E-01	1.01	3.12E-03	2.47E-03
	0.77261	0.76196	3.466E+07	0.0200	1.86E+00	1.96E+01	1.01	3.681E+01	6.249E+01	4.951E+01	1.01	1.17E+02	9.30E+01
	0.7802	0.012338	3.466E+07	0.0200	3.01E-02	3.21E-01	1.01	9.751E-03	1.021E+00	8.091E-01	1.01	3.11E-02	2.46E-02
	0.7845	0.004244	3.466E+07	0.0200	1.04E-02	1.11E-01	1.01	1.161E-03	3.532E-01	2.798E-01	1.01	3.70E-03	2.93E-03
	0.8098	0.028623	3.466E+07	0.0200	6.99E-02	7.72E-01	1.01	5.448E-02	2.454E+00	1.944E+00	1.01	1.73E-01	1.37E-01
	0.8122	0.056259	3.466E+07	0.0200	1.37E-01	1.52E+00	1.01	2.110E-01	4.838E+00	3.832E+00	1.01	6.71E-01	5.32E-01
	0.8633	0.005823	3.466E+07	0.0200	1.42E-02	1.66E-01	1.01	2.390E-03	5.296E-01	4.194E-01	1.02	7.68E-03	6.08E-03
	0.8768	0.010758	3.466E+07	0.0200	2.63E-02	3.12E-01	1.01	8.280E-03	9.925E-01	7.860E-01	1.02	2.66E-02	2.11E-02
	0.9103	0.009179	3.466E+07	0.0200	2.24E-02	2.76E-01	1.01	6.251E-03	8.752E-01	6.930E-01	1.01	1.98E-02	1.57E-02
	0.9276	0.004145	3.466E+07	0.0200	1.01E-02	1.27E-01	1.01	1.299E-03	4.018E-01	3.182E-01	1.01	4.11E-03	3.25E-03
	0.95455	0.18062	3.466E+07	0.0200	4.41E-01	5.71E+00	1.01	2.541E+00	1.795E+01	1.421E+01	1.01	7.99E+00	6.33E+00
	0.9837	0.005626	3.466E+07	0.0200	1.37E-02	1.84E-01	1.01	2.546E-03	5.733E-01	4.540E-01	1.01	7.95E-03	6.30E-03
	1.0347	0.004738	3.466E+07	0.0200	1.16E-02	1.62E-01	1.01	1.895E-03	5.034E-01	3.985E-01	1.01	5.88E-03	4.66E-03
	1.136	0.02961	3.466E+07	0.0200	7.23E-02	1.11E+00	1.01	8.075E-02	3.385E+00	2.680E+00	1.00	2.45E-01	1.94E-01
	1.1434	0.013522	3.466E+07	0.0200	3.30E-02	5.08E-01	1.01	1.694E-02	1.554E+00	1.230E+00	1.00	5.13E-02	4.06E-02
	1.1474	0.002764	3.466E+07	0.0200	6.75E-03	1.04E-01	1.01	7.106E-04	3.185E-01	2.521E-01	1.00	2.15E-03	1.70E-03
	1.1732	0.010857	3.466E+07	0.0200	2.65E-02	4.19E-01	1.02	1.132E-02	1.272E+00	1.007E+00	1.00	3.37E-02	2.67E-02
	1.2727	0.001777	3.466E+07	0.0200	4.34E-03	7.44E-02	1.02	3.292E-04	2.212E-01	1.751E-01	0.99	9.50E-04	7.52E-04
	1.2907	0.011351	3.466E+07	0.0200	2.77E-02	4.82E-01	1.02	1.363E-02	1.427E+00	1.130E+00	0.99	3.91E-02	3.10E-02
	1.2953	0.01974	3.466E+07	0.0200	4.82E-02	8.42E-01	1.02	4.139E-02	2.489E+00	1.970E+00	0.99	1.19E-01	9.40E-02
	1.2976	0.008883	3.466E+07	0.0200	2.17E-02	3.80E-01	1.02	8.397E-03	1.121E+00	8.878E-01	0.99	2.41E-02	1.91E-02
	1.3178	0.001184	3.466E+07	0.0200	2.89E-03	5.14E-02	1.02	1.516E-04	1.511E-01	1.196E-01	0.99	4.32E-04	3.42E-04
	1.3721	0.024675	3.466E+07	0.0200	6.02E-02	1.12E+00	1.03	6.943E-02	3.241E+00	2.566E+00	0.99	1.93E-01	1.53E-01
	1.3986	0.071064	3.466E+07	0.0200	1.73E-01	3.29E+00	1.03	5.879E-01	9.460E+00	7.489E+00	0.99	1.62E+00	1.29E+00
	1.4426	0.014213	3.466E+07	0.0200	3.47E-02	6.81E-01	1.04	2.457E-02	1.933E+00	1.531E+00	0.99	6.64E-02	5.26E-02
	1.4768	0.001352	3.466E+07	0.0200	3.30E-03	6.65E-02	1.04	2.281E-04	1.869E-01	1.480E-01	0.99	6.11E-04	4.84E-04

9/16 9/16/94

Isotope	Energy (MeV)	Probability	Design Basis Source (Ci)	Gap Release Fraction	Cont. Conc. (uCi/cc)	27A&B QAD Det. Response (Rad/hr)	27A&B Eff.	27A&B Response (Rad/hr)	27E QAD Det. Response (Rad/hr)	27F QAD Det. Response (Rad/hr)	27E&F Eff.	27E Response (Rad/hr)	27F Response (Rad/hr)
	1.7575	0.002961	3.466E+07	0.0200	7.23E-03	1.70E-01	1.07	1.315E-03	4.601E-01	3.642E-01	0.98	3.26E-03	2.58E-03
	1.9211	0.011844	3.466E+07	0.0200	2.89E-02	7.37E-01	1.09	2.322E-02	1.952E+00	1.545E+00	0.97	5.47E-02	4.33E-02
	2.0022	0.010857	3.466E+07	0.0200	2.65E-02	7.01E-01	1.10	2.045E-02	1.838E+00	1.455E+00	0.97	4.72E-02	3.74E-02
	2.0868	0.002369	3.466E+07	0.0200	5.78E-03	1.58E-01	1.11	1.011E-03	4.118E-01	3.260E-01	0.97	2.31E-03	1.83E-03
	2.1727	0.001974	3.466E+07	0.0200	4.82E-03	1.35E-01	1.12	7.292E-04	3.522E-01	2.788E-01	0.96	1.63E-03	1.29E-03
	2.2232	0.001184	3.466E+07	0.0200	2.89E-03	8.23E-02	1.13	2.690E-04	2.143E-01	1.697E-01	0.96	5.95E-04	4.71E-04
	2.3905	0.001678	3.466E+07	0.0200	4.10E-03	1.23E-01	1.15	5.794E-04	3.183E-01	2.519E-01	0.95	1.24E-03	9.80E-04
	1.0146	0.031946	3.466E+07	0.0200	7.80E-02	1.07E+00	1.01	8.465E-02	3.340E+00	2.644E+00	1.01	2.63E-01	2.08E-01
I-133	0.2627	0.003565	4.747E+07	0.0200	1.19E-02	9.73E-03	1.03	1.194E-04	9.055E-02	7.167E-02	0.97	1.05E-03	8.29E-04
	0.26717	0.001165	4.747E+07	0.0200	3.90E-03	3.35E-03	1.03	1.344E-05	3.025E-02	2.394E-02	0.97	1.14E-04	9.05E-05
	0.34543	0.001036	4.747E+07	0.0200	3.46E-03	5.83E-03	1.00	2.018E-05	3.689E-02	2.920E-02	0.95	1.21E-04	9.61E-05
	0.36108	0.001122	4.747E+07	0.0200	3.75E-03	6.93E-03	1.00	2.601E-05	4.195E-02	3.321E-02	0.95	1.50E-04	1.18E-04
	0.41805	0.001528	4.747E+07	0.0200	5.11E-03	1.26E-02	1.00	6.459E-05	6.618E-02	5.240E-02	0.95	3.21E-04	2.54E-04
	0.42291	0.00309	4.747E+07	0.0200	1.03E-02	2.61E-02	1.00	2.693E-04	1.352E-01	1.071E-01	0.95	1.33E-03	1.05E-03
	0.51053	0.018127	4.747E+07	0.0200	6.06E-02	2.64E-01	0.99	1.585E-02	1.115E+00	8.834E-01	0.96	6.49E-02	5.14E-02
	0.52987	0.8632	4.747E+07	0.0200	2.89E+00	1.38E+01	0.99	3.939E+01	5.310E+01	4.208E+01	0.97	1.49E+02	1.18E+02
	0.61797	0.005395	4.747E+07	0.0200	1.80E-02	1.11E-01	1.00	1.994E-03	3.603E-01	2.857E-01	0.99	6.43E-03	5.10E-03
	0.68025	0.006448	4.747E+07	0.0200	2.16E-02	1.46E-01	1.00	3.147E-03	4.686E-01	3.714E-01	1.00	1.01E-02	8.01E-03
	0.70658	0.014933	4.747E+07	0.0200	4.99E-02	3.51E-01	1.00	1.753E-02	1.125E+00	8.915E-01	1.01	5.67E-02	4.50E-02
	0.76838	0.004566	4.747E+07	0.0200	1.53E-02	1.17E-01	1.01	1.800E-03	3.726E-01	2.952E-01	1.01	5.75E-03	4.55E-03
	0.82051	0.001537	4.747E+07	0.0200	5.14E-03	4.19E-02	1.01	2.177E-04	1.334E-01	1.057E-01	1.02	7.00E-04	5.54E-04
	0.85628	0.012344	4.747E+07	0.0200	4.13E-02	3.50E-01	1.01	1.459E-02	1.114E+00	8.825E-01	1.02	4.69E-02	3.72E-02
	0.87533	0.044714	4.747E+07	0.0200	1.50E-01	1.29E+00	1.01	1.955E-01	4.118E+00	3.261E+00	1.02	6.28E-01	4.97E-01
	0.90967	0.002124	4.747E+07	0.0200	7.10E-03	6.39E-02	1.01	4.582E-04	2.024E-01	1.603E-01	1.01	1.45E-03	1.15E-03
	1.0523	0.005516	4.747E+07	0.0200	1.84E-02	1.92E-01	1.01	3.572E-03	5.940E-01	4.703E-01	1.01	1.11E-02	8.76E-03
	1.0601	0.001373	4.747E+07	0.0200	4.59E-03	4.80E-02	1.01	2.228E-04	1.487E-01	1.178E-01	1.01	6.90E-04	5.46E-04
	1.2364	0.014933	4.747E+07	0.0200	4.99E-02	6.07E-01	1.02	3.091E-02	1.820E+00	1.441E+00	1.00	9.09E-02	7.19E-02
	1.2982	0.023306	4.747E+07	0.0200	7.79E-02	9.96E-01	1.02	7.919E-02	2.943E+00	2.330E+00	0.99	2.27E-01	1.80E-01
	1.3504	0.001485	4.747E+07	0.0200	4.97E-03	6.62E-02	1.03	3.386E-04	1.929E-01	1.527E-01	0.99	9.48E-04	7.51E-04
	0.53524	0.006072	4.747E+07	0.0200	2.03E-02	9.92E-02	0.99	1.994E-03	3.744E-01	2.967E-01	0.97	7.37E-03	5.84E-03
I-134	0.1354	0.037592	5.183E+07	0.0200	1.37E-01	3.23E-03	1.03	4.568E-04	4.014E-01	3.175E-01	1.02	5.62E-02	4.44E-02
	0.13903	0.006869	5.183E+07	0.0200	2.51E-02	8.09E-04	1.02	2.069E-05	7.565E-02	5.984E-02	1.02	1.93E-03	1.53E-03
	0.15198	0.001059	5.183E+07	0.0200	3.87E-03	3.36E-04	1.00	1.298E-06	1.300E-02	1.028E-02	1.00	5.02E-05	3.98E-05
	0.16248	0.002576	5.183E+07	0.0200	9.40E-03	1.11E-03	1.00	1.042E-05	3.442E-02	2.723E-02	0.98	3.17E-04	2.51E-04

V/6 9/16/94

Isotope	Energy (MeV)	Probability	Design Basis Source (Ci)	Gap Release Fraction	Cont. Conc. (uCi/cc)	27A&B QAD Det. Response (Rad/hr)	27A&B Eff.	27A&B Response (Rad/hr)	27E QAD Det. Response (Rad/hr)	27F QAD Det. Response (Rad/hr)	27E&F Eff.	27E Response (Rad/hr)	27F Response (Rad/hr)
	0.18847	0.006965	5.183E+07	0.0200	2.54E-02	6.22E-03	1.04	1.644E-04	1.132E-01	8.954E-02	0.97	2.79E-03	2.21E-03
	0.217	0.002481	5.183E+07	0.0200	9.06E-03	3.81E-03	1.06	3.659E-05	4.877E-02	3.859E-02	0.97	4.29E-04	3.39E-04
	0.23547	0.019845	5.183E+07	0.0200	7.25E-02	3.88E-02	1.05	2.949E-03	4.358E-01	3.449E-01	0.97	3.06E-02	2.42E-02
	0.2788	0.001307	5.183E+07	0.0200	4.77E-03	4.30E-03	1.02	2.093E-05	3.588E-02	2.840E-02	0.96	1.64E-04	1.30E-04
	0.31981	0.005152	5.183E+07	0.0200	1.88E-02	2.46E-02	1.00	4.623E-04	1.677E-01	1.327E-01	0.96	3.03E-03	2.40E-03
	0.35108	0.004961	5.183E+07	0.0200	1.81E-02	2.89E-02	1.00	5.231E-04	1.799E-01	1.424E-01	0.95	3.09E-03	2.45E-03
	0.40545	0.073466	5.183E+07	0.0200	2.68E-01	5.77E-01	1.00	1.548E-01	3.092E+00	2.448E+00	0.95	7.88E-01	6.24E-01
	0.411	0.006106	5.183E+07	0.0200	2.23E-02	4.91E-02	1.00	1.094E-03	2.603E-01	2.061E-01	0.95	5.51E-03	4.36E-03
	0.43335	0.041885	5.183E+07	0.0200	1.53E-01	3.68E-01	1.00	5.626E-02	1.873E+00	1.483E+00	0.95	2.72E-01	2.15E-01
	0.45892	0.012976	5.183E+07	0.0200	4.74E-02	1.25E-01	0.99	5.871E-03	6.084E-01	4.817E-01	0.96	2.77E-02	2.19E-02
	0.4655	0.003626	5.183E+07	0.0200	1.32E-02	3.58E-02	0.99	4.691E-04	1.719E-01	1.361E-01	0.96	2.18E-03	1.73E-03
	0.48888	0.014121	5.183E+07	0.0200	5.16E-02	1.51E-01	0.99	7.688E-03	6.936E-01	5.492E-01	0.96	3.43E-02	2.72E-02
	0.5144	0.023375	5.183E+07	0.0200	8.53E-02	3.48E-01	0.99	2.936E-02	1.437E+00	1.138E+00	0.97	1.19E-01	9.42E-02
	0.54083	0.078236	5.183E+07	0.0200	2.86E-01	1.31E+00	0.99	3.691E-01	4.835E+00	3.832E+00	0.97	1.34E+00	1.06E+00
	0.56552	0.008778	5.183E+07	0.0200	3.20E-02	1.59E-01	0.99	5.044E-03	5.524E-01	4.379E-01	0.98	1.73E-02	1.38E-02
	0.57075	0.002099	5.183E+07	0.0200	7.66E-03	3.86E-02	0.99	2.927E-04	1.327E-01	1.052E-01	0.98	9.96E-04	7.90E-04
	0.59536	0.11354	5.183E+07	0.0200	4.15E-01	2.22E+00	0.99	9.130E-01	7.374E+00	5.847E+00	0.99	3.03E+00	2.40E+00
	0.62179	0.10591	5.183E+07	0.0200	3.87E-01	2.19E+00	1.00	8.453E-01	7.111E+00	5.638E+00	0.99	2.72E+00	2.16E+00
	0.62796	0.023662	5.183E+07	0.0200	8.64E-02	4.94E-01	1.00	4.263E-02	1.601E+00	1.269E+00	0.99	1.37E-01	1.09E-01
	0.67734	0.084915	5.183E+07	0.0200	3.10E-01	1.91E+00	1.00	5.935E-01	6.147E+00	4.872E+00	1.00	1.91E+00	1.51E+00
	0.70665	0.008301	5.183E+07	0.0200	3.03E-02	1.95E-01	1.00	5.915E-03	6.256E-01	4.957E-01	1.01	1.91E-02	1.52E-02
	0.73074	0.019082	5.183E+07	0.0200	6.97E-02	4.64E-01	1.01	3.262E-02	1.484E+00	1.176E+00	1.01	1.04E-01	8.27E-02
	0.73918	0.007633	5.183E+07	0.0200	2.79E-02	1.88E-01	1.01	5.281E-03	6.003E-01	4.756E-01	1.01	1.69E-02	1.34E-02
	0.76668	0.041026	5.183E+07	0.0200	1.50E-01	1.05E+00	1.01	1.583E-01	3.341E+00	2.647E+00	1.01	5.05E-01	4.00E-01
	0.81638	0.005248	5.183E+07	0.0200	1.92E-02	1.43E-01	1.01	2.758E-03	4.534E-01	3.591E-01	1.02	8.86E-03	7.02E-03
	0.84702	0.9541	5.183E+07	0.0200	3.48E+00	2.68E+01	1.01	9.424E+01	8.528E+01	6.754E+01	1.02	3.03E+02	2.40E+02
	0.85729	0.069649	5.183E+07	0.0200	2.54E-01	1.98E+00	1.01	5.079E-01	6.295E+00	4.985E+00	1.02	1.63E+00	1.29E+00
	0.864	0.001908	5.183E+07	0.0200	6.97E-03	5.46E-02	1.01	3.840E-04	1.737E-01	1.375E-01	1.02	1.23E-03	9.77E-04
	0.88409	0.6526	5.183E+07	0.0200	2.38E+00	1.91E+01	1.01	4.591E+01	6.064E+01	4.802E+01	1.01	1.46E+02	1.16E+02
	0.9226	0.001431	5.183E+07	0.0200	5.22E-03	4.36E-02	1.01	2.303E-04	1.381E-01	1.093E-01	1.01	7.28E-04	5.77E-04
	0.94786	0.040358	5.183E+07	0.0200	1.47E-01	1.27E+00	1.01	1.883E-01	3.986E+00	3.156E+00	1.01	5.93E-01	4.70E-01
	0.9669	0.00353	5.183E+07	0.0200	1.29E-02	1.13E-01	1.01	1.472E-03	3.546E-01	2.808E-01	1.01	4.62E-03	3.65E-03
	0.97467	0.046751	5.183E+07	0.0200	1.71E-01	1.51E+00	1.01	2.603E-01	4.727E+00	3.743E+00	1.01	8.15E-01	6.45E-01
	1.0403	0.019082	5.183E+07	0.0200	6.97E-02	6.56E-01	1.01	4.618E-02	2.036E+00	1.612E+00	1.01	1.43E-01	1.13E-01

VB [illegible] 9/16/94

Isotope	Energy (MeV)	Probability	Design Basis Source (Ci)	Gap Release Fraction	Cont. Conc. (uCi/cc)	27A&B QAD Det. Response (Rad/hr)	27A&B Eff.	27A&B Response (Rad/hr)	27E QAD Det. Response (Rad/hr)	27F QAD Det. Response (Rad/hr)	27E&F Eff.	27E Response (Rad/hr)	27F Response (Rad/hr)
	1.0726	0.15266	5.183E+07	0.0200	5.57E-01	5.40E+00	1.01	3.040E+00	1.669E+01	1.322E+01	1.01	9.40E+00	7.44E+00
	1.1001	0.006869	5.183E+07	0.0200	2.51E-02	2.49E-01	1.01	6.302E-03	7.661E-01	6.065E-01	1.00	1.92E-02	1.52E-02
	1.1032	0.007251	5.183E+07	0.0200	2.65E-02	2.63E-01	1.01	7.041E-03	8.105E-01	6.417E-01	1.00	2.15E-02	1.70E-02
	1.1362	0.097318	5.183E+07	0.0200	3.55E-01	3.64E+00	1.01	1.305E+00	1.113E+01	8.815E+00	1.00	3.96E+00	3.13E+00
	1.1591	0.00353	5.183E+07	0.0200	1.29E-02	1.34E-01	1.01	1.751E-03	4.099E-01	3.245E-01	1.00	5.28E-03	4.18E-03
	1.164	0.001336	5.183E+07	0.0200	4.88E-03	5.11E-02	1.02	2.543E-04	1.556E-01	1.232E-01	1.00	7.59E-04	6.01E-04
	1.19	0.00353	5.183E+07	0.0200	1.29E-02	1.38E-01	1.02	1.815E-03	4.181E-01	3.310E-01	1.00	5.39E-03	4.27E-03
	1.239	0.002099	5.183E+07	0.0200	7.66E-03	8.55E-02	1.02	6.681E-04	2.561E-01	2.028E-01	1.00	1.96E-03	1.55E-03
	1.2695	0.005629	5.183E+07	0.0200	2.06E-02	2.35E-01	1.02	4.927E-03	6.993E-01	5.536E-01	1.00	1.44E-02	1.14E-02
	1.3224	0.00105	5.183E+07	0.0200	3.83E-03	4.58E-02	1.03	1.807E-04	1.343E-01	1.063E-01	0.99	5.10E-04	4.03E-04
	1.336	0.001431	5.183E+07	0.0200	5.22E-03	6.31E-02	1.03	3.393E-04	1.844E-01	1.460E-01	0.99	9.54E-04	7.55E-04
	1.3526	0.004484	5.183E+07	0.0200	1.64E-02	2.00E-01	1.03	3.376E-03	5.830E-01	4.615E-01	0.99	9.45E-03	7.48E-03
	1.4143	0.002194	5.183E+07	0.0200	8.01E-03	1.03E-01	1.03	8.481E-04	2.943E-01	2.330E-01	0.99	2.33E-03	1.85E-03
	1.4282	0.001717	5.183E+07	0.0200	6.27E-03	8.14E-02	1.03	5.252E-04	2.320E-01	1.837E-01	0.99	1.44E-03	1.14E-03
	1.4314	0.001717	5.183E+07	0.0200	6.27E-03	8.16E-02	1.03	5.265E-04	2.324E-01	1.839E-01	0.99	1.44E-03	1.14E-03
	1.4552	0.022898	5.183E+07	0.0200	8.36E-02	1.11E+00	1.04	9.629E-02	3.134E+00	2.481E+00	0.99	2.59E-01	2.05E-01
	1.47	0.007728	5.183E+07	0.0200	2.82E-02	3.78E-01	1.04	1.108E-02	1.065E+00	8.427E-01	0.99	2.97E-02	2.35E-02
	1.5055	0.001145	5.183E+07	0.0200	4.18E-03	5.75E-02	1.04	2.499E-04	1.605E-01	1.270E-01	0.99	6.64E-04	5.26E-04
	1.5415	0.005057	5.183E+07	0.0200	1.85E-02	2.59E-01	1.04	4.972E-03	7.200E-01	5.700E-01	0.98	1.30E-02	1.03E-02
	1.6138	0.043602	5.183E+07	0.0200	1.59E-01	2.32E+00	1.05	3.882E-01	6.402E+00	5.068E+00	0.98	9.99E-01	7.91E-01
	1.6292	0.002576	5.183E+07	0.0200	9.40E-03	1.38E-01	1.05	1.367E-03	3.807E-01	3.014E-01	0.98	3.51E-03	2.78E-03
	1.6443	0.004007	5.183E+07	0.0200	1.46E-02	2.17E-01	1.06	3.364E-03	5.957E-01	4.716E-01	0.98	8.54E-03	6.76E-03
	1.6552	0.00229	5.183E+07	0.0200	8.36E-03	1.25E-01	1.06	1.105E-03	3.420E-01	2.708E-01	0.98	2.80E-03	2.22E-03
	1.7415	0.026715	5.183E+07	0.0200	9.75E-02	1.52E+00	1.07	1.588E-01	4.126E+00	3.267E+00	0.98	3.94E-01	3.12E-01
	1.8068	0.057246	5.183E+07	0.0200	2.09E-01	3.37E+00	1.08	7.603E-01	9.060E+00	7.172E+00	0.98	1.86E+00	1.47E+00
	1.9259	0.001813	5.183E+07	0.0200	6.62E-03	1.13E-01	1.09	8.153E-04	2.992E-01	2.369E-01	0.97	1.92E-03	1.52E-03
	2.0206	0.001717	5.183E+07	0.0200	6.27E-03	1.12E-01	1.10	7.697E-04	2.924E-01	2.315E-01	0.97	1.78E-03	1.41E-03
	2.1599	0.002099	5.183E+07	0.0200	7.66E-03	1.43E-01	1.12	1.227E-03	3.729E-01	2.953E-01	0.96	2.74E-03	2.17E-03
	2.3124	0.002385	5.183E+07	0.0200	8.71E-03	1.71E-01	1.14	1.694E-03	4.428E-01	3.505E-01	0.96	3.70E-03	2.93E-03
	2.4674	0.001527	5.183E+07	0.0200	5.57E-03	1.15E-01	1.16	7.405E-04	2.954E-01	2.339E-01	0.95	1.56E-03	1.24E-03
	1.7872	0.013348	5.183E+07	0.0200	4.87E-02	7.78E-01	1.07	4.055E-02	2.097E+00	1.660E+00	0.98	1.00E-01	7.93E-02
I-135	0.2205	0.017452	4.470E+07	0.0200	5.49E-02	2.81E-02	1.06	1.636E-03	3.506E-01	2.775E-01	0.97	1.87E-02	1.48E-02
	0.22972	0.002317	4.470E+07	0.0200	7.30E-03	4.20E-03	1.05	3.221E-05	4.921E-02	3.894E-02	0.97	3.48E-04	2.76E-04
	0.26426	0.00184	4.470E+07	0.0200	5.79E-03	5.11E-03	1.03	3.051E-05	4.711E-02	3.728E-02	0.97	2.65E-04	2.10E-04

J/B 9/16/94

Isotope	Energy (MeV)	Probability	Design Basis Source (Ci)	Gap Release Fraction	Cont. Conc. (uCi/cc)	27A&B QAD Det. Response (Rad/hr)	27A&B Eff.	27A&B Response (Rad/hr)	27E QAD Det. Response (Rad/hr)	27F QAD Det. Response (Rad/hr)	27E&F Eff.	27E Response (Rad/hr)	27F Response (Rad/hr)
	0.28845	0.030899	4.470E+07	0.0200	9.73E-02	1.13E-01	1.02	1.125E-02	8.857E-01	7.010E-01	0.96	8.27E-02	6.55E-02
	0.29027	0.003033	4.470E+07	0.0200	9.55E-03	1.14E-02	1.01	1.095E-04	8.763E-02	6.936E-02	0.96	8.03E-04	6.36E-04
	0.36185	0.00186	4.470E+07	0.0200	5.86E-03	1.15E-02	1.00	6.761E-05	6.969E-02	5.517E-02	0.95	3.88E-04	3.07E-04
	0.40303	0.002317	4.470E+07	0.0200	7.30E-03	1.80E-02	1.00	1.315E-04	9.697E-02	7.676E-02	0.95	6.72E-04	5.32E-04
	0.41483	0.003004	4.470E+07	0.0200	9.46E-03	2.45E-02	1.00	2.321E-04	1.292E-01	1.023E-01	0.95	1.16E-03	9.19E-04
	0.41763	0.03519	4.470E+07	0.0200	1.11E-01	2.91E-01	1.00	3.220E-02	1.523E+00	1.205E+00	0.95	1.60E-01	1.27E-01
	0.42993	0.003033	4.470E+07	0.0200	9.55E-03	2.63E-02	1.00	2.511E-04	1.347E-01	1.066E-01	0.95	1.22E-03	9.67E-04
	0.43374	0.005522	4.470E+07	0.0200	1.74E-02	4.86E-02	1.00	8.446E-04	2.471E-01	1.956E-01	0.95	4.08E-03	3.23E-03
	0.45163	0.003147	4.470E+07	0.0200	9.91E-03	2.96E-02	1.00	2.931E-04	1.457E-01	1.153E-01	0.95	1.37E-03	1.09E-03
	0.54656	0.071239	4.470E+07	0.0200	2.24E-01	1.21E+00	0.99	2.696E-01	4.418E+00	3.502E+00	0.97	9.61E-01	7.62E-01
	0.57597	0.001288	4.470E+07	0.0200	4.06E-03	2.40E-02	0.99	9.644E-05	8.185E-02	6.489E-02	0.98	3.25E-04	2.58E-04
	0.64985	0.004549	4.470E+07	0.0200	1.43E-02	9.84E-02	1.00	1.409E-03	3.171E-01	2.514E-01	1.00	4.54E-03	3.60E-03
	0.69013	0.001288	4.470E+07	0.0200	4.06E-03	2.96E-02	1.00	1.199E-04	9.486E-02	7.518E-02	1.00	3.85E-04	3.05E-04
	0.70792	0.00658	4.470E+07	0.0200	2.07E-02	1.55E-01	1.00	3.210E-03	4.965E-01	3.935E-01	1.01	1.04E-02	8.23E-03
	0.78548	0.001516	4.470E+07	0.0200	4.77E-03	3.97E-02	1.01	1.913E-04	1.263E-01	1.001E-01	1.01	6.09E-04	4.82E-04
	0.79771	0.001717	4.470E+07	0.0200	5.41E-03	4.57E-02	1.01	2.495E-04	1.452E-01	1.150E-01	1.01	7.93E-04	6.28E-04
	0.8368	0.066661	4.470E+07	0.0200	2.10E-01	1.85E+00	1.01	3.924E-01	5.893E+00	4.667E+00	1.02	1.26E+00	9.99E-01
	0.96146	0.001459	4.470E+07	0.0200	4.59E-03	4.64E-02	1.01	2.155E-04	1.458E-01	1.155E-01	1.01	6.77E-04	5.36E-04
	0.97196	0.008869	4.470E+07	0.0200	2.79E-02	2.86E-01	1.01	8.056E-03	8.948E-01	7.085E-01	1.01	2.52E-02	2.00E-02
	0.97261	0.012016	4.470E+07	0.0200	3.78E-02	3.87E-01	1.01	1.480E-02	1.213E+00	9.606E-01	1.01	4.64E-02	3.67E-02
	0.99509	0.001545	4.470E+07	0.0200	4.86E-03	5.10E-02	1.01	2.507E-04	1.589E-01	1.259E-01	1.01	7.81E-04	6.18E-04
	1.0388	0.07925	4.470E+07	0.0200	2.50E-01	2.72E+00	1.01	6.864E-01	8.448E+00	6.689E+00	1.01	2.13E+00	1.69E+00
	1.1016	0.016022	4.470E+07	0.0200	5.04E-02	5.81E-01	1.01	2.961E-02	1.789E+00	1.416E+00	1.00	9.02E-02	7.14E-02
	1.124	0.036049	4.470E+07	0.0200	1.14E-01	1.33E+00	1.01	1.528E-01	4.089E+00	3.237E+00	1.00	4.64E-01	3.67E-01
	1.1315	0.22516	4.470E+07	0.0200	7.09E-01	8.38E+00	1.01	5.999E+00	2.567E+01	2.032E+01	1.00	1.82E+01	1.44E+01
	1.1599	0.00103	4.470E+07	0.0200	3.24E-03	3.93E-02	1.02	1.299E-04	1.197E-01	9.474E-02	1.00	3.88E-04	3.07E-04
	1.169	0.008726	4.470E+07	0.0200	2.75E-02	3.35E-01	1.02	9.394E-03	1.020E+00	8.074E-01	1.00	2.80E-02	2.22E-02
	1.2405	0.009012	4.470E+07	0.0200	2.84E-02	3.68E-01	1.02	1.064E-02	1.101E+00	8.715E-01	1.00	3.12E-02	2.47E-02
	1.2604	0.2861	4.470E+07	0.0200	9.01E-01	1.19E+01	1.02	1.090E+01	3.536E+01	2.799E+01	1.00	3.19E+01	2.52E+01
	1.3679	0.006065	4.470E+07	0.0200	1.91E-02	2.74E-01	1.03	5.392E-03	7.949E-01	6.293E-01	0.99	1.50E-02	1.19E-02
	1.4484	0.003147	4.470E+07	0.0200	9.91E-03	1.51E-01	1.04	1.560E-03	4.293E-01	3.398E-01	0.99	4.21E-03	3.33E-03
	1.4576	0.086402	4.470E+07	0.0200	2.72E-01	4.19E+00	1.04	1.185E+00	1.184E+01	9.375E+00	0.99	3.19E+00	2.52E+00
	1.5028	0.010729	4.470E+07	0.0200	3.38E-02	5.38E-01	1.04	1.889E-02	1.502E+00	1.189E+00	0.99	5.02E-02	3.98E-02
	1.5664	0.012875	4.470E+07	0.0200	4.05E-02	6.69E-01	1.05	2.846E-02	1.853E+00	1.467E+00	0.98	7.36E-02	5.83E-02

Isotope	Energy (MeV)	Probability	Design Basis Source (Ci)	Gap Release Fraction	Cont. Conc. (uCi/cc)	27A&B QAD Det. Response (Rad/hr)	27A&B Eff.	27A&B Response (Rad/hr)	27E QAD Det. Response (Rad/hr)	27F QAD Det. Response (Rad/hr)	27E&F Eff.	27E Response (Rad/hr)	27F Response (Rad/hr)
	1.678	0.095271	4.470E+07	0.0200	3.00E-01	5.25E+00	1.06	1.669E+00	1.436E+01	1.136E+01	0.98	4.22E+00	3.34E+00
	1.7065	0.040912	4.470E+07	0.0200	1.29E-01	2.29E+00	1.06	3.125E-01	6.235E+00	4.936E+00	0.98	7.87E-01	6.23E-01
	1.7912	0.076961	4.470E+07	0.0200	2.42E-01	4.49E+00	1.07	1.165E+00	1.211E+01	9.585E+00	0.98	2.88E+00	2.28E+00
	1.8307	0.005779	4.470E+07	0.0200	1.82E-02	3.44E-01	1.08	6.762E-03	9.225E-01	7.303E-01	0.98	1.64E-02	1.30E-02
	1.9273	0.002947	4.470E+07	0.0200	9.28E-03	1.84E-01	1.09	1.859E-03	4.866E-01	3.852E-01	0.97	4.38E-03	3.47E-03
	2.0459	0.008697	4.470E+07	0.0200	2.74E-02	5.70E-01	1.11	1.733E-02	1.492E+00	1.181E+00	0.97	3.96E-02	3.14E-02
	2.2555	0.006123	4.470E+07	0.0200	1.93E-02	4.30E-01	1.13	9.374E-03	1.119E+00	8.856E-01	0.96	2.07E-02	1.64E-02
	2.4087	0.009527	4.470E+07	0.0200	3.00E-02	7.02E-01	1.15	2.421E-02	1.815E+00	1.437E+00	0.95	5.17E-02	4.09E-02
	1.0734	0.014948	4.470E+07	0.0200	4.71E-02	5.29E-01	1.01	2.516E-02	1.636E+00	1.295E+00	1.01	7.77E-02	6.16E-02
Kr-85	0.51399	0.00434	8.915E+05	0.0300	4.09E-04	6.44E-02	0.99	2.606E-05	2.668E-01	2.113E-01	0.97	1.06E-04	8.38E-05
Kr-85m	0.30487	0.13989	1.976E+07	0.0300	2.92E-01	6.03E-01	1.01	1.777E-01	4.296E+00	3.400E+00	0.96	1.20E+00	9.53E-01
	0.00169	0.000586	1.976E+07	0.0300	1.22E-03	0.00E+00	0	0.000E+00	9.001E+10	7.101E+10	0	0.00E+00	0.00E+00
	0.013336	0.006116	1.976E+07	0.0300	1.28E-02	0.00E+00	0	0.000E+00	2.476E+00	1.954E+00	0	0.00E+00	0.00E+00
	0.013395	0.01183	1.976E+07	0.0300	2.47E-02	0.00E+00	0	0.000E+00	4.664E+00	3.681E+00	0	0.00E+00	0.00E+00
	0.015	0.003105	1.976E+07	0.0300	6.48E-03	0.00E+00	0	0.000E+00	6.416E-01	5.064E-01	0	0.00E+00	0.00E+00
	0.12985	0.003011	1.976E+07	0.0300	6.29E-03	1.59E-04	1.05	1.051E-06	3.065E-02	2.424E-02	1.02	1.97E-04	1.55E-04
	0.15118	0.75278	1.976E+07	0.0300	1.57E+00	2.33E-01	1.00	3.665E-01	9.181E+00	7.263E+00	1.00	1.44E+01	1.14E+01
	0.58128	0.000211	1.976E+07	0.0300	4.41E-04	3.99E-03	0.99	1.741E-06	1.348E-02	1.069E-02	0.98	5.82E-06	4.62E-06
Kr-87	0.40258	0.495	3.671E+07	0.0300	1.92E+00	3.84E+00	1.00	7.377E+00	2.069E+01	1.638E+01	0.95	3.77E+01	2.99E+01
	0.67387	0.019058	3.671E+07	0.0300	7.39E-02	4.27E-01	1.00	3.159E-02	1.373E+00	1.088E+00	1.00	1.01E-01	8.04E-02
	0.81425	0.001683	3.671E+07	0.0300	6.53E-03	4.56E-02	1.01	3.006E-04	1.450E-01	1.149E-01	1.02	9.66E-04	7.65E-04
	0.83637	0.007524	3.671E+07	0.0300	2.92E-02	2.09E-01	1.01	6.156E-03	6.648E-01	5.266E-01	1.02	1.98E-02	1.57E-02
	0.84543	0.072765	3.671E+07	0.0300	2.82E-01	2.04E+00	1.01	5.814E-01	6.493E+00	5.143E+00	1.02	1.87E+00	1.48E+00
	0.94664	0.001386	3.671E+07	0.0300	5.38E-03	4.34E-02	1.01	2.356E-04	1.367E-01	1.082E-01	1.01	7.42E-04	5.88E-04
	1.1754	0.011237	3.671E+07	0.0300	4.36E-02	4.34E-01	1.02	1.929E-02	1.319E+00	1.044E+00	1.00	5.75E-02	4.55E-02
	1.338	0.006484	3.671E+07	0.0300	2.51E-02	2.86E-01	1.03	7.413E-03	8.366E-01	6.623E-01	0.99	2.08E-02	1.65E-02
	1.3825	0.002871	3.671E+07	0.0300	1.11E-02	1.31E-01	1.03	1.505E-03	3.791E-01	3.001E-01	0.99	4.18E-03	3.31E-03
	1.3899	0.001237	3.671E+07	0.0300	4.80E-03	5.69E-02	1.03	2.812E-04	1.640E-01	1.298E-01	0.99	7.79E-04	6.17E-04
	1.5312	0.003564	3.671E+07	0.0300	1.38E-02	1.81E-01	1.04	2.609E-03	5.051E-01	3.999E-01	0.98	6.84E-03	5.42E-03
	1.578	0.001287	3.671E+07	0.0300	4.99E-03	6.72E-02	1.05	3.525E-04	1.862E-01	1.474E-01	0.98	9.11E-04	7.21E-04
	1.6112	0.00104	3.671E+07	0.0300	4.03E-03	5.53E-02	1.05	2.343E-04	1.525E-01	1.208E-01	0.98	6.03E-04	4.77E-04
	1.7405	0.020493	3.671E+07	0.0300	7.95E-02	1.17E+00	1.07	9.922E-02	3.165E+00	2.506E+00	0.98	2.47E-01	1.95E-01
	1.8426	0.001386	3.671E+07	0.0300	5.38E-03	8.30E-02	1.08	4.818E-04	2.222E-01	1.759E-01	0.97	1.16E-03	9.17E-04
	2.0119	0.028957	3.671E+07	0.0300	1.12E-01	1.88E+00	1.10	2.318E-01	4.916E+00	3.892E+00	0.97	5.36E-01	4.24E-01

V/B [illegible] 9/16/94

Isotope	Energy (MeV)	Probability	Design Basis Source (Ci)	Gap Release Fraction	Cont. Conc. (uCi/cc)	27A&B QAD Det. Response (Rad/hr)	27A&B Eff.	27A&B Response (Rad/hr)	27E QAD Det. Response (Rad/hr)	27F QAD Det. Response (Rad/hr)	27E&F Eff.	27E Response (Rad/hr)	27F Response (Rad/hr)
	2.4085	0.002129	3.671E+07	0.0300	8.26E-03	1.57E-01	1.15	1.490E-03	4.056E-01	3.211E-01	0.95	3.18E-03	2.52E-03
	2.5548	0.09306	3.671E+07	0.0300	3.61E-01	7.16E+00	1.17	3.024E+00	1.841E+01	1.458E+01	0.94	6.25E+00	4.95E+00
	2.5581	0.039105	3.671E+07	0.0300	1.52E-01	3.01E+00	1.17	5.345E-01	7.743E+00	6.129E+00	0.94	1.10E+00	8.74E-01
	2.8114	0.003168	3.671E+07	0.0300	1.23E-02	2.62E-01	1.19	3.831E-03	6.662E-01	5.274E-01	0.92	7.53E-03	5.96E-03
	3.3085	0.004504	3.671E+07	0.0300	1.75E-02	4.15E-01	1.20	8.707E-03	1.050E+00	8.310E-01	0.85	1.56E-02	1.23E-02
	1.6201	0.006499	3.671E+07	0.0300	2.52E-02	3.47E-01	1.05	9.194E-03	9.567E-01	7.574E-01	0.98	2.36E-02	1.87E-02
Kr-88	0.12227	0.001972	5.139E+07	0.0300	1.07E-02	5.33E-05	1.08	6.158E-07	1.879E-02	1.486E-02	1.01	2.03E-04	1.61E-04
	0.16598	0.031036	5.139E+07	0.0300	1.69E-01	1.48E-02	1.01	2.513E-03	4.263E-01	3.373E-01	0.98	7.04E-02	5.57E-02
	0.19632	0.25985	5.139E+07	0.0300	1.41E+00	2.87E-01	1.05	4.253E-01	4.460E+00	3.529E+00	0.97	6.10E+00	4.83E+00
	0.24071	0.002526	5.139E+07	0.0300	1.37E-02	5.27E-03	1.05	7.590E-05	5.712E-02	4.521E-02	0.97	7.60E-04	6.01E-04
	0.31169	0.001073	5.139E+07	0.0300	5.83E-03	4.85E-03	1.01	2.852E-05	3.386E-02	2.680E-02	0.96	1.89E-04	1.50E-04
	0.33471	0.001453	5.139E+07	0.0300	7.89E-03	7.64E-03	1.00	6.026E-05	4.989E-02	3.949E-02	0.95	3.74E-04	2.96E-04
	0.36223	0.02249	5.139E+07	0.0300	1.22E-01	1.40E-01	1.00	1.709E-02	8.439E-01	6.680E-01	0.95	9.79E-02	7.75E-02
	0.39054	0.006436	5.139E+07	0.0300	3.49E-02	4.70E-02	1.00	1.642E-03	2.612E-01	2.067E-01	0.95	8.67E-03	6.86E-03
	0.4217	0.00128	5.139E+07	0.0300	6.95E-03	1.07E-02	1.00	7.469E-05	5.589E-02	4.424E-02	0.95	3.69E-04	2.92E-04
	0.4718	0.007266	5.139E+07	0.0300	3.95E-02	7.33E-02	0.99	2.862E-03	3.479E-01	2.755E-01	0.96	1.32E-02	1.04E-02
	0.67734	0.002353	5.139E+07	0.0300	1.28E-02	5.30E-02	1.00	6.775E-04	1.703E-01	1.350E-01	1.00	2.18E-03	1.72E-03
	0.78828	0.005328	5.139E+07	0.0300	2.89E-02	1.40E-01	1.01	4.090E-03	4.455E-01	3.529E-01	1.01	1.30E-02	1.03E-02
	0.79032	0.001246	5.139E+07	0.0300	6.77E-03	3.28E-02	1.01	2.243E-04	1.045E-01	8.275E-02	1.01	7.14E-04	5.65E-04
	0.83483	0.12975	5.139E+07	0.0300	7.05E-01	3.60E+00	1.01	2.559E+00	1.145E+01	9.066E+00	1.02	8.23E+00	6.51E+00
	0.85034	0.00173	5.139E+07	0.0300	9.39E-03	4.88E-02	1.01	4.626E-04	1.552E-01	1.229E-01	1.02	1.49E-03	1.18E-03
	0.86233	0.006712	5.139E+07	0.0300	3.64E-02	1.92E-01	1.01	7.054E-03	6.098E-01	4.830E-01	1.02	2.27E-02	1.80E-02
	0.94492	0.002941	5.139E+07	0.0300	1.60E-02	9.19E-02	1.01	1.483E-03	2.897E-01	2.294E-01	1.01	4.67E-03	3.70E-03
	0.98578	0.013148	5.139E+07	0.0300	7.14E-02	4.30E-01	1.01	3.100E-02	1.342E+00	1.063E+00	1.01	9.68E-02	7.66E-02
	0.99009	0.001419	5.139E+07	0.0300	7.70E-03	4.66E-02	1.01	3.628E-04	1.454E-01	1.151E-01	1.01	1.13E-03	8.96E-04
	1.0396	0.004844	5.139E+07	0.0300	2.63E-02	1.67E-01	1.01	4.424E-03	5.165E-01	4.090E-01	1.01	1.37E-02	1.09E-02
	1.0495	0.001419	5.139E+07	0.0300	7.70E-03	4.92E-02	1.01	3.829E-04	1.525E-01	1.207E-01	1.01	1.19E-03	9.39E-04
	1.1413	0.012837	5.139E+07	0.0300	6.97E-02	4.82E-01	1.01	3.392E-02	1.474E+00	1.167E+00	1.00	1.03E-01	8.13E-02
	1.1795	0.009965	5.139E+07	0.0300	5.41E-02	3.86E-01	1.02	2.131E-02	1.172E+00	9.279E-01	1.00	6.34E-02	5.02E-02
	1.185	0.006885	5.139E+07	0.0300	3.74E-02	2.68E-01	1.02	1.022E-02	8.129E-01	6.436E-01	1.00	3.04E-02	2.41E-02
	1.2098	0.001419	5.139E+07	0.0300	7.70E-03	5.64E-02	1.02	4.433E-04	1.701E-01	1.347E-01	1.00	1.31E-03	1.04E-03
	1.2127	0.001384	5.139E+07	0.0300	7.51E-03	5.52E-02	1.02	4.228E-04	1.663E-01	1.316E-01	1.00	1.25E-03	9.89E-04
	1.2452	0.003633	5.139E+07	0.0300	1.97E-02	1.49E-01	1.02	2.992E-03	4.450E-01	3.523E-01	1.00	8.78E-03	6.95E-03
	1.2507	0.01121	5.139E+07	0.0300	6.09E-02	4.61E-01	1.02	2.863E-02	1.378E+00	1.091E+00	1.00	8.39E-02	6.64E-02

Isotope	Energy (MeV)	Probability	Design Basis Source (Ci)	Gap Release Fraction	Cont. Conc. (uCi/cc)	27A&B QAD Det. Response (Rad/hr)	27A&B Eff.	27A&B Response (Rad/hr)	27E QAD Det. Response (Rad/hr)	27F QAD Det. Response (Rad/hr)	27E&F Eff.	27E Response (Rad/hr)	27F Response (Rad/hr)
	1.325	0.001592	5.139E+07	0.0300	8.64E-03	6.95E-02	1.03	6.192E-04	2.040E-01	1.615E-01	0.99	1.75E-03	1.38E-03
	1.3523	0.001592	5.139E+07	0.0300	8.64E-03	7.11E-02	1.03	6.329E-04	2.070E-01	1.639E-01	0.99	1.77E-03	1.40E-03
	1.3695	0.014774	5.139E+07	0.0300	8.02E-02	6.69E-01	1.03	5.525E-02	1.938E+00	1.535E+00	0.99	1.54E-01	1.22E-01
	1.4069	0.00218	5.139E+07	0.0300	1.18E-02	1.02E-01	1.03	1.238E-03	2.914E-01	2.307E-01	0.99	3.42E-03	2.70E-03
	1.4648	0.001142	5.139E+07	0.0300	6.20E-03	5.56E-02	1.04	3.587E-04	1.570E-01	1.243E-01	0.99	9.63E-04	7.63E-04
	1.5184	0.021521	5.139E+07	0.0300	1.17E-01	1.09E+00	1.04	1.322E-01	3.033E+00	2.401E+00	0.98	3.47E-01	2.75E-01
	1.5298	0.10934	5.139E+07	0.0300	5.94E-01	5.56E+00	1.04	3.435E+00	1.549E+01	1.226E+01	0.98	9.01E+00	7.13E+00
	1.6038	0.004567	5.139E+07	0.0300	2.48E-02	2.42E-01	1.05	6.301E-03	6.678E-01	5.287E-01	0.98	1.62E-02	1.28E-02
	1.6856	0.006643	5.139E+07	0.0300	3.61E-02	7.37E-01	1.06	2.819E-02	1.004E+00	7.950E-01	0.98	3.55E-02	2.81E-02
	1.8928	0.001384	5.139E+07	0.0300	7.51E-03	1.66E-01	1.09	1.358E-03	2.259E-01	1.788E-01	0.97	1.65E-03	1.30E-03
	1.9087	0.001003	5.139E+07	0.0300	5.45E-03	1.21E-01	1.09	7.172E-04	1.645E-01	1.303E-01	0.97	8.69E-04	6.88E-04
	2.0298	0.045291	5.139E+07	0.0300	2.46E-01	5.68E+00	1.10	1.536E+00	7.733E+00	6.122E+00	0.97	1.84E+00	1.46E+00
	2.0354	0.037368	5.139E+07	0.0300	2.03E-01	4.69E+00	1.10	1.048E+00	6.392E+00	5.060E+00	0.97	1.26E+00	9.96E-01
	2.1865	0.002872	5.139E+07	0.0300	1.56E-02	3.78E-01	1.12	6.596E-03	5.144E-01	4.072E-01	0.96	7.70E-03	6.10E-03
	2.1958	0.13183	5.139E+07	0.0300	7.16E-01	1.74E+01	1.13	1.407E+01	2.368E+01	1.875E+01	0.96	1.63E+01	1.29E+01
	2.2318	0.033908	5.139E+07	0.0300	1.84E-01	4.52E+00	1.13	9.401E-01	6.154E+00	4.872E+00	0.96	1.09E+00	8.61E-01
	2.3521	0.007301	5.139E+07	0.0300	3.96E-02	1.01E+00	1.14	4.547E-02	1.370E+00	1.085E+00	0.96	5.21E-02	4.13E-02
	2.3921	0.346	5.139E+07	0.0300	1.88E+00	4.82E+01	1.15	1.041E+02	6.565E+01	5.197E+01	0.95	1.17E+02	9.27E+01
	2.4089	0.001038	5.139E+07	0.0300	5.64E-03	1.45E-01	1.15	9.418E-04	1.979E-01	1.567E-01	0.95	1.06E-03	8.39E-04
	2.5484	0.006228	5.139E+07	0.0300	3.38E-02	9.03E-01	1.17	3.574E-02	1.230E+00	9.739E-01	0.94	3.91E-02	3.10E-02
	2.771	0.001488	5.139E+07	0.0300	8.08E-03	2.28E-01	1.19	2.189E-03	3.101E-01	2.455E-01	0.93	2.33E-03	1.84E-03
	1.0001	0.018892	5.139E+07	0.0300	1.03E-01	1.43E+00	1.01	1.485E-01	1.952E+00	1.545E+00	1.01	2.02E-01	1.60E-01
Kr-89	0.1962	0.0022	6.082E+07	0.0300	1.41E-02	2.42E-03	1.05	3.597E-05	3.774E-02	2.986E-02	0.97	5.18E-04	4.10E-04
	0.1975	0.0182	6.082E+07	0.0300	1.17E-01	2.08E-02	1.05	2.549E-03	3.149E-01	2.492E-01	0.97	3.57E-02	2.83E-02
	0.20503	0.00124	6.082E+07	0.0300	7.97E-03	1.62E-03	1.05	1.356E-05	2.258E-02	1.787E-02	0.98	1.76E-04	1.40E-04
	0.2209	0.2	6.082E+07	0.0300	1.29E+00	3.24E-01	1.06	4.407E-01	4.028E+00	3.187E+00	0.97	5.02E+00	3.97E+00
	0.26411	0.0066	6.082E+07	0.0300	4.24E-02	1.83E-02	1.03	7.997E-04	1.688E-01	1.336E-01	0.97	6.95E-03	5.50E-03
	0.3382	0.00342	6.082E+07	0.0300	2.20E-02	1.84E-02	1.00	4.041E-04	1.189E-01	9.409E-02	0.95	2.48E-03	1.96E-03
	0.34503	0.0118	6.082E+07	0.0300	7.58E-02	6.62E-02	1.00	5.019E-03	4.195E-01	3.321E-01	0.95	3.02E-02	2.39E-02
	0.35606	0.0414	6.082E+07	0.0300	2.66E-01	2.48E-01	1.00	6.607E-02	1.524E+00	1.207E+00	0.95	3.85E-01	3.05E-01
	0.36488	0.009	6.082E+07	0.0300	5.78E-02	5.69E-02	1.00	3.288E-03	3.402E-01	2.693E-01	0.95	1.87E-02	1.48E-02
	0.3693	0.0138	6.082E+07	0.0300	8.87E-02	8.94E-02	1.00	7.932E-03	5.285E-01	4.184E-01	0.95	4.45E-02	3.52E-02
	0.40225	0.00318	6.082E+07	0.0300	2.04E-02	2.46E-02	1.00	5.037E-04	1.328E-01	1.052E-01	0.95	2.58E-03	2.04E-03
	0.41142	0.0256	6.082E+07	0.0300	1.65E-01	2.06E-01	1.00	3.391E-02	1.092E+00	8.648E-01	0.95	1.71E-01	1.35E-01

Isotope	Energy (MeV)	Probability	Design Basis Source (Ci)	Gap Release Fraction	Cont. Conc. (uCi/cc)	27A&B QAD Det. Response (Rad/hr)	27A&B Eff.	27A&B Response (Rad/hr)	27E QAD Det. Response (Rad/hr)	27F QAD Det. Response (Rad/hr)	27E&F Eff.	27E Response (Rad/hr)	27F Response (Rad/hr)
	0.43808	0.0096	6.082E+07	0.0300	6.17E-02	8.59E-02	1.00	5.296E-03	4.333E-01	3.430E-01	0.95	2.54E-02	2.01E-02
	0.46613	0.008	6.082E+07	0.0300	5.14E-02	7.92E-02	0.99	4.029E-03	3.797E-01	3.007E-01	0.96	1.87E-02	1.48E-02
	0.49076	0.00322	6.082E+07	0.0300	2.07E-02	3.46E-02	0.99	7.079E-04	1.586E-01	1.256E-01	0.96	3.15E-03	2.49E-03
	0.4975	0.0664	6.082E+07	0.0300	4.27E-01	7.28E-01	0.99	3.075E-01	3.300E+00	2.613E+00	0.96	1.35E+00	1.07E+00
	0.4986	0.0114	6.082E+07	0.0300	7.33E-02	1.25E-01	0.99	9.095E-03	5.675E-01	4.493E-01	0.96	3.99E-02	3.16E-02
	0.5573	0.0016	6.082E+07	0.0300	1.03E-02	2.83E-02	0.99	2.876E-04	9.996E-02	7.925E-02	0.98	1.01E-03	7.98E-04
	0.57696	0.0564	6.082E+07	0.0300	3.62E-01	1.05E+00	0.99	3.785E-01	3.588E+00	2.845E+00	0.98	1.27E+00	1.01E+00
	0.5858	0.166	6.082E+07	0.0300	1.07E+00	3.18E+00	0.99	3.355E+00	1.066E+01	8.454E+00	0.98	1.11E+01	8.84E+00
	0.6262	0.006	6.082E+07	0.0300	3.86E-02	1.25E-01	1.00	4.810E-03	4.051E-01	3.211E-01	0.99	1.55E-02	1.23E-02
	0.62975	0.00342	6.082E+07	0.0300	2.20E-02	7.16E-02	1.00	1.573E-03	2.320E-01	1.839E-01	0.99	5.05E-03	4.00E-03
	0.66572	0.00114	6.082E+07	0.0300	7.33E-03	2.53E-02	1.00	1.850E-04	8.122E-02	6.438E-02	1.00	5.95E-04	4.72E-04
	0.6714	0.00106	6.082E+07	0.0300	6.81E-03	2.37E-02	1.00	1.614E-04	7.612E-02	6.034E-02	1.00	5.18E-04	4.11E-04
	0.67411	0.00232	6.082E+07	0.0300	1.49E-02	5.21E-02	1.00	7.760E-04	1.672E-01	1.325E-01	1.00	2.49E-03	1.98E-03
	0.69624	0.0178	6.082E+07	0.0300	1.14E-01	4.12E-01	1.00	4.716E-02	1.322E+00	1.048E+00	1.01	1.53E-01	1.21E-01
	0.70701	0.00498	6.082E+07	0.0300	3.20E-02	1.17E-01	1.00	3.748E-03	3.753E-01	2.975E-01	1.01	1.21E-02	9.61E-03
	0.71005	0.0078	6.082E+07	0.0300	5.01E-02	1.84E-01	1.00	9.232E-03	5.902E-01	4.677E-01	1.01	2.99E-02	2.37E-02
	0.72963	0.00296	6.082E+07	0.0300	1.90E-02	7.18E-02	1.01	1.380E-03	2.299E-01	1.822E-01	1.01	4.42E-03	3.50E-03
	0.73839	0.042	6.082E+07	0.0300	2.70E-01	1.03E+00	1.01	2.812E-01	3.300E+00	2.615E+00	1.01	8.99E-01	7.13E-01
	0.7474	0.00114	6.082E+07	0.0300	7.33E-03	2.83E-02	1.01	2.097E-04	9.061E-02	7.179E-02	1.01	6.70E-04	5.31E-04
	0.7629	0.004	6.082E+07	0.0300	2.57E-02	1.02E-01	1.01	2.636E-03	3.242E-01	2.568E-01	1.01	8.42E-03	6.67E-03
	0.7629	0.0092	6.082E+07	0.0300	5.91E-02	2.34E-01	1.01	1.395E-02	7.457E-01	5.908E-01	1.01	4.45E-02	3.53E-02
	0.77649	0.0112	6.082E+07	0.0300	7.20E-02	2.90E-01	1.01	2.104E-02	9.229E-01	7.312E-01	1.01	6.71E-02	5.31E-02
	0.82675	0.0076	6.082E+07	0.0300	4.88E-02	2.09E-01	1.01	1.030E-02	6.647E-01	5.265E-01	1.02	3.31E-02	2.62E-02
	0.83553	0.011	6.082E+07	0.0300	7.07E-02	3.05E-01	1.01	2.178E-02	9.712E-01	7.692E-01	1.02	7.00E-02	5.55E-02
	0.85737	0.00286	6.082E+07	0.0300	1.84E-02	8.12E-02	1.01	1.507E-03	2.585E-01	2.047E-01	1.02	4.85E-03	3.84E-03
	0.86708	0.0592	6.082E+07	0.0300	3.80E-01	1.70E+00	1.01	6.528E-01	5.405E+00	4.281E+00	1.02	2.10E+00	1.66E+00
	0.87042	0.0016	6.082E+07	0.0300	1.03E-02	4.61E-02	1.01	4.785E-04	1.466E-01	1.161E-01	1.02	1.54E-03	1.22E-03
	0.90427	0.0718	6.082E+07	0.0300	4.61E-01	2.15E+00	1.01	1.000E+00	6.806E+00	5.390E+00	1.01	3.17E+00	2.51E+00
	0.93095	0.0062	6.082E+07	0.0300	3.98E-02	1.91E-01	1.01	7.680E-03	6.029E-01	4.774E-01	1.01	2.43E-02	1.92E-02
	0.94419	0.00164	6.082E+07	0.0300	1.05E-02	5.12E-02	1.01	5.451E-04	1.614E-01	1.278E-01	1.01	1.72E-03	1.36E-03
	0.95318	0.00106	6.082E+07	0.0300	6.81E-03	3.34E-02	1.01	2.301E-04	1.052E-01	8.330E-02	1.01	7.24E-04	5.73E-04
	0.96042	0.00322	6.082E+07	0.0300	2.07E-02	1.02E-01	1.01	2.140E-03	3.216E-01	2.546E-01	1.01	6.72E-03	5.32E-03
	0.97439	0.0098	6.082E+07	0.0300	6.30E-02	3.16E-01	1.01	2.012E-02	9.903E-01	7.842E-01	1.01	6.30E-02	4.99E-02
	0.99737	0.0066	6.082E+07	0.0300	4.24E-02	2.19E-01	1.01	9.363E-03	6.803E-01	5.387E-01	1.01	2.91E-02	2.31E-02

Isotope	Energy (MeV)	Probability	Design Basis Source (Ci)	Gap Release Fraction	Cont. Conc. (uCi/cc)	27A&B QAD Det. Response (Rad/hr)	27A&B Eff.	27A&B Response (Rad/hr)	27E QAD Det. Response (Rad/hr)	27F QAD Det. Response (Rad/hr)	27E&F Eff.	27E Response (Rad/hr)	27F Response (Rad/hr)
	1.0108	0.00108	6.082E+07	0.0300	6.94E-03	3.62E-02	1.01	2.538E-04	1.126E-01	8.911E-02	1.01	7.89E-04	6.25E-04
	1.0444	0.00408	6.082E+07	0.0300	2.62E-02	1.41E-01	1.01	3.730E-03	4.367E-01	3.457E-01	1.01	1.16E-02	9.16E-03
	1.0765	0.00236	6.082E+07	0.0300	1.52E-02	8.38E-02	1.01	1.283E-03	2.588E-01	2.049E-01	1.01	3.96E-03	3.14E-03
	1.0881	0.00358	6.082E+07	0.0300	2.30E-02	1.28E-01	1.01	2.983E-03	3.959E-01	3.134E-01	1.00	9.11E-03	7.21E-03
	1.1032	0.009	6.082E+07	0.0300	5.78E-02	3.27E-01	1.01	1.909E-02	1.006E+00	7.963E-01	1.00	5.82E-02	4.61E-02
	1.1078	0.0292	6.082E+07	0.0300	1.88E-01	1.06E+00	1.01	2.018E-01	3.275E+00	2.593E+00	1.00	6.14E-01	4.86E-01
	1.1166	0.0166	6.082E+07	0.0300	1.07E-01	6.10E-01	1.01	6.571E-02	1.873E+00	1.483E+00	1.00	2.00E-01	1.58E-01
	1.1315	0.0016	6.082E+07	0.0300	1.03E-02	5.95E-02	1.01	6.182E-04	1.824E-01	1.444E-01	1.00	1.88E-03	1.48E-03
	1.1625	0.00214	6.082E+07	0.0300	1.38E-02	8.18E-02	1.02	1.147E-03	2.491E-01	1.972E-01	1.00	3.42E-03	2.71E-03
	1.1723	0.0098	6.082E+07	0.0300	6.30E-02	3.77E-01	1.02	2.424E-02	1.147E+00	9.083E-01	1.00	7.23E-02	5.72E-02
	1.1824	0.00166	6.082E+07	0.0300	1.07E-02	6.45E-02	1.02	7.018E-04	1.957E-01	1.549E-01	1.00	2.09E-03	1.65E-03
	1.1865	0.00184	6.082E+07	0.0300	1.18E-02	7.17E-02	1.02	8.652E-04	2.175E-01	1.722E-01	1.00	2.57E-03	2.04E-03
	1.2288	0.00144	6.082E+07	0.0300	9.25E-03	5.82E-02	1.02	5.489E-04	1.747E-01	1.383E-01	1.00	1.62E-03	1.28E-03
	1.2356	0.00594	6.082E+07	0.0300	3.82E-02	2.41E-01	1.02	9.393E-03	7.235E-01	5.728E-01	1.00	2.76E-02	2.19E-02
	1.2737	0.0136	6.082E+07	0.0300	8.74E-02	5.70E-01	1.02	5.081E-02	1.694E+00	1.341E+00	0.99	1.47E-01	1.16E-01
	1.3027	0.001	6.082E+07	0.0300	6.43E-03	4.29E-02	1.02	2.812E-04	1.266E-01	1.002E-01	0.99	8.05E-04	6.37E-04
	1.3243	0.0306	6.082E+07	0.0300	1.97E-01	1.34E+00	1.03	2.706E-01	3.919E+00	3.103E+00	0.99	7.63E-01	6.04E-01
	1.3354	0.00132	6.082E+07	0.0300	8.48E-03	5.81E-02	1.03	5.080E-04	1.701E-01	1.347E-01	0.99	1.43E-03	1.13E-03
	1.3406	0.00194	6.082E+07	0.0300	1.25E-02	8.58E-02	1.03	1.102E-03	2.506E-01	1.984E-01	0.99	3.09E-03	2.45E-03
	1.3675	0.00148	6.082E+07	0.0300	9.51E-03	6.69E-02	1.03	6.550E-04	1.939E-01	1.535E-01	0.99	1.83E-03	1.45E-03
	1.3722	0.00126	6.082E+07	0.0300	8.10E-03	5.71E-02	1.03	4.765E-04	1.655E-01	1.310E-01	0.99	1.33E-03	1.05E-03
	1.4126	0.00264	6.082E+07	0.0300	1.70E-02	1.24E-01	1.03	2.159E-03	3.539E-01	2.801E-01	0.99	5.94E-03	4.71E-03
	1.4216	0.00224	6.082E+07	0.0300	1.44E-02	1.06E-01	1.03	1.565E-03	3.017E-01	2.388E-01	0.99	4.30E-03	3.40E-03
	1.4613	0.00122	6.082E+07	0.0300	7.84E-03	5.93E-02	1.04	4.833E-04	1.675E-01	1.326E-01	0.99	1.30E-03	1.03E-03
	1.4642	0.00178	6.082E+07	0.0300	1.14E-02	8.67E-02	1.04	1.031E-03	2.446E-01	1.937E-01	0.99	2.77E-03	2.19E-03
	1.4685	0.00188	6.082E+07	0.0300	1.21E-02	9.19E-02	1.04	1.154E-03	2.589E-01	2.050E-01	0.99	3.10E-03	2.45E-03
	1.4728	0.0688	6.082E+07	0.0300	4.42E-01	3.37E+00	1.04	1.550E+00	9.494E+00	7.516E+00	0.99	4.16E+00	3.29E+00
	1.501	0.0132	6.082E+07	0.0300	8.48E-02	6.61E-01	1.04	5.830E-02	1.846E+00	1.461E+00	0.99	1.55E-01	1.23E-01
	1.5062	0.00112	6.082E+07	0.0300	7.20E-03	5.62E-02	1.04	4.208E-04	1.569E-01	1.242E-01	0.99	1.12E-03	8.85E-04
	1.53	0.0332	6.082E+07	0.0300	2.13E-01	1.69E+00	1.04	3.748E-01	4.703E+00	3.723E+00	0.98	9.83E-01	7.78E-01
	1.5337	0.0512	6.082E+07	0.0300	3.29E-01	2.61E+00	1.04	8.932E-01	7.264E+00	5.750E+00	0.98	2.34E+00	1.85E+00
	1.5553	0.00152	6.082E+07	0.0300	9.77E-03	7.84E-02	1.05	8.044E-04	2.177E-01	1.723E-01	0.98	2.08E-03	1.65E-03
	1.5738	0.0019	6.082E+07	0.0300	1.22E-02	9.90E-02	1.05	1.270E-03	2.743E-01	2.171E-01	0.98	3.28E-03	2.60E-03
	1.6341	0.0082	6.082E+07	0.0300	5.27E-02	4.42E-01	1.05	2.443E-02	1.214E+00	9.610E-01	0.98	6.27E-02	4.96E-02

V/B 9/14/94

Isotope	Energy (MeV)	Probability	Design Basis Source (Ci)	Gap Release Fraction	Cont. Conc. (uCi/cc)	27A&B QAD Det. Response (Rad/hr)	27A&B Eff.	27A&B Response (Rad/hr)	27E QAD Det. Response (Rad/hr)	27F QAD Det. Response (Rad/hr)	27E&F Eff.	27E Response (Rad/hr)	27F Response (Rad/hr)
	1.6438	0.00338	6.082E+07	0.0300	2.17E-02	1.83E-01	1.06	4.212E-03	5.024E-01	3.977E-01	0.98	1.07E-02	8.47E-03
	1.6675	0.00128	6.082E+07	0.0300	8.23E-03	7.02E-02	1.06	6.119E-04	1.922E-01	1.521E-01	0.98	1.55E-03	1.23E-03
	1.6769	0.0014	6.082E+07	0.0300	9.00E-03	7.71E-02	1.06	7.355E-04	2.109E-01	1.670E-01	0.98	1.86E-03	1.47E-03
	1.6838	0.00132	6.082E+07	0.0300	8.48E-03	7.30E-02	1.06	6.562E-04	1.994E-01	1.579E-01	0.98	1.66E-03	1.31E-03
	1.692	0.0026	6.082E+07	0.0300	1.67E-02	1.44E-01	1.06	2.556E-03	3.940E-01	3.119E-01	0.98	6.45E-03	5.11E-03
	1.6937	0.0438	6.082E+07	0.0300	2.81E-01	2.43E+00	1.06	7.262E-01	6.643E+00	5.259E+00	0.98	1.83E+00	1.45E+00
	1.7213	0.00224	6.082E+07	0.0300	1.44E-02	1.26E-01	1.06	1.927E-03	3.434E-01	2.719E-01	0.98	4.84E-03	3.83E-03
	1.7776	0.0076	6.082E+07	0.0300	4.88E-02	4.41E-01	1.07	2.304E-02	1.191E+00	9.425E-01	0.98	5.70E-02	4.51E-02
	1.7882	0.00106	6.082E+07	0.0300	6.81E-03	6.18E-02	1.07	4.505E-04	1.667E-01	1.319E-01	0.98	1.11E-03	8.81E-04
	1.8107	0.0014	6.082E+07	0.0300	9.00E-03	8.25E-02	1.08	8.020E-04	2.219E-01	1.757E-01	0.98	1.96E-03	1.55E-03
	1.8375	0.00118	6.082E+07	0.0300	7.58E-03	7.05E-02	1.08	5.773E-04	1.888E-01	1.495E-01	0.98	1.40E-03	1.11E-03
	1.8397	0.0035	6.082E+07	0.0300	2.25E-02	2.09E-01	1.08	5.085E-03	5.606E-01	4.438E-01	0.97	1.22E-02	9.68E-03
	1.8685	0.00196	6.082E+07	0.0300	1.26E-02	1.19E-01	1.08	1.617E-03	3.171E-01	2.510E-01	0.97	3.87E-03	3.07E-03
	1.8798	0.00158	6.082E+07	0.0300	1.02E-02	9.64E-02	1.08	1.057E-03	2.567E-01	2.032E-01	0.97	2.53E-03	2.00E-03
	1.9034	0.0104	6.082E+07	0.0300	6.68E-02	6.41E-01	1.09	4.672E-02	1.703E+00	1.348E+00	0.97	1.10E-01	8.74E-02
	1.9391	0.0064	6.082E+07	0.0300	4.11E-02	4.01E-01	1.09	1.800E-02	1.061E+00	8.398E-01	0.97	4.23E-02	3.35E-02
	1.9666	0.00132	6.082E+07	0.0300	8.48E-03	8.39E-02	1.10	7.827E-04	2.208E-01	1.748E-01	0.97	1.82E-03	1.44E-03
	1.9986	0.00118	6.082E+07	0.0300	7.58E-03	7.61E-02	1.10	6.347E-04	1.995E-01	1.579E-01	0.97	1.47E-03	1.16E-03
	2.0122	0.0156	6.082E+07	0.0300	1.00E-01	1.01E+00	1.10	1.115E-01	2.648E+00	2.097E+00	0.97	2.58E-01	2.04E-01
	2.021	0.00244	6.082E+07	0.0300	1.57E-02	1.59E-01	1.10	2.736E-03	4.154E-01	3.289E-01	0.97	6.32E-03	5.00E-03
	2.0465	0.00262	6.082E+07	0.0300	1.68E-02	1.72E-01	1.11	3.211E-03	4.497E-01	3.560E-01	0.97	7.34E-03	5.81E-03
	2.1006	0.0094	6.082E+07	0.0300	6.04E-02	6.28E-01	1.11	4.209E-02	1.640E+00	1.299E+00	0.97	9.61E-02	7.61E-02
	2.16	0.00528	6.082E+07	0.0300	3.39E-02	3.60E-01	1.12	1.367E-02	9.384E-01	7.428E-01	0.96	3.06E-02	2.42E-02
	2.1958	0.00128	6.082E+07	0.0300	8.23E-03	8.83E-02	1.13	8.204E-04	2.299E-01	1.820E-01	0.96	1.82E-03	1.44E-03
	2.2802	0.00204	6.082E+07	0.0300	1.31E-02	1.44E-01	1.14	2.159E-03	3.753E-01	2.971E-01	0.96	4.72E-03	3.74E-03
	2.3774	0.008	6.082E+07	0.0300	5.14E-02	5.84E-01	1.15	3.454E-02	1.512E+00	1.197E+00	0.95	7.39E-02	5.85E-02
	2.401	0.0072	6.082E+07	0.0300	4.63E-02	5.29E-01	1.15	2.817E-02	1.369E+00	1.084E+00	0.95	6.02E-02	4.76E-02
	2.5979	0.00108	6.082E+07	0.0300	6.94E-03	8.41E-02	1.17	6.832E-04	2.159E-01	1.709E-01	0.94	1.41E-03	1.12E-03
	2.6453	0.0042	6.082E+07	0.0300	2.70E-02	3.32E-01	1.18	1.056E-02	8.496E-01	6.726E-01	0.94	2.16E-02	1.71E-02
	2.7509	0.00124	6.082E+07	0.0300	7.97E-03	1.01E-01	1.19	9.567E-04	2.573E-01	2.036E-01	0.93	1.91E-03	1.51E-03
	2.7821	0.0076	6.082E+07	0.0300	4.88E-02	6.24E-01	1.19	3.625E-02	1.588E+00	1.257E+00	0.92	7.14E-02	5.65E-02
	2.7938	0.0068	6.082E+07	0.0300	4.37E-02	5.60E-01	1.19	2.910E-02	1.424E+00	1.128E+00	0.92	5.73E-02	4.53E-02
	2.8196	0.00132	6.082E+07	0.0300	8.48E-03	1.09E-01	1.19	1.105E-03	2.782E-01	2.202E-01	0.92	2.17E-03	1.72E-03
	2.8533	0.0024	6.082E+07	0.0300	1.54E-02	2.01E-01	1.19	3.685E-03	5.095E-01	4.033E-01	0.92	7.23E-03	5.72E-03

V/B 5/16/94

Isotope	Energy (MeV)	Probability	Design Basis Source (Ci)	Gap Release Fraction	Cont. Conc. (uCi/cc)	27A&B QAD Det. Response (Rad/hr)	27A&B Eff.	27A&B Response (Rad/hr)	27E QAD Det. Response (Rad/hr)	27F QAD Det. Response (Rad/hr)	27E&F Eff.	27E Response (Rad/hr)	27F Response (Rad/hr)
	2.8662	0.0174	6.082E+07	0.0300	1.12E-01	1.46E+00	1.19	1.943E-01	3.704E+00	2.932E+00	0.92	3.81E-01	3.02E-01
	2.8787	0.00324	6.082E+07	0.0300	2.08E-02	2.73E-01	1.19	6.762E-03	6.917E-01	5.476E-01	0.91	1.31E-02	1.04E-02
	3.0179	0.00254	6.082E+07	0.0300	1.63E-02	2.22E-01	1.20	4.344E-03	5.588E-01	4.423E-01	0.90	8.21E-03	6.50E-03
	3.0292	0.0027	6.082E+07	0.0300	1.74E-02	2.36E-01	1.20	4.918E-03	5.954E-01	4.713E-01	0.90	9.30E-03	7.36E-03
	3.1073	0.00194	6.082E+07	0.0300	1.25E-02	1.72E-01	1.20	2.577E-03	4.346E-01	3.440E-01	0.89	4.82E-03	3.82E-03
	3.1403	0.0104	6.082E+07	0.0300	6.68E-02	9.29E-01	1.20	7.454E-02	2.346E+00	1.857E+00	0.88	1.38E-01	1.09E-01
	3.1721	0.001	6.082E+07	0.0300	6.43E-03	8.99E-02	1.20	6.933E-04	2.270E-01	1.797E-01	0.88	1.28E-03	1.02E-03
	3.2198	0.00428	6.082E+07	0.0300	2.75E-02	3.88E-01	1.20	1.282E-02	9.808E-01	7.763E-01	0.87	2.35E-02	1.86E-02
	3.3617	0.0104	6.082E+07	0.0300	6.68E-02	9.68E-01	1.20	7.765E-02	2.448E+00	1.938E+00	0.84	1.37E-01	1.09E-01
	3.3711	0.0062	6.082E+07	0.0300	3.98E-02	5.78E-01	1.20	2.765E-02	1.462E+00	1.158E+00	0.84	4.89E-02	3.87E-02
	3.3999	0.00136	6.082E+07	0.0300	8.74E-03	1.28E-01	1.20	1.337E-03	3.225E-01	2.553E-01	0.83	2.34E-03	1.85E-03
	3.5329	0.0134	6.082E+07	0.0300	8.61E-02	1.29E+00	1.18	1.307E-01	3.254E+00	2.576E+00	0.80	2.24E-01	1.77E-01
	3.5839	0.00258	6.082E+07	0.0300	1.66E-02	2.50E-01	1.18	4.888E-03	6.324E-01	5.006E-01	0.79	8.28E-03	6.56E-03
	3.7178	0.0084	6.082E+07	0.0300	5.40E-02	8.32E-01	1.16	5.213E-02	2.107E+00	1.668E+00	0.76	8.65E-02	6.84E-02
	3.7325	0.00138	6.082E+07	0.0300	8.87E-03	1.37E-01	1.16	1.410E-03	3.469E-01	2.746E-01	0.75	2.31E-03	1.83E-03
	3.7814	0.00132	6.082E+07	0.0300	8.48E-03	1.32E-01	1.15	1.290E-03	3.347E-01	2.649E-01	0.74	2.10E-03	1.66E-03
	3.8274	0.00138	6.082E+07	0.0300	8.87E-03	1.39E-01	1.14	1.408E-03	3.524E-01	2.790E-01	0.72	2.25E-03	1.78E-03
	3.8427	0.0011	6.082E+07	0.0300	7.07E-03	1.11E-01	1.14	8.970E-04	2.817E-01	2.230E-01	0.72	1.43E-03	1.13E-03
	3.9018	0.00134	6.082E+07	0.0300	8.61E-03	1.37E-01	1.12	1.320E-03	3.464E-01	2.742E-01	0.70	2.09E-03	1.65E-03
	3.923	0.00414	6.082E+07	0.0300	2.66E-02	4.24E-01	1.12	1.265E-02	1.074E+00	8.501E-01	0.69	1.97E-02	1.56E-02
	3.9655	0.00208	6.082E+07	0.0300	1.34E-02	2.15E-01	1.11	3.186E-03	5.432E-01	4.300E-01	0.68	4.94E-03	3.91E-03
	3.9775	0.0027	6.082E+07	0.0300	1.74E-02	2.79E-01	1.10	5.330E-03	7.065E-01	5.592E-01	0.67	8.21E-03	6.50E-03
	3.996	0.00142	6.082E+07	0.0300	9.13E-03	1.47E-01	1.10	1.479E-03	3.726E-01	2.949E-01	0.67	2.28E-03	1.80E-03
	4.048	0.00116	6.082E+07	0.0300	7.45E-03	1.21E-01	1.09	9.846E-04	3.068E-01	2.429E-01	0.65	1.49E-03	1.18E-03
	4.3411	0.00104	6.082E+07	0.0300	6.68E-03	1.13E-01	0.98	7.395E-04	2.873E-01	2.274E-01	0.52	9.98E-04	7.90E-04
	4.4892	0.00134	6.082E+07	0.0300	8.61E-03	1.48E-01	0.91	1.161E-03	3.780E-01	2.992E-01	0.45	1.46E-03	1.16E-03
	2.1811	0.07118	6.082E+07	0.0300	4.57E-01	4.88E+00	1.12	2.502E+00	1.273E+01	1.008E+01	0.96	5.59E+00	4.42E+00
Xe-131m	0.16393	0.0196	9.762E+05	0.0300	2.02E-03	8.79E-03	1.00	1.777E-05	2.649E-01	2.096E-01	0.98	5.25E-04	4.15E-04
Xe-133	0.079621	0.002165	1.902E+08	0.0300	4.35E-02	1.86E-08	0.70	5.678E-10	1.479E-02	1.169E-02	0.93	5.98E-04	4.73E-04
	0.080997	0.36483	1.902E+08	0.0300	7.33E+00	5.66E-06	0.73	3.027E-05	2.511E+00	1.986E+00	0.82	1.51E+01	1.19E+01
	0.1777	0.000712	1.902E+08	0.0300	1.43E-02	4.72E-04	1.02	6.886E-06	1.070E-02	8.462E-03	0.98	1.50E-04	1.19E-04
Xe-133m	0.23322	0.103	6.044E+06	0.0300	6.58E-02	1.96E-01	1.05	1.350E-02	2.233E+00	1.767E+00	0.97	1.42E-01	1.13E-01
Xe-135	0.1582	0.002886	4.723E+07	0.0300	1.44E-02	1.10E-03	1.00	1.580E-05	3.727E-02	2.948E-02	0.99	5.31E-04	4.20E-04
	0.24979	0.899	4.723E+07	0.0300	4.49E+00	2.10E+00	1.04	9.793E+00	2.136E+01	1.691E+01	0.97	9.30E+01	7.36E+01

V/B [illegible] 9/16/94

Isotope	Energy (MeV)	Probability	Design Basis Source (Ci)	Gap Release Fraction	Cont. Conc. (uCi/cc)	27A&B QAD Det. Response (Rad/hr)	27A&B Eff.	27A&B Response (Rad/hr)	27E QAD Det. Response (Rad/hr)	27F QAD Det. Response (Rad/hr)	27E&F Eff.	27E Response (Rad/hr)	27F Response (Rad/hr)
	0.35839	0.002203	4.723E+07	0.0300	1.10E-02	1.34E-02	1.00	1.473E-04	8.168E-02	6.466E-02	0.95	8.53E-04	6.75E-04
	0.40799	0.003578	4.723E+07	0.0300	1.79E-02	2.84E-02	1.00	5.072E-04	1.515E-01	1.199E-01	0.95	2.57E-03	2.03E-03
	0.60819	0.028948	4.723E+07	0.0300	1.44E-01	5.83E-01	0.99	8.333E-02	1.910E+00	1.514E+00	0.99	2.73E-01	2.17E-01
	0.68433	0.002093	4.723E+07	0.0300	1.04E-02	4.77E-02	1.00	4.979E-04	1.530E-01	1.213E-01	1.00	1.60E-03	1.27E-03
Xe-135m	0.52656	0.80997	3.905E+07	0.0300	3.34E+00	1.28E+01	0.99	4.222E+01	4.982E+01	3.948E+01	0.97	1.61E+02	1.28E+02
Xe-137	0.298	0.001167	1.656E+08	0.0300	2.04E-02	4.76E-03	1.01	9.807E-05	3.485E-02	2.759E-02	0.96	6.83E-04	5.41E-04
	0.39335	0.001381	1.656E+08	0.0300	2.42E-02	1.02E-02	1.00	2.473E-04	5.645E-02	4.469E-02	0.95	1.30E-03	1.03E-03
	0.45549	0.307	1.656E+08	0.0300	5.37E+00	2.93E+00	0.99	1.556E+01	1.431E+01	1.133E+01	0.95	7.30E+01	5.78E+01
	0.84895	0.00614	1.656E+08	0.0300	1.07E-01	1.73E-01	1.01	1.875E-02	5.500E-01	4.356E-01	1.02	6.03E-02	4.77E-02
	0.98225	0.002057	1.656E+08	0.0300	3.60E-02	6.70E-02	1.01	2.436E-03	2.094E-01	1.658E-01	1.01	7.61E-03	6.03E-03
	1.1193	0.001053	1.656E+08	0.0300	1.84E-02	3.88E-02	1.01	7.214E-04	1.190E-01	9.422E-02	1.00	2.19E-03	1.74E-03
	1.2732	0.002241	1.656E+08	0.0300	3.92E-02	9.39E-02	1.02	3.754E-03	2.790E-01	2.209E-01	0.99	1.08E-02	8.57E-03
	1.5768	0.001013	1.656E+08	0.0300	1.77E-02	5.29E-02	1.05	9.842E-04	1.464E-01	1.159E-01	0.98	2.54E-03	2.01E-03
	1.6125	0.001228	1.656E+08	0.0300	2.15E-02	6.54E-02	1.05	1.475E-03	1.803E-01	1.427E-01	0.98	3.80E-03	3.00E-03
	1.7834	0.004083	1.656E+08	0.0300	7.14E-02	2.37E-01	1.07	1.815E-02	6.406E-01	5.072E-01	0.98	4.49E-02	3.55E-02
	2.8498	0.001811	1.656E+08	0.0300	3.17E-02	1.51E-01	1.19	5.706E-03	3.841E-01	3.041E-01	0.92	1.12E-02	8.86E-03
	1.4906	0.01315	1.656E+08	0.0300	2.30E-01	6.53E-01	1.04	1.563E-01	1.830E+00	1.449E+00	0.99	4.17E-01	3.30E-01
Xe-138	0.15375	0.059535	1.506E+08	0.0300	9.47E-01	1.99E-02	1.00	1.884E-02	7.416E-01	5.866E-01	0.99	6.95E-01	5.50E-01
	0.24256	0.034965	1.506E+08	0.0300	5.56E-01	7.47E-02	1.05	4.362E-02	7.989E-01	6.322E-01	0.97	4.31E-01	3.41E-01
	0.25831	0.315	1.506E+08	0.0300	5.01E+00	8.15E-01	1.03	4.210E+00	7.825E+00	6.193E+00	0.97	3.80E+01	3.01E+01
	0.28251	0.004284	1.506E+08	0.0300	6.82E-02	1.47E-02	1.02	1.022E-03	1.196E-01	9.464E-02	0.96	7.83E-03	6.19E-03
	0.33528	0.001071	1.506E+08	0.0300	1.70E-02	5.65E-03	1.00	9.629E-05	3.684E-02	2.916E-02	0.95	5.96E-04	4.72E-04
	0.37144	0.005009	1.506E+08	0.0300	7.97E-02	3.29E-02	1.00	2.620E-03	1.930E-01	1.528E-01	0.95	1.46E-02	1.16E-02
	0.39643	0.063	1.506E+08	0.0300	1.00E+00	4.75E-01	1.00	4.757E-01	2.594E+00	2.054E+00	0.95	2.47E+00	1.96E+00
	0.40136	0.021735	1.506E+08	0.0300	3.46E-01	1.68E-01	1.00	5.804E-02	9.058E-01	7.171E-01	0.95	2.98E-01	2.36E-01
	0.43449	0.20318	1.506E+08	0.0300	3.23E+00	1.79E+00	1.00	5.795E+00	9.105E+00	7.208E+00	0.95	2.80E+01	2.21E+01
	0.50022	0.003622	1.506E+08	0.0300	5.76E-02	4.97E-02	0.99	2.833E-03	2.238E-01	1.772E-01	0.96	1.24E-02	9.80E-03
	0.53007	0.00252	1.506E+08	0.0300	4.01E-02	4.03E-02	0.99	1.600E-03	1.551E-01	1.229E-01	0.97	6.03E-03	4.78E-03
	0.53776	0.001166	1.506E+08	0.0300	1.86E-02	1.92E-02	0.99	3.532E-04	7.195E-02	5.703E-02	0.97	1.29E-03	1.03E-03
	0.55595	0.001166	1.506E+08	0.0300	1.86E-02	2.05E-02	0.99	3.765E-04	7.276E-02	5.768E-02	0.98	1.32E-03	1.05E-03
	0.56853	0.003055	1.506E+08	0.0300	4.86E-02	5.58E-02	0.99	2.686E-03	1.927E-01	1.528E-01	0.98	9.18E-03	7.28E-03
	0.58884	0.001228	1.506E+08	0.0300	1.95E-02	2.37E-02	0.99	4.582E-04	7.916E-02	6.276E-02	0.98	1.52E-03	1.20E-03
	0.65408	0.001449	1.506E+08	0.0300	2.31E-02	3.15E-02	1.00	7.272E-04	1.016E-01	8.053E-02	1.00	2.34E-03	1.86E-03
	0.86582	0.002961	1.506E+08	0.0300	4.71E-02	8.49E-02	1.01	4.038E-03	2.700E-01	2.138E-01	1.02	1.30E-02	1.03E-02

VB 9/14/94

Isotope	Energy (MeV)	Probability	Design Basis Source (Ci)	Gap Release Fraction	Cont. Conc. (uCi/cc)	27A&B QAD Det. Response (Rad/hr)	27A&B Eff.	27A&B Response (Rad/hr)	27E QAD Det. Response (Rad/hr)	27F QAD Det. Response (Rad/hr)	27E&F Eff.	27E Response (Rad/hr)	27F Response (Rad/hr)
	0.86935	0.006206	1.506E+08	0.0300	9.88E-02	1.79E-01	1.01	1.781E-02	5.680E-01	4.499E-01	1.02	5.72E-02	4.53E-02
	0.89687	0.001323	1.506E+08	0.0300	2.11E-02	3.92E-02	1.01	8.342E-04	1.245E-01	9.862E-02	1.01	2.65E-03	2.10E-03
	0.91251	0.003276	1.506E+08	0.0300	5.21E-02	9.88E-02	1.01	5.202E-03	3.130E-01	2.479E-01	1.01	1.65E-02	1.30E-02
	0.91713	0.009198	1.506E+08	0.0300	1.46E-01	2.79E-01	1.01	4.123E-02	8.831E-01	6.993E-01	1.01	1.31E-01	1.03E-01
	0.93636	0.001355	1.506E+08	0.0300	2.16E-02	4.20E-02	1.01	9.136E-04	1.324E-01	1.048E-01	1.01	2.88E-03	2.28E-03
	0.94125	0.002299	1.506E+08	0.0300	3.66E-02	7.16E-02	1.01	2.644E-03	2.257E-01	1.787E-01	1.01	8.34E-03	6.60E-03
	1.0939	0.004095	1.506E+08	0.0300	6.52E-02	1.48E-01	1.01	9.710E-03	4.547E-01	3.600E-01	1.00	2.96E-02	2.35E-02
	1.0988	0.002142	1.506E+08	0.0300	3.41E-02	7.75E-02	1.01	2.669E-03	2.387E-01	1.890E-01	1.00	8.14E-03	6.44E-03
	1.1022	0.001071	1.506E+08	0.0300	1.70E-02	3.89E-02	1.01	6.689E-04	1.196E-01	9.470E-02	1.00	2.04E-03	1.61E-03
	1.1143	0.014742	1.506E+08	0.0300	2.35E-01	5.40E-01	1.01	1.281E-01	1.661E+00	1.315E+00	1.00	3.90E-01	3.08E-01
	1.1416	0.005134	1.506E+08	0.0300	8.17E-02	1.93E-01	1.01	1.590E-02	5.893E-01	4.665E-01	1.00	4.81E-02	3.81E-02
	1.1454	0.001323	1.506E+08	0.0300	2.11E-02	4.98E-02	1.01	1.059E-03	1.523E-01	1.206E-01	1.00	3.21E-03	2.54E-03
	1.5718	0.002646	1.506E+08	0.0300	4.21E-02	1.38E-01	1.05	6.091E-03	3.817E-01	3.021E-01	0.98	1.57E-02	1.25E-02
	1.6146	0.002363	1.506E+08	0.0300	3.76E-02	1.26E-01	1.05	4.973E-03	3.471E-01	2.748E-01	0.98	1.28E-02	1.01E-02
	1.7683	0.16727	1.506E+08	0.0300	2.66E+00	9.66E+00	1.07	2.750E+01	2.610E+01	2.066E+01	0.98	6.81E+01	5.39E+01
	1.8125	0.001796	1.506E+08	0.0300	2.86E-02	1.06E-01	1.08	3.270E-03	2.848E-01	2.255E-01	0.98	7.98E-03	6.31E-03
	1.8509	0.014238	1.506E+08	0.0300	2.27E-01	8.56E-01	1.08	2.094E-01	2.289E+00	1.812E+00	0.97	5.03E-01	3.98E-01
	1.9254	0.005639	1.506E+08	0.0300	8.97E-02	3.51E-01	1.09	3.437E-02	9.303E-01	7.365E-01	0.97	8.10E-02	6.41E-02
	2.0048	0.05355	1.506E+08	0.0300	8.52E-01	3.46E+00	1.10	3.244E+00	9.070E+00	7.180E+00	0.97	7.50E+00	5.93E+00
	2.0158	0.12254	1.506E+08	0.0300	1.95E+00	7.95E+00	1.10	1.705E+01	2.083E+01	1.649E+01	0.97	3.94E+01	3.12E+01
	2.0792	0.014427	1.506E+08	0.0300	2.30E-01	9.57E-01	1.11	2.437E-01	2.501E+00	1.980E+00	0.97	5.57E-01	4.41E-01
	2.2523	0.022869	1.506E+08	0.0300	3.64E-01	1.61E+00	1.13	6.603E-01	4.175E+00	3.305E+00	0.96	1.46E+00	1.15E+00
	2.3219	0.006206	1.506E+08	0.0300	9.88E-02	4.45E-01	1.14	5.014E-02	1.155E+00	9.145E-01	0.96	1.10E-01	8.67E-02
	2.4753	0.003119	1.506E+08	0.0300	4.96E-02	2.34E-01	1.16	1.350E-02	6.048E-01	4.788E-01	0.95	2.85E-02	2.26E-02
	2.4976	0.001733	1.506E+08	0.0300	2.76E-02	1.31E-01	1.16	4.196E-03	3.380E-01	2.676E-01	0.95	8.85E-03	7.01E-03
	1.1186	0.026586	1.506E+08	0.0300	4.23E-01	9.78E-01	1.01	4.181E-01	3.004E+00	2.378E+00	1.00	1.27E+00	1.27E+00
							SUM =	6.003E+02				1.85E+03	1.46E+03

27A = 5.138 Rad/hr
27B = 5.841 Rad/hr

27E = 1.85E+03 Rad/hr
27F = 1.47E+03 Rad/hr

Con. Vol=	5.68E+09 cm**3
27A Conc Factor	0.00856
27B Conc Factor	0.00973
Release Frac.	0.02

1/13 9/16/94

Isotope	Energy (MeV)	Probability	Design Basis Source (Ci)	Gap Release Fraction	Cont. Conc. (uCi/cc)	27A&B QAD Det. Response (Rad/hr)	27A&B Eff.	27A&B Response (Rad/hr)	27E QAD Det. Response (Rad/hr)	27F QAD Det. Response (Rad/hr)	27E&F Eff.	27E Response (Rad/hr)	27F Response (Rad/hr)
I-131	0.080183	0.026182	2.422E+07	0.0200	1.12E-01	3.20E-07	0.71	2.539E-08	1.794E-01	1.418E-01	0.88	1.76E-02	1.39E-02
	0.17721	0.002648	2.422E+07	0.0200	1.13E-02	1.73E-03	1.02	1.994E-05	3.963E-02	3.135E-02	0.98	4.39E-04	3.47E-04
	0.2843	0.060521	2.422E+07	0.0200	2.58E-01	2.12E-01	1.02	5.579E-02	1.703E+00	1.348E+00	0.96	4.22E-01	3.34E-01
	0.32578	0.002507	2.422E+07	0.0200	1.07E-02	1.24E-02	1.00	1.330E-04	8.341E-02	6.603E-02	0.96	8.56E-04	6.78E-04
	0.36448	0.81164	2.422E+07	0.0200	3.46E+00	5.12E+00	1.00	1.771E+01	3.065E+01	2.426E+01	0.95	1.01E+02	7.98E+01
	0.50299	0.003605	2.422E+07	0.0200	1.54E-02	5.03E-02	0.99	7.653E-04	2.224E-01	1.761E-01	0.96	3.28E-03	2.60E-03
	0.63697	0.072605	2.422E+07	0.0200	3.10E-01	1.54E+00	1.00	4.761E-01	4.973E+00	3.942E+00	0.99	1.52E+00	1.21E+00
	0.6427	0.002195	2.422E+07	0.0200	9.36E-03	4.69E-02	1.00	4.393E-04	1.515E-01	1.201E-01	1.00	1.42E-03	1.12E-03
	0.72289	0.018025	2.422E+07	0.0200	7.69E-02	4.33E-01	1.00	3.331E-02	1.388E+00	1.100E+00	1.01	1.08E-01	8.54E-02
	0.32939	0.002304	2.422E+07	0.0200	9.83E-03	1.17E-02	1.00	1.151E-04	7.767E-02	6.148E-02	0.95	7.25E-04	5.74E-04
I-132	0.1472	0.002369	3.466E+07	0.0200	1.45E-02	5.60E-04	1.01	8.183E-06	2.796E-02	2.211E-02	1.01	4.08E-04	3.23E-04
	0.1833	0.001382	3.466E+07	0.0200	8.44E-03	1.07E-03	1.03	9.298E-06	2.163E-02	1.712E-02	0.97	1.77E-04	1.40E-04
	0.2548	0.001875	3.466E+07	0.0200	1.14E-02	4.65E-03	1.04	5.538E-05	4.574E-02	3.620E-02	0.97	5.08E-04	4.02E-04
	0.2627	0.01441	3.466E+07	0.0200	8.80E-02	3.93E-02	1.03	3.561E-03	3.660E-01	2.896E-01	0.97	3.12E-02	2.47E-02
	0.2848	0.007205	3.466E+07	0.0200	4.40E-02	2.54E-02	1.02	1.138E-03	2.032E-01	1.608E-01	0.96	8.58E-03	6.79E-03
	0.3165	0.001382	3.466E+07	0.0200	8.44E-03	6.45E-03	1.00	5.439E-05	4.443E-02	3.516E-02	0.96	3.60E-04	2.85E-04
	0.3635	0.004935	3.466E+07	0.0200	3.01E-02	3.09E-02	1.00	9.318E-04	1.859E-01	1.471E-01	0.95	5.32E-03	4.21E-03
	0.3878	0.002961	3.466E+07	0.0200	1.81E-02	2.13E-02	1.00	3.848E-04	1.193E-01	9.443E-02	0.95	2.05E-03	1.62E-03
	0.4168	0.004738	3.466E+07	0.0200	2.89E-02	3.90E-02	1.00	1.128E-03	2.046E-01	1.620E-01	0.95	5.62E-03	4.45E-03
	0.4319	0.004836	3.466E+07	0.0200	2.95E-02	4.22E-02	1.00	1.247E-03	2.156E-01	1.707E-01	0.95	6.05E-03	4.79E-03
	0.446	0.006021	3.466E+07	0.0200	3.67E-02	5.55E-02	1.00	2.038E-03	2.759E-01	2.184E-01	0.95	9.63E-03	7.62E-03
	0.4739	0.001777	3.466E+07	0.0200	1.08E-02	1.80E-02	0.99	1.938E-04	8.537E-02	6.759E-02	0.96	8.89E-04	7.04E-04
	0.4785	0.001481	3.466E+07	0.0200	9.04E-03	1.53E-02	0.99	1.367E-04	7.164E-02	5.672E-02	0.96	6.22E-04	4.92E-04
	0.4882	0.004145	3.466E+07	0.0200	2.53E-02	4.41E-02	0.99	1.105E-03	2.034E-01	1.611E-01	0.96	4.94E-03	3.91E-03
	0.5059	0.050337	3.466E+07	0.0200	3.07E-01	7.14E-01	0.99	2.173E-01	3.101E+00	2.456E+00	0.96	9.15E-01	7.24E-01
	0.52265	0.16088	3.466E+07	0.0200	9.82E-01	2.49E+00	0.99	2.421E+00	9.888E+00	7.835E+00	0.97	9.42E+00	7.46E+00
	0.5355	0.005231	3.466E+07	0.0200	3.19E-02	8.55E-02	0.99	2.704E-03	3.226E-01	2.556E-01	0.97	9.99E-03	7.92E-03
	0.54	0.001086	3.466E+07	0.0200	6.63E-03	1.81E-02	0.99	1.186E-04	6.709E-02	5.318E-02	0.97	4.31E-04	3.42E-04
	0.5471	0.012535	3.466E+07	0.0200	7.65E-02	2.14E-01	0.99	1.620E-02	7.774E-01	6.162E-01	0.97	5.77E-02	4.57E-02
	0.6	0.001382	3.466E+07	0.0200	8.44E-03	2.74E-02	0.99	2.286E-04	9.024E-02	7.155E-02	0.99	7.54E-04	5.97E-04
	0.6208	0.003948	3.466E+07	0.0200	2.41E-02	8.13E-02	1.00	1.959E-03	2.646E-01	2.098E-01	0.99	6.31E-03	5.01E-03
	0.6212	0.015792	3.466E+07	0.0200	9.64E-02	3.26E-01	1.00	3.138E-02	1.059E+00	8.399E-01	0.99	1.01E-01	8.01E-02
	0.63022	0.13719	3.466E+07	0.0200	8.37E-01	2.87E+00	1.00	2.406E+00	9.314E+00	7.384E+00	0.99	7.72E+00	6.12E+00

v/B 9/12/94

Isotope	Energy (MeV)	Probability	Design Basis Source (Ci)	Gap Release Fraction	Cont. Conc. (uCi/cc)	27A&B QAD Det. Response (Rad/hr)	27A&B Eff.	27A&B Response (Rad/hr)	27E QAD Det. Response (Rad/hr)	27F QAD Det. Response (Rad/hr)	27E&F Eff.	27E Response (Rad/hr)	27F Response (Rad/hr)
	0.6506	0.026649	3.466E+07	0.0200	1.63E-01	5.77E-01	1.00	9.381E-02	1.859E+00	1.474E+00	1.00	3.02E-01	2.40E-01
	0.659	0.003948	3.466E+07	0.0200	2.41E-02	8.66E-02	1.00	2.086E-03	2.786E-01	2.209E-01	1.00	6.71E-03	5.32E-03
	0.66769	0.987	3.466E+07	0.0200	6.02E+00	2.19E+01	1.00	1.321E+02	7.051E+01	5.589E+01	1.00	4.25E+02	3.37E+02
	0.6698	0.04935	3.466E+07	0.0200	3.01E-01	1.10E+00	1.00	3.314E-01	3.535E+00	2.802E+00	1.00	1.06E+00	8.44E-01
	0.6716	0.052311	3.466E+07	0.0200	3.19E-01	1.17E+00	1.00	3.733E-01	3.757E+00	2.978E+00	1.00	1.20E+00	9.51E-01
	0.727	0.031584	3.466E+07	0.0200	1.93E-01	7.64E-01	1.00	1.472E-01	2.444E+00	1.937E+00	1.01	4.76E-01	3.77E-01
	0.7272	0.021714	3.466E+07	0.0200	1.33E-01	5.25E-01	1.00	6.960E-02	1.681E+00	1.332E+00	1.01	2.25E-01	1.78E-01
	0.7285	0.010857	3.466E+07	0.0200	6.63E-02	2.63E-01	1.01	1.761E-02	8.421E-01	6.673E-01	1.01	5.64E-02	4.47E-02
	0.7645	0.003948	3.466E+07	0.0200	2.41E-02	1.00E-01	1.01	2.444E-03	3.206E-01	2.540E-01	1.01	7.80E-03	6.18E-03
	0.77261	0.76196	3.466E+07	0.0200	4.65E+00	1.96E+01	1.01	9.203E+01	6.249E+01	4.951E+01	1.01	2.94E+02	2.33E+02
	0.7802	0.012338	3.466E+07	0.0200	7.53E-02	3.21E-01	1.01	2.438E-02	1.021E+00	8.091E-01	1.01	7.77E-02	6.15E-02
	0.7845	0.004244	3.466E+07	0.0200	2.59E-02	1.11E-01	1.01	2.902E-03	3.532E-01	2.798E-01	1.01	9.24E-03	7.32E-03
	0.8098	0.028623	3.466E+07	0.0200	1.75E-01	7.72E-01	1.01	1.362E-01	2.454E+00	1.944E+00	1.01	4.33E-01	3.43E-01
	0.8122	0.056259	3.466E+07	0.0200	3.43E-01	1.52E+00	1.01	5.276E-01	4.838E+00	3.832E+00	1.01	1.68E+00	1.33E+00
	0.8633	0.005823	3.466E+07	0.0200	3.55E-02	1.66E-01	1.01	5.974E-03	5.296E-01	4.194E-01	1.02	1.92E-02	1.52E-02
	0.8768	0.010758	3.466E+07	0.0200	6.57E-02	3.12E-01	1.01	2.070E-02	9.925E-01	7.860E-01	1.02	6.65E-02	5.26E-02
	0.9103	0.009179	3.466E+07	0.0200	5.60E-02	2.76E-01	1.01	1.563E-02	8.752E-01	6.930E-01	1.01	4.95E-02	3.92E-02
	0.9276	0.004145	3.466E+07	0.0200	2.53E-02	1.27E-01	1.01	3.248E-03	4.018E-01	3.182E-01	1.01	1.03E-02	8.13E-03
	0.95455	0.18062	3.466E+07	0.0200	1.10E+00	5.71E+00	1.01	6.353E+00	1.795E+01	1.421E+01	1.01	2.00E+01	1.58E+01
	0.9837	0.005626	3.466E+07	0.0200	3.43E-02	1.84E-01	1.01	6.365E-03	5.733E-01	4.540E-01	1.01	1.99E-02	1.57E-02
	1.0347	0.004738	3.466E+07	0.0200	2.89E-02	1.62E-01	1.01	4.738E-03	5.034E-01	3.985E-01	1.01	1.47E-02	1.16E-02
	1.136	0.02961	3.466E+07	0.0200	1.81E-01	1.11E+00	1.01	2.019E-01	3.385E+00	2.680E+00	1.00	6.12E-01	4.84E-01
	1.1434	0.013522	3.466E+07	0.0200	8.25E-02	5.08E-01	1.01	4.236E-02	1.554E+00	1.230E+00	1.00	1.28E-01	1.02E-01
	1.1474	0.002764	3.466E+07	0.0200	1.69E-02	1.04E-01	1.01	1.776E-03	3.185E-01	2.521E-01	1.00	5.37E-03	4.25E-03
	1.1732	0.010857	3.466E+07	0.0200	6.63E-02	4.19E-01	1.02	2.829E-02	1.272E+00	1.007E+00	1.00	8.43E-02	6.68E-02
	1.2727	0.001777	3.466E+07	0.0200	1.08E-02	7.44E-02	1.02	8.231E-04	2.212E-01	1.751E-01	0.99	2.37E-03	1.88E-03
	1.2907	0.011351	3.466E+07	0.0200	6.93E-02	4.82E-01	1.02	3.407E-02	1.427E+00	1.130E+00	0.99	9.79E-02	7.75E-02
	1.2953	0.01974	3.466E+07	0.0200	1.20E-01	8.42E-01	1.02	1.035E-01	2.489E+00	1.970E+00	0.99	2.97E-01	2.35E-01
	1.2976	0.008883	3.466E+07	0.0200	5.42E-02	3.80E-01	1.02	2.099E-02	1.121E+00	8.878E-01	0.99	6.02E-02	4.77E-02
	1.3178	0.001184	3.466E+07	0.0200	7.23E-03	5.14E-02	1.02	3.790E-04	1.511E-01	1.196E-01	0.99	1.08E-03	8.56E-04
	1.3721	0.024675	3.466E+07	0.0200	1.51E-01	1.12E+00	1.03	1.736E-01	3.241E+00	2.566E+00	0.99	4.83E-01	3.83E-01
	1.3986	0.071064	3.466E+07	0.0200	4.34E-01	3.29E+00	1.03	1.470E+00	9.460E+00	7.489E+00	0.99	4.06E+00	3.22E+00
	1.4426	0.014213	3.466E+07	0.0200	8.67E-02	6.81E-01	1.04	6.141E-02	1.933E+00	1.531E+00	0.99	1.66E-01	1.31E-01
	1.4768	0.001352	3.466E+07	0.0200	8.25E-03	6.65E-02	1.04	5.704E-04	1.869E-01	1.480E-01	0.99	1.53E-03	1.21E-03

V/B 9/16/94

Isotope	Energy (MeV)	Probability	Design Basis Source (Ci)	Gap Release Fraction	Cont. Conc. (uCi/cc)	27A&B QAD Det. Response (Rad/hr)	27A&B Eff.	27A&B Response (Rad/hr)	27E QAD Det. Response (Rad/hr)	27F QAD Det. Response (Rad/hr)	27E&F Eff.	27E Response (Rad/hr)	27F Response (Rad/hr)
	1.7575	0.002961	3.466E+07	0.0200	1.81E-02	1.70E-01	1.07	3.287E-03	4.601E-01	3.642E-01	0.98	8.15E-03	6.45E-03
	1.9211	0.011844	3.466E+07	0.0200	7.23E-02	7.37E-01	1.09	5.805E-02	1.952E+00	1.545E+00	0.97	1.37E-01	1.08E-01
	2.0022	0.010857	3.466E+07	0.0200	6.63E-02	7.01E-01	1.10	5.112E-02	1.838E+00	1.455E+00	0.97	1.18E-01	9.35E-02
	2.0868	0.002369	3.466E+07	0.0200	1.45E-02	1.58E-01	1.11	2.528E-03	4.118E-01	3.260E-01	0.97	5.78E-03	4.57E-03
	2.1727	0.001974	3.466E+07	0.0200	1.20E-02	1.35E-01	1.12	1.823E-03	3.522E-01	2.788E-01	0.96	4.07E-03	3.22E-03
	2.2232	0.001184	3.466E+07	0.0200	7.23E-03	8.23E-02	1.13	6.724E-04	2.143E-01	1.697E-01	0.96	1.49E-03	1.18E-03
	2.3905	0.001678	3.466E+07	0.0200	1.02E-02	1.23E-01	1.15	1.449E-03	3.183E-01	2.519E-01	0.95	3.10E-03	2.45E-03
	1.0146	0.031946	3.466E+07	0.0200	1.95E-01	1.07E+00	1.01	2.116E-01	3.340E+00	2.644E+00	1.01	6.58E-01	5.21E-01
I-133	0.2627	0.003565	4.747E+07	0.0200	2.98E-02	9.73E-03	1.03	2.985E-04	9.055E-02	7.167E-02	0.97	2.62E-03	2.07E-03
	0.26717	0.001165	4.747E+07	0.0200	9.74E-03	3.35E-03	1.03	3.361E-05	3.025E-02	2.394E-02	0.97	2.86E-04	2.26E-04
	0.34543	0.001036	4.747E+07	0.0200	8.66E-03	5.83E-03	1.00	5.046E-05	3.689E-02	2.920E-02	0.95	3.03E-04	2.40E-04
	0.36108	0.001122	4.747E+07	0.0200	9.38E-03	6.93E-03	1.00	6.504E-05	4.195E-02	3.321E-02	0.95	3.74E-04	2.96E-04
	0.41805	0.001528	4.747E+07	0.0200	1.28E-02	1.26E-02	1.00	1.615E-04	6.618E-02	5.240E-02	0.95	8.03E-04	6.36E-04
	0.42291	0.00309	4.747E+07	0.0200	2.58E-02	2.61E-02	1.00	6.733E-04	1.352E-01	1.071E-01	0.95	3.32E-03	2.63E-03
	0.51053	0.018127	4.747E+07	0.0200	1.52E-01	2.64E-01	0.99	3.961E-02	1.115E+00	8.834E-01	0.96	1.62E-01	1.29E-01
	0.52987	0.8632	4.747E+07	0.0200	7.22E+00	1.38E+01	0.99	9.848E+01	5.310E+01	4.208E+01	0.97	3.72E+02	2.95E+02
	0.61797	0.005395	4.747E+07	0.0200	4.51E-02	1.11E-01	1.00	4.986E-03	3.603E-01	2.857E-01	0.99	1.61E-02	1.28E-02
	0.68025	0.006448	4.747E+07	0.0200	5.39E-02	1.46E-01	1.00	7.868E-03	4.686E-01	3.714E-01	1.00	2.53E-02	2.00E-02
	0.70658	0.014933	4.747E+07	0.0200	1.25E-01	3.51E-01	1.00	4.382E-02	1.125E+00	8.915E-01	1.01	1.42E-01	1.12E-01
	0.76838	0.004566	4.747E+07	0.0200	3.82E-02	1.17E-01	1.01	4.501E-03	3.726E-01	2.952E-01	1.01	1.44E-02	1.14E-02
	0.82051	0.001537	4.747E+07	0.0200	1.28E-02	4.19E-02	1.01	5.443E-04	1.334E-01	1.057E-01	1.02	1.75E-03	1.39E-03
	0.85628	0.012344	4.747E+07	0.0200	1.03E-01	3.50E-01	1.01	3.649E-02	1.114E+00	8.825E-01	1.02	1.17E-01	9.29E-02
	0.87533	0.044714	4.747E+07	0.0200	3.74E-01	1.29E+00	1.01	4.888E-01	4.118E+00	3.261E+00	1.02	1.57E+00	1.24E+00
	0.90967	0.002124	4.747E+07	0.0200	1.78E-02	6.39E-02	1.01	1.145E-03	2.024E-01	1.603E-01	1.01	3.63E-03	2.87E-03
	1.0523	0.005516	4.747E+07	0.0200	4.61E-02	1.92E-01	1.01	8.930E-03	5.940E-01	4.703E-01	1.01	2.77E-02	2.19E-02
	1.0601	0.001373	4.747E+07	0.0200	1.15E-02	4.80E-02	1.01	5.570E-04	1.487E-01	1.178E-01	1.01	1.72E-03	1.36E-03
	1.2364	0.014933	4.747E+07	0.0200	1.25E-01	6.07E-01	1.02	7.728E-02	1.820E+00	1.441E+00	1.00	2.27E-01	1.80E-01
	1.2982	0.023306	4.747E+07	0.0200	1.95E-01	9.96E-01	1.02	1.980E-01	2.943E+00	2.330E+00	0.99	5.68E-01	4.49E-01
	1.3504	0.001485	4.747E+07	0.0200	1.24E-02	6.62E-02	1.03	8.465E-04	1.929E-01	1.527E-01	0.99	2.37E-03	1.88E-03
	0.53524	0.006072	4.747E+07	0.0200	5.08E-02	9.92E-02	0.99	4.984E-03	3.744E-01	2.967E-01	0.97	1.84E-02	1.46E-02
I-134	0.1354	0.037592	5.183E+07	0.0200	3.43E-01	3.23E-03	1.03	1.142E-03	4.014E-01	3.175E-01	1.02	1.40E-01	1.11E-01
	0.13903	0.006869	5.183E+07	0.0200	6.27E-02	8.09E-04	1.02	5.172E-05	7.565E-02	5.984E-02	1.02	4.84E-03	3.83E-03
	0.15198	0.001059	5.183E+07	0.0200	9.67E-03	3.36E-04	1.00	3.245E-06	1.300E-02	1.028E-02	1.00	1.26E-04	9.94E-05
	0.16248	0.002576	5.183E+07	0.0200	2.35E-02	1.11E-03	1.00	2.606E-05	3.442E-02	2.723E-02	0.98	7.93E-04	6.27E-04

Isotope	Energy (MeV)	Probability	Design Basis Source (Ci)	Gap Release Fraction	Cont. Conc. (uCi/cc)	27A&B QAD Det. Response (Rad/hr)	27A&B Eff.	27A&B Response (Rad/hr)	27E QAD Det. Response (Rad/hr)	27F QAD Det. Response (Rad/hr)	27E&F Eff.	27E Response (Rad/hr)	27F Response (Rad/hr)
	0.18847	0.006965	5.183E+07	0.0200	6.36E-02	6.22E-03	1.04	4.111E-04	1.132E-01	8.954E-02	0.97	6.98E-03	5.52E-03
	0.217	0.002481	5.183E+07	0.0200	2.26E-02	3.81E-03	1.06	9.148E-05	4.877E-02	3.859E-02	0.97	1.07E-03	8.48E-04
	0.23547	0.019845	5.183E+07	0.0200	1.81E-01	3.88E-02	1.05	7.372E-03	4.358E-01	3.449E-01	0.97	7.66E-02	6.06E-02
	0.2788	0.001307	5.183E+07	0.0200	1.19E-02	4.30E-03	1.02	5.233E-05	3.588E-02	2.840E-02	0.96	4.11E-04	3.25E-04
	0.31981	0.005152	5.183E+07	0.0200	4.70E-02	2.46E-02	1.00	1.156E-03	1.677E-01	1.327E-01	0.96	7.57E-03	5.99E-03
	0.35108	0.004961	5.183E+07	0.0200	4.53E-02	2.89E-02	1.00	1.308E-03	1.799E-01	1.424E-01	0.95	7.74E-03	6.12E-03
	0.40545	0.073466	5.183E+07	0.0200	6.71E-01	5.77E-01	1.00	3.870E-01	3.092E+00	2.448E+00	0.95	1.97E+00	1.56E+00
	0.411	0.006106	5.183E+07	0.0200	5.57E-02	4.91E-02	1.00	2.736E-03	2.603E-01	2.061E-01	0.95	1.38E-02	1.09E-02
	0.43335	0.041885	5.183E+07	0.0200	3.82E-01	3.68E-01	1.00	1.406E-01	1.873E+00	1.483E+00	0.95	6.80E-01	5.38E-01
	0.45892	0.012976	5.183E+07	0.0200	1.18E-01	1.25E-01	0.99	1.468E-02	6.084E-01	4.817E-01	0.96	6.92E-02	5.48E-02
	0.4655	0.003626	5.183E+07	0.0200	3.31E-02	3.58E-02	0.99	1.173E-03	1.719E-01	1.361E-01	0.96	5.46E-03	4.32E-03
	0.48888	0.014121	5.183E+07	0.0200	1.29E-01	1.51E-01	0.99	1.922E-02	6.936E-01	5.492E-01	0.96	8.58E-02	6.79E-02
	0.5144	0.023375	5.183E+07	0.0200	2.13E-01	3.48E-01	0.99	7.340E-02	1.437E+00	1.138E+00	0.97	2.97E-01	2.36E-01
	0.54083	0.078236	5.183E+07	0.0200	7.14E-01	1.31E+00	0.99	9.228E-01	4.835E+00	3.832E+00	0.97	3.35E+00	2.65E+00
	0.56552	0.008778	5.183E+07	0.0200	8.01E-02	1.59E-01	0.99	1.261E-02	5.524E-01	4.379E-01	0.98	4.34E-02	3.44E-02
	0.57075	0.002099	5.183E+07	0.0200	1.92E-02	3.86E-02	0.99	7.318E-04	1.327E-01	1.052E-01	0.98	2.49E-03	1.98E-03
	0.59536	0.11354	5.183E+07	0.0200	1.04E+00	2.22E+00	0.99	2.282E+00	7.374E+00	5.847E+00	0.99	7.57E+00	6.00E+00
	0.62179	0.10591	5.183E+07	0.0200	9.67E-01	2.19E+00	1.00	2.113E+00	7.111E+00	5.638E+00	0.99	6.81E+00	5.40E+00
	0.62796	0.023662	5.183E+07	0.0200	2.16E-01	4.94E-01	1.00	1.066E-01	1.601E+00	1.269E+00	0.99	3.42E-01	2.71E-01
	0.67734	0.084915	5.183E+07	0.0200	7.75E-01	1.91E+00	1.00	1.484E+00	6.147E+00	4.872E+00	1.00	4.76E+00	3.78E+00
	0.70665	0.008301	5.183E+07	0.0200	7.58E-02	1.95E-01	1.00	1.479E-02	6.256E-01	4.957E-01	1.01	4.79E-02	3.79E-02
	0.73074	0.019082	5.183E+07	0.0200	1.74E-01	4.64E-01	1.01	8.156E-02	1.484E+00	1.176E+00	1.01	2.61E-01	2.07E-01
	0.73918	0.007633	5.183E+07	0.0200	6.97E-02	1.88E-01	1.01	1.320E-02	6.003E-01	4.756E-01	1.01	4.22E-02	3.35E-02
	0.76668	0.041026	5.183E+07	0.0200	3.74E-01	1.05E+00	1.01	3.959E-01	3.341E+00	2.647E+00	1.01	1.26E+00	1.00E+00
	0.81638	0.005248	5.183E+07	0.0200	4.79E-02	1.43E-01	1.01	6.896E-03	4.534E-01	3.591E-01	1.02	2.22E-02	1.75E-02
	0.84702	0.9541	5.183E+07	0.0200	8.71E+00	2.68E+01	1.01	2.356E+02	8.528E+01	6.754E+01	1.02	7.57E+02	6.00E+02
	0.85729	0.069649	5.183E+07	0.0200	6.36E-01	1.98E+00	1.01	1.270E+00	6.295E+00	4.985E+00	1.02	4.08E+00	3.23E+00
	0.864	0.001908	5.183E+07	0.0200	1.74E-02	5.46E-02	1.01	9.599E-04	1.737E-01	1.375E-01	1.02	3.08E-03	2.44E-03
	0.88409	0.6526	5.183E+07	0.0200	5.96E+00	1.91E+01	1.01	1.148E+02	6.064E+01	4.802E+01	1.01	3.65E+02	2.89E+02
	0.9226	0.001431	5.183E+07	0.0200	1.31E-02	4.36E-02	1.01	5.757E-04	1.381E-01	1.093E-01	1.01	1.82E-03	1.44E-03
	0.94786	0.040358	5.183E+07	0.0200	3.68E-01	1.27E+00	1.01	4.708E-01	3.986E+00	3.156E+00	1.01	1.48E+00	1.17E+00
	0.9669	0.00353	5.183E+07	0.0200	3.22E-02	1.13E-01	1.01	3.679E-03	3.546E-01	2.808E-01	1.01	1.15E-02	9.14E-03
	0.97467	0.046751	5.183E+07	0.0200	4.27E-01	1.51E+00	1.01	6.508E-01	4.727E+00	3.743E+00	1.01	2.04E+00	1.61E+00
	1.0403	0.019082	5.183E+07	0.0200	1.74E-01	6.56E-01	1.01	1.155E-01	2.036E+00	1.612E+00	1.01	3.58E-01	2.84E-01

V/B 7/14/94

Isotope	Energy (MeV)	Probability	Design Basis Source (Ci)	Gap Release Fraction	Cont. Conc. (uCi/cc)	27A&B QAD Det. Response (Rad/hr)	27A&B Eff.	27A&B Response (Rad/hr)	27E QAD Det. Response (Rad/hr)	27F QAD Det. Response (Rad/hr)	27E&F Eff.	27E Response (Rad/hr)	27F Response (Rad/hr)
	1.0726	0.15266	5.183E+07	0.0200	1.39E+00	5.40E+00	1.01	7.601E+00	1.669E+01	1.322E+01	1.01	2.35E+01	1.86E+01
	1.1001	0.006869	5.183E+07	0.0200	6.27E-02	2.49E-01	1.01	1.575E-02	7.661E-01	6.065E-01	1.00	4.80E-02	3.80E-02
	1.1032	0.007251	5.183E+07	0.0200	6.62E-02	2.63E-01	1.01	1.760E-02	8.105E-01	6.417E-01	1.00	5.36E-02	4.25E-02
	1.1362	0.097318	5.183E+07	0.0200	8.88E-01	3.64E+00	1.01	3.263E+00	1.113E+01	8.815E+00	1.00	9.89E+00	7.83E+00
	1.1591	0.00353	5.183E+07	0.0200	3.22E-02	1.34E-01	1.01	4.376E-03	4.099E-01	3.245E-01	1.00	1.32E-02	1.05E-02
	1.164	0.001336	5.183E+07	0.0200	1.22E-02	5.11E-02	1.02	6.357E-04	1.556E-01	1.232E-01	1.00	1.90E-03	1.50E-03
	1.19	0.00353	5.183E+07	0.0200	3.22E-02	1.38E-01	1.02	4.536E-03	4.181E-01	3.310E-01	1.00	1.35E-02	1.07E-02
	1.239	0.002099	5.183E+07	0.0200	1.92E-02	8.55E-02	1.02	1.670E-03	2.561E-01	2.028E-01	1.00	4.91E-03	3.88E-03
	1.2695	0.005629	5.183E+07	0.0200	5.14E-02	2.35E-01	1.02	1.232E-02	6.993E-01	5.536E-01	1.00	3.59E-02	2.84E-02
	1.3224	0.00105	5.183E+07	0.0200	9.58E-03	4.58E-02	1.03	4.516E-04	1.343E-01	1.063E-01	0.99	1.27E-03	1.01E-03
	1.336	0.001431	5.183E+07	0.0200	1.31E-02	6.31E-02	1.03	8.483E-04	1.844E-01	1.460E-01	0.99	2.38E-03	1.89E-03
	1.3526	0.004484	5.183E+07	0.0200	4.09E-02	2.00E-01	1.03	8.439E-03	5.830E-01	4.615E-01	0.99	2.36E-02	1.87E-02
	1.4143	0.002194	5.183E+07	0.0200	2.00E-02	1.03E-01	1.03	2.120E-03	2.943E-01	2.330E-01	0.99	5.83E-03	4.62E-03
	1.4282	0.001717	5.183E+07	0.0200	1.57E-02	8.14E-02	1.03	1.313E-03	2.320E-01	1.837E-01	0.99	3.60E-03	2.85E-03
	1.4314	0.001717	5.183E+07	0.0200	1.57E-02	8.16E-02	1.03	1.316E-03	2.324E-01	1.839E-01	0.99	3.60E-03	2.85E-03
	1.4552	0.022898	5.183E+07	0.0200	2.09E-01	1.11E+00	1.04	2.407E-01	3.134E+00	2.481E+00	0.99	6.48E-01	5.13E-01
	1.47	0.007728	5.183E+07	0.0200	7.05E-02	3.78E-01	1.04	2.771E-02	1.065E+00	8.427E-01	0.99	7.43E-02	5.88E-02
	1.5055	0.001145	5.183E+07	0.0200	1.05E-02	5.75E-02	1.04	6.247E-04	1.605E-01	1.270E-01	0.99	1.66E-03	1.31E-03
	1.5415	0.005057	5.183E+07	0.0200	4.62E-02	2.59E-01	1.04	1.243E-02	7.200E-01	5.700E-01	0.98	3.26E-02	2.58E-02
	1.6138	0.043602	5.183E+07	0.0200	3.98E-01	2.32E+00	1.05	9.706E-01	6.402E+00	5.068E+00	0.98	2.50E+00	1.98E+00
	1.6292	0.002576	5.183E+07	0.0200	2.35E-02	1.38E-01	1.05	3.416E-03	3.807E-01	3.014E-01	0.98	8.77E-03	6.94E-03
	1.6443	0.004007	5.183E+07	0.0200	3.66E-02	2.17E-01	1.06	8.410E-03	5.957E-01	4.716E-01	0.98	2.14E-02	1.69E-02
	1.6552	0.00229	5.183E+07	0.0200	2.09E-02	1.25E-01	1.06	2.763E-03	3.420E-01	2.708E-01	0.98	7.01E-03	5.55E-03
	1.7415	0.026715	5.183E+07	0.0200	2.44E-01	1.52E+00	1.07	3.969E-01	4.126E+00	3.267E+00	0.98	9.86E-01	7.81E-01
	1.8068	0.057246	5.183E+07	0.0200	5.22E-01	3.37E+00	1.08	1.901E+00	9.060E+00	7.172E+00	0.98	4.64E+00	3.67E+00
	1.9259	0.001813	5.183E+07	0.0200	1.65E-02	1.13E-01	1.09	2.038E-03	2.992E-01	2.369E-01	0.97	4.80E-03	3.80E-03
	2.0206	0.001717	5.183E+07	0.0200	1.57E-02	1.12E-01	1.10	1.924E-03	2.924E-01	2.315E-01	0.97	4.44E-03	3.52E-03
	2.1599	0.002099	5.183E+07	0.0200	1.92E-02	1.43E-01	1.12	3.068E-03	3.729E-01	2.953E-01	0.96	6.86E-03	5.43E-03
	2.3124	0.002385	5.183E+07	0.0200	2.18E-02	1.71E-01	1.14	4.235E-03	4.428E-01	3.505E-01	0.96	9.25E-03	7.32E-03
	2.4674	0.001527	5.183E+07	0.0200	1.39E-02	1.15E-01	1.16	1.851E-03	2.954E-01	2.339E-01	0.95	3.91E-03	3.10E-03
	1.7872	0.013348	5.183E+07	0.0200	1.22E-01	7.78E-01	1.07	1.014E-01	2.097E+00	1.660E+00	0.98	2.50E-01	1.98E-01
I-135	0.2205	0.017452	4.470E+07	0.0200	1.37E-01	2.81E-02	1.06	4.089E-03	3.506E-01	2.775E-01	0.97	4.67E-02	3.70E-02
	0.22972	0.002317	4.470E+07	0.0200	1.82E-02	4.20E-03	1.05	8.052E-05	4.921E-02	3.894E-02	0.97	8.71E-04	6.89E-04
	0.26426	0.00184	4.470E+07	0.0200	1.45E-02	5.11E-03	1.03	7.629E-05	4.711E-02	3.728E-02	0.97	6.62E-04	5.24E-04

V/B [illegible] 9/16/94

Isotope	Energy (MeV)	Probability	Design Basis Source (Ci)	Gap Release Fraction	Cont. Conc. (uCi/cc)	27A&B QAD Det. Response (Rad/hr)	27A&B Eff.	27A&B Response (Rad/hr)	27E QAD Det. Response (Rad/hr)	27F QAD Det. Response (Rad/hr)	27E&F Eff.	27E Response (Rad/hr)	27F Response (Rad/hr)
	0.28845	0.030899	4.470E+07	0.0200	2.43E-01	1.13E-01	1.02	2.812E-02	8.857E-01	7.010E-01	0.96	2.07E-01	1.64E-01
	0.29027	0.003033	4.470E+07	0.0200	2.39E-02	1.14E-02	1.01	2.737E-04	8.763E-02	6.936E-02	0.96	2.01E-03	1.59E-03
	0.36185	0.00186	4.470E+07	0.0200	1.46E-02	1.15E-02	1.00	1.690E-04	6.969E-02	5.517E-02	0.95	9.69E-04	7.67E-04
	0.40303	0.002317	4.470E+07	0.0200	1.82E-02	1.80E-02	1.00	3.287E-04	9.697E-02	7.676E-02	0.95	1.68E-03	1.33E-03
	0.41483	0.003004	4.470E+07	0.0200	2.36E-02	2.45E-02	1.00	5.801E-04	1.292E-01	1.023E-01	0.95	2.90E-03	2.30E-03
	0.41763	0.03519	4.470E+07	0.0200	2.77E-01	2.91E-01	1.00	8.050E-02	1.523E+00	1.205E+00	0.95	4.01E-01	3.17E-01
	0.42993	0.003033	4.470E+07	0.0200	2.39E-02	2.63E-02	1.00	6.278E-04	1.347E-01	1.066E-01	0.95	3.05E-03	2.42E-03
	0.43374	0.005522	4.470E+07	0.0200	4.35E-02	4.86E-02	1.00	2.111E-03	2.471E-01	1.956E-01	0.95	1.02E-02	8.08E-03
	0.45163	0.003147	4.470E+07	0.0200	2.48E-02	2.96E-02	1.00	7.328E-04	1.457E-01	1.153E-01	0.95	3.43E-03	2.71E-03
	0.54656	0.071239	4.470E+07	0.0200	5.61E-01	1.21E+00	0.99	6.739E-01	4.418E+00	3.502E+00	0.97	2.40E+00	1.90E+00
	0.57597	0.001288	4.470E+07	0.0200	1.01E-02	2.40E-02	0.99	2.411E-04	8.185E-02	6.489E-02	0.98	8.13E-04	6.45E-04
	0.64985	0.004549	4.470E+07	0.0200	3.58E-02	9.84E-02	1.00	3.522E-03	3.171E-01	2.514E-01	1.00	1.14E-02	9.00E-03
	0.69013	0.001288	4.470E+07	0.0200	1.01E-02	2.96E-02	1.00	2.998E-04	9.486E-02	7.518E-02	1.00	9.62E-04	7.62E-04
	0.70792	0.00658	4.470E+07	0.0200	5.18E-02	1.55E-01	1.00	8.025E-03	4.965E-01	3.935E-01	1.01	2.60E-02	2.06E-02
	0.78548	0.001516	4.470E+07	0.0200	1.19E-02	3.97E-02	1.01	4.782E-04	1.263E-01	1.001E-01	1.01	1.52E-03	1.21E-03
	0.79771	0.001717	4.470E+07	0.0200	1.35E-02	4.57E-02	1.01	6.236E-04	1.452E-01	1.150E-01	1.01	1.98E-03	1.57E-03
	0.8368	0.066661	4.470E+07	0.0200	5.25E-01	1.85E+00	1.01	9.810E-01	5.893E+00	4.667E+00	1.02	3.15E+00	2.50E+00
	0.96146	0.001459	4.470E+07	0.0200	1.15E-02	4.64E-02	1.01	5.387E-04	1.458E-01	1.155E-01	1.01	1.69E-03	1.34E-03
	0.97196	0.008869	4.470E+07	0.0200	6.98E-02	2.86E-01	1.01	2.014E-02	8.948E-01	7.085E-01	1.01	6.31E-02	5.00E-02
	0.97261	0.012016	4.470E+07	0.0200	9.46E-02	3.87E-01	1.01	3.700E-02	1.213E+00	9.606E-01	1.01	1.16E-01	9.18E-02
	0.99509	0.001545	4.470E+07	0.0200	1.22E-02	5.10E-02	1.01	6.268E-04	1.589E-01	1.259E-01	1.01	1.95E-03	1.55E-03
	1.0388	0.07925	4.470E+07	0.0200	6.24E-01	2.72E+00	1.01	1.716E+00	8.448E+00	6.689E+00	1.01	5.32E+00	4.21E+00
	1.1016	0.016022	4.470E+07	0.0200	1.26E-01	5.81E-01	1.01	7.402E-02	1.789E+00	1.416E+00	1.00	2.26E-01	1.79E-01
	1.124	0.036049	4.470E+07	0.0200	2.84E-01	1.33E+00	1.01	3.820E-01	4.089E+00	3.237E+00	1.00	1.16E+00	9.19E-01
	1.1315	0.22516	4.470E+07	0.0200	1.77E+00	8.38E+00	1.01	1.500E+01	2.567E+01	2.032E+01	1.00	4.55E+01	3.60E+01
	1.1599	0.00103	4.470E+07	0.0200	8.11E-03	3.93E-02	1.02	3.247E-04	1.197E-01	9.474E-02	1.00	9.70E-04	7.68E-04
	1.169	0.008726	4.470E+07	0.0200	6.87E-02	3.35E-01	1.02	2.349E-02	1.020E+00	8.074E-01	1.00	7.00E-02	5.55E-02
	1.2405	0.009012	4.470E+07	0.0200	7.09E-02	3.68E-01	1.02	2.659E-02	1.101E+00	8.715E-01	1.00	7.81E-02	6.18E-02
	1.2604	0.2861	4.470E+07	0.0200	2.25E+00	1.19E+01	1.02	2.724E+01	3.536E+01	2.799E+01	1.00	7.96E+01	6.30E+01
	1.3679	0.006065	4.470E+07	0.0200	4.77E-02	2.74E-01	1.03	1.348E-02	7.949E-01	6.293E-01	0.99	3.76E-02	2.97E-02
	1.4484	0.003147	4.470E+07	0.0200	2.48E-02	1.51E-01	1.04	3.900E-03	4.293E-01	3.398E-01	0.99	1.05E-02	8.33E-03
	1.4576	0.086402	4.470E+07	0.0200	6.80E-01	4.19E+00	1.04	2.962E+00	1.184E+01	9.375E+00	0.99	7.97E+00	6.31E+00
	1.5028	0.010729	4.470E+07	0.0200	8.45E-02	5.38E-01	1.04	4.723E-02	1.502E+00	1.189E+00	0.99	1.26E-01	9.94E-02
	1.5664	0.012875	4.470E+07	0.0200	1.01E-01	6.69E-01	1.05	7.115E-02	1.853E+00	1.467E+00	0.98	1.84E-01	1.46E-01

V/B [illegible] 9/16/94

Isotope	Energy (MeV)	Probability	Design Basis Source (Ci)	Gap Release Fraction	Cont. Conc. (uCi/cc)	27A&B QAD Det. Response (Rad/hr)	27A&B Eff.	27A&B Response (Rad/hr)	27E QAD Det. Response (Rad/hr)	27F QAD Det. Response (Rad/hr)	27E&F Eff.	27E Response (Rad/hr)	27F Response (Rad/hr)
	1.678	0.095271	4.470E+07	0.0200	7.50E-01	5.25E+00	1.06	4.173E+00	1.436E+01	1.136E+01	0.98	1.05E+01	8.35E+00
	1.7065	0.040912	4.470E+07	0.0200	3.22E-01	2.29E+00	1.06	7.812E-01	6.235E+00	4.936E+00	0.98	1.97E+00	1.56E+00
	1.7912	0.076961	4.470E+07	0.0200	6.06E-01	4.49E+00	1.07	2.912E+00	1.211E+01	9.585E+00	0.98	7.19E+00	5.69E+00
	1.8307	0.005779	4.470E+07	0.0200	4.55E-02	3.44E-01	1.08	1.690E-02	9.225E-01	7.303E-01	0.98	4.11E-02	3.26E-02
	1.9273	0.002947	4.470E+07	0.0200	2.32E-02	1.84E-01	1.09	4.648E-03	4.866E-01	3.852E-01	0.97	1.09E-02	8.67E-03
	2.0459	0.008697	4.470E+07	0.0200	6.85E-02	5.70E-01	1.11	4.333E-02	1.492E+00	1.181E+00	0.97	9.91E-02	7.85E-02
	2.2555	0.006123	4.470E+07	0.0200	4.82E-02	4.30E-01	1.13	2.343E-02	1.119E+00	8.856E-01	0.96	5.18E-02	4.10E-02
	2.4087	0.009527	4.470E+07	0.0200	7.50E-02	7.02E-01	1.15	6.054E-02	1.815E+00	1.437E+00	0.95	1.29E-01	1.02E-01
	1.0734	0.014948	4.470E+07	0.0200	1.18E-01	5.29E-01	1.01	6.290E-02	1.636E+00	1.295E+00	1.01	1.94E-01	1.54E-01
Kr-85	0.51399	0.00434	8.915E+05	0.0300	1.02E-03	6.44E-02	0.99	6.514E-05	2.668E-01	2.113E-01	0.97	2.64E-04	2.09E-04
Kr-85m	0.30487	0.13989	1.976E+07	0.0300	7.30E-01	6.03E-01	1.01	4.444E-01	4.296E+00	3.400E+00	0.96	3.01E+00	2.38E+00
	0.00169	0.000586	1.976E+07	0.0300	3.06E-03	0.00E+00	0	0.000E+00	9.001E+10	7.101E+10	0	0.00E+00	0.00E+00
	0.013336	0.006116	1.976E+07	0.0300	3.19E-02	0.00E+00	0	0.000E+00	2.476E+00	1.954E+00	0	0.00E+00	0.00E+00
	0.013395	0.01183	1.976E+07	0.0300	6.17E-02	0.00E+00	0	0.000E+00	4.664E+00	3.681E+00	0	0.00E+00	0.00E+00
	0.015	0.003105	1.976E+07	0.0300	1.62E-02	0.00E+00	0	0.000E+00	6.416E-01	5.064E-01	0	0.00E+00	0.00E+00
	0.12985	0.003011	1.976E+07	0.0300	1.57E-02	1.59E-04	1.05	2.627E-06	3.065E-02	2.424E-02	1.02	4.91E-04	3.89E-04
	0.15118	0.75278	1.976E+07	0.0300	3.93E+00	2.33E-01	1.00	9.163E-01	9.181E+00	7.263E+00	1.00	3.61E+01	2.85E+01
	0.58128	0.000211	1.976E+07	0.0300	1.10E-03	3.99E-03	0.99	4.352E-06	1.348E-02	1.069E-02	0.98	1.46E-05	1.15E-05
Kr-87	0.40258	0.495	3.671E+07	0.0300	4.80E+00	3.84E+00	1.00	1.844E+01	2.069E+01	1.638E+01	0.95	9.44E+01	7.47E+01
	0.67387	0.019058	3.671E+07	0.0300	1.85E-01	4.27E-01	1.00	7.898E-02	1.373E+00	1.088E+00	1.00	2.54E-01	2.01E-01
	0.81425	0.001683	3.671E+07	0.0300	1.63E-02	4.56E-02	1.01	7.516E-04	1.450E-01	1.149E-01	1.02	2.41E-03	1.91E-03
	0.83637	0.007524	3.671E+07	0.0300	7.30E-02	2.09E-01	1.01	1.539E-02	6.648E-01	5.266E-01	1.02	4.95E-02	3.92E-02
	0.84543	0.072765	3.671E+07	0.0300	7.06E-01	2.04E+00	1.01	1.454E+00	6.493E+00	5.143E+00	1.02	4.67E+00	3.70E+00
	0.94664	0.001386	3.671E+07	0.0300	1.34E-02	4.34E-02	1.01	5.891E-04	1.367E-01	1.082E-01	1.01	1.86E-03	1.47E-03
	1.1754	0.011237	3.671E+07	0.0300	1.09E-01	4.34E-01	1.02	4.823E-02	1.319E+00	1.044E+00	1.00	1.44E-01	1.14E-01
	1.338	0.006484	3.671E+07	0.0300	6.29E-02	2.86E-01	1.03	1.853E-02	8.366E-01	6.623E-01	0.99	5.21E-02	4.12E-02
	1.3825	0.002871	3.671E+07	0.0300	2.78E-02	1.31E-01	1.03	3.764E-03	3.791E-01	3.001E-01	0.99	1.04E-02	8.27E-03
	1.3899	0.001237	3.671E+07	0.0300	1.20E-02	5.69E-02	1.03	7.029E-04	1.640E-01	1.298E-01	0.99	1.95E-03	1.54E-03
	1.5312	0.003564	3.671E+07	0.0300	3.46E-02	1.81E-01	1.04	6.523E-03	5.051E-01	3.999E-01	0.98	1.71E-02	1.35E-02
	1.578	0.001287	3.671E+07	0.0300	1.25E-02	6.72E-02	1.05	8.812E-04	1.862E-01	1.474E-01	0.98	2.28E-03	1.80E-03
	1.6112	0.00104	3.671E+07	0.0300	1.01E-02	5.53E-02	1.05	5.858E-04	1.525E-01	1.208E-01	0.98	1.51E-03	1.19E-03
	1.7405	0.020493	3.671E+07	0.0300	1.99E-01	1.17E+00	1.07	2.480E-01	3.165E+00	2.506E+00	0.98	6.16E-01	4.88E-01
	1.8426	0.001386	3.671E+07	0.0300	1.34E-02	8.30E-02	1.08	1.205E-03	2.222E-01	1.759E-01	0.97	2.90E-03	2.29E-03
	2.0119	0.028957	3.671E+07	0.0300	2.81E-01	1.88E+00	1.10	5.796E-01	4.916E+00	3.892E+00	0.97	1.34E+00	1.06E+00

Isotope	Energy (MeV)	Probability	Design Basis Source (Ci)	Gap Release Fraction	Cont. Conc. (uCi/cc)	27A&B QAD Det. Response (Rad/hr)	27A&B Eff.	27A&B Response (Rad/hr)	27E QAD Det. Response (Rad/hr)	27F QAD Det. Response (Rad/hr)	27E&F Eff.	27E Response (Rad/hr)	27F Response (Rad/hr)
	2.4085	0.002129	3.671E+07	0.0300	2.06E-02	1.57E-01	1.15	3.724E-03	4.056E-01	3.211E-01	0.95	7.96E-03	6.30E-03
	2.5548	0.09306	3.671E+07	0.0300	9.02E-01	7.16E+00	1.17	7.561E+00	1.841E+01	1.458E+01	0.94	1.56E+01	1.24E+01
	2.5581	0.039105	3.671E+07	0.0300	3.79E-01	3.01E+00	1.17	1.336E+00	7.743E+00	6.129E+00	0.94	2.76E+00	2.18E+00
	2.8114	0.003168	3.671E+07	0.0300	3.07E-02	2.62E-01	1.19	9.578E-03	6.662E-01	5.274E-01	0.92	1.88E-02	1.49E-02
	3.3085	0.004504	3.671E+07	0.0300	4.37E-02	4.15E-01	1.20	2.177E-02	1.050E+00	8.310E-01	0.85	3.90E-02	3.08E-02
	1.6201	0.006499	3.671E+07	0.0300	6.30E-02	3.47E-01	1.05	2.299E-02	9.567E-01	7.574E-01	0.98	5.91E-02	4.68E-02
Kr-88	0.12227	0.001972	5.139E+07	0.0300	2.68E-02	5.33E-05	1.08	1.540E-06	1.879E-02	1.486E-02	1.01	5.08E-04	4.02E-04
	0.16598	0.031036	5.139E+07	0.0300	4.21E-01	1.48E-02	1.01	6.282E-03	4.263E-01	3.373E-01	0.98	1.76E-01	1.39E-01
	0.19632	0.25985	5.139E+07	0.0300	3.53E+00	2.87E-01	1.05	1.063E+00	4.460E+00	3.529E+00	0.97	1.53E+01	1.21E+01
	0.24071	0.002526	5.139E+07	0.0300	3.43E-02	5.27E-03	1.05	1.897E-04	5.712E-02	4.521E-02	0.97	1.90E-03	1.50E-03
	0.31169	0.001073	5.139E+07	0.0300	1.46E-02	4.85E-03	1.01	7.129E-05	3.386E-02	2.680E-02	0.96	4.73E-04	3.75E-04
	0.33471	0.001453	5.139E+07	0.0300	1.97E-02	7.64E-03	1.00	1.507E-04	4.989E-02	3.949E-02	0.95	9.35E-04	7.40E-04
	0.36223	0.02249	5.139E+07	0.0300	3.05E-01	1.40E-01	1.00	4.273E-02	8.439E-01	6.680E-01	0.95	2.45E-01	1.94E-01
	0.39054	0.006436	5.139E+07	0.0300	8.74E-02	4.70E-02	1.00	4.104E-03	2.612E-01	2.067E-01	0.95	2.17E-02	1.72E-02
	0.4217	0.00128	5.139E+07	0.0300	1.74E-02	1.07E-02	1.00	1.867E-04	5.589E-02	4.424E-02	0.95	9.22E-04	7.30E-04
	0.4718	0.007266	5.139E+07	0.0300	9.86E-02	7.33E-02	0.99	7.155E-03	3.479E-01	2.755E-01	0.96	3.29E-02	2.61E-02
	0.67734	0.002353	5.139E+07	0.0300	3.19E-02	5.30E-02	1.00	1.694E-03	1.703E-01	1.350E-01	1.00	5.44E-03	4.31E-03
	0.78828	0.005328	5.139E+07	0.0300	7.23E-02	1.40E-01	1.01	1.022E-02	4.455E-01	3.529E-01	1.01	3.25E-02	2.58E-02
	0.79032	0.001246	5.139E+07	0.0300	1.69E-02	3.28E-02	1.01	5.608E-04	1.045E-01	8.275E-02	1.01	1.78E-03	1.41E-03
	0.83483	0.12975	5.139E+07	0.0300	1.76E+00	3.60E+00	1.01	6.396E+00	1.145E+01	9.066E+00	1.02	2.06E+01	1.63E+01
	0.85034	0.00173	5.139E+07	0.0300	2.35E-02	4.88E-02	1.01	1.156E-03	1.552E-01	1.229E-01	1.02	3.72E-03	2.94E-03
	0.86233	0.006712	5.139E+07	0.0300	9.11E-02	1.92E-01	1.01	1.764E-02	6.098E-01	4.830E-01	1.02	5.67E-02	4.49E-02
	0.94492	0.002941	5.139E+07	0.0300	3.99E-02	9.19E-02	1.01	3.707E-03	2.897E-01	2.294E-01	1.01	1.17E-02	9.25E-03
	0.98578	0.013148	5.139E+07	0.0300	1.78E-01	4.30E-01	1.01	7.751E-02	1.342E+00	1.063E+00	1.01	2.42E-01	1.92E-01
	0.99009	0.001419	5.139E+07	0.0300	1.93E-02	4.66E-02	1.01	9.069E-04	1.454E-01	1.151E-01	1.01	2.83E-03	2.24E-03
	1.0396	0.004844	5.139E+07	0.0300	6.58E-02	1.67E-01	1.01	1.106E-02	5.165E-01	4.090E-01	1.01	3.43E-02	2.72E-02
	1.0495	0.001419	5.139E+07	0.0300	1.93E-02	4.92E-02	1.01	9.572E-04	1.525E-01	1.207E-01	1.01	2.97E-03	2.35E-03
	1.1413	0.012837	5.139E+07	0.0300	1.74E-01	4.82E-01	1.01	8.480E-02	1.474E+00	1.167E+00	1.00	2.57E-01	2.03E-01
	1.1795	0.009965	5.139E+07	0.0300	1.35E-01	3.86E-01	1.02	5.327E-02	1.172E+00	9.279E-01	1.00	1.59E-01	1.26E-01
	1.185	0.006885	5.139E+07	0.0300	9.35E-02	2.68E-01	1.02	2.556E-02	8.129E-01	6.436E-01	1.00	7.60E-02	6.01E-02
	1.2098	0.001419	5.139E+07	0.0300	1.93E-02	5.64E-02	1.02	1.108E-03	1.701E-01	1.347E-01	1.00	3.28E-03	2.59E-03
	1.2127	0.001384	5.139E+07	0.0300	1.88E-02	5.52E-02	1.02	1.057E-03	1.663E-01	1.316E-01	1.00	3.12E-03	2.47E-03
	1.2452	0.003633	5.139E+07	0.0300	4.93E-02	1.49E-01	1.02	7.481E-03	4.450E-01	3.523E-01	1.00	2.19E-02	1.74E-02
	1.2507	0.01121	5.139E+07	0.0300	1.52E-01	4.61E-01	1.02	7.157E-02	1.378E+00	1.091E+00	1.00	2.10E-01	1.66E-01

V/B [illegible] 5/16/94

Isotope	Energy (MeV)	Probability	Design Basis Source (Ci)	Gap Release Fraction	Cont. Conc. (uCi/cc)	27A&B QAD Det. Response (Rad/hr)	27A&B Eff.	27A&B Response (Rad/hr)	27E QAD Det. Response (Rad/hr)	27F QAD Det. Response (Rad/hr)	27E&F Eff.	27E Response (Rad/hr)	27F Response (Rad/hr)
	1.325	0.001592	5.139E+07	0.0300	2.16E-02	6.95E-02	1.03	1.548E-03	2.040E-01	1.615E-01	0.99	4.36E-03	3.46E-03
	1.3523	0.001592	5.139E+07	0.0300	2.16E-02	7.11E-02	1.03	1.582E-03	2.070E-01	1.639E-01	0.99	4.43E-03	3.51E-03
	1.3695	0.014774	5.139E+07	0.0300	2.01E-01	6.69E-01	1.03	1.381E-01	1.938E+00	1.535E+00	0.99	3.85E-01	3.05E-01
	1.4069	0.00218	5.139E+07	0.0300	2.96E-02	1.02E-01	1.03	3.096E-03	2.914E-01	2.307E-01	0.99	8.54E-03	6.76E-03
	1.4648	0.001142	5.139E+07	0.0300	1.55E-02	5.56E-02	1.04	8.966E-04	1.570E-01	1.243E-01	0.99	2.41E-03	1.91E-03
	1.5184	0.021521	5.139E+07	0.0300	2.92E-01	1.09E+00	1.04	3.305E-01	3.033E+00	2.401E+00	0.98	8.68E-01	6.87E-01
	1.5298	0.10934	5.139E+07	0.0300	1.48E+00	5.56E+00	1.04	8.587E+00	1.549E+01	1.226E+01	0.98	2.25E+01	1.78E+01
	1.6038	0.004567	5.139E+07	0.0300	6.20E-02	2.42E-01	1.05	1.575E-02	6.678E-01	5.287E-01	0.98	4.06E-02	3.21E-02
	1.6856	0.006643	5.139E+07	0.0300	9.02E-02	7.37E-01	1.06	7.048E-02	1.004E+00	7.950E-01	0.98	8.87E-02	7.03E-02
	1.8928	0.001384	5.139E+07	0.0300	1.88E-02	1.66E-01	1.09	3.396E-03	2.259E-01	1.788E-01	0.97	4.12E-03	3.26E-03
	1.9087	0.001003	5.139E+07	0.0300	1.36E-02	1.21E-01	1.09	1.793E-03	1.645E-01	1.303E-01	0.97	2.17E-03	1.72E-03
	2.0298	0.045291	5.139E+07	0.0300	6.15E-01	5.68E+00	1.10	3.840E+00	7.733E+00	6.122E+00	0.97	4.61E+00	3.65E+00
	2.0354	0.037368	5.139E+07	0.0300	5.07E-01	4.69E+00	1.10	2.619E+00	6.392E+00	5.060E+00	0.97	3.14E+00	2.49E+00
	2.1865	0.002872	5.139E+07	0.0300	3.90E-02	3.78E-01	1.12	1.649E-02	5.144E-01	4.072E-01	0.96	1.93E-02	1.52E-02
	2.1958	0.13183	5.139E+07	0.0300	1.79E+00	1.74E+01	1.13	3.517E+01	2.368E+01	1.875E+01	0.96	4.07E+01	3.22E+01
	2.2318	0.033908	5.139E+07	0.0300	4.60E-01	4.52E+00	1.13	2.350E+00	6.154E+00	4.872E+00	0.96	2.72E+00	2.15E+00
	2.3521	0.007301	5.139E+07	0.0300	9.91E-02	1.01E+00	1.14	1.137E-01	1.370E+00	1.085E+00	0.96	1.30E-01	1.03E-01
	2.3921	0.346	5.139E+07	0.0300	4.70E+00	4.82E+01	1.15	2.603E+02	6.565E+01	5.197E+01	0.95	2.93E+02	2.32E+02
	2.4089	0.001038	5.139E+07	0.0300	1.41E-02	1.45E-01	1.15	2.354E-03	1.979E-01	1.567E-01	0.95	2.65E-03	2.10E-03
	2.5484	0.006228	5.139E+07	0.0300	8.45E-02	9.03E-01	1.17	8.935E-02	1.230E+00	9.739E-01	0.94	9.78E-02	7.74E-02
	2.771	0.001488	5.139E+07	0.0300	2.02E-02	2.28E-01	1.19	5.473E-03	3.101E-01	2.455E-01	0.93	5.83E-03	4.61E-03
	1.0001	0.018892	5.139E+07	0.0300	2.56E-01	1.43E+00	1.01	3.712E-01	1.952E+00	1.545E+00	1.01	5.06E-01	4.00E-01
Kr-89	0.1962	0.0022	6.082E+07	0.0300	3.53E-02	2.42E-03	1.05	8.993E-05	3.774E-02	2.986E-02	0.97	1.29E-03	1.02E-03
	0.1975	0.0182	6.082E+07	0.0300	2.92E-01	2.08E-02	1.05	6.372E-03	3.149E-01	2.492E-01	0.97	8.93E-02	7.07E-02
	0.20503	0.00124	6.082E+07	0.0300	1.99E-02	1.62E-03	1.05	3.391E-05	2.258E-02	1.787E-02	0.98	4.41E-04	3.49E-04
	0.2209	0.2	6.082E+07	0.0300	3.21E+00	3.24E-01	1.06	1.102E+00	4.028E+00	3.187E+00	0.97	1.26E+01	9.93E+00
	0.26411	0.0066	6.082E+07	0.0300	1.06E-01	1.83E-02	1.03	1.999E-03	1.688E-01	1.336E-01	0.97	1.74E-02	1.37E-02
	0.3382	0.00342	6.082E+07	0.0300	5.49E-02	1.84E-02	1.00	1.010E-03	1.189E-01	9.409E-02	0.95	6.20E-03	4.91E-03
	0.34503	0.0118	6.082E+07	0.0300	1.90E-01	6.62E-02	1.00	1.255E-02	4.195E-01	3.321E-01	0.95	7.56E-02	5.98E-02
	0.35606	0.0414	6.082E+07	0.0300	6.65E-01	2.48E-01	1.00	1.652E-01	1.524E+00	1.207E+00	0.95	9.63E-01	7.62E-01
	0.36488	0.009	6.082E+07	0.0300	1.45E-01	5.69E-02	1.00	8.221E-03	3.402E-01	2.693E-01	0.95	4.67E-02	3.70E-02
	0.3693	0.0138	6.082E+07	0.0300	2.22E-01	8.94E-02	1.00	1.983E-02	5.285E-01	4.184E-01	0.95	1.11E-01	8.81E-02
	0.40225	0.00318	6.082E+07	0.0300	5.11E-02	2.46E-02	1.00	1.259E-03	1.328E-01	1.052E-01	0.95	6.45E-03	5.10E-03
	0.41142	0.0256	6.082E+07	0.0300	4.11E-01	2.06E-01	1.00	8.478E-02	1.092E+00	8.648E-01	0.95	4.27E-01	3.38E-01

V/B 9/12/94

Isotope	Energy (MeV)	Probability	Design Basis Source (Ci)	Gap Release Fraction	Cont. Conc. (uCi/cc)	27A&B QAD Det. Response (Rad/hr)	27A&B Eff.	27A&B Response (Rad/hr)	27E QAD Det. Response (Rad/hr)	27F QAD Det. Response (Rad/hr)	27E&F Eff.	27E Response (Rad/hr)	27F Response (Rad/hr)
	0.43808	0.0096	6.082E+07	0.0300	1.54E-01	8.59E-02	1.00	1.324E-02	4.333E-01	3.430E-01	0.95	6.35E-02	5.03E-02
	0.46613	0.008	6.082E+07	0.0300	1.29E-01	7.92E-02	0.99	1.007E-02	3.797E-01	3.007E-01	0.96	4.69E-02	3.71E-02
	0.49076	0.00322	6.082E+07	0.0300	5.17E-02	3.46E-02	0.99	1.770E-03	1.586E-01	1.256E-01	0.96	7.87E-03	6.23E-03
	0.4975	0.0664	6.082E+07	0.0300	1.07E+00	7.28E-01	0.99	7.687E-01	3.300E+00	2.613E+00	0.96	3.38E+00	2.68E+00
	0.4986	0.0114	6.082E+07	0.0300	1.83E-01	1.25E-01	0.99	2.274E-02	5.675E-01	4.493E-01	0.96	9.98E-02	7.90E-02
	0.5573	0.0016	6.082E+07	0.0300	2.57E-02	2.83E-02	0.99	7.189E-04	9.996E-02	7.925E-02	0.98	2.52E-03	2.00E-03
	0.57696	0.0564	6.082E+07	0.0300	9.06E-01	1.05E+00	0.99	9.462E-01	3.588E+00	2.845E+00	0.98	3.19E+00	2.53E+00
	0.5858	0.166	6.082E+07	0.0300	2.67E+00	3.18E+00	0.99	8.388E+00	1.066E+01	8.454E+00	0.98	2.79E+01	2.21E+01
	0.6262	0.006	6.082E+07	0.0300	9.64E-02	1.25E-01	1.00	1.203E-02	4.051E-01	3.211E-01	0.99	3.87E-02	3.06E-02
	0.62975	0.00342	6.082E+07	0.0300	5.49E-02	7.16E-02	1.00	3.932E-03	2.320E-01	1.839E-01	0.99	1.26E-02	1.00E-02
	0.66572	0.00114	6.082E+07	0.0300	1.83E-02	2.53E-02	1.00	4.626E-04	8.122E-02	6.438E-02	1.00	1.49E-03	1.18E-03
	0.6714	0.00106	6.082E+07	0.0300	1.70E-02	2.37E-02	1.00	4.034E-04	7.612E-02	6.034E-02	1.00	1.30E-03	1.03E-03
	0.67411	0.00232	6.082E+07	0.0300	3.73E-02	5.21E-02	1.00	1.940E-03	1.672E-01	1.325E-01	1.00	6.23E-03	4.94E-03
	0.69624	0.0178	6.082E+07	0.0300	2.86E-01	4.12E-01	1.00	1.179E-01	1.322E+00	1.048E+00	1.01	3.82E-01	3.03E-01
	0.70701	0.00498	6.082E+07	0.0300	8.00E-02	1.17E-01	1.00	9.370E-03	3.753E-01	2.975E-01	1.01	3.03E-02	2.40E-02
	0.71005	0.0078	6.082E+07	0.0300	1.25E-01	1.84E-01	1.00	2.308E-02	5.902E-01	4.677E-01	1.01	7.47E-02	5.92E-02
	0.72963	0.00296	6.082E+07	0.0300	4.76E-02	7.18E-02	1.01	3.449E-03	2.299E-01	1.822E-01	1.01	1.10E-02	8.75E-03
	0.73839	0.042	6.082E+07	0.0300	6.75E-01	1.03E+00	1.01	7.029E-01	3.300E+00	2.615E+00	1.01	2.25E+00	1.78E+00
	0.7474	0.00114	6.082E+07	0.0300	1.83E-02	2.83E-02	1.01	5.242E-04	9.061E-02	7.179E-02	1.01	1.68E-03	1.33E-03
	0.7629	0.004	6.082E+07	0.0300	6.43E-02	1.02E-01	1.01	6.590E-03	3.242E-01	2.568E-01	1.01	2.10E-02	1.67E-02
	0.7629	0.0092	6.082E+07	0.0300	1.48E-01	2.34E-01	1.01	3.486E-02	7.457E-01	5.908E-01	1.01	1.11E-01	8.82E-02
	0.77649	0.0112	6.082E+07	0.0300	1.80E-01	2.90E-01	1.01	5.261E-02	9.229E-01	7.312E-01	1.01	1.68E-01	1.33E-01
	0.82675	0.0076	6.082E+07	0.0300	1.22E-01	2.09E-01	1.01	2.575E-02	6.647E-01	5.265E-01	1.02	8.28E-02	6.56E-02
	0.83553	0.011	6.082E+07	0.0300	1.77E-01	3.05E-01	1.01	5.446E-02	9.712E-01	7.692E-01	1.02	1.75E-01	1.39E-01
	0.85737	0.00286	6.082E+07	0.0300	4.59E-02	8.12E-02	1.01	3.769E-03	2.585E-01	2.047E-01	1.02	1.21E-02	9.59E-03
	0.86708	0.0592	6.082E+07	0.0300	9.51E-01	1.70E+00	1.01	1.632E+00	5.405E+00	4.281E+00	1.02	5.24E+00	4.15E+00
	0.87042	0.0016	6.082E+07	0.0300	2.57E-02	4.61E-02	1.01	1.196E-03	1.466E-01	1.161E-01	1.02	3.84E-03	3.04E-03
	0.90427	0.0718	6.082E+07	0.0300	1.15E+00	2.15E+00	1.01	2.500E+00	6.806E+00	5.390E+00	1.01	7.93E+00	6.28E+00
	0.93095	0.0062	6.082E+07	0.0300	9.96E-02	1.91E-01	1.01	1.920E-02	6.029E-01	4.774E-01	1.01	6.06E-02	4.80E-02
	0.94419	0.00164	6.082E+07	0.0300	2.63E-02	5.12E-02	1.01	1.363E-03	1.614E-01	1.278E-01	1.01	4.29E-03	3.40E-03
	0.95318	0.00106	6.082E+07	0.0300	1.70E-02	3.34E-02	1.01	5.752E-04	1.052E-01	8.330E-02	1.01	1.81E-03	1.43E-03
	0.96042	0.00322	6.082E+07	0.0300	5.17E-02	1.02E-01	1.01	5.349E-03	3.216E-01	2.546E-01	1.01	1.68E-02	1.33E-02
	0.97439	0.0098	6.082E+07	0.0300	1.57E-01	3.16E-01	1.01	5.030E-02	9.903E-01	7.842E-01	1.01	1.57E-01	1.25E-01
	0.99737	0.0066	6.082E+07	0.0300	1.06E-01	2.19E-01	1.01	2.341E-02	6.803E-01	5.387E-01	1.01	7.29E-02	5.77E-02

V/B [illegible] 9/6/94

Isotope	Energy (MeV)	Probability	Design Basis Source (Ci)	Gap Release Fraction	Cont. Conc. (uCi/cc)	27A&B QAD Det. Response (Rad/hr)	27A&B Eff.	27A&B Response (Rad/hr)	27E QAD Det. Response (Rad/hr)	27F QAD Det. Response (Rad/hr)	27E&F Eff.	27E Response (Rad/hr)	27F Response (Rad/hr)
	1.0108	0.00108	6.082E+07	0.0300	1.74E-02	3.62E-02	1.01	6.345E-04	1.126E-01	8.911E-02	1.01	1.97E-03	1.56E-03
	1.0444	0.00408	6.082E+07	0.0300	6.55E-02	1.41E-01	1.01	9.324E-03	4.367E-01	3.457E-01	1.01	2.89E-02	2.29E-02
	1.0765	0.00236	6.082E+07	0.0300	3.79E-02	8.38E-02	1.01	3.208E-03	2.588E-01	2.049E-01	1.01	9.91E-03	7.85E-03
	1.0881	0.00358	6.082E+07	0.0300	5.75E-02	1.28E-01	1.01	7.456E-03	3.959E-01	3.134E-01	1.00	2.28E-02	1.80E-02
	1.1032	0.009	6.082E+07	0.0300	1.45E-01	3.27E-01	1.01	4.772E-02	1.006E+00	7.963E-01	1.00	1.45E-01	1.15E-01
	1.1078	0.0292	6.082E+07	0.0300	4.69E-01	1.06E+00	1.01	5.045E-01	3.275E+00	2.593E+00	1.00	1.54E+00	1.22E+00
	1.1166	0.0166	6.082E+07	0.0300	2.67E-01	6.10E-01	1.01	1.643E-01	1.873E+00	1.483E+00	1.00	5.00E-01	3.95E-01
	1.1315	0.0016	6.082E+07	0.0300	2.57E-02	5.95E-02	1.01	1.546E-03	1.824E-01	1.444E-01	1.00	4.69E-03	3.71E-03
	1.1625	0.00214	6.082E+07	0.0300	3.44E-02	8.18E-02	1.02	2.867E-03	2.491E-01	1.972E-01	1.00	8.56E-03	6.78E-03
	1.1723	0.0098	6.082E+07	0.0300	1.57E-01	3.77E-01	1.02	6.060E-02	1.147E+00	9.083E-01	1.00	1.81E-01	1.43E-01
	1.1824	0.00166	6.082E+07	0.0300	2.67E-02	6.45E-02	1.02	1.754E-03	1.957E-01	1.549E-01	1.00	5.22E-03	4.13E-03
	1.1865	0.00184	6.082E+07	0.0300	2.96E-02	7.17E-02	1.02	2.163E-03	2.175E-01	1.722E-01	1.00	6.43E-03	5.09E-03
	1.2288	0.00144	6.082E+07	0.0300	2.31E-02	5.82E-02	1.02	1.372E-03	1.747E-01	1.383E-01	1.00	4.04E-03	3.20E-03
	1.2356	0.00594	6.082E+07	0.0300	9.54E-02	2.41E-01	1.02	2.348E-02	7.235E-01	5.728E-01	1.00	6.90E-02	5.47E-02
	1.2737	0.0136	6.082E+07	0.0300	2.18E-01	5.70E-01	1.02	1.270E-01	1.694E+00	1.341E+00	0.99	3.66E-01	2.90E-01
	1.3027	0.001	6.082E+07	0.0300	1.61E-02	4.29E-02	1.02	7.030E-04	1.266E-01	1.002E-01	0.99	2.01E-03	1.59E-03
	1.3243	0.0306	6.082E+07	0.0300	4.92E-01	1.34E+00	1.03	6.764E-01	3.919E+00	3.103E+00	0.99	1.91E+00	1.51E+00
	1.3354	0.00132	6.082E+07	0.0300	2.12E-02	5.81E-02	1.03	1.270E-03	1.701E-01	1.347E-01	0.99	3.57E-03	2.83E-03
	1.3406	0.00194	6.082E+07	0.0300	3.12E-02	8.58E-02	1.03	2.754E-03	2.506E-01	1.984E-01	0.99	7.73E-03	6.12E-03
	1.3675	0.00148	6.082E+07	0.0300	2.38E-02	6.69E-02	1.03	1.638E-03	1.939E-01	1.535E-01	0.99	4.56E-03	3.61E-03
	1.3722	0.00126	6.082E+07	0.0300	2.02E-02	5.71E-02	1.03	1.191E-03	1.655E-01	1.310E-01	0.99	3.32E-03	2.63E-03
	1.4126	0.00264	6.082E+07	0.0300	4.24E-02	1.24E-01	1.03	5.397E-03	3.539E-01	2.801E-01	0.99	1.49E-02	1.18E-02
	1.4216	0.00224	6.082E+07	0.0300	3.60E-02	1.06E-01	1.03	3.913E-03	3.017E-01	2.388E-01	0.99	1.07E-02	8.51E-03
	1.4613	0.00122	6.082E+07	0.0300	1.96E-02	5.93E-02	1.04	1.208E-03	1.675E-01	1.326E-01	0.99	3.25E-03	2.57E-03
	1.4642	0.00178	6.082E+07	0.0300	2.86E-02	8.67E-02	1.04	2.578E-03	2.446E-01	1.937E-01	0.99	6.93E-03	5.48E-03
	1.4685	0.00188	6.082E+07	0.0300	3.02E-02	9.19E-02	1.04	2.885E-03	2.589E-01	2.050E-01	0.99	7.74E-03	6.13E-03
	1.4728	0.0688	6.082E+07	0.0300	1.11E+00	3.37E+00	1.04	3.876E+00	9.494E+00	7.516E+00	0.99	1.04E+01	8.22E+00
	1.501	0.0132	6.082E+07	0.0300	2.12E-01	6.61E-01	1.04	1.458E-01	1.846E+00	1.461E+00	0.99	3.88E-01	3.07E-01
	1.5062	0.00112	6.082E+07	0.0300	1.80E-02	5.62E-02	1.04	1.052E-03	1.569E-01	1.242E-01	0.99	2.80E-03	2.21E-03
	1.53	0.0332	6.082E+07	0.0300	5.33E-01	1.69E+00	1.04	9.371E-01	4.703E+00	3.723E+00	0.98	2.46E+00	1.95E+00
	1.5337	0.0512	6.082E+07	0.0300	8.23E-01	2.61E+00	1.04	2.233E+00	7.264E+00	5.750E+00	0.98	5.86E+00	4.64E+00
	1.5553	0.00152	6.082E+07	0.0300	2.44E-02	7.84E-02	1.05	2.011E-03	2.177E-01	1.723E-01	0.98	5.21E-03	4.12E-03
	1.5738	0.0019	6.082E+07	0.0300	3.05E-02	9.90E-02	1.05	3.174E-03	2.743E-01	2.171E-01	0.98	8.20E-03	6.50E-03
	1.6341	0.0082	6.082E+07	0.0300	1.32E-01	4.42E-01	1.05	6.107E-02	1.214E+00	9.610E-01	0.98	1.57E-01	1.24E-01

V/S 9/16/94

Isotope	Energy (MeV)	Probability	Design Basis Source (Ci)	Gap Release Fraction	Cont. Conc. (uCi/cc)	27A&B QAD Det. Response (Rad/hr)	27A&B Eff.	27A&B Response (Rad/hr)	27E QAD Det. Response (Rad/hr)	27F QAD Det. Response (Rad/hr)	27E&F Eff.	27E Response (Rad/hr)	27F Response (Rad/hr)
	1.6438	0.00338	6.082E+07	0.0300	5.43E-02	1.83E-01	1.06	1.053E-02	5.024E-01	3.977E-01	0.98	2.67E-02	2.12E-02
	1.6675	0.00128	6.082E+07	0.0300	2.06E-02	7.02E-02	1.06	1.530E-03	1.922E-01	1.521E-01	0.98	3.87E-03	3.07E-03
	1.6769	0.0014	6.082E+07	0.0300	2.25E-02	7.71E-02	1.06	1.839E-03	2.109E-01	1.670E-01	0.98	4.65E-03	3.68E-03
	1.6838	0.00132	6.082E+07	0.0300	2.12E-02	7.30E-02	1.06	1.641E-03	1.994E-01	1.579E-01	0.98	4.14E-03	3.28E-03
	1.692	0.0026	6.082E+07	0.0300	4.18E-02	1.44E-01	1.06	6.390E-03	3.940E-01	3.119E-01	0.98	1.61E-02	1.28E-02
	1.6937	0.0438	6.082E+07	0.0300	7.04E-01	2.43E+00	1.06	1.816E+00	6.643E+00	5.259E+00	0.98	4.58E+00	3.63E+00
	1.7213	0.00224	6.082E+07	0.0300	3.60E-02	1.26E-01	1.06	4.817E-03	3.434E-01	2.719E-01	0.98	1.21E-02	9.59E-03
	1.7776	0.0076	6.082E+07	0.0300	1.22E-01	4.41E-01	1.07	5.761E-02	1.191E+00	9.425E-01	0.98	1.42E-01	1.13E-01
	1.7882	0.00106	6.082E+07	0.0300	1.70E-02	6.18E-02	1.07	1.126E-03	1.667E-01	1.319E-01	0.98	2.78E-03	2.20E-03
	1.8107	0.0014	6.082E+07	0.0300	2.25E-02	8.25E-02	1.08	2.005E-03	2.219E-01	1.757E-01	0.98	4.89E-03	3.87E-03
	1.8375	0.00118	6.082E+07	0.0300	1.90E-02	7.05E-02	1.08	1.443E-03	1.888E-01	1.495E-01	0.98	3.51E-03	2.78E-03
	1.8397	0.0035	6.082E+07	0.0300	5.62E-02	2.09E-01	1.08	1.271E-02	5.606E-01	4.438E-01	0.97	3.06E-02	2.42E-02
	1.8685	0.00196	6.082E+07	0.0300	3.15E-02	1.19E-01	1.08	4.042E-03	3.171E-01	2.510E-01	0.97	9.68E-03	7.67E-03
	1.8798	0.00158	6.082E+07	0.0300	2.54E-02	9.64E-02	1.08	2.641E-03	2.567E-01	2.032E-01	0.97	6.32E-03	5.00E-03
	1.9034	0.0104	6.082E+07	0.0300	1.67E-01	6.41E-01	1.09	1.168E-01	1.703E+00	1.348E+00	0.97	2.76E-01	2.18E-01
	1.9391	0.0064	6.082E+07	0.0300	1.03E-01	4.01E-01	1.09	4.499E-02	1.061E+00	8.398E-01	0.97	1.06E-01	8.38E-02
	1.9666	0.00132	6.082E+07	0.0300	2.12E-02	8.39E-02	1.10	1.957E-03	2.208E-01	1.748E-01	0.97	4.54E-03	3.60E-03
	1.9986	0.00118	6.082E+07	0.0300	1.90E-02	7.61E-02	1.10	1.587E-03	1.995E-01	1.579E-01	0.97	3.67E-03	2.90E-03
	2.0122	0.0156	6.082E+07	0.0300	2.51E-01	1.01E+00	1.10	2.787E-01	2.648E+00	2.097E+00	0.97	6.44E-01	5.10E-01
	2.021	0.00244	6.082E+07	0.0300	3.92E-02	1.59E-01	1.10	6.839E-03	4.154E-01	3.289E-01	0.97	1.58E-02	1.25E-02
	2.0465	0.00262	6.082E+07	0.0300	4.21E-02	1.72E-01	1.11	8.028E-03	4.497E-01	3.560E-01	0.97	1.84E-02	1.45E-02
	2.1006	0.0094	6.082E+07	0.0300	1.51E-01	6.28E-01	1.11	1.052E-01	1.640E+00	1.299E+00	0.97	2.40E-01	1.90E-01
	2.16	0.00528	6.082E+07	0.0300	8.48E-02	3.60E-01	1.12	3.418E-02	9.384E-01	7.428E-01	0.96	7.64E-02	6.05E-02
	2.1958	0.00128	6.082E+07	0.0300	2.06E-02	8.83E-02	1.13	2.051E-03	2.299E-01	1.820E-01	0.96	4.54E-03	3.59E-03
	2.2802	0.00204	6.082E+07	0.0300	3.28E-02	1.44E-01	1.14	5.398E-03	3.753E-01	2.971E-01	0.96	1.18E-02	9.35E-03
	2.3774	0.008	6.082E+07	0.0300	1.29E-01	5.84E-01	1.15	8.634E-02	1.512E+00	1.197E+00	0.95	1.85E-01	1.46E-01
	2.401	0.0072	6.082E+07	0.0300	1.16E-01	5.29E-01	1.15	7.042E-02	1.369E+00	1.084E+00	0.95	1.50E-01	1.19E-01
	2.5979	0.00108	6.082E+07	0.0300	1.74E-02	8.41E-02	1.17	1.708E-03	2.159E-01	1.709E-01	0.94	3.52E-03	2.79E-03
	2.6453	0.0042	6.082E+07	0.0300	6.75E-02	3.32E-01	1.18	2.641E-02	8.496E-01	6.726E-01	0.94	5.39E-02	4.27E-02
	2.7509	0.00124	6.082E+07	0.0300	1.99E-02	1.01E-01	1.19	2.392E-03	2.573E-01	2.036E-01	0.93	4.77E-03	3.77E-03
	2.7821	0.0076	6.082E+07	0.0300	1.22E-01	6.24E-01	1.19	9.064E-02	1.588E+00	1.257E+00	0.92	1.78E-01	1.41E-01
	2.7938	0.0068	6.082E+07	0.0300	1.09E-01	5.60E-01	1.19	7.276E-02	1.424E+00	1.128E+00	0.92	1.43E-01	1.13E-01
	2.8196	0.00132	6.082E+07	0.0300	2.12E-02	1.09E-01	1.19	2.762E-03	2.782E-01	2.202E-01	0.92	5.43E-03	4.30E-03
	2.8533	0.0024	6.082E+07	0.0300	3.86E-02	2.01E-01	1.19	9.212E-03	5.095E-01	4.033E-01	0.92	1.81E-02	1.43E-02

Isotope	Energy (MeV)	Probability	Design Basis Source (Ci)	Gap Release Fraction	Cont. Conc. (uCi/cc)	27A&B QAD Det. Response (Rad/hr)	27A&B Eff.	27A&B Response (Rad/hr)	27E, QAD Det. Response (Rad/hr)	27F QAD Det. Response (Rad/hr)	27E&F Eff.	27E Response (Rad/hr)	27F Response (Rad/hr)
	2.8662	0.0174	6.082E+07	0.0300	2.80E-01	1.46E+00	1.19	4.859E-01	3.704E+00	2.932E+00	0.92	9.53E-01	7.54E-01
	2.8787	0.00324	6.082E+07	0.0300	5.21E-02	2.73E-01	1.19	1.691E-02	6.917E-01	5.476E-01	0.91	3.28E-02	2.59E-02
	3.0179	0.00254	6.082E+07	0.0300	4.08E-02	2.22E-01	1.20	1.086E-02	5.588E-01	4.423E-01	0.90	2.05E-02	1.62E-02
	3.0292	0.0027	6.082E+07	0.0300	4.34E-02	2.36E-01	1.20	1.230E-02	5.954E-01	4.713E-01	0.90	2.32E-02	1.84E-02
	3.1073	0.00194	6.082E+07	0.0300	3.12E-02	1.72E-01	1.20	6.443E-03	4.346E-01	3.440E-01	0.89	1.21E-02	9.54E-03
	3.1403	0.0104	6.082E+07	0.0300	1.67E-01	9.29E-01	1.20	1.863E-01	2.346E+00	1.857E+00	0.88	3.45E-01	2.73E-01
	3.1721	0.001	6.082E+07	0.0300	1.61E-02	8.99E-02	1.20	1.733E-03	2.270E-01	1.797E-01	0.88	3.21E-03	2.54E-03
	3.2198	0.00428	6.082E+07	0.0300	6.88E-02	3.88E-01	1.20	3.204E-02	9.808E-01	7.763E-01	0.87	5.87E-02	4.64E-02
	3.3617	0.0104	6.082E+07	0.0300	1.67E-01	9.68E-01	1.20	1.941E-01	2.448E+00	1.938E+00	0.84	3.44E-01	2.72E-01
	3.3711	0.0062	6.082E+07	0.0300	9.96E-02	5.78E-01	1.20	6.912E-02	1.462E+00	1.158E+00	0.84	1.22E-01	9.68E-02
	3.3999	0.00136	6.082E+07	0.0300	2.18E-02	1.28E-01	1.20	3.343E-03	3.225E-01	2.553E-01	0.83	5.85E-03	4.63E-03
	3.5329	0.0134	6.082E+07	0.0300	2.15E-01	1.29E+00	1.18	3.267E-01	3.254E+00	2.576E+00	0.80	5.60E-01	4.44E-01
	3.5839	0.00258	6.082E+07	0.0300	4.14E-02	2.50E-01	1.18	1.222E-02	6.324E-01	5.006E-01	0.79	2.07E-02	1.64E-02
	3.7178	0.0084	6.082E+07	0.0300	1.35E-01	8.32E-01	1.16	1.303E-01	2.107E+00	1.668E+00	0.76	2.16E-01	1.71E-01
	3.7325	0.00138	6.082E+07	0.0300	2.22E-02	1.37E-01	1.16	3.524E-03	3.469E-01	2.746E-01	0.75	5.77E-03	4.57E-03
	3.7814	0.00132	6.082E+07	0.0300	2.12E-02	1.32E-01	1.15	3.224E-03	3.347E-01	2.649E-01	0.74	5.25E-03	4.16E-03
	3.8274	0.00138	6.082E+07	0.0300	2.22E-02	1.39E-01	1.14	3.519E-03	3.524E-01	2.790E-01	0.72	5.63E-03	4.45E-03
	3.8427	0.0011	6.082E+07	0.0300	1.77E-02	1.11E-01	1.14	2.242E-03	2.817E-01	2.230E-01	0.72	3.58E-03	2.84E-03
	3.9018	0.00134	6.082E+07	0.0300	2.15E-02	1.37E-01	1.12	3.301E-03	3.464E-01	2.742E-01	0.70	5.22E-03	4.13E-03
	3.923	0.00414	6.082E+07	0.0300	6.65E-02	4.24E-01	1.12	3.162E-02	1.074E+00	8.501E-01	0.69	4.93E-02	3.90E-02
	3.9655	0.00208	6.082E+07	0.0300	3.34E-02	2.15E-01	1.11	7.964E-03	5.432E-01	4.300E-01	0.68	1.23E-02	9.77E-03
	3.9775	0.0027	6.082E+07	0.0300	4.34E-02	2.79E-01	1.10	1.333E-02	7.065E-01	5.592E-01	0.67	2.05E-02	1.63E-02
	3.996	0.00142	6.082E+07	0.0300	2.28E-02	1.47E-01	1.10	3.696E-03	3.726E-01	2.949E-01	0.67	5.69E-03	4.51E-03
	4.048	0.00116	6.082E+07	0.0300	1.86E-02	1.21E-01	1.09	2.462E-03	3.068E-01	2.429E-01	0.65	3.72E-03	2.94E-03
	4.3411	0.00104	6.082E+07	0.0300	1.67E-02	1.13E-01	0.98	1.849E-03	2.873E-01	2.274E-01	0.52	2.50E-03	1.98E-03
	4.4892	0.00134	6.082E+07	0.0300	2.15E-02	1.48E-01	0.91	2.904E-03	3.780E-01	2.992E-01	0.45	3.66E-03	2.90E-03
	2.1811	0.07118	6.082E+07	0.0300	1.14E+00	4.88E+00	1.12	6.255E+00	1.273E+01	1.008E+01	0.96	1.40E+01	1.11E+01
Xe-131m	0.16393	0.0196	9.762E+05	0.0300	5.05E-03	8.79E-03	1.00	4.443E-05	2.649E-01	2.096E-01	0.98	1.31E-03	1.04E-03
Xe-133	0.079621	0.002165	1.902E+08	0.0300	1.09E-01	1.86E-08	0.70	1.419E-09	1.479E-02	1.169E-02	0.93	1.50E-03	1.18E-03
	0.080997	0.36483	1.902E+08	0.0300	1.83E+01	5.66E-06	0.73	7.568E-05	2.511E+00	1.986E+00	0.82	3.77E+01	2.98E+01
	0.1777	0.000712	1.902E+08	0.0300	3.58E-02	4.72E-04	1.02	1.722E-05	1.070E-02	8.462E-03	0.98	3.75E-04	2.97E-04
Xe-133m	0.23322	0.103	6.044E+06	0.0300	1.64E-01	1.96E-01	1.05	3.376E-02	2.233E+00	1.767E+00	0.97	3.56E-01	2.82E-01
Xe-135	0.1582	0.002886	4.723E+07	0.0300	3.60E-02	1.10E-03	1.00	3.950E-05	3.727E-02	2.948E-02	0.99	1.33E-03	1.05E-03
	0.24979	0.899	4.723E+07	0.0300	1.12E+01	2.10E+00	1.04	2.448E+01	2.136E+01	1.691E+01	0.97	2.32E+02	1.84E+02

Isotope	Energy (MeV)	Probability	Design Basis Source (Ci)	Gap Release Fraction	Cont. Conc. (uCi/cc)	27A&B QAD Det. Response (Rad/hr)	27A&B Eff.	27A&B Response (Rad/hr)	27E QAD Det. Response (Rad/hr)	27F QAD Det. Response (Rad/hr)	27E&F Eff.	27E Response (Rad/hr)	27F Response (Rad/hr)
	0.35839	0.002203	4.723E+07	0.0300	2.75E-02	1.34E-02	1.00	3.682E-04	8.168E-02	6.466E-02	0.95	2.13E-03	1.69E-03
	0.40799	0.003578	4.723E+07	0.0300	4.46E-02	2.84E-02	1.00	1.268E-03	1.515E-01	1.199E-01	0.95	6.42E-03	5.09E-03
	0.60819	0.028948	4.723E+07	0.0300	3.61E-01	5.83E-01	0.99	2.083E-01	1.910E+00	1.514E+00	0.99	6.83E-01	5.41E-01
	0.68433	0.002093	4.723E+07	0.0300	2.61E-02	4.77E-02	1.00	1.245E-03	1.530E-01	1.213E-01	1.00	3.99E-03	3.17E-03
Xe-135m	0.52656	0.80997	3.905E+07	0.0300	8.35E+00	1.28E+01	0.99	1.055E+02	4.982E+01	3.948E+01	0.97	4.04E+02	3.20E+02
Xe-137	0.298	0.001167	1.656E+08	0.0300	5.10E-02	4.76E-03	1.01	2.452E-04	3.485E-02	2.759E-02	0.96	1.71E-03	1.35E-03
	0.39335	0.001381	1.656E+08	0.0300	6.04E-02	1.02E-02	1.00	6.183E-04	5.645E-02	4.469E-02	0.95	3.24E-03	2.56E-03
	0.45549	0.307	1.656E+08	0.0300	1.34E+01	2.93E+00	0.99	3.890E+01	1.431E+01	1.133E+01	0.95	1.83E+02	1.45E+02
	0.84895	0.00614	1.656E+08	0.0300	2.69E-01	1.73E-01	1.01	4.687E-02	5.500E-01	4.356E-01	1.02	1.51E-01	1.19E-01
	0.98225	0.002057	1.656E+08	0.0300	9.00E-02	6.70E-02	1.01	6.089E-03	2.094E-01	1.658E-01	1.01	1.90E-02	1.51E-02
	1.1193	0.001053	1.656E+08	0.0300	4.61E-02	3.88E-02	1.01	1.803E-03	1.190E-01	9.422E-02	1.00	5.48E-03	4.34E-03
	1.2732	0.002241	1.656E+08	0.0300	9.80E-02	9.39E-02	1.02	9.386E-03	2.790E-01	2.209E-01	0.99	2.71E-02	2.14E-02
	1.5768	0.001013	1.656E+08	0.0300	4.43E-02	5.29E-02	1.05	2.460E-03	1.464E-01	1.159E-01	0.98	6.36E-03	5.03E-03
	1.6125	0.001228	1.656E+08	0.0300	5.37E-02	6.54E-02	1.05	3.688E-03	1.803E-01	1.427E-01	0.98	9.49E-03	7.51E-03
	1.7834	0.004083	1.656E+08	0.0300	1.79E-01	2.37E-01	1.07	4.538E-02	6.406E-01	5.072E-01	0.98	1.12E-01	8.88E-02
	2.8498	0.001811	1.656E+08	0.0300	7.92E-02	1.51E-01	1.19	1.427E-02	3.841E-01	3.041E-01	0.92	2.80E-02	2.22E-02
	1.4906	0.01315	1.656E+08	0.0300	5.75E-01	6.53E-01	1.04	3.908E-01	1.830E+00	1.449E+00	0.99	1.04E+00	8.25E-01
Xe-138	0.15375	0.059535	1.506E+08	0.0300	2.37E+00	1.99E-02	1.00	4.709E-02	7.416E-01	5.866E-01	0.99	1.74E+00	1.38E+00
	0.24256	0.034965	1.506E+08	0.0300	1.39E+00	7.47E-02	1.05	1.090E-01	7.989E-01	6.322E-01	0.97	1.08E+00	8.53E-01
	0.25831	0.315	1.506E+08	0.0300	1.25E+01	8.15E-01	1.03	1.052E+01	7.825E+00	6.193E+00	0.97	9.51E+01	7.53E+01
	0.28251	0.004284	1.506E+08	0.0300	1.70E-01	1.47E-02	1.02	2.555E-03	1.196E-01	9.464E-02	0.96	1.96E-02	1.55E-02
	0.33528	0.001071	1.506E+08	0.0300	4.26E-02	5.65E-03	1.00	2.407E-04	3.684E-02	2.916E-02	0.95	1.49E-03	1.18E-03
	0.37144	0.005009	1.506E+08	0.0300	1.99E-01	3.29E-02	1.00	6.550E-03	1.930E-01	1.528E-01	0.95	3.65E-02	2.89E-02
	0.39643	0.063	1.506E+08	0.0300	2.51E+00	4.75E-01	1.00	1.189E+00	2.594E+00	2.054E+00	0.95	6.18E+00	4.89E+00
	0.40136	0.021735	1.506E+08	0.0300	8.65E-01	1.68E-01	1.00	1.451E-01	9.058E-01	7.171E-01	0.95	7.44E-01	5.89E-01
	0.43449	0.20318	1.506E+08	0.0300	8.08E+00	1.79E+00	1.00	1.449E+01	9.105E+00	7.208E+00	0.95	6.99E+01	5.53E+01
	0.50022	0.003622	1.506E+08	0.0300	1.44E-01	4.97E-02	0.99	7.083E-03	2.238E-01	1.772E-01	0.96	3.10E-02	2.45E-02
	0.53007	0.00252	1.506E+08	0.0300	1.00E-01	4.03E-02	0.99	3.999E-03	1.551E-01	1.229E-01	0.97	1.51E-02	1.20E-02
	0.53776	0.001166	1.506E+08	0.0300	4.64E-02	1.92E-02	0.99	8.830E-04	7.195E-02	5.703E-02	0.97	3.24E-03	2.57E-03
	0.55595	0.001166	1.506E+08	0.0300	4.64E-02	2.05E-02	0.99	9.413E-04	7.276E-02	5.768E-02	0.98	3.31E-03	2.62E-03
	0.56853	0.003055	1.506E+08	0.0300	1.22E-01	5.58E-02	0.99	6.714E-03	1.927E-01	1.528E-01	0.98	2.30E-02	1.82E-02
	0.58884	0.001228	1.506E+08	0.0300	4.89E-02	2.37E-02	0.99	1.145E-03	7.916E-02	6.276E-02	0.98	3.79E-03	3.00E-03
	0.65408	0.001449	1.506E+08	0.0300	5.76E-02	3.15E-02	1.00	1.818E-03	1.016E-01	8.053E-02	1.00	5.86E-03	4.64E-03
	0.86582	0.002961	1.506E+08	0.0300	1.18E-01	8.49E-02	1.01	1.010E-02	2.700E-01	2.138E-01	1.02	3.24E-02	2.57E-02

V/B [illegible] 5/16/94

Isotope	Energy (MeV)	Probability	Design Basis Source (Ci)	Gap Release Fraction	Cont. Conc. (uCi/cc)	27A&B QAD Det. Response (Rad/hr)	27A&B Eff.	27A&B Response (Rad/hr)	27E QAD Det. Response (Rad/hr)	27F QAD Det. Response (Rad/hr)	27E&F Eff.	27E Response (Rad/hr)	27F Response (Rad/hr)
	0.86935	0.006206	1.506E+08	0.0300	2.47E-01	1.79E-01	1.01	4.452E-02	5.680E-01	4.499E-01	1.02	1.43E-01	1.13E-01
	0.89687	0.001323	1.506E+08	0.0300	5.26E-02	3.92E-02	1.01	2.086E-03	1.245E-01	9.862E-02	1.01	6.62E-03	5.24E-03
	0.91251	0.003276	1.506E+08	0.0300	1.30E-01	9.88E-02	1.01	1.301E-02	3.130E-01	2.479E-01	1.01	4.12E-02	3.26E-02
	0.91713	0.009198	1.506E+08	0.0300	3.66E-01	2.79E-01	1.01	1.031E-01	8.831E-01	6.993E-01	1.01	3.26E-01	2.58E-01
	0.93636	0.001355	1.506E+08	0.0300	5.39E-02	4.20E-02	1.01	2.284E-03	1.324E-01	1.048E-01	1.01	7.21E-03	5.71E-03
	0.94125	0.002299	1.506E+08	0.0300	9.15E-02	7.16E-02	1.01	6.611E-03	2.257E-01	1.787E-01	1.01	2.08E-02	1.65E-02
	1.0939	0.004095	1.506E+08	0.0300	1.63E-01	1.48E-01	1.01	2.427E-02	4.547E-01	3.600E-01	1.00	7.41E-02	5.86E-02
	1.0988	0.002142	1.506E+08	0.0300	8.52E-02	7.75E-02	1.01	6.671E-03	2.387E-01	1.890E-01	1.00	2.03E-02	1.61E-02
	1.1022	0.001071	1.506E+08	0.0300	4.26E-02	3.89E-02	1.01	1.672E-03	1.196E-01	9.470E-02	1.00	5.10E-03	4.03E-03
	1.1143	0.014742	1.506E+08	0.0300	5.86E-01	5.40E-01	1.01	3.201E-01	1.661E+00	1.315E+00	1.00	9.74E-01	7.71E-01
	1.1416	0.005134	1.506E+08	0.0300	2.04E-01	1.93E-01	1.01	3.975E-02	5.893E-01	4.665E-01	1.00	1.20E-01	9.53E-02
	1.1454	0.001323	1.506E+08	0.0300	5.26E-02	4.98E-02	1.01	2.649E-03	1.523E-01	1.206E-01	1.00	8.01E-03	6.34E-03
	1.5718	0.002646	1.506E+08	0.0300	1.05E-01	1.38E-01	1.05	1.523E-02	3.817E-01	3.021E-01	0.98	3.94E-02	3.12E-02
	1.6146	0.002363	1.506E+08	0.0300	9.40E-02	1.26E-01	1.05	1.243E-02	3.471E-01	2.748E-01	0.98	3.20E-02	2.53E-02
	1.7683	0.16727	1.506E+08	0.0300	6.65E+00	9.66E+00	1.07	6.875E+01	2.610E+01	2.066E+01	0.98	1.70E+02	1.35E+02
	1.8125	0.001796	1.506E+08	0.0300	7.14E-02	1.06E-01	1.08	8.176E-03	2.848E-01	2.255E-01	0.98	1.99E-02	1.58E-02
	1.8509	0.014238	1.506E+08	0.0300	5.66E-01	8.56E-01	1.08	5.236E-01	2.289E+00	1.812E+00	0.97	1.26E+00	9.95E-01
	1.9254	0.005639	1.506E+08	0.0300	2.24E-01	3.51E-01	1.09	8.592E-02	9.303E-01	7.365E-01	0.97	2.02E-01	1.60E-01
	2.0048	0.05355	1.506E+08	0.0300	2.13E+00	3.46E+00	1.10	8.110E+00	9.070E+00	7.180E+00	0.97	1.87E+01	1.48E+01
	2.0158	0.12254	1.506E+08	0.0300	4.87E+00	7.95E+00	1.10	4.263E+01	2.083E+01	1.649E+01	0.97	9.85E+01	7.80E+01
	2.0792	0.014427	1.506E+08	0.0300	5.74E-01	9.57E-01	1.11	6.094E-01	2.501E+00	1.980E+00	0.97	1.39E+00	1.10E+00
	2.2523	0.022869	1.506E+08	0.0300	9.10E-01	1.61E+00	1.13	1.651E+00	4.175E+00	3.305E+00	0.96	3.65E+00	2.89E+00
	2.3219	0.006206	1.506E+08	0.0300	2.47E-01	4.45E-01	1.14	1.253E-01	1.155E+00	9.145E-01	0.96	2.74E-01	2.17E-01
	2.4753	0.003119	1.506E+08	0.0300	1.24E-01	2.34E-01	1.16	3.375E-02	6.048E-01	4.788E-01	0.95	7.13E-02	5.64E-02
	2.4976	0.001733	1.506E+08	0.0300	6.89E-02	1.31E-01	1.16	1.049E-02	3.380E-01	2.676E-01	0.95	2.21E-02	1.75E-02
	1.1186	0.026586	1.506E+08	0.0300	1.06E+00	9.78E-01	1.01	1.045E+00	3.004E+00	2.378E+00	1.00	3.18E+00	3.18E+00
							SUM =	1.501E+03				4.62E+03	3.66E+03

27A = 12.846 Rad/hr
27B = 14.602 Rad/hr

27E = 4.63E+03 Rad/hr
27F = 3.66E+03 Rad/hr

Con. Vol=	5.68E+09 cm**3
27A Cone Factor	0.00856
27B Cone Factor	0.00973
Release Frac.	0.05

V/B 9/14/94

Isotope	Energy (MeV)	Probability	Design Basis Source (Ci)	Gap Release Fraction	Cont. Conc. (uCi/cc)	27A&B QAD Det. Response (Rad/hr)	27A&B Eff.	27A&B Response (Rad/hr)	27E QAD Det. Response (Rad/hr)	27F QAD Det. Response (Rad/hr)	27E&F Eff.	27E Response (Rad/hr)	27F Response (Rad/hr)
I-131	0.080183	0.026182	2.422E+07	1.0000	1.12E+02	3.202E-07	0.71	2.539E-05	1.79E-01	1.42E-01	0.88	1.76E+01	1.39E+01
	0.17721	0.002648	2.422E+07	1.0000	1.13E+01	0.0017308	1.02	1.994E-02	3.96E-02	3.14E-02	0.98	4.39E-01	3.47E-01
	0.2843	0.060521	2.422E+07	1.0000	2.58E+02	0.21188	1.02	5.579E+01	1.70E+00	1.35E+00	0.96	4.22E+02	3.34E+02
	0.32578	0.002507	2.422E+07	1.0000	1.07E+01	0.012442	1.00	1.330E-01	8.34E-02	6.60E-02	0.96	8.56E-01	6.78E-01
	0.36448	0.81164	2.422E+07	1.0000	3.46E+03	5.1164	1.00	1.771E+04	3.07E+01	2.43E+01	0.95	1.01E+05	7.98E+04
	0.50299	0.003605	2.422E+07	1.0000	1.54E+01	0.050276	0.99	7.653E-01	2.22E-01	1.76E-01	0.96	3.28E+00	2.60E+00
	0.63697	0.072605	2.422E+07	1.0000	3.10E+02	1.5375	1.00	4.761E+02	4.97E+00	3.94E+00	0.99	1.52E+03	1.21E+03
	0.6427	0.002195	2.422E+07	1.0000	9.36E+00	0.046921	1.00	4.393E-01	1.52E-01	1.20E-01	1.00	1.42E+00	1.12E+00
	0.72289	0.018025	2.422E+07	1.0000	7.69E+01	0.43332	1.00	3.331E+01	1.39E+00	1.10E+00	1.01	1.08E+02	8.54E+01
	0.32939	0.002304	2.422E+07	1.0000	9.83E+00	0.011708	1.00	1.151E-01	7.77E-02	6.15E-02	0.95	7.25E-01	5.74E-01
I-132	0.1472	0.002369	3.466E+07	1.0000	1.45E+01	0.00056033	1.01	8.183E-03	2.80E-02	2.21E-02	1.01	4.08E-01	3.23E-01
	0.1833	0.001382	3.466E+07	1.0000	8.44E+00	0.0010702	1.03	9.298E-03	2.16E-02	1.71E-02	0.97	1.77E-01	1.40E-01
	0.2548	0.001875	3.466E+07	1.0000	1.14E+01	0.0046528	1.04	5.538E-02	4.57E-02	3.62E-02	0.97	5.08E-01	4.02E-01
	0.2627	0.01441	3.466E+07	1.0000	8.80E+01	0.039305	1.03	3.561E+00	3.66E-01	2.90E-01	0.97	3.12E+01	2.47E+01
	0.2848	0.007205	3.466E+07	1.0000	4.40E+01	0.025366	1.02	1.138E+00	2.03E-01	1.61E-01	0.96	8.58E+00	6.79E+00
	0.3165	0.001382	3.466E+07	1.0000	8.44E+00	0.0064486	1.00	5.439E-02	4.44E-02	3.52E-02	0.96	3.60E-01	2.85E-01
	0.3635	0.004935	3.466E+07	1.0000	3.01E+01	0.030934	1.00	9.318E-01	1.86E-01	1.47E-01	0.95	5.32E+00	4.21E+00
	0.3878	0.002961	3.466E+07	1.0000	1.81E+01	0.021291	1.00	3.848E-01	1.19E-01	9.44E-02	0.95	2.05E+00	1.62E+00
	0.4168	0.004738	3.466E+07	1.0000	2.89E+01	0.039003	1.00	1.128E+00	2.05E-01	1.62E-01	0.95	5.62E+00	4.45E+00
	0.4319	0.004836	3.466E+07	1.0000	2.95E+01	0.042246	1.00	1.247E+00	2.16E-01	1.71E-01	0.95	6.05E+00	4.79E+00
	0.446	0.006021	3.466E+07	1.0000	3.67E+01	0.055452	1.00	2.038E+00	2.76E-01	2.18E-01	0.95	9.63E+00	7.62E+00
	0.4739	0.001777	3.466E+07	1.0000	1.08E+01	0.018048	0.99	1.938E-01	8.54E-02	6.76E-02	0.96	8.89E-01	7.04E-01
	0.4785	0.001481	3.466E+07	1.0000	9.04E+00	0.015272	0.99	1.367E-01	7.16E-02	5.67E-02	0.96	6.22E-01	4.92E-01
	0.4882	0.004145	3.466E+07	1.0000	2.53E+01	0.044124	0.99	1.105E+00	2.03E-01	1.61E-01	0.96	4.94E+00	3.91E+00
	0.5059	0.050337	3.466E+07	1.0000	3.07E+02	0.71429	0.99	2.173E+02	3.10E+00	2.46E+00	0.96	9.15E+02	7.24E+02
	0.52265	0.16088	3.466E+07	1.0000	9.82E+02	2.49	0.99	2.421E+03	9.89E+00	7.83E+00	0.97	9.42E+03	7.46E+03
	0.5355	0.005231	3.466E+07	1.0000	3.19E+01	0.085532	0.99	2.704E+00	3.23E-01	2.56E-01	0.97	9.99E+00	7.92E+00
	0.54	0.001086	3.466E+07	1.0000	6.63E+00	0.018066	0.99	1.186E-01	6.71E-02	5.32E-02	0.97	4.31E-01	3.42E-01
	0.5471	0.012535	3.466E+07	1.0000	7.65E+01	0.21393	0.99	1.620E+01	7.77E-01	6.16E-01	0.97	5.77E+01	4.57E+01
	0.6	0.001382	3.466E+07	1.0000	8.44E+00	0.027372	0.99	2.286E-01	9.02E-02	7.15E-02	0.99	7.54E-01	5.97E-01
	0.6208	0.003948	3.466E+07	1.0000	2.41E+01	0.081315	1.00	1.959E+00	2.65E-01	2.10E-01	0.99	6.31E+00	5.01E+00
	0.6212	0.015792	3.466E+07	1.0000	9.64E+01	0.32556	1.00	3.138E+01	1.06E+00	8.40E-01	0.99	1.01E+02	8.01E+01
	0.63022	0.13719	3.466E+07	1.0000	8.37E+02	2.8731	1.00	2.406E+03	9.31E+00	7.38E+00	0.99	7.72E+03	6.12E+03

v13 908 7/6/94

Isotope	Energy (MeV)	Probability	Design Basis Source (Ci)	Gap Release Fraction	Cont. Conc. (uCi/cc)	27A&B QAD Det. Response (Rad/hr)	27A&B Eff.	27A&B Response (Rad/hr)	27E QAD Det. Response (Rad/hr)	27F QAD Det. Response (Rad/hr)	27E&F Eff.	27E Response (Rad/hr)	27F Response (Rad/hr)
	0.6506	0.026649	3.466E+07	1.0000	1.63E+02	0.57678	1.00	9.381E+01	1.86E+00	1.47E+00	1.00	3.02E+02	2.40E+02
	0.659	0.003948	3.466E+07	1.0000	2.41E+01	0.086579	1.00	2.086E+00	2.79E-01	2.21E-01	1.00	6.71E+00	5.32E+00
	0.66769	0.987	3.466E+07	1.0000	6.02E+03	21.936	1.00	1.321E+05	7.05E+01	5.59E+01	1.00	4.25E+05	3.37E+05
	0.6698	0.04935	3.466E+07	1.0000	3.01E+02	1.1001	1.00	3.314E+02	3.54E+00	2.80E+00	1.00	1.06E+03	8.44E+02
	0.6716	0.052311	3.466E+07	1.0000	3.19E+02	1.1692	1.00	3.733E+02	3.76E+00	2.98E+00	1.00	1.20E+03	9.51E+02
	0.727	0.031584	3.466E+07	1.0000	1.93E+02	0.76351	1.00	1.472E+02	2.44E+00	1.94E+00	1.01	4.76E+02	3.77E+02
	0.7272	0.021714	3.466E+07	1.0000	1.33E+02	0.52518	1.00	6.960E+01	1.68E+00	1.33E+00	1.01	2.25E+02	1.78E+02
	0.7285	0.010857	3.466E+07	1.0000	6.63E+01	0.26306	1.01	1.761E+01	8.42E-01	6.67E-01	1.01	5.64E+01	4.47E+01
	0.7645	0.003948	3.466E+07	1.0000	2.41E+01	0.10043	1.01	2.444E+00	3.21E-01	2.54E-01	1.01	7.80E+00	6.18E+00
	0.77261	0.76196	3.466E+07	1.0000	4.65E+03	19.593	1.01	9.203E+04	6.25E+01	4.95E+01	1.01	2.94E+05	2.33E+05
	0.7802	0.012338	3.466E+07	1.0000	7.53E+01	0.32051	1.01	2.438E+01	1.02E+00	8.09E-01	1.01	7.77E+01	6.15E+01
	0.7845	0.004244	3.466E+07	1.0000	2.59E+01	0.11091	1.01	2.902E+00	3.53E-01	2.80E-01	1.01	9.24E+00	7.32E+00
	0.8098	0.028623	3.466E+07	1.0000	1.75E+02	0.77184	1.01	1.362E+02	2.45E+00	1.94E+00	1.01	4.33E+02	3.43E+02
	0.8122	0.056259	3.466E+07	1.0000	3.43E+02	1.5212	1.01	5.276E+02	4.84E+00	3.83E+00	1.01	1.68E+03	1.33E+03
	0.8633	0.005823	3.466E+07	1.0000	3.55E+01	0.16642	1.01	5.974E+00	5.30E-01	4.19E-01	1.02	1.92E+01	1.52E+01
	0.8768	0.010758	3.466E+07	1.0000	6.57E+01	0.31213	1.01	2.070E+01	9.92E-01	7.86E-01	1.02	6.65E+01	5.26E+01
	0.9103	0.009179	3.466E+07	1.0000	5.60E+01	0.27617	1.01	1.563E+01	8.75E-01	6.93E-01	1.01	4.95E+01	3.92E+01
	0.9276	0.004145	3.466E+07	1.0000	2.53E+01	0.12712	1.01	3.248E+00	4.02E-01	3.18E-01	1.01	1.03E+01	8.13E+00
	0.95455	0.18062	3.466E+07	1.0000	1.10E+03	5.7061	1.01	6.353E+03	1.79E+01	1.42E+01	1.01	2.00E+04	1.58E+04
	0.9837	0.005626	3.466E+07	1.0000	3.43E+01	0.18354	1.01	6.365E+00	5.73E-01	4.54E-01	1.01	1.99E+01	1.57E+01
	1.0347	0.004738	3.466E+07	1.0000	2.89E+01	0.16221	1.01	4.738E+00	5.03E-01	3.99E-01	1.01	1.47E+01	1.16E+01
	1.136	0.02961	3.466E+07	1.0000	1.81E+02	1.106	1.01	2.019E+02	3.39E+00	2.68E+00	1.00	6.12E+02	4.84E+02
	1.1434	0.013522	3.466E+07	1.0000	8.25E+01	0.50818	1.01	4.236E+01	1.55E+00	1.23E+00	1.00	1.28E+02	1.02E+02
	1.1474	0.002764	3.466E+07	1.0000	1.69E+01	0.10426	1.01	1.776E+00	3.18E-01	2.52E-01	1.00	5.37E+00	4.25E+00
	1.1732	0.010857	3.466E+07	1.0000	6.63E+01	0.41862	1.02	2.829E+01	1.27E+00	1.01E+00	1.00	8.43E+01	6.68E+01
	1.2727	0.001777	3.466E+07	1.0000	1.08E+01	0.074398	1.02	8.231E-01	2.21E-01	1.75E-01	0.99	2.37E+00	1.88E+00
	1.2907	0.011351	3.466E+07	1.0000	6.93E+01	0.48218	1.02	3.407E+01	1.43E+00	1.13E+00	0.99	9.79E+01	7.75E+01
	1.2953	0.01974	3.466E+07	1.0000	1.20E+02	0.84198	1.02	1.035E+02	2.49E+00	1.97E+00	0.99	2.97E+02	2.35E+02
	1.2976	0.008883	3.466E+07	1.0000	5.42E+01	0.3796	1.02	2.099E+01	1.12E+00	8.88E-01	0.99	6.02E+01	4.77E+01
	1.3178	0.001184	3.466E+07	1.0000	7.23E+00	0.051411	1.02	3.790E-01	1.51E-01	1.20E-01	0.99	1.08E+00	8.56E-01
	1.3721	0.024675	3.466E+07	1.0000	1.51E+02	1.119	1.03	1.736E+02	3.24E+00	2.57E+00	0.99	4.83E+02	3.83E+02
	1.3986	0.071064	3.466E+07	1.0000	4.34E+02	3.2897	1.03	1.470E+03	9.46E+00	7.49E+00	0.99	4.06E+03	3.22E+03
	1.4426	0.014213	3.466E+07	1.0000	8.67E+01	0.68072	1.04	6.141E+01	1.93E+00	1.53E+00	0.99	1.66E+02	1.31E+02
	1.4768	0.001352	3.466E+07	1.0000	8.25E+00	0.06646	1.04	5.704E-01	1.87E-01	1.48E-01	0.99	1.53E+00	1.21E+00

Isotope	Energy (MeV)	Probability	Design Basis Source (Ci)	Gap Release Fraction	Cont. Conc. (uCi/cc)	27A&B QAD Det. Response (Rad/hr)	27A&B Eff.	27A&B Response (Rad/hr)	27E QAD Det. Response (Rad/hr)	27F QAD Det. Response (Rad/hr)	27E&F Eff.	27E Response (Rad/hr)	27F Response (Rad/hr)
	1.7575	0.002961	3.466E+07	1.0000	1.81E+01	0.16998	1.07	3.287E+00	4.60E-01	3.64E-01	0.98	8.15E+00	6.45E+00
	1.9211	0.011844	3.466E+07	1.0000	7.23E+01	0.73671	1.09	5.805E+01	1.95E+00	1.54E+00	0.97	1.37E+02	1.08E+02
	2.0022	0.010857	3.466E+07	1.0000	6.63E+01	0.70124	1.10	5.112E+01	1.84E+00	1.45E+00	0.97	1.18E+02	9.35E+01
	2.0868	0.002369	3.466E+07	1.0000	1.45E+01	0.15753	1.11	2.528E+00	4.12E-01	3.26E-01	0.97	5.78E+00	4.57E+00
	2.1727	0.001974	3.466E+07	1.0000	1.20E+01	0.13509	1.12	1.823E+00	3.52E-01	2.79E-01	0.96	4.07E+00	3.22E+00
	2.2232	0.001184	3.466E+07	1.0000	7.23E+00	0.082343	1.13	6.724E-01	2.14E-01	1.70E-01	0.96	1.49E+00	1.18E+00
	2.3905	0.001678	3.466E+07	1.0000	1.02E+01	0.12299	1.15	1.449E+00	3.18E-01	2.52E-01	0.95	3.10E+00	2.45E+00
	1.0146	0.031946	3.466E+07	1.0000	1.95E+02	1.0746	1.01	2.116E+02	3.34E+00	2.64E+00	1.01	6.58E+02	5.21E+02
I-133	0.2627	0.003565	4.747E+07	1.0000	2.98E+01	0.0097256	1.03	2.985E-01	9.06E-02	7.17E-02	0.97	2.62E+00	2.07E+00
	0.26717	0.001165	4.747E+07	1.0000	9.74E+00	0.0033502	1.03	3.361E-02	3.03E-02	2.39E-02	0.97	2.86E-01	2.26E-01
	0.34543	0.001036	4.747E+07	1.0000	8.66E+00	0.0058264	1.00	5.046E-02	3.69E-02	2.92E-02	0.95	3.03E-01	2.40E-01
	0.36108	0.001122	4.747E+07	1.0000	9.38E+00	0.0069341	1.00	6.504E-02	4.20E-02	3.32E-02	0.95	3.74E-01	2.96E-01
	0.41805	0.001528	4.747E+07	1.0000	1.28E+01	0.012642	1.00	1.615E-01	6.62E-02	5.24E-02	0.95	8.03E-01	6.36E-01
	0.42291	0.00309	4.747E+07	1.0000	2.58E+01	0.026066	1.00	6.733E-01	1.35E-01	1.07E-01	0.95	3.32E+00	2.63E+00
	0.51053	0.018127	4.747E+07	1.0000	1.52E+02	0.26406	0.99	3.961E+01	1.12E+00	8.83E-01	0.96	1.62E+02	1.29E+02
	0.52987	0.8632	4.747E+07	1.0000	7.22E+03	13.786	0.99	9.848E+04	5.31E+01	4.21E+01	0.97	3.72E+05	2.95E+05
	0.61797	0.005395	4.747E+07	1.0000	4.51E+01	0.11055	1.00	4.986E+00	3.60E-01	2.86E-01	0.99	1.61E+01	1.28E+01
	0.68025	0.006448	4.747E+07	1.0000	5.39E+01	0.14597	1.00	7.868E+00	4.69E-01	3.71E-01	1.00	2.53E+01	2.00E+01
	0.70658	0.014933	4.747E+07	1.0000	1.25E+02	0.35102	1.00	4.382E+01	1.13E+00	8.92E-01	1.01	1.42E+02	1.12E+02
	0.76838	0.004566	4.747E+07	1.0000	3.82E+01	0.11676	1.01	4.501E+00	3.73E-01	2.95E-01	1.01	1.44E+01	1.14E+01
	0.82051	0.001537	4.747E+07	1.0000	1.28E+01	0.041941	1.01	5.443E-01	1.33E-01	1.06E-01	1.02	1.75E+00	1.39E+00
	0.85628	0.012344	4.747E+07	1.0000	1.03E+02	0.3501	1.01	3.649E+01	1.11E+00	8.83E-01	1.02	1.17E+02	9.29E+01
	0.87533	0.044714	4.747E+07	1.0000	3.74E+02	1.2949	1.01	4.888E+02	4.12E+00	3.26E+00	1.02	1.57E+03	1.24E+03
	0.90967	0.002124	4.747E+07	1.0000	1.78E+01	0.063875	1.01	1.145E+00	2.02E-01	1.60E-01	1.01	3.63E+00	2.87E+00
	1.0523	0.005516	4.747E+07	1.0000	4.61E+01	0.19174	1.01	8.930E+00	5.94E-01	4.70E-01	1.01	2.77E+01	2.19E+01
	1.0601	0.001373	4.747E+07	1.0000	1.15E+01	0.048048	1.01	5.570E-01	1.49E-01	1.18E-01	1.01	1.72E+00	1.36E+00
	1.2364	0.014933	4.747E+07	1.0000	1.25E+02	0.60698	1.02	7.728E+01	1.82E+00	1.44E+00	1.00	2.27E+02	1.80E+02
	1.2982	0.023306	4.747E+07	1.0000	1.95E+02	0.99632	1.02	1.980E+02	2.94E+00	2.33E+00	0.99	5.68E+02	4.49E+02
	1.3504	0.001485	4.747E+07	1.0000	1.24E+01	0.066202	1.03	8.465E-01	1.93E-01	1.53E-01	0.99	2.37E+00	1.88E+00
	0.53524	0.006072	4.747E+07	1.0000	5.08E+01	0.09918	0.99	4.984E+00	3.74E-01	2.97E-01	0.97	1.84E+01	1.46E+01
I-134	0.1354	0.037592	5.183E+07	1.0000	3.43E+02	0.0032316	1.03	1.142E+00	4.01E-01	3.18E-01	1.02	1.40E+02	1.11E+02
	0.13903	0.006869	5.183E+07	1.0000	6.27E+01	0.00080871	1.02	5.172E-02	7.56E-02	5.98E-02	1.02	4.84E+00	3.83E+00
	0.15198	0.001059	5.183E+07	1.0000	9.67E+00	0.00033577	1.00	3.245E-03	1.30E-02	1.03E-02	1.00	1.26E-01	9.94E-02
	0.16248	0.002576	5.183E+07	1.0000	2.35E+01	0.0011084	1.00	2.606E-02	3.44E-02	2.72E-02	0.98	7.93E-01	6.27E-01

Isotope	Energy (MeV)	Probability	Design Basis Source (Ci)	Gap Release Fraction	Cont. Conc. (uCi/cc)	27A&B QAD Det. Response (Rad/hr)	27A&B Eff.	27A&B Response (Rad/hr)	27E QAD Det. Response (Rad/hr)	27F QAD Det. Response (Rad/hr)	27E&F Eff.	27E Response (Rad/hr)	27F Response (Rad/hr)
	0.18847	0.006965	5.183E+07	1.0000	6.36E+01	0.0062184	1.04	4.111E-01	1.13E-01	8.95E-02	0.97	6.98E+00	5.52E+00
	0.217	0.002481	5.183E+07	1.0000	2.26E+01	0.003811	1.06	9.148E-02	4.88E-02	3.86E-02	0.97	1.07E+00	8.48E-01
	0.23547	0.019845	5.183E+07	1.0000	1.81E+02	0.038765	1.05	7.372E+00	4.36E-01	3.45E-01	0.97	7.66E+01	6.06E+01
	0.2788	0.001307	5.183E+07	1.0000	1.19E+01	0.004301	1.02	5.233E-02	3.59E-02	2.84E-02	0.96	4.11E-01	3.25E-01
	0.31981	0.005152	5.183E+07	1.0000	4.70E+01	0.024579	1.00	1.156E+00	1.68E-01	1.33E-01	0.96	7.57E+00	5.99E+00
	0.35108	0.004961	5.183E+07	1.0000	4.53E+01	0.028881	1.00	1.308E+00	1.80E-01	1.42E-01	0.95	7.74E+00	6.12E+00
	0.40545	0.073466	5.183E+07	1.0000	6.71E+02	0.57714	1.00	3.870E+02	3.09E+00	2.45E+00	0.95	1.97E+03	1.56E+03
	0.411	0.006106	5.183E+07	1.0000	5.57E+01	0.049087	1.00	2.736E+00	2.60E-01	2.06E-01	0.95	1.38E+01	1.09E+01
	0.43335	0.041885	5.183E+07	1.0000	3.82E+02	0.36789	1.00	1.406E+02	1.87E+00	1.48E+00	0.95	6.80E+02	5.38E+02
	0.45892	0.012976	5.183E+07	1.0000	1.18E+02	0.12519	0.99	1.468E+01	6.08E-01	4.82E-01	0.96	6.92E+01	5.48E+01
	0.4655	0.003626	5.183E+07	1.0000	3.31E+01	0.035793	0.99	1.173E+00	1.72E-01	1.36E-01	0.96	5.46E+00	4.32E+00
	0.48888	0.014121	5.183E+07	1.0000	1.29E+02	0.15064	0.99	1.922E+01	6.94E-01	5.49E-01	0.96	8.58E+01	6.79E+01
	0.5144	0.023375	5.183E+07	1.0000	2.13E+02	0.3475	0.99	7.340E+01	1.44E+00	1.14E+00	0.97	2.97E+02	2.36E+02
	0.54083	0.078236	5.183E+07	1.0000	7.14E+02	1.3054	0.99	9.228E+02	4.83E+00	3.83E+00	0.97	3.35E+03	2.65E+03
	0.56552	0.008778	5.183E+07	1.0000	8.01E+01	0.15898	0.99	1.261E+01	5.52E-01	4.38E-01	0.98	4.34E+01	3.44E+01
	0.57075	0.002099	5.183E+07	1.0000	1.92E+01	0.038582	0.99	7.318E-01	1.33E-01	1.05E-01	0.98	2.49E+00	1.98E+00
	0.59536	0.11354	5.183E+07	1.0000	1.04E+03	2.2248	0.99	2.282E+03	7.37E+00	5.85E+00	0.99	7.57E+03	6.00E+03
	0.62179	0.10591	5.183E+07	1.0000	9.67E+02	2.1861	1.00	2.113E+03	7.11E+00	5.64E+00	0.99	6.81E+03	5.40E+03
	0.62796	0.023662	5.183E+07	1.0000	2.16E+02	0.4935	1.00	1.066E+02	1.60E+00	1.27E+00	0.99	3.42E+02	2.71E+02
	0.67734	0.084915	5.183E+07	1.0000	7.75E+02	1.9143	1.00	1.484E+03	6.15E+00	4.87E+00	1.00	4.76E+03	3.78E+03
	0.70665	0.008301	5.183E+07	1.0000	7.58E+01	0.19519	1.00	1.479E+01	6.26E-01	4.96E-01	1.01	4.79E+01	3.79E+01
	0.73074	0.019082	5.183E+07	1.0000	1.74E+02	0.46364	1.01	8.156E+01	1.48E+00	1.18E+00	1.01	2.61E+02	2.07E+02
	0.73918	0.007633	5.183E+07	1.0000	6.97E+01	0.18764	1.01	1.320E+01	6.00E-01	4.76E-01	1.01	4.22E+01	3.35E+01
	0.76668	0.041026	5.183E+07	1.0000	3.74E+02	1.0467	1.01	3.959E+02	3.34E+00	2.65E+00	1.01	1.26E+03	1.00E+03
	0.81638	0.005248	5.183E+07	1.0000	4.79E+01	0.14254	1.01	6.896E+00	4.53E-01	3.59E-01	1.02	2.22E+01	1.75E+01
	0.84702	0.9541	5.183E+07	1.0000	8.71E+03	26.788	1.01	2.356E+05	8.53E+01	6.75E+01	1.02	7.57E+05	6.00E+05
	0.85729	0.069649	5.183E+07	1.0000	6.36E+02	1.9778	1.01	1.270E+03	6.29E+00	4.99E+00	1.02	4.08E+03	3.23E+03
	0.864	0.001908	5.183E+07	1.0000	1.74E+01	0.054576	1.01	9.599E-01	1.74E-01	1.38E-01	1.02	3.08E+00	2.44E+00
	0.88409	0.6526	5.183E+07	1.0000	5.96E+03	19.08	1.01	1.148E+05	6.06E+01	4.80E+01	1.01	3.65E+05	2.89E+05
	0.9226	0.001431	5.183E+07	1.0000	1.31E+01	0.043644	1.01	5.757E-01	1.38E-01	1.09E-01	1.01	1.82E+00	1.44E+00
	0.94786	0.040358	5.183E+07	1.0000	3.68E+02	1.2656	1.01	4.708E+02	3.99E+00	3.16E+00	1.01	1.48E+03	1.17E+03
	0.9669	0.00353	5.183E+07	1.0000	3.22E+01	0.11306	1.01	3.679E+00	3.55E-01	2.81E-01	1.01	1.15E+01	9.14E+00
	0.97467	0.046751	5.183E+07	1.0000	4.27E+02	1.51	1.01	6.508E+02	4.73E+00	3.74E+00	1.01	2.04E+03	1.61E+03
	1.0403	0.019082	5.183E+07	1.0000	1.74E+02	0.65635	1.01	1.155E+02	2.04E+00	1.61E+00	1.01	3.58E+02	2.84E+02

Isotope	Energy (MeV)	Probability	Design Basis Source (Ci)	Gap Release Fraction	Cont. Conc. (uCi/cc)	27A&B QAD Det. Response (Rad/hr)	27A&B Eff.	27A&B Response (Rad/hr)	27E QAD Det. Response (Rad/hr)	27F QAD Det. Response (Rad/hr)	27E&F Eff.	27E Response (Rad/hr)	27F Response (Rad/hr)
	1.0726	0.15266	5.183E+07	1.0000	1.39E+03	5.4009	1.01	7.601E+03	1.67E+01	1.32E+01	1.01	2.35E+04	1.86E+04
	1.1001	0.006869	5.183E+07	1.0000	6.27E+01	0.24881	1.01	1.575E+01	7.66E-01	6.07E-01	1.00	4.80E+01	3.80E+01
	1.1032	0.007251	5.183E+07	1.0000	6.62E+01	0.26335	1.01	1.760E+01	8.10E-01	6.42E-01	1.00	5.36E+01	4.25E+01
	1.1362	0.097318	5.183E+07	1.0000	8.88E+02	3.6374	1.01	3.263E+03	1.11E+01	8.81E+00	1.00	9.89E+03	7.83E+03
	1.1591	0.00353	5.183E+07	1.0000	3.22E+01	0.13449	1.01	4.376E+00	4.10E-01	3.25E-01	1.00	1.32E+01	1.05E+01
	1.164	0.001336	5.183E+07	1.0000	1.22E+01	0.051108	1.02	6.357E-01	1.56E-01	1.23E-01	1.00	1.90E+00	1.50E+00
	1.19	0.00353	5.183E+07	1.0000	3.22E+01	0.13804	1.02	4.536E+00	4.18E-01	3.31E-01	1.00	1.35E+01	1.07E+01
	1.239	0.002099	5.183E+07	1.0000	1.92E+01	0.085473	1.02	1.670E+00	2.56E-01	2.03E-01	1.00	4.91E+00	3.88E+00
	1.2695	0.005629	5.183E+07	1.0000	5.14E+01	0.23507	1.02	1.232E+01	6.99E-01	5.54E-01	1.00	3.59E+01	2.84E+01
	1.3224	0.00105	5.183E+07	1.0000	9.58E+00	0.045755	1.03	4.516E-01	1.34E-01	1.06E-01	0.99	1.27E+00	1.01E+00
	1.336	0.001431	5.183E+07	1.0000	1.31E+01	0.063057	1.03	8.483E-01	1.84E-01	1.46E-01	0.99	2.38E+00	1.89E+00
	1.3526	0.004484	5.183E+07	1.0000	4.09E+01	0.2002	1.03	8.439E+00	5.83E-01	4.62E-01	0.99	2.36E+01	1.87E+01
	1.4143	0.002194	5.183E+07	1.0000	2.00E+01	0.1028	1.03	2.120E+00	2.94E-01	2.33E-01	0.99	5.83E+00	4.62E+00
	1.4282	0.001717	5.183E+07	1.0000	1.57E+01	0.08135	1.03	1.313E+00	2.32E-01	1.84E-01	0.99	3.60E+00	2.85E+00
	1.4314	0.001717	5.183E+07	1.0000	1.57E+01	0.081551	1.03	1.316E+00	2.32E-01	1.84E-01	0.99	3.60E+00	2.85E+00
	1.4552	0.022898	5.183E+07	1.0000	2.09E+02	1.1075	1.04	2.407E+02	3.13E+00	2.48E+00	0.99	6.48E+02	5.13E+02
	1.47	0.007728	5.183E+07	1.0000	7.05E+01	0.37777	1.04	2.771E+01	1.06E+00	8.43E-01	0.99	7.43E+01	5.88E+01
	1.5055	0.001145	5.183E+07	1.0000	1.05E+01	0.057482	1.04	6.247E-01	1.60E-01	1.27E-01	0.99	1.66E+00	1.31E+00
	1.5415	0.005057	5.183E+07	1.0000	4.62E+01	0.25897	1.04	1.243E+01	7.20E-01	5.70E-01	0.98	3.26E+01	2.58E+01
	1.6138	0.043602	5.183E+07	1.0000	3.98E+02	2.3227	1.05	9.706E+02	6.40E+00	5.07E+00	0.98	2.50E+03	1.98E+03
	1.6292	0.002576	5.183E+07	1.0000	2.35E+01	0.13839	1.05	3.416E+00	3.81E-01	3.01E-01	0.98	8.77E+00	6.94E+00
	1.6443	0.004007	5.183E+07	1.0000	3.66E+01	0.21695	1.06	8.410E+00	5.96E-01	4.72E-01	0.98	2.14E+01	1.69E+01
	1.6552	0.00229	5.183E+07	1.0000	2.09E+01	0.12472	1.06	2.763E+00	3.42E-01	2.71E-01	0.98	7.01E+00	5.55E+00
	1.7415	0.026715	5.183E+07	1.0000	2.44E+02	1.5213	1.07	3.969E+02	4.13E+00	3.27E+00	0.98	9.86E+02	7.81E+02
	1.8068	0.057246	5.183E+07	1.0000	5.22E+02	3.3686	1.08	1.901E+03	9.06E+00	7.17E+00	0.98	4.64E+03	3.67E+03
	1.9259	0.001813	5.183E+07	1.0000	1.65E+01	0.11301	1.09	2.038E+00	2.99E-01	2.37E-01	0.97	4.80E+00	3.80E+00
	2.0206	0.001717	5.183E+07	1.0000	1.57E+01	0.11162	1.10	1.924E+00	2.92E-01	2.31E-01	0.97	4.44E+00	3.52E+00
	2.1599	0.002099	5.183E+07	1.0000	1.92E+01	0.143	1.12	3.068E+00	3.73E-01	2.95E-01	0.96	6.86E+00	5.43E+00
	2.3124	0.002385	5.183E+07	1.0000	2.18E+01	0.17064	1.14	4.235E+00	4.43E-01	3.51E-01	0.96	9.25E+00	7.32E+00
	2.4674	0.001527	5.183E+07	1.0000	1.39E+01	0.11451	1.16	1.851E+00	2.95E-01	2.34E-01	0.95	3.91E+00	3.10E+00
	1.7872	0.013348	5.183E+07	1.0000	1.22E+02	0.77768	1.07	1.014E+02	2.10E+00	1.66E+00	0.98	2.50E+02	1.98E+02
I-135	0.2205	0.017452	4.470E+07	1.0000	1.37E+02	0.028083	1.06	4.089E+00	3.51E-01	2.77E-01	0.97	4.67E+01	3.70E+01
	0.22972	0.002317	4.470E+07	1.0000	1.82E+01	0.0042047	1.05	8.052E-02	4.92E-02	3.89E-02	0.97	8.71E-01	6.89E-01
	0.26426	0.00184	4.470E+07	1.0000	1.45E+01	0.0051136	1.03	7.629E-02	4.71E-02	3.73E-02	0.97	6.62E-01	5.24E-01

V/B 9/14/94

Isotope	Energy (MeV)	Probability	Design Basis Source (Ci)	Gap Release Fraction	Cont. Conc. (uCi/cc)	27A&B QAD Det. Response (Rad/hr)	27A&B Eff.	27A&B Response (Rad/hr)	27E QAD Det. Response (Rad/hr)	27F QAD Det. Response (Rad/hr)	27E&F Eff.	27E Response (Rad/hr)	27F Response (Rad/hr)
	0.28845	0.030899	4.470E+07	1.0000	2.43E+02	0.11334	1.02	2.812E+01	8.86E-01	7.01E-01	0.96	2.07E+02	1.64E+02
	0.29027	0.003033	4.470E+07	1.0000	2.39E+01	0.011351	1.01	2.737E-01	8.76E-02	6.94E-02	0.96	2.01E+00	1.59E+00
	0.36185	0.00186	4.470E+07	1.0000	1.46E+01	0.011545	1.00	1.690E-01	6.97E-02	5.52E-02	0.95	9.69E-01	7.67E-01
	0.40303	0.002317	4.470E+07	1.0000	1.82E+01	0.01802	1.00	3.287E-01	9.70E-02	7.68E-02	0.95	1.68E+00	1.33E+00
	0.41483	0.003004	4.470E+07	1.0000	2.36E+01	0.024534	1.00	5.801E-01	1.29E-01	1.02E-01	0.95	2.90E+00	2.30E+00
	0.41763	0.03519	4.470E+07	1.0000	2.77E+02	0.29063	1.00	8.050E+01	1.52E+00	1.21E+00	0.95	4.01E+02	3.17E+02
	0.42993	0.003033	4.470E+07	1.0000	2.39E+01	0.026294	1.00	6.278E-01	1.35E-01	1.07E-01	0.95	3.05E+00	2.42E+00
	0.43374	0.005522	4.470E+07	1.0000	4.35E+01	0.048577	1.00	2.111E+00	2.47E-01	1.96E-01	0.95	1.02E+01	8.08E+00
	0.45163	0.003147	4.470E+07	1.0000	2.48E+01	0.029581	1.00	7.328E-01	1.46E-01	1.15E-01	0.95	3.43E+00	2.71E+00
	0.54656	0.071239	4.470E+07	1.0000	5.61E+02	1.2139	0.99	6.739E+02	4.42E+00	3.50E+00	0.97	2.40E+03	1.90E+03
	0.57597	0.001288	4.470E+07	1.0000	1.01E+01	0.02402	0.99	2.411E-01	8.18E-02	6.49E-02	0.98	8.13E-01	6.45E-01
	0.64985	0.004549	4.470E+07	1.0000	3.58E+01	0.098357	1.00	3.522E+00	3.17E-01	2.51E-01	1.00	1.14E+01	9.00E+00
	0.69013	0.001288	4.470E+07	1.0000	1.01E+01	0.029571	1.00	2.998E-01	9.49E-02	7.52E-02	1.00	9.62E-01	7.62E-01
	0.70792	0.00658	4.470E+07	1.0000	5.18E+01	0.15494	1.00	8.025E+00	4.97E-01	3.93E-01	1.01	2.60E+01	2.06E+01
	0.78548	0.001516	4.470E+07	1.0000	1.19E+01	0.039674	1.01	4.782E-01	1.26E-01	1.00E-01	1.01	1.52E+00	1.21E+00
	0.79771	0.001717	4.470E+07	1.0000	1.35E+01	0.045685	1.01	6.236E-01	1.45E-01	1.15E-01	1.01	1.98E+00	1.57E+00
	0.8368	0.066661	4.470E+07	1.0000	5.25E+02	1.8511	1.01	9.810E+02	5.89E+00	4.67E+00	1.02	3.15E+03	2.50E+03
	0.96146	0.001459	4.470E+07	1.0000	1.15E+01	0.046439	1.01	5.387E-01	1.46E-01	1.15E-01	1.01	1.69E+00	1.34E+00
	0.97196	0.008869	4.470E+07	1.0000	6.98E+01	0.28562	1.01	2.014E+01	8.95E-01	7.08E-01	1.01	6.31E+01	5.00E+01
	0.97261	0.012016	4.470E+07	1.0000	9.46E+01	0.38733	1.01	3.700E+01	1.21E+00	9.61E-01	1.01	1.16E+02	9.18E+01
	0.99509	0.001545	4.470E+07	1.0000	1.22E+01	0.051032	1.01	6.268E-01	1.59E-01	1.26E-01	1.01	1.95E+00	1.55E+00
	1.0388	0.07925	4.470E+07	1.0000	6.24E+02	2.7235	1.01	1.716E+03	8.45E+00	6.69E+00	1.01	5.32E+03	4.21E+03
	1.1016	0.016022	4.470E+07	1.0000	1.26E+02	0.58109	1.01	7.402E+01	1.79E+00	1.42E+00	1.00	2.26E+02	1.79E+02
	1.124	0.036049	4.470E+07	1.0000	2.84E+02	1.3329	1.01	3.820E+02	4.09E+00	3.24E+00	1.00	1.16E+03	9.19E+02
	1.1315	0.22516	4.470E+07	1.0000	1.77E+03	8.3786	1.01	1.500E+04	2.57E+01	2.03E+01	1.00	4.55E+04	3.60E+04
	1.1599	0.00103	4.470E+07	1.0000	8.11E+00	0.039268	1.02	3.247E-01	1.20E-01	9.47E-02	1.00	9.70E-01	7.68E-01
	1.169	0.008726	4.470E+07	1.0000	6.87E+01	0.33521	1.02	2.349E+01	1.02E+00	8.07E-01	1.00	7.00E+01	5.55E+01
	1.2405	0.009012	4.470E+07	1.0000	7.09E+01	0.36751	1.02	2.659E+01	1.10E+00	8.72E-01	1.00	7.81E+01	6.18E+01
	1.2604	0.2861	4.470E+07	1.0000	2.25E+03	11.86	1.02	2.724E+04	3.54E+01	2.80E+01	1.00	7.96E+04	6.30E+04
	1.3679	0.006065	4.470E+07	1.0000	4.77E+01	0.27412	1.03	1.348E+01	7.95E-01	6.29E-01	0.99	3.76E+01	2.97E+01
	1.4484	0.003147	4.470E+07	1.0000	2.48E+01	0.1514	1.04	3.900E+00	4.29E-01	3.40E-01	0.99	1.05E+01	8.33E+00
	1.4576	0.086402	4.470E+07	1.0000	6.80E+02	4.1876	1.04	2.962E+03	1.18E+01	9.38E+00	0.99	7.97E+03	6.31E+03
	1.5028	0.010729	4.470E+07	1.0000	8.45E+01	0.5377	1.04	4.723E+01	1.50E+00	1.19E+00	0.99	1.26E+02	9.94E+01
	1.5664	0.012875	4.470E+07	1.0000	1.01E+02	0.66861	1.05	7.115E+01	1.85E+00	1.47E+00	0.98	1.84E+02	1.46E+02

Isotope	Energy (MeV)	Probability	Design Basis Source (Ci)	Gap Release Fraction	Cont. Conc. (uCi/cc)	27A&B QAD Det. Response (Rad/hr)	27A&B Eff.	27A&B Response (Rad/hr)	27E QAD Det. Response (Rad/hr)	27F QAD Det. Response (Rad/hr)	27E&F Eff.	27E Response (Rad/hr)	27F Response (Rad/hr)
	1.678	0.095271	4.470E+07	1.0000	7.50E+02	5.2497	1.06	4.173E+03	1.44E+01	1.14E+01	0.98	1.05E+04	8.35E+03
	1.7065	0.040912	4.470E+07	1.0000	3.22E+02	2.2884	1.06	7.812E+02	6.24E+00	4.94E+00	0.98	1.97E+03	1.56E+03
	1.7912	0.076961	4.470E+07	1.0000	6.06E+02	4.4923	1.07	2.912E+03	1.21E+01	9.58E+00	0.98	7.19E+03	5.69E+03
	1.8307	0.005779	4.470E+07	1.0000	4.55E+01	0.34408	1.08	1.690E+01	9.23E-01	7.30E-01	0.98	4.11E+01	3.26E+01
	1.9273	0.002947	4.470E+07	1.0000	2.32E+01	0.18383	1.09	4.648E+00	4.87E-01	3.85E-01	0.97	1.09E+01	8.67E+00
	2.0459	0.008697	4.470E+07	1.0000	6.85E+01	0.57019	1.11	4.333E+01	1.49E+00	1.18E+00	0.97	9.91E+01	7.85E+01
	2.2555	0.006123	4.470E+07	1.0000	4.82E+01	0.43029	1.13	2.343E+01	1.12E+00	8.86E-01	0.96	5.18E+01	4.10E+01
	2.4087	0.009527	4.470E+07	1.0000	7.50E+01	0.70194	1.15	6.054E+01	1.82E+00	1.44E+00	0.95	1.29E+02	1.02E+02
	1.0734	0.014948	4.470E+07	1.0000	1.18E+02	0.52926	1.01	6.290E+01	1.64E+00	1.29E+00	1.01	1.94E+02	1.54E+02
Kr-85	0.51399	0.00434	8.915E+05	1.0000	6.81E-01	0.064379	0.99	4.343E-02	2.67E-01	2.11E-01	0.97	1.76E-01	1.40E-01
Kr-85m	0.30487	0.13989	1.976E+07	1.0000	4.87E+02	0.60256	1.01	2.962E+02	4.30E+00	3.40E+00	0.96	2.01E+03	1.59E+03
	0.00169	0.000586	1.976E+07	1.0000	2.04E+00	0	0	0.000E+00	9.00E+10	7.10E+10	0	0.00E+00	0.00E+00
	0.013336	0.006116	1.976E+07	1.0000	2.13E+01	0	0	0.000E+00	2.48E+00	1.95E+00	0	0.00E+00	0.00E+00
	0.013395	0.01183	1.976E+07	1.0000	4.12E+01	0	0	0.000E+00	4.66E+00	3.68E+00	0	0.00E+00	0.00E+00
	0.015	0.003105	1.976E+07	1.0000	1.08E+01	0	0	0.000E+00	6.42E-01	5.06E-01	0	0.00E+00	0.00E+00
	0.12985	0.003011	1.976E+07	1.0000	1.05E+01	0.00015922	1.05	1.752E-03	3.06E-02	2.42E-02	1.02	3.28E-01	2.59E-01
	0.15118	0.75278	1.976E+07	1.0000	2.62E+03	0.23321	1.00	6.109E+02	9.18E+00	7.26E+00	1.00	2.40E+04	1.90E+04
	0.58128	0.000211	1.976E+07	1.0000	7.34E-01	0.0039914	0.99	2.901E-03	1.35E-02	1.07E-02	0.98	9.70E-03	7.69E-03
Kr-87	0.40258	0.495	3.671E+07	1.0000	3.20E+03	3.8421	1.00	1.229E+04	2.07E+01	1.64E+01	0.95	6.29E+04	4.98E+04
	0.67387	0.019058	3.671E+07	1.0000	1.23E+02	0.42739	1.00	5.265E+01	1.37E+00	1.09E+00	1.00	1.69E+02	1.34E+02
	0.81425	0.001683	3.671E+07	1.0000	1.09E+01	0.045599	1.01	5.011E-01	1.45E-01	1.15E-01	1.02	1.61E+00	1.27E+00
	0.83637	0.007524	3.671E+07	1.0000	4.86E+01	0.20885	1.01	1.026E+01	6.65E-01	5.27E-01	1.02	3.30E+01	2.61E+01
	0.84543	0.072765	3.671E+07	1.0000	4.70E+02	2.0396	1.01	9.690E+02	6.49E+00	5.14E+00	1.02	3.12E+03	2.47E+03
	0.94664	0.001386	3.671E+07	1.0000	8.96E+00	0.043398	1.01	3.927E-01	1.37E-01	1.08E-01	1.01	1.24E+00	9.80E-01
	1.1754	0.011237	3.671E+07	1.0000	7.26E+01	0.43394	1.02	3.215E+01	1.32E+00	1.04E+00	1.00	9.58E+01	7.58E+01
	1.338	0.006484	3.671E+07	1.0000	4.19E+01	0.28619	1.03	1.236E+01	8.37E-01	6.62E-01	0.99	3.47E+01	2.75E+01
	1.3825	0.002871	3.671E+07	1.0000	1.86E+01	0.13125	1.03	2.509E+00	3.79E-01	3.00E-01	0.99	6.97E+00	5.51E+00
	1.3899	0.001237	3.671E+07	1.0000	8.00E+00	0.056895	1.03	4.686E-01	1.64E-01	1.30E-01	0.99	1.30E+00	1.03E+00
	1.5312	0.003564	3.671E+07	1.0000	2.30E+01	0.18148	1.04	4.348E+00	5.05E-01	4.00E-01	0.98	1.14E+01	9.03E+00
	1.578	0.001287	3.671E+07	1.0000	8.32E+00	0.067248	1.05	5.875E-01	1.86E-01	1.47E-01	0.98	1.52E+00	1.20E+00
	1.6112	0.00104	3.671E+07	1.0000	6.72E+00	0.055321	1.05	3.905E-01	1.53E-01	1.21E-01	0.98	1.00E+00	7.96E-01
	1.7405	0.020493	3.671E+07	1.0000	1.32E+02	1.1666	1.07	1.654E+02	3.16E+00	2.51E+00	0.98	4.11E+02	3.25E+02
	1.8426	0.001386	3.671E+07	1.0000	8.96E+00	0.082991	1.08	8.031E-01	2.22E-01	1.76E-01	0.97	1.93E+00	1.53E+00
	2.0119	0.028957	3.671E+07	1.0000	1.87E+02	1.8765	1.10	3.864E+02	4.92E+00	3.89E+00	0.97	8.93E+02	7.07E+02

V/B 9/16/94

Isotope	Energy (MeV)	Probability	Design Basis Source (Ci)	Gap Release Fraction	Cont. Conc. (uCi/cc)	27A&B QAD Det. Response (Rad/hr)	27A&B Eff.	27A&B Response (Rad/hr)	27E QAD Det. Response (Rad/hr)	27F QAD Det. Response (Rad/hr)	27E&F Eff.	27E Response (Rad/hr)	27F Response (Rad/hr)
	2.4085	0.002129	3.671E+07	1.0000	1.38E+01	0.15687	1.15	2.483E+00	4.06E-01	3.21E-01	0.95	5.30E+00	4.20E+00
	2.5548	0.09306	3.671E+07	1.0000	6.02E+02	7.1616	1.17	5.041E+03	1.84E+01	1.46E+01	0.94	1.04E+04	8.24E+03
	2.5581	0.039105	3.671E+07	1.0000	2.53E+02	3.0119	1.17	8.908E+02	7.74E+00	6.13E+00	0.94	1.84E+03	1.46E+03
	2.8114	0.003168	3.671E+07	1.0000	2.05E+01	0.26201	1.19	6.385E+00	6.66E-01	5.27E-01	0.92	1.26E+01	9.94E+00
	3.3085	0.004504	3.671E+07	1.0000	2.91E+01	0.41534	1.20	1.451E+01	1.05E+00	8.31E-01	0.85	2.60E+01	2.06E+01
	1.6201	0.006499	3.671E+07	1.0000	4.20E+01	0.34737	1.05	1.532E+01	9.57E-01	7.57E-01	0.98	3.94E+01	3.12E+01
Kr-88	0.12227	0.001972	5.139E+07	1.0000	1.78E+01	0.000053253	1.08	1.026E-03	1.88E-02	1.49E-02	1.01	3.39E-01	2.68E-01
	0.16598	0.031036	5.139E+07	1.0000	2.81E+02	0.014764	1.01	4.188E+00	4.26E-01	3.37E-01	0.98	1.17E+02	9.28E+01
	0.19632	0.25985	5.139E+07	1.0000	2.35E+03	0.28706	1.05	7.088E+02	4.46E+00	3.53E+00	0.97	1.02E+04	8.05E+03
	0.24071	0.002526	5.139E+07	1.0000	2.29E+01	0.0052702	1.05	1.265E-01	5.71E-02	4.52E-02	0.97	1.27E+00	1.00E+00
	0.31169	0.001073	5.139E+07	1.0000	9.71E+00	0.0048462	1.01	4.753E-02	3.39E-02	2.68E-02	0.96	3.16E-01	2.50E-01
	0.33471	0.001453	5.139E+07	1.0000	1.31E+01	0.0076384	1.00	1.004E-01	4.99E-02	3.95E-02	0.95	6.23E-01	4.93E-01
	0.36223	0.02249	5.139E+07	1.0000	2.04E+02	0.13995	1.00	2.848E+01	8.44E-01	6.68E-01	0.95	1.63E+02	1.29E+02
	0.39054	0.006436	5.139E+07	1.0000	5.82E+01	0.046976	1.00	2.736E+00	2.61E-01	2.07E-01	0.95	1.44E+01	1.14E+01
	0.4217	0.00128	5.139E+07	1.0000	1.16E+01	0.010747	1.00	1.245E-01	5.59E-02	4.42E-02	0.95	6.15E-01	4.87E-01
	0.4718	0.007266	5.139E+07	1.0000	6.58E+01	0.073278	0.99	4.770E+00	3.48E-01	2.75E-01	0.96	2.20E+01	1.74E+01
	0.67734	0.002353	5.139E+07	1.0000	2.13E+01	0.05303	1.00	1.129E+00	1.70E-01	1.35E-01	1.00	3.63E+00	2.87E+00
	0.78828	0.005328	5.139E+07	1.0000	4.82E+01	0.13996	1.01	6.816E+00	4.45E-01	3.53E-01	1.01	2.17E+01	1.72E+01
	0.79032	0.001246	5.139E+07	1.0000	1.13E+01	0.032828	1.01	3.739E-01	1.04E-01	8.27E-02	1.01	1.19E+00	9.42E-01
	0.83483	0.12975	5.139E+07	1.0000	1.17E+03	3.5957	1.01	4.264E+03	1.14E+01	9.07E+00	1.02	1.37E+04	1.09E+04
	0.85034	0.00173	5.139E+07	1.0000	1.57E+01	0.048758	1.01	7.710E-01	1.55E-01	1.23E-01	1.02	2.48E+00	1.96E+00
	0.86233	0.006712	5.139E+07	1.0000	6.07E+01	0.19164	1.01	1.176E+01	6.10E-01	4.83E-01	1.02	3.78E+01	2.99E+01
	0.94492	0.002941	5.139E+07	1.0000	2.66E+01	0.091932	1.01	2.471E+00	2.90E-01	2.29E-01	1.01	7.79E+00	6.17E+00
	0.98578	0.013148	5.139E+07	1.0000	1.19E+02	0.42996	1.01	5.167E+01	1.34E+00	1.06E+00	1.01	1.61E+02	1.28E+02
	0.99009	0.001419	5.139E+07	1.0000	1.28E+01	0.046617	1.01	6.046E-01	1.45E-01	1.15E-01	1.01	1.89E+00	1.49E+00
	1.0396	0.004844	5.139E+07	1.0000	4.38E+01	0.16653	1.01	7.373E+00	5.17E-01	4.09E-01	1.01	2.29E+01	1.81E+01
	1.0495	0.001419	5.139E+07	1.0000	1.28E+01	0.049203	1.01	6.382E-01	1.52E-01	1.21E-01	1.01	1.98E+00	1.57E+00
	1.1413	0.012837	5.139E+07	1.0000	1.16E+02	0.48182	1.01	5.653E+01	1.47E+00	1.17E+00	1.00	1.71E+02	1.36E+02
	1.1795	0.009965	5.139E+07	1.0000	9.02E+01	0.38609	1.02	3.551E+01	1.17E+00	9.28E-01	1.00	1.06E+02	8.37E+01
	1.185	0.006885	5.139E+07	1.0000	6.23E+01	0.26808	1.02	1.704E+01	8.13E-01	6.44E-01	1.00	5.07E+01	4.01E+01
	1.2098	0.001419	5.139E+07	1.0000	1.28E+01	0.056407	1.02	7.388E-01	1.70E-01	1.35E-01	1.00	2.18E+00	1.73E+00
	1.2127	0.001384	5.139E+07	1.0000	1.25E+01	0.055162	1.02	7.047E-01	1.66E-01	1.32E-01	1.00	2.08E+00	1.65E+00
	1.2452	0.003633	5.139E+07	1.0000	3.29E+01	0.14872	1.02	4.987E+00	4.45E-01	3.52E-01	1.00	1.46E+01	1.16E+01
	1.2507	0.01121	5.139E+07	1.0000	1.01E+02	0.4611	1.02	4.771E+01	1.38E+00	1.09E+00	1.00	1.40E+02	1.11E+02

Isotope	Energy (MeV)	Probability	Design Basis Source (Ci)	Gap Release Fraction	Cont. Conc. (uCi/cc)	27A&B QAD Det. Response (Rad/hr)	27A&B Eff.	27A&B Response (Rad/hr)	27E QAD Det. Response (Rad/hr)	27F QAD Det. Response (Rad/hr)	27E&F Eff.	27E Response (Rad/hr)	27F Response (Rad/hr)
	1.325	0.001592	5.139E+07	1.0000	1.44E+01	0.069549	1.03	1.032E+00	2.04E-01	1.62E-01	0.99	2.91E+00	2.30E+00
	1.3523	0.001592	5.139E+07	1.0000	1.44E+01	0.071079	1.03	1.055E+00	2.07E-01	1.64E-01	0.99	2.95E+00	2.34E+00
	1.3695	0.014774	5.139E+07	1.0000	1.34E+02	0.66869	1.03	9.209E+01	1.94E+00	1.53E+00	0.99	2.57E+02	2.03E+02
	1.4069	0.00218	5.139E+07	1.0000	1.97E+01	0.10158	1.03	2.064E+00	2.91E-01	2.31E-01	0.99	5.69E+00	4.51E+00
	1.4648	0.001142	5.139E+07	1.0000	1.03E+01	0.055616	1.04	5.978E-01	1.57E-01	1.24E-01	0.99	1.61E+00	1.27E+00
	1.5184	0.021521	5.139E+07	1.0000	1.95E+02	1.0879	1.04	2.204E+02	3.03E+00	2.40E+00	0.98	5.79E+02	4.58E+02
	1.5298	0.10934	5.139E+07	1.0000	9.89E+02	5.5628	1.04	5.724E+03	1.55E+01	1.23E+01	0.98	1.50E+04	1.19E+04
	1.6038	0.004567	5.139E+07	1.0000	4.13E+01	0.242	1.05	1.050E+01	6.68E-01	5.29E-01	0.98	2.70E+01	2.14E+01
	1.6856	0.006643	5.139E+07	1.0000	6.01E+01	0.73737	1.06	4.699E+01	1.00E+00	7.95E-01	0.98	5.92E+01	4.68E+01
	1.8928	0.001384	5.139E+07	1.0000	1.25E+01	0.16584	1.09	2.264E+00	2.26E-01	1.79E-01	0.97	2.74E+00	2.17E+00
	1.9087	0.001003	5.139E+07	1.0000	9.08E+00	0.12082	1.09	1.195E+00	1.65E-01	1.30E-01	0.97	1.45E+00	1.15E+00
	2.0298	0.045291	5.139E+07	1.0000	4.10E+02	5.678	1.10	2.560E+03	7.73E+00	6.12E+00	0.97	3.07E+03	2.43E+03
	2.0354	0.037368	5.139E+07	1.0000	3.38E+02	4.6935	1.10	1.746E+03	6.39E+00	5.06E+00	0.97	2.10E+03	1.66E+03
	2.1865	0.002872	5.139E+07	1.0000	2.60E+01	0.37768	1.12	1.099E+01	5.14E-01	4.07E-01	0.96	1.28E+01	1.02E+01
	2.1958	0.13183	5.139E+07	1.0000	1.19E+03	17.391	1.13	2.344E+04	2.37E+01	1.88E+01	0.96	2.71E+04	2.15E+04
	2.2318	0.033908	5.139E+07	1.0000	3.07E+02	4.5188	1.13	1.567E+03	6.15E+00	4.87E+00	0.96	1.81E+03	1.44E+03
	2.3521	0.007301	5.139E+07	1.0000	6.61E+01	1.0062	1.14	7.579E+01	1.37E+00	1.08E+00	0.96	8.69E+01	6.88E+01
	2.3921	0.346	5.139E+07	1.0000	3.13E+03	48.201	1.15	1.736E+05	6.56E+01	5.20E+01	0.95	1.95E+05	1.55E+05
	2.4089	0.001038	5.139E+07	1.0000	9.39E+00	0.1453	1.15	1.570E+00	1.98E-01	1.57E-01	0.95	1.77E+00	1.40E+00
	2.5484	0.006228	5.139E+07	1.0000	5.64E+01	0.90331	1.17	5.957E+01	1.23E+00	9.74E-01	0.94	6.52E+01	5.16E+01
	2.771	0.001488	5.139E+07	1.0000	1.35E+01	0.22768	1.19	3.648E+00	3.10E-01	2.45E-01	0.93	3.88E+00	3.07E+00
	1.0001	0.018892	5.139E+07	1.0000	1.71E+02	1.4333	1.01	2.475E+02	1.95E+00	1.55E+00	1.01	3.37E+02	2.67E+02
Kr-89	0.1962	0.0022	6.082E+07	1.0000	2.36E+01	0.0024232	1.05	5.995E-02	3.77E-02	2.99E-02	0.97	8.63E-01	6.83E-01
	0.1975	0.0182	6.082E+07	1.0000	1.95E+02	0.020754	1.05	4.248E+00	3.15E-01	2.49E-01	0.97	5.95E+01	4.71E+01
	0.20503	0.00124	6.082E+07	1.0000	1.33E+01	0.0016211	1.05	2.261E-02	2.26E-02	1.79E-02	0.98	2.94E-01	2.33E-01
	0.2209	0.2	6.082E+07	1.0000	2.14E+03	0.32352	1.06	7.346E+02	4.03E+00	3.19E+00	0.97	8.37E+03	6.62E+03
	0.26411	0.0066	6.082E+07	1.0000	7.07E+01	0.018307	1.03	1.333E+00	1.69E-01	1.34E-01	0.97	1.16E+01	9.16E+00
	0.3382	0.00342	6.082E+07	1.0000	3.66E+01	0.018385	1.00	6.734E-01	1.19E-01	9.41E-02	0.95	4.14E+00	3.27E+00
	0.34503	0.0118	6.082E+07	1.0000	1.26E+02	0.066193	1.00	8.365E+00	4.20E-01	3.32E-01	0.95	5.04E+01	3.99E+01
	0.35606	0.0414	6.082E+07	1.0000	4.43E+02	0.24833	1.00	1.101E+02	1.52E+00	1.21E+00	0.95	6.42E+02	5.08E+02
	0.36488	0.009	6.082E+07	1.0000	9.64E+01	0.056855	1.00	5.480E+00	3.40E-01	2.69E-01	0.95	3.12E+01	2.47E+01
	0.3693	0.0138	6.082E+07	1.0000	1.48E+02	0.089448	1.00	1.322E+01	5.28E-01	4.18E-01	0.95	7.42E+01	5.87E+01
	0.40225	0.00318	6.082E+07	1.0000	3.41E+01	0.024648	1.00	8.395E-01	1.33E-01	1.05E-01	0.95	4.30E+00	3.40E+00
	0.41142	0.0256	6.082E+07	1.0000	2.74E+02	0.20614	1.00	5.652E+01	1.09E+00	8.65E-01	0.95	2.85E+02	2.25E+02

v/B 9/16/94

Isotope	Energy (MeV)	Probability	Design Basis Source (Ci)	Gap Release Fraction	Cont. Conc. (uCi/cc)	27A&B QAD Det. Response (Rad/hr)	27A&B Eff.	27A&B Response (Rad/hr)	27E QAD Det. Response (Rad/hr)	27F QAD Det. Response (Rad/hr)	27E&F Eff.	27E Response (Rad/hr)	27F Response (Rad/hr)
	0.43808	0.0096	6.082E+07	1.0000	1.03E+02	0.085854	1.00	8.827E+00	4.33E-01	3.43E-01	0.95	4.23E+01	3.35E+01
	0.46613	0.008	6.082E+07	1.0000	8.57E+01	0.079167	0.99	6.715E+00	3.80E-01	3.01E-01	0.96	3.12E+01	2.47E+01
	0.49076	0.00322	6.082E+07	1.0000	3.45E+01	0.034556	0.99	1.180E+00	1.59E-01	1.26E-01	0.96	5.25E+00	4.16E+00
	0.4975	0.0664	6.082E+07	1.0000	7.11E+02	0.72789	0.99	5.125E+02	3.30E+00	2.61E+00	0.96	2.25E+03	1.78E+03
	0.4986	0.0114	6.082E+07	1.0000	1.22E+02	0.1254	0.99	1.516E+01	5.67E-01	4.49E-01	0.96	6.65E+01	5.27E+01
	0.5573	0.0016	6.082E+07	1.0000	1.71E+01	0.028252	0.99	4.793E-01	1.00E-01	7.92E-02	0.98	1.68E+00	1.33E+00
	0.57696	0.0564	6.082E+07	1.0000	6.04E+02	1.0548	0.99	6.308E+02	3.59E+00	2.85E+00	0.98	2.12E+03	1.68E+03
	0.5858	0.166	6.082E+07	1.0000	1.78E+03	3.177	0.99	5.592E+03	1.07E+01	8.45E+00	0.98	1.86E+04	1.47E+04
	0.6262	0.006	6.082E+07	1.0000	6.43E+01	0.12476	1.00	8.017E+00	4.05E-01	3.21E-01	0.99	2.58E+01	2.04E+01
	0.62975	0.00342	6.082E+07	1.0000	3.66E+01	0.071557	1.00	2.621E+00	2.32E-01	1.84E-01	0.99	8.41E+00	6.67E+00
	0.66572	0.00114	6.082E+07	1.0000	1.22E+01	0.02526	1.00	3.084E-01	8.12E-02	6.44E-02	1.00	9.92E-01	7.86E-01
	0.6714	0.00106	6.082E+07	1.0000	1.14E+01	0.023691	1.00	2.690E-01	7.61E-02	6.03E-02	1.00	8.64E-01	6.85E-01
	0.67411	0.00232	6.082E+07	1.0000	2.48E+01	0.052052	1.00	1.293E+00	1.67E-01	1.33E-01	1.00	4.15E+00	3.29E+00
	0.69624	0.0178	6.082E+07	1.0000	1.91E+02	0.41228	1.00	7.860E+01	1.32E+00	1.05E+00	1.01	2.55E+02	2.02E+02
	0.70701	0.00498	6.082E+07	1.0000	5.33E+01	0.11712	1.00	6.247E+00	3.75E-01	2.97E-01	1.01	2.02E+01	1.60E+01
	0.71005	0.0078	6.082E+07	1.0000	8.35E+01	0.18419	1.00	1.539E+01	5.90E-01	4.68E-01	1.01	4.98E+01	3.95E+01
	0.72963	0.00296	6.082E+07	1.0000	3.17E+01	0.071817	1.01	2.300E+00	2.30E-01	1.82E-01	1.01	7.36E+00	5.83E+00
	0.73839	0.042	6.082E+07	1.0000	4.50E+02	1.0314	1.01	4.686E+02	3.30E+00	2.61E+00	1.01	1.50E+03	1.19E+03
	0.7474	0.00114	6.082E+07	1.0000	1.22E+01	0.028341	1.01	3.495E-01	9.06E-02	7.18E-02	1.01	1.12E+00	8.85E-01
	0.7629	0.004	6.082E+07	1.0000	4.28E+01	0.10153	1.01	4.393E+00	3.24E-01	2.57E-01	1.01	1.40E+01	1.11E+01
	0.7629	0.0092	6.082E+07	1.0000	9.85E+01	0.23355	1.01	2.324E+01	7.46E-01	5.91E-01	1.01	7.42E+01	5.88E+01
	0.77649	0.0112	6.082E+07	1.0000	1.20E+02	0.2895	1.01	3.507E+01	9.23E-01	7.31E-01	1.01	1.12E+02	8.86E+01
	0.82675	0.0076	6.082E+07	1.0000	8.14E+01	0.20885	1.01	1.717E+01	6.65E-01	5.26E-01	1.02	5.52E+01	4.37E+01
	0.83553	0.011	6.082E+07	1.0000	1.18E+02	0.3051	1.01	3.630E+01	9.71E-01	7.69E-01	1.02	1.17E+02	9.24E+01
	0.85737	0.00286	6.082E+07	1.0000	3.06E+01	0.08121	1.01	2.512E+00	2.58E-01	2.05E-01	1.02	8.08E+00	6.40E+00
	0.86708	0.0592	6.082E+07	1.0000	6.34E+02	1.699	1.01	1.088E+03	5.41E+00	4.28E+00	1.02	3.50E+03	2.77E+03
	0.87042	0.0016	6.082E+07	1.0000	1.71E+01	0.046081	1.01	7.976E-01	1.47E-01	1.16E-01	1.02	2.56E+00	2.03E+00
	0.90427	0.0718	6.082E+07	1.0000	7.69E+02	2.1462	1.01	1.667E+03	6.81E+00	5.39E+00	1.01	5.29E+03	4.19E+03
	0.93095	0.0062	6.082E+07	1.0000	6.64E+01	0.19085	1.01	1.280E+01	6.03E-01	4.77E-01	1.01	4.04E+01	3.20E+01
	0.94419	0.00164	6.082E+07	1.0000	1.76E+01	0.051212	1.01	9.085E-01	1.61E-01	1.28E-01	1.01	2.86E+00	2.27E+00
	0.95318	0.00106	6.082E+07	1.0000	1.14E+01	0.033444	1.01	3.835E-01	1.05E-01	8.33E-02	1.01	1.21E+00	9.55E-01
	0.96042	0.00322	6.082E+07	1.0000	3.45E+01	0.10238	1.01	3.566E+00	3.22E-01	2.55E-01	1.01	1.12E+01	8.87E+00
	0.97439	0.0098	6.082E+07	1.0000	1.05E+02	0.31631	1.01	3.353E+01	9.90E-01	7.84E-01	1.01	1.05E+02	8.31E+01
	0.99737	0.0066	6.082E+07	1.0000	7.07E+01	0.21857	1.01	1.560E+01	6.80E-01	5.39E-01	1.01	4.86E+01	3.85E+01

Isotope	Energy (MeV)	Probability	Design Basis Source (Ci)	Gap Release Fraction	Cont. Conc. (uCi/cc)	27A&B QAD Det. Response (Rad/hr)	27A&B Eff.	27A&B Response (Rad/hr)	27E QAD Det. Response (Rad/hr)	27F QAD Det. Response (Rad/hr)	27E&F Eff.	27E Response (Rad/hr)	27F Response (Rad/hr)
	1.0108	0.00108	6.082E+07	1.0000	1.16E+01	0.036205	1.01	4.230E-01	1.13E-01	8.91E-02	1.01	1.31E+00	1.04E+00
	1.0444	0.00408	6.082E+07	1.0000	4.37E+01	0.14084	1.01	6.216E+00	4.37E-01	3.46E-01	1.01	1.93E+01	1.53E+01
	1.0765	0.00236	6.082E+07	1.0000	2.53E+01	0.083774	1.01	2.139E+00	2.59E-01	2.05E-01	1.01	6.61E+00	5.23E+00
	1.0881	0.00358	6.082E+07	1.0000	3.83E+01	0.12836	1.01	4.971E+00	3.96E-01	3.13E-01	1.00	1.52E+01	1.20E+01
	1.1032	0.009	6.082E+07	1.0000	9.64E+01	0.3268	1.01	3.182E+01	1.01E+00	7.96E-01	1.00	9.69E+01	7.68E+01
	1.1078	0.0292	6.082E+07	1.0000	3.13E+02	1.0648	1.01	3.363E+02	3.27E+00	2.59E+00	1.00	1.02E+03	8.11E+02
	1.1166	0.0166	6.082E+07	1.0000	1.78E+02	0.60993	1.01	1.095E+02	1.87E+00	1.48E+00	1.00	3.33E+02	2.64E+02
	1.1315	0.0016	6.082E+07	1.0000	1.71E+01	0.059531	1.01	1.030E+00	1.82E-01	1.44E-01	1.00	3.13E+00	2.47E+00
	1.1625	0.00214	6.082E+07	1.0000	2.29E+01	0.081761	1.02	1.911E+00	2.49E-01	1.97E-01	1.00	5.71E+00	4.52E+00
	1.1723	0.0098	6.082E+07	1.0000	1.05E+02	0.37737	1.02	4.040E+01	1.15E+00	9.08E-01	1.00	1.20E+02	9.53E+01
	1.1824	0.00166	6.082E+07	1.0000	1.78E+01	0.064496	1.02	1.170E+00	1.96E-01	1.55E-01	1.00	3.48E+00	2.75E+00
	1.1865	0.00184	6.082E+07	1.0000	1.97E+01	0.071739	1.02	1.442E+00	2.17E-01	1.72E-01	1.00	4.29E+00	3.39E+00
	1.2288	0.00144	6.082E+07	1.0000	1.54E+01	0.058157	1.02	9.149E-01	1.75E-01	1.38E-01	1.00	2.69E+00	2.13E+00
	1.2356	0.00594	6.082E+07	1.0000	6.36E+01	0.24125	1.02	1.565E+01	7.24E-01	5.73E-01	1.00	4.60E+01	3.64E+01
	1.2737	0.0136	6.082E+07	1.0000	1.46E+02	0.56997	1.02	8.468E+01	1.69E+00	1.34E+00	0.99	2.44E+02	1.93E+02
	1.3027	0.001	6.082E+07	1.0000	1.07E+01	0.042901	1.02	4.687E-01	1.27E-01	1.00E-01	0.99	1.34E+00	1.06E+00
	1.3243	0.0306	6.082E+07	1.0000	3.28E+02	1.3359	1.03	4.510E+02	3.92E+00	3.10E+00	0.99	1.27E+03	1.01E+03
	1.3354	0.00132	6.082E+07	1.0000	1.41E+01	0.058148	1.03	8.467E-01	1.70E-01	1.35E-01	0.99	2.38E+00	1.88E+00
	1.3406	0.00194	6.082E+07	1.0000	2.08E+01	0.085784	1.03	1.836E+00	2.51E-01	1.98E-01	0.99	5.15E+00	4.08E+00
	1.3675	0.00148	6.082E+07	1.0000	1.59E+01	0.066866	1.03	1.092E+00	1.94E-01	1.54E-01	0.99	3.04E+00	2.41E+00
	1.3722	0.00126	6.082E+07	1.0000	1.35E+01	0.057135	1.03	7.942E-01	1.65E-01	1.31E-01	0.99	2.21E+00	1.75E+00
	1.4126	0.00264	6.082E+07	1.0000	2.83E+01	0.12354	1.03	3.598E+00	3.54E-01	2.80E-01	0.99	9.91E+00	7.84E+00
	1.4216	0.00224	6.082E+07	1.0000	2.40E+01	0.10558	1.03	2.609E+00	3.02E-01	2.39E-01	0.99	7.16E+00	5.67E+00
	1.4613	0.00122	6.082E+07	1.0000	1.31E+01	0.059276	1.04	8.055E-01	1.67E-01	1.33E-01	0.99	2.17E+00	1.71E+00
	1.4642	0.00178	6.082E+07	1.0000	1.91E+01	0.08667	1.04	1.718E+00	2.45E-01	1.94E-01	0.99	4.62E+00	3.66E+00
	1.4685	0.00188	6.082E+07	1.0000	2.01E+01	0.09185	1.04	1.923E+00	2.59E-01	2.05E-01	0.99	5.16E+00	4.09E+00
	1.4728	0.0688	6.082E+07	1.0000	7.37E+02	3.3721	1.04	2.584E+03	9.49E+00	7.52E+00	0.99	6.93E+03	5.48E+03
	1.501	0.0132	6.082E+07	1.0000	1.41E+02	0.66087	1.04	9.717E+01	1.85E+00	1.46E+00	0.99	2.58E+02	2.05E+02
	1.5062	0.00112	6.082E+07	1.0000	1.20E+01	0.056218	1.04	7.013E-01	1.57E-01	1.24E-01	0.99	1.86E+00	1.48E+00
	1.53	0.0332	6.082E+07	1.0000	3.56E+02	1.6893	1.04	6.247E+02	4.70E+00	3.72E+00	0.98	1.64E+03	1.30E+03
	1.5337	0.0512	6.082E+07	1.0000	5.48E+02	2.6103	1.04	1.489E+03	7.26E+00	5.75E+00	0.98	3.90E+03	3.09E+03
	1.5553	0.00152	6.082E+07	1.0000	1.63E+01	0.07843	1.05	1.341E+00	2.18E-01	1.72E-01	0.98	3.47E+00	2.75E+00
	1.5738	0.0019	6.082E+07	1.0000	2.03E+01	0.099031	1.05	2.116E+00	2.74E-01	2.17E-01	0.98	5.47E+00	4.33E+00
	1.6341	0.0082	6.082E+07	1.0000	8.78E+01	0.44153	1.05	4.072E+01	1.21E+00	9.61E-01	0.98	1.04E+02	8.27E+01

Isotope	Energy (MeV)	Probability	Design Basis Source (Ci)	Gap Release Fraction	Cont. Conc. (uCi/cc)	27A&B QAD Det. Response (Rad/hr)	27A&B Eff.	27A&B Response (Rad/hr)	27E QAD Det. Response (Rad/hr)	27F QAD Det. Response (Rad/hr)	27E&F Eff.	27E Response (Rad/hr)	27F Response (Rad/hr)
	1.6438	0.00338	6.082E+07	1.0000	3.62E+01	0.18295	1.06	7.020E+00	5.02E-01	3.98E-01	0.98	1.78E+01	1.41E+01
	1.6675	0.00128	6.082E+07	1.0000	1.37E+01	0.070177	1.06	1.020E+00	1.92E-01	1.52E-01	0.98	2.58E+00	2.04E+00
	1.6769	0.0014	6.082E+07	1.0000	1.50E+01	0.077123	1.06	1.226E+00	2.11E-01	1.67E-01	0.98	3.10E+00	2.45E+00
	1.6838	0.00132	6.082E+07	1.0000	1.41E+01	0.072985	1.06	1.094E+00	1.99E-01	1.58E-01	0.98	2.76E+00	2.19E+00
	1.692	0.0026	6.082E+07	1.0000	2.78E+01	0.14433	1.06	4.260E+00	3.94E-01	3.12E-01	0.98	1.08E+01	8.51E+00
	1.6937	0.0438	6.082E+07	1.0000	4.69E+02	2.4341	1.06	1.210E+03	6.64E+00	5.26E+00	0.98	3.05E+03	2.42E+03
	1.7213	0.00224	6.082E+07	1.0000	2.40E+01	0.12627	1.06	3.211E+00	3.43E-01	2.72E-01	0.98	8.07E+00	6.39E+00
	1.7776	0.0076	6.082E+07	1.0000	8.14E+01	0.44095	1.07	3.840E+01	1.19E+00	9.42E-01	0.98	9.50E+01	7.52E+01
	1.7882	0.00106	6.082E+07	1.0000	1.14E+01	0.061815	1.07	7.509E-01	1.67E-01	1.32E-01	0.98	1.85E+00	1.47E+00
	1.8107	0.0014	6.082E+07	1.0000	1.50E+01	0.082545	1.08	1.337E+00	2.22E-01	1.76E-01	0.98	3.26E+00	2.58E+00
	1.8375	0.00118	6.082E+07	1.0000	1.26E+01	0.070495	1.08	9.622E-01	1.89E-01	1.49E-01	0.98	2.34E+00	1.85E+00
	1.8397	0.0035	6.082E+07	1.0000	3.75E+01	0.20932	1.08	8.474E+00	5.61E-01	4.44E-01	0.97	2.04E+01	1.61E+01
	1.8685	0.00196	6.082E+07	1.0000	2.10E+01	0.11886	1.08	2.695E+00	3.17E-01	2.51E-01	0.97	6.46E+00	5.11E+00
	1.8798	0.00158	6.082E+07	1.0000	1.69E+01	0.096355	1.08	1.761E+00	2.57E-01	2.03E-01	0.97	4.21E+00	3.34E+00
	1.9034	0.0104	6.082E+07	1.0000	1.11E+02	0.64131	1.09	7.786E+01	1.70E+00	1.35E+00	0.97	1.84E+02	1.46E+02
	1.9391	0.0064	6.082E+07	1.0000	6.85E+01	0.40142	1.09	2.999E+01	1.06E+00	8.40E-01	0.97	7.05E+01	5.58E+01
	1.9666	0.00132	6.082E+07	1.0000	1.41E+01	0.083882	1.10	1.304E+00	2.21E-01	1.75E-01	0.97	3.03E+00	2.40E+00
	1.9986	0.00118	6.082E+07	1.0000	1.26E+01	0.076099	1.10	1.058E+00	1.99E-01	1.58E-01	0.97	2.45E+00	1.94E+00
	2.0122	0.0156	6.082E+07	1.0000	1.67E+02	1.0109	1.10	1.858E+02	2.65E+00	2.10E+00	0.97	4.29E+02	3.40E+02
	2.021	0.00244	6.082E+07	1.0000	2.61E+01	0.15861	1.10	4.559E+00	4.15E-01	3.29E-01	0.97	1.05E+01	8.34E+00
	2.0465	0.00262	6.082E+07	1.0000	2.81E+01	0.17183	1.11	5.352E+00	4.50E-01	3.56E-01	0.97	1.22E+01	9.69E+00
	2.1006	0.0094	6.082E+07	1.0000	1.01E+02	0.62775	1.11	7.015E+01	1.64E+00	1.30E+00	0.97	1.60E+02	1.27E+02
	2.16	0.00528	6.082E+07	1.0000	5.65E+01	0.35979	1.12	2.279E+01	9.38E-01	7.43E-01	0.96	5.09E+01	4.03E+01
	2.1958	0.00128	6.082E+07	1.0000	1.37E+01	0.088267	1.13	1.367E+00	2.30E-01	1.82E-01	0.96	3.03E+00	2.40E+00
	2.2802	0.00204	6.082E+07	1.0000	2.18E+01	0.14448	1.14	3.599E+00	3.75E-01	2.97E-01	0.96	7.87E+00	6.23E+00
	2.3774	0.008	6.082E+07	1.0000	8.57E+01	0.58417	1.15	5.756E+01	1.51E+00	1.20E+00	0.95	1.23E+02	9.74E+01
	2.401	0.0072	6.082E+07	1.0000	7.71E+01	0.52938	1.15	4.695E+01	1.37E+00	1.08E+00	0.95	1.00E+02	7.94E+01
	2.5979	0.00108	6.082E+07	1.0000	1.16E+01	0.084134	1.17	1.139E+00	2.16E-01	1.71E-01	0.94	2.35E+00	1.86E+00
	2.6453	0.0042	6.082E+07	1.0000	4.50E+01	0.33171	1.18	1.761E+01	8.50E-01	6.73E-01	0.94	3.59E+01	2.84E+01
	2.7509	0.00124	6.082E+07	1.0000	1.33E+01	0.10089	1.19	1.594E+00	2.57E-01	2.04E-01	0.93	3.18E+00	2.51E+00
	2.7821	0.0076	6.082E+07	1.0000	8.14E+01	0.62381	1.19	6.042E+01	1.59E+00	1.26E+00	0.92	1.19E+02	9.42E+01
	2.7938	0.0068	6.082E+07	1.0000	7.28E+01	0.55969	1.19	4.851E+01	1.42E+00	1.13E+00	0.92	9.54E+01	7.55E+01
	2.8196	0.00132	6.082E+07	1.0000	1.41E+01	0.10944	1.19	1.841E+00	2.78E-01	2.20E-01	0.92	3.62E+00	2.86E+00
	2.8533	0.0024	6.082E+07	1.0000	2.57E+01	0.20078	1.19	6.142E+00	5.09E-01	4.03E-01	0.92	1.20E+01	9.54E+00

Isotope	Energy (MeV)	Probability	Design Basis Source (Ci)	Gap Release Fraction	Cont. Conc. (uCi/cc)	27A&B QAD Det. Response (Rad/hr)	27A&B Eff.	27A&B Response (Rad/hr)	27E QAD Det. Response (Rad/hr)	27F QAD Det. Response (Rad/hr)	27E&F Eff.	27E Response (Rad/hr)	27F Response (Rad/hr)
	2.8662	0.0174	6.082E+07	1.0000	1.86E+02	1.4606	1.19	3.239E+02	3.70E+00	2.93E+00	0.92	6.35E+02	5.03E+02
	2.8787	0.00324	6.082E+07	1.0000	3.47E+01	0.27292	1.19	1.127E+01	6.92E-01	5.48E-01	0.91	2.18E+01	1.73E+01
	3.0179	0.00254	6.082E+07	1.0000	2.72E+01	0.22176	1.20	7.239E+00	5.59E-01	4.42E-01	0.90	1.37E+01	1.08E+01
	3.0292	0.0027	6.082E+07	1.0000	2.89E+01	0.23623	1.20	8.197E+00	5.95E-01	4.71E-01	0.90	1.55E+01	1.23E+01
	3.1073	0.00194	6.082E+07	1.0000	2.08E+01	0.17228	1.20	4.296E+00	4.35E-01	3.44E-01	0.89	8.04E+00	6.36E+00
	3.1403	0.0104	6.082E+07	1.0000	1.11E+02	0.92945	1.20	1.242E+02	2.35E+00	1.86E+00	0.88	2.30E+02	1.82E+02
	3.1721	0.001	6.082E+07	1.0000	1.07E+01	0.089913	1.20	1.156E+00	2.27E-01	1.80E-01	0.88	2.14E+00	1.69E+00
	3.2198	0.00428	6.082E+07	1.0000	4.58E+01	0.3883	1.20	2.136E+01	9.81E-01	7.76E-01	0.87	3.91E+01	3.10E+01
	3.3617	0.0104	6.082E+07	1.0000	1.11E+02	0.96825	1.20	1.294E+02	2.45E+00	1.94E+00	0.84	2.29E+02	1.81E+02
	3.3711	0.0062	6.082E+07	1.0000	6.64E+01	0.57827	1.20	4.608E+01	1.46E+00	1.16E+00	0.84	8.16E+01	6.46E+01
	3.3999	0.00136	6.082E+07	1.0000	1.46E+01	0.12752	1.20	2.229E+00	3.23E-01	2.55E-01	0.83	3.90E+00	3.09E+00
	3.5329	0.0134	6.082E+07	1.0000	1.44E+02	1.286	1.18	2.178E+02	3.25E+00	2.58E+00	0.80	3.74E+02	2.96E+02
	3.5839	0.00258	6.082E+07	1.0000	2.76E+01	0.24985	1.18	8.147E+00	6.32E-01	5.01E-01	0.79	1.38E+01	1.09E+01
	3.7178	0.0084	6.082E+07	1.0000	9.00E+01	0.83246	1.16	8.688E+01	2.11E+00	1.67E+00	0.76	1.44E+02	1.14E+02
	3.7325	0.00138	6.082E+07	1.0000	1.48E+01	0.13704	1.16	2.350E+00	3.47E-01	2.75E-01	0.75	3.85E+00	3.04E+00
	3.7814	0.00132	6.082E+07	1.0000	1.41E+01	0.13221	1.15	2.149E+00	3.35E-01	2.65E-01	0.74	3.50E+00	2.77E+00
	3.8274	0.00138	6.082E+07	1.0000	1.48E+01	0.13924	1.14	2.346E+00	3.52E-01	2.79E-01	0.72	3.75E+00	2.97E+00
	3.8427	0.0011	6.082E+07	1.0000	1.18E+01	0.11131	1.14	1.495E+00	2.82E-01	2.23E-01	0.72	2.39E+00	1.89E+00
	3.9018	0.00134	6.082E+07	1.0000	1.44E+01	0.13689	1.12	2.200E+00	3.46E-01	2.74E-01	0.70	3.48E+00	2.75E+00
	3.923	0.00414	6.082E+07	1.0000	4.43E+01	0.42445	1.12	2.108E+01	1.07E+00	8.50E-01	0.69	3.29E+01	2.60E+01
	3.9655	0.00208	6.082E+07	1.0000	2.23E+01	0.21472	1.11	5.310E+00	5.43E-01	4.30E-01	0.68	8.23E+00	6.51E+00
	3.9775	0.0027	6.082E+07	1.0000	2.89E+01	0.27929	1.10	8.884E+00	7.06E-01	5.59E-01	0.67	1.37E+01	1.08E+01
	3.996	0.00142	6.082E+07	1.0000	1.52E+01	0.1473	1.10	2.464E+00	3.73E-01	2.95E-01	0.67	3.80E+00	3.00E+00
	4.048	0.00116	6.082E+07	1.0000	1.24E+01	0.12118	1.09	1.641E+00	3.07E-01	2.43E-01	0.65	2.48E+00	1.96E+00
	4.3411	0.00104	6.082E+07	1.0000	1.11E+01	0.11291	0.98	1.233E+00	2.87E-01	2.27E-01	0.52	1.66E+00	1.32E+00
	4.4892	0.00134	6.082E+07	1.0000	1.44E+01	0.14822	0.91	1.936E+00	3.78E-01	2.99E-01	0.45	2.44E+00	1.93E+00
	2.1811	0.07118	6.082E+07	1.0000	7.62E+02	4.8839	1.12	4.170E+03	1.27E+01	1.01E+01	0.96	9.32E+03	7.37E+03
Xe-131m	0.16393	0.0196	9.762E+05	1.0000	3.37E+00	0.0087908	1.00	2.962E-02	2.65E-01	2.10E-01	0.98	8.75E-01	6.92E-01
Xe-133	0.079621	0.002165	1.902E+08	1.0000	7.25E+01	1.8642E-08	0.70	9.463E-07	1.48E-02	1.17E-02	0.93	9.97E-01	7.89E-01
	0.080997	0.36483	1.902E+08	1.0000	1.22E+04	5.6564E-06	0.73	5.046E-02	2.51E+00	1.99E+00	0.82	2.52E+04	1.99E+04
	0.1777	0.000712	1.902E+08	1.0000	2.38E+01	0.00047185	1.02	1.148E-02	1.07E-02	8.46E-03	0.98	2.50E-01	1.98E-01
Xe-133m	0.23322	0.103	6.044E+06	1.0000	1.10E+02	0.1955	1.05	2.250E+01	2.23E+00	1.77E+00	0.97	2.37E+02	1.88E+02
Xe-135	0.1582	0.002886	4.723E+07	1.0000	2.40E+01	0.0010972	1.00	2.634E-02	3.73E-02	2.95E-02	0.99	8.86E-01	7.01E-01
	0.24979	0.899	4.723E+07	1.0000	7.48E+03	2.099	1.04	1.632E+04	2.14E+01	1.69E+01	0.97	1.55E+05	1.23E+05

V/B [illegible] 9/16/94

Isotope	Energy (MeV)	Probability	Design Basis Source (Ci)	Gap Release Fraction	Cont. Conc. (uCi/cc)	27A&B QAD Det. Response (Rad/hr)	27A&B Eff.	27A&B Response (Rad/hr)	27E QAD Det. Response (Rad/hr)	27F QAD Det. Response (Rad/hr)	27E&F Eff.	27E Response (Rad/hr)	27F Response (Rad/hr)
	0.35839	0.002203	4.723E+07	1.0000	1.83E+01	0.013397	1.00	2.455E-01	8.17E-02	6.47E-02	0.95	1.42E+00	1.13E+00
	0.40799	0.003578	4.723E+07	1.0000	2.98E+01	0.028407	1.00	8.453E-01	1.51E-01	1.20E-01	0.95	4.28E+00	3.39E+00
	0.60819	0.028948	4.723E+07	1.0000	2.41E+02	0.58265	0.99	1.389E+02	1.91E+00	1.51E+00	0.99	4.55E+02	3.61E+02
	0.68433	0.002093	4.723E+07	1.0000	1.74E+01	0.047669	1.00	8.298E-01	1.53E-01	1.21E-01	1.00	2.66E+00	2.11E+00
Xe-135m	0.52656	0.80997	3.905E+07	1.0000	5.57E+03	12.76	0.99	7.036E+04	4.98E+01	3.95E+01	0.97	2.69E+05	2.13E+05
Xe-137	0.298	0.001167	1.656E+08	1.0000	3.40E+01	0.0047552	1.01	1.634E-01	3.49E-02	2.76E-02	0.96	1.14E+00	9.01E-01
	0.39335	0.001381	1.656E+08	1.0000	4.03E+01	0.010236	1.00	4.122E-01	5.64E-02	4.47E-02	0.95	2.16E+00	1.71E+00
	0.45549	0.307	1.656E+08	1.0000	8.95E+03	2.926	0.99	2.593E+04	1.43E+01	1.13E+01	0.95	1.22E+05	9.63E+04
	0.84895	0.00614	1.656E+08	1.0000	1.79E+02	0.17277	1.01	3.124E+01	5.50E-01	4.36E-01	1.02	1.00E+02	7.96E+01
	0.98225	0.002057	1.656E+08	1.0000	6.00E+01	0.067004	1.01	4.059E+00	2.09E-01	1.66E-01	1.01	1.27E+01	1.00E+01
	1.1193	0.001053	1.656E+08	1.0000	3.07E+01	0.038767	1.01	1.202E+00	1.19E-01	9.42E-02	1.00	3.65E+00	2.89E+00
	1.2732	0.002241	1.656E+08	1.0000	6.54E+01	0.093873	1.02	6.257E+00	2.79E-01	2.21E-01	0.99	1.81E+01	1.43E+01
	1.5768	0.001013	1.656E+08	1.0000	2.95E+01	0.052882	1.05	1.640E+00	1.46E-01	1.16E-01	0.98	4.24E+00	3.36E+00
	1.6125	0.001228	1.656E+08	1.0000	3.58E+01	0.065389	1.05	2.459E+00	1.80E-01	1.43E-01	0.98	6.33E+00	5.01E+00
	1.7834	0.004083	1.656E+08	1.0000	1.19E+02	0.23746	1.07	3.025E+01	6.41E-01	5.07E-01	0.98	7.48E+01	5.92E+01
	2.8498	0.001811	1.656E+08	1.0000	5.28E+01	0.15133	1.19	9.510E+00	3.84E-01	3.04E-01	0.92	1.87E+01	1.48E+01
	1.4906	0.01315	1.656E+08	1.0000	3.83E+02	0.65322	1.04	2.605E+02	1.83E+00	1.45E+00	0.99	6.95E+02	5.50E+02
Xe-138	0.15375	0.059535	1.506E+08	1.0000	1.58E+03	0.019885	1.00	3.140E+01	7.42E-01	5.87E-01	0.99	1.16E+03	9.17E+02
	0.24256	0.034965	1.506E+08	1.0000	9.27E+02	0.07466	1.05	7.269E+01	7.99E-01	6.32E-01	0.97	7.19E+02	5.69E+02
	0.25831	0.315	1.506E+08	1.0000	8.35E+03	0.81546	1.03	7.017E+03	7.83E+00	6.19E+00	0.97	6.34E+04	5.02E+04
	0.28251	0.004284	1.506E+08	1.0000	1.14E+02	0.014699	1.02	1.703E+00	1.20E-01	9.46E-02	0.96	1.30E+01	1.03E+01
	0.33528	0.001071	1.506E+08	1.0000	2.84E+01	0.0056502	1.00	1.605E-01	3.68E-02	2.92E-02	0.95	9.94E-01	7.87E-01
	0.37144	0.005009	1.506E+08	1.0000	1.33E+02	0.032873	1.00	4.367E+00	1.93E-01	1.53E-01	0.95	2.44E+01	1.93E+01
	0.39643	0.063	1.506E+08	1.0000	1.67E+03	0.47458	1.00	7.929E+02	2.59E+00	2.05E+00	0.95	4.12E+03	3.26E+03
	0.40136	0.021735	1.506E+08	1.0000	5.76E+02	0.16781	1.00	9.673E+01	9.06E-01	7.17E-01	0.95	4.96E+02	3.93E+02
	0.43449	0.20318	1.506E+08	1.0000	5.39E+03	1.7923	1.00	9.658E+03	9.11E+00	7.21E+00	0.95	4.66E+04	3.69E+04
	0.50022	0.003622	1.506E+08	1.0000	9.61E+01	0.049656	0.99	4.722E+00	2.24E-01	1.77E-01	0.96	2.06E+01	1.63E+01
	0.53007	0.00252	1.506E+08	1.0000	6.68E+01	0.040298	0.99	2.666E+00	1.55E-01	1.23E-01	0.97	1.01E+01	7.97E+00
	0.53776	0.001166	1.506E+08	1.0000	3.09E+01	0.01923	0.99	5.887E-01	7.20E-02	5.70E-02	0.97	2.16E+00	1.71E+00
	0.55595	0.001166	1.506E+08	1.0000	3.09E+01	0.020499	0.99	6.275E-01	7.28E-02	5.77E-02	0.98	2.20E+00	1.75E+00
	0.56853	0.003055	1.506E+08	1.0000	8.10E+01	0.055808	0.99	4.476E+00	1.93E-01	1.53E-01	0.98	1.53E+01	1.21E+01
	0.58884	0.001228	1.506E+08	1.0000	3.26E+01	0.023686	0.99	7.637E-01	7.92E-02	6.28E-02	0.98	2.53E+00	2.00E+00
	0.65408	0.001449	1.506E+08	1.0000	3.84E+01	0.031539	1.00	1.212E+00	1.02E-01	8.05E-02	1.00	3.90E+00	3.09E+00
	0.86582	0.002961	1.506E+08	1.0000	7.85E+01	0.084856	1.01	6.730E+00	2.70E-01	2.14E-01	1.02	2.16E+01	1.71E+01

9/16/94

Isotope	Energy (MeV)	Probability	Design Basis Source (Ci)	Gap Release Fraction	Cont. Conc. (uCi/cc)	27A&B QAD Det. Response (Rad/hr)	27A&B Eff.	27A&B Response (Rad/hr)	27E QAD Det. Response (Rad/hr)	27F QAD Det. Response (Rad/hr)	27E&F Eff.	27E Response (Rad/hr)	27F Response (Rad/hr)
	0.86935	0.006206	1.506E+08	1.0000	1.65E+02	0.17856	1.01	2.968E+01	5.68E-01	4.50E-01	1.02	9.54E+01	7.55E+01
	0.89687	0.001323	1.506E+08	1.0000	3.51E+01	0.039234	1.01	1.390E+00	1.25E-01	9.86E-02	1.01	4.41E+00	3.49E+00
	0.91251	0.003276	1.506E+08	1.0000	8.69E+01	0.098805	1.01	8.670E+00	3.13E-01	2.48E-01	1.01	2.75E+01	2.17E+01
	0.91713	0.009198	1.506E+08	1.0000	2.44E+02	0.27894	1.01	6.872E+01	8.83E-01	6.99E-01	1.01	2.18E+02	1.72E+02
	0.93636	0.001355	1.506E+08	1.0000	3.59E+01	0.041953	1.01	1.523E+00	1.32E-01	1.05E-01	1.01	4.81E+00	3.81E+00
	0.94125	0.002299	1.506E+08	1.0000	6.10E+01	0.071573	1.01	4.407E+00	2.26E-01	1.79E-01	1.01	1.39E+01	1.10E+01
	1.0939	0.004095	1.506E+08	1.0000	1.09E+02	0.14754	1.01	1.618E+01	4.55E-01	3.60E-01	1.00	4.94E+01	3.91E+01
	1.0988	0.002142	1.506E+08	1.0000	5.68E+01	0.077519	1.01	4.448E+00	2.39E-01	1.89E-01	1.00	1.36E+01	1.07E+01
	1.1022	0.001071	1.506E+08	1.0000	2.84E+01	0.038859	1.01	1.115E+00	1.20E-01	9.47E-02	1.00	3.40E+00	2.69E+00
	1.1143	0.014742	1.506E+08	1.0000	3.91E+02	0.54048	1.01	2.134E+02	1.66E+00	1.31E+00	1.00	6.49E+02	5.14E+02
	1.1416	0.005134	1.506E+08	1.0000	1.36E+02	0.19269	1.01	2.650E+01	5.89E-01	4.67E-01	1.00	8.02E+01	6.35E+01
	1.1454	0.001323	1.506E+08	1.0000	3.51E+01	0.049826	1.01	1.766E+00	1.52E-01	1.21E-01	1.00	5.34E+00	4.23E+00
	1.5718	0.002646	1.506E+08	1.0000	7.02E+01	0.13777	1.05	1.015E+01	3.82E-01	3.02E-01	0.98	2.62E+01	2.08E+01
	1.6146	0.002363	1.506E+08	1.0000	6.27E+01	0.12595	1.05	8.288E+00	3.47E-01	2.75E-01	0.98	2.13E+01	1.69E+01
	1.7683	0.16727	1.506E+08	1.0000	4.44E+03	9.6566	1.07	4.584E+04	2.61E+01	2.07E+01	0.98	1.13E+05	8.98E+04
	1.8125	0.001796	1.506E+08	1.0000	4.76E+01	0.10596	1.08	5.451E+00	2.85E-01	2.25E-01	0.98	1.33E+01	1.05E+01
	1.8509	0.014238	1.506E+08	1.0000	3.78E+02	0.85593	1.08	3.490E+02	2.29E+00	1.81E+00	0.97	8.38E+02	6.64E+02
	1.9254	0.005639	1.506E+08	1.0000	1.50E+02	0.3514	1.09	5.728E+01	9.30E-01	7.36E-01	0.97	1.35E+02	1.07E+02
	2.0048	0.05355	1.506E+08	1.0000	1.42E+03	3.4612	1.10	5.407E+03	9.07E+00	7.18E+00	0.97	1.25E+04	9.89E+03
	2.0158	0.12254	1.506E+08	1.0000	3.25E+03	7.9505	1.10	2.842E+04	2.08E+01	1.65E+01	0.97	6.57E+04	5.20E+04
	2.0792	0.014427	1.506E+08	1.0000	3.83E+02	0.95655	1.11	4.062E+02	2.50E+00	1.98E+00	0.97	9.28E+02	7.35E+02
	2.2523	0.022869	1.506E+08	1.0000	6.06E+02	1.6057	1.13	1.100E+03	4.18E+00	3.30E+00	0.96	2.43E+03	1.92E+03
	2.3219	0.006206	1.506E+08	1.0000	1.65E+02	0.44537	1.14	8.356E+01	1.16E+00	9.15E-01	0.96	1.83E+02	1.44E+02
	2.4753	0.003119	1.506E+08	1.0000	8.27E+01	0.23449	1.16	2.250E+01	6.05E-01	4.79E-01	0.95	4.75E+01	3.76E+01
	2.4976	0.001733	1.506E+08	1.0000	4.60E+01	0.13116	1.16	6.993E+00	3.38E-01	2.68E-01	0.95	1.48E+01	1.17E+01
	1.1186	0.026586	1.506E+08	1.0000	7.05E+02	0.97844	1.01	6.968E+02	3.00E+00	2.38E+00	1.00	2.12E+03	2.12E+03
							SUM =	1.264E+06				3.95E+06	3.13E+06

27A = 1.08E+04 Rad/hr
27B = 1.23E+04 Rad/hr

27E = 3.96E+06 Rad/hr
27F = 3.13E+06 Rad/hr

Con. Vol=	5.68E+09 cm**3
27A Cone Factor	0.00856
27B Cone Factor	0.00973
Release Frac.	1

WASHINGTON PUBLIC POWER SUPPLY SYSTEM		VERIFY PRIOR TO USE DATE
WNP-2 PLANT PROCEDURES MANUAL		
PROCEDURE NUMBER 13.1.1	APPROVED BY	DATE
VOLUME NAME EMERGENCY PLAN IMPLEMENTING PROCEDURES		
SECTION EMERGENCY CLASSIFICATION		
TITLE CLASSIFYING THE EMERGENCY		

1.0 PURPOSE

The purpose of this procedure is to provide the Shift Manager, Plant Emergency Director, and plant operations personnel with the necessary information to guide them in properly identifying and classifying an emergency situation.

This procedure should be referred to whenever conditions at or near the Plant are out of the ordinary. Refer to PPM 13.1.1.A for the Technical Bases for this procedure.

2.0 REFERENCES

NOTE: Regulatory commitments made in:
Letter GO2-92-013, Supply System to NRC, dated January 12, 1993
Letter GO2-83-237, Supply System to NRC, dated March 15, 1983, and
Letter GO2-83-997, Supply System to NRC, dated October 31, 1983 are no longer valid in light of conversion from NUREG 0654 to NUMARC NESP-007 criteria in this procedure. Consequently these commitments will no longer be tracked nor 'belled' in this procedure.

2.1 WNP-2 Technical Specifications

2.2 WNP-2 Offsite Dose Calculation Manual

2.3 WNP-2 FSAR Section 1.5.2, SBO Coping Study

2.4 WNP-2 FSAR Section 8.3.2.1, Batteries

2.5 WNP-2 FSAR Table 9.5-8, Location of Emergency Lighting

2.6 PPM 4.12.1.1 Control Room Evacuation and Remote Cooldown

2.7 PPM 4.12.4.2 Flood

2.8 PPM 4.12.4.3 Earthquake

2.9 PPM 4.12.4.8 Tornado/High Winds

2.10 PPM 4.12.4.10 Reactor Building 422 Area Flooding

2.11 PPM 5.0.10 EOP Flowchart Training Manual

2.12 PPM 5.1.2 RPV Control-ATWS

2.13 PPM 5.1.7 Primary Containment Flooding

2.14 PPM 9.3.22 Core Damage Evaluation

2.15 Calculation CE-02-93-16

2.16 Calculation 2.05.01 (Battery Size Calc)

2.17 NUMARC NESP-007, Rev. 2

2.18 NUMARC/NRC "Questions & Answers", June 1993

2.19 NUREG/CR-4982 "Severe Accident in Spent Fuel Pools in Support of Generic Safety Issue 82"

2.20 NUREG 0737 "Clarification of TMI Action Plan Requirements"

2.21 10CFR20

2.22 10CFR50

2.23 EPA 400 "Manual of Protective Action Guidelines and Protective Actions for Nuclear Incidents"

2.24 FSAR, Chapter 13.3, Emergency Preparedness Plan, Section 6

2.25 NUREG-0654, FEMA-REP-1, Rev. 1, Appendix 1

2.26 PPM 13.1.2, Plant Emergency Director Duties

2.27 PPM 13.4.1, Notifications

2.28 WNP-2 Safeguards Contingency Plan

3.0 PROCEDURE

3.1 Plant Emergency Director Responsibilities

Maintain the sole responsibility for timely classification and declaration of any WNP-2 emergency situation. Utilize guidance specified in this procedure, and the recommendations of the Operations Manager, Shift Manager, Control Room Supervisor, Shift Technical Advisor, Radiological Protection Manager, and Recovery Manager.

Given the abnormal conditions at or near the Plant, utilize Attachment 4.1, Emergency Classification Table for guidance in determining the proper emergency classification.

Refer to PPM 13.1.2 for actions and responsibilities necessary after the emergency has been classified, and PPM 13.4.1, for responsibilities to notify offsite emergency authorities.

3.2 Shift Manager Responsibilities

Function as the Plant Emergency Director until relieved.

Maintain primary responsibility for monitoring the status of plant parameters and other initiating conditions upon which emergency classification depends.

Recommend an appropriate emergency classification to the Plant Emergency Director for any observed WNP-2 emergency conditions. Utilize guidance specified in this procedure, and the recommendations of the Control Room Supervisor, Shift Technical Advisor, and Reactor Operators.

3.3 Control Room Supervisor, Shift Technical Advisor, Reactor Operator Responsibilities

Monitor the status of Plant parameters and other initiating conditions upon which the emergency classification depends, and inform the Shift Manager if any parameter approaches or exceeds emergency action levels as specified in this procedure. Refer to Attachment 4.1, Emergency Classification Table for examples, and to PPM 13.1.1A for the basis of each emergency action level.

3.4 Technical Support Center (TSC) Staff and Recovery Manager Responsibilities

Recommend an emergency classification to the Plant Emergency Director based upon plant conditions and the guidance provided in this procedure.

3.5 Use of Plant Instruments and Indications

Plant instrumentation described in each EAL in Attachment 4.1 is the primary instrumentation to be used. This does not preclude use of other instruments as alternate indication, as appropriate, to properly classify the emergency.

An indication or report condition is considered to be valid or confirmed when it is conclusively verified by:

- an instrument channel check; or
- indications on related or redundant indicators; or
- by direct observation by plant personnel, such that doubt related to the indicator's operability, the condition's existence, or the report's truth is removed.

Implicit in this definition is the need for timely assessment.

3.6 Emergency Class Description

The following is a description of the four classes of emergency.

NOTIFICATION OF UNUSUAL EVENT: Unusual events are in process or have occurred which indicate a potential degradation of the level of safety of the plant. No releases of radioactive material requiring offsite response or monitoring are expected unless further degradation of safety systems occurs.

ALERT: Events are in process or have occurred which involve an actual or potential substantial degradation of the level of safety of the plant. Any releases are expected to be limited to small fractions of the EPA Protective Action Guideline exposure levels.

SITE AREA EMERGENCY: Events are in process or have occurred which involve actual or likely major failures of plant functions needed for protection of the public.

Any releases are not expected to result in exposure levels which exceed EPA Protective Action Guideline exposure levels except near the site boundary.

GENERAL EMERGENCY: Events are in process or have occurred which involve actual or imminent substantial core degradation or melting with potential for loss of containment integrity. Releases can be reasonably expected to exceed EPA Protective Action Guideline exposure levels offsite for more than the immediate site area.

3.7 Mode Applicability

The operational conditions (modes) in which Initiating conditions are applicable are indicated by a series of boxes as follows;

1	2	3	4	5	Def

where the numbers indicate operational conditions as defined in Technical Specifications and Def indicates "Defueled" or all fuel removed from the reactor vessel.

4.0 ATTACHMENTS

4.1 Emergency Classification Table

Attachment 4.1

WNP-2 EMERGENCY CLASSIFICATION TABLE

CATEGORY	UNUSUAL EVENT	ALERT	SITE AREA EMERGENCY	GENERAL EMERGENCY
CATEGORY A FISSION PRODUCT BARRIER DEGRADATION	AU1 Fuel Clad Degradation 1 2 3 4 Confirmed "SJAE CONDSR OUTLET RAD HI-HI" alarm annunciated on P602. OR Laboratory analysis confirms Reactor Coolant System (RCS) sample activity greater than or equal to limits specified in Tech. Spec. 3.4.5.	AA1 Loss OR Potential Loss of Fuel Clad 1 2 3 Loss OR Potential Loss of the Fuel Clad as indicated by Fission Product Barrier Degradation Table	AS1 Loss OR Potential Loss of ANY two Fission Product Barriers 1 2 3 Loss OR Potential Loss of ANY TWO Fission Product Barriers as indicated by Fission Product Barrier Degradation Table	AG1 Loss of ANY two Barriers AND a loss or potential loss of the Third Barrier 1 2 3 Loss of any TWO fission product barriers as indicated by Fission Product Barrier Degradation Table AND Loss OR Potential Loss of the third barrier as indicated by Fission Product Barrier Degradation Table
	AU2 Reactor Coolant System Leakage 1 2 3 Valid unidentified leakage greater than or equal to 10 gpm or upscale high indicated on Recorder EDR-FRS-623, Drywell Floor Drain Sump Fill Rate and Sump Level, on Panel P632 OR Valid identified leakage greater than or equal to 25 gpm indicated on Recorder EDR-FRS-623, Drywell Equipment Drain Sump Fill Rate and Sump Level, on Panel P632	AA2 Loss OR Potential Loss of Reactor Coolant System (RCS) 1 2 3 Loss OR Potential Loss of the RCS barrier as indicated by Fission Product Barrier Degradation Table		
	AU3 Loss OR Potential Loss of Containment 1 2 3 Loss OR Potential Loss of the Primary Containment barrier as indicated by Fission Product Barrier Degradation Table		AS2 Loss of Water Level in the Reactor Vessel that has or will uncover fuel in the Reactor Vessel 1 2 3 4 5 RPV level is less than -161 inches	

Attachment 4.1

WNP-2 EMERGENCY CLASSIFICATION TABLE
FISSION PRODUCT BARRIER DEGRADATION

INDICATOR	FUEL CLAD POTENTIAL LOSS	FUEL CLAD LOSS	REACTOR COOLANT SYSTEM POTENTIAL LOSS	REACTOR COOLANT SYSTEM LOSS	PRIMARY CONTAINMENT SYSTEM POTENTIAL LOSS	PRIMARY CONTAINMENT SYSTEM LOSS
RPV LEVEL	Level is less than -181"	Entry into PPM 5.1.7		Level is less than -181"	Entry into PPM 5.1.7	
DRYWELL CONTAINMENT RADIATION MONITORS		Containment Radiation Monitor CMS-RIS-27E and CMS-RIS-27F reading greater than 3,600 R/hr		Containment Radiation Monitor CMS-RIS-27E and CMS-RIS-27F reading greater than 70 R/hr	Containment Radiation Monitor CMS-RIS-27E and CMS-RIS-27F reading greater than 14,000 R/hr	
DRYWELL CONTAINMENT PRESSURE				Drywell pressure greater than 1.68 psig WITH indications of RCS leak inside drywell	Containment pressure greater than 39 psig and increasing OR Containment H_2 & O_2 concentration greater than 6% H_2 and 5% O_2	Rapid unexplained decrease of containment pressure following an initial increase
					Wetwell pressure exceeds PSP	Drywell Pressure Response not consistent with LOCA conditions
CONTAINMENT ISOLATION VALVES						Failure of BOTH containment isolation valves (as listed in T.S. Table 3.8.3-1) in any one line to close following AUTO or MANUAL initiation AND Downstream pathway to the environment exists OR Unisolable primary system discharging outside primary containment as indicted by any area temperature or radiation level above Maximum Safe Operating values (PPM 5.3.1) OR Intentional venting per PPM 5.2.1
COOLANT ACTIVITY		Coolant activity greater than 300 uCi/gm Dose Equivalent Iodine				
RCS LEAK RATE			Unisolable primary system discharging outside primary containment as indicated by any area temperature or radiation level above Maximum Safe Operating values (PPM 5.3.1) OR RCS Leakage GT 30 gpm inside containment or EDR FRS-623 upscale high			
OTHER					Cannot maintain plant parameters below the HCTL or SRVTPLL, or above the HCLL	
PED JUDGEMENT	Any condition that in the judgement of the PED/Shift Manager indicates LOSS or POTENTIAL LOSS of the Fuel Clad Barrier		Any condition that in the judgement of the PED/Shift Manager indicates LOSS or POTENTIAL LOSS of the RCS Barrier		Any condition that in the judgement of the PED/Shift Manager indicates LOSS or POTENTIAL LOSS of the Primary Containment Barrier	

Attachment 4.1

WNP-2 EMERGENCY CLASSIFICATION TABLE

CATEGORY	UNUSUAL EVENT	ALERT	SITE AREA EMERGENCY	GENERAL EMERGENCY
CATEGORY B LOSS OF SHUTDOWN OR COOLDOWN FUNCTIONS	BU1 Inability to Reach Shutdown Within Technical Specification Limits 1 2 3 Plant is not brought to required operating mode within Technical Specification LCO Action Statement Time.	BA1 Inability to Maintain Plant in Cold Shutdown 4 5 Inability to maintain a reactor temperature of less than 200°F per PPM 4.4.2.1	BS1 Complete Loss of Functions Needed to Achieve Cold Shutdown 1 2 3 RPV pressure and suppression pool temperature cannot be maintained below the Heat Capacity Temperature Limit	

Attachment 4.1

WNP-2 EMERGENCY CLASSIFICATION TABLE

CATEGORY	UNUSUAL EVENT	ALERT	SITE AREA EMERGENCY	GENERAL EMERGENCY
CATEGORY C ANTICIPATED TRANSIENT WITHOUT SCRAM		CA1 Failure of Reactor Protection System (RPS) Instrumentation to Complete or Initiate a Reactor Scram AND Manual Scram Was Successful. [1]2 [redacted] One or more Reactor Protection System setpoint(s) have been exceeded per Tech. Spec. 2.2 AND Automatic RPS actuation failed to result in a control rod pattern which alone always assures reactor shutdown.	CS1 Failure of RPS Instrumentation to Complete or Initiate an Automatic Reactor Scram AND Manual Scram with Continued Power Generation. [1]2 [redacted] One or more Reactor Protection System setpoint(s) have been exceeded per Tech. Spec. 2.2 AND Automatic and manual RPS actuation failed to result in a control rod pattern which alone always assures reactor shutdown AND either Reactor power GT 5% OR Wetwell temperature GT 110°F	CG1 Failure of the RPS to Complete an Automatic Scram AND Manual Scram Was NOT Successful AND There is Indication of an Extreme Challenge to the Ability to Cool the Core [1]2 [redacted] One or more Reactor Protection System setpoint(s) have been exceeded per Tech. Spec. 2.2 AND Automatic and manual RPS actuation failed to result in a control rod pattern which alone always assures reactor shutdown AND either Wetwell temperature cannot be maintained less than the HCTL OR Entry into Primary Containment Flooding, PPM 5.1.7, is required

Attachment 4.1

WNP-2 EMERGENCY CLASSIFICATION TABLE

CATEGORY	UNUSUAL EVENT	ALERT	SITE AREA EMERGENCY	GENERAL EMERGENCY
CATEGORY D A.C. POWER LOSS	DU1 Loss of ALL Off-Site Power to Critical AC Busses for Greater Than 15 Minutes 1 2 3 4 5 Def Power is unavailable to SM-7 and SM-8 from Offsite AC sources for greater than 15 minutes	DA1 Loss of ALL Off Site Power AND Loss of ALL On-Site Power to Critical AC Busses for Greater Than 15 Minutes 4 5 Def Complete loss of all power to Bus SM-7 and to Bus SM 8 for greater than 15 minutes DA2 Power Capability to Critical Busses Reduced to a Single Power Source for Greater Than 15 Minutes Such That Any Additional Single Failure Would Result in a Station Blackout 1 2 3 Complete loss of all power to Bus SM-7 for greater than 15 minutes. AND Bus SM-8 has only one of the following power sources: • SM-3 • TR-8 • DG-2 OR Complete loss of all power to Bus SM-8 for greater than 15 minutes. AND Bus SM-7 has only one of the following power sources: • SM-1 • TR-8 • DG-1	DS1 Loss of ALL Off-Site Power AND Loss of ALL On-Site Power to Critical AC Busses for Greater Than 15 Minutes 1 2 3 Complete loss of all power to Bus SM-7 and to Bus SM-8 for greater than 15 minutes	DG1 PROLONGED Loss of ALL Off-Site Power AND PROLONGED Loss of ALL On-Site Power to Critical AC Busses 1 2 3 Complete loss of all power to Bus SM-7 and to Bus SM-8 AND power to either Bus SM-7 or SM-8 is not likely to be restored within 4 hours OR RPV level is less than -181"

Attachment 4.1

WNP-2 EMERGENCY CLASSIFICATION TABLE

CATEGORY	UNUSUAL EVENT	ALERT	SITE AREA EMERGENCY	GENERAL EMERGENCY
CATEGORY E D.C. POWER LOSS	EU1 Degradation of All Critical DC Power for Greater Than 15 Minutes [redacted] 4 6 Degradation of Division 1 Critical DC voltage as indicated by Bus Voltage less than 110 VDC on 125 V Dist. Panel S1-1 voltmeter located on Bd. C for greater than 15 minutes AND Degradation of Division 2 Critical DC voltage as indicated by Bus Voltage less than 110 VDC on 125 V Dist. Panel S1-2 voltmeter located on Bd. C for greater than 15 minutes		ES1 Degradation of All Critical DC Power for Greater Than 15 Minutes 1 2 3 [redacted] Degradation of Division 1 Critical DC voltage as indicated by Bus Voltage less than 110 VDC on 125 V Dist. Panel S1-1 voltmeter located on Bd. C for greater than 15 minutes AND Degradation of Division 2 Critical DC voltage as indicated by Bus Voltage less than 110 VDC on 125 V Dist. Panel S2-1 voltmeter located on Bd. C for greater than 15 minutes	

WNP-2 EMERGENCY CLASSIFICATION TABLE

CATEGORY	UNUSUAL EVENT	ALERT	SITE AREA EMERGENCY	GENERAL EMERGENCY
CATEGORY F INCREASED PLANT RADIATION RELEASE	FU1 Unexpected Increase in Plant Radiation Levels 1 2 3 4 5 Def Any of the following Area Radiation Monitors exceeding 5,000 mr/hr: ARM-RIS- 4 ARM-RIS- 5 ARM-RIS- 6 ARM-RIS- 7 ARM-RIS- 8 ARM-RIS- 9 ARM-RIS-10 ARM-RIS-11 ARM-RIS-12 ARM-RIS-13 ARM-RIS-14 ARM-RIS-15 ARM-RIS-16 ARM-RIS-17 ARM-RIS-18 ARM-RIS-20 ARM-RIS-21 ARM-RIS-22 ARM-RIS-23 ARM-RIS-24 ARM-RIS-25 ARM-RIS-26 ARM-RIS-27 ARM-RIS-28 ARM-RIS-29 ARM-RIS-30 ARM-RIS-32 ARM-RIS-33	FA1 Major Damage to Irradiated Fuel OR Loss of Water Level That Has or Will Result in the Uncovering of Irradiated Fuel Outside the RPV 1 2 3 4 5 Def A confirmed HIGH alarm on ARM-RIS-1 Fuel Pool Radiation Monitor resulting from uncontrolled fuel storage or handling FA2 Release of Radioactive Material or Increase in Radiation Levels Within the Facility That Impedes Operation of Systems Required to Maintain Safe Operation or to Establish or Maintain Cold Shutdown 1 2 3 4 5 Def Valid Radiation monitor readings on any of the following monitors: GREATER THAN 15 mrem/hr: Control Room ARM-RIS-19 OR Any of the following Area Radiation Monitors, located in safe shutdown buildings, Table 1, exceeding 10,000 mr/hr: ARM-RIS- 9 thru ARM-RIS-18 ARM-RIS- 23 ARM-RIS- 24 ARM-RIS- 32 ARM-RIS- 33 ARM-RIS- 34	Table 1 Safe Shutdown Buildings • Vital portions of the Radwaste/Control Building • Reactor Building • Turbine Building • Standby Service Water Pump Houses • Diesel Generator Building • Diesel Generator Fuel Oil Storage Area	

Attachment 4.1

WNP-2 EMERGENCY CLASSIFICATION TABLE

CATEGORY	UNUSUAL EVENT	ALERT	SITE AREA EMERGENCY	GENERAL EMERGENCY
CATEGORY G INCREASED RADIATION RELEASE TO THE ENVIRONMENT	GU1 Any Unplanned Release of Gaseous or Liquid Radioactivity to the Environment That Exceeds Two Times the Radiological Technical Specifications for 60 minutes or longer 1 2 3 4 5 Def A valid reading on one or more of the following monitors that exceeds the value shown for 60 minutes or longer AND assessment in accordance with PPM 13.8.1 or 13.8.2 using isotopic source term obtained from effluent grab sampling and laboratory analysis confirms Site Boundary dose rates equal to or greater than 0.1 mrem/hr TEDE or 0.3 mrem/hr thyroid CDE: PRM-RE-1B 905,000 CPS TEA-RIS-13 16,750 CPM WEA-RIS-14 120,000 CPM NOTE: If the monitor reading(s) is sustained for longer than 60 minutes and the required assessments cannot be completed within this period, then the declaration must be made based on the valid reading. OR Assessment in accordance with PPM 13.8.1 or 13.8.2 using isotopic source term obtained from effluent grab sampling and laboratory analysis confirms Site Boundary dose rates equal to or greater than 0.1 mrem/hr TEDE or 0.3 mrem/hr thyroid CDE. OR A valid reading on one or more of the following monitors that exceeds the value shown AND sample analysis indicates greater than TWO times ODCM 6.2.1.1 limits for 60 minutes or longer: SW-RE-4 SW Loop A Process Rad Monitor 200 CPS SW-RE-5 SW Loop B Process Rad Monitor 200 CPS FDR-RE-8 Radwaste Effluent 2 X Hi-Hi Alarm TSW-RE-5 TSW Effluent 3900 CPM NOTE: If the monitor reading is sustained for longer than 60 minutes and the required assessments cannot be completed within this period, then the declaration must be made based on the valid reading. OR Sample analysis indicates greater than TWO times ODCM 6.2.1.1 limits for 60 minutes or longer.	GA1 Any Unplanned Release of Gaseous or Liquid Radioactivity to the Environment That Exceeds 200 Times the Radiological Technical Specifications for 15 minutes or Longer 1 2 3 4 5 Def A valid reading on one or more of the following monitors that exceeds the value shown for 15 minutes or longer AND assessment in accordance with PPM 13.8.1 or 13.8.2 confirms Site Boundary dose rates equal to or greater than 10 mrem/hr TEDE or 50 mrem/hr thyroid CDE: • PRM-RE-1C 650,CPS • TEA-RIS-13 44,000 CPM • WEA-RIS-14 187,000 CPM NOTE: If the monitor reading(s) is sustained for longer than 15 minutes and the required assessments cannot be completed within this period, then the declaration must be made based on the valid reading. OR Offsite dose calculations indicate greater than 10 mrem/hr TEDE or greater than 50 mrem/hr CDE to the thyroid and the release continues at or above that level for 15 minutes or longer. OR A valid reading on one or more of the following monitors that exceeds the value shown AND sample analysis indicates greater than 200 times ODCM 6.2.1.1 limit for 15 minutes or longer: SW RE-4 SW Loop A Process Rad Monitor 20,000 CPS SW RE-5 SW Loop B Process Rad Monitor 20,000 CPS FDR RE 8 Radwaste Effluent Monitor 200 X High HIGH Alarm TSW RE-5 TSW Effluent Monitor 300,000 CPM NOTE: If the monitor reading is sustained for longer than 15 minutes and the required assessment cannot be completed within this period, then the declaration must be made based on the valid reading. OR Sample analysis indicates greater than 200 times ODCM limits for 15 minutes or longer.	GS1 Boundary Dose Resulting from an Actual or Imminent Release of Gaseous Radioactivity That Exceeds 100 mrem Total Effective Dose Equivalent or 500 mrem Thyroid Committed Dose Equivalent for the Actual OR Projected Duration of the Release 1 2 3 4 5 Def A valid reading on one or more of the following monitors that exceeds or is expected to exceed the value shown: • PRM-RE-1C 6500 CPS • TEA-RIS-13 440,000 CPM • WEA-RIS-14 1,870,000 CPM AND Assessment in accordance with PPM 13.8.1 or 13.8.2 indicates offsite doses greater than 100 mrem TEDE or 500 mrem thyroid CDE for the actual or projected duration of the release. NOTE: If the monitor reading is sustained for longer than 15 minutes and the required assessment cannot be completed within this period, then the declaration must be made based on the valid reading. OR Valid dose assessment indicates dose consequences greater than 100 mrem TEDE or 500 mrem thyroid CDE OR Field survey results indicate Protected Area Boundary dose rates exceeding 100 mrem/hr and are expected to continue for more than one hour OR Analyses of field survey samples indicate thyroid CDE of 500 mrem for one hour of inhalation	GG1 Boundary Dose Resulting from an Actual or Imminent Release of Gaseous Radioactivity That Exceeds 1000 mrem Total Effective Dose Equivalent or 5000 mrem Thyroid Committed Dose Equivalent for the Actual OR Projected Duration of the Release Using Actual Meteorology 1 2 3 4 5 Def A valid reading on one or more of the following monitors that exceeds or is expected to exceed the value shown: • PRM-RE-1C 65,000 CPS • TEA-RIS-13A 8 PMU • WEA-RIS-14A 28 PMU AND Assessment in accordance with PPM 13.8.1 or 13.8.2 indicates offsite doses greater than 1000 mrem TEDE or 5000 mrem thyroid CDE for the actual or projected duration of the release. NOTE: If the monitor reading(s) is sustained for longer than 15 minutes and the required assessment cannot be completed within this period, OR Valid dose assessment capability indicates dose consequences greater than 1000 mrem TEDE or 5000 mrem thyroid CDE OR Field survey results indicate Protected Area Boundary dose rates exceeding 1000 mrem/hr and are expected to continue for more than one hour OR Analyses of field survey samples indicate thyroid CDE of 5000 mrem for one hour of inhalation

Attachment 4.1

WNP-2 EMERGENCY CLASSIFICATION TABLE

CATEGORY	UNUSUAL EVENT	ALERT	SITE AREA EMERGENCY	GENERAL EMERGENCY
CATEGORY H FIRE	HU1 Fire Within the Protected Area Boundary Not Extinguished within 15 minutes of Detection OR an Explosion Within the Protected Area Boundary 1 2 3 4 5 Def Fire within or adjacent to any Safe Shutdown Building Table 1, which is not extinguished within 15 minutes of a valid alarm. OR Fire within or adjacent to any Safe Shutdown Building Table 1, which is not extinguished within 15 minutes of Control Room notification by plant personnel. OR Report by plant personnel of an unplanned explosion within the protected area boundary resulting in visible damage to permanent structures or equipment.	HA1 Fire or Explosion Affecting the Operability of Plant Safety Systems Required to Establish or Maintain Safe Shutdown 1 2 3 4 5 Def Confirmed fire or explosion in a safe shutdown building Table 1 AND Affected safe shutdown system parameters indicate degraded performance OR Report by plant personnel of visible damage to the safe shutdown building or equipment contained within the safe shutdown building	Table 1 Safe Shutdown Buildings • Vital portions of the Radwaste/Control Building • Reactor Building • Turbine Building • Standby Service Water Pump Houses • Diesel Generator Building • Diesel Generator Fuel Oil Storage Area	
CATEGORY I CONTROL ROOM EVACUATION		IA1 Control Room Evacuation has been Initiated 1 2 3 4 5 Def Entry into PPM 4.12.1.1, "Control Room Evacuation and Remote Cooldown"	IS1 Control Room Evacuation has been Initiated, BUT Plant Control Cannot Be Established 1 2 3 4 5 Def Control room evacuation has been initiated PPM 4.12.1.1, "Control Room Evacuation and Remote Cooldown" AND Control of plant equipment needed to maintain adequate core cooling cannot be established at either the Division 1 or Division 2 Remote Shutdown Panels in accordance with PPM 4.12.1.1 within 15 minutes of the SRO in charge of the Control Room physically leaving the Control Room	

WNP-2 EMERGENCY CLASSIFICATION TABLE

CATEGORY	UNUSUAL EVENT	ALERT	SITE AREA EMERGENCY	GENERAL EMERGENCY
CATEGORY J LOSS OF ANNUNCIATORS OR INDICATIONS	**JU1 Unplanned Loss of Most or All Safety System Annunciators or Indications on Panels P601, P602, P603 & Bd C for Greater Than 15 minutes** 1 2 3 Unplanned Loss of most or all annunciators on P601, P602, P603 and Bd C associated with safety related equipment for greater than 15 minutes AND Compensatory nonalarming indications ARE available (Plant Computer System, GDS or other installed monitors). AND In the opinion of the Shift Manager/PED, the loss of the indications or annunciators requires increased surveillance to safely operate the plant	**JA1 Unplanned Loss of Most or All Safety System Annunciators or Indications on Panels P601, P602, P603 & Bd C With Either: (1) A Significant Transient in Progress; OR (2) Compensatory Non-Alarming Indications Are Unavailable** 1 2 3 Unplanned loss of most or all annunciators on P601, P602, P603 and Bd C associated with safety related equipment for greater than 15 minutes AND In the opinion of the Shift Manager/PED, the loss of the indications or annunciators requires increased surveillance to safely operate the plant AND A significant plant transient is in progress. OR Compensatory nonalarming indications are NOT available (Plant Computer System, GDS or other installed monitors).	**JS1 Inability to Monitor a Significant Transient in Progress** 1 2 3 Loss of most or all annunciators on P601, P602, P603, and Bd C associated with safety related equipment AND Compensatory non-alarming indications are unavailable (Process Computer System, GDS or other installed monitors). AND Loss of indications needed to monitor any of the following plant critical safety parameters: Reactor power, RPV level, RPV pressure, Wetwell pressure, Drywell pressure, Drywell temperature, Wetwell/Drywell H2/O2 Concentrations, Wetwell level, Wetwell temperature, Radioactive Gaseous Effluents AND Significant transient in progress	

WNP-2 EMERGENCY CLASSIFICATION TABLE

CATEGORY	UNUSUAL EVENT	ALERT	SITE AREA EMERGENCY	GENERAL EMERGENCY
CATEGORY K LOSS OF COMMUNICATIONS	KU1 Significant Loss of On-Site OR Off-Site Communication Capabilities 1 2 3 4 5 Def Unplanned loss of all of the following onsite communications capability: Plant Public Address (PA) System Plant Telephone System Plant Radio System Operations and Security Channels OR Unplanned loss of the following offsite communications capability: State/County Notification (CRASH) System Offsite calling capability from the Control Room via direct telephone and fax lines Long distance calling capability on the Plant ("2000") Switch and Plant Support Facility/Plant Engineering Center ("8000") Switch			

WNP-2 EMERGENCY CLASSIFICATION TABLE

CATEGORY	UNUSUAL EVENT	ALERT	SITE AREA EMERGENCY	GENERAL EMERGENCY
CATEGORY L NATURAL AND DESTRUCTIVE PHENOMENA	LU1 Natural and Destructive Phenomena Affecting the Protected Area Boundary 1 2 3 4 5 Def Maximum Seismic Earthquake Exceeded (H13-P851-S1-2.5) AND Control Room receives report from plant personnel who have felt an earthquake OR Report by plant personnel confirming the occurrence of a tornado striking within the Protected Area Boundary OR Vehicle crash into or projectile which impacts plantstructures or systems within Protected Area boundary. OR Weather Service projected winds GT 60, or Control Room measured winds GT 60 mph (5 min. average at 33 ft.) OR Range fires near the plant which threaten to reduce the normal level of safety OR Turbine failure resulting in casing penetration or damage to turbine or generator seals OR Visible ash fallout from volcanic activity OR Floods where the river pumphouse is observed to be in danger of inundation	LA1 Natural and Destructive Phenomena Affecting Plant Safe Shutdown Buildings 1 2 3 4 5 Def Operating Basis Earthquake Exceeded (H13-P851-S1-5.1) AND Control Room receives report from plant personnel who have felt an earthquake OR Report by plant personnel confirming the occurrence of a tornado striking a plant Safe Shutdown building, Table 1 OR Vehicle crash or projectile impactwhich impedes access to or damages equipment in plant vital areas. OR Weather Service projected winds GT 100, or Control Room measured winds GT 76 mph (5 min. average at 33 ft.) OR Ash fallout from volcanic activity which is severe enough to warrant plant shutdown OR Missiles generated from the turbine failure have resulted in visible structural damage to or penetration of a safe shutdown building OR Report by plant personnel of an event causing visible structural damage to a safe shutdown building Table 1 OR Report by plant personnel confirming the occurrences of plant internal flooding in a safe shutdown building AND Affected safe shutdown system parameters indicate degraded performance	Table 1 Safe Shutdown Buildings • Vital portions of the Radwaste/Control Building • Reactor Building • Turbine Building • Standby Service Water Pump Houses • Diesel Generator Building • Diesel Generator Fuel Oil Storage Area	

Attachment 4.1

WNP-2 EMERGENCY CLASSIFICATION TABLE

CATEGORY	UNUSUAL EVENT	ALERT	SITE AREA EMERGENCY	GENERAL EMERGENCY
CATEGORY M RELEASE OF TOXIC/FLAMMABLE GAS	MU1 Release of Toxic or Flammable Gases Affecting the Protected Area Boundary Deemed Detrimental to Safe Operation of the Plant 1 2 3 4 5 Def Report or detection of toxic or flammable gases that could enter or have entered within the Protected Area boundary in amounts that could affect the health of plant personnel or safe plant operation OR Report by local, county or state officials for potential evacuation of site personnel based on offsite event	MA1 Release of Toxic or Flammable Gases Within a Facility Structure Which Jeopardizes Operation of Systems Required to Maintain Safe Operations or to Establish or Maintain Cold Shutdown 1 2 3 4 5 Def Report or detection of toxic or flammable gases within a safe shutdown building (Table 1) in concentrations that will be life threatening to plant personnel or impede access to equipment needed for safe plant operation	Table 1 Safe Shutdown Buildings • Vital portions of the Radwaste/Control Building • Reactor Building • Turbine Building • Standby Service Water Pump Houses • Diesel Generator Building • Diesel Generator Fuel Oil Storage Area	
CATEGORY N SECURITY EVENTS	NU1 Confirmed Security Event Which Indicates a Potential Degradation in the Level of Safety of the Plant 1 2 3 4 5 Def Bomb device discovered within the plant Protected Area and outside the plant Vital Areas OR Confirmed report of an attempted entry, sabotage or security threat that cannot be properly compensated for within 10 minutes.	NA1 Security Event in a Plant Protected Area 1 2 3 4 5 Def Confirmed report of an intrusion by a hostile force into the plant Protected Area.	NS1 Security Event in a Plant Vital Area 1 2 3 4 5 Def Bomb device discovered within the plant Vital Areas OR Confirmed report of an intrusion by a hostile force into Vital Areas.	Security Event Resulting in Loss of Ability to Reach and Maintain Cold Shutdown 1 2 3 4 5 Def Loss of physical control of the Control Room due to a security event OR Loss of physical control of the Remote Shutdown capability due to a security event

Attachment 4.1

WNP-2 EMERGENCY CLASSIFICATION TABLE

CATEGORY	UNUSUAL EVENT	ALERT	SITE AREA EMERGENCY	GENERAL EMERGENCY
CATEGORY O MISCELLANEOUS INITIATING CONDITIONS/SYSTEM MALFUNCTIONS	OU1 Unexpected Decrease in Water Covering Irradiated Fuel Assemblies 1 2 3 4 5 Def Uncontrolled water level decrease in the Reactor Cavity or Spent Fuel Pool below the level of the weirs with all irradiated fuel assemblies remaining covered by water	OA1 Main Steam Line Break Outside Containment with Isolation 1 2 3 Indications of a Main Steam Line break AND Main steam line isolation valve has isolated the break OA2 Loss of Water Level that Has or Will Result in the Uncovering of Irradiated Fuel Outside the Reactor Vessel 1 2 3 4 5 Def Water level, when not intentionally lowered, was observed to be below the top of the gate sill separating the Reactor Cavity and Dryer Storage Pool OR Water level, when not intentionally lowered, was observed to be below the top of the gate sill separating the Reactor Cavity and the Spent Fuel Pool OR Report of visual observation of irradiated fuel uncovered or uncovering imminent		
CATEGORY P PLANT EMERGENCY DIRECTOR'S JUDGEMENT	PU1 Other Conditions Existing Which in the Judgement of the Plant Emergency Director (PED) Warrant Declaration of an Unusual Event 1 2 3 4 5 Def In the judgment of the Shift Manager/PED, events are in process or have occurred which indicate a potential degradation of the level of safety of the plant	PA1 Other Conditions Existing Which in the Judgement of the Plant Emergency Director (PED) Warrant Declaration of an Alert 1 2 3 4 5 Def In the judgment of the Shift Manager/PED, events are in process or have occurred which indicate actual or potential substantial degradation of systems needed for the protection of the public	PS1 Other Conditions Existing Which in the Judgement of the Plant Emergency Director (PED) Warrant Declaration of a Site Area Emergency 1 2 3 4 5 Def In the judgment of the Shift Manager/PED, events are in process or have occurred which involve actual or likely major failures of plant functions needed for protection of the public.	PG1 Other Conditions Existing Which in the Judgement of the Plant Emergency Director (PED) Warrant Declaration of a General Emergency 1 2 3 4 5 Def In the judgment of the Shift Manager/PED other conditions exist which indicate: 1) Actual or imminent substantial core degradation or melting with the potential for loss of containment integrity OR 2) Potential for uncontrolled radionuclide releases. These releases can reasonably be expected to exceed EPA PAG plume exposure levels outside the site boundary.

WASHINGTON PUBLIC POWER SUPPLY SYSTEM		VERIFY PRIOR TO USE DATE
WNP-2 PLANT PROCEDURES MANUAL		
PROCEDURE NUMBER 13.1.1.A	APPROVED BY	DATE
VOLUME NAME EMERGENCY PLAN IMPLEMENTING PROCEDURES		
SECTION EMERGENCY CLASSIFICATION		
TITLE CLASSIFYING THE EMERGENCY - TECHNICAL BASES		

1.0 PURPOSE

The purpose of this procedure is to provide Plant Emergency Response Organization personnel tasked with classifying the emergency the technical bases for the Initiating Conditions/Emergency Action Levels (IC/EAL) listed in PPM 13.1.1, "Classifying The Emergency".

It is not necessary to refer to this procedure to classify the emergency. The emergency classification may be determined by utilizing the guidance contained within PPM 13.1.1. Plant Emergency Organization personnel may refer to this procedure for supplemental information.

2.0 REFERENCES

2.1 WNP-2 Technical Specifications

2.2 WNP-2 Offsite Dose Calculation Manual

2.3 WNP-2 FSAR Section 1.5.2, SBO Coping Study

2.4 WNP-2 FSAR Section 8.3.2.1, Batteries

2.5 WNP-2 FSAR Table 9.5-8, Location of Emergency Lighting

2.6 PPM 4.12.1.1 Control Room Evacuation and Remote Cooldown

2.7 PPM 4.12.4.2 Flood

2.8 PPM 4.12.4.3 Earthquake

2.9 PPM 4.12.4.8 Tornado/High Winds

2.10 PPM 4.12.4.10 Reactor Building 422 Area Flooding

2.11 PPM 5.0.10 EOP Flowchart Training Manual

2.12 PPM 5.1.2 RPV Control-ATWS

2.13 PPM 5.1.7 Primary Containment Flooding

2.14 PPM 9.3.22 Core Damage Evaluation

2.15 Calculation CE-02-93-16

2.16 Calculation 2.05.01 (Battery Size Calc)

2.17 NUMARC NESP-007, Rev. 2

2.18 NUMARC/NRC "Questions & Answers", June 1993

2.19 NUREG/CR-4982 "Severe Accident in Spent Fuel Pools in Support of Generic Safety Issue 82"

2.20 NUREG 0737 "Clarification of TMI Action Plan Requirements"

2.21 10CFR20

2.22 10CFR50

2.23 EPA 400 "Manual of Protective Action Guidelines and Protective Actions for Nuclear Incidents"

2.24 FSAR, Chapter 13.3, Emergency Preparedness Plan, Section 6

2.25 NUREG-0654, FEMA-REP-1, Rev. 1, Appendix 1

2.26 PPM 13.1.2, Plant Emergency Director Duties

2.28 PPM 13.4.1, Notifications

2.27 WNP-2 Safeguards Contingency Plan

3.0 PROCEDURE

3.1 Plant Emergency Response Personnel Responsibilities

May refer to the Technical Bases in this procedure for emergency classification and after-the-fact review of initiating conditions/emergency action levels.

3.2 Use of Plant Instruments and Indications

Plant instrumentation described in each EAL in Attachment 4.1 is the primary instrumentation to be used. This does not preclude use of other instruments as alternate indication, as appropriate, to properly classify the emergency.

An indication or report condition is considered to be valid when it is conclusively verified by:

- an instrument channel check; or
- indications on related or redundant indicators; or
- by direct observation by plant personnel, such that doubt related to the indicator's operability, the condition's existence, or the report's truth is removed.

Implicit in this definition is the need for timely assessment.

3.3 Emergency Class Description

The following is a description of the four classes of emergency.

NOTIFICATION OF UNUSUAL EVENT: Unusual events are in process or have occurred which indicate a potential degradation of the level of safety of the plant. No releases of radioactive material requiring offsite response or monitoring are expected unless further degradation of safety systems occurs.

ALERT: Events are in process or have occurred which involve an actual or potential substantial degradation of the level of safety of the plant. Any releases are expected to be limited to small fractions of the EPA Protective Action Guideline exposure levels.

SITE AREA EMERGENCY: Events are in process or have occurred which involve actual or likely major failures of plant functions needed for protection of the public. Any releases are not expected to result in exposure levels which exceed EPA Protective Action Guideline exposure levels except near the site boundary.

GENERAL EMERGENCY: Events are in process or have occurred which involve actual or imminent substantial core degradation or melting with potential for loss of containment integrity. Releases can be reasonably expected to exceed EPA Protective Action Guideline exposure levels offsite for more than the immediate site area.

3.4 Mode Applicability

The operational conditions (modes) in which Initiating Conditions are applicable are indicated by a series of boxes as follows;

1	2	3	4	5	Def

where the numbers indicate operational conditions as defined in Technical Specifications and Def indicates "Defueled" or all fuel removed from the reactor vessel.

4.0 ATTACHMENTS

4.1 Technical Bases

A. FISSION PRODUCT BARRIER DEGRADATION

UNUSUAL EVENT:

AU1: Fuel Clad Degradation.

APPLICABILITY:

Operating Conditions	1	2	3	4	

EMERGENCY ACTION LEVEL:

Confirmed "SJAE CONDSR OUTLET RAD HI-HI" alarm annunciated on P602.

OR

Laboratory analysis confirms Reactor Coolant System (RCS) sample activity greater than or equal to limits specified in Tech. Spec. 3.4.5.

This Initiating Condition is considered to be a potential degradation in the level of safety of the plant and a potential precursor of more serious problems.

The confirmed SJAE CONDSR OUTLET RAD HI HI monitor and alarm reflects the offgas effluent and, therefore, may be one of the first indicators of degrading fuel conditions. The alarm is confirmed by verification of greater than current alarm setpoint on Recorder OG RIS-612 on Panel P604 or high offgas pretreatment air activity [determined by sample results] greater than limits specified in Technical Specification 3.11.2.7. The Hi alarm setpoint corresponds to a fraction of the Technical Specification limit thereby alerting the plant of the need to sample prior to exceeding limits. Confirmation via a sample ensures that only valid Unusual Events will be declared.

Coolant activity in excess of allowable Technical Specifications also reflect a degraded or degrading core condition and represent a decrease in plant safety.

REF:

WNP-2 Technical Specifications

NUMARC NESP-007, Methodology for Development of Emergency Action Levels, Rev. 2, Unusual Event SU4

Instrument Master Data Sheet(s) for instrument(s) listed in the EAL(s)

DEVIATION:

This EAL and Initiating Condition apply to modes 1 through 4, inclusive. Mode 5 is not supported in the WNP-2 Technical Specification as the Steam Jet Air Ejector is not in operation in Mode 5.

A. FISSION PRODUCT BARRIER DEGRADATION

UNUSUAL EVENT:

AU2: RCS Leakage.

APPLICABILITY:

Operating Conditions	1	2	3	[redacted]

EMERGENCY ACTION LEVEL:

Valid unidentified leakage 10 gpm or upscale high indicated on recorder EDR-FRS-623, Drywell Floor Drain Sump Fill Rate and Sump Level, on Panel P632.

OR

Valid identified leakage greater than or equal to 25 gpm indicated on recorder EDR-FRS-623, Drywell Equipment Drain Sump Fill Rate and Sump Level, on Panel P632.

This Initiating Condition may be a precursor of more serious conditions and, as a result, is considered to be a potential degradation in the level of safety of the plant. The value for identified leakage is set at a higher value due to the lesser significance of identified leakage in comparison to unidentified and pressure boundary leakage.

REF:

WNP-2 Technical Specifications

NUMARC NESP-007, Methodology for Development of Emergency Action Levels, Rev. 2, Unusual Event SU5

DEVIATION:

Unidentified Leakage on EDR-FRS-623 reads 0-10 gpm. Consequently the EAL is changed to read "...10 gpm or upscale high...". Pressure boundary leakage cannot be distinguished from Unidentified Leakage by Control Room indication.

A. FISSION PRODUCT BARRIER DEGRADATION

UNUSUAL EVENT:

AU3: Loss OR Potential Loss of Containment.

APPLICABILITY:

Operating Conditions	1	2	3	[redacted]

EMERGENCY ACTION LEVEL:

> Loss OR Potential Loss of the Primary Containment barrier as indicated by Fission Product Barrier Degradation Table.

Refer to the Fission Product Barrier Degradation Table in this procedure, for an explanation of the indications used to satisfy this Initiating Condition.

Events that indicate an imminent degradation of containment should result in a classification as if the affected threshold(s) are already exceeded. Imminent in this context means mitigation strategies and actions are not successful in preventing a challenge to Primary Containment.

REF:

NUMARC NESP-007, Methodology for Development of Emergency Action Levels, Rev. 2, Alert FU1

A. FISSION PRODUCT BARRIER DEGRADATION

ALERT:

AA1: Loss OR Potential Loss of Fuel Clad.

APPLICABILITY:

Operating Conditions	1	2	3	[redacted]

EMERGENCY ACTION LEVEL:

Loss OR Potential Loss of the Fuel Clad as indicated by Fission Product Barrier Degradation Table.

Refer to the Fission Product Barrier Degradation Table in this procedure for an explanation of the indications used to satisfy this Initiating Condition.

Events that indicate an imminent degradation of the Fuel Clad Barrier should result in a classification as if the affected threshold(s) are already exceeded. Imminent in this context means mitigation strategies and actions are not successful in preventing a challenge to Fuel Clad.

REF:

NUMARC NESP-007, Methodology for Development of Emergency Action Levels, Rev. 2, Alert FA1

A. FISSION PRODUCT BARRIER DEGRADATION

ALERT:

AA2: Loss OR Potential Loss of RCS.

APPLICABILITY:

Operating Conditions	1	2	3	

EMERGENCY ACTION LEVEL:

Loss OR Potential Loss of the RCS barrier as indicated by Fission Product Barrier Degradation Table

Refer to the Fission Product Barrier Degradation Table in this procedure for an explanation of the indications used to satisfy this Initiating Condition.

Events that indicate an imminent degradation of the Reactor Coolant System Barrier should result in a classification as if the affected threshold(s) are already exceeded. Imminent in this context means mitigation strategies and actions are not successful in preventing a challenge to the Reactor Coolant Pressure Boundary.

REF:

NUMARC NESP-007, Methodology for Development of Emergency Action Levels, Rev. 2, Alert FA1

A. FISSION PRODUCT BARRIER DEGRADATION

SITE AREA EMERGENCY:

AS1: Loss OR Potential Loss of ANY TWO Fission Product Barriers.

APPLICABILITY:

Operating Conditions	1	2	3	

EMERGENCY ACTION LEVEL:

Loss OR Potential Loss of ANY TWO Fission Product Barriers as indicated by Fission Product Barrier Degradation Table.

Refer to the Fission Product Barrier Degradation Table in this procedure for an explanation of the indications used to satisfy this Initiating Condition.

Events that indicate an imminent degradation of a Fission Product Barrier should result in a classification as if the affected threshold(s) are already exceeded. Imminent in this context means mitigation strategies and actions are not successful in preventing a challenge to Fuel Clad, Reactor Coolant Pressure Boundary or Primary Containment.

REF:

NUMARC NESP-007, Methodology for Development of Emergency Action Levels, Rev. 2, Alert FS1

DEVIATION:

It is considered to be a challenge to plant functions necessary for the protection of the public if the integrity of any two of the three fission product barriers has or has the potential of being degraded. This approach is more conservative than the USNRC Regulatory Guide 1.101 in that the containment barrier is not weighted less significantly than the other two barriers. Thus a "Loss" or "Potential Loss" of any two barriers is a Site Area Emergency. This approach also simplifies the Site Area Emergency classification from the fission product barrier matrix, allowing for more rapid classification should the need arise.

A. FISSION PRODUCT BARRIER DEGRADATION

SITE AREA EMERGENCY:

AS2: Loss of Water Level in the RPV That Has or Will Uncover Fuel in the RPV.

APPLICABILITY:

Operating Conditions	1	2	3	4	5	

EMERGENCY ACTION LEVEL:

RPV level is less than -161 inches.

This Initiating Condition and its associated EAL address a loss of the Reactor Coolant System, defined here as RPV water level below the top of the active fuel, and a potential loss of fuel clad when the core becomes uncovered. If RPV water level continues to decrease, this could ultimately result in a release to the environment. An RPV level which approaches top of active fuel or is anticipated to drop below top of active fuel is also reason to declare a Site Area Emergency under this EAL.

Indications used to determine water level for this EAL are, but not limited to, the Fuel Zone Indicator MS-LI-610 and/or recorder MS-LR-615.

Escalation of this event to a General Emergency would be via the Increased Radiation Release to the Environment initiating condition GG1.

REF:

WNP-2 Technical Specifications

NUMARC NESP-007, Methodology for Development of Emergency Action Levels, Rev. 2, Site Area Emergency SS5

DEVIATION:

1. Operating conditions have been expanded to include modes 1, 2 and 3 in this EAL because it is realized that modes 1 - 3 are also covered by the same RPV water level condition in the Fission Product Barrier Degradation table as a loss of RCS and a potential loss of fuel clad.

2. Uncovery of the fuel, irrespective of the event causing the uncovery, is justification alone for declaring the SAE. Since other events could lead to fuel uncovery other than a loss of decay heat removal capability, it is not prudent to base the EAL on this one event.

A. FISSION PRODUCT BARRIER DEGRADATION

GENERAL EMERGENCY:

AG1: Loss of ANY Two Barriers AND a Potential Loss OR Loss of the Third Barrier.

APPLICABILITY:

Operating Conditions	1	2	3	[redacted]

EMERGENCY ACTION LEVEL:

> Loss of any TWO fission product barriers as indicated by Fission Product Barrier Degradation Table.
>
> AND
>
> Loss OR Potential Loss of the third barrier as indicated by Fission Product Barrier Degradation Table.

Refer to the Fission Product Barrier Degradation Table in this procedure for an explanation of the indications used to satisfy this Initiating Condition.

Events that indicate an imminent degradation of a Fission Product Barrier should result in a classification as if the affected threshold(s) are already exceeded. Imminent in this context means mitigation strategies and actions are not successful in preventing a challenge to Fuel Clad, Reactor Coolant Pressure Boundary or Primary Containment.

REF:

NUMARC NESP-007, Methodology for Development of Emergency Action Levels, Rev. 2, General Emergency FG1

WNP-2 EMERGENCY CLASSIFICATION
FISSION PRODUCT BARRIER DEGRADATION TABLE

INDICATOR	FUEL CLAD POTENTIAL LOSS	FUEL CLAD LOSS	REACTOR COOLANT SYSTEM POTENTIAL LOSS	REACTOR COOLANT SYSTEM LOSS	PRIMARY CONTAINMENT SYSTEM POTENTIAL LOSS	PRIMARY CONTAINMENT SYSTEM LOSS
RPV LEVEL	Level is less than -161"	Entry into PPM 5.1.7		Level is less than -161"	Entry into PPM 5.1.7	
DRYWELL/ CONTAINMENT RADIATION MONITORS		Containment Radiation Monitor CMS RIS 27E and CMS RIS 27F reading greater than 3,000 R/hr		Containment Radiation Monitor CMS RIS 27E and CMS RIS 27F reading greater than 70 R/hr	Containment Radiation Monitor CMS RIS 27E and CMS RIS 27F reading greater than 14,000 R/hr	
DRYWELL/ CONTAINMENT PRESSURE				Drywell pressure greater than 1.88 psig with indications of RCS leak inside drywell	Containment pressure greater than 30 psig and increasing OR Containment H_2 & O_2 concentration greater than 5% H_2 and 5% O_2	Rapid unexplained decrease of containment pressure following an initial increase
					Wetwell pressure exceeds PSP	Drywell Pressure Response not consistent with LOCA conditions
CONTAINMENT ISOLATION VALVES						Failure of BOTH containment isolation valves (as listed in T.S. Table 3.8.3.1) in any one line to close following AUTO or MANUAL initiation AND Downstream pathway to the environment exists OR Unisolable primary system discharging outside primary containment as indicated by any area temperature or radiation level above Maximum Safe Operating values (PPM 5.3.1) OR Intentional venting per PPM 5.2.1
COOLANT ACTIVITY		Coolant activity greater than 300 uCi/gm Dose Equivalent Iodine				
RCS LEAK RATE			Unisolable primary system discharging outside primary containment as indicated by any area temperature or radiation level above Maximum Safe Operating values (PPM 5.3.1) OR RCS Leakage GT 30 gpm inside containment or EDR FRS 623 upscale high			
OTHER					Cannot maintain plant parameters below the HCTL or SRVTPLL, or above the HCLL	
PED JUDGEMENT	Any condition that in the judgement of the PED/Shift Manager indicates LOSS or POTENTIAL LOSS of the Fuel Clad Barrier		Any condition that in the judgement of the PED/Shift Manager indicates LOSS or POTENTIAL LOSS of the RCS Barrier		Any condition that in the judgement of the PED/Shift Manager indicates LOSS or POTENTIAL LOSS of the Primary Containment Barrier	

A. FISSION PRODUCT BARRIER DEGRADATION

1.0 RPV LEVEL

a. Indicating Fuel Clad Barrier Potential Loss at -161" (Top of Active Fuel) ensures that an emergency is declared before fuel perforation occurs. An unintentional level decrease to below -161" is indicative of a large RCS break, or a smaller break with loss of high pressure makeup.

b. Entry into PPM 5.1.7, Primary Containment Flooding, is indicative of a loss of fuel clad barrier because:

1) RPV water level may not be able to be restored and maintained above -161 inches, or

2) For ATWS conditions, RPV water level cannot be maintained above -192", or

3) If RPV water level cannot be determined, RPV flooding for ATWS or non-ATWS conditions cannot be established or maintained.

Entry into PPM 5.1.7 is indicative of a potential loss of primary containment because actions to flood the containment may jeopardize the pressure suppression capability of the containment or result in the need to vent the RPV or primary containment.

2.0 DRYWELL/CONTAINMENT RADIATION MONITORS

A 50 R/hr reading on CMS-RIS-27E and 50 R/hr reading on CMS-RIS-27F is used to indicate a loss of the Reactor Coolant System barrier. This value assumes a 0.1% core damage instantaneous release and dispersal of the reactor coolant noble gas and iodine inventory into the drywell atmosphere.

A 2500 R/hr reading on CMS-RIS-27E and 2500 R/hr reading on CMS-RIS-27F is used to indicate a release of reactor coolant, with elevated activity indicative of fuel damage, into the drywell. This value assumes an instantaneous release and dispersal of the reactor coolant noble gas and iodine inventory associated with coolant concentration associated with 5% clad failures into the drywell atmosphere. WNP-2 has elected to provide an example dealing with the top end of the 2-5% range discussed in NESP-007. This value assumes an instantaneous release and dispersal of the reactor coolant noble gas and iodine inventory into the drywell atmosphere.

An 10,000 R/hr reading on CMS-RIS-27E and 10,000 R/hr reading on CMS-RIS-27F is used to indicate potential failure of the primary containment barrier. It is a value that indicates significant fuel damage well in excess of that associated with the loss of both Fuel Clad and RCS barriers. A major release of radioactivity requiring offsite

protective actions is not possible unless a major failure of fuel cladding allows radioactive material to be released from the core into the reactor coolant. Regardless of whether containment is challenged, this amount of activity in containment, if released, could have such severe consequences that it is prudent to treat this as a potential loss of containment, such that a General Emergency declaration is warranted. This level of activity is indicative of approximately 20% clad failure. This value assumes an instantaneous release and dispersal of the reactor coolant noble gas and iodine inventory into the drywell atmosphere.

These values were derived from Engineering Calculation NE-02-94-57.

3.0 DRYWELL PRESSURE

Changes in drywell pressure indication would not be expected for a Fuel Clad barrier degradation if the Reactor Coolant System were still intact. Therefore, no drywell pressure indications are provided for Fuel Clad barrier degradation.

The 1.68 psig drywell pressure for the Reactor Coolant System barrier loss is based on the drywell pressure scram and isolation setpoint and indicates a Loss of Coolant Accident (LOCA). A potential loss of the Reactor Coolant System barrier would not result in an increasing drywell pressure and, therefore, no indicator is provided. The qualifier of "with indications of RCS leak inside drywell" is included as an indicator of RCS boundary degradation and eliminates a drywell pressure increase due to a loss of drywell ventilation.

Containment pressures that exceeds 34.7 psig, the maximum expected pressure following a LOCA, have the potential to result in a loss of the containment barrier. Preparations to vent containment are required by PPM 5.2.1, "Primary Containment Control" when Drywell pressure exceeds 39 psig and before the Wetwell pressure reaches the Primary Containment Pressure Limit (PCPL). Hydrogen and Oxygen concentrations at or above PPM 5.2.1, Table 19, Combustible Limits, in the drywell or wetwell represent a potential for a deflagration with a subsequent containment failure.

Containment or drywell pressure responses not consistent with LOCA conditions indicate a loss of the Primary Containment barrier. This may be noticed as a decrease in drywell pressure when no operation action (e.g., starting drywell cooling fans) has been taken. It would also include a failure of the drywell pressure to increase as expected during a LOCA.

Entry into the unsafe region of the Pressure Suppression Pressure curve (PPM 5.2.1, Figure F, PSP) is included as a potential primary containment barrier loss. A rapid depressurization of the RPV (e.g., occurrence of a large break LOCA or initiation of ADS) at wetwell pressures in excess of the PSP may cause either:

- Wetwell pressure responses indicative of a failure in the drywell-to-wetwell boundary, or

- Wetwell pressure increases to or beyond the Primary Containment Pressure Limit (PPM 5.2.1, figure G, PCPL).

4.0 CONTAINMENT ISOLATION VALVES

These indicators are intended to cover containment isolation failures allowing a direct flow path to the environment such as a failure of both MSIV's to close with open valves downstream to the turbine or condenser. Downstream path to the environment does not mean leakage incident to normal system integrity. Only those penetrations required to isolate per Technical Specifications should be considered. In addition, area radiation and area temperature alarms indicating an unisolable primary system leakage outside containment are included. Again, only those penetrations required to isolate per Technical Specifications are included.

Venting, if necessary to prevent failure of primary containment, is included as a loss of primary containment. This is specified in PPM 5.2.1 when containment hydrogen and oxygen concentrations are in excess of or cannot be determined to be below combustible limits or when wetwell pressure approaches PCPL. However, routine venting per PPM 2.3.1, as long as radioactivity release rates are maintained, is not considered a loss of primary containment.

5.0 COOLANT ACTIVITY

Fuel Clad barrier damage is indicated by a coolant activity of 300 μCi/gm dose equivalent I-131. This amount of activity is well above that expected for iodine spikes and corresponds to approximately 2-5% fuel clad failure in accordance with assessment performed by the NUMARC EAL task force. This amount of clad failure indicates significant clad heating and, thus, the Fuel Clad barrier is considered lost.

6.0 RCS LEAK RATE

A leak from the Reactor Pressure Boundary that cannot be isolated indicates a RCS failure. This condition is most readily displayed as an increase in area ambient or differential temperature above the Maximum Safe Operating Values specified in PPM 5.3.1. The maximum measurable leak rate in the Control Room at WNP-2 is 30 gpm, therefore 30 gpm is used instead of the 50 gpm limit recommended by NUMARC.

7.0 OTHER

Primary Containment

The Heat Capacity Temperature Limit (HCTL) is the highest wetwell temperature at which initiation of RPV depressurization will not result in exceeding the Primary Containment Pressure Limit (PCPL) before the rate of energy transfer to the containment is within the capacity of the containment vent. The HCTL is used to preclude failure of the containment or equipment necessary for safe shutdown by assuring that RPV blowdown does not cause containment pressure to exceed the PCPL. The potential loss occurs when RPV pressure and wetwell temperature cannot be maintained below HCTL.

The Heat Capacity Level Limit (HCLL) precludes loss of the pressure suppression function of the containment and, in conjunction with the HCTL, precludes failure of the containment or equipment necessary for safe shutdown of the plant. The potential loss occurs when the wetwell level cannot be maintained above the HCLL.

The SRV Tail Pipe Level Limit (SRVTPLL) is the highest wetwell water level at which opening of an SRV will not result in exceeding the code allowable stresses in the tailpipe, tailpipe supports, quenchers or quencher supports. This level is a function of RPV pressure and the Limit is utilized to preclude SRV system failure and containment failure. The consequences of operating SRV's when wetwell water level exceeds the SRVTPLL may include direct pressurization of the containment from a break in the SRV tail pipe. The resulting primary containment pressurization could cause containment failure.

8.0 SHIFT MANAGER/PED JUDGMENT

Shift Manager/PED judgment is included for all loss and potential loss categories. This "indicator" should be used to allow the Shift Manager/PED to appropriately classify an event when the indications needed to monitor fission barrier status are not available.

Shift Manager/PED judgment should also be used when the other indicators have not been exceeded but the trends indicate that loss or potential loss is imminent. Imminent in this context means mitigation strategies and actions are not successful in preventing a challenge to Fuel Clad, Reactor Coolant Pressure Boundary or Primary Containment.

REF:

WNP-2 Technical Specifications

BWR Owners' Group, Transmittal of Generic Procedures for Estimation of Core Damage Using Post-Accident Sampling System, dated June 17, 1983

RTM-91, Response Technical Manual, Volume 1, Rev. 1

WNP-2 Emergency Operating Procedures, PPM series 5.1.X and 5.2.X

WNP-2 Emergency Operating Procedure Flowchart Training Manual, PPM 5.0.10

NUMARC/NESP-007, Methodology for Development of Emergency Action Levels, Rev. 2, Recognition Category F

WNP-2 PPM 9.3.22, Core Damage Evaluation

WNP-2 FSAR, Section 15.6, MSL Break

DEVIATION:

1. RPV Level - Reactor Coolant System Loss:

   Two-thirds core height was not selected as a fission product barrier loss or potential loss condition because it is possible for beyond-design-basis inventory threatening events to occur in which fuel clad damage cannot be precluded even though RPV water level is above 2/3 core height and below the top of active fuel.

2. RCS Leak Rate - Reactor Coolant System Loss:

   This condition has been moved to its own Alert initiating condition. This decision is consistent with the level identified in the NUMARC basis. The NUMARC basis discusses the design basis accident for MSL break. WNP-2 MSL break analysis shows that offsite dose expected at the exclusion area boundary is below the entry level of a Site Area Emergency which is 100 mrem TEDE and is consistent with the radiological EAL's at the Alert level. This EAL was moved to the System Failure category per the NUMARC NESP-007, Rev 2 "Questions and Answers" dated June, 1993.

3. Drywell/Containment Radiation Monitors

   WNP-2 will use an instantaneous release at 0.1% core damage as the basis for the drywell/containment radiation monitor reading indicative of a loss of RCS due to limited response of the detectors to lower coolant activity levels.

B. LOSS OF SHUTDOWN/COOLDOWN FUNCTIONS

UNUSUAL EVENT:

BU1: Inability to Reach Required Shutdown Within Technical Specification Limits.

APPLICABILITY:

Operating Conditions	1	2	3	

EMERGENCY ACTION LEVEL:

Plant is not brought to required operating mode within (site-specific) Technical Specifications LCO Action Statement Time.

Limiting Conditions of Operation (LCO's) require the plant to be brought to a required shutdown mode when the Technical Specification required configuration cannot be restored. Depending on the circumstances, this may or may not be an emergency or precursor to a more severe condition. In any case, the initiation of plant shutdown required by the Technical Specifications requires a one hour report under 10 CFR 50.72 (b) Non-emergency events. The plant is within its safety envelope when being shut down within the allowable action statement time in the Technical Specifications. An immediate Notification of Unusual Event is required when the plant is not brought to the required operating mode within the allowable action statement time in the Technical Specifications. Declaration of an Unusual Event is based on the time at which the LCO-specified action statement time period elapses under the site Technical Specifications and is not related to how long a condition may have existed. Other required Technical Specification shutdowns that involve precursors to more serious events are addressed by other categories of Initiating Condition's.

REF:

WNP-2 Technical Specifications

NUMARC NESP-007, Methodology for Development of Emergency Action Levels, Rev. 2, Unusual Event SU2

B. LOSS OF SHUTDOWN/COOLDOWN FUNCTIONS

ALERT:

BA1: Inability to Maintain Plant in Cold Shutdown.

APPLICABILITY:

Operating Conditions	4	5

EMERGENCY ACTION LEVEL:

Inability to maintain a reactor temperature of less than 200°F per PPM 4.4.2.1..

This EAL addresses loss or degradation of functions required for core cooling during refueling and cold shutdown modes such that the technical specification limit cannot be maintained. Determination of "Inability to maintain" includes making an evaluation that considers both current and future system performance in relation to the current values and trends of relevant parameters. A momentary unplanned excursion above 200°F when adequate heat removal function is available is not intended to constitute an Alert.

REF:

WNP-2 Technical Specifications

NUMARC NESP-007, Methodology for Development of Emergency Action Levels, Rev. 2, Alert SA3

DEVIATION:

WNP-2 deleted the "loss of (site-specific) Technical Specification required functions to maintain cold shutdown" as a condition in this EAL to recognize additional plant capability to maintain cooling of the reactor beyond those specified in Technical Specifications. This deviation is consistent with NUMARC/NRC Questions and Answers concerning NESP-007, Rev. 2, dated June 1993.

B. LOSS OF SHUTDOWN/COOLDOWN FUNCTIONS

SITE AREA EMERGENCY:

BS1: Complete Loss of Functions Needed to Achieve and Maintain Hot Shutdown.

APPLICABILITY:

Operating Conditions	1	2	3	[redacted]

EMERGENCY ACTION LEVEL:

RPV pressure and suppression pool temperature cannot be maintained below the Heat Capacity Temperature Limit.

This EAL addresses complete loss of functions, including ultimate heat sink and reactivity control, required for hot shutdown with the reactor at pressure and temperature. Under these conditions, there is an actual major failure of a system intended for protection of the public. Thus, declaration of a Site Area Emergency is warranted. Escalation to a General Emergency would occur by Abnormal Rad Levels/Radiological Effluent, Fission Product Barrier Degradation, or Emergency Director Judgement Initiating Conditions.

Functions required for hot shutdown consist of the ability to achieve reactor shutdown and to discharge decay heat energy from the reactor to the ultimate heat sink. Appropriate emergency declarations required by the inability to achieve reactor shutdown are addressed by EAL CA1, CS1 and CG1. Inability to remove decay heat energy is reflected in an increase in suppression pool temperature. Elevated suppression pool temperature is addressed by the Heat Capacity Temperature Limit (HCTL). The HCTL is a function of RPV pressure and suppression pool temperature. If RPV pressure and suppression pool temperature cannot be maintained below the HCTL, the ultimate heat sink is threatened and declaration of a Site Area Emergency is warranted.

REF:

WNP-2 Technical Specifications

NUMARC NESP-007, Methodology for Development of Emergency Action Levels, Rev. 2, Site Area Emergency SS4

WNP-2 Emergency Operating Procedure Flowchart Training Manual, PPM 5.0.10

C. ANTICIPATED TRANSIENT WITHOUT SCRAM

ALERT:

CA1: Failure of Reactor Protection System (RPS) Instrumentation to Complete or initiate a Reactor Scram AND Manual Scram Was Successful.

APPLICABILITY:

Operating Conditions	1	2	[redacted]

EMERGENCY ACTION LEVEL:

> One or more Reactor Protection System setpoint(s) have been exceeded per Tech. Spec. 2.2.
>
> AND
>
> Automatic RPS actuation failed to result in a control rod pattern which alone always assures reactor shutdown.

This condition indicates a failure of the automatic protection system to scram the reactor sufficient to achieve shutdown under all conditions without boron but the reactor was successfully manually scrammed sufficient to achieve shutdown under all conditions without boron.

A manual scram is any set of actions by the reactor operator(s) which results in a scram. These actions include placing the reactor mode switch in shutdown, depressing the RPS Manual Scram pushbuttons and/or placing ARI switches to trip.

Failure of a manual scram to reduce reactor power below APRM downscale levels or resulting in exceeding 110 degrees F in the suppression pool would escalate this event to Site Area Emergency CS1.

REF:

NUMARC NESP-007, Methodology for Development of Emergency Action Levels, Rev. 2, Alert SA2

WNP-2 Emergency Operating Procedure Flowchart Training Manual, PPM 5.0.10

C. ANTICIPATED TRANSIENT WITHOUT SCRAM

SITE AREA EMERGENCY:

CS1: Failure of RPS Instrumentation to Complete or Initiate an Automatic Reactor Scram AND Manual Scram Was NOT Successful to reduce power below 5%.

APPLICABILITY:

Operating Conditions	1	2	[redacted]

EMERGENCY ACTION LEVEL:

One or more Reactor Protection System setpoint(s) have been exceeded per Tech. Spec. 2.2.

AND

Automatic and manual RPS actuation failed to result in a control rod pattern which alone always assures reactor shutdown.

AND either

- Reactor power GT 5%

OR

- Wetwell temperature GT 110°F

This condition indicates a failure of both the automatic protection system and manual efforts to scram the reactor with continued power generation.

A manual scram is any set of actions by the reactor operator(s) which results in a scram. These actions include placing the reactor mode switch in shutdown, depressing the RPS Manual Scram pushbuttons and/or placing ARI switches to trip. Injection of boron is not considered in reducing reactor power below 5%. A concurrent challenge to the ability to cool the core or a significant challenge to decay heat removal capability would escalate this event to General Emergency CG1.

As specified in the NUMARAC/NESP-007 Questions and Answers, January 1993, ". . . a scram is considered unsuccessful if it does not result in achieving a state in which the reactor will remain shutdown under all conditions without boron injection." For CA1, if manual actions result in the reactor being shutdown under all conditions without boron injection, an

ALERT is declared. Escalation to a Site Area Emergency (CA2) is not required. If sufficient control rods are not inserted to reduce reactor power to below the APRM downscale setpoints, an immediate Site Area Emergency (SS2) is declared. IF the APRM downscale setpoint is achieved, but suppression pool temperature is greater than Boron Injection [Initiation] Temperature, a precursor exists for a threat to containment and thus a Site Area Emergency is warranted."

APRM downscale trip setpoint for WNP-2 is 5%, the Boron Injection Initiation Temperature is defined as 110°F. The conditions". . . control rod pattern which alone always assures reactor shutdown" is defined to me an that the reactor is shutdown under all conditions without boron.

REF:

WNP-2 Emergency Operating Procedure RPV Control-ATWS, PPM 5.1.2

WNP-2 Technical Specifications

NUMARC NESP-007, Methodology for Development of Emergency Action Levels, Rev. 2, Site General Emergency SS2

C. ANTICIPATED TRANSIENT WITHOUT SCRAM

GENERAL EMERGENCY:

CG1: Failure of the RPS to Complete an Automatic Scram AND Manual Scram Was NOT Successful AND There is Indication of an Extreme Challenge to the Ability to Cool the Core.

APPLICABILITY:

Operating Conditions	1	2	[redacted]

EMERGENCY ACTION LEVEL:

One or more Reactor Protection System setpoint(s) have been exceeded per Tech. Spec. 2.2

AND

Automatic and manual RPS actuation failed to result in a control rod pattern which alone always assures reactor shutdown.

AND either

Wetwell temperature cannot be maintained less than the HCTL

OR

Entry to Primary Containment Flooding, PPM 5.1.7, is required

This condition indicates a failure of both the automatic protection system and manual efforts at Control Room Panel P-603 to scram the reactor concurrent with a challenge to the ability to cool the core or a significant challenge to decay heat removal capability.

Entry to PPM 5.1.7, Primary Containment Flooding, is indicative of an extreme challenge to core cooling because either:

1. RPV water level cannot be restored and maintained above -192 in., or

2. If RPV water level cannot be determined, RPV flooding conditions cannot be established or maintained.

Heat removal capability is extremely challenged if the wetwell temperature cannot be maintained below the Heat Capacity Temperature Limit curve.

A manual scram is any set of actions by the reactor operator(s) which results in a scram. These actions include placing the reactor mode switch in shutdown, depressing the RPS Manual Scram pushbuttons and/or placing ARI switches to trip. Injection of boron is not considered in reducing reactor power below 5%.

REF:

WNP-2 Emergency Operating Procedure RPV Control-ATWS, PPM 5.1.2

WNP-2 Emergency Operating Procedure Primary Containment Flooding, PPM 5.1.7

WNP-2 Technical Specifications

NUMARC NESP-007, Methodology for Development of Emergency Action Levels, Rev. 2, Site General Emergency SG2

D. AC POWER LOSS

UNUSUAL EVENT:

DU1: Loss of All Offsite Power to Critical AC Busses for Greater Than 15 Minutes.

APPLICABILITY:

Operating Conditions	1	2	3	4	5	Def

EMERGENCY ACTION LEVEL:

Power is unavailable to SM-7 and SM-8 from Offsite AC sources for greater than 15 minutes.

Even though power may still be available from offsite sources, there must be a functional flowpath to the Critical busses. Prolonged loss of offsite AC power reduces the required redundancy and potentially degrades the level of safety by rendering the plant more vulnerable to a complete loss of AC power (Station Blackout).

Fifteen minutes was selected as a threshold to exclude transient or momentary power losses.

Credit is not taken in this EAL for the Division 3 Standby Diesel Generator because it only supplies power to the High Pressure Core Spray (HPCS) pump and associated loads, but not for any long-term decay heat removal systems and, in particular, Wetwell cooling mechanisms that would be essential subsequent to a station blackout.

Failure of either the Division 1 or Division 2 Standby Diesel Generator would escalate this event to Alert DA2.

REF:

WNP-2 Technical Specifications

NUMARC NESP-007, Methodology for Development of Emergency Action Levels, Rev. 2, Unusual Event SU1

DEVIATION:

The Initiating Condition title has been changed by adding the qualifier, "Critical AC busses", and a time frame. This change meets the intent of the example EAL listed in NUMARC while being more descriptive for the Shift Manager/PED. Consistency between event classification titles is being sought to avoid the confusion created in the NUMARC document (see NUMARC Initiating Condition: SU1, SA1, SA5, SS1, SG1, SU7, and SS3).

D. AC POWER LOSS

ALERT:

DA1: Loss of All Offsite Power and Loss of All Onsite Power to Critical AC Busses for Greater Than 15 Minutes.

APPLICABILITY:

Operating Conditions		4	5	Def

EMERGENCY ACTION LEVEL:

Complete loss of all power to Bus SM-7 and to Bus SM-8 for greater than 15 minutes.

A loss of the minimum required offsite circuits and failure of the diesel generators to restore power to the emergency busses results in a loss of AC power to all plant safety systems requiring AC power including RHR, ECCS, containment cooling systems, spent fuel heat removal systems, and Wetwell cooling systems. This significant reduction in decay heat removal is a substantial reduction in the level of safety of the plant due to a potential for temperature and pressure increases.

Credit is not taken in this EAL for the Division 3 Standby Diesel Generator because: 1) it is not required for all situations during Operating Conditions 4 and 5; and 2) although it does supply power to the HPCS pump which is a source of makeup water, it does not supply power to any systems that could be used to remove energy from the reactor and Wetwell thereby limiting the long-term decay heat removal effectiveness.

When the plant is in a cold shutdown or refueling condition, RPV temperature and pressure are lower than they would be in other operating conditions. These lower pressures and temperatures increase the margin of safety allowing more time before power must be restored to an emergency bus than would be available during Operating Conditions 1, 2 or 3.

Fifteen minutes was selected as a conservative lower threshold that retains the anticipatory nature of EAL's while excluding transient or momentary power losses.

Escalation of this event to a Site Area Emergency would be via the Increased Radiation Release to the Environment (see Initiating Condition FS1) or Shift Manager/PED Judgment (see Initiating Condition PS1).

If this same set of conditions were to occur in Operating Conditions 1, 2 or 3, they would be classified a Site Area Emergency (see Initiating Condition DS1).

REF:

WNP-2 Technical Specifications

NUMARC NESP-007, Methodology for Development of Emergency Action Levels, Rev. 2, Alert SA1

DEVIATION:

1. NUMARC Initiating Condition SA1 requires you to check that offsite power distribution and onsite power distribution are available. These conditions are combined into one EAL. If the Critical bus is deenergized, it means that both offsite and onsite power sources were unable to connect to the divisional bus.

2. The title of the Initiating Condition has been changed by adding the qualifier, "Critical AC busses", and a time frame. This change meets the intent of the example EAL listed in NUMARC while being more descriptive for the Shift Manager/PED. Consistency between event classification titles is being sought to avoid the confusion created in the NUMARC document (see NUMARC Initiating Condition: SU1, SA1, SA5, SS1, SG1, SU7 and SS3).

D. AC POWER LOSS

ALERT:

DA2: Power Capability to Critical AC Busses Reduced to a Single Power Source for Greater Than 15 Minutes Such That Any Additional Single Failure Would Result in Station Blackout.

APPLICABILITY:

Operating Conditions	1	2	3	[redacted]

EMERGENCY ACTION LEVEL:

Complete loss of all power to Bus SM-7 for greater than 15 minutes.
AND
Bus SM-8 has only one of the following power sources:
- SM-3
- TR-B
- DG-2

OR

Complete loss of all power to Bus SM-8 for greater than 15 minutes.
AND
Bus SM-7 has only one of the following power sources:
- SM-1
- TR-B
- DG-1

This Initiating Condition and its associated EAL provide an escalation from Initiating Condition DU1, "Loss of All Offsite Power to Critical Busses for Greater than 15 Minutes". The condition indicated by this EAL is the degradation of the offsite and onsite power systems such that any additional single failure would result in a station blackout.

This EAL includes a loss of both offsite power sources with only one diesel generator powering its respective emergency bus as well as a failure of both diesel generators such that they would not be able to power their respective emergency busses with only one offsite power source available.

Credit is not taken in this Initiating Condition for bus SM-4 and the Division 3 Standby Diesel Generator because they only supply power to the HPCS pump and associated loads but not to any decay heat removal systems that would be essential subsequent to a station blackout.

Power to busses SM-7 and SM-8 may come from either its respective standby diesel generator or from the Switch Yard through the Startup or Backup Transformers. Regardless of the source of power, failure of the remaining power source would result, at least temporarily, in a station blackout. The determining factor of whether or not to classify then becomes the amount of time that power is not available.

Escalation for a Site Area Emergency for a station blackout would be via Initiating Condition DS1.

REF:

WNP-2 Technical Specifications

NUMARC NESP-007, Methodology for Development of Emergency Action Levels, Rev. 2, Alert SA5

DEVIATION:

The Initiating Condition title has been changed by adding the qualifier, "Critical AC busses", and a time frame. This change meets the intent of the example EAL listed in NUMARC while being more descriptive for the Shift Manager/PED. Consistency between event classification titles is being sought to avoid the confusion created in the NUMARC document (see NUMARC Initiating Condition: SU1, SA1, SA5, SS1, SG1, SU7 and SS3).

D. AC POWER LOSS

SITE AREA EMERGENCY:

DS1: Loss of All Offsite Power and Loss of All Onsite Power to Critical AC Busses for Greater Than 15 Minutes.

APPLICABILITY:

Operating Conditions	1	2	3	

EMERGENCY ACTION LEVEL:

Complete loss of all power to Bus SM-7 and to Bus SM-8 for greater than 15 minutes.

The condition indicated by this EAL is a station blackout and reflects a condition more serious than that described in Alert DA2 in that both Division 1 and Division 2 Emergency Busses are deenergized and have been without power for 15 minutes or longer. Station blackouts lasting less than 15 minutes or electrical system faults resulting in only one emergency bus powered from only one source are classified according to Alert DA2.

Credit is not taken in this EAL for Bus SM-4 and the Division 3 Standby Diesel Generator because it only supplies power to the HPCS pump and associated loads but not to any decay heat removal systems that would be essential subsequent to a station blackout.

Fifteen minutes was chosen as a conservative time to maintain the anticipatory nature of EAL's while excluding transient or momentary power losses.

This event would be upgraded to a General Emergency per DG1 if it appears that power cannot be restored to Bus SM-7 or SM-8 within 4 hours or if the Shift Manager/PED determines that a loss or potential loss of a fission product barrier is imminent in accordance with the Fission Product Barrier Degradation table. Imminent in this context means mitigation strategies and actions are not successful in preventing a challenge to Fuel Clad, Reactor Coolant Pressure Boundary or Primary Containment.

REF:

WNP-2 Technical Specifications

WNP-2 FSAR, Section 1.5.2, SBO Coping Study

NUMARC NESP-007, Methodology for Development of Emergency Action Levels, Rev. 2, Site Area Emergency SS1

DEVIATION:

1. NUMARC Initiating Condition SA1 requires you to check that offsite power distribution and onsite power distribution are available. These conditions are combined into one EAL. If the Critical bus is deenergized, it means that both offsite and onsite power sources were unable to connect to the divisional bus.

2. The Initiating Condition title has been changed by adding the qualifier, "Critical AC busses", and a time frame. This change meets the intent of the example EAL listed in NUMARC while being more descriptive for the Shift Manager/PED. Consistency between event classification is being sought to avoid the confusion created in the NUMARC document. (See NUMARC Initiating Conditions: SU1, SA1, SA5, SS1, SG1, SU7 and SS3.)

D. AC POWER LOSS

GENERAL EMERGENCY:

DG1: Prolonged Loss of All Offsite Power and Prolonged Loss of All Onsite Power to Critical AC Busses.

APPLICABILITY:

Operating Conditions	1	2	3	

EMERGENCY ACTION LEVEL:

Complete loss of all power to Bus SM-7 and to Bus SM-8
AND either

Power to either Bus SM-7 or SM-8 is not likely to be restored within 4 hours.

OR

RPV level is less than -161".

The condition indicated by this Initiating Condition and its associated EAL is a station blackout lasting long enough to degrade or potentially degrade a fission product barrier.

Loss of all AC power compromises all plant safety systems requiring AC power including RHR, ECCS, containment cooling systems, spent fuel heat removal systems and Wetwell cooling systems. Prolonged loss of all AC power may lead to loss of integrity of the fuel clad, reactor coolant system or containment.

Credit is not taken in this EAL for Bus SM-4 and the Division 3 Standby Diesel Generator because it only supplies power to the HPCS pump and associated loads but not to any decay heat removal systems that would be essential subsequent to a station blackout.

Under these conditions, fission product barrier monitoring capability may be degraded. It may be difficult to predict when power can be restored. However, the Shift Manager/PED must determine the need to declare a General Emergency based on two major considerations:

1. Are there any present indications that core cooling is already degraded to the point that loss or potential loss of a fission product barrier is imminent? Imminent in this context means mitigation strategies and actions are not successful in preventing a challenge to Fuel Clad, Reactor Coolant Pressure Boundary or Primary Containment.

2. If there are no present indications of such core cooling degradation, how likely is it that power can be restored in time to assure that a loss of two barriers with a potential loss of the third can be prevented?

The first question is answered by reviewing the parameters listed in Fission Product Barrier Degradation Table. The second question must be answered by the Shift Manager/PED by making a realistic assessment of the time required to complete any necessary repairs. This EAL requires the Shift Manager/PED to classify the event as soon as his assessment indicates that necessary repairs will take longer than 4 hours rather than waiting for the 4 hours to expire.

REF:

WNP-2 Technical Specifications

NUMARC NESP-007, Methodology for Development of Emergency Action Levels, Rev. 2, General Emergency SG1

WNP-2 FSAR, Section 1.5.2, SBO Coping Study

DEVIATION:

The Initiating Condition title has been changed by adding the qualifier, "Critical AC busses", and a time frame. This change meets the intent of the example EAL listed in NUMARC while being more descriptive for the Shift Manager/PED. Consistency between event classification is being sought to avoid the confusion created in the NUMARC document. (See NUMARC ID: SU1, SA1, SA5, SS1, SG1, SU7 and SS3.)

E. DC POWER LOSS

UNUSUAL EVENT:

EU1: Degradation of All Critical DC Power for Greater Than 15 Minutes.

APPLICABILITY:

Operating Conditions		4.	5

EMERGENCY ACTION LEVEL:

Degradation of Division 1 Critical DC voltage as indicated by Bus Voltage less than 110 VDC on 125 V Dist. Panel S1-1 voltmeter located on Bd. C for greater than 15 minutes.

AND

Degradation of Division 2 Critical DC voltage as indicated by Bus Voltage less than 110 VDC on 125 V Dist. Panel S1-2 voltmeter located on Bd. C for greater than 15 minutes.

This Initiating Condition and its EAL recognize a loss of DC power compromising the ability to monitor and control the removal of decay heat during cold shutdown or refueling. This EAL is intended to be anticipatory in that the operating crew may not have the necessary indication and control of equipment needed to respond to the loss. This is a less severe condition than that described in Site Area Emergency CS2 because initial temperatures and pressures are lower than they would be for Operating Conditions 1, 2 or 3 and, normally, less decay would be present.

Credit is not taken in this EAL for the Division 3 DC bus because it only supplies control power to loads associated with the HPCS pump and not to any decay heat removal systems.

The WNP-2 battery sizing calculations for the 125 VDC batteries, S1-1 and S1-2, reveal that a worst case LOCA analysis would permit a 15 minute margin between 106.3 volts and 105.0 volts. However, a conservative value of one hundred ten (110) volts DC is used as a minimum bus voltage. It is based on providing a 15 minute margin of operation before bus voltage drops below 105 volts DC at which time bus loads cannot be guaranteed to function. One hundred ten volts was also selected based on instrument accuracy of $\pm 2\%$ full scale or ± 3 volts and scale increments of 2 volts.

The same set of conditions as described in this EAL would be classified Site Area Emergency ES2 if they occurred during Operating Conditions 1, 2 or 3.

REF:

WNP-2 Technical Specifications

NUMARC NESP-007, Methodology for Development of Emergency Action Levels, Rev. 2, Unusual Event SU7

Engineering Calculation 2.05.01 (Battery Sizing Calc)

WNP-2 FSAR Section 8.3.2.1, Batteries

CVI 51A-00,8 Exide Manual

DEVIATION:

The Initiating Condition title has been changed by adding the qualifier, "Critical DC busses", and a time frame. This change meets the intent of the example EAL listed in NUMARC while being more descriptive for the Shift Manager/PED. Consistency between event classification is being sought to avoid the confusion created in the NUMARC document. (See NUMARC Initiating Conditions: SU1, SA1, SA5, SS1, SG1, SU7 and SS3.)

E. DC POWER LOSS

SITE AREA EMERGENCY:

ES1: Degradation of All Critical DC Power for Greater Than 15 Minutes.

APPLICABILITY:

Operating Conditions	1	2	3	[redacted]

EMERGENCY ACTION LEVEL:

Degradation of Division 1 Critical DC voltage as indicated by Bus Voltage less than 110 VDC on 125 V Dist. Panel S1-1 voltmeter located on Bd. C for greater than 15 minutes.

AND

Degradation of Division 2 Critical DC voltage as indicated by Bus Voltage less than 110 VDC on 125 V Dist. Panel S1-2 voltmeter located on Bd. C for greater than 15 minutes.

This Initiating Condition and its EAL recognize a loss of DC power compromising the ability to monitor and control the removal of decay heat during power operations, startup and hot shutdown conditions. It is intended to be anticipatory in that the operating crew may not have the necessary indication and control of equipment needed to respond to the loss. This EAL represents a more serious condition that than described in Unusual Event EU1 in that the initial temperatures, pressures and available decay heat may be substantially higher than in Unusual Event EU1 resulting in significantly less time available before failure of systems needed to protect the public.

Loss of all DC power compromises the ability to monitor and control plant safety functions. Prolonged loss of all DC power may result in core uncovery and loss of containment integrity when there is significant decay heat and residual heat in the reactor coolant system.

Credit is not taken in this EAL for the Division 3 DC bus because it only supplies control power to loads associated with the HPCS pump and not to any decay heat removal systems.

The WNP-2 battery sizing calculations for the 125 VDC batteries, S1-1 and S1-2, reveal that a worst case LOCA analysis would permit a 15 minute margin between 106.3 volts and 105.0 volts. However, a conservative value of one hundred ten (110) volts DC is used as a minimum bus voltage. It is based on providing a 15 minute margin of operation before bus voltage drops below 105 volts DC at which time bus loads cannot be guaranteed to function.

One hundred ten volts was also selected based on instrument accuracy of ±2% full scale or ±3 volts and scale increments of 2 volts.

REF:

WNP-2 Technical Specifications

NUMARC NESP-007, Methodology for Development of Emergency Action Levels, Rev. 2, Site Area Emergency SS3

Engineering Calculation 2.05.01 (Battery Sizing Calc)

WNP-2 FSAR Section 8.3.2.1, Batteries

CVI 51A-00,8 Exide Manual

DEVIATION:

The Initiating Condition title has been changed by adding the qualifier, "Critical DC busses", and a time frame. This change meets the intent of the example EAL listed in NUMARC while being more descriptive for the Shift Manager/PED. Consistency between event classification is being sought to avoid the confusion created in the NUMARC document. (See NUMARC Initiating Conditions: SU1, SA1, SA5, SS1, SG1, SU7 and SS3.)

F. INCREASED PLANT RADIATION RELEASE

UNUSUAL EVENT:

FU1: Unexpected Increase in Plant Radiation Levels.

APPLICABILITY:

Operating Conditions	1	2	3	4	5	Def

EMERGENCY ACTION LEVEL:

Any of the following Area Radiation Monitors exceeding 5,000 mr/hr:
ARM-RIS-4, 5, 6, 7, 8, 9, 10, 11, 12, 13, 14, 15, 16, 17, 18
ARM-RIS-20, 21, 22, 23, 24, 25, 26, 27, 28, 29, 30, 32, 33, 34

These events tend to have long lead times relative to potential for radiological release outside the site boundary thus, the impact to public health and safety is very low.

This Initiating Condition is not applicable for alarms resulting from the controlled movement of radioactive materials in the plant or expected increases in radiation levels due to the backwashing of demineralizer filters or other planned operation.

Unplanned increases in inplant radiation levels represent a degradation in the control of radioactive material and represent a potential degradation in the level of safety of the plant. This EAL escalates to an ALERT per FA2 if the radiation level increase impairs safe operation of the plant.

REF:

WNP-2 Technical Specifications

WNP-2 Instrument Master Data Sheets for referenced instruments

NUMARC NESP-007, Methodology for Development of Emergency Action Levels, Rev. 2, Unusual Event AU2

DEVIATION:

1. The 5,000 mr/hr for each ARM will be used as the trigger for the EAL. This removes the interpretation by the Shift Manager/PED of determining "normal levels" from a strip chart recorder or periodic Health Physics surveys of the area. This reading of 5,000 mr/hr has the added benefit of being extremely close to the 1,000 times normal high reading advocated by NUMARC while providing sufficient margin to the ALERT EAL condition in Initiating Condition FA2.

2. Airborne concentration is not addressed. An increase in airborne concentration is not addressed in the example EAL's or the basis for the Unusual Event or Alert in discussions with NUMARC. The airborne example EAL was deleted in the body but overlooked in the title.

3. NUMARC example: EAL 3 is applicable to plants with licenses for dry storage for older irradiated spent fuel. Currently, WNP-2 does not have a license for the dry storage of older irradiated spent fuel.

4. NUMARC example: EAL 1 is considered by WNP-2 to be more closely related to a system failure than to increased plant radiation release. Consequently EAL 1 is addressed in Initiating Condition OU1, Miscellaneous Initiating Conditions/System Malfunctions.

F. INCREASED PLANT RADIATION RELEASE

ALERT:

FA1: Major Damage to Irradiated Fuel OR Loss of Water Level That Has Resulted or Will Result in the Uncovering of Irradiated Fuel Outside the RPV.

APPLICABILITY:

Operating Conditions	1	2	3	4	5	Def

EMERGENCY ACTION LEVEL:

A confirmed HIGH alarm on ARM-RIS-1 Fuel Pool Area Radiation Monitor resulting from an uncontrolled fuel storage or handling.

Due to the decreased amount of decay heat present, there is time available to take corrective actions and little potential for substantial fuel damage. In addition, NUREG/CR-4982, "Severe Accident in Spent Fuel Pools in Support of Generic Safety Issue 82", July 1987, indicates that even if corrective actions are not taken, no prompt fatalities are predicted, and that risk of injury is low.

Setpoint for the listed ARM in EAL AA2.1 is given in PPM 4.602.A5 1-1. After review of refuel floor radiation monitoring capability it was determined that three of the four ARMs included in this EAL should not be listed for the following reasons.

- ARM-RIS-3 and ARM-RIS-3A detect radiation near the bottom of the new fuel storage pit and, therefore, would not provide adequate indication of radiation levels associated with decreasing water level above irradiated fuel.

- ARM-RIS-2, Fuel Pool Area Radiation Monitor, alarm setpoint is arbitrarily adjusted to a level slightly above normal background to monitor operator performance during fuel handling and would, therefore, not be indicative of a potential refueling accident. Its high alarm setpoint is typically 15 mR/hr.

The high alarm on ARM-RIS-1, Fuel Pool Area Radiation Monitor, is the threshold condition for this EAL. Its setpoint is nominally 300 mR/hr. The EAL is worded so that the alarm must be a confirmed high alarm thus avoiding an unnecessary declaration if the condition were to be caused by a spurious alarm signal.

Unintentional water level decrease may result in unplanned increases in inplant radiation levels represent a degradation in the control of radioactive material and represent a potential degradation in the level of safety of the plant.

REF:

WNP-2 Technical Specifications

NUMARC NESP-007, Methodology for Development of Emergency Action Levels, Rev. 2, AA2

NUREG/CR-4982, Severe Accident in Spent Fuel Pools in Support of Generic Safety, Issue 82, July 1987

DEVIATION:

NUMARC example: EAL 2, 3 and 4 are considered by WNP-2 to be more closely related to a system failure than to increased plant radiation release. Consequently EAL 2, 3 and 4 are addressed in Initiating Condition OA2, Miscellaneous Initiating Conditions/System Malfunctions.

F. INCREASED PLANT RADIATION RELEASE

ALERT:

FA2: Release of Radioactive Material or Increases in Radiation Levels Within the Facility That Impedes Operation of Systems Required to Maintain Safe Operations or to Establish or Maintain Cold Shutdown.

APPLICABILITY:

Operating Conditions	1	2	3	4	5	Def

EMERGENCY ACTION LEVEL:

Valid Radiation monitor reading GREATER THAN 15 mrem/hr on the Control Room Area Radiation Monitor, ARM-RIS-19.

OR

Any of the following Area Radiation Monitors, located in safe shutdown buildings, exceeding 10,000 mr/hr:
ARM-RIS-4 through ARM-RIS-18
ARM-RIS-23 and ARM-RIS-24
ARM-RIS-32 through ARM-RIS-34

Safe Shutdown Buildings are:

- Vital portions of the Radwaste/Control Building
- Reactor Building
- Turbine Building
- Standby Service Water Pump Houses
- Diesel Generator Building
- Diesel Generator Fuel Oil Storage Area

These events tend to have long lead times relative to potential for radiological release outside the site boundary thus, the impact to public health and safety is very low.

This Initiating Condition is not applicable for alarms resulting from the controlled movement of radioactive materials in the plant or expected increases in radiation levels due to the backwashing of demineralizer filters.

Unplanned increases in inplant radiation levels represent a degradation in the control of radioactive material and represent a potential degradation in the level of safety of the plant.

Areas requiring continuous occupancy include the Control Room. The value of 15 mrem/hr is derived from the Generic Design Criteria (GDC) 19 value of 5 rem in 30 days with adjustment for expected occupancy times. Although Section III.D.3 or NUREG 0737, "Clarification of TMI Action Plan Requirements", provides that the 15 mrem/hr value can be averaged over the 30 days, the value is used here without averaging, as a 30-day duration implies an event potentially more significant than an Alert.

This Initiating Condition addresses increased radiation levels that impede necessary access to operating stations or other areas containing equipment that must be operated manually in order to maintain safe operation or perform a safe shutdown. It is this impaired ability to operate the plant that results in the actual or potential substantial degradation of the level of safety of the plant. The cause and/or magnitude of the increase in radiation levels is not a concern of this Initiating Condition.

This Initiating Condition is not meant to apply to increases in the containment radiation monitors as these events are addressed in the fission product barrier Initiating Condition's, nor is it intended to apply to anticipated temporary increases due to planned events (e.g., incore detector movement, radwaste container movement, depleted resin transfers, etc.).

The Shift Manager/PED should determine the cause of the increase in radiation levels and review other Initiating Condition's for applicability.

REF:

NUMARC NESP-007, Methodology for Development of Emergency Action Levels, Rev. 2, AA3

NUREG 0737, Clarification of TMI Action Plan Requirements

WNP-2 FSAR Table 9.5-8, Locations of Emergency Lighting

DEVIATION:

1. The 10,000 mr/hr for each ARM will be used as the trigger for the EAL. This removes the interpretation by the Shift Manager/PED of determining "normal levels" from a strip chart recorder or periodic Health Physics surveys of the area. The upscale high reading of 10,000 mr/hr has the added benefit of being close to the 1,000 times normal high reading advocated by NUMARC.

2. NUMARC lists the Central Alarm Station as being a location requiring continuous occupation in NUMARC example EAL #1. It is not listed in the WNP-2 EAL's since all functions can be assumed at the Secondary Alarm Station located in the Control Room.

3. At WNP-2, safe shutdown buildings include: plant security areas (vital areas), buildings containing safe shutdown equipment, and buildings containing safety related equipment. The NUMARC document uses these three terms (areas) interchangeably. To reduce confusion, WNP-2 will use the term "safe shutdown building" which will encompass the three (3) areas listed.

G. INCREASED RADIATION RELEASE TO THE ENVIRONMENT

UNUSUAL EVENT:

GU1: Any Unplanned Release of Gaseous or Liquid Radioactivity to the Environment That Exceeds Two Times ODCM limits for 60 Minutes or Longer.

APPLICABILITY:

Operating Conditions	1	2	3	4	5	

EMERGENCY ACTION LEVEL:

A valid reading on one or more of the following monitors that exceeds the value shown for 60 minutes or longer AND assessment in accordance with PPM 13.8.1 or 13.8.2 using actual meteorology, isotopic source term obtained from effluent grab sampling and laboratory analysis confirms Site Boundary dose rates equal to or greater than 0.1 mrem/hr TEDE or 0.3 mrem/hr typhoid CDE:

PRM-RE-1B	905,000 CPS
TEA-RIS-13	16,750 CPM
WEA-RIS-14	120,000 CPM

NOTE: If the monitor reading(s) is sustained for longer than 60 minutes and the required assessments cannot be completed within this period, then the declaration must be made based on the valid reading.

OR

Assessment in accordance with PPM 13.8.1 or 13.8.2 using isotopic source term obtained from effluent grab sampling and laboratory analysis confirms Site Boundary dose rates equal to or greater than 0.1 mrem/hr TEDE or 0.3 mrem/hr thyroid CDE.

D

A valid reading on one or more of the following monitors that exceeds the value shown AND sample analysis indicates greater than TWO times ODCM 6.2.1.1 limits for 60 minutes or longer:

SW-RE-4,	SW Loop A Process Rad Monitor	200 CPS
SW-RE-5,	SW Loop B Process Rad Monitor	200 CPS
FDR-RE-6	Radwaste Monitor	2 X Hi-Hi Alarm
TSW-RE-5,	TSW Effluent	3900 CPM

NOTE: If the monitor reading is sustained for longer than 60 minutes and the required assessments cannot be completed within this period, then the declaration must be made based on the valid reading.

OR

Sample analysis indicates greater than TWO times ODCM 6.2.1.1 limits for 60 minutes or longer.

Unplanned releases in excess of TWO times Technical Specifications that continue for 60 minutes or longer represent an uncontrolled situation and, hence, a potential degradation in the level of safety. The final integrated dose (which is very low in the Unusual Event emergency class) is not the primary concern here; rather, it is the degradation in plant control implied by the fact that the release was not isolated within 60 minutes.

It is not intended that the release be averaged over 60 minutes. Further, the PED should not wait until 60 minutes has elapsed, but should declare the event as soon as it is determined that the release will exceed TWO times the Technical Specification for greater than 60 minutes. It is expected that the offsite dose analysis will be performed on the Emergency Dose Projection System (EDPS) or the Backup EDPS using results of isotopic analysis if available, and actual meteorology.

If the monitor reading(s) is sustained for longer than 60 minutes and the required assessments cannot be completed within this period, then the declaration must be made based on the valid reading.

Monitor indications and alarms are based on the methodology of the ODCM which demonstrates compliance with 10 CFR 20 and 10 CFR 50, Appendix I, requirements. The six year average meteorology is also used for basing alarm setpoints.

REF:

WNP-2 Technical Specifications

WNP-2 Offsite Dose Calculation Manual

NUMARC NESP-007, Methodology for Development of Emergency Action Levels, Rev. 2, Unusual Event AU1

DEVIATION:

1. NUMARC example #3 not included because WNP-2 does not have a perimeter monitoring system.

2. NUMARC example #4 not included because WNP-2 does not provide automatic real time dose assessment capability.

3. EAL's are based on 500 mrem/yr as specified in 10 CFR 20 and ODCM.

G. INCREASED RADIATION RELEASE TO THE ENVIRONMENT

ALERT:

GA1: Any Unplanned Release of Gaseous or Liquid Radioactivity to the Environment That Exceeds 200 Times the Radiological Specifications for 15 Minutes or Longer.

APPLICABILITY:

Operating Conditions	1	2	3	4	5	Def

EMERGENCY ACTION LEVEL:

A valid reading on one or more of the following monitors that exceeds the value shown for 15 minutes or longer AND assessment in accordance with PPM 13.8.1 or 13.8.2 using actual meteorology confirms Site Boundary dose rates equal to or greater than 10 mrem/hr TEDE or 10 mrem/hr thyroid CDE:

PRM-RE-1C	850 CPS
TEA-RIS-13	44,000 CPM
WEA-RIS-14	167,000 CPM

NOTE: If the monitor reading(s) is sustained for longer than 15 minutes and the required assessments cannot be completed within this period, then the declaration must be made based on the valid reading.

OR

Offsite dose calculations indicate greater than 10 mrem/hr TEDE or greater than 50 mrem/hr CDE to the thyroid and the release continues at or above that level for 15 minutes or longer.

OR

A valid reading on one or more of the following monitors that exceeds the value shown AND sample analysis indicates greater than 200 times ODCM 6.2.1.1 limit for 15 minutes or longer:

SW-RE-4	SW Loop A Process Rad Monitor	20,000 CPS
SW-RE-5	SW Loop B Process Rad Monitor	20,000 CPS
FDR-RE-6	Radwaste Effluent Monitor	200 X High-High Alarm
TSW-RE-5,	TSW Effluent Monitor	390,000 CPM

OR

Sample analysis indicates greater than 200 times ODCM 6.2.1.1 limit for 15 minutes or longer.

The required release duration has been reduced to 15 minutes in recognition of the decreased plant safety, and to provide prompt classification. It is expected that the offsite dose analysis will be performed on the Emergency Dose Projection System (EDPS) or the Backup EDPS.

If the monitor reading(s) is sustained for longer than 15 minutes and the required assessments cannot be completed within this period, then the declaration must be made based on the valid reading.

REF:

NUMARC NESP-007, Methodology for Development of Emergency Action Levels, Rev. 2, Alert AA1

WNP-2 Offsite Dose Calculation Manual

WNP-2 Technical Specifications

DEVIATION:

1. NUMARC example #3 was deleted since WNP-2 does not have telemetered perimeter monitors.

2. NUMARC example #4 not included because WNP-2 does not provide automatic real time dose assessment capability.

3. ODCM has a 2 hour default as opposed to the 1 hour default advocated by NUMARC NESP-007.

G. INCREASED RADIATION RELEASE TO THE ENVIRONMENT

SITE AREA EMERGENCY:

GS1: Boundary Dose Resulting From an Actual or Imminent Release of Gaseous Radioactivity that Exceeds 100 mrem TEDE OR 500 mrem Thyroid CDE for the Actual OR Projected Duration of the Release.

APPLICABILITY:

Operating Conditions	1	2	3	4	5	Def

EMERGENCY ACTION LEVEL:

A valid reading on one or more of the following monitors that exceeds or is expected to exceed the value shown:

- PRM-RE-1C 6500 CPS
- TEA-RIS-13 440,000 CPM
- WEA-RIS-14 1,670,000 CPM

AND

Assessment in accordance with PPM 13.8.1 or 13.8.2 using actual meteorology indicates offsite doses greater than 100 mrem TEDE or 500 mrem thyroid CDE for the actual or projected duration of the release.

NOTE: If the monitor reading is sustained for longer than 15 minutes and the required assessment cannot be completed within this period, then the declaration must be made based on the valid reading.

OR

Valid dose assessment capability indicates dose consequences greater than 100 mrem TEDE or 500 mrem thyroid CDE.

OR

Field survey results indicate Protected Area Boundary dose rates exceeding 100 mrem/hr and are expected to continue for more than one hour.

OR

Analyses of field survey samples indicate thyroid CDE of 500 mrem for one hour of inhalation.

Effluent readings shall only be used for the classification of fast breaking events until actual dose projections can be made. Dose assessment, since it uses current plant values, will be more accurate and should be used.

The 100 mrem integrated dose in this Initiating Condition is based on the proposed 10 CFR 20 annual average population exposure. This value also provides a desirable gradient (one order of magnitude) between the Alert, Site Area Emergency and General Emergency classes. It is calculated that exposures less than this time limit are not consistent with the Site Area Emergency class description. The 500 mrem integrated thyroid CDE dose was established in consideration of the 1:5 ratio of the EPA Protection Action Guidelines for TEDE and Thyroid Committed Dose Equivalent.

In establishing the emergency action levels, a release duration of one hour is assumed. If the monitor reading(s) is sustained for longer than 15 minutes and the required assessments cannot be completed within this period, then the declaration must be made based on the valid reading.

REF:

NUMARC NESP-007, Methodology for Development of Emergency Action Levels, Rev. 2, Site Area Emergency AS1

10 CFR 20

WNP-2 Offsite Dose Calculation Manual

Environmental Protection Agency 400, Manual of Protective Action Guides and Protective Actions for Nuclear Incidents, October 15, 1991

DEVIATION:

1. NUMARC example #2 was deleted since WNP-2 does not have a perimeter monitoring system.

2. ODCM has a 2 hour default as opposed to the 1 hour default advocated by NUMARC NESP-007.

G. INCREASED RADIATION RELEASE TO THE ENVIRONMENT

GENERAL EMERGENCY:

GG1: Boundary Dose Resulting From an Actual or Imminent Release of Gaseous Radioactivity that Exceeds 1000 mR Total Effective Dose Equivalent OR 5000 mrem Thyroid Committed Dose Equivalent for the Actual OR Projected Duration of the Release Using Actual Meteorology.

APPLICABILITY:

Operating Conditions	1	2	3	4	5	Def

EMERGENCY ACTION LEVEL:

A reading on one or more of the following monitors that exceeds or is expected to exceed the value shown:

- PRM-RE-1C 65,000 CPS
- TEA-RIS-13A 8 PMU
- WEA-RIS-14A 26 PMU

AND

Assessment in accordance with PPM 13.8.1 or 13.8.2 using actual meteorology indicates offsite doses greater than 1000 mrem TEDE or 5000 mrem thyroid CDE for the actual or projected duration of the release.

NOTE: If the monitor reading(s) is sustained for longer than 15 minutes and the required assessment cannot be completed within this period, then the declaration must be made based on the valid reading.

OR

Valid dose assessment capability indicates dose consequences greater than 1000 mrem TEDE or 5000 mrem thyroid CDE.

OR

Field survey results indicate Protected Area Boundary dose rates exceeding 1000 mrem/hr and are expected to continue for more than one hour.

Analyses of field survey samples indicate thyroid CDE of 5000 mrem for one hour of inhalation.

Effluent readings shall only be used for the classification of fast breaking events until actual dose projections can be made. Dose assessment, since it uses current plant values, will be more accurate and should be used.

In establishing the emergency action levels, a release duration of one hour is assumed. If the monitor reading(s) is sustained for longer than 15 minutes and the required assessments cannot be completed within this period, then the declaration must be made based on the valid reading.

The 1000 mrem Total Effective Dose Equivalent or 5000 mrem thyroid Committed Dose Equivalent integrated dose are based on the EPA protective action guidance which indicates that public protective actions are indicated if the dose exceeds 1 rem Total Effective Dose Equivalent or 5 rem thyroid Committed Dose Equivalent. This logic is consistent with the emergency class description for a General Emergency and constitutes the upper level of the desirable gradient for the Site Area Emergency.

Actual meteorology is specifically identified in the Initiating Condition since it gives the most accurate dose assessment.

REF:

NUMARC NESP-007, Methodology for Development of Emergency Action Levels, Rev. 2, General Emergency AG1

10 CFR 20

WNP-2 Offsite Dose Calculation Manual

Environmental Protection Agency 400, Manual of Protective Action Guides and Protective Actions for Nuclear Incidents, October 15, 1991

DEVIATION:

1. NUMARC example #2 was deleted since WNP-2 does not have a perimeter monitoring system.

2. ODCM has a 2 hour default as opposed to the 1 hour default advocated by NUMARC NESP-007.

H. FIRE/EXPLOSION

UNUSUAL EVENT:

HU1: Fire Within the Protected Area Boundary Not Extinguished Within 15 Minutes of Detection OR an Explosion Within Protected Area Boundary.

APPLICABILITY:

Operating Conditions	1	2	3	4	5	Def

EMERGENCY ACTION LEVEL:

Fire within or adjacent to any Safe Shutdown Building which is not extinguished within 15 minutes of a valid alarm.

OR

Fire within or adjacent to any Safe Shutdown Building which is not extinguished within 15 minutes of Control Room notification by plant personnel.

OR

Report by plant personnel confirming the occurrence of an explosion within the Protected Area Boundary.

Safe Shutdown Buildings are:

- Vital portions of the Radwaste/Control Building
- Reactor Building
- Turbine Building
- Standby Service Water Pump Houses
- Diesel Generator Building
- Diesel Generator Fuel Oil Storage Area

This Initiating Condition and its associated EAL address fires that are of sufficient magnitude that they may be potentially significant precursors to damage to safety systems. This excludes items such as fires within administrative buildings or other structures not contiguous with a safe shutdown building, and other fires of no safety consequence or threat to a safe shutdown building.

An alarm can be shown to be valid by multiple/redundant indications such as alarms on FCP-1 or FCP-2, fire pumps starting, fire water header pressure fluctuations or my notification by plant personnel. If an alarm must be verified by dispatching an individual to the scene, the 15 minute clock starts at the time of the alarm.

If an inspection of the area is completed within 15 minutes with no evidence of a fire (spurious alarm), no declaration need be made.

No attempt is made to assess the magnitude of the damage. The occurrence of the explosion with reports of damage (deformation/scorching) is sufficient for declaration.

Any security aspects of this event should be considered under Event Category N, "Security Events". If structural or equipment damage occurs within areas housing safe shutdown equipment and functions, the event may be escalated to Alert, HA1.

REF:

Title 10 of the Code of Federal Regulations, Part 50, Domestic Licensing of Production and Utilization Facilities, Appendix R, Fire Protection Program for Nuclear Power Facilities

NUMARC NESP-007, Methodology for Development of Emergency Action Levels, Rev. 2, Unusual Event HU2

WNP-2 FSAR TABLE 9.5-8, Locations of Emergency Lighting.

DEVIATION:

Explosion within the protected area was moved from General Hazards (NUMARC HU1) to the Fire EAL to provide consistency with the Alert Level Fire EAL (NUMARC HA2) and to avoid Shift Manager/PED confusion.

H. FIRE/EXPLOSION

ALERT:

HA1: Fire OR Explosion Affecting the Operability of Plant Safety Systems Required to Establish or Maintain Safe Shutdown.

APPLICABILITY:

Operating Conditions	1	2	3	4	5	Def

EMERGENCY ACTION LEVEL:

Confirmed fire or explosion in a safe shutdown building.

AND

Affected safe shutdown system parameters indicate degraded performance.

OR

Report by plant personnel of visible damage to the safe shutdown building or equipment contained within the safe shutdown building.

Safe Shutdown Buildings are:

- Vital portions of the Radwaste/Control Building
- Reactor Building
- Turbine Building
- Standby Service Water Pump Houses
- Diesel Generator Building
- Diesel Generator Fuel Oil Storage Area

As used here, an explosion is a rapid, violent, unconfined combustion or catastrophic failure of pressurized equipment, that potentially imparts significant energy to near-by structures and materials. The inclusion of a "report of visible damage" should not be interpreted as mandating a lengthy damage assessment prior to classification. No attempt is made in this EAL to assess the actual magnitude of the damage. The occurrence of the explosion with reports of evidence of damage (e.g., deformation, scorching) is sufficient for declaration.

It is important to note that this EAL addresses a fire and not the degradation in performance of affected systems. The reference to damage of systems is used to identify the magnitude of the fire and to discriminate against minor fires. The reference to Safe Shutdown Buildings is included to discriminate against fires in areas having a low probability of affecting safe operation. The significance here is not that a safety system was degraded but the fact that the fire was large enough to cause damage to these systems.

REF:

Title 10 of the Code of Federal Regulations, Part 50, Domestic Licensing of Production and Utilization Facilities, Appendix R, Fire Protection Program for Nuclear Power Facilities

NUMARC/NESP-007, Methodology for Development of Emergency Action Levels, Rev. 2, Alert HA2

WNP-2 FSAR TABLE 9.5-8, Locations of Emergency Lighting

I. CONTROL ROOM EVACUATION

ALERT:

IA1: Control Room Evacuation Has Been Initiated.

APPLICABILITY:

Operating Conditions	1	2	3	4	5	Def

EMERGENCY ACTION LEVEL:

Entry into PPM 4.12.1.1, "Control Room Evacuation and Remote Cooldown".

The Alert condition addresses events which involve a substantial degradation of the level of safety of the plant. Frequently, a distinguishing characteristic of a "substantial degradation" is the need for increased monitoring of or assistance in monitoring plant functions. With the Control Room evacuated, additional support, monitoring and direction through the Technical Support Center and/or Operations Support Center is necessary. Therefore, an Alert should be declared when the Control Room must be evacuated.

An inability to establish plant control from outside the Control Room will escalate this event to a Site Area Emergency.

REF:

WNP-2 Control Room Evacuation and Remote Cooldown, PPM 4.12.1.1

NUMARC/NESP-007, Methodology for Development of Emergency Action Levels, Rev. 2, Alert HA5

I. CONTROL ROOM EVACUATION

SITE AREA EMERGENCY:

IS1: Control Room Evacuation Has Been Initiated, but Plant Control CANNOT be Established.

APPLICABILITY:

Operating Conditions	1	2	3	4	5	Def

EMERGENCY ACTION LEVEL:

Control room evacuation has been initiated PPM 4.12.1.1., "Control Room Evacuation and Remote Cooldown".

AND

Control of plant equipment needed to maintain adequate core cooling cannot be established at either the Division 1 or Division 2 Remote Shutdown Panels in accordance with PPM 4.12.1.1 within 15 minutes of the SRO in charge of the Control Room physically leaving the Control Room.

This Initiating Condition and its associated EAL address a condition where evacuation of the Control Room is necessary but expeditious transfer of safety systems has not occurred. Fission product barrier damage may not yet be indicated. A 15 minute transfer time was chosen for control to be reestablished to ensure that core uncovery with subsequent core damage does not occur and is consistent with NUMARC methodology.

Escalation of this event, if appropriate, would be by Fission Product Barrier Degradation, Abnormal Rad Levels/Radiological Effluent, or Shift Manager/PED Judgment Initiating Conditions.

REF:

NUMARC/NESP-007, Methodology for Development of Emergency Action Levels, Rev. 2, Site Area Emergency HS2

WNP-2 Control Room Evacuation and Remote Cooldown, PPM 4.12.1.1

J. LOSS OF ANNUNCIATORS/INDICATIONS

UNUSUAL EVENT:

JU1: Unplanned Loss of Most or All Safety System Annunciators or Indication in the Control Room for Greater than 15 Minutes.

APPLICABILITY:

Operating Conditions	1	2	3	4	5	Def

EMERGENCY ACTION LEVEL:

Unplanned Loss of most or all annunciators on P601, P602, P603, and Bd C associated with safety related equipment for greater than 15 minutes.

AND

Compensatory nonalarming indications ARE available (Plant Computer System, GDS or other installed monitors).

AND

In the opinion of the Shift Manager/PED, the loss of the indications or annunciators requires increased surveillance to safely operate the plant.

AND

The loss of the indications or annunciators was not planned.

This Initiating Condition and its associated EAL recognize the difficulty associated with monitoring plant conditions without the use of a major portion of the annunciation or indication equipment.

Quantification of "most" is left to the Shift Manager/PED. It is not intended that plant personnel perform a detailed count of the instrumentation lost but rather make a judgment call with approximately 75% being the threshold. It is estimated that if approximately 75% of the annunciators or indicators are lost, there is an increased risk that a degraded plant condition could go undetected.

Control Room panels with annunciators and indicators for safety related equipment required for off normal or emergency plan response include:

- P601
- P602
- P603
- Electrical Distribution on Bd C

Indications are available at other locations including Control Room backpanels, using them to safely operate the plant would require increased surveillance.

Plant design provides redundant safety system indication powered from separate uninterruptible power supplies. While failure of a large portion of annunciators is more likely than a failure of a large portion of indications, the concern is included in this EAL due to difficulty associated with assessment of plant conditions. The loss of specific, or several, safety system indicators should remain a function of that specific system or component operability status. This will be addressed by the specific Technical Specification. The initiation of a Technical Specification-imposed plant shutdown related to the instrument loss will be reported via 10 CFR 50.72. If the shutdown is not in compliance with the Technical Specification Action Statement, the Unusual Event is based on AU1, "Inability to Reach Required Shutdown Within Technical Specification Limits".

Compensatory nonalarming indications include the Process Computers and the Graphic Display System (GDS). It may include other permanently or temporarily installed monitoring systems if they allow the plant operators to compensate for the failed indications.

Fifteen minutes was selected as a threshold to exclude transitory or momentary power losses.

No Initiating Condition is indicated during cold shutdown and refueling due to the limited number of safety systems required for operation.

This event should be escalated to Alert CA3 if a transient is in progress or the compensatory indications become unavailable.

REF:

NUMARC/NESP-007, Methodology for Development of Emergency Action Levels, Rev. 2, Unusual Event SU3

WNP-2 Technical Specifications

J. LOSS OF ANNUNCIATORS/INDICATIONS

ALERT:

JA1: Unplanned Loss of Most or All Safety System Annunciators or Indications in the Control Room with EITHER: 1) a Significant Transient in Progress; OR 2) Compensatory Nonalarming Indicators are Unavailable.

APPLICABILITY:

Operating Conditions	1	2	3	

EMERGENCY ACTION LEVEL:

Unplanned loss of most or all annunciators on P601, P602, P603, and Bd C associated with safety related equipment for greater than 15 minutes.

AND

In the opinion of the Shift Manager/PED, the loss of the annunciators requires increased surveillance to safely operate the plant.

AND

Loss of annunciation was not planned

AND

A significant plant transient is in progress.
OR
Compensatory nonalarming indications are NOT available (Plant Computer System, GDS or other installed monitors).

This Initiating Condition and its associated EAL recognize the difficulty associated with monitoring plant conditions without the use of a major portion of the annunciation or indication equipment. It represents an increase in severity above that described in Unusual Event CU4 in that either compensatory indications are not available or a significant transient is in progress.

Quantification of "most" is left to the Shift Manager/PED. It is not intended that plant personnel perform a detailed count of the instrumentation lost but, rather, make a judgment call with approximately 75% being the threshold. It is estimated that if approximately 75% of the annunciators or indicators are lost, there is an increased risk that a degraded plant condition could go undetected.

Control Room panels with annunciators and indicators for safety related equipment for off normal or emergency plan response include:

- P601
- P602
- P603
- Electrical Distribution on Bd C

Indications are available at other locations including Control Room backpanels. However, using them to safely operate the plant would require increased surveillance.

Plant design provides redundant safety system indication powered from separate uninterruptable power supplies. While failure of a large portion of annunciators is more likely than a failure of a large portion of indications, the concern is included in this EAL due to difficulty associated with assessment of plant conditions. The loss of specific, or several, safety system indicators should remain a function of that specific system or component operability status. This will be addressed by the specific Technical Specification. The initiation of a Technical Specification-imposed plant shutdown related to the instrument loss will be reported via 10 CFR 50.72. If the shutdown is not in compliance with the Technical Specification action statement, the Unusual Event is based on AU1, "Inability to Reach Required Shutdown Within Technical Specification Limits".

Compensatory nonalarming indications include the Process Computer Systems. It may include other permanently or temporarily installed monitoring systems if they allow the plant operators to compensate for the failed indications.

Fifteen minutes was selected as a threshold to exclude transient or momentary power losses.

A "significant transient" includes response to automatic or manually initiated functions such as scrams, runbacks involving greater than 25% thermal power change, ECCS injection, or thermal power oscillations of 10% or greater.

No Initiating Condition is indicated during cold shutdown or refueling due to the limited number of safety systems required for operation.

This event should be escalated to Site Area Emergency CS3 if the operating crew cannot monitor a transient in progress.

REF:

NUMARC/NESP-007, Methodology for Development of Emergency Action Levels, Rev. 2, Alert SA4

WNP-2 Technical Specifications

J. LOSS OF ANNUNCIATORS/INDICATIONS

SITE AREA EMERGENCY:

JS1: Inability to Monitor a Significant Transient in Progress.

APPLICABILITY:

Operating Conditions	1	2	3	[redacted]

EMERGENCY ACTION LEVEL:

Loss of most or all annunciators on P601, P602, P603, and Bd C associated with safety related equipment.

AND

Compensatory non-alarming indications are unavailable (process computer system, GDS or other installed monitors).

AND

Loss of indications needed to monitor any of the following plant critical safety parameters: Reactor power, RPV level, RPV pressure, Wetwell pressure, Drywell pressure, Drywell temperature, Wetwell/Drywell H2/O2 Concentrations, Wetwell level, Wetwell temperature, Radioactive Gaseous Effluents

AND

Significant transient in progress

This Initiating Condition and its associated EAL recognize the inability of the Control Room staff to monitor plant response to a transient. A Site Area Emergency is considered to exist if the Control Room staff cannot monitor the critical safety functions needed for protection of the public.

Critical safety functions include those plant parameters and functions that allow the plant operators to verify they have a coolable core geometry, that core cooling is maintained, and that containment is intact. The WNP-2 Safety Analysis Report states that the safety functions include:

1. The accommodation of abnormal operational transients and postulated design basis accidents;

2. The maintenance of containment integrity;

3. The assurance of Emergency Core Cooling; and

4. The continuance of reactor coolant pressure boundary integrity.

Compensatory nonalarming indications include the Process Computer Systems. It may include other permanently or temporarily installed monitoring systems if they allow the plant operators to compensate for the failed indications.

A "significant transient" includes response to automatic or manually initiated functions such as scrams, runbacks involving greater than 25% thermal power change, ECCs injection, or thermal power oscillations of 10% or greater.

REF:

NUMARC/NESP-007, Methodology for Development of Emergency Action Levels, Rev. 2, Site Area Emergency SS6

WNP-2 Technical Specifications

K. LOSS OF COMMUNICATIONS

UNUSUAL EVENT:

KU1: Significant Loss of Onsite OR Offsite Communications Capabilities.

APPLICABILITY:

Operating Conditions	1	2	3	4	5	Def

EMERGENCY ACTION LEVEL:

Unplanned loss of all of the following onsite communications capability:
- Plant Public Address (PA) System
- Plant Telephone System
- Plant Radio System Operations and Security Channels

OR

Unplanned loss of all of the following offsite communications capability:
- State/County Notification (CRASH) System.
- Offsite calling capability from the Control Room via direct telephone and fax lines.
- Long distance calling capability on the Plant ("2000") Switch and Plant Support Facility/Plant Engineering Center ("8000") Switch.

This Initiating Condition and its associated EAL's recognize a loss of communications capability that significantly degrades the plant operations staff's ability to perform tasks necessary for plant operations or the ability to communicate with offsite authorities. The loss of offsite communications capability is more comprehensive than that addressed by 10 CFR 50.72.

REF:

NUMARC NESP-007, Methodology for Development of Emergency Action Levels, Rev. 2, Unusual Event SU6

L. NATURAL/DESTRUCTIVE PHENOMENA

UNUSUAL EVENT:

LU1: Natural and Destructive Phenomena Affecting the Protected Area Boundary.

APPLICABILITY:

Operating Conditions	1	2	3	4	5	Def

EMERGENCY ACTION LEVEL:

EAL #1

Minimum Seismic Earthquake Exceeded (H13-P851-S1-2.5)
AND
Control Room receives report from plant personnel who have felt an earthquake.

OR

EAL #2

Report by plant personnel confirming the occurrence of a tornado striking within the Protected Area Boundary.

OR

EAL #3

Vehicle crash into or projectile which impacts plant structures or systems within Protected Area boundary.

OR

EAL #4

Weather Service projected winds GT 80, or Control Room measured winds GT 66 mph (5 min. average at 33 ft.)

OR

EAL #5

Range fires near the plant which threaten to reduce the normal level of safety.

OR

EAL #6

Turbine failure resulting in casing penetration or damage to turbine or generator seals.

OR

EAL #7

Visible ash fallout from volcanic activity.

OR

EAL #8

Floods where the river pumphouse is observed to be in danger of inundation.

EAL 1: The method of detection associated with an earthquake of this intensity is based on the condition for a "felt earthquake" as defined in the EPRI-sponsored "Guidelines for, Nuclear Plant Response to an Earthquake". These methods include the activation of seismic monitoring instrumentation as evidenced by a valid alarm on P851-S1-2.5, "MINIMUM SEISMIC EARTHQUAKE EXCEEDED" along with confirmation from plant personnel who have physically felt the ground motion and recognize the event as an earthquake. An earthquake of this magnitude may be sufficient to cause some minor damage to plant structures or equipment within the Protected Area. Damage is considered to be minor since it does not affect physical or structural integrity. The event is not expected to affect the capabilities of plant safety functions. Due to the unpredictable nature of earthquakes, this may be a precursor to a more serious event and, therefore, represents a potential degradation in the level of safety of the plant.

EAL 2: A tornado touching down within the Protected Area is an observed event with the potential to cause damage to structures containing systems or functions necessary for the safe shutdown of the plant. As such, the occurrence of a tornado strike represents a potential degradation in the level of safety of the plant. If structural damage is confirmed, this event would be escalated to Alert LA1. If it is determined that the occurrence of the tornado strike has either affected or caused the loss of shutdown cooling functions, then the consequences of the event are assessed under event category B, "Loss of Shutdown/Cooldown Functions". The event may then be escalated via this category if appropriate.

EAL 3: This EAL addresses such items as plane, helicopter, train, car, truck, or barge crash, or impact of other projectiles that may potentially damage plant structures containing functions and systems required for safe shutdown of the plant. If the crash is confirmed to affect a plant vital area, the event may be escalated to Alert.

EAL 4: This event is a natural and potentially destructive phenomena that may accompany certain events such as a tornado or hurricane. These sustained high winds may also be produced by unstable weather conditions. However this event occurs, it may be a precursor to a more serious event and, therefore, represents a potential degradation in the level of safety of the plant.

EAL 5: WNP-2 is located on a dryland steppe. Range fires routinely occur in this type of environment. This event has the potential to affect or cause the loss of safe shutdown systems and functions and, therefore, may be a precursor to a more serious event.

EAL 6: Turbine failure with casing penetration or seal failure increases the potential for leakage of combustible fluids (oils and gas).

EAL 7: In May of 1980, Mount St. Helens volcano erupted. Prevailing winds spread up to 1/4" of volcanic ash on the WNP-2 site, with much heavier concentrations of ash several miles north of the site. Ash can clog diesel-generator air intakes and can be highly abrasive to rotating machinery. This event represents a potential degradation in the level of safety of the plant.

EAL 8: The WNP-2 station is located on an elevated plateau, well removed from risk of flooding by the Columbia River. The river pumphouse, located lower and closer to the river, may be prone to flooding. Should the river pumphouse be lost, the Standby Service Water Ultimate Heat Sink spray ponds have a 30 day supply of water. However, loss of the river pumphouse is deemed a potential degradation in the level of safety of the plant. The first Control Room indication of river pumphouse flooding would be TMU-LI-7 off-scale high.

REF:

NUMARC/NESP-007, Methodology for Development of Emergency Action Levels, Rev. 2, Unusual Event HU1

WNP-2 Earthquake, PPM 4.12.4.3

WNP-P Flood, PPM 4.12.4.2

WNP-2 Tornado/High Winds, PPM 4.12.4.8

WNP-2 Design Basis Ash Fallout, PPM 4.12.4.5

WNP-2 Engineering Calculation CE-02-93-16

EPRI Guidelines for Nuclear Plant Response to an Earthquake

WNP-2 FSAR Table 9.5-8, Locations of Emergency Lighting

DEVIATION:

The explosion EAL was moved to Event Category H, "FIRE", to be consistent with the Fire Alert HA1, and to avoid Shift Manager/PED confusion.

L. NATURAL/DESTRUCTIVE PHENOMENA

ALERT:

LA1: Natural and Destructive Phenomena Affecting Safe Shutdown Buildings.

APPLICABILITY:

Operating Conditions	1	2	3	4	5	Def

EMERGENCY ACTION LEVEL:

EAL 1:

Operating Basis Earthquake Exceeded (H13-P851-S1-5.1)
AND
Control Room receives report from plant personnel who have felt an earthquake.

OR

EAL 2:

Report by plant personnel confirming the occurrence of a tornado striking a plant Safe Shutdown building.

OR

EAL 3:

Vehicle crash or projectile impact which impedes access to or damages equipment in plant vital areas.

OR

EAL 4:

Weather Service projected winds GT 100, or Control Room measured winds GT 76 mph (5 min. average at 33 ft.).

OR

EAL 5:

Ash fallout from volcanic activity is severe enough to warrant plant shutdown.

OR

EAL 6:

Missiles generated from a turbine failure have resulted in visible structural damage to or penetration of a safe shutdown building

OR

EAL 7:

Report by plant personnel of an event causing visible structural damage to a Safe Shutdown Building.

OR

EAL 8:

Report by plant personnel confirming the occurrences of plant internal flooding in a Safe Shutdown Building. AND Affected safe shutdown system parameters indicate degraded performance.

Each of these EAL's is intended to address events that may have resulted in Safe Shutdown Buildings being subjected to forces beyond design limits and, thus, damage may be assumed to have occurred to safe shutdown systems. The initial "report" should not be interpreted as mandating a lengthy damage assessment prior to classification. No attempt is made in these EAL's to assess the actual magnitude of the damage. Escalation to a higher emergency class, if appropriate, will be based on the specific system malfunctions, fission product barrier degradation, abnormal radiological releases, or Shift Manager/PED judgement IC's.

The occurrence of the explosion with reports of evidence of damage (e.g., deformation, scorching) is sufficient for declaration. The declaration of an Alert and the activation of the TSC and OSC will provide the Shift Manager/PED with the resources needed to perform these damage assessments subsequent to the classification. The Shift Manager/PED also needs to consider any security aspects of the explosion, if applicable.

For the purposes of this Initiating Condition, safe shutdown buildings are considered to be the following locations:

- Vital portions of the Radwaste/Control Building
- Reactor Building
- Turbine Building
- Standby Service Water Pump Houses
- Diesel Generator Building
- Diesel Generator Fuel Oil Storage Area

This list was developed from select portions of the Emergency Lighting in the Safety Analysis Report.

NOTE: Each EAL is discussed individually as it applies to the Initiating Condition for this Unusual Event. For the purposes of the Technical Basis, the EAL's are numbered, then referenced by number in the body of the discussion.

EAL 1: An earthquake that exceeds the OBE level is beyond the design basis limits for the plant as specified in the Safety Analysis Report, Section 3.7, Seismic Design. A seismic event of this magnitude can cause damage to safety related systems and functions. Detection of this event includes activation of seismic monitoring instrumentation as evidenced by a valid alarm on P851-S1-5.1, "OPERATING BASIS EARTHQUAKE EXCEEDED" along with confirmation from plant personnel who have physically felt the associated ground motion. An evaluation along with a thorough inspection of plant areas and systems will be used to determine the extent of plant damage and will provide the necessary information to determine if escalation to a higher emergency classification is required.

EAL 2: This event is a natural and potentially destructive phenomena that may accompany certain events such as a tornado or hurricane. These sustained high winds may also be produced by unstable weather conditions. However this event occurs, it may be a precursor to a more serious event and, therefore, represents a potential for substantial degradation in the level of safety of the plant.

EAL 3: This EAL addresses such items as plane, helicopter, train, car, truck, or barge crash, or impact of other projectiles that may affect plant structures containing functions and systems required for safe shutdown of the plant. If the crash is confirmed to affect a plant vital area, the event is an Alert.

EAL 4: Sustained high winds at this level are beyond the design basis limits for the plant as described in SAR Section 3.3, Wind Loading. Wind loads of this magnitude have the potential to damage safety related systems and functions. As such, the potential exists for substantial degradation of the level of the safety of the plant.

EAL 5: In May of 1980, Mount St. Helens volcano erupted. Prevailing winds spread up to 1/4" of volcanic ash on the WNP-2 site, with much heavier concentrations of ash several miles north of the site. Ash can clog diesel-generator air intakes and can be highly abrasive to rotating machinery. Should the Ash fallout be severe enough to warrant plant shutdown, the event additionally represents a potential for substantial degradation in the level of safety of the plant.

EAL 6: Turbine causing penetration, caused by failure of turbine rotating components, can result in missiles (blading, pieces of diaphragm, etc.) being hurled through the casing penetrations with such force, they can penetrate the turbine and come to rest a significant distance away. These turbine-generated missiles pose a threat to safety related equipment if they cause visible structural damage to, or if they penetrate, Safe Shutdown Buildings.

EAL 7: Visible structural damage is any observed physically degraded condition that indicates a significant impairment of the structural integrity of the building or area. An example of such a condition would be where a building sustained enough damage ghat it appears as if the roof could collapse at any time. The damage is based upon a report only. A detailed investigation or engineering evaluation is not required in order to classify the event.

EAL 8: Flooding conditions within the plant affecting safe shutdown areas have the potential to directly impact the safe operation of the plant. The flooding event may pose a direct threat to safety related equipment. As such, the potential exists for substantial degradation of the level of safety of the plant. Flooding is indicated by ECCS room level alarms on P601 and sump hi-hi alarms on P602.

REF:

NUMARC/NESP-007, Methodology for Development of Emergency Actions Levels, Rev. 2, Alert HA1

WNP-2 Earthquake, PPM 4.12.4.3

WNP-2 Tornado/High Winds, PPM 4.12.4.8

WNP-2 Reactor Building 422 Area Flooding, PPM 4.12.4.10

EPRI Guidelines for Nuclear Plant Response to an Earthquake

WNP-2 FSAR Table 9.5-8, Locations of Emergency Lighting

WNP-2 Design Basis ash Fallout, PPM 4.12.4.5

DEVIATION:

1. NUMARC Initiating Condition Statement, "Natural and Destructive Phenomena Affecting Plant Vital Areas", was changed to "Natural and Destructive Phenomena Affecting Safe Shutdown Buildings". At WNP-2, Safe Shutdown Buildings include: plant security areas (vital areas), buildings containing safe shutdown equipment (Appendix R), and buildings containing safety related equipment (ASME).

   This encompasses all the different areas and equipment discussed in the various NUMARC Alert EAL's included in this section. By changing the Initiating Condition to Safe Shutdown Buildings a common philosophy was able to be utilized throughout the Alert level while still encompassing the intent of the NUMARC EAL's.

2. NUMARC EAL Statement: "(Site-specific) Indications in the Control Room", is not included in the WNP-2 EAL's. The NUMARC Basis for this EAL states: "EAL 4 should specify the instrumentation or indications including judgment which are to be used to assess occurrence". This is not substantially different from NUMARC Alert HA6, "Other Conditions Existing Which in the Judgment of the Emergency Director Warrant Declaration of an Alert". This EAL is already addressed by WNP-2 Initiating Condition PA1.

M. RELEASE OF TOXIC/FLAMMABLE GAS

UNUSUAL EVENT:

MU1: Release of Toxic or Flammable Gases Affecting the Protected Area Boundary Deemed Detrimental to Safe Operation of the Plant.

APPLICABILITY:

Operating Conditions	1	2	3	4	5	Def

EMERGENCY ACTION LEVEL:

Report or detection of toxic or flammable gases that could enter or have entered within the Protected Area boundary in amounts that could affect the health of plant personnel or safe plant operation.

OR

Report by local, county or state officials for potential evacuation of site personnel based on offsite event.

This Initiating Condition and its associated EAL's are based on releases in concentrations within the Protected Area Boundary that may affect the health of plant personnel or the safe operation of the plant. This includes releases that originate onsite as well as releases that originate offsite but threaten onsite areas.

A toxic gas is considered to be any gas that is dangerous to life or limb by reason of inhalation or skin contact.

A combustible gas, if maintained at a concentration lower than the Lower Explosive Limit (LEL), will not explode due to ignition.

REF:

NUMARC/NESP-007, Methodology for Development of Emergency Actions Levels, Rev. 2, Unusual Event HU3

DEVIATION:

The wording of NUMARC Initiating Condition, "Release of Toxic or Flammable Gases Deemed Detrimental to Safe Operation of the Plant", was changed to more closely reflect the intent of the NUMARC basis while maintaining consistency of philosophy between Unusual Events LU1, HU1 and MU1. The NUMARC basis for this Initiating Condition "...is based on releases...within the site boundary...". However, it is believed that the site boundary referred to here is a generic term and is not intended to reflect the more proper Owner Controlled Area. Unusual Events HU1 and LU1 which also evaluate potential hazards, limit their scope to the Protected Area..

M. RELEASE OF TOXIC/FLAMMABLE GAS

ALERT:

MA1: Release of Toxic or Flammable Gases Within a Facility Structure Which Jeopardizes Operation of Systems Required to Maintain Safe Operations or to Establish or Maintain Cold Shutdown.

APPLICABILITY:

Operating Conditions	1	2	3	4	5	Def

EMERGENCY ACTION LEVEL:

Report or detection of toxic or flammable gases within a safe shutdown building in concentrations that will be life threatening to plant personnel or impede access to equipment needed for safe plant operation.

This EAL is based on gases that have entered a plant structure impeding access to equipment necessary for the safe operation of the plant. This EAL applies to safe shutdown buildings and areas contiguous to plant vital areas or other significant buildings or areas. The intent of this EAL is not to include buildings (i. e., warehouses) or other areas that are not contiguous or immediately adjacent to plant vital areas or safe shutdown buildings. It is appropriate that increased monitoring be done to ascertain whether consequential damage has occurred.

For the purposes of this Initiating Condition, safe shutdown buildings are considered to be the following locations:

- Vital portions of the Radwaste/Control Building
- Reactor Building
- Turbine Building
- Standby Service Water Pump Houses
- Diesel Generator Building
- Diesel Generator Fuel Oil Storage Area

This list was developed from select portions of the Emergency Lighting in the Safety Analysis Report.

REF:

NUMARC/NESP-007, Methodology for Development of Emergency Actions Levels, Rev. 2, Alert HA3

WNP-2 FSAR Table 9.5-8, Locations of Emergency Lighting

N. SECURITY EVENTS

UNUSUAL EVENT:

NU1: Confirmed Security Event Which Indicates a Potential Degradation in the Level of Safety of the Plant.

APPLICABILITY:

Operating Conditions	1	2	3	4	5	Def

EMERGENCY ACTION LEVEL:

A bomb device discovered within the plant Protected Area and outside the plant Vital Area

OR

Confirmed report of an attempted entry, sabotage or security threat that cannot be properly compensated for within 10 minutes.

Events which are believed by the Shift Manager/PED to indicate a potential degradation of the level of safety of the plant should be declared an Unusual Event.

Security events which do not represent at least a potential degradation in this level of safety of the plant are reported under 10 CFR 73.71 or, in some cases, 10 CFR 50.72.

The 10 minute criteria to compensate is derived from regulatory guidance on implementation of 10 CFR 73.71, Reporting of Security Events.

REF:

WNP-2 Safeguards Contingency Plan

NUMARC/NESP-007, Methodology for Development of Emergency Actions Levels, Rev. 2, Unusual Event HU4

N. SECURITY EVENTS

ALERT:

NA1: Security Event in a Plant Protected Area.

APPLICABILITY:

Operating Conditions	1	2	3	4	5	Def

EMERGENCY ACTION LEVEL:

Confirmed report of an intrusion by a hostile force into the plant Protected Area.

This class of security events represents an escalated threat to plant safety above that contained in the Unusual event. For the purpose of this Initiating Condition, a civil disturbance which penetrates the Protected Area Boundary as well as an individual or group of individuals with known or suspected malicious intent is considered a hostile force.

Intrusion into a Vital Area by a hostile force as defined in Site Area Emergency NS1 will escalate this event to Site Area Emergency.

REF:

WNP-2 Safeguards Contingency Plan

NUMARC/NESP-007, Methodology for Development of Emergency Actions Levels, Rev. 2, Alert HA4

N. SECURITY EVENTS

SITE AREA EMERGENCY:

NS1: Security Event in a Plant Vital Area.

APPLICABILITY:

Operating Conditions	1	2	3	4	5	Def

EMERGENCY ACTION LEVEL:

Bomb device discovered within the plant Vital Areas

OR

Confirmed report of an intrusion by a hostile force into Vital Areas.

This class of security event represents an escalated threat to plant safety above that contained in Alert NA1 in that a hostile force has progressed from the Protected Area to the Vital Area.

For the purposes of this initiating condition, a civil disturbance which penetrates the Protected Area boundary as well as an individual or group of individuals with known or suspected malicious intent can be considered a hostile force.

REF:

WNP-2 Safeguards Contingency Plan

NUMARC/NESP-007, Methodology for Development of Emergency Actions Levels, Rev. 2, Site Area Emergency HS1

N. SECURITY EVENTS

GENERAL EMERGENCY:

NG1: Security Event Resulting in Loss of Ability to Reach and Maintain Cold Shutdown.

APPLICABILITY:

Operating Conditions	1	2	3	4	5	Def

EMERGENCY ACTION LEVEL:

Loss of physical control of the Control Room due to a security event.

OR

Loss of physical control of the Remote Shutdown capability due to a security event.

This Initiating Condition encompasses conditions under which a hostile force has taken physical control of areas required to reach and maintain cold shutdown.

For the purpose of this Initiating Condition, a civil disturbance which penetrates the Protected Area Boundary as well as an individual or group of individuals with known or suspected malicious intent is considered a hostile force.

REF:

NUMARC/NESP-007, Methodology for Development of Emergency Actions Levels, Rev. 2, Unusual Event HG1

O. MISCELLANEOUS INITIATING CONDITIONS/SYSTEM MALFUNCTIONS

UNUSUAL EVENT:

OU1: Unexpected Decrease in Water Covering Irradiated Fuel Assemblies.

APPLICABILITY:

Operating Conditions	1	2	3	4	5	Def

EMERGENCY ACTION LEVEL:

Uncontrolled water level decrease in the Reactor Cavity or Spent Fuel Pool below the level of the weirs with all irradiated fuel assemblies remaining covered by water.

The SFP cooling system weirs were chosen as a readily identifiable level. In addition to being readily visible from the refueling floor, dropping below the level of the weir, only a few inches, impairs the operability of the SFP cooling system with subsequent alarms.

These events tend to have long lead times relative to potential for radiological release outside the site boundary thus, the impact to public health and safety is very low.

Uncontrolled water level decrease may result in unplanned increases in inplant radiation levels represent a degradation in the control of radioactive material and represent a potential degradation in the level of safety of the plant. This EAL escalates to an ALERT per Initiating Condition OA2 if the water level drops lower to the level of the gates.

REF:

WNP-2 Technical Specifications

NUMARC NESP-007, Methodology for Development of Emergency Action Levels, Rev. 2, Unusual Event AU2

DEVIATION:

NUMARC example: EAL 1 and 2 are considered by WNP-2 to be more closely related to a system failure than to increased plant radiation release. Consequently EAL 1 and 2 addressed in this Initiating Condition. EAL 4 is addressed in Initiating Condition FU1. WNP-2 has no dry fuel storage license, therefore EAL 3 is not applicable.

O. MISCELLANEOUS INITIATING CONDITIONS/SYSTEM MALFUNCTIONS

ALERT:

OA1: Main Steam Line Break Outside Containment with Isolation.

APPLICABILITY:

Operating Conditions	1	2	3	

EMERGENCY ACTION LEVEL:

Indications of a Main Steam Line break AND Main steam line isolation valve closure has isolated the break.

This EAL is based on design basis accident analyses which show that even if MSIV closure occurs within design limits, offsite (Exclusion Area Boundary) dose consequences from a "puff" release could exceed 50 but less than 100 millirem total effective dose equivalent (TEDE). Specifically FSAR Table 15.6-9 demonstrates 53 millirem TEDE. Only MSIV isolation signals that definitely indicate leakage outside primary RCS boundary with a path to the environment are included.

Examples of indications of Main Steam Line breaks are, but not limited to:

- Main Steam Line Tunnel temperature greater than 156°F on LD-TR-608, P-632 and "LEAK DET MSL TUNNEL TEMP HI-HI" alarm(s) on P-601-A2 &/or A3.
- Main Steam Line Tunnel delta temperature greater than 80°F on LD-TR-611, P-632 and "LEAK DET MSL TUNNEL HI-HI" alarm(s) on P601-A2 &/or A3.
- Main Steam Line flow greater than 140% as indicated by MSL ISOL MAIN STEAM LINE FLOW HIGH" alarm on P-601-A11 &/or A12.

REF:

NUMARC NESP-007, Methodology for Development of Emergency Action Levels, Rev. 2, Alert FA1.

NUMARC "Questions & Answers, June 1993" Fission Product Barriers - BWR, question/answer number 4

WNP-2 FSAR Table 15.6-9, MSL Break

O. MISCELLANEOUS INITIATING CONDITIONS/SYSTEM MALFUNCTIONS

ALERT:

OA2: Loss of Water Level that Has or Will Result in the Uncovering of Irradiated Fuel Outside the Reactor Vessel.

APPLICABILITY:

Operating Conditions	1	2	3	4	5	Def

EMERGENCY ACTION LEVEL:

Water level, when not intentionally lowered, was observed to be below the top of the gate sill separating the Reactor Cavity and Dryer Storage Pool.

OR

Water level, when not intentionally lowered, was observed to be below the top of the gate sill separating the Reactor Cavity and the Spent Fuel Pool.

OR

Report of visual observation of irradiated fuel uncovered or uncovering imminent.

Unintentional water level decrease may result in unplanned increases in inplant radiation levels which represent a degradation in the control of radioactive material and represent a potential degradation in the level of safety of the plant.

No level indication is available in Reactor Cavity or spent fuel pools for monitoring pool level outside of a narrow band around the normal operating range. In lieu of using a visual observation of pool level below top of fuel racks, the bottom of the water gates between the pools were chosen as a reference point for classification purposes. The intent of this EAL is to allow observations from plant personnel to be factored into the declaration and is not intended to direct an entry into an area solely to observe pool level.

REF:

WNP-2 Technical Specifications

NUMARC NESP-007, Methodology for Development of Emergency Action Levels, Rev. 2, AA2

NUREG 0818, Emergency Action Levels for Light Water Reactors

NUREG/CR-4982, Severe Accident in Spent Fuel Pools in Support of Generic Safety, Issue 82, July 1987

DEVIATION:

NUMARC example: EAL 2, 3 and 4 are considered by WNP-2 to be more closely related to a system failure than to increased plant radiation release. Consequently EAL 2, 3 and 4 are addressed in this Initiating Condition. EAL 1 is addressed in Initiating Condition FA1.

P. SHIFT MANAGER/PED JUDGMENT

UNUSUAL EVENT:

PU1: Other Conditions Existing Which, In the Judgment of the Shift Manager/PED, Warrant Declaration of an Unusual Event.

APPLICABILITY:

Operating Conditions	1	2	3	4	5	Def

EMERGENCY ACTION LEVEL:

In the judgment of the Shift Manager/PED, events are in process or have occurred which indicate a potential degradation of the level of safety of the plant.

Events which are believed by the Shift Manager/PED to indicate a potential degradation of the level of safety of the plant should be declared an Unusual Event. For those cases where the degradation in the level of the safety of the plant is tied to equipment or system malfunctions, the decision that the component is degraded should be based upon its functionality and not its operability.

A system, subsystem, train, component or device, though degraded in equipment condition or configuration, is functional if it is capable of maintaining respective system parameters within acceptable design limits.

Releases of radioactive material requiring offsite response or monitoring are not expected to occur at the Unusual Event level unless further degradation of safety systems occur. However, if one does occur, it will be classified under Initiating Condition GU1.

REF:

NUMARC/NESP-007, Methodology for Development of Emergency Actions Levels, Rev. 2, Unusual Event HU5

P. SHIFT MANAGER/PED JUDGMENT

ALERT:

PA1: Other Conditions Existing Which, In the Judgment of the Shift Manager/PED, Warrant Declaration of an Alert.

APPLICABILITY:

Operating Conditions	1	2	3	4	5	Def

EMERGENCY ACTION LEVEL:

In the judgment of the Shift Manager/PED, events are in process or have occurred which indicate actual or potential substantial degradation of systems needed for the protection of the public.

This Emergency Action Level is intended to address unanticipated conditions not addressed explicitly elsewhere but that warrant declaration of an emergency because conditions exist which are believed by the Shift Manager/PED to fall under the Alert emergency class. This includes a determination by the Shift Manager/PED that additional assistance similar to that provided by the TSC and OSC staffs, including a transfer of the PED responsibilities to the TSC, is necessary for the event to be effectively mitigated. Transfer of PED duties for classification, offsite notifications and PAR decisions, is used as an initiator since an event significant enough to warrant transfer of command and control is a substantial reduction in the level of safety of the plant.

Activation of the TSC outside of the Emergency Plan in support of the Control Room staff is permissible. Releases that are expected to be limited to a small fraction of the EPA Protective Action Guideline exposure levels are addressed under Initiating Condition GA1.

REF:

NUMARC/NESP-007, Methodology for Development of Emergency Actions Levels, Rev. 2, Alert HA6

P. SHIFT MANAGER/PED JUDGMENT

SITE AREA EMERGENCY:

PS1: Other Conditions Existing Which, In the Judgment of the Shift Manager/PED, Warrant Declaration of a Site Area Emergency.

APPLICABILITY:

Operating Conditions	1	2	3	4	5	Def

EMERGENCY ACTION LEVEL:

In the judgment of the Shift Manager/PED, events are in process or have occurred which involve actual or likely major failures of plant functions needed for protection of the public.

This Emergency Action Level is intended to address unanticipated conditions not addressed explicitly elsewhere but that warrant declaration of an emergency because conditions exist which are believed by the Shift Manager/PED to fall under the emergency class description for a Site Area Emergency.

Radioactive releases are not expected to result in exposure levels which exceed EPA Protective Action Guideline exposure levels except within the site boundary. Radioactive releases to the general public are addressed under Initiating Condition GS1 and GG1.

REF:

NUMARC/NESP-007, Methodology for Development of Emergency Actions Levels, Rev. 2, Site Area Emergency HS3

P. SHIFT MANAGER/PED JUDGMENT

GENERAL EMERGENCY:

PG1: Other Conditions Existing Which, In the Judgment of the Shift Manager/PED, Warrant Declaration of a General Emergency.

APPLICABILITY:

Operating Conditions	1	2	3	4	5	Def

EMERGENCY ACTION LEVEL:

In the judgment of the Shift Manager/PED other conditions exist which indicate:
1) Actual or imminent substantial core degradation or melting with the potential for loss of containment integrity.

OR

2) Potential for uncontrolled radionuclide releases. These releases can reasonably be expected to exceed EPA PAG plume exposure levels outside the site boundary.

This Emergency Action Level is intended to address unanticipated conditions not addressed explicitly elsewhere but that warrant declaration of an emergency because conditions exist which are believed by the Shift Manager/PED to fall under the General Emergency class. Imminent in this context means mitigation strategies and actions are not successful in preventing a challenge to Fuel Clad, Reactor Coolant Pressure Boundary or Primary Containment.

Radioactive releases may exceed EPA Protective Action Guideline exposure levels offsite for more than the immediate site area. Radioactive releases to the general public are addressed under Initiating Condition GS1 and GG1.

REF:

NUMARC/NESP-007, Methodology for Development of Emergency Actions Levels, Rev. 2, General Emergency HG2