ACCELERATED DISTRIBUTION DEMONSTRATION SYSTEM

REGULATORY INFORMATION DISTRIBUTION SYSTEM (RIDS)

ACCESSION NBR:9401240290 DOC.DATE: 94/01/13 NOTARIZED: NO DOCKET #
FACIL:50-397 WPPSS Nuclear Project, Unit 2, Washington Public Powe 05000397
AUTH.NAME AUTHOR AFFILIATION
PARRISH,J.V. Washington Public Power Supply System
RECIP.NAME RECIPIENT AFFILIATION
Document Control Branch (Document Control Desk)

SUBJECT: Requests discretionary enforcement to allow continued plant operation w/ECCS instrumentation functional,but not in strict compliance w/requirements for demonstrating that response time within limits specified in TS 3/4.3.3.

DISTRIBUTION CODE: A001D COPIES RECEIVED:LTR 1 ENCL 1 SIZE: 12
TITLE: OR Submittal: General Distribution

NOTES:

	RECIPIENT ID CODE/NAME	COPIES LTTR	COPIES ENCL	RECIPIENT ID CODE/NAME	COPIES LTTR	COPIES ENCL
	PDV LA	1	1	PDV PD	1	1
	CLIFFORD,J	2	2			
INTERNAL:	ACRS	6	6	NRR/DE/EELB	1	1
	NRR/DORS/OTSB	1	1	NRR/DRCH/HICB	1	1
	NRR/DRPW	1	1	NRR/DSSA/SPLB	1	1
	NRR/DSSA/SRXB	1	1	NUDOCS-ABSTRACT	1	1
	OC/LFDCB	1	0	OGC/HDS1	1	0
	REG FILE 01	1	1			
EXTERNAL:	NRC PDR	1	1	NSIC	1	1

R I D S / A D D S

R I D S / A D D S

NOTE TO ALL "RIDS" RECIPIENTS:

PLEASE HELP US TO REDUCE WASTE! CONTACT THE DOCUMENT CONTROL DESK, ROOM P1-37 (EXT. 20079) TO ELIMINATE YOUR NAME FROM DISTRIBUTION LISTS FOR DOCUMENTS YOU DON'T NEED!

TOTAL NUMBER OF COPIES REQUIRED: LTTR 22 ENCL 20

AA2

WASHINGTON PUBLIC POWER SUPPLY SYSTEM

P.O. Box 968 • 3000 George Washington Way • Richland, Washington 99352-0968 • (509) 372-5000

January 13, 1994
G02-94-010

Docket No. 50-397

U.S. Nuclear Regulatory Commission
Attn: Document Control Desk
Washington, D.C. 20555

Gentlemen:

Subject: **WNP-2, OPERATING LICENSE NPF-21**
REQUEST FOR DISCRETIONARY ENFORCEMENT FOR TECHNICAL SPECIFICATION 3/4.3.3, ECCS INSTRUMENTATION

References:
1) Letter G02-91-159, dated August 29, 1991, JW Baker (SS) to NRC, "Licensee Event Report No. 91-013-02"
2) Letter G02-93-266, dated November 9, 1993, JV Parrish (SS) to NRC, "Licensee Event Report No. 93-010-05"

The Supply System is requesting discretionary enforcement to allow continued plant operation with Emergency Core Cooling System (ECCS) instrumentation functional, but not in strict compliance with the requirements for demonstrating that the response time is within the limits specified in Technical Specification (TS) 3/4.3.3, "Emergency Core Cooling System Actuation Instrumentation." This written request is provided as followup to our verbal request made to and granted by the NRC on January 11, 1994 at 14:00 PST. This letter also serves to detail additional information that was discovered during further investigation on January 12, 1994.

On January 10, 1994, the condition of noncompliance with the WNP-2 Technical Specifications was identified as part of the ongoing Technical Specification Surveillance Improvement Project (TSSIP). It was identified that the testing performed to satisfy Surveillance Requirement (SR) 4.3.3.3 did not adequately measure the total response time of two in-series relays in the logic string for the opening of the injection valve in the Low Pressure Core Spray (LPCS) and Residual Heat Removal (RHR) B and C low pressure ECCS loops and three in-series relays in the logic string for the injection valve in the RHR A low pressure ECCS loop. On January 12, 1994, it was also discovered that the response time testing had not adequately measured the total

A001
1/1

response time of the relays in the logic string for the pump start. This situation was true for each of the four ECCS loops although the details for the different logic strings are slightly different.

The Supply System is requesting discretionary enforcement until an emergency Technical Specification change request is submitted to and approved by the NRC. The proposed change will request that a note be added to the surveillance requirements in TS 3/4.3.3. This note, added to SR 4.3.3.3, will allow the delay of the response time testing of the low pressure ECCS systems until startup following the next COLD SHUTDOWN, but no later than the startup following completion of the Spring 1994 Refueling Outage. Absent any discretionary enforcement, WNP-2 would be required to shutdown to complete the response time testing. The Supply System believes that it is less safe to perform the required ECCS response time testing at power, based upon the safety functions that would have to be disabled in order to perform the testing without causing unnecessary actuations or a plant trip. During the test, two loops of a single division would be disabled with the associated injection valves and pumps removed from service. The testing would also disable the low low reactor water level and the high drywell pressure initiation signals to the divisional emergency diesel generator.

Failure to satisfy the response time testing specified in SR 4.3.3.3 requires that the applicable systems be declared inoperable. This would involve all four low pressure ECCS loops and would require that the plant be taken to COLD SHUTDOWN. The Supply System believes there is less risk in relying on the existing functional testing than in testing at power or forcing an unnecessary plant transient by taking the plant to COLD SHUTDOWN to perform an additional response time test on each of the four loops.

Technical Specification Violated and Need for Prompt Action

Discretionary enforcement for the Action Statements applicable to the ECCS response time is being requested to allow for continued plant operation with the requirement of SR 4.3.3.3 not being adequately satisfied. Upon identification that this surveillance requirement was not satisfied, TS 4.0.3 was entered for all the affected ECCS loops at 18:15 PST on January 10, 1994. Without discretionary enforcement, the plant would have been required to enter, among other Actions, ACTION STATEMENT 30 of Table 3.3.3-1 at 18:15 PST on January 11, 1994, declare the associated systems inoperable, and be in at least STARTUP in 6 hours, HOT SHUTDOWN within 12 hours, and in COLD SHUTDOWN within the next 24 hours in accordance with TS 3.0.3.

Description of Condition

On January 10, 1994, a condition of noncompliance with the WNP-2 Technical Specifications was identified as part of the TSSIP. The TSSIP is an ongoing project that was recommended by a Supply System Quality Action Team formed as a corrective action of LER 91-013-02 (Reference 1). The TSSIP revises and broadens the scope of the Surveillance Procedure Verification Program completed in May 1991. Additional details of this program and previous findings are provided in LER 93-010-05 (Reference 2).

During the performance of the TSSIP review for compliance with the requirements associated with SR 4.3.3.3 and Table 3.3.3-3, it was noted that response time testing procedures did not measure the entire response time from sensor actuation until the ECCS equipment is capable of performing its safety function (i.e., valves travel to their required position and pump discharge pressures reach required values). Specifically, the interval not measured is the time from logic relay coil energization to contact operation in the injection valve control circuit. This affects Division I and II low pressure ECCS. The existing response time testing procedures measure the system response time from the sensed parameter to the energization of the first logic relay, and from the injection valve hand switches until the injection valves are open. The testing does not measure the interval from the logic relay coil pickup to injection valve control circuit contact closure. (See attached figures and tables.) At the time of the verbal request for discretionary enforcement, the review of response time testing for Division I and II ECCS was continuing and was expanded to include HPCS response time testing. The review raised a question on the HPCS system which resulted in the determination that the testing of the initiation logic for the LPCS and RHR pumps was also not completely adequate.

Specifically, for the ECCS low pressure pumps actual testing initiation signals were measured at a point in the logic string which did not include certain logic components. These include one relay in the logic string to the LPCS and RHR B/C pumps and two relays in the logic string for the RHR A pump. The response time testing does include pump initiation until stable pump discharge pressure is achieved. (See attached figures and tables.) Logic System Functional Testing has been performed which establishes that the circuits are functional including both pumps and associated injection valves; however, these tests did not require that the response time of the function be measured.

Because the inadequate testing was not identified by TSSIP until January 10, 1994, it was not possible to submit this request on a more timely basis. The additional details of the inadequate response time testing for the pump logic strings were not identified until January 12, 1994. This letter was intended to serve as an immediate followup to the verbal request granted on January 11, 1994, but was delayed one day until the Supply System was able to more clearly define the extent of the testing deficiencies.

In summary, this enforcement discretion is requested to extend until the Supply System has requested and the NRC has approved an emergency change to the WNP-2 Technical Specifications. The Supply System will request the ECCS RESPONSE TIME testing of the low pressure ECCS injection valves and pump start logic be delayed until startup following the next COLD SHUTDOWN, but no later than the startup following completion of the Spring 1994 Refueling Outage. It is the Supply System's belief that continued operation without full compliance with the response time testing is acceptable because testing has demonstrated that the ECCS loops will function as designed and it is expected that the testing of the relays will not challenge the acceptance criteria specified in the Technical Specifications.

It should be noted that, because the TSSIP is an in-depth technical review of the surveillance procedures to ensure they meet the Technical Specification surveillance requirements, other conditions of noncompliance with the WNP-2 Technical Specifications may be identified in the future.

Compensatory Measures

The Technical Specification (TS) acceptance criteria for the applicable response times require that the time be less than or equal to 43 seconds. Of the four ECCS systems, the most limiting margin to the TS limit established by the acceptance criteria of the surveillance procedures for the response of the opening of the injection valves is 11 seconds. The response time of the portion of the logic circuits not measured is expected to be less than 0.5 seconds. The corresponding remaining margin to the TS acceptance criteria will therefore be in excess of 10 seconds. Also, the time that is expected to be added to the response time in each case is small when compared to the allowable response time or the measured response time.

The most limiting margin to the TS limit of 43 seconds established by testing from sensor initiation through achieving adequate pump discharge pressure is 20.6 seconds. The response time for the portion of the logic circuits not yet measured is expected to be less than 0.5 seconds. The corresponding margin to the TS acceptance criteria will therefore be in excess of 20 seconds. As discussed above, the time to be added to the measured time is small when compared to the allowable response time or the measured response time.

The relays which have not been response time tested are located in the Main Control Room where they are under control of the Shift Manager. This limits possible environmental degradation as well as access to the cabinets, making them less susceptible to inadvertent damage.

The affected relays are GE HMA or HFA types which do not have any time delay features, i.e., a dash pot or other dampening of the armature which would automatically delay the pickup time. Degradation of this type of relay is typically evidenced by failure to function, rather than degraded response times. Since no mechanism has been identified for degrading pickup times, it can be concluded that the actuated relay will perform its function consistent with existing data. Qualification data for HFA and HMA relays indicates expected pickup times of less than 100 milliseconds. This data has been subsequently confirmed by response time testing at WNP-2.

Based upon the reasons stated above, compensatory actions are not necessary.

Safety Basis for the Request

Logic System Functional Testing (LSFT) is performed each annual refueling outage. The applicable series of LSFTs were completed during the Spring 1993 Refueling Outage. The LSFT provides testing of the instrumentation and logic string from the sensor through the pumps

and associated injection valves through an overlapping series of channel functional tests (CFT) and specific component tests. The LSFTs provide periodic assurance that each of the logic strings, including relays and contacts, will operate as required to perform their safety functions through the actuated component.

The Supply System has performed industry event reviews of HMA and HFA relays. A search of the WNP-2 Operating Events Review files, Nuclear Plant Reliability Data System (NPRDS) database and INPO Operating Experience was performed. There were some failures of the early HFA relays. We have replaced our HFA relay coils with the new Century series relay coils and there is no indication that these relays with these coils have experienced the same type of failures. No information indicating any other generic failure mechanisms applicable to the pickup times of the HMA or HFA relays was discovered. Further, a review of Supply System maintenance history did not identify any concerns with these HMA and HFA relays that would impact their response time.

The Supply System has evaluated these relay designs and their applications at WNP-2 and has concluded that the relays will perform their intended safety function within specified time requirements. Therefore, a plant shutdown for response time testing would not provide significant additional assurance that the relays would actuate within specified time requirements. Additionally, in order to support the response time testing of each low pressure ECCS system during power operation, an entire division (two ECCS loops and the associated emergency diesel generator) would have to be disabled during the performance of the test.

Justification for the Period of Applicability

Based upon the observed failure modes of these relays, the scope of the testing currently performed, the results of the testing, and the limited added assurance that would be provided by the response time testing in evaluating the ability of these relays to perform their safety function, the Supply System believes that granting the requested discretionary enforcement does not represent a significant safety issue.

Safety Significance

The Supply System has evaluated this request for discretionary enforcement to defer the ECCS response time testing for the low pressure ECCS loops until startup following the next COLD SHUTDOWN, but no later than the startup following completion of the Spring 1994 Refueling Outage. The Supply System has determined that the granting of this request will not represent a significant hazards consideration because it will not:

1) Involve a significant increase in the probability or consequences of an accident previously evaluated. The only components that have not been adequately response time tested are relay coils and contacts. The relays are accident mitigating features and are not considered in the initiating sequences for any accidents previously evaluated. Hence, the probability of evaluated accidents will not be increased upon approval of this request.

Design and industry experience leads to the conclusion that the overall system response time will be within the Technical Specification requirements. There is no observed mechanism that would cause deterioration of the response time of these relays. The LSFTs performed to date have demonstrated that the relays function as designed. Thus, the relays and logic strings, when tested, are expected to yield response time results well within the assumptions in the accident analysis. Therefore, approval of the request will not result in a significant increase in the consequences of an accident previously evaluated.

2) Create the possibility of a new or different kind of accident from any accident previously evaluated. No new modes of operation of any equipment, system configuration or initial conditions result from, or are necessary to compensate for, the lack of complete response time testing of the relays. Granting of the request will not affect initial conditions or introduce new system configurations and thus, will not create the possibility of a new or different kind of accident.

3) Involve a significant reduction in a margin of safety. As discussed above, the LSFTs performed to date have demonstrated functionality of the relays. Design and industry experience leads to the conclusion that the response time of the circuits will be within the expected overall system response limit. There is no observed mechanism failure mode that has caused deterioration of the response time of these relays. With no identified mechanism for degradation and design specifications supporting appropriate interval time response, there is reasonable confidence that the relays will perform within the required limits and the design basis for the low pressure emergency core cooling systems will be maintained. Hence, there is no significant increase in the ECCS response time and the margin of safety provided by the response time specified in the Technical Specifications is not significantly decreased.

Because the logic strings are considered to be capable of performing their safety function within the response times listed in the Technical Specifications, granting of this request does not represent a significant hazards consideration.

Environmental Considerations

As previously discussed, the Supply System concludes that this request does not involve a significant hazards consideration, nor is there a potential for a significant change in the types or significant increase in the amount of any effluent that may be released offsite, nor does the request involve a significant increase in individual or cumulative occupational radiation exposure. Accordingly, the proposed change meets the eligibility criteria for categorical exclusion set forth in 10 CFR 51.22(c)(9) and, therefore, per 10 CFR 51.22(b), an environmental assessment of this change is not required.

Plant Operating Committee Approval

This request for discretionary enforcement was approved by the WNP-2 Plant Operating Committee on January 11, 1994 (for the condition identified January 10, 1994) and on January 13, 1994.

Upon any notification of the termination of enforcement discretion, the Supply System will take the actions required by the Technical Specifications.

Sincerely,

J. V. Parrish (Mail Drop 1023)
Assistant Managing Director, Operations

MGE/bk
Attachments

cc: KE Perkins - NRC RV
JW Clifford - NRC
NRC Site Inspector - 927N
NS Reynolds - Winston & Strawn
DL Williams - BPA/399

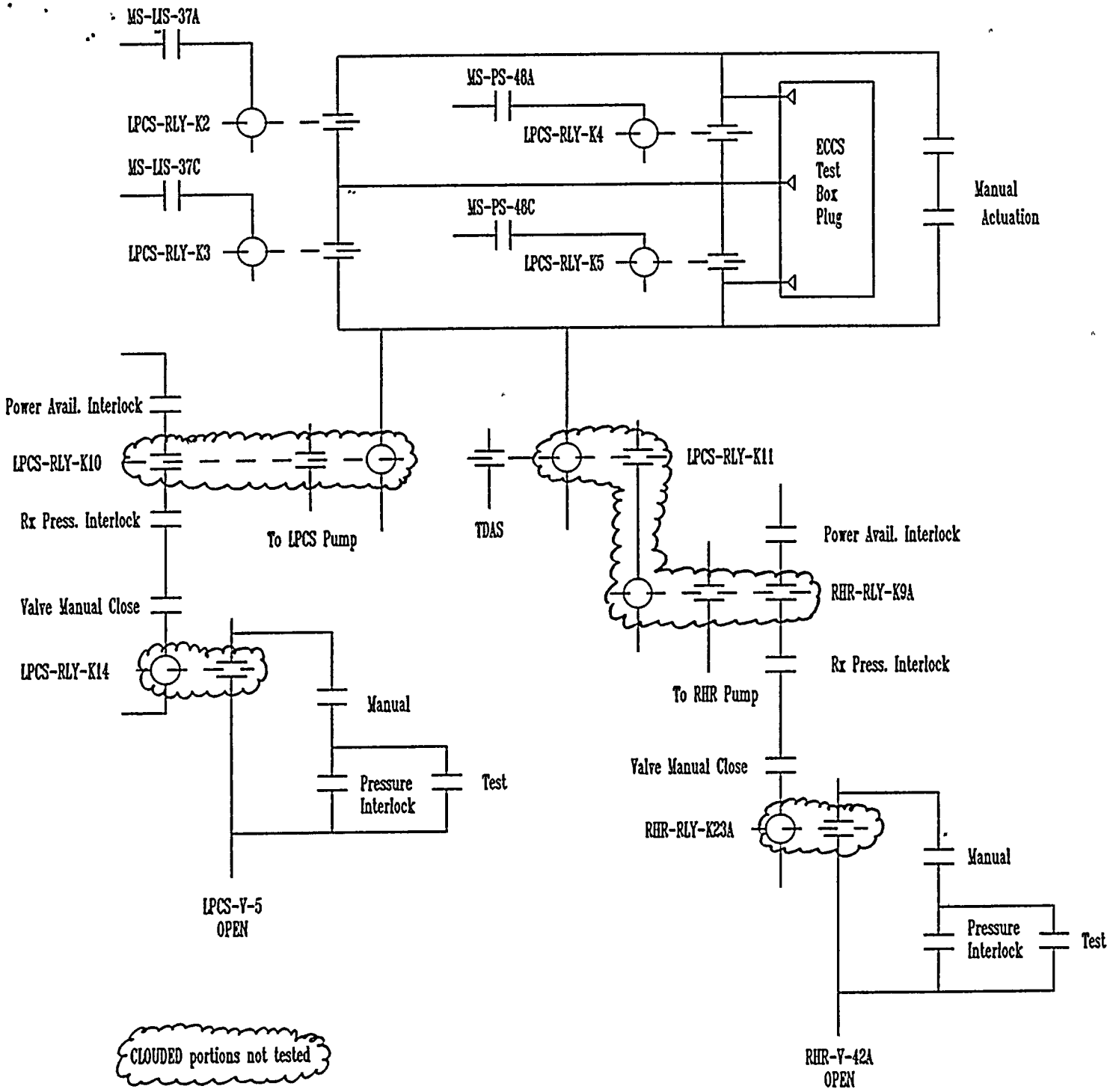

LPCS / RHR A
Division I

For Information Only

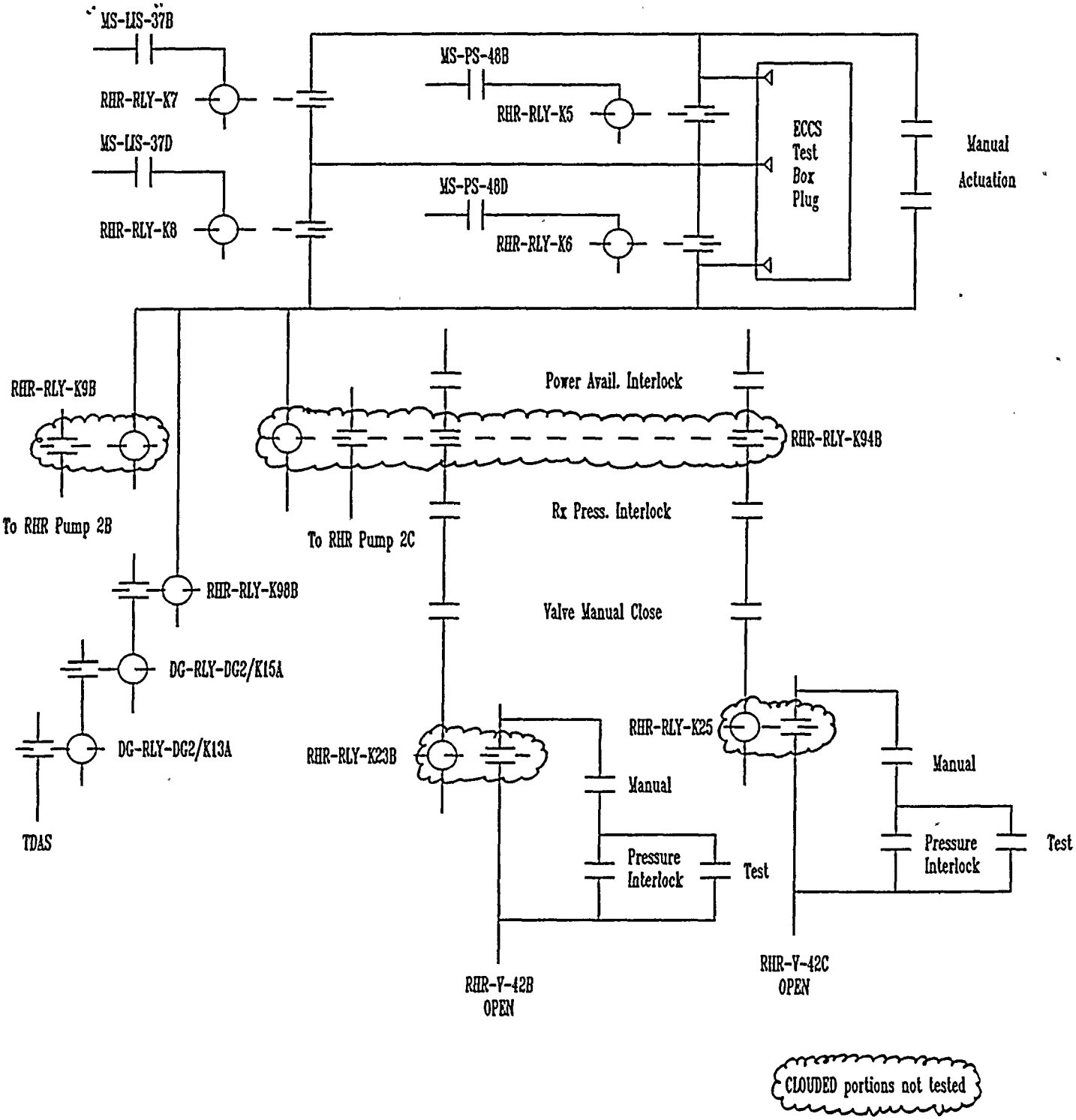

RHR B and C
Division II

For Information Only

RHR/LPCS Logic Response Time Test Issue Scope

Tech. Spec. Chan. (TS Table 3.3.3-1)	Sensor	Sensor Relay	Logic Relays[1]	Interposing Relays	Actuated Component
1.A.1.a	MS-LIS-37A	LPCS-RLY-K2	*LPCS-RLY-K10*	LPCS-RLY-K12	LPCS-P-1
	MS-LIS-37C	LPCS-RLY-K3		*LPCS-RLY-K14*	LPCS-V-5
1.A.1.b	MS-PS-48A	LPCS-RLY-K4	*LPCS-RLY-K11*	*RHR-RLY-K9A* RHR-RLY-K70A (TDPU) RHR-RLY-K18A	RHR-P-2A
	MS-PS-48C	LPCS-RLY-K5		*RHR-RLY-K9A* *RHR-RLY-K23A*	RHR-V-42A
1.B.1.a	MS-LIS-37B	RHR-RLY-K7	*RHR-RLY-K9B*	RHR-RLY-K70B (TDPU) RHR-RLY-K18B	RHR-P-2B
	MS-LIS-37D	RHR-RLY-K8	*RHR-RLY-K94B*	*RHR-RLY-K23B*	RHR-V-42B
1.B.1.b	MS-PS-48B	RHR-RLY-K5		RHR-RLY-K21	RHR-P-2C
	MS-PS-48D	RHR-RLY-K6		*RHR-RLY-K25*	RHR-V-42C

Italicized Components are not included in existing response time test scope

Notes

1 - Both Logic Relays (and others) actuate in response to two of two sensors exceeding their setpoints, association above indicates logic path to actuated component.

Comparison of Existing Response Time Test Acceptance Criteria with Tech. Spec. Limit

Tech. Spec. Chan. (TS Table 3.3.3-1)	Div.	Function	Sensor	Sensor to Logic Test Acceptance Criteria (seconds)	EDG Start Time Acceptance Criteria (seconds)	ASME Valve Stroke Time Acceptence Criteria (seconds)	TS Acceptance Criteria (seconds)	Margin to TS Limit (seconds)
1.A.1.a	1	Low Low Low Reactor Level 1	MS-LIS-37A	3	10	17.01 (LPCS-V-5)	43	12.99 (LPCS-V-5)
			MS-LIS-37C					
1.A.1.b		High Drywell Pressure	MS-PS-48A	3		18.87 (RHR-V-42A)		11.13 (RHR-V-42A)
			MS-PS-48C					
1.B.1.a	2	Low Low Low Reactor Level 1	MS-LIS-37B	3		18.93 (RHR-V-42B)		11.67 (RHR-V-42B)
			MS-LIS-37D					
1.B.1.b		High Drywell Pressure	MS-PS-48B	3		19.16 (RHR-V-42C)		11.07 (RHR-V-42C)
			MS-PS-48D					

The most limiting margin to the Tech. Spec. Limit, based on the latest *actual* response time test data is for MS-PS-48B and MS-PS-48D, actuating Division 2. The margin to the Tech. Spec. limit based on this logic string is 20.14 seconds.

Pump Logic Response Time Testing

Portion of Logic...	LPCS-P-1	RHR-P-2A	RHR-P-2B	RHR-P-2C
Sensor to Coil of Logic Relay (Acceptance Criteria in PPMs 7.4.3.3.3.1, .2, .4, and .8) (seconds)	3	3	3	3
Logic Which is Not Response Time Tested	Coil of LPCS-RLY-K10 to Contact in LPCS Pump Start Logic	Coil of LPCS-RLY-K11 through RHR-RLY-K9A to Contact in Pump Start Logic	Coil of RHR-K9B to Contact in Pump Start Logic	Coil of RHR-RLY-K94B to Contact in Pump Start Logic
Emergency Diesel Generator (EDG) Start Time Acceptance Criteria (seconds)	10	10	10	10
EDG Output Breaker Closure to Closure of ECCS Pump Breaker (From PPM 7.4.8.1.1.2.7/.7A LOP/LOCA Test) (seconds)	0.4	5.4	0.4	5.4
ECCS Pump Breaker Closure to Pump Discharge Pressure Stabilized (From PPM 7.4.8.1.1.2.7/.7A LOCA Test) (seconds)	2.0	1.0	4.0	4.0
Response Time for Portions of Logic Tested in existing PPMs (seconds)	15.4	19.4	17.4	22.4
Margin to 43 Second TS Limit (seconds)	**27.6**	**23.6**	**25.6**	**20.6**