# ACCELERATED DISTRIBUTION DEMONSTRATION SYSTEM

REGULATORY INFORMATION DISTRIBUTION SYSTEM (RIDS)

ACCESSION NBR:9312170043 DOC.DATE: 93/12/03 NOTARIZED: YES DOCKET #
FACIL:50-397 WPPSS Nuclear Project, Unit 2, Washington Public Powe 05000397
AUTH.NAME AUTHOR AFFILIATION
PARRISH,J.V. Washington Public Power Supply System
RECIP.NAME RECIPIENT AFFILIATION
Document Control Branch (Document Control Desk)

SUBJECT: Application for amend to license NPF-21 for exclusion of single RWCU HELB,in ref to LER 93-028-00,submitted via 931025 ltr.

DISTRIBUTION CODE: A001D COPIES RECEIVED:LTR 1 ENCL 1 SIZE: 8
TITLE: OR Submittal: General Distribution

NOTES:

| | RECIPIENT ID CODE/NAME | COPIES LTTR | COPIES ENCL | RECIPIENT ID CODE/NAME | COPIES LTTR | COPIES ENCL |
|---|---|---|---|---|---|---|
| | PDV LA | 1 | 1 | PDV PD | 1 | 1 |
| | CLIFFORD,J | 2 | 2 | | | |
| INTERNAL: | ACRS | 6 | 6 | NRR/DE/EELB | 1 | 1 |
| | NRR/DORS/OTSB | 1 | 1 | NRR/DRCH/HICB | 1 | 1 |
| | NRR/DRPW | 1 | 1 | NRR/DSSA/SPLB | 1 | 1 |
| | NRR/DSSA/SRXB | 1 | 1 | NUDOCS-ABSTRACT | 1 | 1 |
| | OC/LEDCB | 1 | 0 | OGC/HDS1 | 1 | 0 |
| | REG FILE 01 | 1 | 1 | | | |
| EXTERNAL: | NRC PDR | 1 | 1 | NSIC | 1 | 1 |

R I D S / A D D S

R I D S / A D D S

NOTE TO ALL "RIDS" RECIPIENTS:

PLEASE HELP US TO REDUCE WASTE! CONTACT THE DOCUMENT CONTROL DESK, ROOM P1-37 (EXT. 20079) TO ELIMINATE YOUR NAME FROM DISTRIBUTION LISTS FOR DOCUMENTS YOU DON'T NEED!

TOTAL NUMBER OF COPIES REQUIRED: LTTR 22 ENCL 20

AA2

WASHINGTON PUBLIC POWER SUPPLY SYSTEM

*P.O. Box 968 • 3000 George Washington Way • Richland, Washington 99352-0968 • (509) 372-5000*

December 3, 1993
G02-93-279

Docket No. 50-397

U.S. Nuclear Regulatory Commission
Attn: Document Control Desk
Washington, D.C. 20555

Gentlemen:

Subject: **WNP-2, OPERATING LICENSE NPF-21**
**REQUEST FOR AMENDMENT TO OPERATING LICENSE FOR EXCLUSION OF A SINGLE REACTOR WATER CLEANUP SYSTEM HIGH ENERGY LINE BREAK**

Reference: Letter G02-93-258 dated October 25, 1993, JV Parrish (SS) to NRC, "Licensee Event Report No. 93-028-00"

The Supply System has determined, through Engineering review, that the effects of a postulated high energy line break (HELB) in four-inch Reactor Water Cleanup System (RWCU) line RWCU(5)-3-1 have not been properly evaluated. The pipe to valve connection at valve RWCU-FCV-33 is a terminal end as defined in NRC Branch Technical Position MEB 3-1. This postulated break, located on the 501′ elevation of the Reactor Building, was not previously evaluated for impacts on the Reactor Building environment. This condition was reported in Licensee Event Report 93-028-00.

The Supply System has evaluated the current RWCU design and concluded that this design provides an adequate level of protection, and that compliance with the specified NRC guidance in, and Supply System commitment to, MEB 3-1 would result in hardship without a compensating increase in the level of quality and safety. NRC authorization is requested, pursuant to the requirements of 10 CFR 50.55a(a)(3) and 10 CFR 50.91, to permanently utilize the present RWCU system design without postulation of a break at the terminal end at valve RWCU-FCV-33.

The Supply System has in place a Basis for Continued Operation (BCO) and Operability Evaluation to support interim operation with the current RWCU design. The Supply System has determined that the proposed permanent resolution of this issue would result in a USQ. The USQ involves application of the HELB design methodology for postulating breaks in accordance with MEB 3-1 at terminal end locations. This request for NRC approval is based on this USQ determination.



A001
1/1

Current RWCU System Configuration

Attachment 1 is a simplified flow diagram for the portion of the RWCU system in question. Attachment 2 is a simplified isometric drawing of the subject piping. As stated in Section 3.6.2.1.1.2 of the WNP-2 Final Safety Analysis Report (FSAR), complete circumferential severance breaks are postulated at terminal ends of the pressurized portions of the run for American Society of Mechanical Engineers (ASME) Section III Class 2 and 3 piping. The pipe to valve connection at RWCU-FCV-33 is a terminal end since it satisfies this condition.

Stress Analysis

WNP-2 does not believe that a break needs to be postulated at this location. This position appears to be consistent with the intent of Branch Technical Position MEB 3-1 of SRP 3.6.2 (Rev.2). The following is taken from MEB 3-1, paragraph B.1.c.(2):

> "With the exception of those portions of piping identified in B.1.b., breaks in Class 2 and 3 piping (ASME Code, Section III) should be postulated at the following locations in those portions of each piping and branch run:
>
> (a) At terminal ends.
>
> (b) At intermediate locations selected by one of the following criteria:
>
> (i) At each pipe fitting (e.g., elbow, tee, cross, flange, and nonstandard fitting), welded attachment, and valve. Where the piping contains no fittings, welded attachments, or valves, at one location at each extreme of the piping run adjacent to the protective structure.
>
> (ii) At each location where stresses calculated[2] by the sum of Eqs. (9) and (10) in NC/ND-3653, ASME Code, Section III, exceed 0.8 times the sum of the stress limits given in NC/ND-3653.
>
> As a result of piping reanalysis due to differences between the design configuration and the as-built configuration, the highest stress locations may be shifted; however, the initially determined intermediate break locations may be used unless a redesign of the piping resulting in a change in pipe parameters (diameter, wall thickness, routing) is required, or the dynamic effects from the new (as-built) intermediate break locations are not mitigated by the original pipe whip restraints and jet shields."

[2]For those loads and conditions in which Level A and Level B stress limits have been specified in the Design Specification (including the operating basis earthquake).

The intent behind the above specified break criterion is that breaks should be postulated at locations where stress levels indicate the most potential for failure. This interpretation is reflected in the first paragraph of MEB 3-1 titled "BACKGROUND", which states:

> "It is recognized that pipe rupture is a rare event which may only occur under unanticipated conditions, such as those which might be caused by possible design, construction, or operation errors; unanticipated loads or unanticipated corrosive environments. Our observation of actual piping failures has indicated that they generally occur at high stress and fatigue locations, such as at the terminal ends of a piping system at its connection to the nozzle of a component. The rules of this position are intended to utilize the available piping design information by postulating pipe ruptures at locations having relatively higher potential for failure, such that an adequate and practical level of protection may be achieved."

The as-built stress analysis for the 4"RWCU(5)-3 piping connection to RWCU-FCV-33 was reviewed to determine the calculated loading in the piping. At the postulated break location, the calculated stresses due to the various loading conditions are extremely low. The calculation stresses for this break location (ADLPIPE node 1140) are found in Revision 9 of calculation 8.10.136C, and are summarized in Table 1.

**Table 1: Results of As-Built Stress Analysis**

| ASME Sec. III, Class 3 Piping Stress Equation | Analyzed Stress Effect | Calculated Value | Allowable ASME Value |
|---|---|---|---|
| Eqn. 8 | DWT* + Pressure | 5,483 psi | 15,000 psi |
| Eqn. 9 | DWT + Pressure + OBE** | 9,838 psi | 18,000 psi |
| Eqn. 10 | Thermal Stress | 360 psi | 22,500 psi |

* DWT - Deadweight Loading **OBE - Operating Basis Earthquake

Stress based pipe breaks and cracks are required to be postulated when the summation of ASME equations 9 and 10 exceed a specified portion of the ASME Code stress allowable values (FSAR Sections 3.6.2.1.1.2 and 3.6.2.1.3). The sum of ASME equations 9 and 10 along with the FSAR break and crack criteria are summarized in Table 2.

**Table 2: Comparison of Calculated Stresses with FSAR Break & Crack Criteria**

| Summation of Calculated Values for ASME Eqn.s 9 & 10 | FSAR Stress Criteria for Full Guillotine Breaks | FSAR Stress Criteria for Through-Wall Cracks |
|---|---|---|
| 10,198 psi | ≥32,400 psi | ≥16,200 psi |

From Table 2, it is clear that the calculated stresses at the piping connection to RWCU-FCV-33 are far below the values necessary to credibly postulate a high energy line break. The calculated stresses are also lower than the values necessary to postulate a through-wall pipe crack at this location.

In addition, a field walkdown of the subject piping was performed to confirm that field installation is consistent with the design drawings on which the as-built stress analysis is based. The subject piping is located in the main Reactor Building in a controlled, mild, non-corrosive environment. A nondestructive examination on the subject piping confirmed that the piping was within ASME defined limits. The results of the nondestructive examination indicate that the subject piping is not degraded after eight years of plant operation.

Based on the low calculated stress levels, it is believed that no piping failure needs to be postulated at this location. The fact that the subject piping is located in a mild environment and that a nondestructive examination revealed that the piping is not in a degraded condition supports this conclusion.

## Significant Hazards Consideration

The proposed license amendment of permanent exclusion of a piping break at valve RWCU-FCV-33 has been evaluated by the Supply System against the requirements of 10 CFR 50.92. It has been determined that this change does not represent a significant hazards consideration since it does not:

1) Involve a significant increase in the probability or consequences of an accident previously evaluated. The postulated pipe break at RWCU-FCV-33 is not considered credible based on the low stress levels calculated for this location. Thus, there is no significant increase in the probability or consequences of an accident previously evaluated as a result of this change.

2) Create the possibility of a new or different kind of accident from any previously evaluated. Pipe breaks have been previously evaluated for WNP-2. Since the calculated stresses at the postulated break location are low, this break is not considered credible. Therefore, this change will not result in the possibility of a new or different type of accident than those previously evaluated.

3) Involve a significant reduction in a margin of safety. The postulated break for which exclusion is requested is not credible based on the low calculated stress levels at that piping location. Exclusion of the break results in maintenance of the current licensing basis, including Reactor Building environmental conditions. Therefore, the margin of safety for the plant is not significantly reduced as a result of this change.

**REQUEST FOR AMENDMENT TO OPERATING LICENSE FOR EXCLUSION OF A SINGLE REACTOR WATER CLEANUP SYSTEM HIGH ENERGY LINE BREAK**

As discussed above, the Supply System considers that the proposed change does not involve a significant hazards consideration, nor is there a potential for a change in the types or increase in the amount of any effluents that may be released offsite, nor do they involve an increase in individual or cumulative occupational radiation exposure. Accordingly, the proposed change meets the eligibility criteria for categorical exclusion set forth in 10 CFR 51.22(c)(9). Therefore, per 10 CFR 51.22(b), an environmental assessment of this change is not required.

This license amendment request has been reviewed and approved by the WNP-2 Plant Operations Committee and the Supply System Corporate Nuclear Safety Review Board (CNSRB). In accordance with 10 CFR 50.91, the State of Washington has been provided a copy of this letter.

Sincerely,

J. V. Parrish

J. V. Parrish (Mail Drop 1023)
Assistant Managing Director, Operations

DAS/bk
Attachments

cc: BH Faulkenberry - NRC RV
NS Reynolds - Winston & Strawn
JW Clifford - NRC
DL Williams - BPA/399
NRC Site Inspector - 927N
W Bishop - EFSEC

STATE OF WASHINGTON )
)
COUNTY OF BENTON )

Subject: Request for Amend to License for Exclusion of RWC System HELB

I. J. H. SWAILES, being duly sworn, subscribe to and say that I am the WNP-2 Plant Manager for the WASHINGTON PUBLIC POWER SUPPLY SYSTEM, the applicant herein; that I have the full authority to execute this oath; that I have reviewed the foregoing; and that to the best of my knowledge, information, and belief the statements made in it are true.

DATE 12/3, 1993

J. H. Swailes
WNP-2 Plant Manager

On this date personally appeared before me J. H. SWAILES, to me known to be the individual who executed the foregoing instrument, and acknowledged that he signed the same as his free act and deed for the uses and purposes herein mentioned.

GIVEN under my hand and seal this 3rd day of December 1993.

Notary Public in and for the
STATE OF WASHINGTON

Residing at Kennewick

My Commission Expires 4/28/94

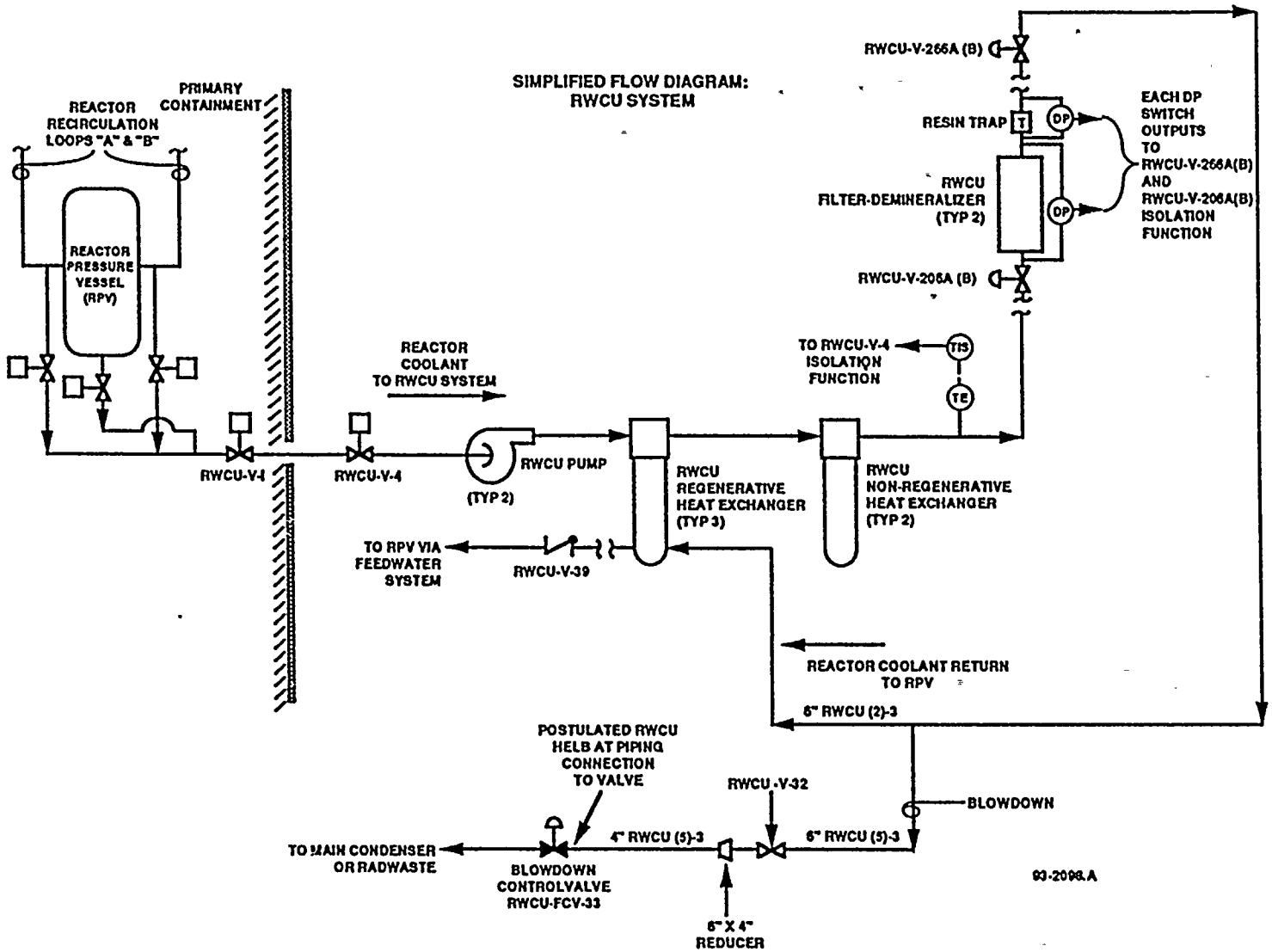


Attachment 1: Page 1 of 1

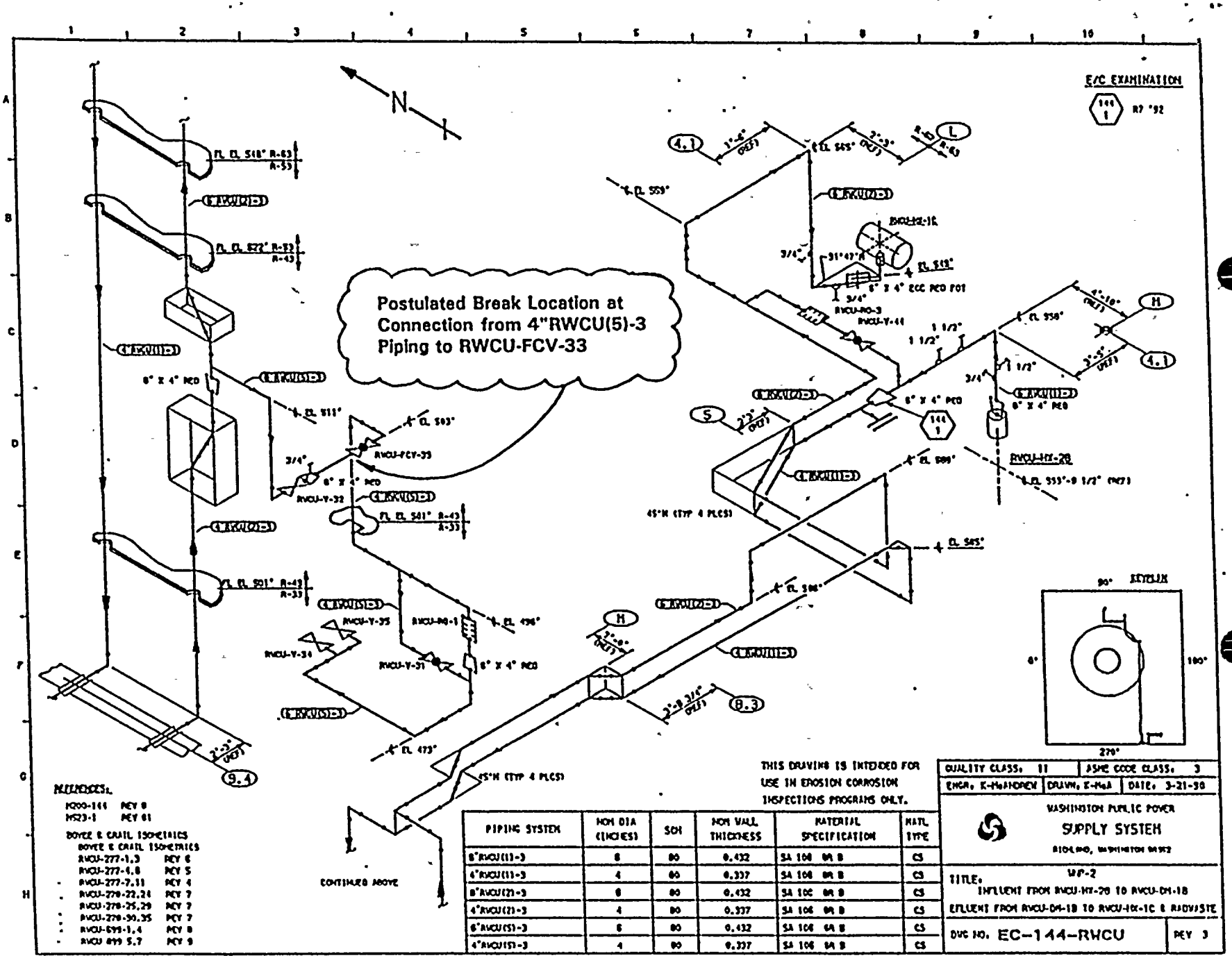


| PIPING SYSTEM | NOM DIA (INCHES) | SCH | NOM WALL THICKNESS | MATERIAL SPECIFICATION | MATL TYPE |
|---|---|---|---|---|---|
| 8"RWCU(1)-3 | 8 | 80 | 0.432 | SA 106 GR B | CS |
| 4"RWCU(1)-3 | 4 | 80 | 0.337 | SA 106 GR B | CS |
| 8"RWCU(2)-3 | 8 | 80 | 0.432 | SA 106 GR B | CS |
| 4"RWCU(2)-3 | 4 | 80 | 0.337 | SA 106 GR B | CS |
| 8"RWCU(5)-3 | 8 | 80 | 0.432 | SA 106 GR B | CS |
| 4"RWCU(5)-3 | 4 | 80 | 0.337 | SA 106 GR B | CS |

Attachment 2: Page 1 of 1