ACCELERATED DISTRIBUTION DEMONSTRATION SYSTEM

REGULATORY INFORMATION DISTRIBUTION SYSTEM (RIDS)

ACCESSION NBR:8906060288 DOC.DATE: 89/06/02 NOTARIZED: NO DOCKET #
FACIL:50-397 WPPSS Nuclear Project, Unit 2, Washington Public Powe 05000397
AUTH.NAME AUTHOR AFFILIATION
BOUCHEY,G.D. Washington Public Power Supply System
RECIP.NAME RECIPIENT AFFILIATION
MURLEY,T.E. Office of Nuclear Reactor Regulation, Director (Post 870411

SUBJECT: Part 21 rept re defect discovered in valve motor operator of RCIC inboard containment isolation valve RCIC-V-63.

DISTRIBUTION CODE: IE19D COPIES RECEIVED:LTR 1 ENCL 1 SIZE: 6
TITLE: Part 21 Rept (50 DKT)

NOTES:

	RECIPIENT ID CODE/NAME	COPIES LTTR	COPIES ENCL	RECIPIENT ID CODE/NAME	COPIES LTTR	COPIES ENCL
	PD5 LA	1	0	PD5 PD	1	1
	SAMWORTH,R	1	1			
INTERNAL:	AEOD/DOA	1	1	AEOD/DSP/TPAB	1	1
	IRM TECH ADV	1	1	IRM/DCTS/DAB	1	1
	NRR CRUTCHFIELD	1	1	NRR VARGA,S	1	1
	NRR/DEST/ADE 8H	1	1	NRR/DEST/ADS 7E	1	1
	NRR/DLPQ/PEB 10	1	1	NRR/DOEA/GCB 11	1	1
	NRR/DRIS/VIB 9D	1	1	NUDOCS-ABSTRACT	1	1
	REG FILE 01	1	1	RES/DSIR/EIB	1	1
	RGN1	1	1	RGN2	1	1
	RGN3	1	1	RGN4	1	1
	RGN5	1	1			
EXTERNAL:	INPO RECORD CTR	1	1	LPDR	1	1
	NRC PDR	1	1	NSIC SILVER,E	1	1

R I D S / A D D S

R I D S / A D D S

NOTE TO ALL "RIDS" RECIPIENTS:

PLEASE HELP US TO REDUCE WASTE! CONTACT THE DOCUMENT CONTROL DESK, ROOM P1-37 (EXT. 20079) TO ELIMINATE YOUR NAME FROM DISTRIBUTION LISTS FOR DOCUMENTS YOU DON'T NEED!

TOTAL NUMBER OF COPIES REQUIRED: LTTR 26 ENCL 25

WASHINGTON PUBLIC POWER SUPPLY SYSTEM

P.O. Box 968 • 3000 George Washington Way • Richland, Washington 99352

June 2, 1989
G02-89-104

Docket No. 50-397

Mr. T. E. Murley, Director
Office of Nuclear Reactor Regulation
U.S. Nuclear Regulatory Commission
Washington, D.C. 20555

Gentlemen:

Subject: NUCLEAR PLANT NO. 2
LICENSE NO. NPF-21
10CFR PART 21 REPORT

This is a 10CFR Part 21 Report submitted in accordance with the requirements of 10CFR Part 21 by Mr. G. D. Bouchey, Director, Licensing and Assurance. The address of the Washington Public Power Supply System is:

Washington Public Power Supply System
PO Box 968
3000 George Washington Way
Richland, Washington 99352

Questions concerning this report should be referred to Mr. S. L. Washington, Compliance Supervisor (509) 377-2080. The verbal notification of this 10CFR Part 21 was made on May 26, 1989 by Mr. J. W. Baker to Mr. C. Bosted, NRC Senior Resident Inspector. A followup call was made on May 30, 1989 to Clifford Clark, NRC Region V.

On May 25, 1989 a defect was discovered in the valve motor operator of Reactor Core Isolation Cooling (RCIC) Inboard Containment Isolation Valve RCIC-V-63. The basic component which contained the defect is a valve motor operator Model SMB-2 manufactured by Limitorque Corporation. This valve is on the RCIC Turbine Steam Supply Line and the valve isolates following a RCIC line break. Operation of this valve is necessary to mitigate the consequences of an accident and; therefore, this valve motor operator (RCIC-MO-63) meets the 10CFR Part 21 definition of a basic component.

8906060288 890602
PDR ADOCK 05000397
S PDC

IE19
1/1

The defect is in the casting of the upper housing cover of the motor operator. Excess material was left following the casting process on the inside of the upper housing cover. The excess material causes the upper housing cover to exert pressure on the drive sleeve of the upper thrust bearing and prevent free rotation of the bearing. This is a deviation in a delivered component which was installed and operated at WNP-2. An unusual diagnostic test signature for RCIC-V-63 valve/motor operator was obtained during the 1988 Refueling and Maintenance Outage (May - June 1988). The motor current was higher than normal, but within name plate rating, in relation to developed stem thrust to the valve. This defect can cause a decrease in the developed stem thrust to the valve in relation to motor power.

This defect can potentially create a substantial safety hazard in that a valve motor operator could provide insufficient stem thrust to the valve which could cause the valve to fail to perform its safety function. This is considered a major degradation of safety related equipment. The Supply System is also concerned because the upper housing cover which contains the defect is a casting and the casting could have been used repeatedly to manufacture a large number of parts.

There is no safety significance associated with the defective upper housing cover found at WNP-2. Even though the diagnostic test signature was unusual, the required stem thrust for RCIC-V-63 was achieved and the valve was capable of performing its safety function. And, since this valve performs a containment isolation function, there is a redundant containment isolation valve (RCIC-V-8).

The nature of the failure is as follows: The upper housing cover is made from a casting which has a machined surface which sits on the outer ring of the upper thrust bearing exerting no force on the bearing (see Figure 1). The bearing has a cage which holds the bearing rollers in place. The cage extends above the bearing by approximately .1 inches and the housing cover is designed to provide a recess of 7.32 inches in diameter and .188 inches deep so that the bearing can rotate freely. In the defective housing of RCIC-MO-63 the clearance was less than .1 inch at the cage diameter causing the cage to rub against the housing cover. Therefore, a portion of the motor thrust was diverted to turn the bearing instead of the valve. The torque switch of the motor operator is set to provide the stem thrust necessary for the valve to operate under specified conditions. With some of the motor thrust diverted to turn the bearing, it is possible that the stem thrust at the valve would not be sufficient to operate the valve under all required conditions.

A similar defect could exist in Limitorque Model SMB-0 through SMB-4 motor operators due to their use of a similar design for the upper housing cover casting. Each housing cover must have a recess on the inside of the housing cover to provide clearance for the thrust bearing cage.

The defect was discovered by a Plant Mechanic on May 25, 1989 while reassembling RCIC-MO-63 following an inspection of the motor operator. The inspection was performed because of a previous limit/torque switch failure and because of the unusual diagnostic test signature obtained during the 1988 Refueling and Maintenance Outage. The signature analysis indicated a drive sleeve or worm gear problem for which the motor operator was inspected with no defects found. The cause of the unusual diagnostic test signature was the bearing cage rubbing on the upper housing cover. The System Engineer inspected the upper housing cover on May 25, 1989 and recommended to the Plant Operating Committee (POC) on May 26, 1989 that this defect met the requirements for reporting per 10CFR Part 21. On May 26, 1989 the POC determined that this failure of a basic component was reportable per the requirements of 10CFR Part 21.

The Supply System has 155 Limitorque Model SMB-0 through SMB-4 valve motor operators of which 50 are used on safety function valves. The safety function valves are listed in Appendix A.

Corrective Actions

a) The upper housing cover of RCIC-MO-63 will be machined to remove the excess material to provide the required recess of 7.32 inch diameter and .18 inch depth. Also, the upper thrust bearing will be replaced before reassembling the motor operator.

b) On May 31, 1989 Limitorque was contacted and asked if this problem had been previously identified and, if so, what was the extent of the problem. Limitorque responded that they had never seen this problem before. Limitorque also stated that the SMB-2 covers would not be used to make any other Model SMB upper housing covers; therefore, if this problem is due to casting defect it would be limited to the Model SMB-2 motor operators.

c) Of the 50 safety function valves listed in Appendix A, thirteen have previously been diagnostically tested. These test results were re-reviewed and confirmed that no other tested valve had a test signature similar to the RCIC-MO-63 signature. Included in the thirteen valves tested are Model SMB-0, SMB-3, and SMB-4 motor operators from the same purchase order as RCIC-MO-63.

d) There are seven SMB-2 model operators installed at WNP-2 (see Appendix A). Two of the seven SMB-2 motor operators were manufactured on the same shop order number as RCIC-MO-63. The shop order number is 379507(X). The valves are Residual Heat Removal Shutdown Cooling Isolation Valves RHR-V-8 and RHR-V-9. The motor operator for RHR-V-9 was disassembled and inspected on June 1, 1989 and a similar defect was not found. Of the remaining four SMB-2 motor operators, one RHR-V-53A was disassembled and inspected during the current outage and no defect was found, and two of the valves (HPCS-V-15 and RCIC-V-22) were previously diagnostically tested and exhibited normal test signatures.

e) The equipment history of Limitorque Model SMB-0 through SMB-4 was reviewed and no similar defects have been identified.

f) The Supply System has committed to an ongoing program to diagnostically test safety function valves and will rely on these test results to identify other motor operators with this defect.

This problem was discussed with Limitorque Corporation on May 25, 1989 and again on May 31, 1989. Limitorque will be formally notified of this 10CFR Part 21 Report.

Very truly yours,

for G. D. Bouchey, Director
Licensing and Assurance

SLW/bk

cc: JB Martin - NRC RV
NS Reynolds - BCP&R
RB Samworth - NRC
DL Williams - BPA
NRC Site Inspector - 901A
Document Control Desk - NRC

APPENDIX A

LIST OF SAFETY RELATED VALVES
WITH LIMITORQUE MODEL SMB-0 THRU SMB-4 MOTOR OPERATORS

VALVE EPN	DESCRIPTION
FPC-V-149	FPC DEMINERALIZER EFFLUENT TO SUPPRESSION POOL
HPCS-V-04[1]	HPCS-P-1 DISCHARGE TO RPV
HPCS-V-10[1]	TEST RETURN FROM HPCS-P-1 TO CONDENSATE STORAGE TANK
HPCS-V-11[1]	TEST RETURN FROM HPCS-P-1 TO CONDENSATE STORAGE TANK
HPCS-V-15[1,2]	HPCS-P-1 SUCTION FROM SUPPRESSION POOL
HPCS-V-23[1]	TEST LINE FROM HPCS-P-1 TO SUPPRESSION POOL
LPCS-V-01	LPCS-P-1 SUCTION FROM SUPPRESSION POOL
LPCS-V-05	LPCS-P-1 DISCHARGE TO RPV
LPCS-V-12	LPCS-P-1 TEST RETURN TO SUPPRESSION POOL
MS-V-146	MAIN STEAM SUPPLY ISOLATION TO AUXILLIARIES
RCC-V-005	RCC SUPPLY TO CONTAINMENT COOLERS, OUTBOARD ISOLATION
RCC-V-021	RCC RETURN FROM CONTAINMENT COOLERS, OUTBOARD ISOLATION
RCC-V-040	RCC RETURN FROM CONTAINMENT COOLERS, INBOARD ISOLATION
RCC-V-104	RCC SUPPLY TO CONTAINMENT COOLERS
RCIC-V-013[1]	RCIC-P-1 DISCHARGE TO RPV
RCIC-V-022[1,2]	RCIC-P-1 TEST RETURN TO CONDENSATE STORAGE TANK
RCIC-V-045[1]	RCIC TURBINE STEAM ADMISSION VALVE
RCIC-V-059[1]	RCIC-P-1 TEST RETURN TO CONDENSATE STORAGE TANK
RCIC-V-063[1,2]	INBOARD CONTAINMENT ISOLATION OF RCIC TURBINE STEAM SUPPLY
RCIC-V-068[1]	RCIC TURBINE EXHAUST TO SUPPRESSION POOL
RFW-V-65A[1]	RFW LOOP "A" SUPPLY ISOLATION TO RPV
RFW-V-65B[1]	RFW LOOP "B" SUPPLY ISOLATION TO RPV
RHR-V-003A	RHR-HX-1A OUTLET ISOLATION
RHR-V-003B	RHR-HX-1B OUTLET ISOLATION
RHR-V-004A	RHR-P-2A SUPPRESSION POOL SUCTION ISOLATION
RHR-V-004B	RHR-P-2B SUPPRESSION POOL SUCTION ISOLATION
RHR-V-004C	RHR-P-2C SUPPRESSION POOL SUCTION ISOLATION
RHR-V-006A	RHR-P-2A SUCTION ISOLATION FOR SHUTDOWN COOLING
RHR-V-006B	RHR-P-2B SUCTION ISOLATION FOR SHUTDOWN COOLING
RHR-V-008[2]	SHUTDOWN COOLING SUCTION ISOLATION
RHR-V-009[2]	SHUTDOWN COOLING SUCTION ISOLATION
RHR-V-021	LOOP C TEST RETURN TO SUPPRESSION POOL
RHR-V-023	LOOP B SUPPLY TO RPV HEAD SPRAY
RHR-V-024A	LOOP A TEST RETURN TO SUPPRESSION POOL
RHR-V-024B	LOOP B TEST RETURN TO SUPPRESSION POOL
RHR-V-047A	RHR-HX-1A INLET ISOLATION
RHR-V-047B	RHR-HX-1B INLET ISOLATION
RHR-V-048A	RHR-HX-1A BYPASS
RHR-V-048B	RHR-HX-1B BYPASS
RHR-V-053A[2]	LOOP A SHUTDOWN COOLING SUPPLY
RHR-V-053B[2]	LOOP B SHUTDOWN COOLING SUPPLY
RHR-V-068A	STANDBY SERVICE WATER SUPPLY ISOLATION TO RHR-HX-1A
RHR-V-068B	STANDBY SERVICE WATER SUPPLY ISOLATION TO RHR-HX-1B
RHR-V-115	CROSSTIE CONNECTION FROM STANDBY SERVICE WATER
RHR-V-116	CROSSTIE CONNECTION FROM STANDBY SERVICE WATER
RWCU-V-01	RWCU PUMP SUCTION, INBOARD ISOLATION
RWCU-V-04	RWCU PUMP SUCTION, OUTBOARD ISOLATION
RWCU-V-40	RWCU RETURN TO RFW LINE
SW-V-012A	SW RETURN TO SPRAY POND B SPARGER
SW-V-012B	SW RETURN TO SPRAY POND A SPARGER

NOTE 1 Diagnostically tested valve/motor operators

NOTE 2 SMB-2 motor operators installed

[illegible]

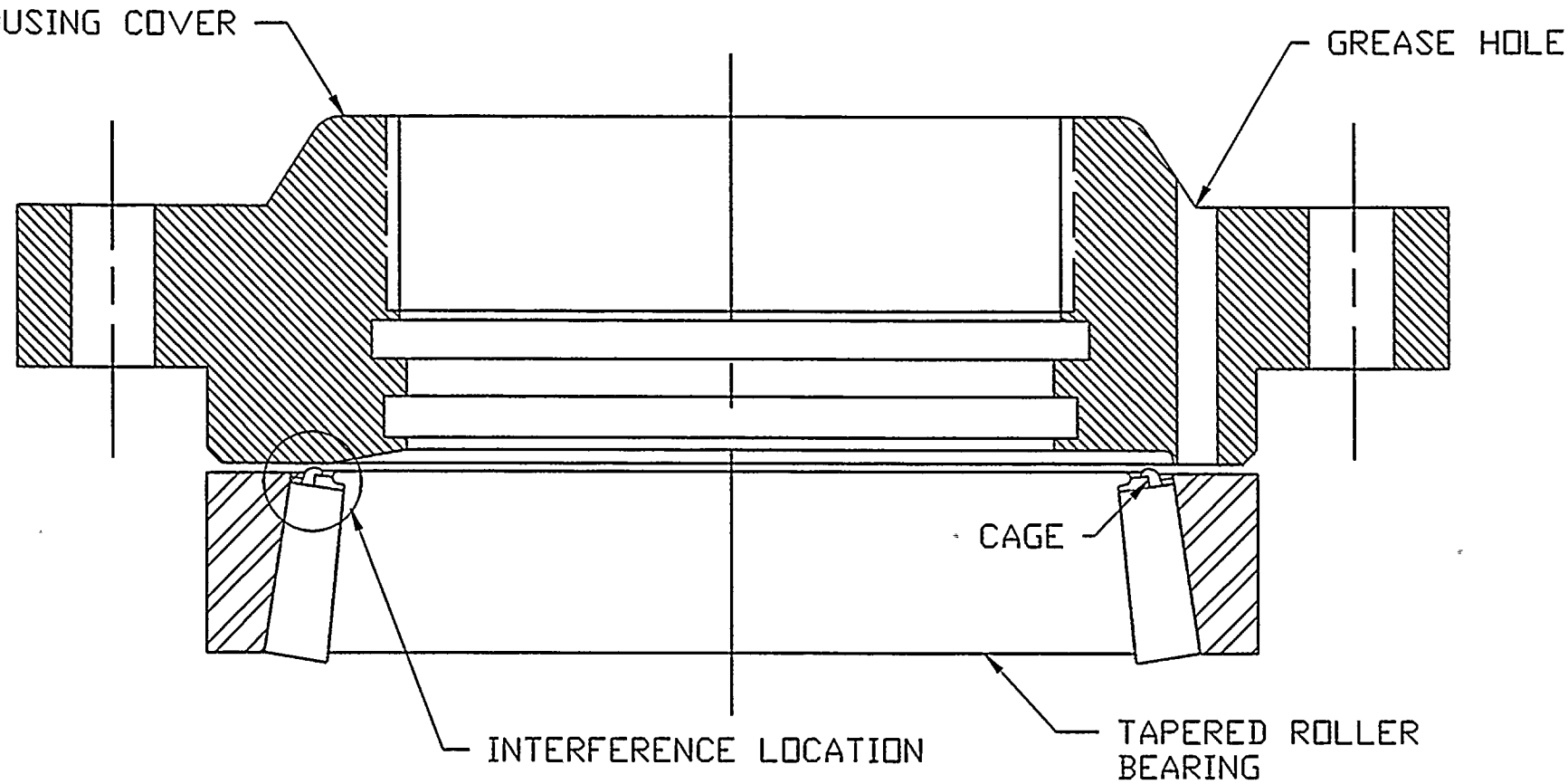

Figure 1

FIGURE 1

SECTION VIEW OF THRUST BEARING AND HOUSING COVER