REGULATORY INFORMATION DISTRIBUTION SYSTEM (RIDS) MAZ

ACCESSION NBR:8310170446 DOC.DATE: 83/09/29 NOTARIZED: NO DOCKET #
FACIL:50-397 WPPSS Nuclear Project, Unit 2, Washington Public Powe 05000397
AUTH.NAME AUTHOR AFFILIATION
SORENSEN,G.C. Washington Public Power Supply System
RECIP.NAME RECIPIENT AFFILIATION
SCHWENCER,A. Licensing Branch 2

SUBJECT: Discusses history & background of use of fire dampers not fire rated or tested in const of facility,due to state of art const at time of installation,FSAR will be revised via Amend 33 to document const,Marked-up drawings encl.

DISTRIBUTION CODE: B002S COPIES RECEIVED:LTR 1 ENCL 60 SIZE: 27
TITLE: Licensing Submittal: Fire Protection

NOTES:

	RECIPIENT ID CODE/NAME		COPIES LTTR	COPIES ENCL	RECIPIENT ID CODE/NAME		COPIES LTTR	COPIES ENCL
	NRR LB2 BC		1	1	AULUCK,R.	01	1	1
INTERNAL:	ELD/HDS2		1	0	IE FILE	07	1	1
	NRR/DE/CEB	06	2	2	NRR/DSI/ASB		1	1
	REG FILE	04	1	1	RGN5		1	1
EXTERNAL:	ACRS	10	6	6	LPDR	03	1	1
	NRC PDR	02	1	1	NSIC	05	1	1
	NTIS		1	1				

Aperture Card Distribution

Extras To Pm

TOTAL NUMBER OF COPIES REQUIRED: LTTR 19 ENCL 18

Washington Public Power Supply System
P.O. Box 968 3000 George Washington Way Richland, Washington 99352 (509) 372-5000

September 29, 1983
G02-83-875

Docket No. 50-397

Director of Nuclear Reactor Regulation
Attention: Mr. A. Schwencer, Chief
Licensing Branch No. 2
Division of Licensing
U.S. Nuclear Regulatory Commission
Washington, D.C. 20555

Dear Mr. Schwencer:

Subject: NUCLEAR PROJECT NO. 2
FIRE DAMPER QUALIFICATION

In a review of fire dampers, the Supply System has identified 54 fire dampers in the WNP-2 Nuclear Project that are not fire rated or tested as stated in the WNP-2 FSAR. These fire dampers were provided to the contractor (Waldinger) by Ruskin in 1975.

Attachment 1, a letter from Mr. Richard Plittner, Vice President of Ruskin, gives the history and background surrounding why these dampers were used in the construction of WNP-2. The letter states that until 1979, Underwriters Laboratories Standard 555 did not contain a 3-hour requirement for fire dampers. Therefore, the dampers provided prior to that time had construction similar to fire doors and utilized a 3-hour rated fire door but the overall assembly was never fire rated or tested. This was the state of the art of construction of 3-hour fire dampers at the time of installation of these dampers at WNP-2.

The construction of these fire dampers is shown in Attachment 2. The construction of the guillotine fire dampers includes a 3-hour UL labeled fire door in a 12 gauge "C" channel which is used as a guide for the door to slide in. A 3/16" angle is welded to the channel and the angle is bolted to the wall. The metal used in the "C" channel and angle are similar to the metal used in sliding fire door hardware and the attachment angle has the same thickness as fire door attachments.

8310170446 830929
PDR ADOCK 05000397
F PDR

APERTURE CARD DISTRIBUTION
EXTRAS TO PM
B002
1/60

Attachment 3 shows the location and size of the dampers and the fire loading in each area involved. The location of the dampers are noted in red. The guillotine dampers are attached using through bolting on hollow block walls and expansion bolts on concrete walls.

The bolts are placed on a maximum of 18 inches on center and the expansion bolts have a 2-1/2" minimum imbedment using 1/2" diameter bolts.

The trap door dampers are constructed using a 3-hour UL labeled fire door in a 10 gauge steel frame. These are installed both in the horizontal and vertical position and are bolted to the wall or floor using 1/2" diameter bolts or expansion bolts.

Areas with high fire loading have compensating fire protection in the form of automatic sprinklers which provide adequate protection for exposed steel on the dampers and for the room. The remaining areas have a very low fire loading. The fire dampers will perform satisfactorily because the damper itself is a UL listed fire door and the construction of the frame is similar to a fire door frame. This construction with automatic sprinkler protection in areas of high fire loading and low fire loading in other areas ensures that the existing fire dampers are acceptable.

The FSAR will be revised in Amendment 33 to document this construction.

Should you have any further questions, please contact Mr. P. L. Powell, Manager, WNP-2 Licensing.

Very truly yours,

G C Sorensen

G. C. Sorensen, Acting Manager
Nuclear Safety and Regulatory Programs

PLP/tmh
Attachments

cc: R Auluck - NRC
WS Chin - BPA
D Kubicki - NRC
A Toth - NRC Site

Attachment 1

RUSKIN air handling specialties
Division of Philips Industrial Components Inc.

Box 129
Grandview, Missouri 64030
Phone 816 761 7476
TWX 910 777 7041
TELEX 42 4192

Factories: Parsons, Great Bend and Paola, Kansas; Anaheim, California; Minden, Louisiana; and Bronx, New York

Representatives in all Major Cities

May 11, 1983
Ref: RMP/88

Burns & Roe, Inc.
P. O. Box 200
Mail Drop No. 970N
Richland, WA 99352

Attention: Mr. J. V. Zalavadia

Subject: Three Hour Fire Doors Furnished By Ruskin Manufacturing Division for WPPSS Nuclear Project No. 2

Gentlemen:

I have been asked to discuss the suitability of fire doors model FDTD and model FDG as furnished by Ruskin to the Waldinger Corporation for installation at WPPSS Nuclear Station No. 2 in Richland, WA. In the early 1970's, Underwriters Laboratory Fire Damper Standard UL555 did not provide for a 3 hour fire protection classification. One and one-half hour in both vertical and horizontal installation were part of the UL555 Fire Damper Standard. The only standard that addressed 3 hour fire protection for openings in 3 and 4 hour rated fire walls was Underwriters Laboratories Fire Door Standard, UL 10B. This standard addressed only fire doors for vertical installation. There was no standard that addressed fire doors for horizontal installation.

Underwriters Laboratory Fire Door Standard, UL10B, evaluated fire door installations that were intended to protect pedestrian openings in fire rated walls and partitions. UL10B did not evaluate air duct type openings in walls and partitions. Because various building codes and nuclear regulatory commission guides required 3 hour protection, it was necessary for design engineers and manufacturers to protect air duct openings through 3 and 4 hour fire walls, partitions and floors. In the early 1970's Underwriters Laboratories was quite adamant in their position that 3 hour fire dampers (for air duct penetrations) were not necessary as air ducts were not permitted to penetrate 3 and 4 hour fire walls. It was necessary for manufacturers to utilize fire doors which had been tested in accordance with UL Standard 10B and provide an appropriate mounting frame work so that the installation

could be adapted to air duct penetrations rather than pedestrian openings.

The model FDTD and FDG units described by Waldinger's submittal drawings and Ruskin publication or drawing numbers FDTD-272 and FDTD-1274 represent the state of the art for protecting air duct penetrations through 3 hour fire walls and floors in 1975 (when they were proposed and approved for installation at WPPSS Unit No. 2). All A & E firms engaged in nuclear power plant design were specifying guillotine or trap door type fire doors for this application. The actual barrier door incorporated in the FDTD and FDG units bears a 3 hour UL fire door label and is listed in accordance with the appropriate manufacturers listing under the UL Classification system (it should be noted that Ruskin did not manufacture or maintain a UL Classified door but rather purchased the barrier door from one of several manufacturers who maintained appropriate UL Classifications). The framing and installation was never evaluated by Underwriters Laboratory as the air duct protection application was not recognized by Underwriters Laboratory. Ruskin is of the opinion that the framing provided by model FDTD and FDG fire doors and the installation proposed by the Waldinger Corporation exceeds any known standards for installation of fire doors or fire dampers for protection of air duct penetrations through 3 and 4 hour fire walls, partitions, or floors.

In 1978 Ruskin initiated a program with Underwriters Laboratories to establish a 3 hour fire damper category in UL Standard 555. A revision to UL555 in 1979 incorporated the 3 hour fire damper category and provided Ruskin and other fire damper manufacturers, the ability to supply UL classified fire dampers for installation in nuclear power plant requirements after that date. Ruskin stopped supplying FDTD and FDG fire door units after about 1979 because the revised UL Standard 555 enabled us to supply qualified 3 hour fire dampers. It required a number of years after 1979 before architects and engineering design firms stopped detailing guillotine and trap door type hardware to protect air duct penetrations. Specifications for guillotine and trap door type fire doors are still occasionally encountered.

In the years since 1979 when UL Standard 555 incorporated 3 hour fire dampers (both vertical and horizontal), Ruskin has conducted a number of actual fire tests. The types of installations tested incorporate standard dampers, sleeve and retaining angle installations. Ruskin has furnished fire dampers of this design and installation to other WPPSS nuclear power stations. It is this writer's professional opinion that the framing and installation provided with FDTD and FDG type units for WPPSS Nuclear Station No. 2 exceeds the installation and framing now required for 3 hour dampers in accordance with UL Standard 555. Appropriate

authorities having jurisdiction should be able to accept and approve the FDTD and FDG units provided to and installed in WPPSS Nuclear Station No. 2.

RUSKIN MANUFACTURING DIVISION

Richard M. Plettner, P.E.
Vice President

RMP:skh

cc: Adrian Jones
Washington Public Power Supply System
P. O. Box 968
Richland, WA 99352

Attachment 2

BR FILE NUMBER 216 00 0033

	CONTRACT
WASHINGTON PUBLIC POWER SUPPLY SYS. WPPSS NUCLEAR PROJECT NO. 2 W. O. 2808	
BURNS AND ROE, INC. ORADELL, N.J.-HEMPSTEAD, N.Y.-LOS ANGELES, CAL.	
REVIEWED AS CHECKED BELOW	
[X] APPROVED FOR FABRICATION	A
[ ] NOT APPROVED	NA
[ ] APPROVED AS NOTED FOR FABRICATION SEE ACCEPTANCE NOTE - FA-A, 1, 2, OF APPENDIX A, SECTION 18	AN
[ ] FOR INFORMATION ONLY	I
SUBJECT TO ALL CONTRACTUAL PROVISIONS	
THIS REVIEW DOES NOT IMPLY ACCEPTANCE OF ANY MATERIAL OR EQUIPMENT NOT FULFILLING ALL SPECIFICATION REQUIREMENTS.	
BSS/SB	7-22-75
PROCESSED BY	DATE

RECEIVED
AUG 04 1975
BURNS & ROE, INC.

6-11-75

SPEC NO. Rev. 1 FDG-1274 Replaces FDG-1174

FIRE DAMPER GUILLOTINE (Class A)

TYPE FDG.

STANDARD CONSTRUCTION

FRAME: 2" x 1½" x 12 ga. galv. channel with 16 ga. galv. plate tack welded to face of channels above duct opening.
2" x 1¼" x 3/16" angle duct starter welded to channel around duct opening.

DOOR: U/L Approved and U/L labeled rated three (3) hours for Class A Openings.

OTHER HARDWARE: Zinc plated, 1" x ¼" Trip-bar with 160° U/L approved fusible link.

FINISH: Rust inhibitor coating

CLASS "A", 3 HOUR,
FIRE DOOR CONSTRUCTION
U.L. LABELED UNDER NO. 01920

Core Of Door Consists of Hydrous Calcium Silicate Block Insulation Tongue and Groove. Core Surrounded On All Sides By An 18 Gauge, Cold Rolled Steel Channel. Steel Cover 22 Gauge Electro Galvanized And Bonderized Steel Securely Bonded To The Core And Welded To The Perimeter Channel. Door Completely Encased In A Heavy Gauge Perimeter Channel.

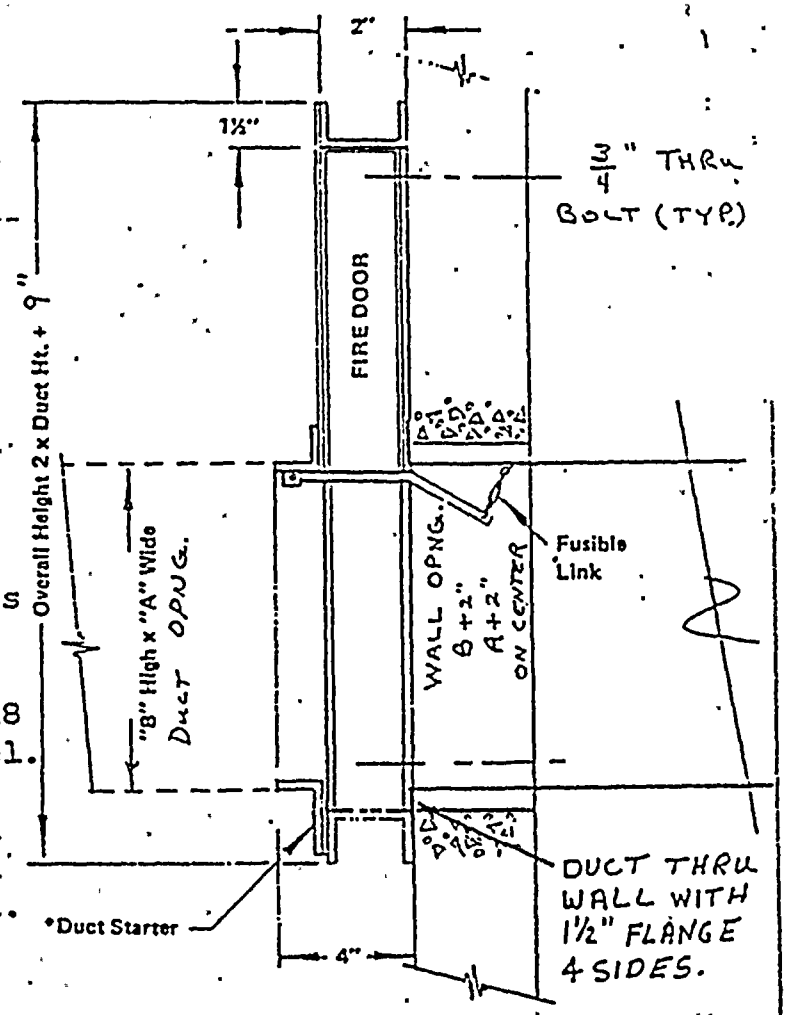

*DUCT STARTER: APPROX. ¼" SMALLER THAN GIVEN 'OPENING' DIMENSIONS.

QUAN.	TYPE	DUCT OPNG. "A"-Wide	DUCT OPNG. "B"-High

NOTE:

1. FDG IS SUBMITTED FOR CONSTRUCTION DETAILS ONLY.
2. FDG WILL BE FURNISHED & INSTALLED WHERE GUILLOTINE TYPE FIRE DPRS ARE CALLED FOR ON CONTRACT DWGS.
3. SIZES & QUANTITIES WILL BE VERIFIED FROM CONTRACT DWGS.
4. SEE DWG # 2444, REV 1, FOR EXPLODED VIEW & MOUNTING BOLT SPACING.
5. OVERALL WIDTH = A + 10"
6. FIRE DOOR LAPS WALL OPNG 4" TOP & SIDES

JOB WPPSS NUCLEAR #2 LOCATION RICHLAND, WASHINGTON
CONTRACTOR THE WALDINGER CORP.
THE WALDINGER CORP.
TRANSMITTAL NO. 7A

RUSKIN MFG. CO. P.O.Box 141 Grandview, Missouri

© RUSKIN MFG. CO. 1974

BR FILE 216 00 0033816 · 761-7478 Page 3/c

6-11-75

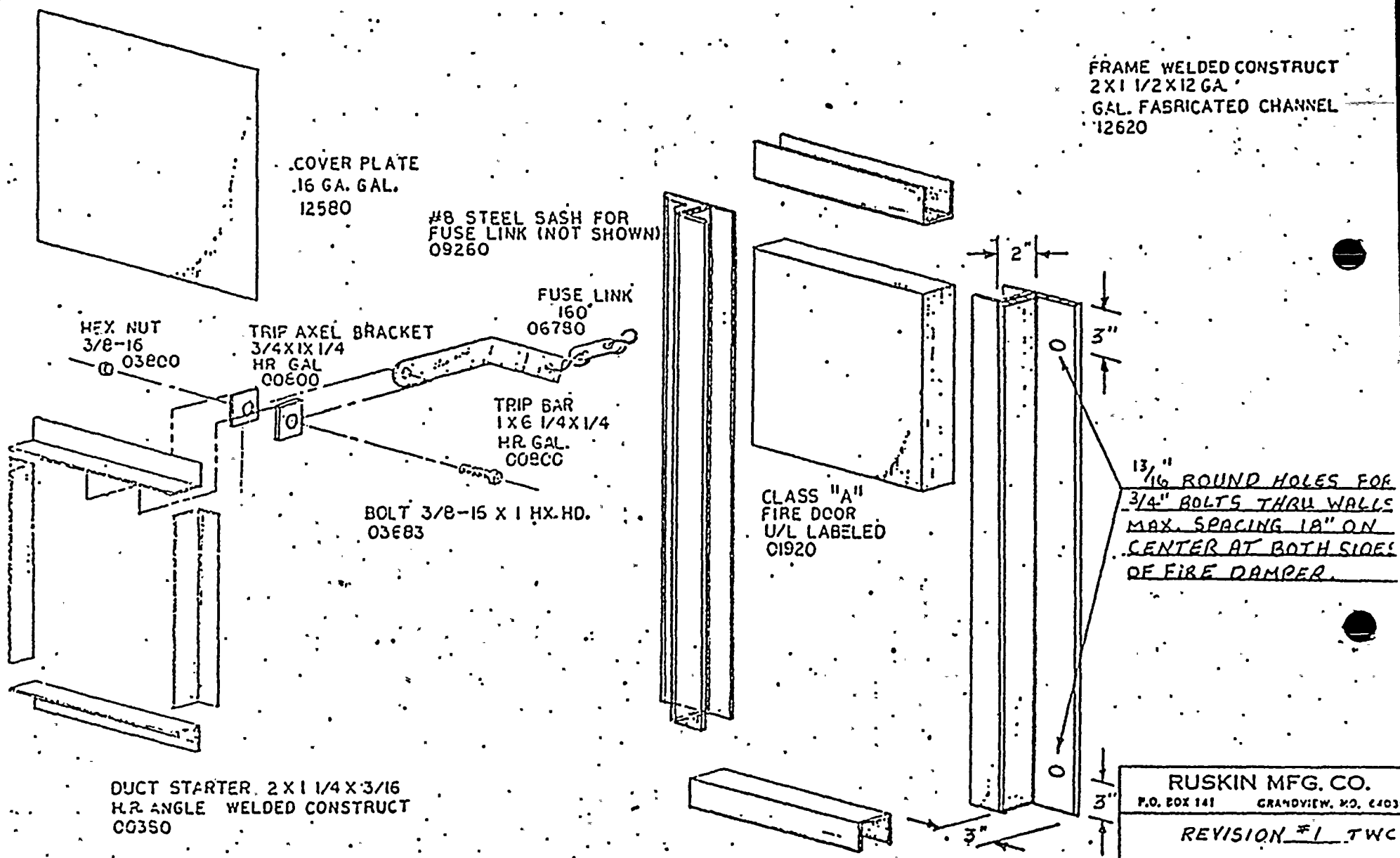

RUSKIN MFG. CO.
P.O. BOX 141 GRANDVIEW, MO. 64030

REVISION #1 TWC

TITLE FIRE DAMPER
GUILLOTINE FDG TYPE

DRAWN TWC | DATE 9-9-75 | SCALE | DRAWING 2444

T-7A

BR FILE NUMBER 216 00 0030

	CONTRACT
WASHINGTON PUBLIC POWER SUPPLY SYS. WPPSS NUCLEAR PROJECT NO. 2 W. O. 2808	
BURNS AND ROE, INC. ORADELL, N.J.-HEMPSTEAD, N.Y.-LOS ANGELES, CAL.	
REVIEWED AS CHECKED BELOW	
☒ APPROVED FOR FABRICATION	A
☐ NOT APPROVED	NA
☐ APPROVED AS NOTED FOR FABRICATION SEE ACCEPTANCE NOTE - PARA. 1, 2, OF APPENDIX A, SECTION 18	AN
☐ FOR INFORMATION ONLY	I
SUBJECT TO ALL CONTRACTUAL PROVISIONS THIS REVIEW DOES NOT IMPLY ACCEPTANCE OF ANY MATERIAL OR EQUIPMENT NOT FULFILLING ALL SPECIFICATION REQUIREMENTS.	
BSS/SB	7-22-75
PROCESSED BY	DATE

RECEIVED

AUG 04 1975

BURNS & ROE, INC.

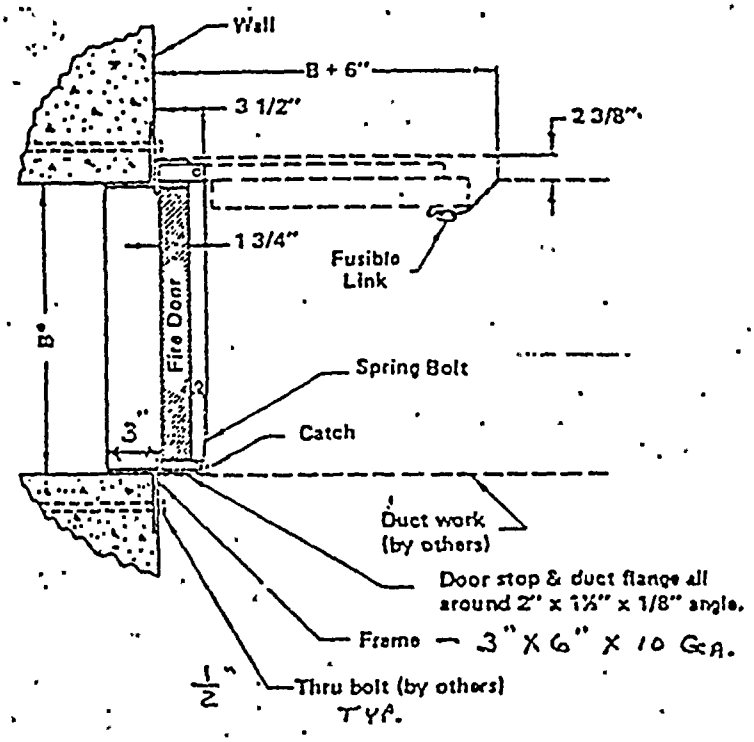

TYPE: FDTD VERTICAL MOUNT

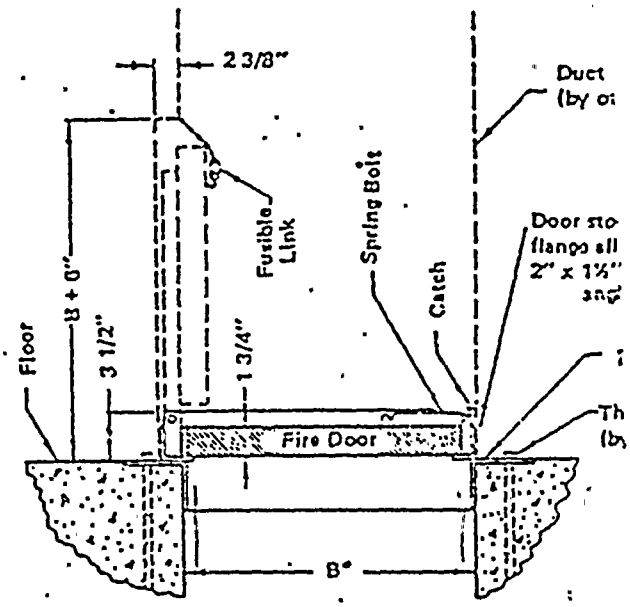

TYPE: FDTD HORIZONTAL MOUNT

STANDARD CONSTRUCTION

FRAME: Up to 9 sq. ft. 4" x 3" x 10 ga. steel angle frame with 2" x 1½" x 1/8" door stop & duct flange angle.

9 sq. ft. & over 4" x 3" x 1/4" angle frame

DOOR: UL approved and labeled class "A" Fire Door.

HINGE: Angle type with S.S. bearings and 1/2" dia. zinc plated axles.

OTHER HARDWARE: 160° ~~or 212°~~ UL approved fusible link (with "S" hooks and retaining chain). Spring bolt type locking device "S" hooks and retaining chain.

FINISH: Rust inhibitor coating.

* Unit furnished approx. ¼" sr than given 'opening' dimensi

NOTE:

1. FDTD IS BEING SUBMITTED FOR CONSTRUCTION DETAILS ONL
2. FDTD WILL BE FURNISHED & INSTALLED WHERE TRAP DOO TYPE FIRE DOORS ARE CALLED FOR ON CONTRACT DWG:
3. SIZES & QUANTITIES WILL BE VERIFIED FROM CONTRACT DWGS.
4. SEE DWG # 2447, REV 1, FOR EXPLODED VIEW & MOUNTING BOLT SPACING.

THE WALDINGER CORP. TRANSMITTAL NO 7A

JOB WPPSS - Nuclear #2 LOCATION RICHLAND, WASHINGTON

CONSTRUCTION WALDINGER

RUSKIN MFG. CO. P. O. BOX 141 GRANDVIEW, MO. 64030

© RUSKIN MFG. CO. 1972

BR FILE 216 00 0030 0

6-11-75

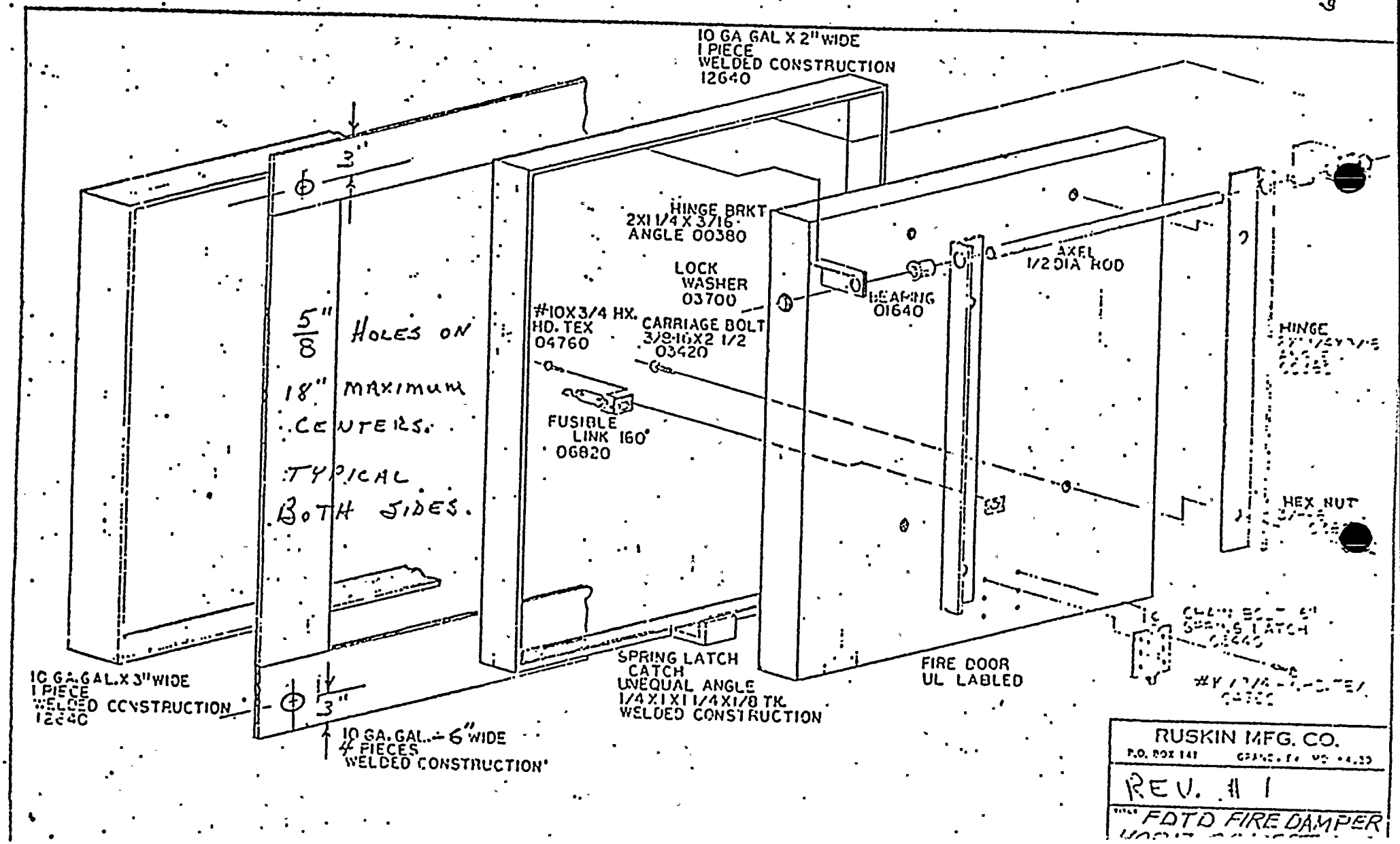
10 GA GAL X 2" WIDE
1 PIECE
WELDED CONSTRUCTION
12640
3"
HINGE BRKT
2X1 1/4 X 3/16
ANGLE 00380
LOCK
WASHER
03700
#10X3/4 HX.
HD. TEX
04760
CARRIAGE BOLT
3/8-16X2 1/2
03420
BEARING
01640
AXEL
1/2 DIA ROD
5/8" HOLES ON
18" MAXIMUM
CENTERS.
TYPICAL
BOTH SIDES.
FUSIBLE
LINK 160°
06820
HINGE
HEX NUT
10 GA.GAL.X 3"WIDE
1 PIECE
WELDED CONSTRUCTION
12640
3"
10 GA. GAL. - 6" WIDE
4 PIECES
WELDED CONSTRUCTION
SPRING LATCH
CATCH
UNEQUAL ANGLE
1/4X1X1 1/4X1/8 TK.
WELDED CONSTRUCTION
FIRE DOOR
UL LABLED
RUSKIN MFG. CO.
P.O. BOX 141
REV. # 1
FDTD FIRE DAMPER

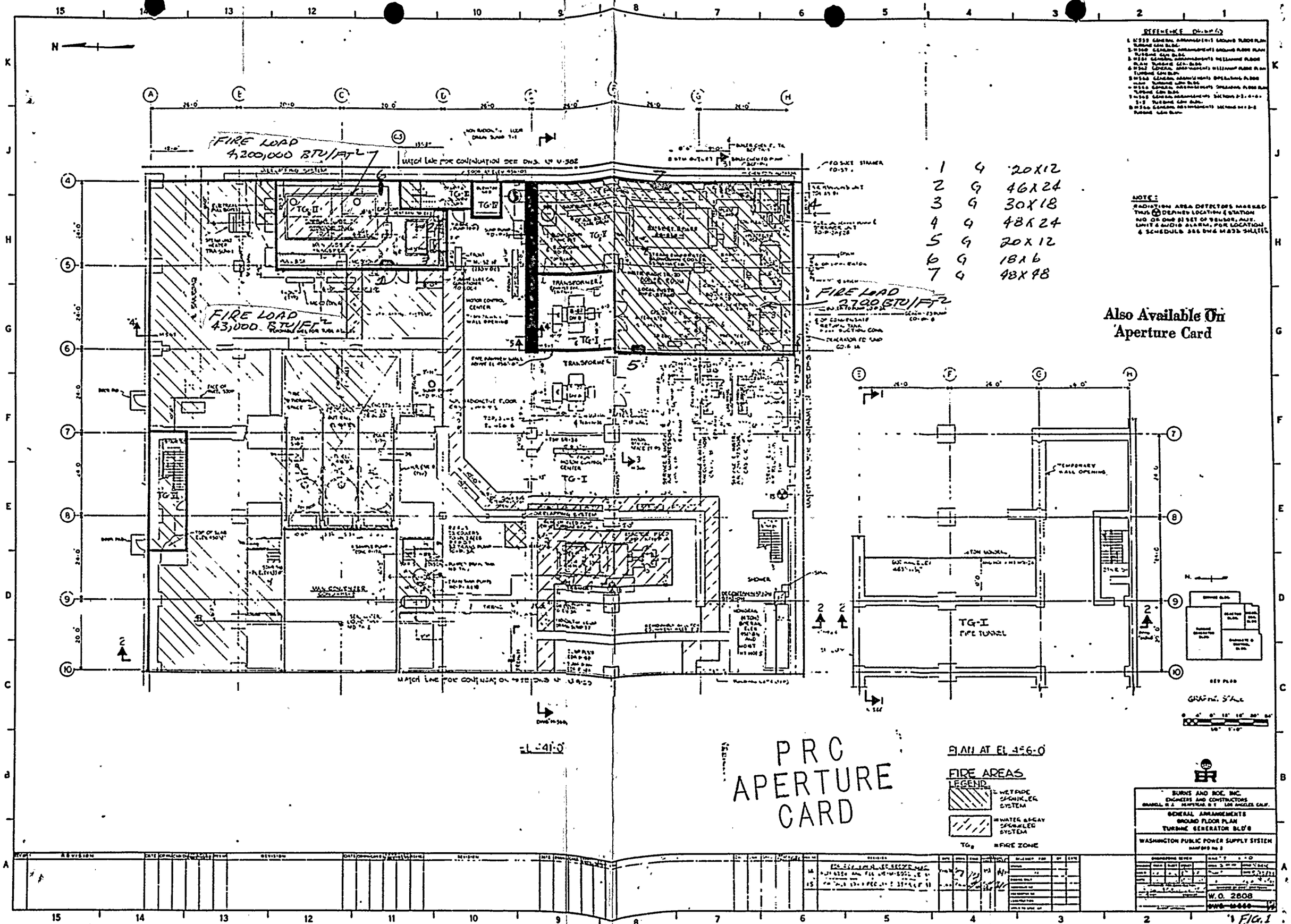

Also Available On Aperture Card

PRC APERTURE CARD

8310170446-01

1 - G 30 X 12
2 G 24 X 10

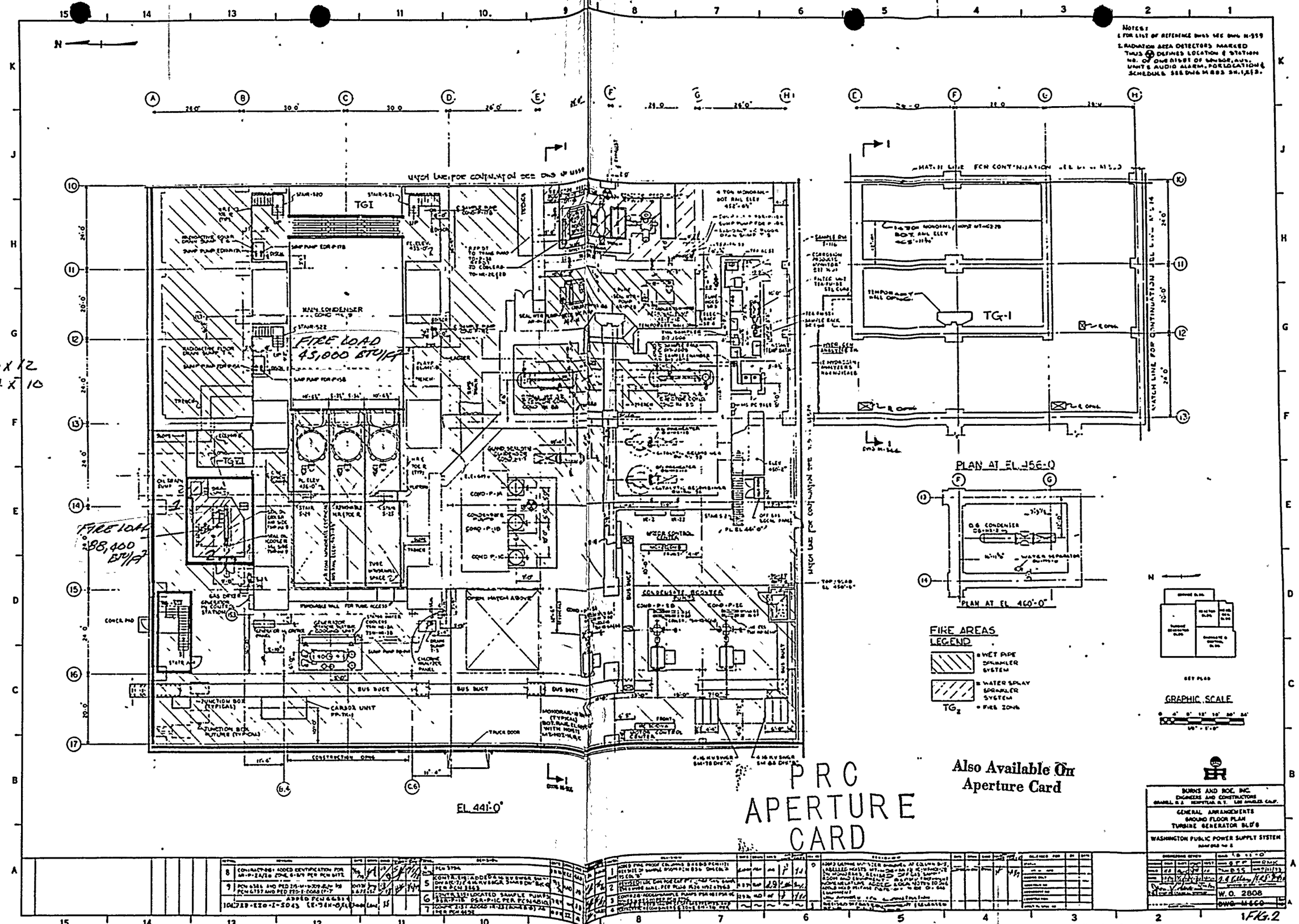

PRC APERTURE CARD

Also Available On Aperture Card

FIG. 2

8310170446-02

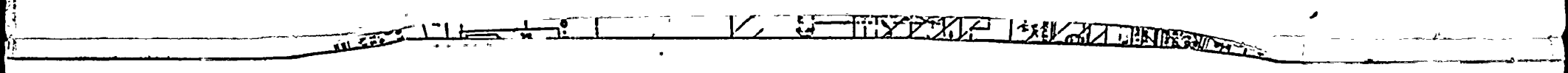

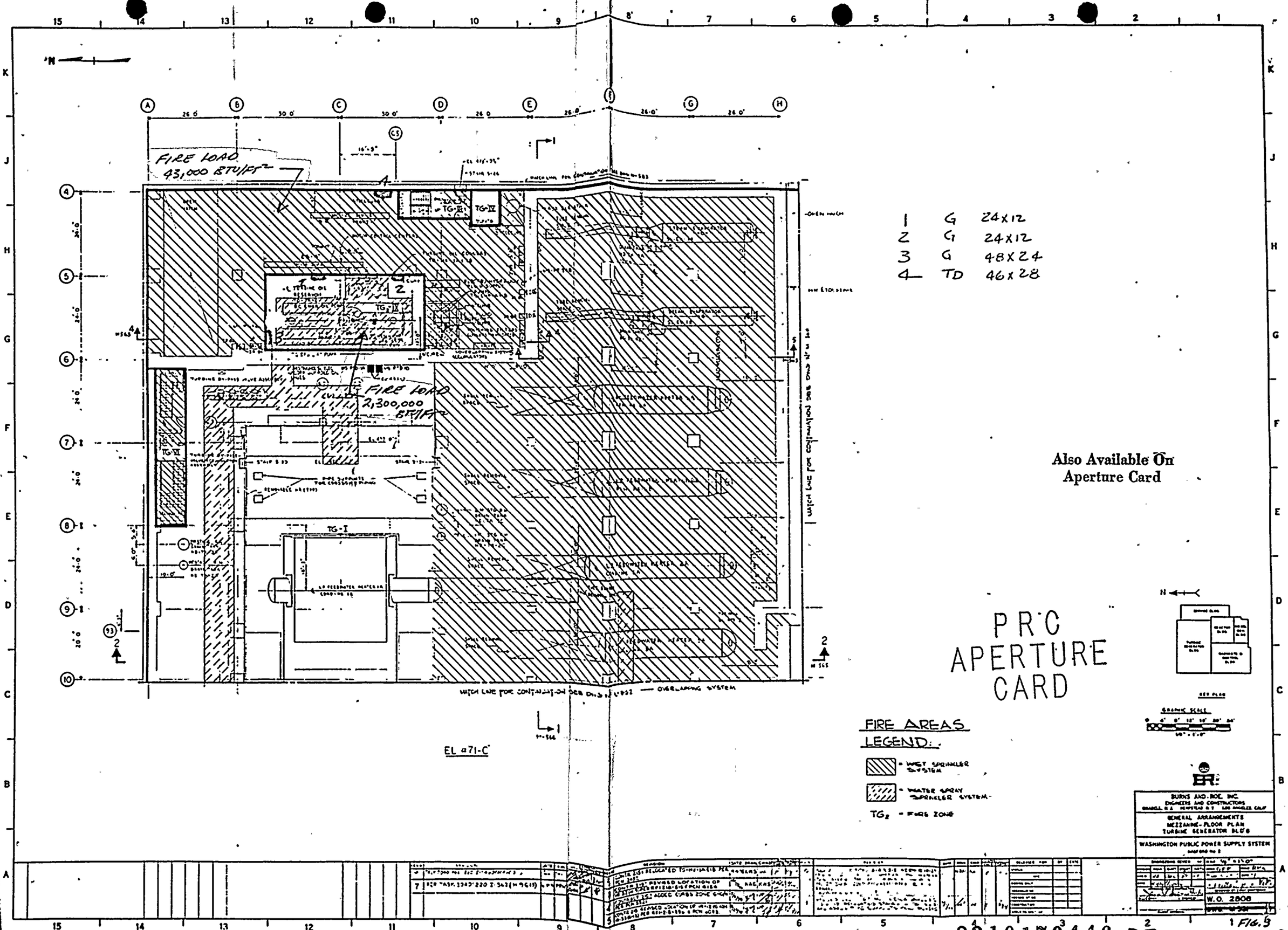

Also Available On
Aperture Card

PRC
APERTURE
CARD

8310170446-03

FIRE LOAD 182,300 BTU/FT²

FIRE LOAD 38,000 BTU/FT²

6	G	15X15
20	G	60X20
21	G	60X20
22	TD	12X10
23	TD	12X10

FIRE LOAD 25,380 BTU/FT²

FIRE LOAD 45000 BTU/FT²

GENERAL NOTES:

1. FOR LIST OF REFERENCE DRAWINGS SEE DWG M-519.
2. SMOKE DETECTORS AND DETECTORS MARKED THUS (D) DENOTES LOCATIONS (WITHIN ONE OR ONE (1) SET OF SENSORS, AND UNIT (WHERE MARKED) SEE LOCATION & SCHEMATIC DWG M-519 SH. 1, 2 & 4.

PARTIAL PLAN @ EL. 452'-0"

PARTIAL PLAN @ EL. 449'-9"

PARTIAL PLAN @ EL. 452'-0"

PARTIAL PLAN @ EL 477'-0"

ELEV. 467'-0" UNLESS NOTED

FIRE AREAS LEGEND

PRE-ACT DN SPRINKLER SYSTEM

Also Available On Aperture Card

PRC APERTURE CARD

BURNS AND ROE, INC.
ENGINEERS AND CONSTRUCTORS
ORADELL, N.J. SEATTLE, WASH. LOS ANGELES, CALIF.

GENERAL ARRANGEMENT
EL. 467'-0" & PARTIAL PLANS
RADWASTE BUILDING

WASHINGTON PUBLIC POWER SUPPLY SYSTEM
WNP-2

W.O. 2206

8310170446-04

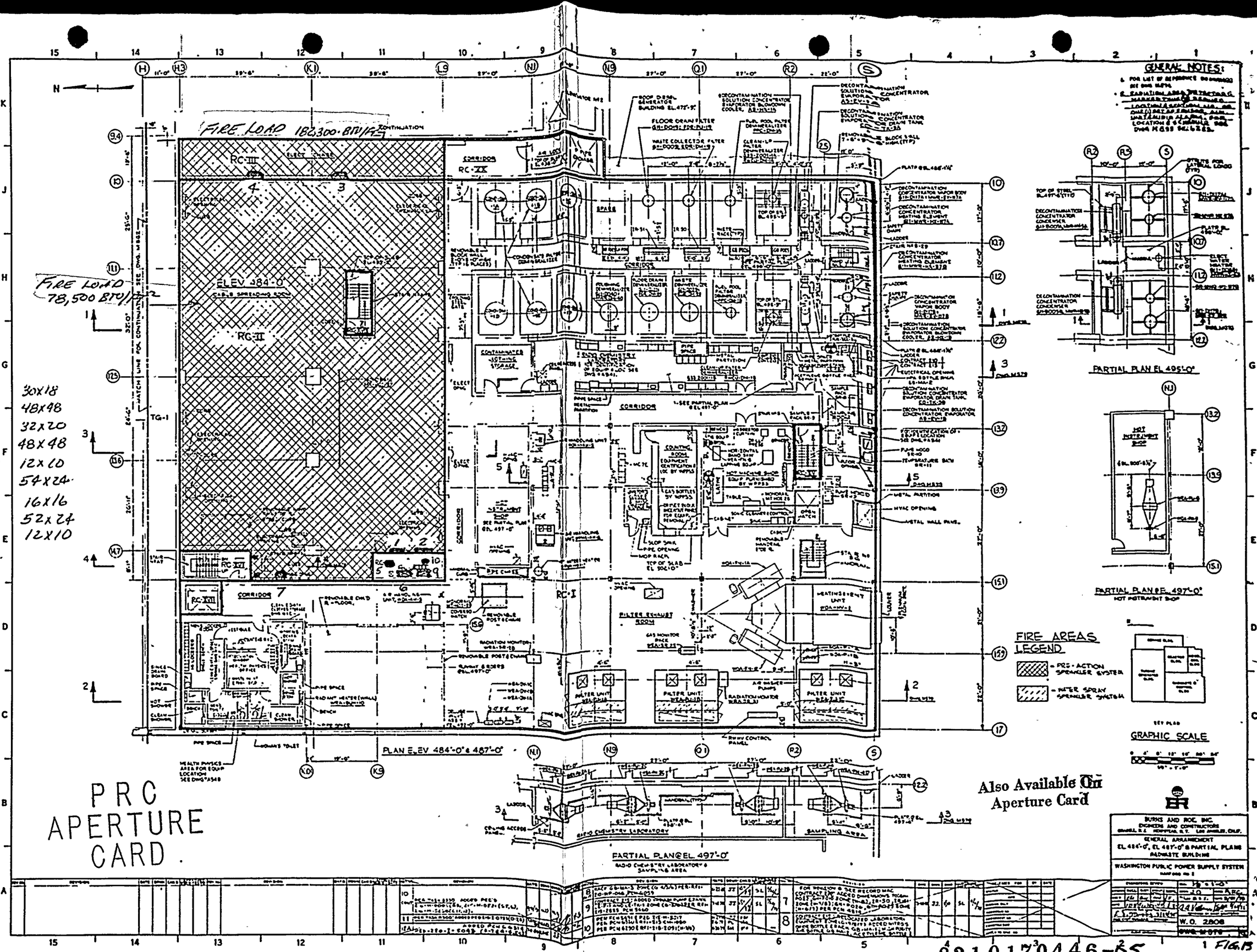

PRC APERTURE CARD

Also Available On Aperture Card

8310170446-85

FIG. 13

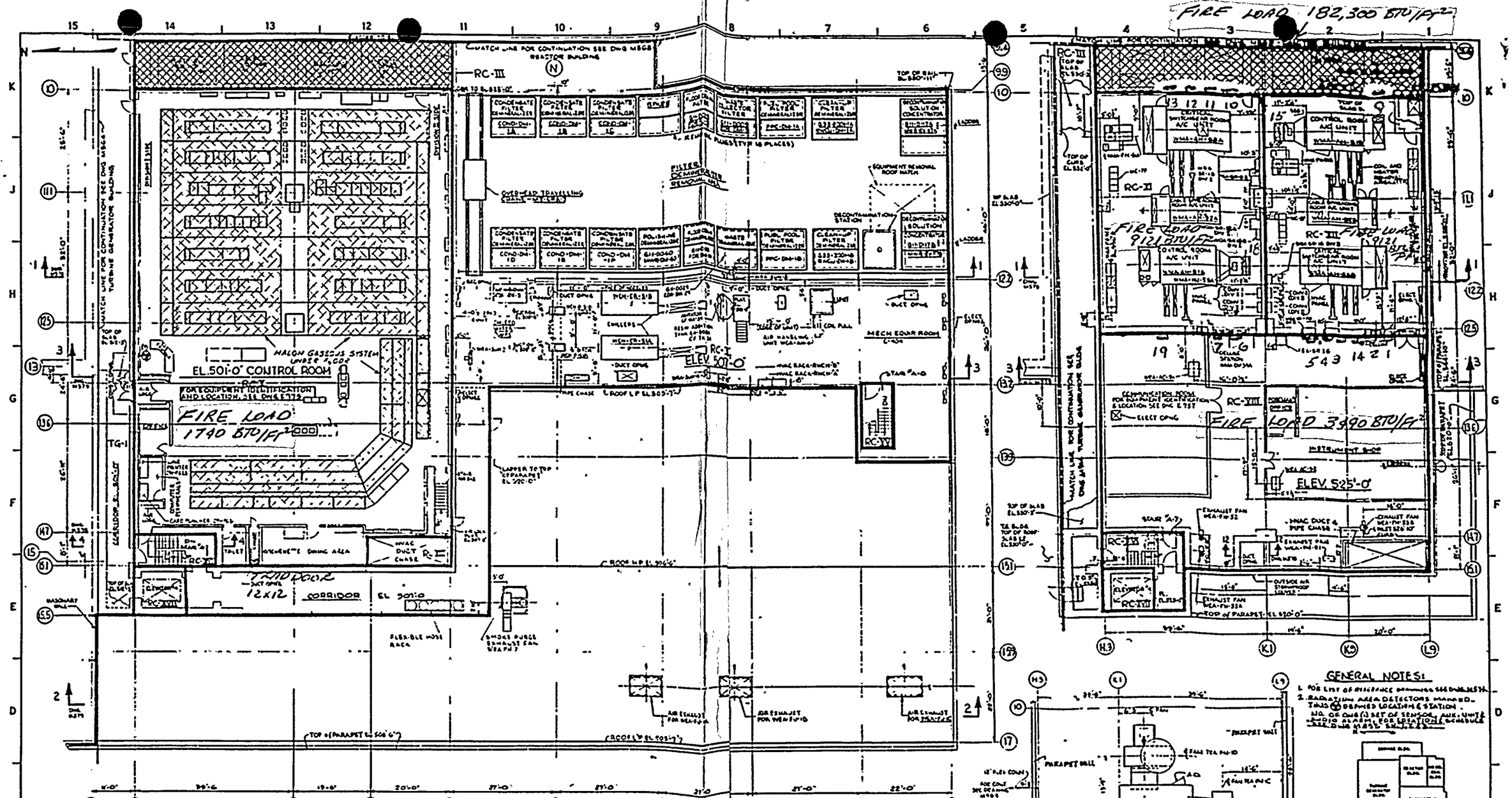

No	TYPE	SIZE	No	TYPE	SIZE
1	G	60X24	10	TD	28X26
2	G	36X22	11	TD	48X32
3	G	12X12	12	TD	28X26
4	G	36X22	13	TD	54X28
5	G	54X24	14	TD	48X36
6	G	14X10	15	TD	48X30
7	G	30X14	18	TD	48X30
9	TD	36X22	19	TD	12X12

FIRE AREAS LEGEND

- = GASEOUS SYSTEM (HALON)
- = PRE-ACTION SPRINKLER SYSTEM
- = WATER SPRAY SPRINKLER SYSTEM

PRC APERTURE CARD

Also Available On Aperture Card

8310170446-06

FIRE LOAD 6980 BTU/FT²

GUILLOTINE 8X14

FIRE LOAD 530,000 BTU/FT²

TRAP DOOR 10X10

PLAN ABOVE EL. 448'-0"

PLAN BELOW EL. 448'-0"

SECTION "1-1"

SECTION "2-2"

PRC APERTURE CARD

Also Available On Aperture Card

GRAPHIC SCALE

FIRE AREAS

FIRE AREA BY SEPARATION

LEGEND

= WET PIPE SPRINKLER SYSTEM

BURNS AND ROE, INC.
ENGINEERS AND CONSTRUCTORS
HANFORD, U.S. HEMPSTEAD, N.Y. LOS ANGELES, CALIF.

GENERAL ARRANGEMENT
PLANS & SECTIONS
CIRCULATING WATER PUMP HOUSE

WASHINGTON PUBLIC POWER SUPPLY SYSTEM
HANFORD NO. 2

W.O. 2806

8310170446-07

1	G	10x8
2	G	12x12
3	G	10x8
4	G	12x12
5	G	10x8
6	G	12x12
7	TD	30x10
8	TD	18x10