1.0 INTRODUCTION

1.1 General

This Appendix "B" to the Quality Assurance Manual outlines the third interval inservice inspection examination (ISI) requirements for Class 1, Class 2, and Class 3 systems, and components for Rochester Gas & Electric Corporation's (RG&E) R. E. Ginna Nuclear Power Plant (Ginna Station). The third inspection interval begins on January 1, 1990, as permitted by Paragraph IWA-2400 of ASME Code Section XI, the second interval concluded December 31,1989.

1.1.1 This program is based on the requirements of the 1986 Edition of the American Society for Mechanical Engineers (ASME) Boiler and Pressure Vessel Code, Section XI, "Inservice Inspection of Nuclear Power Plant Components" as adopted by the Code of the Federal Regulations, 10 CFR Part 50, (Federal Register 53FR16051) May 5, 1988.

1.1.2 This program excludes the controls of the Enforcement Authority, and N-Stamp, in addition to IWE of ASME Section XI, since it is not endorsed by the Regulation.

1.1.3 Inservice Testing of pumps (IWP) and valves (IWV) is performed in accordance with Appendix C of the Ginna Station Quality Assurance Manual.

1.2 **Applicable Documents**

RG&E has adopted the following documents as the basis for the third inspection interval and is committed to satisfying their requirements. Specific exceptions to the requirements of ASME Section XI are identified and located in the "Relief Requests", Section 2.0 of this document. This program was developed in accordance with these documents:

1.2.1 ASME Boiler and Pressure Vessel Code Section XI, "Rules for Inservice Inspection of Nuclear Power Plant Components," 1986 Edition, no Addenda.

1.2.1.1 ASME Boiler & Pressure Vessel Code, Section XI, 1986 Edition, no Addenda, Appendix IV.

1.2.2 U.S. Nuclear Regulatory Commission (USNRC) Regulatory Guides:

a. 1.14, Rev. 1, "Reactor Coolant Pump Flywheel Integrity"

b. 1.147, Latest Revision, "Inservice Inspection Code Case Acceptability - ASME Section XI, Division 1"

c. 1.150, Rev. 1, "Ultrasonic Testing of Reactor Vessel Welds During Preservice and Inservice Examinations"

d. 1.83, Rev. 1, "Inservice Inspection of Pressurized Water Reactor Steam Generator Tubes"

e. 1.26, Rev. 3 "Quality Group Classifications and Standards for Water, Steam, and Radioactive Waste Containing Components of Nuclear Power Plants.

f. 1.29, Rev. 3, "Seismic Design Classification".

g. 1.121, Rev. 0, "Bases for Plugging Degrated PWR Steam Generator Tubes".

1.2.3 **ASME Code Cases**

In accordance with 10CFR50.55a, Footnote 6, ASME Section XI Code Cases referenced in Regulatory Guide 1.147, "Inservice Inspection Code Case Acceptability- ASME Section XI, Division 1," may be incorporated into the Ginna Station ISI Program. Those Code Cases included in Regulatory Guide 1.147 that will be implemented at Ginna Station are identified in this section. Each Code Case is preceded by information on the applicable component/area, ASME requirements, and how the Code Case will be implemented.

Paragraph 1.2.3.1 lists those code cases that have been technically reviewed and endorsed, with or without conditions by the NRC in Regulatory Guide 1.147 and will be implemented during the 3rd ten year Inspection Interval.

Use of any subsequent NRC endorsed code cases that are identified in revisions to the Regulatory Guide 1.147 may be incorporated in the program and used during the 3rd ten year Inspection Interval.

1.2.3.1 USNRC Regulatory Guide 1.147 - Approved ASME Section XI Code Cases

Code Case No.	Sect. XI References	Component/Area
N 307-1	IWB-2500-1	Studs and Bolts with Heater Holes
N-416	IWA-4400	Any repaired or replaced Class 2 piping component that cannot be isolated by valves or requires securing safety/ relief valves.
N-401	IWA-2233	Eddy Current Examinations
N-402	IWA-2233	Eddy Current Calibration Standard Material

N-427*	Code Cases	Code Cases in Inspection Plans
N-437	IWA-5260	Use of digital readout and digital measurement devices for performing Pressure Tests.
N-446	IWA-2300	Recertification of Visual Examination Personnel.
N-460	IWA-2000/3000	Alternative examination coverage for Class 1 and Class 2 welds.
N-498	IWX-5000	Alternative rules for 10-year Hydrostatic Pressure Testing for Class 1 and 2 systems.

* As amended by USNRC Regulatory Guide 1.147, April, 1992.

1.2.4 R.E. Ginna Updated Final Safety Analysis Report (UFSAR):

Section 5.4 - For Class 1

Section 6.6 - For Class 2 and 3

1.2.5 Letter dated March 23, 1981, from Darrell G. Eisenhut, Director, Division of Licensing, USNRC, regarding Technical Specification Revisions for Snubber Surveillance

1.2.5.1 First Addenda to ASME/ANSI OM-1987, Part 4 Published in 1988.

1.2.6 USAS B31.1.0-1967, "Power Piping" for High Energy Systems

1.2.7 R. E. Ginna, Technical Specification 4.2. "Inservice Inspection".

1.2.8 R. E. Ginna Technical Specification 3.13 and 4.14 "Snubbers".

1.2.9 Letter dated February 16, 1989, to Mr. Carl Stahle, USNRC, PWR Project Directorate No. 1, regarding proposed changes to Snubber Technical Specification R. E. Ginna Nuclear Power Plant, Docket No. 50-244.

1.2.10 Rochester Gas and Electric Corporation Mechanical Engineering Specification, ME-256, Titled - "Snubber Inspection and Test Program".

1.2.11 Electric Power Research Institute PWR Steam Generator Inspection Guidelines, Rev. 2.

1.2.12 Code of the Federal Regulations, 10CFR Part 50.

1.3 **Inspection Intervals**

1.3.1 The inservice inspection intervals for Class 1 components started on January 1, 1970, with the second interval starting on January 1, 1980. The third inspection interval shall start on January 1, 1990.

1.3.2 For Class 2 and Class 3, the first inspection interval started on May 1, 1973; the second on January 1, 1980; and the third on January 1, 1990.

1.3.3 The third inspection interval for Class 1, 2 and 3 is scheduled to end December 31, 1999. However, this date is subject to change as allowed by IWA-2400, which states that each inspection interval may be decreased or extended (but not cumulatively) by as much as one year. If R. E. Ginna Nuclear Power Plant is out of service continuously for 6 months or more, the inspection interval and associated period during which the outage occurred may be extended for a period of time equivalent to the outage.

1.3.4 A 10-year examination Program plan (Supplement 1 to Appendix B), will describe the distribution of examinations for Class 1, Class 2, and Class 3 components in accordance with Inspection Program B, the IWB-2400, IWC-2400, IWD-2400 and IWF-2400 of Section XI, "Rules for Inservice Inspection of Nuclear Power Plant Components", 1986 Edition, no Addenda.

1.4 **Classification of Components**

The Program Plan components and piping have been classified by RG&E for purposes of inservice inspection based on Section XI, Article IWA-1320, and definitions contained in 10CFR50.2.

1.5 **Responsibility**

As specified in Paragraph IWA-1400 of ASME Section XI, RG&E bears the overall responsibility for implementation of an ISI program. Administrative Procedures, NDE Procedures, ISI Plans and Schedules are in place to control and implement these inservice inspection requirements.

1.6 **Records**

Examination records and documentation of results provide the basis for evaluation and facilitate comparison with previous results and subsequent inspections. In accordance with Section XI, IWA-6000, these records will be maintained for the plant life.

1.6.1 An Inservice Inspection Report shall be generated to document applicable Inservice Inspection and associated Repair, Replacement and Modification activities. ASME NIS-1 and NIS-2 Forms shall be generated and included within the Inservice Inspection Report.

1.7 **Examination Methods**

Examination methods which will be used to satisfy Code examination requirements have been listed for nonexempt Class 1, Class 2, and Class 3 components, as applicable.

Provided in the following is a brief explanation of the examination methods which will be performed to satisfy the Code requirements.

Personnel performing nondestructive examinations will be qualified in accordance with written procedures prepared as required by Paragraph IWA-2300 of Section XI. Methods of examination are also described in the applicable sections of this Inservice Inspection Program.

1.7.1 **Visual Examination Method**

Visual examinations (VT) will be performed in accordance with IWA-2210 of ASME Section XI. IWA-2210 defines the three types of VT examinations as follows:

1.7.1.1 VT-1 examinations are conducted to determine the condition of the part, component or surface examined. The examination shall determine conditions such as cracks, wear, corrosion, erosion, or physical damage on the surfaces of the part or components. This type of examination may be performed by direct or remote methods as defined in IWA-2211.

1.7.1.2 VT-2 examinations are conducted to detect leakage (or abnormal leakage) from pressure-retaining components during system pressure or functional tests as defined in IWA-2212.

1.7.1.3 VT-3 examinations are conducted to determine general mechanical and structural conditions of components and their supports such as the presence of loose parts, debris, or abnormal corrosion products, wear, erosion, corrosion, and the loss of integrity at bolted or welded connections. VT-3 Examinations are also conducted to determine conditions related to operability of mechanical and hydraulic snubbers, and spring devices.

1.7.2 **Surface Examination Method**

1.7.2.1 A surface examination is performed to detect the presence of discontinuities open to the surface of a material. Techniques for surface examination include either magnetic particle (MT) or liquid penetrant (PT) methods. Surface examinations will be conducted as defined in IWA-2220.

1.7.3 **Volumetric Examination Method**

1.7.3.1 A volumetric examination is performed to detect the presence of discontinuities in the volume of a material. Such volumetric examinations include radiographic (RT), ultrasonic (UT), and eddy current (ET). Volumetric examinations will be conducted as defined in IWA-2230.

1.7.3.2 Radiography may be performed by utilizing either x-ray or gamma ray techniques.

1.7.3.3 The UT examinations may be performed by utilizing either manual or mechanized UT (Mech UT) techniques in accordance with Appendix I of Section XI and Regulatory Guide 1.150, Rev. 1 for the Reactor Vessel Examination only.

1.7.3.4 The ET Method will be utilized in the examination of heat exchanger tubing in accordance with Appendix IV of ASME Section XI and USNRC Regulatory Guide 1.83.

1.7.4 **Alternative Examination Methods**

1.7.4.1 Alternative examination methods may be performed to those described in 1.7.1, 1.7.2 and 1.7.3 as allowed in IWA-2240. These may include such things as newly developed techniques, provided that these alternative methods are shown by practical demonstration to be equivalent or superior to those of the specific method to the satisfaction of the Level III NDE Examiner & Authorized Nuclear Inservice Inspector (ANII).

1.7.4.2 Examinations that detect flaws which require evaluation may be supplemented by other examination methods and techniques to determine the character of the flaw.

1.7.5 **Evaluation of Examination Results**

1.7.5.1 The evaluation of nondestructive examination results shall be in accordance with Article IWA-3000 of Section XI. All reportable indications will be subject to comparison with previous data to aid in characterization and determination of origin.

Class 1 and Class 3 components containing relevant conditions will be considered acceptable for continued service providing an analytical evaluation performed demonstrates the component's acceptability and is subsequently examined in accordance with the requirements of IWB-3132.4, IWB-3142.4 and IWB-3144(b). Successive inspections for Class 1 shall comply with the requirements of IWB-2420(b) and (c). For Class 3, successive inspections shall comply with the requirements of IWC-2420(b) and (c).

Class 2 and High Energy Program components containing relevant conditions will be considered acceptable for continued service providing an evaluation performed demonstrates the component's acceptability and is subsequently examined in accordance with the requirements of IWC-3122.4, IWC-3132.3 and IWC-3134(b). For Class 2 and High Energy Program components, successive inspections shall comply with the requirements of IWC-2420(b) and (c).

Class 1, Class 2, Class 3 and High Energy Program Supports containing relevant conditions will be considered acceptable for continued service providing an evaluation or test is performed that demonstrates the component's acceptability and is subsequently examined in accordance with the requirements of IWF-3122.4 and IWC-3134(b). Successive inspections on these supports shall comply with the requirements of IWF-2420(b) and (c).

1.8 **Repair Requirements**

Repairs shall be performed to the requirements specified within Supplement 2 to Appendix B, The Repair, Replacement & Modification (RR&M) Program. This RR&M Program shall apply to Class 1, 2 & 3 pressure boundary piping, components & supports; High Energy Pressure Boundary piping, components & supports; Snubbers & identified Seismic Category I supports.

1.8.1 **Performance of Repair**

Repairs shall be performed in accordance with the requirements of IWA/B/C/D/F-4000 of ASME Section XI, 1986 Edition or later Edition/Addenda that is approved via 10CFR50.55a. Alternatively, repairs may be performed either to the requirements of the original Construction Code, which the component or system was fabricated to, or to later approved editions of the Construction Code, or later approved editions of ASME Section III along with any Code Cases approved via Regulatory Guide 1.147.

1.8.2 **Examination/Test for Repairs**

1.8.2.1 Applicable examination requirements of the Construction Code shall be met. If the repair is performed on an existing weld that requires the complete removal of the original weld metal within that joint before rewelding, the following additional NDE requirements are required:

(a) Pressure retaining components greater than 2 inches in diameter shall require both surface and 100% volumetric examinations to be performed on the new weld.

Or

(b) Pressure retaining components 2 inches or less in diameter shall require a surface examination to be performed on the new weld.

Examinations and testing of snubbers and supports that have been repaired shall be performed in accordance with 5.0 below and Section 9 of this program of this program.

1.8.2.2 The examination shall include the original examination method that detected the flaw, if applicable.

1.8.2.3 Applicable examination requirements of ASME section XI, 1986 Edition shall also be met to serve as a new PSI baseline for future ISI examinations, unless the examination performed under paragraph 1.8.2.1 was conducted under conditions and with equipment and techniques equivalent to those required by Section XI.

1.8.2.4 A hydrostatic test shall be performed in accordance with ASME Section XI, 1986 Edition, unless specifically exempted by Section XI Article IWA-4400, or the Alternate Rules of Incorporated Code Cases or Relief Requests, as applicable..

1.8.3 Surface flaws in Class 1, 2, or 3, bolts, studs, nuts and ligaments may be removed by mechanical means provided the removal of that flaw does not alter the basic configuration of the item. Bolts, studs, and nuts that have flaws that cannot be removed by mechanical means shall be replaced or reported for evaluation as indicated by Section XI, Article IWA-3100.

1.9 **Replacement Requirements**

Replacement requirements, which includes modifications, are applicable to Class 1, 2 and 3 and high energy pressure retaining components and piping systems and their supports, unless specifically exempted by ASME Section XI, 1986 Edition, Article IWA-7400.

1.9.1 **Replacement Performance**

Replacements shall meet the requirements of ASME Section XI, 1986 Edition or a later Edition/Addenda approved via 10CFR50.55a. In addition, replacement items shall meet the requirements of the original Construction Code to which the original part was constructed. The R. E. Ginna Nuclear Power Plant Replacement Program is defined within Supplement 2 to Appendix B.

1.9.1.1 A "Like for Like" replacement is an item that meets the original requirements of the design and procurement documents for the item being replaced and does not require reconciliation, reanalysis or changes to the item's design and technical requirements.

1.9.1.2 An approved equivalent is a replacement that will result in a design or technical change to the original requirements based on reconciliation, re-analysis and/or testing per Paragraph 1.9.2.1.

1.9.2 Alternatively items used for replacement may meet all or portions of the requirements later additions of the Construction Code or Section III, when the construction code was not Section III. In order to use this alternate approach, the following additional requirements apply.

1.9.2.1 Reconcile the requirements affecting the design, fabrication and examination of the replacement with the Design Analysis or Design Criteria or other methods of analysis that demonstrates the item is satisfactory for the specified design and operating conditions.

1.9.2.2 Mechanical interfaces, fits and tolerances that provide satisfactory performance are compatible with the system and component requirements.

1.9.2.3 Materials used are compatible with installation and system requirements.

1.9.2.4 If a replacement is because of a failure of the item being replaced, a design evaluation or analysis shall consider the cause of the failure and its impact on other similar items, and the necessary actions to be taken to preclude recurrence.

1.9.2.5 When welding is to be performed as part of the replacement, the rules of Section IX shall be followed to satisfy the requirements of IWA-7320 and IWF-7000.

1.9.2.6 Items identified in IWA-7400 will be exempt from the requirements of the replacement program.

1.9.3 **Examination/Test**

1.9.3.1 The replacement item shall be examined and pressure tested in accordance with the Construction Code or later Code provided it meets the requirements of 1.9.1 above.

Snubbers shall be examined and tested in accordance with Section 9 of this program.

1.9.3.2 Where the attachment of the non-pressure-retaining item is welded to a pressure boundary, the weld shall be examined in accordance with the requirements or 1.8.2.

1.9.3.3 Applicable examination requirements of ASME Section XI, 1986 Edition, shall also be met to serve as a new PSI baseline for future ISI examinations, unless the examination performed under 1.9.3.1 was conducted under conditions and with equipment and techniques equivalent to those required by ASME Section XI.

1.9.3.4 Replacements installed by mechanical methods shall be pressure tested at nominal operating pressure, or for Class 1 systems, the pressure associated with 100% rated reactor power.

1.9.4 **Reports and Records**

Reports and records to the extent required by the construction code and IWA 7520, as applicable for the replacement, shall be completed for all replacements.

1.10 **System Pressure Testing**

1.10.1 **General Requirements**

1.10.1.1 Pressure testing shall be conducted on all Class 1, 2, and 3 pressure retaining components in accordance with the requirements of Section XI Articles IWA-5000, IWB-5000, IWC-5000, IWD-5000; and Section XI Table
IWB-2500-1 - Examination Category B-P, Table
IWC-2500-1 - Examination Category C-H, and Table
IWD-2500-1 - Examination Category D-A, D-B and D-C.

In addition, "High Energy" Main Steam and Feedwater Piping shall also be pressure tested on these non-class systems in accordance with the rules of IWC-5000.

1.10.1.2 Pressure tests are conducted from normal operating pressure, to a pressure up to 25% over design pressure. The degree of pressurization and the test boundary depends upon the type of pressure test being performed. A visual examination (VT-2 method) is performed in concert with the pressure test on pressure retaining components under test pressure. Specific exceptions from achieving Section XI requirements are detailed in the Relief Request Section of this document.

1.10.2 **Type of Pressure Tests**

The various types of pressure tests which are required during the inspection interval are described in the following:

1.10.2.1 **LEAKAGE PRESSURE TEST**

This test is performed subsequent to refueling outages. The boundary subject to test pressurization and the associated VT-2 examination during a leakage pressure test will extend to the pressure retaining components within the system boundary containing pressurized reactor coolant under the plant mode of normal reactor startup.

1.10.2.2 **FUNCTIONAL PRESSURE TEST**

This test is performed once each inspection period. The boundary subject to test pressurization and the associated VT-2 examination during a system functional pressure test will include only those pressure retaining components within the system boundary pressurized under the test mode required during the performance or a periodic system/component surveillance test.

1.10.2.3 **INSERVICE PRESSURE TEST**

This test is performed once each inspection period. The boundary subject to a test pressurization and the associated VT-2 examination during a system inservice pressure test will include only those pressure retaining components under operating pressure during normal system service.

1.10.2.4 **HYDROSTATIC PRESSURE TEST**

This test is performed once each inspection interval. The boundary subject to test pressurization and the associated VT-2 examination during a system hydrostatic pressure test includes all Class 1, 2, and 3 components and piping.

1.10.2.5 **PNEUMATIC PRESSURE TEST**

This test is limited to Class 2 and 3 systems. The boundary limits subject to test pressurization and the associated VT-2 examination during a system pneumatic pressure test are the same as a hydrostatic pressure test.

1.10.2.6 **REPAIR/REPLACEMENT PRESSURE TESTS**

The boundary subject to test pressurization and the associated VT-2 examination is limited to the portion repaired or replaced, within the Class 1, 2 or 3 boundary. The specific type of pressure test is either a hydrostatic, pneumatic or a test at operating pressure such as the Leakage, Inservice or Functional. The specific type of test to be performed and the exemptions which apply to repair/replacement pressure testing are described in Supplement 2 to Appendix B, the Repair, Replacement & Modification Program.

1.10.3 **Examination Requirements**

1.10.3.1 During the conduct of pressure tests, certified VT-2 examination personnel, using RG&E approved NDE VT-2 examination procedure and the associated recording form, will examine the portions of piping under pressurization. The examination and test boundaries are depicted on controlled color-coded P&ID's. In some cases, the test boundary extends beyond the examination boundary due to valve location and/or check valve flow direction. In general, personnel will examine for evidence of leakage, inoperative leakage collection systems and evidence of corrosion.

1.10.3.2 Insulation removal during the VT-2 examination is not required, however, in accordance with IWA-5242 (a) "systems borated for the purpose of controlling reactivity" shall have insulation removed at bolted connections during conduct of the VT-2 examination. This requirement is only applicable to those VT-2 examinations performed during a hydrostatic pressure test, since Leakage, Functional and Inservice tests are intended to be non-intrusive type tests. At Ginna, this requirement is considered to be applicable to borated lines only in the primary flow path of piping from the boric acid supply and CVCS Charging to the Reactor Vessel and return through CVCS Letdown, and is not applicable to branch lines connected to the primary flow path.

1.10.4 **Test Requirements**

1.10.4.1 **GENERAL**

The contained fluid in the system or fluid added to the system shall serve as the pressurizing or test medium. In steam systems either water or air may be used. Where air is used, the test procedures shall permit the detection and location of through wall leakages in components of the system tested. The temperature of the test medium will be that of the available source unless otherwise specified by the implementing test procedure/document. The test medium will be of a quality which is equal to or better than the system operating medium.

1.10.4.1.1 During conduct of hydrostatic tests, all entrained air will be vented from the system except in the following cases:

a. Atmospheric Storage Tanks
b. 0-15 psi Storage Tanks
c. Class 1 systems where a mixture of steam, water and noncondensible gases are present in a proportion typical of normal startup conditions.
d. Normal Steam Systems

1.10.4.1.2 For Leakage, Functional, Inservice and Hydrostatic tests, the level of system pressure and temperature indicated or recorded by normal operating system instrumentation, or alternatively by test instrumentation is acceptable. For hydrostatic tests, the instrument requirements of IWA-5260 and applicable Code Case N-437 must be met.

1.10.4.2 **LEAKAGE PRESSURE TEST REQUIREMENTS**

The system leakage pressure test shall be conducted at a pressure not less than nominal operating pressure associated with 100% Rated Reactor Power.

The pressure and temperature will be attained at a rate in accordance with the heat-up limitations specified in the Ginna Technical Specifications for the component/piping system being tested.

1.10.4.3 **FUNCTIONAL PRESSURE TEST REQUIREMENTS**

The system functional pressure test is normally performed during performance or a Periodic Surveillance Test. The test is used to establish the test conditions associated with normal system operating pressure and temperature for performance of the system functional pressure test.

1.10.4.4 **INSERVICE PRESSURE TEST REQUIREMENTS**

The operating pressure and temperature during normal system operation is used during performance of this test.

1.10.4.5 **HYDROSTATIC PRESSURE TEST REQUIREMENTS**

1.10.4.5.1 **General**

Code Case N-498 stipulations may be employed on Class 1 and 2 Required Systems in lieu of the 10 year Hydrostatic Test. Hydrostatic test pressure requirements vary among each of the classifications. The minimum test pressure will be maintained for the entire duration of the test, with the exception of tests performed at temperatures greater than 200°F, where the examination phase may be performed at a lower pressure corresponding to 200°F. The test pressure shall not exceed the maximum allowable test pressure of any component within the test boundary.

1.10.4.5.2 The hydrostatic test pressure, including static head, will not exceed 106% of the specified test pressure for the system anywhere within the test boundary.

1.10.4.5.2.1 In cases where the highest and lowest elevations cannot be isolated, and the test pressure including static head, would exceed 106% of the specified test pressure at the lowest point, the test pressure will be reduced.

1.10.4.5.2.2 In cases where the high and low elevations result in unreasonably small differences between the test pressure including static head, and 106% of the specified test pressure, the test pressure will be reduced to accomodate the precision of the test instrument.

1.10.4.5.2.3 The test pressure, as identified in sections 1.10.4.5.2.1 and 1.10.4.5.2.2, will be adjusted such that the test pressure, including static head, does not exceed 106% of the specified test pressure at the lowest point. The resulting pressure at the highest point will be considered acceptable.

1.10.4.5.3 The hydrostatic test boundary will end at the transition between system piping and instrumentation tubing shown on P&ID drawings. When this transition does not occur at an isolation valve, the boundary will be extended to the first isolation valve after the transition.

1.10.4.6 The following sections list the hydrostatic test pressure requirements which will be met for each Code classification:

1.10.4.6.1 Class 1

The system hydrostatic pressure test is conducted at the pressure calculated from the following table based on the test temperature:

Test Temperature, Deg. F.	Test Pressure
100 or less	1.10 P_o
200	1.08 P_o
300	1.06 P_o
400	1.04 P_o
500 or greater	1.02 P_o

"P_o" is the nominal operating pressure corresponding with 100% rated reactor power. Linear interpolation will be used at intermediate test temperatures. Technical Specification heat-up/cool-down limits will be observed.

1.10.4.6.2 **Class 2, 3, and High Energy:**

a. The test pressure will be at least 1.10 times the system pressure for systems with a design temperature of 200°F or less, and at least 1.25 times the system pressure for systems with a design temperature above 200°F. The system pressure will be the lowest pressure setting among the number of safety or relief valves provided for overpressure protection within the boundary of the system to be tested. For systems (or portions of systems) not provided with safety or relief valves, the system design pressure will be substituted for the system pressure.

b. In the case of atmospheric storage tanks, the nominal hydrostatic pressure developed with the tank filled to its design capacity will be acceptable as the test pressure.

c. For 0 to 15 psi storage tanks, the test pressure will be 1.1 times the design pressure of vapor or gas space above liquid level for which overpressure protection is provided by the relief valves. If relief valves are not installed, the test pressure will be equal to 1.1 times the normal operating pressure.

d. For the purpose of the test, open-ended portions of a suction or drain line from a storage tank extending to the first shutoff valve are considered as an extension of the storage tank.

e. For open ended portions of discharge lines beyond the last shutoff valve in nonclosed systems, a test that demonstrates unimpaired flow will be performed in lieu of a system hydrostatic pressure test. Unimpaired flow for Class 2 is defined as an "open flow path" and for Class 3 as "adequate flow during system operation".

1.10.5 **Test Implementation**

1.10.5.1 All pressure testing is implemented using both the VT-2 examination procedure and the specific test procedure for the type of test and portion of system being tested.

1.10.5.2 Applicable Required System Pressure Test Boundaries shall be confirmed prior to examination performance.

1.10.6 **Scheduling**

When using the inspection plan, it should be noted that during a period or refueling outage in which a hydrostatic test is performed on a system or portion(s) of a system, the leakage test (Functional or Inservice) required for that period on the same system or portion of the system, may be deleted from that period or outage.

The hydrostatic test will satisfy the requirements for that leakage test.

2.0 **CLASS 1 PROGRAM PLAN**

2.1 **Basis for Preparation**

2.1.1 Preparation of the Class 1 ISI program plan was based on the requirements of Articles IWB-1000 and IWB-2000 of Section XI. These articles provide rules and guidelines for exemptions, inspection schedules, and examination requirements for Class 1 pressure retaining components and their integral attachments.

2.1.2 As allowed by 10CFR50.55a 2(ii), Class 1 Category B-J weld selection is based upon ASME Section XI '74/Summer '75 Code and does not utilize stress level criteria.

2.2 **Components Subject to Examination**

2.2.1 Based on the requirements of Section XI, Class 1 nonexempt pressure-retaining components and their integral attachments will be subject to examination during the third inspection interval.

2.3 **Extent and Frequency of Examinations**

2.3.1 Class 1 components, as listed in Section 4, Table 1 shall be examined to the extent and frequency required in Table IWB-2500-1 and Figures IWB 2500 through IWB 2500-20 of Section XI.

2.4 **Exemption Criteria**

2.4.1 In accordance with IWB-1220, certain Class 1 components are exempt from examination. The following criteria were applied to exempt components from surface and volumetric examinations in accordance with Section XI :

Exemption Criteria	Code Reference
Piping or 1 inch nominal pipe size (NPS) and smaller, except for steam generator tubing	IWB-1220(b) (1)
Components and their connections in piping of 1 inch NPS and smaller	IWB-1220(b) (2)

2.5 **Examination of Reactor Coolant Pump Flywheels**

The Reactor Coolant Pump Flywheels shall be examined as specified in Section 11 of this program. These examinations shall be scheduled in the Class 1 section of the ISI program plan.

2.6 **Inservice Inspection Program Plan (Supplement 1 to Appendix B)**

This plan provides the examination requirements for Class 1 components per the 1986 Edition of Section XI. These requirements shall be satisfied during the third inspection interval. The plan also shows the results of examinations performed in the previous two intervals.

A detailed description of the contents of the Class 1 Examination Plan can be found in the "Introduction". This immediately precedes the tables and the isometric and component drawings, in the plan. From this plan, an examination schedule is extracted for implementation of the examinations for each outage of the third interval.

3.0 **CLASS 2 PROGRAM PLAN**

3.1 **Basis for Preparation**

3.1.1 Preparation of the Class 2 ISI program plan is based on the requirements of Articles IWC-1000 and IWC-2000 of Section XI. These articles provide rules and guidelines for exemptions, inspection schedule, and examination requirements for Class 2 pressure retaining components and their integral attachments.

3.2 **Components Subject to Examination**

3.2.1 Based on the requirements of Section XI, Class 2, nonexempt pressure-retaining components and their integral attachments will be subject to examination during the third inspection interval.

3.3 **Extent and Frequency of Examinations**

3.3.1 Class 2 components, as listed in Section 4, Table 2, shall be examined to the extent and frequency required in Table IWC 2500-1 and Figures IWC 2500-1 through IWC 2500-13 of Section XI.

3.4 **Exemption Criteria**

IWC-1220 of Section XI provides the exemption criteria for Class 2 components. The following criteria were used to exempt Class 2 components from surface and volumetric examinations in accordance with IWC-1220.

3.4.1 The following components (or parts of components) of Residual Heat Removal (RHR), Emergency Core Cooling (ECC), and Containment Heat Removal (CHR), systems (or portions of systems) are exempt from the volumetric and surface examination requirements of IWC-2500:

(a) vessels, piping, pumps, valves and other components 4 inches NPS and smaller in all systems except in high pressure safety injection systems of pressurized water reactor plants;

(b) vessels, piping, pumps, valves, and other components 1-1/2 inches NPS and smaller in high pressure safety injection systems of pressurized water reactor plants;

(c) component connections 4 inches NPS and smaller (including nozzles, socket fittings, and other connections) in vessels, piping, pumps, valves, and other components of any size in all systems except in high pressure safety injection systems of pressurized water reactor plants;

(d) component connections 1-1/2 inches NPS and smaller (including nozzles, socket fittings and other connections) in vessels, piping, pumps, valves and other components of any size in high pressure safety injection systems of pressurized water reactor plants;

(e) vessels, piping, pumps, valves, other components, and component connections of any size in statically pressurized, passive (i.e., no pumps) safety injection systems of pressurized water reactor plants; and

(f) piping and other components of any size beyond the last shutoff valve in open- ended portions of systems that do not contain water during normal plant operating conditions.

3.4.2 The following components (or parts of components) of systems (or portions of systems) other than RHR, ECC and CHR systems are exempt from the volumetric and surface examination requirements of IWC-2500:

(a) vessels, piping, pumps, valves and other components 4 inches NPS and smaller;

(b) component connections 4 inches NPS and smaller (including nozzles, socket fittings and other connections) in vessels, piping, pumps, valves and other components of any size;

(c) vessels, piping, pumps, valves, other components and component connections of any size in systems or portions of systems that operate (when the system function is required) at a pressure equal to or less than 275 psig and at a temperature equal to or less than 200°F; and

(d) piping and other components of any size beyond the last shutoff valve in open ended portions of systems that do not contain water during normal plant operating conditions.

3.5 **Inservice Inspection Program Plan (Supplement 1 to Appendix B)**

This plan provides the examination requirements for Class 2 components per ASME Section 11, 1986 Edition, no Addenda. These requirements shall be satisfied during the third inspection interval. The plan also shows the results of examinations performed during the previous two intervals.

A detailed description of the contents of the Class 2 Examination Plan can be found in the "Introduction". This immediately precedes the tables and the isometric and components drawings in the plan. From the plan an examination schedule is extracted for implementation of the examinations for each outage of the third interval.

4.0 **CLASS 3 PROGRAM**

4.1 **Basis for Preparation**

4.1.1 Preparation of the Class 3 ISI program was based on the requirements of Articles IWD-1000 and IWD-2000 of Section XI. These articles provide rules and guidelines for exemptions, inspection schedules, and examination requirements for Class 3 pressure retaining components and their integral attachments.

4.2 **Components Subject to Examination**

4.2.1 Based on the requirements of Section XI, Class 3 nonexempt pressure-retaining components integral attachments will be subject to examination during the third inspection interval:

4.2.1.1 Other Class 3 systems are not subject to the examination or System Pressure Testing requirements of ASME Section XI because they do not meet the system function requirements of Examination Categories D-A, D-B and D-C, where:

D-A Systems in support of Reactor Shutdown Function

D-B Systems in support of Emergency Core Cooling, Containment Heat Removal, Atmosphere Clean-up and Reactor Residual Heat Removal.

D-C Systems in support of Residual Heat Removal From Spent Fuel Storage Pool.

4.3 **Extent and Frequency of Examinations**

4.3.1 Class 3 components, as listed in Table 3 shall be examined to the extent and frequency required in Table IWD 2500-1 and Figure IWD 2500-1 of Section XI.

4.3.2 Integrally welded attachments shall be examined, utilizing the VT-3 method, once during the Interval on all Class 3 Component Supports. The associated Class 3 Categories have been grouped since the methods of examination and their Requirements are identical.

4.4 **Exemption Criteria**

4.4.1 In accordance with IWD-1220, certain Class 3 components are exempt from examination. The following exemption criteria was applied to Class 3 systems as specified in IWD-1220:

Exemption Criteria	Section XI Reference
Integral attachments of supports and restraints to components that are 4 inches NPS and smaller within the system boundaries of Examination Categories D-A, D-B, and D-C shall be exempt from the VT-3 examination, except for Auxiliary Feedwater. Exemption for the Auxiliary Feedwater System is 1 inch and less.	IWD-1220.1
Integral attachments of supports and restraints to components exceeding 4" nominal pipe size may be exempted from the visual examination VT-3 of Table IWD-2500-1 provided:	IWD-1220.2

(a) the components are located in systems (or portions of systems) whose function is not required in support of reactor residual heat removal, containment heat removal, and emergency core cooling; and

(b) The components operate at a pressure of 275 psig or less and at a temperature or 200 degrees F or less.

4.5 **Inservice Inspection Program Plan (Supplement 1 to Appendix B)**

This plan provides the examination requirements for Class 3 IWD components per the 1986 Edition of Section XI. These requirements shall be satisfied during the third inspection interval. The plan also shows the results of examinations performed during the previous two intervals.

A detailed description of the contents of the Class 3 Examination Plan can be found in the "Introduction". This immediately precedes the tables and the isometric and component drawings in the plan. From the plan an examination schedule is extracted for implementation of the examinations for each outage of the third interval.

5.0 **CLASS 1, CLASS 2, AND CLASS 3 COMPONENT SUPPORTS**

5.1 **Basis for Preparation**

5.1.1 Preparation of the component support ISI Program was based on the requirements of Articles IWF-1000 and IWF-2000 of Section XI. These articles provide rules and guidelines for exemptions, inspection schedules, and examination requirements for Class 1, Class 2, and Class 3 component supports. Inservice test requirements and VT-3 inspection requirements for snubbers shall be conducted in accordance with Section 9 of this program which implements the requirements of Article IWF-2000.

5.2 **Component Supports Subject to Examination**

5.2.1 Based on the requirements of Section XI, nonexempt component supports for the Class 1, Class 2 and Class 3 systems identified in Sections 2.2, 3.2 and 4.2 of this plan will be subject to examination during the third inspection interval. The component supports requiring examination shall be as follows:

5.2.1.1 **Plate and Shell-Type Supports**

Supports which are fabricated from plate and shell elements, such as vessel skirts and saddles, and are normally subjected to a biaxial stress.

5.2.1.2 **Linear-Type Supports**

Supports acting under essentially a single component or direct stress. Such elements may also be subjected to shear stress. Examples of such structural elements are: tension and compression struts; beams and columns subjected to bending; trusses; frames; arches; rings; and cables.

5.2.1.3 **Component Standard Supports**

A support assembly consisting of one or more generally mass-produced units usually referred to as catalog items. Examples of such items are shown in Figure IWF-1210-1 of Section XI.

5.3 **Extent and Frequency of Examination**

5.3.1 Component supports selected for examination shall be those components required to be examined under the requirements of 2.3, 3.3 and 4.3, IWF-2500. The inservice test requirements of Article IWF-5000 shall be satisfied by the requirements of Section 9 of this program.

5.3.1.1 Class 3 component supports containing integrally welded attachments shall be examined, utilizing the VT-3 method, once during the Interval. The associated IWF categories have been grouped since the methods of examination and associated Requirements are identical.

5.3.2 In addition, snubbers shall be functionally tested at the frequency required by Section 9 of this program.

5.3.3 On piping systems where a piping seismic analysis boundary is beyond the safety class boundary, the component supports within the portion between those two boundaries shall be examined. The extent of these examinations shall be consistent with the examination requirements of that safety class system.

5.3.4 High Energy Piping Component Supports shall be examined to IWC-2500 Category C-C and to IWF-2500 in an Augmented Program.

5.4 **Exemptions**

5.4.1 ASME Section XI, 1986 Edition, no Addenda, does not contain defined exemption criteria for component supports.

5.4.2 Exemption criteria specified in IWB, IWC and IWD have been used.

5.5 **Inservice Inspection Program Plan (Supplement 1 to Appendix B)**

This plan provides that Class 1, Class 2 and Class 3 component supports shall be incorporated into the appropriate Class 1, Class 2 or Class 3 section of the examination plan. These requirements shall be satisfied during the third inspection interval. The plan also shows the results of examinations performed in the previous two intervals.

1.0 Introduction:

1.1 General:

In accordance with 10CFR50.55a(g) (5) (iv), Rochester Gas & Electric has requested relief from those ASME Section XI requirements that have been determined impractical for certain areas. This section identifies each active and owner withdrawn Relief Request submitted to the Nuclear Regulatory Commission for their consideration and acceptance.

Table 1 provides information in a summary format for both active and withdrawn relief requests applicable to R. E. Ginna Nuclear Power Plant.

Following Table 1, detailed Relief Requests are listed. These provide information on the component for which relief is requested, ASME requirements, proposed alternate method, and other pertinent information, as needed. Existing active relief requests can be withdrawn by the owner at any time. Additional relief requests will be submitted to the Nuclear Regulatory Commission, as appropriate.

TABLE 1

SUMMARY OF RELIEF REQUESTS

Relief Request Number	Section XI Reference	Component	ASME Requirement for Which Relief is Requested	Reason for Relief Request	Proposed Alternate Examination
1	IWB-2500-1 Cat. B-A	RPV Shell to Flange Weld	Volumetric Examination during two different periods.	To perform all examinations associated with the Shell-to Flange during the same period.	Perform all examinations associated with the Shell-to-Flange at or near the end of the interval.
2	IWB-2500-1 Cat. B-D	RPV Nozzle-to-Vessel Welds	Volumetric Examination during two different periods.	To perform all examinations associated with the Nozzle-to-Vessel welds during the same period.	Perform all examinations associated with the Nozzle-to-Vessel welds at or near the end of the interval.
3 (*)	IWA-1400 Inspection	Authorized Inspection Agency.	Use of "Authorized Agency"	New York State has not endorsed ASME Codes and does not have an Authorized Inspection Agency.	Use R. E. Ginna Quality Assurance Program.
4 (*)	IWB-2500-1 Cat. B-L-1 B-L-2	Reactor Coolant Pump Case Welds and Intervals.	Volumetric Examination of case welds and visual of internals.	Pump material and configuration.	Hydrostatic test, surface and visual exams of outside surfaces.
5	IWB-2500-1 Cat. B-M-2	Class 1 Valves Greater than NPS 4.	Visual Examination of valve internals.	Excessive radiation exposure and historical reliability of valves.	Examine valve internals when disassembled for maintenance.
6 (*)	IWD-2500-1 Cat. D-B	Radioactive Waste Holdup Tank.	Visual Examination of hydrostatic pressure.	Tank will be rendered inoperative during tests.	Perform visual examination each period at normal operating pressure.
7	IWC-5222(a)	Charging Pumps	Visual Examination at 3420 psig Hydrostatic Pressure.	Pumps have maximum pressure limit on the seals.	Perform Hydro Test and visual at 2400 psig.
8	IWC-5222(a)	Valves PCV 430 and PCV 431C.	Visual Examination at Hydrostatic Pressure.	Valve diaphragms cannot withstand Test Pressure.	Hydrostatic Test to Flex Connection operate diaphragm per valve test requirements and perform inservice visual examination once per period.
9	IWC-5222(a)	Secondary Side of steam generator and associated main steam piping.	Visual Examination at Hydrostatic Pressure.	RG&E adopted pressure differential limitation of 800 psig to prevent primary side tube sheet cladding separation.	Hydrostatic Test at 1.10 times instead of 1.25 Psv setting and perform visual examination.
10 (*)	IWD-5223(a)	Standby Auxiliary Pump Recircul. Line from AOV 9710A, AOV 9710B and their associated downstream flow orifices.	Visual Examination at Hydrostatic Pressure.	Pressure Reduction Flow Orifice requires removal and blank-off. System piping does not provide isolation to condensate supply tank. Significant tank reduction would be required for removal and is considered Impractical.	Perform Inservice Visual Examination once per period.

(*) = WITHDRAWN

TABLE 1 (Con't)

SUMMARY OF RELIEF REQUESTS

Relief Request Number	Component	Section XI Reference	ASME Requirement for Which Relief is Requested	Reason for Relief Request	Proposed Alternate Examination
11 (*)	IWD-5223(a)	Boric Acid Filter and associated piping between Valves 347, 348A and 349A.	Visual Examination at Hydrostatic Pressure.	Test Pressure required will exceed limits for safe working pressure on Boric Acid Filter Housing Flange Gaskets.	Perform Inservice Visual Examination once per period.
12.1	IWD-5223(a)	Air Start for Diesel Generator including Receiver Tanks and Piping.	Visual Examination at Hydrostatic Pressure.	Air Start Pressure Test would require termination prior to reaching engine skid to preclude air to air start motors, leaving portion of piping untestable.	Perform Inservice Examination once per period and once each quarter a pressure decay test performed on air receiver.
12.2	IWD-5223(a)	Fuel Oil Transfer Pumps and associated piping to terminals at Oil Storage Tank.	Visual Examination at Hydrostatic Pressure.	Requires isolation of Deisel Oil Storage and Dry Tank where no means of isolation is provided at Transfer pump discharge piping with tanks vented to atmosphere.	Perform system Functional Testing with associated Visual Examination once per period.
12.3	IWD-5223(a)	Jacket Cooling Water System and associated piping to terminals at Water Expansion Tanks.	Visual Examination at Hydrostatic Pressure.	Cooling Water Expansion Tank vented to atmosphere requiring isolation with vast piping involved will be unable to pressurize.	Perform System Functional Testing with associated Visual Examination once per period.
13	IWD-5222(a)	Non-ISI classified systems penetrating primary containment.	Visual Examination at Hydrostatic Pressure.	Requirements should be based on the containment system design not the associated process system design requirement.	Test in accordance with 10CFR50 Appendix J with the safety function the line performs in accordance with Technical Specifications, surveillance requirements, in addition, perform Inservice Visual Examination on exposed portions.
14	IWD-5223(a)	Class 3 Portion of the service water system	Visual Examination at Hydrostatic Pressure.	Hydrostatic Testing is impractical due to system design that is open-ended and employing butterfly valves that were not designed to provide a leaktight boundary.	Perform Inservice Visual Examination once per period.
15 (*)	IWC-2500 Cat. C-F-1 & C-F-2 Items C5.10 and C5.50 resp.	Class 2 Piping Welds < 3/8" nominal wall thickness for piping > NPS4.	Piping Welds < 3/8" nominal wall thickness do not require surface and volumetric examinations.	At a minimum terminal connection welds of identified exempted welds per Items C5.10 and C5.50 of Table IWC-2500 should be examined.	Surface and Volumetric Examinations on terminal connection welds of identified exempted welds shall be performed to the requirements of IWC-2500-1.
16 (*)	IWB-2500 Cat. B-K-1 Item B10.10 and IWC-2500, Cat. C-C, Item C3.20	Class 1 & 2 Integral Attachment on piping specifically support Attachments.	Volumetric or surface examination on Class 1 Integral Attachments is required on Base Attachment ≥ 5/8". Class 2 requires a surface examination on Base Attachments ≥ 3/4".	Integral Attachments on Class 1 & 2 support attachments should have a surface examination to insure safety and system integrity.	On Class 1 & 2 Integral Attachments, a surface examination shall be performed on support attachments to IWB and IWC-2500 requirements.

(*) = WITHDRAWN

RELIEF REQUEST NO. 1

DEFER RPV EXAMINATIONS TO END OF INTERVAL

I. Components for Which Relief is Requested:

The component for which relief is requested is the Reactor Pressure Vessel (RPV) Shell-to-Flange Weld.

II. ASME Requirement from Which Relief is Requested:

Table IWB-2500-1, Examination Category B-A, requires that the RPV Shell-to-Flange weld be examined during the first and third periods in conjunction with the nozzle examinations, with at least 50 percent examined during the first period and the remainder by the end of the third period. The required Shell-to-Flange examination is impractical if performed during the periods specified as it can only be accomplished from the flange surface.

III. Proposed Alternate Method:

During the first two inspection intervals, 100 percent of the accessible length of the RPV welds including the Shell-to-Flange weld were examined at or near the end of the interval when the entire examination could be performed from both the flange surface and the vessel wall. This is a more practical approach in that the required examinations from both surfaces can be performed at the same time. During the third interval, 100 percent of the accessible length of all RPV welds including the shell-to-flange weld will be performed at or near the end of the interval when all the required examinations can be performed at the same time.

RELIEF REQUEST NO. 2

I. Components for Which Relief is Requested:

The components for which relief is requested are the RPV Nozzle-to-Vessel welds and Nozzle Inside Radius Sections.

II. ASME Requirements for Which Relief is Requested:

Table IWB-2500-1, Examination Category B-D, Item B3.90, Nozzle-to-Vessel welds allows partial deferral. "If examinations are conducted from inside the component and the nozzle weld is examined by straight beam ultrasonic method from the nozzle bore, the remaining examinations required to be conducted from the shell inside diameter may be performed at or near the end of each interval."

Examination Category B-D, Item 3.100 Nozzle Inside Radius Sections, does not allow deferral to the end of the interval, and requires (footnote 2) 25 percent to 50 percent of the nozzles to be examined during the first period, with the remainder to be examined at the end of the interval.

Examinations from the nozzle bore and nozzle inside radius examinations can only be performed on two (outlets) of the six major nozzles without removal of the core barrel. The mechanized examination of the two accessible nozzle and inside radius sections is quite expensive, and the nozzle-to-vessel examination is only a partial examination from the nozzle bore. From a technical position considering the progress which is being made in ultrasonic examination equipment and techniques and for the correlation of data obtained from the bore with that obtained from the shell, it is highly desirable to perform both examinations at the same time.

III. Proposed Alternate Method:

Rochester Gas & Electric (RG&E) proposes to perform both nozzle-to-vessel examinations (from the nozzle bore and from the shell inside diameter) at or near the end of the interval. The nozzle inside radius examinations will also be performed at this time. This more practical approach will allow all the required examinations to be performed at the same time on all the nozzles and nozzle inside radii.

(WITHDRAWN)

RELIEF REQUEST NO. 3

I. Examination Requirement for Which Relief is Requested:

The ASME Boiler and Pressure Vessel Code, Section XI, 1986 Edition, IWA-1400(f), requires an arrangement with an Authorized Inspection Agency to provide inspection services. In addition, the Code requires that certain administrative functions be performed by the "Enforcement Authority" and "Authorized Nuclear Inservice Inspector".

II. Proposed Alternative:

Ginna Station is located in the state of New York. This state has not endorsed ASME Codes and therefore does not provide administrative organization and controls such as "Enforcement Authority", "Authorized Nuclear Inservice Inspector" and "Reporting Systems". However, Ginna Station's Quality Assurance Program does provide equivalent administrative control. Therefore, RG&E requests that Ginna's Station Quality Assurance Program be used in lieu of Code administrative functions.

Rochester Gas & Electric's program for the inservice inspection, governed by the R. E. Ginna Station Quality Assurance Manual, contains the requirements and responsibilities for implementation of the program and procedures. The procedures have been prepared and approved by the responsible organizations within Rochester Gas & Electric (e.g., Ginna Station, Engineering, Materials Engineering and Inspection Services, Electric Meter and Laboratory and Purchasing).

Approved procedures will be implemented to control the standards for examination evaluation. These procedures include the identifications of the organization performing the inspection, description of the method of inspection to be used, acceptance and rejection criteria, and requirements for providing evidence of completion and certification of the inspection activity.

(WITHDRAWN)

RELIEF REQUEST NO. 3 (Con't)

In addition, procedures are developed by Ginna Station to prescribe the disposition of nonconformances. The procedures implemented for the repairs, the retest procedures and the test results will be reviewed by the Plant Operating Review Committee. The members of this committee include technically qualified staff personnel.

Examination techniques have been established in accordance with written requirements and incorporated into written procedures. qualifications for nondestructive test personnel are in compliance with Regulatory Guide 1.58, "Qualification of Nuclear Power Plant Inspection, Examination and Testing Personnel."

Records and reports of the inservice inspection will be developed and maintained by Rochester Gas and Electric and include such items as examination plans and schedules, examination of results and corrective actions.

The functions of the authorized nuclear inservice inspector, namely their review and verification of inservice examinations, personnel qualification and equipment certification during the annual outages at Ginna Station will be performed by personnel of the Hartford Steam Boiler Inspection and Insurance Company. The qualifications of the inspectors, inspections specialists and inspection agency are in compliance with the Code.

(WITHDRAWN)

RELIEF REQUEST NO. 4

I. Components for Which Relief is Requested:

Each of the 27.5 inch diameter recirculation loops at R.E. Ginna has a Class 1 Reactor Coolant Pump. The function of these two pumps is to provide forced circulation through the RPV core during normal reactor operation.

II. Code Requirement for Which Relief is Requested:

Table IWB-2500-1, Examination Categories B-L-1 and B-L-2 require volumetric examination of casing welds and visual examination of internal pressure boundary surfaces of one pump case in each of the pump groups performing similar system functions each inspection interval. These examinations are impractical for the reactor coolant pumps at Ginna Station and relief is, therefore, requested.

A. Supporting Information

1. The two reactor coolant pumps (RCP) for R.E. Ginna are Westinghouse Model 93 pumps. Each pump casing is fabricated by welding four stainless steel (5A351 CF8) castings together. Thus, there are 3 circumferential pressure-retaining welds that are to be volumetrically inspected in accordance with Category B-L-1.

2. The unsuitability of ultrasonic examination was demonstrated during the "A" reactor coolant pump examination in 1980. An attempt was made to determine the wall thicknesses using ultrasonic examination, the casing welds must be inspected using the miniature linear accelerator (MINAC).

3. Radiographic examination using the MINAC was performed on the R. E. Ginna "A" RCP during the Spring 1981 refueling outage. In addition, the same type of examination has been performed at several other sites.

(WITHDRAWN)

RELIEF REQUEST NO. 4 (Con't)

This examination was performed by placing the MINAC inside the pump casing and placing the film on the outside of the pump. To perform the examination, the pump was completely disassembled.

Disassembly to this extent is far beyond any disassembly expected for this examination. Also, insulation on the casing exterior was removed for film placement.

Additionally, the pump bowl must be dry for installation of the MINAC. Therefore, all fuel assemblies were removed from the reactor vessel and the vessel water level lowered to below the nozzles. Complete disassembly of the pump was also required to conduct the VT-1 examination in accordance with Category B-L-2.

4. No problems have been found with the welds at R. E. Ginna or other sites. Additionally, no problems have been found during the Category B-L-2 visual examination. The visual examination was conducted at R. E. Ginna by using the video camera on the MINAC.

   The whole body exposure to personnel during the Spring 1981 directly attributable to the RCP "A" examinations 93,067 millirem. This does not include the dose received during the complete core unload to get the plant in condition for the RCP disassembly.

5. The nuclear industry has been successfully applying leak-before-break concepts to primary loop and Class 1 auxiliary piping systems of commercial nuclear power plants. Currently, the analyses supporting such concepts comes under the review of the Nuclear Regulatory Commission by General Design Criteria-4 (GDC-4).

(WITHDRAWN)

RELIEF REQUEST NO. 4 (Con't)

There are eight different models of RCP's in Westinghouse-type PWRs. Model 93 methodology used in the analyses is consistent with that recommended in NUREG 1061, Vol. 3 and GDC-4. A finite element stress analysis model for the Model 93 pump was developed.

The RCP casings are cast stainless steel. The chemistries of each heat of material used in the pumps were used to determine the fracture toughness. The phenomenon of thermal aging was addressed.

The program successfully demonstrates that leak-before-break analyses are applicable to all primary pump casings of all Westinghouse design PWRs for which the screening loads are reasonably applicable and the fracture toughness are known.

6. We believe that performing a volumetric examination of the Ginna Station Unit 1 RCP casing welds and a visual examination of the interior pressure retaining surface of one pump during the third 10-year inspection period does not provide an increase in safety and expected radiation exposure. The following items have been considered:

   a. Visual examination (VT-2) of the exterior of all pumps during the hydrostatic pressure test required by Table IWB 2500-1 Category B-P.

   b. Perform a Visual examination (VT-1) of the external surfaces of the welds of one pump casing.

   c. Perform a visual examination (VT-3) of the internal surfaces each time pump disassembly is required for maintenance.

(WITHDRAWN)

RELIEF REQUEST NO. 4 (Con't)

d. Perform an evaluation to demonstrate the safety and serviceability of the pump casing. The evaluation will include:

(i) Establishing material properties including fracture toughness values.

(ii) Performing a stress analysis of the structure.

(iii) Reviewing of the operating history of the structure.

(iv) Selection of locations for postulating flaws.

(v) Determination of a flaw size resulting in the detectable leak rate

(vi) Establishing the stability of the selected flaw.

(vii) Demonstration that a postulated through-wall flaw which yields detectable leakage remains stable for all design loadings, with a margin of 2 on flaw size.

NOTE: In making this assessment, thermal aging embrittlement and any other processes which may degrade the properties of the pump casing during service will be considered.

RELIEF REQUEST NO. 5

I. Components for Which Relief is Requested:

Class 1 valves requiring valve body internal VT examination.

Size (In.)	Valve No.	MFG/Type	Line No.
10	842A	Darling/Check	10A-SI2-1502-A
10	842B	Darling/Check	10A-SI2-2501-B
10	867A	Darling/Check	10A-SI2-2501-A
10	867B	Darling/Check	10A-SI2-2501-B
10	700	Velan/Gate	10A-RC02501-A
10	701	Velan/Gate	10A-RC0-2501-A
10	720	Velan/Gate	10A-RC0-2501-B
10	721	Velan/Gate	10A-RC0-2501-B
6	853A	Velan/Check	6A-RC-2501-A
6	853B	Velan/Check	6A-RC-2501-B
6	852A	Velan/Gate	6A-RC-2501-A
6	852B	Velan/Gate	6A-RC-2501-B

II. ASME Requirement for Which Relief is Requested

Table IWB-2500-1, Examination Category B-M-2, requires an internal VT-3 examination on at least one valve within each group of valves that are of the same size, constructional design (such as globe, gate or check valves) and manufacturing method, that perform similar functions in the system. This relief request is based on the following points:

1. to complete the subject examination, unnecessary expenditures of man-hours and manrem are required with essentially no compensating increase in plant safety, and

RELIEF REQUEST NO. 5 (Con't)

2. the structural integrity afforded by valve casing material utilized will not significantly degrade over the lifetime of the valve.

Based on data compiled from a plant similar in age and design to Ginna Station, it is expected that approximately 100 manhours and 5 manrem exposure would be required to disassemble, inspect, and reassemble these vales. Performing this visual examination under such adverse conditions, high doses rate (30-40 R/hr), and poor as-cast surface conditions, realistically provides little additional information as to the valve's casing integrity.

The valves material, a high-strength cast stainless steel (ASTM A351-CF8), is widely used in the nuclear industry and has performed extremely well. The presence of some delta ferrite (typically 5% or more) substantially increases resistance to intergranular stress corrosion cracking. The delta ferrite also helps the material to resist pitting corrosion in chloride containing environments.

RG&E feels that adequate safety margins are inherent in the basic valve design and that the public's health and safety will not be adversely affected by not performing a visual examination of the valve internal pressure boundary surfaces. Additionally, this visual examination adds little or no value to the overall safety of the plant and subjects plant personnel to unnecessary radiation exposure. Therefore, a request for relief from this requirement is sought.

III. Proposed Alternative Method:

As stated above, RG&E does not believe that the visual examination required each ten-year interval is warranted. However, as standard maintenance practice dictates, when these valves are disassembled for maintenance purposes, a visual examination of the internals and internal pressure boundary surfaces will be performed, to the extent practical.

(WITHDRAWN)

RELIEF REQUEST NO. 6

I. Component for Which Relief is Requested:

The radioactive waste hold-up tank in the waste disposal system provides a means of storing contaminated water that has been used in the operation of the nuclear power plant. The waste disposal system and waste hold-up tank may be required to function in all modes of reactor operation including cold shutdown and refueling.

II. ASME Requirement for Which Relief is Requested:

Table IWD 2500-1, Examination Category D-B, Item No. D2.10, requires VT-2 examination of the waste hold-up tank at hydrostatic testing levels (at least 1.10 system pressure) during each interval as well as VT-2 examinations at nominal operating pressure during each period.

The design of the waste disposal system is such that contaminated water is stored in the waste holdup tank until such time as the level of contamination is below the limits for discharge. At this time the holdup tanks may be reavailable for use by emptying the stored liquid.

Several important systems within the chemical volume and control system drain into the waste disposal system hold-up tanks. These are the volume and control tank drains, reactor coolant letdown system, reactor coolant drain tank discharge, and the demineralizer system drains.

If the tank was to be hydrostatically tested by filling it with water and pressurizing to 1.10 system pressure, the hold-up tank would be rendered useless. The plant would then be potentially put into an unsafe condition for any abnormal plant function and if startup occurred without a holdup tank being available.

(WITHDRAWN)

RELIEF REQUEST NO. 6 (Con't)

Since this hold-up tank constantly stores liquid, any degradation of the tank material would show up prior to it becoming a problem. RG&E believes that hydrostatically testing the rad-waste hold-up tank puts Ginna's plant in an unsafe condition and therefore a request for relief from this requirement is sought.

III. Proposed Alternative Method:

A Visual VT-2 examination shall be performed once every period with the system at normal operating pressure to verify continued structural integrity.

RELIEF REQUEST NO.7

I. Components for which Relief is Requested:

CVCS, Three Charging Pumps and Discharge Piping to Discharge Isolation Valves.

II. ASME Requirements for which Relief is Requested:

IWC-5222(a) System Hydrostatic Test; The system hydrostatic test pressure shall be at least 1.10 times the system pressure Psv for systems with Design Temperature of 200°F (93C) or less, and at least 1.25 times the system pressure Psv for systems with Design Temperature above 200°F (93C). The system pressure Psv shall be the lowest pressure setting among the number of safety or relief valves provided for overpressure protection within the boundary of the system to be tested. This corresponds to a test pressure of 3420 psig.

The charging pumps have a minimum hydrostatic test pressure limitation on the seals of 2400 psig, as specified by the pump manufacturer. As a result, the pumps and associated discharge piping to the first isolation valves cannot be tested to the required Code Test Pressure.

III. Proposed Alternate Method:

During the hydrostatic test and associated VT-2 examination, the charging pumps and associated discharge piping to the first isolation valves will be tested at a pressure of 2400 psig.

RELIEF REQUEST NO. 8

I. Components for Which Relief is Requested:

RCS Overpressure Protection Nitrogen Accumulator System Valves PCV 430 and PCV 431C

II. ASME Requirements for Which Relief is Requested:

IWC-5222(a) System Hydrostatic Test; The system hydrostatic test pressure shall be at least 1.10 times the system pressure Psv for systems with Design Temperature of 200°F (93C) or less, and at least 1.25 times the system pressure Psv for systems with Design Temperature above 200°F (93C). The system pressure Psv shall be the lowest pressure setting among the number of safety or relief valves provided for overpressure protection within the boundary of the system to be tested. This corresponds to a test pressure of 137.5 psig.

The diaphragms in the operators of the subject valves are only designed to withstand a maximum pressure of 105 psig, and therefore cannot be tested to the required Code test pressure.

III. Proposed Alternate Method:

The RCS overpressure nitrogen accumulator system will be tested to the Code requirements up to the flex connection to the valve operator. Operability of the diaphragm and operator is verified by valve testing requirements. In addition, an inservice pressure test at operating pressure will be performed once each inspection period on the piping, including the diaphragm.

RELIEF REQUEST NO. 9

I. Components for Which Relief is Requested:

Main Steam Secondary Side of Steam Generator and Downstream Piping to Class Boundary.

ASME Requirement from Which Relief is Requested:

IWC-5222(a) System Hydrostatic Test; The system hydrostatic test pressure shall be at least 1.10 times the system pressure Psv for systems with Design Temperature of 200°F (93C) or less, and at least 1.25 times the system pressure Psv for systems with Design Temperature above 200°F (93C). The system pressure Psv shall be the lowest pressure setting among the number of safety or relief valves provided for overpressure protection within the boundary of the system to be tested. Since the design temperature of the Main Steam system is greater than 200°F, the test pressure is required to be 1.25 times Psv, or 1356 psig.

A pressure differential limitation of 800 psig between the primary and secondary side of the Steam Generator has been adopted. This was established early in plant life due to the experiences of some plants with primary side tube sheet cladding separation. To maintain this 800 psig differential, and the required pressure on the secondary side, the primary system must be heated up to a minimum of 160°F which would result in a problem with heat balance and a potential operational problem during implementation of the test procedure. The administrative controls necessary to assure a proper and safe test and the complexity required for the test procedure result in a situation that should be minimized.

In addition to the Section XI volumetric and surfaces examination requirements, the piping is part of the augmented inspection program since it falls within the high energy break criteria.

RELIEF REQUEST NO. 9 (con't)

A letter was submitted to Dennis L. Ziemann. Chief Operating Reactor Branch #2, USNRC, Dated: November 8, 1979, requesting relief.

Subject: System Pressure Test Restriction for Steam Generator and associated Feedwater and Main Steam piping, R.E. Ginna Nuclear Power Plant #1, Docket No. 50-244.

III. Proposed Alternate Method:

Test the secondary side of the Steam Generator and associated Main Steam piping at a pressure of 1194 psig, which corresponds to 1.10 times the Psv setting.

These components are inside containment and any significant leakage would be detected by various leakage monitoring systems during plant operation.

(WITHDRAWN)

RELIEF REQUEST NO. 10

I. Component for Which Relief is Requested:

Feedwater, Standby Auxiliary Pump recirculation line between AOV 9710A, AOV 9710B and their associated downstream flow orifices.

I. ASME Requirement from Which Relief is Requested:

IWD-5223(a) System Hydrostatic Test; The system hydrostatic test pressure shall be at least 1.10 times the system pressure Psv for systems with Design Temperature of 200°F (93C) or less, and at least 1.25 times the system pressure Psv for systems with Design Temperature above 200°F (93C). The system pressure Psv shall be the lowest pressure setting among the number of safety or relief valves provided for overpressure protection within the boundary of the system to be tested. For systems (or portions of systems) not provided with safety or relief valves, the system design pressure Pd shall be substituted for Psv.

In order to hydrotest this piping to Section XI requirements, the pressure reducing flow orifices downstream of AOV 9710A & B would require removal and blank flanges installed. System piping does not provide an isolation valve between the orifices and the Condensate Supply Tank. A significant reduction in tank level would be required to facilitate orifice removal, which is considered to be impractical.

II. Proposed Alternate Method:

The Class 3 portion of this piping shall be VT-2 examined at operational discharge pressure during functional testing which is performed once each period.

(WITHDRAWN)

RELIEF REQUEST NO. 11

I. Component for Which Relief is Requested:

CVCS, Boric Acid Filter (CSFLBA) and all piping between valves 347, 348A and 349A.

I. ASME Requirement from Which Relief is Requested:

IWD-5223 (a) System Hydrostatic Test: The system hydrostatic test pressure shall be at least 1.10 times the system pressure Psv for systems with Design Temperature of 200°F (93C) or less, and at least 1.25 times the system pressure Psv for systems with Design Temperature above 200°F (93C). The system pressure Psv shall be the lowest pressure setting among the number of safety or relief valves provided for overpressure protection within the boundary of the system to be tested. For systems (or portions of systems) not provided with safety or relief valves, the system design pressure Pd shall be substituted for Psv.

The hydrostatic test pressure necessary to satisfy Section XI requirements will exceed the limits for the safe working pressure on the Boric Acid Filter housing flange gaskets.

II. Proposed Alternate Method:

The Boric Acid Filter and associated piping shall be VT-2 examined, at full operational pressure during inservice testing which shall be performed once each period.

RELIEF REQUEST NO. 12

I. Component for Which Relief is Requested;

Emergency Diesel Generation:

1. Starting Air including receiver tanks and associated piping.
2. Fuel Oil Transfer pumps, suction and discharge including miscellaneous lines terminating at oil storage tanks.
3. Jacket Cooling Water system including miscellaneous line terminating at cooling water expansion tanks.

II. ASME Requirement from Which Relief is Requested:

IWD-5223(a) System Hydrostatic Test; The system hydrostatic test pressure shall be at least 1.10 times the system pressure Psv for systems with Design Temperature of 200°F (93C) or less, and at least 1.25 times the system pressure Psv for systems with Design Temperature above 200°F (93C). The system pressure Psv shall be the lowest pressure setting among the number of safety or relief valves provided for overpressure protection within the boundary of the system to be tested. For systems (or portions of systems) not provided with safety or relief valves, the system design pressure Pd shall be substituted for Psv.

Only portions of the piping associated with the components identified above are capable of being pressure tested.

The Air Start System pressure test would require termination prior to reaching the engine skid to preclude administrating air to the Air Start Motors. This would leave that portion of piping between the Air Start Motors to the first isolation, prior to reaching the engine skid, untestable.

RELIEF REQUEST NO. 12 (Con't)

The Diesel Fuel Oil Transfer system would require flange connection disassembly and the installation of blind flanges to isolate the Diesel Oil Storage Tank, which is vented to atmosphere, and the Day Tank where no means is provided to isolate the transfer pump discharge piping at a point close to the day tank. Additionally, the overflow piping from the day tank to the storage tank, which is identified as Class 3, has no isolation valves installed and is vented to the atmosphere.

The Jacket Cooling Water System would require isolating the Cooling Water Expansion Tank, due to vents to the atmosphere, which would include most of the piping subject to pressure testing. Due to the amount of piping within the class boundary which is unable to be pressurized, testing in accordance with Section XI requirements would not prove system integrity over and above the existing Surveillance Inservice and Functional Testing.

II. Proposed Alternate Method:

Inservice Testing shall be performed on the Air Start System at least once each period in accordance with the requirements of Section XI. Additionally, once each quarter a pressure decay test shall be performed on the air receiver to verify check valve operability in the reverse direction for the air receiver inlet check.

System Functional Testing shall be performed at least once each period on the Diesel Fuel Oil Transfer and Jacket Cooling Water Systems in accordance with the requirements of Section XI.

In addition to the testing discussed above, Technical Specifications 6.4.1 requires surveillance testing to be performed on a monthly basis. Such as, verifying operability of the fuel oil transfer pumps and verifying that the diesel starts from normal standby conditions.

RELIEF REQUEST NO. 13

I. Components for Which Relief is Requested:

Non-ISI classified systems, which do not carry radioactive gases or fluids, that contain line penetrating primary containment.

II. ASME Requirement from Which Relief is Requested:

IWC-5222(a) System Hydrostatic Test; The system hydrostatic test pressure shall be at least 1.10 times the system pressure Psv for systems with Design Temperature of 200°F (93C) or less, and at least 1.25 times the system pressure Psv for systems with Design Temperature above 200°F (93C). The system pressure Psv shall be the lowest pressure setting among the number of safety or relief valves provided for overpressure protection within the boundary of the system to be tested.

The safety function of these lines is to become part of the containment isolation system during periods when containment isolation is required. Therefore, the pressure testing requirements should be based on the containment system design not the associated process system design requirements.

III. Proposed Alternate Method:

Test these lines in accordance with 10CFR50 Appendix J, Reactor Containment Leakage Testing for Water Cooled Power Reactor commensurate with the safety function the line performs in accordance with Technical Specification, Surveillance requirements. Additionally, at least once each period exposed portions of the lines penetrating primary containment will be examined during normal system operation.

RELIEF REQUEST NO. 14

I. Component for Which, Relief is Requested:

Service Water, All pressure retaining components within the Class 3 portion of the Service Water System.

II. ASME Requirement for Which Relief is Requested:

IWD-5223(a) System Hydrostatic Test; The system hydrostatic test pressure shall be at least 1.10 times the system pressure Psv for systems with Design Temperature of 200°F (93C) or less, and at least 1.25 times the system pressure Psv for systems with Design Temperature above 200°F (93C). The system pressure Psv shall be the lowest pressure setting among the number of safety or relief valves provided for overpressure protection within the boundary of the system to be tested. For systems (or portions of systems) not provided with safety or relief valves, the system design pressure Pd shall be substituted for Psv.

Rochester Gas and Electric believes that the hydrostatic test requirement for the service water system is impractical due to system design which dictates the use of an open-ended test. The portion of the system downstream of the heat exchanger is also open-ended and cannot be hydrostatically tested. The remaining section of the system is only isolatable by means of butterfly valves which were not designed to provide a leak-tight boundary. With the system as such it would be impractical to expect the leakages other than at the valves could be detected.

The ample margin in cooling capacity inherently provided by system design does not dictate the need for an essentially leak-tight boundary. Since the system is in constant operation, its integrity is continually monitored. Thorough inspection of the system each period at the full operating pressure is adequate to detect any gross failures in the system without degrading system safety or availability.

III. Proposed Alternate Method:

Pressure retaining components within the operational boundary will receive an inservice test at operating pressure and an associated VT-2 examination each period during the interval.

(WITHDRAWN)

RELIEF REQUEST NO. 15

I. Component for Which Relief is Requested:

Class 2, IWC 2500-1 Table Examination Category C-F-1 and C-F-2, Items C5.10 and C5.50.

II. ASME Requirements for Which Relief is Requested:

Category C-F-1 and C-F-2 (Items C5.10 and C5.50, respectively) for piping welds > 3/8 inches nominal wall thickness for piping > NPS4, a surface and volumetric examination is required on 100% of each weld requiring examination at each inspection interval.

III. Proposed Alternate Method:

Rochester Gas and Electric believes as a minimum that the terminal connection welds of identified exempted welds (< 3/8" nominal wall) should be examined to the requirements of IWC 2500-1 Table, Category C-F-1 and C-F-2, Items C5.10 and C5.50 respectively. These examinations are identified in the Class 2 Allocation Tables as Augmented Examinations and also are included under the category C-F-1 and C-F-2. In the Program Plan Tables (Supplement 1 to Appendix B). These are identified as C-F-1 or C-F-2 followed by "----". These components are also noted in the instruction field.

(WITHDRAWN)

RELIEF REQUEST NO. 16

I. Components for Which Relief is Requested:

Class 1 and Class 2 Integral Attachments on Piping specifically to Support Attachments.

II. ASME Requirements for Which Relief is Requested:

For Class 1, Integral Attachments on piping as indicated in IWB-2500-1, Category B-K-1, Item B10.10, requires volumetric or surface examination be performed on Base Attachment Thickness ≥ 5/8". For Class 2, Integral Attachments on piping as indicated in IWC-2500-1, Category C-C, Item C3.20, requires a surface examination be performed on Base Attachments ≥ 3/4".

It has been felt that support attachments to the pressure boundary such as gussets and stanchions should have a surface examination performed to insure the safety and integrity of the Class 1 and Class 2 Systems.

III. Proposed Alternate Method:

Surface examinations shall be performed on Integral Attachments on piping specifically support attachments once per interval in accordance with IWB-2500-1 and IWC-2500-1, B-K-1 and C-C, respectively.

1.0 **General:**

The P&ID drawings included within this section identify drawings containing lines classified as ASME Class 1, 2, 3 and High Energy pressure boundary. A unique line identifier has been established for each class line and high energy pressure boundary line. The line identifier was used in the preparation of the "Line List" to identify the pressure boundary as well as document the line on the applicable P&ID drawing.

The rules of ASME Section XI were applied to both class and high energy pressure boundaries as specified by IWB/C/D/F-1200. The color coded lines appearing on the applicable drawings identify those lines requiring Inservice Inspection and are not exempt under ASME Section XI for volumetric, surface and/or visual examinations. Leakage examination boundaries and accompanying visual examinations for leakage is not addressed on these drawings.

Pressure boundaries that are not color coded reflect lines that are exempt from volumetric, surface and/or visual examinations.

The following color codes were applied to Class 1, 2, 3, and High Energy pressure boundaries;

Class 1	=	Blue
Class 2 & High Energy	=	Red
Class 3	=	Green

The following list identifies the P&ID drawings that contain ASME Class 1, 2, 3, or High Energy pressure boundaries.

33013-1231		Rev. 18
33013-1231		Rev. 18
33013-1232		Rev. 7
33013-1236	Sheet 1	Rev. 3
33013-1236	Sheet 2	Rev. 5
33013-1236	Sheet 2	Rev. 5
33013-1237		Rev. 24
33013-1238		Rev. 8
33013-1239	Sheet 1	Rev. 6
33013-1239	Sheet 2	Rev. 6
33013-1245		Rev. 14
33013-1246	Sheet 1	Rev. 6
33013-1246	Sheet 2	Rev. 4
33013-1247		Rev. 17
33013-1248		Rev. 15
33013-1250	Sheet 1	Rev. 10
33013-1250	Sheet 2	Rev. 6
33013-1250	Sheet 3	Rev. 5
33013-1258		Rev. 12
33013-1260		Rev. 14
33013-1261		Rev. 19
33013-1262	Sheet 1	Rev. 7
33013-1262	Sheet 2	Rev. 3
33013-1263		Rev. 6
33013-1264		Rev. 12
33013-1265	Sheet 1	Rev. 5
33013-1265	Sheet 2	Rev. 4
33013-1266		Rev. 14
33013-1267		Rev. 10
33013-1268		Rev. 8
33013-1270	Sheet 1	Rev. 4
33013-1270	Sheet 2	Rev. 2
33013-1272	Sheet 1	Rev. 5
33013-1272	Sheet 2	Rev. 2
33013-1273	Sheet 1	Rev. 2
33013-1273	Sheet 2	Rev. 2
33013-1275	Sheet 1	Rev. 1
33013-1275	Sheet 2	Rev. 1
33013-1277	Sheet 1	Rev. 4
33013-1278	Sheet 1	Rev. 4
33013-1278	Sheet 2	Rev. 4
33013-1279		Rev. 7
33013-1863		Rev. 7

33013-1865		Rev. 6
33013-1866		Rev. 9
33013-1870		Rev. 6
33013-1882		Rev. 5
33013-1886	Sheet 2	Rev. 3
33013-1887		Rev. 4
33013-1893		Rev. 8
33013-1908	Sheet 3	Rev. 2
33013-1915		Rev. 5
33013-1991		Rev. 4
33013-2275	Sheet 2	Rev. 1
33013-2278		Rev. 0
33013-2279	Sheet 1	Rev. 0

1.0 General

The following Code Tables were developed to address applicable ASME Section XI Requirements specifically to R. E. Ginna Nuclear Power Plant. The Format of each Table is identical and a definition appears before the start of each text. ASME Section XI Code, 1986 Edition, no Addenda, and 10CFR50 specify that this program conforms to Articles IWB, C, D and F of ASME Section XI, if not altered by a Relief Request and/or Code Case.

The following list identified the Code Table applicability.

Code Table #	Component Jurisdiction
1	Class 1
2	Class 2
3	Class 3
4	Class 1, 2 and 3 IWF Component Supports

Table 1

INSERVICE INSPECTION PROGRAM
CODE CLASS

Item No.	Examination Category	Components and Parts To be Examined	Examination Methods	Examination Requirements for Third Inspection Interval	Examination Technique/Examination Area Comments
The ASME Section XI Item No. and Category of the component are listed in these columns.		Each type of examination area is listed in this column.	The NDE method required to satisfy Code requirements is listed in this column.	This column provides information regarding the number and/or percent of examinations required to be performed for the inspection interval.	This column provides information specific to examination techniques, examination areas, or comments.

a.

Table 1

INSERVICE INSPECTION PROGRAM
CLASS 1 COMPONENTS

Item No.	Examination Category	Components and Parts To be Examined	Examination Methods	Examination Requirements for Third Inspection Interval	Examination Technique/Examination Area Comments
REACTOR PRESSURE VESSEL					
B1.10 B1.11 B1.12	B-A	Circumferential and Longitudinal Shell Welds	Volumetric	100% of one circumferential weld to be examined at structural discontinuity in the beltline region. The three other circumferential welds shall be performed as a Augmented Program as specified by 10 CFR Part 50. Examinations may be performed at or near the end of the inspection interval.	Examination of circumferential shell welds will be performed with UT techniques. There are no longitudinal welds at R. E. Ginna.
B1.20 B1.21 B1.22	B-A	Circumferential and Meridional Head Welds	N/A		There are no meridional or circumferential head welds at R. E. Ginna.
B1.30	B-A	Shell-to-Flange Weld	Volumetric	100% of the weld to be examined. At least 50% of the weld shall be examined from the flange face by the end of the first inspection period and the remainder by the end of the third inspection period.	The shell-to-flange weld will be examined from the vessel seal surface and from the vessel wall inside surface with UT. NOTE: Relief Request #1.
B1.40	B-A	Head-to-Flange Weld	Volumetric and Surface	100% of the weld to be examined.	The head-to-flange weld will be examined with UT and surface examination techniques when the head is removed.
B1.50 B1.51	B-A	Repair Welds	N/A		No repair welds at R. E. Ginna.
B3.90 B3.100	B-D B-D	Nozzle-to-Vessel Welds and Nozzle Inside Radius Section	Volumetric	100% of nozzles. At least 25% but not more than 50% of the nozzles shall be examined by the end of the first period and the remainder by the end of the interval.	The nozzle-to-vessel welds and nozzle inside radius sections will be examined with UT.
B4.10 B4.11 B4.12 B4.13	B-E	Partial Penetration Welds: Vessel Nozzles Control Rod Drive Nozzles Instrumentation Nozzles	Visual (VT-2)	At least 25% of each group of welds of comparable size and function to be examined.	Examination will be performed during the system hydrostatic test or alternatively to Code Case N-498. VT examinations will be performed in accordance with IWA-5240.
B5.10	B-F	Pressure-Retaining Dissimilar Metal Welds	Volumetric & Surface	All Nozzle-to-safe end butt welds NPS 4 or larger.	Exams may be performed coincident with the vessel nozzle exams required by Category B-D.
B5.20 B5.30	B-F	Pressure-Retaining Dissimilar Metal Welds	N/A		No dissimilar metal welds on RPV at R. E. Ginna.
B6.10	B-G-1	Closure Head Nuts >2 Inches in Diameter	Surface	100% of nuts to be examined. Examination may be performed at or near the end of the inspection interval.	Nuts will be examined with MT when removed for refueling.

Table 1

INSERVICE INSPECTION PROGRAM
CLASS 1 (Cont'd)

Item No.	Examination Category	Components and Parts To be Examined	Examination Methods	Examination Requirements for Third Inspection Interval	Examination Technique/Examination Area Comments
REACTOR PRESSURE VESSEL (cont'd)					
B6.20	B-G-1	Closure Head Studs, In Place, >2 Inches in Diameter	Volumetric	100% of studs to be examined. Examination may be performed at or near the end of the inspection interval.	Closure stud examinations may be performed "in place." Examinations should be scheduled when studs are removed to reduce radiation exposure and allow the most thorough examination. Code Case N-307-1 shall apply.
B6.30	B-G-1	Closure Head Studs, When Removed, >2 Inches in Diameter	Volumetric and Surface	100% of studs to be examined. Examination may be performed at or near the end of the inspection interval.	The studs will be examined with UT and MT. Code Case N-307-1 shall apply.
B6.40	B-G-1	Threads in Flange >2 Inches in Diameter	Volumetric	100% of threaded holes to be examined. Examination may be performed at or near the end of the inspection interval.	The threads in flange will be examined from the flange face with UT.
B6.50	B-G-1	Pressure-Retaining Closure Washers and Bushings >2 Inches in Diameter	Visual (VT-1)	All washers and bushings to be examined upon stud removal. Examination may be performed at or near the end of the inspection interval.	
B7.10	B-G-2	Pressure-Retaining Bolting ≤2 Inches in Diameter			No pressure-retaining bolting ≤2" in diameter on RPV at R. E. Ginna.
B7.80	B-G-2	CRD Housings Bolts, Studs, and Nuts	Visual (VT-1)	All bolts, studs, and nuts to be examined.	Pressure-retaining CRD housing bolting will be examined when disassembled.
B8.10	B-H	Integral Attachments for RPV	N/A		No integrally welded attachments on RPV at R. E. Ginna that meet the requirements of Category B-H.
B13.10	B-N-1	Vessel Interior	Visual (VT-3)	Accessible areas to be examined during each inspection period.	
B13.50	B-N-2	Interior Attachments Within Beltline Region	Visual (VT-1)	Accessible attachment welds to be examined. Examinations may be completed at or near the end of the inspection interval.	
B13.60	B-N-2	Interior Attachments Beyond Beltline Region	Visual (VT-3)	Accessible attachment welds to be examined. Examinations may be completed at or near the end of the inspection interval.	
B13.70	B-N-3	Core-Support Structure	Visual (VT-3)	With core-support structure removed, all accessible surfaces to be examined. Examinations may be completed at or near the end of the inspection interval.	
B14.10	B-O	Control Rod Drive Housing Welds	Volumetric or Surface	Welds in 10% of the peripheral CRD housings to be examined. Examinations may be performed at or near the end of the inspection interval.	The CRD housing welds will be examined with PT.

Table 1

INSERVICE INSPECTION PROGRAM
CLASS 1 COMPONENTS (Cont'd)

Item No.	Examination Category	Components and Parts To be Examined	Examination Methods	Examination Requirements for Third Inspection Interval	Examination Technique/Examination Area Comments
REACTOR PRESSURE VESSEL (cont'd)					
B15.10	B-P	All Pressure-Retaining Boundaries for Vessel Components	Visual (VT-2)	All components to be examined during system leakage test. Examinations to be performed in accordance with IWB-5221 prior to plant startup after each refueling outage.	VT examinations will be performed in accordance with IWA-5240.
B15.11	B-P	All Pressure-Retaining Boundaries for Vessel Components	Visual (VT-2)	All components to be examined during system hydrostatic test or alternatively to Code Case N-498. Examinations to be performed in accordance with IWB-5221/5222 at or near the end of the inspection interval.	VT examinations will be performed in accordance with IWA-5240.

Table 1

INSERVICE INSPECTION PROGRAM
CLASS 1 COMPONENTS (Cont'd)

Item No.	Examination Category	Components and Parts To be Examined	Examination Methods	Examination Requirements for Third Inspection Interval	Examination Technique/Examination Area Comments
PRESSURIZER					
B2.10 B2.11 B2.12	B-B	Circumferential and Longitudinal Shell-to-Head Welds	Volumetric	The upper and lower head-to-shell welds to be examined. One foot of one longitudinal weld intersecting each head-to-shell weld to be examined.	Examination will be performed with UT techniques.
B2.20 B2.21 B2.22	B-B	Circumferential and Meridional Head Welds	Volumetric	There are no pressurizer head welds at R. E. Ginna.	
B3.110	B-D	Nozzle-to-Vessel Welds	N/A		No nozzle-to-vessel welds. Nozzles are integrallly cast into the head of pressurizer at R. E. Ginna.
B3.120	B-D	Nozzle Inside Radius Sections	Volumetric	All inside radius sections to be examined. At least 25% but not more than 50% of the nozzles shall be examined by the end of the first period and the remainder by the end of the inspection interval.	Examinations will be performed with UT techniques.
B4.20	B-E	Heater Penetration Welds	Visual (VT-2)	All pressurizer heater penetration welds shall be examined during system hydrostatic test or alternatively to Code Case N-498 in accordance with IWB-5222 at or near the end of the inspection interval.	VT examination will be performed in accordance with IWA-5240.
B5.40	B-F	Nozzle-to-Safe End Dissimilar Metal Welds ≥4 Inches NPS	Surface and Volumetric	All butt welds to be examined.	Examinations will be performed with PT and UT techniques.
B5.50	B-F	Nozzle-to-Safe End Dissimilar Metal Welds <4 Inches NPS	N/A		No nozzle-to-safe end dissimilar metal welds on pressurizer at R. E. Ginna.
B5.60	B-F	Nozzle-to-Safe End Socket Welds	N/A		No dissimilar metal socket welds on pressurizer at R. E. Ginna.
B6.60 B6.70 B6.80	B-G-1	Pressure-Retaining Bolting >2 Inches in Diameter	N/A		No bolting on pressurizer >2 inches in diameter at R. E. Ginna.
B7.20	B-G-2	Bolts, Studs, and Nuts ≤2 Inches in Diameter	Visual (VT-1)	All bolts, studs, and nuts to be examined.	Bolting examinations may be performed in place under tension or when disassembled or removed.
B8.20	B-H	Integrally Welded Attachments	N/A		Pressurizer support skirt not required for examination for 3rd and 4th intervals by Code.

Table 1

INSERVICE INSPECTION PROGRAM
CLASS 1 COMPONENTS (Cont'd)

Item No.	Examination Category	Components and Parts To be Examined	Examination Methods	Examination Requirements for Third Inspection Interval	Examination Technique/Examination Area Comments
PRESSURIZER (Cont'd)					
B15.20	B-P	Pressure-Retaining Boundaries for Vessel Components	Visual (VT-2)	All pressurizer components to be examined during system leakage test. Examination to be performed in accordance with IWB-5221 prior to plant startup after each refueling outage.	VT examination will be performed in accordance with IWB-5240.
B15.21	B-P	Pressure-Retaining Boundaries for Vessel Components	Visual (VT-2)	All pressurizer components to be examined during system hydrostatic test or alternatively to Code Case N-498. Examination to be performed in accordance with IWB-5221/5222 at or near the end of the inspection interval.	VT examination will be performed in accordance with IWA-5240.

Table 1

INSERVICE INSPECTION PROGRAM
CLASS 1 COMPONENTS (Cont'd)

Item No.	Examination Category	Components and Parts To be Examined	Examination Methods	Examination Requirements for Third Inspection Interval	Examination Technique/Examination Area Comments
STEAM GENERATORS					
B2.30 B2.31 B2.32	B-B	Circumferential and Meridional Welds in the Lower Head	N/A		There are no steam generator lower head circumferential or meridional welds.
B2.40	B-B	Tubesheet-to-Head Weld	Volumetric	The tubesheet-to-head weld will be examined. The examination will be limited to one of the two steam generators.	Examination will be performed with UT techniques.
B3.130	B-D	Nozzle-to-Vessel Welds	N/A		There are no steam generator nozzle-to-vessel welds. Nozzles are integrally cast into heads.
B3.140	B-D	Nozzle Inside Radius Sections	Volumetric	All nozzle inside radius sections will be examined. At least 25% but not more than 50% of the nozzles shall be examined by the end of the first inspection period and the remainder by the end of the inspection interval.	Examinations will be performed with UT techniques. There are no steam generator nozzle-to-vessel welds.
B5.70	B-F	NPS 4 or Larger Nozzle-to-Safe End Dissimilar Metal Welds	Surface and Volumetric	All nozzle safe-end dissimilar metal welds shall be examined.	Examinations will be performed with PT and UT techniques at R. E. Ginna.
B5.80	B-F	Less than NPS4, Nozzle-to-Safe End Dissimilar Metal Welds	N/A		There are no steam generator welds of this type.
B5.90	B-F	Nozzle-to-Safe End Dissimilar Metal Welds	N/A		There are no steam generator welds of this type.
B6.90 B6.100 B6.110	B-G-1	Pressure-Retaining Bolting >2 Inches in Diameter	N/A	No bolting on steam generators >2 inches in diameter at R. E. Ginna.	
B7.30	B-G-2	Bolts, Studs, and Nuts ≥2 Inches in Diameter	Visual (VT-1)	All bolts, studs, and nuts will be examined. The examination will be limited to one of the two steam generators.	Examinations may be performed in place under tension or when removed.
B8.30	B-H	Integrally Welded Attachments	N/A		There are no steam generator integrally welded attachments. IWB-2500-13.
B15.30	B-P	Pressure-Retaining Boundaries	Visual (VT-2)	All steam generator components to be examined during system leakage test. Examinations to be performed in accordance with IWB-5221 prior to plant startup after each refueling outage.	VT examinations will be performed in accordance with IWA-5240.

Table 1

INSERVICE INSPECTION PROGRAM
CLASS 1 COMPONENTS (Cont'd)

Item No.	Examination Category	Components and Parts To be Examined	Examination Methods	Examination Requirements for Third Inspection Interval	Examination Technique/Examination Area Comments
STEAM GENERATORS (Cont'd)					
B15.31	B-P	Pressure-Retaining Boundaries	Visual (VT-2)	All steam generator components to be examined during system hydrostatic test or alternatively to Code Case N-498. Examinations to be performed in accordance with IWB-5221/5222 at or near the end of the inspection interval.	VT examinations will be performed in accordance with IWA-5240.
B16.20	B-Q	Steam Generator Tubing	Volumetric	The tubing in the hot leg side, U-bend portion, and optionally cold leg side will be examined.	Examination requirements, examination method, and the extent and frequency of examination shall be in accordance with plant Technical Specifications.

Table 1

INSERVICE INSPECTION PROGRAM
CLASS 1 COMPONENTS (Cont'd)

Item No.	Examination Category	Components and Parts To be Examined	Examination Methods	Examination Requirements for Third Inspection Interval	Examination Technique/Examination Area Comments
HEAT EXCHANGERS					
B2.50 B2.51 B2.52	B-B	Head Welds	N/A		No meridional or circumferential head welds in heat exchanger at R. E. Ginna.
B2.60	B-B	Tubesheet-to-Head Welds	Volumetric	Each tubesheet-to-head weld will be examined.	Examination will be performed with UT techniques.
B2.70	B-B	Longitudinal Welds	N/A		There are no RHE longitudinal welds at R. E. Ginna.
B2.80	B-B	Tubesheet-to-Shell Welds	Volumetric	Each tubesheet-to-shell weld will be examined.	Examination will be performed with UT techniques.
B3.150 B3.160	B-D B-D	Nozzle-to-Vessel Welds and Nozzle Inside Radius Section	Volumetric	All nozzle-to-shell and nozzle inside radius sections will be examined. At least 25% but not more than 50% of the nozzles shall be examined by the end of the first inspection period and the remainder by the end of the interval.	Examination will be performed with UT techniques.
B5.100 B5.110 B5.120	B-F	Pressure-Retaining Dissimilar Metal Welds	N/A		No heat exchanger dissimilar welds at R. E. Ginna.
B6.120 B6.130 B6.140	B-G-1	Pressure-Retaining Bolting >2 Inches in Diameter	N/A		No heat exchanger bolting at R. E. Ginna.
B7.40	B-G-2	Bolts, Studs, and Nuts ≤2 Inches in Diameter	N/A		No heat exchanger bolting at R. E. Ginna.
B8.40	B-H	Integrally Welded Attachments	N/A		Integrally welded attachments not required for examination for 3rd and 4th intervals by code.
B15.40	B-P	Pressure-Retaining Boundaries	Visual (VT-2)	All RHE components will be examined during system leakage test. Examinations to be performed in accordance with IWB-5221 prior to plant startup after each refueling outage.	VT examinations will be performed in accordance with IWA-5240
B15.41	B-P	Pressure-Retaining Boundaries	Visual (VT-2)	All RHE components will be examined during system hydrostatic test or alternatively to Code Case N-498. Examinations to be performed in accordance with IWB-5221/5222 at or near the end of the inspection interval.	VT examinations will be performed in accordance with IWA-5240.

Table 1

INSERVICE INSPECTION PROGRAM
CLASS 1 COMPONENTS (Cont'd)

Item No.	Examination Category	Components and Parts To be Examined	Examination Methods	Examination Requirements for Third Inspection Interval	Examination Technique/Examination Area Comments
PIPING					
B5.130	B-F	Dissimilar Metal Welds ≥4 Inches NPS	Volumetric and Surface	All butt welds to be examined.	The welds will be examined with UT and PT.
B5.140	B-F	Dissimilar Metal Welds <4 Inches NPS	N/A		No dissimilar metal welds <4 inches NPS at R. E. Ginna.
B5.150	B-F	Dissimilar Metal Socket Welds	N/A		No dissimilar metal socket welds at R. E. Ginna.
B6.150 B6.160 B6.170	B-G-1	Pressure-Retaining Bolting >2 Inches in Diameter	N/A		No pressure-retaining bolting >2 inches in diameter at R. E. Ginna.
B7.50	B-G-2	Pressure-Retaining Bolting ≤2 Inches in Diameter	N/A		No pressure-retaining bolting ≤2 inches on piping at R. E. Ginna.
B9.10 B9.11	B-J	Circumferential Pipe Welds ≥4 Inches NPS	Volumetric and Surface	25% of the required circumferential butt welds to be examined. See Note 1 at end of Table 1 for selection criteria.	The piping welds will be examined with UT and PT.
B9.12	B-J	Longitudinal Pipe Welds ≥4 Inches NPS	Volumetric and Surface	Longitudinal welds that adjoin scheduled circumferential welds are to be examined. One pipe diameter not to exceed 12 inches of each longitudinal weld length required.	The piping welds will be examined with UT and PT.
B9.20 B9.21	B-J	Circumferential Welds <4 Inches NPS	Surface	25% of the required circumferential butt welds to be examined. See Note 1 at end of Table 1 for selection criteria.	The piping welds will be examined with PT.
B9.22	B-J	Longitudinal Pipe Welds <4 Inches NPS	N/A		No pressure-retaining logitudinal pipe welds ≤4 inches NPS at R. E. Ginna.
B9.30 B9.31	B-J	Branch Pipe Connection Welds ≥4 Inches NPS	Volumetric and Surface	25% of the required branch connection joints to be examined. See Note 1 at end of Table 1 for selection criteria.	The branch connection welds will be examined with UT and PT.
B9.32	B-J	Branch Pipe Connection Welds <4 Inches NPS	Surface	25% of the required branch connection joints to be examined. See Note 1 at end of Table 1 for selection criteria.	The branch connection welds will be examined with PT.
B9.40	B-J	Socket Welds	Surface	25% of the required socket welds to be examined. See Note 1 at end of Table 1 for selection criteria.	The socket welds will be examined with PT.
B10.10	B-K-1	Integrally Welded Attachments	N/A		Integrally welded attachments not required for examination for 3rd and 4th intervals by code.

Table 1

INSERVICE INSPECTION PROGRAM
CLASS 1 COMPONENTS (Cont'd)

Item No.	Examination Category	Components and Parts To be Examined	Examination Methods	Examination Requirements for Third Inspection Interval	Examination Technique/Examination Area Comments
PIPING (Cont'd)					
B15.50	B-P	All Pressure-Retaining Boundaries for Piping Components	Visual (VT-2)	All components to be examined during system leakage test. Examination to be performed in accordance with IWB-5221 prior to plant startup after each refueling outage.	VT examination will be performed in accordance with IWA-5240.
B15.51	B-P	All Pressure-Retaining Boundaries for Piping Components	Visual (VT-2)	All components to be examined during system hydrostatic test or alternatively to Code Case N-498. Examination to be performed in accordance with IWB-5221/5222 at or near the end of the inspection interval.	VT examination will be performed in accordance with IWA-5240.

Table 1

INSERVICE INSPECTION PROGRAM
CLASS 1 COMPONENTS (Cont'd)

Item No.	Examination Category	Components and Parts To be Examined	Examination Methods	Examination Requirements for Third Inspection Interval	Examination Technique/Examination Area Comments
PUMPS					
B6.180	B-G-1	Bolts and Studs, >2 Inches in Diameter	Volumetric	All bolts and studs to be examined for items associated with one component in a multicomponent group.	The bolting will be examined with UT. Code Case N-307-1 shall apply. The bolting may be examined in place under tension or when disassembled or removed.
B6.190	B-G-1	Flange Surface for Bolting >2 Inches in Diameter When Connection Is Disassembled	Visual (VT-1)	Examination includes 1 inch annular surface of flange around each stud hole surface when disassembled.	VT examination will be performed when disassembled.
B6.200	B-G-1	Nuts, Bushings, and Washers >2 Inches in Diameter	Visual (VT-1)	All nuts, bushings, and washers to be examined when disassembled on one component in a multicomponent group.	VT examination will be performed when disassembled.
B7.60	B-G-2	Pressure-Retaining Bolting ≤2 Inches in Diameter	N/A		No pressure-retaining bolting ≤2 inches in diameter on pumps at R. E. Ginna.
B10.20	B-K-1	Integrally Welded Attachments			Integrally welded attachments not required for examination for 3rd and 4th intervals by code.
B12.10	B-L-1	Pump Casing Welds	Volumetric	Reactor coolant pump casing welds on one pump to be examined.	
B12.20	B-L-2	Internal Surfaces of Pump Casings	Visual (VT-3)	One reactor coolant pump to be examined when disassembled.	Pump casing internal surface will be examined with visual techniques when disassembled.
B15.60	B-P	Pressure-Retaining Boundaries for Pump Components	Visual (VT-2)	All components to be examined during system leakage test. Examination to be performed in accordance with IWB-5221 prior to plant startup after each refueling outage.	VT examinations will be performed in accordance with IWA-5240.
B15.61	B-P	Pressure-Retaining Boundaries for Pump Components	Visual (VT-2)	All components to be examined during system hydrostatic test or alternatively to Code Case N-498. Examination to be performed in accordance with IWB-5221/5222 at or near the end of the inspection interval.	VT examinations will be performed in accordance with IWA-5240.
RG1.14	Flywheel	Pump Flywheels	Surface and Volumetric	Each reactor coolant pump flywheel to be examined per Reg. Guide 1.14. High-stress areas to be examined each period with full examination at the end of interval.	Examinations will be performed with MT and UT techniques on the 2 active components as a minimum on an Augmented Program.

Table 1

INSERVICE INSPECTION PROGRAM
CLASS 1 COMPONENTS (Cont'd)

Item No.	Examination Category	Components and Parts To be Examined	Examinstion Methods	Examination Requirements for Third Inspection Interval	Examination Technique/Examination Area Comments
VALVES					
B6.210 B6.220 B6.230	B-G-1	Bolting >2 Inches in Diameter	N/A		No valve bolting >2 inches in diameter at R. E. Ginna.
B7.70	B-G-2	Bolting ≤2 Inches in Diameter	Visual (VT-1)	All bolts, studs, and nuts to be examined on 1 component per group.	The bolting may be examined in place under tension or when disassembled or removed.
B10.30	B-K-1	Integrally Welded Attachments	N/A		Integrally welded attachments not required for examination for 3rd and 4th intervals by code.
B12.30	B-M-1	Pressure-Retaining Welds in Valve Bodies <4 Inches NPS	N/A		No pressure-retaining welds in valve bodies <4 inches NPS at R. E. Ginna.
B12.40	B-M-1	Pressure-Retaining Welds in Valve Bodies ≥4 Inches NPS	Volumetric	All welds on one valve in each group of valves that is of the same construction and similar function to be examined.	Valve welds will be examined with UT.
B12.50	B-M-2	Internal Surfaces of Valve Bodies on Valves >4 Inches NPS	Visual (VT-3)	One valve in each group of valves that is of the same construction and similar function to be examined.	Internal surfaces of valve bodies to be examined with VT-3.
B15.70	B-P	All Pressure-Retaining Boundaries for Valve Components	Visual (VT-2)	All components to be examined during system leakage test. Examination to be performed in accordance with IWB-5221 prior to plant startup after each refueling outage.	VT examinations will be performed in accordance with IWB-5240.
B15.71	B-P	All Pressure-Retaining Boundaries for Valve Components	Visual (VT-2)	All components to be examined during system hydrostatic test or alternatively to Code Case N-498. Examination to be performed in accordance with IWB-5221/5222 at or near the end of the inspection interval.	VT examinations will be performed in accordance with IWA-5240.

Table 1

NOTES

(1) Examinations shall be distributed throughout the piping system to satisfy the extent required by ASME Section XI 1974 Edition with Addenda through Summer 1975 as permitted by 10CFR50.55a(b)(2)(ii). Examinations selected shall be distributed in such a manner to include:

(a) Terminal ends in each pipe or branch run connected to vessels.

(b) Terminal ends and joints in each pipe or branch run connected to other components.

(c) All dissimilar metal welds.

(d) Additional piping welds so that the total number of circumferential butt welds (or branch connection or socket welds) selected for examination equals 25% of the circumferential butt welds (or branch connection or socket welds) in the reactor coolant piping system. This total does not include welds excluded by IWB-1220. These additional welds may be located in one loop.

(2) Examination is limited to those integrally welded attachments that meet the following conditions:

(a) the attachment is on the outside surface of the pressure-retaining component;

(b) the attachment provides component support as defined in NF-1110;

(c) the attachment base material design thickness is 5/8 inch or greater; and

(d) the attachment weld joins the attachment either directly to the surface of the component or to an integrally cast or forged attachment to the component.

Examinations include the welded attachments of piping required to be examined by Examination Category B-J and the welded attachments to associated pumps and valves integral to such piping.

Table 2

INSERVICE INSPECTION PROGRAM
CODE CLASS

Item No.	Examination Category	Components and Parts To be Examined	Examination Methods	Examination Requirements for Third Inspection Interval	Examination Technique/Examination Area Comments
The ASME Section XI Item No. and Category of the component are listed in these columns.		Each type of examination area is listed in this column.	The NDE method required to satisfy Code requirements is listed in this column.	This column provides information regarding the number and/or percent of examinations required to be performed for the inspection interval.	This column provides information specific to examination techniques, examination areas, or comments.

Table 2

INSERVICE INSPECTION PROGRAM
CLASS 2 COMPONENTS

Item No.	Examination Category	Components and Parts To be Examined	Examination Methods	Examination Requirements for Third Inspection Interval	Examination Technique/Examination Area Comments
PRESSURE VESSELS					
C1.10	C-A	Shell Circumferential Welds	Volumetric	100% of each weld to be examined (applies only to welds at gross structural discontinuities). For multiple vessels of similar design size and service, examinations may be limited to one vessel.	The welds will be examined with UT.
C1.20	C-A	Head Circumferential Welds	Volumetric	100% of each head-to-shell weld to be examined. For multiple vessels of similar design size and service, examinations may be limited to one vessel.	The welds will be examined with UT.
C1.30	C-A	Tubesheet-to-Shell Weld	Volumetric	100% of each weld to be examined. For multiple vessels of similar design size and service, examinations may be limited to one vessel.	The welds will be examined with UT.
C2.10 C2.11	C-B	Nozzles in Vessels ≤1/2-Inch Nominal Thickness Nozzle-to-Shell (or Head) Weld	Surface	All nozzles at terminal ends of piping runs which are selected for examination under Categories C-F-1 and C-F-2. 100% of each weld to be examined. Manways and hand holes excluded. For multiple vessels of similar design, size, and service, examinations may be limited to one vessel.	The welds will be examined with MT or PT as applicable.
C2.20 C2.21	C-B	Nozzles Without Reinforcing Plate in Vessels > 1/2-Inch Nominal Thickness Nozzle-to-Shell (or Head) Weld	Surface and Volumetric	All nozzles to be selected at terminal ends of piping runs selected for examination under Categories C-F-1 and C-F-2. 100% of each weld to be examined. Manways and hand holes excluded. For multiple vessels of similar design, size, and service, examinations may be limited to one vessel.	The welds will be examined with UT and MT or PT as applicable.
C2.22	C-B	Nozzle Inside Radius Section	Volumetric	100% of each area to be examined. Manways and hand holes are excluded. For multiple vessels of similar design, size, and service, examinations may be limited to one vessel.	The nozzle inside radius section will be examined with UT.
C2.30	C-B	Nozzles with Reinforcing Plate in Vessels > 1/2 inch Nominal Thickness			See C2.31, C2.32, C2.33
C2.31	C-B	Reinforcing Plate Welds Surface to Nozzle & Vessel	Surface	All nozzles at terminal ends of piping runs. For multiple vessels of similar design, size, and service, examinations may be limited to one vessel.	The reinforcing plate welds will be examined with PT or MT as applicable.

Table 2

INSERVICE INSPECTION PROGRAM
CLASS 2 COMPONENTS (Cont'd)

Item No.	Examination Category	Components and Parts To be Examined	Examination Methods	Examination Requirements for Third Inspection Interval	Examination Technique/Examination Area Comments
PRESSURE VESSELS (Cont'd)					
C2.32	C-B	Nozzle-To-Shell (or Head) Welds When Inside of Vessel is Accessible	N/A	All nozzles at terminal ends of piping runs. For multiple vessels of similar design, size, and service, examinations may be limited to one vessel.	The inside of vessel is not accessible, performing C2.33 instead.
C2.33	C-B	Nozzle-To-Shell (or Head) Welds When Inside of Vessel is Inaccessible	Visual (VT-2)	All nozzles at terminal ends of piping runs. For multiple vessels of similar design, size, and service, examinations may be limited to one vessel.	VT examinations will be performed in accordance with IWB-5240. The required components to be examined during system leakage test.
C3.10	C-C	Integrally Welded Attachments	Surface	100% of each weld to be examined. Attachments whose base material is 3/4 inch or greater to be selected. Where multiple vessels are provided with a number of similar attachments, the attachments may be distributed among the vessels. For multiple vessels of similar design and service, examinations may be limited to one vessel.	The welded attachments will be examined with MT or PT as applicable.
C4.10	C-D	Pressure-Retaining Bolting >2 Inches in Diameter	N/A		No pressure-retaining vessel bolting >2 inches in diameter at R. E. Ginna.
C7.10	C-H	Pressure-Retaining Components	Visual (VT-2)	All pressure-retaining boundaries for vessels to be examined during system pressure test. Examinations to be performed in accordance with IWC-5221 for each inspection period.	VT examinations will be performed in accordance with IWA-5240.
C7.20	C-H	Pressure-Retaining Components	Visual (VT-2)	All pressure-retaining boundaries for vessels to be examined during system hydrostatic test or alternatively to Code Case N-498. Examinations to be performed in accordance with IWC-5221/5222 at or near the end of each inspection interval or during same inspection periods of each interval.	VT examinations will be performed in accordance with IWA-5240.

Table 2

INSERVICE INSPECTION PROGRAM
CLASS 2 COMPONENTS (Cont'd)

Item No.	Examination Category	Components and Parts To be Examined	Examination Methods	Examination Requirements for Third Inspection Interval	Examination Technique/Examination Area Comments
PIPING					
C3.20	C-C	Integrally Welded Attachments	Surface	100% of each weld to be examined. Attachments whose base material is 3/4 inch or greater to be selected. Selection limited to those components selected under Examination Categories C-F-1 and C-F-2.	The welds will be examined with MT or PT as applicable.
C4.20	C-D	Pressure-Retaining Bolting >2 Inches in Diameter	N/A		No pressure-retaining bolting >2 inches in diameter at R. E. Ginna.
C5.10 C5.11	C-F-1	Piping Welds in Austenitic Stainless Steel or High-Alloy Piping ≥3/8-Inch Nominal Wall Thickness for Piping >4 NPS, Circumferential.	Surface and Volumetric	100% of each circumferential weld requiring examination. See Note 1 at end of Table 2 for selection criteria.	The welds will be examined with UT and PT.
C5.12	C-F-1	Piping Welds in Austenitic Stainless Steel or High-Alloy Piping ≥3/8-Inch Nominal Wall Thickness for Piping >4 NPS, Longitudinal	N/A		No logitudinal welds of this item number at R. E. Ginna.
C5.20 C5.21	C-F-1	Piping Welds in Austenitic Stainless Steel or High-Alloy Piping ≥1/5-Inch Nominal Wall Thickness for Piping ≥2 NPS and ≤4 NPS, Circumferential	Surface and Volumetric	100% of each circumferential weld requiring examination. See Note 1 at end of Table 2 for selection criteria.	The welds will be examined with UT and PT.
C5.22	C-F-1	Piping Welds in Austenitic Stainless Steel or High-Alloy Piping ≥1/5-Inch Nominal Wall Thickness for Piping ≥2 NPS and ≤4 NPS, Longitudinal	N/A		No logitudinal welds of this item number at R. E. Ginna.
C5.30	C-F-1	Socket Welds in Austenitic Stainless Steel or High-Alloy Piping	Surface	100% of each weld requiring examination. See Note 1 at end of Table 2 for selection criteria.	The welds will be examined with PT.
C5.40 C5.41	C-F-1	Pipe Branch Connections in Austenitic Stainless Steel or High-Alloy Piping ≥2 NPS, Circumferential	Surface	100% of each circumferential weld requiring examination. See Note 1 at end of Table 2 for selection criteria.	The welds will be examined with PT.

Table 2

INSERVICE INSPECTION PROGRAM
CLASS 2 COMPONENTS (Cont'd)

Item No.	Examination Category	Components and Parts To be Examined	Examination Methods	Examination Requirements for Third Inspection Interval	Examination Technique/Examination Area Comments
PIPING (cont'd)					
C5.42	C-F-1	Pipe Branch Connections in Austenitic Stainless Steel or High-Alloy Piping ≥2 NPS, Longitudinal	N/A		No logitudinal welds of this item number at R. E. Ginna.
C5.50 C5.51 C5.52	C-F-2	Piping Welds in Carbon or Low-Alloy Steel ≥3/8-Inch Nominal Wall Thickness for Piping >4 NPS, Circumferential and Longitudinal	Surface and Volumetric	100% of each circumferential and 2.5t of each longitudinal weld requiring examination. See Note 2 at end of Table 2 for selection criteria. In addition, 100% of the main steam and main feedwater welds located outside containment and traversing safety areas shall be examined per Technical Specifications.	The welds will be examined with UT and MT.
C5.60 C5.61 C5.62	C-F-2	Piping Welds in Carbon or Low-Alloy Steel >1/5-Inch Nominal Wall Thickness for Piping ≥2 NPS and ≤4 NPS, Circumferential and Longitudinal	N/A		No carbon or low-alloy steel nonexempt welds in this category at R. E. Ginna.
C5.70	C-F-2	Socket Welds in Carbon or Low-Alloy Steel	N/A		No carbon or low-alloy steel nonexempt welds in this category at R. E. Ginna.
C5.80 C5.81	C-F-2	Pipe Branch Connections in Carbon or Low-Alloy Steel ≥2 NPS, Circumferential	Surface	100% of each circumferential weld requiring examination. See Note 2 at end of Table 2 for selection criteria.	The welds will be examined with MT.
C5.82	C-F-1	Pipe Branch Connections in Carbon or Low-Alloy Steel ≥2 NPS, Longitudinal	N/A		No longitudinal welds of this item number at R. E. Ginna.
C7.30	C-H	Pressure-Retaining Components	Visual (VT-2)	All pressure-retaining boundaries for piping to be examined during system pressure test. Examination to be performed in accordance with IWC-5221 for each inspection period.	VT examinations will be performed in accordance with IWA-5240.
C7.40	C-H	Pressure-Retaining Components	Visual (VT-2)	All pressure-retaining boundaries for piping to be examined during system hydrostatic test or alternatively to Code Case N-498. Examination to be performed in accordance with IWC-5221/5222 at or near the end of each inspection interval or during same inspection periods of each interval.	VT examinations will be performed in accordance with IWA-5240.

Table 2

INSERVICE INSPECTION PROGRAM
CLASS 2 COMPONENTS (Cont'd)

Item No.	Examination Category	Components and Parts To be Examined	Examination Methods	Examination Requirements for Third Inspection Interval	Examination Technique/Examination Area Comments
PUMPS					
C3.30	C-C	Integrally Welded Attachments	N/A		100% of each weld to be examined. Attachments whose base material is 3/4 inch or greater to be selected. Selection limited to those components selected under Examination Category C-G. No pumps meet this criteria at R. E. Ginna.
C4.30	C-D	Pressure-Retaining Bolting >2 Inches in Diameter	N/A		No pressure-retaining pump bolting >2 inches in diameter at R. E. Ginna.
C6.10	C-G	Pressure-Retaining Welds in Pump Casings	N/A		No pressure-retaining pump welds at R. E. Ginna.
C7.50	C-H	Pressure-Retaining Components	Visual (VT-2)	All pressure-retaining boundaries for pumps to be examined during pressure test. Examination to be performed in accordance with IWC-5221 for each inspection period.	VT examinations will be performed in accordance with IWA-5240.
C7.60	C-H	Pressure-Retaining Components	Visual (VT-2)	All pressure-retaining boundaries for pumps to be examined during system hydrostatic test or alternatively to Code Case N-498. Examination to be performed in accordance with IWC-5221/5222 at or near the end of each inspection interval or during same inspection periods of each interval.	VT examinations will be performed in accordance with IWA-5240.

Table 2

INSERVICE INSPECTION PROGRAM
CLASS 2 COMPONENTS (Cont'd)

Item No.	Examination Category	Components and Parts To be Examined	Examination Methods	Examination Requirements for Third Inspection Interval	Examination Technique/Examination Area Comments
VALVES					
C3.40	C-C	Integrally Welded Attachments	Surface	100% of each weld to be examined. Attachments whose base material is 3/4 inch or greater to be selected. Selection limited to those components selected under Examination Category C-G.	The welds will be examined with MT or PT as applicable.
C4.40	C-D	Pressure-Retaining Bolting >2 Inches in Diameter	N/A		No pressure-retaining bolting >2 inches in diameter at R. E. Ginna.
C6.20	C-G	Pressure-Retaining Welds in Valve Bodies	N/A		No pressure-retaining welds in valve bodies at R. E. Ginna.
C7.70	C-H	Pressure-Retaining Components	Visual (VT-2)	All pressure-retaining boundaries for valves to be examined during system pressure test. Examination to be performed in accordance with IWC-5221 for each inspection period.	VT examinations will be performed in accordance with IWA-5240.
C7.80	C-H	Pressure-Retaining Components	Visual (VT-2)	All pressure-retaining boundaries for valves to be examined during system hydrostatic test or alternatively to Code Case N-498. Examination to be performed in accordance with IWC-5221/5222 at or near the end of each inspection interval or during same inspection periods of each interval.	VT examinations will be performed in accordance with IWA-5240.

Table 2

NOTES

(1) The welds selected for examination shall include 7.5%, but not less than 28 welds, of all austenitic stainless steel or high-alloy welds not exempted by IWC-1220. (Some welds not exempted by this Case are not required to be nondestructively examined per Examination Category C-F-1. These welds, however, shall be included in the total weld count to which the 7.5% sampling rate is applied.) The examinations shall be distributed as follows:

(a) the examinations shall be distributed among the Class 2 systems prorated, to the degree practicable, on the number of nonexempt austenitic stainless steel or high-alloy welds in each system (i.e., if a system contains 30% of the nonexempt welds, then 30% of the nondestructive examinations required by Examination Category C-F-1 should be performed on that system);

(b) within a system, the examinations shall be distributed among terminal ends [see Note (3)] and structural discontinuities [see Note (4)] prorated, to the degree practicable, on the number of nonexempt terminal ends and structural discontinuities in that system; and

(c) within each system, examinations shall be distributed between line sizes prorated to the degree practicable.

(2) The welds selected for examination shall include 7.5%, but not less than 28 welds, of all carbon or low-alloy welds not exempted by IWC-1220. (Some welds not exempted by this Case are not required to be nondestructively examined per Examination Category C-F-2. These welds, however, shall be included in the total weld count to which the 7.5% sampling rate is applied.) The examinations shall be distributed as follows:

(a) the examinations shall be distributed among the Class 2 systems prorated, to the degree practicable, on the number of nonexempt carbon or low-alloy welds in each system (i.e., if a system contains 30% of the nonexempt welds, then 30% of the nondestructive examinations required by Examination Category C-F-2 should be performed on that system);

(b) within a system, the examinations shall be distributed among terminal ends [see Note (3)] and structural discontinuities [see Note (4)] prorated, to the degree practicable, on the number of nonexempt terminal ends and structural discontinuities in that system; and

(c) within each system, examinations shall be distributed between line sizes prorated to the degree practicable.

(d) Only those welds showing reportable preservice transverse indications need to be examined for transverse reflectors.

(3) Terminal ends are the extremities of piping runs that connect to structures, components (such as vessels, pumps, valves), or pipe anchors, each of which acts as a rigid restraint or provides at least two degrees of transitional restraint to piping thermal expansion.

(4) Structural discontinuities include pipe weld joints to vessel nozzles, valve bodies, pump casings, pipe fittings (such as elbows, tees, reducers, flanges, etc., conforming to ANSI B16.9), and pipe branch connections and fittings.

Table 3

INSERVICE INSPECTION PROGRAM
CODE CLASS

Item No.	Examination Category	Components and Parts To be Examined	Examination Methods	Examination Requirements for Third Inspection Interval	Examination Technique/Examination Area Comments
The ASME Section XI Item No. and Category of the component are listed in these columns.		Each type of examination area is listed in this column.	The NDE method required to satisfy Code requirements is listed in this column.	This column provides information regarding the number and/or percent of examinations required to be performed for the inspection interval.	This column provides information specific to examination techniques, examination areas, or comments.

Table 3

INSERVICE INSPECTION PROGRAM
CLASS 3 COMPONENTS

Item No.	Examination Category	Components and Parts To be Examined	Examination Methods	Examination Requirements for Third Inspection Interval	Examination Technique/Examination Area Comments
CLASS 3 COMPONENTS					
D1.10 D2.10 D3.10	D-A D-B D-C	Pressure-Retaining Components	Visual (VT-2)	All components to be examined during system pressure or system hydrostatic test as defined by IWD-2500-1 Table Descriptions. Examination to be performed in accordance with IWD-5221 for each inspection period and performed once each interval in accordance with IWD-5223.	VT examinations will be performed in accordance with IWA-5240.
D1.20 through D1.60 D2.20 through D2.60 D3.20 through D3.60	D-A D-B D-C	Integral Attachments of Supports and Restraints, Hydraulic Snubbers, Spring, Constant Load, and Shock Absorbers	Visual (VT-3)	All required attachments to be examined during each inspection interval as defined by IWD-2500-1 Table Descriptions. For multiple components in a system of similar design, function, and service, the integral attachment of only one of the multiple components shall be examined. The integral attachments selected shall correspond to those support components selected for examination in accordance with IWF-2510(b).	The integral attachments will be examined.

Table 4

INSERVICE INSPECTION PROGRAM

CODE CLASS

Item No.	Examination Category	Components and Parts To be Examined	Examination Methods	Examination Requirements for Third Inspection Interval	Examination Technique/Examination Area Comments
The ASME Section XI Item No. and Category of the component are listed in these columns.		Each type of examination area is listed in this column.	The NDE method required to satisfy Code requirements is listed in this column.	This column provides information regarding the number and/or percent of examinations required to be performed for the inspection interval.	This column provides information specific to examination techniques, examination areas, or comments.

Table 4

INSERVICE INSPECTION PROGRAM
CLASS 1, CLASS 2, AND CLASS 3 COMPONENT SUPPORTS

Item No.	Examination Category	Components and Parts To be Examined	Examination Methods	Examination Requirements for Third Inspection Interval	Examination Technique/Examination Area Comments
CLASS 1, 2, AND 3 IWF COMPONENTS SUPPORTS					
PLATE AND SHELL TYPE SUPPORTS, LINEAR TYPE SUPPORTS, AND COMPONENT STANDARD SUPPORTS					
F1.10 through F1.40 F2.10 through F2.40 F3.10 through F3.50	F-A F-B F-C	Mechanical Connections to Pressure-Retaining Components and Building Structure; Weld Connections to Building Structure; Weld and Mechanical Connections at Intermediate Joints in Multi-connected Integral and Nonintegral Supports; and Component Displacement Settings of Guides and Stops, Misalignment of Supports, Assembly of Support Items; Spring Type Supports; Constant Load Type Supports; Shock Absorbers; Hydraulic Type Snubbers	Visual (VT-3)	Component supports to be selected for examination are the supports of the nonexempt Class 1, 2, and 3 components scheduled to be examined. Examination boundaries established in accordance with IWF-1300. Examinations may be performed during normal system operation or plant outages.	Functional testing of snubber type support components shall be performed in accordance with Technical Specifications and in accordance with requirements of this program.

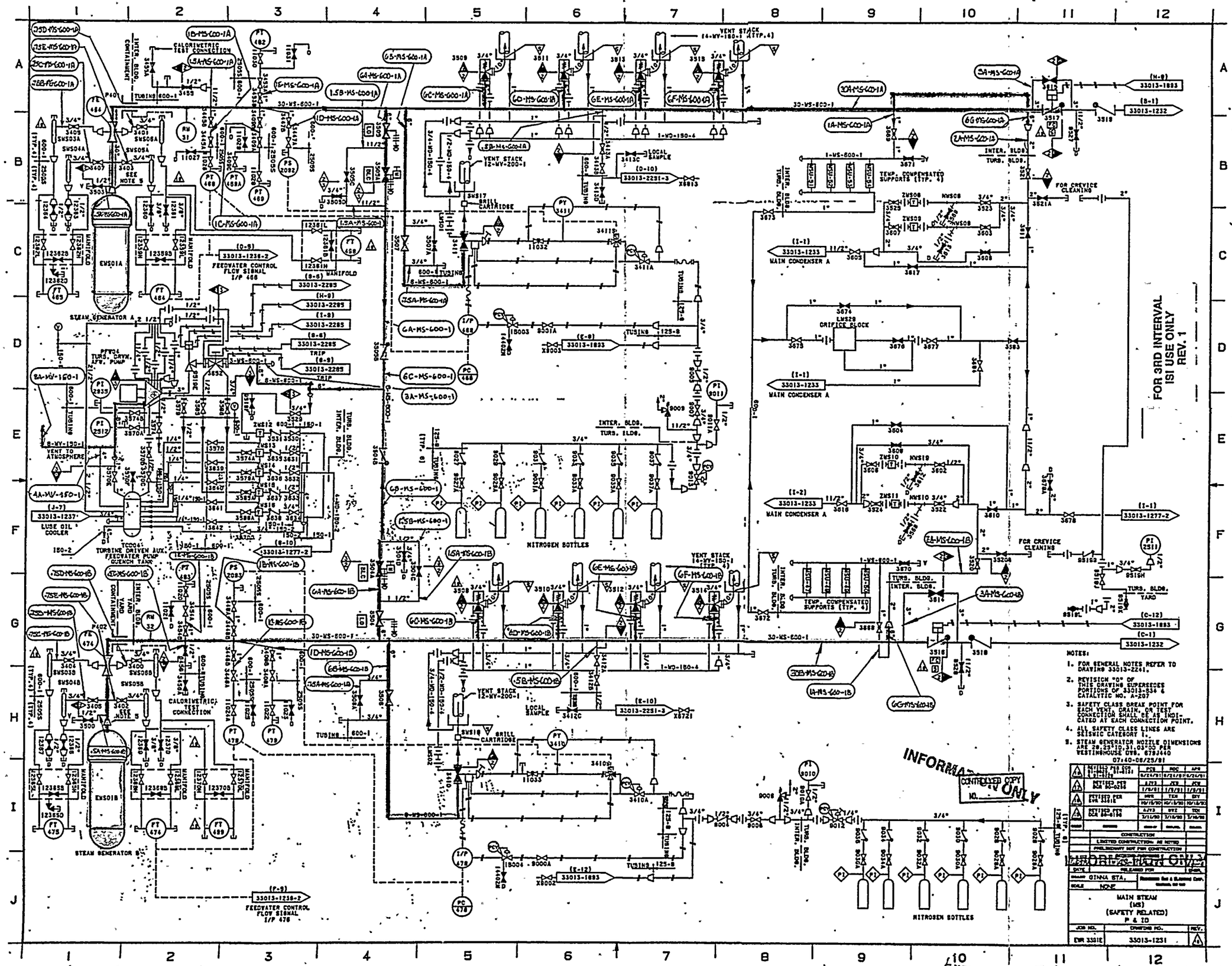

NOTES:

1. FOR GENERAL NOTES REFER TO DRAWING 33013-2241.
2. REVISION "0" OF THIS DRAWING SUPERSEDES PORTIONS OF 33013-534 & CATALYTIC NO. A-207
3. SAFETY CLASS BREAK POINT FOR EACH VENT, DRAIN, OR TEST CONNECTION SHALL BE AS INDICATED AT EACH CONNECTION POINT.
4. ALL SAFETY CLASS LINES ARE SEISMIC CATEGORY I.
5. STEAM GENERATOR NOZZLE DIMENSIONS ARE 28.25"ID,31.03"OD PER WESTINGHOUSE DWG. 6783440

07:40-06/25/81

SI APERTURE CARD

Also Available On Aperture Card

9302020317-01

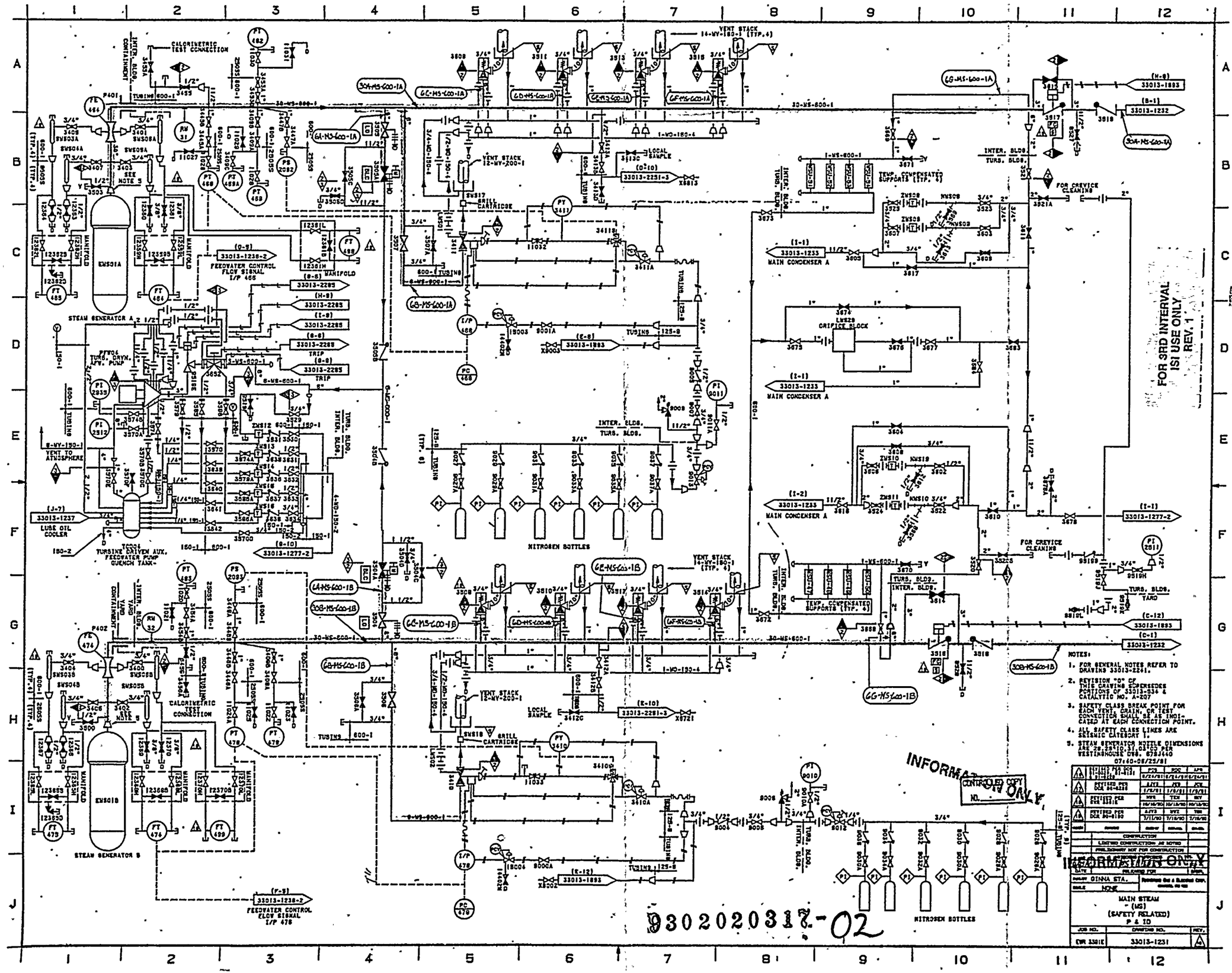

SI APERTURE CARD

Also Available On Aperture Card

9302020317-02

9302020317-02

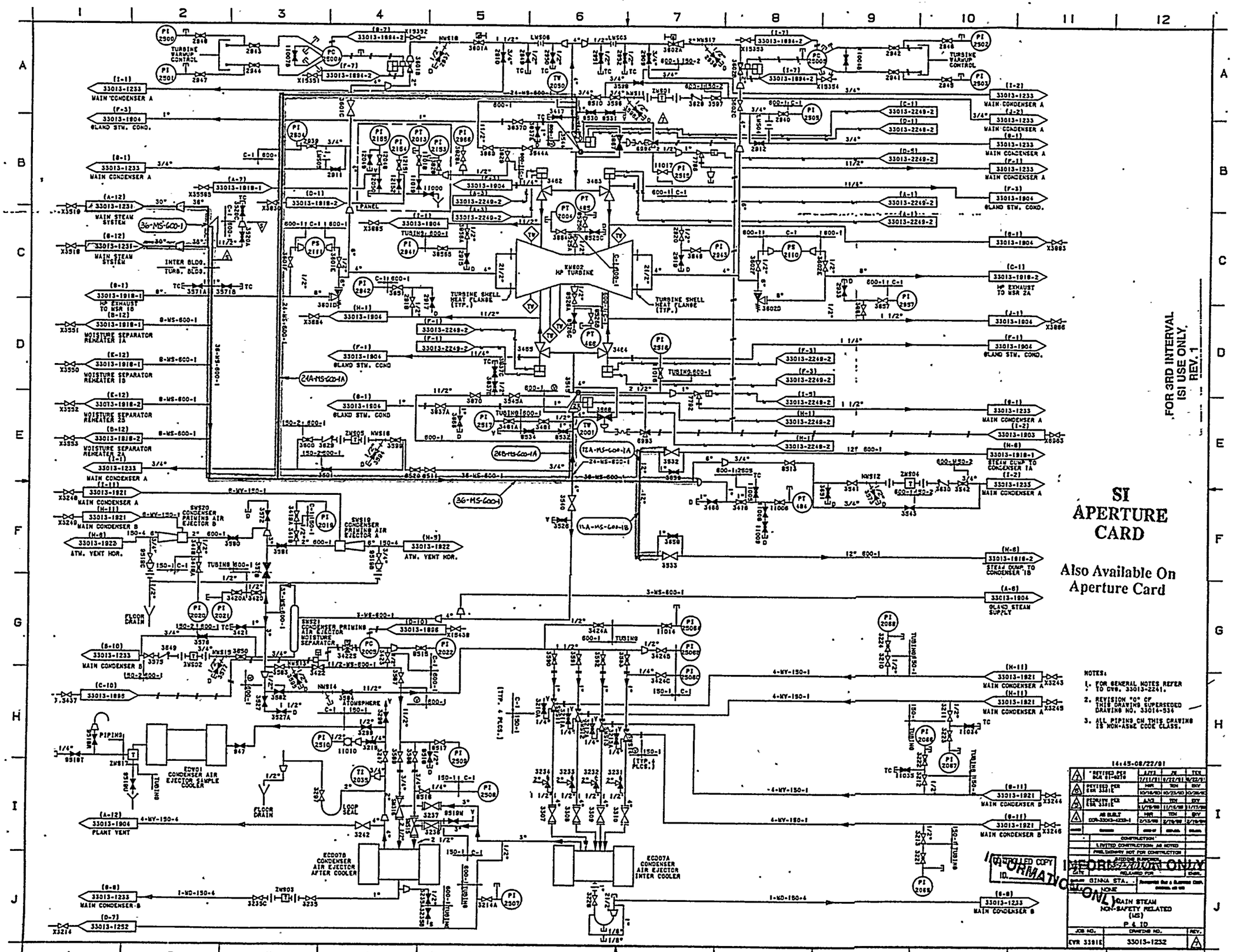

9302020317-03

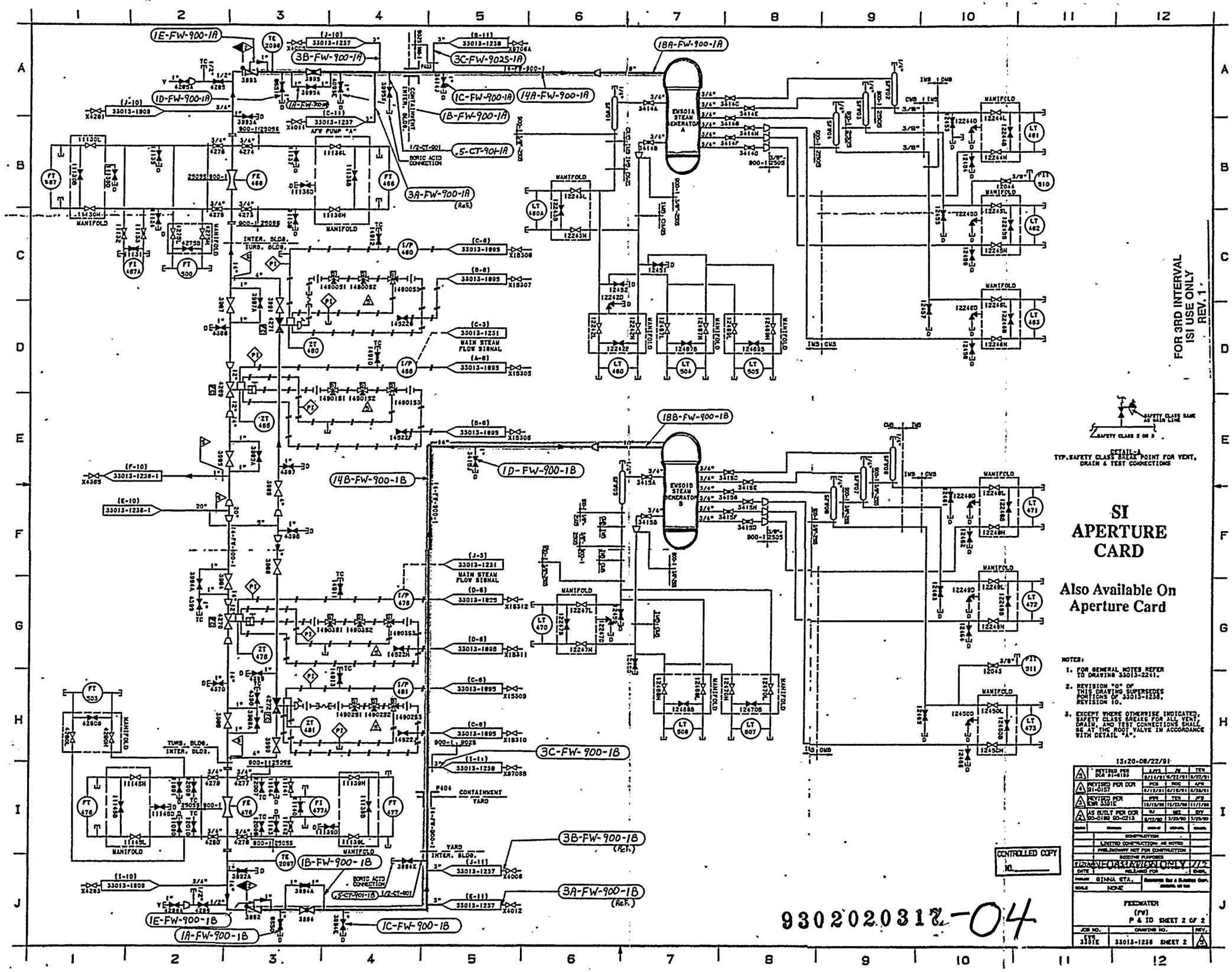
1E-FW-900-1A
3B-FW-900-1A
3C-FW-902S-1A
1D-FW-900-1A
1C-FW-900-1A
14A-FW-900-1A
1B-FW-900-1A
.5-CT-901-1A
3A-FW-900-1A (Ref.)
18A-FW-900-1A
EW501A STEAM GENERATOR A
MAIN STEAM FLOW SIGNAL
18B-FW-900-1B
1D-FW-900-1B
14B-FW-900-1B
EW501B STEAM GENERATOR B
3C-FW-900-1B
3B-FW-900-1B (Ref.)
3A-FW-900-1B (Ref.)
1B-FW-900-1B
.5-CT-901-1B
1E-FW-900-1B
1A-FW-900-1B
1C-FW-900-1B
BORIC ACID CONNECTION
CONTAINMENT YARD
TURB. BLDG. INTER. BLDG.
MANIFOLD
FOR 3RD INTERVAL ISI USE ONLY REV. 1
DETAIL-A TYP. SAFETY CLASS BREAK POINT FOR VENT, DRAIN & TEST CONNECTIONS
SI APERTURE CARD
Also Available On Aperture Card
NOTES:
1. FOR GENERAL NOTES REFER TO DRAWING 33013-2241.
2. REVISION "0" OF THIS DRAWING SUPERSEDES PORTIONS OF 33013-1238, REVISION 10.
3. EXCEPT WHERE OTHERWISE INDICATED, SAFETY CLASS BREAKS FOR ALL VENT, DRAIN, AND TEST CONNECTIONS SHALL BE AT THE ROOT VALVE IN ACCORDANCE WITH DETAIL "A".
CONTROLLED COPY NO.
FOR REVIEW ONLY
FEEDWATER (FW) P & ID SHEET 2 OF 2
33013-1238 SHEET 2
9302020317-04

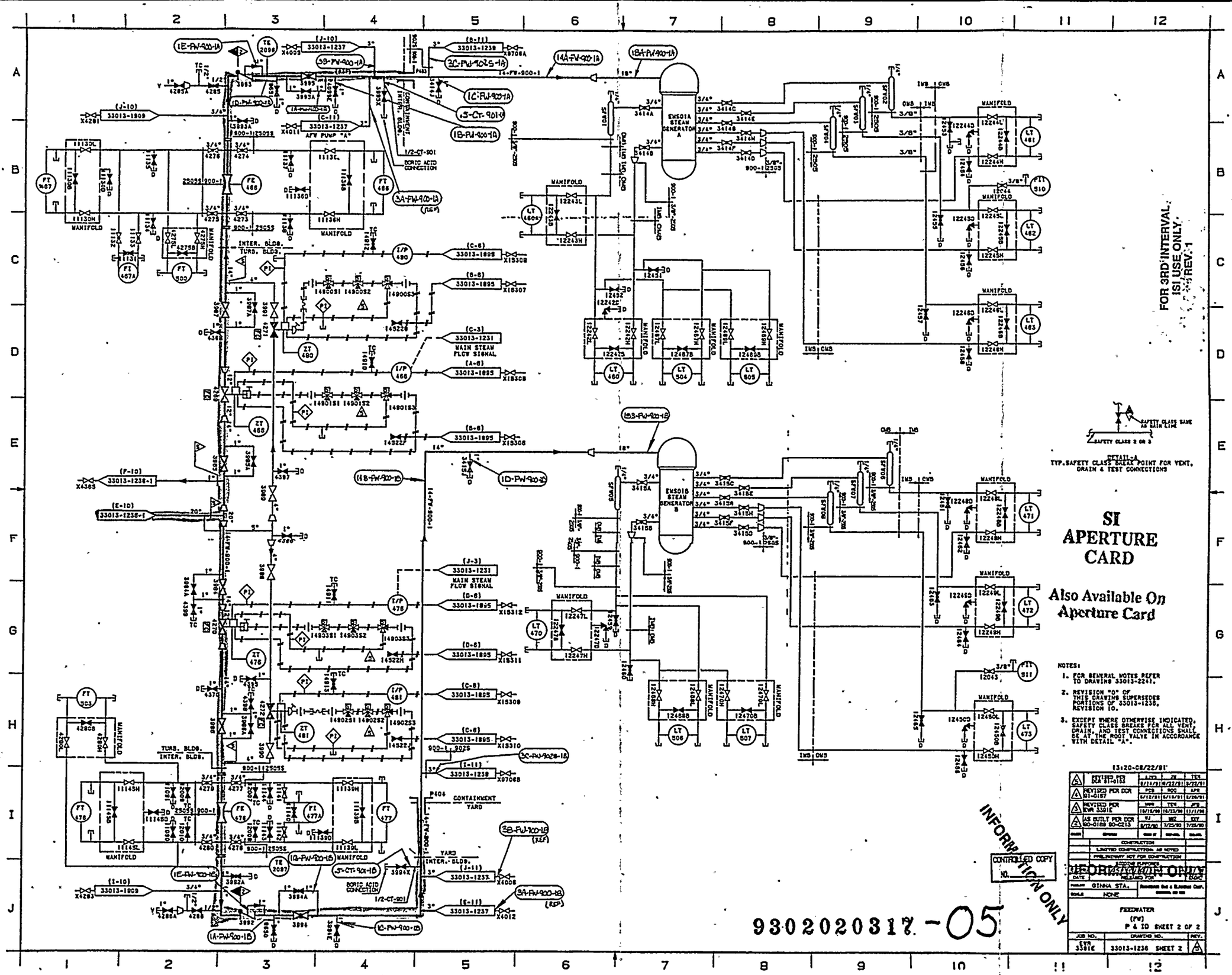
FOR 3RD INTERVAL ISI USE ONLY REV. 1
SI APERTURE CARD
Also Available On Aperture Card
INFORMATION ONLY
CONTROLLED COPY NO.
9302020317-05
TYP. SAFETY CLASS BREAK POINT FOR VENT, DRAIN & TEST CONNECTIONS
SAFETY CLASS SAME AS SIN LINE
SAFETY CLASS 2 OR 3
EN501A STEAM GENERATOR A
EN501B STEAM GENERATOR B
AFW PUMP "A"
MAIN STEAM FLOW SIGNAL
BORIC ACID CONNECTION
CONTAINMENT YARD
TURB. BLDG. INTER. BLDG.
MANIFOLD
NOTES:
1. FOR GENERAL NOTES REFER TO DRAWING 33013-2241.
2. REVISION "0" OF THIS DRAWING SUPERSEDES PORTIONS OF 33013-1236, REVISION 10.
3. EXCEPT WHERE OTHERWISE INDICATED, SAFETY CLASS BREAKS FOR ALL VENT, DRAIN, AND TEST CONNECTIONS SHALL BE AT THE ROOT VALVE IN ACCORDANCE WITH DETAIL "A".
13:20-08/22/91
REVISED PER SDA 91-0182
REVISED PER DCR 91-0187
REVISED PER SWR 3381E
AS BUILT PER DCR 90-0189 90-0213
CONSTRUCTION
LIMITED CONSTRUCTION AS NOTED
PRELIMINARY NOT FOR CONSTRUCTION
GINNA STA.
NONE
FEEDWATER (FW) P & ID SHEET 2 OF 2
33013-1236 SHEET 2

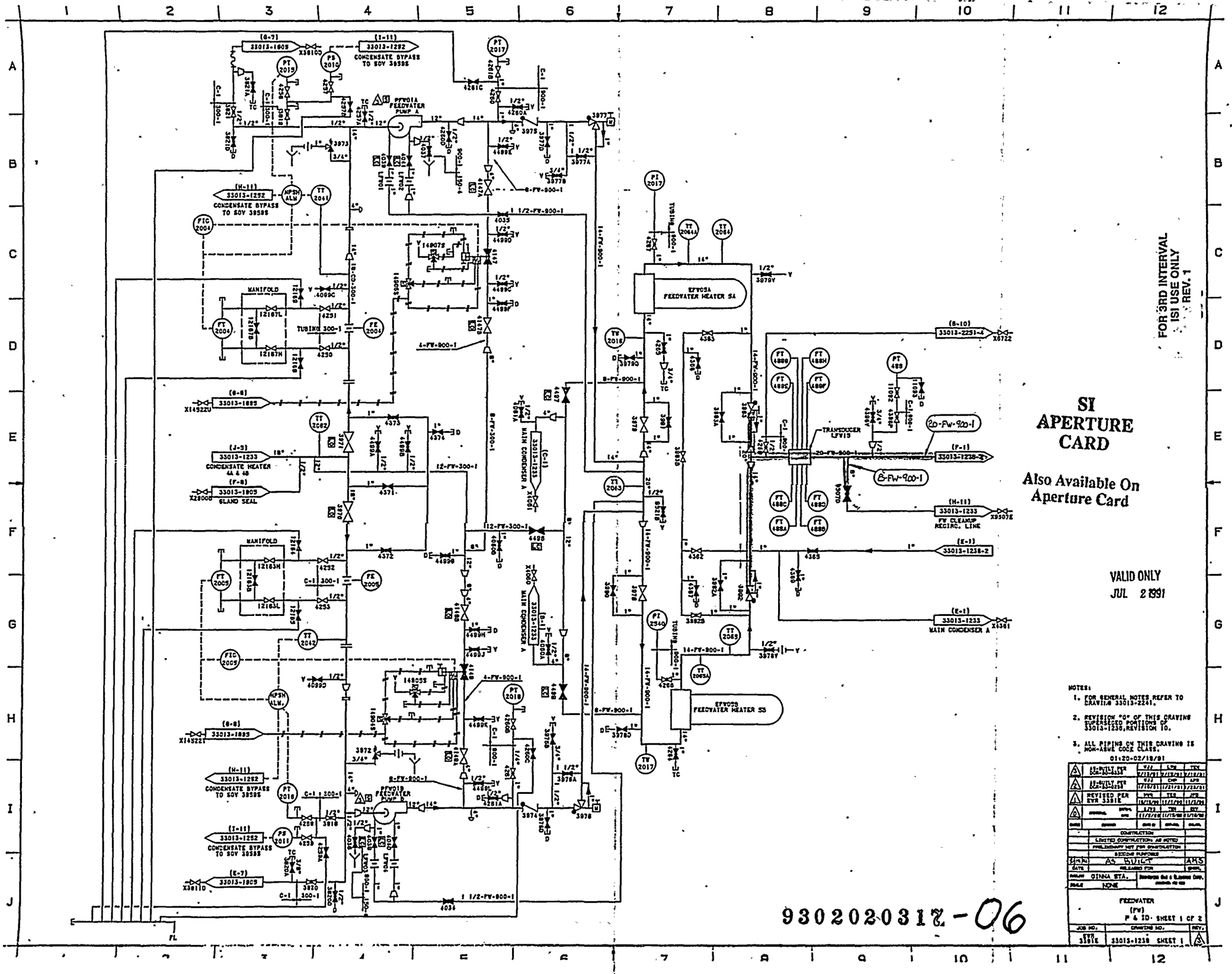
EFWCOA FEEDWATER PUMP A
EFWCOB FEEDWATER PUMP B
EFWCOA FEEDWATER HEATER 5A
EFWCOB FEEDWATER HEATER 5B
CONDENSATE BYPASS TO SOV 38585
MANIFOLD
TUBING 300-1
CONDENSATE HEATER 4A & 4B
GLAND SEAL
MAIN CONDENSER A
MAIN CONDENSER B
TRANSDUCER LFW15
FW CLEANUP RECIRC. LINE
MAIN CONDENSER A
NPSH ALM.
20-FW-900-1
8-FW-900-1
4-FW-900-1
12-FW-300-1
14-FW-900-1
1 1/2-FW-900-1
FEEDWATER
(FW)
P & ID - SHEET 1 OF 2
JOB NO. 33013
DRAWING NO. 33013-1238 SHEET 1
REV. 5
SCALE NONE
DRAWN GINNA STA.
AS BUILT
AHS
FOR 3RD INTERVAL ISI USE ONLY REV. 1
SI APERTURE CARD
Also Available On Aperture Card
VALID ONLY JUL 2 1991
NOTES:
1. FOR GENERAL NOTES REFER TO DRAWING 33013-2241.
2. REVISION "0" OF THIS DRAWING SUPERSEDES PORTIONS OF 33013-1238, REVISION 10.
3. ALL PIPING ON THIS DRAWING IS NON-ASME CODE CLASS.
01:20-02/19/91
9302020317-06

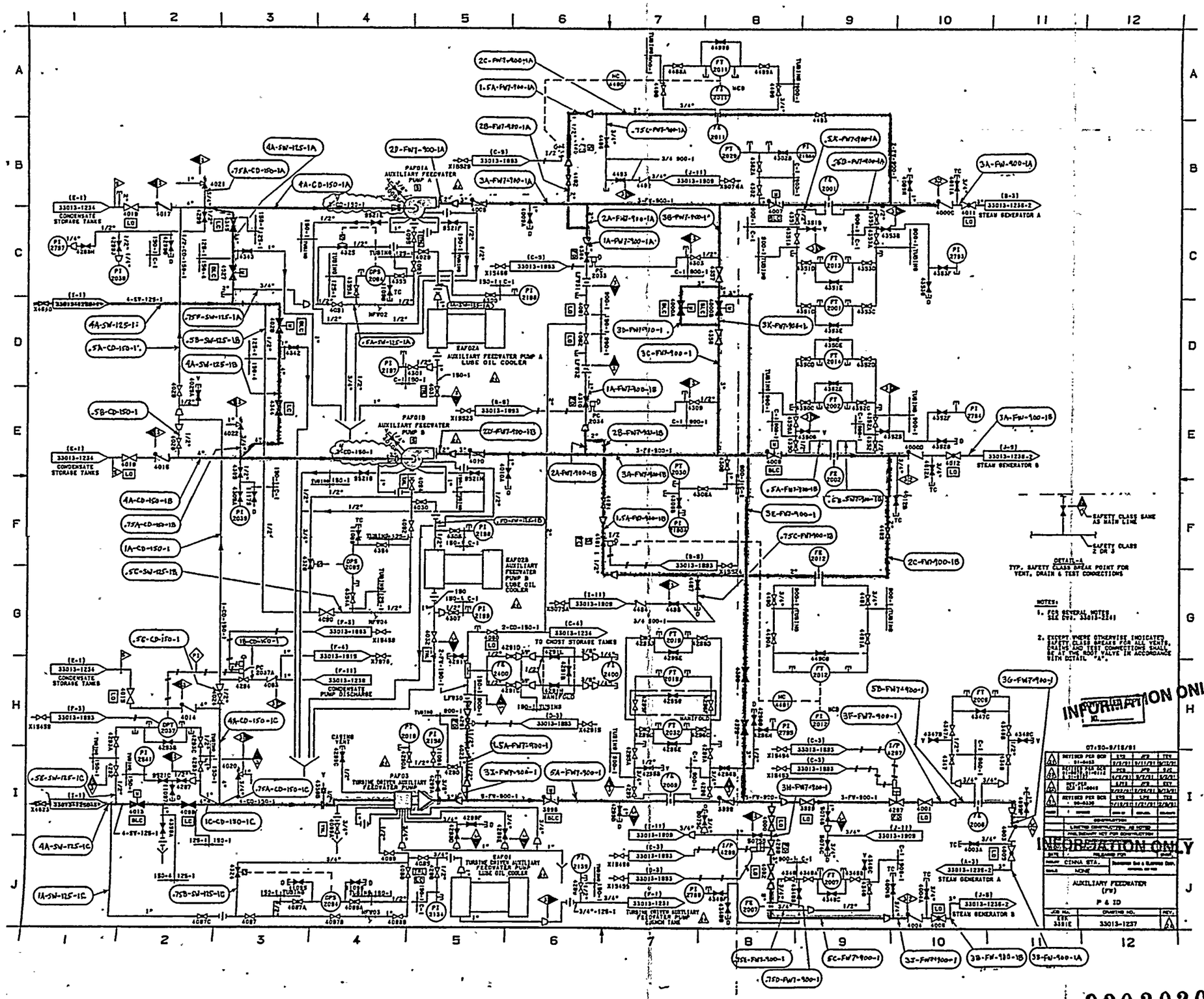

FOR 3RD INTERVAL
ISI USE ONLY
REV. 1

SI
APERTURE
CARD

Also Available On
Aperture Card

9302020317-07

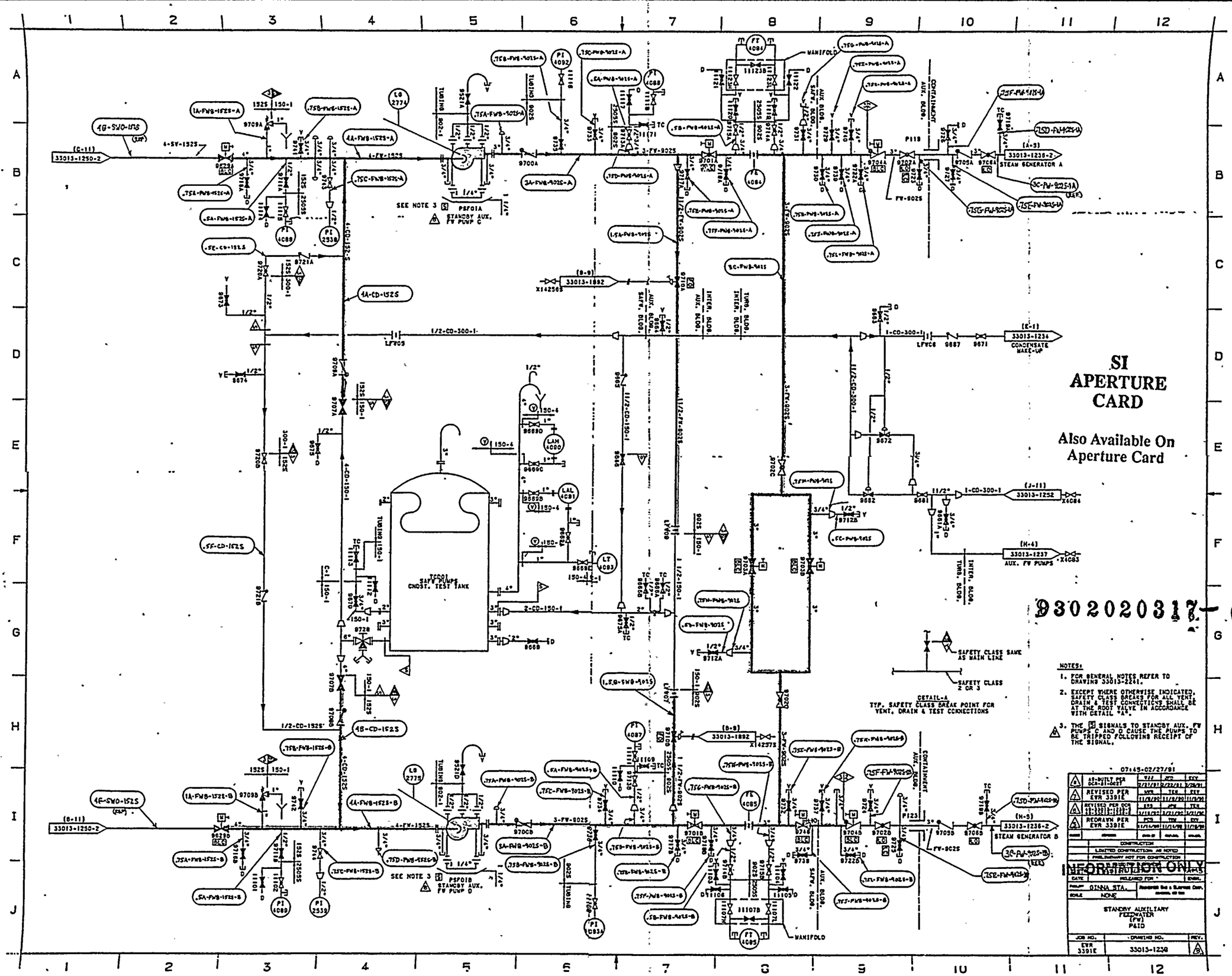
SI
APERTURE
CARD
Also Available On
Aperture Card
FOR 3RD INTERVAL
ISI USE ONLY
REV. 1
9302020317-08
INFORMATION ONLY
STEAM GENERATOR A
STEAM GENERATOR B
CONDENSATE MAKE-UP
AUX. FW PUMPS
SAFY PUMPS CNDST. TEST TANK
STANDBY AUX. FW PUMP C
STANDBY AUX. FW PUMP D
SAFETY CLASS SAME AS MAIN LINE
SAFETY CLASS 2 OR 3
DETAIL-A
TYP. SAFETY CLASS BREAK POINT FOR VENT, DRAIN & TEST CONNECTIONS
NOTES:
1. FOR GENERAL NOTES REFER TO DRAWING 33013-2261.
2. EXCEPT WHERE OTHERWISE INDICATED, SAFETY CLASS BREAKS FOR ALL VENT, DRAIN & TEST CONNECTIONS SHALL BE AT THE ROOT VALVE IN ACCORDANCE WITH DETAIL "A".
3. THE S SIGNALS TO STANDBY AUX. FW PUMPS C AND D CAUSE THE PUMPS TO BE TRIPPED FOLLOWING RECEIPT OF THE SIGNAL.
07:45-02/27/91
AS-BUILT PER DCA-91-0057
REVISED PER EVR 3391E
REVISED PER DCN
REDRAWN PER EVR 3391E
CONSTRUCTION
LIMITED CONSTRUCTION AS NOTED
PRELIMINARY NOT FOR CONSTRUCTION
DATE
RELEASED FOR
GINNA STA.
NONE
STANDBY AUXILIARY FEEDWATER (FW) P&ID
JOB NO.
DRAWING NO.
REV.
EVR 3391E
33013-1259

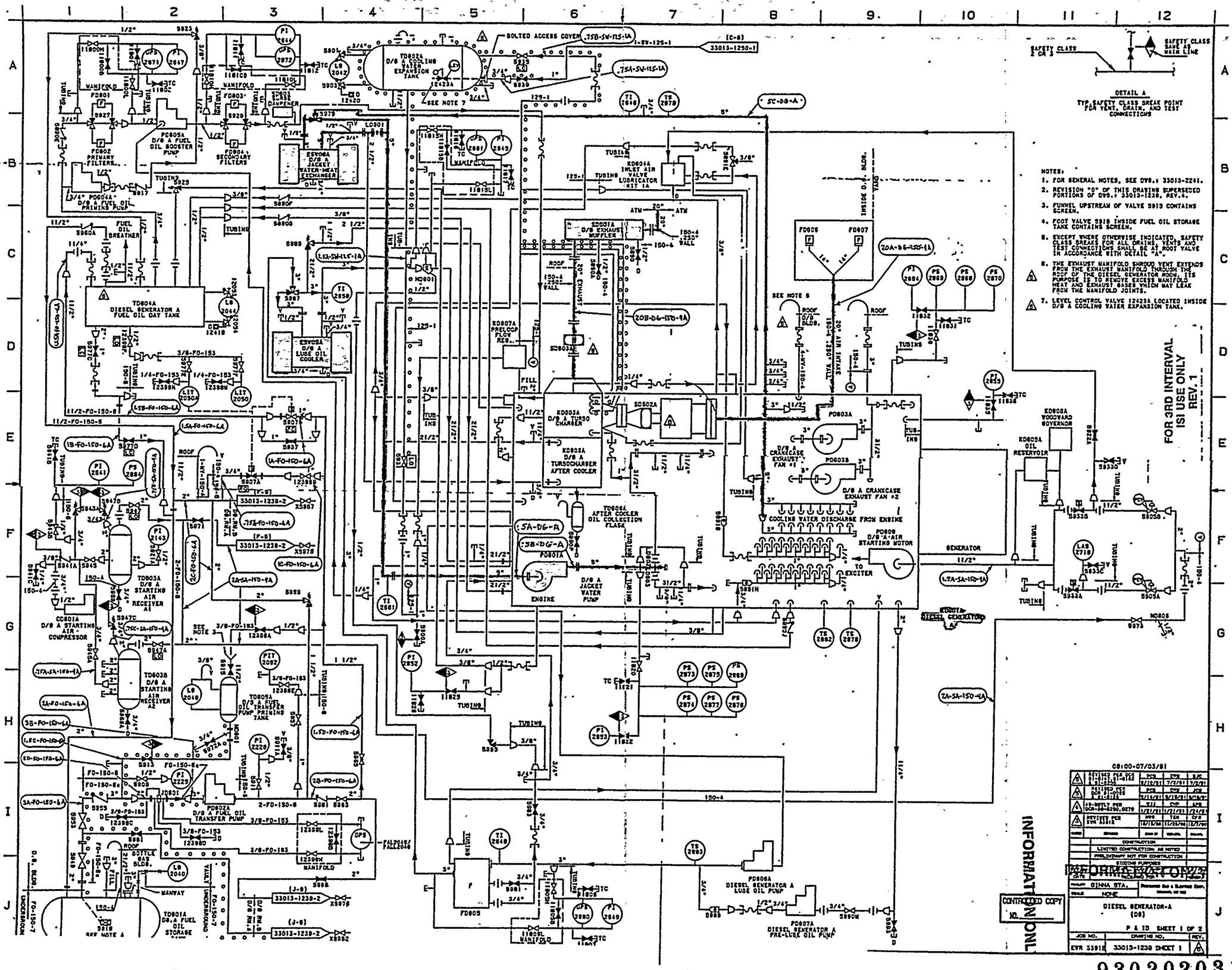

9302020317-09

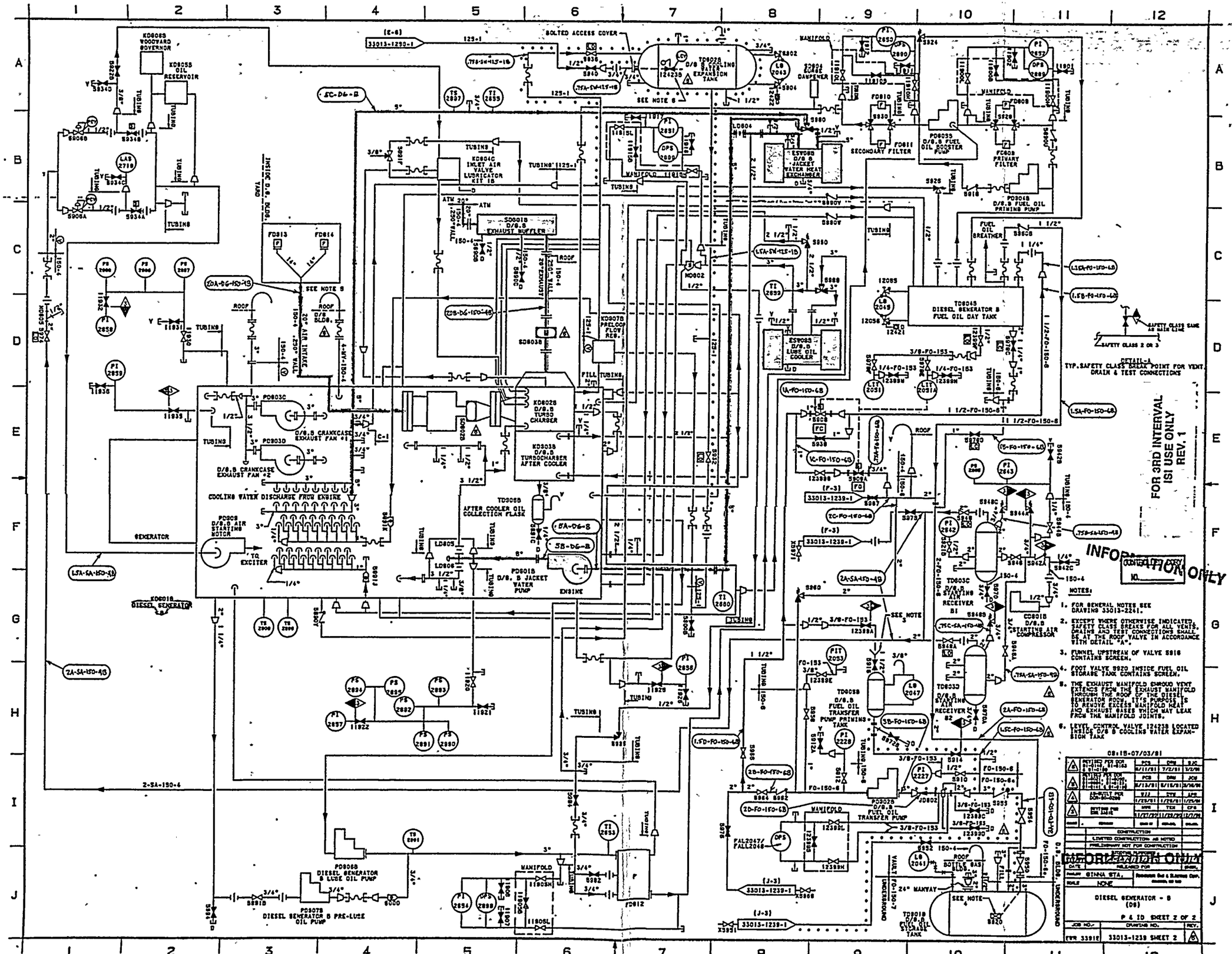

930202031 7-10

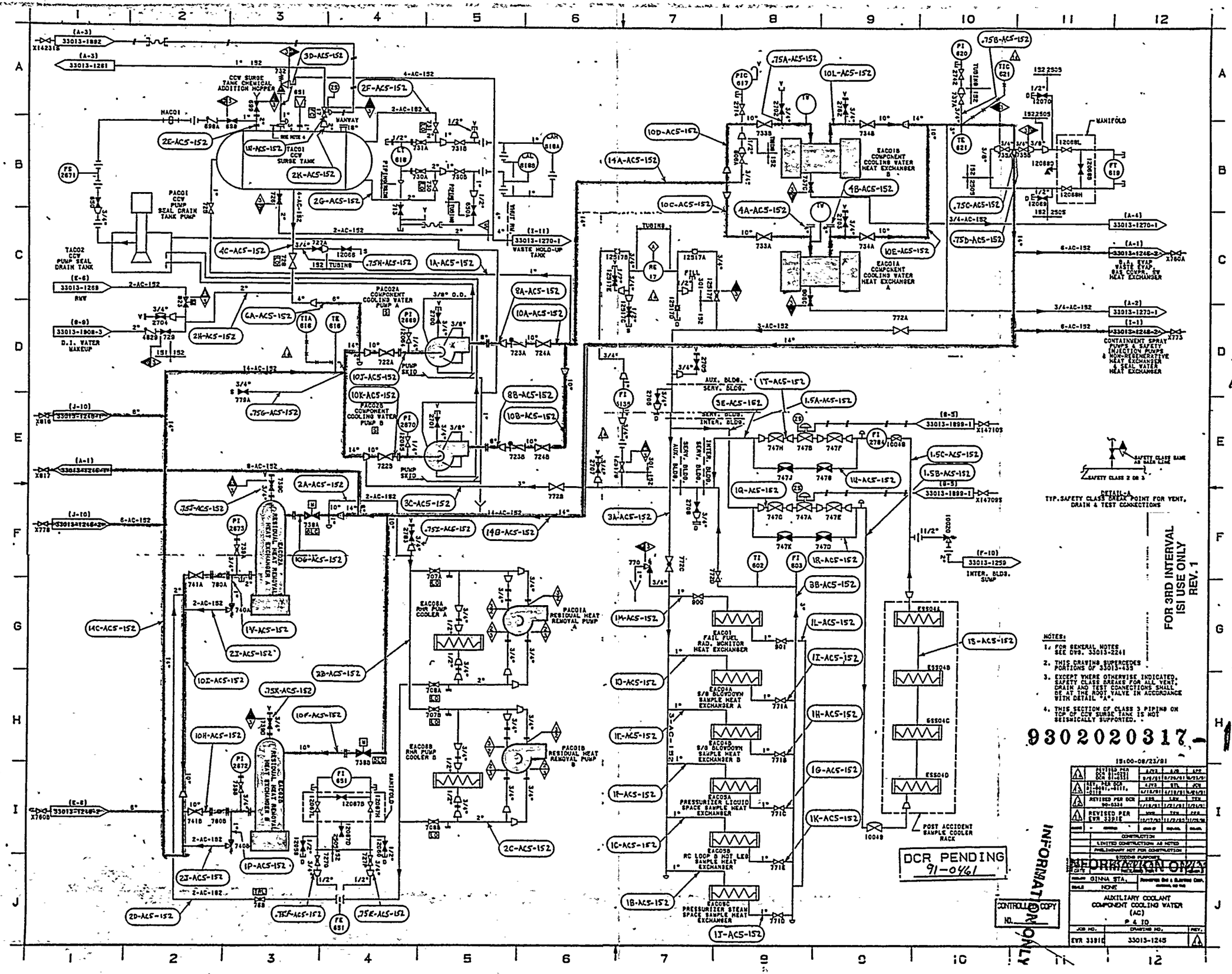

SI APERTURE CARD

Also Available On Aperture Card

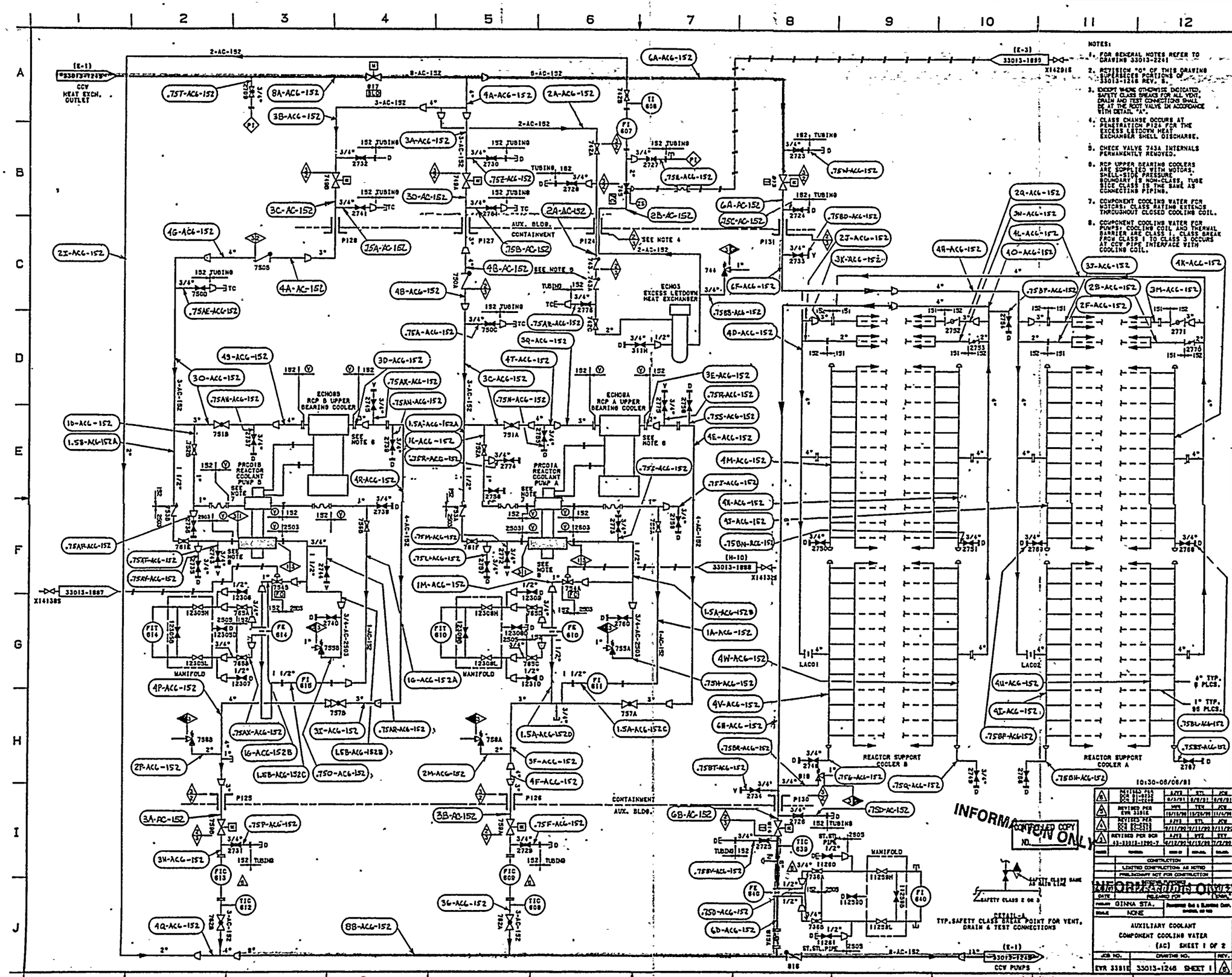

9302020317-12

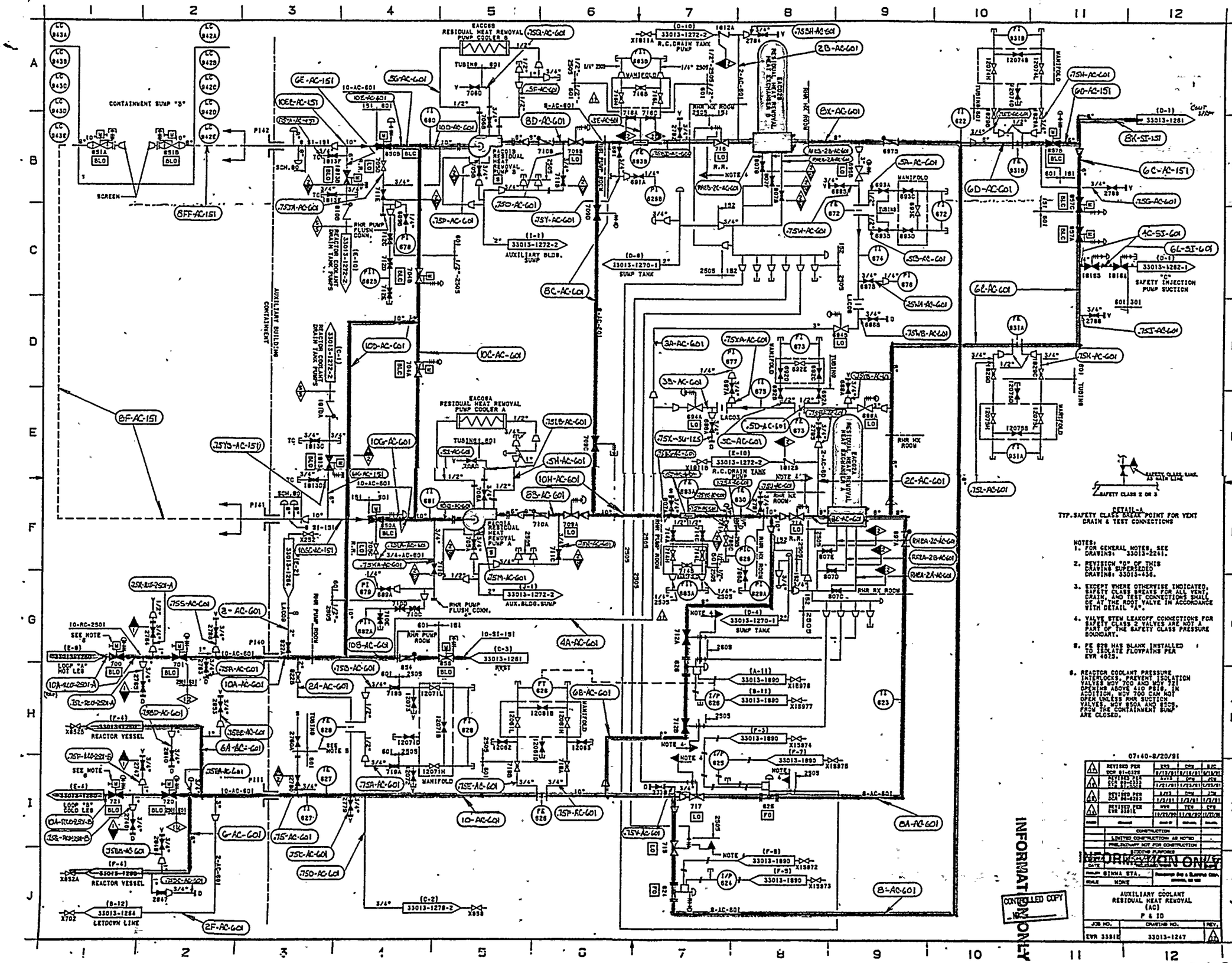

FOR 3RD INTERVAL
ISI USE ONLY
REV. 1

SI
APERTURE
CARD

Also Available On
Aperture Card

9302020317-13

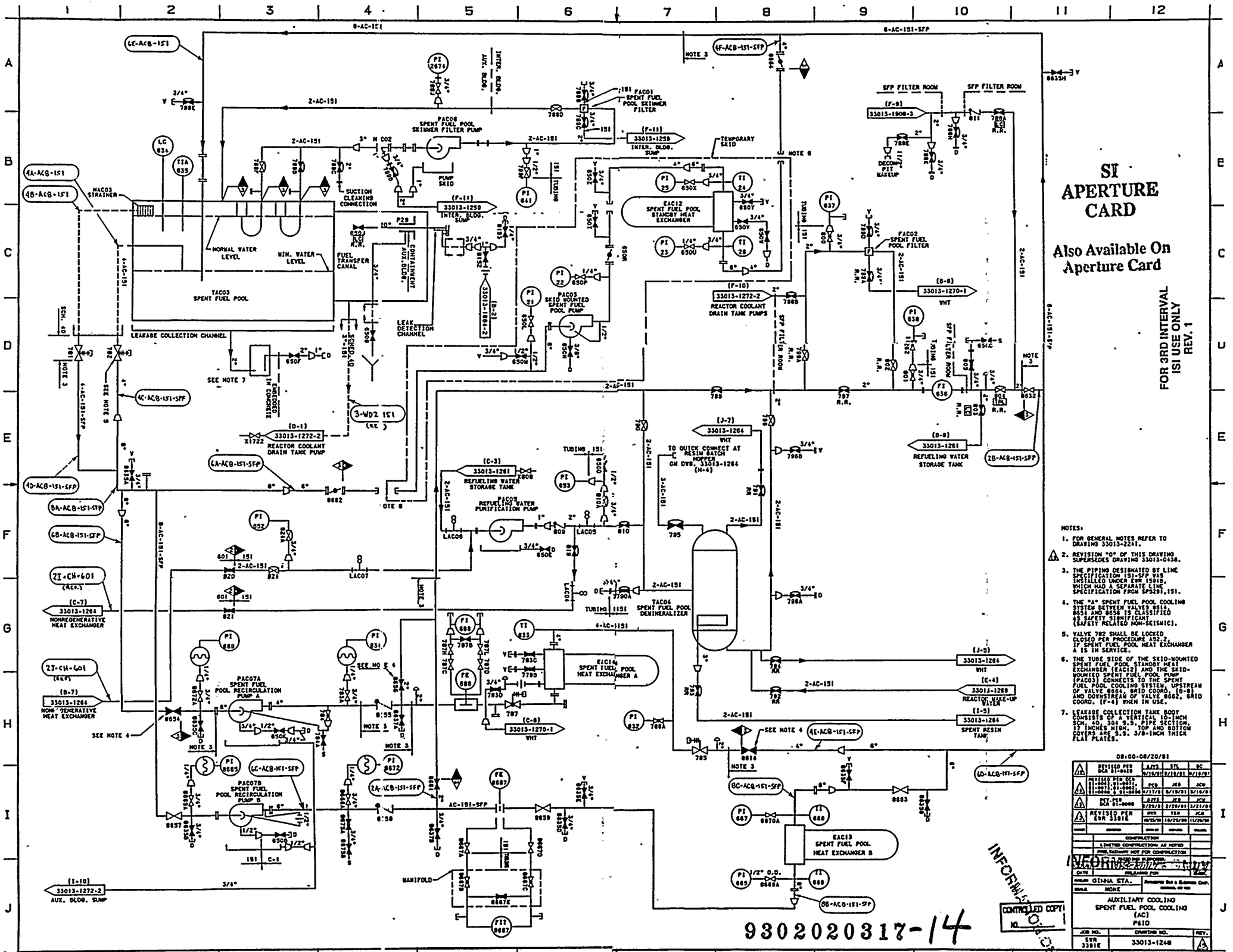
TACO3 SPENT FUEL POOL
PACO6 SPENT FUEL POOL SKIMMER FILTER PUMP
PACO1 SPENT FUEL POOL SKIMMER FILTER
EAC12 SPENT FUEL POOL STANDBY HEAT EXCHANGER
PACO2 SPENT FUEL POOL FILTER
PACO3 SKID MOUNTED SPENT FUEL POOL PUMP
REACTOR COOLANT DRAIN TANK PUMPS
REFUELING WATER STORAGE TANK
REFUELING WATER PURIFICATION PUMP
TACO4 SPENT FUEL POOL DEMINERALIZER
EAC14 SPENT FUEL POOL HEAT EXCHANGER A
EAC13 SPENT FUEL POOL HEAT EXCHANGER B
PACO7A SPENT FUEL POOL RECIRCULATION PUMP A
PACO7B SPENT FUEL POOL RECIRCULATION PUMP B
NONREGENERATIVE HEAT EXCHANGER
SPENT RESIN TANK
REACTOR MAKE-UP WATER
AUX. BLDG. SUMP
LEAKAGE COLLECTION CHANNEL
LEAK DETECTION CHANNEL
NORMAL WATER LEVEL
MIN. WATER LEVEL
SUCTION CLEANING CONNECTION
FUEL TRANSFER CANAL
SFP FILTER ROOM
MANIFOLD
SEE NOTE 4
NOTE 3
NOTE 6
TEMPORARY SKID
SI APERTURE CARD
Also Available On Aperture Card
FOR 3RD INTERVAL ISI USE ONLY REV. 1
NOTES:
1. FOR GENERAL NOTES REFER TO DRAWING 33013-2241.
2. REVISION "0" OF THIS DRAWING SUPERSEDES DRAWING 33013-0436.
3. THE PIPING DESIGNATED BY LINE SPECIFICATION 151-SFP WAS INSTALLED UNDER EWR 15918, WHICH HAD A SEPARATE LINE SPECIFICATION FROM SPS281.151.
4. THE "A" SPENT FUEL POOL COOLING SYSTEM BETWEEN VALVES 8814, 8654 AND 8658 IS CLASSIFIED AS SAFETY SIGNIFICANT (SAFETY RELATED NON-SEISMIC).
5. VALVE 782 SHALL BE LOCKED CLOSED PER PROCEDURE A52.2 IF SPENT FUEL POOL HEAT EXCHANGER A IS IN SERVICE.
6. THE TUBE SIDE OF THE SKID-MOUNTED SPENT FUEL POOL STANDBY HEAT EXCHANGER (EAC12) AND THE SKID-MOUNTED SPENT FUEL POOL PUMP (PACO3) CONNECTS TO THE SPENT FUEL POOL COOLING SYSTEM UPSTREAM OF VALVE 8661, GRID COORD. (D-8) AND DOWNSTREAM OF VALVE 8662, GRID COORD. (F-4) WHEN IN USE.
7. LEAKAGE COLLECTION TANK BODY CONSISTS OF A VERTICAL 10-INCH SCH. 40, 304 S.S. PIPE SECTION, 17 INCHES HIGH. TOP AND BOTTOM COVERS ARE S.S. 3/8-INCH THICK FLAT PLATES.
08:00-08/20/81
REVISED PER DCN 81-0620
REVISED PER EWR 15918
REVISED PER EWR 3381E
CONSTRUCTION
LIMITED CONSTRUCTION AS NOTED
PRELIMINARY NOT FOR CONSTRUCTION
RELEASED FOR
GINNA STA.
NONE
AUXILIARY COOLING
SPENT FUEL POOL COOLING
(AC)
P&ID
JOB NO. EWR 3381E
DRAWING NO. 33013-1248
REV. 1
INFORMATION ONLY
CONTROLLED COPY NO.
9302020317-14

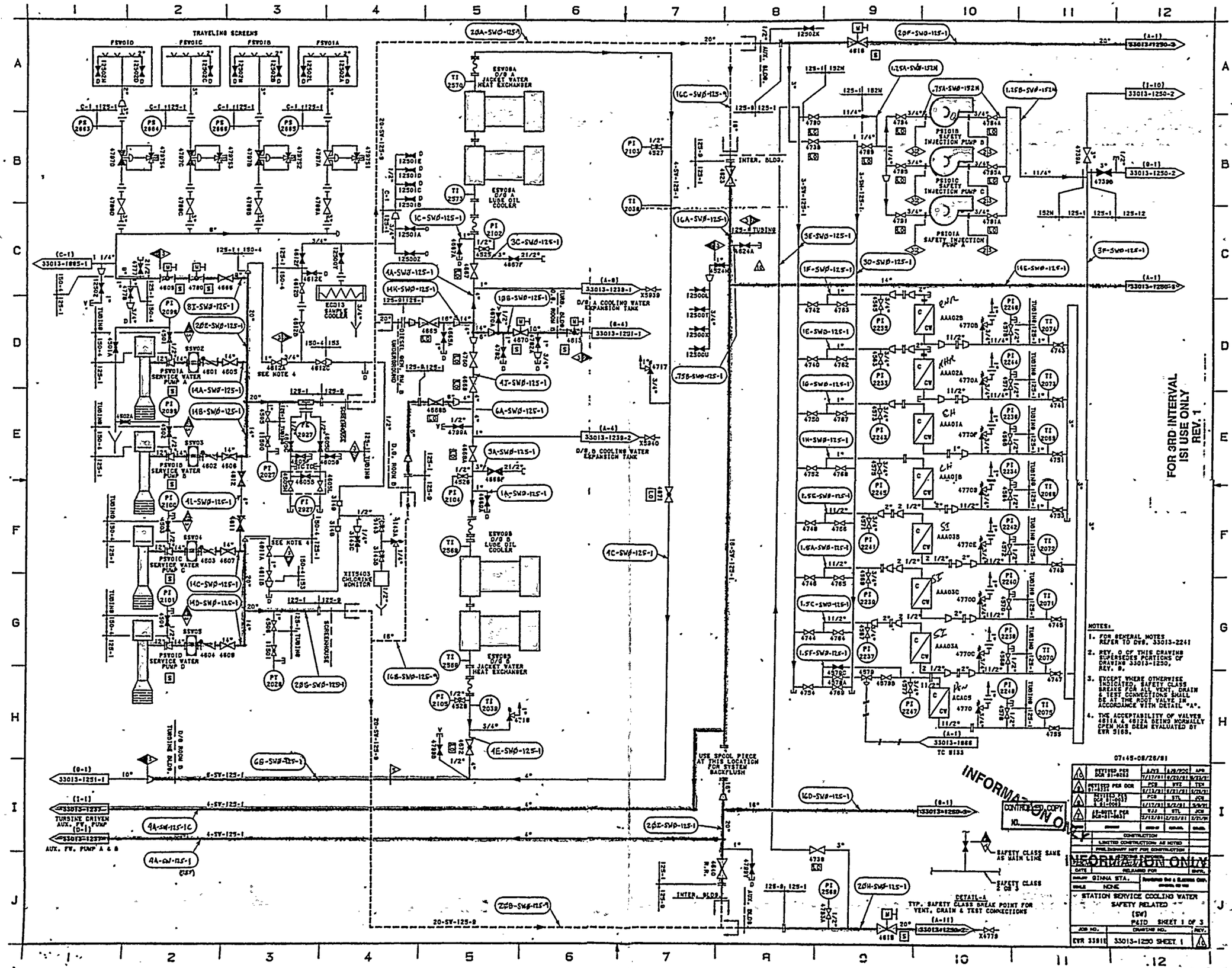

SI APERTURE CARD

Also Available On Aperture Card

9302020317-15

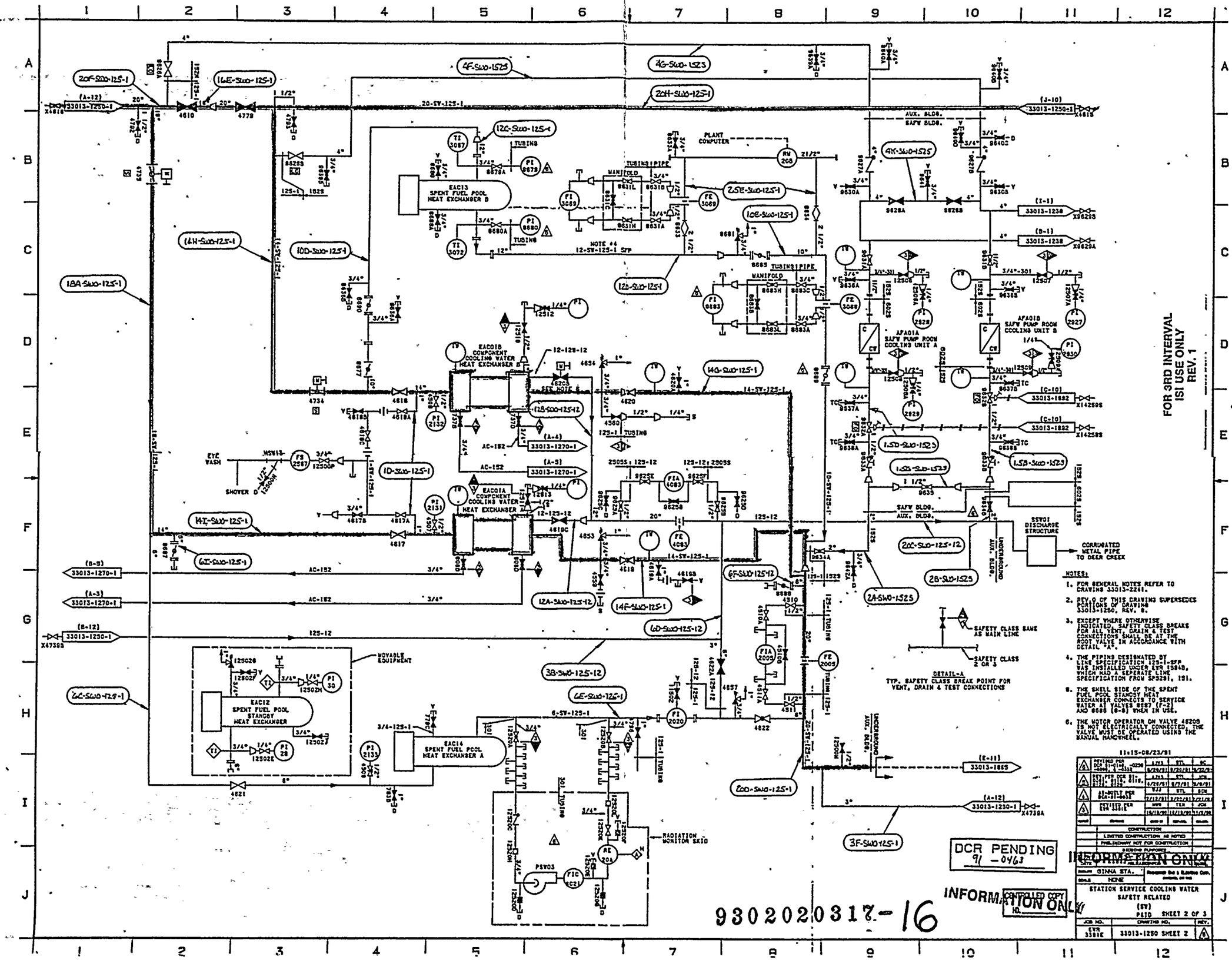
EAC13 SPENT FUEL POOL HEAT EXCHANGER B
EAC12 SPENT FUEL POOL STANDBY HEAT EXCHANGER
EAC16 SPENT FUEL POOL HEAT EXCHANGER A
EAC01B COMPONENT COOLING WATER HEAT EXCHANGER B
EAC01A COMPONENT COOLING WATER HEAT EXCHANGER A
AFA01A SAFW PUMP ROOM COOLING UNIT A
AFA01B SAFW PUMP ROOM COOLING UNIT B
SSW01 DISCHARGE STRUCTURE
CORRUGATED METAL PIPE TO DEER CREEK
PLANT COMPUTER
MOVABLE EQUIPMENT
RADIATION MONITOR SKID
EYE WASH
SHOWER
SAFETY CLASS SAME AS MAIN LINE
SAFETY CLASS 2 OR 3
DETAIL-A
TYP. SAFETY CLASS BREAK POINT FOR VENT, DRAIN & TEST CONNECTIONS
NOTES:
1. FOR GENERAL NOTES REFER TO DRAWING 33013-2261.
2. REV. 0 OF THIS DRAWING SUPERSEDES PORTIONS OF DRAWING 33013-1250, REV. 8.
3. EXCEPT WHERE OTHERWISE INDICATED, SAFETY CLASS BREAKS FOR ALL VENT, DRAIN & TEST CONNECTIONS SHALL BE AT THE ROOT VALVE IN ACCORDANCE WITH DETAIL "A".
4. THE PIPING DESIGNATED BY LINE SPECIFICATION 125-1-SFR WAS INSTALLED UNDER EVR 15948, WHICH HAD A SEPERATE LINE SPECIFICATION FROM SP5291, 191.
5. THE SHELL SIDE OF THE SPENT FUEL POOL STANDBY HEAT EXCHANGER CONNECTS TO SERVICE WATER VALVES 8587 (F-2) AND 8686 (B-8) WHEN IN USE.
6. THE MOTOR OPERATOR ON VALVE 46205 IS NOT ELECTRICALLY CONNECTED; THE VALVE MUST BE OPERATED USING THE MANUAL HANDWHEEL.
11:15-08/23/91
CONSTRUCTION
LIMITED CONSTRUCTION AS NOTED
PRELIMINARY NOT FOR CONSTRUCTION
BIDDING PURPOSES
GINNA STA.
NONE
STATION SERVICE COOLING WATER
SAFETY RELATED
(SW)
P&ID SHEET 2 OF 3
33013-1250 SHEET 2
DCR PENDING 91-0463
INFORMATION ONLY
CONTROLLED COPY NO.
9302020317-16
FOR 3RD INTERVAL ISI USE ONLY REV. 1
SI APERTURE CARD
Also Available On Aperture Card

NOTE: DUE TO LACK OF SPACE, ALL CLASS 2; 3 & 4" Ø FCU'S SUPPLY & RETURN PIPING ARE: __-SW-125

SI APERTURE CARD

Also Available On Aperture Card

DETAIL-A
TYP. SAFETY CLASS BREAK POINT FOR VENT, DRAIN & TEST CONNECTIONS

FOR 3RD INTERVAL ISI USE ONLY REV. 1

NOTES:
1. FOR GENERAL NOTES REFER TO DRAWING 33013-2241
2. REVISION "0" OF THIS DRAWING SUPERSEDED PORTIONS OF 33013-1250, REV. 8
3. EXCEPT WHERE OTHERWISE INDICATED, SAFETY CLASS BREAKS FOR ALL VENT, DRAIN & TEST CONNECTION SHALL BE AT THE ROOT VALVE IN ACCORDANCE WITH DETAIL "A".
4. ALL SAFETY CLASS LINES ARE SEISMIC CATEGORY I.

11:00-08/22/91

5	ECN 87-4252	A/TS 7/17/91	SCC/A/TS 8/21/91	A/TS 8/22/91
4	AS-BUILT ECN 88-4252	TJS 8/15/91	TJS 8/26/91	PCR 8/26/91
3	REVISED PER ECN 88-4216	MEB 10/11/90	TJS 10/16/90	ALM 11/07/90
2	ECN 90-0152	EMB 5/18/90	JPS 5/21/90	TJS 5/21/90
REV	REVISION	CHG BY	CHK'D BY	CHK'D

CONSTRUCTION
LIMITED CONSTRUCTION AS NOTED
PRELIMINARY NOT FOR CONSTRUCTION
SIZING PURPOSES

DRAWN GINNA STA. — Rochester Gas & Electric Corp. Ginna Station
SCALE NONE

STATION SERVICE COOLING WATER SAFETY RELATED (SW)

PAID SHEET 3 OF 3

JOB NO.	DRAWING NO.	REV.
ECN 33916	33013-1250 SHEET 3	5

INFORMATION ONLY

CONTROLLED COPY NO.

INFORMATION ONLY

9302020317-17

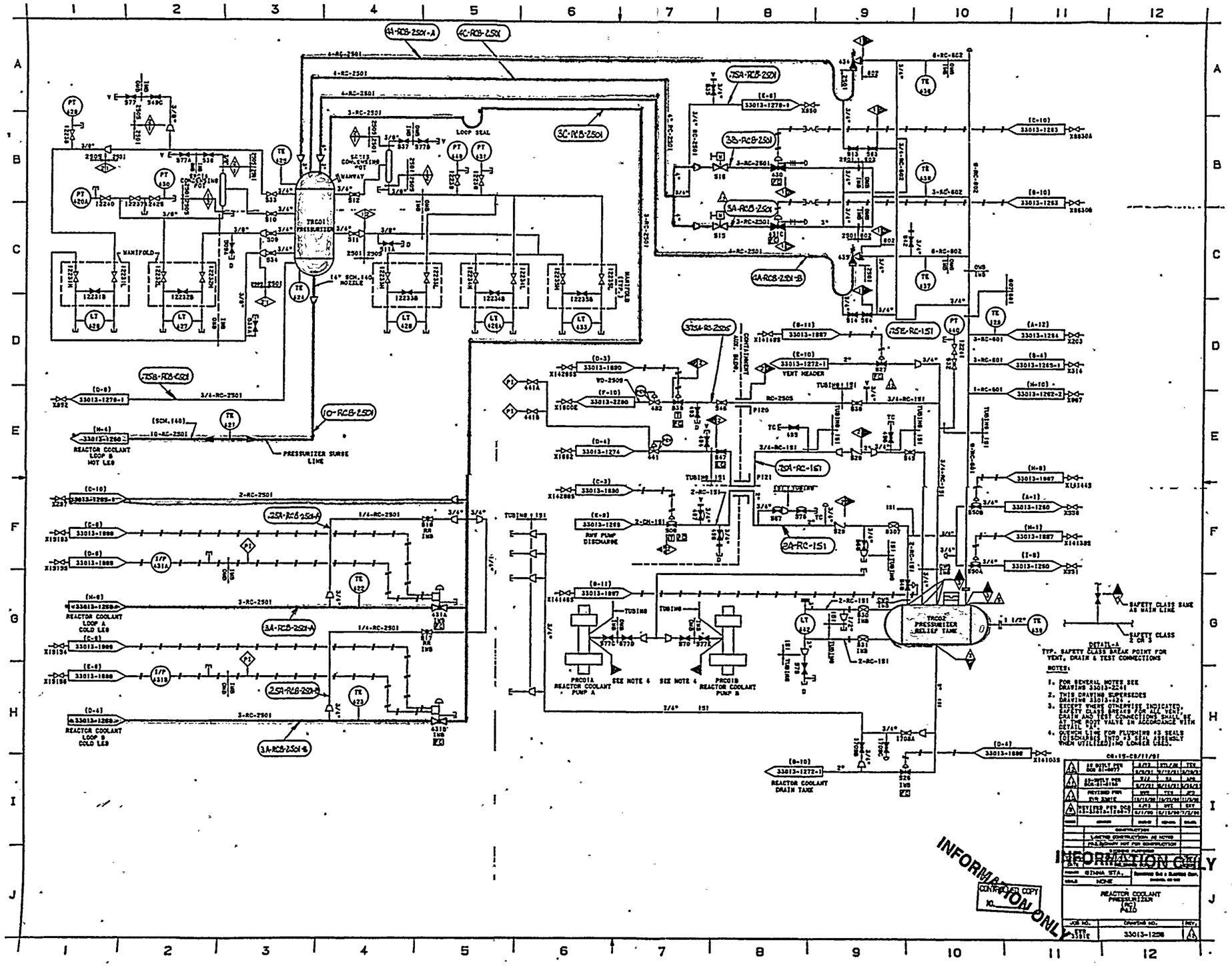

SI APERTURE CARD

Also Available On Aperture Card

FOR 3RD INTERVAL ISI USE ONLY REV. 1

9302020317-18

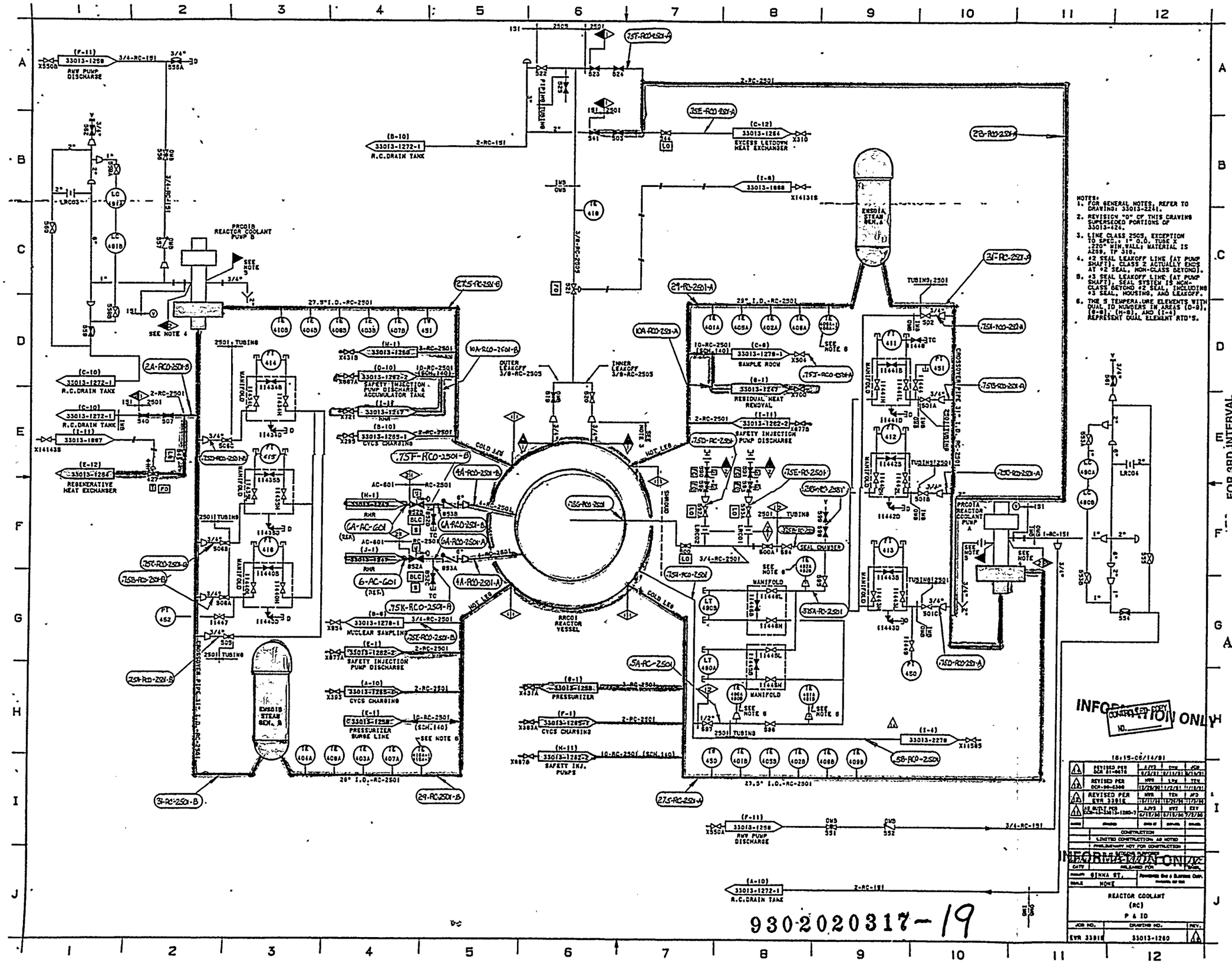
RHR PUMP DISCHARGE
R.C.DRAIN TANK
REGENERATIVE HEAT EXCHANGER
PRC01B REACTOR COOLANT PUMP B
SEE NOTE 4
SEE NOTE 3
EXCESS LETDOWN HEAT EXCHANGER
EVS01A STEAM GEN. A
EVS01B STEAM GEN. B
SAFETY INJECTION PUMP DISCHARGE & ACCUMULATOR TANK
CVCS CHARGING
NUCLEAR SAMPLING
PRESSURIZER SURGE LINE
PRESSURIZER
SAFETY INJ. PUMPS
OUTER LEAKOFF 3/8-RC-2503
INNER LEAKOFF 3/8-RC-2503
COLD LEG
HOT LEG
RRC01 REACTOR VESSEL
SAMPLE ROOM
RESIDUAL HEAT REMOVAL
SAFETY INJECTION PUMP DISCHARGE
MANIFOLD
SEAL CHAMBER
CROSSOVER PIPE 31" I.D.-RC-2501
PRC01A REACTOR COOLANT PUMP A
NOTES:
1. FOR GENERAL NOTES, REFER TO DRAWING: 33013-2241.
2. REVISION "0" OF THIS DRAWING SUPERSEDED PORTIONS OF 33013-424.
3. LINE CLASS 2503, EXCEPTION TO SPEC.: 1" O.D. TUBE X .220" MIN.WALL; MATERIAL IS A269, TP 316.
4. #2 SEAL LEAKOFF LINE (AT PUMP SHAFT), CLASS 2 ACTUALLY ENDS AT #2 SEAL, NON-CLASS BEYOND.
5. #3 SEAL LEAKOFF LINE (AT PUMP SHAFT), SEAL SYSTEM IS NON-CLASS BEYOND #2 SEAL, INCLUDING #3 SEAL, HOUSING, AND LEAKOFF.
6. THE 6 TEMPERATURE ELEMENTS WITH DUAL ID NUMBERS IN AREAS (D-9), (E-8), (H-8) AND (I-4) REPRESENT DUAL ELEMENT RTD'S.
FOR 3RD INTERVAL ISI USE ONLY REV. 1
SI APERTURE CARD
Also Available On Aperture Card
INFORMATION ONLY
REACTOR COOLANT (RC) P & ID
EVR 33816
33013-1260
930202031 7-19

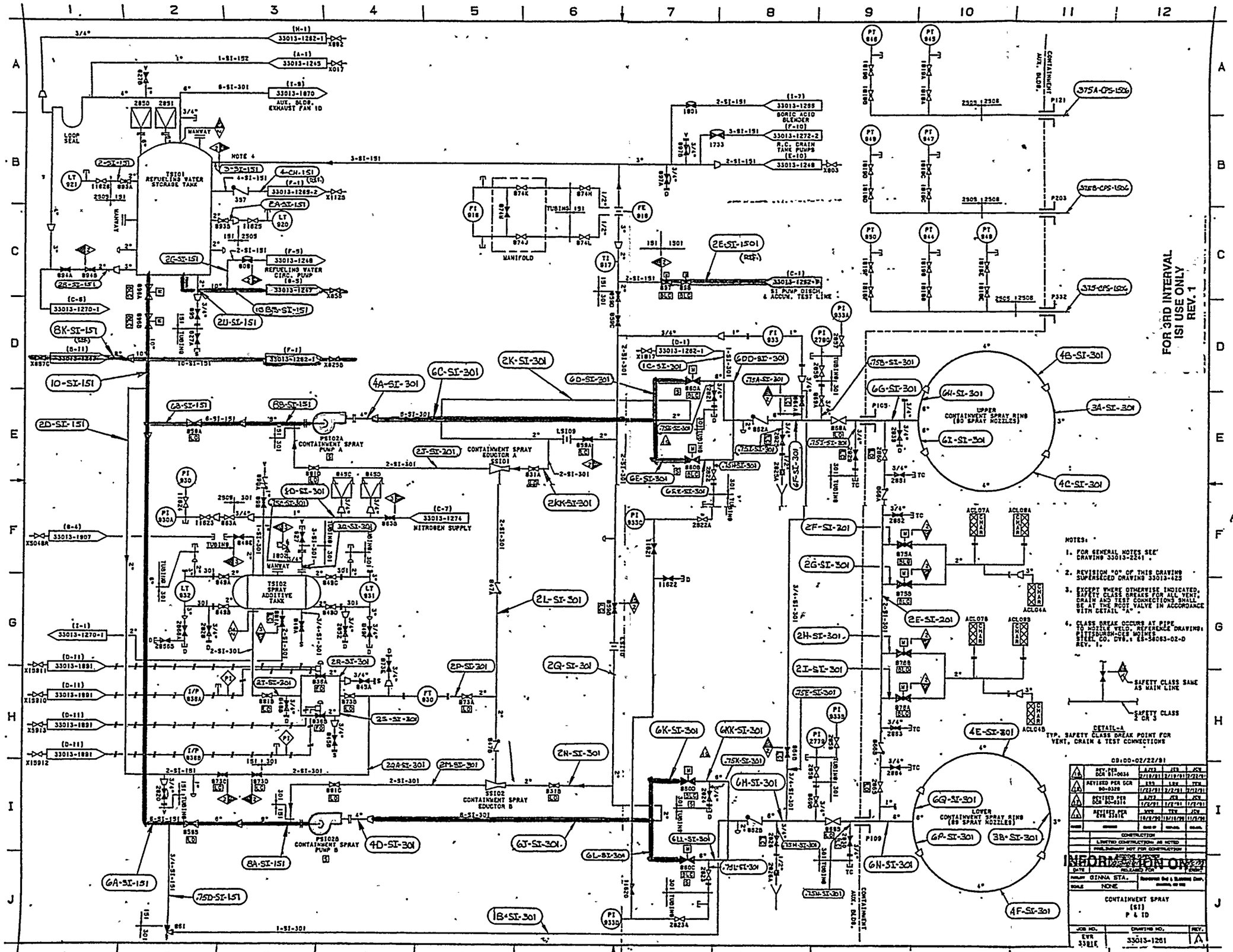

SI APERTURE CARD

Also Available On Aperture Card

9302020317-20

FOR 3RD INTERVAL
ISI USE ONLY
REV. 1

SI
APERTURE
CARD

Also Available On
Aperture Card

NOTES

1. FOR GENERAL NOTES, SEE DRAWING 33013-2241
2. REVISION "0" OF THIS DRAWING SUPERSEDES PORTIONS OF CV01 33013-1282, REVISION 10.
3. EXCEPT WHERE OTHERWISE INDICATED, SAFETY CLASS BREAKS FOR ALL VENT, DRAIN AND TEST CONNECTIONS SHALL BE AT THE ROOT VALVE IN ACCORDANCE WITH DETAIL "A".
4. VALVES 8293A & 8293B OPEN ON COINCIDENCE OF LOW LEVEL (CLOS) IN EITHER BORIC ACID TANKS AND "SI" SIGNAL OR COINCIDENCE OF FAILURE FOR BOTH VALVES 8768 & 8260 TO OPEN WITHIN 9 SECONDS AND "SI" SIGNAL (ONLY ONE OF THE VALVES IS REQUIRED TO OPEN).

SAFETY CLASS SAME AS MAIN LINE

SAFETY CLASS 2 CR.3

DETAIL-A
TYP. SAFETY CLASS BREAK POINT FOR VENT, DRAIN & TEST CONNECTIONS

07143-03/08/91

4	AS-BUILT PER DCN 91-0030	VJJ	JCB	JCB
		8/7/91	8/7/91	8/7/91
3	REV. PER DCN 91-0030	AJY	JCB	JCB
		2/18/91	2/19/91	2/21/91
2	REVISED PER DCN 90-4336	ENS	LWS	TEB
		1/17/91	12/3/91	2/12/91
1	REVISED PER DCN 90-3911 DCN 90-3912 DCN 90-3917	AJY	JCB	JCB
		1/2/91	1/2/91	1/2/91
REVISIONS		DRAWN	TRACED	CHECKED

CONSTRUCTION
LIMITED CONSTRUCTION: AS NOTED
PRELIMINARY NOT FOR CONSTRUCTION
AS-BUILT REVISION REQUIRED

INFORMATION ONLY

DATE	REQUIRED FOR	SCALE
DRAWN GINNA STA.		
SCALE NONE		

SAFETY INJECTION AND ACCUMULATORS (SI)
P & I D SHEET 1 OF 2

JOB NO.	DRAWING NO.	REV.
CVR 33016	33013-1282 SHEET 1	4

9302020317-21

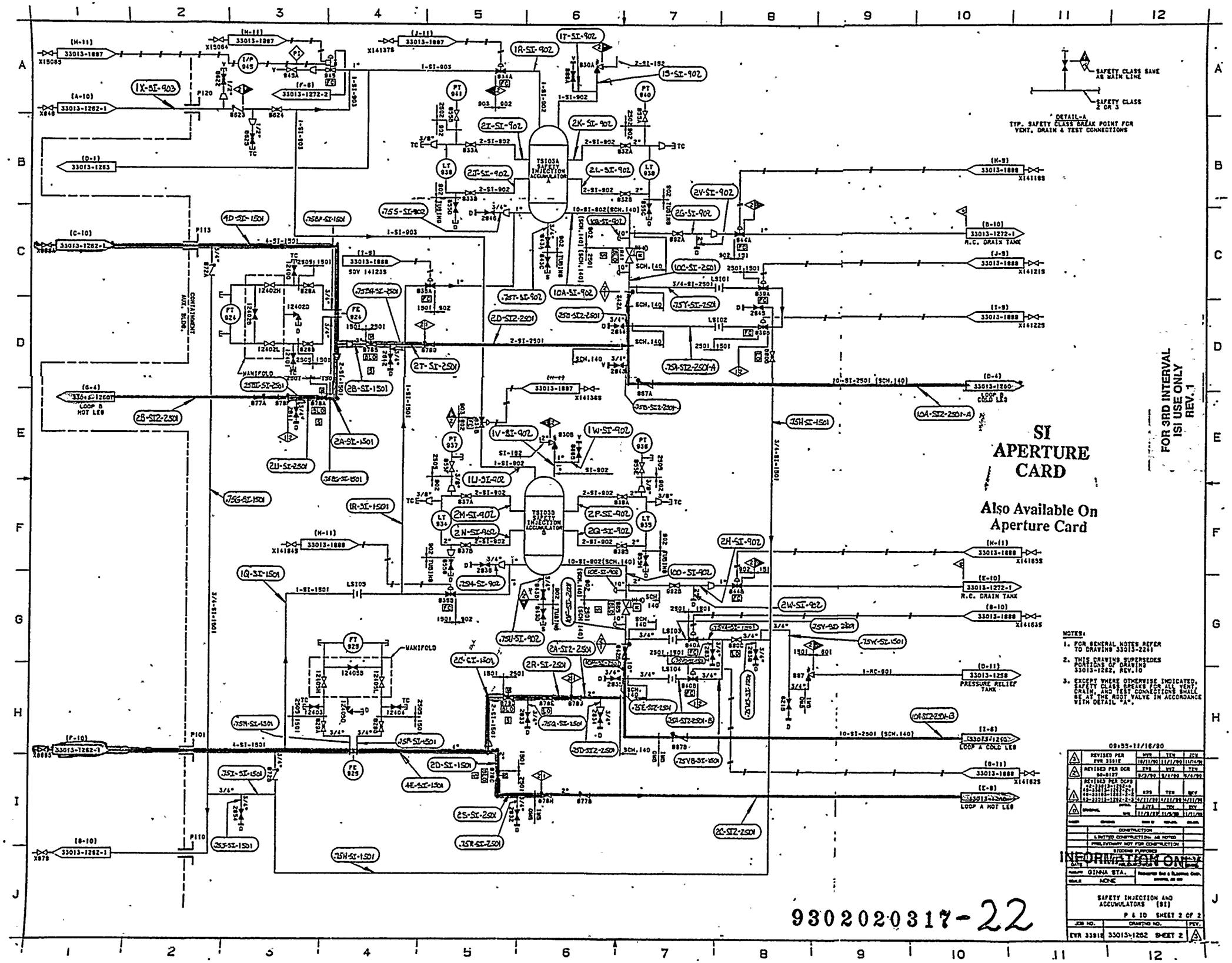
SI
APERTURE
CARD
Also Available On
Aperture Card
FOR 3RD INTERVAL
ISI USE ONLY
REV. 1
SAFETY CLASS SAME AS MAIN LINE
SAFETY CLASS 2 OR 3
DETAIL-A
TYP. SAFETY CLASS BREAK POINT FOR VENT, DRAIN & TEST CONNECTIONS
NOTES:
1. FOR GENERAL NOTES REFER TO DRAWING 33013-2261
2. THIS DRAWING SUPERSEDES PORTIONS OF DRAWING 33013-1262, REV.10
3. EXCEPT WHERE OTHERWISE INDICATED, SAFETY CLASS BREAKS FOR ALL VENT, DRAIN, AND TEST CONNECTIONS SHALL BE AT THE ROOT VALVE IN ACCORDANCE WITH DETAIL "A".
INFORMATION ONLY
GINNA STA.
NONE
SAFETY INJECTION AND ACCUMULATORS (SI)
P & ID SHEET 2 OF 2
33013-1262 SHEET 2
9302020317-22

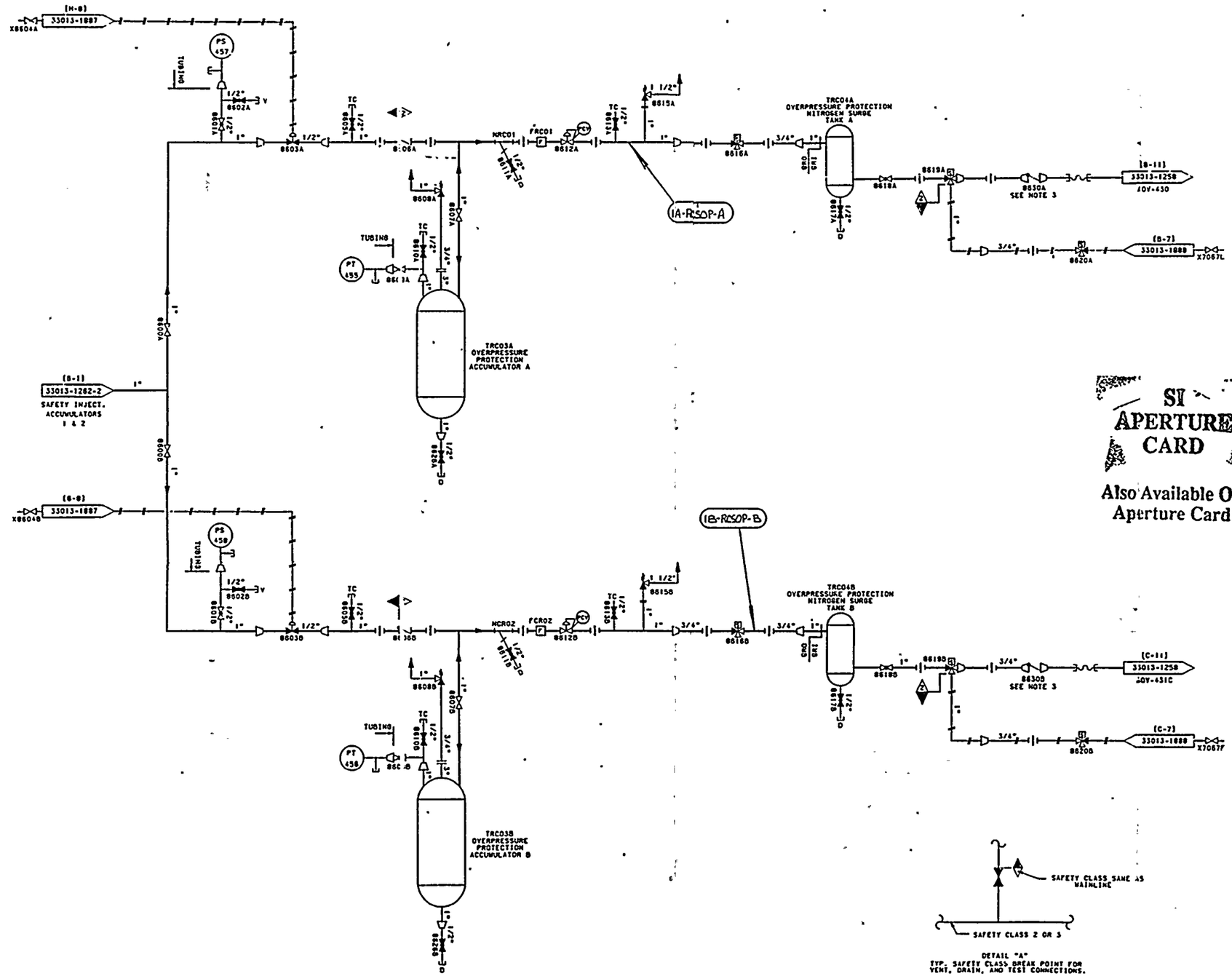

FOR 3RD INTERVAL
ISI USE ONLY
REV. 1

SI
APERTURE
CARD

Also Available On
Aperture Card

NOTES:

1. FOR GENERAL NOTES SEE DRAWING 33013-2241.
2. THIS DRAWING SUPERSEDES CATALYTIC DRAWING A-202.
3. CHECK VALVES 86304 AND 86308 ARE PROVIDED WITH ORIFICES IN THEIR DISKS TO ALLOW CONTROLLED CLOSURE OF THE PORV'S, REFERENCE EWR 1660.
4. EXCEPT WHERE OTHERWISE INDICATED, SAFETY CLASS BREAKS FOR ALL VENT, DRAIN, AND TEST CONNECTIONS SHALL BE AT THE ROOT VALVE IN ACCORDANCE WITH DETAIL "A".

10:50-12/07/90

4	REVISED PER EWR 3391E	12/11/90	12/10/90
3	REV. PER EWR 4000	4/16/90	4/17/90
2	REVISED PER EWR 3391E	11/2/89	11/11/89
1	AS BUILT PER EWR 1660	8/10/89	8/10/89

CONSTRUCTION
LIMITED CONSTRUCTION AS NOTED
PRELIMINARY NOT FOR CONSTRUCTION
AS BUILT

GINNA STA.
NONE

RCS OVERPRESSURE PROTECTION
NITROGEN ACCUMULATOR SYSTEM

P & ID

JOB NO. EWR 3391E
DRAWING NO. 33013-1263
REV. 4

9302020317-23

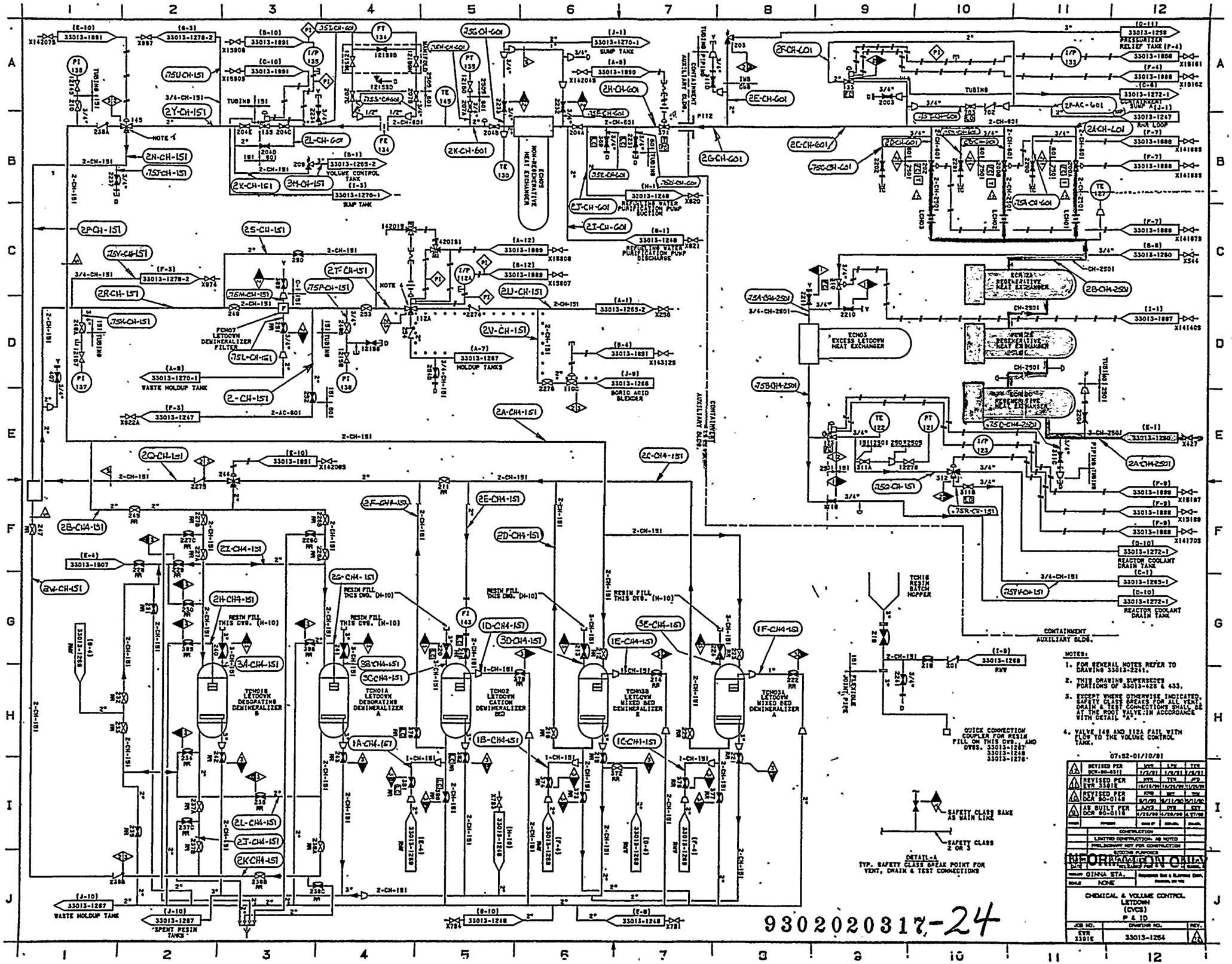

FOR 3RD INTERVAL
ISI USE ONLY
REV. 1

SI
APERTURE
CARD

Also Available On
Aperture Card

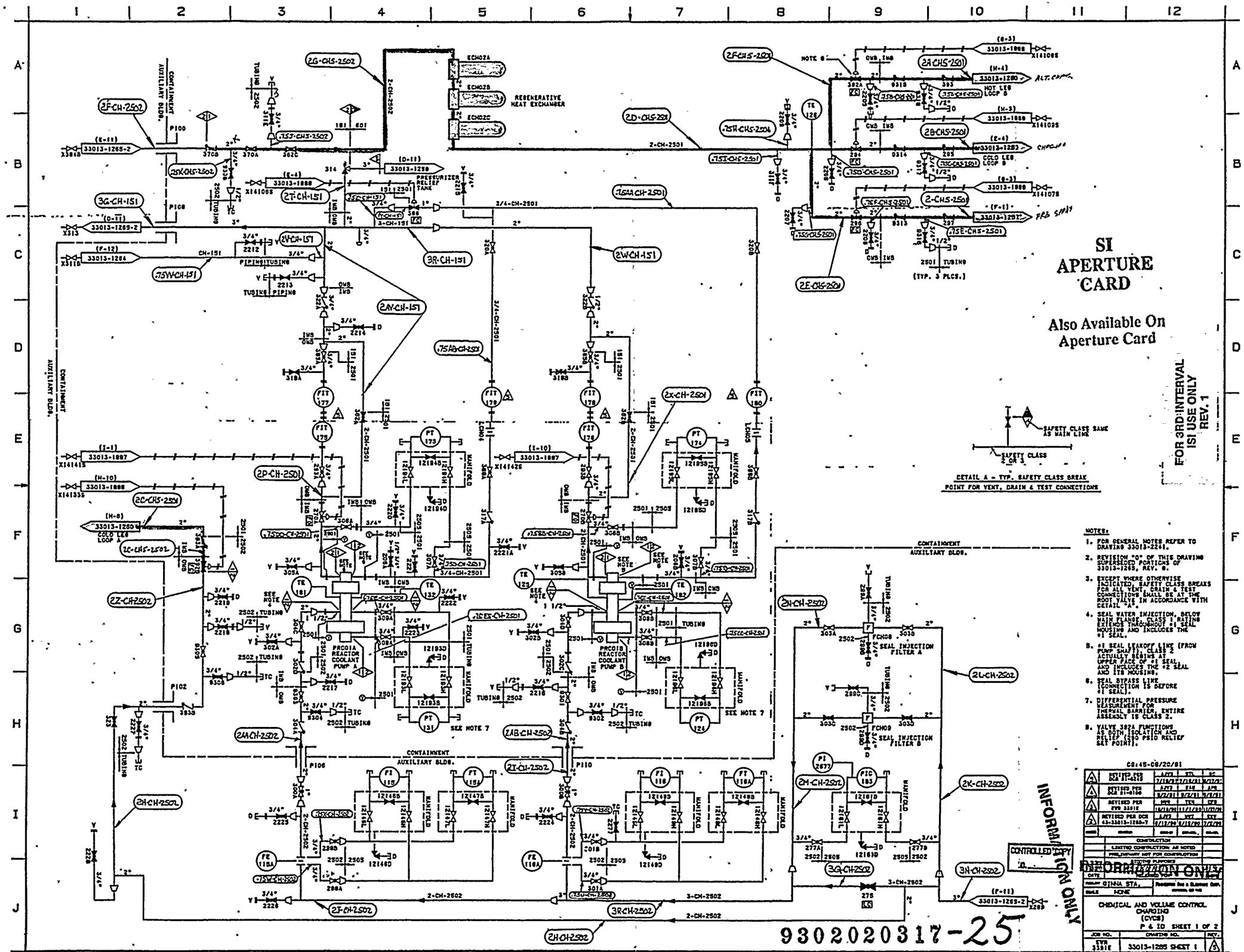
REGENERATIVE HEAT EXCHANGER
ECHO2A
ECHO2B
ECHO2C
PRESSURIZER RELIEF TANK
PRC01A REACTOR COOLANT PUMP A
PRC01B REACTOR COOLANT PUMP B
CONTAINMENT AUXILIARY BLDG.
HOT LEG LOOP B
COLD LEG LOOP B
SEAL INJECTION FILTER A
SEAL INJECTION FILTER B
(TYP. 3 PLCS.)
SEE NOTE 7
SAFETY CLASS SAME AS MAIN LINE
SAFETY CLASS 2 OR 3
DETAIL A - TYP. SAFETY CLASS BREAK POINT FOR VENT, DRAIN & TEST CONNECTIONS
NOTES:
1. FOR GENERAL NOTES REFER TO DRAWING 33013-2241.
2. REVISION "0" OF THIS DRAWING SUPERSEDED PORTIONS OF 33013-1265, REV. 8.
3. EXCEPT WHERE OTHERWISE INDICATED, SAFETY CLASS BREAKS FOR ALL VENT, DRAIN & TEST CONNECTIONS SHALL BE AT THE ROOT VALVE IN ACCORDANCE WITH DETAIL "A".
4. SEAL WATER INJECTION, BELOW MAIN FLANGE, CLASS 1 PIPING EXISTS THROUGHOUT #1 SEAL HOUSING AND INCLUDES THE #1 SEAL.
5. #1 SEAL LEAKOFF LINE (FROM PUMP SHAFT), CLASS 2 ACTUALLY BEGINS AT UPPER FACE OF #1 SEAL AND INCLUDES THE #2 SEAL AND ITS HOUSING.
6. SEAL BYPASS LINE CONNECTION IS BEFORE #1 SEAL.
7. DIFFERENTIAL PRESSURE MEASUREMENT FOR THERMAL BARRIER, ENTIRE ASSEMBLY IS CLASS 2.
8. VALVE 382A FUNCTIONS AS BOTH ISOLATION AND RELIEF (250 PSID RELIEF SET POINT).
C9:45-08/20/91
REVISED PER DCN 91-4018
REVISED PER DCN 88 91-4108
REVISED PER EVR 3381E
REVISED PER DCN 43-33013-1265-7
CONSTRUCTION
LIMITED CONSTRUCTION AS NOTED
PRELIMINARY NOT FOR CONSTRUCTION
ISSUED FOR REVIEW
GINNA STA.
NONE
CHEMICAL AND VOLUME CONTROL CHARGING (CVCS)
P & ID SHEET 1 OF 2
EVR 3381E
33013-1265 SHEET 1
SI APERTURE CARD
Also Available On Aperture Card
FOR 3RD INTERVAL ISI USE ONLY REV. 1
INFORMATION ONLY
CONTROLLED COPY
9302020317-25

FOR 3RD INTERVAL
ISI USE ONLY
REV. 1

SI
APERTURE
CARD

Also Available On
Aperture Card

NOTES:

1. FOR GENERAL NOTES, REFER TO DRAWING 33013-2241.
2. REVISION "0" OF THIS DRAWING SUPERSEDES PORTIONS OF 33013-1269, REV. 8.
3. EXCEPT WHERE OTHERWISE INDICATED, SAFETY CLASS BREAKS FOR ALL VENT, DRAIN, AND TEST CONNECTIONS SHALL BE AT THE FIRST VALVE IN ACCORDANCE WITH DETAIL "A".

DETAIL-A
TYP. SAFETY CLASS BREAK POINT FOR VENT DRAIN & TEST CONNECTIONS

08:10-04/15/91

3	REVISED PER DCR SI-0084	PCS 6/2/91	PCS 6/11/91	PCS 6/11/91
2	REVISED PER DCR 90-0329	KRB 7/18/91	LRK 7/18/91	TTK 7/31/91
1	REVISED PER EVR 33811	KRB 11/20/96	TTK 12/11/96	TTK 12/11/96
0	ORIGINAL	8/13/ 11/13/91	TTK 11/13/91	RCT 11/13/91

CONSTRUCTION
LIMITED CONSTRUCTION AS NOTED
PRELIMINARY NOT FOR CONSTRUCTION
BIDDING PURPOSES

DATE
DRAWN GINNA STA.
SCALE NONE

AUXILIARY BUILDING
CHEMICAL AND VOLUME CONTROL
CHARGING
(CVCS)
P & ID SHEET 2 OF 2

JOB NO. | DRAWING NO. | REV.
EVR 33811 | 33013-1269 SHEET 2 | 3

INFORMATION ONLY

9302020317-26

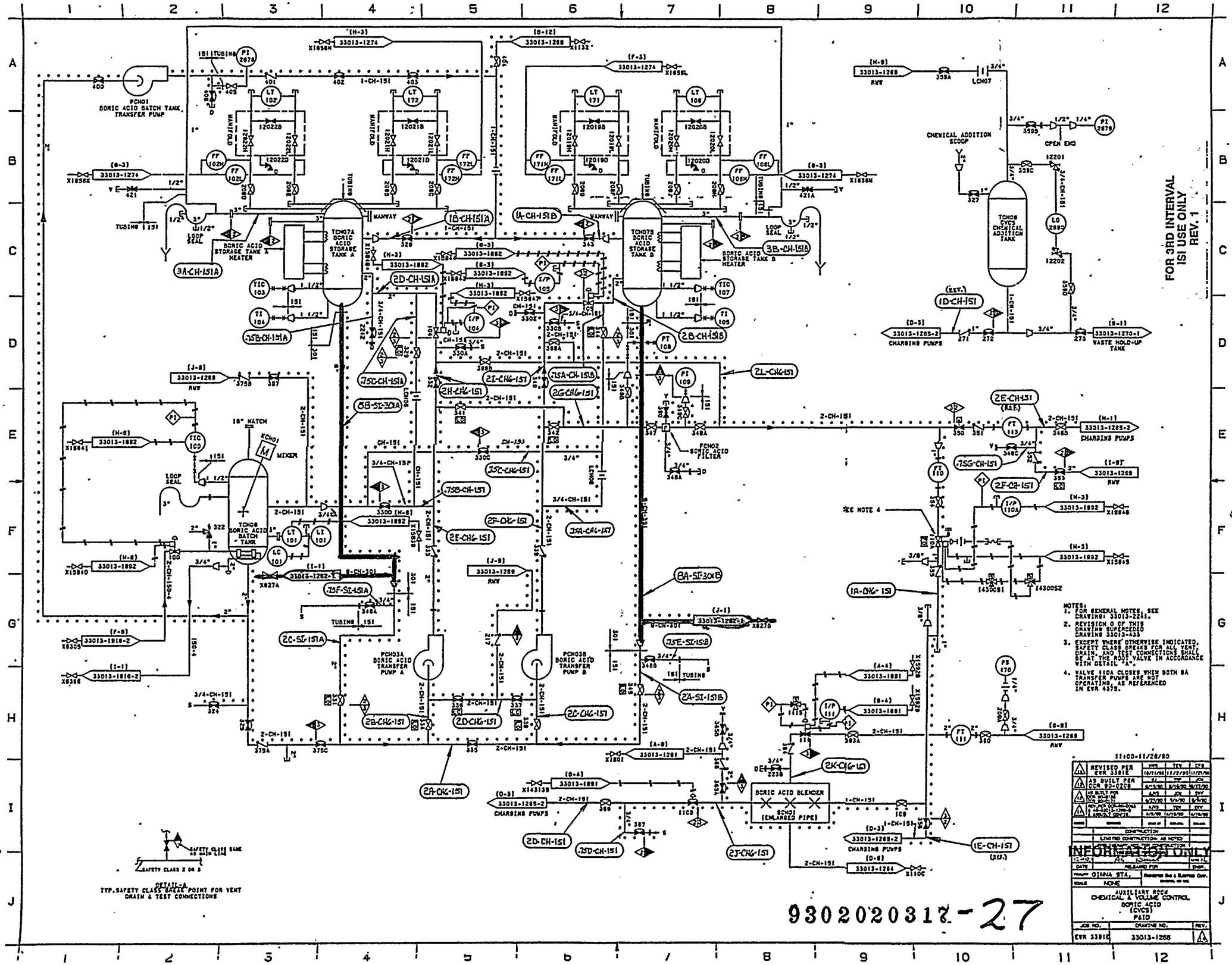

9302020317-27

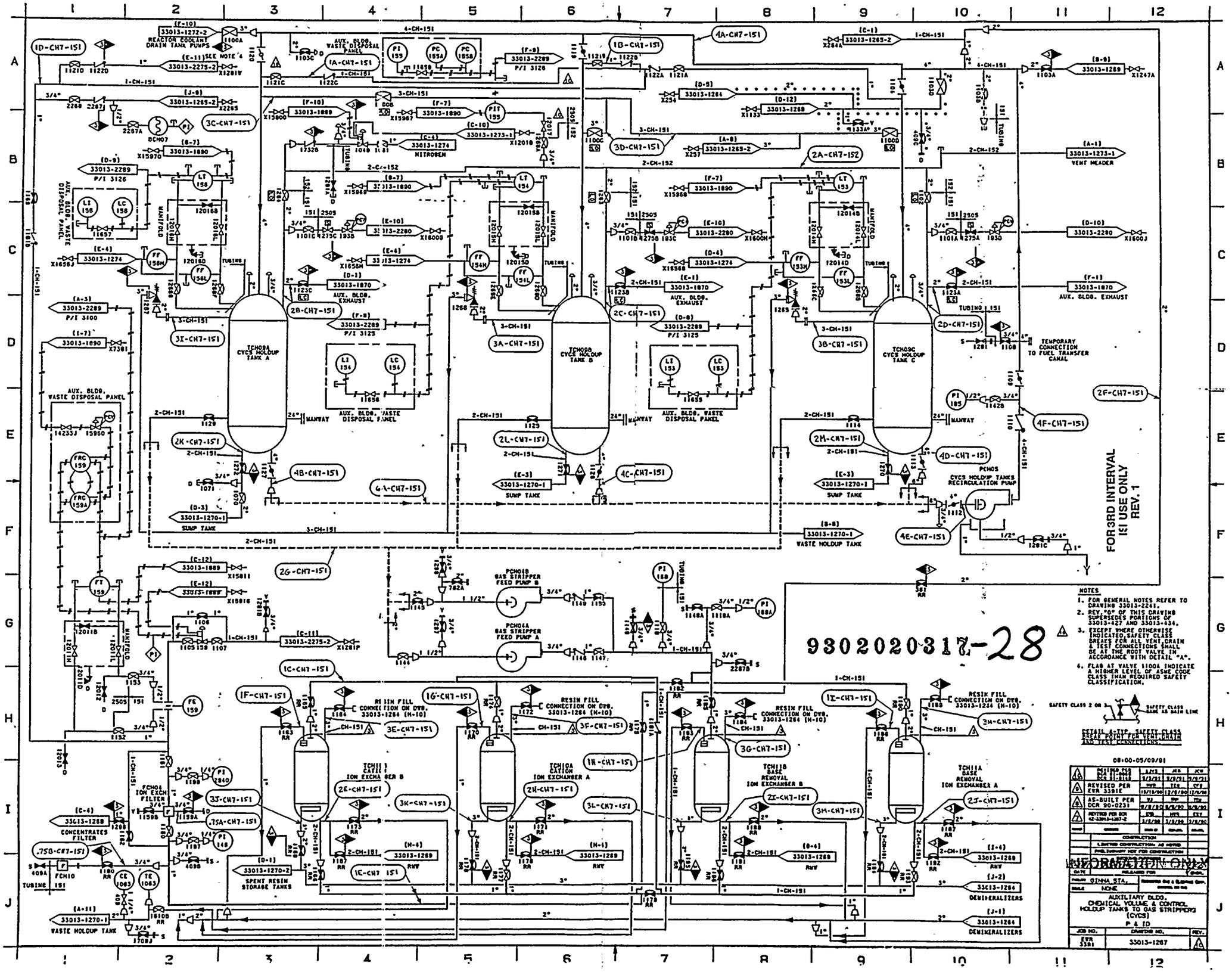

SI APERTURE CARD

Also Available On Aperture Card

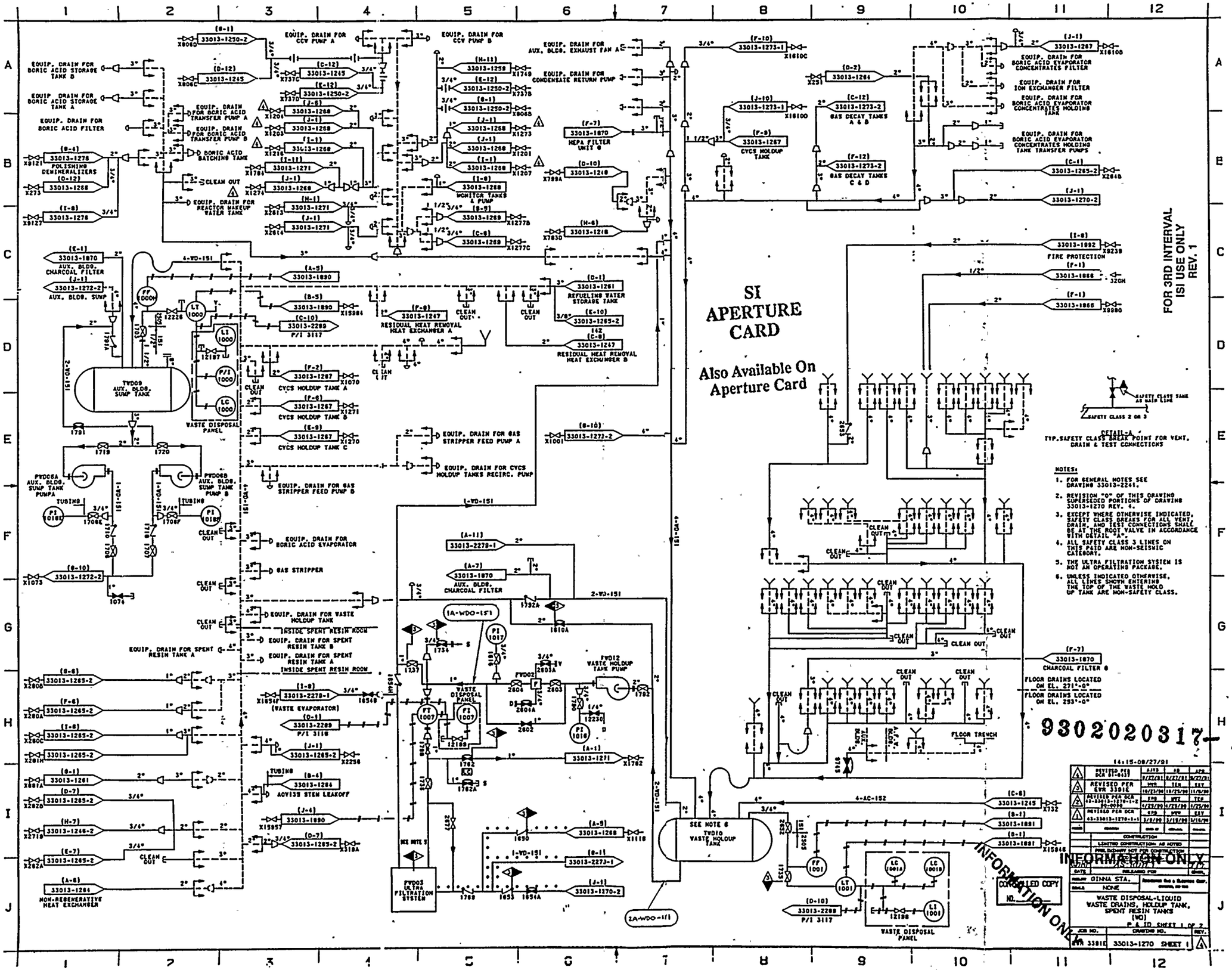
SI APERTURE CARD
Also Available On Aperture Card
FOR 3RD INTERVAL ISI USE ONLY REV. 1
INFORMATION ONLY
CONTROLLED COPY NO.
WASTE DISPOSAL-LIQUID
WASTE DRAINS, HOLDUP TANK, SPENT RESIN TANKS (WD)
P & ID SHEET 1 OF 2
33013-1270 SHEET 1
EQUIP. DRAIN FOR BORIC ACID STORAGE TANK B
EQUIP. DRAIN FOR BORIC ACID STORAGE TANK A
EQUIP. DRAIN FOR BORIC ACID FILTER
POLISHING DEMINERALIZERS
BORIC ACID BATCHING TANK
EQUIP. DRAIN FOR REACTOR MAKEUP WATER TANK
EQUIP. DRAIN FOR CCW PUMP A
EQUIP. DRAIN FOR CCW PUMP B
EQUIP. DRAIN FOR AUX. BLDG. EXHAUST FAN A
EQUIP. DRAIN FOR CONDENSATE RETURN PUMP
HEPA FILTER UNIT 8
MONITOR TANKS & PUMP
CVCS HOLDUP TANK
GAS DECAY TANKS A & B
GAS DECAY TANKS C & D
EQUIP. DRAIN FOR BORIC ACID EVAPORATOR CONCENTRATES FILTER
EQUIP. DRAIN FOR ION EXCHANGER FILTER
EQUIP. DRAIN FOR BORIC ACID EVAPORATOR CONCENTRATES HOLDING TANK
EQUIP. DRAIN FOR BORIC ACID EVAPORATOR CONCENTRATES HOLDING TANK TRANSFER PUMPS
FIRE PROTECTION
AUX. BLDG. CHARCOAL FILTER
AUX. BLDG. SUMP
REFUELING WATER STORAGE TANK
RESIDUAL HEAT REMOVAL HEAT EXCHANGER A
RESIDUAL HEAT REMOVAL HEAT EXCHANGER B
CVCS HOLDUP TANK A
CVCS HOLDUP TANK B
CVCS HOLDUP TANK C
WASTE DISPOSAL PANEL
AUX. BLDG. SUMP TANK
AUX. BLDG. SUMP TANK PUMP A
AUX. BLDG. SUMP TANK PUMP B
EQUIP. DRAIN FOR GAS STRIPPER FEED PUMP A
EQUIP. DRAIN FOR GAS STRIPPER FEED PUMP B
EQUIP. DRAIN FOR CVCS HOLDUP TANKS RECIRC. PUMP
EQUIP. DRAIN FOR BORIC ACID EVAPORATOR
GAS STRIPPER
EQUIP. DRAIN FOR WASTE HOLDUP TANK
INSIDE SPENT RESIN ROOM
EQUIP. DRAIN FOR SPENT RESIN TANK B
EQUIP. DRAIN FOR SPENT RESIN TANK A
EQUIP. DRAIN FOR SPENT RESIN TANK A
WASTE EVAPORATOR
AOV135 STEM LEAKOFF
NON-REGENERATIVE HEAT EXCHANGER
WASTE DISPOSAL PANEL
WASTE HOLDUP TANK PUMP
WASTE HOLDUP TANK
ULTRA FILTRATION SYSTEM
CHARCOAL FILTER 8
FLOOR DRAINS LOCATED ON EL. 271'-0"
FLOOR DRAINS LOCATED ON EL. 293'-0"
FLOOR TRENCH
SEE NOTE 6
SEE NOTE 9
SAFETY CLASS 2 OR 3
DETAIL A
TYP. SAFETY CLASS BREAK POINT FOR VENT, DRAIN & TEST CONNECTIONS
NOTES:
1. FOR GENERAL NOTES SEE DRAWING 33013-2241.
2. REVISION "0" OF THIS DRAWING SUPERSEDED PORTIONS OF DRAWING 33013-1270 REV. 4.
3. EXCEPT WHERE OTHERWISE INDICATED, SAFETY CLASS BREAKS FOR ALL VENT, DRAIN, AND TEST CONNECTIONS SHALL BE AT THE ROOT VALVE IN ACCORDANCE WITH DETAIL "A".
4. ALL SAFETY CLASS 3 LINES ON THIS PAID ARE NON-SEISMIC CATEGORY.
5. THE ULTRA FILTRATION SYSTEM IS NOT AN OPERATING PACKAGE.
6. UNLESS INDICATED OTHERWISE, ALL LINES SHOWN ENTERING THE TOP OF THE WASTE HOLD UP TANK ARE NON-SAFETY CLASS.
REVISED PER DCR 91-0610
REVISED PER EWR 33916
REVISED PER DCR 93-33013-1270-1-2 93-0019
REVISED PER DCR 93-33013-1270-1-1
CONSTRUCTION
LIMITED CONSTRUCTION: AS NOTED
PRELIMINARY NOT FOR CONSTRUCTION
RELEASED FOR
GINNA STA.
NONE
JOB NO.
DRAWING NO.
REV.
EWR 33916
33013-1270 SHEET 1
9302020317-29
14:15-09/27/91

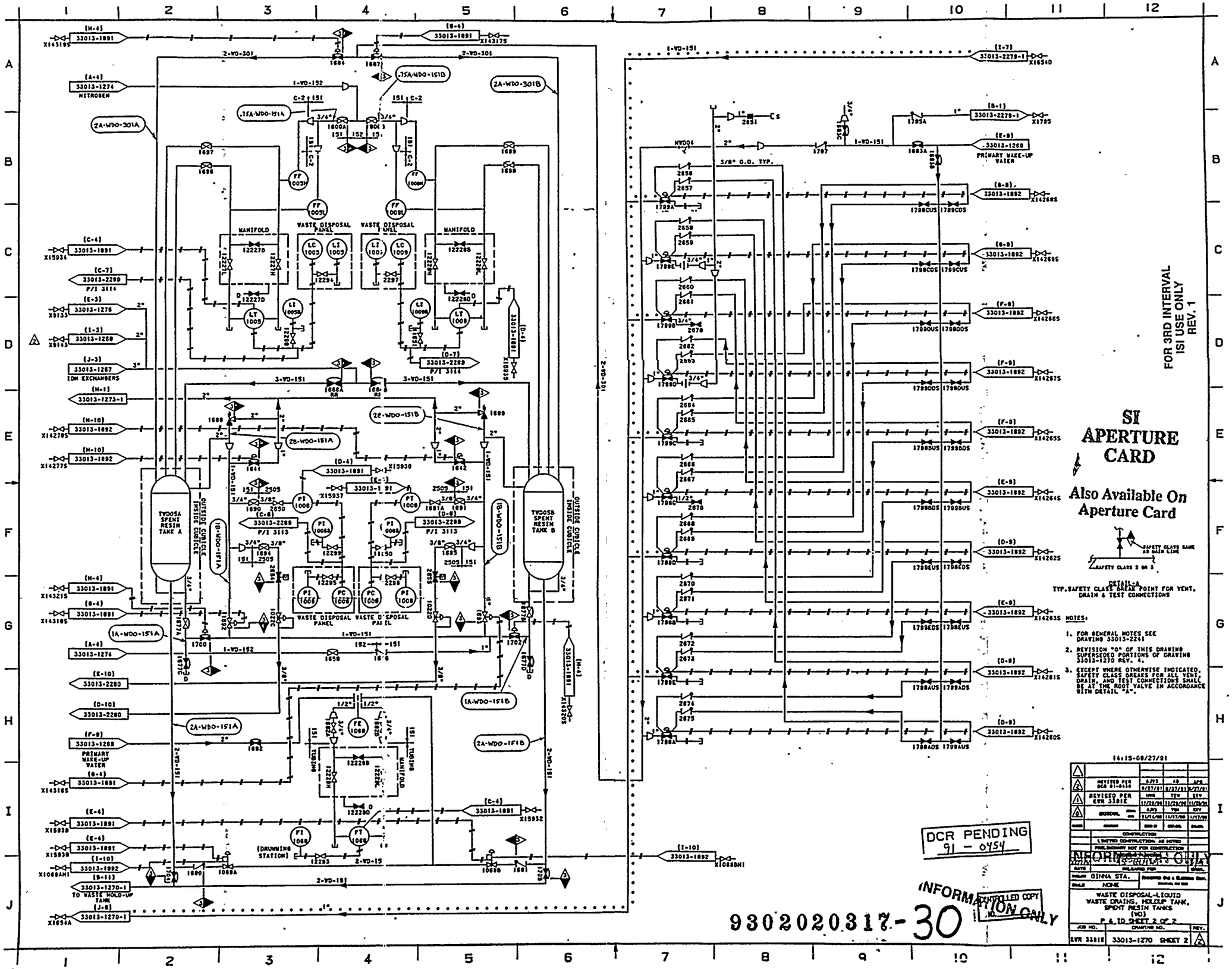

9302020317-30

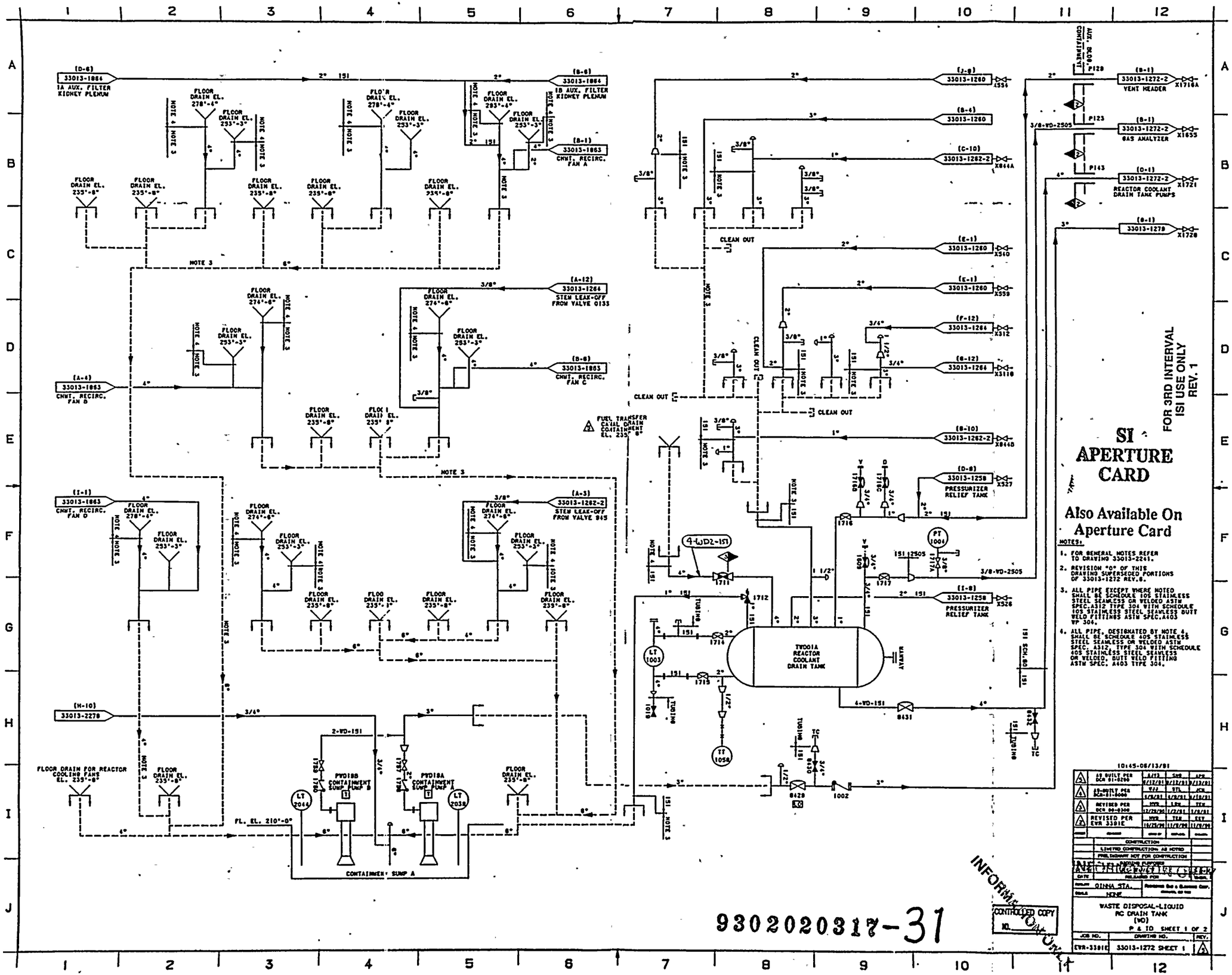
1A AUX. FILTER KIDNEY PLENUM
1B AUX. FILTER KIDNEY PLENUM
CNMT. RECIRC. FAN A
CNMT. RECIRC. FAN B
CNMT. RECIRC. FAN C
CNMT. RECIRC. FAN D
STEM LEAK-OFF FROM VALVE 0133
STEM LEAK-OFF FROM VALVE 945
VENT HEADER
GAS ANALYZER
REACTOR COOLANT DRAIN TANK PUMPS
PRESSURIZER RELIEF TANK
PRESSURIZER RELIEF TANK
TV001A REACTOR COOLANT DRAIN TANK
PV0018B CONTAINMENT SUMP PUMP B
PV0018A CONTAINMENT SUMP PUMP A
CONTAINMENT SUMP A
FLOOR DRAIN FOR REACTOR COOLING FANS EL. 235'-8"
FUEL TRANSFER CANAL DRAIN CONTAINMENT EL. 235'-8"
CLEAN OUT
FL. EL. 210'-0"
SI APERTURE CARD
Also Available On Aperture Card
FOR 3RD INTERVAL ISI USE ONLY REV. 1
NOTES:
1. FOR GENERAL NOTES REFER TO DRAWING 33013-2241.
2. REVISION "0" OF THIS DRAWING SUPERSEDED PORTIONS OF 33013-1272 REV.8.
3. ALL PIPE EXCEPT WHERE NOTED SHALL BE SCHEDULE 10S STAINLESS STEEL SEAMLESS OR WELDED ASTM SPEC.A312 TYPE 304 WITH SCHEDULE 10S STAINLESS STEEL SEAMLESS BUTT WELD FITTINGS ASTM SPEC.A403 TYPE 304.
4. ALL PIPE, DESIGNATED BY NOTE 4, SHALL BE SCHEDULE 40S STAINLESS STEEL SEAMLESS OR WELDED ASTM SPEC. A312, TYPE 304 WITH SCHEDULE 40S STAINLESS STEEL SEAMLESS OR WELDED, BUTT WELD FITTING ASTM SPEC. A403 TYPE 304.
WASTE DISPOSAL-LIQUID RC DRAIN TANK (WO)
P & ID SHEET 1 OF 2
33013-1272 SHEET 1
INFORMATION ONLY
CONTROLLED COPY
9302020317-31

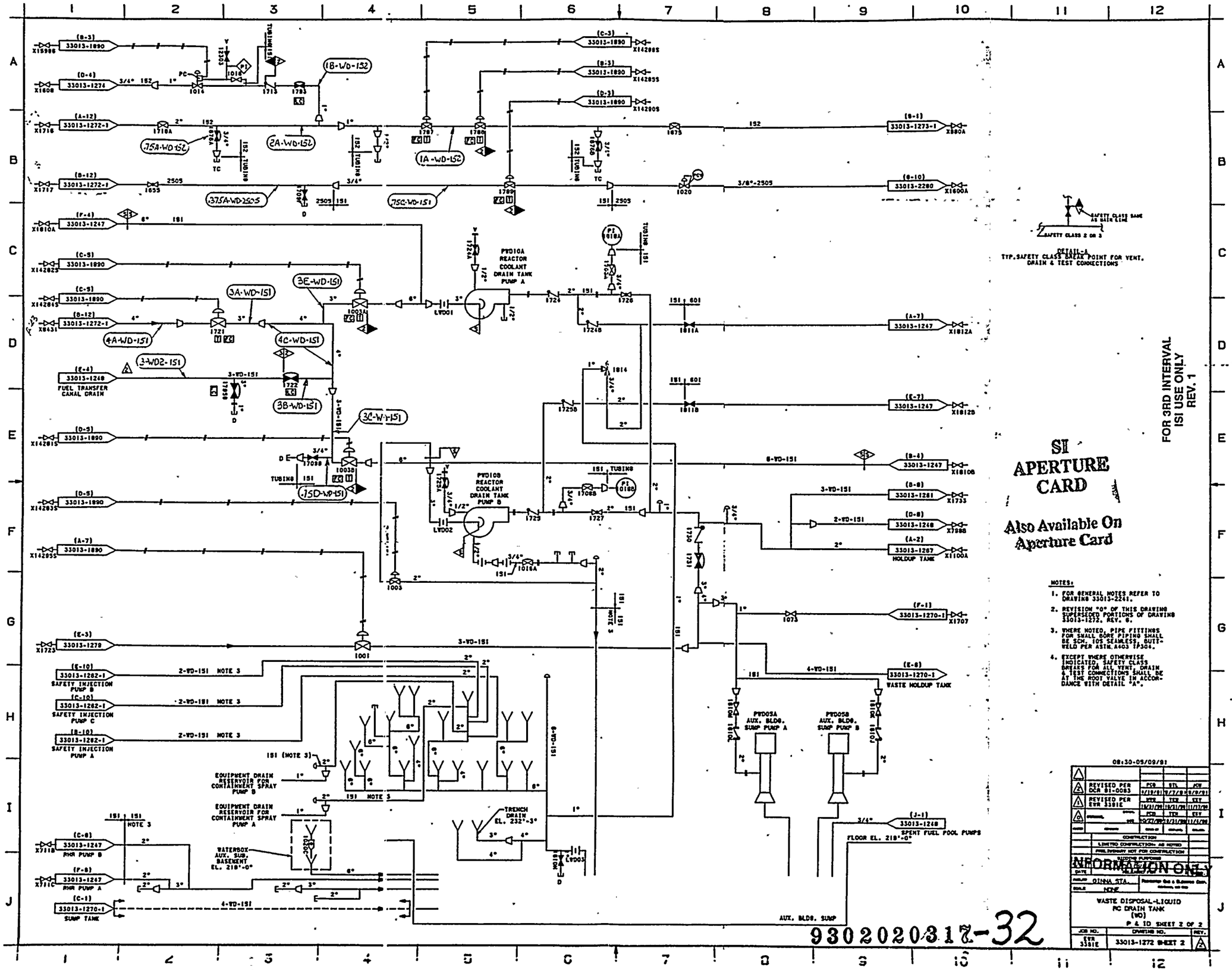

9302020317-32

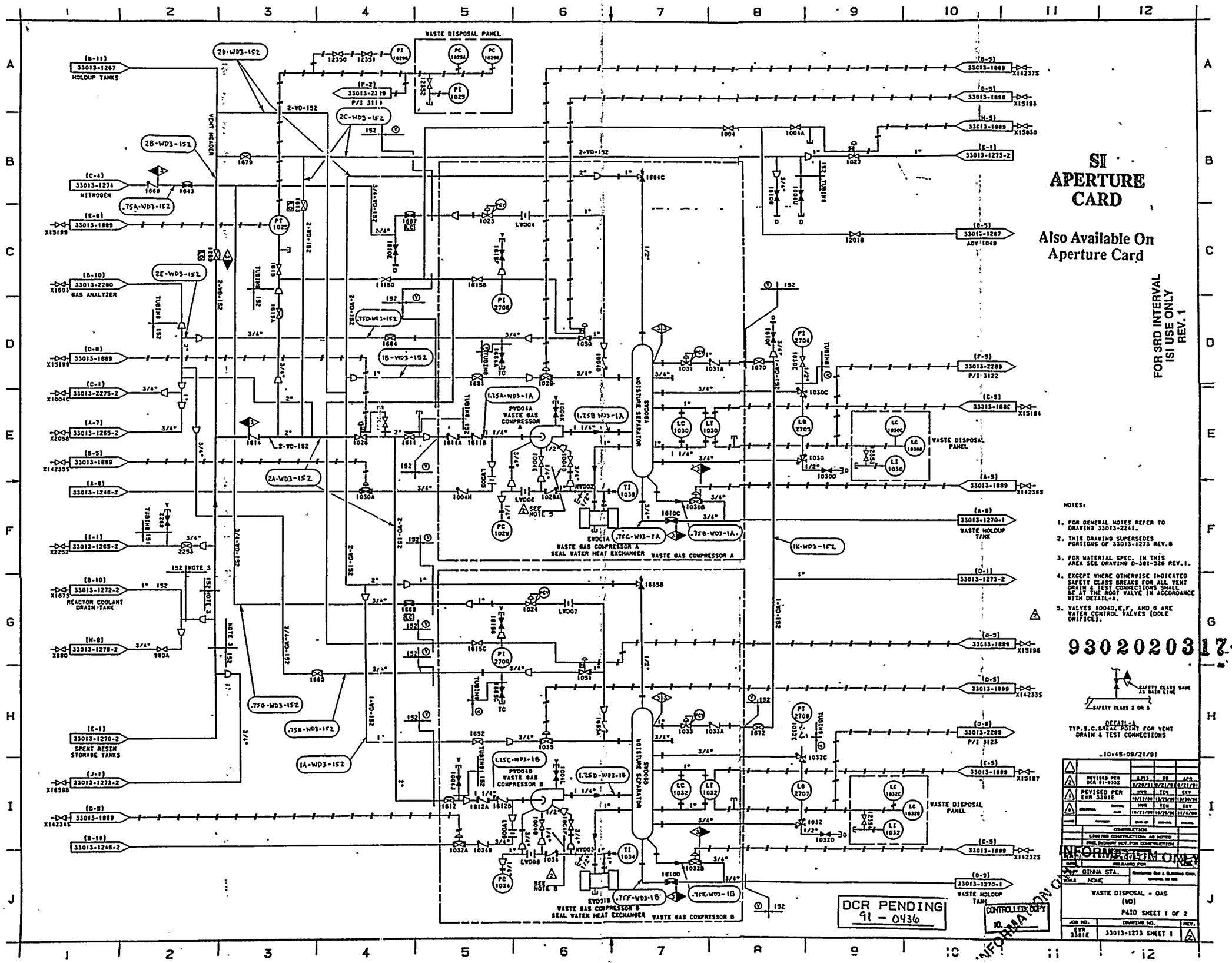

SI APERTURE CARD

Also Available On Aperture Card

FOR 3RD INTERVAL ISI USE ONLY REV. 1

NOTES:

1. FOR GENERAL NOTES REFER TO DRAWING 33013-2241.
2. THIS DRAWING SUPERSEDES PORTIONS OF 33013-1273 REV.0
3. FOR MATERIAL SPEC. IN THIS AREA SEE DRAWING D-381-528 REV.1.
4. EXCEPT WHERE OTHERWISE INDICATED SAFETY CLASS BREAKS FOR ALL VENT DRAIN & TEST CONNECTIONS SHALL BE AT THE ROOT VALVE IN ACCORDANCE WITH DETAIL-A.
5. VALVES 1004D,E,F, AND G ARE WATER CONTROL VALVES (DOLE ORIFICE).

9302020317-33

SAFETY CLASS SAME AS MAIN LINE

SAFETY CLASS 2 OR 3

DETAIL-A
TYP.S.C.BREAK POINT FOR VENT DRAIN & TEST CONNECTIONS

10:45-09/21/91

2	REVISED PER DCA 91-0352	9/29/91	9/21/91	9/21/91
1	REVISED PER EWR 3391E	10/11/90	10/25/90	10/30/90
0		10/23/90	10/26/90	11/6/90

CONSTRUCTION
LIMITED CONSTRUCTION, AS NOTED
PRELIMINARY NOT FOR CONSTRUCTION

DRAWN BY: GINNA STA.
SCALE: NONE

WASTE DISPOSAL - GAS (WO)
P&ID SHEET 1 OF 2

JOB NO.	DRAWING NO.	REV.
EWR 3391E	33013-1273 SHEET 1	2

DCR PENDING 91 - 0436

CONTROLLED COPY NO.

INFORMATION ONLY

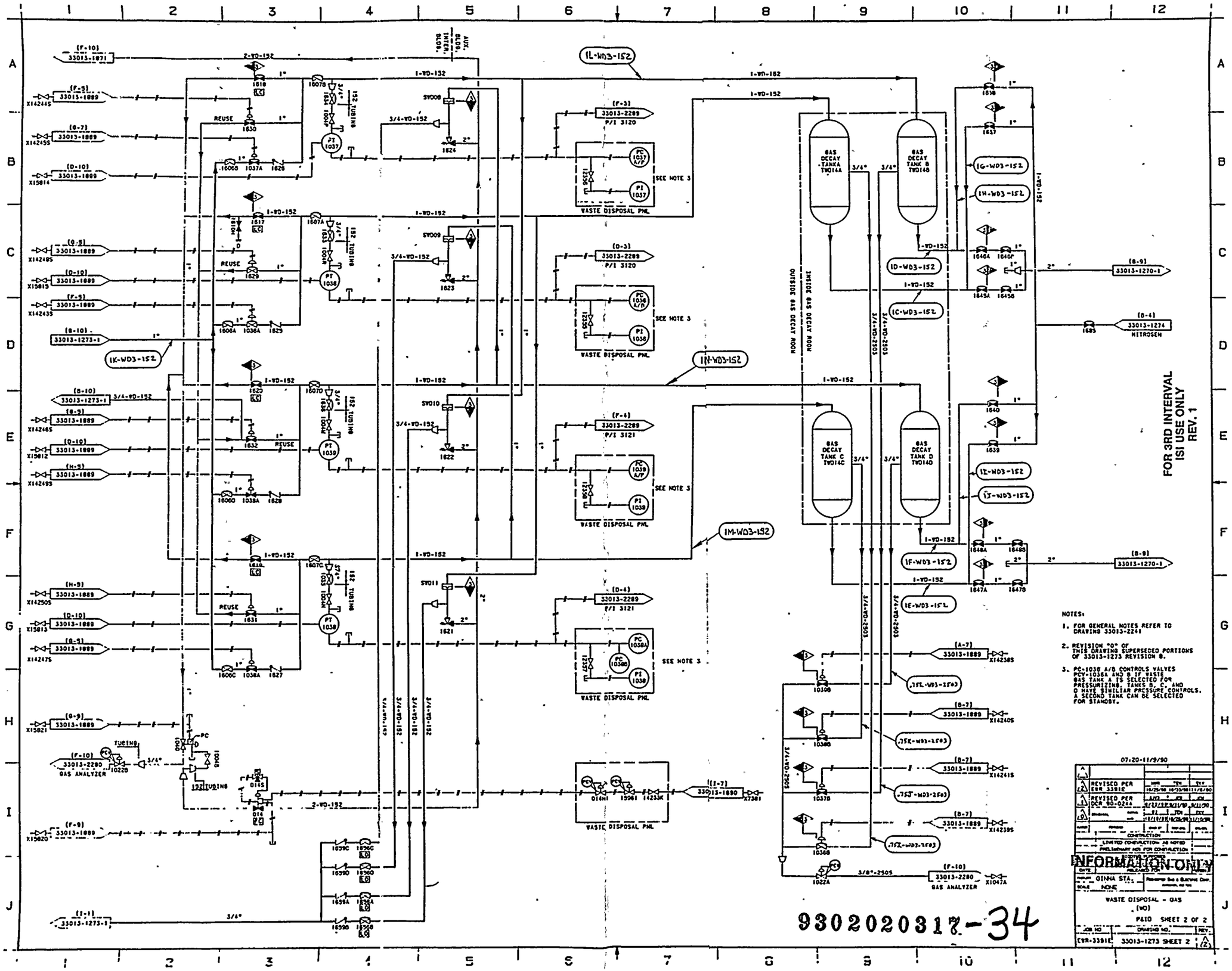

SI APERTURE CARD

Also Available On Aperture Card

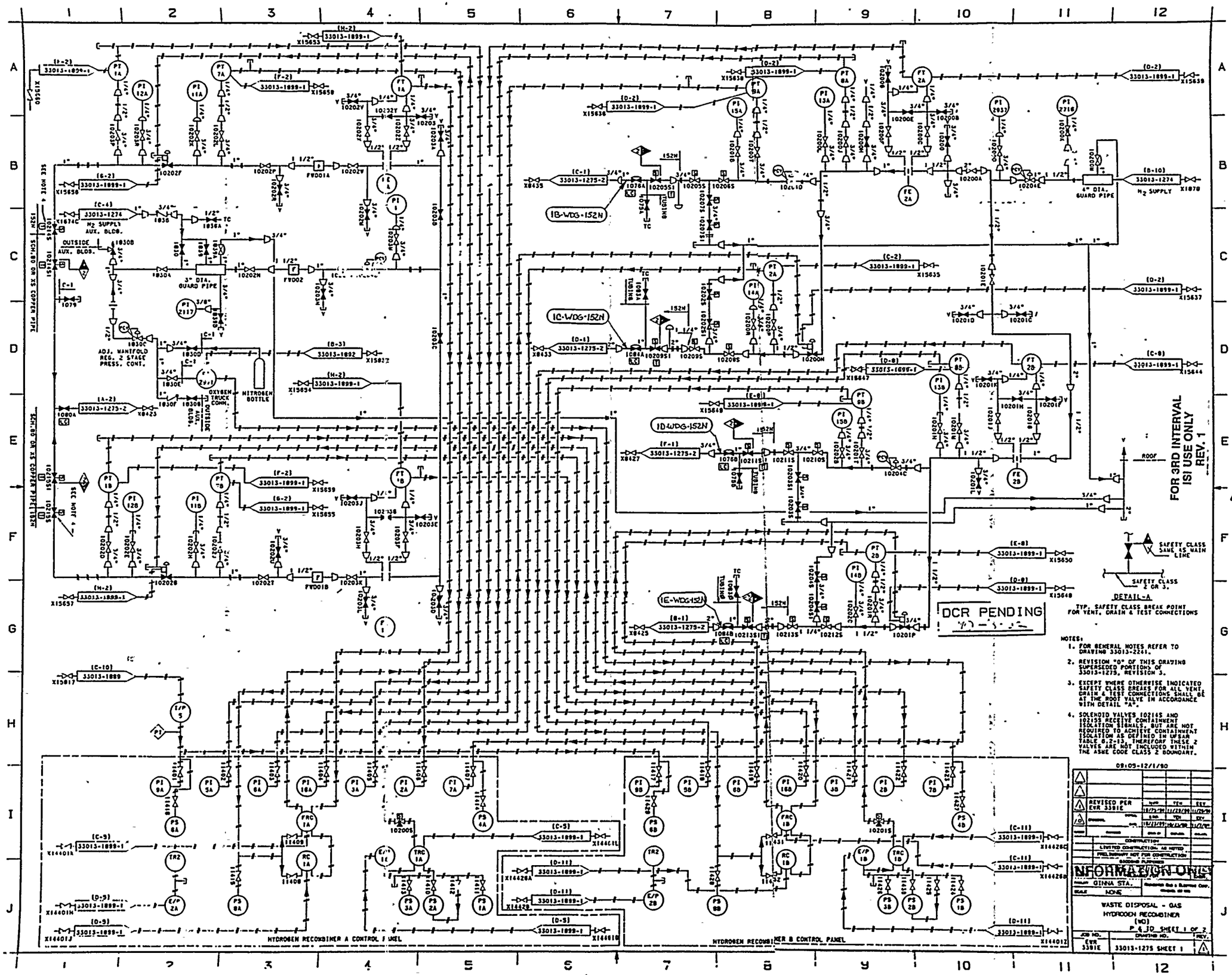

SI APERTURE CARD

Also Available On Aperture Card

9302020317-35

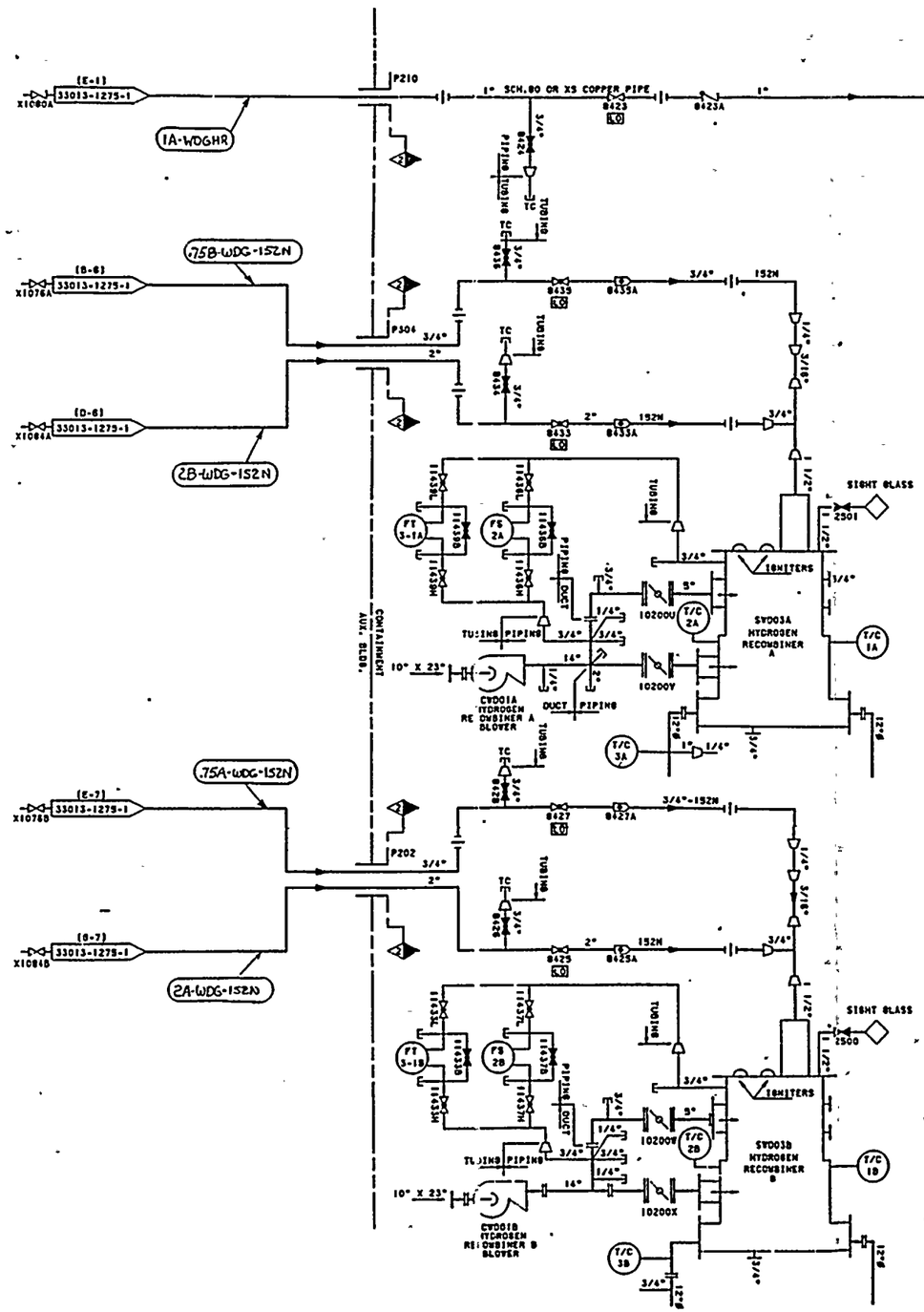

FOR 3RD INTERVAL
ISI USE ONLY
REV. 1

SI APERTURE CARD

Also Available On Aperture Card

NOTES:

1. FOR GENERAL NOTES REFER TO DRAWING 33013-2241.
2. THIS DRAWING SUPERSEDES PORTIONS OF DRAWING 33013-1275 REV. 3

11-25-11/28/90

3			
2			
1	REVISED PER EVR 3391E	DRWN 10/31/90	TEN 11/27/90	TEK 11/27/90
0	ORIGINAL	PCA 10/26/90	TEN 10/26/90	KEY 10/26/90

CONSTRUCTION
LIMITED CONSTRUCTION, AS NOTED
PRELIMINARY NOT FOR CONSTRUCTION
AS BUILT

INFORMATION ONLY

DATE | REVISED FOR | BY

PROJECT GINNA STA. | Rochester Gas & Electric Corp.
SCALE NONE

WASTE DISPOSAL - GAS
HYDROGEN RECOMBINER
(WD)
P & ID SHEET 2 OF 2

JOB NO. EVR 3391E | DRAWING NO. 33013-1275 SHEET 2 | REV. 1

9302020317-36

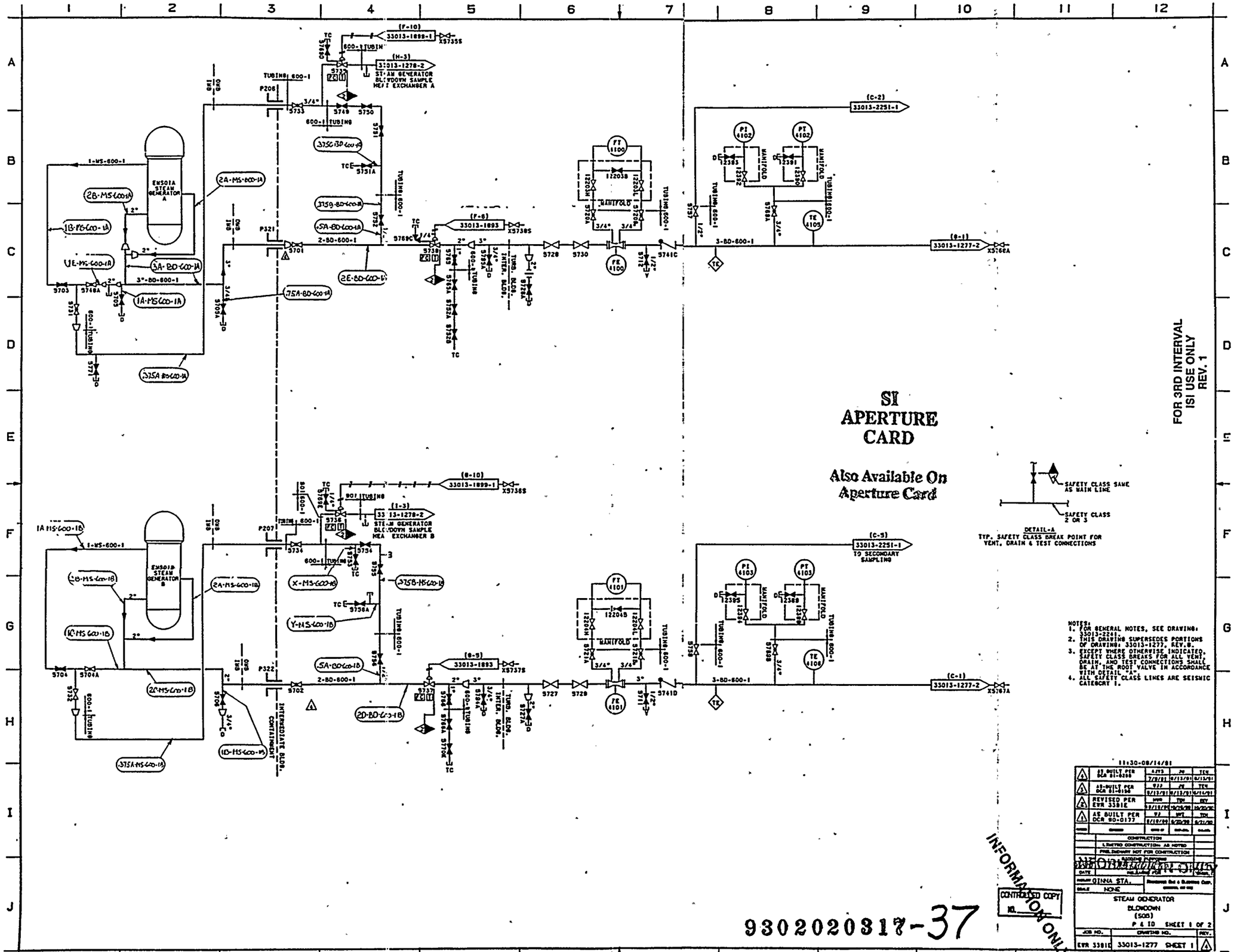

9302020317-37

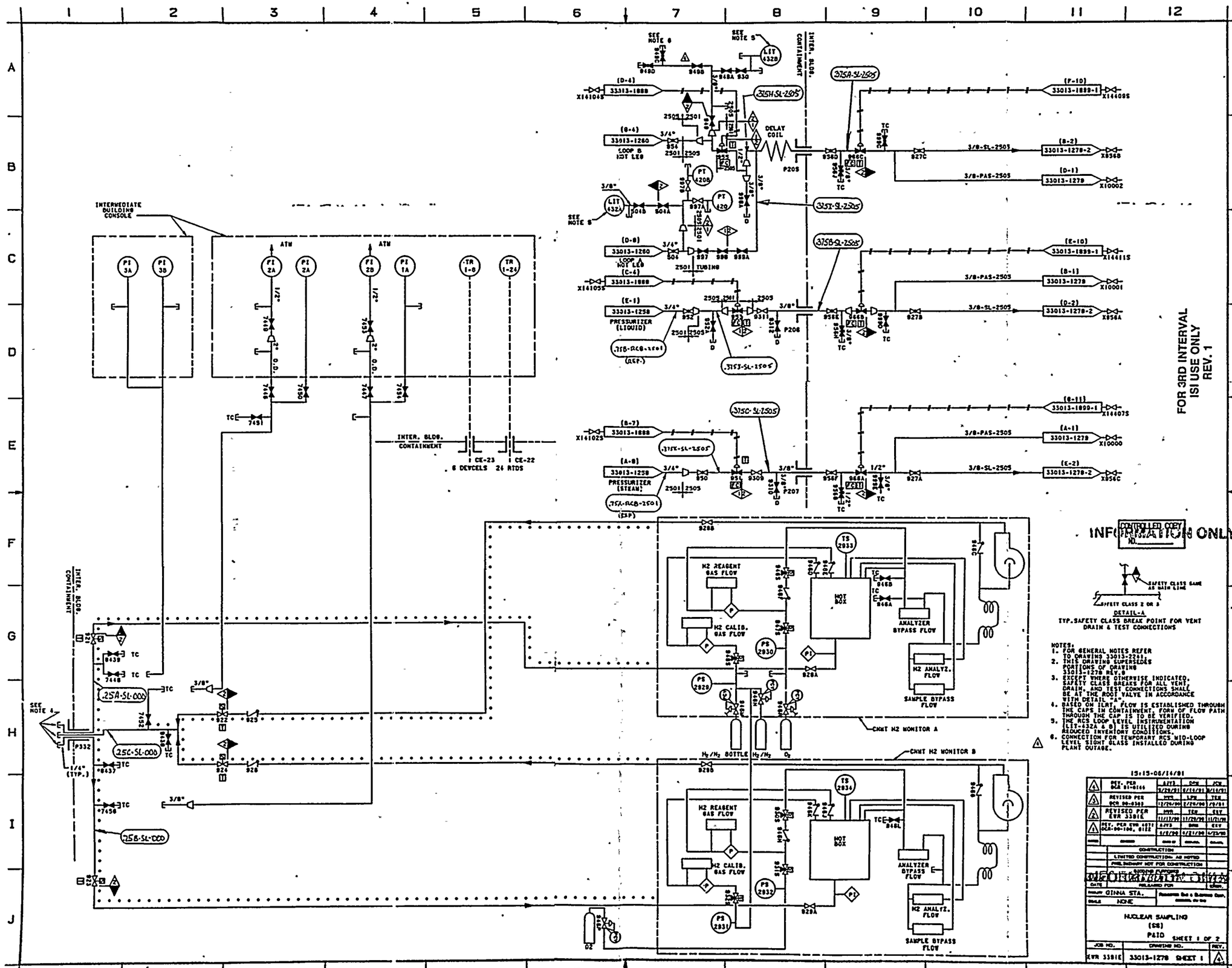

SI APERTURE CARD

Also Available On Aperture Card

9302020317-38

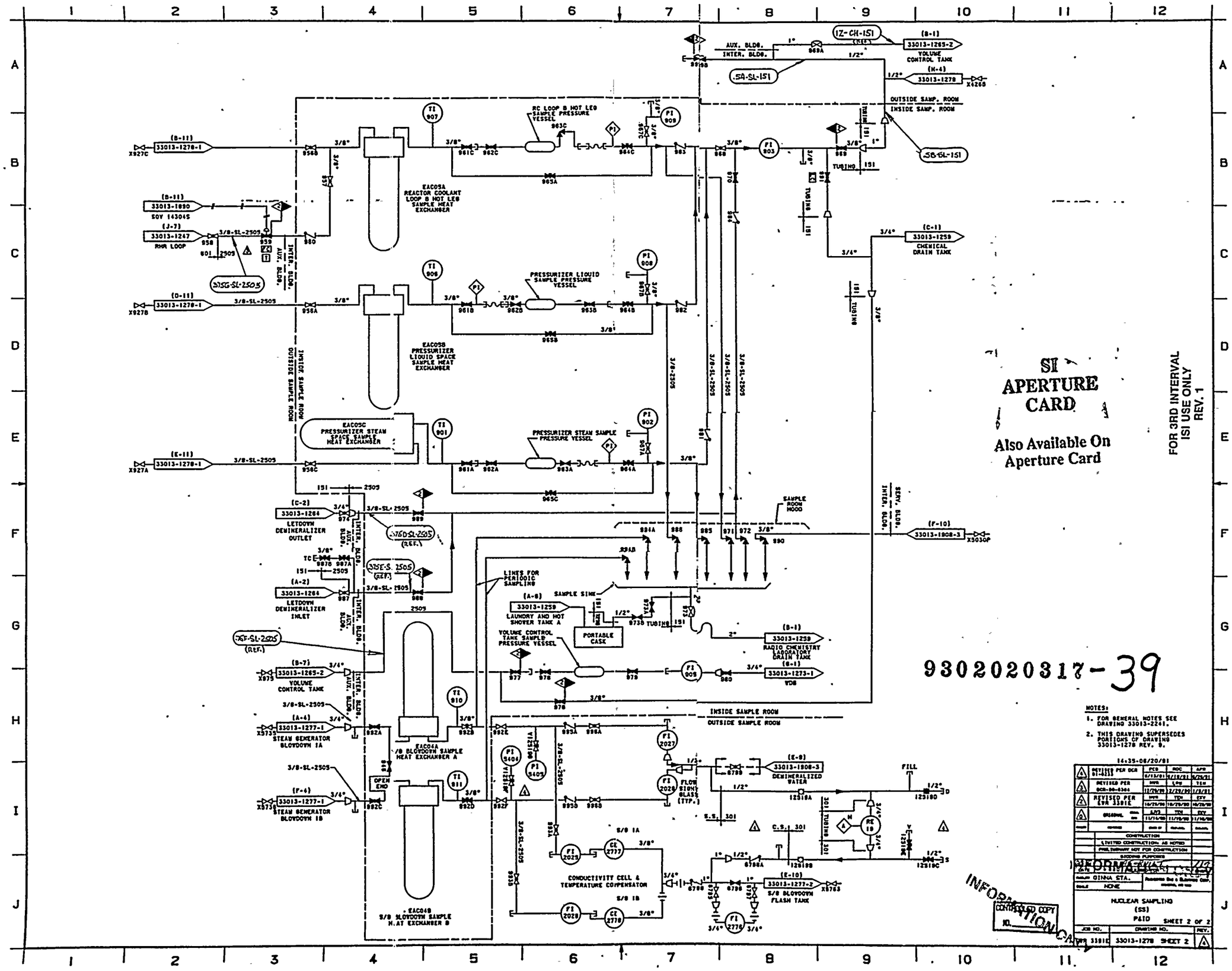
AUX. BLDG.
INTER. BLDG.
VOLUME CONTROL TANK
OUTSIDE SAMP. ROOM
INSIDE SAMP. ROOM
RC LOOP B HOT LEG SAMPLE PRESSURE VESSEL
EAC05A REACTOR COOLANT LOOP B HOT LEG SAMPLE HEAT EXCHANGER
PRESSURIZER LIQUID SAMPLE PRESSURE VESSEL
EAC05B PRESSURIZER LIQUID SPACE SAMPLE HEAT EXCHANGER
EAC05C PRESSURIZER STEAM SPACE SAMPLE HEAT EXCHANGER
PRESSURIZER STEAM SAMPLE PRESSURE VESSEL
RHR LOOP
CHEMICAL DRAIN TANK
LETDOWN DEMINERALIZER OUTLET
LETDOWN DEMINERALIZER INLET
LINES FOR PERIODIC SAMPLING
SAMPLE SINK
LAUNDRY AND HOT SHOWER TANK A
PORTABLE CASK
VOLUME CONTROL TANK SAMPLE PRESSURE VESSEL
RADIO CHEMISTRY LABORATORY DRAIN TANK
STEAM GENERATOR BLOWDOWN 1A
STEAM GENERATOR BLOWDOWN 1B
EAC04A S/G BLOWDOWN SAMPLE HEAT EXCHANGER A
EAC04B S/G BLOWDOWN SAMPLE HEAT EXCHANGER B
OPEN END
INSIDE SAMPLE ROOM
OUTSIDE SAMPLE ROOM
DEMINERALIZED WATER
FLOW SIGHT GLASS (TYP.)
CONDUCTIVITY CELL & TEMPERATURE COMPENSATOR
S/G BLOWDOWN FLASH TANK
FILL
SAMPLE ROOM HOOD
SERV. BLDG.
INTER. BLDG.
SI APERTURE CARD
Also Available On Aperture Card
FOR 3RD INTERVAL ISI USE ONLY REV. 1
9302020317-39
NOTES:
1. FOR GENERAL NOTES SEE DRAWING 33013-2241.
2. THIS DRAWING SUPERSEDES PORTIONS OF DRAWING 33013-1278 REV. 9.
NUCLEAR SAMPLING (SS) P&ID
SHEET 2 OF 2
33013-1278 SHEET 2
NONE
INFORMATION CONTROLLED COPY NO.

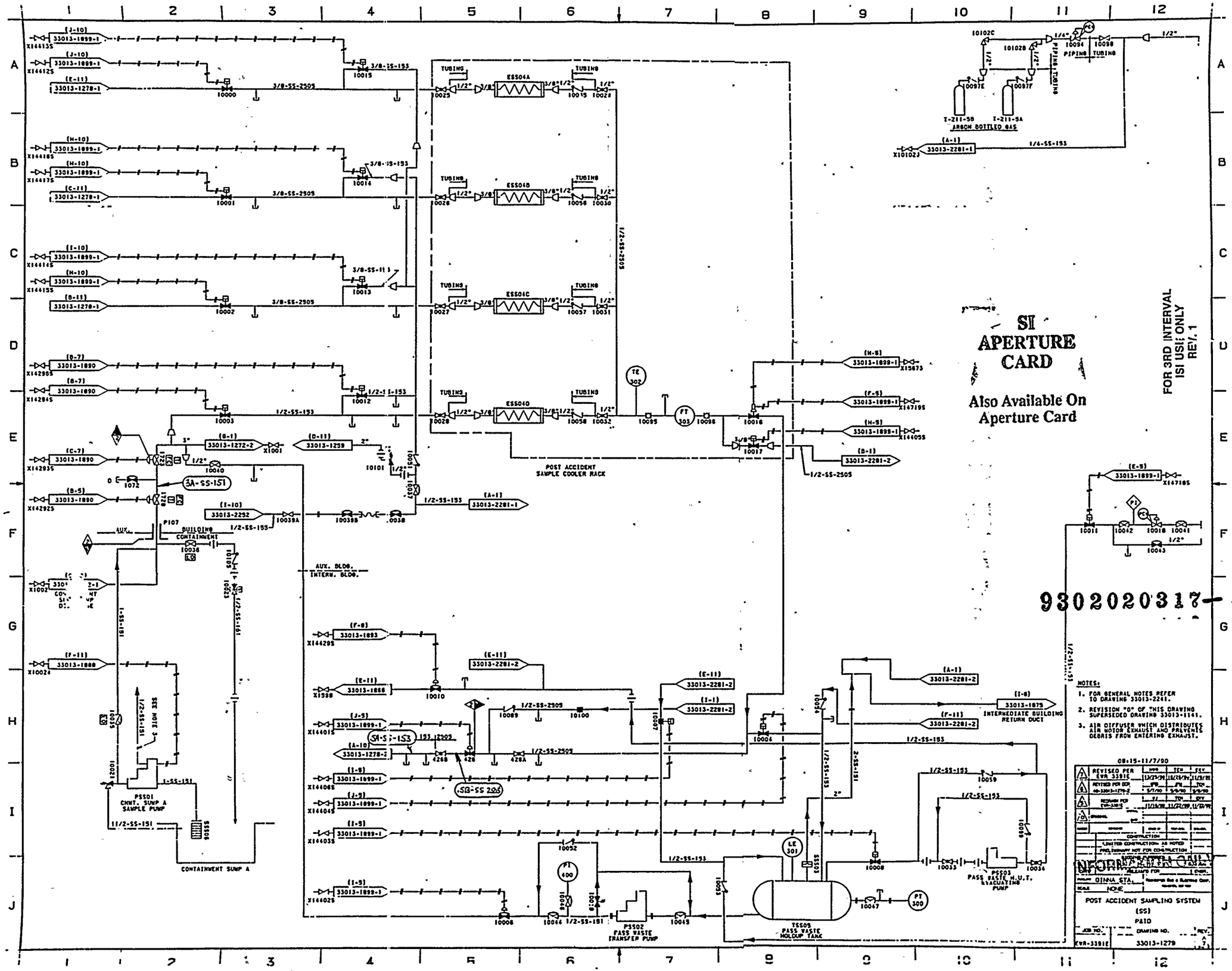

SI APERTURE CARD

Also Available On Aperture Card

FOR 3RD INTERVAL ISI USE ONLY REV. 1

9302020317-40

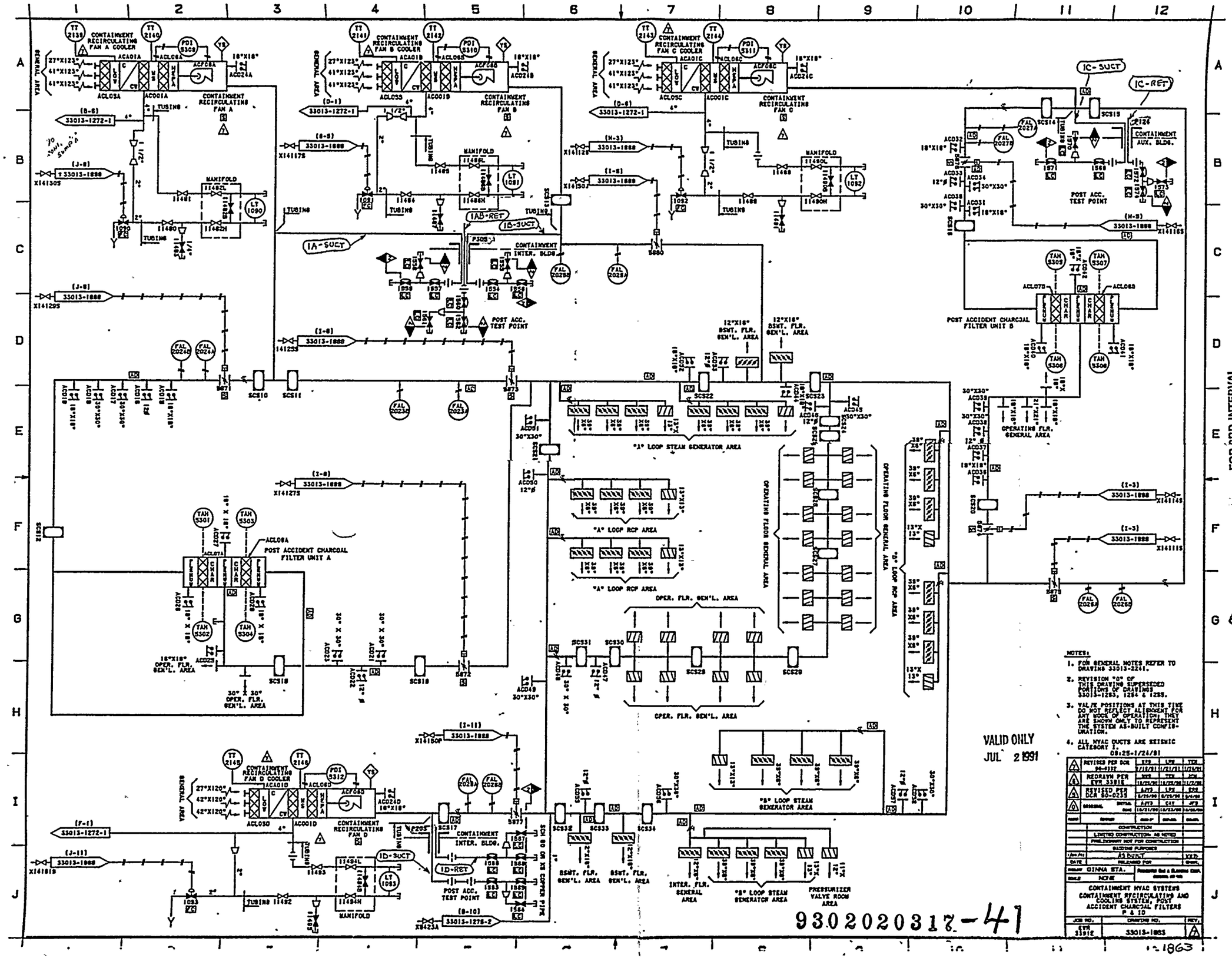
CONTAINMENT RECIRCULATING FAN A COOLER
CONTAINMENT RECIRCULATING FAN B COOLER
CONTAINMENT RECIRCULATING FAN C COOLER
CONTAINMENT RECIRCULATING FAN A
CONTAINMENT RECIRCULATING FAN B
CONTAINMENT RECIRCULATING FAN C
CONTAINMENT RECIRCULATING FAN D COOLER
CONTAINMENT RECIRCULATING FAN D
POST ACCIDENT CHARCOAL FILTER UNIT A
POST ACCIDENT CHARCOAL FILTER UNIT B
CONTAINMENT INTER. BLDG.
CONTAINMENT AUX. BLDG.
POST ACC. TEST POINT
"A" LOOP STEAM GENERATOR AREA
"A" LOOP RCP AREA
"B" LOOP STEAM GENERATOR AREA
OPER. FLR. GEN'L. AREA
OPERATING FLOOR GENERAL AREA
OPERATING FLOOR RCP AREA
OPERATING FLR. GENERAL AREA
INTER. FLR. GENERAL AREA
PRESSURIZER VALVE ROOM AREA
IC-SUCT
IC-RET
IA-SUCT
IAB-RET
IB-SUCT
ID-SUCT
ID-RET
NOTES:
1. FOR GENERAL NOTES REFER TO DRAWING 33013-2241.
2. REVISION "0" OF THIS DRAWING SUPERSEDED PORTIONS OF DRAWINGS 33013-1253, 1254 & 1255.
3. VAL/E POSITIONS AT THIS TIME DO NOT REFLECT ALIGNMENT FOR ANY MODE OF OPERATION; THEY ARE SHOWN ONLY TO REPRESENT THE SYSTEM AS-BUILT CONFIGURATION.
4. ALL HVAC DUCTS ARE SEISMIC CATEGORY I.
08:25-1/24/91
REVISED PER DCR 90-0317
REDRAWN PER EVR 3391E
REVISED PER DCR 90-0235
CONSTRUCTION
LIMITED CONSTRUCTION AS NOTED
PRELIMINARY NOT FOR CONSTRUCTION
BIDDING PURPOSES
AS BUILT
GINNA STA.
NONE
CONTAINMENT HVAC SYSTEMS
CONTAINMENT RECIRCULATING AND COOLING SYSTEM, POST ACCIDENT CHARCOAL FILTERS P & ID
EVR 3391E
33013-1863
VALID ONLY
JUL 2 1991
FOR 3RD INTERVAL ISI USE ONLY REV. 1
SI APERTURE CARD
Also Available On Aperture Card
9302020317-41

JOHNSON CONTROL PANEL MOUNTED ON INTER. BLDG. CLEANSIDE TOP FLOOR DOWNSTREAM OF REHEATERS

JOHNSON CONTROL CO. PANEL (DUCT MOUNTED)

JOHNSON CONTROL CO. PANEL (DUCT MOUNTED)

TC 5276 TC 5275 TC 5278 TC 5277

(B-12) 33013-1815 AOV 6160

(B-11) 33013-1815 AOV 6161

(B-9) 33013-1815 AOV 6158

(B-8) 33013-1815 AOV 6159

TC 5283 TC 5282 PY 5281 PY 5280

1444851 1444852 14410A 14410

(B-4) 33013-1889

(B-10) 33013-1815 AOV 6149

(B-7) 33013-1815 AOV 6150

ACD62 34X34 PURGE FAN TEST RELIEF

(J-10) 33013-1899-1 X147126

60" X 47" OUTSIDE AIR

60" X 47" OUTSIDE AIR

ACD59

DPI 5271

ACL11 ACA03A THRU ACA03D

ACF06A ACF06B SC568 SC569

CONTAINMENT PURGE SUPPLY FANS

ACD60A ACD60B

ACA04A ACA04B

TSH 5284 TSH 5285

AA501 AA502

P204 TEMPORARY CONNECTION 8074B TC

"O" RING TEST VALVE

INTER. BLDG. CONTAINMENT

C-1 SEE NOTE 5 PI 2 8074A 8074

(H-10) 33013-1884-1

(J-1) 33013-1897 X15100

(D-12) 33013-1893 X15472

(F-12) 33013-1893 X15475

1443OS

LIFT VENT

ROOF

DPI 5283

ACF10 ACL13 SILENCER SC567

CONTAINMENT MINI-PURGE SUPPLY FAN

15007 7481S 7481 7480 7448 7479 P309

STANDBY FAN CONNECTION

CONTAINMENT MINI-PURGE SUPPLY FAN

CONTAINMENT INTER. BLDG.

EA-MP3-2000

THIS PENETRATION WILL BE CLASSIFIED MC

34" ø HINGED BLIND FLANGE

SI APERTURE CARD

Also Available On Aperture Card

NOTES:

1. FOR GENERAL NOTES REFER TO DRAWING 33013-2261
2. THIS DRAWING SUPERSEDES PORTIONS OF DRAWINGS 33013-1253, 1254, AND 1255
3. VALVE POSITIONS AT THIS TIME DO NOT REFLECT ALIGNMENT FOR ANY MODE OF OPERATION; THEY ARE SHOWN ONLY TO REPRESENT THE SYSTEM AS-BUILT CONFIGURATION.
4. ALL HVAC DUCTS ARE SEISMIC CATEGORY I
5. MATERIAL SPECIFICATIONS FOR PIPING TO BE I.P.S. COPPER (.065" WALL).

12:00-04/15/91

4	REVISED PER DCR-91-0474	HTG	CAY	LPS
		3/11/91	4/11/91	4/15/91
3	REVISED PER DCR-90-0300	MMM	LMM	TTS
		12/27/90	12/28/90	1/4/91
2	REVISED PER EWR 3381E	HTG	TCS	LPS
		10/25/88	10/25/88	11/28/88
1	ORIGINAL	AJG	CDV	FS
		10/21/88	10/23/88	10/24/88

CONSTRUCTION

LIMITED CONSTRUCTION AS NOTED

FOR INFORMATION ONLY NOT FOR CONSTRUCTION

INFORMATION ONLY

DATE RELEASED FOR SIGN.

COMPANY BINNA STA. SCALE NONE

CONTAINMENT HVAC SYSTEMS PURGE SUPPLY P & ID

JOB NO. EWR-3381E DRAWING NO. 33013-1865 REV. 4

FOR 3RD INTERVAL ISI USE ONLY REV. 1

9302020317-42

is 1865

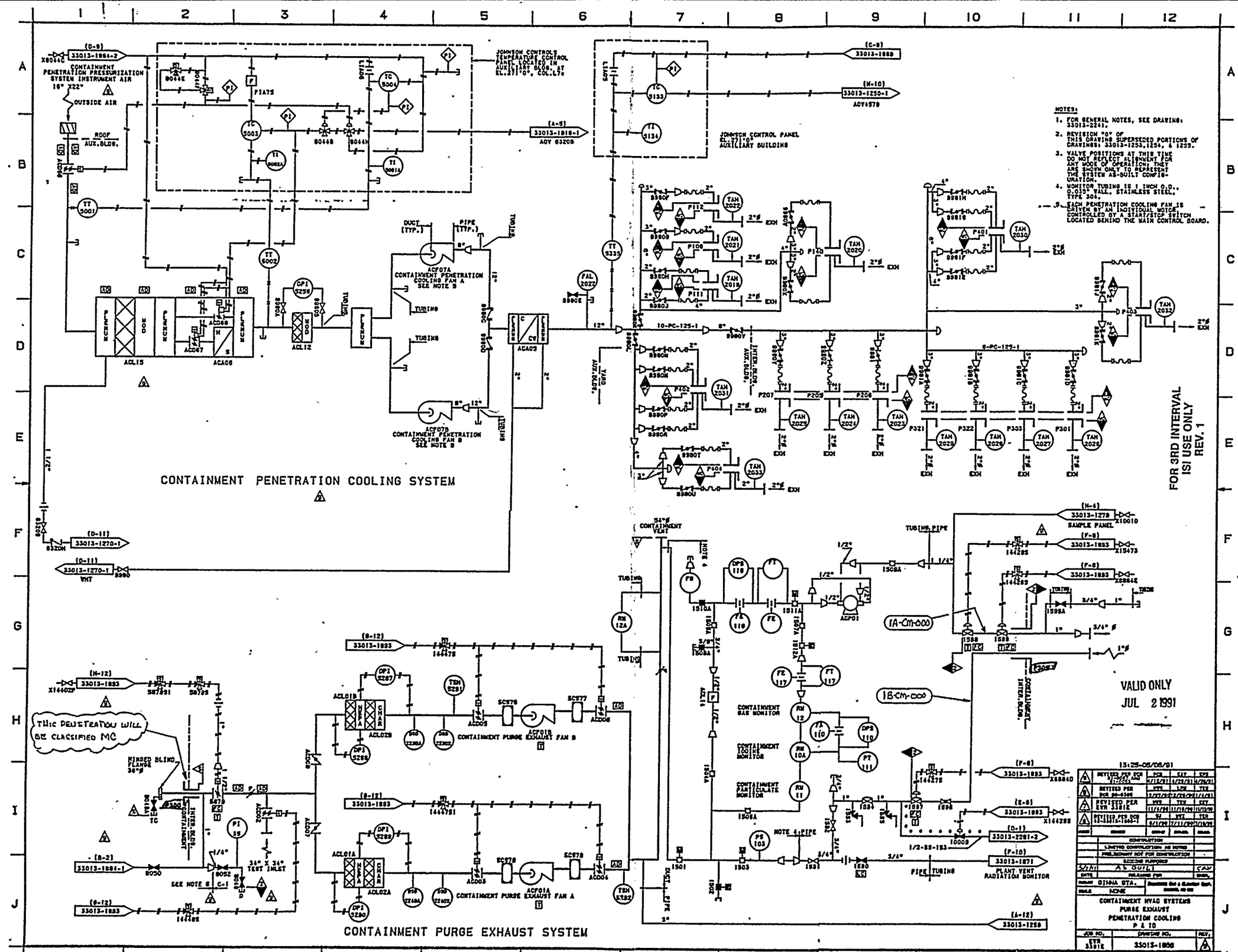

9302020317-43

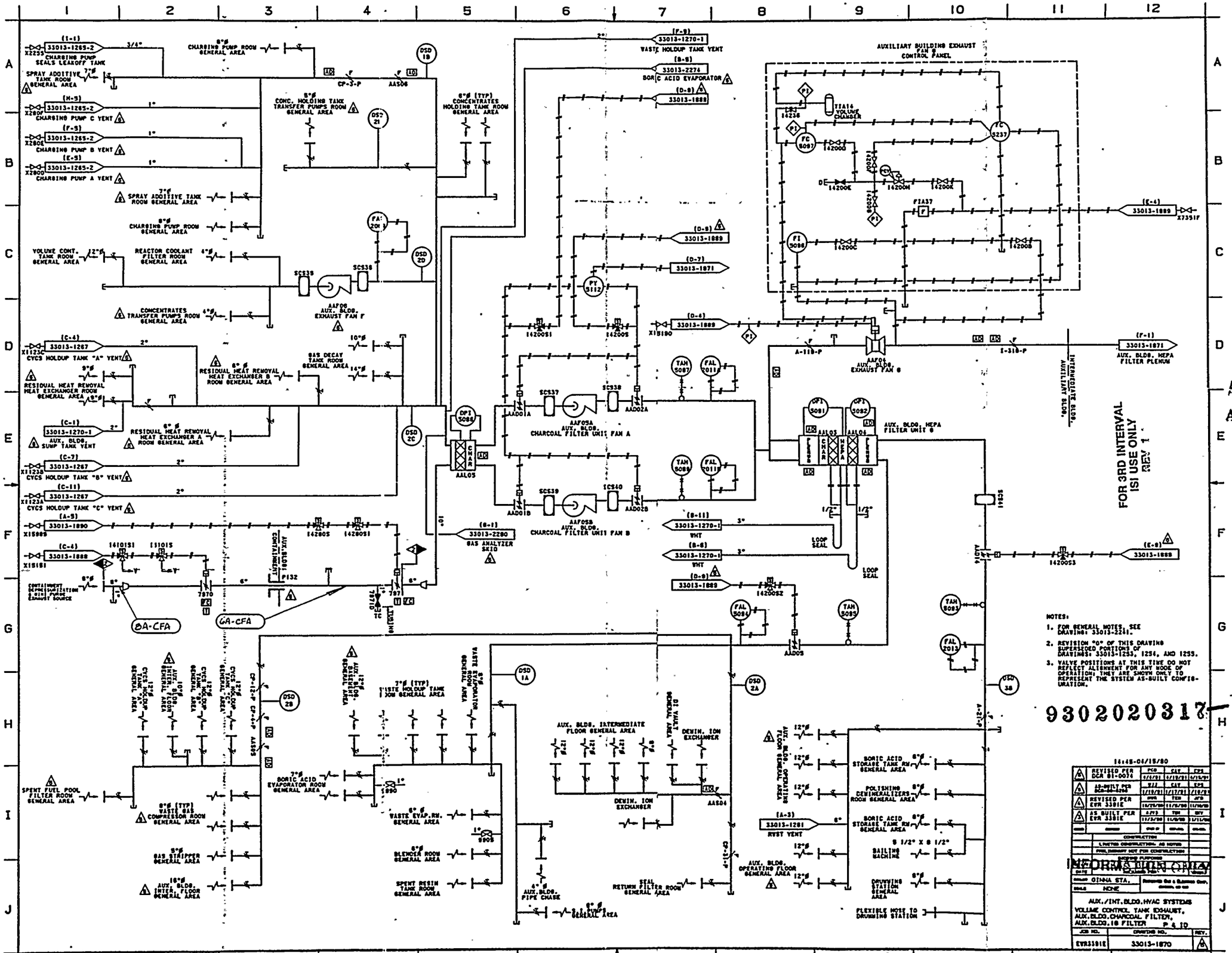

FOR 3RD INTERVAL ISI USE ONLY REV 1

SI APERTURE CARD

Also Available On Aperture Card

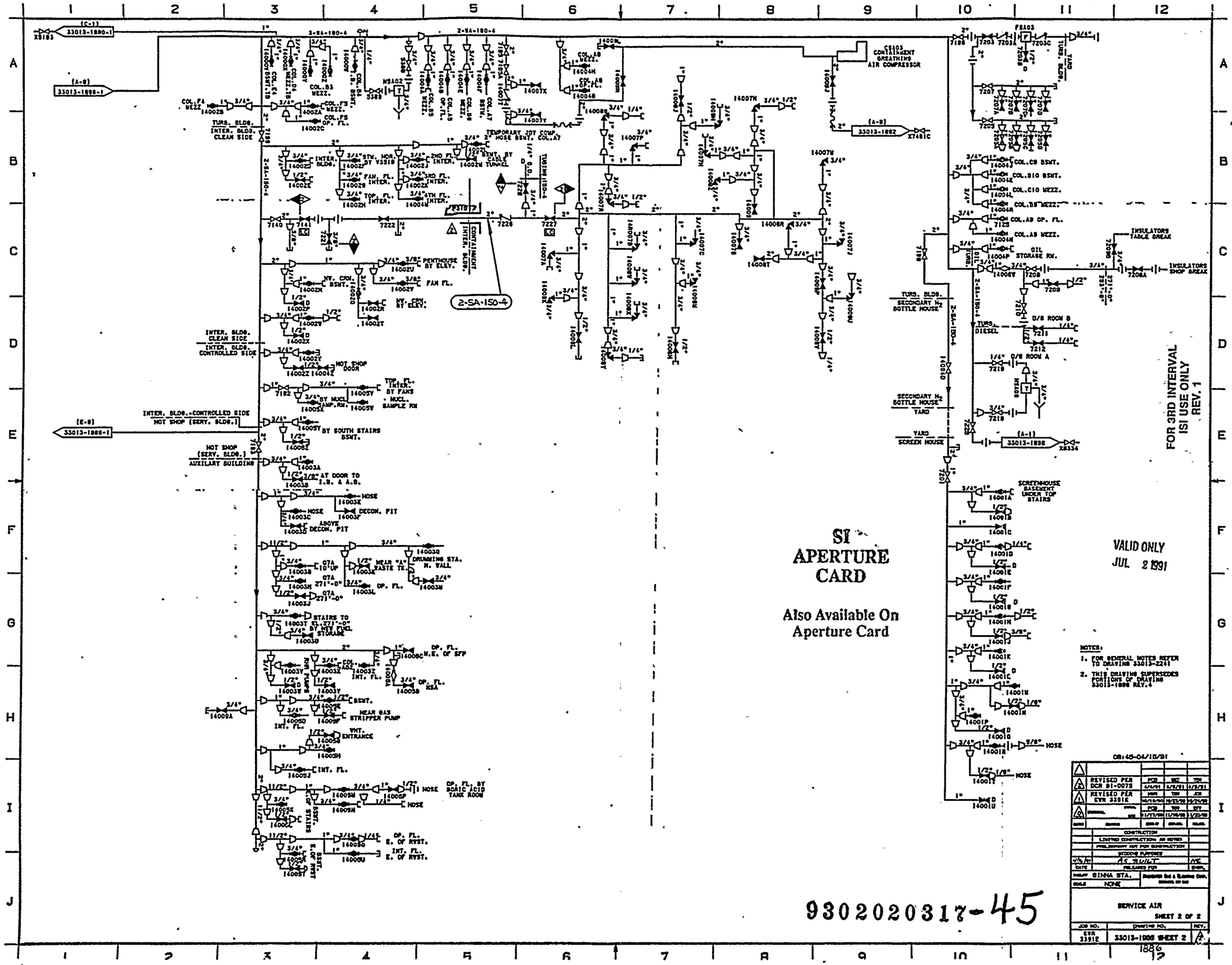

9302020317-45

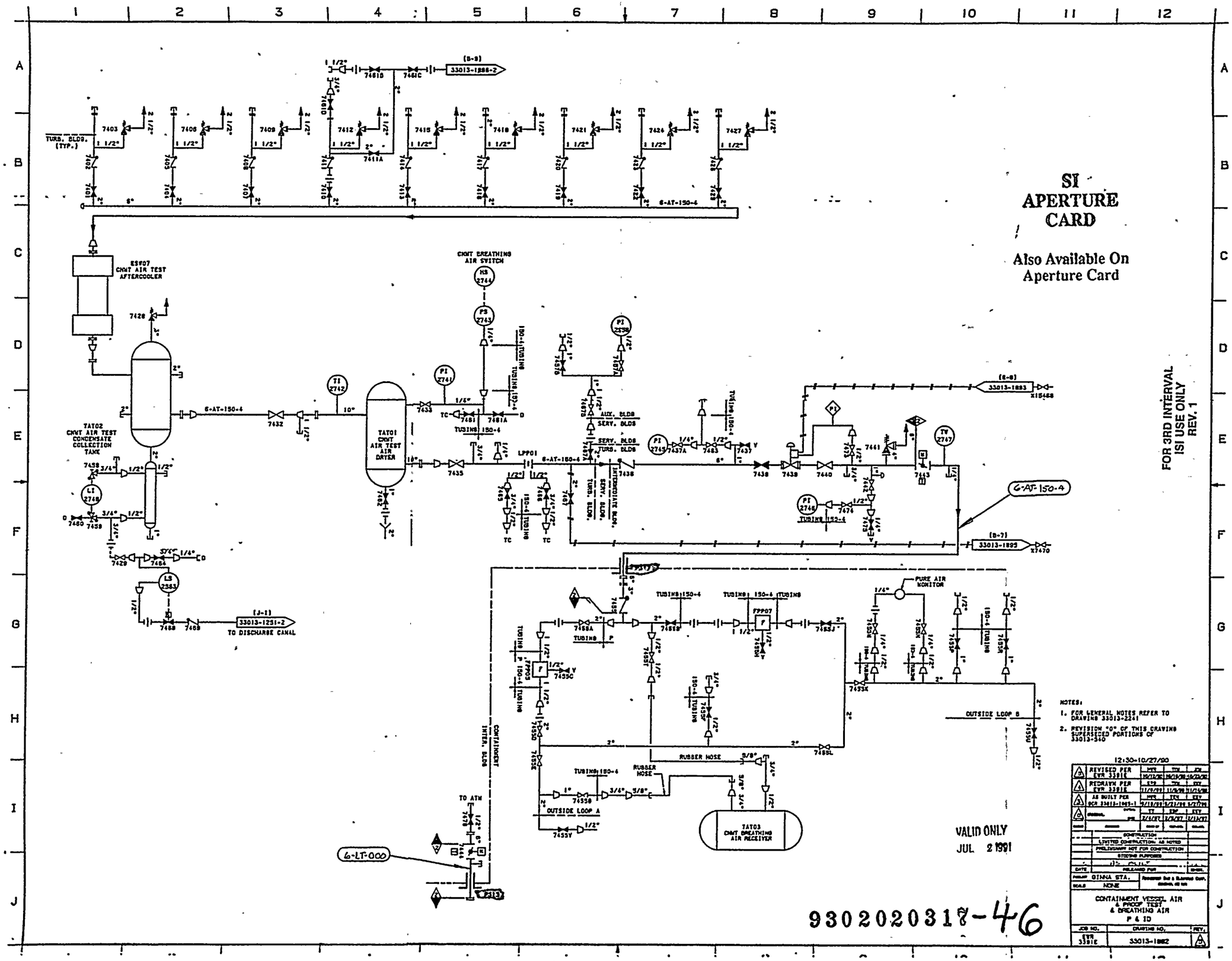

9302020318-46

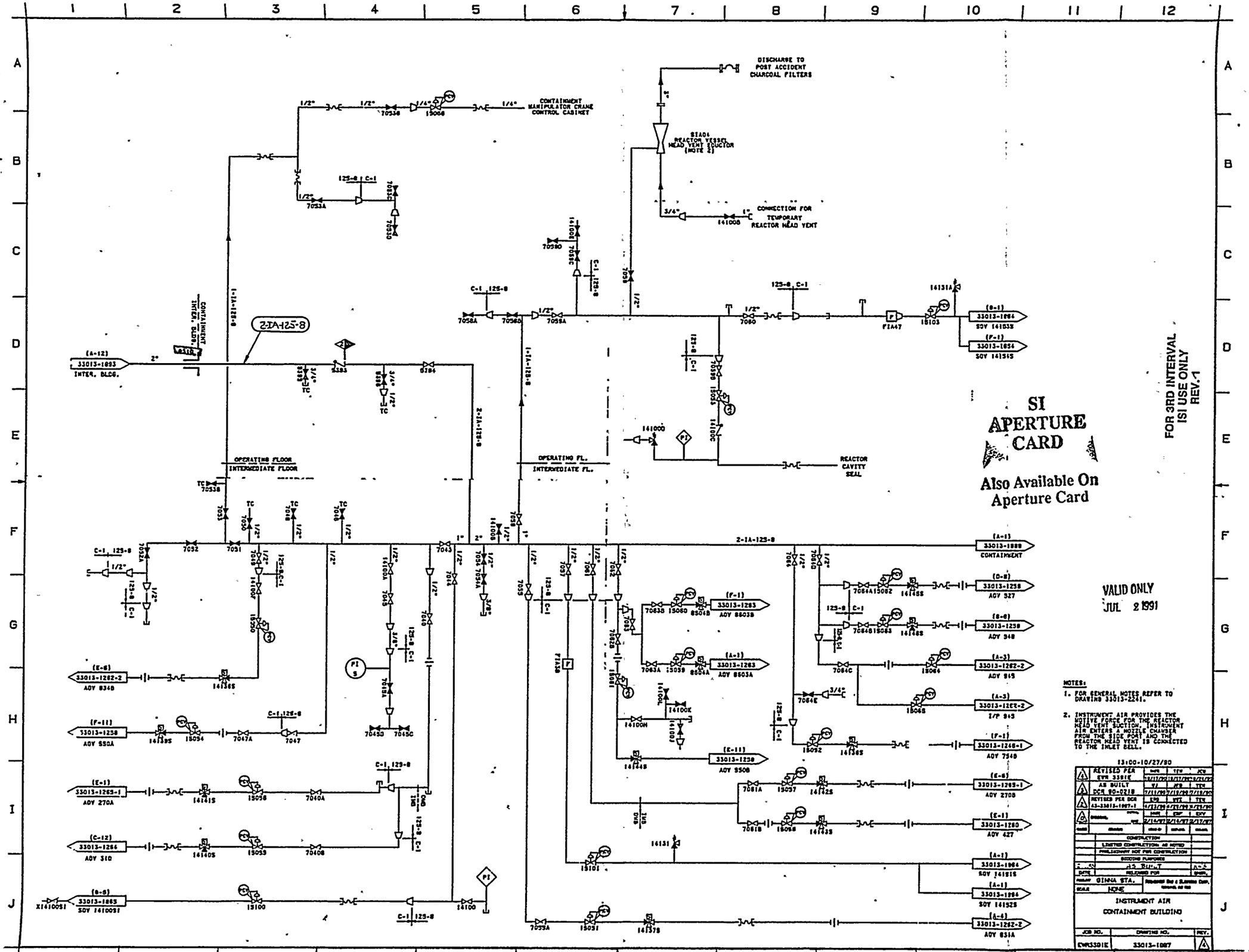

9302020317-47

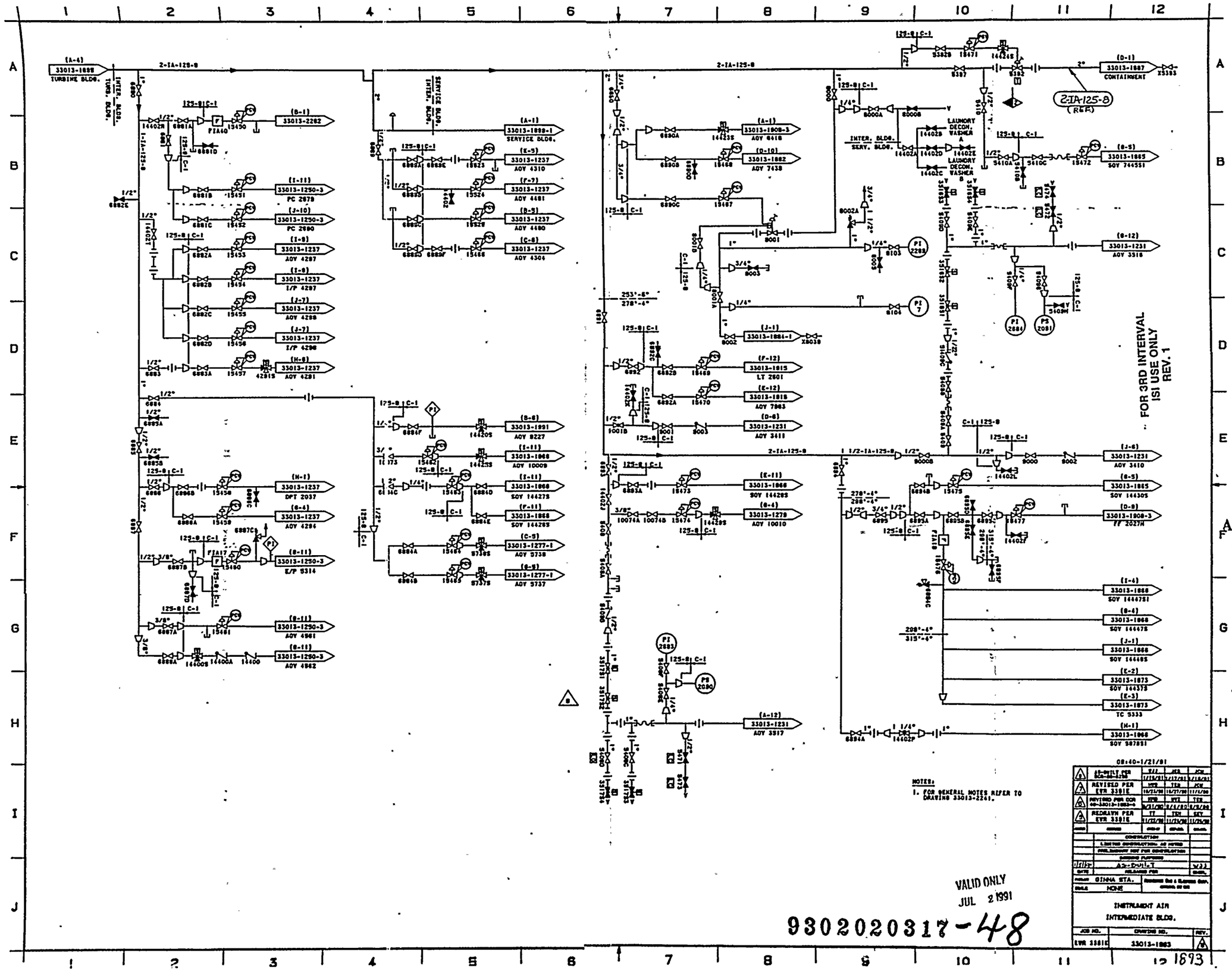

SI APERTURE CARD

Also Available On Aperture Card

VALID ONLY JUL 2 1991

9302020317-48

1893

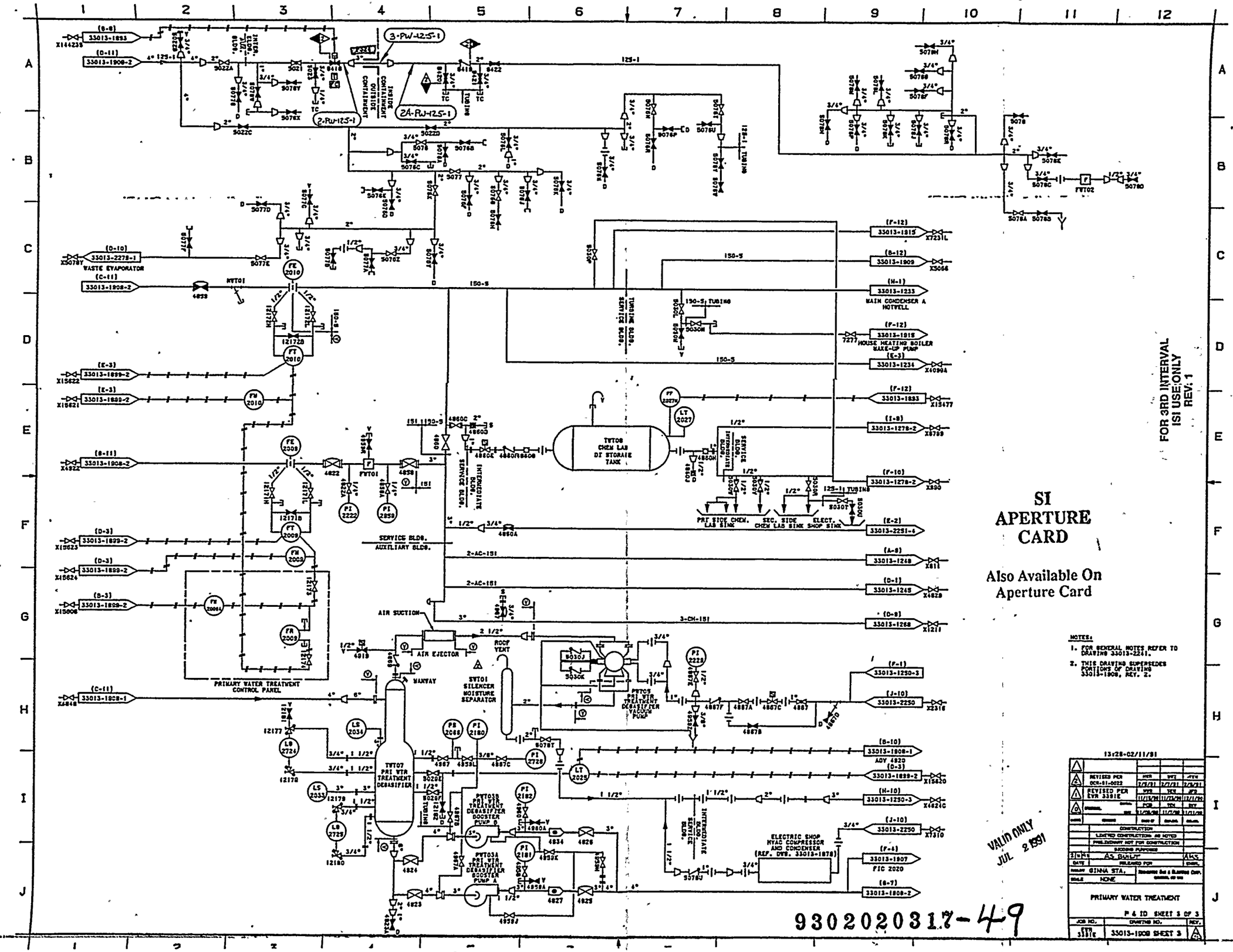
WASTE EVAPORATOR
MAIN CONDENSER A HOTWELL
HOUSE HEATING BOILER MAKE-UP PUMP
TWT08 CHEM LAB DI STORAGE TANK
PRI SIDE CHEM. LAB SINK
SEC. SIDE CHEM LAB SINK
ELECT. SHOP SINK
SERVICE BLDG. AUXILIARY BLDG.
PRIMARY WATER TREATMENT CONTROL PANEL
AIR SUCTION
AIR EJECTOR
ROOF VENT
MANWAY
SVT01 SILENCER MOISTURE SEPARATOR
PWT05 PRI WTR TREATMENT DEAERATOR VACUUM PUMP
TWT07 PRI WTR TREATMENT DEAERATOR
PWT03B PRI WTR TREATMENT DEAERATOR BOOSTER PUMP B
PWT03A PRI WTR TREATMENT DEAERATOR BOOSTER PUMP A
INTERMEDIATE BLDG. SERVICE BLDG.
ELECTRIC SHOP HVAC COMPRESSOR AND CONDENSER (REF. DWG. 33013-1878)
FIC 2020
SI APERTURE CARD
Also Available On Aperture Card
NOTES:
1. FOR GENERAL NOTES REFER TO DRAWING 33013-2261.
2. THIS DRAWING SUPERSEDES PORTIONS OF DRAWING 33013-1908, REV. 2.
FOR 3RD INTERVAL ISI USE ONLY REV. 1
VALID ONLY JUL 2 1991
9302020317-49
PRIMARY WATER TREATMENT
P & ID SHEET 3 OF 3
33013-1908 SHEET 3

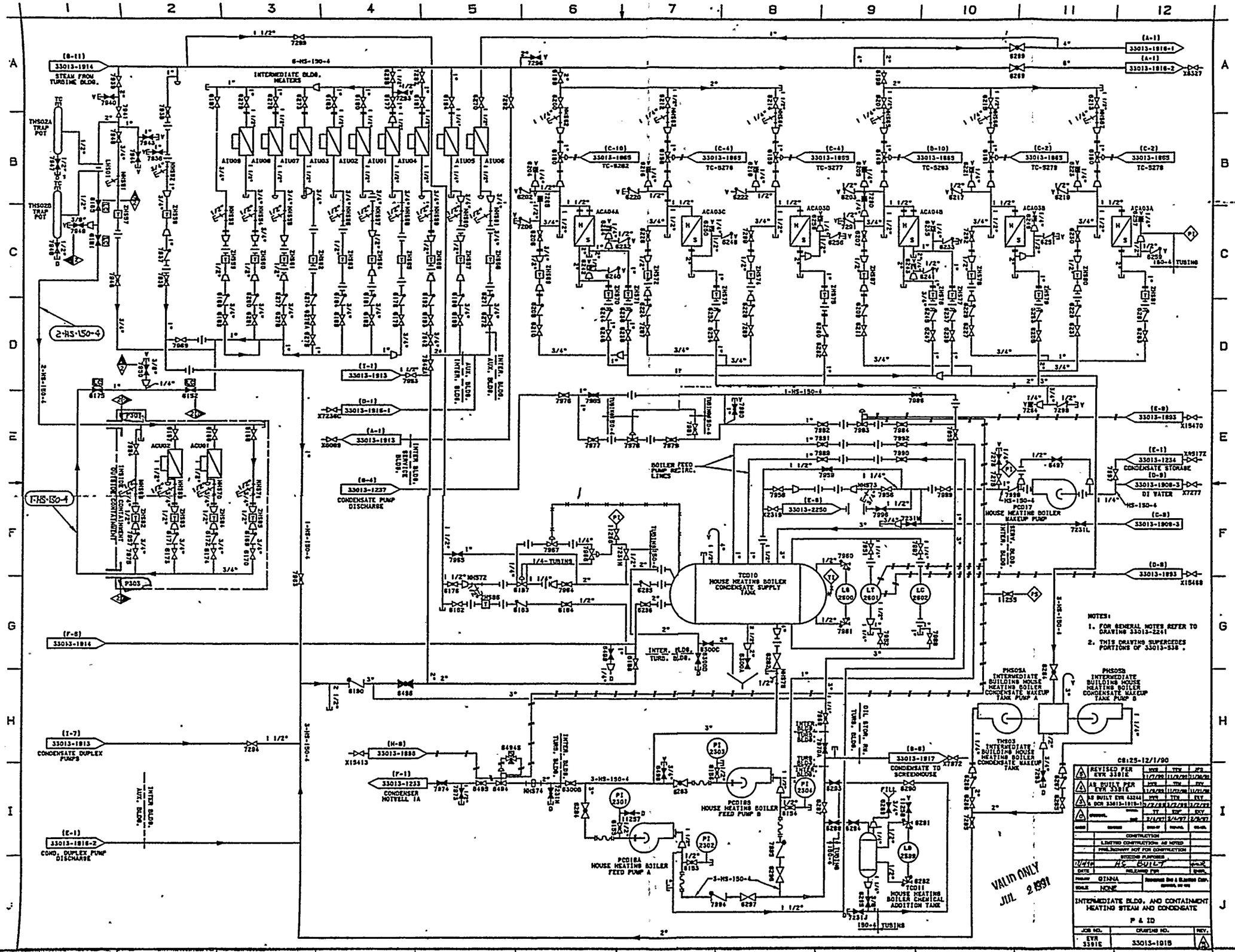

FOR 3RD INTERVAL ISI USE ONLY REV. 1

SI APERTURE CARD

Also Available On Aperture Card

9302020317-50

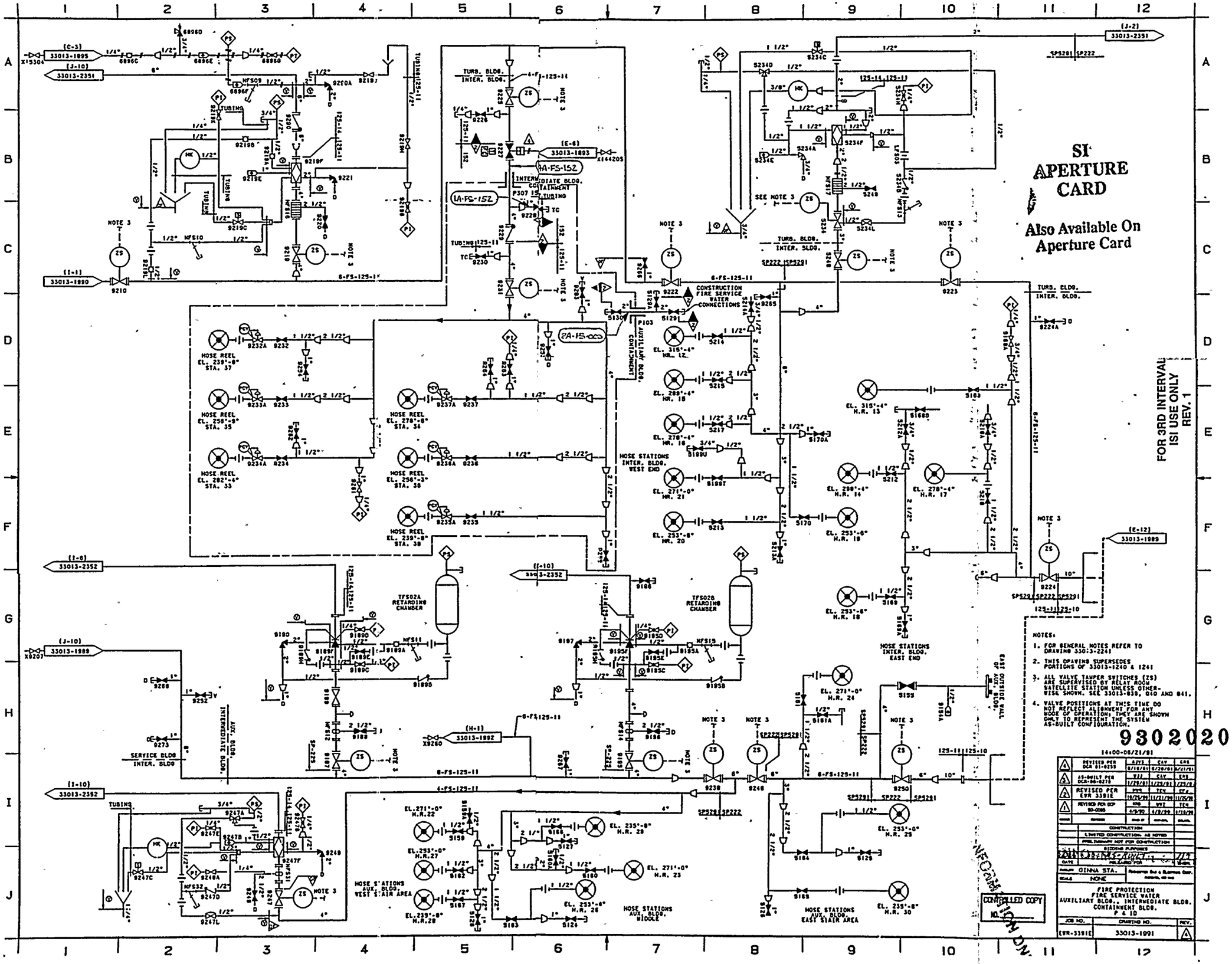

93020203 17-51

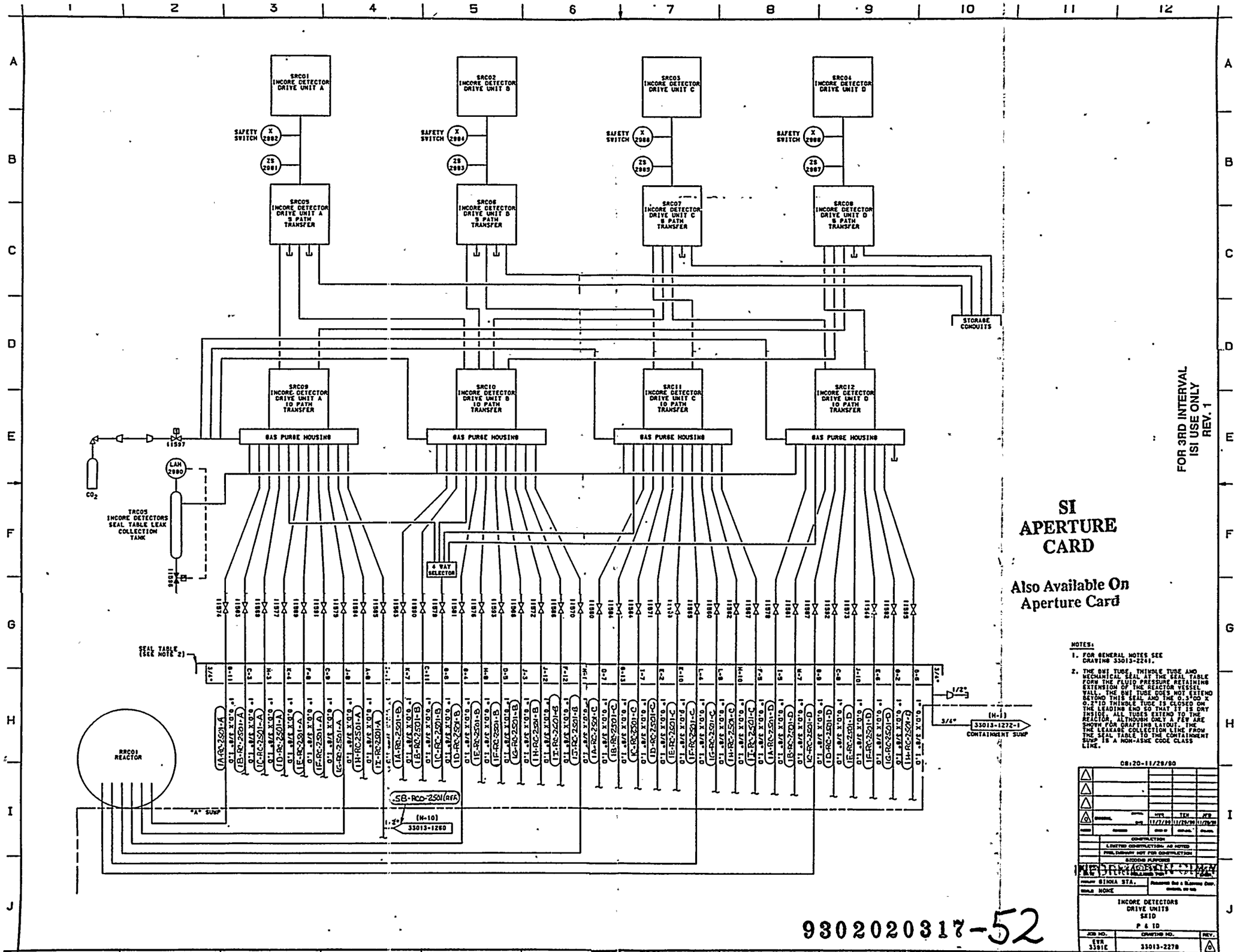
SRC01 INCORE DETECTOR DRIVE UNIT A
SRC02 INCORE DETECTOR DRIVE UNIT B
SRC03 INCORE DETECTOR DRIVE UNIT C
SRC04 INCORE DETECTOR DRIVE UNIT D
SAFETY SWITCH
SRC05 INCORE DETECTOR DRIVE UNIT A 8 PATH TRANSFER
SRC06 INCORE DETECTOR DRIVE UNIT B 8 PATH TRANSFER
SRC07 INCORE DETECTOR DRIVE UNIT C 8 PATH TRANSFER
SRC08 INCORE DETECTOR DRIVE UNIT D 8 PATH TRANSFER
STORAGE CONDUITS
SRC09 INCORE DETECTOR DRIVE UNIT A 10 PATH TRANSFER
SRC10 INCORE DETECTOR DRIVE UNIT B 10 PATH TRANSFER
SRC11 INCORE DETECTOR DRIVE UNIT C 10 PATH TRANSFER
SRC12 INCORE DETECTOR DRIVE UNIT D 10 PATH TRANSFER
GAS PURGE HOUSING
LAH 2990
CO2
TRC05 INCORE DETECTORS SEAL TABLE LEAK COLLECTION TANK
4 WAY SELECTOR
SEAL TABLE (SEE NOTE 2)
RRC01 REACTOR
"A" SUMP
SB-RCD-2501(REF)
(H-10)
33013-1260
(H-1)
33013-1272-1
CONTAINMENT SUMP
FOR 3RD INTERVAL ISI USE ONLY REV. 1
SI APERTURE CARD
Also Available On Aperture Card
NOTES:
1. FOR GENERAL NOTES SEE DRAWING 33013-2241.
2. THE BNT TUBE, THIMBLE TUBE AND MECHANICAL SEAL AT THE SEAL TABLE FORM THE PRIMARY PRESSURE RETAINING EXTENSION OF THE REACTOR VESSEL WALL. THE BNT TUBE DOES NOT EXTEND BEYOND THIS SEAL AND THE 0.3"OD X 0.2"ID THIMBLE TUBE IS CLOSED ON THE LEADING END SO THAT IT IS DRY INSIDE. ALL TUBES EXTEND TO THE REACTOR, ALTHOUGH ONLY A FEW ARE SHOWN FOR DRAFTING LAYOUT. THE LEAKAGE COLLECTION LINE FROM THE SEAL TABLE TO THE CONTAINMENT SUMP IS A NON-ASME CODE CLASS LINE.
08:20-11/28/90
CONSTRUCTION
LIMITED CONSTRUCTION: AS NOTED
PRELIMINARY NOT FOR CONSTRUCTION
SIXONS PURPOSES
SINNA STA.
SCALE NONE
INCORE DETECTORS DRIVE UNITS SK1D
P & ID
JOB NO. EVR 3391E
DRAWING NO. 33013-2278
REV.
9302020317-52

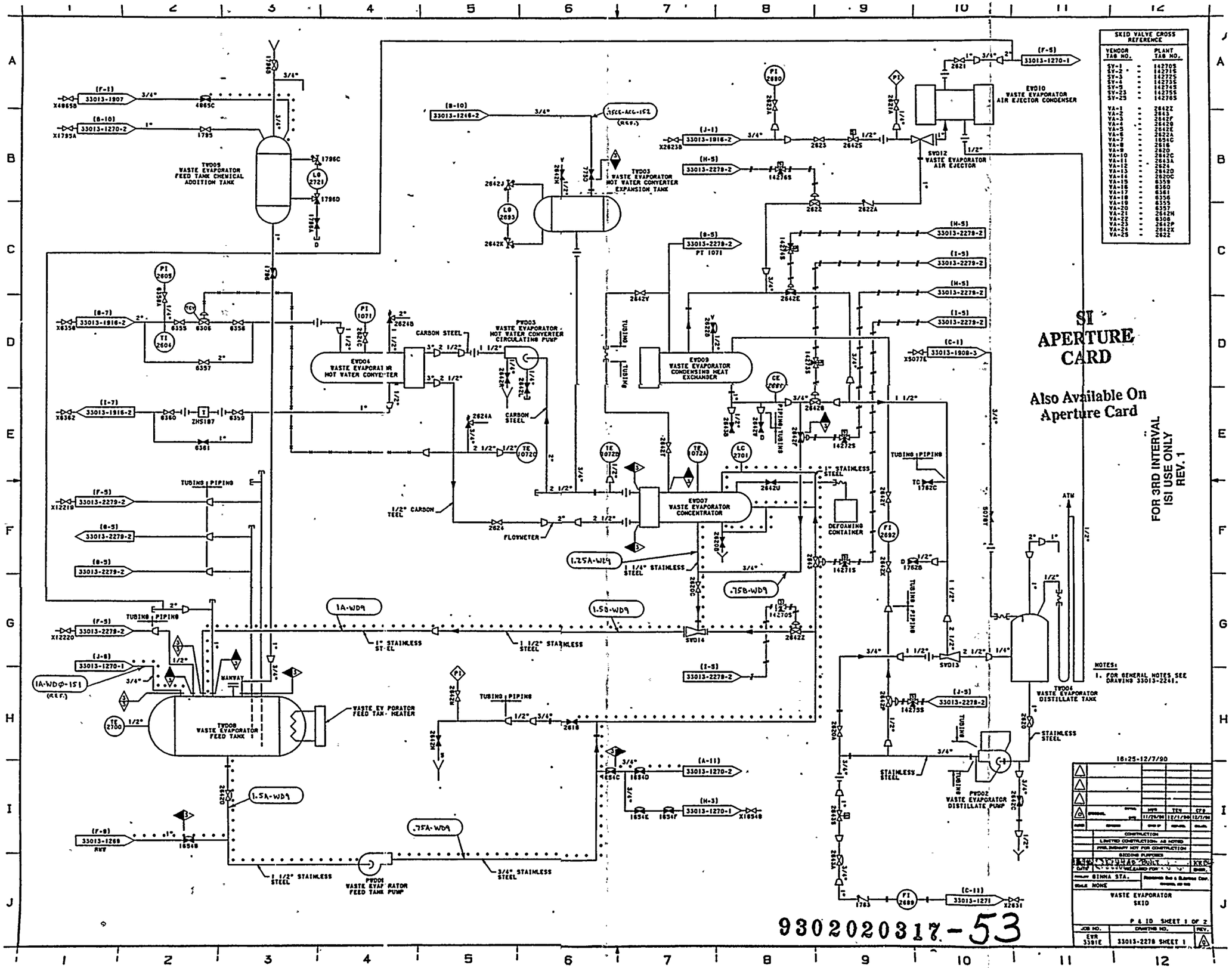
TVD09 WASTE EVAPORATOR FEED TANK CHEMICAL ADDITION TANK
TVD03 WASTE EVAPORATOR HOT WATER CONVERTER EXPANSION TANK
EVD04 WASTE EVAPORATOR HOT WATER CONVERTER
PVD03 WASTE EVAPORATOR HOT WATER CONVERTER CIRCULATING PUMP
EVD09 WASTE EVAPORATOR CONDENSING HEAT EXCHANGER
EVD07 WASTE EVAPORATOR CONCENTRATOR
EVD10 WASTE EVAPORATOR AIR EJECTOR CONDENSER
SVD12 WASTE EVAPORATOR AIR EJECTOR
TVD08 WASTE EVAPORATOR FEED TANK 1
WASTE EVAPORATOR FEED TANK HEATER
PVD08 WASTE EVAPORATOR FEED TANK PUMP
PVD02 WASTE EVAPORATOR DISTILLATE PUMP
TVD04 WASTE EVAPORATOR DISTILLATE TANK
DEFOAMING CONTAINER
FLOWMETER
CARBON STEEL
STAINLESS STEEL
TUBING PIPING
MANWAY
1A-WD9
1.5A-WD9
.75A-WD9
1.25A-WD9
.75B-WD9
1.5B-WD9
SKID VALVE CROSS REFERENCE
VENDOR TAG NO. | PLANT TAG NO.
SI APERTURE CARD
Also Available On Aperture Card
FOR 3RD INTERVAL ISI USE ONLY REV. 1
NOTES:
1. FOR GENERAL NOTES SEE DRAWING 33013-2241.
WASTE EVAPORATOR SKID
P & ID SHEET 1 OF 2
33013-2278 SHEET 1
9302020317-53

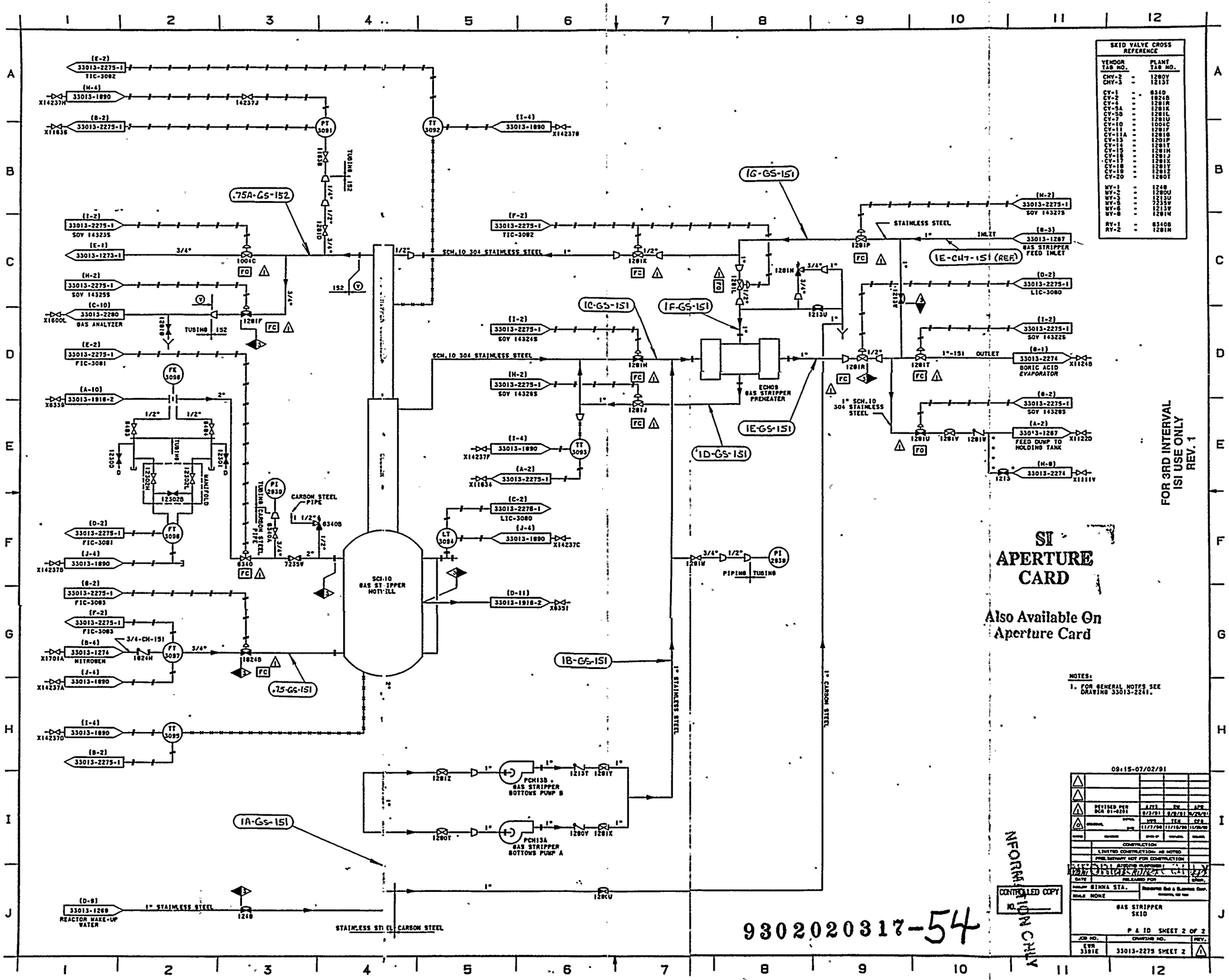
SKID VALVE CROSS REFERENCE
VENDOR TAG NO. | PLANT TAG NO.
CHV-2 - 1280Y
CHV-3 - 1213T
CV-1 - 6340
CV-2 - 1824B
CV-3 - 1281R
CV-5A - 1281K
CV-5B - 1281L
CV-7 - 1281U
CV-10 - 1004C
CV-11 - 1281F
CV-11A - 1281G
CV-13 - 1281P
CV-14 - 1281T
CV-15 - 1281H
CV-16 - 1281J
CV-17 - 1281X
CV-18 - 1281Z
CV-19 - 1281Z
CV-20 - 1280T
MV-1 - 1248
MV-2 - 1280U
MV-3 - 1213U
MV-5 - 7235V
MV-6 - 1213V
MV-8 - 1281M
RV-1 - 6340B
RV-2 - 1281N
.75A-GS-152
1G-GS-151
1C-GS-151
1F-GS-151
1E-GS-151
1D-GS-151
1B-GS-151
.75-GS-151
1A-GS-151
1E-CHT-151 (REF)
SCH.10 304 STAINLESS STEEL
STAINLESS STEEL
CARBON STEEL PIPE
GAS ANALYZER
NITROGEN
REACTOR MAKE-UP WATER
GAS STRIPPER FEED INLET
BORIC ACID EVAPORATOR
FEED DUMP TO HOLDING TANK
ECHOS GAS STRIPPER PREHEATER
SCH.10 GAS STRIPPER HOT WELL
PCH13B GAS STRIPPER BOTTOMS PUMP B
PCH13A GAS STRIPPER BOTTOMS PUMP A
1" SCH.10 304 STAINLESS STEEL
1" CARBON STEEL
STAINLESS STEEL-CARBON STEEL
FOR 3RD INTERVAL ISI USE ONLY REV. 1
SI APERTURE CARD
Also Available On Aperture Card
NOTES:
1. FOR GENERAL NOTES SEE DRAWING 33013-2241.
09:15-07/02/91
REVISED PER DCN 01-0201
CONSTRUCTION
LIMITED CONSTRUCTION AS NOTED
PRELIMINARY NOT FOR CONSTRUCTION
RELEASED FOR
SIMMS STA.
NONE
GAS STRIPPER SKID
P & ID SHEET 2 OF 2
EYN 3381E
33013-2275 SHEET 2
CONTROLLED COPY NO.
INFORMATION ONLY
9302020317-54

1.0 General

The following line list was developed utilizing ASME Section XI Rules and Criteria to identify all Class 1, 2 & 3 exempt and non-exempt items. This list further identifieS non-exempt piping lines and components, type of nondestructive examination requirements as well as providing a line description. Visual examination for leakage (VT-2) boundaries are not addressed in this Section, but shall be administratively confirmed by the responsible Rochester Gas & Electric organization before implementation.

The line list is grouped by Class, System, P&ID Drawing Number and Component Type. This information appears on each page of the Line List on the upper left hand corner. Thus, all Class 1 items will be listed first, followed by Class 2, Class 3 and finally by the Augmented High Energy (HE) items. Within the respective Class groupings, the Line List is also grouped by system, alphabetically. The applicable P&ID Number is then identified, followed by the generic component type of "piping" or "component".

On the individual pages, unique line numbers were identified that correspond to a description of a particular segment. Other relative information listed within each page of the line list includes ISI Figure Numbers, material type, pipe size, wall thickness, applicable code exemption basis, applicable NDE methods, applicable operating pressure and temperature, as well as component insulation information. The revision status of "R" shall indicate that a change has occurred anywhere horizontally for the line number in question. A Revision Status of "A" indicates a new entry was made.

A visual representation of the line number can be seen on the corresponding P&ID contained within Section 3.

Printed: 11/09/92

R. E. GINNA NUCLEAR POWER PLANT
Inservice Examination Boundary Line List
Third Inspection Interval

Class....: 1
System...: AUXILIARY COOLANT-CCW
P&ID No..: 33013-1246
Comp Type: COMPONENTS

RG&E Line No.	Gilbert Line No.	SWRI Line No.	ISI Fig.	Matrl.	Size (in.)	Thkns (in.)	Exemption Basis	NDE Method	Po	Temp	In?	Line description/remarks	Revision Status
PRC01A			A-7		0.00	0.000		SUR/VOL				THIS PUMP ACCOUNTED FOR ON 33013-1260.	A 11/91
PRC01B			A-7		0.00	0.000		SUR/VOL				THIS PUMP ACCOUNTED FOR ON 33013-1260.	A 11/91

Printed: 11/09/92

R. E. GINNA NUCLEAR POWER PLANT
Inservice Examination Boundary Line List
Third Inspection Interval

Class....: 1
System...: AUXILIARY COOLANT-RHR
P&ID No..: 33013-1247
Comp Type: PIPING

RG&E Line No.	Gilbert Line No.	SWRI Line No.	ISI Fig.	Matrl.	Size (in.)	Thkns (in.)	Exemption Basis	NDE Method	Po	Temp	In?	Line description/remarks	Revision Status
10A-RC0-2501-A	RHR-2500	10-AC-1004	A-15	A376	10.00	1.000		SUR/VOL			Y	THIS LINE ACCOUNTED FOR ON 33013-1260.	R 11/91
10A-RC0-2501-B	SI-200	10-AC-1001	A-14	A376	10.00	1.000		SUR/VOL			Y	THIS LINE ACCOUNTED FOR ON 33013-1260.	R 11/91
.75F-RC0-2501-B			A-14		0.75	0.000	IWB-1220(B)					10A-RC0-2501-B TO VALVE 2747.	A 11/91
.75G-RC0-2501-B			A-14		0.75	0.000	IWB-1220(B)					10A-RC0-2501-B TO VALVE 2746.	A 11/91
.75K-RC0-2501-A			A-15		0.75	0.000	IWB-1220(B)					10A-RC0-2501-A TO VALVE 2764.	A 11/91
.75L-RC0-2501-A			A-15		0.75	0.000	IWB-1220(B)					10A-RC0-2501-A TO VALVE 2765.	A 11/91

Printed: 11/09/92

R. E. GINNA NUCLEAR POWER PLANT
Inservice Examination Boundary Line List
Third Inspection Interval

Class....: 1
System...: CVCS-CHARGING
P&ID No..: 33013-1265
Comp Type: COMPONENTS

RG&E Line No.	Gilbert Line No.	SWRI Line No.	ISI Fig.	Matrl.	Size (in.)	Thkns (in.)	Exemption Basis	NDE Method	Po	Temp	In?	Line description/remarks	Revision Status
ECH02A			A-8		0.00	0.000		VOL	2300	525	-	REGENERATIVE HEAT EXCHANGER A.	A 11/91
ECH02B			A-8		0.00	0.000		VOL	2300	525	-	REGENERATIVE HEAT EXCHANGER B.	A 11/91
ECH02C			A-8		0.00	0.000		VOL	2300	525		REGENERATIVE HEAT EXCHANGER C.	A 11/91
PRC01A			A-7		0.00	0.000		SUR/VOL				THIS PUMP ACCOUNTED FOR ON 33013-1260.	A 11/91
PRC01B			A-7		0.00	0.000		SUR/VOL				THIS PUMP ACCOUNTED FOR ON 33013-1260.	A 11/91

Printed: 11/09/92

R. E. GINNA NUCLEAR POWER PLANT
Inservice Examination Boundary Line List
Third Inspection Interval

Class....: 1
System...: CVCS-CHARGING
P&ID No..: 33013-1265
Comp Type: PIPING

RG&E Line No.	Gilbert Line No.	SWRI Line No.	ISI Fig.	Matrl.	Size (in.)	Thkns (in.)	Exemption Basis	NDE Method	Po	Temp	In?	Line description/remarks	Revision Status
2-CHS-2501	RC-300;CVC-700	2-AS-1001	A-11	A376	2.00	0.344		SUR			Y	CVCS AUX SPRAY FROM 9313 TO PRZ SPRAY.	
2A-CHS-2501	CVC-700;-701	2-ACH-1002	A-27	A376	2.00	0.344		SUR			Y	CVCS ALT CHARGING FROM 9315 TO HOT LEG B	R 11/91
2B-CHS-2501			A-25	A376	2.00	0.344		SUR			Y	CVCS CHARGING FROM 9314 TO COLD LEG B.	R 11/91
2C-CHS-2501	CVC-400;-401	2-ACH-1001	A-26	A376	2.00	0.344		SUR			Y	CVCS ALT CHARG FROM 383A TO COLD LEG A.	R 11/91
2C-CHS-2502	CVC-400;-401	2-ACH-1001	A-26	A376	2.00	0.344		SUR			Y	CVCS ALT CHARG FROM 392B TO 383A.	A 11/91
2D-CHS-2501			A-29		2.00	0.000		SUR				VALVE 9314 THRU REGEN HE'S.	A 11/91
2E-CHS-2501			A-11		2.00	0.000		SUR				VALVE 9313 TO 2D-CHS-2501.	A 11/91
2F-CHS-2501			A-27		2.00	0.000		SUR				VALVE 9315 TO 2D-CHS-2501.	A 11/91
2G-CHS-2502			A-30		2.00	0.000		SUR				REGEN HE'S TO VALVE 370B.	A 11/91
.75A-CHS-2501			A-27		0.75	0.000	IWB-1220(B)					2A-CHS-2501 TO VALVE 9318.	A 11/91
.75B-CHS-2501			A-27		0.75	0.000	IWB-1220(B)					2F-CHS-2501 TO VALVE 2205.	A 11/91
.75C-CHS-2501			A-25		0.75	0.000	IWB-1220(B)					2B-CHS-2501 TO VALVE 9317.	A 11/91
.75D-CHS-2501			A-29		0.75	0.000	IWB-1220(B)					2D-CHS-2501 TO VALVE 2208.	A 11/91
.75E-CHS-2501			A-11		0.75	0.000	IWB-1220(B)					2-CHS-2501 TO VALVE 9316.	A 11/91
.75F-CHS-2501			A-11		0.75	0.000	IWB-1220(B)					2E-CHS-2501 TO VALVE 2206.	A 11/91
.75G-CHS-2501			A-11		0.75	0.000	IWB-1220(B)					2E-CHS-2501 TO VALVE 2207.	A 11/91
.75H-CHS-2501			A-29		0.75	0.000	IWB-1220(B)					2D-CHS-2501 TO VALVE 2209.	A 11/91
.75I-CHS-2501			A-29		0.75	0.000	IWB-1220(B)					2D-CHS-2501 TO VALVE 311F.	A 11/91
.75J-CHS-2502			A-30		0.75	0.000	IWB-1220(B)					2G-CHS-2502 TO VALVE 311E.	A 11/91
.75K-CHS-2502			A-30		0.75	0.000	IWB-1220(B)					2G-CHS-2502 TO VALVE 9308.	A 11/91

Printed: 11/09/92

R. E. GINNA NUCLEAR POWER PLANT
Inservice Examination Boundary Line List
Third Inspection Interval

Class....: 1
System...: CVCS-LETDOWN
P&ID No..: 33013-1264
Comp Type: COMPONENTS

RG&E Line No.	Gilbert Line No.	SWRI Line No.	ISI Fig.	Matrl.	Size (in.)	Thkns (in.)	Exemption Basis	NDE Method	Po	Temp	In?	Line description/remarks	Revision Status
ECH02A			A-8		0.00	0.000		VOL			-	THIS COMP ACCOUNTED FOR ON 33013-1265.	R 01/92
ECH02B			A-8		0.00	0.000		VOL			-	THIS COMP ACCOUNTED FOR ON 33013-1265.	R 01/92
ECH02C			A-8		0.00	0.000		VOL			-	THIS COMP ACCOUNTED FOR ON 33013-1265	R 01/92
ECH03			N/A		0.00	0.000	IWB-1220(B)					EXCESS LETDOWN HEAT EXCHANGER.	A 11/91

Printed: 11/09/92

R. E. GINNA NUCLEAR POWER PLANT
Inservice Examination Boundary Line List
Third Inspection Interval

Class....: 1
System...: CVCS-LETDOWN
P&ID No..: 33013-1264
Comp Type: PIPING

RG&E Line No.	Gilbert Line No.	SWRI Line No.	ISI Fig.	Matrl.	Size (in.)	Thkns (in.)	Exemption Basis	NDE Method	Po	Temp	In?	Line description/remarks	Revision Status
2A-CH4-2501	CVC-730	2-LD-1002	A-23	A376	2.00	0.344		SUR			Y	CVCS LETDOWN FROM 427 TO 2204,THRU RHE'S	R 11/91
2B-CH4-2501		2-LD-1003	A-24	A376	2.00	0.344		SUR			Y	RHE'S TO 200A, 200B, 202.	R 11/91
.75A-CH4-2501		N/A	N/A	A376	0.75	0.113	IWB-1220(B)				Y	VALVE 310 TO ELHE.	
.75B-CH4-2501		N/A	N/A	A376	0.75	0.113	IWB-1220(B)				Y	ELHE TO VALVE 123 & 311G.	R 11/91
.75C-CH4-2501			A-23		0.75	0.000	IWB-1220(B)					2A-CH4-2501 TO VALVE 311C.	A 11/91

Printed: 11/09/92

R. E. GINNA NUCLEAR POWER PLANT
Inservice Examination Boundary Line List
Third Inspection Interval

Class....: 1
System...: INCORE DETECTORS DRIVE UNITS
P&ID No..: 33013-2278
Comp Type: PIPING

RG&E Line No.	Gilbert Line No.	SWRI Line No.	ISI Fig.	Matrl.	Size (in.)	Thkns (in.)	Exemption Basis	NDE Method	Po	Temp	In?	Line description/remarks	Revision Status
1A-RC-2501-A			N/A		1.00	0.312	IWB-1220(B)					RX VESSEL TO SEAL TABLE AT G-11.	A 11/91
1A-RC-2501-B			N/A		1.00	0.312	IWB-1220(B)					RX VESSEL TO SEAL TABLE AT K-7.	A 11/91
1A-RC-2501-C			N/A		1.00	0.312	IWB-1220(B)					RX VESSEL TO SEAL TABLE AT D-7.	A 11/91
1A-RC-2501-D			N/A		1.00	0.312	IWB-1220(B)					RX VESSEL TO SEAL TABLE AT I-5.	A 11/91
1B-RC-2501-A			N/A		1.00	0.312	IWB-1220(B)					RX VESSEL TO SEAL TABLE AT C-3.	A 11/91
1B-RC-2501-B			N/A		1.00	0.312	IWB-1220(B)					RX VESSEL TO SEAL TABLE AT C-11.	A 11/91
1B-RC-2501-C			N/A		1.00	0.312	IWB-1220(B)					RX VESSEL TO SEAL TABLE AT G-13.	A 11/91
1B-RC-2501-D			N/A		1.00	0.312	IWB-1220(B)					RX VESSEL TO SEAL TABLE AT M-7.	A 11/91
1C-RC-2501-A			N/A		1.00	0.312	IWB-1220(B)					RX VESSEL TO SEAL TABLE AT H-3.	A 11/91
1C-RC-2501-B			N/A		1.00	0.312	IWB-1220(B)					RX VESSEL TO SEAL TABLE AT G-6.	A 11/91
1C-RC-2501-C			N/A		1.00	0.312	IWB-1220(B)					RX VESSEL TO SEAL TABLE AT I-7.	A 11/91
1C-RC-2501-D			N/A		1.00	0.312	IWB-1220(B)					RX VESSEL TO SEAL TABLE AT G-9.	A 11/91
1D-RC-2501-A			N/A		1.00	0.312	IWB-1220(B)					RX VESSEL TO SEAL TABLE AT K-4.	A 11/91
1D-RC-2501-B			N/A		1.00	0.312	IWB-1220(B)					RX VESSEL TO SEAL TABLE AT G-4.	A 11/91
1D-RC-2501-C			N/A		1.00	0.312	IWB-1220(B)					RX VESSEL TO SEAL TABLE AT E-2.	A 11/91
1D-RC-2501-D			N/A		1.00	0.312	IWB-1220(B)					RX VESSEL TO SEAL TABLE AT C-8.	A 11/91
1E-RC-2501-A			N/A		1.00	0.312	IWB-1220(B)					RX VESSEL TO SEAL TABLE AT F-8.	A 11/91
1E-RC-2501-B			N/A		1.00	0.312	IWB-1220(B)					RX VESSEL TO SEAL TABLE AT H-8.	A 11/91
1E-RC-2501-C			N/A		1.00	0.312	IWB-1220(B)					RX VESSEL TO SEAL TABLE AT E-10.	A 11/91
1E-RC-2501-D			N/A		1.00	0.312	IWB-1220(B)					RX VESSEL TO SEAL TABLE AT J-10.	A 11/91
1F-RC-2501-A			N/A		1.00	0.312	IWB-1220(B)					RX VESSEL TO SEAL TABLE AT C-9.	A 11/91
1F-RC-2501-B			N/A		1.00	0.312	IWB-1220(B)					RX VESSEL TO SEAL TABLE AT D-5.	A 11/91
1F-RC-2501-C			N/A		1.00	0.312	IWB-1220(B)					RX VESSEL TO SEAL TABLE AT L-4.	A 11/91
1F-RC-2501-D			N/A		1.00	0.312	IWB-1220(B)					RX VESSEL TO SEAL TABLE AT E-6.	A 11/91
1G-RC-2501-A			N/A		1.00	0.312	IWB-1220(B)					RX VESSEL TO SEAL TABLE AT J-8.	A 11/91
1G-RC-2501-B			N/A		1.00	0.312	IWB-1220(B)					RX VESSEL TO SEAL TABLE AT J-3.	A 11/91
1G-RC-2501-C			N/A		1.00	0.312	IWB-1220(B)					RX VESSEL TO SEAL TABLE AT L-9.	A 11/91
1G-RC-2501-D			N/A		1.00	0.312	IWB-1220(B)					RX VESSEL TO SEAL TABLE AT G-2.	A 11/91

Printed: 11/09/92

R. E. GINNA NUCLEAR POWER PLANT
Inservice Examination Boundary Line List
Third Inspection Interval

Class....: 1
System...: INCORE DETECTORS DRIVE UNITS
P&ID No..: 33013-2278
Comp Type: PIPING

RG&E Line No.	Gilbert Line No.	SWRI Line No.	ISI Fig.	Matrl.	Size (in.)	Thkns (in.)	Exemption Basis	NDE Method	Po	Temp	In?	Line description/remarks	Revision Status
1H-RC-2501-A			N/A		1.00	0.312	IWB-1220(B)					RX VESSEL TO SEAL TABLE AT A-8.	A 11/91
1H-RC-2501-B			N/A		1.00	0.312	IWB-1220(B)					RX VESSEL TO SEAL TABLE AT J-12.	A 11/91
1H-RC-2501-C			N/A		1.00	0.312	IWB-1220(B)					RX VESSEL TO SEAL TABLE AT H-10.	A 11/91
1H-RC-2501-D			N/A		1.00	0.312	IWB-1220(B)					RX VESSEL TO SEAL TABLE AT B-6.	A 11/91
1I-RC-2501-A			N/A		1.00	0.312	IWB-1220(B)					RX VESSEL TO SEAL TABLE AT I-11.	A 11/91
1I-RC-2501-B			N/A		1.00	0.312	IWB-1220(B)					RX VESSEL TO SEAL TABLE AT F-12.	A 11/91
1I-RC-2501-C			N/A		1.00	0.312	IWB-1220(B)					RX VESSEL TO SEAL TABLE AT F-5.	A 11/91
1J-RC-2501-B			N/A		1.00	0.312	IWB-1220(B)					RX VESSEL TO SEAL TABLE AT H-1.	A 11/91

Printed: 11/09/92

R. E. GINNA NUCLEAR POWER PLANT
Inservice Examination Boundary Line List
Third Inspection Interval

Class....: 1
System...: NUCLEAR SAMPLING
P&ID No..: 33013-1278
Comp Type: PIPING

RG&E Line No.	Gilbert Line No.	SWRI Line No.	ISI Fig.	Matrl.	Size (in.)	Thkns (in.)	Exemption Basis	NDE Method	Po	Temp	In?	Line description/remarks	Revision Status
.375J-SL-2505			N/A		0.37	0.000	IWB-1220(B)		2235	602		VALVE 952 TO VALVE 953.	A 11/91
.375K-SL-2505			N/A		0.37	0.000	IWB-1220(B)		2235	602		VALVE 950 TO VALVE 951.	A 11/91

Printed: 11/09/92

R. E. GINNA NUCLEAR POWER PLANT
Inservice Examination Boundary Line List
Third Inspection Interval

Class....: 1
System...: REACTOR COOLANT
P&ID No..: 33013-1260
Comp Type: COMPONENTS

RG&E Line No.	Gilbert Line No.	SWRI Line No.	ISI Fig.	Matrl.	Size (in.)	Thkns (in.)	Exemption Basis	NDE Method	Po	Temp	In?	Line description/remarks	Revision Status
EMS01A			A-5		0.00	0.000		SUR/VOL				STEAM GENERATOR A.	A 11/91
EMS01B			A-5		0.00	0.000		SUR/VOL				STEAM GENERATOR B.	A 11/91
PRC01A			A-7		0.00	0.000		SUR/VOL				REACTOR COOLANT PUMP A.	A 11/91
PRC01B			A-7		0.00	0.000		SUR/VOL				REACTOR COOLANT PUMP B.	A 11/91
RRC01			A-1		0.00	0.000		SUR/VOL				REACTOR VESSEL.	A 11/91

Printed: 11/09/92

R. E. GINNA NUCLEAR POWER PLANT
Inservice Examination Boundary Line List
Third Inspection Interval

Class....: 1
System...: REACTOR COOLANT
P&ID No..: 33013-1260
Comp Type: PIPING-LOOP A

RG&E Line No.	Gilbert Line No.	SWRI Line No.	ISI Fig.	Matrl.	Size (in.)	Thkns (in.)	Exemption Basis	NDE Method	Po	Temp	In?	Line description/remarks	Revision Status
31-RC-2501-A		LINE A	A-3	CCSS	31.00	2.500		SUR/VOL			Y	CROSS OVER FROM SG-A TO RCP A.	
29-RC-2501-A		LINE A	A-3	CCSS	29.00	2.500		SUR/VOL			Y	HOT LEG FROM RPV TO SG-A.	
27.5-RC-2501-A		LINE A	A-3	CCSS	27.50	2.400		SUR/VOL			Y	COLD LEG FROM RCP A TO RPV.	
10A-RC0-2501-A	RHR-2500	10-AC-1004	A-15	A376	10.00	1.000		SUR/VOL			Y	RH FROM HOT LEG A TO 701.	R 11/91
6A-RC0-2501-A	RHR-100	6-AC-1003	A-14	A376	6.00	0.718		SUR/VOL			Y	RHR FROM VALVE 852A TO 6X4 REDUCER.	R 11/91
4A-RC0-2501-A	RHR-100	4-AC-1003	A-14	A376	4.00	0.531		SUR/VOL			Y	RHR FROM 6X4 REDUCER TO RPV.	R 11/91
2B-RC0-2501-A		2-LD-1001	A-22	A376	2.00	0.000		SUR			Y	DRAIN FROM CROSS OVER LEG TO VALVE 541.	
.75A-RC0-2501-A		N/A	A-3B	A376	0.75	0.000	IWB-1220(B)				Y	CROSS OVER LEG A INSTRUMENTATION.	R 11/91
.75B-RC0-2501-A		N/A	A-3B	A376	0.75	0.000	IWB-1220(B)				Y	CROSS OVER LEG A INSTRUMENTATION.	R 11/91
.75C-RC0-2501-A		N/A	A-3B	A376	0.75	0.000	IWB-1220(B)				Y	CROSS OVER LEG A INSTRUMENTATION.	R 11/91
.75D-RC0-2501-A		N/A	A-3B	A376	0.75	0.000	IWB-1220(B)				Y	CROSS OVER LEG A INSTRUMENTATION.	R 11/91
.75E-RC0-2501-A		N/A	N/A	A376	0.75	0.000	IWB-1220(B)				Y	CROSS OVER LEG TO EXCESS LETDOWN.	R 11/91
.75F-RC0-2501-A		N/A	N/A	A376	0.75	0.000	IWB-1220(B)				Y	VALVE 523 TO 2B-RC0-2501-A.	R 11/91
.75G-RC0-2501		N/A	N/A	A376	0.75	0.000	IWB-1220(B)				Y	RPV TO LRC01&2, AND TUBING PAST 500A.	R 11/91
.75H-RC0-2501		N/A	N/A	A376	0.75	0.000	IWB-1220(B)				Y	RPV TO VALVE 597 & .5B-RC0-2501.	R 11/91
.75J-RC0-2501-A			A-15		0.75	0.113	IWB-1220(B)					A HOT LEG TO SAMPLING VALVE 998.	R 11/91
.75K-RC0-2501-A			A-14		0.75	0.000	IWB-1220(B)					DRAIN BETWEEN VLV 853A & 852A TO 852C.	A 01/92
.5B-RC0-2501			N/A		0.50	0.000	IWB-1220(B)					.75H-RC0-2501 TO A INCORE DETECTOR TUBE.	A 11/91

Printed: 11/09/92

R. E. GINNA NUCLEAR POWER PLANT
Inservice Examination Boundary Line List
Third Inspection Interval

Class....: 1
System...: REACTOR COOLANT
P&ID No..: 33013-1260
Comp Type: PIPING-LOOP B

RG&E Line No.	Gilbert Line No.	SWRI Line No.	ISI Fig.	Matrl.	Size (in.)	Thkns (in.)	Exemption Basis	NDE Method	Po	Temp	In?	Line description/remarks	Revision Status
31-RC-2501-B		LINE B	A-3B	CCSS	31.00	2.500		SUR/VOL			Y	CROSS OVER FROM SG B TO RCP B.	
29-RC-2501-B		LINE B	A-3B	CCSS	29.00	2.500		SUR/VOL			Y	HOT LEG FROM RPV TO SG B.	
27.5-RC-2501-B		LINE B	A-3B	CCSS	27.50	2.400		SUR/VOL			Y	COLD LEG FROM RCP B TO RPV.	
10A-RC0-2501-B	SI-200	10-AC-1001	A-14	A376	10.00	1.000		SUR/VOL			Y	SI FROM VALVE 720 TO COLD LEG B.	A 11/91
6A-RC0-2501-B	RHR-100	6-AC-1002	A-18	A376	6.00	0.718		SUR/VOL			Y	RHR FROM VALVE 852B TO 6X4 REDUCER.	R 11/91
4A-RC0-2501-B	RHR-100	4-AC-1002	A-18	A376	4.00	0.531		SUR/VOL			Y	RHR FROM 6X4 REDUCER TO RPV.	R 11/91
2A-RC0-2501-B		2-DR-1002	A-23A	A376	2.00	0.344		SUR			Y	LETDOWN FROM CROSSOVER LEG TO VALVE 427.	R 11/91
.75A-RC0-2501-B		N/A	A-3F	A376	0.75	0.113	IWB-1220(B)				Y	CROSS OVER LEG INSTRUMENTATION.	R 11/91
.75B-RC0-2501-B		N/A	A-3F	A376	0.75	0.113	IWB-1220(B)				Y	CROSS OVER LEG INSTRUMENTATION.	R 11/91
.75C-RC0-2501-B		N/A	A-3F	A376	0.75	0.113	IWB-1220(B)				Y	CROSS OVER LEG INSTRUMENTATION.	R 11/91
.75D-RC0-2501-B		N/A	A-3F	A376	0.75	0.113	IWB-1220(B)				Y	CROSS OVER LEG INSTRUMENTATION.	R 11/91
.75E-RC0-2501-B		N/A	A-3E	A376	0.75	0.113	IWB-1220(B)				Y	B HOT LEG TO SAMPLING VALVE 955.	R 11/91
.75F-RC0-2501-B			A-18		0.75	0.000	IWB-1220(B)					DRAIN BETWEEN VLV 853B & 852B TO 852D.	A 01/92

Printed: 11/09/92

R. E. GINNA NUCLEAR POWER PLANT
Inservice Examination Boundary Line List
Third Inspection Interval

Class....: 1
System...: REACTOR COOLANT-PRESSURIZER
P&ID No..: 33013-1258
Comp Type: COMPONENTS

RG&E Line No.	Gilbert Line No.	SWRI Line No.	ISI Fig.	Matrl.	Size (in.)	Thkns (in.)	Exemption Basis	NDE Method	Po	Temp	In?	Line description/remarks	Revision Status
TRC01			A-4		0.00	0.000		VOL				PRESSURIZER.	A 11/91

Printed: 11/09/92

R. E. GINNA NUCLEAR POWER PLANT
Inservice Examination Boundary Line List
Third Inspection Interval

Class....: 1
System...: REACTOR COOLANT-PRESSURIZER
P&ID No..: 33013-1258
Comp Type: PIPING

RG&E Line No.	Gilbert Line No.	SWRI Line No.	ISI Fig.	Matrl.	Size (in.)	Thkns (in.)	Exemption Basis	NDE Method	Po	Temp	In?	Line description/remarks	Revision Status
10-RC8-2501	RC-200	10 PRZ SURGE	A-3D	A376	10.00	1.000		SUR/VOL			Y	PRZ SURGE LINE TO B HOT LEG.	R 11/91
4A-RC8-2501-A		4-RC-273	A-13	A376	4.00	0.531		SUR/VOL			Y	PRZ RELIEF PRZ TO PCV 434.	
4A-RC8-2501-B		4-RC-273	A-13	A376	4.00	0.531		SUR/VOL			Y	PRZ RELIEF PRZ TO PCV 435.	
4C-RC8-2501		4-RC-1005	A-12	A376	4.00	0.531		SUR/VOL			Y	PRZ RELIEF PRZ TO RELIEF MANIFOLD.	
3A-RC8-2501		3-RC-1005	A-12	A376	3.00	0.438		SUR			Y	PRZ RELIEF MANIFOLD TO VALVES 515 & 431C	
3A-RC8-2501-A	RC-300	3-RC-1000	A-10	A376	3.00	0.438		SUR			Y	PRZ SPRAY FROM LOOP A TO 431A.	R 11/91
3A-RC8-2501-B	RC-300	3-RC-1001	A-10	A376	3.00	0.438		SUR			Y	PRZ SPRAY FROM LOOP B TO 431B.	R 11/91
3B-RC8-2501		3-RC-1006	A-12	A376	3.00	0.438		SUR			Y	PRZ RELIEF MANIFOLD TO VALVES 516 & 430.	
3C-RC8-2501	RC-300	3-RC-1000	A-9	A376	3.00	0.438		SUR			Y	PRZ SPRAY FROM 431A & B TO PRZ HEAD.	
.75A-RC8-2501		N/A	A-12	A376	0.75	0.219	IWB-1220(B)				Y	PRZ RELIEF TO VALVE 950, 535.	R 11/91
.75B-RC8-2501		N/A	A-3D	A376	0.75	0.219	IWB-1220(B)				Y	SURGE SAMPLE TO VALVE 952.	R 11/91
.25A-RC8-2501-A		N/A	A-9	A376	0.25	0.000	IWB-1220(B)				Y	PRZ SPRAY BY-PASS AT 518.	R 11/91
.25A-RC8-2501-B		N/A	A-9	A376	0.25	0.000	IWB-1220(B)				Y	PRZ SPRAY BY-PASS AT 517.	R 11/91

Printed: 11/09/92

R. E. GINNA NUCLEAR POWER PLANT
Inservice Examination Boundary Line List
Third Inspection Interval

Class....: 1
System...: SAFETY INJECTION
P&ID No..: 33013-1262
Comp Type: PIPING

RG&E Line No.	Gilbert Line No.	SWRI Line No.	ISI Fig.	Matrl.	Size (in.)	Thkns (in.)	Exemption Basis	NDE Method	Po	Temp	In?	Line description/remarks	Revision Status
10A-SI2-2501-A	SI-200	10-SI-1004	A-16	A376	10.00	1.000		SUR/VOL			Y	CHECK VALVE 842A TO COLD LEG B.	R 11/91
10A-SI2-2501-B	SI-100	10-SI-1005	A-17	A376	10.00	1.000		SUR/VOL			Y	CHECK VALVE 842B TO COLD LEG A.	R 11/91
2A-SI2-2501	SI-110	2-SI-1001	A-19	A376	2.00	0.344		SUR			Y	878J TO 10" SI ACCUM B DUMP.	R 11/91
2B-SI2-2501	SI-210	2-SI-1002	A-21	A376	2.00	0.344		SUR			Y	SI PUMP A, VALVE 878F TO HOT LEG B.	R 11/91
2C-SI2-2501	SI-110,-111	2-SI-1001	A-20	A376	2.00	0.344		SUR			Y	SI PUMP B, VALVE 878H TO HOT LEG A.	R 11/91
2D-SI2-2501	SI-210	2-SI-1002	A-16	A376	2.00	0.344		SUR			Y	878G TO 10" SI ACCUM A DUMP.	R 11/91
.75A-SI2-2501-A		N/A	A-16	A376	0.75	0.113	IWB-1220(B)				Y	ACCUM A TO VALVE 839B.	R 11/91
.75A-SI2-2501-B		N/A	A-17	A376	0.75	0.113	IWB-1220(B)				Y	ACCUM B TO VALVE 840B.	R 11/91
.75B-SI2-2501			A-16		0.75	0.000	IWB-1220(B)					10A-SI2-2501-A TO VALVE 2843.	A 11/91
.75C-SI2-2501			A-16		0.75	0.000	IWB-1220(B)					10A-SI2-2501-A TO VALVE 2844.	A 11/91
.75D-SI2-2501			A-17		0.75	0.000	IWB-1220(B)					2A-SI2-2501 TO VALVE 2834.	A 11/91
.75E-SI2-2501			A-17		0.75	0.000	IWB-1220(B)					10A-SI2-2501-B TO VALVE 2835.	A 11/91

Printed: 11/09/92

R. E. GINNA NUCLEAR POWER PLANT
Inservice Examination Boundary Line List
Third Inspection Interval

Class....: 2
System...: AUXILIARY COOLANT-CCW
P&ID No..: 33013-1245
Comp Type: COMPONENTS

RG&E Line No.	Gilbert Line No.	SWRI Line No.	ISI Fig.	Matrl.	Size (in.)	Thkns (in.)	Exemption Basis	NDE Method	Po	Temp	In?	Line description/remarks	Revision Status
PAC01A	1247		B-28		0.00	0.000		VT-3	410	350	-	THIS COMP ACCOUNTED FOR ON 33013-1247.	A 11/91
PAC01B	1247		B-28		0.00	0.000		VT-3	410	350	-	THIS PUMP ACCOUNTED FOR ON 33013-1247.	A 11/91

Printed: 11/09/92

R. E. GINNA NUCLEAR POWER PLANT
Inservice Examination Boundary Line List
Third Inspection Interval

Class....: 2
System...: AUXILIARY COOLANT-CCW
P&ID No..: 33013-1246
Comp Type: COMPONENTS

RG&E Line No.	Gilbert Line No.	SWRI Line No.	ISI Fig.	Matrl.	Size (in.)	Thkns (in.)	Exemption Basis	NDE Method	Po	Temp	In?	Line description/remarks	Revision Status
EAC08A			N/A		0.00	0.000	IWC-1221(B)					SAFETY INJECTION PUMP A COOLER A.	A 11/91
EAC08B			N/A		0.00	0.000	IWC-1221(B)					SAFETY INJECTION PUMP A COOLER B.	A 11/91
EAC09A			N/A		0.00	0.000	IWC-1221(B)					SAFETY INJECTION PUMP B COOLER A.	A 11/91
EAC09B			N/A		0.00	0.000	IWC-1221(B)					SAFETY INJECTION PUMP B COOLER B.	A 11/91
EAC10A			N/A		0.00	0.000	IWC-1221(B)					SAFETY INJECTION PUMP C COOLER A.	A 11/91
EAC10B			N/A		0.00	0.000	IWC-1221(B)					SAFETY INJECTION PUMP C COOLER B.	A 11/91
EAC11A			N/A		0.00	0.000	IWC-1221(A)					CONTAINMENT SPRAY PUMP A COOLER.	A 11/91
EAC11B			N/A		0.00	0.000	IWC-1221(A)					CONTAINMENT SPRAY PUMP B COOLER.	A 11/91
PSI01A			N/A		0.00	0.000	NO IWA	VT	1550	200	-	THIS PUMP ACCOUNTED FOR ON 33013-1262.	R 01/92
PSI01B			N/A		0.00	0.000	NO IWA	VT	1550	200	-	THIS PUMP ACCOUNTED FOR ON 33013-1262.	R 01/92
PSI01C			N/A		0.00	0.000	NO IWA	VT	1550	200	-	THIS PUMP ACCOUNTED FOR ON 33013-1262.	R 01/92
PSI02A			N/A		0.00	0.000	NO IWA	VT	205	70	-	THIS PUMP ACCOUNTED FOR ON 33013-1261.	R 01/92
PSI02B			N/A		0.00	0.000	NO IWA	VT	205	70	-	THIS PUMP ACCOUNTED FOR ON 33013-1261.	R 01/92

Printed: 11/09/92

R. E. GINNA NUCLEAR POWER PLANT
Inservice Examination Boundary Line List
Third Inspection Interval

Class....: 2
System...: AUXILIARY COOLANT-CCW
P&ID No..: 33013-1246
Comp Type: PIPING

RG&E Line No.	Gilbert Line No.	SWRI Line No.	ISI Fig.	Matrl.	Size (in.)	Thkns (in.)	Exemption Basis	NDE Method	Po	Temp	In?	Line description/remarks	Revision Status
6A-AC-152	CC-200		C-5	A53	6.00	0.280	IWC-1222(C)		90	70	N	VALVE 813 TO PEN 131.	
6B-AC-152	CC-220		C-5	A53	6.00	0.280	IWC-1222(C)		90	70	N	PEN 130 TO VALVE 814.	
4A-AC-152	CC-450		B-29	A53	4.00	0.237	IWC-1222(A)		90	70	N	VALVE 750B IN CONT TO RDCR PEN 128.	
4B-AC-152	CC-625		B-30	A53	4.00	0.237	IWC-1222(A)		90	70	N	VALVE 750A TO RDCR BEFORE PEN 127 IN CON	
3A-AC-152	CC-220		N/A	A58	3.00	0.216	IWC-1222(A)		90	70	N	PEN 125 TO VALVE 759B.	
3B-AC-152	CC-220		N/A	A58	3.00	0.216	IWC-1222(A)		90	70	N	PEN 126 TO VALVE 759A.	
3C-AC-152	CC-330 & CC-450		B-29	A53	3.00	0.216	IWC-1222(A)		90	70	N	RDCR BEFORE PEN 128 IN CONT TO VAL 749B.	
3D-AC-152	CC-625 & CC-330		B-30	A53	3.00	0.216	IWC-1222(A)		90	70	N	RDCR BEFORE PEN 127 IN CONT TO VAL 749A.	
2A-AC-152			N/A	A53	2.00	0.154	IWC-1222(A)		90	70	N	PEN 124 TO VALVE 743.	R 11/91
2B-AC-152	CC-220		N/A	A53	2.00	0.154	IWC-1222(A)		90	70	N	PEN 124 TO VALVE 745.	
.75A-AC-152	CC-300		B-29	A53	0.75	0.113	IWC-1222(A)		90	70	N	3C-AC-152 TO PIPE CAP. (VALVE 2741).	
.75B-AC-152	CC-300		B-30	A53	0.75	0.113	IWC-1222(A)		90	70	N	3D-AC-152 TO PIPE CAP. (VALVE 2761).	R 11/91
.75C-AC-152	CC-200		C-5	A53	0.75	0.113	IWC-1222(A)		90	70	N	6A-AC-152 TO PIPE CAP. (VALVE 2724).	R 11/91
.75D-AC-152	CC-220		C-5	A53	0.75	0.113	IWC-1222(A)		90	70	N	6B-AC-152 TO PIPE CAP. (VALVE 2726).	R 11/91
.5A-SI			N/A		0.50	0.000	IWC-1222(A)					CS PUMP A THRU CS PUMP COOLER A & BACK.	A 11/91
.5B-SI			N/A		0.50	0.000	IWC-1222(A)					CS PUMP B THRU CS PUMP COOLER B & BACK.	A 11/91
.5C-SI			N/A		0.50	0.000	IWC-1222(A)					SI PUMP A THRU SI COOLERS EAC08A & B.	A 11/91
.5D-SI			N/A		0.50	0.000	IWC-1222(A)					SI PUMP B THRU SI COOLERS EAC09A & B.	A 11/91
.5E-SI			N/A		0.50	0.000	IWC-1222(A)					SI PUMP C THRU SI COOLERS EAC10A & B.	A 11/91

Printed: 11/09/92

R. E. GINNA NUCLEAR POWER PLANT
Inservice Examination Boundary Line List
Third Inspection Interval

Class....: 2
System...: AUXILIARY COOLANT-RHR
P&ID No..: 33013-1247
Comp Type: COMPONENTS

RG&E Line No.	Gilbert Line No.	SWRI Line No.	ISI Fig.	Matrl.	Size (in.)	Thkns (in.)	Exemption Basis	NDE Method	Po	Temp	In?	Line description/remarks	Revision Status
CONTAIN SUMP B	RHR-300		N/A		0.00	0.000	IWC-1221(F)		ATM.	<200	-	CONCRETE SUMP EXEMPT FROM EXAMINATION.	R 11/91
EAC02A			B-109		0.00	0.000		VOL	410	350	-	RESIDUAL HEAT REMOVAL HEAT EXCHGR A.	R 11/91
EAC02B			B-109		0.00	0.000		VOL	410	350	-	RESIDUAL HEAT REMOVAL HEAT EXCHGR B.	R 11/91
EAC06A			N/A		0.00	0.000	IWC-1221(A)					RHR PUMP COOLER A.	A 11/91
EAC06B			N/A		0.00	0.000	IWC-1221(A)					RHR PUMP COOLER B.	A 11/91
PAC01A			B-28		0.00	0.000		VT-3	410	350	-	RHR PUMP A, MFG=PACIFIC.	R 11/91
PAC01B			B-28		0.00	0.000		VT-3	410	350	-	RHR PUMP B, MFG=PACIFIC.	R 11/91

Printed: 11/09/92

R. E. GINNA NUCLEAR POWER PLANT
Inservice Examination Boundary Line List
Third Inspection Interval

Class....: 2
System...: AUXILIARY COOLANT-RHR
P&ID No..: 33013-1247
Comp Type: PIPING

RG&E Line No.	Gilbert Line No.	SWRI Line No.	ISI Fig.	Matrl.	Size (in.)	Thkns (in.)	Exemption Basis	NDE Method	Po	Temp	In?	Line description/remarks	Revision Status
10-AC-601	RHR-100	10-RH-2013	B-17	A312	10.00	0.365		SUR/VOL	350	350	Y	V 720 TO REDUCER 10X6 BEFORE VALVE 717.	R 11/91
10A-AC-601	RHR-300	10-RH-2001	B-22	A312	10.00	0.365		SUR/VOL	410	350	Y	VALVE 701 THRU PEN P140 TO 1ST TEE.	R 11/91
10B-AC-601	RHR-300	10-RH-2001	B-20	A312	10.00	0.365		SUR/VOL	410	350	Y	10" TEE FROM 10A-AC-601 TO VALVE 856.	R 11/91
10C-AC-601	RHR-300	10-RH-2004	B-20A	A312	10.00	0.365		SUR/VOL	350	350	Y	TEE ON 10D-AC-601 TO RHR PUMP A.	R 11/91
10D-AC-601	RHR-300	10-RH-2004	B-20	A312	10.00	0.365		SUR/VOL	350	350	Y	TEE ON 10A-AC-601 TO RHR PUMP B.	R 11/91
10E-AC-601	RHR-300	10-RH-2003	B-20	A312	10.00	0.365		SUR/VOL	350	350	Y	TEE ON 10D-AC-601 TO VALVE 850B.	
10EE-AC-151	RHR-300	10-RH-2003	B-20	A312	10.00	0.365	IWC-1221(F)		350	350	Y	VALVE 850B TO 1ST REDUCING ELBOW.	R 11/91
10G-AC-601	RHR-300	10-SI-2010	B-20A	A312	10.00	0.365		SUR/VOL	350	350	Y	VALVE 850A PAST TEE TO 10C-AC-601.	R 11/91
10GG-AC-151	RHR-300	10-SI-2010	B-20A	A312	10.00	0.365	IWC-1221(F)		350	350	Y	VALVE 850A TO 1ST REDUCING ELBOW.	R 11/91
10H-AC-601	RHR-350,RHR-400	10-RH-2007	B-24	A312	10.00	0.365		SUR/VOL	410	350	N	CONT. OF 8B-AC-601 RED ELBOW TO TEE.	
8-AC-601	RHR-400	8-RH-2010	B-26	A312	8.00	0.322		SUR/VOL	350	350	Y	10-AC-601 TEE-RED TO TEE PAST HVC-624.	
8A-AC-601	RHR-400	8-RH-2010	B-26	A312	8.00	0.322		SUR/VOL	350	350	Y	10X8 REDUCER TO RESIDUAL HEAT EXCH A.	
8B-AC-601	RHR-350		B-23	A312	8.00	0.322		SUR/VOL	410	350	N	DISCHG RHR PMP A TO 1ST REDUCING ELBOW.	
8C-AC-601	RHR-350	8-RH-2008	B-23	A312	8.00	0.322		SUR/VOL	410	350	N	10" TEE ON 10H-AC-601 TO RH EX B.	
8D-AC-601	RHR-350	8-RH-2008	B-23	A312	8.00	0.322		SUR/VOL	410	350	N	DISCHG RHR PMP B TO 1ST TEE AFTER V 710B	
8E-AC-601	RHR-400	8-RH-2017	B-24	A312	8.00	0.322		SUR/VOL	410	350	Y	REDUCER BEFORE VALVE 714 TO RH HT EX A.	
8F-AC-151	RHR-300	8-SI-2012	B-20A	A312	8.00	0.500	IWC-1221(F)		350	350	Y	VALVE 851A TO RED ELBOW BY VALVE 850A.	R 11/91
8FF-AC-151	RHR-300	8-SI-2009	B-20	A312	8.00	0.500	IWC-1221(F)		350	350	Y	VALVE 851B TO RED ELBOW BY VALVE 850B.	R 11/91
8K-SI-151	SI-151		B-19	A312	8.00	0.148		SUR/VOL			Y	8X6 REDUCER ON 6C-AC-601 TO 10X8 REDUCER	
8X-AC-601	RHR-400	8-RH-2018	B-26	A312	8.00	0.322		SUR/VOL	410	350	-	RES HEAT EX B TO 8X8X6 REDUCER TEE.	
6-AC-601	RHR-100	6-RH-2015	B-17	A312	6.00	0.280		SUR/VOL	350	350	Y	VALVE 852A TO 10-AC-601 IN CONT.	
6A-AC-601	RHR-100	6-RH-2016	B-18	A312	6.00	0.280		SUR/VOL	350	350	Y	VALVE 852B TO 10-AC-601 IN CONT.	
6B-AC-601	RHR-400	6-RH-2012	B-25	A312	6.00	0.280		SUR/VOL	350	350	Y	10-AC-601 TO 10H-AC-601.	R 11/91
6C-AC-151			B-19		6.00	0.000		SUR/VOL				VALVE 857C TO 6X8 REDUCER.	A 11/91
6C-AC-601	RHR-400,RHR-450	6-RH-2014	B-27	A304	6.00	0.280		SUR/VOL	410	350	Y	8A-AC-601 TO VALVE 857C.	R 11/91
6D-AC-151			B-19		6.00	0.000		SUR/VOL				VALVE 857B TO 6X8 TEE.	A 11/91
6D-AC-601	RHR-450	6-RH-2011	B-26	A312	6.00	0.280		SUR/VOL	410	350	Y	8X-AC-601 TO VALVE 857B.	R 11/91
6E-AC-151	RHR-300	6-SI-2011	B-21	A312	6.00	0.134	IWC-1221(F)		350	350	N	10" TEE ON 10EE-AC-601 TO VALVE 1813B.	R 11/91

Printed: 11/09/92

R. E. GINNA NUCLEAR POWER PLANT
Inservice Examination Boundary Line List
Third Inspection Interval

Class....: 2
System...: AUXILIARY COOLANT-RHR
P&ID No..: 33013-1247
Comp Type: PIPING

RG&E Line No.	Gilbert Line No.	SWRI Line No.	ISI Fig.	Matrl.	Size (in.)	Thkns (in.)	Exemption Basis	NDE Method	Po	Temp	In?	Line description/remarks	Revision Status
6K-AC-151	RHR-300	6-SI-2014	B-21	A312	6.00	0.134	IWC-1221(F)		350	350	N	10" TEE BETWEEN V 850A & PEN 141.	R 11/91
4A-AC-601			B-20		4.00	0.000	IWC-1221(A)					10B-AC-601 TO 4X3 RDCR ON 3A-AC-601.	A 11/91
4C-SI-601			B-16B		4.00	0.000	IWC-1221(A)		410	350	-	6C-AC-601 TO VALVE 1816B.	R 01/92
3A-AC-601			B-26		3.00	0.000	IWC-1221(A)					8X-AC-601 TO 4X3 RDCR ON 4A-AC-601.	A 11/91
3B-AC-601			B-27		3.00	0.000	IWC-1221(A)					6C-AC-601 TO 4A-AC-601.	A 11/91
2-AC-601			B-20A	A312	2.00	0.109	IWC-1221(A)		410	350	-	10A-AC-601 TO VALVE 252.	R 11/91
2A-AC-601	RHR-300,RHR-400		B-25	A312	2.00	0.154	IWC-1221(A)		350	350	3	10-AC-601 TO 10B-AC-601.	
2B-AC-601	RHR-350		B-24	A312	2.00	0.154	IWC-1221(A)		410	350	N	8C-AC-601 TO VALVE 1812A.	
2C-AC-601	RHR-400		B-24	A312	2.00	0.154	IWC-1221(A)		410	350	N	8E-AC-601 TO VALVE 1812B.	
2F-AC-601	CVC-100		B-17	A312	2.00	0.154	IWC-1221(A)		350	350	Y	10-AC-601 TO VALVE 702, 2F-CH-601.	R 11/91
RHEA-2A-AC-601			B-109	A312	2.00	0.154	IWC-1221(A)		410	350	-	RESIDUAL HEAT EXCH. A TO VALVE 807C.	R 11/91
RHEA-2B-AC-601			B-109	A312	2.00	0.154	IWC-1221(A)		410	350	-	RESIDUAL HEAT EXCH. A TO VALVE 807D.	R 11/91
RHEA-2C-AC-601			B-109	A312	2.00	0.154	IWC-1221(A)		410	350	-	RESIDUAL HEAT EXCH. A TO VALVE 807E.	R 11/91
RHEB-2A-AC-601			B-109	A312	2.00	0.154	IWC-1221(A)		410	350	-	RESIDUAL HEAT EXCH. B TO VALVE 807B.	R 11/91
RHEB-2B-AC-601			B-109	A312	2.00	0.154	IWC-1221(A)		410	350	-	RESIDUAL HEAT EXCH. B TO VALVE 807F.	R 11/91
RHEB-2C-AC-601			B-109	A312	2.00	0.154	IWC-1221(A)		410	350	-	RESIDUAL HEAT EXCH. B TO VALVE 807G.	R 11/91
1.25A-AC-601			B-24		1.25	0.000	IWC-1221(A)					10H-AC-601 TO CAP.	A 11/91
.75-AC-601	RHR-400		B-25	A312	0.75	0.113	IWC-1221(A)		350	350	Y	VALVE 2780 TO 10-AC-601.	
.75A-AC-601			N/A	A312	0.75	0.133	IWC-1221(A)		350	350	Y	2A-AC-601 TO VALVE 719A.	R 11/91
.75B-AC-601			N/A	A312	0.75	0.133	IWC-1221(A)		350	350	Y	2A-AC-601 TO VALVE 719B.	R 11/91
.75BA-AC-601	RHR-100	10-RH-2013	B-17	A312	0.75	0.133	IWC-1221(A)		350	350	Y	10-AC-601 TO CAP.	
.75BB-AC-601	RHR-100	6-RH-2015	B-17	A312	0.75	0.133	IWC-1221(A)		350	350	Y	6-AC-601 TO VALVE 2848.	R 11/91
.75BC-AC-601	RHR-100	6-RH-2015	B-17	A312	0.75	0.133	IWC-1221(A)		350	350	Y	6-AC-601 TO VALVE 2847.	R 11/91
.75BD-AC-601	RHR-100	6-RH-2016	B-18	A312	0.75	0.133	IWC-1221(A)		350	350	Y	6A-AC-601 TO VALVE 2840.	R 11/91
.75BE-AC-601	RHR-100	6-RH-2016	B-18	A312	0.75	0.133	IWC-1221(A)		350	350	Y	6A-AC-601 TO VALVE 2853.	R 11/91
.75BF-AC-601	RHR-400		N/A	A312	0.75	0.133	IWC-1221(A)		350	350	Y	2C-AC-601 TO VALVE 2785.	R 11/91
.75BG-AC-601	RHR-400		B-24	A312	0.75	0.133	IWC-1221(A)		350	350	Y	10H-AC-601 TO VALVE 807A.	R 11/91
.75BH-AC-601	RHR-350		N/A	A312	0.75	0.133	IWC-1221(A)		410	350	Y	2B-AC-601 TO VALVE 2784.	R 11/91

Printed: 11/09/92

R. E. GINNA NUCLEAR POWER PLANT
Inservice Examination Boundary Line List
Third Inspection Interval

Class....: 2
System...: AUXILIARY COOLANT-RHR
P&ID No..: 33013-1247
Comp Type: PIPING

RG&E Line No.	Gilbert Line No.	SWRI Line No.	ISI Fig.	Matrl.	Size (in.)	Thkns (in.)	Exemption Basis	NDE Method	Po	Temp	In?	Line description/remarks	Revision Status
.75BI-AC-601	RHR-350	8-RH-2008	B-24	A312	0.75	0.133	IWC-1221(A)		350	350	Y	8C-AC-601 TO VALVE 2782.	R 11/91
.75C-AC-601	RHR-400		B-25	A312	0.75	0.133	IWC-1221(A)		350	350	Y	VALVE 2779 TO 10-AC-601.	
.75D-AC-601	RHR-400		B-25	A312	0.75	0.133	IWC-1221(A)		350	350	Y	VALVE 958 TO 10-AC-601.	
.75E-AC-601	RHR-400		B-25	A312	0.75	0.133	IWC-1221(A)		350	350	Y	VALVE 718B TO 10-AC-601.	
.75F-AC-601	RHR-400		B-25	A312	0.75	0.133	IWC-1221(A)		350	350	Y	VALVE 718A TO 10-AC-601.	
.75G-AC-601	RHR-450		B-26	A312	0.75	0.133	IWC-1221(A)		410	350	N	6D-AC-601 TO 2789.	R 11/91
.75H-AC-601	RHR-450		B-26	A312	0.75	0.133	IWC-1221(A)		410	350	Y	VALVE 1829A TO 6D-AC-601.	R 11/91
.75I-AC-601	RHR-450		B-26	A312	0.75	0.133	IWC-1221(A)		410	350	Y	VALVE 1829B TO 6D-AC-601.	R 11/91
.75J-AC-601	RHR-450		B-27	A312	0.75	0.113	IWC-1221(A)		410	350	N	VALVE 2788 TO 6C-AC-601.	R 11/91
.75JA-AC-601	RHR-300		B-20	A312	0.75	0.133	IWC-1221(A)		410	350	N	DRAIN FROM VALVE 850B,10D TO VALVE 711E.	R 11/91
.75K-AC-601	RHR-450		B-27	A312	0.75	0.113	IWC-1221(A)		410	350	N	VALVE 1829C TO 6C-AC-601.	R 11/91
.75KA-AC-601	RHR-300		B-20A	A312	0.75	0.133	IWC-1221(A)		410	350	N	10C-AC-601 TO VALVE 711D.	R 11/91
.75L-AC-601	RHR-450		B-27	A312	0.75	0.113	IWC-1221(A)		410	350	N	VALVE 1829D TO 6C-AC-601.	R 11/91
.75LA-AC-601	RHR-300		B-20A	A312	0.75	0.133	IWC-1221(A)		410	350	N	DRAIN FROM VALVE 850A TO .75KA-AC-601.	R 11/91
.75LB-AC-601	RHR-300		B-28	A312	0.75	0.133	IWC-1221(A)		410	350	N	RHR PUMP A TO VALVE 706C.	R 11/19
.75M-AC-601	RHR-300		B-28	A312	0.75	0.133	IWC-1221(A)		350	350	Y	DRAIN FM RHR PUMP A TO VALVE 705A.	
.75N-AC-601	RHR-350		B-23	A312	0.75	0.113	IWC-1221(A)		410	350	N	8B-AC-601 TO VALVE 711C.	
.75O-AC-601	RHR-350		B-23	A312	0.75	0.113	IWC-1221(A)		410	350	N	8D-AC-601 TO VALVE 711B.	
.75P-AC-601	RHR-350		B-28	A312	0.75	0.113	IWC-1221(A)		410	350	N	RHR PUMP B DRAIN TO VALVE 705B.	
.75Q-AC-601	RHR-350		B-28	A312	0.75	0.113	IWC-1221(A)		350	350	N	RHR PUMP B TO VALVE 706B.	
.75R-AC-601	RHR-2500		B-22	A312	0.75	0.113	IWC-1221(A)		410	350	-	10A-AC-601 TO VALVE 2763.	R 11/91
.75S-AC-601	RHR-2500		B-22	A312	0.75	0.113	IWC-1221(A)		410	350	-	10A-AC-601 TO VALVE 2786.	R 11/91
.75T-AC-601	RHR-400		B-24	A312	0.75	0.113	IWC-1221(A)		410	350	-	10H-AC-601 TO VALVE 711A.	
.75U-AC-601	RHR-400		B-24	A312	0.75	0.113	IWC-1221(A)		410	350	-	10H-AC-601 TO VALVE 2781.	R 11/91
.75V-AC-601	RHR-400	8-RH-2010	B-25	A312	0.75	0.133	IWC-1221(A)		410	350	Y	8-AC-601 TO VALVE 2778.	R 11/91
.75W-AC-601			N/A		0.75	0.000	IWC-1221(A)					3A-AC-601 TO VALVE 688B.	A 11/91
.75WA-AC-601			N/A		0.75	0.000	IWC-1221(A)					3A-AC-601 TO VALVE 687B.	A 11/91
.75WB-AC-601			N/A		0.75	0.000	IWC-1221(A)					3A-AC-601 TO VALVE 686B.	A 11/91

Printed: 11/09/92

R. E. GINNA NUCLEAR POWER PLANT
Inservice Examination Boundary Line List
Third Inspection Interval

Class....: 2
System...: AUXILIARY COOLANT-RHR
P&ID No..: 33013-1247
Comp Type: PIPING

RG&E Line No.	Gilbert Line No.	SWRI Line No.	ISI Fig.	Matrl.	Size (in.)	Thkns (in.)	Exemption Basis	NDE Method	Po	Temp	In?	Line description/remarks	Revision Status
.75X-AC-601			N/A		0.75	0.000	IWC-1221(A)					3B-AC-601 TO VALVE 686A.	A 11/91
.75XA-AC-601			N/A		0.75	0.000	IWC-1221(A)					3B-AC-601 TO VALVE 687A.	A 11/91
.75XB-AC-601			N/A		0.75	0.000	IWC-1221(A)					3B-AC-601 TO VALVE 688A.	A 11/91
.75Y-AC-601			B-24		0.75	0.000	IWC-1221(A)					8C-AC-601 TO VALVE 691A.	A 11/91
.75YA-AC-601			B-21		0.75	0.000	IWC-1221(A)					6E-AC-601 TO VALVE 1813F.	A 11/91
.75YB-AC-601			B-21		0.75	0.000	IWC-1221(A)					6K-AC-601 TO VALVE 1813D.	A 11/91
.75YC-AC-601			B-24		0.75	0.000	IWC-1221(A)					10H-AC-601 TO CAP.	A 11/91
.5A-AC-601			N/A		0.50	0.000	IWC-1221(A)					3A-AC-601 TO VALVE 693A.	A 11/91
.5B-AC-601			N/A		0.50	0.000	IWC-1221(A)					3A-AC-601 TO VALVE 693B.	A 11/91
.5C-AC-601			N/A		0.50	0.000	IWC-1221(A)					3B-AC-601 TO VALVE 692B.	A 11/91
.5D-AC-601			N/A		0.50	0.000	IWC-1221(A)					3B-AC-601 TO VALVE 692A.	A 11/91
.5E-AC-601			B-24		0.50	0.000	IWC-1221(A)					8C-AC-601 TO VALVES 716A & 716C.	A 11/91
.5F-AC-601			B-28		0.50	0.000	IWC-1221(A)					B RHR PUMP CASING TO B COOLER.	A 11/91
.5G-AC-601			B-28		0.50	0.000	IWC-1221(A)					B RHR PUMP CASING TO B COOLER.	A 11/91
.5H-AC-601			B-28		0.50	0.000	IWC-1221(A)					A RHR PUMP CASING TO A COOLER.	A 11/91
.5I-AC-601			B-28		0.50	0.000	IWC-1221(A)					A RHR PUMP CASING TO A COOLER.	A 11/91
.5J-AC-601			B-24		0.50	0.000	IWC-1221(A)					10H-AC-601 TO VALVES 714A & 714C.	A 11/91

Printed: 11/09/92

R. E. GINNA NUCLEAR POWER PLANT
Inservice Examination Boundary Line List
Third Inspection Interval

Class....: 2
System...: AUXILIARY COOLING-SPENT FUEL
P&ID No..: 33013-1248
Comp Type: PIPING

RG&E Line No.	Gilbert Line No.	SWRI Line No.	ISI Fig.	Matrl.	Size (in.)	Thkns (in.)	Exemption Basis	NDE Method	Po	Temp	In?	Line description/remarks	Revision Status
2I-CH-601	CVC-900		B-35	A312	2.00	0.154	IWC-1222(A)		250	350	Y	THIS LINE ACCOUNTED FOR ON 33013-1264.	
2J-CH-601	CVC-900		B-35	A312	2.00	0.154	IWC-1222(A)		250	350	Y	THIS LINE ACCOUNTED FOR ON 33013-1264.	

Printed: 11/09/92

R. E. GINNA NUCLEAR POWER PLANT
Inservice Examinstion Boundary Line List
Third Inspection Interval

Class....: 2
System...: AUXILIARY FEEDWATER
P&ID No..: 33013-1237
Comp Type: PIPING

RG&E Line No.	Gilbert Line No.	SWRI Line No.	ISI Fig.	Matrl.	Size (in.)	Thkns (in.)	Exemption Basis	NDE Method	Po	Temp	In?	Line description/remarks	Revision Status
3A-FW-900-1A	AFW-500	FW-1001	B-11	A106	3.00	0.300	IWC-1222(A)		715	505	Y	4000C TO 4011, 14A-FW-900-1A.	R 11/91
3A-FW-900-1B	AFW-400	FW-1005	B-14	A106	3.00	0.300	IWC-1222(A)		715	505	Y	4000D TO 4012, 14B-FW-900-1B.	R 11/91
3B-FW-900-1A	AFW-500	FW-1001	B-11	A106	3.00	0.300	IWC-1222(A)		715	505	Y	4003 TO 4005, 14A-FW-900-1A.	R 11/91
3B-FW-900-1B	AFW-400	FW-1005	B-14	A106	3.00	0.300	IWC-1222(A)		715	505	Y	4004 TO 4006, 14B-FW-900-1B.	R 11/91

Printed: 11/09/92

R. E. GINNA NUCLEAR POWER PLANT
Inservice Examination Boundary Line List
Third Inspection Interval

Class....: 2
System...: CONTAINMENT BREATHING AIR
P&ID No..: 33013-1882
Comp Type: PIPING

RG&E Line No.	Gilbert Line No.	SWRI Line No.	ISI Fig.	Matrl.	Size (in.)	Thkns (in.)	Exemption Basis	NDE Method	Po	Temp	In?	Line description/remarks	Revision Status
6-AT-150-4			N/A		6.00	0.000	IWC-1222(C)		<275	<200		VALVE 7443 THRU PEN 317 TO VALVE 7455.	A 11/91
6-LT-000			N/A		6.00	0.000	IWC-1222(C)		<275	<200		VALVE 7444 THRU PEN 313 TO FLANGE.	A 11/91

Printed: 11/09/92

R. E. GINNA NUCLEAR POWER PLANT
Inservice Examination Boundary Line List
Third Inspection Interval

Class....: 2
System...: CONTAINMENT HVAC SYSTEMS
P&ID No..: 33013-1863
Comp Type: PIPING

RG&E Line No.	Gilbert Line No.	SWRI Line No.	ISI Fig.	Matrl.	Size (in.)	Thkns (in.)	Exemption Basis	NDE Method	Po	Temp	In?	Line description/remarks	Revision Status
1A-SUCT			N/A		0.00	0.000	IWC-1222(B)		60	120		VLV 1559 TO "A" CONT RECIRC FAN A SYS.	A 01/92
1B-SUCT			N/A		0.00	0.000	IWC-1222(B)		60	120		VLV 1556 TO "B" CONT RECIRC FAN B SYS.	A 01/92
1C-RET			N/A		0.00	0.000	IWC-1222(B)		60	120		VLV 1574 THRU PEN 124 TO CONTINMENT.	A 01/92
1C-SUCT			N/A		0.00	0.000	IWC-1222(B)		60	120		VLV 1571 TO "C" CONT RECIRC FAN C SYS.	A 01/92
1D-RET			N/A		0.00	0.000	IWC-1222(B)		60	120		VLV 1568 THRU PEN 203 TO CONTINMENT.	A 01/92
1D-SUCT			N/A		0.00	0.000	IWC-1222(B)		60	120		VLV 1563 TO "D" CONT RECIRC FAN D SYS.	A 01/92
AB-RET			N/A		0.00	0.000	IWC-1222(B)		60	120		VLV 1562 THRU PEN 305 TO CONTINMENT.	A 01/92

Printed: 11/09/92

R. E. GINNA NUCLEAR POWER PLANT
Inservice Examination Boundary Line List
Third Inspection Interval

Class....: 2
System...: CONTAINMENT PURGE EXH & MONIT
P&ID No..: 33013-1866
Comp Type: PIPING

RG&E Line No.	Gilbert Line No.	SWRI Line No.	ISI Fig.	Matrl.	Size (in.)	Thkns (in.)	Exemption Basis	NDE Method	Po	Temp	In?	Line description/remarks	Revision Status
1A-CM-000			N/A		1.00	0.000	IWC-1222(A)					PENETRATION 305 TO VALVE 1598.	A 11/91
1B-CM-000			N/A		1.00	0.000	IWC-1222(A)					PENETRATION 305 TO VALVE 1597.	A 11/91

Printed: 11/09/92

R. E. GINNA NUCLEAR POWER PLANT
Inservice Examination Boundary Line List
Third Inspection Interval

Class....: 2
System...: CONTAINMENT SPRAY
P&ID No..: 33013-1261
Comp Type: COMPONENTS

RG&E Line No.	Gilbert Line No.	SWRI Line No.	ISI Fig.	Matrl.	Size (in.)	Thkns (in.)	Exemption Basis	NDE Method	Po	Temp	In?	Line description/remarks	Revision Status
PSI02A	1261		N/A		0.00	0.000	NO IWA	VT	205	70	-	CONTAINMNT SPRAY PMP A,MFG=INGERSOL RAND	R 01/92
PSI02B	1261		N/A		0.00	0.000	NO IWA	VT	205	70	-	CONTAINMNT SPRAY PMP B,MFG=INGERSOL RAND	R 01/92
SSI01	1261		N/A		0.00	0.000	IWC-1221(A)				-	CONTAINMENT SPRAY EDUCTOR A.	R 11/91
SSI02	1261		N/A		0.00	0.000	IWC-1221(A)				-	CONTAINMENT SPRAY EDUCTOR B.	R 11/91
TSI01	1261		N/A		0.00	0.000	NOT SECT XI		30	70	-	REFUELING WATER STORAGE TANK.	R 11/91

Printed: 11/09/92

R. E. GINNA NUCLEAR POWER PLANT
Inservice Examination Boundary Line List
Third Inspection Interval

Class.....: 2
System....: CONTAINMENT SPRAY
P&ID No..: 33013-1261
Comp Type: PIPING

RG&E Line No.	Gilbert Line No.	SWRI Line No.	ISI Fig.	Matrl.	Size (in.)	Thkns (in.)	Exemption Basis	NDE Method	Po	Temp	In?	Line description/remarks	Revision Status
10-SI-151	RHR-450	10-SI-2004	B-19	A312	10.00	0.165		SUR/VOL	30	70	-	RWST TO 1ST 10X8 & 10X6 RDCRS.	R 11/91
10BB-SI-151			B-20		10.00	0.000		SUR/VOL	410	350	-	RWST TO VALVE 856.	R 11/91
8A-SI-151	RHR-450		B-19	A312	8.00	0.148		SUR/VOL	30	70	-	6A-SI-151 TO CS PUMP B.	R 11/91
8B-SI-151	RHR-450	10-SI-151R	B-19	A312	8.00	0.148		SUR/VOL	30	70	-	6B-SI-151 TO CS PUMP A.	R 11/91
8K-SI-151	SI-151		B-19	A312	8.00	0.148		SUR/VOL			Y	THIS LINE ACCOUNTED FOR ON 33013-1247.	R 11/91
6A-SI-151	RHR-450	6-SI-151R	B-19	A312	6.00	0.148		SUR/VOL	30	70	-	10-SI-151 TO RDCR PAST VALVE 858B.	R 11/91
6B-SI-151	RHR-450	10-SI-151R	B-19	A312	6.00	0.148		SUR/VOL	30	70	-	10-SI-151 TO RDCR PAST VALVE 858A.	R 11/91
6C-SI-301	CS-500		B-46	A403	6.00	0.280		SUR/VOL	205	70	-	4A-SI-301 TO 1ST 6X6X6 TEE.	R 11/91
6D-SI-301	CS-500		B-46	A403	6.00	0.280		SUR/VOL	205	70	-	6C-SI-301 TO VALVE 860A.	
6DD-SI-301	CS-500		B-46	A403	6.00	0.280	IWC-1221(F)		205	70	-	VALVE 860A TO 1ST 6" TEE BEFORE V 862A.	
6E-SI-301	CS-500		B-46	A403	6.00	0.280		SUR/VOL	205	70	-	1ST TEE ON LINE 6C-SI-301 TO VALVE 860B.	
6EE-SI-301	CS-500		B-46	A403	6.00	0.280	IWC-1221(F)		205	70	-	VALVE 860B TO VALVE 852A.	
6F-SI-301	CS-500		B-46	A403	6.00	0.280	IWC-1221(F)		205	70	-	VALVE 862A TO PEN 105.	R 11/91
6G-SI-301	CS-100,CS-150		B-48	A312	6.00	0.281	IWC-1221(F)		205	70	N	PEN 105 TO CS SPRAY RING.	
6H-SI-301	CS-150		N/A	A312	6.00	0.281	IWC-1221(F)		205	70	N	6G-SI-301 TO 4B-SI-301.	
6I-SI-301	CS-150		N/A	A312	6.00	0.281	IWC-1221(F)		205	70	N	4C-SI-301 TO 6G-SI-301.	
6J-SI-301	CS-800		B-47	A403	6.00	0.280		SUR/VOL	205	70	-	4D-SI-301 TO 1ST 6X6X6 TEE.	
6K-SI-301	CS-800		B-47	A403	6.00	0.280		SUR/VOL	205	70	-	6X6X6 TEE ON 6J-SI-301 TO VALVE 860D.	
6KK-SI-301	CS-800		B-47	A403	6.00	0.280	IWC-1221(F)		205	70	-	VALVE 860D TO 6" TEE BEFORE VALVE 862B.	
6L-SI-301	CS-800		B-47	A403	6.00	0.280		SUR/VOL	205	70	-	6X6X6 TEE ON 6J-SI-301 TO VALVE 860C.	
6LL-SI-301	CS-800		B-47	A403	6.00	0.280	IWC-1221(F)		205	70	-	VALVE 860C TO 6" TEE BEFORE VALVE 862B.	
6M-SI-301	CS-800		B-47	A403	6.00	0.280	IWC-1221(F)		205	70	-	6X6X6 TEE BEFORE VALVE 862B TO PEN 109.	
6N-SI-301	CS-200,CS-250		N/A	A312	6.00	0.280	IWC-1221(F)		205	70	N	PEN 109 TO 6" TEE ON LOWER CS RING.	
6P-SI-301	CS-250		N/A	A312	6.00	0.281	IWC-1221(F)		205	70	N	4F-SI-301 TO 6N-SI-301.	
6Q-SI-301	CS-250		N/A	A312	6.00	0.281	IWC-1221(F)		205	70	N	6N-SI-301 TO 4E-SI-301.	
4-CH-151	CVC-1200		N/A	A312	4.00	0.120	IWC-1221(A)		30	100	-	THIS LINE ACCOUNTED FOR ON 33013-1265.	R 11/91
4A-SI-301	CS-500		B-46	A312	4.00	0.000	IWC-1221(A)		205	70	-	A CS PUMP TO REDUCER.	R 11/91
4B-SI-301	CS-150		N/A	A312	4.00	0.237	IWC-1221(A)		205	70	N	6H-SI-301 TO 3A-SI-301.	R 11/91

Printed: 11/09/92

R. E. GINNA NUCLEAR POWER PLANT
Inservice Examination Boundary Line List
Third Inspection Interval

Class....: 2
System...: CONTAINMENT SPRAY
P&ID No..: 33013-1261
Comp Type: PIPING

RG&E Line No.	Gilbert Line No.	SWRI Line No.	ISI Fig.	Matrl.	Size (in.)	Thkns (in.)	Exemption Basis	NDE Method	Po	Temp	In?	Line description/remarks	Revision Status
4C-SI-301	CS-150		N/A	A312	4.00	0.237	IWC-1221(A)		205	70	N	3A-SI-301 TO 6I-SI-301.	R 11/91
4D-SI-301	CS-800		B-47		4.00	0.000	IWC-1221(A)		205	70	-	B CS PUMP TO REDUCER.	R 11/91
4E-SI-301	CS-250		N/A	A312	4.00	0.237	IWC-1221(A)		205	70	N	6X4 RDCR TO 3B-SI-301.	R 11/91
4F-SI-301	CS-250		N/A	A312	4.00	0.237	IWC-1221(A)		205	70	N	4X3 RDCR TO 6X4 RDCR ON 6P-SI-301.	R 11/91
3-SI-151			N/A		3.00	0.000	IWC-1221(A)		30	70	-	RWST TO NOZZLE WELD.	R 11/91
3A-SI-301	CS-150		N/A	A312	3.00	0.216	IWC-1221(A)		205	70	N	4B-SI-301 TO 4C-SI-301.	R 11/91
3B-SI-301	CS-250		N/A	A312	3.00	0.216	IWC-1221(A)		205	70	N	4X3 RDCR ON 4E-SI-301 TO 4X3 RDCR.	R 11/91
3C-SI-301			N/A		3.00	0.000	IWC-1221(A)				-	SPRAY ADDITIVE TANK TO VALVE 627.	R 11/91
2-SI-151			N/A		2.00	0.154	IWC-1221(A)		30	70	-	RWST TO VALVE 893A.	R 11/91
2A-SI-151			N/A		2.00	0.154	IWC-1221(A)		30	70	-	RWST TO VALVE 893B.	R 11/91
2B-SI-151			N/A		2.00	0.154	IWC-1221(A)		30	70	-	RWST TO VALVE 894B.	R 11/91
2C-SI-151			B-20		2.00	0.154	IWC-1221(A)		30	70	-	RWST TO VALVE 808.	R 11/91
2D-SI-151	CS-520		B-19	A312	2.00	0.154	IWC-1221(A)		30	70	-	10-SI-151 TO VALVE 873C.	R 11/91
2E-SI-1501			B-54		2.00	0.000		SUR				THIS LINE ACCOUNTED FOR ON 33013-1262.	A 11/91
2E-SI-301	CS-100		N/A	A312	2.00	0.154	IWC-1221(A)		205	70	N	6G-SI-301 TO 6N-SI-301.	R 11/91
2F-SI-301	CS-100		N/A	A312	2.00	0.154	IWC-1221(A)		205	70	N	2E-SI-301 TO VALVE 875A.	
2G-SI-301	CS-100		N/A	A312	2.00	0.154	IWC-1221(A)		205	70	N	2E-SI-301 TO VALVE 875B.	
2H-SI-301	CS-100		N/A	A312	2.00	0.154	IWC-1221(A)		205	70	N	2E-SI-301 TO VALVE 876B.	
2I-SI-301	CS-100		N/A	A312	2.00	0.154	IWC-1221(A)		205	70	N	2E-SI-301 TO VALVE 876A.	
2J-SI-301	CS-510		B-19	A312	2.00	0.154	IWC-1221(A)		205	70	-	8B-SI-151 TO CS EDUCTOR.	R 11/91
2K-SI-301	CS-510		B-46	A312	2.00	0.154	IWC-1221(A)		205	70	-	6C-SI-301 TO VALVE 859A.	R 11/91
2KK-SI-301	CS-510		N/A	A312	2.00	0.154	IWC-1221(A)		205	70	-	CS EDUCTORA TO 2K-SI-301.	
2L-SI-301	CS-510		N/A	A312	2.00	0.154	IWC-1221(A)		205	70	-	CS EDUCTOR 1 TO CS EDUCTOR 2.	R 11/91
2M-SI-301	CS-510		B-19	A312	2.00	0.154	IWC-1221(A)		205	70	-	8A-SI-151 TO CS EDUCTOR.	
2N-SI-301	CS-510		N/A	A312	2.00	0.154	IWC-1221(A)		205	70	-	CS EDUCTOR 2 TO 2Q-SI-301.	R 11/91
2P-SI-301	CS-510,CS-520		N/A	A312	2.00	0.154	IWC-1221(A)				-	2L-SI-301 TO VALVE 873A.	R 11/91
2Q-SI-301	CS-510		B-47	A312	2.00	0.154	IWC-1221(A)				-	6J-SI-301 TO VALVE 859B.	R 11/91
2QA-SI-301	CS-520		N/A	A312	2.00	0.154	IWC-1221(A)				-	2P-SI-301 BY VALVE 873B TO VALVE 873D.	R 11/91

Printed: 11/09/92

R. E. GINNA NUCLEAR POWER PLANT
Inservice Examination Boundary Line List
Third Inspection Interval

Class....: 2
System...: CONTAINMENT SPRAY
P&ID No..: 33013-1261
Comp Type: PIPING

RG&E Line No.	Gilbert Line No.	SWRI Line No.	ISI Fig.	Matrl.	Size (in.)	Thkns (in.)	Exemption Basis	NDE Method	Po	Temp	In?	Line description/remarks	Revision Status
2R-SI-301	CS-520		N/A	A312	2.00	0.154	IWC-1221(A)				-	2" TEE ON P-SI-151 PAST VALVE.	R 11/91
2S-SI-301	CS-520		N/A	A312	2.00	0.154	IWC-1221(A)				-	2P-SI-301 PAST VALVE 836B TO 1ST 2" TEE.	R 11/91
2T-SI-301	CS-520		N/A	A312	2.00	0.154	IWC-1221(A)				-	VALVE 881B TO SPRAY ADDITIVE TANK.	R 11/91
2U-SI-151			N/A		2.00	0.000	IWC-1222(A)					RWST TO VALVE 895.	A 11/91
1B-SI-301	CS-800		B-47	A312	1.00	0.133	IWC-1221(A)		205	70	-	6" TEE ON 6M-SI-301 BY V 862B TO V 861.	R 11/91
1C-SI-301			B-46		1.00	0.000	IWC-1221(A)					6F-SI-301 TO RV-1817.	A 11/91
1D-SI-301			N/A		1.00	0.000	IWC-1221(A)					SPRAY ADDITION TANK TO VALVE 863B.	A 11/91
.75A-SI-301	CS-500		B-46	A312	0.75	0.113	IWC-1221(A)		205	70	-	6F-SI-301 TO VALVE 864A.	R 11/91
.75B-SI-301	CS-500		B-46	A312	0.75	0.113	IWC-1221(A)		205	70	-	6F-SI-301 TO VALVE 869A.	R 11/91
.75C-SI-301			N/A	A312	0.75	0.113	IWC-1221(A)				-	3C-SI-301 TO VALVE 1802.	
.75D-SI-151			N/A	A312	0.75	0.113	IWC-1221(A)		30	70	-	6A-SI-151 BY VALVE 858B TO VALVE 861.	
.75E-SI-301			B-47		0.75	0.000	IWC-1221(A)					6M-SI-301 TO VALVE 864B.	A 11/91
.75G-SI-301			B-46		0.75	0.000	IWC-1221(A)					6DD-SI-301 TO VALVE 2821.	A 11/91
.75H-SI-301			B-46		0.75	0.000	IWC-1221(A)					6EE-SI-301 TO VALVE 2822.	A 11/91
.75I-SI-301			B-46		0.75	0.000	IWC-1221(A)					6F-SI-301 TO VALVE 2825.	A 11/91
.75J-SI-301			N/A		0.75	0.000	IWC-1221(A)					6F-SI-301 TO VALVE 2829.	A 11/91
.75K-SI-301			B-47		0.75	0.000	IWC-1221(A)					6KK-SI-301 TO VALVE 2824.	A 11/91
.75L-SI-301			B-47		0.75	0.000	IWC-1221(A)					6LL-SI-301 TO VALVE 2823.	A 11/91
.75M-SI-301			B-47		0.75	0.000	IWC-1221(A)					6M-SI-301 TO VALVE 2826.	A 11/91
.75N-SI-301			N/A		0.75	0.000	IWC-1221(A)					6M-SI-301 TO VALVE 2830.	A 11/91
.375A-CPS-1506			N/A		0.37	0.000	IWC-1222(A)					PEN P121 TO VALVES 1819A & 1819B.	A 11/91
.375B-CPS-1506			N/A		0.37	0.000	IWC-1222(A)					PEN P203 TO VALVES 1819C & 1819D.	A 11/91
.375C-CPS-1506			N/A		0.37	0.000	IWC-1222(A)					PEN P332 TO VALVES 1819E, 1819F, & 1819G	A 11/91

Printed: 11/09/92

R. E. GINNA NUCLEAR POWER PLANT
Inservice Examination Boundary Line List
Third Inspection Interval

Class....: 2
System...: CVCS-BORIC ACID
P&ID No..: 33013-1266
Comp Type: COMPONENTS

RG&E Line No.	Gilbert Line No.	SWRI Line No.	ISI Fig.	Matrl.	Size (in.)	Thkns (in.)	Exemption Basis	NDE Method	Po	Temp	In?	Line description/remarks	Revision Status
TCH07A	1266		N/A		0.00	0.000	NOT SECT XI		5	210	-	BORIC ACID STORAGE TANK A.	R 11/91
TCH07B	1266		N/A		0.00	0.000	NOT SECT XI		5	210	-	BORIC ACID STORAGE TANK B.	R 11/91

Printed: 11/09/92

R. E. GINNA NUCLEAR POWER PLANT
Inservice Examination Boundary Line List
Third Inspection Interval

Class....: 2
System...: CVCS-BORIC ACID
P&ID No..: 33013-1266
Comp Type: PIPING

RG&E Line No.	Gilbert Line No.	SWRI Line No.	ISI Fig.	Matrl.	Size (in.)	Thkns (in.)	Exemption Basis	NDE Method	Po	Temp	In?	Line description/remarks	Revision Status
8A-SI-301B	SI-400	8-SI-2001	B-15	A312	8.00	0.322		SUR/VOL	5	210	Y	BORIC ACID TANK B TO 8X8X8 TEE.	R 11/91
8B-SI-301A	SI-400	8-SI-2001	B-15	A312	8.00	0.322		SUR/VOL	5	210	Y	BORIC ACID TANK A TO 8X8X8 TEE.	R 11/91
3A-CH-151A	SI-400		N/A		3.00	0.000	IWC-1221(A)		5	210	Y	BORIC ACID TANK A TO LOOP SEAL FLANGE.	R 11/91
3B-CH-151B	SI-400		N/A	A312	3.00	0.120	IWC-1221(A)		5	210	Y	BORIC ACID TANK B TO LOOP SEAL FLANGE.	R 11/91
2A-SI-151B	SI-400		B-15	A312	2.00	0.154	IWC-1221(A)		5	210	Y	8X8X2 TEE ON 8A-SI-301B TO VALVE 345.	R 11/91
2B-CH-151B	SI-400		N/A	A312	2.00	0.154	IWC-1221(A)		5	210	Y	BORIC ACID TANK B TO HCV 105.	
2C-SI-151A	SI-400		B-15	A312	2.00	0.154	IWC-1221(A)		5	210	Y	8X8X2 TEE ON 8B-SI-301A TO VALVE 331.	R 11/91
2D-CH-151			N/A	A312	2.00	0.000	IWC-1222(A)		40	100	-	VALVE 110B TO 368, 271, 4A-CH-151.	R 11/91
2D-CH-151A	SI-400		N/A	A312	2.00	0.154	IWC-1221(A)		5	210	Y	BORIC ACID TANK A TO HCV 104.	
2E-CH-151			N/A		2.00	0.000	IWC-1222(A)		80	200	-	THIS LINE ACCOUNTED FOR ON 33013-1265.	
2F-CH-151			N/A		2.00	0.000	IWC-1221(A)		80	200	-	2E-CH-151 TO VALVE 353.	R 11/91
1A-CH-151B	SI-400		N/A	A312	1.00	0.000	IWC-1221(A)		5	210	Y	BORIC ACID TANK B TO VALVE 343.	R 11/91
1B-CH-151A	SI-400		N/A		1.00	0.000	IWC-1221(A)		5	210	Y	BORIC ACID TANK A TO VALVE 328.	
1D-CH-151			N/A		1.00	0.000	IWC-1222(A)		80	200	-	THIS LINE ACCOUNTED FOR ON 33013-1265.	R 11/91
1E-CH-151			N/A		1.00	0.000	IWC-1222(A)		80	190	-	THIS LINE ACCOUNTED FOR ON 33013-1265.	R 11/91
.75A-CH-151B	SI-400		N/A		0.75	0.113	IWC-1221(A)		5	210	Y	2B-CH-151B TO VALVE 344.	
.75B-CH-151A			N/A		0.75	0.083	IWC-1221(A)		5	210	Y	2D-CH-151A TO VALVE 2242.	
.75C-CH-151A			N/A		0.75	0.083	IWC-1221(A)		5	210	Y	2D-CH-151A TO VALVE 329.	
.75D-CH-151			N/A		0.75	0.000	IWC-1221(A)		80	190	-	2D-CH-151 TO VALVE 367.	R 11/91
.75E-SI-151B	SI-400		B-15	A312	0.75	0.113	IWC-1221(A)		5	210	Y	2A-SI-151B TO VALVE 346B.	R 11/91
.75F-SI-151A	SI-400		B-15	A312	0.75	0.113	IWC-1221(A)		5	210	Y	2C-SI-151A TO VALVE 346A.	R 11/91
.75G-CH-151			N/A		0.75	0.000	IWC-1221(A)					2F-CH-151 TO VALVE 348C.	A 11/91

Printed: 11/09/92

R. E. GINNA NUCLEAR POWER PLANT
Inservice Examination Boundary Line List
Third Inspection Interval

Class....: 2
System...: CVCS-CHARGING
P&ID No..: 33013-1265
Comp Type: COMPONENTS

RG&E Line No.	Gilbert Line No.	SWRI Line No.	ISI Fig.	Matrl.	Size (in.)	Thkns (in.)	Exemption Basis	NDE Method	Po	Temp	In?	Line description/remarks	Revision Status
ECH04			B-4		0.00	0.000	IWC-1222(A)		40	140	-	SEAL WATER HEAT EXCHANGER.	R 11/91
FCH03			B-3		0.00	0.000	IWC-1222(A)		40	140	-	SEAL WATER RETURN FILTER.	R 11/91
FCH08			B-7		0.00	0.000	IWC-1222(A)		2450	100	-	SEAL INJECTION FILTER A.	R 11/91
FCH09			B-7		0.00	0.000	IWC-1222(A)		2450	1007	-	SEAL INJECTION FILTER B.	R 11/91
PCH01A			N/A		0.00	0.000	IWC-1222(A)		2450	100	-	CHARGING PUMP A, MFG=AJAX.	R 11/91
PCH01B			N/A		0.00	0.000	IWC-1222(A)		2450	100	-	CHARGING PUMP B, MFG=AJAX.	R 11/91
PCH01C			N/A		0.00	0.000	IWC-1222(A)		2450	100	-	CHARGING PUMP C, MFG=AJAX.	R 11/91
SCH11			B-6		0.00	0.000		SUR/VOL	2450	100	-	24" CHARGING PUMP PULSE DAMPENER.	R 11/91
TCH04			N/A		0.00	0.000	IWC-1222(C)		30	100	-	VOLUME CONTROL TANK.	R 11/91

Printed: 11/09/92

R. E. GINNA NUCLEAR POWER PLANT
Inservice Examination Boundary Line List
Third Inspection Interval

Class....: 2
System...: CVCS-CHARGING
P&ID No..: 33013-1265
Comp Type: PIPING

RG&E Line No.	Gilbert Line No.	SWRI Line No.	ISI Fig.	Matrl.	Size (in.)	Thkns (in.)	Exemption Basis	NDE Method	Po	Temp	In?	Line description/remarks	Revision Status
8A-CH-2502	CVC-851	PULSE DAMPENER	B-6	A312	8.00	0.906		SUR/VOL	2450	100	Y	3" TEE ON 3K-CH-2502 TO PULSE DAMPENER.	
8B-CH-2502	CVC-852	PULSE DAMPENER	B-6	A312	8.00	0.906		SUR/VOL	2450	100	Y	3" TEE ON 3L-CH-2502 TO PULSE DAMPENER.	
8C-CH-2502	CVC-853	PULSE DAMPENER	B-6	A312	8.00	0.906		SUR/VOL	2450	100	Y	3" TEE ON 3M-CH-2502 TO PULSE DAMPENER.	
4-CH-151	CVC-1200		N/A	A312	4.00	0.120	IWC-1221(A)		30	100	-	4B-CH-151 PAST VALVE 357 TO RWST.	R 11/91
4A-CH-151	CVC-1200		N/A	A312	4.00	0.120	IWC-1222(A)		30	100	-	VCT TO 1ST 4X4X3 TEE AFTER VALVE 266.	
4B-CH-151	CVC-1200		N/A	A312	4.00	0.120	IWC-1222(A)		30	100	-	4" TEE ON 4A-CH-151 TO VALVE 268.	
4C-CH-151	CVC-1200		N/A	A312	4.00	0.120	IWC-1222(A)		30	100	-	4B-CH-151 TO VALVE 399.	R 11/91
4D-CH-151			N/A		4.00	0.000	IWC-1222(A)					4C-CH-151 THRU 358 TO 4-CH-151.	A 11/91
3A-CH-151	CVC-1000		N/A	A312	3.00	0.120	IWC-1222(A)		30	100	Y	3M-CH-151 TO 3X3X3 TEE BEFORE VALVE 394.	R 11/91
3AH-CH-151	CVC-1000		N/A	A312	3.00	0.120	IWC-1222(A)		40	140	-	3" TEE ON 3E-CH-151 PAST VALVE 315C.	
3B-CH-151	CVC-1000		N/A	A312	3.00	0.120	IWC-1222(A)		30	100	Y	3" TEE ON 3A-CH-151 TO 1ST 3" TEE.	
3C-CH-151	CVC-1000		N/A	A312	3.00	0.120	IWC-1222(A)		30	100	Y	3" TEE ON 3A-CH-151 TO SEAL WATER HE.	R 11/91
3D-CH-151	CVC-1000		N/A	A312	3.00	0.120	IWC-1222(A)		40	140	-	SEAL WATER HE PAST VALVE 265 TO 1ST TEE.	
3E-CH-151	CVC-1000		N/A	A312	3.00	0.120	IWC-1222(A)		40	140	-	3" TEE ON 3D TO TEE BTEW VLVS 265 & 315B	R 11/91
3F-CH-151	CVC-1000		N/A	A312	3.00	0.120	IWC-1222(A)		40	140	-	3" TEE ON 3E-CH-151 TO SEAL WATER FILTER	
3G-CH-151	CVC-1000		N/A	A312	3.00	0.120	IWC-1222(A)		40	140	-	SEAL WATER RETURN FILTER TO PEN 108.	
3H-CH-151	CVC-1200		N/A	A312	3.00	0.120	IWC-1222(A)		40	140	Y	4" TEE ON 4A-CH-151 TO CHARGING PUMP 1.	
3I-CH-151	CVC-1200		N/A	A312	3.00	0.120	IWC-1222(A)		2450	100	-	4" TEE ON 4C-CH-151 TO CHARGING PUMP 2.	R 11/91
3J-CH-151	CVC-1200		N/A	A312	3.00	0.120	IWC-1222(A)		30	100	Y	4" TEE ON 4C-CH-151 TO CHARGING PUMP 3.	
3K-CH-2502	CVC-851		B-6	A312	3.00	0.437	IWC-1222(A)		2450	100	-	CHG PUMP 1 DISCHG PAST VALVE 287 TO TEE.	
3L-CH-2502	CVC-852		B-6	A312	3.00	0.437	IWC-1222(A)		2450	100	-	CHG PUMP 2 DISCHG PAST VALVE 288 TO TEE.	
3M-CH-151			N/A		3.00	0.000	IWC-1222(A)		30	100	-	THIS LINE ACCOUNTED FOR ON 33013-1264.	R 11/91
3M-CH-2502	CVC-853		B-6	A312	3.00	0.437	IWC-1222(A)		2450	100	-	CHG PUMP 3 DISCHG PAST VALVE 291 TO TEE.	
3N-CH-2502	CVC-1000		N/A	A312	3.00	0.438	IWC-1222(A)		2450	100	Y	PULSE DAMPENER PAST VALVE 289 TO 1ST TEE	
3P-CH-2502			N/A	A312	3.00	0.438	IWC-1222(A)		2450	100	Y	PULSE DAMPENER PAST VALVE 290 PUL DAMP.	
3Q-CH-2502	CVC-1100		N/A	A312	3.00	0.438	IWC-1222(A)		2450	100	Y	2" TEE ON 3N-CH-2502 PAST VALVE 275.	
3R-CH-151	CVC-200		N/A	A312	3.00	0.120	IWC-1222(A)		140	40	Y	PEN 108 TO 3X2 REDUCER.	R 11/91
3R-CH-2502	CVC-1100		N/A	A312	3.00	0.438	IWC-1222(A)		2450	100	Y	2" TEE ON 3Q-CH-2502 TO 1ST 2" RDCR TEE.	

Printed: 11/09/92

R. E. GINNA NUCLEAR POWER PLANT
Inservice Examination Boundary Line List
Third Inspection Interval

Class....: 2
System...: CVCS-CHARGING
P&ID No..: 33013-1265
Comp Type: PIPING

RG&E Line No.	Gilbert Line No.	SWRI Line No.	ISI Fig.	Matrl.	Size (in.)	Thkns (in.)	Exemption Basis	NDE Method	Po	Temp	In?	Line description/remarks	Revision Status
2A-CH-151			N/A	A312	2.00	0.109	IWC-1222(A)		30	100	-	VALVE 257 TO VOLUME CONTROL TANK.	
2AA-CH-2502	CVC-600,CVC-601		N/A	A312	2.00	0.344	IWC-1222(A)		2450	100	Y	PEN 106 PAST VALVES 304A & 304C PUMP 1A.	
2AB-CH-2502	CVC-500,CVC-501		B-33	A312	2.00	0.344	IWC-1222(A)		2450	100	Y	PEN 110 PAST VALVES 304B & 304D PUMP 1B.	
2AV-CH-151	CVC-200		N/A	A312	2.00	0.109	IWC-1222(A)		140	40	Y	3R-CH-151 TO VALVES 362A & 38SA.	R 11/91
2D-CH-151			N/A	A312	2.00	0.000	IWC-1222(A)		40	100	-	THIS LINE ACCOUNTED FOR ON 33013-1266.	R 11/91
2E-CH-151	CVC-1200		N/A	A312	2.00	0.109	IWC-1222(A)		80	200	-	4C-CH-151 TO VALVE 350.	R 11/91
2F-CH-2502	CVC-800		N/A	A312	2.00	0.344	IWC-1222(A)		2450	100	Y	PULSE DAMPER TO CHECK VALVE 370B.	R 11/91
2G-CH-2502	CVC-800		N/A	A312	2.00	0.344	IWC-1222(A)		2450	100	Y	2F-CH-2502 THRU 384C TO DAMPER.	R 11/91
2H-CH-2502	CVC-1100		N/A	A312	2.00	0.343	IWC-1222(A)		2450	100	Y	3Q-CH-2502 PAST VALVE 323 TO PEN 102.	
2I-CH-2502	CVC-1100		N/A	A312	2.00	0.344	IWC-1222(A)		2450	100	Y	2" RDCR TEE ON 3R-CH-2502 TO PEN 110.	
2J-CH-2502	CVC-1100		N/A	A312	2.00	0.344	IWC-1222(A)		2450	100	Y	2" RDCR TEE 3R-CH-2502 TO PEN 106.	R 11/91
2K-CH-2502	CVC-1100		N/A	A312	2.00	0.344	IWC-1222(A)		2450	100	Y	2" TEE ON 3N-CH-2502 TO FCH09.	R 11/91
2L-CH-2502	CVC-1100		N/A	A312	2.00	0.344	IWC-1222(A)		2450	100	Y	2K-CH-2502 PAST VALVE 303B TO SW FIL 2.	
2M-CH-2502	CVC-1100		N/A	A312	2.00	0.344	IWC-1222(A)		2450	100	Y	2" TEE ON 3Q-CH-2502 TO FCH09.	R 11/91
2N-CH-2502	CVC-1100		N/A	A312	2.00	0.344	IWC-1222(A)		2450	100	Y	2M-CH-2502 PAST VALVE 303A TO FCH08.	R 11/91
2P-CH-2501			B-34		2.00	0.000	IWC-1222(A)					2AV-CH-151 TO RC PUMP A.	A 11/91
2R-CH-151			N/A		2.00	0.000	IWC-1222(A)					VCT TO VALVES 255A & 255C.	A 11/91
2S-CH-151			N/A		2.00	0.000	IWC-1222(A)					VCT TO VALVES 255B & 255D.	A 11/91
2T-CH-151	CVC-200		N/A	A312	2.00	0.109	IWC-1222(A)		140	40	Y	3R-CH-151 TO VALVE 314.	
2U-CH-151	CVC-1110		N/A	A312	2.00	0.109	IWC-1222(A)		30	100	-	THIS LINE ACCOUNTED FOR ON 33013-1264.	
2V-CH-151	CVC-200		N/A	A312	2.00	0.109	IWC-1222(A)		140	40	Y	2AV-CH-151 TO 2X.75 RDCR.	R 11/91
2W-CH-151	CVC-200		N/A	A312	2.00	0.109	IWC-1222(A)		140	40	Y	3" RDCR ON 3R-CH-151 TO VALVE 362B.	R 11/91
2X-CH-2501	CVC-700		N/A	A376	2.00	0.344	IWC-1222(A)		140	40	Y	VALVE 362B PAST VALVE 270B TO RC PMP 1B.	
2Z-CH-2502	CVC-400,CVC-402		N/A	A312	2.00	0.344	IWC-1222(A)		2450	100	Y	PEN 102 TO VALVE 392B.	
1A-CH-151			N/A	A312	1.00	0.000	IWC-1222(A)		30	100	-	2A-CH-151 TO TEE BEFORE VAL 205A & 975.	
1AA-CH-151			N/A		1.00	0.000	IWC-1222(A)					VCT TO VALVE 263.	A 11/91
1B-CH-151			N/A	A312	1.00	0.000	IWC-1222(A)		30	100	-	4A-CH-151 TO VALVE 264A.	
1C-CH-151			N/A	A312	1.00	0.000	IWC-1222(A)		30	100	-	1B-CH-151 TO VALVE 264B.	

Printed: 11/09/92

R. E. GINNA NUCLEAR POWER PLANT
Inservice Examination Boundary Line List
Third Inspection Interval

Class....: 2
System...: CVCS-CHARGING
P&ID No..: 33013-1265
Comp Type: PIPING

RG&E Line No.	Gilbert Line No.	SWRI Line No.	ISI Fig.	Matrl.	Size (in.)	Thkns (in.)	Exemption Basis	NDE Method	Po	Temp	In?	Line description/remarks	Revision Status
1D-CH-151			N/A	A312	1.00	0.000	IWC-1222(A)		80	200	-	4A-CH-151 PAST VALVE 271 TO VALVE 272.	R 11/91
1E-CH-151			N/A	A312	1.00	0.000	IWC-1222(A)		80	190	-	4A-CH-151 TO VALVE 356.	R 11/91
1F-CH-151	CVC-1200		N/A	A312	1.00	0.000	IWC-1222(A)		30	100	-	3J-CH-151 TO REDUCING TEE ON .75E.	R 11/91
1G-CH-151	CVC-1200		N/A	A312	1.00	0.000	IWC-1222(A)		30	100	-	1F-CH-151 TO VALVE 283.	
1I-CH-151	CVC-1200		N/A	A312	1.00	0.000	IWC-1222(A)		30	100	-	.5C-CH-151 TO VALVE 280C.	R 11/91
1J-CH-151	CVC-1200		N/A	A312	1.00	0.000	IWC-1222(A)		2450	100	-	CHARGING PUMP 3 TO VALVE 280F.	
1K-CH-151			N/A	A312	1.00	0.000	IWC-1222(A)		2450	100	-	DRAIN OF STUFF BOX LEAKOFF OF CHG PMP 3.	
1L-CH-151	CVC-1200		N/A	A312	1.00	0.000	IWC-1222(A)		30	100	-	3I-CH-151 PAST VALVES 276 & 279B.	
1M-CH-151	CVC-1200		N/A	A312	1.00	0.000	IWC-1222(A)		30	100	-	1L-CH-151 TO VALVE 284.	
1P-CH-151	CVC-1200		N/A	A312	1.00	0.000	IWC-1222(A)		30	100	-	.5B-CH-151 TO VALVE 208B.	R 11/91
1Q-CH-151	CVC-1200		N/A	A312	1.00	0.000	IWC-1222(A)		2450	100	-	CHARGING PUMP 2 TO VALVE 280E.	
1R-CH-151	CVC-1200		N/A	A312	1.00	0.000	IWC-1222(A)		2450	100	-	DRAIN STUFFING BOX LEAKOFF TO VALVE 2245	
1S-CH-151	CVC-1200		N/A	A312	1.00	0.000	IWC-1222(A)		30	100	-	3H-CH-151 PAST VAL 278 & 278A TO 1ST TEE	
1T-CH-151	CVC-1200		N/A	A312	1.00	0.000	IWC-1222(A)		30	100	-	1S-CH-151 TO VALVE 285.	
1U-CH-151	CVC-1200		N/A	A312	1.00	0.000	IWC-1222(A)		30	100	-	.5A-CH-151 TO VALVE 280A.	R 11/91
1W-CH-151	CVC-1200		N/A	A312	1.00	0.000	IWC-1222(A)		2450	100	-	CHARGING PUMP 1 TO VALVE 280D.	
1X-CH-151	CVC-1200		N/A	A312	1.00	0.000	IWC-1222(A)		2450	100	-	DRAIN STUFFING BOX LEAKOFF TO VALVE 2244	
1Y-CH-151	CVC-200		N/A	A312	1.00	0.000	IWC-1222(A)		140	40	Y	.75X1 RDCR ON .75Z-CH-151 TO NEXT RDCR.	
1Z-CH-151			N/A		1.00	0.000	IWC-1222(A)		30	100		3M-CH-151 PAST VLV 969A TO .5A-SL-151.	A 11/91
.75A-CH-151			N/A		0.75	0.000	IWC-1222(A)		30	100	-	2A-CH-151 TO VALVE 1275D.	
.75AA-CH-2501	CVC-700		N/A	A312	0.75	0.218	IWC-1222(A)		140	40	Y	1X.75 RDCR ON 1Y-CH-151 TO B RCP.	R 11/91
.75AB-CH-2501	CVC-700		N/A	A312	0.75	0.218	IWC-1222(A)		140	40	Y	.75AA-CH-2501 TO A RCP.	R 11/91
.75B-CH-151			N/A		0.75	0.000	IWC-1222(A)		30	100	-	TEE ON 1A-CH-151 TO VALVE PCV141.	
.75B-CH-2501			N/A		0.75	0.000	IWC-1222(A)					.75AA-CH-2501 TO VALVE 307B.	A 11/91
.75BB-CH-151			N/A		0.75	0.000	IWC-1222(A)					TEE ON 1A-CH-151 TO VALVE 975.	A 11/91
.75BB-CH-2501			N/A		0.75	0.000	IWC-1222(A)					2X-CH-2501 TO VALVE 306B.	A 11/91
.75C-CH-152			N/A		0.75	0.000	IWC-1222(A)		30	100	-	SEAL WATER HEAT EXCH TO VALVE 282A.	R 11/91
.75C-CH-2501			N/A		0.75	0.000	IWC-1222(A)					RC PUMP B TO VALVE 309B.	A 11/91

Printed: 11/09/92

R. E. GINNA NUCLEAR POWER PLANT
Inservice Examination Boundary Line List
Third Inspection Interval

Class....: 2
System...: CVCS-CHARGING
P&ID No..: 33013-1265
Comp Type: PIPING

RG&E Line No.	Gilbert Line No.	SWRI Line No.	ISI Fig.	Matrl.	Size (in.)	Thkns (in.)	Exemption Basis	NDE Method	Po	Temp	In?	Line description/remarks	Revision Status
.75CC-CH-2501			N/A		0.75	0.000	IWC-1222(A)					RC PUMP B TO VALVE 308B.	A 11/91
.75D-CH-152			N/A		0.75	0.000	IWC-1222(A)		30	100	-	SEAL WATER HEAT EXCH TO VALVE 282B.	R 11/91
.75D-CH-2501			N/A		0.75	0.000	IWC-1222(A)					.75AB-CH-2501 TO VALVE 307A.	A 11/91
.75DD-CH-2501			B-34		0.75	0.000	IWC-1222(A)					2P-CH-2501 TO VALVE 306A.	A 11/91
.75E-CH-151			N/A		0.75	0.000	IWC-1222(A)					.75J-CH-151 TO RDCR TEE BY 274.	A 11/91
.75E-CH-2501			N/A		0.75	0.000	IWC-1222(A)					RC PUMP A TO VALVE 309A.	A 11/91
.75EE-CH-2501			N/A		0.75	0.000	IWC-1222(A)					RC PUMP A TO VALVE 308A.	A 11/91
.75F-CH-152			N/A		0.75	0.000	IWC-1222(A)		40	140	-	SEAL WATER HEAT EXCH TO VALVE 282C.	R 11/91
.75F-SL-2505			N/A		0.75	0.000	IWC-1222(A)		30	100	-	VALVE 975 TO VALVE 977.	R 11/91
.75H-CH-151	CVC-1000		N/A		0.75	0.000	IWC-1222(A)		40	140	-	SEAL WATER RETURN FILTER TO VALVE 319B.	
.75I-CH-151	CVC-1000		N/A		0.75	0.000	IWC-1222(A)		40	140	-	SEAL WATER RETURN FILTER TO VALVE 319A.	
.75J-CH-151			N/A		0.75	0.000	IWC-1222(A)		30	100	-	3M-CH-601 TO RDCR AFTER VALVE 278.	R 11/91
.75K-CH-2502	CVC-851		N/A	A312	0.75	0.000	IWC-1222(A)		2450	100	-	3K-CH-2502 TO VALVE 292C.	
.75L-CH-2502	CVC-851		N/A	A312	0.75	0.000	IWC-1222(A)		2450	100	-	3K-CH-2502 TO VALVE 285 ON 1T-CH-151.	
.75M-CH-2502	CVC-852		N/A	A312	0.75	0.000	IWC-1222(A)		2450	100	-	3L-CH-2502 TO VALVE 292D.	
.75N-CH-2502	CVC-852		N/A	A312	0.75	0.000	IWC-1222(A)		2450	100	-	3L-CH-2502 TO VALVE 284 ON 1M-CH-151.	
.75P-CH-2502	CVC-853		N/A	A312	0.75	0.154	IWC-1222(A)		2450	100	-	3M-CH-2502 TO VALVE 292E.	
.75Q-CH-2502	CVC-853		N/A	A312	0.75	0.154	IWC-1222(A)		2450	100	-	3M-CH-2502 TO VALVE 283 ON 1G-CH-151.	
.75R-CH-2502	CVC-851		B-6	A312	0.75	0.154	IWC-1222(A)		2450	100	Y	8A-CH-2502 TO VALVE 281F.	R 11/91
.75S-CH-2502	CVC-852		B-6	A312	0.75	0.154	IWC-1222(A)		2450	100	Y	8B-CH-2502 TO VALVE 281G.	
.75T-CH-2502	CVC-853		B-6	A312	0.75	0.154	IWC-1222(A)		2450	100	Y	8C-CH-2502 TO VALVE 281H.	R 11/91
.75U-CH-2502	CVC-1100		N/A	A312	0.75	0.154	IWC-1222(A)		2450	100	Y	2I-CH-2502 TO VALVE 301A.	
.75V-CH-2502	CVC-1100		N/A	A312	0.75	0.154	IWC-1222(A)		2450	100	Y	2I-CH-2502 TO VALVE 301B.	
.75VV-CH-151			N/A		0.75	0.000	IWC-1222(A)					2V-CH-151 TO VALVE 311B.	A 11/91
.75W-CH-2502	CVC-1100		N/A	A312	0.75	0.154	IWC-1222(A)		2450	100	Y	2J-CH-2502 TO VALVE 298A.	
.75X-CH-2502	CVC-1100		N/A	A312	0.75	0.154	IWC-1222(A)		2450	100	Y	2J-CH-2502 TO VALVE 298B.	
.75Y-CH-151			N/A		0.75	0.000	IWC-1222(A)					2A-CH-151 TO RDCR AT PT139.	A 11/91
.75Z-CH-151	CVC-200		N/A	A312	0.75	0.083	IWC-1222(A)		140	40	Y	3R-CH-151 TO .75X1 RDCR BEFORE VALVE 386	

Printed: 11/09/92

R. E. GINNA NUCLEAR POWER PLANT
Inservice Examination Boundary Line List
Third Inspection Interval

Class....: 2
System...: CVCS-CHARGING
P&ID No..: 33013-1265
Comp Type: PIPING

RG&E Line No.	Gilbert Line No.	SWRI Line No.	ISI Fig.	Matrl.	Size (in.)	Thkns (in.)	Exemption Basis	NDE Method	Po	Temp	In?	Line description/remarks	Revision Status
.5A-CH-151	CVC-1200		N/A	A312	0.50	0.000	IWC-1222(A)		30	100	-	CHR PUMP 1 TO REDUCER.	R 11/91
.5B-CH-151	CVC-1200		N/A	A312	0.50	0.000	IWC-1222(A)		30	100	-	3I-CH-151 TO REDUCER.	R 11/91
.5C-CH-151	CVC-1200		N/A	A312	0.50	0.000	IWC-1222(A)		30	100	-	3J-CH-151 TO REDUCER.	R 11/91
.375B-CH-151			N/A		0.37	0.000	IWC-1222(A)		2450	100	-	CHG PUMP 3 TO DRAIN FM STUFF BOX LEAKOFF	
.375C-CH-151			N/A		0.37	0.000	IWC-1222(A)		2450	100	-	CHG PUMP 3 TO DRAIN FM STUFF BOX LEAKOFF	
.375D-CH-151			N/A		0.37	0.000	IWC-1222(A)		2450	100	-	CHG PUMP 3 TO DRAIN FM STUFF BOX LEAKOFF	
.375E-CH-151	CVC-1200		N/A	A312	0.37	0.000	IWC-1222(A)		2450	100	-	CHG PUMP 2 TO DRAIN FM STUFF BOX LEAKOFF	
.375F-CH-151	CVC-1200		N/A	A312	0.37	0.000	IWC-1222(A)		2450	100	-	CHG PUMP 2 TO DRAIN FM STUFF BOX LEAKOFF	
.375G-CH-151	CVC-1200		N/A	A312	0.37	0.000	IWC-1222(A)		2450	100	-	CHG PUMP 2 TO DRAIN FM STUFF BOX LEAKOFF	
.375H-CH-151	CVC-1200		N/A	A312	0.37	0.000	IWC-1222(A)		2450	100	-	CHG PUMP 1 TO DRAIN FM STUFF BOX LEAKOFF	
.375I-CH-151	CVC-1200		N/A	A312	0.37	0.000	IWC-1222(A)		2450	100	-	CHG PUMP 1 TO DRAIN FM STUFF BOX LEAKOFF	
.375J-CH-151	CVC-1200		N/A	A312	0.37	0.000	IWC-1222(A)		2450	100	-	CHG PUMP 1 TO DRAIN FM STUFF BOX LEAKOFF	
.25A-CH-151			N/A		0.25	0.000	IWC-1222(A)		2450	100	-	1K-CH-151 TO VALVE 2273.	
.25B-CH-151			N/A	A312	0.25	0.000	IWC-1222(A)		2450	100	-	1R-CH-151 TO VALVE 2272 SAMPLE.	R 11/91
.25C-CH-151	CVC-1200		N/A	A312	0.25	0.000	IWC-1222(A)		2450	100	-	1X-CH-151 TO VALVE 2271 SAMPLE.	

Printed: 11/09/92

R. E. GINNA NUCLEAR POWER PLANT
Inservice Examination Boundary Line List
Third Inspection Interval

Class....: 2
System...: CVCS-LETDOWN
P&ID No..: 33013-1264
Comp Type: COMPONENTS

RG&E Line No.	Gilbert Line No.	SWRI Line No.	ISI Fig.	Matrl.	Size (in.)	Thkns (in.)	Exemption Basis	NDE Method	Po	Temp	In?	Line description/remarks	Revision Status
ECH05			N/A		0.00	0.000	IWC-1222(A)		250	350	-	NON-REGENERATIVE HEAT EXCHANGER.	R 11/91
FCH07			B-3		0.00	0.000	IWC-1222(A)		40	100	-	LETDOWN DEMINERALIZER FILTER.	R 11/91

Printed: 11/09/92

R. E. GINNA NUCLEAR POWER PLANT
Inservice Examination Boundary Line List
Third Inspection Interval

Class....: 2
System...: CVCS-LETDOWN
P&ID No..: 33013-1264
Comp Type: PIPING

RG&E Line No.	Gilbert Line No.	SWRI Line No.	ISI Fig.	Matrl.	Size (in.)	Thkns (in.)	Exemption Basis	NDE Method	Po	Temp	In?	Line description/remarks	Revision Status
3M-CH-151	CVC-1000		N/A	A312	3.00	0.120	IWC-1222(A)		30	100	Y	VCT TO RV-209.	R 11/91
2-CH-151	CVC-1110		N/A	A312	2.00	0.109	IWC-1222(A)		20	100	-	2T-CH-151 TO VALVE 252.	R 11/91
2A-CH-601	CVC-105		N/A	A312	2.00	0.154	IWC-1222(A)		250	350	Y	VALVE 200A TO 1ST 2X2X2 TEE.	
2B-CH-601	CVC-105		N/A	A312	2.00	0.154	IWC-1222(A)		250	350	Y	VALVE 200B TO 1ST 2" TEE ON 2A-CH-601.	
2C-CH-601	CVC-105		B-32	A312	2.00	0.154	IWC-1222(A)		250	350	Y	2" TEE ON 2A-CH-601 TO 702 & 703.	R 11/91
2D-CH-601	CVC-105		N/A	A312	2.00	0.154	IWC-1222(A)		250	350	Y	VALVE 202 TO LINE 2C-CH-601.	
2E-CH-601	CVC-105		B-32	A312	2.00	0.154	IWC-1222(A)		250	350	Y	2C-CH-601 TO VALVE 203.	
2F-AC-601	CVC-100		B-17	A312	2.00	0.154	IWC-1221(A)		350	350	Y	THIS LINE ACCOUNTED FOR ON 33013-1247.	A 11/91
2F-CH-601	CVC-100		N/A	A312	2.00	0.154	IWC-1222(A)		250	350	Y	2F-AC-601 TO 2" TEE PAST VALVE HCV-133.	R 11/91
2G-CH-601	CVC-100		B-32	A312	2.00	0.154	IWC-1222(A)		250	350	Y	2" TEE ON 2C-CH-601 TO PEN 112.	
2H-CH-601	CVC-900		B-35	A312	2.00	0.154	IWC-1222(A)		250	350	Y	PEN 112 TO NON-REGEN. HEAT EXCHG.	
2I-CH-601	CVC-900		B-35	A312	2.00	0.154	IWC-1222(A)		250	350	Y	2H-CH-601 TO VALVE 821.	
2J-CH-601	CVC-900		B-35	A312	2.00	0.154	IWC-1222(A)		250	350	Y	2H-CH-601 TO VALVE 820.	
2K-CH-601	CVC-1000		B-36	A312	2.00	0.145	IWC-1222(A)		250	100	Y	DISCHARGE ON NONREGEN HE TO VALVE 135.	R 11/91
2L-CH-601	CVC-1000		B-36	A312	2.00	0.145	IWC-1222(A)		250	100	Y	2K-CH-601 TO VALVE 204D.	R 11/91
2N-CH-151	CVC-1000		B-36A	A312	2.00	0.109	IWC-1222(A)		70	100	Y	VALVE TCV145 TO 2" TEE NEAR VALVE 2237.	R 11/91
2P-CH-151	CVC-1000		B-36A	A312	2.00	0.109	IWC-1222(A)		70	100	Y	2" TEE ON 2N-CH-151 TO 1ST 2" TEE.	R 11/91
2Q-CH-151	CVC-1000		B-36A	A312	2.00	0.109	IWC-1222(A)		40	100	Y	1ST 2" TEE ON 2P-CH-151 TO VALVE 2275.	R 11/91
2R-CH-151	CVC-1110		B-36A	A312	2.00	0.109	IWC-1222(A)		40	100	Y	1ST 2" TEE ON 2P-CH-151 TO RC FILTER.	R 11/91
2S-CH-151	CVC-1110		N/A	A312	2.00	0.109	IWC-1222(A)		40	100	-	2" TEE ON 2R-CH-151 TO 2T-CH-151.	
2T-CH-151	CVC-1110		N/A	A312	2.00	0.109	IWC-1222(A)		20	100	-	RC FILTER TO VALVE LCV112A.	
2U-CH-151	CVC-1110		N/A	A312	2.00	0.109	IWC-1222(A)		30	100	-	VALVE LCV112A PAST VALVE 256 TO VCT.	R 11/91
2V-CH-151	CVC-1110		N/A	A312	2.00	0.109	IWC-1222(A)		20	100	-	2U-CH-151 TO VALVE FCV110C.	
2W-CH-151	CVC-1110		B-36A	A312	2.00	0.109	IWC-1222(A)		40	100	-	2" TEE ON 2P-CH-151 TO VALVE 239B.	R 11/91
2X-CH-151			B-36		2.00	0.000	IWC-1222(A)					2Y-CH-151 TO RV-209 & 204D.	A 11/91
2Y-CH-151			B-36		2.00	0.000	IWC-1222(A)					3 WAY VALVE 145 TO VALVE 135.	A 11/91
.75A-CH-601	CVC-105		N/A	A312	0.75	0.113	IWC-1222(A)		250	350	Y	2A-CH-601 TO VALVE 2200.	
.75B-CH-601	CVC-105		N/A	A312	0.75	0.113	IWC-1222(A)		250	350	Y	2B-CH-601 TO VALVE 2201.	

Printed: 11/09/92

R. E. GINNA NUCLEAR POWER PLANT
Inservice Examination Boundary Line List
Third Inspection Interval

Class....: 2
System...: CVCS-LETDOWN
P&ID No..: 33013-1264
Comp Type: PIPING

RG&E Line No.	Gilbert Line No.	SWRI Line No.	ISI Fig.	Matrl.	Size (in.)	Thkns (in.)	Exemption Basis	NDE Method	Po	Temp	In?	Line description/remarks	Revision Status
.75C-CH-601	CVC-105		N/A	A312	0.75	0.113	IWC-1222(A)		250	350	Y	2D-CH-601 TO VALVE 2202.	
.75D-CH-601	CVC-900		B-35	A312	0.75	0.113	IWC-1222(A)		250	350	Y	2H-CH-601 TO VALVE 2231.	
.75E-CH-601	CVC-900		B-35	A312	0.75	0.113	IWC-1222(A)		250	350	Y	2H-CH-601 TO VALVE 369.	
.75F-CH-601	CVC-900		B-35	A312	0.75	0.113	IWC-1222(A)		250	350	Y	BYPASS 2H-CH-601 PAST V 2232 TO V 2233.	
.75G-CH-601	CVC-1000		B-36	A312	0.75	0.113	IWC-1222(A)		250	100	Y	.75F-CH-601 TO V 2233 COMPLETES BYPASS.	
.75H-CH-601	CVC-1000		B-36	A312	0.75	0.113	IWC-1222(A)		250	100	Y	2K-CH-601 TO VALVE 207A.	
.75I-CH-601	CVC-1000		B-36	A312	0.75	0.113	IWC-1222(A)		250	100	Y	2K-CH-601 TO VALVE 2234.	
.75J-CH-151	CVC-1000		B-36A	A312	0.75	0.083	IWC-1222(A)		70	100	-	2" TEE ON 2N-CH-151 TO VALVE 2237.	R 11/91
.75K-CH-151	CVC-1110		N/A	A312	0.75	0.083	IWC-1222(A)		40	100	-	2R-CH-151 TO VALVE 248A.	
.75L-CH-151	CVC-1110		N/A	A312	0.75	0.083	IWC-1222(A)		40	100	-	REACTOR COOLANT FILTER TO VALVE 251.	
.75M-CH-151	CVC-1110		N/A	A312	0.75	0.083	IWC-1222(A)		40	100	-	REACTOR COOLANT FILTER TO VALVE 389.	
.75P-CH-151	CVC-1110		N/A	A312	0.75	0.083	IWC-1222(A)		20	100	-	2T-CH-151 TO VALVE 2488.	
.75Q-CH-151			N/A	A312	0.75	0.219	IWC-1222(A)		35		-	VALVE HCV123 TO VALVE 312.	R 11/91
.75R-CH-151			N/A		0.75	0.000	IWC-1222(A)		35		-	VALVE 312 TO 311B.	R 11/91
.75S-CH-601	CVC-1000		B-36		0.75	0.113	IWC-1222(A)		250	100	-	2K-CH-601 BYPASS ON VALVES 207C & 207B.	
.75T-CH-601			N/A		0.75	0.113	IWC-1222(A)		250	100	-	2F-CH-601 PAST VALVES 703 & 702.	
.75U-CH-151			B-36		0.75	0.000	IWC-1222(A)					2Y-CH-151 TO VALVE 987.	A 11/91
.75V-CH-151			B-36A		0.75	0.000	IWC-1222(A)		40	100	-	2R-CH-151 TO VALVE 989.	R 11/91

Printed: 11/09/92

R. E. GINNA NUCLEAR POWER PLANT
Inservice Examination Boundary Line List
Third Inspection Interval

Class....: 2
System...: FEEDWATER
P&ID No..: 33013-1236
Comp Type: COMPONENTS

RG&E Line No.	Gilbert Line No.	SWRI Line No.	ISI Fig.	Matrl.	Size (in.)	Thkns (in.)	Exemption Basis	NDE Method	Po	Temp	In?	Line description/remarks	Revision Status
EMS01A			B-1		0.00	0.000		SUR/VOL	715	505		THIS COMP ACCOUNTED FOR ON 33013-1231.	A 11/91
EMS01B			B-1		0.00	0.000		SUR/VOL	715	505		THIS COMP ACCOUNTED FOR ON 33013-1231.	A 11/91

Printed: 11/09/92

R. E. GINNA NUCLEAR POWER PLANT
Inservice Examination Boundary Line List
Third Inspection Interval

Class....: 2
System...: FEEDWATER
P&ID No..: 33013-1236
Comp Type: PIPING-LOOP A

RG&E Line No.	Gilbert Line No.	SWRI Line No.	ISI Fig.	Matrl.	Size (in.)	Thkns (in.)	Exemption Basis	NDE Method	Po	Temp	In?	Line description/remarks	Revision Status
18A-FW-900-1A			B-12		18.00	0.000		SUR/VOL				S/G-A TO 18X14 REDUCER.	A 11/91
14A-FW-900-1A	FW-100	FW-1001	B-11	A106	14.00	0.938		SUR/VOL	715	505	Y	18X14 REDUCER TO VALVE 3993.	R 11/91
3A-FW-900-1A	AFW-500	FW-1001	B-11	A106	3.00	0.300	IWC-1222(A)		715	505	Y	THIS LINE ACCOUNTED FOR ON 33013-1237.	R 11/91
3B-FW-900-1A	AFW-500	FW-1001	B-11	A106	3.00	0.300	IWC-1222(A)		715	505	Y	THIS LINE ACCOUNTED FOR ON 33013-1237.	R 11/91
3C-FW-902S-1A	AFW-500	FW-1001	B-12	A106	3.00	0.300	IWC-1222(A)		715	505	Y	14A-FW-900-1A TO 9706A, 9704A.	R 11/91
1A-FW-900-1A	FW-301	FW-1001	B-11	A106	1.00	0.179	IWC-1222(A)		715	505	Y	BYPASS LINE ON VALVE 3995 THRU 3995A.	R 11/91
1B-FW-900-1A	FW-301	FW-1001	B-11	A106	1.00	0.179	IWC-1222(A)		715	505	Y	DRAIN FROM 14A-FW-900-1A TO & INCL 4099E	R 11/91
1C-FW-900-1A	AFW-500	FW-1001	B-12	A106	1.00	0.179	IWC-1222(A)		715	505	Y	DRAIN FROM 14A-FW-900-1A TO & INCL 3414J	R 11/91
1D-FW-900-1A	FW-301	FW-1001	B-11	A106	1.00	0.179	IWC-1222(A)		715	505	Y	DRAIN FROM 14A-FW-900-1A TO & INCL 8651.	R 11/91
1E-FW-900-1A			B-11		1.00	0.179	IWC-1222(A)					14" CHECK VALVE 3993 EQUALIZING LINE.	A 11/91
.5-CT-901-1A			B-11		0.50	0.000	IWC-1222(A)					14A-FW-900-1A TO 3995X (BORIC ACID CONN)	A 11/91

Printed: 11/09/92

R. E. GINNA NUCLEAR POWER PLANT
Inservice Examination Boundary Line List
Third Inspection Interval

Class....: 2
System...: FEEDWATER
P&ID No..: 33013-1236
Comp Type: PIPING-LOOP B

RG&E Line No.	Gilbert Line No.	SWRI Line No.	ISI Fig.	Matrl.	Size (in.)	Thkns (in.)	Exemption Basis	NDE Method	Po	Temp	In?	Line description/remarks	Revision Status
18B-FW-900-1B			B-13		18.00	0.000		SUR/VOL				S/G-B TO 18X14 REDUCER.	A 11/91
14B-FW-900-1B	FW-200	FW-1005	B-13	A106	14.00	0.938		SUR/VOL	715	505	Y	18X14 REDUCER TO VALVE 3992.	R 11/91
3A-FW-900-1B	AFW-400	FW-1005	B-14	A106	3.00	0.300	IWC-1222(A)		715	505	Y	THIS LINE ACCOUNTED FOR ON 33013-1237.	R 11/91
3B-FW-900-1B	AFW-400	FW-1005	B-14	A106	3.00	0.300	IWC-1222(A)		715	505	Y	THIS LINE ACCOUNTED FOR ON 33013-1237.	R 11/91
3C-FW-902S-1B	AFW-400	FW-1005	B-13	A106	3.00	0.300	IWC-1222(A)		715	505	Y	14B-FW-900-1B TO 9706B, 9704B.	R 11/91
1A-FW-900-1B	FW-300	FW-1005	B-14	A106	1.00	0.179	IWC-1222(A)		715	505	Y	DRAIN FROM 14B-FW-900-1B TO & INCL 8650.	R 11/91
1B-FW-900-1B	FW-300	FW-1005	B-14	A106	1.00	0.179	IWC-1222(A)		715	505	Y	BYPASS ON VALVE 3994 THRU 3994A.	R 11/91
1C-FW-900-1B	FW-300	FW-1005	B-14	A106	1.00	0.179	IWC-1222(A)		715	505	Y	DRAIN FROM 14B-FW-900-1B TO & INCL 3994E	R 11/91
1D-FW-900-1B	AFW-400	FW-1005	B-13	A106	1.00	0.179	IWC-1222(A)		715	505	Y	DRAIN FROM 14B-FW-900-1B TO & INCL 3415J	R 11/91
1E-FW-900-1B			B-14		1.00	0.179	IWC-1222(A)					14" CHECK VALVE 3992 EQUALIZING LINE.	A 11/91
.5-CT-901-1B			B-14		0.50	0.000	IWC-1222(A)					14B-FW-900-1B TO 3994X (BORIC ACID CONN)	A 11/91

Printed: 11/09/92

R. E. GINNA NUCLEAR POWER PLANT
Inservice Examination Boundary Line List
Third Inspection Interval

Class....: 2
System...: FIRE PROTECTION IN CONTAINMENT
P&ID No..: 33013-1991
Comp Type: PIPING

RG&E Line No.	Gilbert Line No.	SWRI Line No.	ISI Fig.	Matrl.	Size (in.)	Thkns (in.)	Exemption Basis	NDE Method	Po	Temp	In?	Line description/remarks	Revision Status
4A-FS-152			N/A		4.00	0.000	IWC-1222(A)		135	80	•	VALVE 9227 TO VALVE 9229 IN CONTAINMENT.	R 11/91
2A-FS-000			N/A		2.00	0.000	IWC-1221(A)					VALVE 5129 AT PEN P103 TO 5130.	A 11/91
1A-FS-152			N/A		1.00	0.000	IWC-1222(A)		135	80	•	4A-FS-152 IN CONTAINMENT TO VALVE 9228.	R 11/91

Printed: 11/09/92

R. E. GINNA NUCLEAR POWER PLANT
Inservice Examination Boundary Line List
Third Inspection Interval

Class....: 2
System...: HEATING STEAM & CONDENSATE
P&ID No..: 33013-1915
Comp Type: PIPING

RG&E Line No.	Gilbert Line No.	SWRI Line No.	ISI Fig.	Matrl.	Size (in.)	Thkns (in.)	Exemption Basis	NDE Method	Po	Temp	In?	Line description/remarks	Revision Status
2-HS-150-4			N/A		2.00	0.000	IWC-1222(A)					PENETRATION 301 TO VALVE 6165.	A 11/91
1-HS-150-4			N/A		1.00	0.000	IWC-1222(A)					PENETRATION 301 TO VALVE 6152.	A 11/91

Printed: 11/09/92

R. E. GINNA NUCLEAR POWER PLANT
Inservice Examination Boundary Line List
Third Inspection Interval

Class....: 2
System...: HVAC-AUXILIARY & INTERM. BLDG.
P&ID No..: 33013-1870
Comp Type: PIPING

RG&E Line No.	Gilbert Line No.	SWRI Line No.	ISI Fig.	Matrl.	Size (in.)	Thkns (in.)	Exemption Basis	NDE Method	Po	Temp	In?	Line description/remarks	Revision Status
8A-CFA			N/A		8.00	0.000	IWC-1222(C)		.5	110	-	FILTER INLET IN CONT TO 8X6 RDCR.	
6A-CFA			N/A		6.00	0.000	IWC-1222(C)		.5	110	-	8A, 8X6 RDCR PAST PEN 132 TO V 7971.	R 11/91

Printed: 11/09/92

R. E. GINNA NUCLEAR POWER PLANT
Inservice Examination Boundary Line List
Third Inspection Interval

Class....: 2
System...: HVAC-CONTAINMENT
P&ID No..: 33013-1865
Comp Type: PIPING

RG&E Line No.	Gilbert Line No.	SWRI Line No.	ISI Fig.	Matrl.	Size (in.)	Thkns (in.)	Exemption Basis	NDE Method	Po	Temp	In?	Line description/remarks	Revision Status
6A-MPS-2000			N/A		6.00	0.000	IWC-1222(C)		125	80	-	V 7445 OUT CONT PAST PEN 309 TO V 7478.	

Printed: 11/09/92

R. E. GINNA NUCLEAR POWER PLANT
Inservice Examination Boundary Line List
Third Inspection Interval

Class....: 2
System...: INSTRUMENT AIR - CONTNMT BLDG
P&ID No..: 33013-1887
Comp Type: PIPING

RG&E Line No.	Gilbert Line No.	SWRI Line No.	ISI Fig.	Matrl.	Size (in.)	Thkns (in.)	Exemption Basis	NDE Method	Po	Temp	In?	Line description/remarks	Revision Status
2-IA-125-8			N/A		2.00	0.000	IWC-1222(A)					VALVE 5392 THRU PEN 310 TO VALVE 5393.	A 11/91

Printed: 11/09/92

R. E. GINNA NUCLEAR POWER PLANT
Inservice Examination Boundary Line List
Third Inspection Interval

Class....: 2
System...: INSTRUMENT AIR - INTERM BLDG
P&ID No..: 33013-1893
Comp Type: PIPING

RG&E Line No.	Gilbert Line No.	SWRI Line No.	ISI Fig.	Matrl.	Size (in.)	Thkns (in.)	Exemption Basis	NDE Method	Po	Temp	In?	Line description/remarks	Revision Status
2-IA-125-8			N/A		2.00	0.000	IWC-1222(A)					THIS LINE ACCOUNTED FOR ON 33013-1887.	A 11/91

Printed: 11/09/92

R. E. GINNA NUCLEAR POWER PLANT
Inservice Examination Boundary Line List
Third Inspection Interval

Class....: 2
System...: MAIN STEAM
P&ID No..: 33013-1231
Comp Type: COMPONENTS

RG&E Line No.	Gilbert Line No.	SWRI Line No.	ISI Fig.	Matrl.	Size (in.)	Thkns (in.)	Exemption Basis	NDE Method	Po	Temp	In?	Line description/remarks	Revision Status
EMS01A			B-1		0.00	0.000		SUR/VOL	715	505	-	STEAM GENERATOR A.	R 11/91
EMS01B			B-1		0.00	0.000		SUR/VOL	715	505	-	STEAM GENERATOR B.	R 11/91

Printed: 11/09/92

R. E. GINNA NUCLEAR POWER PLANT
Inservice Examination Boundary Line List
Third Inspection Interval

Class....: 2
System...: MAIN STEAM
P&ID No..: 33013-1231
Comp Type: PIPING-LOOP A

RG&E Line No.	Gilbert Line No.	SWRI Line No.	ISI Fig.	Matrl.	Size (in.)	Thkns (in.)	Exemption Basis	NDE Method	Po	Temp	In?	Line description/remarks	Revision Status
30A-MS-600-1A	MS-100	MS-1000	B-8	A115	30.00	1.250		SUR/VOL	715	505	Y	S/G 1A TO VALVE 3517.	
6A-MS-600-1A	MS-100	MS-1000	B-9A	A106	6.00	0.432		SUR/VOL	715	505	Y	30" MS PIPE TO VALVE 3505A.	R 11/91
6B-MS-600-1A	MS-300	MS-1000	B-9A	A106	6.00	0.432		SUR/VOL	715	505	Y	30" MS PIPE TO VALVE 3411.	R 11/91
6C-MS-600-1A	MS-300	MS-1000	B-9A	A106	6.00	0.432		SUR/VOL	715	505	Y	30" MS PIPE TO VALVE 3509.	R 11/91
6D-MS-600-1A	MS-300	MS-1000	B-9A	A106	6.00	0.432		SUR/VOL	715	505	Y	30" MS PIPE TO VALVE 3511.	R 11/91
6E-MS-600-1A	MS-300	MS-1000	B-9A	A106	6.00	0.432		SUR/VOL	715	505	Y	30" MS PIPE TO VALVE 3513.	R 11/91
6F-MS-600-1A	MS-300	MS-1000	B-9A	A106	6.00	0.432		SUR/VOL	715	505	Y	30" MS PIPE TO VALVE 3515.	R 11/91
6G-MS-600-1A	MS-300	MS-1000	B-9A	A106	6.00	0.432		SUR/VOL	715	505	Y	30" MS PIPE TO 6X2 REDUCER.	R 11/91
3A-MS-600-1A	MS-300	MS-1000	B-9A	A106	3.00	0.300	IWC-1222(A)		715	505	Y	30" MS PIPE TO VALVE 3615 (3517 BYPASS).	R 11/91
2A-MS-600-1A			B-9A		2.00	0.000	IWC-1222(A)					6G-MS-600-1A TO VALVE 3521.	A 11/91
1.5A-MS-600-1A	MS-300	MS-1000	B-9	A106	1.50	0.145	IWC-1222(A)		715	505	Y	30" MS PIPE TO VALVE 3455.	
1.5B-MS-600-1A	MS-300	MS-1000	B-9A	A106	1.50	0.147	IWC-1222(A)		715	505	Y	6A-MS-600-1A TO VALVE 3505C.	R 11/91
1E-MS-600-1A	MS-300	MS-1000	B-9	A106	1.50	0.145	IWC-1222(A)		715	505	Y	30" MS PIPE TO VALVE 3453A.	R 11/91
1A-MS-600-1A	MS-300	MS-1000	B-9A	A106	1.00	0.179	IWC-1222(A)		715	505	Y	30" MS PIPE TO VALVE 3669.	R 11/91
1B-MS-600-1A	MS-300	MS-1000	B-9	A106	1.00	0.179	IWC-1222(A)		715	505	Y	30" MS PIPE TO VALVE 3445A.	R 11/91
1C-MS-600-1A	MS-300	MS-1000	B-9	A106	1.00	0.179	IWC-1222(A)		715	505	Y	30" MS PIPE TO VALVE 3409A.	R 11/91
1D-MS-600-1A	MS-300	MS-1000	B-9	A106	1.00	0.179	IWC-1222(A)		715	505	Y	30" MS PIPE TO VALVE 3447A.	R 11/91
.75A-MS-600-1A	MS-300	MS-1000	B-9A	A106	0.75	0.154	IWC-1222(A)		715	505	Y	BYPASS LINE FOR VALVE 3507.	R 11/91
.75B-MS-600-1A	MS-100	MS-1000	B-8	A106	0.75	0.154	IWC-1222(A)		715	505	Y	30" MS PIPE TO VALVE 3405.	
.75C-MS-600-1A	MS-100	MS-1000	B-8	A106	0.75	0.154	IWC-1222(A)		715	505	Y	30" MS PIPE TO VALVE 3407.	
.75D-MS-600-1A			B-8		0.75	0.154	IWC-1222(A)					30" MS PIPE TO VALVE 3401.	A 11/91
.75E-MS-600-1A			B-8		0.75	0.154	IWC-1222(A)					30" MS PIPE TO VALVE 3403.	A 11/91
.5A-MS-600-1A			B-8		0.50	0.000	IWC-1222(A)					30" MS PIPE TO VALVE 3503.	A 11/91
.5B-MS-600-1A			B-9A		0.50	0.000	IWC-1222(A)					30" MS BRANCH CONNECTION.	A 11/91

Printed: 11/09/92

R. E. GINNA NUCLEAR POWER PLANT
Inservice Examination Boundary Line List
Third Inspection Interval

Class....: 2
System...: MAIN STEAM
P&ID No..: 33013-1231
Comp Type: PIPING-LOOP B

RG&E Line No.	Gilbert Line No.	SWRI Line No.	ISI Fig.	Matrl.	Size (in.)	Thkns (in.)	Exemption Basis	NDE Method	Po	Temp	In?	Line description/remarks	Revision Status
30B-MS-600-1B	MS-200	SMS-1001	B-8	A115	30.00	1.250		SUR/VOL	715	505	Y	S/G 1B TO VALVE 3516.	
6A-MS-600-1B	MS-300	SMS-1001	B-10	A106	6.00	0.432		SUR/VOL	715	505	Y	30" MS PIPE TO VALVE 3504A.	
6B-MS-600-1B	MS-120	SMS-1001	B-10	A106	6.00	0.432		SUR/VOL	715	505	Y	30" MS-PIPE TO VALVE 3410.	
6C-MS-600-1B	MS-300	SMS-1001	B-10	A106	6.00	0.432		SUR/VOL	715	505	Y	30" MS PIPE TO VALVE 3508.	
6D-MS-600-1B	MS-300	SMS-1001	B-10	A106	6.00	0.432		SUR/VOL	715	505	Y	30" MS PIPE TO VALVE 3510.	
6E-MS-600-1B	MS-300	SMS-1001	B-10	A106	6.00	0.432		SUR/VOL	715	505	Y	30" MS PIPE TO VALVE 3512.	
6F-MS-600-1B	MS-300	SMS-1001	B-10	A106	6.00	0.432		SUR/VOL	715	505	Y	30" MS PIPE TO VALVE 3514.	
6G-MS-600-1B	MS-300	SMS-1001	B-10	A106	6.00	0.432		SUR/VOL	715	505	Y	30" MS PIPE TO 6X2 REDUCER.	R 11/91
3A-MS-600-1B	MS-300	SMS-1001	B-10	A106	3.00	0.300	IWC-1222(A)		715	505	Y	30" MS PIPE TO VALVE 3614 (3516 BYPASS).	R 11/91
2A-MS-600-1B			B-10		2.00	0.000	IWC-1222(A)					6G-MS-600-1B TO VALVE 3520.	A 11/91
1.5A-MS-600-1B	MS-300	SMS-1001	B-10	A106	1.50	0.145	IWC-1222(A)		715	505	Y	6A-MS-600-1B TO VALVE 3504C.	
1A-MS-600-1B	MS-300	SMS-1001	B-10	A106	1.00	0.179	IWC-1222(A)		715	505	Y	30" MS PIPE TO VALVE 3668.	
1B-MS-600-1B	MS-300	SMS-1001	B-10A	A106	1.00	0.179	IWC-1222(A)		715	505	Y	30" MS PIPE TO VALVE 3448A.	R 11/91
1C-MS-600-1B	MS-300	SMS-1001	B-10A	A106	1.00	0.179	IWC-1222(A)		715	505	Y	30" MS PIPE TO VALVE 3446A.	R 11/91
1D-MS-600-1B	MS-300	SMS-1001	B-10A	A106	1.00	0.179	IWC-1222(A)		715	505	Y	30" MS PIPE TO VALVE 3408A.	R 11/91
1E-MS-600-1B	MS-300	SMS-1001	B-10A	A106	1.00	0.179	IWC-1222(A)		715	505	Y	30" MS PIPE TO VALVE 3454A.	R 11/91
.75A-MS-600-1B	MS-120	SMS-1001	B-10	A106	0.75	0.154	IWC-1222(A)		715	505	Y	6B-MS-600-1B BYPASS TO VALVE 3506.	
.75B-MS-600-1B	MS-200	SMS-1001	B-8	A106	0.75	0.154	IWC-1222(A)		715	505	Y	30" MS PIPE TO VALVE 3406.	
.75C-MS-600-1B	MS-200	SMS-1001	B-8	A106	0.75	0.154	IWC-1222(A)		715	505	Y	30" MS PIPE TO VALVE 3404.	
.75D-MS-600-1B			B-8		0.75	0.154	IWC-1222(A)					30" MS PIPE TO VALVE 3400.	A 11/91
.75E-MS-600-1B			B-8		0.75	0.154	IWC-1222(A)					30" MS PIPE TO VALVE 3402.	A 11/91
.5A-MS-600-1B			B-8		0.50	0.000	IWC-1222(A)					30" MS PIPE TO VALVE 3500.	A 11/91
.5B-MS-600-1B			B-10		0.50	0.000	IWC-1222(A)					30" MS BRANCH CONNECTION.	A 11/91
.5C-MS-600-1B			B-10A		0.50	0.000	IWC-1222(A)					30" MS PIPE TO VALVE 3456.	A 11/91

Printed: 11/09/92

R. E. GINNA NUCLEAR POWER PLANT
Inservice Examination Boundary Line List
Third Inspection Interval

Class....: 2
System...: NUCLEAR SAMPLING
P&ID No..: 33013-1278
Comp Type: PIPING

RG&E Line No.	Gilbert Line No.	SWRI Line No.	ISI Fig.	Matrl.	Size (in.)	Thkns (in.)	Exemption Basis	NDE Method	Po	Temp	In?	Line description/remarks	Revision Status
1Z-CH-151			N/A		1.00	0.000	IWC-1222(A)		30	100	-	THIS LINE ACCOUNTED FOR ON 33013-1265.	R 11/91
.75F-SL-2505			N/A		0.75	0.000	IWC-1222(A)		30	100	-	THIS LINE ACCOUNTED FOR ON 33013-1265.	R 11/91
.5A-SL-151			N/A		0.50	0.000	IWC-1222(A)		30	80	-	VALVE 999B TO 1ST .5X.5X.5 TEE.	
.5B-SL-151			N/A		0.50	0.000	IWC-1222(A)		30	80	-	VALVE 969 TO 1ST .5X.5X.5 TEE.	
.375A-SL-2505			N/A		0.37	0.000	IWC-1222(A)		2235	602	-	VALVE 966C OUT CONT TO PEN 205.	
.375B-SL-2505			N/A		0.37	0.000	IWC-1222(A)		2235	650	-	V 966B OUT CONT PAST PEN 206 TO V 953.	
.375C-SL-2505			N/A		0.37	0.000	IWC-1222(A)		2235	650	-	V 966A OUT CONT PAST PEN 207 TO V 951.	
.375D-SL-2505			N/A		0.37	0.000	IWC-1222(A)		40	110	-	VALVE 974 TO VALVE 989.	R 11/91
.375E-SL-2505			N/A		0.37	0.000	IWC-1222(A)		250	110	-	VALVE 987 TO VALVE 988.	R 11/91
.375G-SL-2505			N/A		0.37	0.000	IWC-1222(A)		2235	602	-	VALVE 959 TO VALVE 958.	
.375H-SL-2505			N/A		0.37	0.000	IWC-1222(A)		2235	602	-	PEN 205 PAST DELAY COIL TO VALVE 955.	R 11/91
.375I-SL-2505			N/A		0.37	0.000	IWC-1222(A)		2235	602	-	.375H-SL-2505 TO VALVE 998.	R 11/91
.25A-SL-000			N/A		0.25	0.000	IWC-1222(A)					CONTAINMENT TO A H2 ANALYZER.	A 11/91
.25B-SL-000			N/A		0.25	0.000	IWC-1222(A)					CONTAINMENT TO B H2 ANALYZER.	A 11/91
.25C-SL-000			N/A		0.25	0.000	IWC-1222(A)					FROM A & B ANALYZER TO CONTAINMENT.	A 11/91

Printed: 11/09/92

R. E. GINNA NUCLEAR POWER PLANT
Inservice Examination Boundary Line List
Third Inspection Interval

Class....: 2
System...: POST ACCIDENT SAMPLING
P&ID No..: 33013-1279
Comp Type: PIPING

RG&E Line No.	Gilbert Line No.	SWRI Line No.	ISI Fig.	Matrl.	Size (in.)	Thkns (in.)	Exemption Basis	NDE Method	Po	Temp	In?	Line description/remarks	Revision Status
3A-SS-151			N/A		3.00	0.000	IWC-1222(A)					PEN P107 TO VALVE 1723.	A 11/91
.5A-SS-153			N/A		0.50	0.000	IWC-1222(A)		30	80	-	TEE ON .5A-SL-151 & .5B TO VALVE 426B.	R 11/91
.5B-SS-2505			N/A		0.50	0.000	IWC-1222(A)		30	80	-	.5A-SS-153 TO VALVE 426.	R 11/91

Printed: 11/09/92

R. E. GINNA NUCLEAR POWER PLANT
Inservice Examination Boundary Line List
Third Inspection Interval

Class....: 2
System...: PRIMARY WATER TREATMENT
P&ID No..: 33013-1908
Comp Type: PIPING

RG&E Line No.	Gilbert Line No.	SWRI Line No.	ISI Fig.	Matrl.	Size (in.)	Thkns (in.)	Exemption Basis	NDE Method	Po	Temp	In?	Line description/remarks	Revision Status
3-PW-125-1			N/A		3.00	0.000	IWC-1222(A)					3X2 RDCR OUTSIDE TO 3X2 RDCR INSIDE.	A 11/91
2-PW-125-1			N/A		2.00	0.000	IWC-1222(A)					VALVE 8418 TO 3X2 RDCR OUTSIDE CONTNMT.	A 11/91
2A-PW-125-1			N/A		2.00	0.000	IWC-1222(A)					3X2 RDCR INSIDE CONTNMT TO VALVE 8419.	A 11/91

Printed: 11/09/92

R. E. GINNA NUCLEAR POWER PLANT
Inservice Examination Boundary Line List
Third Inspection Interval

Class....: 2
System...: RCS OVERPRESS. PROT. N2 ACCUM.
P&ID No..: 33013-1263
Comp Type: COMPONENTS

RG&E Line No.	Gilbert Line No.	SWRI Line No.	ISI Fig.	Matrl.	Size (in.)	Thkns (in.)	Exemption Basis	NDE Method	Po	Temp	In?	Line description/remarks	Revision Status
TRC03A			N/A		0.00	0.000	IWC-1222(A)					OVERPRESSURE PROTECTION ACCUMULATOR A.	A 11/91
TRC03B			N/A		0.00	0.000	IWC-1222(A)					OVERPRESSURE PROTECTION ACCUMULATOR B.	A 11/91
TRC04A			N/A		0.00	0.000	IWC-1222(A)					OVERPRESSURE PROTECTION N2 SURGE TANK A.	A 11/91
TRC04B			N/A		0.00	0.000	IWC-1222(A)					OVERPRESSURE PROTECTION N2 SURGE TANK B.	A 11/91

Printed: 11/09/92

R. E. GINNA NUCLEAR POWER PLANT
Inservice Examination Boundary Line List
Third Inspection Interval

Class....: 2
System...: RCS OVERPRESS. PROT. N2 ACCUM.
P&ID No..: 33013-1263
Comp Type: PIPING

RG&E Line No.	Gilbert Line No.	SWRI Line No.	ISI Fig.	Matrl.	Size (in.)	Thkns (in.)	Exemption Basis	NDE Method	Po	Temp	In?	Line description/remarks	Revision Status
1A-RCSOP-A			N/A		1.00	0.000	IWC-1222(A)				?	PCV-430 TO VALVE 8606A.	
1B-RCSOP-B			N/A		1.00	0.000	IWC-1222(A)				?	PCV-431C TO VALVE 8606B.	

Printed: 11/09/92

R. E. GINNA NUCLEAR POWER PLANT
Inservice Examination Boundary Line List
Third Inspection Interval

Class....: 2
System...: REACTOR COOLANT
P&ID No..: 33013-1260
Comp Type: PIPING

RG&E Line No.	Gilbert Line No.	SWRI Line No.	ISI Fig.	Matrl.	Size (in.)	Thkns (in.)	Exemption Basis	NDE Method	Po	Temp	In?	Line description/remarks	Revision Status
6-AC-601	RHR-100	6-RH-2015	B-17	A312	6.00	0.280		SUR/VOL	350	350	Y	THIS LINE ACCOUNTED FOR ON 33013-1247.	R 11/91
6A-AC-601	RHR-100	6-RH-2016	B-18	A312	6.00	0.280		SUR/VOL	350	350	Y	THIS LINE ACCOUNTED FOR ON 33013-1247.	R 11/91
.75C-RC-2501			N/A		0.75	0.000	IWC-1222(A)		0	0	-	SEAL CHAMBER VENT PAST VALVES 598 & 599.	
.75D-RC-2501			N/A		0.75	0.000	IWC-1222(A)		0	100	-	FLANGE PAST VALVE SV592 TO VALVE SV590.	
.75E-RC-2501			N/A		0.75	0.000	IWC-1222(A)		0	100	-	FLANGE PAST VALVE SV593 TO VALVE SV591.	
.5A-RC-2501			N/A		0.50	0.000	IWC-1222(A)		2235	80	-	VALVE 597 TO LT490A & LT490B.	R 11/91
.375A-RC-2501			N/A		0.37	0.000	IWC-1222(A)		2235	80	-	VALVE 595 TO LT490A & LT490B.	R 11/91
.375B-RC-2501			N/A		0.37	0.000	IWC-1222(A)		2235	80	-	TUBING ON .75G THRU SEAL CHAMBER TO 595.	R 11/91

Printed: 11/09/92

R. E. GINNA NUCLEAR POWER PLANT
Inservice Examination Boundary Line List
Third Inspection Interval

Class....: 2
System...: REACTOR COOLANT-PRESSURIZER
P&ID No..: 33013-1258
Comp Type: PIPING

RG&E Line No.	Gilbert Line No.	SWRI Line No.	ISI Fig.	Matrl.	Size (in.)	Thkns (in.)	Exemption Basis	NDE Method	Po	Temp	In?	Line description/remarks	Revision Status
2A-RC-151			N/A		2.00	0.000	IWC-1222(A)		60	70	-	VALVE 529 BY PEN 121 TO VALVE 508.	
.75A-RC-151			N/A		0.75	0.000	IWC-1222(A)		125	70	-	VALVE 528 BY PEN 121 TO VALVE 441.	
.375A-RC-250S			N/A		0.37	0.000	IWC-1222(A)		5	90	-	PEN 120 IN CONT TO VALVE 539 OUT CONT.	R 11/91

Printed: 11/09/92

R. E. GINNA NUCLEAR POWER PLANT
Inservice Examination Boundary Line List
Third Inspection Interval

Class....: 2
System...: SAFETY INJECTION
P&ID No..: 33013-1262
Comp Type: COMPONENTS

RG&E Line No.	Gilbert Line No.	SWRI Line No.	ISI Fig.	MatrL	Size (in.)	Thkns (in.)	Exemption Basis	NDE Method	Po	Temp	In?	Line description/remarks	Revision Status
PSI01A			N/A		0.00	0.000	NO IWA	VT	1550	200	-	SAFETY INJECTION PUMP A, MFG=WORTHINGTON	R 01/92
PSI01B			N/A		0.00	0.000	NO IWA	VT	1550	200	-	SAFETY INJECTION PUMP B, MFG=WORTHINGTON	R 01/92
PSI01C			N/A		0.00	0.000	NO IWA	VT	1550	200	-	SAFETY INJECTION PUMP C, MFG=WORTHINGTON	R 01/92
TSI03A			N/A		0.00	0.000	IWC-1221(E)		740	80	-	SAFETY INJECTION ACCUMULATOR A.	R 11/91
TSI03B			N/A		0.00	0.000	IWC-1221(E)		740	80	-	SAFETY INJECTION ACCUMULATOR B.	R 11/91

Printed: 11/09/92

R. E. GINNA NUCLEAR POWER PLANT
Inservice Examination Boundary Line List
Third Inspection Interval

Class....: 2
System...: SAFETY INJECTION
P&ID No..: 33013-1262
Comp Type: PIPING

RG&E Line No.	Gilbert Line No.	SWRI Line No.	ISI Fig.	Matrl.	Size (in.)	Thkns (in.)	Exemption Basis	NDE Method	Po	Temp	In?	Line description/remarks	Revision Status
10A-SI-902	SIS-200		N/A	A376	10.00	1.000	IWC-1221(E)		740	80	-	ACCUMULATOR 1 TO VALVE 841.	R 11/91
10B-SI-902	SIS-200		N/A	A376	10.00	1.000	IWC-1221(E)		740	80	-	10A-SI-902 TO CAP ON TEE.	
10C-SI-2501	SIS-200		N/A	A376	10.00	1.000	IWC-1221(E)		740	80	-	VALVE 841 TO 842A INCLD CAP ON TEE.	R 11/91
10D-SI-902	SI-100		N/A	A376	10.00	1.000	IWC-1221(E)		740	80	Y	ACCUMULATOR 2 TO VALVE 865.	R 11/91
10E-SI-902	SI-100		N/A	A376	10.00	1.000	IWC-1221(E)		740	80	-	10D-SI-902 TO TEE CAP.	
10F-SI-2501	SI-100		N/A	A376	10.00	1.000	IWC-1221(E)		740	80	-	VALVE 865 TO 842B INCLD CAP ON TEE.	R 11/91
8A-SI-301B	SI-400,8-SI-301	8-SI-2001	B-15	A312	8.00	0.322		SUR/VOL	5	210	Y	THIS LINE ACCOUNTED FOR ON 33013-1266.	R 11/91
8B-SI-301A	SI-400,8-SI-301	8-SI-2001	B-15	A312	8.00	0.322		SUR/VOL	5	210	Y	THIS LINE ACCOUNTED FOR ON 33013-1266.	R 11/91
8C-SI-301	SI-400,8-SI-301	8-SI-2001	B-15	A312	8.00	0.322		SUR/VOL	200	200	Y	8A/8B-SI-301 TO 1ST 8" TEE.	R 11/91
8D-SI-301	SI-400,SI-301	8-SI-2003	B-16	A312	8.00	0.322		SUR/VOL	200	200	Y	8C-SI-301 TO TEE PAST VALVE 826B.	R 11/91
8E-SI-301	SI-400,8-SI-301	8-SI-2002	B-16	A312	8.00	0.322		SUR/VOL	200	200	Y	8C-SI-301 TO 1ST TEE PAST VALVE 826D.	R 11/91
8F-SI-301	SI-400,RHR-450	8-SI-2003	B-16A	A312	8.00	0.322		SUR/VOL	200	200	Y	8D/8E-SI-301 TO 1ST 8X4 RDCR.	R 11/91
8G-SI-301	RHR-450		B-19	A312	8.00	0.322		SUR/VOL	200	200	Y	8F-SI-301 TO VALVE 825A.	R 11/91
8H-SI-301	RHR-450		B-16	A312	8.00	0.322		SUR/VOL	200	200	-	8F-SI-301 TO VALVE 825B.	R 11/91
8J-SI-151			B-19		8.00	0.000		SUR/VOL				VALVE 825B TO 10-SI-151.	A 11/91
8L-SI-151			B-19		8.00	0.000		SUR/VOL				VALVE 825A TO 10-SI-151.	A 11/91
6L-SI-601			B-16B		6.00	0.280		SUR/VOL				4C-SI-301 TO VALVE 1816B.	A 01/92
4-SI-301	RHR-450		B-16B	A312	4.00	0.237	IWC-1221(A)		200	200	Y	8F-SI-301 TO SI PUMP SUCTION A.	R 11/91
4A-SI-301	RHR-450		B-16B	A312	4.00	0.237	IWC-1221(A)		200	200	Y	8H-SI-301 TO SI PUMP SUCTION B.	R 11/91
4B-SI-301	RHR-450		B-16B	A312	4.00	0.237	IWC-1221(A)		200	200	Y	8G-SI-301 TO SI PUMP SUCTION C.	R 11/91
4C-SI-301	RHR-450		B-16B	A312	4.00	0.237	IWC-1221(A)		200	200	Y	4B-SI-301 TO 1816A.	R 11/91
4D-SI-1501	SI-300,SI-210		B-37	A312	4.00	0.337		SUR/VOL	1550	200	N	3A-SI-1501 THRU PEN 113 TO 4X4X3 TEE.	R 11/91
4E-SI-1501	SI-300,SI-110		B-42	A312	4.00	0.337		SUR/VOL	1550	200	-	3E-SI-1501 THRU PEN 101 TO 4X4X3 TEE.	R 11/91
3A-SI-1501	SI-300		B-37	A312	3.00	0.300		SUR/VOL	1550	200	-	SI PUMP A TO 4X3 RDCR AFTER VALVE 888A.	R 11/91
3B-SI-1501	SI-300		B-40	A312	3.00	0.300		SUR/VOL	1550	200	-	SI PUMP C PAST FLANGE TO 3" TEE.	
3C-SI-1501	SI-300		B-41	A312	3.00	0.300		SUR/VOL	1550	200	-	3" TEE FROM 3B TO 871A, 870A, & 4D.	R 11/91
3D-SI-1501	SI-300		B-41	A312	3.00	0.300		SUR/VOL	1550	200	-	3" TEE FROM 3B TO 871B, 870B, & 4E.	R 11/91
3E-SI-1501	SI-300		B-42	A312	3.00	0.300		SUR/VOL	1550	200	-	SI PUMP B TO 4X3 RDCR AFTER VALVE 888B.	R 11/91

Printed: 11/09/92

R. E. GINNA NUCLEAR POWER PLANT
Inservice Examination Boundary Line List
Third Inspection Interval

Class....: 2
System...: SAFETY INJECTION
P&ID No..: 33013-1262
Comp Type: PIPING

RG&E Line No.	Gilbert Line No.	SWRI Line No.	ISI Fig.	Matrl.	Size (in.)	Thkns (in.)	Exemption Basis	NDE Method	Po	Temp	In?	Line description/remarks	Revision Status
2A-SI-1501	SI-210		B-39	A312	2.00	0.218		SUR	1550	200	N	4D-SI-1501 TO VALVE 878A.	R 11/91
2B-SI-1501	SI-210		B-39	A376	2.00	0.218		SUR	1550	200	N	4D-SI-1501 TO VALVE 878B.	R 11/91
2C-SI-1501	SI-110		B-45	A376	2.00	0.343		SUR	1550	200	Y	4" TEE ON 4E-SI-1501 TO VALVE 878D.	R 11/91
2D-SI-1501	SI-110		B-44	A312	2.00	0.218		SUR	1550	200	Y	4" TEE ON 4E-SI-1501 TO VALVE 878C.	R 11/91
2E-SI-1501			B-54		2.00	0.000		SUR				SI PUMPS DISG RDCRS TO VALVES 898 & 897.	A 11/91
2G-SI-902	SIS-200		N/A	A312	2.00	0.343	IWC-1221(E)		740	80	-	10A-SI-902 TO VALVE 844A.	
2H-SI-902	SI-101		N/A	A312	2.00	0.154	IWC-1221(E)		740	80	-	10D-SI-902 TO VALVE 844B.	
2I-SI-902			N/A	A312	2.00	0.154	IWC-1221(E)		740	80	-	ACCUMULATOR 1 PAST V 833A TO LT 939.	
2J-SI-902			N/A	A312	2.00	0.154	IWC-1221(E)		740	80	-	LT 939 PAST V 833B TO ACCUMULATOR 1.	
2K-SI-902			N/A	A312	2.00	0.154	IWC-1221(E)		740	80	-	ACCUMULATOR 1 PAST V 832A TO LT 938.	
2L-SI-902			N/A	A312	2.00	0.154	IWC-1221(E)		740	80	-	LT 938 PAST V 832B TO ACCUMULATOR 1.	
2M-SI-902			N/A	A312	2.00	0.154	IWC-1221(E)		740	80	-	ACCUMULATOR 2 PAST V 837A TO LT 934.	
2N-SI-902			N/A	A312	2.00	0.154	IWC-1221(E)		740	80	-	LT 934 PAST V 837B TO ACCUMULATOR 2.	
2P-SI-902			N/A	A312	2.00	0.154	IWC-1221(E)		740	80	-	ACCUMULATOR 2 PAST V 838A TO LT 935.	R 11/91
2Q-SI-902			N/A	A312	2.00	0.154	IWC-1221(E)		740	80	-	LT 935 PAST V 838B TO ACCUMULATOR 2.	R 11/91
2R-SI-2501			B-45		2.00	0.000		SUR				VALVE 878D TO VALVE 878J.	A 11/91
2S-SI-2501			B-44		2.00	0.000		SUR				VALVE 878C TO VALVE 878H.	A 11/91
2T-SI-2501			B-39		2.00	0.000		SUR				VALVE 878B TO VALVE 878G.	A 11/91
2U-SI-2501			B-39		2.00	0.000		SUR				VALVE 878A TO VALVE 878E.	A 11/91
2V-SI-2501			N/A		2.00	0.000	IWC-1221(E)					DRAIN OFF 2G-SI-902.	A 11/91
2W-SI-2501			N/A		2.00	0.000	IWC-1221(E)					DRAIN OFF 2H-SI-902.	A 11/91
1.5A-SI-1501	SI-300		B-37	A312	1.50	0.000	IWC-1221(B)		1550	200	-	2E-SI-1501 TO 3A-SI-1501.	R 11/91
1.5C-SI-1501	SI-300		B-54	A312	1.50	0.000	IWC-1221(B)		1550	200	-	3B-SI-1501 TO 2E-SI-1501.	R 11/91
1.5D-SI-1501	SI-300		B-42	A312	1.50	0.000	IWC-1221(B)		1550	200	-	3E-SI-1501 TO 2E-SI-1501.	R 11/91
1M-SI-1501			N/A	A312	1.00	0.133	IWC-1221(B)		200	200	-	2E-SI-1501 TO RDCR ON .75B-SI-1501.	R 11/91
1Q-SI-1501	SI-110		B-43	A312	1.00	0.133	IWC-1221(B)		1550	200	-	4E-SI-1501 PAST V 835B TO ACCUMULATOR 2.	R 11/91
1R-SI-1501	SI-110		N/A	A312	1.00	0.133	IWC-1221(B)		1550	200	-	1Q-SI-1501 PAST V 835A TO ACCUMULATOR 1.	
1R-SI-902			N/A	A312	1.00	0.133	IWC-1221(E)		740	80	-	ACCUMULATOR 1 TO VALVE 834A.	

Printed: 11/09/92

R. E. GINNA NUCLEAR POWER PLANT
Inservice Examination Boundary Line List
Third Inspection Interval

Class....: 2
System...: SAFETY INJECTION
P&ID No..: 33013-1262
Comp Type: PIPING

RG&E Line No.	Gilbert Line No.	SWRI Line No.	ISI Fig.	Matrl.	Size (in.)	Thkns (in.)	Exemption Basis	NDE Method	Po	Temp	In?	Line description/remarks	Revision Status
1S-SI-902			N/A	A312	1.00	0.133	IWC-1221(E)		740	80	-	ACCUMULATOR 1 TO VALVE 830A.	
1T-SI-902			N/A	A312	1.00	0.133	IWC-1221(E)		740	80	-	1S-SI-902 TO VALVE 886A.	
1U-SI-902	SI-100		N/A	A312	1.00	0.133	IWC-1221(E)		740	80	-	ACCUMULATOR 2 TO VALVE 834B.	
1V-SI-902	SI-100		N/A	A312	1.00	0.133	IWC-1221(E)		740	80	-	ACCUMULATOR 2 TO VALVE 830B.	
1W-SI-902	SI-100		N/A	A312	1.00	0.133	IWC-1221(E)		740	80	-	1V-SI-902 TO VALVE 886B.	
1X-SI-903			N/A		1.00	0.000	IWC-1221(B)		740	80	-	V 846 OUT CONT PAST PEN 120 TO V 8623.	
.75A-SIPA			B-16B	A312	0.75	0.113	IWC-1221(A)		200	200	-	PSI01A TO VALVE 2803.	R 11/91
.75AA-SI-301	SI-400		B-16		0.75	0.000	IWC-1222(A)		200	200	-	8E-SI-301 TO & INCL VALVE 1822.	R 11/91
.75B-SI-1501	SI-300		N/A	A312	0.75	0.154	IWC-1221(B)		1550	200	-	1M-SI-1501 TO VALVE 884.	
.75B-SIPA			N/A	A312	0.75	0.113	IWC-1221(A)		200	200	-	PSI01A TO VALVE 2802.	R 11/91
.75BB-SI-301	SI-400		B-16		0.75	0.000	IWC-1222(A)		200	200	-	8D-SI-301 TO & INCL VALVE 1821.	R 11/91
.75BC-SI-301	RHR-450		B-19		0.75	0.000	IWC-1221(B)		200	200	-	8H-SI-301 TO & INCL VALVE 2817.	R 11/91
.75BD-SI-301	RHR-450		B-19		0.75	0.000	IWC-1221(B)		200	200	-	VALVE 825A BYPASS.	R 11/91
.75BE-SI-1501	SI-300		B-37		0.75	0.000	IWC-1221(B)		1550	200	-	4D-SI-1501 PAST VALVE 885A.	
.75BF-SI-1501	SI-300		B-38		0.75	0.000	IWC-1221(B)		1550	200	-	4D-SI-1501 PAST VALVE 828A.	R 11/91
.75BG-SI-1501	SI-300		B-38		0.75	0.000	IWC-1221(B)		1550	200	-	4D-SI-1501 PAST VALVE 828B.	R 11/91
.75BH-SI-2501	SI-210		B-39		0.75	0.000	IWC-1221(B)		1550	200	-	2T-SI-2501 TO & INCL VALVE 2842.	R 11/91
.75BI-SI-2501	SI-210		B-39		0.75	0.000	IWC-1221(B)		1550	200	-	2U-SI-2501 TO & INCL VALVE 2841.	R 11/91
.75C-SIPA			N/A	A312	0.75	0.113	IWC-1221(A)		200	200	-	PSI01A TO VALVE 2801.	R 11/91
.75D-SIPA			N/A	A312	0.75	0.113	IWC-1221(B)		200	200	-	PSI01A TO VALVE 2804.	R 11/91
.75E-SI-1501	SI-300		B-40	A312	0.75	0.154	IWC-1221(B)		1550	200	-	3E-SI-1501 TO VALVE 2810.	R 11/91
.75E-SIPC			N/A	A312	0.75	0.113	IWC-1221(B)		200	200	-	PSI01C TO VALVE 2814.	R 11/91
.75F-SI-1501	SI-300		B-15	A312	0.75	0.154	IWC-1221(B)		1550	200	-	3E-SI-1501 TO VALVE 885B.	R 11/91
.75F-SIPC			B-16B	A312	0.75	0.113	IWC-1221(A)		200	200	-	PSI01C TO VALVE 2811.	R 11/91
.75G-SI-1501	SI-300		B-38	A312	0.75	0.154	IWC-1221(B)		1550	200	N	4D-SI-1501 PAST V 872A PEN 110 TO V 879.	R 11/91
.75G-SIPC			N/A	A312	0.75	0.113	IWC-1221(A)		200	200	-	PSI01C TO VALVE 2812.	R 11/91
.75H-SI-1501	SI-110		B-43	A312	0.75	0.154	IWC-1221(B)		1550	200	N	4E-SI-1501 TO VALVES 839A & 839B.	R 11/91
.75H-SIPC			N/A	A312	0.75	0.113	IWC-1221(A)		200	200	-	PSI01C TO VALVE 2813.	R 11/91

Printed: 11/09/92

R. E. GINNA NUCLEAR POWER PLANT
Inservice Examination Boundary Line List
Third Inspection Interval

Class....: 2
System...: SAFETY INJECTION
P&ID No..: 33013-1262
Comp Type: PIPING

RG&E Line No.	Gilbert Line No.	SWRI Line No.	ISI Fig.	Matrl.	Size (in.)	Thkns (in.)	Exemption Basis	NDE Method	Po	Temp	In?	Line description/remarks	Revision Status
.75I-SI-1501	SI-110		N/A	A312	0.75	0.154	IWC-1221(B)		1550	200	-	.75G-SI-1501 TO .75H-SI-1501.	
.75I-SIPB			B-16B	A312	0.75	0.113	IWC-1221(A)		200	200	-	PSI01B TO VALVE 2808.	R 11/91
.75J-SI-1501	SI-110		N/A	A312	0.75	0.154	IWC-1221(B)		1550	200	-	.75I-SI-1501 TO VALVE 2854.	
.75J-SIPB			N/A	A312	0.75	0.113	IWC-1221(A)		200	200	-	PSI01B TO VALVE 2806.	R 11/91
.75K-SIPB			N/A	A312	0.75	0.113	IWC-1221(A)		200	200	-	PSI01B TO VALVE 2807.	R 11/91
.75L-SIPB			N/A		0.75	0.113	IWC-1221(B)					PSI01B TO VALVE 2809.	A 11/91
.75M-SI-902	SI-110		N/A	A312	0.75	0.154	IWC-1221(B)		1550	200	-	1Q-SI-1501 TO VALVE 2836.	R 11/91
.75N-SI-1501	SI-110		B-43	A312	0.75	0.154	IWC-1221(B)		1550	200	N	4E-SI-1501 TO VALVE 829A.	R 11/91
.75P-SI-1501	SI-110		B-43	A312	0.75	0.154	IWC-1221(B)		1550	200	N	4E-SI-1501 TO VALVE 829B.	R 11/91
.75Q-SI-2501	SI-110		B-45	A376	0.75	0.218	IWC-1221(B)		1550	200	Y	2R-SI-2501 TO & INCL VALVE 2833.	R 11/91
.75R-SI-2501	SI-110		B-44		0.75	0.000	IWC-1221(B)		1550	200	-	2S-SI-2501 TO & INCL VALVE 2832.	R 11/91
.75S-SI-902	SI-110		N/A	A312	0.75	0.154	IWC-1221(B)		1550	200	-	1R-SI-1501 TO & INCL VALVE 2846.	R 11/91
.75T-SI-902			N/A		0.75	0.000	IWC-1221(E)		740	80	-	ACCUMULATOR 1 TO VALVE 843A.	
.75U-SI-902	SI-100		N/A		0.75	0.000	IWC-1221(E)		740	80	-	ACCUMULATOR 2 TO VALVE 843B.	
.75V-SI-2501			N/A	A376	0.75	0.218	IWC-1221(E)		740	80	-	10F-SI-2501 TO VALVE 840A.	R 11/91
.75VA-SI-1501			N/A		0.75	0.000	IWC-1221(E)					VALVE 840A TO .75H-SI-1501.	A 11/91
.75VB-SI-1501			N/A		0.75	0.000	IWC-1221(E)					.75VA-SI-1501 TO VALVE 840B.	A 11/91
.75VC-SI-1501			N/A		0.75	0.000	IWC-1221(E)					.75VA-SI-1501 TO VALVE 2838.	A 11/91
.75VD-SI-1501			N/A		0.75	0.000	IWC-1221(E)					.75VA-SI-1501 TO VALVE 2837.	A 11/91
.75W-SI-1501			N/A		0.75	0.000	IWC-1221(E)					.75VA-SI-1501 TO VALVE RV-887, & 621B.	A 11/91
.75X-SI-301			N/A		0.75	0.000	IWC-1221(B)					T.C. OFF 8C-SI-301.	A 11/91
.75XA-SI-301			B-16B		0.75	0.000	IWC-1221(B)					4B-SI-301 TO RV-1817.	A 11/91
.75XB-SI-301			N/A		0.75	0.000	IWC-1221(B)					8G-SI-301 TO VALVE 2816.	A 11/91
.75Y-SI-2501			N/A		0.75	0.000	IWC-1221(E)					10C-SI-2501 TO VALVE 839A.	A 11/91
.75Z-SI-1501			N/A		0.75	0.000	IWC-1221(B)					1.5D-SI-1501 TO VALVE 874E.	A 11/91
.75ZA-SI-1501			N/A		0.75	0.000	IWC-1221(B)					1.5D-SI-1501 TO VALVE 874C.	A 11/91
.75ZB-SI-1501			N/A		0.75	0.000	IWC-1221(B)					1.5D-SI-1501 TO VALVE 874B.	A 11/91
.75ZC-SI-1501			B-41		0.75	0.000	IWC-1221(B)					3D-SI-1501 TO VALVE 2849.	A 11/91

Printed: 11/09/92

R. E. GINNA NUCLEAR POWER PLANT
Inservice Examination Boundary Line List
Third Inspection Interval

Class....: 2
System...: SAFETY INJECTION
P&ID No..: 33013-1262
Comp Type: PIPING

RG&E Line No.	Gilbert Line No.	SWRI Line No.	ISI Fig.	Matrl.	Size (in.)	Thkns (in.)	Exemption Basis	NDE Method	Po	Temp	In?	Line description/remarks	Revision Status
.75ZD-SI-1501			N/A		0.75	0.000	IWC-1221(B)					3A-SI-1501 TO VALVE 2805.	A 11/91

Printed: 11/09/92

R. E. GINNA NUCLEAR POWER PLANT
Inservice Examination Boundary Line List
Third Inspection Interval

Class....: 2
System...: SERVICE AIR
P&ID No..: 33013-1886
Comp Type: PIPING

RG&E Line No.	Gilbert Line No.	SWRI Line No.	ISI Fig.	Matrl.	Size (in.)	Thkns (in.)	Exemption Basis	NDE Method	Po	Temp	In?	Line description/remarks	Revision Status
2-SA-150-4			N/A		2.00	0.000	IWC-1222(A)					VALVE 7141 THRU PEN 310 TO VALVE 7227.	A 11/91

Printed: 11/09/92

R. E. GINNA NUCLEAR POWER PLANT
Inservice Examination Boundary Line List
Third Inspection Interval

Class....: 2
System...: SERVICE WATER
P&ID No..: 33013-1250
Comp Type: COMPONENTS

RG&E Line No.	Gilbert Line No.	SWRI Line No.	ISI Fig.	Matrl.	Size (in.)	Thkns (in.)	Exemption Basis	NDE Method	Po	Temp	In?	Line description/remarks	Revision Status
ACA01A			N/A		0.00	0.000	IWC-1221(C)					CONTAINMENT RECIRC FAN A COOLER.	A 11/91
ACA01B			N/A		0.00	0.000	IWC-1221(C)					CONTAINMENT RECIRC FAN B COOLER.	A 11/91
ACA01C			N/A		0.00	0.000	IWC-1221(C)					CONTAINMENT RECIRC FAN C COOLER.	A 11/91
ACA01D			N/A		0.00	0.000	IWC-1221(C)					CONTAINMENT RECIRC FAN D COOLER.	A 11/91
ACA01E			N/A		0.00	0.000	IWC-1221(C)					CONTAINMENT RECIRC FAN A COOLER.	A 11/91
ACA01F			N/A		0.00	0.000	IWC-1221(C)					CONTAINMENT RECIRC FAN A COOLER.	A 11/91
ACA01G			N/A		0.00	0.000	IWC-1221(C)					CONTAINMENT RECIRC FAN B COOLER.	A 11/91
ACA01H			N/A		0.00	0.000	IWC-1221(C)					CONTAINMENT RECIRC FAN B COOLER.	A 11/91
ACA01J			N/A		0.00	0.000	IWC-1221(C)					CONTAINMENT RECIRC FAN C COOLER.	A 11/91
ACA01K			N/A		0.00	0.000	IWC-1221(C)					CONTAINMENT RECIRC FAN C COOLER.	A 11/91
ACA01L			N/A		0.00	0.000	IWC-1221(C)					CONTAINMENT RECIRC FAN D COOLER.	A 11/91
ACA01M			N/A		0.00	0.000	IWC-1221(C)					CONTAINMENT RECIRC FAN D COOLER.	A 11/91
ACA02A			N/A		0.00	0.000	IWC-1221(C)					REACTOR COMPARTMENT COOLER A.	A 11/91
ACA02B			N/A		0.00	0.000	IWC-1221(C)					REACTOR COMPARTMENT COOLER B.	A 11/91
ACA07			N/A		0.00	0.000	IWC-1221(C)					CONTAINMENT RECIRC FAN B COOLER.	A 11/91
ACA08			N/A		0.00	0.000	IWC-1221(C)					CONTAINMENT RECIRC FAN C COOLER.	A 11/91
ACA09			N/A		0.00	0.000	IWC-1221(C)					CONTAINMENT RECIRC FAN D COOLER.	A 11/91
ACA10			N/A		0.00	0.000	IWC-1221(C)					CONTAINMENT RECIRC FAN A COOLER.	A 11/91
PSI01A			N/A		0.00	0.000	NO IWA	VT	1550	200	-	THIS PUMP ACCOUNTED FOR ON 33013-1262.	R 01/92
PSI01B			N/A		0.00	0.000	NO IWA	VT	1550	200	-	THIS PUMP ACCOUNTED FOR ON 33013-1262.	R 01/92
PSI01C			N/A		0.00	0.000	NO IWA	VT	1550	200	-	THIS PUMP ACCOUNTED FOR ON 33013-1262.	R 01/92

Printed: 11/09/92

R. E. GINNA NUCLEAR POWER PLANT
Inservice Examination Boundary Line List
Third Inspection Interval

Class....: 2
System...: SERVICE WATER
P&ID No..: 33013-1250
Comp Type: PIPING

RG&E Line No.	Gilbert Line No.	SWRI Line No.	ISI Fig.	Matrl.	Size (in.)	Thkns (in.)	Exemption Basis	NDE Method	Po	Temp	In?	Line description/remarks	Revision Status
8-SW-125	SW-1400		B-53A	A53	8.00	0.322		SUR/VOL	60	80	Y	VALVE 4644 TO 8" TEE BY PEN 323 OUT CONT	R 11/91
8A-SW-125	SW-1400		B-53A	A53	8.00	0.322		SUR/VOL	60	80	Y	PEN 323 TO D RECIRC FAN COOLER.	R 11/91
8B-SW-125	SW-700		B-53	A53	8.00	0.322		SUR/VOL	60	80	Y	D RECIRC FAN COOLER TO PEN 312.	R 11/91
8C-SW-125	SW-1500		B-53	A53	8.00	0.322		SUR/VOL	60	80	Y	RED ELBOW AFTER PEN 312 TO VALVE 4642.	R 11/91
8D-SW-125	SW-1400		B-52B	A53	8.00	0.322		SUR/VOL	60	80	Y	VALVE 4643 TO 8" TEE BEFORE PEN 315.	R 11/91
8E-SW-125	SW-100		B-52B	A53	8.00	0.322		SUR/VOL	60	80	Y	RED EL PAST P315 TO C RECIRC FAN COOLER.	R 11/91
8F-SW-125	SW-200		B-52	A53	8.00	0.322		SUR/VOL	60	80	Y	RED EL PAST P320 TO C RECIRC FAN COOLER.	R 11/91
8G-SW-125	SW-1500		B-52	A53	8.00	0.322		SUR/VOL	60	80	Y	VALVE 4641 TO RED ELBOW PAST PEN 320.	R 11/91
8H-SW-125	SW-1400		B-51C	A53	8.00	0.322		SUR/VOL	60	80	Y	VALVE 4630 TO 1ST 8" TEE BY PEN 311.	R 11/91
8I-SW-125	SW-150		B-51B	A53	8.00	0.322		SUR/VOL	60	80	Y	RED EL BY P311 TO B RECIRC FAN COOLER.	R 11/91
8J-SW-125	SW-600		B-51	A53	8.00	0.322		SUR/VOL	60	80	Y	B RECIRC FAN COOLER TO PEN 316.	R 11/91
8K-SW-125	SW-1500		B-51	A53	8.00	0.322		SUR/VOL	60	80	Y	RED ELBOW AFTER PEN 316 TO VALVE 4628.	R 11/91
8L-SW-125	SW-1400		B-50A	A53	8.00	0.322		SUR/VOL	60	80	Y	VALVE 4629 TO 8" TEE BY PEN 308.	R 11/91
8M-SW-125	SW-200		B-50A	A53	8.00	0.322		SUR/VOL	60	80	Y	RED EL BY P308 TO A RECIRC FAN COOLER.	R 11/91
8N-SW-125	SW-500		B-50	A53	8.00	0.322		SUR/VOL	60	80	Y	A RECIRC FAN COOLR TO RED EL BEFORE P319	R 11/91
8O-SW-125	SW-1500		B-50	A53	8.00	0.322		SUR/VOL	60	80	Y	RED ELBOW BY PEN 319 TO VALVE 4627.	R 11/91
6-SW-125	SW-1400		B-53A	A53	6.00	0.280		SUR/VOL	60	80	Y	8" TEE BY PEN 323 TO 1ST RED ELBOW.	R 11/91
6A-SW-125	SW-700,SW-1500		B-53	A53	6.00	0.280		SUR/VOL	60	80	Y	RED ELBOW BEFORE & AFTER PEN 312.	R 11/91
6B-SW-125	SW-1400		B-52B	A53	6.00	0.280		SUR/VOL	60	80	Y	8" TEE ON 8D-SW-125 TO PEN 315.	R 11/91
6C-SW-125	SW-200,SW-1500		B-52	A53	6.00	0.280		SUR/VOL	60	80	Y	RED ELBOW IN CONT & OUT CONT AT PEN 320.	R 11/91
6D-SW-125	SW-1400,SW-150		B-51C	A53	6.00	0.280		SUR/VOL	60	80	Y	8" TEE BY PEN 311 TO RED ELBOW PEN 311.	R 11/91
6E-SW-125	SW-600,SW-1500		B-51	A53	6.00	0.280		SUR/VOL	60	80	Y	RED ELBOW BEFORE & AFTER PEN 316.	R 11/91
6F-SW-125	SW-1400,SW-200		B-50A	A53	6.00	0.280		SUR/VOL	60	80	Y	8" TEE BY PEN 308 TO 1ST RED ELBOW 308.	R 11/91
6G-SW-125	SW-500,SW-1500		B-50	A53	6.00	0.280		SUR/VOL	60	80	Y	RED ELBOW PEN 319 IN CONT TO 319 OUT CON	R 11/91
4A-SW-125			B-50	A53	4.00	0.237	IWC-1221(A)		60	80		8X4 RDCG ELL TO RDCR ON FCU 1-A SUPPLY.	A 11/91
4B-SW-125			B-50	A53	4.00	0.237	IWC-1221(A)		60	80		8X8X4 TEE TO RDCR ON FCU 1-A SUPPLY.	A 11/91
4C-SW-125			B-50	A53	4.00	0.237	IWC-1221(A)		60	80		8X4 RDCR TO FCU 1-A SUPPLY.	A 11/91
4D-SW-125			B-50A	A53	4.00	0.237	IWC-1221(A)		60	80		8X4 RDCR TO RDCG ELL ON FCU 1-A RETURN.	A 11/91

Printed: 11/09/92

R. E. GINNA NUCLEAR POWER PLANT
Inservice Examination Boundary Line List
Third Inspection Interval

Class....: 2
System...: SERVICE WATER
P&ID No..: 33013-1250
Comp Type: PIPING

RG&E Line No.	Gilbert Line No.	SWRI Line No.	ISI Fig.	Matrl.	Size (in.)	Thkns (in.)	Exemption Basis	NDE Method	Po	Temp	In?	Line description/remarks	Revision Status
4E-SW-125			B-50A	A53	4.00	0.237	IWC-1221(A)		60	80		8X8X4 TEE TO RDCG ELL ON FCU 1-A RETURN.	A 11/91
4F-SW-125			B-50A	A53	4.00	0.237	IWC-1221(A)		60	80		8X4 RDCR TO RDCG ELL ON FCU 1-A RETURN.	A 11/91
4G-SW-125			B-51A	A53	4.00	0.237	IWC-1221(A)		60	80		8X8X4 TEE TO RDCG ELL ON FCU 1-B SUPPLY.	A 11/91
4H-SW-125			B-51A	A53	4.00	0.237	IWC-1221(A)		60	80		8X8X4 TEE TO RDCG ELL ON FCU 1-B SUPPLY.	A 11/91
4I-SW-125			B-51A	A53	4.00	0.237	IWC-1221(A)		60	80		8X4 RDCR TO RDCG ELL ON FCU 1-B SUPPLY.	A 11/91
4J-SW-125			B-51B	A53	4.00	0.237	IWC-1221(A)		60	80		8X4 RDCR TO RDCG ELL ON FCU 1-B RETURN.	A 11/91
4K-SW-125			B-51B	A53	4.00	0.237	IWC-1221(A)		60	80		8X8X4 TEE TO RDCG ELL ON FCU 1-B RETURN.	A 11/91
4L-SW-125			B-51B	A53	4.00	0.237	IWC-1221(A)		60	80		8X4 RDCR TO RDCG ELL ON FCU 1-B RETURN.	A 11/91
4M-SW-125			B-52A	A53	4.00	0.237	IWC-1221(A)		60	80		8X8X4 TEE TO RDCG ELL ON FCU 1-C SUPPLY.	A 11/91
4N-SW-125			B-52A	A53	4.00	0.237	IWC-1221(A)		60	80		8X8X4 TEE TO RDCG ELL ON FCU 1-C SUPPLY.	A 11/91
4O-SW-125			B-52A	A53	4.00	0.237	IWC-1221(A)		60	80		8X4 RDCR TO RDCG ELL ON FCU 1-C SUPPLY.	A 11/91
4P-SW-125			B-52B	A53	4.00	0.237	IWC-1221(A)		60	80		8X4 RDCR TO RDCG ELL ON FCU 1-C RETURN.	A 11/91
4Q-SW-125			B-52B	A53	4.00	0.237	IWC-1221(A)		60	80		8X4 RDCR TO RDCG ELL ON FCU 1-C RETURN.	A 11/91
4R-SW-125			B-53	A53	4.00	0.237	IWC-1221(A)		60	80		8X8X4 TEE TO RDCR ON FCU 1-D SUPPLY.	A 11/91
4S-SW-125			B-53	A53	4.00	0.237	IWC-1221(A)		60	80		8X8X4 TEE TO RDCR ON FCU 1-D SUPPLY.	A 11/91
4T-SW-125			B-53	A53	4.00	0.237	IWC-1221(A)		60	80		8X4 RDCR TO 4X3 RDCR ON FCU 1-D SUPPLY.	A 11/91
4U-SW-125			B-53A	A53	4.00	0.237	IWC-1221(A)		60	80		8X4 RDCR TO RDCG ELL ON FCU 1-D RETURN.	A 11/91
4V-SW-125			B-53A	A53	4.00	0.237	IWC-1221(A)		60	80		8X8X4 TEE TO RDCG ELL ON FCU 1-D RETURN.	A 11/91
4W-SW-125			B-53A	A53	4.00	0.237	IWC-1221(A)		60	80		8X4 RDCR TO RDCG ELL ON FCU 1-D RETURN.	A 11/91
3A-SW-125			N/A		3.00	0.216	IWC-1221(A)		60	80	-	CROSS CONNECT FOR ACA07,08, & 10.	R 11/91
3B-SW-125			B-52B	A53	3.00	0.000	IWC-1221(A)		60	80		FCU 1-C RETURN TO 8" TEE.	A 11/91
2.5A-SW-125	SW-1410		N/A	A53	2.50	0.203	IWC-1221(A)		60	80	Y	VALVE 4636 TO 2.5X2.5X2 TEE PAST PEN 201	R 11/91
2.5B-SW-125	SW-800		N/A	A53	2.50	0.203	IWC-1221(A)		60	80	Y	1ST ELBOW PAST PEN 201 TO ACA02B.	R 11/91
2.5C-SW-125	SW-450		N/A	A53	2.50	0.203	IWC-1221(A)		60	80	Y	REACTOR COOLER ACA02B TO PEN 209.	R 11/91
2.5D-SW-125	SW-1550		N/A	A53	2.50	0.203	IWC-1221(A)		60	80	Y	2.5X2.5X2 TEE BY PEN 209 TO VALVE 4635.	R 11/91
2.5E-SW-125	SW-1410		N/A	A53	2.50	0.203	IWC-1221(A)		60	80	Y	VALVE 4758 TO 2.5X2.5X2 TEE BY PEN 209.	R 11/91
2.5F-SW-125	SW-300		N/A	A53	2.50	0.203	IWC-1221(A)		60	80	Y	1ST RED ELBOW BY PEN IN CONT TO ACA02A.	R 11/91
2.5G-SW-125	SW-800		N/A	A53	2.50	0.203	IWC-1221(A)		60	80	Y	REACTOR COOLER ACA02A TO PEN 201.	R 11/91

Printed: 11/09/92

R. E. GINNA NUCLEAR POWER PLANT
Inservice Examination Boundary Line List
Third Inspection Interval

Class....: 2
System...: SERVICE WATER
P&ID No..: 33013-1250
Comp Type: PIPING

RG&E Line No.	Gilbert Line No.	SWRI Line No.	ISI Fig.	Matrl.	Size (in.)	Thkns (in.)	Exemption Basis	NDE Method	Po	Temp	In?	Line description/remarks	Revision Status
2.5H-SW-125	SW-1550		N/A	AS3	2.50	0.203	IWC-1221(A)		60	80	Y	2.5X2.5X2 TEE BY PEN 201 TO VALVE 4757.	R 11/91
2.5I-SW-125			B-50		2.50	0.000	IWC-1221(A)		60	80	-	8N THRU ACA10, TO 8M.	R 11/91
2.5J-SW-125			B-51		2.50	0.000	IWC-1221(A)		60	80	-	8J THRU ACA07, TO 8I.	R 11/91
2.5K-SW-125			B-52A		2.50	0.000	IWC-1221(A)		60	80	-	8F THRU ACA08, TO 8E.	R 11/91
2.5L-SW-125			B-53		2.50	0.000	IWC-1221(A)		60	80	-	8B THRU ACA09, TO 8A.	R 11/91
2A-SW-125	SW-1410,SW-800		N/A	AS3	2.00	0.154	IWC-1221(A)		60	80	Y	2.5X2.5X2 TEE AT PEN 201 1ST RED ELBOW.	R 11/91
2B-SW-125	SW-450,SW-1550		N/A	AS3	2.00	0.154	IWC-1221(A)		60	80	Y	RED ELBOW BY PEN 209 TO 1ST 2" TEE.	R 11/91
2C-SW-125	SW-1410,SW-300		N/A	AS3	2.00	0.154	IWC-1221(A)		60	80	Y	2.5X2.5X2 TEE BY PEN 209 1ST RED ELBOW.	R 11/91
2D-SW-125	SW-800,SW-1550		N/A	AS3	2.00	0.154	IWC-1221(A)		60	80	Y	1ST RED ELBOW BY PEN 201 TO 2" TEE.	R 11/91
2E-SW-125			N/A		2.00	0.000	IWC-1221(A)		60	80	-	2.5I-SW-125 PAST VALVE 4794F.	R 11/91
2F-SW-125			N/A		2.00	0.000	IWC-1221(A)		60	80	-	2.5J-SW-125 PAST VALVE 4794K.	R 11/91
2G-SW-125			N/A		2.00	0.000	IWC-1221(A)		60	80	-	VALVE 4794U TO 2.5F-SW-125.	R 11/91
1.5A-SW-125			B-50A		1.50	0.000	IWC-1221(A)		60	80	-	8M THRU VALVE 4773 TO 2E.	A 01/92
1.5A-SW-125			B-50A		1.50	0.000	IWC-1221(A)		60	80	-	8M THRU VALVE 4773 TO 2E.	A 01/92
1A-SW-125			B-50A		1.00	0.000	IWC-1221(A)				-	8L-SW-125 TO RV-4655.	A 11/91
1B-SW-125			B-50		1.00	0.000	IWC-1221(A)				-	6G-SW-125 TO 4631.	A 11/91
1C-SW-125			B-51C		1.00	0.000	IWC-1221(A)				-	6D-SW-125 TO 4634.	A 11/91
1D-SW-125			B-51		1.00	0.000	IWC-1221(A)				-	6E-SW-125 TO 4632.	A 11/91
1E-SW-125			B-52B		1.00	0.000	IWC-1221(A)				-	6B-SW-125 TO 4647.	A 11/91
1F-SW-125			B-52		1.00	0.000	IWC-1221(A)				-	8G-SW-125 TO 4645.	A 11/91
1G-SW-125			B-53A		1.00	0.000	IWC-1221(A)				-	8-SW-125 TO 4648.	A 11/91
1H-SW-125			B-53		1.00	0.000	IWC-1221(A)				-	6A-SW-125 TO 4646.	A 11/91
.75A-SW-125			B-50A		0.75	0.000	IWC-1221(A)		60	80	-	A RECIRC FAN COOLER TO VALVE 4794D.	R 11/91
.75B-SW-125			B-50A		0.75	0.000	IWC-1221(A)		60	80	-	A RECIRC FAN COOLER TO VALVE 4794C.	R 11/91
.75C-SW-125			B-50A		0.75	0.000	IWC-1221(A)		60	80	-	A RECIRC FAN COOLER TO VALVE 4794E.	R 11/91
.75D-SW-125			B-50		0.75	0.000	IWC-1221(A)		60	80	-	A RECIRC FAN COOLER TO VALVE 4794B.	R 11/91
.75E-SW-125			B-51B		0.75	0.000	IWC-1221(A)		60	80	-	B RECIRC FAN COOLER TO VALVE 4794H.	R 11/91
.75F-SW-125			B-51B		0.75	0.000	IWC-1221(A)		60	80	-	B RECIRC FAN COOLER TO VALVE 4794J.	R 11/91

Printed: 11/09/92

R. E. GINNA NUCLEAR POWER PLANT
Inservice Examination Boundary Line List
Third Inspection Interval

Class....: 2
System...: SERVICE WATER
P&ID No..: 33013-1250
Comp Type: PIPING

RG&E Line No.	Gilbert Line No.	SWRI Line No.	ISI Fig.	Matrl.	Size (in.)	Thkns (in.)	Exemption Basis	NDE Method	Po	Temp	In?	Line description/remarks	Revision Status
.75G-SW-125			B-51A		0.75	0.000	IWC-1221(A)		60	80	-	B RECIRC FAN COOLER TO VALVE 4794G.	R 11/91
.75H-SW-125			B-51B		0.75	0.000	IWC-1221(A)		60	80	-	B RECIRC FAN COOLER TO VALVE 4794V.	R 11/91
.75I-SW-125			B-52B		0.75	0.000	IWC-1221(A)		60	80	-	C RECIRC FAN COOLER TO VALVE 4794M.	R 11/91
.75J-SW-125			B-52B		0.75	0.000	IWC-1221(A)		60	80	-	C RECIRC FAN COOLER TO VALVE 4794N.	R 11/91
.75K-SW-125			B-52A		0.75	0.000	IWC-1221(A)		60	80	-	C RECIRC FAN COOLER TO VALVE 4794L.	R 11/91
.75L-SW-125			B-52B		0.75	0.000	IWC-1221(A)		60	80	-	C RECIRC FAN COOLER TO VALVE 4794W.	R 11/91
.75M-SW-125			B-53A		0.75	0.000	IWC-1221(A)		60	80	-	D RECIRC FAN COOLER TO VALVE 4794R.	R 11/91
.75N-SW-125			B-53A		0.75	0.000	IWC-1221(A)		60	80	-	D RECIRC FAN COOLER TO VALVE 4794S.	R 11/91
.75P-SW-125			B-53		0.75	0.000	IWC-1221(A)		60	80	-	D RECIRC FAN COOLER TO VALVE 4794Q.	R 11/91
.75Q-SW-125			B-53A		0.75	0.000	IWC-1221(A)		60	80	-	D RECIRC FAN COOLER TO VALVE 4794T.	R 11/91
.75R-SW-125			B-50A		0.75	0.000	IWC-1221(A)				-	8L-SW-125 TO RV-4655.	A 11/91
.75S-SW-125			B-51C		0.75	0.000	IWC-1221(A)				-	8H-SW-125 TO RV-4656.	A 11/91
.75T-SW-125			N/A		0.75	0.000	IWC-1221(A)				-	2.5E-SW-125 TO RV-4759.	A 11/91
.75TA-SW-125			N/A		0.75	0.000	IWC-1221(A)				-	2.5E-SW-125 TO 4638.	A 11/91
.75TB-SW-125			N/A		0.75	0.000	IWC-1221(A)				-	2.5H-SW-125 TO 4755.	A 11/91
.75TC-SW-125			N/A		0.75	0.000	IWC-1221(A)				-	2.5A-SW-125 TO RV-4658.	A 11/91
.75TD-SW-125			N/A		0.75	0.000	IWC-1221(A)				-	2.5A-SW-125 TO 4776.	A 11/91
.75U-SW-125			B-52B		0.75	0.000	IWC-1221(A)				-	8D-SW-125 TO RV-4659.	A 11/91
.75V-SW-125			B-53A		0.75	0.000	IWC-1221(A)				-	8-SW-125 TO RV-4660.	A 11/91
.5A-SW-125			B-50A		0.50	0.000	IWC-1221(A)				-	8L-SW-125 TO 4521.	A 11/91
.5B-SW-125			B-50A		0.50	0.000	IWC-1221(A)				-	8L-SW-125 TO 4522.	A 11/91
.5C-SW-125			N/A		0.50	0.000	IWC-1221(A)				-	2.5I-SW-125 TO 4581.	A 11/91
.5D-SW-125			N/A		0.50	0.000	IWC-1221(A)				-	2.5I-SW-125 TO 4580.	A 11/91
.5E-SW-125			B-50		0.50	0.000	IWC-1221(A)				-	8O-SW-125 TO 4514.	A 11/91
.5F-SW-125			B-51C		0.50	0.000	IWC-1221(A)				-	8H-SW-125 TO 4523.	A 11/91
.5G-SW-125			B-51C		0.50	0.000	IWC-1221(A)				-	8H-SW-125 TO 4524.	A 11/91
.5H-SW-125			N/A		0.50	0.000	IWC-1221(A)				-	2.5J-SW-125 TO 4583.	A 11/91
.5I-SW-125			N/A		0.50	0.000	IWC-1221(A)				-	2.5J-SW-125 TO 4582.	A 11/91

Printed: 11/09/92

R. E. GINNA NUCLEAR POWER PLANT
Inservice Examination Boundary Line List
Third Inspection Interval

Class....: 2
System...: SERVICE WATER
P&ID No..: 33013-1250
Comp Type: PIPING

RG&E Line No.	Gilbert Line No.	SWRI Line No.	ISI Fig.	Matrl.	Size (in.)	Thkns (in.)	Exemption Basis	NDE Method	Po	Temp	In?	Line description/remarks	Revision Status
.SJ-SW-125			B-51A		0.50	0.000	IWC-1221(A)				-	8J-SW-125 TO 12503.	A 11/91
.SK-SW-125			B-51		0.50	0.000	IWC-1221(A)				-	8K-SW-125 TO 4515.	A 11/91
.SL-SW-125			N/A		0.50	0.000	IWC-1221(A)				-	2.5B-SW-125 TO 4637.	A 11/91
.SM-SW-125			N/A		0.50	0.000	IWC-1221(A)				-	2.5E-SW-125 TO 4590.	A 11/91
.SN-SW-125			N/A		0.50	0.000	IWC-1221(A)				-	2.5A-SW-125 TO 4588.	A 11/91
.SO-SW-125			B-52B		0.50	0.000	IWC-1221(A)				-	8D-SW-125 TO 4591.	A 11/91
.SP-SW-125			B-52B		0.50	0.000	IWC-1221(A)				-	8D-SW-125 TO 4592.	A 11/91
.SQ-SW-125			N/A		0.50	0.000	IWC-1221(A)				-	2.5K-SW-125 TO 4585.	A 11/91
.SR-SW-125			N/A		0.50	0.000	IWC-1221(A)				-	2.5K-SW-125 TO 4584.	A 11/91
.SS-SW-125			B-52		0.50	0.000	IWC-1221(A)				-	8G-SW-125 TO 4513.	A 11/91
.ST-SW-125			B-53A		0.50	0.000	IWC-1221(A)				-	8-SW-125 TO 4593.	A 11/91
.SU-SW-125			B-53A		0.50	0.000	IWC-1221(A)				-	8-SW-125 TO 4594.	A 11/91
.SV-SW-125			N/A		0.50	0.000	IWC-1221(A)				-	2.5L-SW-125 TO 4587.	A 11/91
.SW-SW-125			N/A		0.50	0.000	IWC-1221(A)				-	2.5L-SW-125 TO 4586.	A 11/91
.SX-SW-125			B-53		0.50	0.000	IWC-1221(A)				-	6A-SW-125 TO 4516.	A 11/91

Printed: 11/09/92

R. E. GINNA NUCLEAR POWER PLANT
Inservice Examination Boundary Line List
Third Inspection Interval

Class....: 2
System...: STANDBY AUXILIARY FEEDWATER
P&ID No..: 33013-1238
Comp Type: PIPING

RG&E Line No.	Gilbert Line No.	SWRI Line No.	ISI Fig.	Matrl.	Size (in.)	Thkns (in.)	Exemption Basis	NDE Method	Po	Temp	In?	Line description/remarks	Revision Status
3C-FW-902S-1A	AFW-500	FW-1001	B-12	A106	3.00	0.300	IWC-1222(A)		715	505	Y	THIS LINE ACCOUNTED FOR ON 33013-1236.	R 11/91
3C-FW-902S-1B	AFW-400	FW-1005	B-13	A106	3.00	0.300	IWC-1222(A)		715	505	Y	THIS LINE ACCOUNTED FOR ON 30013-1236.	R 11/91
.75D-FW-902S-1A	AFW-500	FW-1001	C-20		0.75	0.000	IWC-1222(A)		715	505	Y	3C-FW-902S-1A TO & INCL VALVE 9719A.	R 11/91
.75D-FW-902S-1B	AFW-400	FW-1005	C-24		0.75	0.000	IWC-1222(A)		715	505	Y	3C-FW-902S-1B TO & INCL VALVE 9719B.	R 11/91
.75E-FW-902S-1A	AFW-500	FW-1001	C-20		0.75	0.000	IWC-1222(A)		715	505	Y	3C-FW-902S-1A TO & INCL VALVE 9727.	R 11/91
.75E-FW-902S-1B	AFW-400	FW-1005	C-25		0.75	0.000	IWC-1222(A)		715	505	Y	3C-FW-902S-1B TO & INCL VALVE 9725.	R 11/91
.75F-FW-902S-1A	AFW-500	FW-1001	C-20		0.75	0.000	IWC-1222(A)		715	505	Y	3C-FW-902S-1A TO & INCL VALVE 9726.	R 11/91
.75F-FW-902S-1B	AFW-400	FW-1005	C-25		0.75	0.000	IWC-1222(A)		715	505	Y	3C-FW-902S-1B TO & INCL VALVE 9724.	R 11/91
.75G-FW-902S-1A	AFW-500	FW-1001	C-21		0.75	0.000	IWC-1222(A)		715	505	Y	3C-FW-902S-1A TO & INCL VALVE 9723.	R 11/91

Printed: 11/09/92

R. E. GINNA NUCLEAR POWER PLANT
Inservice Examination Boundary Line List
Third Inspection Interval

Class....: 2
System...: STEAM GENERATOR BLOWDOWN
P&ID No..: 33013-1277
Comp Type: COMPONENTS

RG&E Line No.	Gilbert Line No.	SWRI Line No.	ISI Fig.	Matrl.	Size (in.)	Thkns (in.)	Exemption Basis	NDE Method	Po	Temp	In?	Line description/remarks	Revision Status
EMS01A			B-1		0.00	0.000		SUR/VOL	715	505		THIS COMP ACCOUNTED FOR ON 33013-1231.	A 11/91
EMS01B			B-1		0.00	0.000		SUR/VOL	715	505		THIS COMP ACCOUNTED FOR ON 33013-1231.	A 11/91

Printed: 11/09/92

R. E. GINNA NUCLEAR POWER PLANT
Inservice Examination Boundary Line List
Third Inspection Interval

Class....: 2
System...: STEAM GENERATOR BLOWDOWN
P&ID No..: 33013-1277
Comp Type: PIPING-LOOP A

RG&E Line No.	Gilbert Line No.	SWRI Line No.	ISI Fig.	Matrl.	Size (in.)	Thkns (in.)	Exemption Basis	NDE Method	Po	Temp	In?	Line description/remarks	Revision Status
3A-BD-600-1A	SGB-100		N/A	A106	3.00	0.000	IWC-1222(A)		1005	547	Y	TEE 2A-MS-600-1A & 2B TO RDCR AT 5701.	R 11/91
2A-MS-600-1A	SGB-100		N/A	A106	2.00	0.218	IWC-1222(A)		1005	547	Y	N. NOZZLE TO FIRST TEE GIRTH WELD.	
2B-MS-600-1A	SGB-100		N/A	A106	2.00	0.218	IWC-1222(A)		1005	547	Y	S. NOZZLE TO FIRST TEE GIRTH WELD.	
2E-BD-600-1A			N/A		2.00	0.000	IWC-1222(A)					3X2 RDCR TO VALVE 5738.	A 11/91
1A-MS-600-1A	SGB-100		N/A	A106	1.00	0.179	IWC-1222(A)		1005	547	Y	TEE ON 3A-BD-600-1A TO VALVE 5705.	R 11/91
1B-MS-600-1A	SGB-100		N/A	A106	1.00	0.179	IWC-1222(A)		1005	547	Y	S/G-1A NOZZLE TO TEE BEFORE V 5748A,5748	
1E-MS-600-1A	SGB-100		N/A	A106	1.00	0.179	IWC-1222(A)		1005	547	Y	1B-MS-600-1A TO TEE PAST VALVE 5748A.	
.75A-BD-600-1A	SGB-100		N/A	A106	0.75	0.154	IWC-1222(A)		1005	547	Y	3A-BD-600-1A TO VALVE 5705A.	R 11/91
.5A-BD-600-1A			N/A		0.50	0.000	IWC-1222(A)					2E-BD-600-1A TO VALVE 5752.	A 11/91
.375A-MS-600-1A	SGB-100		N/A		0.37	0.000	IWC-1222(A)		1005	547	Y	TEE BEFORE VALVE 5731 TO VALVE 5735.	
.375B-MS-600-1A	SGB-100		N/A		0.37	0.000	IWC-1222(A)		1005	547	Y	.5A-BD-600-1A TO .375A-MS-600-1A.	R 11/91
.375C-BD-600-1A	SGB-100		N/A		0.37	0.000	IWC-1222(A)		1005	547	Y	.375B-MS-600-1A TO VALVE 5157A.	R 11/91

Printed: 11/09/92

R. E. GINNA NUCLEAR POWER PLANT
Inservice Examination Boundary Line List
Third Inspection Interval

Class....: 2
System...: STEAM GENERATOR BLOWDOWN
P&ID No..: 33013-1277
Comp Type: PIPING-LOOP B

RG&E Line No.	Gilbert Line No.	SWRI Line No.	ISI Fig.	Matrl.	Size (in.)	Thkns (in.)	Exemption Basis	NDE Method	Po	Temp	In?	Line description/remarks	Revision Status
2A-MS-600-1B	SGB-200		B-31	A106	2.00	0.218	IWC-1222(A)		1005	547	Y	N. NOZZLE TO FIRST TEE GIRTH WELD.	
2B-MS-600-1B	SGB-200		B-31	A106	2.00	0.218	IWC-1222(A)		1005	547	Y	S. NOZZLE TO FIRST TEE GIRTH WELD.	
2C-MS-600-1B	SGB-200,SGB-400		B-31	A106	2.00	0.218	IWC-1222(A)		1005	547	Y	2A-MS-600-1B & 2B TO VALVE 5702.	R 11/91
2D-BD-600-1B			N/A		2.00	0.000	IWC-1222(A)					VALVE 5702 TO VALVE 5737.	A 11/91
1A-MS-600-1B	SGB-200		B-31	A106	1.00	0.179	IWC-1222(A)		1005	574	Y	NOZZLE ON S/G-1B TO TEE BEFORE V 5704A.	R 11/91
1B-MS-600-1B	SGB-200		B-31	A106	1.00	0.179	IWC-1222(A)		1005	547	Y	2C-MS-600-1B TO VALVE 5706.	
1C-MS-600-1B	SGB-200		N/A	A106	1.00	0.179	IWC-1222(A)		1005	547	Y	1A-MS-600-1B TO 2C-MS-600-1B.	
.5A-BD-600-1B			N/A		0.50	0.000	IWC-1222(A)					2B-BD-600-1B TO VALVE 5756.	A 11/91
.375A-MS-600-1B	SGB-200,SGB-400		N/A		0.37	0.000	IWC-1222(A)		1005	547	Y	1A-MS-600-1B TEE TO VALVE 5736.	
.375B-MS-600-1B	SGB-400		N/A		0.37	0.000	IWC-1222(A)		1005	547	Y	.375A-MS-600-1B TO VALVE 5756.	R 11/91
X-MS-600-1B	SGB-400		N/A		0.00	0.000	IWC-1222(A)		1005	547	-	.375B-MS-600-1B TO VALVE 5753.	
Y-MS-600-1B	SGB-400		N/A		0.00	0.000	IWC-1222(A)		1005	547	-	.375B-MS-600-1B TO VALVE 5756A.	

Printed: 11/09/92

R. E. GINNA NUCLEAR POWER PLANT
Inservice Examination Boundary Line List
Third Inspection Interval

Class....: 2
System...: WASTE DISPOSAL-GAS H2 RECOMBIN
P&ID No..: 33013-1275
Comp Type: PIPING

RG&E Line No.	Gilbert Line No.	SWRI Line No.	ISI Fig.	Matrl.	Size (in.)	Thkns (in.)	Exemption Basis	NDE Method	Po	Temp	In?	Line description/remarks	Revision Status
2A-WDG-152N			N/A		2.00	0.000	IWC-1222(A)		<275	<200	-	PEN 202 TO RDCR BEFORE VALVE 1084B.	R 11/91
2B-WDG-152N			N/A		2.00	0.000	IWC-1222(A)					PEN P304 TO VALVE 1084A.	A 11/91
1A-WDGHR			N/A		1.00	0.000	IWC-1222(A)		<275	<200	-	P210 IN CONT TO VLVS 10214S1 & 10215S1.	R 11/91
1B-WDG-152N			N/A		1.00	0.000	IWC-1222(A)		<275	<200	-	.75B TO VALVE 10205S1.	R 11/91
1C-WDG-152N			N/A		1.00	0.000	IWC-1222(A)		<275	<200	-	2B TO VALVE 10209S1.	R 11/91
1D-WDG-152N			N/A		1.00	0.000	IWC-1222(A)		<275	<200	-	.75A TO VALVE 10211S1.	R 11/91
1E-WDG-152N			N/A		1.00	0.000	IWC-1222(A)					2A TO VALVE 10213S1.	A 11/91
.75A-WDG-152N			N/A		0.75	0.000	IWC-1222(A)					PEN 202 TO RDCR BEFORE VALVE 1076B.	A 11/91
.75B-WDG-152N			N/A		0.75	0.000	IWC-1222(A)					PEN 304 TO RDCR BEFORE VALVE 1076A.	A 11/91

Printed: 11/09/92

R. E. GINNA NUCLEAR POWER PLANT
Inservice Examination Boundary Line List
Third Inspection Interval

Class....: 2
System...: WASTE DISPOSAL-LIQ-RC DRAIN TK
P&ID No..: 33013-1272
Comp Type: PIPING

RG&E Line No.	Gilbert Line No.	SWRI Line No.	ISI Fig.	Matrl.	Size (in.)	Thkns (in.)	Exemption Basis	NDE Method	Po	Temp	In?	Line description/remarks	Revision Status
4A-WD-151	RHR-300		N/A	A312	4.00	0.120	IWC-1222(A)		2	80	-	PEN 143, TO 8431, 4X3 RDCR BEFORE 1721.	R 11/91
4C-WD-151	RHR-300		N/A	A312	4.00	0.120	IWC-1222(A)		2	80	-	3A TO 3C.	R 11/91
3A-WD-151	RHR-300		N/A	A312	3.00	0.120	IWC-1222(A)		2	80	-	4A TO VALVE 1721, 4C.	R 11/91
3B-WD-151	RHR-300		N/A	A312	3.00	0.120	IWC-1222(A)		2	80	-	VALVE 1722 TO 4C.	R 11/91
3C-WD-151	RHR-300		N/A	A312	3.00	0.120	IWC-1222(A)		2	80	-	4C TO VALVE 1003B.	R 11/91
3E-WD-151			N/A		3.00	0.120	IWC-1222(A)					4X4X3 TEE ON 4C TO VALVE 1003A.	A 11/91
2A-WD-152			N/A		2.00	0.000	IWC-1222(A)		3	80	-	PEN 129 TO 1716A, 1ST TEE W/RDCR'S.	R 11/91
1A-WD-152			N/A		1.00	0.000	IWC-1222(A)		3	80	-	2A-WD-152 TO VALVE 1786.	R 11/91
1B-WD-152			N/A		1.00	0.000	IWC-1222(A)		3	80	-	TEE W/RDCR'S ON 2A-WD-152 TO VALVE 1713.	R 11/91
.75A-WD-152			N/A		0.75	0.000	IWC-1222(A)		3	80	-	2A-WD-152 TO VALVE 1676A TC CONN.	
.75C-WD-151			N/A		0.75	0.000	IWC-1222(A)		3	80	-	.375X.75 RDCR ON .375A-WD-2505 TO 1789.	R 11/91
.75D-WD-151	RHR-300		N/A	A312	0.75	0.120	IWC-1222(A)		2	80	-	3C-WD-151 TO VALVE 1709G.	
.375A-WD-2505			N/A		0.37	0.000	IWC-1222(A)		3	80	-	PEN 123 TO .375X.75 RDCR BEFORE V 1789.	R 11/91

Printed: 11/09/92

R. E. GINNA NUCLEAR POWER PLANT
Inservice Examination Boundary Line List
Third Inspection Interval

Class....: 3
System...: AUXILIARY COOLANT-CCW
P&ID No..: 33013-1245
Comp Type: COMPONENTS

RG&E Line No.	Gilbert Line No.	SWRI Line No.	ISI Fig.	Matrl.	Size (in.)	Thkns (in.)	Exemption Basis	NDE Method	Po	Temp	In?	Line description/remarks	Revision Status
EAC01			N/A		0.00	0.000	IWD-1220.1		<275	<200		FAILED FUEL RAD MONITOR HEAT EXCHGR.	A 11/91
EAC01A			C-41		0.00	0.000		VT-3				COMPONENT COOLING WATER HEAT EXCHGR A.	A 11/91
EAC01B			C-41		0.00	0.000		VT-3				COMPONENT COOLING WATER HEAT EXCHGR B.	A 11/91
EAC02A			B-109		0.00	0.000		N/A				RHR-HX-A ACCOUNTED FOR ON 33013-1247.	A 11/91
EAC02B			B-109		0.00	0.000		N/A				RHR-HX-B ACCOUNTED FOR ON 33013-1247.	A 11/91
EAC04A			N/A		0.00	0.000	IWD-1220.1		<275	<200		S/G BLOWDOWN SAMPLE HEAT EXCHGR A.	A 11/91
EAC04B			N/A		0.00	0.000	IWD-1220.1		<275	<200		S/G BLOWDOWN SAMPLE HEAT EXCHGR B.	A 11/91
EAC05A			N/A		0.00	0.000	IWD-1220.1		<275	<200		PRESSURIZER LIQUID SPACE SAMPLE HE.	A 11/91
EAC05B			N/A		0.00	0.000	IWD-1220.1		<275	<200		RC LOOP B HOT LEG SAMPLE HEAT EXCHGR.	A 11/91
EAC05C			N/A		0.00	0.000	IWD-1220.1		<275	<200		PRESSURIZER STEAM SPACE SAMPLE HE.	A 11/91
EAC06A			N/A		0.00	0.000	IWD-1220.1					RHR PUMP COOLER A.	A 11/91
EAC06B			N/A		0.00	0.000	IWD-1220.1					RHR PUMP COOLER B.	A 11/91
ESS04A			N/A		0.00	0.000	IWD-1220.1		<275	<200		POST ACCIDENT SAMPLE COOLER A.	A 11/91
ESS04B			N/A		0.00	0.000	IWD-1220.1		<275	<200		POST ACCIDENT SAMPLE COOLER B.	A 11/91
ESS04C			N/A		0.00	0.000	IWD-1220.1		<275	<200		POST ACCIDENT SAMPLE COOLER C.	A 11/91
ESS04D			N/A		0.00	0.000	IWD-1220.1		<275	<200		POST ACCIDENT SAMPLE COOLER D.	A 11/91
PAC02A					0.00	0.000	NO IWA	VT-3				COMPONENT COOLING WATER PUMP A.	R 01/92
PAC02B					0.00	0.000	NO IWA	VT-3				COMPONENT COOLING WATER PUMP B.	R 01/92
TAC01					0.00	0.000		VT-3				COMPONENT COOLING WATER SURGE TANK.	A 11/91

Printed: 11/09/92

R. E. GINNA NUCLEAR POWER PLANT
Inservice Examination Boundary Line List
Third Inspection Interval

Class....: 3
System...: AUXILIARY COOLANT-CCW
P&ID No..: 33013-1245
Comp Type: PIPING

RG&E Line No.	Gilbert Line No.	SWRI Line No.	ISI Fig.	Matrl.	Size (in.)	Thkns (in.)	Exemption Basis	NDE Method	Po	Temp	In?	Line description/remarks	Revision Status
14A-ACS-152	CC-100	N/A	C-2	A53	14.00	0.375		VT-3	<150	<200	?	10X14 RDCR FROM B CC PUMP TO 10" RDCRS.	R 11/91
14B-ACS-152	CC-200	N/A	C-4	A53	14.00	0.375		VT-3	<150	<200	?	734B TO 10" REDUCING ELL BEFORE 738A.	R 11/91
14C-ACS-152	CC-300	N/A	C-6	A53	14.00	0.375		VT-3	<150	<200	?	14" TEE AT RHRHE OUTLETS TO CC PUMPS.	R 11/91
10A-ACS-152	CC-100	N/A	C-2	A53	10.00	0.365		VT-3	<150	<200	?	VALVE 723A TO 14" TEE, 14A.	R 11/91
10B-ACS-152	CC-100	N/A	C-2	A53	10.00	0.365	NO SUPPORTS	VT-3	<150	<200	?	VALVE 723B TO 14X10" REDUCER.	R 11/91
10C-ACS-152	CC-100	N/A	C-2	A53	10.00	0.365	NO SUPPORTS	VT-3	<150	<200	?	14" REDUCER TO VALVE 733A, CCHE A.	R 11/91
10D-ACS-152	CC-100	N/A	C-2	A53	10.00	0.365		VT-3	<150	<200	?	14" REDUCER TO VALVE 733B, CCHE B.	R 11/91
10E-ACS-152	CC-200	N/A	C-4	A53	10.00	0.365		VT-3	<150	<200	?	CCHE A TO VALVE 734A, 14B.	R 11/91
10F-ACS-152	CC-200	N/A	C-4	A53	10.00	0.365		VT-3	<150	<200	?	14B TO RHRHE B.	R 11/91
10G-ACS-152	CC-200	N/A	C-4	A53	10.00	0.365		VT-3	<150	<200	?	14B TO RHRHE A.	R 11/91
10H-ACS-152	CC-300	N/A	C-6	A53	10.00	0.365		VT-3	<150	<200	?	RHRHE B OUTLET TO 14" TEE.	R 11/91
10I-ACS-152	CC-300	N/A	C-6	A53	10.00	0.365		VT-3	<150	<200	?	RHRHE A OUTLET TO 14" REDUCER.	R 11/91
10J-ACS-152	CC-300	N/A	C-6	A53	10.00	0.365	NO SUPPORTS	VT-3	<150	<200	?	14C TO CC PUMP A SUCTION.	R 11/91
10K-ACS-152	CC-300	N/A	C-6	A53	10.00	0.365	NO SUPPORTS	VT-3	<150	<200	?	14C TO CC PUMP B SUCTION.	R 11/91
10L-ACS-152	CC-200	N/A	C-4	A53	10.00	0.365		VT-3	<150	<200	?	CCHE B TO 734B, 14B.	R 11/91
8A-ACS-152	CC-100	N/A	C-2	A53	8.00	0.365		VT-3	<150	<200	?	CC PUMP A TO VALVE 723A.	R 11/91
8B-ACS-152	CC-100	N/A	C-2	A53	8.00	0.365		VT-3	<150	<200	?	CC PUMP B TO VALVE 723B.	R 11/91
6A-ACS-152			C-6		6.00	0.280	NO SUPPORTS	VT-3	<150	<200	?	14C TO 4C.	R 01/92
4A-ACS-152	CC-200	N/A	C-2	A53	4.00	0.237	IWD-1220.1		<150	<200	?	10C TO ACAHHX.	R 11/91
4B-ACS-152	CC-200	N/A	C-4	A53	4.00	0.237	IWD-1220.1		<150	<200	?	10E TO ACAPCP.	R 11/91
4C-ACS-152	CC-300	N/A	C-6	A53	4.00	0.237	IWD-1220.1		<150	<200	?	CC SURGE TANK TO 728, 6A.	R 11/91
3A-ACS-152	CC-340	N/A	C-4	A53	3.00	0.216	IWD-1220.1		<150	<200	?	DRAIN FROM 14B TO SAMPLE HES.	
3B-ACS-152	CC-350	N/A	N/A	A53	3.00	0.216	IWD-1220.1		<150	<200	?	SAMPLE HES TO 772D.	R 11/91
3C-ACS-152	CC-350	N/A	C-6	A53	3.00	0.216	IWD-1220.1		<150	<200	?	772D TO CC PUMPS SUCTION.	R 11/91
3D-ACS-152		N/A	N/A		3.00	0.216	IWD-1220.1		<150	<200	?	CC SURGE TANK TO 732.	
3E-ACS-152			N/A		3.00	0.216	IWD-1220.1		<150	<200	?	747H TO 3C.	A 11/91
2A-ACS-152	CC-240,120	N/A	C-4	A53	2.00	0.154	IWD-1220.1		<150	<200	?	10G TO 707A, RHR PUMP A.	R 11/91
2B-ACS-152	CC-240,120	N/A	N/A	A53	2.00	0.154	IWD-1220.1		<150	<200	?	2A TO 707B, RHR PUMP B.	R 11/91

Printed: 11/09/92

R. E. GINNA NUCLEAR POWER PLANT
Inservice Examination Boundary Line List
Third Inspection Interval

Class....: 3
System...: AUXILIARY COOLANT-CCW.
P&ID No..: 33013-1245
Comp Type: PIPING

RG&E Line No.	Gilbert Line No.	SWRI Line No.	ISI Fig.	Matrl.	Size (in.)	Thkns (in.)	Exemption Basis	NDE Method	Po	Temp	In?	Line description/remarks	Revision Status
2C-ACS-152	CC-140,180	N/A	N/A	A53	2.00	0.154	IWD-1220.1		<150	<200	?	RHR PUMP B TO 708B, 2D.	R 11/91
2D-ACS-152	CC-170,180	N/A	C-6	A53	2.00	0.154	IWD-1220.1		<150	<200	?	RHR PUMP A TO 741A, 769, 10I.	R 11/91
2E-ACS-152		N/A	N/A		2.00	0.154	IWD-1220.1		<150	<200	?	699 TO CC SURGE TANK.	R 11/91
2F-ACS-152		N/A	N/A		2.00	0.154	IWD-1220.1		<150	<200	?	CC SURGE TANK TO 731A.	R 11/91
2G-ACS-152		N/A	N/A		2.00	0.154	IWD-1220.1		<150	<200	?	CC SURGE TANK TO 713.	R 11/91
2H-ACS-152	CC-170	N/A	N/A	A53	2.00	0.154	IWD-1220.1		<150	<200	?	4C TO 823, 729.	R 11/91
2I-ACS-152			C-6		2.00	0.154	IWD-1220.1		<150	<200	?	740A TO 10I.	A 11/91
2J-ACS-152			C-6		2.00	0.154	IWD-1220.1		<150	<200	?	740B TO 14C.	A 11/91
2K-ACS-152			N/A		2.00	0.154	IWD-1220.1		<150	<200	?	CC SURGE TANK TO RCV017.	A 11/91
1.5A-ACS-152			N/A		1.50	0.145	IWD-1220.1		<150	<200	?	3A TO VALVE 747C.	A 11/91
1.5B-ACS-152			N/A		1.50	0.145	IWD-1220.1		<150	<200	?	VALVE 747E TO 1S, PAS COOLER.	A 11/91
1.5C-ACS-152			N/A		1.50	0.145	IWD-1220.1		<150	<200	?	1S, PAS COOLERS TO VALVE 747F.	A 11/91
1A-ACS-152	CC-230	N/A	C-2	A53	1.00	0.133	IWD-1220.1		<150	<200	?	14A TO CC SURGE TANK.	R 11/91
1B-ACS-152	CC-340	N/A	N/A	A53	1.00	0.133	IWD-1220.1		<150	<200	?	3A TO PZR STEAM SAMPLE HE.	R 11/91
1C-ACS-152	CC-340	N/A	N/A	A53	1.00	0.133	IWD-1220.1		<150	<200	?	3A TO RC LOOP B HOT LEG SAMPLE HE.	R 11/91
1D-ACS-152	CC-340	N/A	N/A	A53	1.00	0.133	IWD-1220.1		<150	<200	?	3A TO S/G BLOWDOWN SAMPLE HE A.	R 11/91
1E-ACS-152	CC-340	N/A	N/A	A53	1.00	0.133	IWD-1220.1		<150	<200	?	3A TO S/G BLOWDOWN SAMPLE HE B.	R 11/91
1F-ACS-152	CC-340	N/A	N/A	A53	1.00	0.133	IWD-1220.1		<150	<200	?	3A TO PZR LIQUID SAMPLE HE.	R 11/91
1G-ACS-152	CC-350	N/A	N/A	A53	1.00	0.133	IWD-1220.1		<150	<200	?	PZR LIQUID SAMPLE HE TO 3B.	R 11/91
1H-ACS-152	CC-350	N/A	N/A	A53	1.00	0.133	IWD-1220.1		<150	<200	?	S/G BLOWDOWN SAMPLE HE B TO 3B.	R 11/91
1I-ACS-152	CC-350	N/A	N/A	A53	1.00	0.133	IWD-1220.1		<150	<200	?	S/G BLOWDOWN SAMPLE HE A TO 3B.	R 11/91
1J-ACS-152	CC-350	N/A	N/A	A53	1.00	0.133	IWD-1220.1		<150	<200	?	PZR STEAM SAMPLE HE TO 3B.	R 11/91
1K-ACS-152	CC-350	N/A	N/A	A53	1.00	0.133	IWD-1220.1		<150	<200	?	RC LOOP B HOT LEG SAMPLE HE TO 3B.	R 11/91
1L-ACS-152	CC-350	N/A	N/A	A53	1.00	0.133	IWD-1220.1		<150	<200	?	FAILED FUEL RAD MONITOR SAMPLE HE TO 3B.	R 11/91
1M-ACS-152	CC-340	N/A	N/A	A53	1.00	0.133	IWD-1220.1		<150	<200	?	3A TO FAILED FUEL RAD MONITOR SAMPLE HE.	R 11/91
1N-ACS-152		N/A	N/A		1.00	0.133	IWD-1220.1		<150	<200	?	2J TO RCV017.	R 11/91
1P-ACS-152			C-6		1.00	0.133	IWD-1220.1		<150	<200	?	10H TO VALVE 740B.	A 11/91
1Q-ACS-152			N/A		1.00	0.133	IWD-1220.1		<150	<200	?	VALVE 747C TO VALVE 747E.	A 11/91

Printed: 11/09/92

R. E. GINNA NUCLEAR POWER PLANT
Inservice Examination Boundary Line List
Third Inspection Interval

Class....: 3
System...: AUXILIARY COOLANT-CCW
P&ID No..: 33013-1245
Comp Type: PIPING

RG&E Line No.	Gilbert Line No.	SWRI Line No.	ISI Fig.	Matrl.	Size (in.)	Thkns (in.)	Exemption Basis	NDE Method	Po	Temp	In?	Line description/remarks	Revision Status
1R-ACS-152			N/A		1.00	0.133	IWD-1220.1		<150	<200	?	1.5A TO VALVE 747K, 1.5B.	A 11/91
1S-ACS-152			N/A		1.00	0.133	IWD-1220.1		<150	<200	?	1.5B TO PAS COOLERS, 1.5C.	A 11/91
1T-ACS-152			N/A		1.00	0.133	IWD-1220.1		<150	<200	?	VALVE 747F TO VALVE 747H.	A 11/91
1U-ACS-152			N/A		1.00	0.133	IWD-1220.1		<150	<200	?	1.5C TO VALVE 747G, 3E.	A 11/91
1V-ACS-152			C-6		1.00	0.133	IWD-1220.1		<150	<200	?	10I TO VALVE 740A.	A 11/91
.75A-ACS-152	CC-100	N/A	C-2	A53	0.75	0.113	IWD-1220.1		<150	<200	?	VENT FROM 10D TO 2702.	R 11/91
.75B-ACS-152	CC-200	N/A	C-4	A53	0.75	0.113	IWD-1220.1		<150	<200	?	14B TO VALVE 737A.	R 11/91
.75C-ACS-152	CC-200	N/A	C-4	A53	0.75	0.113	IWD-1220.1		<150	<200	?	14B TO VALVE 735A.	R 11/91
.75D-ACS-152	CC-200	N/A	C-4	A53	0.75	0.113	IWD-1220.1		<150	<200	?	14B TO VALVE 735B.	R 11/91
.75E-ACS-152	CC-180	N/A	N/A	A53	0.75	0.113	IWD-1220.1		<150	<200	?	2D TO 727P.	
.75F-ACS-152	CC-180	N/A	N/A	A53	0.75	0.113	IWD-1220.1		<150	<200	?	2D TO 727Q.	
.75G-ACS-152	CC-300	N/A	C-6	A53	0.75	0.113	IWD-1220.1		<150	<200	?	14C TO 779A.	R 11/91
.75H-ACS-152	CC-300	N/A	N/A	A53	0.75	0.113	IWD-1220.1		<150	<200	?	DRAIN FROM 4C TO VALVE 727A.	
.75I-ACS-152	CC-240	N/A	N/A	A53	0.75	0.113	IWD-1220.1		<150	<200	?	VENT FROM 2A TO 2783.	R 11/91
.75J-ACS-152			N/A	A53	0.75	0.113	IWD-1220.1		<150	<200	?	RHR-HX-A VENT TO VALVE 739C.	A 11/91
.75K-ACS-152			N/A	A53	0.75	0.113	IWD-1220.1		<150	<200	?	RHR-HX-B VENT TO VALVE 739D.	A 11/91

Printed: 11/09/92

R. E. GINNA NUCLEAR POWER PLANT
Inservice Examination Boundary Line List
Third Inspection Interval

Class....: 3
System...: AUXILIARY COOLANT-CCW
P&ID No..: 33013-1246
Comp Type: COMPONENTS

RG&E Line No.	Gilbert Line No.	SWRI Line No.	ISI Fig.	Matrl.	Size (in.)	Thkns (in.)	Exemption Basis	NDE Method	Po	Temp	In?	Line description/remarks	Revision Status
EAC08A			N/A		0.00	0.000	IWD-1220.1					SAFETY INJECTION PUMP A COOLER A.	A 11/91
EAC08B			N/A		0.00	0.000	IWD-1220.1					SAFETY INJECTION PUMP A COOLER B.	A 11/91
EAC09A			N/A		0.00	0.000	IWD-1220.1					SAFETY INJECTION PUMP B COOLER A.	A 11/91
EAC09B			N/A		0.00	0.000	IWD-1220.1					SAFETY INJECTION PUMP B COOLER B.	A 11/91
EAC10A			N/A		0.00	0.000	IWD-1220.1					SAFETY INJECTION PUMP C COOLER A.	A 11/91
EAC10B			N/A		0.00	0.000	IWD-1220.1					SAFETY INJECTION PUMP C COOLER B.	A 11/91
EAC11A			N/A		0.00	0.000	IWD-1220.1					CONTAINMENT SPRAY PUMP A COOLER.	A 11/91
EAC11B			N/A		0.00	0.000	IWD-1220.1					CONTAINMENT SPRAY PUMP B COOLER.	A 11/91
ECH01			N/A		0.00	0.000	IWD-1220.1		<275	<200		BORIC ACID EVAP DISTILATE COOLER.	A 11/91
ECH03			N/A		0.00	0.000	IWD-1220.1		<275	<200		EXCESS LETDOWN HEAT EXCHANGER.	A 11/91
ECH04			N/A		0.00	0.000	IWD-1220.1		<275	<200		SEAL WATER HEAT EXCHANGER.	A 11/91
ECH05			N/A		0.00	0.000	IWD-1220.1					NON-REGENERATIVE HEAT EXCHANGER.	A 11/91
ECH06			N/A		0.00	0.000	IWD-1220.1		<275	<200		BORIC ACID EVAP AIR EJECTOR CONDENSOR.	A 11/91
ECH07			N/A		0.00	0.000	IWD-1220.2		<275	<200		BORIC ACID EVAPORATOR.	A 11/91
ECH08A			N/A		0.00	0.000	IWD-1220.1		<275	<200		RCP A UPPER BEARING COOLER.	A 11/91
ECH08B			N/A		0.00	0.000	IWD-1220.1		<275	<200		RCP B UPPER BEARING COOLER.	A 11/91
EWD01A			N/A		0.00	0.000	IWD-1220.2		<275	<200		WASTE GAS COMPRESSOR A SEAL WATER HE.	A 11/91
EWD01B			N/A		0.00	0.000	IWD-1220.2		<275	<200		WASTE GAS COMPRESSOR B SEAL WATER HE.	A 11/91
EWD09			N/A		0.00	0.000	IWD-1220.1		<275	<200		WASTE EVAP CONDENSING HEAT EXCHGR.	A 11/91
EWD10			N/A		0.00	0.000	IWD-1220.1		<275	<200		WASTE EVAP AIR EJECTOR HEAT EXCHGR.	A 11/91
EWD11			N/A		0.00	0.000	IWD-1220.1		<275	<200		WASTE EVAPORATOR DISTILATE COOLER.	A 11/91
RX SUPT COOL A			N/A		0.00	0.000	IWD-1220.2		<275	<200		REACTOR SUPPORT COOLER A.	A 11/91
RX SUPT COOL B			N/A		0.00	0.000	IWD-1220.2		<275	<200		REACTOR SUPPORT COOLER B.	A 11/91

Printed: 11/09/92

R. E. GINNA NUCLEAR POWER PLANT
Inservice Examination Boundary Line List
Third Inspection Interval

Class....: 3
System...: AUXILIARY COOLANT-CCW
P&ID No..: 33013-1246
Comp Type: PIPING

RG&E Line No.	Gilbert Line No.	SWRI Line No.	ISI Fig.	Matrl.	Size (in.)	Thkns (in.)	Exemption Basis	NDE Method	Po	Temp	In?	Line description/remarks	Revision Status
8A-AC6-152	CC-200	N/A	C-5	A53	8.00	0.322		VT-3	<150	<200	?	COMPONENT COOLING HE TO 817, 6" REDUCER.	R 11/91
8B-AC6-152	CC-220	N/A	C-5	A53	8.00	0.322		VT-3	<150	<200	?	4Q TO 816, 14" REDUCER.	R 11/91
6A-AC6-152	CC-200	N/A	C-5	A53	6.00	0.280	NO SUPPORTS	VT-3	<150	<200	?	8A TO 813.	R 11/91
6B-AC6-152	CC-310	N/A	C-3	A53	6.00	0.280		VT-3	<150	<200	?	COMPONENT COOLING HE TO 4C, 773.	R 11/91
6C-AC6-152	CC-230	N/A	C-7	A53	6.00	0.280		VT-3	<150	<200	?	COMP CLG HE TO 760A & BORIC ACID EVAP.	R 11/91
6D-AC6-152	CC-220	N/A	C-5	A53	6.00	0.280		VT-3	<150	<200	?	814 TO 815A, 8B.	R 11/91
6E-AC6-152	CC-160	N/A	C-3	A53	6.00	0.280		VT-3	<150	<200	?	4C TO COMPONENT COOLING PUMPS.	R 11/91
6F-AC6-152	CC-500,-525	N/A	C-9	A53	6.00	0.280	IWD-1220.2		<150	<200	?	PEN 131 TO 4D, 4H.	R 02/92
6G-AC6-152	CC-190, CC-300	N/A	C-7	A53	6.00	0.280		VT-3	<150	<200	?	BORIC ACID EVAP TO COMP COOLING PUMPS.	
6H-AC6-152	CC-575	N/A	C-9	A53	6.00	0.280	IWD-1220.2		<150	<200	?	REACTOR SUPPORT COOLERS, 4O TO PEN 130.	R 02/92
4A-AC6-152	CC-330	N/A	C-5	A53	4.00	0.237	IWD-1220.1		<150	<200	?	8A TO REDUCER BEFORE 749A.	
4B-AC6-152	CC-625, CC-600	N/A	N/A	A53	4.00	0.237	IWD-1220.1		<150	<200	?	750A AT PEN 127 TO 3C.	R 11/91
4C-AC6-152	CC-160	N/A	C-3	A53	4.00	0.237	IWD-1220.1		<150	<200	?	6B TO 773, NON REGEN HE, 778, 6E.	R 11/91
4D-AC6-152	CC-525	N/A	C-9	A53	4.00	0.237	IWD-1220.1		<150	<200	?	6F TO RX SUPT COOLER B HEADERS 4M & 4V.	R 11/91
4E-AC6-152	CC-700	N/A	N/A	A53	4.00	0.237	IWD-1220.1		<150	<200	?	3E AT RPC A TO 3F.	R 11/91
4F-AC6-152	CC-700,-725	N/A	N/A	A53	4.00	0.237	IWD-1220.1		<150	<200	?	3F TO PEN 126.	R 11/91
4G-AC6-152	CC-450	N/A	B-29	A53	4.00	0.237	IWD-1220.1		<150	<200	?	750B AT PEN 128 TO 3" RDCR (3O).	R 11/91
4H-AC6-152	CC-525	N/A	C-9	A53	4.00	0.237	IWD-1220.1		<150	<200	?	6F TO RX SUPT COOLER A HEADERS 4J & 4I.	R 11/91
4I-AC6-152	CC-525	N/A	N/A	A53	4.00	0.237	IWD-1220.1		<150	<200	?	4H TO RX SUPT COOLER A.	R 11/91
4J-AC6-152	CC-525	N/A	N/A	A53	4.00	0.237	IWD-1220.1		<150	<200	?	4H TO RX SUPT COOLER A.	R 11/91
4K-AC6-152	CC-525	N/A	N/A	A53	4.00	0.237	IWD-1220.1		<150	<200	?	RX SUPT COOLER A TO 4L.	R 11/91
4L-AC6-152	CC-525	N/A	C-9	A53	4.00	0.237	IWD-1220.1		<150	<200	?	RX SUPT COOLER A DSCHG HDRS 4K, 4U TO 6H	R 11/91
4M-AC6-152	CC-525	N/A	N/A	A53	4.00	0.237	IWD-1220.1		<150	<200	?	4D TO RX SUPT COOLER B.	R 11/91
4N-AC6-152	CC-525	N/A	N/A	A53	4.00	0.237	IWD-1220.1		<150	<200	?	RX SUPT COOLER B TO 4O.	R 11/91
4O-AC6-152	CC-525	N/A	C-9	A53	4.00	0.237	IWD-1220.1		<150	<200	?	RX SUPT COOLER B DSCHG HDRS 4N, 4W TO 6H	R 11/91
4P-AC6-152	CC-400	N/A	N/A	A53	4.00	0.237	IWD-1220.1		<150	<200	?	757B TO P12S.	
4Q-AC6-152	CC-220	N/A	C-5	A53	4.00	0.237	IWD-1220.1		<150	<200	?	CONNECTS 8B, 3H, & 2I.	R 11/91
4R-AC6-152			N/A		4.00	0.237	IWD-1220.1		<150	<200	?	3D AT RCP B TO 3I, 757B.	A 11/91

Printed: 11/09/92

R. E. GINNA NUCLEAR POWER PLANT
Inservice Examination Boundary Line List
Third Inspection Interval

Class....: 3
System...: AUXILIARY COOLANT-CCW
P&ID No..: 33013-1246
Comp Type: PIPING

RG&E Line No.	Gilbert Line No.	SWRI Line No.	ISI Fig.	Matrl.	Size (in.)	Thkns (in.)	Exemption Basis	NDE Method	Po	Temp	In?	Line description/remarks	Revision Status
4S-AC6-152			B-29		4.00	0.237	IWD-1220.1		<150	<200	?	3O TO RCP B.	A 11/91
4T-AC6-152			B-30		4.00	0.237	IWD-1220.1		<150	<200	?	3C TO 3Q AT RCP A.	A 11/91
4U-AC6-152			N/A		4.00	0.237	IWD-1220.1		<150	<200	?	RX SUPT COOLER A TO 4L.	A 11/91
4V-AC6-152			N/A		4.00	0.237	IWD-1220.1		<150	<200	?	4D TO RX SUPT COOLER B.	A 11/91
4W-AC6-152			N/A		4.00	0.237	IWD-1220.1		<150	<200	?	RX SUPT COOLER B TO 4O.	A 11/91
3A-AC6-152	CC-330	N/A	N/A	A53	3.00	0.216	IWD-1220.1		<150	<200	?	4A TO 749A.	
3B-AC6-152	CC-330	N/A	N/A	A53	3.00	0.216	IWD-1220.1		<150	<200	?	4A TO 749B.	R 11/91
3C-AC6-152	CC-600	N/A	B-30	A53	3.00	0.216	IWD-1220.1		<150	<200	?	4B TO 751A, 4T.	R 11/91
3D-AC6-152	CC-600	N/A	N/A	A53	3.00	0.216	IWD-1220.1		<150	<200	?	RCP B TO REDUCER AT 4R.	R 11/91
3E-AC6-152	CC-700	N/A	C-34	A53	3.00	0.216	IWD-1220.1		<150	<200	?	RCP A TO REDUCER AT 4E.	R 11/91
3F-AC6-152	CC-700	N/A	N/A	A53	3.00	0.216	IWD-1220.1		<150	<200	?	4E TO 757A, 4F.	R 11/91
3G-AC6-152	CC-220	N/A	C-5	A53	3.00	0.216	IWD-1220.1		<150	<200	?	759A TO 762A, 8B.	R 11/91
3H-AC6-152	CC-220	N/A	N/A	A53	3.00	0.216	IWD-1220.1		<150	<200	?	759B TO 762B, 4Q.	R 11/91
3I-AC6-152	CC-400	N/A	N/A	A53	3.00	0.216	IWD-1220.1		<150	<200	?	4R TO 757B, 4P.	R 11/91
3J-AC6-152	CC-525	N/A	N/A	A53	3.00	0.216	IWD-1220.1		<150	<200	?	4H TO RX SUPT COOLER A.	R 11/91
3K-AC6-152	CC-525	N/A	N/A	A53	3.00	0.216	IWD-1220.1		<150	<200	?	4D TO RX SUPT COOLER B.	R 11/91
3M-AC6-152	CC-525	N/A	N/A	A53	3.00	0.216	IWD-1220.1		<150	<200	?	RX SUPT COOLER A TO 4L.	R 11/91
3N-AC6-152	CC-525	N/A	N/A	A53	3.00	0.216	IWD-1220.1		<150	<200	?	RX SUPT COOLER B TO 4O.	R 11/91
3O-AC6-152	CC-450	N/A	B-29	A53	3.00	0.216	IWD-1220.1		<150	<200	?	4G TO 751B, 4S.	R 11/91
3P-AC6-152	CC-230	N/A	C-7	A53	3.00	0.216	IWD-1220.1		<150	<200	?	6C TO 2" REDUCER BEFORE 764A, 2T.	R 11/91
3Q-AC6-152			B-30		3.00	0.216	IWD-1220.1		<150	<200	?	4T TO RCP A.	A 11/91
2A-AC6-152	CC-330	N/A	N/A	A53	2.00	0.154	IWD-1220.1		<150	<200	?	4A TO 742A, & 743 TO EXCESS LETDN HE.	R 11/91
2B-AC6-152	CC-250	N/A	C-3	A53	2.00	0.154	IWD-1220.1		<150	<200	?	6B TO 777B, 777C.	R 11/91
2C-AC6-152	CC-260	N/A	C-3	A53	2.00	0.154	IWD-1220.1		<150	<200	?	CS PUMPS A & B TO 6E.	
2D-AC6-152	CC-300	N/A	C-7	A53	2.00	0.154	IWD-1220.1		<150	<200	?	DISTILLATE COOLER TO 748B, 6G.	R 11/91
2E-AC6-152	CC-230	N/A	C-7	A53	2.00	0.154	IWD-1220.1		<150	<200	?	6C TO DISTILLATE COOLER.	
2F-AC6-152	CC-525	N/A	N/A	A53	2.00	0.109	IWD-1220.1		<150	<200	?	4H TO RX SUPT COOLER A.	R 11/91
2G-AC6-152	CC-270	N/A	C-3	A53	2.00	0.154	IWD-1220.1		<150	<200	?	6B TO SI PUMP COOLERS.	R 11/91

Printed: 11/09/92

R. E. GINNA NUCLEAR POWER PLANT
Inservice Examination Boundary Line List
Third Inspection Interval

Class....: 3
System...: AUXILIARY COOLANT-CCW
P&ID No..: 33013-1246
Comp Type: PIPING

RG&E Line No.	Gilbert Line No.	SWRI Line No.	ISI Fig.	Matrl.	Size (in.)	Thkns (in.)	Exemption Basis	NDE Method	Po	Temp	In?	Line description/remarks	Revision Status
2H-AC6-152	CC-230	N/A	C-7	AS3	2.00	0.154	IWD-1220.1		<150	<200	?	1I TO 6G.	R 11/91
2I-AC6-152	CC-220	N/A	N/A	AS3	2.00	0.154	IWD-1220.1		<150	<200	?	EXCESS LETDN HE TO P124 & 74S TO 742B,4Q	R 11/91
2J-AC6-152	CC-525	N/A	N/A	AS3	2.00	0.109	IWD-1220.1		<150	<200	?	4D TO RX SUPT COOLER B.	R 11/91
2K-AC6-152	CC-320	N/A	C-3	AS3	2.00	0.154	IWD-1220.1		<150	<200	?	SI PUMP COOLERS TO 764C, 6E.	R 11/91
2M-AC6-152	CC-700	N/A	N/A	AS3	2.00	0.154	IWD-1220.1		<150	<200	?	3F TO 758A.	R 11/91
2N-AC6-152	CC-310	N/A	C-3	AS3	2.00	0.154	IWD-1220.1		<150	<200	?	6B TO 763, SEAL WATER HE.	
2O-AC6-152	CC-230	N/A	C-7	AS3	2.00	0.154	IWD-1220.1		<150	<200	?	WASTE EVAP CONDENSING HE TO 764B, 6G.	R 11/91
2P-AC6-152	CC-400	N/A	N/A	AS3	2.00	0.154	IWD-1220.1		<150	<200	?	4P TO 758B.	
2Q-AC6-152	CC-525	N/A	N/A	AS3	2.00	0.109	IWD-1220.1		<150	<200	?	RX SUPT COOLER B TO 4O.	R 11/91
2R-AC6-152	CC-160	N/A	C-3	AS3	2.00	0.154	IWD-1220.1		<150	<200	?	SEAL WATER HX TO 6E.	R 11/91
2S-AC6-152			N/A		2.00	0.154	IWD-1220.1		<150	<200	?	RX SUPT COOLER A TO 4L.	A 11/91
2T-AC6-152			N/A		2.00	0.154	IWD-1220.1		<150	<200	?	3P TO 764A, EWD09.	A 11/91
1.5A-AC6-152A	CC-700	N/A	B-30	AS3	1.50	0.145	IWD-1220.1		<150	<200	?	3C TO RCP A.	
1.5A-AC6-152B			N/A		1.50	0.145	IWD-1220.1		<150	<200	?	RCP A TO .75H, 1M.	A 11/91
1.5A-AC6-152C			N/A		1.50	0.145	IWD-1220.1		<150	<200	?	1A, FI-611 TO 3F.	A 11/91
1.5A-AC6-152D			N/A		1.50	0.145	IWD-1220.1		<150	<200	?	1M TO 3F.	A 11/91
1.5B-AC6-152A	CC-400	N/A	B-29	AS3	1.50	0.145	IWD-1220.1		<150	<200	?	3O TO RCP B.	R 11/91
1.5B-AC6-152B			N/A		1.50	0.145	IWD-1220.1		<150	<200	?	RCP B TO .75O.	A 11/91
1.5B-AC6-152C			N/A		1.50	0.145	IWD-1220.1		<150	<200	?	1G-AC6-152A TO 1G-AC6-152B.	A 11/91
1.5D-AC6-152	CC-230	N/A	N/A	AS3	1.50	0.145	IWD-1220.1		<150	<200	?	3P TO GAS COMPRESSOR HE B.	R 11/91
1.5E-AC6-152	CC-230	N/A	N/A	AS3	1.50	0.145	IWD-1220.1		<150	<200	?	GAS COMPRESSOR HE B TO 2H.	R 11/91
1.5F-AC6-152	CC-230	N/A	N/A	AS3	1.50	0.145	IWD-1220.1		<150	<200	?	3P TO GAS COMPRESSOR HE A.	R 11/91
1.5G-AC6-152			N/A		1.50	0.145	IWD-1220.1		<150	<200	?	GAS COMPRESSOR HE A TO 2H.	A 11/91
1A-AC6-152	CC-700	N/A	N/A	AS3	1.00	0.133	IWD-1220.1		<150	<200	?	RCP A TO 756A, 3F.	R 11/91
1B-AC6-152	CC-160	N/A	C-3	AS3	1.00	0.133	IWD-1220.1		<150	<200	?	766 TO 6E.	
1D-AC6-152	CC-450	N/A	B-29	AS3	1.00	0.133	IWD-1220.1		<150	<200	?	3O TO 752B, RCP B.	R 11/91
1E-AC6-152	CC-310	N/A	C-3	AS3	1.00	0.133	IWD-1220.1		<150	<200	?	776 TO 4C.	R 11/91
1F-AC6-152	CC-300	N/A	C-7	AS3	1.00	0.133	IWD-1220.1		<150	<200	?	774B TO 6G.	R 11/91

Printed: 11/09/92

R. E. GINNA NUCLEAR POWER PLANT
Inservice Examination Boundary Line List
Third Inspection Interval

Class....: 3
System...: AUXILIARY COOLANT-CCW
P&ID No..: 33013-1246
Comp Type: PIPING

RG&E Line No.	Gilbert Line No.	SWRI Line No.	ISI Fig.	Matrl.	Size (in.)	Thkns (in.)	Exemption Basis	NDE Method	Po	Temp	In?	Line description/remarks	Revision Status
1G-AC6-152A	CC-400	N/A	N/A	A53	1.00	0.133	IWD-1220.1		<150	<200	?	RCP B TO 756B, FI615.	R 11/91
1G-AC6-152B			N/A		1.00	0.133	IWD-1220.1		<150	<200	?	754B TO 1.5B-AC6-152B.	A 11/91
1H-AC6-152	CC-230	N/A	N/A	A53	1.00	0.133	IWD-1220.1		<150	<200	?	774A TO 2H.	R 11/91
1I-AC6-152	CC-230	N/A	N/A	A53	1.00	0.133	IWD-1220.1		<150	<200	?	774D TO 2H.	R 11/91
1K-AC6-152	CC-300	N/A	C-7	A53	1.00	0.133	IWD-1220.1		<150	<200	?	774C TO 6G.	
1L-AC6-152			B-30		1.00	0.133	IWD-1220.1		<150	<200	?	3C TO 752A, RCP A.	A 11/91
1M-AC6-152			N/A		1.00	0.133	IWD-1220.1		<150	<200	?	1.5A-AC6-152B TO 1.5A-AC6-152D.	A 11/91
1N-AC6-152			N/A		1.00	0.133	IWD-1220.1		<150	<200	?	774E TO 2O.	A 11/91
.75A-AC6-152	CC-600	N/A	B-30	A53	0.75	0.113	IWD-1220.1		<150	<200	?	4B TO 750C.	R 11/91
.75AA-AC6-152	CC-270	N/A	N/A	A53	0.75	0.113	IWD-1220.1		<150	<200	?	777L TO SI PUMP COOLER A.	R 11/91
.75AB-AC6-152	CC-230	N/A	N/A	A53	0.75	0.113	IWD-1220.1		<150	<200	?	1.5G TO 727H, 727J.	R 11/91
.75AC-AC6-152	CC-270	N/A	N/A	A53	0.75	0.113	IWD-1220.1		<150	<200	?	777F TO SI PUMP COOLER A.	R 11/91
.75AD-AC6-152	CC-230	N/A	N/A	A53	0.75	0.113	IWD-1220.1		<150	<200	?	1.5G TO 774D.	R 11/91
.75AE-AC6-152	CC-450	N/A	B-29	A53	0.75	0.113	IWD-1220.1		<150	<200	?	3O TO 750D.	R 11/91
.75AF-AC6-152	CC-320	N/A	N/A	A53	0.75	0.113	IWD-1220.1		<150	<200	?	SI PUMP COOLER A TO 777M.	R 11/91
.75AG-AC6-152	CC-230	N/A	N/A	A53	0.75	0.113	IWD-1220.1		<150	<200	?	VENT FROM 1.5E TO 2712.	R 11/91
.75AH-AC6-152	CC-450	N/A	B-29	A53	0.75	0.113	IWD-1220.1		<150	<200	?	3O TO 2737.	R 11/91
.75AI-AC6-152	CC-320	N/A	N/A	A53	0.75	0.113	IWD-1220.1		<150	<200	?	SI PUMP COOLER A TO 777E.	R 11/91
.75AJ-AC6-152	CC-230	N/A	N/A	A53	0.75	0.113	IWD-1220.1		<150	<200	?	1.5E TO 727K, 727L.	R 11/91
.75AK-AC6-152	CC-400	N/A	N/A	A53	0.75	0.113	IWD-1220.1		<150	<200	?	4R TO 2745.	R 11/91
.75AL-AC6-152	CC-270	N/A	N/A	A53	0.75	0.113	IWD-1220.1		<150	<200	?	777N TO SI PUMP COOLER B.	R 11/91
.75AM-AC6-152	CC-230	N/A	N/A	A53	0.75	0.113	IWD-1220.1		<150	<200	?	1.5F TO TO 1030A, WASTE GAS COMPRESSOR A	R 11/91
.75AN-AC6-152	CC-400	N/A	N/A	A53	0.75	0.113	IWD-1220.1		<150	<200	?	4R TO 2739.	R 11/91
.75AO-AC6-152	CC-270	N/A	N/A	A53	0.75	0.113	IWD-1220.1		<150	<200	?	777H TO SI PUMP COOLER B.	R 11/91
.75AP-AC6-152	CC-450	N/A	N/A	A53	0.75	0.113	IWD-1220.1		<150	<200	?	1D TO 2736.	R 11/91
.75AQ-AC6-152	CC-320	N/A	N/A	A53	0.75	0.113	IWD-1220.1		<150	<200	?	SI PUMP COOLER B TO 777P.	R 11/91
.75AR-AC6-152	CC-400	N/A	N/A	A53	0.75	0.113	IWD-1220.1		<150	<200	?	VENT FROM 1.5B-AC6-152B TO 2744.	R 11/91
.75AS-AC6-152	CC-320	N/A	N/A	A53	0.75	0.113	IWD-1220.1		<150	<200	?	SI PUMP COOLER B TO 777G.	R 11/91

Printed: 11/09/92

R. E. GINNA NUCLEAR POWER PLANT
Inservice Examination Boundary Line List
Third Inspection Interval

Class....: 3
System...: AUXILIARY COOLANT-CCW
P&ID No..: 33013-1246
Comp Type: PIPING

RG&E Line No.	Gilbert Line No.	SWRI Line No.	ISI Fig.	Matrl.	Size (in.)	Thkns (in.)	Exemption Basis	NDE Method	Po	Temp	In?	Line description/remarks	Revision Status
.75AT-AC6-152	CC-450	N/A	N/A	A53	0.75	0.113	IWD-1220.1		<150	<200	?	VENT FROM 1.5B-AC6-152A TO 2743.	R 11/91
.75AU-AC6-152	CC-270	N/A	N/A	A53	0.75	0.113	IWD-1220.1		<150	<200	?	777S TO SI PUMP COOLER C.	R 11/91
.75AV-AC6-152	CC-450	N/A	N/A	A53	0.75	0.113	IWD-1220.1		<150	<200	?	DRAIN FROM 1.5B-AC6-152A TO 2735.	R 11/91
.75AW-AC6-152	CC-270	N/A	N/A	A53	0.75	0.113	IWD-1220.1		<150	<200	?	777J TO SI PUMP COOLER C.	R 11/91
.75AX-AC6-152	CC-400	N/A	N/A	A53	0.75	0.113	IWD-1220.1		<150	<200	?	1.5B-AC6-152C TO 765A, 765B.	R 11/91
.75AY-AC6-152	CC-320	N/A	N/A	A53	0.75	0.113	IWD-1220.1		<150	<200	?	SI PUMP COOLER C TO 777R.	R 11/91
.75AZ-AC6-152	CC-330	N/A	N/A	A53	0.75	0.113	IWD-1220.1		<150	<200	?	2A TO 2776.	
.75B-AC6-152	CC-250	N/A	N/A	A53	0.75	0.113	IWD-1220.1		<150	<200	?	2B TO CS PUMP A.	R 11/91
.75BA-AC6-152	CC-320	N/A	N/A	A53	0.75	0.113	IWD-1220.1		<150	<200	?	SI PUMP COOLER C TO 777K.	R 11/91
.75BB-AC6-152	CC-220	N/A	N/A	A53	0.75	0.113	IWD-1220.1		<150	<200	?	2I TO 744.	
.75BC-AC6-152	CC-320	N/A	N/A	A53	0.75	0.113	IWD-1220.1		<150	<200	?	2K TO 727F, 727G.	R 11/91
.75BD-AC6-152	CC-500	N/A	C-9	A53	0.75	0.113	IWD-1220.1		<150	<200	?	VENT FROM 6F TO 2733.	R 11/91
.75BE-AC6-152	CC-310	N/A	N/A	A53	0.75	0.113	IWD-1220.1		<150	<200	?	VENT FROM 2N TO 2716.	R 11/91
.75BF-AC6-152	CC-525	N/A	N/A	A53	0.75	0.113	IWD-1220.1		<150	<200	?	4J TO 2769.	R 11/91
.75BG-AC6-152	CC-310	N/A	N/A	A53	0.75	0.113	IWD-1220.1		<150	<200	?	DRAIN FROM 2R TO 2720.	R 11/91
.75BH-AC6-152	CC-525	N/A	N/A	A53	0.75	0.113	IWD-1220.1		<150	<200	?	4I TO 2766.	
.75BI-AC6-152	CC-310	N/A	N/A	A53	0.75	0.113	IWD-1220.1		<150	<200	?	2R TO 766.	R 11/91
.75BJ-AC6-152	CC-525	N/A	N/A	A53	0.75	0.113	IWD-1220.1		<150	<200	?	4K TO 2767.	R 11/91
.75BK-AC6-152	CC-310	N/A	C-3	A53	0.75	0.113	IWD-1220.1		<150	<200	?	4C TO 776.	R 11/91
.75BL-AC6-152	CC-525	N/A	N/A	A53	0.75	0.113	IWD-1220.1		<150	<200	?	4K TO 2768.	R 11/91
.75BM-AC6-152	CC-160	N/A	C-3	A53	0.75	0.113	IWD-1220.1		<150	<200	?	4C TO 2718.	R 11/91
.75BN-AC6-152	CC-525	N/A	N/A	A53	0.75	0.113	IWD-1220.1		<150	<200	?	4M TO 2751.	
.75BP-AC6-152	CC-525	N/A	N/A	A53	0.75	0.113	IWD-1220.1		<150	<200	?	DRAIN FROM 4O TO 2754.	R 11/91
.75BQ-AC6-152	CC-160	N/A	C-3	A53	0.75	0.113	IWD-1220.1		<150	<200	?	6E TO 2722.	R 11/91
.75BR-AC6-152	CC-525	N/A	C-9	A53	0.75	0.113	IWD-1220.1		<150	<200	?	6H TO 818.	R 11/91
.75BS-AC6-152	CC-310	N/A	C-3	A53	0.75	0.113	IWD-1220.1		<150	<200	?	DRAIN FROM 4C TO 2721.	R 11/91
.75BT-AC6-152	CC-525	N/A	C-9	A53	0.75	0.113	IWD-1220.1		<150	<200	?	6H TO 2734.	R 11/91
.75BU-AC6-152	CC-260	N/A	N/A	A53	0.75	0.113	IWD-1220.1		<150	<200	?	CS PUMP A TO 2C.	R 11/91

Printed: 11/09/92

R. E. GINNA NUCLEAR POWER PLANT
Inservice Examination Boundary Line List
Third Inspection Interval

Class....: 3
System...: AUXILIARY COOLANT-CCW
P&ID No..: 33013-1246
Comp Type: PIPING

RG&E Line No.	Gilbert Line No.	SWRI Line No.	ISI Fig.	Matrl.	Size (in.)	Thkns (in.)	Exemption Basis	NDE Method	Po	Temp	In?	Line description/remarks	Revision Status
.75BV-AC6-152	CC-220	N/A	C-5	A53	0.75	0.113	IWD-1220.1		<150	<200	?	6D TO 2725.	R 11/91
.75BW-AC6-152	CC-260	N/A	N/A	A53	0.75	0.113	IWD-1220.1		<150	<200	?	CS PUMP B TO 2C.	R 11/91
.75BX-AC6-152	CC-230	N/A	N/A	A53	0.75	0.113	IWD-1220.1		<150	<200	?	2E TO STEAM AIR COOLER.	R 11/91
.75BY-AC6-152	CC-300	N/A	N/A	A53	0.75	0.113	IWD-1220.1		<150	<200	?	STEAM AIR COOLER TO 748D, 2D.	R 11/91
.75BZ-AC6-152			N/A		0.75	0.113	IWD-1220.1		<150	<200	?	1.5D TO 1032A, WASTE GAS COMPRESSOR B.	A 11/91
.75C-AC6-152	CC-300	N/A	C-7	A53	0.75	0.113	IWD-1220.1		<150	<200	?	6G TO 774B.	
.75CA-AC6-152			N/A		0.75	0.113	IWD-1220.1		<150	<200	?	2T TO 2626, EWD11, 2626A.	A 11/91
.75CB-AC6-152			N/A		0.75	0.113	IWD-1220.1		<150	<200	?	EWD11 TO 2627, 2628, 2O, 2627A.	A 11/91
.75CC-AC6-152			N/A		0.75	0.113	IWD-1220.1		<150	<200	?	2T TO 2713, 2618, EWD10.	A 11/91
.75CD-AC6-152			N/A		0.75	0.113	IWD-1220.1		<150	<200	?	EWD10 TO 2617, 2O.	A 11/91
.75CE-AC6-152			N/A		0.75	0.113	IWD-1220.1		<150	<200	?	.75CC TO 775D.	A 11/91
.75CF-AC6-152			N/A		0.75	0.113	IWD-1220.1		<150	<200	?	2O TO 774E.	A 11/91
.75D-AC6-152	CC-220	N/A	C-5	A53	0.75	0.113	IWD-1220.1		<150	<200	?	6D TO 736A, 736B.	R 11/91
.75E-AC6-152	CC-220	N/A	N/A	A53	0.75	0.113	IWD-1220.1		<150	<200	?	2I TO 2727.	
.75F-AC6-152	CC-220	N/A	N/A	A53	0.75	0.113	IWD-1220.1		<150	<200	?	3G TO 2729.	
.75G-AC6-152	CC-700	N/A	N/A	A53	0.75	0.113	IWD-1220.1		<150	<200	?	DRAIN FROM 4D TO 2748.	R 11/91
.75H-AC6-152	CC-700	N/A	N/A	A53	0.75	0.113	IWD-1220.1		<150	<200	?	1.5A-AC6-152B TO 755A.	R 11/91
.75I-AC6-152	CC-700	N/A	N/A	A53	0.75	0.113	IWD-1220.1		<150	<200	?	VENT FROM 1.5A-AC6-152B TO 2773.	R 11/91
.75J-AC6-152	CC-700	N/A	N/A	A53	0.75	0.113	IWD-1220.1		<150	<200	?	DRAIN FROM 1.5A-AC6-152B TO 2759.	R 11/91
.75K-AC6-152	CC-600	N/A	N/A	A53	0.75	0.113	IWD-1220.1		<150	<200	?	1L TO 2774.	R 11/91
.75L-AC6-152	CC-600	N/A	N/A	A53	0.75	0.113	IWD-1220.1		<150	<200	?	1.5A-AC6-152A TO 2757.	R 11/91
.75M-AC6-152	CC-600	N/A	N/A	A53	0.75	0.113	IWD-1220.1		<150	<200	?	1.5A-AC6-152A TO 2772.	R 11/91
.75N-AC6-152	CC-600	N/A	B-30	A53	0.75	0.113	IWD-1220.1		<150	<200	?	DRAIN FROM 4T TO 2755.	R 11/91
.75O-AC6-152	CC-400	N/A	N/A	A53	0.75	0.113	IWD-1220.1		<150	<200	?	1.5B-AC6-152-B TO 755B.	R 11/91
.75P-AC6-152	CC-220	N/A	N/A	A53	0.75	0.113	IWD-1220.1		<150	<200	?	3H TO 2731.	
.75Q-AC6-152	CC-525	N/A	N/A	A53	0.75	0.113	IWD-1220.1		<150	<200	?	4O TO 2749.	R 11/91
.75R-AC6-152	CC-700	N/A	N/A	A53	0.75	0.113	IWD-1220.1		<150	<200	?	VENT FROM 4E TO 2775.	
.75S-AC6-152	CC-700	N/A	N/A	A53	0.75	0.113	IWD-1220.1		<150	<200	?	DRAIN FROM 4E TO 2758.	R 11/91

Printed: 11/09/92

R. E. GINNA NUCLEAR POWER PLANT
Inservice Examination Boundary Line List
Third Inspection Interval

Class....: 3
System...: AUXILIARY COOLANT-CCW
P&ID No..: 33013-1246
Comp Type: PIPING

RG&E Line No.	Gilbert Line No.	SWRI Line No.	ISI Fig.	Matrl.	Size (in.)	Thkns (in.)	Exemption Basis	NDE Method	Po	Temp	In?	Line description/remarks	Revision Status
.75T-AC6-152	CC-200	N/A	C-5	A53	0.75	0.113	IWD-1220.1		<150	<200	?	8A TO 2709.	R 11/91
.75U-AC6-152	CC-250	N/A	N/A	A53	0.75	0.113	IWD-1220.1		<150	<200	?	2B TO CS PUMP B.	R 11/91
.75V-AC6-152	CC-300	N/A	N/A	A53	0.75	0.113	IWD-1220.1		<150	<200	?	VENT FROM 2D TO 2710.	R 11/91
.75W-AC6-152	CC-200	N/A	C-5	A53	0.75	0.113	IWD-1220.1		<150	<200	?	DRAIN FROM 6A TO 2723.	
.75X-AC6-152	CC-260	N/A	N/A	A53	0.75	0.113	IWD-1220.1		<150	<200	?	2C TO 727D, 727E.	R 11/91
.75Y-AC6-152	CC-300	N/A	N/A	A53	0.75	0.113	IWD-1220.1		<150	<200	?	2D TO 774C.	
.75Z-AC6-152	CC-330	N/A	N/A	A53	0.75	0.113	IWD-1220.1		<150	<200	?	DRAIN FROM 3A TO 2730.	
.5A-AC6-152	CC-160	N/A	C-3	A53	0.50	0.000	IWD-1220.1		<150	<200	?	4C TO 727R, 727S.	R 11/91

Printed: 11/09/92

R. E. GINNA NUCLEAR POWER PLANT
Inservice Examination Boundary Line List
Third Inspection Interval

Class....: 3
System...: AUXILIARY COOLING-SPENT FUEL
P&ID No..: 33013-1248
Comp Type: COMPONENTS

RG&E Line No.	Gilbert Line No.	SWRI Line No.	ISI Fig.	Matrl.	Size (in.)	Thkns (in.)	Exemption Basis	NDE Method	Po	Temp	In?	Line description/remarks	Revision Status
EAC13			N/A		0.00	0.000	IWD-1220.2		<275	<200		SPENT FUEL POOL HEAT EXCHGR B.	A 11/91
PAC07B			N/A		0.00	0.000	IWD-1220.2		<275	<200		SPENT FUEL POOL RECIRC PUMP B.	A 11/91
TAC03			N/A		0.00	0.000	IWD-1220.2		<275	<200		SPENT FUEL POOL.	A 11/91

Printed: 11/09/92

R. E. GINNA NUCLEAR POWER PLANT
Inservice Examination Boundary Line List
Third Inspection Interval

Class....: 3
System...: AUXILIARY COOLING-SPENT FUEL
P&ID No..: 33013-1248
Comp Type: PIPING

RG&E Line No.	Gilbert Line No.	SWRI Line No.	ISI Fig.	Matrl.	Size (in.)	Thkns (in.)	Exemption Basis	NDE Method	Po	Temp	In?	Line description/remarks	Revision Status
8A-AC8-151-SFP			N/A		8.00	0.000	IWD-1220.2		<275	<200		4C & 4D TO 6A & 6B & 8657, SFP PUMP B.	A 11/91
8B-AC8-151-SFP			N/A		8.00	0.000	IWD-1220.2		<275	<200		6C TO SPENT FUEL POOL HE B.	A 11/91
8C-AC8-151-SFP			N/A		8.00	0.000	IWD-1220.2		<275	<200		SPENT FUEL POOL HE B TO 6D.	A 11/91
6A-AC8-151-SFP			N/A		6.00	0.000	IWD-1220.2		<275	<200		8A TO VALVE 8662.	A 11/91
6B-AC8-151-SFP			N/A		6.00	0.000	IWD-1220.2		<275	<200		8A TO VALVE 8654.	A 11/91
6C-AC8-151-SFP			N/A		6.00	0.000	IWD-1220.2		<275	<200		SPENT FUEL POOL RECIRC PUMP B TO 8B.	A 11/91
6D-AC8-151-SFP			N/A		6.00	0.000	IWD-1220.2		<275	<200		8C TO VALVE 8663, 6E.	A 11/91
6E-AC8-151			N/A		6.00	0.000	IWD-1220.2		<275	<200		6D TO SPENT FUEL POOL.	A 11/91
4A-AC8-151			N/A		4.00	0.000	IWD-1220.1					SPENT FUEL POOL TO 4C, VALVE 782.	A 11/91
4B-AC8-151			N/A		4.00	0.000	IWD-1220.1					SPENT FUEL POOL TO 4D, VALVE 781.	A 11/91
4C-AC8-151-SFP			N/A		4.00	0.000	IWD-1220.1					VALVE 782 TO 8A.	A 11/91
4D-AC8-151-SFP			N/A		4.00	0.000	IWD-1220.1					VALVE 781 TO 8A.	A 11/91
4E-AC8-151-SFP			N/A		4.00	0.000	IWD-1220.1					6D TO VALVE 8614.	A 11/91
4F-AC8-151-SFP			N/A		4.00	0.000	IWD-1220.1					6D TO VALVE 8664.	A 11/91
3-WD2-151			N/A		3.00	0.216	IWD-1220.1				?	THIS LINE ACCOUNTED FOR ON 33013-1272.	A 11/91
2A-AC8-151-SFP			N/A		2.00	0.000	IWD-1220.1					6C TO VALVE 8661.	A 11/91
2B-AC8-151-SFP			N/A		2.00	0.000	IWD-1220.1					6D TO VALVE 8632.	A 11/91

Printed: 11/09/92

R. E. GINNA NUCLEAR POWER PLANT
Inservice Examination Boundary Line List
Third Inspection Interval

Class....: 3
System...: AUXILIARY FEEDWATER
P&ID No..: 33013-1237
Comp Type: COMPONENTS

RG&E Line No.	Gilbert Line No.	SWRI Line No.	ISI Fig.	Matrl.	Size (in.)	Thkns (in.)	Exemption Basis	NDE Method	Po	Temp	In?	Line description/remarks	Revision Status
EAF01			N/A		0.00	0.000	IWD-1220.1		75	80		TURBIN DRIVEN AFW PUMP LUBE OIL COOLER.	A 11/91
EAF02A			N/A		0.00	0.000	IWD-1220.1		75	80		AFW PUMP A LUBE OIL COOLER.	A 11/91
EAF02B			N/A		0.00	0.000	IWD-1220.1		75	80		AFW PUMP B LUBE OIL COOLER.	A 11/91
PAF01A			N/A		0.00	0.000	NO IWA	VT-3	1250	100		AUXILIARY FEEDWATER PUMP A.	A 11/91
PAF01B			N/A		0.00	0.000	NO IWA	VT-3	1250	100		AUXILIARY FEEDWATER PUMP B.	A 11/91
PAF03			N/A		0.00	0.000	NO IWA	VT-3	1250	100		TURBIN DRIVEN AFW PUMP.	A 11/91

Printed: 11/09/92

R. E. GINNA NUCLEAR POWER PLANT
Inservice Examination Boundary Line List
Third Inspection Interval

Class....: 3
System...: AUXILIARY FEEDWATER
P&ID No..: 33013-1237
Comp Type: PIPING

RG&E Line No.	Gilbert Line No.	SWRI Line No.	ISI Fig.	Matrl.	Size (in.)	Thkns (in.)	Exemption Basis	NDE Method	Po	Temp	In?	Line description/remarks	Revision Status
5A-FW7-900-1	AFW-200		C-1	A106	5.00	0.375		VT-3	1250	100	?	3I-FW7-900-1 TO VALVE 3998, 3F-FW7-900-1	R 11/91
5B-FW7-900-1	AFW-200		C-1A	A106	5.00	0.375	NO SUPPORTS	VT-3	1250	100	?	3F-FW7-900-1 TO RDCR BEFORE 4003.	R 11/91
5C-FW7-900-1	AFW-400,200		C-1B	A106	5.00	0.375	NO SUPPORTS	VT-3	1250	100	?	3H-FW7-900-1 TO 3J-FW7-900-1.	R 11/91
4A-CD-150-1A	SW-1520		C-33	A53	4.00	0.237	NO SUPPORTS	VT-3	12	80	?	4017 TO 4345, AUX FW PUMP A SUCTION.	R 11/91
4A-CD-150-1B	SW-1520		C-33	A53	4.00	0.237		VT-3	12	80	?	4016 TO 4344, AUX FW PUMP B SUCTION.	R 11/91
4A-CD-150-1C	SW-1520		C-16	A53	4.00	0.237		VT-3	12	80	?	4014 TO 4098, TURB AUX FW PUMP SUCTION.	R 11/91
4A-SW-125-1			C-33	A53	4.00	0.237	NO SUPPORTS	VT-3	75	80	?	20I-SW0-125-1, 4640 TO & INCL TEE.	R 11/91
4A-SW-125-1A			C-33		4.00	0.237		VT-3			?	4A-SW-125-1 TO VALVES 4027 4345.	R 11/91
4A-SW-125-1B			C-33		4.00	0.237		VT-3			?	4A-SW-125-1 TO VALVES 4028, 4344.	R 11/91
4A-SW-125-1C			C-16		4.00	0.237		VT-3			?	16A-SW0-125-1, 4623 TO 4098.	A 11/91
3A-FW7-900-1A	AFW-100,500		C-1A	A106	3.00	0.300		VT-3	1250	100	?	2D-FW7-900-1A TO VALVE 4000C.	R 11/91
3A-FW7-900-1B	AFW-100,400		C-1F	A106	3.00	0.300		VT-3	1250	100	?	2D-FW7-900-1B TO VALVE 4000D.	R 11/91
3B-FW7-900-1			C-1D	A106	3.00	0.300	NO SUPPORTS	VT-3	1250	100	?	3A-FW7-900-1A TO 4357.	A 11/91
3C-FW7-900-1	AFW-100		C-1E	A106	3.00	0.300	NO SUPPORTS	VT-3	1250	100	?	3A-FW7-900-1B TO 4356.	R 11/91
3D-FW7-900-1			C-1E		3.00	0.438		VT-3	1250	100	?	BYPASS FROM 4357 TO 4356 THRU 4000A.	A 11/91
3E-FW7-900-1	AFW-100		C-1D	A106	3.00	0.438		VT-3	1250	100	?	3K-FW7-900-1 TO 4360,4359,5A-FW7-900-1.	R 11/91
3F-FW7-900-1	AFW-200		C-1	A106	3.00	0.300		VT-3	1250	100	?	5A-FW7-900-1 TO 4001, 5B-FW7-900-1.	R 11/91
3G-FW7-900-1	AFW-200,500		C-1A	A106	3.00	0.300		VT-3	1250	100	?	5B-FW7-900-1 TO 4003.	R 11/91
3H-FW7-900-1	AFW-200		C-1	A106	3.00	0.300		VT-3	1250	100	?	5A-FW7-900-1 TO 4000,4002,5C-FW7-900-1.	R 11/91
3I-FW7-900-1			C-1		3.00	0.300	NO SUPPORTS	VT-3			?	TURB AFW PUMP DISCHG TO 5A-FW7-900-1.	A 11/91
3J-FW7-900-1	AFW-200		C-1B	A106	3.00	0.438		VT-3	1250	100	?	5C-FW7-900-1 TO 4004.	R 11/91
3K-FW7-900-1	AFW-100		C-1E		3.00	0.438		VT-3	1250	100	?	BYPASS FROM 4357 TO 4356 THRU 4000B.	R 11/91
2A-FW7-900-1A	AFW-100		C-1G	A106	2.00	0.145		VT-3	1250	100	?	3A-FW7-900-1A TO 1A-FW7-900-1A.	R 11/91
2A-FW7-900-1B	AFW-100		C-1H	A106	2.00	0.154		VT-3	1250	100	?	3A-FW7-900-1B TO 4310.	R 11/91
2B-FW7-900-1A	AFW-100		C-1G	A106	2.00	0.145		VT-3	1250	100	?	2A-FW7-900-1A TO 4482, 1.5A-FW7-900-1A.	R 11/91
2B-FW7-900-1B			C-1H		2.00	0.145		VT-3	1250	100	?	2A-FW7-900-1B TO 4484, 1.5A-FW7-900-1B.	R 11/91
2C-FW7-900-1A			C-1G		2.00	0.145		VT-3			?	1.5A-FW7-900-1A TO 4483, 3A-FW7-900-1A.	A 11/91
2C-FW7-900-1B			C-1H		2.00	0.145		VT-3			?	1.5A-FW7-900-1B TO 4485, 3A-FW7-900-1B.	A 11/91

Printed: 11/09/92

R. E. GINNA NUCLEAR POWER PLANT
Inservice Examination Boundary Line List
Third Inspection Interval

Class....: 3
System...: AUXILIARY FEEDWATER
P&ID No..: 33013-1237
Comp Type: PIPING

RG&E Line No.	Gilbert Line No.	SWRI Line No.	ISI Fig.	Matrl.	Size (in.)	Thkns (in.)	Exemption Basis	NDE Method	Po	Temp	In?	Line description/remarks	Revision Status
2D-FW7-900-1A			C-1A		2.00	0.145	NO SUPPORTS	VT-3	1250	100	?	AFW PUMP A DISCHG TO 3A-FW7-900-1A.	A 11/91
2D-FW7-900-1B			C-1F		2.00	0.145	NO SUPPORTS	VT-3	1250	100	?	AFW PUMP B DISCHG TO 3A-FW7-900-1B.	A 11/91
1.5A-FW7-900-1			C-1		1.50	0.145	NO IWA	VT-3			?	5A-FW7-900-1 TO 4023, 4291, LFW30.	A 11/91
1.5A-FW7-900-1A			C-1G		1.50	0.145	NO SUPPORTS	VT-3			?	2B-FW7-900-1A TO 4480, 2C-FW7-900-1A.	A 11/91
1.5A-FW7-900-1B			C-1H		1.50	0.145	NO SUPPORTS	VT-3			?	2B-FW7-900-1B TO 4481, 2C-FW7-900-1B.	A 11/91
1A-CD-150-1	SW-1520		C-31	AS3	1.00	0.133	IWD-1220.1		12	80	?	.5A-CD-150-1 TO .5C-CD-150-1.	R 11/91
1A-FW7-900-1A			C-1G		1.00	0.133	IWD-1220.1				?	2A-FW7-900-1A TO 4304, LFW31.	A 11/91
1A-FW7-900-1B			C-1H		1.00	0.133	IWD-1220.1				?	2A-FW7-900-1B TO 4310, LFW32.	A 11/91
1A-SW-125-1A			C-33	AS3	1.00	0.133	IWD-1220.1		75	80	?	.5A-SW-125-1A TO 4029,LUBE OIL CLEANER A	R 11/91
1A-SW-125-1C			C-16		1.00	0.133	IWD-1220.1				?	4A-SW-125-1C TO TURB AUX FEED PUMP.	R 11/91
1B-CD-150-1	SW-1520		C-31	AS3	1.00	0.133	IWD-1220.1		12	80	?	1A-CD-150-1 TO 4083.	R 11/91
1C-CD-150-1C			C-16		1.00	0.133	IWD-1220.1				?	4A-CD-150-1C TO 4293, 4287.	A 11/91
.75A-CD-150-1A	SW-1520		C-33	AS3	0.75	0.113	IWD-1220.1		12	80	?	4A-CD-150-1A TO 4021.	R 11/91
.75A-CD-150-1B	SW-1520		C-33	AS3	0.75	0.113	IWD-1220.1		12	80	?	4A-CD-150-1B TO 4022.	R 11/91
.75A-CD-150-1C	SW-1520		C-16	AS3	0.75	0.113	IWD-1220.1		12	80	?	4A-CD-150-1C TO 4020.	R 11/91
.75B-SW-125-1C			C-16		0.75	0.113	IWD-1220.1				?	1A-SW-125-1C BYPASS THRU 4324.	R 11/91
.75C-FW7-900-1A	AFW-100		C-1G	A106	0.75	0.113	IWD-1220.1		1250	100	?	DRAIN FROM 2C-FW7-900-1A TO 4493.	R 11/91
.75C-FW7-900-1B			C-1H		0.75	0.113	IWD-1220.1		1250	100	?	DRAIN FROM 2C-FW7-900-1B TO 4495.	R 11/91
.75D-FW7-900-1	AFW-200		C-1B	A106	0.75	0.113	IWD-1220.1		1250	100	?	5C-FW7-900-1 TO 4348.	R 11/91
.75E-FW7-900-1	AFW-200		C-1B	A106	0.75	0.113	IWD-1220.1		1250	100	?	5C-FW7-900-1 TO 4346.	R 11/91
.75F-SW-125-1A			C-33		0.75	0.145	IWD-1220.1				?	4A-SW-125-1A TO .5A-SW-125-1A.	A 11/91
.5A-CD-150-1			C-31		0.50	0.000	IWD-1220.1				?	1A-CD-150-1 TO 4025, 4A-CD-150-1A.	A 11/91
.5A-FW7-900-1A	AFW-100		C-1A	A106	0.50	0.500	IWD-1220.1		1250	100	?	3A-FW7-900-1A TO 4351A.	R 11/91
.5A-FW7-900-1B	AFW-100		C-1F	A106	0.50	0.500	IWD-1220.1		1250	100	?	3A-FW7-900-1B TO 4350A.	R 11/91
.5A-SW-125-1A			C-33	AS3	0.50	0.100	IWD-1220.1		75	80	?	.75F-SW-125-1A TO 4091, AUX FW PUMP A.	R 11/91
.5B-CD-150-1			C-31		0.50	0.000	IWD-1220.1				?	4A-CD-150-1B TO 4026, 1A-CD-150-1.	A 11/91
.5B-FW7-900-1A	AFW-100		C-1A	A106	0.50	0.500	IWD-1220.1		1250	100	?	3A-FW7-900-1A TO 4353A.	R 11/91
.5B-FW7-900-1B	AFW-100		C-1F	A106	0.50	0.500	IWD-1220.1		1250	100	?	3A-FW7-900-1B TO 4352A.	R 11/91

Printed: 11/09/92

R. E. GINNA NUCLEAR POWER PLANT
Inservice Examination Boundary Line List
Third Inspection Interval

Class....: 3
System...: AUXILIARY FEEDWATER
P&ID No..: 33013-1237
Comp Type: PIPING

RG&E Line No.	Gilbert Line No.	SWRI Line No.	ISI Fig.	Matrl.	Size (in.)	Thkns (in.)	Exemption Basis	NDE Method	Po	Temp	In?	Line description/remarks	Revision Status
.5B-SW-125-1B			C-33		0.50	0.000	IWD-1220.1				?	4A-SW-125-1A TO 4090.	A 11/91
.5C-CD-150-1			C-31		0.50	0.000	IWD-1220.1				?	4A-CD-150-1C TO 4024, 1A-CD-150-1.	A 11/91
.5C-SW-125-1B			C-33	AS3	0.50	0.100	IWD-1220.1		75	80	?	4090 TO AUX FW PUMP B.	R 11/91
.5D-SW-125-1B			C-33		0.50	0.000	IWD-1220.1				?	.5C-SW-125-1B TO LUBE OIL COOLER B.	A 11/91
.5E-SW-125-1C			C-16		0.50	0.000	IWD-1220.1				?	4A-SW-125-1C TO 4292.	A 11/91

Printed: 11/09/92

R. E. GINNA NUCLEAR POWER PLANT
Inservice Examination Boundary Line List
Third Inspection Interval

Class....: 3
System...: CONTAINMENT SPRAY
P&ID No..: 33013-1261
Comp Type: COMPONENTS

RG&E Line No.	Gilbert Line No.	SWRI Line No.	ISI Fig.	Matrl.	Size (in.)	Thkns (in.)	Exemption Basis	NDE Method	Po	Temp	In?	Line description/remarks	Revision Status
TSI02			N/A		0.00	0.000	IWD-1220.1				-	SPRAY ADDITIVE TANK.	R 11/91

Printed: 11/09/92

R. E. GINNA NUCLEAR POWER PLANT
Inservice Examination Boundary Line List
Third Inspection Interval

Class....: 3
System...: CVCS-BORIC ACID
P&ID No..: 33013-1266
Comp Type: COMPONENTS

RG&E Line No.	Gilbert Line No.	SWRI Line No.	ISI Fig.	Matrl.	Size (in.)	Thkns (in.)	Exemption Basis	NDE Method	Po	Temp	In?	Line description/remarks	Revision Status
FCH02			N/A		0.00	0.000	IWD-1220.2		<275	<200		BORIC ACID FILTER.	A 11/91
PCH03A			N/A		0.00	0.000	IWD-1220.1		<275	<200		BORIC ACID TRANSFER PUMP A.	A 11/91
PCH03B			N/A		0.00	0.000	IWD-1220.1		<275	<200		BORIC ACID TRANSFER PUMP B.	A 11/91
SCH01			N/A		0.00	0.000	IWD-1220.1		<275	<200		BORIC ACID BLENDER (ENLARGED PIPE).	A 11/91

Printed: 11/09/92

R. E. GINNA NUCLEAR POWER PLANT
Inservice Examination Boundary Line List
Third Inspection Interval

Class....: 3
System...: CVCS-BORIC ACID
P&ID No..: 33013-1266
Comp Type: PIPING

RG&E Line No.	Gilbert Line No.	SWRI Line No.	ISI Fig.	Matrl.	Size (in.)	Thkns (in.)	Exemption Basis	NDE Method	Po	Temp	In?	Line description/remarks	Revision Status
2A-CH6-151			N/A	A312	2.00	0.109	IWD-1220.1				?	375C, 331 TO 345.	
2B-CH6-151			N/A	A312	2.00	0.109	IWD-1220.1				?	2A TO BORIC ACID TRANSFER PUMP 1 SUCTION	
2C-CH6-151			N/A	A312	2.00	0.109	IWD-1220.1				?	2A TO BORIC ACID TRANSFER PUMP 2 SUCTION	
2D-CH6-151			N/A	A312	2.00	0.109	IWD-1220.1				?	217 TO 2B & 2C.	
2E-CH6-151			N/A	A312	2.00	0.109	IWD-1220.1				?	PUMP 1 DISHCARGE TO 2G.	
2F-CH6-151			N/A	A312	2.00	0.109	IWD-1220.1				?	PUMP 2 DISHCARGE TO 2G.	
2G-CH6-151			N/A	A312	2.00	0.109	IWD-1220.1				?	2E, 2F TO 348A, 1A.	
2H-CH6-151			N/A	A312	2.00	0.109	IWD-1220.1				?	2E TO HCV104, 2G.	
2I-CH6-151			N/A	A312	2.00	0.109	IWD-1220.1				?	2F TO HCV105, 2H.	
2J-CH6-151			N/A	A312	2.00	0.109	IWD-1220.1				?	BORIC ACID BLENDER TO FCV110B, 365A.	
2K-CH6-151			N/A	A312	2.00	0.109	IWD-1220.1				?	BORIC ACID BLENDER TO FCV111, 2238.	
2L-CH6-151			N/A		2.00	0.000	IWD-1220.1					2H-CH6-151 THRU 398B TO 2G-CH6-151.	A 11/91
1A-CH6-151			N/A	A312	1.00	0.109	IWD-1220.1				?	2G TO 356 BORIC ACID BLENDER.	
.75A-CH6-151			N/A	A312	0.75	0.083	IWD-1220.1				?	2F TO 344.	
.75B-CH6-151			N/A	A312	0.75	0.083	IWD-1220.1				?	2E TO 330D.	
.75C-CH6-151			N/A		0.75	0.000	IWD-1220.1					.75A-CH6-151 TO VALVE 330C.	A 11/91

Printed: 11/09/92

R. E. GINNA NUCLEAR POWER PLANT
Inservice Examination Boundary Line List
Third Inspection Interval

Class....: 3
System...: CVCS-BORIC ACID EVAPORATOR
P&ID No..: 33013-1268
Comp Type: PIPING

RG&E Line No.	Gilbert Line No.	SWRI Line No.	ISI Fig.	Matrl.	Size (in.)	Thkns (in.)	Exemption Basis	NDE Method	Po	Temp	In?	Line description/remarks	Revision Status
1A-CH8-151			N/A	A304	1.00	0.109	IWD-1220.1				?	VALVE 1141B TO HOLDUP TANKS.	

Printed: 11/09/92

R. E. GINNA NUCLEAR POWER PLANT
Inservice Examination Boundary Line List
Third Inspection Interval

Class....: 3
System...: CVCS-HOLDUP TKS TO GAS STRPRS
P&ID No..: 33013-1267
Comp Type: COMPONENTS

RG&E Line No.	Gilbert Line No.	SWRI Line No.	ISI Fig.	Matrl.	Size (in.)	Thkns (in.)	Exemption Basis	NDE Method	Po	Temp	In?	Line description/remarks	Revision Status
FCH04			N/A		0.00	0.000	IWD-1220.2		<275	<200		ION EXCHANGER FILTER.	A 11/91
PCH04A			N/A		0.00	0.000	IWD-1220.2		<275	<200		GAS STRIPPER FEED PUMP A.	A 11/91
PCH04B			N/A		0.00	0.000	IWD-1220.2		<275	<200		GAS STRIPPER FEED PUMP B.	A 11/91
PCH05			N/A		0.00	0.000	IWD-1220.2		<275	<200		CVCS HOLDUP TANKS RECIRCULATION PUMP.	A 11/91
TCH09A			N/A		0.00	0.000	IWD-1220.2		<275	<200		CVCS HOLDUP TANK A.	A 11/91
TCH09B			N/A		0.00	0.000	IWD-1220.2		<275	<200		CVCS HOLDUP TANK B.	A 11/91
TCH09C			N/A		0.00	0.000	IWD-1220.2		<275	<200		CVCS HOLDUP TANK C.	A 11/91
TCH10A			N/A		0.00	0.000	IWD-1220.2		<275	<200		CATION ION EXCHANGER A.	A 11/91
TCH10B			N/A		0.00	0.000	IWD-1220.2		<275	<200		CATION ION EXCHANGER B.	A 11/91
TCH11A			N/A		0.00	0.000	IWD-1220.2		<275	<200		BASE REMOVAL ION EXCHANGER A.	A 11/91
TCH11B			N/A		0.00	0.000	IWD-1220.2		<275	<200		BASE REMOVAL ION EXCHANGER B.	A 11/91

Printed: 11/09/92

R. E. GINNA NUCLEAR POWER PLANT
Inservice Examination Boundary Line List
Third Inspection Interval

Class....: 3
System...: CVCS-HOLDUP TKS TO GAS STRPRS
P&ID No..: 33013-1267
Comp Type: PIPING

RG&E Line No.	Gilbert Line No.	SWRI Line No.	ISI Fig.	Matrl.	Size (in.)	Thkns (in.)	Exemption Basis	NDE Method	Po	Temp	In?	Line description/remarks	Revision Status
6A-CH7-151			N/A	A53	6.00	0.280	IWD-1220.2		<275	<200	?	4B, 4C, 4D TO 4E (BURRIED).	R 11/91
4A-CH7-151			N/A	A53	4.00	0.237	IWD-1220.1				?	1100A, 1103A TO HOLDUP TANKS A,B,C.	
4B-CH7-151			N/A	A53	4.00	0.237	IWD-1220.1				?	HOLDUP TANK A TO 1127, 6A.	R 11/91
4C-CH7-151			N/A	A53	4.00	0.237	IWD-1220.1				?	HOLDUP TANK B TO 1126, 6A.	
4D-CH7-151			N/A	A53	4.00	0.237	IWD-1220.1				?	HOLDUP TANK C TO 1113, 6A.	
4E-CH7-151			N/A	A53	4.00	0.237	IWD-1220.1				?	6A TO RECIRC PUMP SUCTION.	
4F-CH7-151			N/A	A53	4.00	0.237	IWD-1220.1				?	RECIRC PUMP DISCHARGE TO 4A.	
3A-CH7-151			N/A	A53	3.00	0.216	IWD-1220.1				?	HOLDUP TANK B TO 1266.	
3B-CH7-151			N/A	A53	3.00	0.216	IWD-1220.1				?	HOLDUP TANK C TO 1265.	
3C-CH7-151			N/A	A53	3.00	0.216	IWD-1220.1				?	4A, 1100B TO 3D.	
3D-CH7-151			N/A	A53	3.00	0.216	IWD-1220.1				?	4A, 1100C TO 1100D.	
3E-CH7-151			N/A	A53	3.00	0.216	IWD-1220.1				?	ION EXCHANGER TO 1164.	
3F-CH7-151			N/A	A53	3.00	0.216	IWD-1220.1				?	ION EXCHANGER TO 1172.	
3G-CH7-151			N/A	A53	3.00	0.216	IWD-1220.1				?	ION EXCHANGER TO 1184.	
3H-CH7-151			N/A	A53	3.00	0.216	IWD-1220.1				?	ION EXCHANGER TO 1189.	
3I-CH7-151			N/A		3.00	0.216	IWD-1220.1				?	HOLDUP TANK A TO 1267.	A 11/91
3J-CH7-151			N/A		3.00	0.216	IWD-1220.1				?	CATION EXCHANGER B TO 1168.	A 11/91
3K-CH7-151			N/A		3.00	0.216	IWD-1220.1				?	CATION EXCHANGER A TO 1178.	A 11/91
3L-CH7-151			N/A		3.00	0.216	IWD-1220.1				?	BASE ION EXCHANGER B TO 1195.	A 11/91
3M-CH7-151			N/A		3.00	0.216	IWD-1220.1				?	BASE ION EXCHANGER A TO 1194.	A 11/91
2A-CH7-152			N/A	A53	2.00	0.154	IWD-1220.1				?	2B, 2C, & 2D TO VENT HEADER.	R 11/91
2B-CH7-151			N/A	A53	2.00	0.154	IWD-1220.1				?	HOLDUP TANK A TO 2A, 1123C.	R 11/91
2C-CH7-151			N/A	A53	2.00	0.154	IWD-1220.1				?	HOLDUP TANK B TO 2A, 1123B.	R 11/91
2D-CH7-151			N/A	A53	2.00	0.154	IWD-1220.1				?	HOLDUP TANK C TO 2A, 1123A.	R 11/91
2E-CH7-151			N/A	A53	2.00	0.154	IWD-1220.1				?	CATION EXCHANGER B TO 1166, 1167, 1173.	R 11/91
2F-CH7-151			N/A	A53	2.00	0.154	IWD-1220.1				?	4A TO 361.	
2G-CH7-151			N/A	A53	2.00	0.154	IWD-1220.1				?	HOLDUP TKS A,B,C TO GAS STPR PMPS A & B.	
2H-CH7-151			N/A	A53	2.00	0.154	IWD-1220.1				?	CATION EXCHANGER A TO 1171, 1176, 1177.	R 11/91

Printed: 11/09/92

R. E. GINNA NUCLEAR POWER PLANT
Inservice Examination Boundary Line List
Third Inspection Interval

Class....: 3
System...: SERVICE WATER
P&ID No..: 33013-1250
Comp Type: PIPING

RG&E Line No.	Gilbert Line No.	SWRI Line No.	ISI Fig.	Matrl.	Size (in.)	Thkns (in.)	Exemption Basis	NDE Method	Po	Temp	In?	Line description/remarks	Revision Status
12B-SW0-125-12			N/A		12.00	0.375	IWD-1220.2				?	CCHE B TO 20C.	A 11/91
12C-SW0-125-1			N/A		12.00	0.375	IWD-1220.2				?	10D TO SFPHE B.	A 11/91
12D-SW0-125-1			N/A		12.00	0.375	IWD-1220.2				?	SFPHE B TO 10E.	A 11/91
10A-SW0-125-1	SW-1400		C-14	A53	10.00	0.375		VT-3	75	80	?	8D, 8E TO 14" REDUCER, 14L.	R 11/91
10B-SW0-125-1			C-13	A53	10.00	0.375		VT-3	75	80	?	14K TO 4613.	R 11/91
10C-SW0-125-1			C-16		10.00	0.375		VT-3			?	16D TO 4614.	A 11/91
10D-SW0-125-1			C-12		10.00	0.375	IWD-1220.2				?	14H TO 12C.	A 11/91
10E-SW0-125-1			C-11		10.00	0.375	IWD-1220.2				?	12D TO 14F.	A 11/91
8A-SW0-125-1	SW-1500		C-16B	A53	8.00	0.322		VT-3	75	80	?	14E TO 4642.	R 11/91
8B-SW0-125-1	SW-1500		C-16B	A53	8.00	0.322	NO SUPPORTS	VT-3	75	80	?	14E TO 4628.	R 11/91
8C-SW0-125-1	SW-1500		C-16B	A53	8.00	0.322		VT-3	75	80	?	14E TO 4641.	R 11/91
8D-SW0-125-1	SW-1400		C-14	A53	8.00	0.322		VT-3	75	80	?	4644 TO 10A.	R 11/91
8E-SW0-125-1			C-14	A53	8.00	0.327		VT-3	75	80	?	4643 TO 10A.	R 11/91
8F-SW0-125-1			C-14	A53	8.00	0.327		VT-3	75	80	?	4630 TO 14J.	R 11/91
8G-SW0-125-1			C-14	A53	8.00	0.327		VT-3	75	80	?	4629 TO 14X14X8 TEE, 14J.	R 11/91
8H-SW0-125-1			C-16B	A53	8.00	0.327	NO SUPPORTS	VT-3	75	80	?	14E TO 4627.	R 11/91
8I-SW0-125-1			C-17	A53	8.00	0.327		VT-3	75	80	?	20E TO 4609.	R 11/91
6A-SW0-125-1	SW-1850		C-13	A53	6.00	0.280	NO SUPPORTS	VT-3	75	80	?	16B TO 4668B, 4J.	R 11/91
6B-SW0-125-1	SW-1410		C-18	A53	6.00	0.280		VT-3	75	80	?	4H, 4I TO 14J.	R 11/91
6C-SW0-125-1	SW-1020		C-12	A53	6.00	0.280	IWD-1220.2		75	80	?	18A TO SFPHE A.	R 11/91
6D-SW0-125-12	SW-1120		C-11	A53	6.00	0.280	IWD-1220.2		75	80	?	6E TO 20C.	R 11/91
6E-SW0-125-1	SW-1120		C-11	A53	6.00	0.280	IWD-1220.2		75	80	?	SFPHE A TO 20D (DISCHARGE).	R 11/91
6F-SW0-125-1			C-11	A53	6.00	0.280	IWD-1220.2		75	80	?	20D TO 8686.	R 11/91
6G-SW0-125-1			C-13	A53	6.00	0.280		VT-3	75	80	?	4C, 4E TO 10" REDUCER.	R 11/91
6H-SW0-125-1			C-16A	A53	6.00	0.280		VT-3	75	80	?	14E TO 4663, 4733, 6X4X4 TEE.	R 11/91
6I-SW0-125-1			C-12		6.00	0.280	IWD-1220.2				?	14I TO 8687.	A 11/91
4A-SW-125-1			C-33	A53	4.00	0.237	NO SUPPORTS	VT-3	75	80	?	THIS LINE ACCOUNTED FOR ON 33013-1237.	A 11/91
4A-SW-125-1C			C-16		4.00	0.237		VT-3			?	THIS LINE ACCOUNTED FOR ON 33013-1237.	A 11/91

Printed: 11/09/92

R. E. GINNA NUCLEAR POWER PLANT
Inservice Examination Boundary Line List
Third Inspection Interval

Class....: 3
System...: SERVICE WATER
P&ID No..: 33013-1250
Comp Type: PIPING

RG&E Line No.	Gilbert Line No.	SWRI Line No.	ISI Fig.	Matrl.	Size (in.)	Thkns (in.)	Exemption Basis	NDE Method	Po	Temp	In?	Line description/remarks	Revision Status
4A-SW0-125-1	SW-1850		C-13	A53	4.00	0.237	IWD-1220.1		75	80	?	14K TO DIESEL GENERATOR A COOLERS.	R 11/91
4B-SW0-125-1			C-16A	A53	4.00	0.237	IWD-1220.1		75	80	?	6H TO 4649, CHILLER A.	R 11/91
4C-SW0-125-1			C-13	A53	4.00	0.237	IWD-1220.1		75	80	?	DIESEL GENERATOR A COOLERS TO 4671, 6G.	R 11/91
4D-SW0-125-1			C-16A	A53	4.00	0.237	IWD-1220.1		75	80	?	6H TO 4650, CHILLER B.	R 11/91
4E-SW0-125-1			C-13	A53	4.00	0.237	IWD-1220.1		75	80	?	DIESEL GENERATOR B COOLERS TO 4672, 6G.	R 11/91
4F-SW0-152S			C-27	A53	4.00	0.237	IWD-1220.1		75	80	?	14H TO 9626B, 9627B, & 9629B.	R 11/91
4G-SW0-152S			C-26	A53	4.00	0.237	IWD-1220.1		75	80	?	20F TO 9626A, 9627A, & 9629A.	R 11/91
4H-SW0-125-1			C-18	A53	4.00	0.237	IWD-1220.1		75	80	?	CHILLER A TO 4651, 6B.	R 11/91
4I-SW0-125-1			C-18	A53	4.00	0.237	IWD-1220.1		75	80	?	CHILLER B TO 4652, 6B.	R 11/91
4J-SW0-125-1			C-13		4.00	0.237	IWD-1220.1				?	14K TO DIESEL GENERATOR B COOLERS, 4668B	A 11/91
4K-SW0-152S			C-29	A53	4.00	0.237	IWD-1220.1		75	80	?	4F TO 9628A, 9628B, 4G.	A 11/91
4L-SW0-125-1			C-17		4.00	0.237	IWD-1220.1				?	14B THRU 4612, 4611 TO 14C.	A 11/91
3A-SW0-125-1	SW-1850		N/A	A53	3.00	0.216	IWD-1220.1		75	80	?	4J TO 4668F.	R 11/91
3B-SW0-125-12			C-11	A53	3.00	0.216	IWD-1220.1		75	80	?	3F TO 6D.	R 11/91
3C-SW0-125-1			N/A	A53	3.00	0.216	IWD-1220.1		75	80	?	4A TO 4667F.	R 11/91
3D-SW0-125-1			C-12	A53	3.00	0.216	IWD-1220.1		75	80	?	20F TO 4739, 4769.	R 11/91
3E-SW0-125-1			C-12	A53	3.00	0.216	IWD-1220.1		75	80	?	20H TO 4738, 4754.	R 11/91
3F-SW0-125-1			C-11	A53	3.00	0.216	IWD-1220.1		75	80	?	4753 TO 4739A, 4739B, DISCHARGE CANAL.	R 11/91
3G-SW0-125-1			C-14		3.00	0.216	IWD-1220.1				?	4624C TO 14J.	A 11/91
2.5A-SW0-125-1			C-16	A53	2.50	0.203	IWD-1220.1		75	80	?	14E TO 4625, 4626, 16D.	R 11/91
2.5B-SW0-125-1			N/A	A53	2.50	0.203	IWD-1220.1		75	80	?	2.5A TO 4635, 4757.	R 11/91
2.5C-SW0-125-1			N/A	A53	2.50	0.203	IWD-1220.1		75	80	?	4636 TO 4I.	R 11/91
2.5D-SW0-125-1			N/A	A53	2.50	0.203	IWD-1220.1		75	80	?	4758 TO 2.5C.	R 11/91
2.5E-SW0-125-1			N/A		2.50	0.203	IWD-1220.1				?	12D TO 8633, 8634, 10E.	A 11/91
2A-SW0-152S			C-11	A53	2.00	0.154	IWD-1220.1		75	80	?	14F TO 1.5D.	R 11/91
2B-SW0-152S			N/A	A53	2.00	0.154	IWD-1220.1		75	80	?	20C TO 1.5B.	R 11/91
1.5A-SW0-125-1			N/A	A53	1.50	0.145	IWD-1220.1		75	80	?	3D TO SI COOLER 3, 3F.	R 11/91
1.5B-SW0-152S			C-29	A53	1.50	0.145	IWD-1220.1		75	80	?	2B TO ROOM COOLING UNIT B, 4F.	R 11/91

Printed: 11/09/92

R. E. GINNA NUCLEAR POWER PLANT
Inservice Examination Boundary Line List
Third Inspection Interval

Class....: 3
System...: SERVICE WATER
P&ID No..: 33013-1250
Comp Type: PIPING

RG&E Line No.	Gilbert Line No.	SWRI Line No.	ISI Fig.	Matrl.	Size (in.)	Thkns (in.)	Exemption Basis	NDE Method	Po	Temp	In?	Line description/remarks	Revision Status
1.5C-SW0-125-1			N/A	A53	1.50	0.145	IWD-1220.1		75	80	?	3D TO SI COOLER 1, 3F.	R 11/91
1.5D-SW0-152S			C-29	A53	1.50	0.145	IWD-1220.1		75	80	?	2A TO ROOM COOLING UNIT A, 4G.	R 11/91
1.5E-SW0-125-1			N/A	A53	1.50	0.145	IWD-1220.1		75	80	?	3D TO SI COOLER 2, 3F.	R 11/91
1.5F-SW0-125-1			N/A	A53	1.50	0.145	IWD-1220.1		75	80	?	3D TO PEN COOLER, 3F.	R 11/91
1.5G-SW0-152S			N/A		1.50	0.145	IWD-1220.1				?	2A TO 9635, 2B.	A 11/91
1.25A-SW0-152N			N/A		1.25	0.000	IWD-1220.1				?	4789, 4790 TO .75A, SI PUMPS.	A 11/91
1.25B-SW0-152N			N/A		1.25	0.000	IWD-1220.1				?	SI PUMPS, .75A TO 3F.	A 11/91
1A-SW0-125-1			N/A	A53	1.00	0.133	IWD-1220.1		75	80	?	4J TO 4669A.	R 11/91
1B-SW0-125-1			C-16A	A53	1.00	0.133	IWD-1220.1		75	80	?	6H TO 4799T.	R 11/91
1C-SW0-125-1			N/A	A53	1.00	0.133	IWD-1220.1		75	80	?	4A TO 4667A.	R 11/91
1D-SW0-125-9			C-12	A53	1.00	0.133	IWD-1220.1		75	80	?	14I TO 4617A, 14H.	R 11/91
1E-SW0-125-1			N/A	A53	1.00	0.133	IWD-1220.1		75	80	?	3D TO RHR COOLER 1, 3F.	R 11/91
1F-SW0-125-1			N/A	A53	1.00	0.133	IWD-1220.1		75	80	?	3D TO RHR COOLER 2, 3F.	R 11/91
1G-SW0-125-1			N/A	A53	1.00	0.133	IWD-1220.1		75	80	?	3D TO CHARGING PUMP COOLER 1, 3F.	R 11/91
1H-SW0-125-1			N/A	A53	1.00	0.133	IWD-1220.1		75	80	?	3D TO CHARGING PUMP COOLER 2, 3F.	R 11/91
1K-SW0-125-1			C-14		1.00	0.133	IWD-1220.1				?	14J TO 4524J.	A 11/91
1L-SW0-125-1			C-18		1.00	0.133	IWD-1220.1				?	6B TO 4799K.	A 11/91
1M-SW0-125-1			C-18		1.00	0.133	IWD-1220.1				?	6B TO 4799V.	A 11/91
1N-SW0-125-1			C-18		1.00	0.133	IWD-1220.1				?	6B TO 4799W.	A 11/91
.75A-SW0-152N			N/A	A53	0.75	0.113	IWD-1220.1		75	80	?	1.25A TO SI PUMPS, 1,25B.	R 11/91
.75B-SW0-125-1			C-16	A53	0.75	0.113	IWD-1220.1		75	80	?	16A TO 4624A.	R 11/91

Printed: 11/09/92

R. E. GINNA NUCLEAR POWER PLANT
Inservice Examination Boundary Line List
Third Inspection Interval

Class....: 3
System...: STANDBY AUXILIARY FEEDWATER
P&ID No..: 33013-1238
Comp Type: COMPONENTS

RG&E Line No.	Gilbert Line No.	SWRI Line No.	ISI Fig.	Matrl.	Size (in.)	Thkns (in.)	Exemption Basis	NDE Method	Po	Temp	In?	Line description/remarks	Revision Status
PSF01A			N/A		0.00	0.000	NO IWA	VT-3				STANDBY AFW PUMP C.	A 11/91
PSF01B			N/A		0.00	0.000	NO IWA	VT-3				STANDBY AFW PUMP D.	A 11/91

Printed: 11/09/92

R. E. GINNA NUCLEAR POWER PLANT
Inservice Examination Boundary Line List
Third Inspection Interval

Class....: 3
System...: STANDBY AUXILIARY FEEDWATER
P&ID No..: 33013-1238
Comp Type: PIPING

RG&E Line No.	Gilbert Line No.	SWRI Line No.	ISI Fig.	Matrl.	Size (in.)	Thkns (in.)	Exemption Basis	NDE Method	Po	Temp	In?	Line description/remarks	Revision Status
4A-CD-152S			C-28	A106	4.00	0.300	NO SUPPORTS	VT-3			?	9707A TO 4A-FW8-152S-A.	R 11/91
4A-FW8-152S-A			C-28	A106	4.00	0.300		VT-3			?	9629A TO STBY AUX FW PUMP C SUCTION.	R 11/91
4A-FW8-152S-B			C-28	A106	4.00	0.300		VT-3			?	9629B TO STBY AUX FW PUMP D SUCTION.	R 11/91
4B-CD-152S			C-28	A106	4.00	0.300	NO SUPPORTS	VT-3			?	9707B TO 4A-FW8-152S-B.	R 11/91
3A-FW8-902S-A			C-22	A106	3.00	0.300		VT-3			?	STBY AUX FW PUMP C DISCHARGE TO 9704A.	R 11/91
3A-FW8-902S-B			C-22	A106	3.00	0.300		VT-3			?	STBY AUX FW PUMP D DISCHARGE TO 9704B.	R 11/91
3C-FW8-902S			C-23	A106	3.00	0.300		VT-3			?	3A-FW8-902S-A TO 3A-FW8-902S-B.	R 11/91
1.5A-FW8-902S			C-22	A106	1.50	0.200		VT-3			?	3A-FW8-902S-A TO LFW08.	R 11/91
1.5B-FW8-902S			C-22	A106	1.50	0.200		VT-3			?	3A-FW8-902S-B TO LFW07.	R 11/91
1A-FW8-152S-A			C-28	A106	1.00	0.179	IWD-1220.1				?	4A-FW8-152S-A TO 9709A.	R 11/91
1A-FW8-152S-B			C-28	A106	1.00	0.179	IWD-1220.1				?	4A-FW8-152S-B TO 9709B.	R 11/91
.75A-FW8-152S-A			C-28	A106	0.75	0.154	IWD-1220.1				?	DRAIN FROM 4A-FW8-152S-A TO 9716A.	R 11/91
.75A-FW8-152S-B			C-28	A106	0.75	0.154	IWD-1220.1				?	DRAIN FROM 4A-FW8-152S-B TO 9716B.	R 11/91
.75A-FW8-902S-A			C-22	A106	0.75	0.154	IWD-1220.1				?	DRAIN FROM 3A-FW8-902S-A.	R 11/91
.75A-FW8-902S-B			C-22	A106	0.75	0.154	IWD-1220.1				?	DRAIN FROM 3A-FW8-902S-B.	R 11/91
.75B-FW8-152S-A			C-28	A106	0.75	0.154	IWD-1220.1				?	VENT FROM 4A-FW8-152S-A TO 9741.	R 11/91
.75B-FW8-152S-B			C-28	A106	0.75	0.154	IWD-1220.1				?	VENT FROM 4A-FW8-152S-B TO 9742.	R 11/91
.75B-FW8-902S-A			C-22	A106	0.75	0.154	IWD-1220.1				?	3A-FW8-902S-A TO 9735.	R 11/91
.75B-FW8-902S-B			C-22	A106	0.75	0.154	IWD-1220.1				?	3A-FW8-902S-B TO 9736.	R 11/91
.75C-FW8-152S-A			C-28	A106	0.75	0.154	IWD-1220.1				?	4A-FW8-152S-A TO 9743.	R 11/91
.75C-FW8-152S-B			C-28	A106	0.75	0.154	IWD-1220.1				?	4A-FW8-152S-B TO 9744.	R 11/91
.75C-FW8-902S-A			C-22	A106	0.75	0.154	IWD-1220.1				?	VENT FROM 3A-FW8-902S-A TO 9733.	R 11/91
.75C-FW8-902S-B			C-22	A106	0.75	0.154	IWD-1220.1				?	VENT FROM 3A-FW8-902S-B TO 9734.	R 11/91
.75D-FW8-152S-B			C-28	A106	0.75	0.154	IWD-1220.1				?	DRAIN FROM 4A-FW8-152-B.	R 11/91
.75D-FW8-902S-A			C-22	A106	0.75	0.154	IWD-1220.1				?	3A-FW8-902S-A TO .5A-FW8-902S-A.	R 11/91
.75D-FW8-902S-B			C-22	A106	0.75	0.154	IWD-1220.1				?	3A-FW8-902S-B TO .5A-FW8-902S-B.	R 11/91
.75E-FW8-902S-A			C-22	A106	0.75	0.154	IWD-1220.1				?	DRAIN FROM 3A-FW8-902S-A TO 9717A.	R 11/91
.75E-FW8-902S-B			C-22	A106	0.75	0.154	IWD-1220.1				?	DRAIN FROM 3A-FW8-902S-B TO 9717B.	R 11/91

Printed: 11/09/92

R. E. GINNA NUCLEAR POWER PLANT
Inservice Examination Boundary Line List
Third Inspection Interval

Class....: 3
System...: STANDBY AUXILIARY FEEDWATER
P&ID No..: 33013-1238
Comp Type: PIPING

RG&E Line No.	Gilbert Line No.	SWRI Line No.	ISI Fig.	Matrl.	Size (in.)	Thkns (in.)	Exemption Basis	NDE Method	Po	Temp	In?	Line description/remarks	Revision Status
.75F-FW8-902S-A			C-22	A106	0.75	0.154	IWD-1220.1				?	DRAIN FROM 3A-FW8-902S-A TO 9718A.	R 11/91
.75F-FW8-902S-B			C-22	A106	0.75	0.154	IWD-1220.1				?	DRAIN FROM 3A-FW8-902S-B TO 9718B.	R 11/91
.75G-FW8-902S-A			C-21	A106	0.75	0.154	IWD-1220.1				?	VENT FROM 3A-FW8-902S-A TO 9731.	R 11/91
.75G-FW8-902S-B			C-22	A106	0.75	0.154	IWD-1220.1				?	3A-FW8-902S-B TO .5B-FW8-902S-B.	R 11/91
.75H-FW8-902S-A			C-21	A106	0.75	0.154	IWD-1220.1				?	DRAIN FROM 3A-FW8-902S-A TO 9730.	R 11/91
.75H-FW8-902S-B			C-22	A106	0.75	0.154	IWD-1220.1				?	3A-FW8-902S-B TO .5B-FW8-902S-B.	R 11/91
.75I-FW8-902S-A			C-21	A106	0.75	0.154	IWD-1220.1				?	VENT FROM 3A-FW8-902S-A TO 9729.	R 11/91
.75I-FW8-902S-B			C-25	A106	0.75	0.154	IWD-1220.1				?	VENT FROM 3A-FW8-902S-B TO 9732.	R 11/91
.75J-FW8-902S-A			C-21	A106	0.75	0.154	IWD-1220.1				?	DRAIN FROM 3A-FW8-902S-A TO 9739.	R 11/91
.75J-FW8-902S-B			C-25	A106	0.75	0.154	IWD-1220.1				?	DRAIN FROM 3A-FW8-902S-B TO 9738.	R 11/91
.75K-FW8-902S-A			C-21	A106	0.75	0.154	IWD-1220.1				?	VENT FROM 3A-FW8-902S-A TO 9740.	R 11/91
.75K-FW8-902S-B			C-25	A106	0.75	0.154	IWD-1220.1				?	VENT FROM 3A-FW8-902S-B TO 9737.	R 11/91
.75L-FW8-902S-A			C-21	A106	0.75	0.154	IWD-1220.1				?	DRAIN FROM 3A-FW8-902S-A TO 9722A.	R 11/91
.75L-FW8-902S-B			C-25	A106	0.75	0.154	IWD-1220.1				?	DRAIN FROM 3A-FW8-902S-B TO 9722B.	R 11/91
.75M-FW8-902S			C-23	A106	0.75	0.154	IWD-1220.1				?	3C-FW8-902S TO .5C-FW8-902S.	R 11/91
.75N-FW8-902S			C-23	A106	0.75	0.154	IWD-1220.1				?	3C-FW8-902S TO .5D-FW8-902S.	R 11/91
.5A-FW8-152S-A			C-28	A106	0.50	0.109	IWD-1220.1				?	4A-FW8-152S-A TO 9711A.	R 11/91
.5A-FW8-152S-B			C-28	A106	0.50	0.109	IWD-1220.1				?	4A-FW8-152S-B TO 9711B.	R 11/91
.5A-FW8-902S-A			C-22	A106	0.50	0.109	IWD-1220.1				?	.75D-FW8-902S-A TO 9713A.	R 11/91
.5A-FW8-902S-B			C-22	A106	0.50	0.109	IWD-1220.1				?	.75D-FW8-902S-B TO 9713B.	R 11/91
.5B-FW8-902S-A			C-22	A106	0.50	0.109	IWD-1220.1				?	3A-FW8-902S-A TO 9714A, 9715A.	R 11/91
.5B-FW8-902S-B			C-22	A106	0.50	0.109	IWD-1220.1				?	.75G-FW8-902S-B TO 9714B, 9715B.	R 11/91
.5C-FW8-902S			C-23	A106	0.50	0.109	IWD-1220.1				?	.75M-FW8-902S TO 9712B.	R 11/91
.5D-FW8-902S			C-23	A106	0.50	0.109	IWD-1220.1				?	.75N-FW8-902S TO 9712A.	R 11/91
.5E-CD-152S			C-28	A106	0.50	0.109	IWD-1220.1				?	9720A TO 4A-CD-152S.	R 11/91
.5F-CD-152S			C-28	A106	0.50	0.109	IWD-1220.1				?	9720B TO 4B-CD-152S.	R 11/91

Printed: 11/09/92

R. E. GINNA NUCLEAR POWER PLANT
Inservice Examination Boundary Line List
Third Inspection Interval

Class....: 3
System...: WASTE DISPOSAL-GAS
P&ID No..: 33013-1273
Comp Type: COMPONENTS

RG&E Line No.	Gilbert Line No.	SWRI Line No.	ISI Fig.	Matrl.	Size (in.)	Thkns (in.)	Exemption Basis	NDE Method	Po	Temp	In?	Line description/remarks	Revision Status
EWD01A			N/A		0.00	0.000	IWD-1220.2		<275	<200		WASTE GAS COMPRESSOR A SEAL WATER HE.	A 11/91
EWD01B			N/A		0.00	0.000	IWD-1220.2		<275	<200		WASTE GAS COMPRESSOR B SEAL WATER HE.	A 11/91
PWD04A			N/A		0.00	0.000	IWD-1220.2		<275	<200		WASTE GAS COMPRESSOR A.	A 11/91
PWD04B			N/A		0.00	0.000	IWD-1220.2		<275	<200		WASTE GAS COMPRESSOR B.	A 11/91
SWD06A			N/A		0.00	0.000	IWD-1220.2		<275	<200		MOISTURE SEPERATOR A.	A 11/91
SWD06B			N/A		0.00	0.000	IWD-1220.2		<275	<200		MOISTURE SEPERATOR B.	A 11/91
TWD14A			N/A		0.00	0.000	IWD-1220.2		<275	<200		GAS DECAY TANK A.	A 11/91
TWD14B			N/A		0.00	0.000	IWD-1220.2		<275	<200		GAS DECAY TANK B.	A 11/91
TWD14C			N/A		0.00	0.000	IWD-1220.2		<275	<200		GAS DECAY TANK C.	A 11/91
TWD14D			N/A		0.00	0.000	IWD-1220.2		<275	<200		GAS DECAY TANK D.	A 11/91

Printed: 11/09/92

R. E. GINNA NUCLEAR POWER PLANT
Inservice Examination Boundary Line List
Third Inspection Interval

Class....: 3
System...: WASTE DISPOSAL-GAS
P&ID No..: 33013-1273
Comp Type: PIPING

RG&E Line No.	Gilbert Line No.	SWRI Line No.	ISI Fig.	Matrl.	Size (in.)	Thkns (in.)	Exemption Basis	NDE Method	Po	Temp	In?	Line description/remarks	Revision Status
2A-WD3-152			N/A		2.00	0.145	IWD-1220.1				?	1614 TO WASTE GAS COMP SUCTION A & B.	R 11/91
2B-WD3-152			N/A		2.00	0.344	IWD-1220.1				?	HOLDUP TANKS TO 1269.	R 11/91
2C-WD3-152			N/A		2.00	0.344	IWD-1220.1				?	1027 TO 1679, 2B.	R 11/91
2D-WD3-152			N/A		2.00	0.145	IWD-1220.1				?	2B TO 1664C, 1665B.	R 11/91
2E-WD3-152			N/A		2.00	0.145	IWD-1220.1				?	GAS ANALYZER TO .75D, .75H.	R 11/91
1.25A-WD3-1A			N/A		1.25	0.133	IWD-1220.1				?	WASTE GAS COMP A SUCTION FROM 2A.	R 11/91
1.25B-WD3-1A			N/A		1.25	0.133	IWD-1220.1				?	WASTE GAS COMP A DISCHG TO MOIST SEP A.	R 11/91
1.25C-WD3-1B			N/A		1.25	0.133	IWD-1220.1				?	WASTE GAS COMP B SUCTION FROM 2A.	A 11/91
1.25D-WD3-1B			N/A		1.25	0.133	IWD-1220.1				?	WASTE GAS COMP B DISCHG TO MOIST SEP B.	A 11/91
1A-WD3-152			N/A		1.00	0.133	IWD-1220.1				?	2D TO 1035, MOIST SEPERATOR TANK B.	R 11/91
1B-WD3-152			N/A		1.00	0.133	IWD-1220.1				?	2B TO 1028, MOIST SEPERATOR TANK A.	R 11/91
1C-WD3-152			N/A		1.00	0.133	IWD-1220.1				?	DECAY TANK A TO 1645A.	R 11/91
1D-WD3-152			N/A		1.00	0.133	IWD-1220.1				?	DECAY TANK B TO 1646A.	R 11/91
1E-WD3-152			N/A		1.00	0.133	IWD-1220.1				?	DECAY TANK C TO 1647A.	R 11/91
1F-WD3-152			N/A		1.00	0.133	IWD-1220.1				?	DECAY TANK D TO 1648A.	R 11/91
1G-WD3-152			N/A		1.00	0.133	IWD-1220.1				?	1637 TO 1C.	R 11/91
1H-WD3-152			N/A		1.00	0.133	IWD-1220.1				?	1638 TO 1D.	R 11/91
1I-WD3-152			N/A		1.00	0.133	IWD-1220.1				?	1639 TO 1E.	R 11/91
1J-WD3-152			N/A		1.00	0.133	IWD-1220.1				?	1640 TO 1F.	R 11/91
1K-WD3-152			N/A		1.00	0.133	IWD-1220.1				?	WG COMP A&B TO A DECAY TNK, V1617, SWD11	A 11/91
1L-WD3-152			N/A		1.00	0.133	IWD-1220.1				?	1K TO B DECAY TNK, V1618, SWD10.	A 11/91
1M-WD3-152			N/A		1.00	0.133	IWD-1220.1				?	1K TO C DECAY TNK, V1619, SWD09.	A 11/91
1N-WD3-152			N/A		1.00	0.133	IWD-1220.1				?	1K TO D DECAY TNK, V1620, SWD08.	A 11/91
.75A-WD3-152			N/A		0.75	0.113	IWD-1220.1				?	1668 TO 1664B.	R 11/91
.75B-WD3-1A			N/A		0.75	0.113	IWD-1220.1				?	MOIST SEPERATOR TANK A TO 1030B.	R 11/91
.75C-WD3-1A			N/A		0.75	0.113	IWD-1220.1				?	MOISTURE SEPERATOR TANK A TO 1610C.	R 11/91
.75D-WD3-152			N/A		0.75	0.113	IWD-1220.1				?	2E TO 1050.	R 11/91
.75E-WD3-1B			N/A		0.75	0.113	IWD-1220.1				?	MOISTURE SEPERATOR TANK B TO 1032B.	R 11/91

Printed: 11/09/92

R. E. GINNA NUCLEAR POWER PLANT
Inservice Examination Boundary Line List
Third Inspection Interval

Class....: 3
System...: WASTE DISPOSAL-GAS
P&ID No..: 33013-1273
Comp Type: PIPING

RG&E Line No.	Gilbert Line No.	SWRI Line No.	ISI Fig.	Matrl.	Size (in.)	Thkns (in.)	Exemption Basis	NDE Method	Po	Temp	In?	Line description/remarks	Revision Status
.75F-WD3-1B			N/A		0.75	0.113	IWD-1220.1				?	MOISTURE SEPERATOR TANK B TO 1610D.	R 11/91
.75G-WD3-152			N/A		0.75	0.113	IWD-1220.1				?	.75A TO 1665A.	R 11/91
.75H-WD3-152			N/A		0.75	0.113	IWD-1220.1				?	2E TO 1051.	R 11/91
.75I-WD3-2503			N/A		0.75	0.113	IWD-1220.1				?	DECAY TANK A TO 1036B.	R 11/91
.75J-WD3-2503			N/A		0.75	0.113	IWD-1220.1				?	DECAY TANK B TO 1037B.	R 11/91
.75K-WD3-2503			N/A		0.75	0.113	IWD-1220.1				?	DECAY TANK C TO 1038B.	R 11/91
.75L-WD3-2503			N/A		0.75	0.113	IWD-1220.1				?	DECAY TANK D TO 1039B.	R 11/91

Printed: 11/09/92

R. E. GINNA NUCLEAR POWER PLANT
Inservice Examination Boundary Line List
Third Inspection Interval

Class....: 3
System...: WASTE DISPOSAL-LIQ-RC DRAIN TK
P&ID No..: 33013-1272
Comp Type: PIPING

RG&E Line No.	Gilbert Line No.	SWRI Line No.	ISI Fig.	MatrL	Size (in.)	Thkns (in.)	Exemption Basis	NDE Method	Po	Temp	In?	Line description/remarks	Revision Status
4-WD2-151			N/A		4.00	0.000	IWD-1220.1				?	FUEL TRANSFER CANAL TO VALVE 1711.	A 11/91
3-WD2-151			N/A		3.00	0.216	IWD-1220.1				?	FUEL TRANSFER DRAIN TO 1795G, 1722.	

Printed: 11/09/92

R. E. GINNA NUCLEAR POWER PLANT
Inservice Examination Boundary Line List
Third Inspection Interval

Class....: 3
System...: WASTE DISPOSAL-LIQUID DRAINS
P&ID No..: 33013-1270
Comp Type: COMPONENTS

RG&E Line No.	Gilbert Line No.	SWRI Line No.	ISI Fig.	Matrl.	Size (in.)	Thkns (in.)	Exemption Basis	NDE Method	Po	Temp	In?	Line description/remarks	Revision Status
FWD02			N/A		0.00	0.000	IWD-1220.2		<275	<200		WASTE FILTER.	A 11/91
FWD03			N/A		0.00	0.000	IWD-1220.2		<275	<200		ULTRA FILTRATION SYSTEM.	A 11/91
PWD12			N/A		0.00	0.000	IWD-1220.2		<275	<200		WASTE HOLDUP TANK PUMP.	A 11/91
TWD05A			N/A		0.00	0.000	IWD-1220.2		<275	<200		SPENT RESIN TANK A.	A 11/91
TWD05B			N/A		0.00	0.000	IWD-1220.2		<275	<200		SPENT RESIN TANK B.	A 11/91
TWD10			N/A		0.00	0.000	IWD-1220.2		<275	<200		WASTE HOLDUP TANK.	A 11/91

Printed: 11/09/92

R. E. GINNA NUCLEAR POWER PLANT
Inservice Examination Boundary Line List
Third Inspection Interval

Class....: 3
System...: WASTE DISPOSAL-LIQUID DRAINS
P&ID No..: 33013-1270
Comp Type: PIPING

RG&E Line No.	Gilbert Line No.	SWRI Line No.	ISI Fig.	Matrl.	Size (in.)	Thkns (in.)	Exemption Basis	NDE Method	Po	Temp	In?	Line description/remarks	Revision Status
2A-WD0-151			N/A		2.00	0.145	IWD-1220.1				?	WST HOLDUP TK TO 1792, WHT PUMP, & 1610A	R 11/91
2A-WD0-151A			N/A		2.00	0.145	IWD-1220.1				?	SPENT RESIN STORAGE TANK A TO 1704.	R 11/91
2A-WD0-151B			N/A		2.00	0.145	IWD-1220.1				?	SPENT RESIN STORAGE TANK B TO 1705.	R 11/91
2A-WD0-301A			N/A		2.00	0.145	IWD-1220.1				?	1684 TO SPENT RESIN STORAGE TANK A.	R 11/91
2A-WD0-301B			N/A		2.00	0.145	IWD-1220.1				?	1687 TO SPENT RESIN STORAGE TANK B.	R 11/91
2B-WD0-151A			N/A		2.00	0.145	IWD-1220.1				?	1688 TO SPENT RESIN STORAGE TANK A.	R 11/91
2B-WD0-151B			N/A		2.00	0.145	IWD-1220.1				?	1689 TO SPENT RESIN STORAGE TANK B.	R 11/91
1A-WD0-151			N/A		1.00	0.133	IWD-1220.1				?	WHTP TO 1650,1653,1734,1737,1762,TWD08.	R 11/91
1A-WD0-151A			N/A		1.00	0.133	IWD-1220.1				?	SPENT RESIN STORAGE TANK A TO 1700.	R 11/91
1A-WD0-151B			N/A		1.00	0.133	IWD-1220.1				?	SPENT RESIN STORAGE TANK B TO 1702.	R 11/91
1B-WD0-151A			N/A		1.00	0.133	IWD-1220.1				?	1692 TO 2B-WD0-151A.	R 11/91
1B-WD0-151B			N/A		1.00	0.133	IWD-1220.1				?	1693 TO 2B-WD0-151B.	R 11/91
.75A-WD0-151A			N/A		0.75	0.113	IWD-1220.1				?	1800A TO SPENT RESIN STORAGE TANK A.	R 11/91
.75A-WD0-151B			N/A		0.75	0.113	IWD-1220.1				?	1800B TO SPENT RESIN STORAGE TANK B.	R 11/91

Printed: 11/09/92

R. E. GINNA NUCLEAR POWER PLANT
Inservice Examination Boundary Line List
Third Inspection Interval

Class....: 3
System...: WASTE EVAPORATOR SKID
P&ID No..: 33013-2279
Comp Type: COMPONENTS

RG&E Line No.	Gilbert Line No.	SWRI Line No.	ISI Fig.	Matrl.	Size (in.)	Thkns (in.)	Exemption Basis	NDE Method	Po	Temp	In?	Line description/remarks	Revision Status
EWD07			N/A		0.00	0.000	IWD-1220.1					WASTE EVAPORATOR CONCENTRATOR.	A 11/91
PWD08			N/A		0.00	0.000	IWD-1220.1					WASTE EVAPORATOR FEED TANK PUMP.	A 11/91
TWD08			N/A		0.00	0.000	IWD-1220.1					WASTE EVAPORATOR FEED TANK.	A 11/91

Printed: 11/09/92

R. E. GINNA NUCLEAR POWER PLANT
Inservice Examination Boundary Line List
Third Inspection Interval

Class....: 3
System...: WASTE EVAPORATOR SKID
P&ID No..: 33013-2279
Comp Type: PIPING

RG&E Line No.	Gilbert Line No.	SWRI Line No.	ISI Fig.	Matrl.	Size (in.)	Thkns (in.)	Exemption Basis	NDE Method	Po	Temp	In?	Line description/remarks	Revision Status
1.5A-WD9			N/A		1.50	0.000	IWD-1220.1				?	WEFT TWD08 TO 2642D, WEFT PUMP.	A 11/91
1.5B-WD9			N/A		1.50	0.000	IWD-1220.1				?	1A TO SWD14, 2642Z, .75A.	A 11/91
1.25A-WD9			N/A		1.25	0.000	IWD-1220.1				?	WE CONCENTRATOR EWD07 TO 2620C, SWD14.	A 11/91
1A-WD0-151			N/A		1.00	0.133	IWD-1220.1				?	THIS LINE ACCOUNTED FOR ON 33013-1270.	A 11/91
1A-WD9			N/A		1.00	0.000	IWD-1220.1				?	WASTE EVAP FEED TANK TWD08 TO 1.5B.	A 11/91
.75A-WD9			N/A		0.75	0.000	IWD-1220.1				?	WEFT PUMP PWD08 TO 2616, EWD07.	A 11/91
.75B-WD9			N/A		0.75	0.000	IWD-1220.1				?	VALVE 2642F TO 1.25A.	A 11/91
.75CE-AC6-152			N/A		0.75	0.113	IWD-1220.1		<150	<200	?	THIS LINE ACCOUNTED FOR ON 33013-1246.	A 11/91

Printed: 11/09/92

R. E. GINNA NUCLEAR POWER PLANT
Inservice Examination Boundary Line List
Third Inspection Interval

Class....: HE
System...: FEEDWATER
P&ID No..: 33013-1236
Comp Type: HE-PIPING:APP-B

RG&E Line No.	Gilbert Line No.	SWRI Line No.	ISI Fig.	Matrl.	Size (in.)	Thkns (in.)	Exemption Basis	NDE Method	Po	Temp	In?	Line description/remarks	Revision Status
20-FW-900-1		FW-1001	HE-6		20.00	0.000		SUR/VOL	715	505	Y	TEE AT 3984 & 3985 TO TEE AT 3982 & 3983	R 11/91
14A-FW-900-1A	FW-100	FW-1001	HE-3	A106	14.00	0.938		SUR/VOL	715	505	Y	20-FW-900-1 TO S/G-A.	R 11/91
14B-FW-900-1B	FW-200	FW-1005	HE-4	A106	14.00	0.938		SUR/VOL	715	505	Y	20-FW-900-1 TO S/G-B.	R 11/91
8-FW-900-1		FW-1081	HE-6		8.00	0.000		SUR/VOL	715	505	Y	20-FW-900-1 TO VALVE 9507D.	R 11/91

Printed: 11/09/92

R. E. GINNA NUCLEAR POWER PLANT
Inservice Examination Boundary Line List
Third Inspection Interval

Class....: HE
System...: MAIN STEAM
P&ID No..: 33013-1231
Comp Type: HE-PIPING:APP-B

RG&E Line No.	Gilbert Line No.	SWRI Line No.	ISI Fig.	Matrl.	Size (in.)	Thkns (in.)	Exemption Basis	NDE Method	Po	Temp	In?	Line description/remarks	Revision Status
30A-MS-600-1A	MS-100	MS-1000	HE-1	A115	30.00	1.250		SUR/VOL	715	505	Y	S/G 1A TO TEE BETWEEN VLVS 3518 & 3519.	R 11/91
30B-MS-600-1B	MS-200	SMS-1001	HE-2A	A115	30.00	1.250		SUR/VOL	715	505	Y	S/G 1B TO TEE BETWEEN VLVS 3518 & 3519.	R 11/91
6A-MS-600-1A	MS-100	MS-1000	HE-1A	A106	6.00	0.432		SUR/VOL	715	505	Y	30" MS PIPE TO VALVE 3505A.	R 11/91
6A-MS-600-1B	MS-300	SMS-1001	HE-2	A106	6.00	0.432		SUR/VOL	715	505	Y	30" MS PIPE TO VALVE 3504A.	
6B-MS-600-1A	MS-300	MS-1000	HE-1A	A106	6.00	0.432		SUR/VOL	715	505	Y	30" MS PIPE TO VALVE 3411.	R 11/91
6B-MS-600-1B	MS-200	SMS-1001	HE-2	A106	6.00	0.432		SUR/VOL	715	505	Y	30" MS PIPE TO VALVE 3410.	
6C-MS-600-1A	MS-300	MS-1000	HE-1A	A106	6.00	0.432		SUR/VOL	715	505	Y	30" MS PIPE TO VALVE 3509.	R 11/91
6C-MS-600-1B	MS-300	SMS-1001	HE-2	A106	6.00	0.432		SUR/VOL	715	505	Y	30" MS PIPE TO VALVE 3508.	
6D-MS-600-1A	MS-300	MS-1000	HE-1A	A106	6.00	0.432		SUR/VOL	715	505	Y	30" MS PIPE TO VALVE 3511.	R 11/91
6D-MS-600-1B	MS-300	SMS-1001	HE-2	A106	6.00	0.432		SUR/VOL	715	505	Y	30" MS PIPE TO VALVE 3510.	
6E-MS-600-1A	MS-300	MS-1000	HE-1A	A106	6.00	0.432		SUR/VOL	715	505	Y	30" MS PIPE TO VALVE 3513.	R 11/91
6E-MS-600-1B	MS-300	SMS-1001	HE-2	A106	6.00	0.432		SUR/VOL	715	505	Y	30" MS PIPE TO VALVE 3512.	
6F-MS-600-1A	MS-300	MS-1000	HE-1A	A106	6.00	0.432		SUR/VOL	715	505	Y	30" MS PIPE TO VALVE 3515.	R 11/91
6F-MS-600-1B	MS-300	SMS-1001	HE-2	A106	6.00	0.432		SUR/VOL	715	505	Y	30" MS PIPE TO VALVE 3514.	
6G-MS-600-1A			HE-1A	A106	6.00	0.432		SUR/VOL	715	505	Y	30" MS PIPE TO VALVE 3521.	A 11/91
6G-MS-600-1B	MS-300	SMS-1001	HE-2	A106	6.00	0.432		SUR/VOL	715	505	Y	30" MS PIPE TO VALVE 3520.	

Printed: 11/09/92

R. E. GINNA NUCLEAR POWER PLANT
Inservice Examination Boundary Line List
Third Inspection Interval

Class....: HE
System...: MAIN STEAM
P&ID No..: 33013-1232
Comp Type: HE-PIPING:APP-B

RG&E Line No.	Gilbert Line No.	SWRI Line No.	ISI Fig.	Matrl.	Size (in.)	Thkns (in.)	Exemption Basis	NDE Method	Po	Temp	In?	Line description/remarks	Revision Status
36-MS-600-1		MS-1000	HE-7		36.00	0.000		SUR/VOL				TEE BETWEEN VLVS 3518 & 3519 TO END CAP.	A 11/91
24A-MS-600-1A		MS-1002	HE-7A		24.00	0.000		SUR/VOL	715	505	Y	36" MS PIPE TO VALVE 3544.	R 11/91
24B-MS-600-1A		MS-1003	HE-7A		24.00	0.000		SUR/VOL	715	505	Y	36" MS PIPE TO VALVE 3545.	R 11/91
12A-MS-600-1A			HE-7		12.00	0.000		SUR/VOL				36" MS PIPE TO VALVE 3532.	A 11/91
12A-MS-600-1B			HE-7		12.00	0.000		SUR/VOL				36" MS PIPE TO VALVE 3533.	A 11/91

1.0 General

This section identifies program examination allocations for "ASME Code required" and "Augmented Required" groups that will be performed during the third interval at R. E. Ginna Nuclear Power Plant. The tables identify the total number of components, the required number and the distribution of the required number within one of the three periods.

The "ASME Code Required" group addresses the program requirements with respect to ASME Section XI. This group is divided into the following allocations.

Class 1
Class 2
Class 3
Class 1, 2, & 3 Supports

The "Augmented Required" group addresses Rochester Gas & Electric commitments that were added to the Inservice Inspection Program to ensure compliance to the commitments and performance. This group is divided into the following allocations.

Reactor Coolant Pump Flywheel Program
Reactor Vessel Augmented Program, Category B-A
High Energy Program
Snubber Program
Steam Generator Tubing Program

ASME CODE REQUIRED

Class 1

Category	Total	Required	Third Interval Scheduled/Percent Period 1	Period 2	Period 3
B-A	10	7	2/28.5%	2/57.1%	3/100%
B-B	15	8	5/62.5%	1/75%	2/100%
B-D	36	26	5/19.2%	8/50.0%	13/100%
B-F	19	19	6/31.5%	4/52.6%	9/100%
B-G-1	245	195	49/25.1%	49/50.2%	97/100%
B-G-2	22	9	3/33.3%	3/66.6%	3/100%
B-J	461	117	33/28.2%	42/64.1%	42/100%
B-L-1	6	3	0/0%	0/0%	3/100%
B-L-2	2	1	0/0%	0/0%	1/100%
B-M-1	8	2	2/100%	0/100%	0/100%
B-M-2	12	4(*)	1/100%	(3 remaining, only if disassembled, Per RR #5.)	
(*) = if disassembled.					
B-N-1	3	3	1/33.3%	1/66.6%	1/100%
B-N-2	2	2	0/0%	0/0%	2/100%
B-N-3	1	1	0/0%	0/0%	1/100%
B-O	29	3	0/0%	0/0%	3/100%
B-P	11	11	3/27.2%	4/63.6%	4/100%
B-Q	6	60	18/30%	24/70	18/100%
Total	888	468	128/27.3%	138/56.8%	202/100%

Class 2

Category	Total	Required	Third Interval Scheduled/Percent Period 1	Period 2	Period 3
C-A	22	13	3/23.0%	4/53.8%	6/100%
C-B	36	21	7/33.3%	7/66.6%	7/100%
C-C	119	112	31/27.6%	39/62.5%	42/100%
C-F-1	675	52	17/32.6%	17/65.3%	18/100%
C-F-2	387	32	9/28.1%	11/62.5%	12/100%
C-H	72	124	39/31.4%	43/66.1%	42/100%
Total	1311	354	106/29.9%	121/64.1%	127/100%

Class 3

Category	Total	Required	Third Interval Scheduled/Percent Period 1	Period 2	Period 3
D-A, D-B & D-C	145	139	37/26.6%	52/64.0%	50/100%
D-A, D-B & D-C Hydro/Leakage	30	164	53/32.3%	51/64.3%	60/100%
Total	175	303	90/29.7	103/63.6	110/100%

Class 1, 2, & 3 Supports

Class Group	Total	Required	Third Interval Scheduled/Percent Period 1	Period 2	Period 3
Class 1	154	137	25/18.2%	51/55.4%	61/100%
Class 2	364	355	94/26.4%	119/60.0%	142/100%
Class 3	472	138	37/26.8%	47/60.8%	54/100%
Total	990	630	156/27.7%	217/59.2%	257/100%

Augmented Required

RCP Flywheel Program:

Category	Total	Required	Third Interval Scheduled/Percent Period 1	Period 2	Period 3
Flywheel	2	6	2/33.3%	2/66.6%	2/100%

Reactor Vessel Augmented Program, Category B-A:

Category	Total	Required	Third Interval Scheduled/Percent Period 1	Period 2	Period 3
B-A	3	3	0/0%	0/0%	3/100%

High Energy, Program:

Category	Total	Required	Third Interval Scheduled/Percent Period 1	Period 2	Period 3
HE-CB	97	97	34/35%	30/65.9%	33/100%
HE-CS	63	63	20/31.7%	24/69.8%	19/100%
HE-DB	18	54	18/33.3%	18/66.6%	18/100%
HE-LK	3	7	2/28.5%	2/57.1%	3/100%
Total	181	221	74/33.3%	74/66.6%	73/100%

Snubber Program:

Category	Total	Required	Third Interval Scheduled/Percent Period 1	Period 2	Period 3
SN-VT	149	1490	447/33.3%	596/66.6%	447/100%
SN-FT	149	149	48/32.2%	57/70.4%	44/100%
Total	298	1639	495/30.2%	653/70.0%	491/100%

1.0 **General:**

The list below identifies Ultrasonic Calibration Blocks that are owned by Rochester Gas & Electric and utilized at R. E. Ginna Nuclear Power Plant. Other calibration blocks not owned by Rochester Gas & Electric may be employed only if they meet the applicable requirements specified within ASME Section XI, 1986 Edition, no Addenda.

IDENTIFICATION NUMBER	DESCRIPTION	MATERIAL SPEC.
6-SS-10S-.134-1A-REG	6" D-SCHEDULE 10-SS-PIPE	SA 312
6-SS-40S-.280-2-REG	6" D-SCHEDULE 40-SS-PIPE	SA 312
8-SS-10S-.148-3-REG	8" D-SCHEDULE 10-SS-PIPE	SA 312
8-SS-40S-.322-4-REG	8" D-SCHEDULE 40-SS-PIPE	SA 312
8-SS-160-.906-5-REG	8" D-SCHEDULE 160-SS-PIPE	SA 312
10-SS-10S-.165-6-REG	10" D-SCHEDULE 10-SS-PIPE	SA 312
10-SS-40S-.365-7-REG	10" D-SCHEDULE 40-SS-PIPE	SA 312
10-SS-140-1.0-8-REG	10" D-SCHEDULE 140-SS-PIPE	SA 376
12-SS-5S-.156-9-REG	12" D-SCHEDULE 5-SS-PIPE	SA 312
14-SS-10-.250-10-REG	14" D-SCHEDULE 10-SS-PIPE	SA 312
14-CS-30-.375-11-REG	14" D-SCHEDULE 30-CS-PIPE	SA 106
PL-1.187-SS-12-REG	1.187 THICK-SS-PLATE	SA 240
PL-.30-SS-13-REG	.30 THICK-SS-PLATE	SA 240
PL-3.5-CS-14-REG	3.5 THICK-CS-PLATE	SA 533
P-CSCL-15-REG	9" THICK-CS-CLAD-VESSEL BLOCK	SA 508
7-CSCL-16-REG	7" THICK-CS-CLAD-VESSEL BLOCK	SA 508
5-CSCL-17-REG	5" THICK-CS-CLAD-VESSEL BLOCK	SA 508
PL-3.0-SS-18-REG	3" THICK-SS-PLATE	SA 479

IDENTIFICATION NUMBER	DESCRIPTION	MATERIAL SPEC.
6-SS-160-.719-19-REG	6" D-SCHEDULE 160-SS-PIPE	SA 312
4-SS-160-.531-20-REG	4" D-SCHEDULE 160-SS-PIPE	SA 376
3-SS-160-.438-21-REG	3" D-SCHEDULE 160-SS-PIPE	SA 376
8.5-6-8-CS-22-REG	REACTOR PRESSURE VESSEL NUT	SA 320-L43
6-1-8-CS-23-REG	REACTOR PRESSURE VESSEL STUD	SA 320-L43
IR-CSCL-24-REG	O.D. INNER RADIUS BLOCK	SA 533
6-SS-120-.562-25-REG	6" D-SCHEDULE 120-SS-PIPE	SA 312
FS/NS-CSCL-26-REG	FLANGE AND NOZZLE SHELL BLOCK	SA 533
IR-CSCL-27-REG	NOZZLE INNER RADIUS BLOCK	SA 553
CRD-SS/IN-.656-28-REG	SS-CONTROL ROD DRIVE BLOCK	SA 182
10-SS-140-1.0-29-REG	10" D-SCHEDULE 140-SS-PIPE	SA 312
3.5-.625-8-CS-30-REG	REACTOR COOLANT PUMP STUD	ACTUAL STUD
5.375-3.5-8-CS-31-REG	REACTOR COOLANT PUMP NUT	ACTUAL NUT
1.187-S-7-CS-32-REG	1.187" DIA. X 7 THREADS/IN-CS-STUD	SA 193
1.187-N-7-CS-33-REG	1.187" DIA. X 7 THREADS/IN-CS-NUT	SA 194
1.125-S-12-CS-34-REG	1.125" DIA. X 12 THREADS/IN-CS-STUD	SA 193
1.125-N-12-CS-35-REG	1.125" DIA. X 12 THREADS/IN-CS-NUT	SA 194
1.250-S-7-CS-36-REG	1.250" DIA. X 7 THREADS/IN-CS-STUD	SA 193
1.250-N-7-CS-37-REG	1.250" DIA. X 7 THREADS/IN-CS-NUT	SA 194
10-SS-160-1.147-70	10" D-SCHEDULE 160-SS-PIPE	SA 312
6-SS-X-1.1-38-REG	6" D-1.1" WALL-SS-PIPE	SA 182
29-SS-X-2.5-39-REG	29" ID-SS-PIPE	SA 182
SI/N-CSCL-40-REG	SAFETY INJECTION NOZZLE BLOCK	SA 508
27.5-CSS-X-2.4-41-REG	27.5" ID-CS-PIPE	SA 351
29-CSCL-X-2.5-42-REG	29" ID-CLAD-CS-PIPE	SA 508
5.437-SS-X-1.0-43-REG	5.437" D-1" WALL-SS-PIPE	SA 182
PL-1.5-CS-44-REG	1.5" THICK-CS-PLATE	SA 285
14-CS-100-.938-45-REG	14" D-SCHEDULE 100-CS-PIPE	SA 106

IDENTIFICATION NUMBER	DESCRIPTION	MATERIAL SPEC.
18-CS-100-1.156-46-REG	18" D-SCHEDULE 100-CS-PIPE	SA 106
4-SS-80-.337-47-REG	4" D-SCHEDULE 80-SS-PIPE	SA 312
3-SS-80-.300-48-REG	3" D-SCHEDULE 80-SS-PIPE	SA 312
4.25-R-CS-N/RB-49-REG	REACTOR PRESSURE VESSEL NUT REFERENCE BLOCK	SA 516
1.250-B-6-A490-50-REG	S/G SECONDARY MANWAY BOLT	ASTM A 490
1.375-S-17-A490-51-REG	1.375 DIA. X 17" LONG-STEEL-STUD	ASTM A 490
1.375-S-24-A490-52-REG	1.375 DIA. X 24" LONG-STEEL-STUD	ASTM A 490
1.375-S-33-A490-53-REG	1.375 DIA. X 33" LONG-STEEL-STUD	ASTM A 490
3-SP-14-A514-GRF-54-REG	COLUMN PIN	ASTM A 514
2-IC600-80-J-NOZ-55-REG	S/G "J" NOZZLE	INCONEL 600
1.875-9-8N-CS-56-REG	S/G AND PRESSURIZER MANWAY BOLT	SA 193
1.0-4-8N-CS-57-REG	S/G HAND HOLD BOLT	SA 193
1.875-S-8-CS-58-REG	S/G PRIMARY MANWAY STUD	SA 193
2.89-1.87-8-CS-59-REG	S/G PRIMARY MANWAY CLOSURE NUT	SA 193
2-CS-40-.218-60-REG	2" BLOWDOWN	SA 335
8-CS-100-.594-63-REG	8" FW BLOCK	SAW6-GR B
15.0-SS-X-1.60-61-REG	15" PZR BLOCK	SA182-F316
20-CS-X-1.281-64-REG	20" FW BLOCK	SA333-GR 6
36-CS-X-1.47-67-REG	30" MS BLOCK	SA517-GR 70
24-CS-80-1.218-65-REG	24" MS BLOCK	SA106-GR B
30-CS-X-1.250-66-REG	30" MS BLOCK	SA517-GR 70
3.0-CS-80-.218-68-REG	3" BLOWDOWN	SA335-

1.0 **General:**

1.1 The augmented inservice inspection program for High Energy Piping, outside of containment, as established in Rochester Gas and Electric Corporation's Report "Effect of Postulated Pipe Breaks Outside the Containment Building", dated October 29, 1973, provides for the examination of all identified circumferential butt welds at design break locations and at consequential discontinuity locations where a failure would result in unacceptable consequences. This program also establishes High Energy Piping component support examination requirements. The required examinations are used to detect any change in condition or development of service induced flaws in advance of a potential failure. Surveillance of these components by the inspection program provides assurance that the design basis or consequential Main Steam or Feedwater breaks will not occur.

2.0 **Examination Requirements:**

2.1 Identified High Energy Piping circumferential butt welds at design break locations and consequential discontinuity locations shall be examined utilizing volumetric, surface and visual examination techniques.

2.2 Identified High Energy Piping component supports shall be examined utilizing visual examination techniques. Integral attachments associated with High Energy component supports shall receive a surface examination.

2.3 Examinations on High Energy Piping circumferential butt welds at design break locations and consequential break locations, as well as component supports, are identified within Table 1 of this section.

2.4 ISI System Pressure Testing and associated visual examination for leakage, shall be performed on the main run of the High Energy Piping.

2.4.1 The 10-year Hydrostatic testing requirements for High Energy Piping was derived from ASME Section XI Code, IWC-5000, as a continuation of the Class 2 boundary. With the implementation of Code Case N-498 within the ISI Program, the code case requirements may be performed in lieu of hydrostatic test requirements for High Energy Piping.

2.4.2 A Leakage examination shall be performed once per period.

3.0 **Examination Methods:**

3.1 Applicable examinations shall be performed in accordance with 1.7.1, 1.7.2, and 1.7.3 of Section 1 of this program.

4.0 **Frequency of Examination**

4.1 Identified High Energy Piping circumferential butt welds at design break locations shall be examined once each period. Circumferential butt welds at consequential discontinuity locations shall be examined once per interval.

4.2 Identified High Energy Piping component supports shall be examined once per interval.

4.3 On the main run of High Energy Piping pressure boundary, a Leakage examination shall be performed once per period.

4.4 In lieu of a Hydrostatic Test once per interval, a Leakage examination may be performed once per interval to Code Case N-498 criteria.

5.0 **Examination Evaluation:**

5.1 The evaluation of examinations of the High-Energy piping welds outside of containment will be in accordance with Section XI, IWC 3130 for visual examinations and IWC 3120 for volumetric and surface examinations. Evaluations of radiographic results shall be in accordance with the acceptance criteria for radiographic examinations referenced in USAS B31.1.0-1967, "Power Piping" and ASME Section XI. Ultrasonic Examinations shall be performed in accordance with the requirements of Appendix I and III and the acceptance criteria in USAS B31.1.0 - 1967 (Radiography).

5.2 Unacceptable examinations shall be reported for evaluation and appropriate corrective action.

6.0 **Repair & Testing Requirements:**

6.1 Repairs and applicable system pressure tests performed on the main run of High Energy pressure retaining piping and to identified High Energy component supports shall conform to the requirements specified within Supplement 2 to Appendix B, the Repair, Replacement and Modification Program. Code Case N-498 does not apply to Repairs.

7.0 **Replacement & Testing Requirements:**

7.1 Replacements, including Modifications, and applicable system pressure tests performed on the main run of High Energy pressure retaining piping as well as to identified High Energy component supports shall conform to the requirements specified within Supplement 2 to Appendix B, the Repair, Replacement and Modification Program. Code Case N-498 does not apply to Replacements and Modifications.

8.0 **Scheduling:**

8.1 Scheduling of the High Energy Program piping welds and component supports shall be performed and controlled within Supplement 1 to Appendix B, the Program Plan.

8.2 Table 1 identifies both welds and component supports that are within the High Energy Program.

9.0 **Reports and Records:**

9.1 Reports and Records generated on High Energy pressure retaining components and component supports shall conform to the requirements of Section 1 and as applicable to Supplement 2 to Appendix B, the Repair, Replacement and Modification Program.

TABLE 1

HIGH ENERGY PROGRAM

MAIN STEAM LOOP A - WELDS:

Design Basis Break

30A-MS-600-1A	D	30A-MS-600-1A	D1
30A-MS-600-1A	F1	36-MS-600-1	L1

Consequential Break

30A-MS-600-1A	D2	30A-MS-600-1A	D3
30A-MS-600-1A	E	30A-MS-600-1A	E1
30A-MS-600-1A	E2	30A-MS-600-1A	F
30A-MS-600-1A	G	30A-MS-600-1A	G1
30A-MS-600-1A	G2	30A-MS-600-1A	H
30A-MS-600-1A	J	30A-MS-600-1A	K
30A-MS-600-1A	L		

MAIN STEAM LOOP B - WELDS:

Design Basis Break

30B-MS-600-1B	D	30B-MS-600-1B	H1
30B-MS-600-1B	J1	36-MS-600-1	P1

Consequential Break

30B-MS-600-1B	D1	30B-MS-600-1B	D2
30B-MS-600-1B	E	30B-MS-600-1B	J
30B-MS-600-1B	K	30B-MS-600-1B	L
30B-MS-600-1B	L1	30B-MS-600-1B	L2
30B-MS-600-1B	M	30B-MS-600-1B	N
30B-MS-600-1B	O	30B-MS-600-1B	P

TABLE 1 (Cont.)

MAIN STEAM - TURBINE BUILDING - WELDS:

Design Basis Break

36-MS-600-1	L2

Consequential Break

36-MS-600-1	L4	24A-MS-600-1A	A
24A-MS-600-1A	B	24A-MS-600-1A	B1
24A-MS-600-1A	C1	24A-MS-600-1A	D
24A-MS-600-1A	D1	24B-MS-600-1B	A
24B-MS-600-1B	B	24B-MS-600-1B	B1
24B-MS-600-1B	C	24B-MS-600-1B	C1
24B-MS-600-1B	D		

FEEDWATER - TURBINE BUILDING - WELDS:

Design Basis Break

20-FW-900-1	M3

Consequential Break

20-FW-900-1	J	20-FW-900-1	K1
20-FW-900-1	L	20-FW-900-1	L1
20-FW-900-1	M	20-FW-900-1	M1
20-FW-900-1	M2	8-FW-900-1	A
8-FW-900-1	B	8-FW-900-1	C
8-FW-900-1	D	8-FW-900-1	E
8-FW-900-1	F	8-FW-900-1	G
8-FW-900-1	H		

TABLE 1 (Cont.)

FEEDWATER LOOP A - WELDS:

Design Basis Break

20-FW-900-1	M4	20-FW-900-1	U1
20-FW-900-1	U2	14A-FW-900-1A	AA

Consequential Break

14A-FW-900-1A	T2	14A-FW-900-1A	T3
14A-FW-900-1A	U7	14A-FW-900-1A	U5
14A-FW-900-1A	U6	14A-FW-900-1A	V
14A-FW-900-1A	VA	14A-FW-900-1A	VB
14A-FW-900-1A	V1	14A-FW-900-1A	V2
14A-FW-900-1A	V2A	14A-FW-900-1A	V2B
14A-FW-900-1A	W	14A-FW-900-1A	X
14A-FW-900-1A	Y	14A-FW-900-1A	Z
14A-FW-900-1A	Z1	14A-FW-900-1A	Z2
14A-FW-900-1A	Z3	14A-FW-900-1A	Z4

FEEDWATER LOOP B - WELDS:

Design Basis Break

20-FW-900-1	A1	20-FW-900-1	F4
14B-FW-900-1A	N	14B-FW-900-1A	V

Consequential Break

14B-FW-900-1B	F3	14B-FW-900-1B	F5
14B-FW-900-1B	F1	14B-FW-900-1B	F2
14B-FW-900-1B	G	14B-FW-900-1B	G2
14B-FW-900-1B	G1	14B-FW-900-1B	G3
14B-FW-900-1B	G4	14B-FW-900-1B	H
14B-FW-900-1B	HA	14B-FW-900-1B	HB
14B-FW-900-1B	H1	14B-FW-900-1B	H2
14B-FW-900-1B	H2A	14B-FW-900-1B	H2B
14B-FW-900-1B	J	14B-FW-900-1B	K
14B-FW-900-1B	L	14B-FW-900-1B	M
14B-FW-900-1B	N1	14B-FW-900-1B	O
14B-FW-900-1B	O1	14B-FW-900-1B	P

TABLE 1 (Cont.)

MAINSTEAM - COMPONENT SUPPORTS:

MSU-35	MS-39	MS-167
MS-34	MS-151	MS-153
MS-35	MS-40	MS-44
MS-47	MS-41	MS-149
MS-59	S13A	MS-45
MS-36	S13B	MS-46
MS-37	MS-42	S23A
MS-150	MS-43	S23B
MS-38		

FEEDWATER - LOOP A - COMPONENT SUPPORTS:

FWU-16	FWU-21	FWU-25
FWU-17	FWU-22	FWU-26
FWU-18	FWU-23	FWU-27
FWU-19	FWU-24	FWU-28
FWU-20		

FEEDWATER - LOOP B - COMPONENT SUPPORTS:

FWU-41	FWU-36	FWU-33
FWU-40	FWU-35	FWU-31
FWU-39	FWU-34	FWU-30
FWU-38	FWU-32	FWU-29
FWU-37		

FEEDWATER - MAIN - COMPONENT SUPPORTS:

FW-37	FW-40	FW-43
FW-38	FW-41	FW-45
FW-39	FW-42	

FEEDWATER - RECIRCULATION LINE - COMPONENT SUPPORTS:

CD-167	CD-169
CD-168	CD-170

1.0 **General:**

1.1 The inspection and testing of all safety related snubbers shall be implemented and performed in accordance with Mechanical Engineering Specification ME-256, "Snubber Inspection & Test Program", to ensure the required operability of these snubbers during a seismic or other event, initiating dynamic loads.

1.2 The snubber program, as defined within ME-256, establishes both visual examination and functional testing requirements.

1.2.1 This program pertains to mechanical and hydraulic snubbers.

1.2.2 The snubber program includes:

a. Visual Inspection Requirements
b. Visual Inspection Failure Evaluation
c. Visual Inspection Corrective Action and Impact on Examination Frequency
d. Functional Testing Requirements
e. Functional Test Sample
f. Functional Test Failure Analysis
g. Functional Testing Corrective Action
h. Functional Testing Methods
i. Inspection and Testing Documentation

1.3 The Snubber Program adheres to the requirements of ASME Section XI, 1986 Edition Article IWF and performed in accordance to the first addenda to ASME/ANSI OM-1987, Part 4 published in 1988.

1.4 R.E. Ginna Nuclear Power Plant Technical Specifications establishes a Snubber Seal Service Life Monitoring for Hydraulic Snubbers that is controlled by R.E. Ginna Station Procedures.

2.0 **Examination, Testing and Monitoring Requirements:**

2.1 Visual (VT-3) Examinations and Functional (FT) Testing shall be performed to the extent specified within ME-256.

2.2 The seal service life of hydraulic snubbers shall be monitored and seals replaced as required to ensure that the service life is not exceeded between surveillance inspections during a period when the snubber is required to be operable. The seal replacement shall be documented and retained in accordance with Technical Specification.

3.0 **Examination and Testing Methods:**

3.1 Visual (VT-3) Examinations and Functional (FT) Testing shall be performed to verify the requirements specified within ME-256, as a minimum.

4.0 **Examination and Testing Frequency:**

4.1 Visual (VT-3) Examinations and Functional (FT) Testing shall be performed at the frequency specified within ME-256.

4.2 Visual (VT-3) Baseline Examinations shall be performed whenever new snubbers are installed, reinstallation of existing or swapped snubbers that were functionally tested, or after repairs, replacements or modifications of snubbers that were performed to Supplement 2 to Appendix B, the Repair, Replacement or Modification Program.

4.3 Functional testing requirements for new installations or spares shall be equal to or more stringent than that specified within ME-256.

5.0 **Examination, Testing and Monitoring Evaluation:**

5.1 Snubbers which do not meet the Visual (VT-3) Examination requirements of Mechanical Engineering Specification ME-256, shall be reported for evaluation and appropriate corrective action. Visual examination failure evaluation shall be performed when necessary and required by ME-256.

Corrective action may include repair, replacement of modification of the snubber.

5.2 Snubbers which are defined as unacceptable as a result of visual examinations may be determined operable for the purpose of establishing the next visual inspection interval, providing that (1) the cause of the rejection is clearly established and remedied for that particular snubber and for other snubbers that may be generically susceptible; or (2) the affected snubber is functionally tested in the "as found" condition and determined operable. However, when the fluid port of a hydraulic snubber is found to be uncovered, the snubber shall be declared inoperable and cannot be determined operable via functional testing unless a functional test is started with the piston in the "as found" setting, extending the piston rod in the tension mode direction. All snubbers connected to an inoperable common Hydraulic Fluid Reservoir shall be counted as inoperable snubbers.

5.3 Snubbers that do not meet the operability testing acceptance criteria in ME-256 shall be evaluated to determine the cause of the failure and appropriate corrective action.

5.4 The service life of a snubber is evaluated via manufacturing input and engineering information through consideration of the snubber service conditions and functional design requirements. The only snubber components with service lives not expected to exceed plant life are seal and o-rings fabricated from certain seal materials. Therefore, a seal replacement program is required to monitor snubber seal and o-ring service life and to assure snubber operability is not degraded due to exceeding component service life.

6.0 **Repair, Replacement and Modification Requirements:**

6.1 Repairs, Replacements and Modifications performed on snubbers under this program shall conform to the requirements specified within Supplement 2 to Appendix B, the Repair, Replacement and Modification Program.

7.0 **Scheduling:**

7.1 The Visual Examinations and Functional Testing schedules shall be established, tracked and maintained within Supplement 1 to this Appendix.

7.2 The Inservice Inspection Program Plan shall identify and track expanded or additional testing and/or examinations as specified and required by ME-256.

8.0 **Reports and Records:**

8.1 Reports and records for the Visual (VT-3) Examinations and Functional (FT) Testing shall be maintained on all snubbers listed within ME-256.

8.2 Applicable records and reports, as required by Supplement 2 for Repairs, Replacements or Modifications, shall be maintained for snubbers.

8.3 Records of the service lives of all hydraulic and mechanical snubbers listed in this program, including the date at which the service life commences, and associated installation and maintenance records will be maintained.

1.0 **General:**

1.1 The augmented inservice inspection program for Seismic Category I supports outside of the ASME Class boundary was developed to provide greater assurance that identified component supports will be operate when and if needed during a seismic event.

1.2 Seismic Category I supports outside of the ASME Class boundary are identified in Table 1.

2.0 **Examination Requirements:**

2.1 The identified Seismic Category I supports shall be examined utilizing visual (VT-3) examination techniques.

3.0 **Examination Methods:**

3.1 The visual (VT-3) examination shall be performed in accordance with Section 1.

4.0 **Frequency of Examination:**

4.1 The identified Seismic Category I supports shall be examined at least once during the inspection interval.

5.0 **Examination Evaluation:**

5.1 The visual (VT-3) examination results shall be evaluated in accordance with of Section 1.

5.2 Supports which do not meet the visual (VT-3) examination requirements shall be reported for evaluation and appropriate corrective action.

6.0 **Repair & Testing Requirements:**

6.1 Repairs and applicable testing shall be performed on identified Seismic Category I supports as required by Supplement 2 to this Appendix. Code Case N-498 does not apply to Repairs.

7.0 **Replacement & Modification, and Testing Requirements:**

7.1 Replacements and Modifications, and applicable testing shall be performed on identified Seismic Category I supports as required by Supplement II to Appendix B, the Repair, Replacement and Modification Program. Code Case N-498 does not apply to Replacements and Modifications.

8.0 **Scheduling:**

8.1 Scheduling of identified Seismic Category I supports shall be performed and controlled within Supplement 1 to this Appendix.

9.0 **Reports and Records:**

9.1 Reports and records generated on identified Seismic Category I supports shall conform to applicable requirements specified within Section 1 and Supplement 2 to this Appendix.

Table 1

Seismic Category I Supports

Line Segment: AFW100

Support Number	Support Number	Support Number	Support Number
AFU-130	AFU-132	AFU-137	AFU-138
AFU-139			

Line Segment: AFW200

Support Number
AFU-88

Line Segment: AFW300

Support Number	Support Number	Support Number	Support Number
AFU-4	AFU-5	AFU-6	AFU-7

Line Segment: CVC100

Support Number
CVU-84

Line Segment: CVC200

Support Number	Support Number	Support Number	Support Number
CVU-125	CVU-126	CVU-129	CVU-130

Line Segment: CVC700

Support Number	Support Number
CVC-56	CVC-58

Table 1 (Cont.)
Seismic Category I Supports

Line Segment: CVC730

Support Number	Support Number
CVC-39	CVC-40

Line Segment: FW300

Support Number	Support Number	Support Number	Support Number
FWU-40	FWU-39	FWU-38	FWU-37
FWU-36	FWU-35	FWU-34	FWU-33
FWU-32	FWU-31	FWU-30	FWU-29
FWU-28			

Line Segment: FW301

Support Number	Support Number	Support Number	Support Number
FWU-16	FWU-17	FWU-18	FWU-19
FWU-20	FWU-21	FWU-22	FWU-23
FWU-24	FWU-25	FWU-26	FWU-27

Line Segment: MS300

Support Number	Support Number	Support Number	Support Number
MSU-35	MSU-59	MSU-60	MSU-51
MSU-52	MSU-53	MSU-54	MSU-47
MSU-48	MSU-49	MSU-50	MSU-56
MSU-57			

Line Segment: RHR300

Support Number	Support Number	Support Number	Support Number
RHU-86	RHR-87	RHU-90	RHR-91

Table 1 (Cont.)
Seismic Category I Supports

Line Segment: SAFW450

Support Number	Support Number	Support Number	Support Number
AFU-169	AFU-170	AFU-175	AFU-176
AFU-177			

Line Segment: SGB-300

Support Number	Support Number	Support Number
BDU-21	BDU-22	BDU-23

Line Segment: SGB-400

Support Number	Support Number
BDU-26	BDU-27

Line Segment: SI100

Support Number
SIU-8

Line Segment: SI200

Support Number
SIU-55

Line Segment: SW1500

Support Number	Support Number	Support Number	Support Number
SWU-363	SWU-364	SWU-365	SWU-366

Line Segment: SW2100

Support Number	Support Number	Support Number	Support Number
SWU-523	SWU-524	SWU-525	SWU-526
SWU-533	SWU-534		

Table 1 (Cont.)
Seismic Category I Supports

Line Segment: SW2300

Support Number	Support Number	Support Number	Support Number
SWU-602	SWU-603	SWU-604	SWU-605
SWU-606	SWU-607		

Line Segment: SW2500

Support Number	Support Number	Support Number	Support Number
SWU-637	SWU-642	SWU-639	SWU-640
SWU-638			

1.0 **General:**

1.1 The purpose of this section is to provide information and clarification on additional inspection programs being performed at R. E. Ginna Nuclear Power Plant. These inspection programs may be due in part to ASME Section XI program requirements or to other commitments made by Rochester Gas and Electric.

The following list identifies additional inspection programs being performed at R. E. Ginna Nuclear Power Plant:

* Steam Generator Tube Inspection Program
* Reactor Coolant Pump Flywheel Program
* Class 1 Bolting Program (IEB 82-02)
* Reactor Vessel Augmented Program, Category B-A

2.0 **Steam Generator Tube Inspection Program:**

2.1 **General:**

2.1.1 The Steam Generator Tube Inspection Program incorporates the requirements of ASME Section XI Code, under Category B-Q, Item Number B16.20. The Code requires that Steam Generator tubing in U-Tube Design is volumetrically (Eddy Current) examined to the extent and frequency governed by the plant Technical Specifications. In accordance with this Code requirement and R. E. Ginna Station Technical Specifications, eddy current examinations shall be performed. Steam Generator Tubing shall be examined their full length, at least once every five years.

2.1.2 The Steam Generator Tube Inspection Program also incorporates the requirements of USNRC Regulatory

Guide 1.83, Revision 1, dated July, 1975, "Inservice Inspection of Pressurized Water Reactor Steam Generator Tubes" and the recommendations of the Electric Power Research (EPRI) PWR Steam Generator Inspection Guidelines, Revision 2.

2.2 **Examination Requirements:**

2.2.1 The program for each year of the five years shall include, as a minimum, the following requirements:

1. A rotating random sampling of 20% of all operational tubes for their full length.

2. A rotating random sample of 20% of each type of sleeved inlet tube for their full length, including the sleeve from the upper end through the expanded transition of the lower end.

3. All operational tubes that had a previously identified degradation of greater than 20% through wall to the extent of previously identified degradation. However, if after two (2) consecutive inspections these tubes have not had greater than 10% further penetration, the inspection frequency on these tubes may be extended to 40 months.

2.2.2 Other tubes may be added to the program each year as necessary to meet other concerns and are classified as "owner optional". "Owner Optional" examinations are not mandatory and may be performed as determined by the owner.

2.2.3 The Ginna Steam Generator Reliability Committee may change the aforementioned plan to meet outage schedules, provided that the changes meet the requirement of Regulatory Guide 1.83 and Supplement 1 to this Appendix.

2.3 **Examination Method:**

2.3.1 Eddy Current (Volumetric) Examination techniques shall be employed to perform the required examinations on Steam Generator tubes.

2.4 **Frequency of Examinations:**

2.4.1 Examinations shall be performed every refueling outage to the extent required and specified within 2.2, as a minimum.

2.5 **Examination Evaluation:**

2.5.1 Eddy Current evaluation shall be performed in accordance with R. E. Ginna Station Technical Specifications.

2.6 **Repair, Replacement and Testing Requirements**

2.6.1 Repair criteria for steam generator tubes is based on the requirements of Regulatory Guide 1.121, "Bases for Plugging Degraded PWR Steam Generator Tubes".

2.6.1.1 Steam generator tubes that have imperfections greater than 40 percent through-wall as indicated by eddy current, shall be repaired by plugging or sleeving.

2.6.1.2 Steam generator sleeves that have imperfections greater than 30 percent through wall as indicated by eddy current shall be repaired by plugging.

2.6.2 Repairs by welded plugs and sleeves shall be performed in accordance with Supplement 2 to this Appendix.

2.7 **Scheduling:**

2.7.1 Eddy Current examination schedules of Steam Generator Tubes shall be established within Supplement 1 to this Appendix.

2.8 **Reports and Records:**

2.8.1 Applicable records shall be maintained as specified within Section 1 of this program and as applicable as required within Supplement 2 to this Appendix.

2.8.2 Within 15 days following the completion of the evaluation of each inservice inspection of steam generator tubes, the number of tubes required by Paragraph 1.12.1 above to be plugged or sleeved in each steam generator shall be reported to the USNCR in a Special Report.

2.8.3 The complete results of the steam generator tube inservice inspection shall be submitted to the USNRC in a Special Report within 12 months following the completion of the inspection. This Special Report shall include:

(a) Number and event of tubes inspected.

(b) Location and percent of wall-thickness penetration for each indication of an imperfection, and

(c) Identification of tubes plugged or sleeved.

2.8.4 If the number of tubes in a generator falling into categories a or b below exceeds the criteria, then results of the inspection shall be considered a Reportable Event pursuant to 10 CFR 50.73. Oral notification to the NRC Staff shall be accomplished within 48 hours, but no sooner than the next normal working day after the final review of the eddy current results. A written follow-up report shall provide a description of investigations conducted to determine the cause of the tube degradation and corrective measures taken to preclude recurrence. Categories (a) and (b) are:

(a) More than 10 percent of the total tubes inspected are degraded (imperfections greater than 20 percent of the nominal wall thickness). However, previously degraded tubes must exhibit at least 10 percent further wall penetration to be included in this calculation.

(b) More than 1 percent of the total tubes inspected are degraded (imperfections greater than the repair limit).

3.0 **Reactor Coolant Pump Flywheel Program**

3.1 **General:**

The augmented inservice inspection program for Reactor Coolant Pump Flywheels incorporates the requirements of the USNRC Regulatory Guide 1.14, Revision 1, dated August 1975, entitled "Reactor Coolant Pump Flywheel Integrity".

3.2 **Examination Requirements:**

3.2.1 Examinations shall be performed on all active Reactor Coolant Pump Flywheels and Anti-Rotation Pawls.

3.3 **Examination Method:**

3.3.1 Reactor Coolant Pump Flywheels shall be examined using Ultrasonic and Surface examination techniques.

3.3.2 Reactor Coolant Pump Anti-Rotation Pawls shall be examined using Surface examination techniques.

3.3.1 Ultrasonic and Surface examinations shall conform to and be performed in accordance with Section 1 of this program.

3.4 **Frequency of Examinations:**

3.4.1 Examinations shall be performed on all operating Reactor Coolant Pump Flywheel and Anti-Rotation Pawls once each period.

3.5 **Examination Evaluation:**

3.5.1 Examination evaluations shall be performed in accordance with Section 1 of this program.

3.5.2 Unacceptable examinations shall be reported for evaluation and appropriate corrective action.

3.6 **Repair, Replacement and Testing Requirements**

3.6.1 Repairs and Replacements shall be performed in accordance with Supplement 2 to this Appendix, as applicable.

3.7 **Scheduling:**

3.7.1 Examination schedules shall be established within Supplement 1 to this Appendix.

3.8 **Reports and Records:**

3.8.1 Applicable records shall be maintained as specified in Section 1 of this program and when required within Supplement 2 to this Appendix.

4.0 **Class 1 Bolting Program (IEB 82-02)**

4.1 **General:**

This augmented inspection program was established to address IE Bulletin 82-02, "Degradation of Threaded Fasteners in the Reactor Coolant Pressure Boundary of PWR Plants" dated June 2, 1982.

4.2 **Examination Requirements:**

4.2.1 Examinations shall be performed on threaded fasteners of closure connections when opened for component inspection or maintenance for the following, as applicable:

1. Steam generator and pressurizer manway closures.

2. Valve bonnets and pump flange connections installed on lines having a nominal diameter of 6 inches or greater.

3. Control rod drive (CDR) flange and pressurizer heater connections that do not have seal welds to provide leak-tight integrity.

4.3 **Examination Method:**

4.3.1 Applicable threaded fasteners of closure connections shall be examined utilizing both Surface and Visual techniques.

4.4 **Frequency of Examinations:**

4.4.1 Applicable components containing threaded fasteners of closure connections shall be examined when opened for component inspection or maintenance.

4.5 **Examination Evaluation:**

4.5.1 Examination evaluations shall be performed in accordance with Section 1 of this program.

4.5.2 Unacceptable examinations shall be reported for evaluation and appropriate corrective action.

4.6 **Repair, Replacement and Testing Requirements**

4.6.1 Repairs and Replacements shall be performed in accordance with Supplement 2 to this Appendix, as applicable.

4.7 **Scheduling:**

4.7.1 Examination schedules shall be established, as applicable and required, within Supplement 1 to this Appendix or the Maintenance Inservice Inspection Program (MISIP).

4.8 **Reports and Records:**

4.8.1 Applicable records shall be maintained as specified within Section 1 of this program and as applicable when required within Supplement 2 to this Appendix.

5.0 **Reactor Vessel Augmented Program, Category B-A:**

5.1 **General:**

As specified within the Federal Register, 10 CFR Part 50, Vol. 57, No. 152 dated August 6, 1992, a

specific augmented examination program is required for ASME Section XI Category B-A, Shell Welds of "Pressure Retaining Welds in Reactor Vessel".

5.2 **Examination Requirements:**

5.2.1 Examinations shall be performed on all ASME Section XI Category B-A, Item B1.0, Shell Welds of "Pressure Retaining Welds in Reactor Vessel" that are not required by the Code.

5.3 **Examination Method:**

5.3.1 Ultrasonic examinations shall conform and be performed in accordance with Section 1 of this program.

5.4 **Frequency of Examinations:**

5.4.1 Examinations shall be performed once during the Inspection Interval.

5.5 **Examination Evaluation:**

5.5.1 Examination Evaluations shall be performed in accordance with Section 1 of this program.

5.5.2 Unacceptable examinations shall be reported for evaluation and appropriate corrective action.

5.6 **Repair, Replacement and Testing Requirements**

5.6.1 Repairs and Replacements shall be performed in accordance with Supplement 2 to this Appendix, as applicable.

5.7 **Scheduling:**

5.7.1 Examination schedules shall be established within Supplement 1 to this Appendix.

5.8 **Reports and Records:**

5.8.1 Applicable records shall be maintained as specified within Section 1 of this program and when required within Supplement 2 to this Appendix.