REGULATORY INFORMATION DISTRIBUTION SYSTEM (RIDS)

ACCESSION NBR:8303080333 DOC.DATE: 83/03/02 NOTARIZED: NO DOCKET #
FACIL:50-244 Robert Emmet Ginna Nuclear Plant, Unit 1, Rochester G 05000244
AUTH.NAME AUTHOR AFFILIATION
MAIER,J.E. Rochester Gas & Electric Corp.
RECIP.NAME RECIPIENT AFFILIATION
CRUTCHFIELD,D. Operating Reactors Branch 5

SUBJECT: Forwards supplemental response to NRC 820819 technical evaluation rept, "Control of Heavy Load ,NUREG-0612.", Part two response will be submitted 831201.Util will develop load handling procedures for 10 sys within NUREG Scope.

DISTRIBUTION CODE: A033S COPIES RECEIVED:LTR 1 ENCL 1 SIZE: 33
TITLE: OR Submittal: USI A-36 Control of Heavy Loads Near Spent Fuel

NOTES:NRR/DL/SEP 1cy. 05000244

	RECIPIENT ID CODE/NAME		COPIES LTTR	COPIES ENCL	RECIPIENT ID CODE/NAME		COPIES LTTR	COPIES ENCL
	NRR ORB5 BC		7	7	NRR CLEMENSON01		4	4
INTERNAL:	NRR REQUA,GI	09	1	1	NRR/DL/ORAB	12	1	1
	NRR/DSI/AEB		1	1	REG FILE	04	1	1
	RGN1		1	1				
EXTERNAL:	ACRS	13	6	6	LPDR	03	1	1
	NRC PDR	02	1	1	NSIC	06	1	1
	NTIS		1	1				
NOTES:			1	1				

TOTAL NUMBER OF COPIES REQUIRED: LTTR 27 ENCL 27

ROCHESTER GAS AND ELECTRIC CORPORATION • 89 EAST AVENUE, ROCHESTER, N.Y. 14649

JOHN E. MAIER
Vice President

TELEPHONE
AREA CODE 716 546-2700

March 2, 1983

50-244

Director of Nuclear Reactor Regulation
Attention: Mr. Dennis M. Crutchfield, Chief
Operating Reactors Branch #5
U.S. Nuclear Regulatory Commission
Washington, DC 20555

SUBJECT: "Control of Heavy Loads"
Supplemental Report Addressing
Technical Evaluation Report, Dated August 19, 1982

Dear Mr. Crutchfield:

Enclosed please find our response to your letter of August 19, 1982, "Control of Heavy Loads - NUREG 0612." A part two response, "NRC Request for Additional Information on Control of Heavy Loads," will be submitted December 1, 1983.

Very truly yours,

John E. Maier

J. E. Maier

A033

SUPPLEMENTAL REPORT ON CONTROL OF HEAVY LOADS

RESPONSE TO THE DRAFT TECHNICAL EVALUATION REPORT
PREPARED BY FRANKLIN RESEARCH CENTER CONCERNING
"CONTROL OF HEAVY LOADS - NUREG 0612" AT
R. E. GINNA NUCLEAR POWER STATION

REFERENCED LETTERS

1. NRC GENERIC LETTER 81-07
   DATED DECEMBER 22, 1980

2. NRC GENERIC LETTER 81-07
   DATED FEBRUARY 3, 1981

3. LETTER TO MR. DARRELL G. EISENHUT (NRC)
   FROM MR. JOHN E. MAIER (RG&E)
   DATED FEBRUARY 1, 1982

4. LETTER TO MR. JOHN E. MAIER (RG&E) FROM
   MR. DENNIS M. CRUTCHFIELD (NRC)
   DATED AUGUST 19, 1982 (TECHNICAL EVALUATION REPORT)

R. E. GINNA NUCLEAR POWER STATION
ROCHESTER GAS AND ELECTRIC CORPORATION
DOCKET NO. 50-244
MARCH 1, 1983

INTRODUCTION AND BACKGROUND

On February 1, 1982 Rochester Gas and Electric Corporation submitted a report stating the extent of compliance with general load-handling policies and procedures at the R. E. Ginna Nuclear Power Plant with NUREG-0612, "Control of Heavy Loads at Nuclear Power Plants", Section 5.1.1.

A Technical Evaluation Report (TER) was prepared and returned to Rochester by the NRC and its consultants. Enclosed in this report are responses to open items in this TER, schedules for implementation of procedures and training programs to assure compliance with NUREG-0612 and justification for exceptions taken to NUREG 0612.

RESPONSE TO THE DRAFT TECHNICAL EVALUATION REPORT PREPARED BY FRANKLIN RESEARCH CENTER CONCERNING "CONTROL OF HEAVY LOADS - NUREG 0612" AT R. E. GINNA NUCLEAR POWER STATION

TER Section 2.1.1c "Overhead Heavy Load Handling Systems" Conclusions and Recommendations

The Licensee should identify overhead handling systems excluded from compliance with NUREG-0612 and verify that such exclusion was based on one or more of the following:

1. No safety-related equipment or irradiated fuel is located in close proximity or sufficient physical separation exists.

2. The systems are sole-purpose systems and are used only when the equipment is out of service.

3. Heavy loads are not carried by the excluded system. (A heavy load for R. E. Ginna Nuclear Power Station is taken as 1500 lbs.)

RG&E Response

In response to "Conclusions and Recommendations" listed for this section RG&E has provided an enclosed list of all Overhead Handling Systems at R. E. Ginna Nuclear Power Station (Attachment 1). The list of overhead handling systems within the scope of NUREG-0612 provided in RG&E's February 1, 1982 submittal has been reduced by using the exclusion criteria shown above.

Attachment 2 shows the physical location of each overhead handling system identified.

TER Section 2.1.2 "Safe Load Paths [Guideline 1, NUREG-0612, Section 5.1.1(1)] Conclusions and Recommendations

The Licensee partially complies with Guideline 1 for the Ginna plant. In order to comply fully with the criteria of this guideline, the Licensee should perform the following:

1. Provide suitable visual aids to assist the crane operator in the areas where loads are handled by all equipment that is not excluded from compliance with NUREG-0612, as specified in 2.1.1.c.

2. Define all safe load paths in procedures.

3. Incorporate safe load paths into equipment layout drawings.

4. Verify that deviations from established load paths require written alternatives to be approved by the plant safety review committee.

RG&E Response

In response to "Conclusions and Recommendations" listed for this section RG&E will: 1) define specific heavy load safe load paths, 2) define "generic" heavy load safe load paths, 3) incorporate safe load paths into load handling procedure A-1305, 4) establish a deviation of safe load path control procedure, 5) provide suitable visual aids to assist crane operators properly handle heavy loads where practical.

The above procedures will be implemented for the following Overhead Handling Systems:

Crane No.	Overhead Handling System
7	100(2) Ton O.H. Crane in CTMT
29	40(5) Ton O.H. Crane Auxiliary Bldg.
32	7 1/2 Ton Screenhouse Crane (East)

The remaining 7 overhead handling systems within the scope of NUREG-0612 (Attachment 1, Page 6 of 6) are restricted by the physical capabilities of the system and therefore require no additional work regarding safe load paths.

RG&E will have these procedures in place by September 1, 1983.

TER Section 2.1.3 "Load Handling Procedures" [Guideline 2, NUREG-0612, Section 5.1.1(2)] Conclusions and Recommendations

The Ginna plant does not comply with Guideline 2. Load-handling procedures should clearly identify inspection and acceptance criteria, steps, and proper sequence, and clearly define the safe load paths for the various heavy loads listed.

RG&E Response

In response to "Conclusions and Recommendations" listed for this section RG&E will develop Load Handling Procedures for the 10 Load Handling Systems within the scope of NUREG 0612. The program will identify specific and "generic lifts", insure the proper equipment is utilized for the lift and that the load is handled properly. This development of Load Handling Procedures will be done in administrative procedure A-1305 accompanied by a qualifying rigger program.

RG&E will have these procedures in place by December 31, 1983.

TER 2.1.5 "Special Lifting Devices" [Guideline 4, NUREG-0612, Section 5.1.1(4)] Conclusions and Recommendations

A conclusion regarding compliance with this guideline must be deferred until the Licensee completes the analysis of their special lifting devices. However, this analysis should address the specific items identified in this independent evaluation.

RG&E Response

A comparison analysis for the Special Lifting Devices used at R. E. Ginna Nuclear Power Plant to determine the compliance with NUREG-0612 has been completed by Westinghouse Corp. This analysis encompasses the following special lifting devices: Reactor Head Lifting Rig, The Upper and Lower Internals Lifting Assembly and The Reactor Coolant Pump Motor Sling. The evaluation shows that the stress limit criteria of ANSI N14.6-1978 associated with certain stress design factors for tensile and shear stresses are adequately satisfied.

Enclosed is justification for dynamic load factors considered in the analysis of these special lifting devices. (Attachment 3)

RG&E has implemented an inspection, testing and maintenance program to insure continued compliance with ANSI N14.6-1978. This program will require visual inspections annually (not to exceed 15 months, consistent with permissible extensions for Technical Specification surveillance). Nondestructive examination of critical welds will also be done every ten years.

At this time the analysis is based on the original design drawings. During our spring outage 1983 "as built" sketches of any modifications or additions to the special lifting devices will be made, reviewed and analyzed to determine if the evaluation performed is effected. RG&E will submit this information by August 1, 1983.

TER 2.1.6 "Lifting Devices" (Not Specially Designed) [Guideline 5, NUREG-0612, Section 5.1.1(5)] Conclusions and Recommendations

Determination of compliance with Guideline 5 must be deferred until RG&E provides specific information concerning:

1. Installation and use of slings (in accordance with ANSI B30.9-1971)

2. Selection of slings (based upon the sum of the static and maximum dynamic loads)

3. Sling markings and sling restrictions, where appropriate

RG&E Response

In response to "conclusions and recommendations" listed for this section RG&E will implement a rigger qualification program to insure that slings are selected and used in accordance with ANSI B30.9-1971.

At this time sling selection and use at R.E. Ginna Station is the responsibility of each individual rigger. The "Handbook for Riggers" by W. G. Newberry, Calgary, Alberta, Canada is currently used and believed to be equivalent to ANSI B30.9-1971.

All slings used at Ginna Station have load ratings marked on them.

RG&E believes that adding additional factors to consider dynamic loads above the 5:1 safety factors for slings already considered is impractical and provides no justifiable cushion of safety. Dynamic loads are negligible and only static loads are considered.

RG&E will have the qualified rigger program in place by December 31, 1983.

TER 2.1.7 "Cranes" (Inspection, Testing, and Maintenance) [Guideline 6, NUREG-0612, Section 5.1.1(6)] Conclusions and Recommendations

The Ginna plant will comply with Guideline 6 upon implementation of proposed revisions to inspection, testing, and maintenance programs.

RG&E Response

Revisions are being made to the existing RG&E inspection, testing, and maintenance programs listed in the February 1, 1982 submittal to insure full compliance with ANSI B30.2-1976, Chapter 2-2.

Additional programs are being developed for jibs and monorails to insure that inspection, testing, and maintenance procedures comply with ANSI B30.11-1980 "Monorails and Underhung Cranes" Chapter 11-2. All procedures will be in place by September 31, 1983.

In response to a question concerning the Auxiliary Building overhead crane and a "rated load test", the February 1, 1982 submittal stated that this crane was load tested prior to lifting a spent fuel cask in 1973. This is correct. The 40 ton auxiliary crane was load tested using a 40 ton test load.

TER 2.1.8 "Crane Design" [Guideline 7, NUREG 0612, Section 5.1.1(7)] Conclusion

The Ginna Auxiliary Building crane complies with Guideline 7. The Reactor Building substantially complies with this guideline; however, the Licensee should be ready to provide suitable documentation to justify the location and moment of inertia of the actual longitudinal stiffeners.

RG&E Response

Justification for the location and moment of inertia of the longitudinal stiffeners used on the crane bridge of the Containment Overhead Crane is provided in Attachment 4.

In response to a question concerning the horsepower rating for the main hoist of the 100 ton containment overhead crane it is a 5 H.P. motor. This capacity was omitted in error in the February 1, 1982 submittal.

TER Interim Protection Measures Conclusions and Recommendations

Insufficient information has been provided to clearly determine compliance with this interim measure. The Licensee should review and determine whether current technical specifications meet the intent of this guideline.

RG&E Response

RG&E has reviewed the technical specifications which limit travel of the Auxiliary Building overhead crane over the spent fuel area and has found them to be adequate interim protection. No other overhead handling systems can physically move over the spent fuel area except the spent fuel manipulator crane. This crane has undergone analysis for a single spent fuel assembly handling accident and has been deemed not to require further evaluation.

TER Special Review for Heavy Loads Handled Over the Core [Interim Protection Measure 6, NUREG-0612, Section 5.3(6)] Evaluation, Conclusion and Recommendations

The Licensee has made no statements or conclusions regarding this interim protection measure. The Licensee should report the completion of the special review identified in ths interim measure.

RG&E Response

Safe load paths for heavy load lifts made in containment at Ginna Station are physically restricted. Procedure A-1305 is currently the controlling load-handling procedure, the crane is inspected according to ANSI and the crane operators are trained according to ANSI. Further analysis of handling of heavy loads in this area is required to satisfy NUREG-0612 and shall be included in the load-drop analysis submittal.

ATTACHMENT 1

TOTAL LIST OF OVERHEAD HANDLING SYSTEMS AT
R. E. GINNA NUCLEAR POWER STATION

No.	Building	Overhead Handling System
1	Containment	3 Ton Jib
2	Containment	1 Ton Jib (E)
3	Containment	1 Ton Jib (W)
4	Containment	1 1/2 Ton Fuel Manipulator Bridge
5	Containment	Aux. Trolley on Fuel Manipulator Bridge
6	Containment	10 Ton Jib
7	Containment	100(20) Ton Overhead Crane
8	Containment	2 Ton Jib
9	Containment	1/4 Ton Jib on Overhead Crane
10	Containment	3 Monorail Hoists on Reactor Head Monorail
11	Containment	Jib on Overhead
12,13	Turbine	(2) Monorails Over Feed-water Pumps (Basement)
14	Turbine	2 Ton Jib -- Turbine Oil Part
15,16,17	Turbine	(3) Monorails -- Condenser Parts
18	Turbine	(1) Monorail -- Feed-water Heater Parts
19,20,21,22	Turbine	(4) Monorails -- Moisture Separator Parts
23	Turbine	Turbine Overhead 125 Ton (25 Ton)
24	Turbine	3 Ton Movable Gantry
25,26	Auxiliary	(2) Monorails RHR Pit (Basement)
27	Auxiliary	(1) Monorail (Basement)
28	Auxiliary	2 Ton Spent Fuel Crane
29	Auxiliary	40(5) Ton Overhead Crane
30	Auxiliary	5 Ton Drumming Crane
31	*Screenhouse	7 1/2 Ton Screenhouse (W)
32	*Screenhouse	7 1/2 Ton Screenhouse (E)
33	Service	2 Ton -- Steamfitting Shop
34	Service	2 Ton -- Hot Shop
35	Service	5 Ton -- Machine & Elect. Shop
36	Service	2 Ton -- Machine & Elec. Shop
37	Service	2 Ton -- Meter Shop

No.	Building	Overhead Handling System
38,39	Intermediate	(2) Monorails -- MDAFWP
40	Intermediate	(1) Monorail -- TDAFWP
41	Intermediate	(1) Monorail -- M.S. Header
42	Intermediate	3 Ton Monorail Upper Level
43	Intermediate	(1) Monorail A F.W. Line
44	Standby Aux F.W. Pump Bldg.	(1) Monorail
45	Diesel Gen.	(1) Monorail DG1
46	Diesel Gen.	(1) Monorail DG2
47	AVT Bldg.	1 Ton Stairwell Monorail
48	Oil Storage Building	(1) Monorail
49	Plant Exterior	18 Ton Mobile Crane
50	Containment	Reactor Vessel Stud Cleaning Crane
51	Containment	Base Mounted Pillar Jib Crane
52	Containment	Jib at Equipment Hatch (On Wall)

*Screenhouse crane is classified as two different cranes, however, there is only one crane for two areas which are separated by a track switch

OVERHEAD HANDLING SYSTEMS EXCLUDED FROM COMPLIANCE WITH NUREG 0612 BASED ON: "NO SAFETY-RELATED EQUIPMENT OR IRRADIATED FUEL IS LOCATED IN CLOSE PROXIMITY OR SUFFICIENT PHYSICAL SEPARATION EXISTS"

No.	Building	Overhead Handling System
12,13	Turbine	(2) Monorails Over Feed-water Pumps (Basement)
14	Turbine	2 Ton Jib -- Turbine Oil Part
15,16,17	Turbine	(3) Monorails -- Condenser Parts
18	Turbine	(1) Monorail -- Feed-water Heater Parts
19,20,21,22	Turbine	(4) Monorails -- Moisture Separator Parts
23	Turbine	125(25) Turbine O.H. Crane
24	Turbine	3 Ton Gantry
30	Auxiliary	5 Ton Drumming Crane
31	Screenhouse	7 1/2 Ton Screenhouse (W)
33	Service	2 Ton -- Steamfitting Shop
34	Service	2 Ton -- Hot Shop
35	Service	5 Ton -- Machine & Elect. Shop
36	Service	2 Ton -- Machine & Elec. Shop
37	Service	2 Ton -- Meter Shop
47	AVT Bldg.	1 Ton Stairwell Monorail
48	Oil Storage Building	(1) Monorail
49	Plant Exterior	18 Ton Mobile Crane
50	Containment	Reactor Vessel Stud Cleaning Crane

TOTAL = 24

OVERHEAD HANDLING SYSTEMS EXCLUDED FROM COMPLIANCE WITH NUREG 0612 BASED ON: "SOLE PURPOSE SYSTEMS AND ARE USED ONLY WHEN THE EQUIPMENT IS OUT OF SERVICE"

No.	Building	Overhead Handling System
10	Containment	(3) Monorail Hoists on Reactor Head Monorail
25, 26	Auxiliary	(2) Monorails RHR Pit Basement
38, 39	Intermediate	(2) Monorails -- MDAFWP
40	Intermediate	(1) Monorail -- TDAFWP
41	Intermediate	Monorail Over Main Steam Header
43	Intermediate	Monorail Over "A" F.W. Line
44	Standby Aux F.W. Pump Bldg.	(1) Monorail
45	Diesel Gen. Bldg. A	(1) Monorail
46	Diesel Gen. Bldg. B	(1) Monorail

TOTAL = 11

All of the above overhead handling systems are used only when the safety related equipment below them or within their proximity is out of service. Each monorail will be posted to prohibit its use while the systems below are in operation and each will be locked to insure that this restriction is adhered to.

OVERHEAD HANDLING SYSTEMS EXCLUDED FROM COMPLIANCE WITH NUREG 0612 BASED ON: "HEAVY LOADS ARE NOT CARRIED BY THE EXCLUDED SYSTEM" (A HEAVY LOAD AS DEFINED BY NUREG 0612 FOR R. E. GINNA STATION IS 1500 LBS.)

No.	Building	Overhead Handling System
2	Containment	1 Ton Jib (E)
3	Containment	1 Ton Jib (W)
5	Containment	Aux. Trolley on Fuel Manipulator Bridge
9	Containment	1/4 Ton Jib on Overhead Crane
11	Containment	Jib on Overhead CTMT Crane
51*	Containment	Base Mounted Pillar Jib Crane
52	Containment	Jib at Equipment Hatch (On Wall)

TOTAL = 7

* Designed, not installed, on hold.

All of the overhead handling systems above will be derated and posted so as to prevent the lifting of any heavy loads. (>1500 lbs.)

Total identified Overhead Handling Systems	52
Total eliminated by "Physical Separation"	24
Total eliminated by "Sole Purpose"	11
Total eliminated by "No Heavy Load Lifted"	7
TOTAL OVERHEAD HANDLING SYSTEMS THAT MUST COMPLY WITH NUREG 0612	10

No.	Building	Overhead Handling System
1	Containment	3 Ton Jib
4	Containment	1 1/2 Ton Fuel Manipulator Bridge
6	Containment	10 Ton Jib
7	Containment	100(20) Ton O.H. Crane
8	Containment	2 Ton Jib
27	Auxiliary	(1) Monorail (Basement)
28	Auxiliary	2 Ton Spent Fuel Crane
29	Auxiliary	40(5) Ton O.H. Crane
32	Screenhouse	7 1/2 Ton Screenhouse (E)
42	Intermediate	3 Ton Monorail -- Upper Level

Total = 10

FIRE AREA CODES

AB – AUXILIARY BUILDING	DG – DIESEL GENERATOR	SAF – STANDBY AUXILIARY FEEDWATER PUMP BUILDING	TB – TURBINE BUILDING
AVT – CONDENSATE DEMINERALIZER BUILDING	IB – INTERMEDIATE BUILDING	SB – SERVICE BUILDING	
CC – CONTROL ROOM AREA	RC – REACTOR CONTAINMENT	SH – SCREEN HOUSE	

ATTACHMENT #2

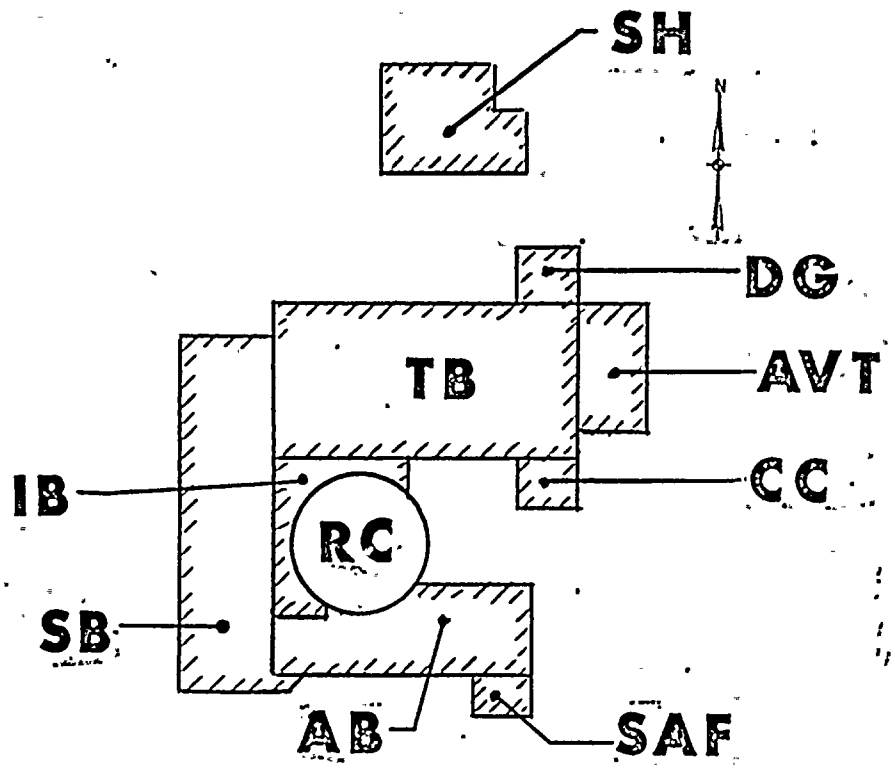

PLAN

LEGEND

1. SAFE SHUTDOWN EQUIPMENT
2. SAFE SHUTDOWN VALVES
3. TRAVEL RANGE FOR OVERHEAD HANDLING SYSTEMS

NUMBER	ORIGINAL	REVISION	INITIAL DATE	DRAWN BY	CHECKED BY	RESP. ENG.	ENG. MANG'R.
0			NJA 6-29-81		Rm 6-30-81	MBF 6/30/81	DW 7-1-81

ROCHESTER GAS & ELECTRIC CORP.
ROCHESTER, NEW YORK

BUILDING LOCATION
OVERHEAD HANDLING SYSTEMS

SCALE ~

NO. 03031-394

H. H. S. 19-1153

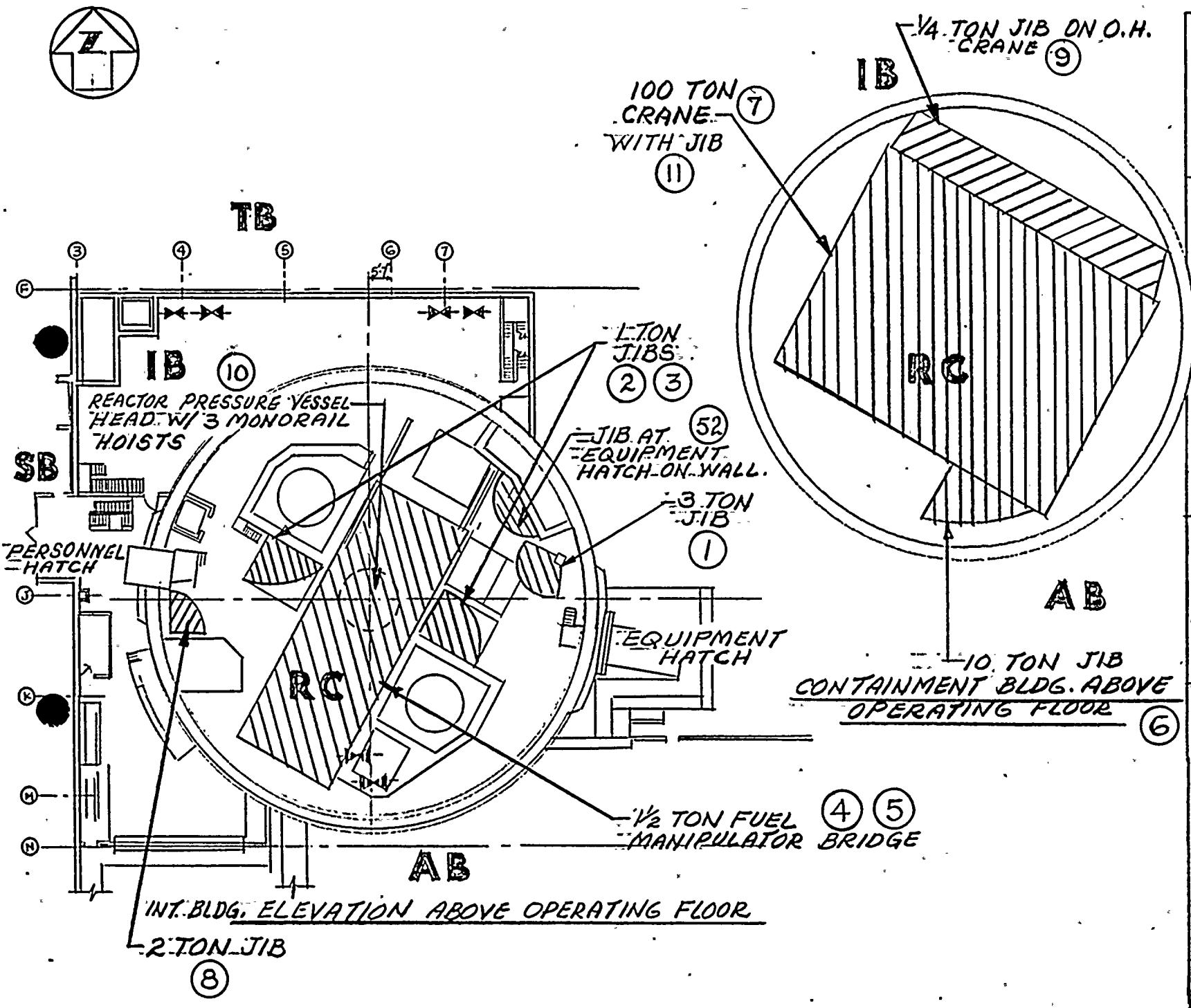

NUMBER	REVISION	INITIAL DATE	DRAWN BY	CHECKED BY	RESP. ENG.	ENG. MANG'R.
1	GENERAL REVISION		N J A 2 16 83	RMW 2-16-83	MBF 2/16/83	RMW 2-18-83
0	ORIGINAL		N J A 6-16-81	RMW 6-30-81	MBF 6/30/81	RMW 7-1-81

ROCHESTER GAS & ELECTRIC CORP.
ROCHESTER, NEW YORK

GINNA STATION
OVERHEAD HANDLING SYSTEMS
CONTAINMENT BLDG.

SCALE ~
NO. 03021-395

H. H. S. 19-1153

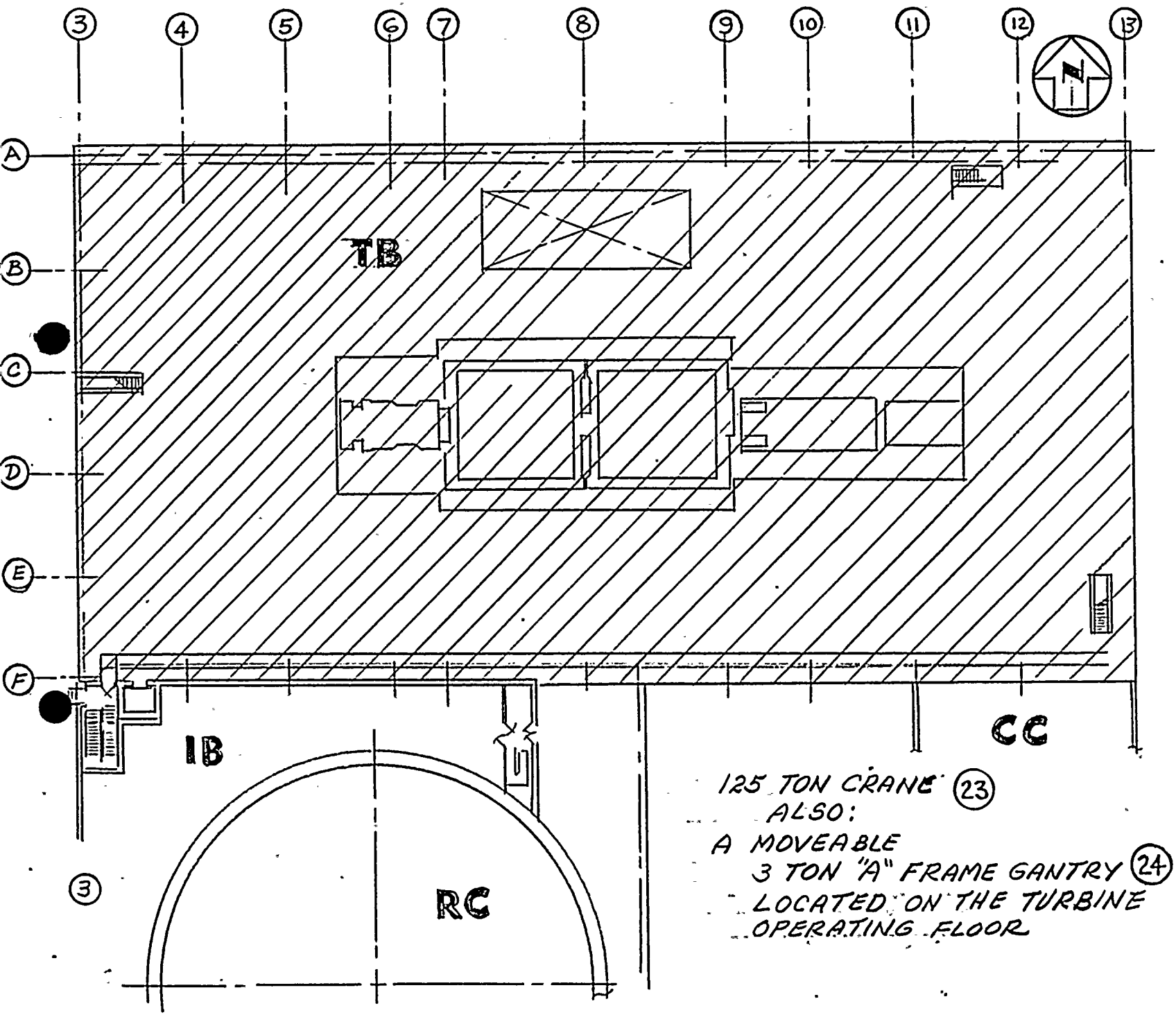

NUMBER	REVISION	INITIAL DATE	DRAWN BY	CHECKED BY	RESP. ENG.	ENG. MANG'R.
1	ADDED CRANE NUMBERS		NJA 2-16-83	RMV 2-16-83	MBF 2/16/83	RWJ 2-16-83
0	ORIGINAL		NJA 6-17-81	RMV 6-30-81	MBF 6/30/81	RWJ 7-1-81

ROCHESTER GAS & ELECTRIC CORP.
ROCHESTER, NEW YORK

GINNA STATION
OVERHEAD HANDLING SYSTEM
TURBINE BLDG. ELEV. 289'-6"

SCALE ~
NO. 03021-396

H. H. S. 19-1153

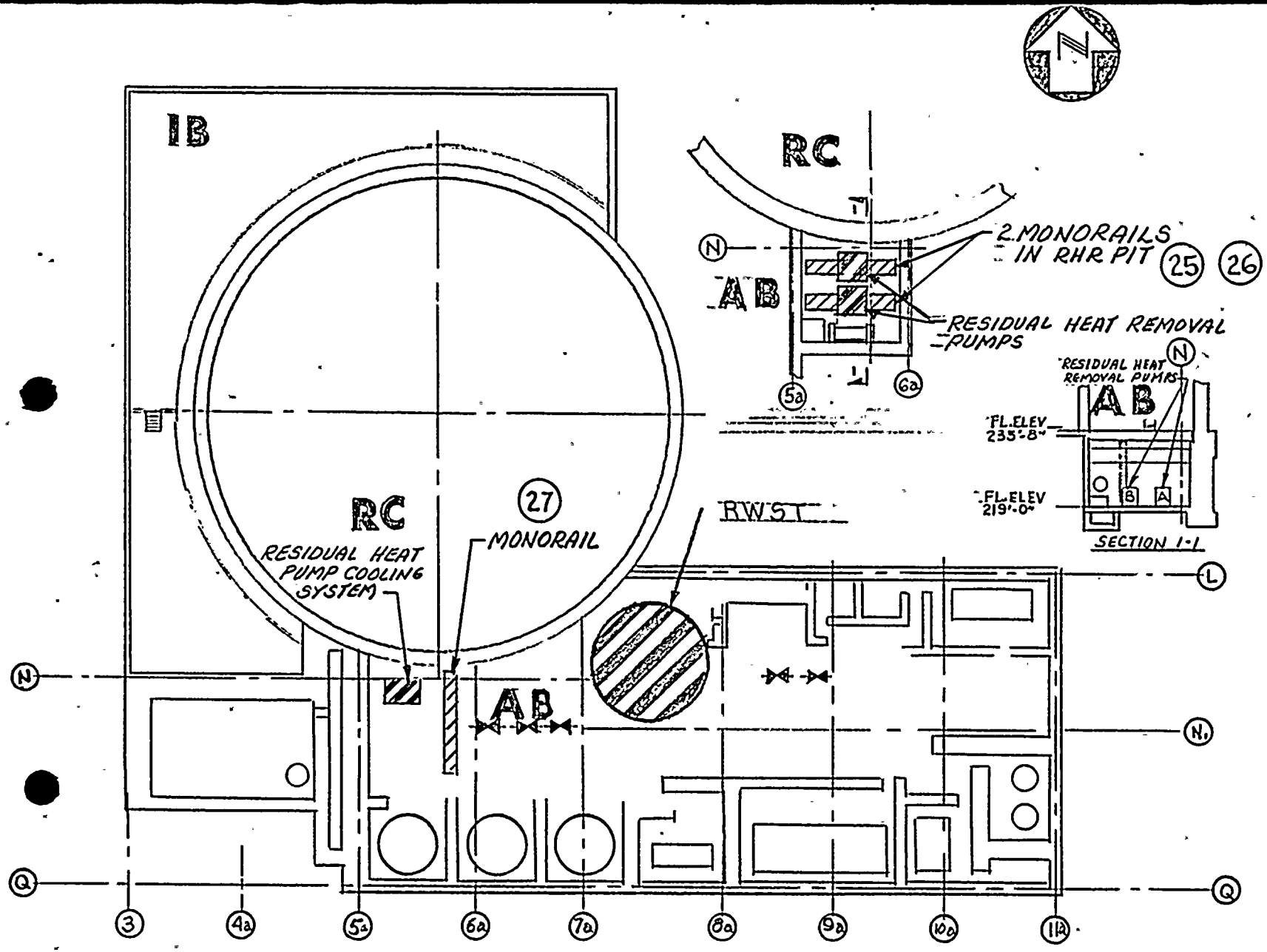

NUMBER	REVISION	INITIAL DATE	DRAWN BY	CHECKED BY	RESP. ENG.	ENG. MANG'R.
1	ADD. MONORAIL NUMBERS	NJA 2-18-83	NJA 6-29-81	6-30-81	MBF 2/18/83	2-18-83
0	ORIGINAL				MBF 6/30/81	7-1-81

ROCHESTER GAS & ELECTRIC CORP.
ROCHESTER, NEW YORK

GINNA STATION
OVERHEAD HANDLING SYSTEMS
AUX. BLDG. BASEMENT

SCALE ~
NO. 03021-397

H. H. S. 19-1153

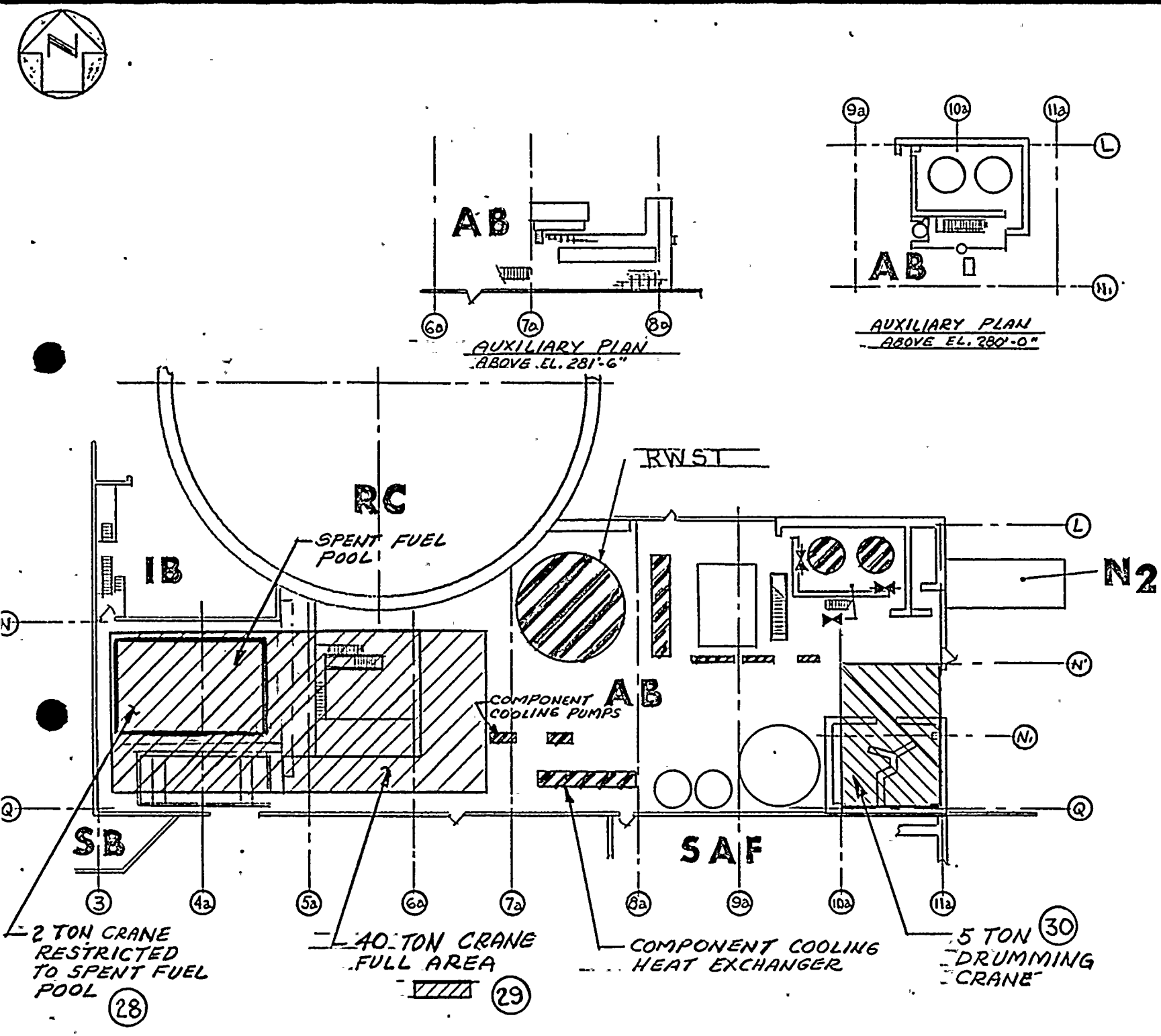

NUMBER	REVISION	INITIAL DATE	DRAWN BY	CHECKED BY	RESP. ENG.	ENG. MANG'R.
1	ADD. CRANE NUMBERS		2-17-83 NJA	2-18-83 RM	MBF 2/18/83	RW 2-18-83
0	ORIGINAL		6-29-81 NJA	6-30-81 RM	MBF 6/30/81	RW 7-1-81

ROCHESTER GAS & ELECTRIC CORP.
ROCHESTER, NEW YORK

GINNA STATION
OVERHEAD-HANDLING-SYSTEMS
AUX.-BLDG-(OPERATING)

SCALE

NO. 03021-398

H.H.S. 19-1153

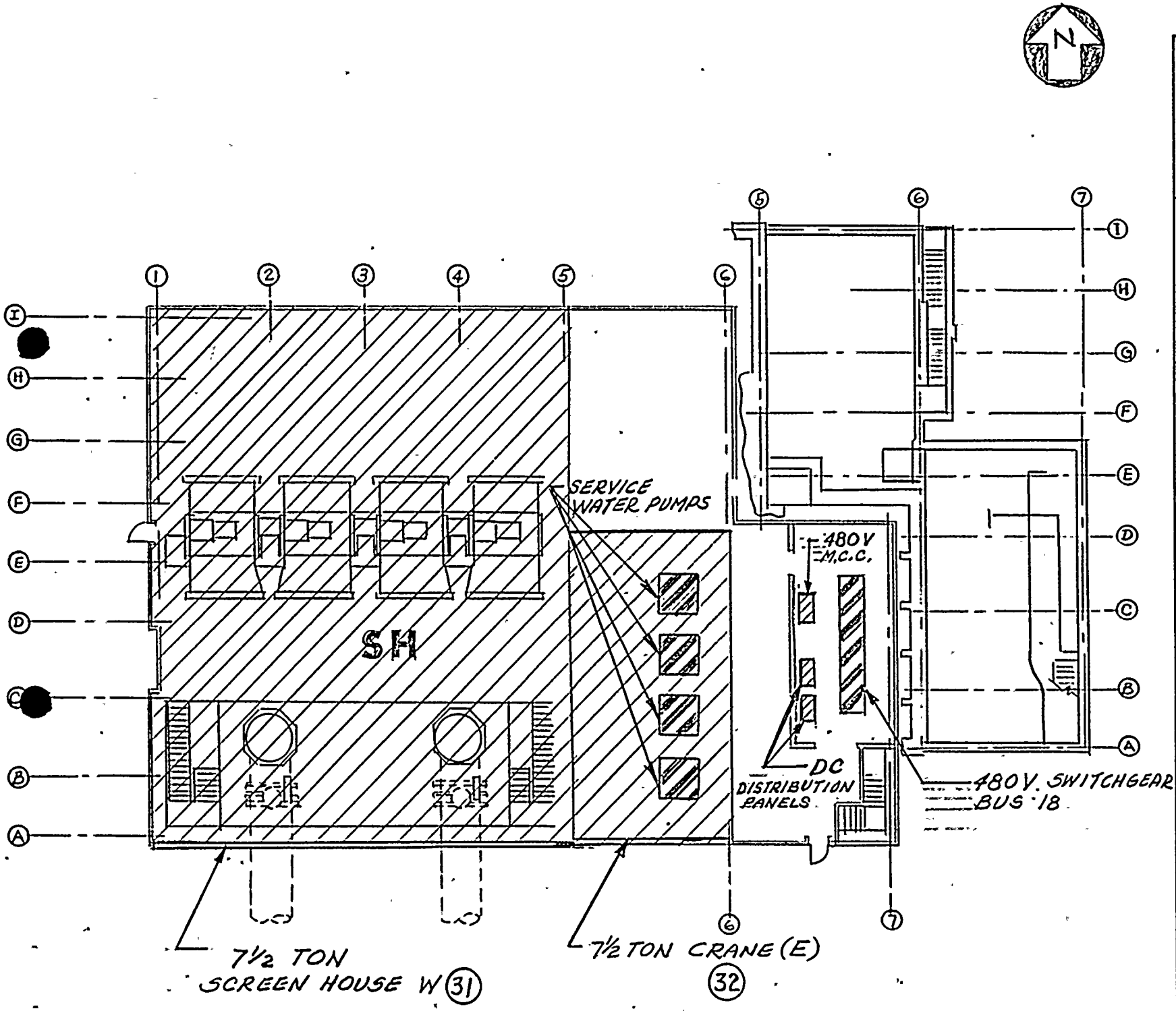

NUMBER	REVISION	INITIAL DATE	DRAWN BY	CHECKED BY	RESP. ENG.	ENG. MANG'R.
1	ADD. NUMBER TO CRANE	NJA 2-18-83	NJA 6-29-81	RMU 2-18-83	MBF 2/18/83	RMU 2-19-83
0	ORIGINAL			RMU 6-30-81	MBF 6/30/81	RMU 7-1-81

ROCHESTER GAS & ELECTRIC CORP.
ROCHESTER, NEW YORK

GINNA STATION
OVERHEAD HANDLING SYSTEMS
SCREENHOUSE

SCALE ~
NO. 03021-399

H.H.S. 19-1153

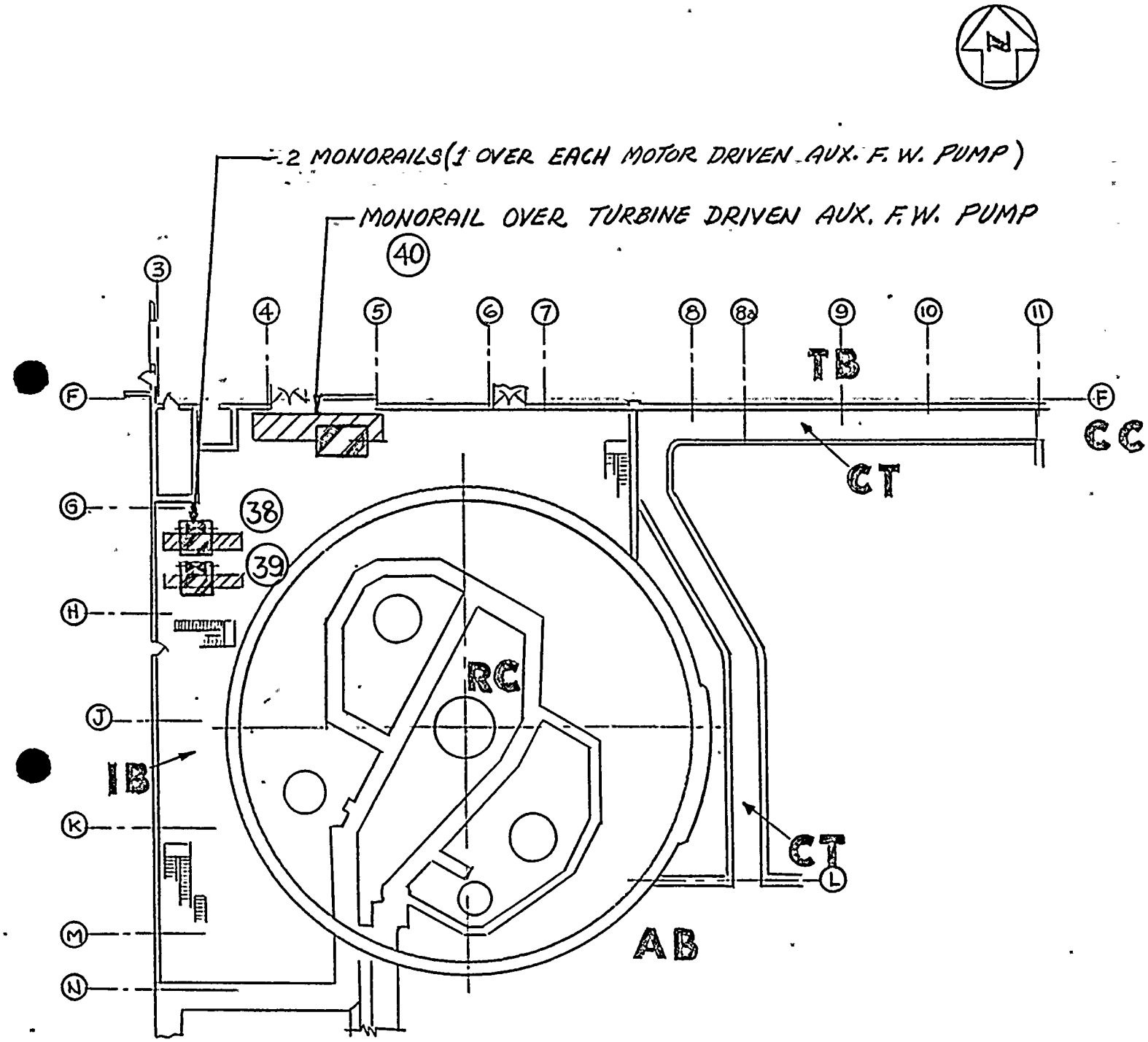

1	ADD. NUMBERS TO MONORAILS	NJA 2-15-83	RM 2-18-83	MBF 2/18/83	DM 2-18-8		
0	ORIGINAL	INITIAL DATE	NJA 6-29-81	RM 6-30-81	MBF 6/30/81	DM 7-1-81	
NUMBER	REVISION	DRAWN BY	CHECKED BY	RESP. ENG.	ENG. MANG'R.		

ROCHESTER GAS & ELECTRIC CORP.
ROCHESTER, NEW YORK

GINNA STATION
OVERHEAD HANDLING SYSTEMS
INTERMEDIATE BLDG. (BASEMENT)

SCALE ~

NO. 03021-400

H. H. S. 19-1153

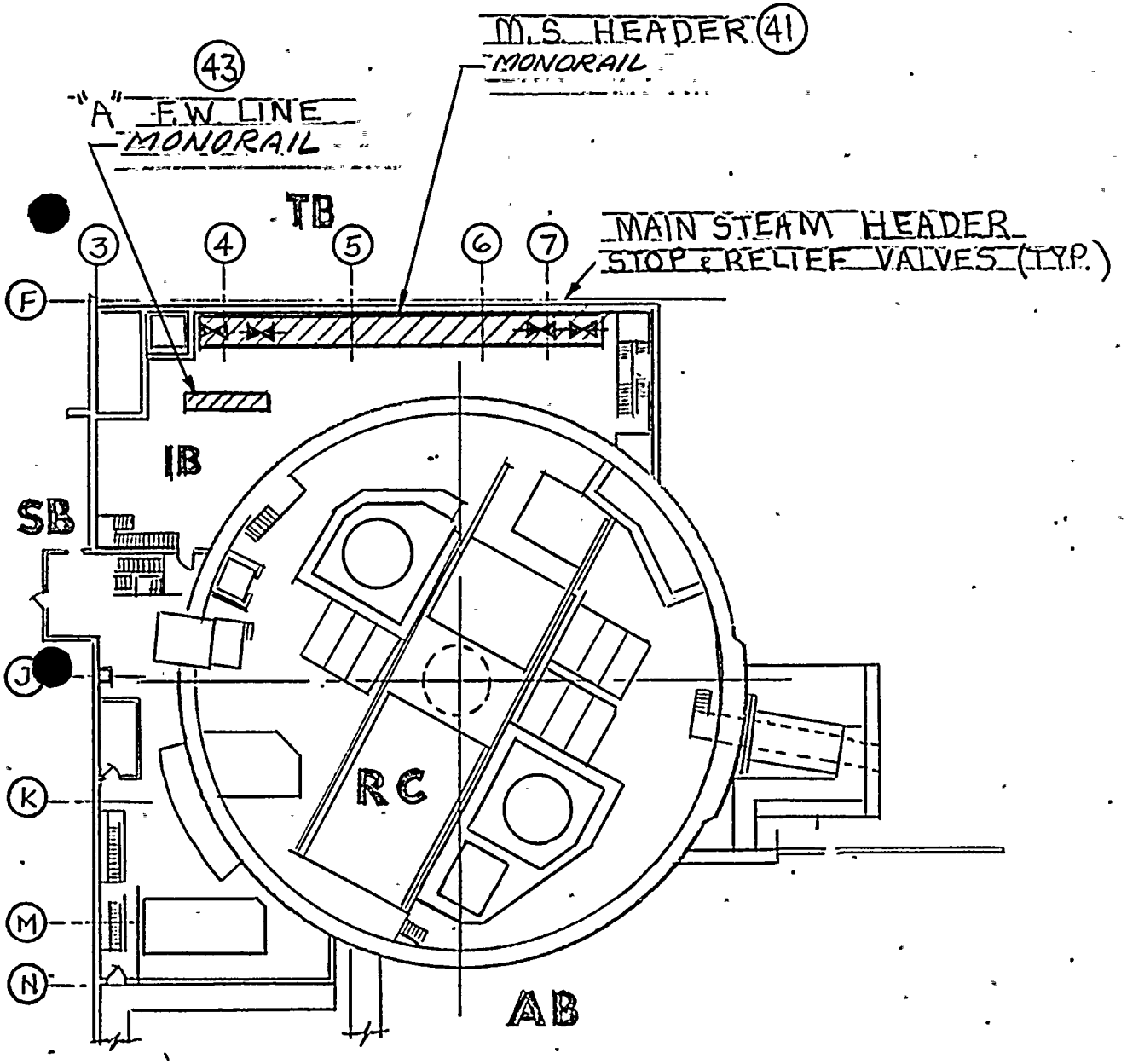

1	ADD NUMBER TO MONORAILS	NJA 2-16-83	RM 2-19-82	MBF 2/18/83	TOW 2-18-83	
0	ORIGINAL	NJA 6-29-81	RM 6-30-81	MBF 6/30/81	TOW 7-1-81	
NUMBER	REVISION	DRAWN BY	CHECKED BY	RESP. ENG.	ENG. MANG'R.	

ROCHESTER GAS & ELECTRIC CORP.
ROCHESTER, NEW YORK

GINNA STATION
OVERHEAD HANDLING SYSTEMS
INTERMEDIATE BLDG. FLR. EL. 278'-4"

SCALE ~

NO. 63021-401

H.H.S. 19-1153

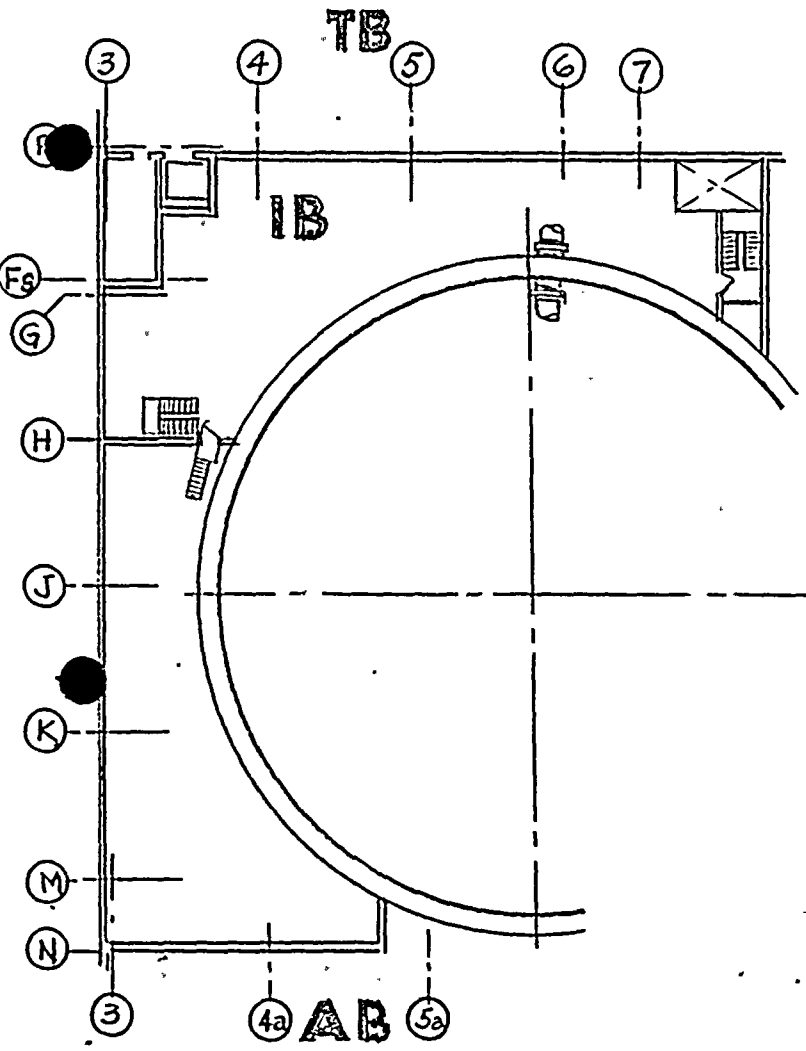

PLAN ABOVE FLR. EL 293'-0" & 298'-4"

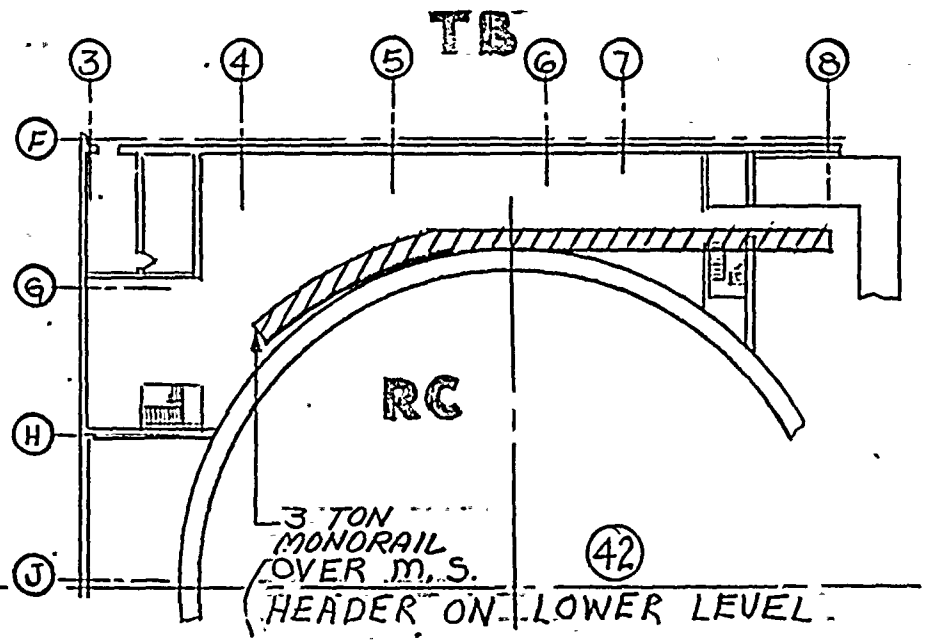

PLAN ABOVE FLR EL. 315'-4"

NUMBER	REVISION	INITIAL DATE	DRAWN BY	CHECKED BY	RESP. ENG.	ENG. MANG'R.
1	ADD NUMBER TO CRANERAIL	NJA 2-16-83	NJA 6-29-81	RMJ 2-16-83	MBF 6/30/81	MBF 2/16/83	RMJ 7-1-81	RMJ 2-16-83
0	ORIGINAL							

ROCHESTER GAS & ELECTRIC CORP.
ROCHESTER, NEW YORK

GINNA STATION
OVERHEAD HANDLING SYSTEMS
INTERMEDIATE BLDG. (UPPER)

SCALE ~

NO. 03021-402

H.H.S. 19-1153

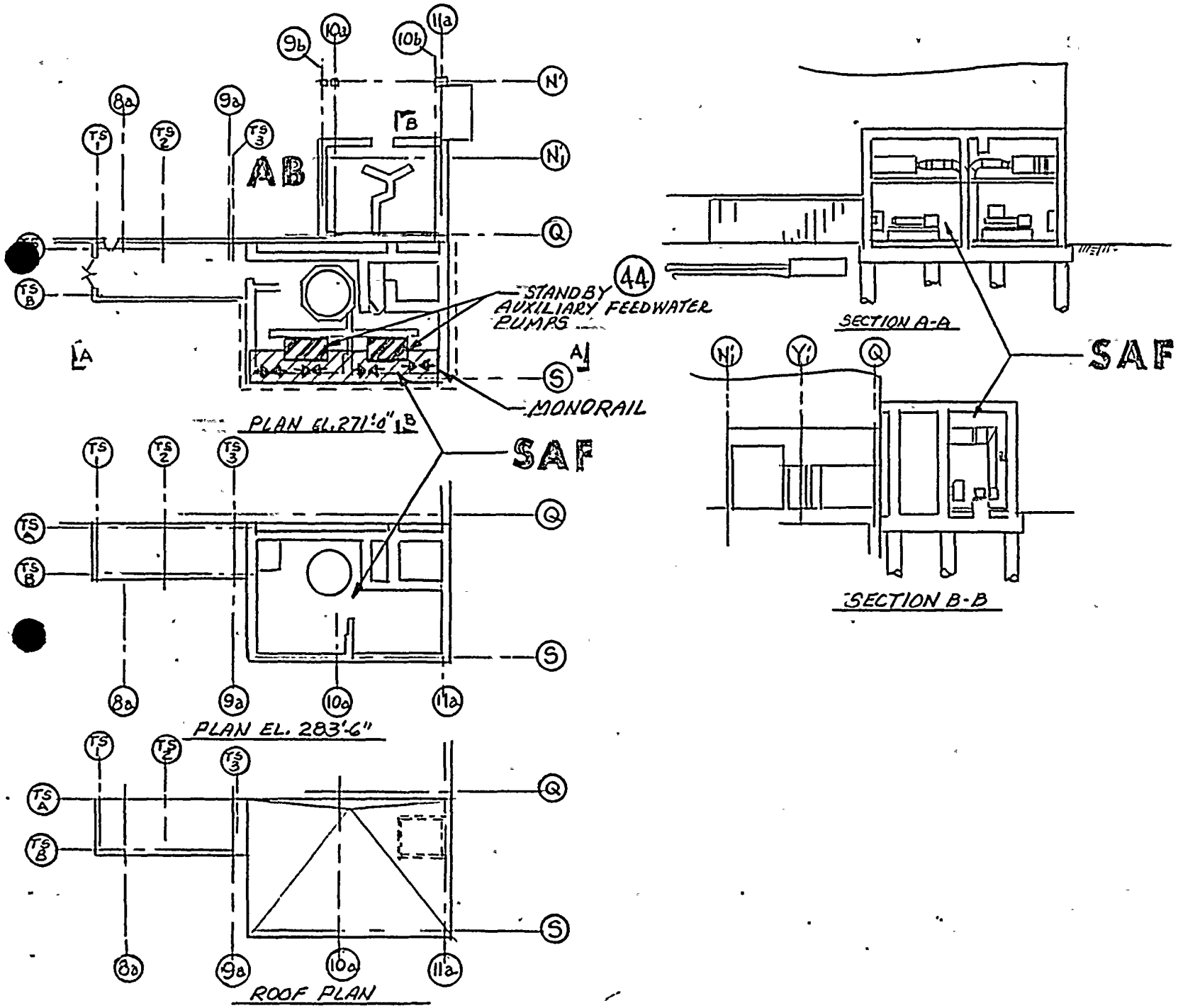

1	ADD. NUMBER TO MONORAIL	NJA 2-16-83	Rm 2-18-83	MBF 2/16/83	RJS 2-18-83	
0	ORIGINAL	NJA 6-29-81	Rm 6-29-81	MBF 6/30/81	RJS 7-1-81	
NUMBER	REVISION	DRAWN BY	CHECKED BY	RESP. ENG.	ENG. MANG'R.	

ROCHESTER GAS & ELECTRIC CORP.
ROCHESTER, NEW YORK

GINNA STATION
OVERHEAD HANDLING SYSTEMS
STANDBY AUX. F.W. PUMP BLDG.

SCALE ~

NO. 03021-403

H.H.S. 19-1153

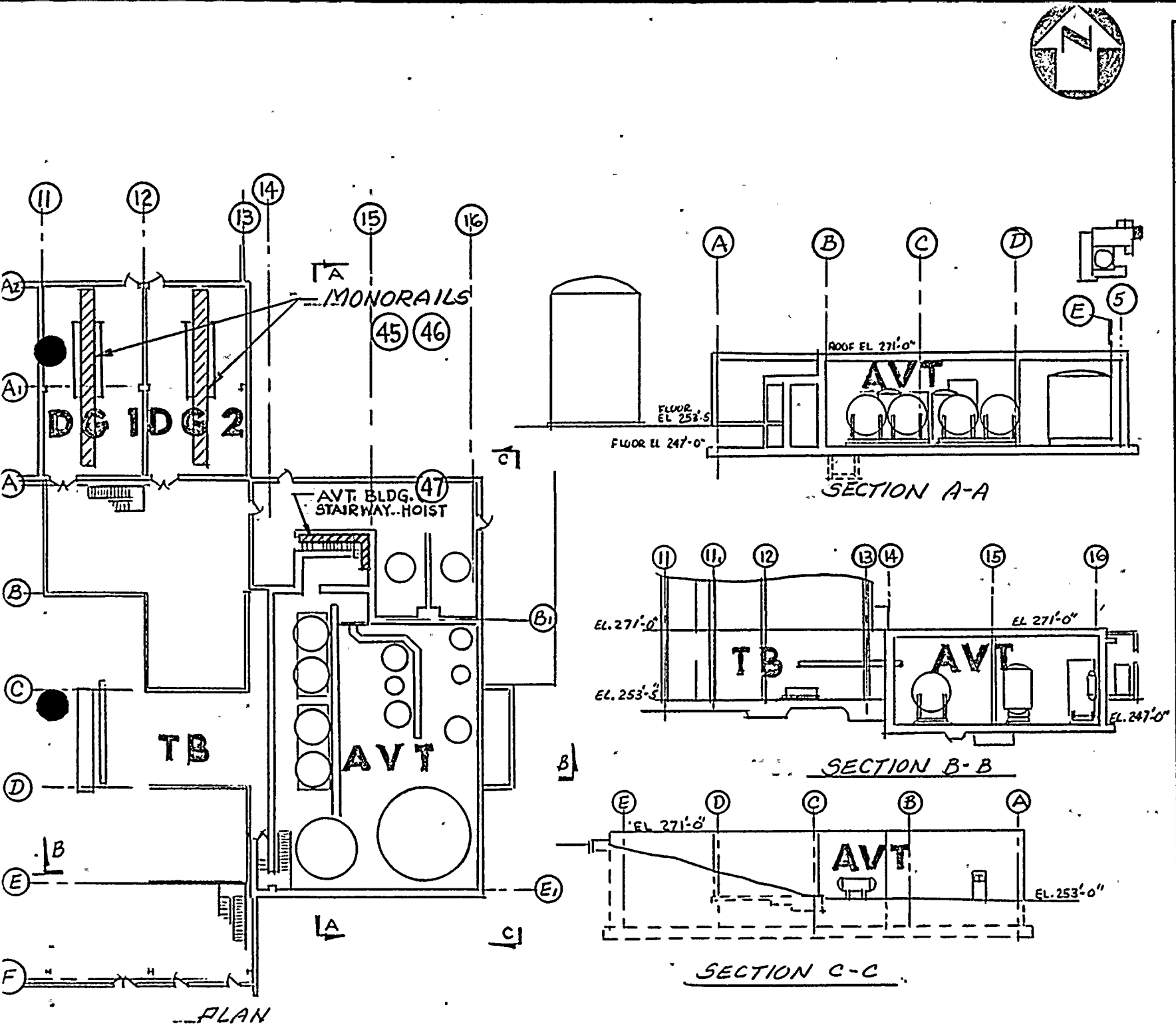

NUMBER	REVISION	INITIAL DATE	DRAWN BY	CHECKED BY	RESP. ENG.	ENG. MANG'R.
1	ADD. NUMBER TO HOIST & MONORAIL	NJA 1-16-83	NJA 6-29-81	RM 2-17-83	MBF 2/16/83	DWS 2-16-83
0	ORIGINAL			RM 6-30-81	MBF 6/30/81	TRN 7-1-81

ROCHESTER GAS & ELECTRIC CORP.
ROCHESTER, NEW YORK

GINNA STATION
OVERHEAD HANDLING SYSTEMS
DIESEL GENERATION ROOMS

SCALE ~

NO. 0302 1-404

H. H. S. 19-1153

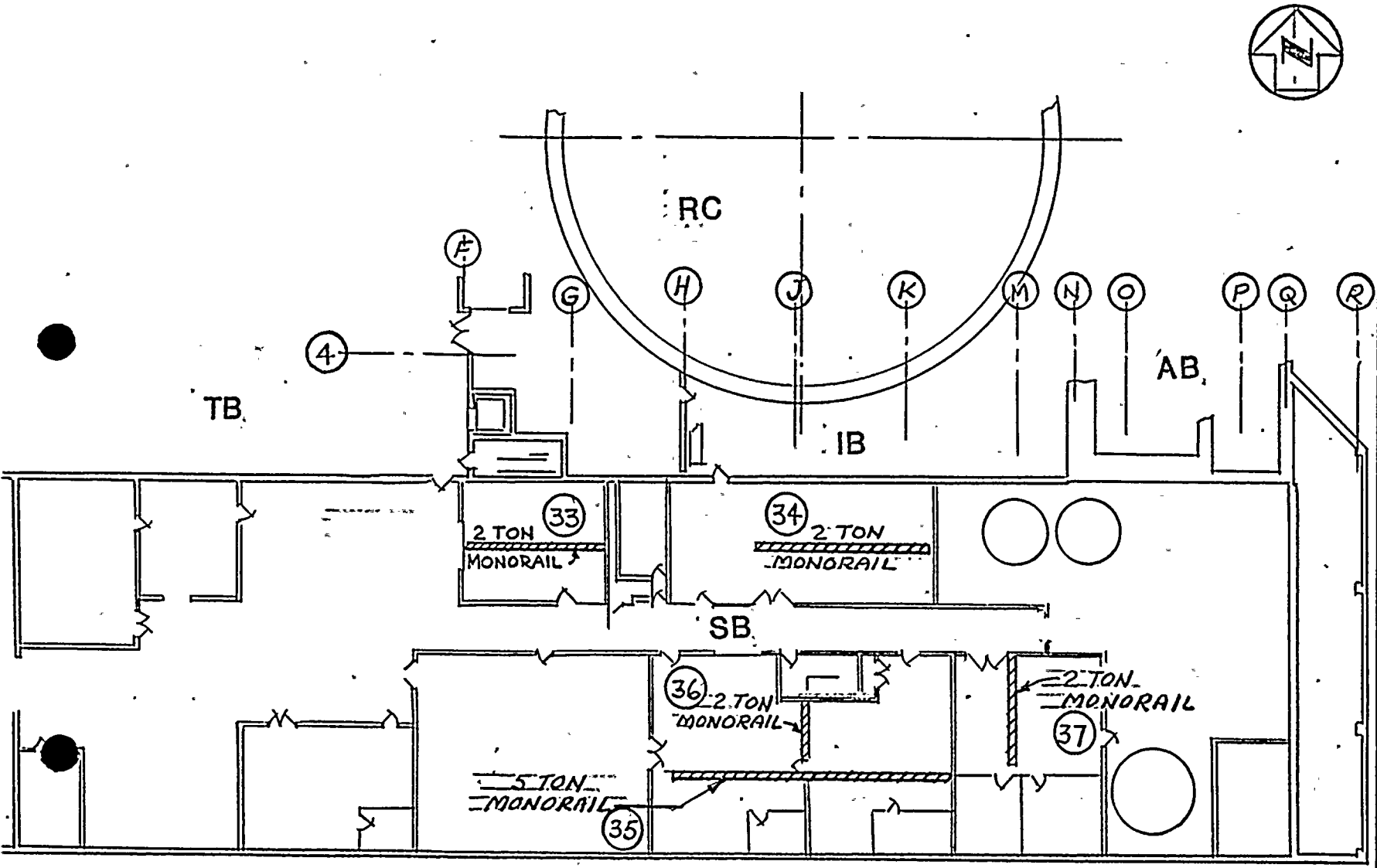

NUMBER	INITIAL	DATE	DRAWN BY	CHECKED BY	RESP. ENG.	ENG. MANG'R.
0	ORIGINAL		NJA 2-16-83	RM 2-18-83	MBF 2/16/83	DNJ 2-18-83
	REVISION					

ROCHESTER GAS & ELECTRIC CORP.
ROCHESTER, NEW YORK

GINNA STATION
OVERHEAD HANDLING SYSTEMS
SERVICE BLDG., ELEV. 253'-6"

SCALE N

NO. 03021-410

H.H.S. 18 1153

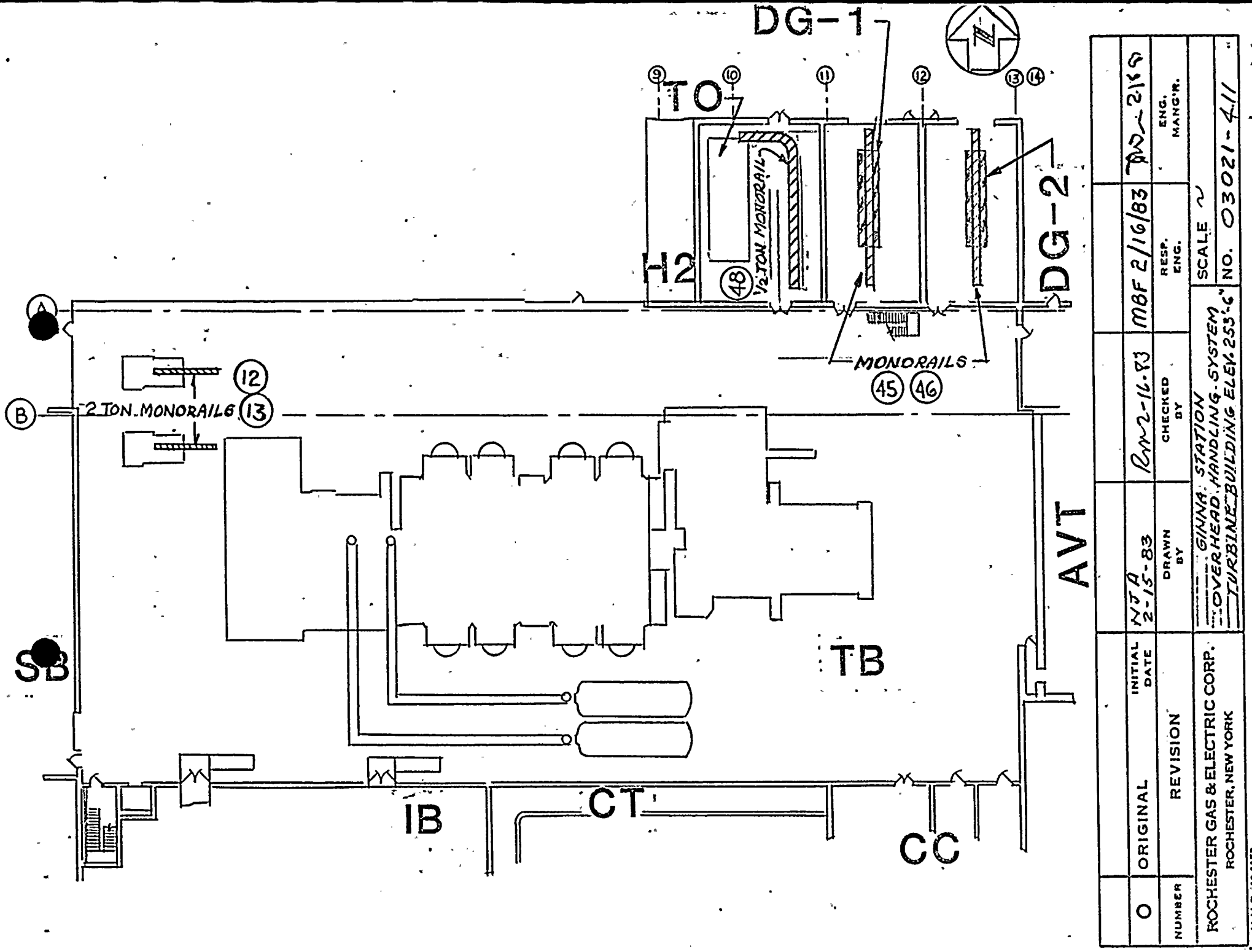
DG-1
DG-2
TO
H2
1/2 TON MONORAIL
48
MONORAILS
45 46
2 TON MONORAILS
12
13
A
B
SB
AVT
TB
IB
CT
CC
9
10
11
12
13
14
ORIGINAL
REVISION
NUMBER
0
INITIAL DATE
NJA 2-15-83
DRAWN BY
RM 2-16-83
CHECKED BY
MBF 2/16/83
RESP. ENG.
TWS 2-15-83
ENG. MANG'R.
SCALE
NO. 03021-411
GINNA STATION
OVERHEAD HANDLING SYSTEM
TURBINE BUILDING ELEV. 253'-6"
ROCHESTER GAS & ELECTRIC CORP.
ROCHESTER, NEW YORK
H.H.S. 19 1153

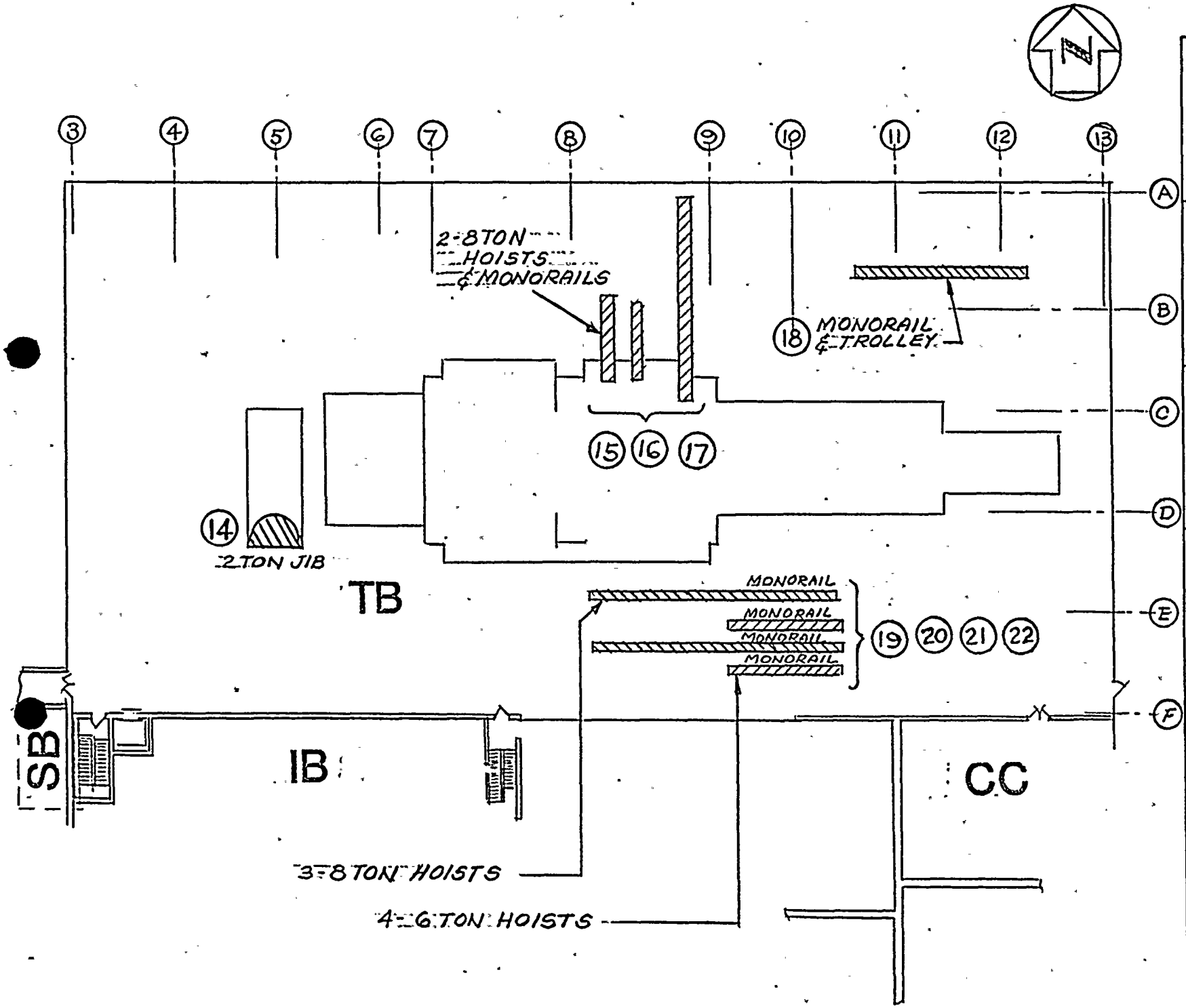

NUMBER	INITIAL DATE	DRAWN BY	CHECKED BY	RESP. ENG.	ENG. MANG'R.
0	ORIGINAL	N.J.A. 2/16/83	2-18-83	MBF 2/16/83	RJW 2-18-83
	REVISION				

ROCHESTER GAS & ELECTRIC CORP.
ROCHESTER, NEW YORK

GINNA STATION
OVERHEAD HANDLING SYSTEMS
MEZZANIN FL. TURB. BLDG. ELEV. 271'-0"

SCALE ~
NO. 03021-412

H.H.S. 191153

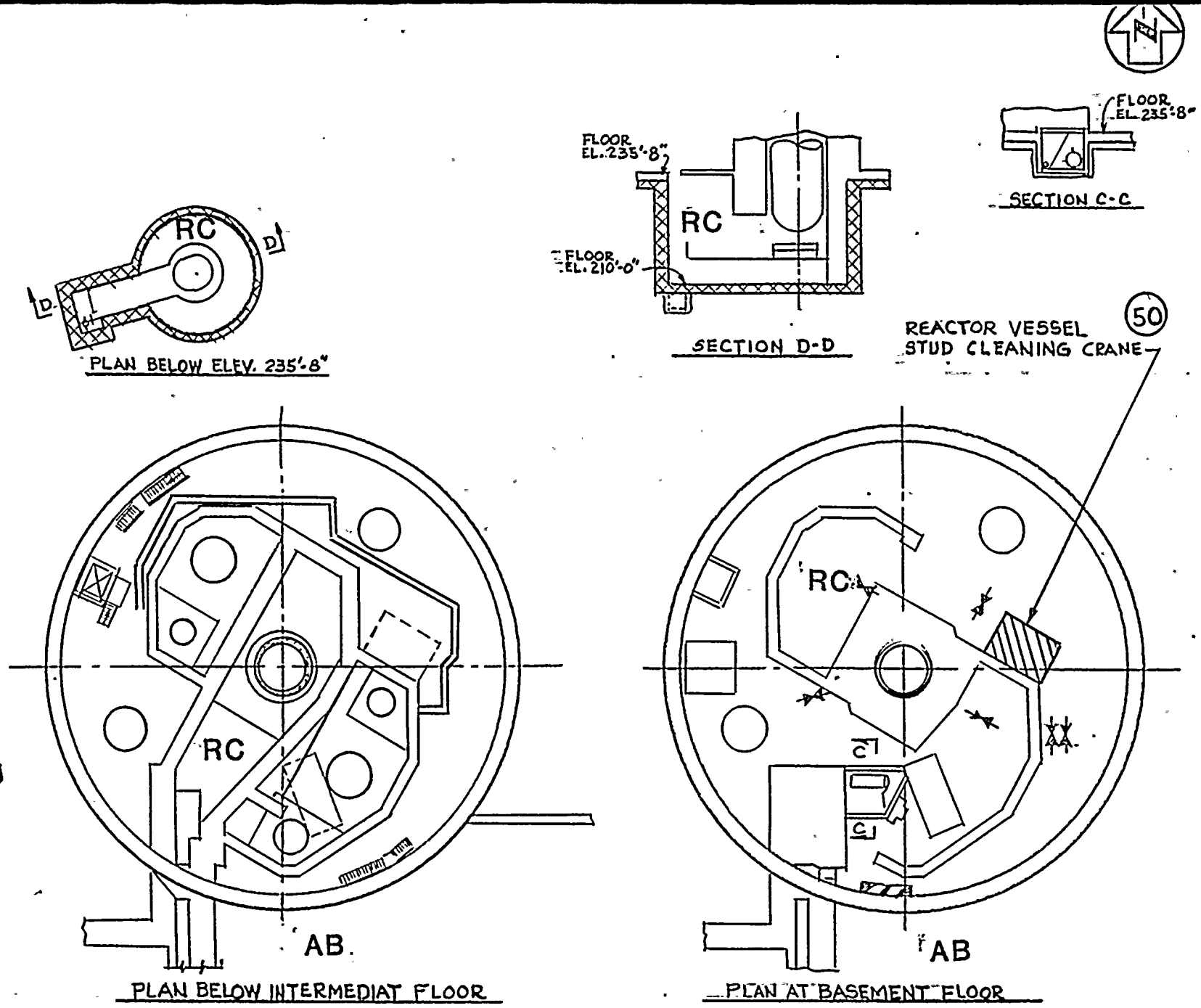

0	ORIGINAL	N.J.P. 2-16-83	MBF 2/16/83	2-18-83	
NUMBER	REVISION	DRAWN BY	RESP. ENG.	CHECKED BY	ENG. MANG'R.

ROCHESTER GAS & ELECTRIC CORP.
ROCHESTER, NEW YORK

GINNA STATION
OVERHEAD HANDLING SYSTEM - REACTOR CONTAINMENT VESSEL - EL. ABOVE BASEMENT FL.

SCALE ~

NO. 03021 - 413

H.H.S. 191153

SPECIAL LIFTING DEVICES

ITEM 1: STRESS DESIGN FACTOR

FROM NUREG 0612

The stress design factor stated in Section 3.2.1.1 of ANSI N14.6 should be based on the combined maximum static and dynamic loads that could be imparted on the handling device based on characteristics of the crane which will be used. This is in lieu of the guideline in Section 3.2.1.1 of ANSI N14.6 which bases the stress design factor on only the weight (static load) of the load and of the intervening components of the special handling device.

DISPOSITION OF DYNAMIC LOADS IN WESTINGHOUSE ANALYSIS OF LIFTING DEVICES

It can be inferred from this paragraph that the stress design factors specified in Section 3.2.1.1 of ANSI N14.6 (3 and 5) are not all inclusive. Also, it can be inferred that the specified ANSI N14.6 stress design factors should be increased by any amount based on the crane dynamic characteristics. The dynamic characteristics of the crane would be based on the main hook and associated wire ropes holding the hook. Most main containment cranes use sixteen (16) or more wire ropes to handle the load. Should the crane hook suddenly stop during the lifting or lowering of a load, a shock load could be transmitted to the connected device. Because of the elasticity of the sixteen or more wire ropes, the dynamic factor for a typical containment crane is not much larger than 1.0. The maximum design factor that is recommended by most design texts [7, 8, 9] is a factor of 2 for loads that are suddenly applied. The stress design factors required in Section 3.2.1.1 of ANSI N14.6 are:

$$3 \text{ (weight)} < \text{Yield Strength}$$
$$5 \text{ (weight)} < \text{Ultimate Strength}$$

The factor of 3 specified, certainly, includes consideration of suddenly applied loads for cases where the dynamic impact factor may be as high as 2.0. Thus, we feel that the use of the design criteria in ANSI N14.6 satisfies the NUREG requirement.

CMAA #70 IMPACT LOAD CRITERIA

3.3.2.1.1.3 Impact Allowance: For cranes operating on runways as described in Section 1.4, the impact allowance of the rated capacity shall be taken as 1/2% of the load per foot per minute of hoisting speed, but not less than 15% nor more than 50%, except for bucket and magnet cranes for which the impact value shall be taken as 50% of the rated capacity.

RG&E DISPOSITION

Since all three of our special lifting devices are operated only with the main hoist of the containment overhead crane, which has a hoist speed of 3"/min., the following maximum impact load has been calculated:

Rated Capacity = 100 Tons
Hoist Speed= 3 inches/minute

Impact Allowance = I

I = 1/2% (100 tons)/3 inches per minute

I = 4000 #
or
2% (15% equals 30,000 lbs.)

Westinghouse has determined that the three special lifting devices analyzed are within the 3 and 5 strength factors for static loading. Based on this analysis, the nature of the crane used with these devices, and their actual impact allowance we have determined that our special lifting devices conform to NUREG 0612.

ATTACHMENT 4

CRANE DESIGN (CTMT OVERHEAD)

ITEM 1: LONGITUDINAL STIFFENERS

FROM NUREG 0612 SECTION 5.1.1 (7)

The crane should be designed to meet the applicable criteria and guidelines of Chapter 2-1 of ANSI B30.2-1976, "Overhead and Gantry Cranes" and of CMAA-70, "Specifications for Electric Overhead Travelling Cranes." An alternative to a specification in ANSI B30.2 or CMAA-70 may be accepted in lieu of specific compliance if the intent of the specification is satisfied.

CRANE COMPARISON ANALYSIS RESULTS

A comparison analysis was done on the containment overhead crane to determine its extent of compliance to CMAA-70. The longitudinal stiffeners are not located as specified in CMAA-70. When two longitudinal stiffeners are used, they shall be located as stated in Section 3.3.3.1.2.2 of CMAA-70. Each shall have a moment of inertia of 2.07 in.^{4} (calculated) the existing moments of inertia are .68 in.^{4} as stated in the "Whiting" crane comparison analysis.

TECHNICAL EVALUATION REPORT COMMENTS

Although not in verbatim compliance with CMAA-70 requirements concerning location and moment of inertia, the use of longitudinal stiffeners in the containment building crane is judged to meet the intent of this guideline. Longitudinal stiffeners are used, in conjunction with transverse stiffeners or diaphragms, to allow the use of thin web plates (i.e., web plates with large h/t ratios where h = web depth, and t = web thickness.) CMAA-70 allows for h/t ratios of up to 188 for girders with no longitudinal stiffener, and of up to 376 for girders with a single longitudinal stiffener. Were such a single stiffener used in the Ginna containment crane, a moment of inertia about the web face of approximately 1.8 in.^{4} would be required. The Ginna design employs two longitudinal stiffeners, each with a moment of inertia of approximately 0.46 in.^{4} about the web face, in conjunction with a web h/t ratio of 236. Although judged to meet the intent of this guideline, the Licensee should provide suitable documentation to justify the location and moment of inertia of the installed stiffeners.

RG&E DISPOSITION

The location of the installed stiffeners in the containment building crane are shown on a Westinghouse Shop Drawing, U-55964 which is a permanent RG&E record. (See attached sketch for stiffener location).

Calculations for the moment of inertia of the stiffeners are shown on pages 15 and 16 of the Whiting Comparison Report (February 1, 1982 submittal, Attachment 5).

The crane girder was designed under EOCI-C1 specifications using sound engineering practices. There is simply no indication that the crane is in jeopardy of structural failure or any overstress due to the location and size of the existing longitudinal stiffeners.

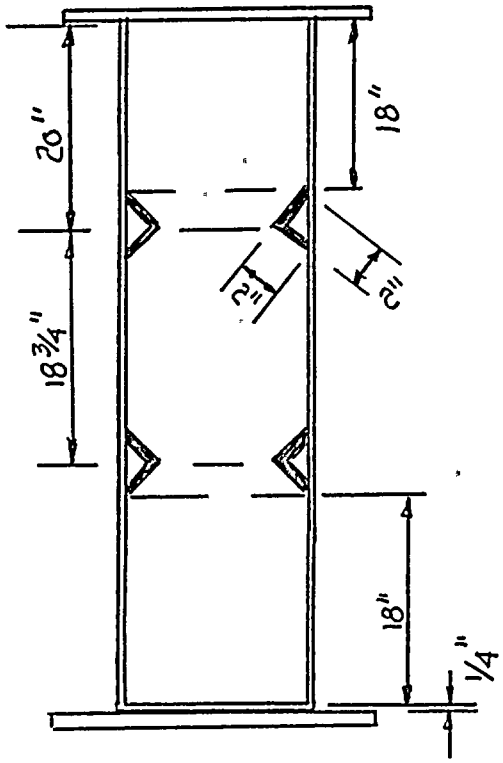

LOCATION OF LONGITUDINAL STIFFENERS IN THE CONTAINMENT BRIDGE CRANE AS SHOWN ON WESTINGHOUSE DWG. U-55964