REVISED RESPONSE TO REQUEST FOR ADDITIONAL INFORMATION

APR1400 Design Certification

Korea Electric Power Corporation / Korea Hydro & Nuclear Power Co., LTD

Docket No. 52-046

RAI No.:	**255-8285**
SRP Section:	**03.08.05 - Foundations**
Application Section:	**03.08.05**
Date of RAI Issue:	**10/19/2015**

Question No. 03.08.05-4

10 CFR 50.55a, and 10 CFR Part 50, Appendix A, General Design Criteria (GDC) 1, 2, 4 and 5 provide the regulatory requirements for the design of the seismic Category I structures. Standard Review Plan (SRP) 3.8. 5, Section I.1.A, “Containment Structure Foundation,” states “If waterproofing membranes are used, the review addresses their effect on the shear resistance of the foundation.”

In DCD Tier 2, Section 3.8.5.1, “Description of Foundations,” the applicant did not provide any description whether waterproofing membranes are used. Therefore, the applicant is requested to address the following, and include this information in DCD Section 3.8.5:

Applicant is requested to descript, whether waterproofing membranes are used in APR1400 design, and if used, provide effects on the shear resistance of the NI common basemat.

Response – (Rev. 2)

Waterproofing membranes are used for exterior horizontal and vertical surfaces of structures in APR1400 design. The wrong sentence “e” of DCD Tier 2, Section 3.4.1.2 will be deleted.

Typical detail for installation of the waterproofing membranes is shown in Figure 1. Because the membranes are installed between lower and upper lean concrete beneath the basemat, they affect the shear resistance of the NI common basemat.

The sliding by shear transfer may be considered across the interfaces between dissimilar materials, i.e., foundation concrete on lean concrete, lean concrete and waterproofing membrane, lean concrete and the supporting medium (soil or rock), and within the supporting medium.

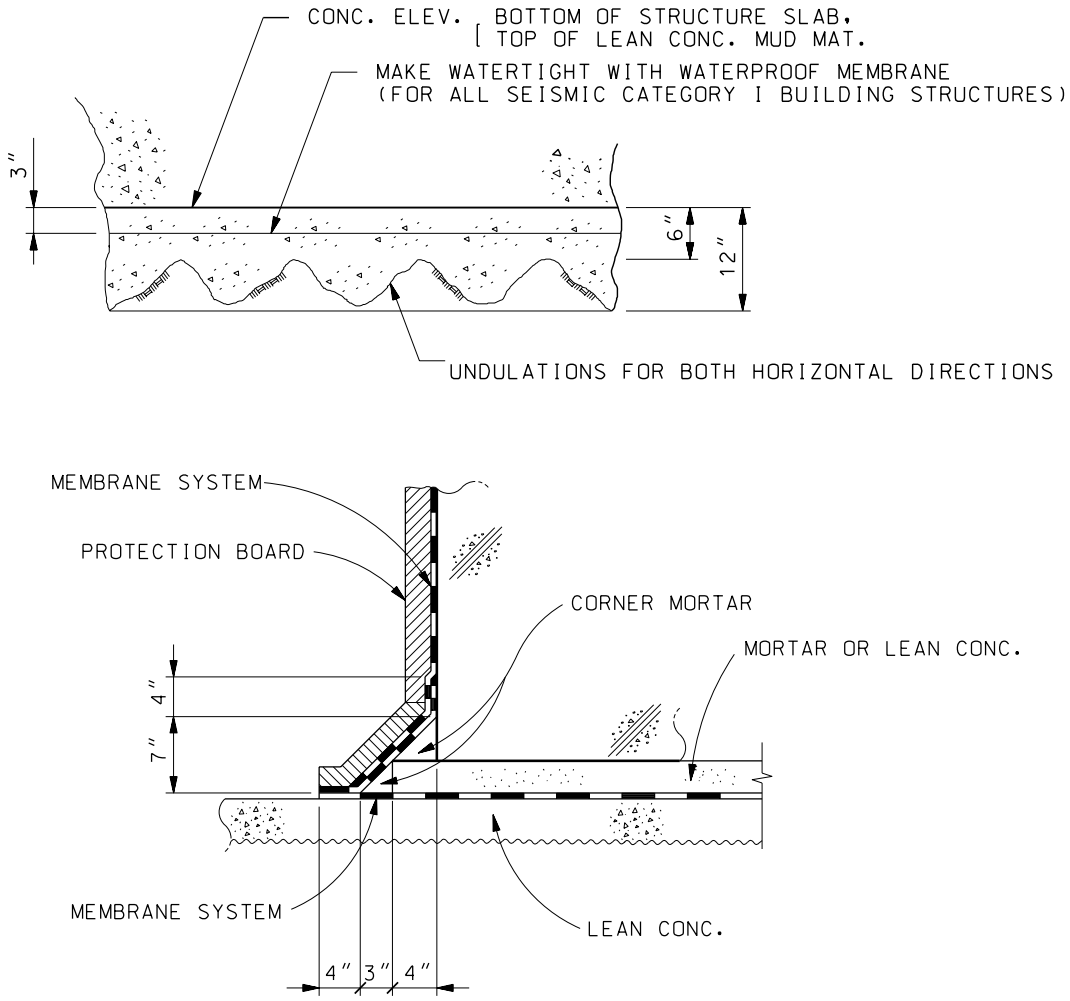

Figure 1 Typical Detail for Installation of Waterproofing Membrane

The coefficient of friction between the lean concrete and waterproofing membrane is greater than or equal to 0.55 as described in COL 3.8(13). This value is compared with the coefficients of friction between other interfaces, and the minimum value among them is used for stability check of the basemat.

Impact on DCD

DCD Tier 2, Subsections 3.4.1.2 and 3.8.5.1 will be revised and Figure 3.8-27 will be added as indicated in the attachment associated with this response.

Impact on PRA

There is no impact on the PRA.

Impact on Technical Specifications

There is no impact on the Technical Specifications.

Impact on Technical/Topical/Environmental Reports

There is no impact on any Technical, Topical, or Environmental Report.

3.4.1.2 Flood Protection from External Sources

The flood protection measures for seismic Category I SSCs are designed in accordance with NRC RG 1.102 (Reference 3).

Seismic Category I structures identified in Table 3.2-1 are designed for flood protection. Seismic Category I structures are designed to protect safety-related equipment from flooding by incorporating the following safeguards into their construction:

a. No exterior access openings are lower than 0.41 m (1 ft 4 in) above plant grade (yard grade) elevation.

b. The finished yard grade adjacent to the safety-related structures is maintained at least 0.41 m (1 ft 4 in) below the ground floor elevation, except where ramps or steps are provided for access.

c. Waterstops are used in all horizontal and vertical construction joints in all exterior walls up to flood-level elevation.

d. Water seals are provided for all penetrations in exterior walls up to flood-level elevation. The water seals are designed for the static pressure of water at the flood elevation. Water seals in safety-related structures are designed to maintain integrity in the event of an SSE.

e. All below-grade exterior walls and basemats of seismic Category I structures are thickened by more than or equal to 0.6 m (2 ft) to protect against water seepage, as required in SRP Section 14.3.2. ~~Waterproofing systems are not used under the basemats or on the below-grade exterior walls of seismic Category I structures as a provision against external flooding.~~

Penetrations below the external flood level in the external walls of the auxiliary building include component cooling water, radwaste, and diesel fuel oil system piping and cable penetrations. Additional penetrations may be identified when layouts are finalized for systems such as sewage, demineralized water, station air, and security. All penetrations

RAI 255-8285 - Question 03.08.05-4_Rev.1

RAI 255-8285 - Question 03.08.05-4_Rev.2

3.8.5 Foundations

3.8.5.1 Description of the Foundations

The foundation basemat is a reinforced concrete common basemat structure for the nuclear island that consists of the reactor containment building and auxiliary building.

3.8.5.1.1 Reactor Containment Building Foundation

The reactor containment building basemat is reinforced at the top and bottom with layers of reinforcing steel bars. The reinforcing bars are arranged in radial and hoop directions for top layers and orthogonal directions for bottom layers. In addition, the reinforcing bars at the floor of the reactor pit below the liner are arranged in orthogonal directions for the top and bottom layers.

The steel liner plate for the containment basemat is 6.0 mm (0.25 in) thick except for embedments in local areas where it is thickened. The liner is anchored by welding on the top of the structural steel rolled sections embedded in the concrete.

Interior structural concrete is poured over the basemat liner to provide support for the reactor coolant loop (RCL) equipment, RCL piping, and the interior concrete walls. Tensile loads generated from analyses are carried by anchorage through the liner plate and into the basemat, if required. Tensile loads from internal concrete walls are transferred from the wall reinforcement to a thickened liner plate using mechanical splices and are then transferred to the base slab through steel reinforcement dowels welded to the underside of the thickened liner plate.

3.8.5.1.2 Auxiliary Building Foundation

horizontal

all seismic Category I building

The foundation of the auxiliary building is a reinforced concrete mat and rests on competent material with a thickness of 3.05 m (10 ft). The bottom of the basemat is located at elevation 40 ft 0 in and 45 ft 0 in, below the finished grade elevation.

Waterproofing membranes are used for exterior horizontal and vertical surfaces of structures. The waterproofing membranes are installed between lower and upper lean concrete beneath the basemat. The COL applicant is to verify that the coefficient of friction between the lean concrete and waterproofing membrane is ~~bounded by~~ 0.55 (COL 3.8(13)).

as shown in Figure 3.8-27

greater than or equal to

RAI 255-8285 - Question 03.08.05-4_Rev.1

RAI 255-8285 - Question 03.08.05-4_Rev.2

COL 3.8(7) The COL applicant is to confirm that uneven settlement due to construction sequence of the NI basemat falls within the values specified in Table 2.0-1.

COL 3.8(8) The COL applicant is to provide the necessary measures for foundation settlement monitoring considering site-specific conditions.

COL 3.8(9) The COL applicant is to provide testing and inservice inspection program to examine inaccessible areas of the concrete structure for degradation and to monitor groundwater chemistry.

COL 3.8.(10) The COL applicant is to provide the following soil information for the APR1400 site: 1) elastic shear modulus and Poisson's ratio of the subsurface soil layers, 2) consolidation properties including data from one-dimensional consolidation tests (initial void ratio, Cc, Ccr, OCR, and complete e-log p curves) and time-versus-consolidation plots, 3) moisture content, Atterberg limits, grain size analyses, and soil classification, 4) construction sequence and loading history, and 5) excavation and dewatering programs.

3.8.7 References

1. 10 CFR Part 50, "Domestic Licensing of Production and Utilization Facilities," U.S. Nuclear Regulatory Commission.

2. ASME Section III, Subsection NE, "Class MC Components," The American Society of Mechanical Engineers, the 2007 Edition with the 2008 Addenda.

3. ASME Section III, Division 2, "Code for Concrete Containments," Subsection CC, American Society of Mechanical Engineers, 2001 Edition with 2003 Addenda.

4. Regulatory Guide 1.35, "Inservice Inspection of Ungrouted Tendons in Prestressed Concrete Containment," Rev. 3, U.S. Nuclear Regulatory Commission, July 1990.

5. Regulatory Guide 1.35.1, "Determining Prestressing Forces for Inspection of Prestressed Concrete Containments," U.S. Nuclear Regulatory Commission, July 1990.

COL 3.8(13) The COL applicant is to verify that the coefficient of friction between the lean concrete and waterproofing membrane is ~~bounded by~~ 0.55.

greater than or equal to

RAI 255-8285 - Question 03.08.05-4_Rev.1

RAI 255-8285 - Question 03.08.05-4_Rev.2

Table 1.8-2 (5 of 29)

Item No.	Description
COL 3.8(7)	The COL applicant is to confirm that uneven settlement due to construction sequence of the NI basemat falls within the values specified in Table 2.0-1.
COL 3.8(8)	The COL applicant is to provide the necessary measures for foundation settlement monitoring considering site-specific conditions.
COL 3.8(9)	The COL applicant is to provide testing and inservice inspection program to examine inaccessible areas of the concrete structure for degradation and to monitor groundwater chemistry.
COL 3.8(10)	The COL application is to provide the following soil information for APR1400 site: 1) Elastic shear modulus and Poisson's ratio of the subsurface soil layers, 2) Consolidation properties including data from one-dimensional consolidation tests (initial void ratio, Cc, Ccr, OCR, and complete e-log p curves) and time-versus-consolidation plots, 3) Moisture content, Atterberg limits, grain size analyses, and soil classification, 4) Construction sequence and loading history, and 5) Excavation and dewatering programs.
COL 3.9(1)	The COL applicant is to provide the inspection results for the APR1400 reactor internals classified as non-prototype Category I in accordance with RG 1.20.
COL 3.9(2)	The COL applicant is to provide a summary of the maximum total stress, deformation, and cumulative usage factor values for each of the component operating conditions for ASME Code Class 1 components except for ASME Code Class 1 nine major components. For those values that differ from the allowable limits by less than 10 percent, the contribution of each loading category (e.g., seismic, deadweight, pressure, and thermal) to the total stress is provided for each maximum stress value identified in this range. The COL applicant is to also provide a summary of the maximum total stress and deformation values for each of the component operating conditions for Class 2 and 3 components required to shut down the reactor or mitigate consequences of a postulated piping failure without offsite power (with identification of those values that differ from the allowable limits by less than 10 percent).
COL 3.9(3)	The COL applicant is to identify the site-specific active pumps.
COL 3.9(4)	The COL applicant is to confirm the type of testing and frequency of site-specific pumps subject to IST in accordance with the ASME Code.
COL 3.9(5)	The COL applicant is to confirm the type of testing and frequency of site-specific valves subject to IST in accordance with the ASME Code.
COL 3.9(6)	The COL applicant is to provide a table listing all safety-related components that use snubbers in their support systems.

COL 3.8(13) The COL applicant is to verify that the coefficient of friction between the lean concrete and waterproofing membrane is ~~bounded by~~ 0.55.

greater than or equal to

Figure 3.7-41 Finite Element Model of Compound Building....3.7-109
Figure 3.8-1 Typical Section of Containment Structures (Looking North)....3.8-109
Figure 3.8-2 Typical Section of Containment Structures (Looking East)....3.8-110
Figure 3.8-3 Local Area around Large Penetrations....3.8-111
Figure 3.8-4 Arrangement of Containment Post-Tensioning System....3.8-112
Figure 3.8-5 Liner Plate and Anchorage System....3.8-113
Figure 3.8-6 Plan for Containment Liner below CIS....3.8-114
Figure 3.8-7 Details for Containment Liner below CIS....3.8-115
Figure 3.8-8 Typical Penetration Assembly System....3.8-118
Figure 3.8-9 Typical Electrical Penetration Assembly....3.8-119
Figure 3.8-10 Reactor Containment Building Section in N-S Direction....3.8-120
Figure 3.8-11 Reactor Containment Building Section in E-W Direction....3.8-121
Figure 3.8-12 Containment Shell and Dome Analysis Model....3.8-122
Figure 3.8-13 Equipment Hatch....3.8-123
Figure 3.8-14 Personnel Airlock....3.8-124
Figure 3.8-15 Reactor Vessel Supports....3.8-125
Figure 3.8-16 Steam Generator Supports....3.8-127
Figure 3.8-17 Reactor Coolant Pump Supports....3.8-129
Figure 3.8-18 Pressurizer Supports....3.8-130
Figure 3.8-19 Detail of the Anchor Bolts for Reactor Vessel Support....3.8-131
Figure 3.8-20 Detail of the Anchor Bolts for Steam Generator Snubber Support....3.8-132
Figure 3.8-21 Detail of the Anchor Bolts for RCP Vertical Column Support....3.8-133
Figure 3.8-22 Detail of the Anchor Bolts for PRZ Skirt Flange Support....3.8-134
Figure 3.8-23 Finite Element Model for Auxiliary Building Global Structural Analysis....3.8-135
Figure 3.9-1 Reactor Coolant System Supports Diagram....3.9-248
Figure 3.9-2 Summary of Analytical Methodology....3.9-249
Figure 3.9-3 ASHSD Finite Element Model of Core Support Barrel....3.9-250
Figure 3.9-4 Finite Element Model of Inner Barrel Assembly....3.9-251
Figure 3.8-27 Typical Detail for Installation of Waterproofing Membrane....3.8-xxx

RAI 255-8285 - Question 03.08.05-4_Rev.2

Figure Added

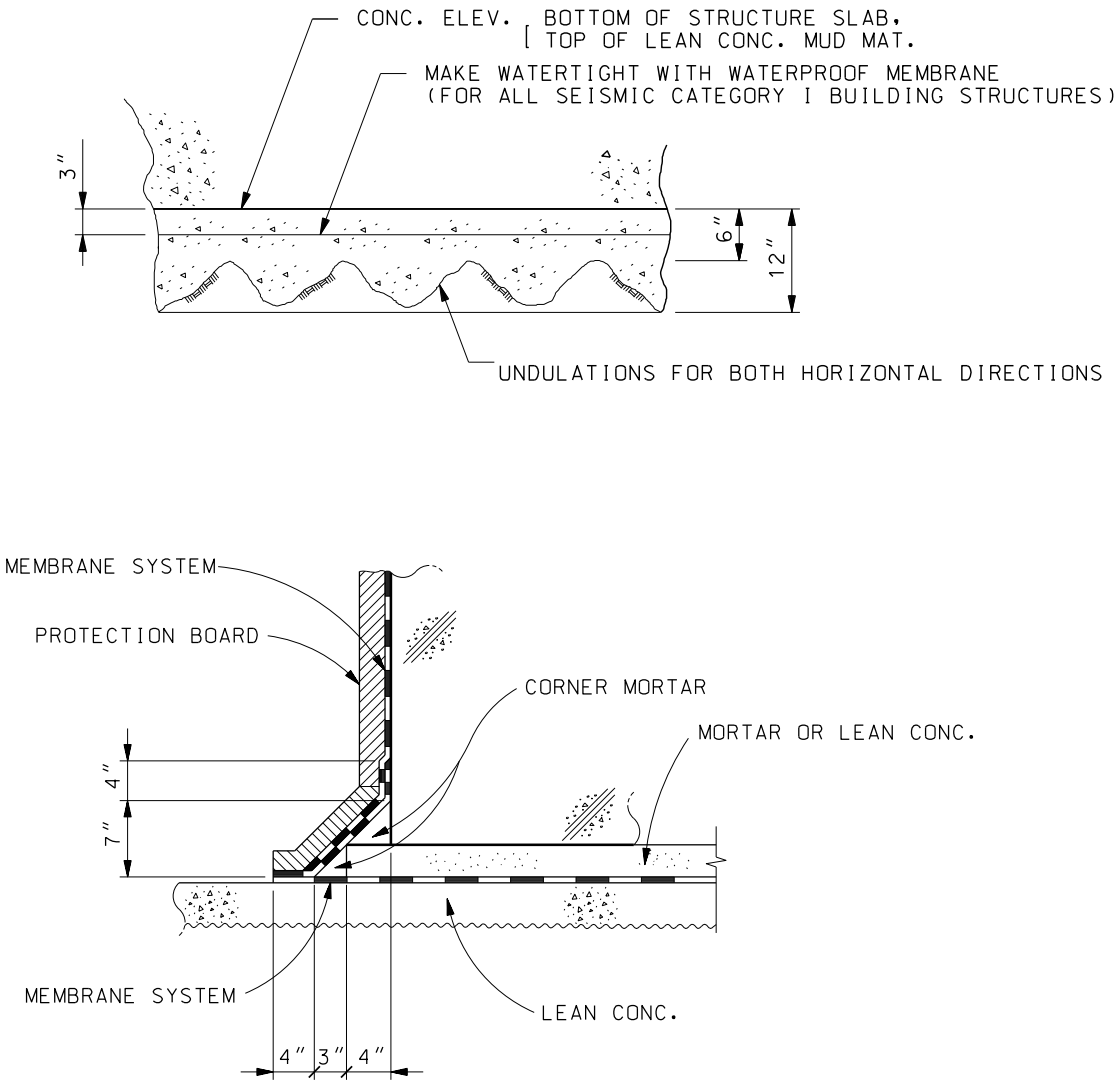

Figure 3.8-27 Typical Detail for Installation of Waterproofing Membrane

COL 3.8(7) The COL applicant is to confirm that uneven settlement due to construction sequence of the NI basemat falls within the values specified in Table 2.0-1.

COL 3.8(8) The COL applicant is to provide the necessary measures for foundation settlement monitoring considering site-specific conditions.

COL 3.8(9) The COL applicant is to provide testing and inservice inspection program to examine inaccessible areas of the concrete structure for degradation and to monitor groundwater chemistry.

COL 3.8.(10) The COL applicant is to provide the following soil information for the APR1400 site: 1) elastic shear modulus and Poisson's ratio of the subsurface soil layers, 2) consolidation properties including data from one-dimensional consolidation tests (initial void ratio, Cc, Ccr, OCR, and complete e-log p curves) and time-versus-consolidation plots, 3) moisture content, Atterberg limits, grain size analyses, and soil classification, 4) construction sequence and loading history, and 5) excavation and dewatering programs.

3.8.7 References

1. 10 CFR Part 50, "Domestic Licensing of Production and Utilization Facilities," U.S. Nuclear Regulatory Commission.

2. ASME Section III, Subsection NE, "Class MC Components," The American Society of Mechanical Engineers, the 2007 Edition with the 2008 Addenda.

3. ASME Section III, Division 2, "Code for Concrete Containments," Subsection CC, American Society of Mechanical Engineers, 2001 Edition with 2003 Addenda.

4. Regulatory Guide 1.35, "Inservice Inspection of Ungrouted Tendons in Prestressed Concrete Containment," Rev. 3, U.S. Nuclear Regulatory Commission, July 1990.

5. Regulatory Guide 1.35.1, "Determining Prestressing Forces for Inspection of Prestressed Concrete Containments," U.S. Nuclear Regulatory Commission, July 1990.

COL 3.8(~~14~~ 13) The COL applicant is to verify that the coefficient of friction between the lean concrete and the supporting medium at the site is equal to or higher than 0.55.

In order to meet this requirement, the COL applicant is to determine the specific undulation pattern in Figure 3.8-27 for two perpendicular horizontal directions.

Table 1.8-2 (5 of 29)

Item No.	Description
COL 3.8(7)	The COL applicant is to confirm that uneven settlement due to construction sequence of the NI basemat falls within the values specified in Table 2.0-1.
COL 3.8(8)	The COL applicant is to provide the necessary measures for foundation settlement monitoring considering site-specific conditions.
COL 3.8(9)	The COL applicant is to provide testing and inservice inspection program to examine inaccessible areas of the concrete structure for degradation and to monitor groundwater chemistry.
COL 3.8(10)	The COL application is to provide the following soil information for APR1400 site: 1) Elastic shear modulus and Poisson's ratio of the subsurface soil layers, 2) Consolidation properties including data from one-dimensional consolidation tests (initial void ratio, Cc, Ccr, OCR, and complete e-log p curves) and time-versus-consolidation plots, 3) Moisture content, Atterberg limits, grain size analyses, and soil classification, 4) Construction sequence and loading history, and 5) Excavation and dewatering programs.
COL 3.9(1)	The COL applicant is to provide the inspection results for the APR1400 reactor internals classified as non-prototype Category I in accordance with RG 1.20.
COL 3.9(2)	The COL applicant is to provide a summary of the maximum total stress, deformation, and cumulative usage factor values for each of the component operating conditions for ASME Code Class 1 components except for ASME Code Class 1 nine major components. For those values that differ from the allowable limits by less than 10 percent, the contribution of each loading category (e.g., seismic, deadweight, pressure, and thermal) to the total stress is provided for each maximum stress value identified in this range. The COL applicant is to also provide a summary of the maximum total stress and deformation values for each of the component operating conditions for Class 2 and 3 components required to shut down the reactor or mitigate consequences of a postulated piping failure without offsite power (with identification of those values that differ from the allowable limits by less than 10 percent).
COL 3.9(3)	The COL applicant is to identify the site-specific active pumps.
COL 3.9(4)	The COL applicant is to confirm the type of testing and frequency of site-specific pumps subject to IST in accordance with the ASME Code.
COL 3.9(5)	The COL applicant is to confirm the type of testing and frequency of site-specific valves subject to IST in accordance with the ASME Code.
COL 3.9(6)	The COL applicant is to provide a table listing all safety-related components that use snubbers in their support systems.

COL 3.8(~~14~~ 13) The COL applicant is to verify that the coefficient of friction between the lean concrete and the supporting medium at the site is equal to or higher than 0.55.

In order to meet this requirement, the COL applicant is to determine the specific undulation pattern in Figure 3.8-27 for two perpendicular horizontal directions.