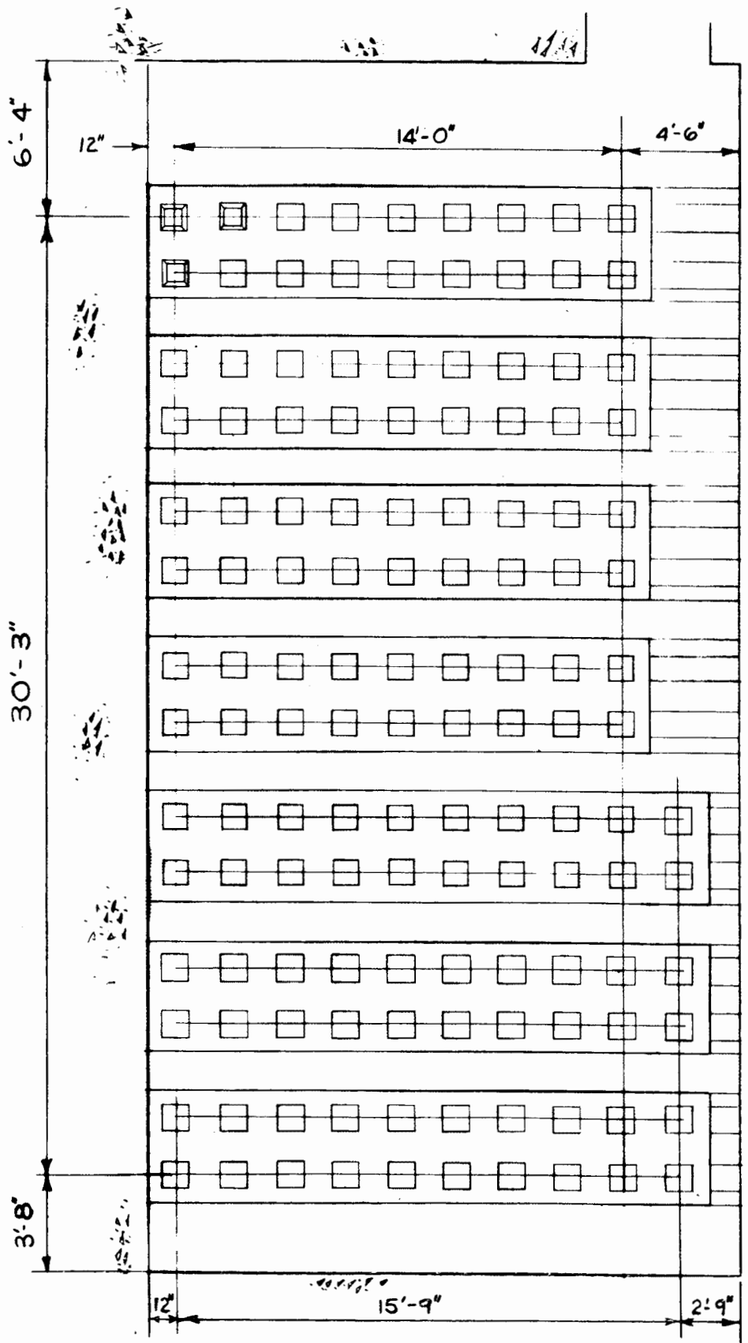

NEW FUEL STORAGE RACKS
(132 ASS'Y)

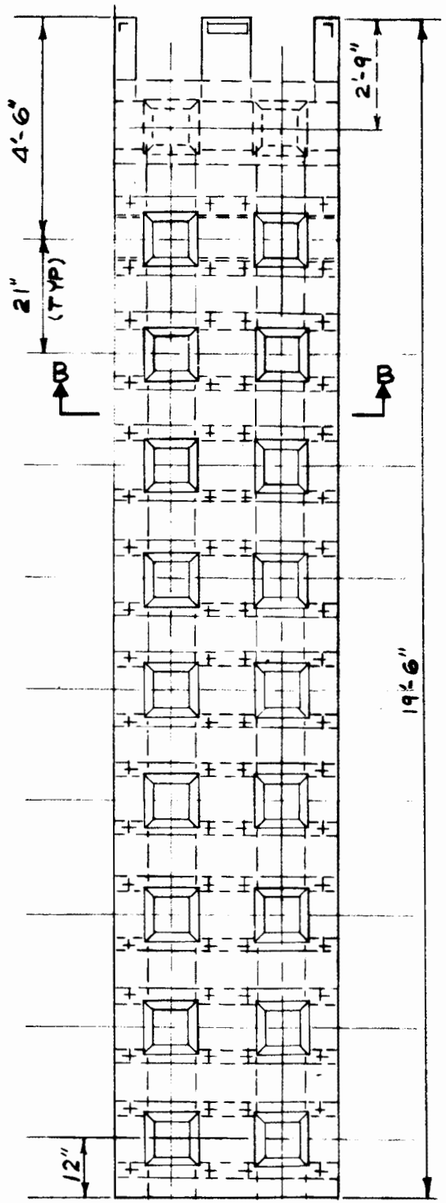

PARTIAL PLAN A

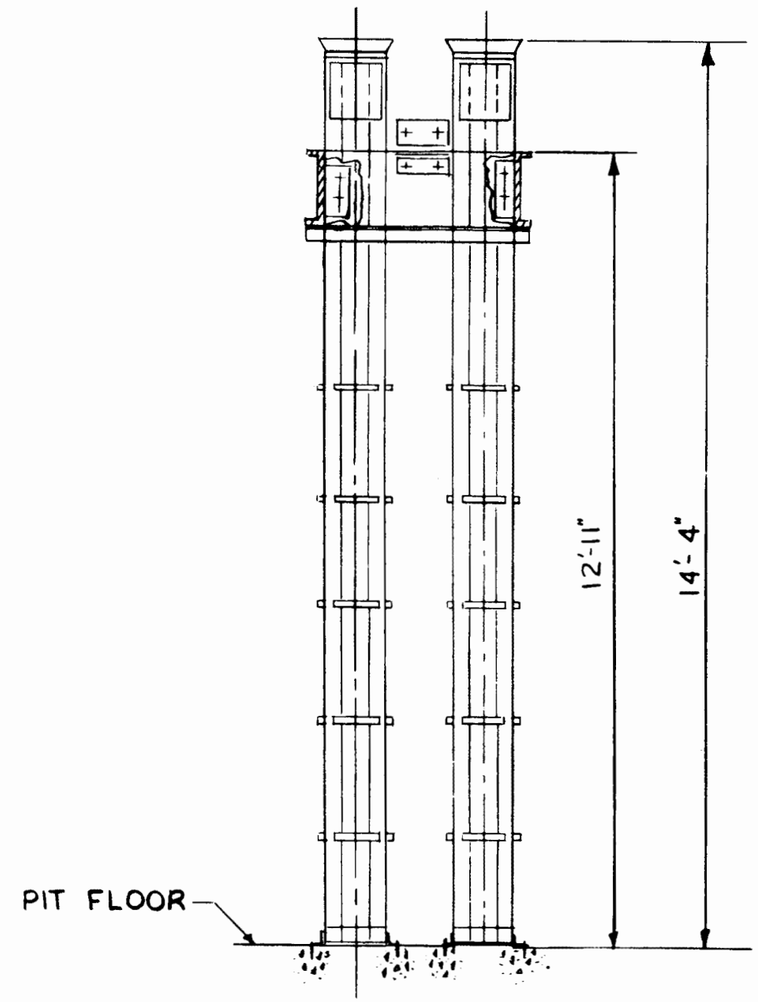

SECTION B-B

COMANCHE PEAK S.E.S.
FINAL SAFETY ANALYSIS REPORT
UNITS 1 and 2

NEW FUEL STORAGE RACKS

FIGURE 9.1-1

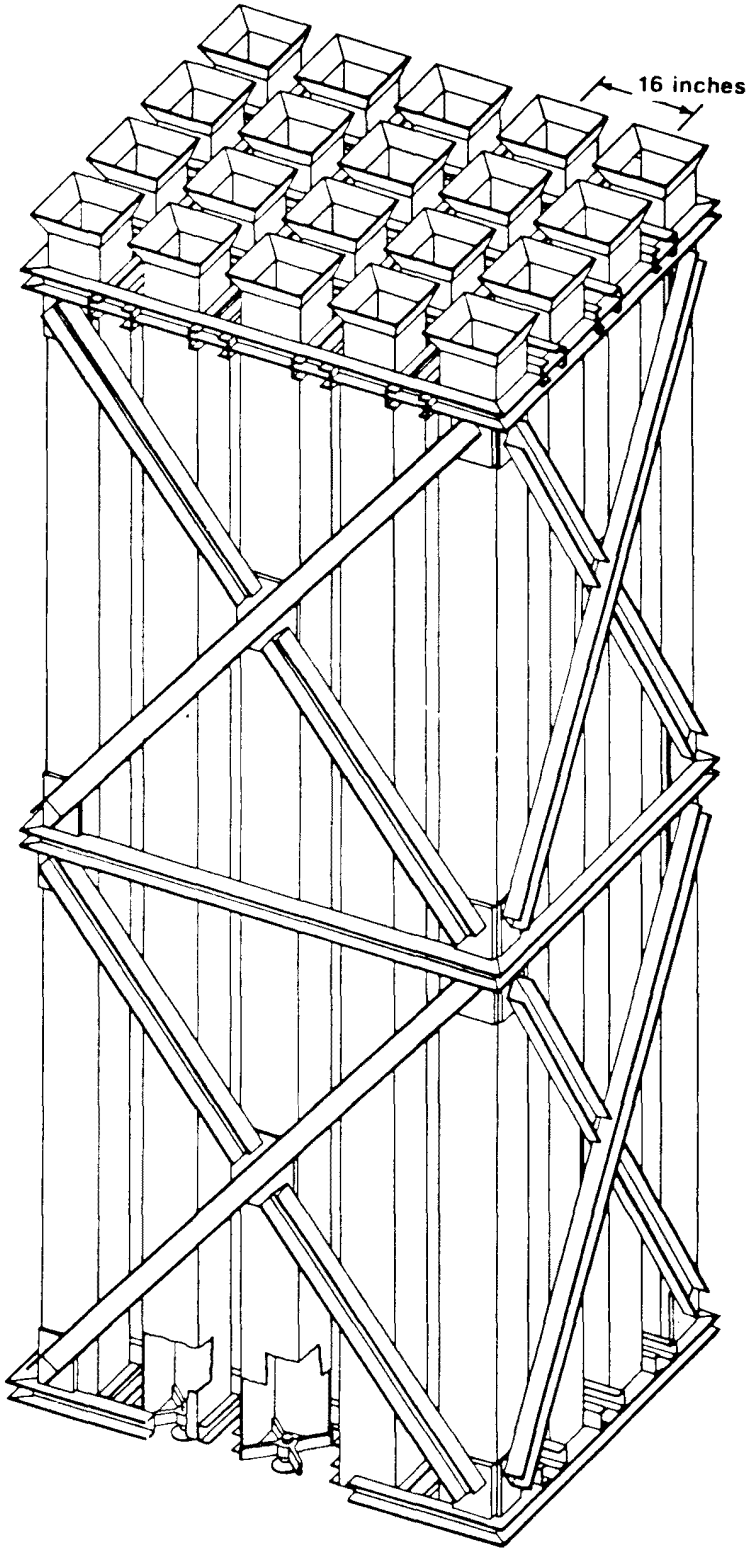

Typical

COMANCHE PEAK S.E.S.
FINAL SAFETY ANALYSIS REPORT
UNITS 1 and 2

Spent Fuel Low Density Rack

FIGURE 9.1-2

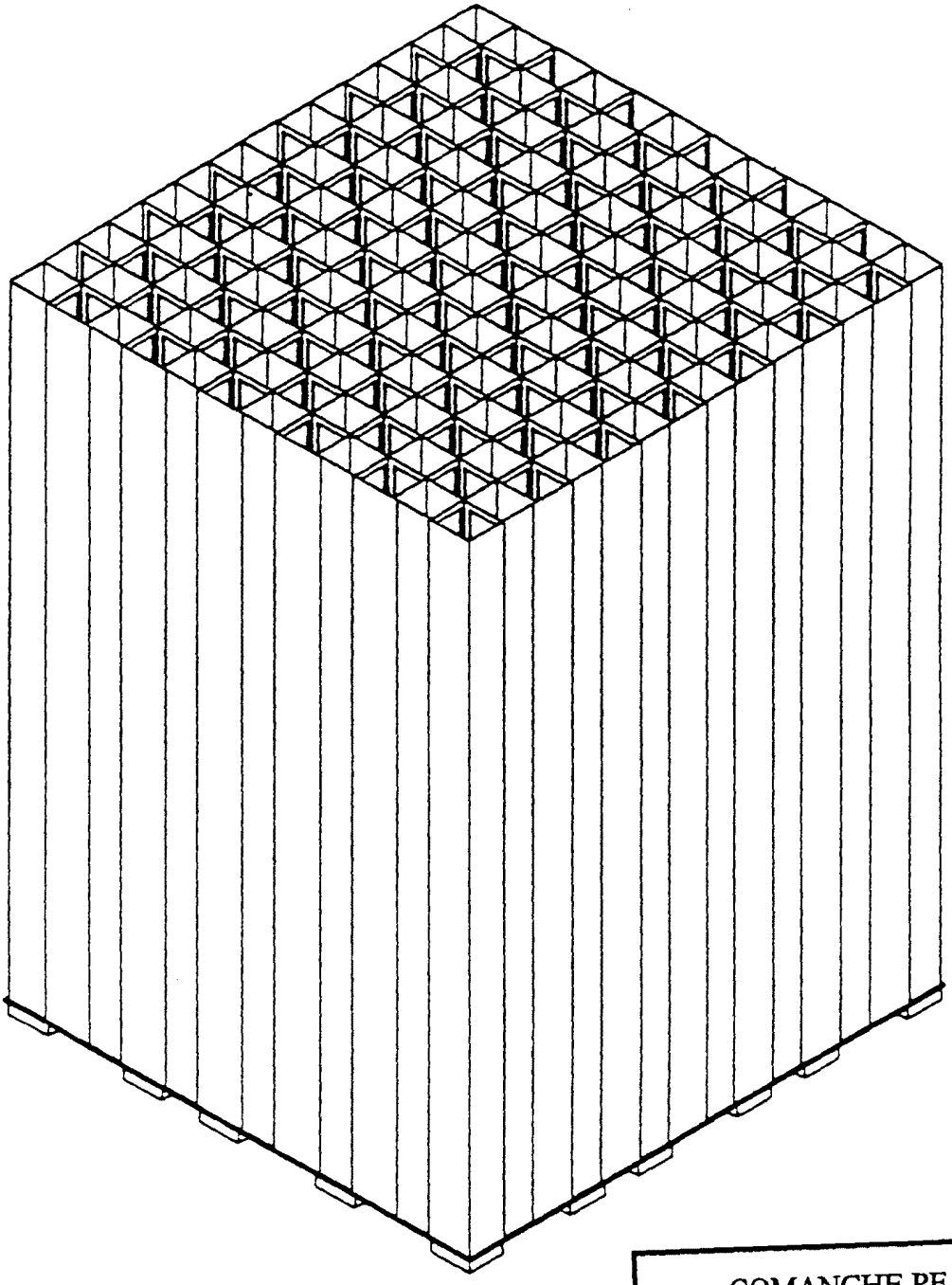

Spent Fuel

COMANCHE PEAK S. E. S.
FINAL SAFETY ANALYSIS REPORT
UNITS 1 and 2

Typical
Amendment 98

Figure 9.1-2A

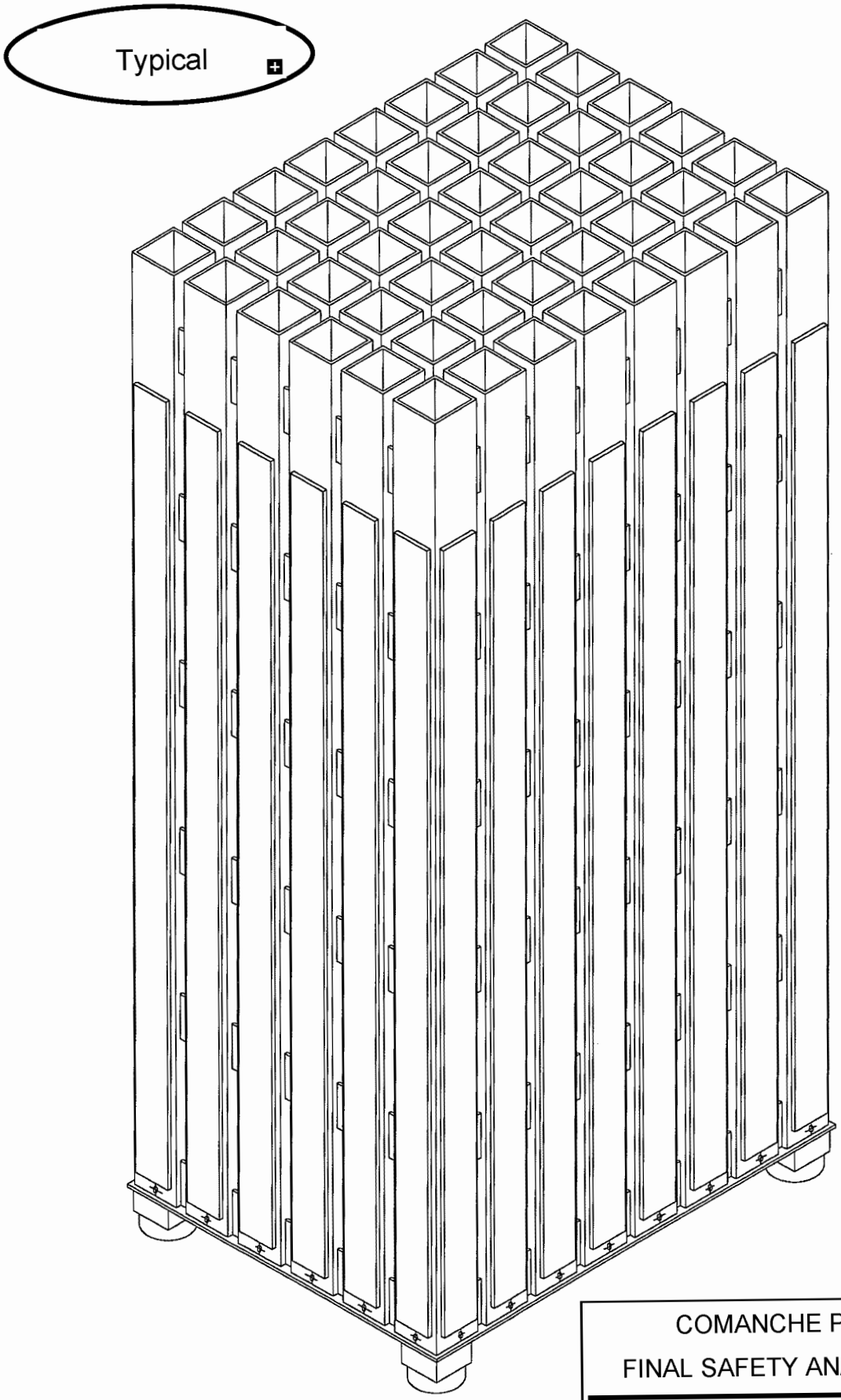

COMANCHE PEAK S. E. S.
FINAL SAFETY ANALYSIS REPORT

Spent Fuel High Density Region I Rack

Figure 9.1-2B

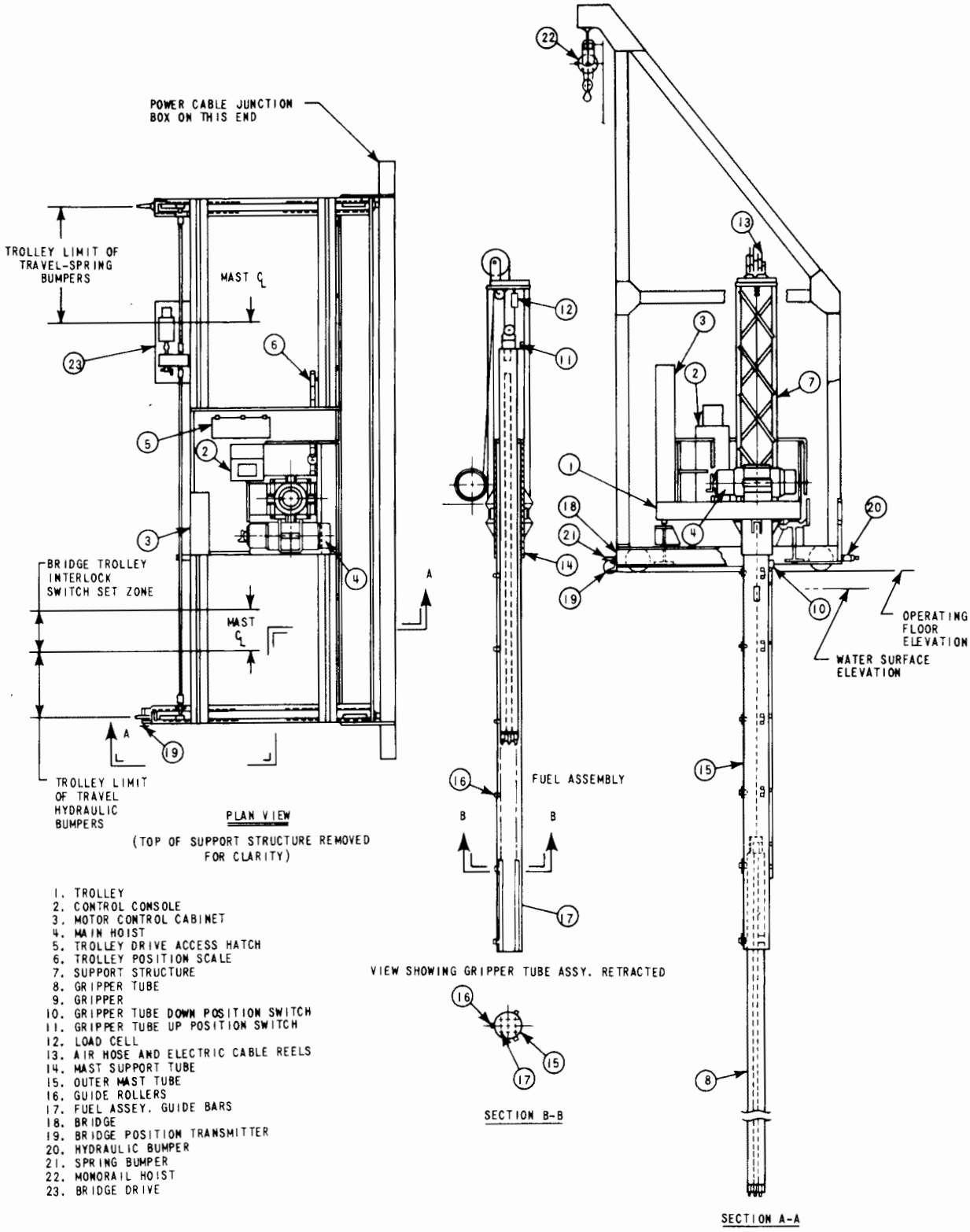

1. TROLLEY
2. CONTROL CONSOLE
3. MOTOR CONTROL CABINET
4. MAIN HOIST
5. TROLLEY DRIVE ACCESS HATCH
6. TROLLEY POSITION SCALE
7. SUPPORT STRUCTURE
8. GRIPPER TUBE
9. GRIPPER
10. GRIPPER TUBE DOWN POSITION SWITCH
11. GRIPPER TUBE UP POSITION SWITCH
12. LOAD CELL
13. AIR HOSE AND ELECTRIC CABLE REELS
14. MAST SUPPORT TUBE
15. OUTER MAST TUBE
16. GUIDE ROLLERS
17. FUEL ASSEY. GUIDE BARS
18. BRIDGE
19. BRIDGE POSITION TRANSMITTER
20. HYDRAULIC BUMPER
21. SPRING BUMPER
22. MONORAIL HOIST
23. BRIDGE DRIVE

11.946-10

COMANCHE PEAK S.E.S.
FINAL SAFETY ANALYSIS REPORT
UNITS 1 and 2

Refueling Machine

FIGURE 9.1-3

CPE

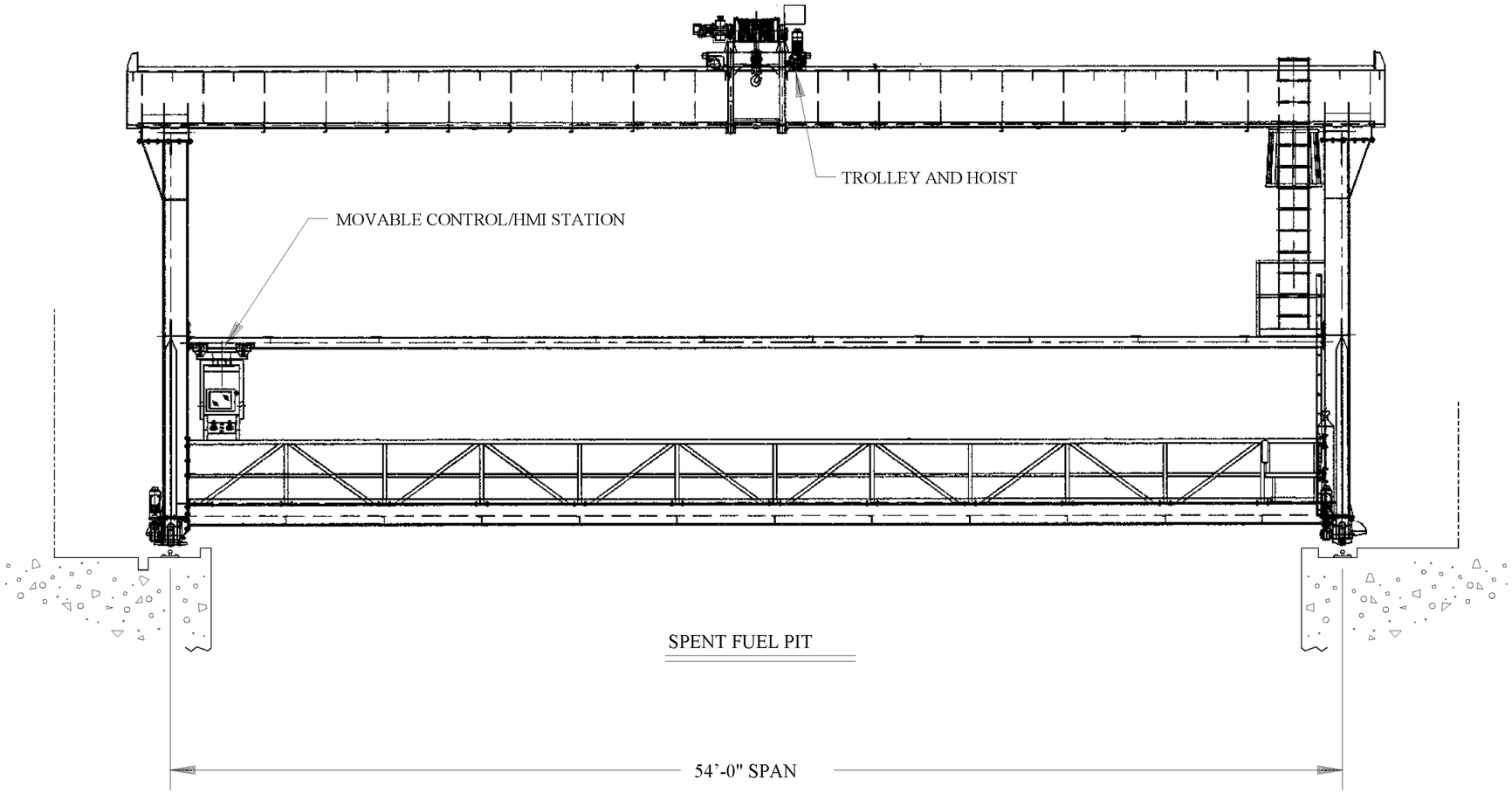

Amendment 104

COMANCHE PEAK N P P

FINAL SAFETY ANALYSIS REPORT

UNITS 1 AND 2

FUEL HANDLING
BRIDGE CRANE

FIGURE 9.1-4

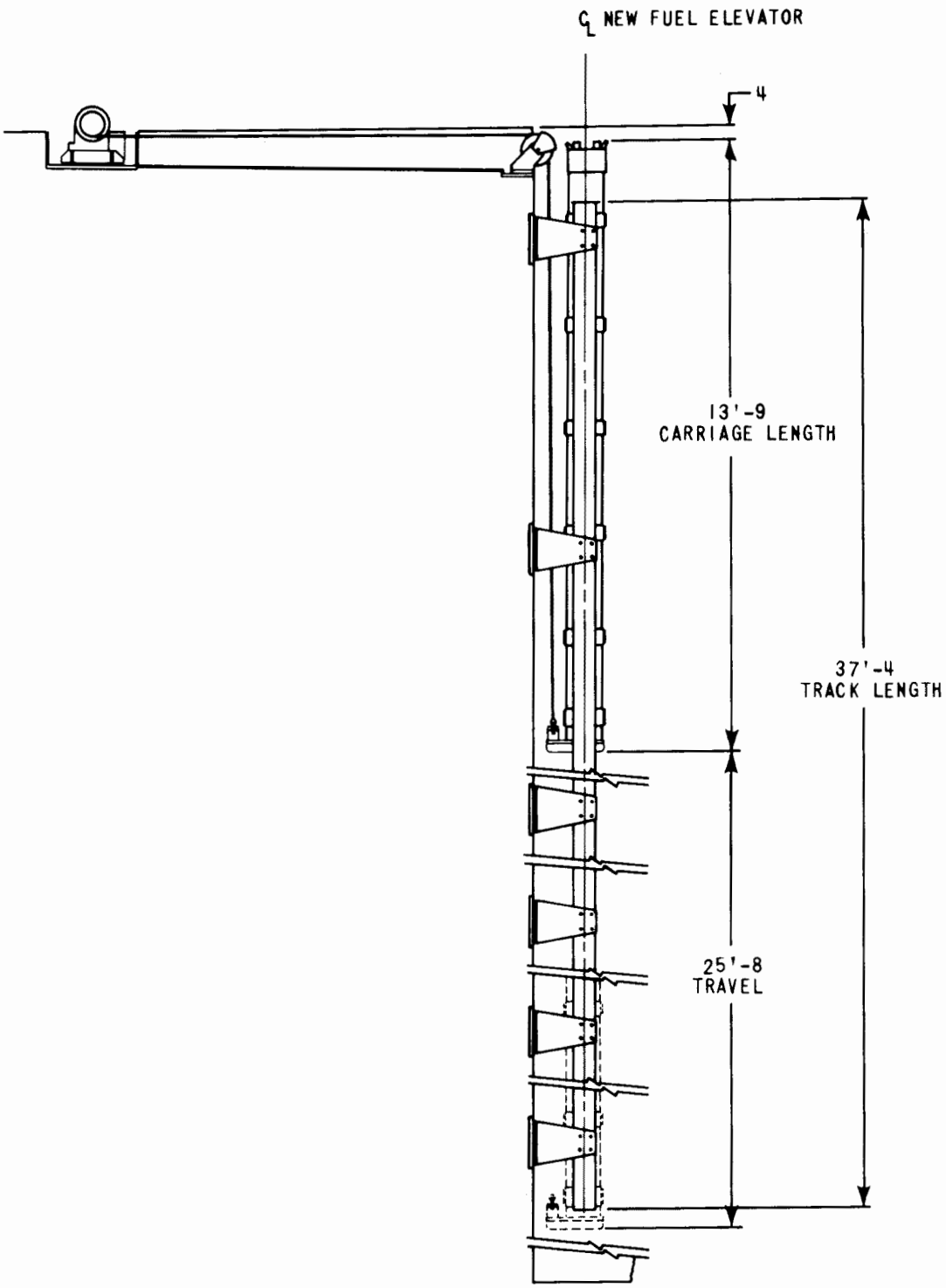

COMANCHE PEAK S.E.S.
FINAL SAFETY ANALYSIS REPORT
UNITS 1 and 2

New Fuel Elevator

FIGURE 9.1-5

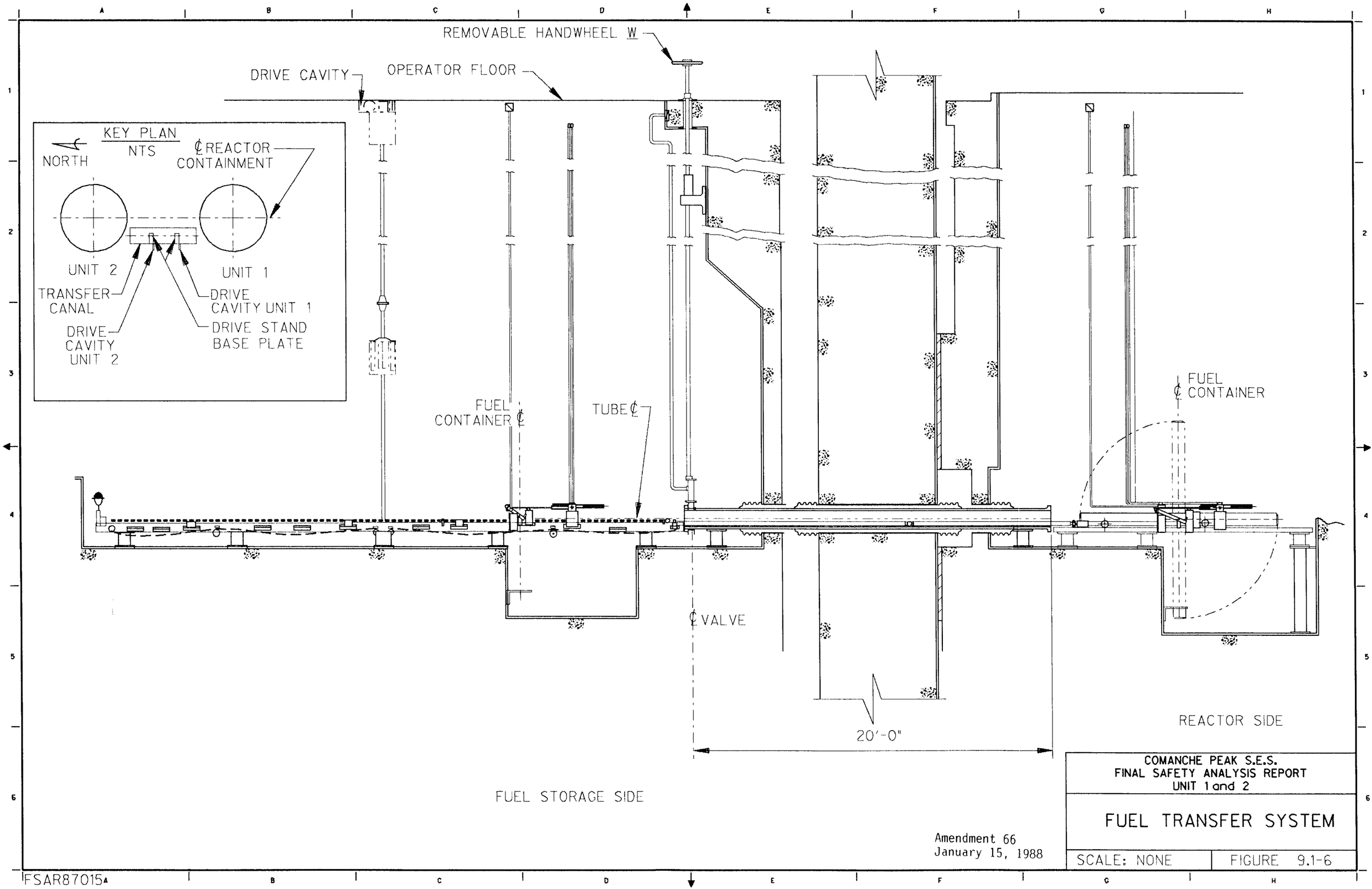

COMANCHE PEAK S.E.S.
FINAL SAFETY ANALYSIS REPORT
UNIT 1 and 2

FUEL TRANSFER SYSTEM

SCALE: NONE | FIGURE 9.1-6

Amendment 66
January 15, 1988

FSAR87015

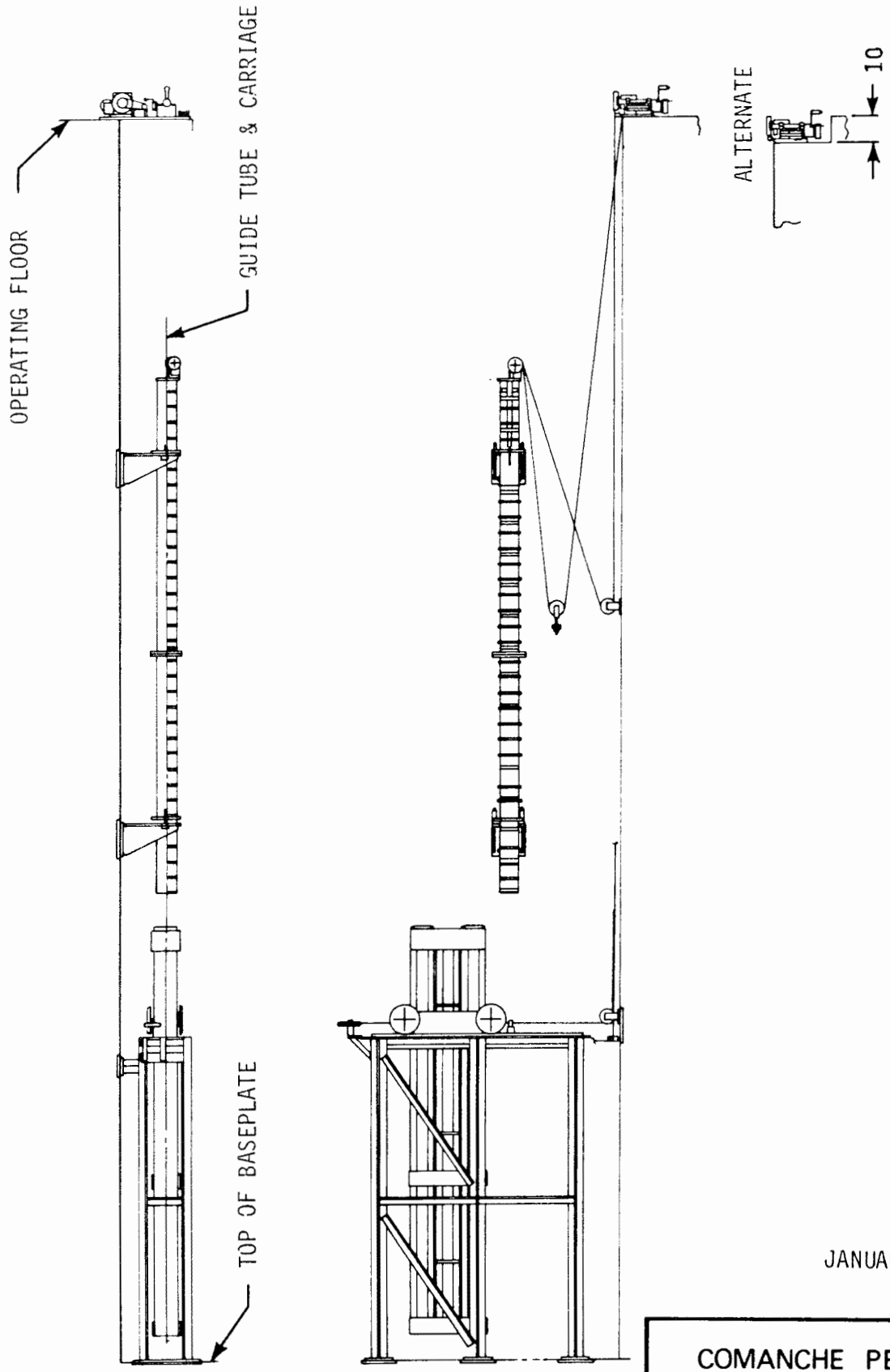

JANUARY 30, 1981

COMANCHE PEAK S.E.S.
FINAL SAFETY ANALYSIS REPORT
UNITS 1 and 2

Rod Cluster Control
Changing Fixture

FIGURE 3.1-7

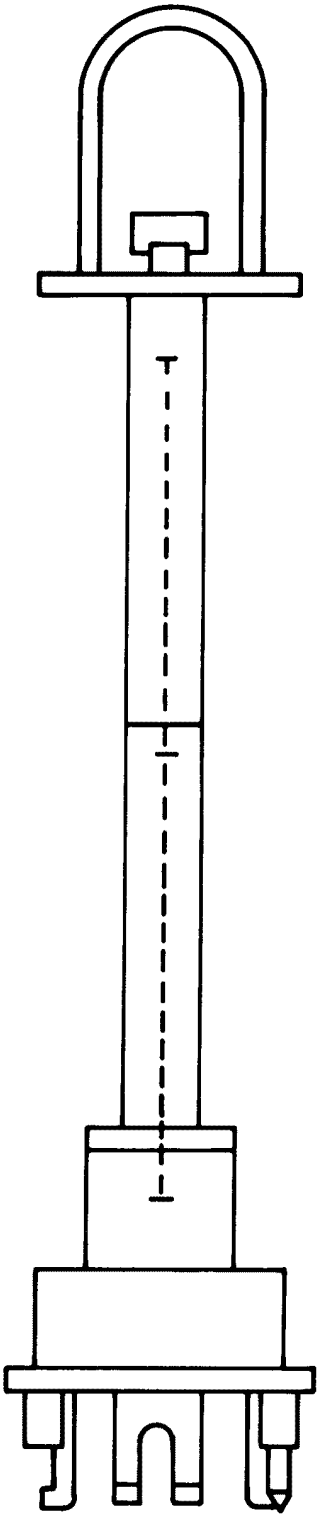

COMANCHE PEAK S.E.S.
FINAL SAFETY ANALYSIS REPORT
UNITS 1 and 2

Spent Fuel Handling Tool

FIGURE 9.1-8

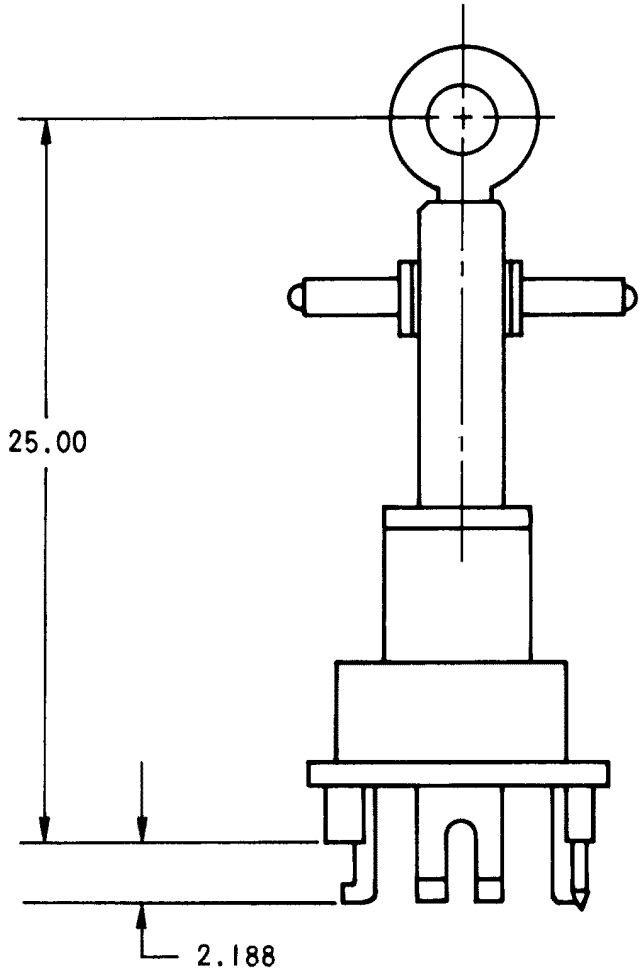

COMANCHE PEAK S.E.S.
FINAL SAFETY ANALYSIS REPORT
UNITS 1 and 2

New Fuel Handling Tool

FIGURE 9.1- 9

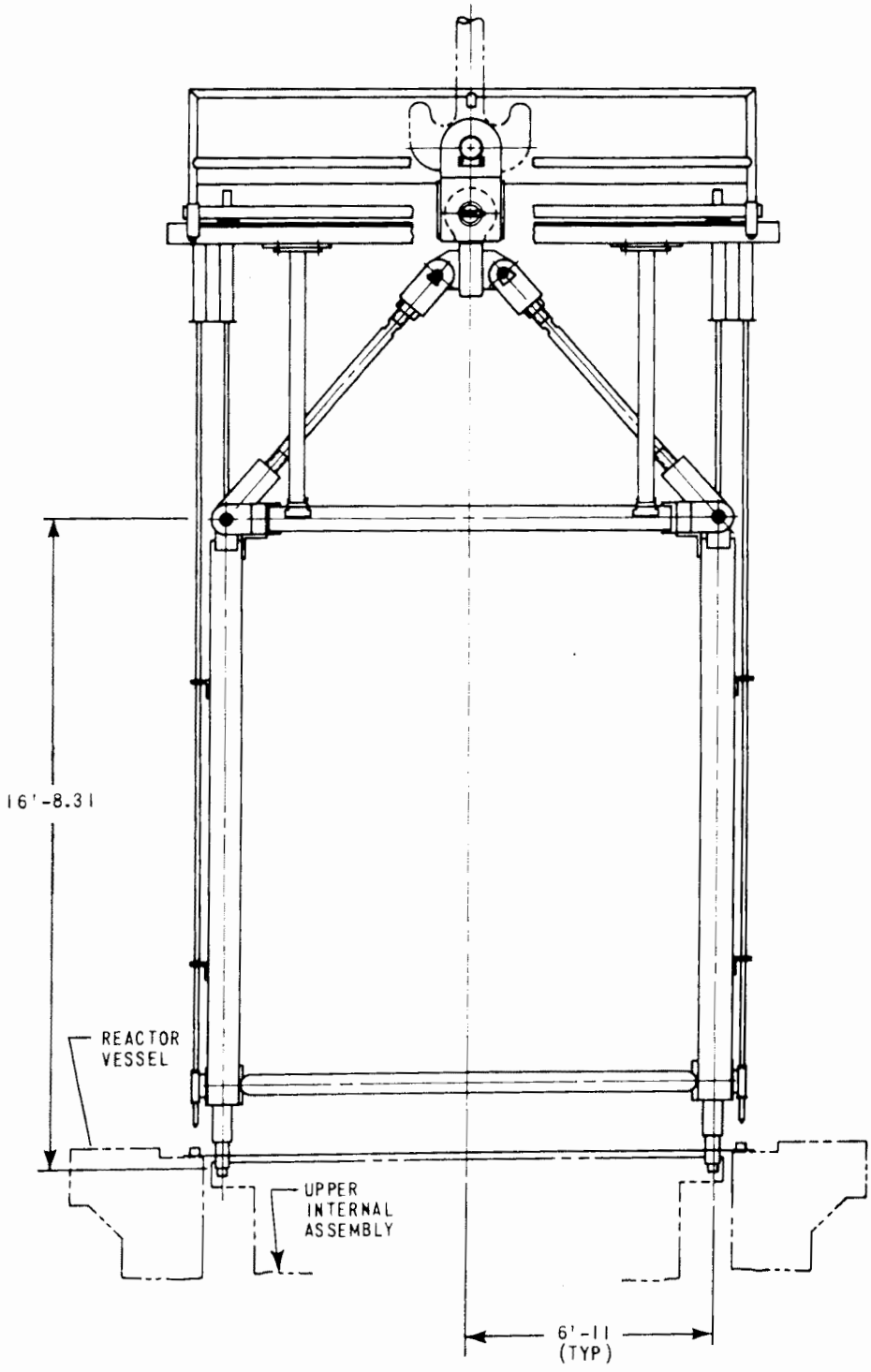

COMANCHE PEAK S.E.S.
FINAL SAFETY ANALYSIS REPORT
UNITS 1 and 2

Upper Core Barrel Handling Fixture

FIGURE 9.1-10

AMENDMENT 13
DECEMBER 15, 1980

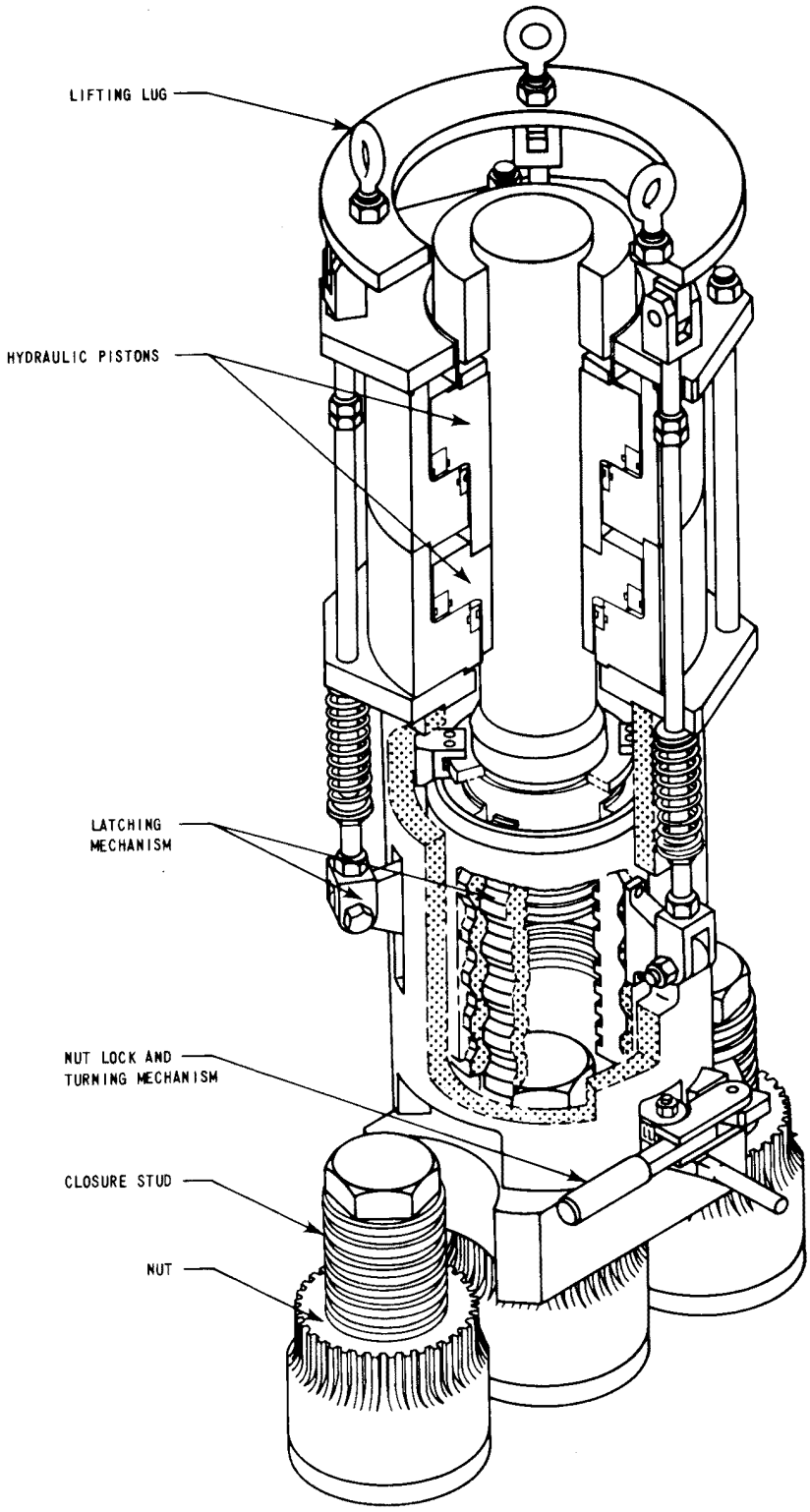

11.946-9

COMANCHE PEAK S.E.S.
FINAL SAFETY ANALYSIS REPORT
UNITS 1 and 2

Stud Tensioner

FIGURE 9.1-11

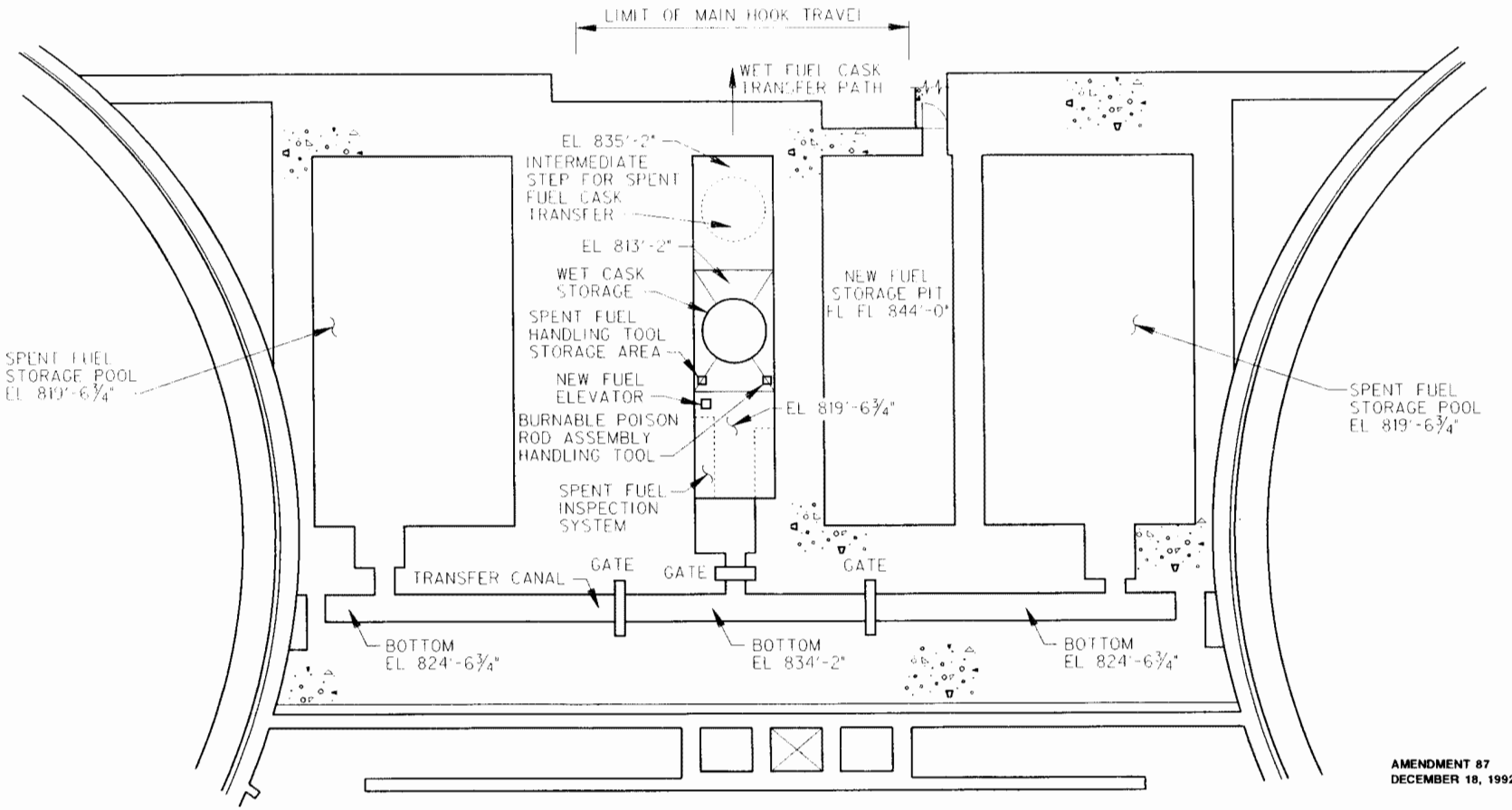

AMENDMENT 87
DECEMBER 18, 1992

COMANCHE PEAK S E S
FINAL SAFETY ANALYSIS REPORT
UNITS 1 AND 2

SPENT FUEL CASK LOADING AREA

FIGURE 9.1-12

FSAR91120.DGN

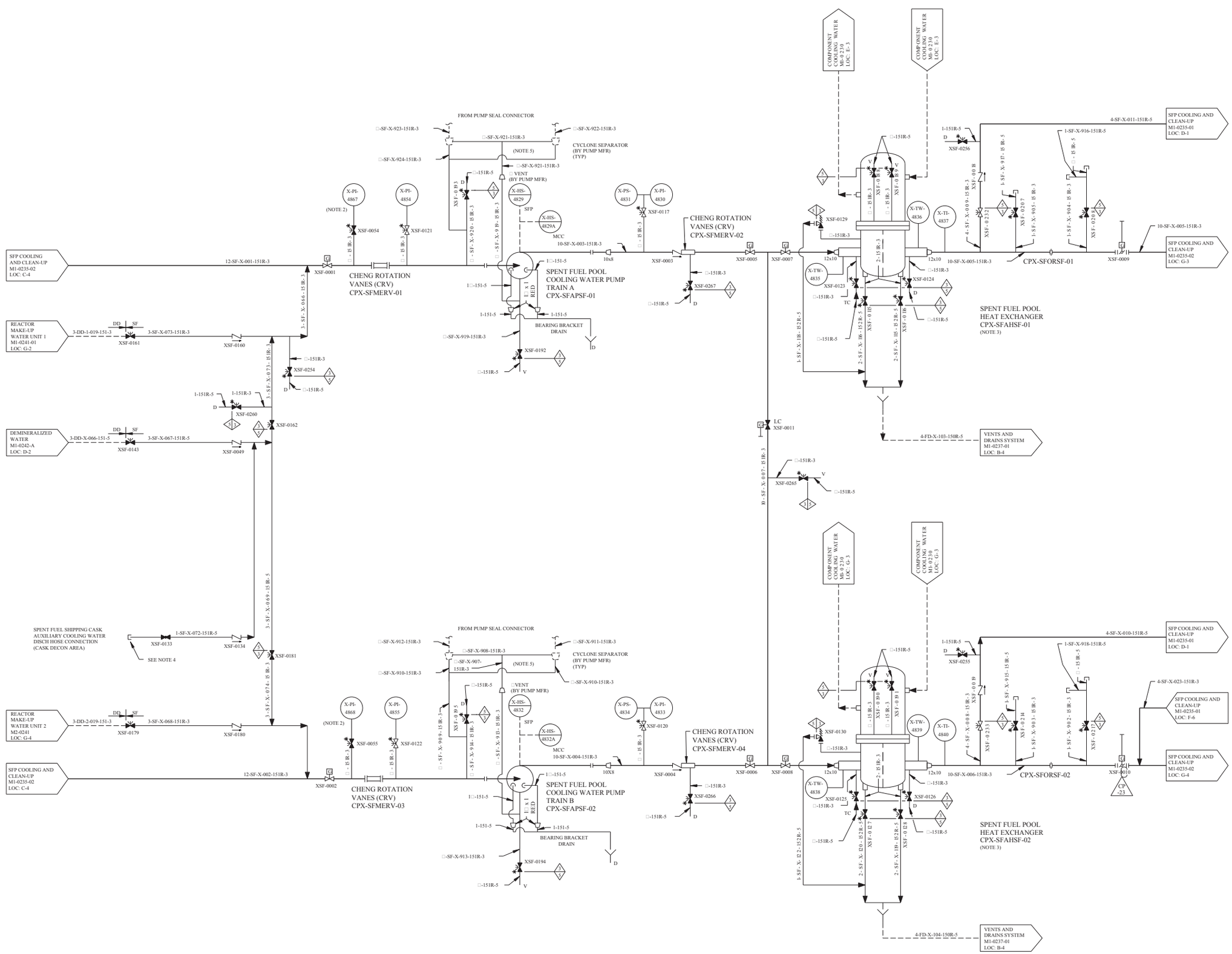

REV	DWN	CHKD	APVD	REMARKS
CP-23	MM 02-22-2013			THIS DRAWING REVISED TO INCORPORATE AN EDITORIAL CHANGE PER AI-CR-2013-001650-1.

NOTES:

1. FOR MECHANICAL SYMBOLS AND NOTES SEE DRAWING M1-0200.
2. (X-PI-4867 AND X-PI-4868) ARE ABANDONED IN PLACE.
3. ALL PIPING TO THE SPENT FUEL POOL HEAT EXCHANGER SHELL IS SHOWN ON THE COMPONENT COOLING WATER FLOW DIAGRAM.
4. CAPS WILL NOT BE PROVIDED ON VENT AND DRAIN LINES.
5. PIPING WAS ORIGINALLY SUPPLIED BY VENDOR AND DAMAGED. PIPING IS NOW FIELD SUPPLIED FOR PUMPS CPX-SFAPSF-01 AND CPX-SFAPSF-02 .

FSAR FIGURE 9.1-13

THIS DRAWING CREATED ELECTRONICALLY

CLASS I

(NUCLEAR SAFETY-RELATED)

SAFETY CLASS 1 — SEISMIC CATEGORY I
SAFETY CLASS 2 — CLASS 1E
SAFETY CLASS 3 — ASSOCIATED CIRCUITS

LUMINANT
CPNPP
GLEN ROSE, TEXAS

FLOW DIAGRAM
SPENT FUEL POOL COOLING
AND CLEAN-UP SYSTEM

DWG. NO.	SH. NO.	REV.
M1-0235	-	CP-23

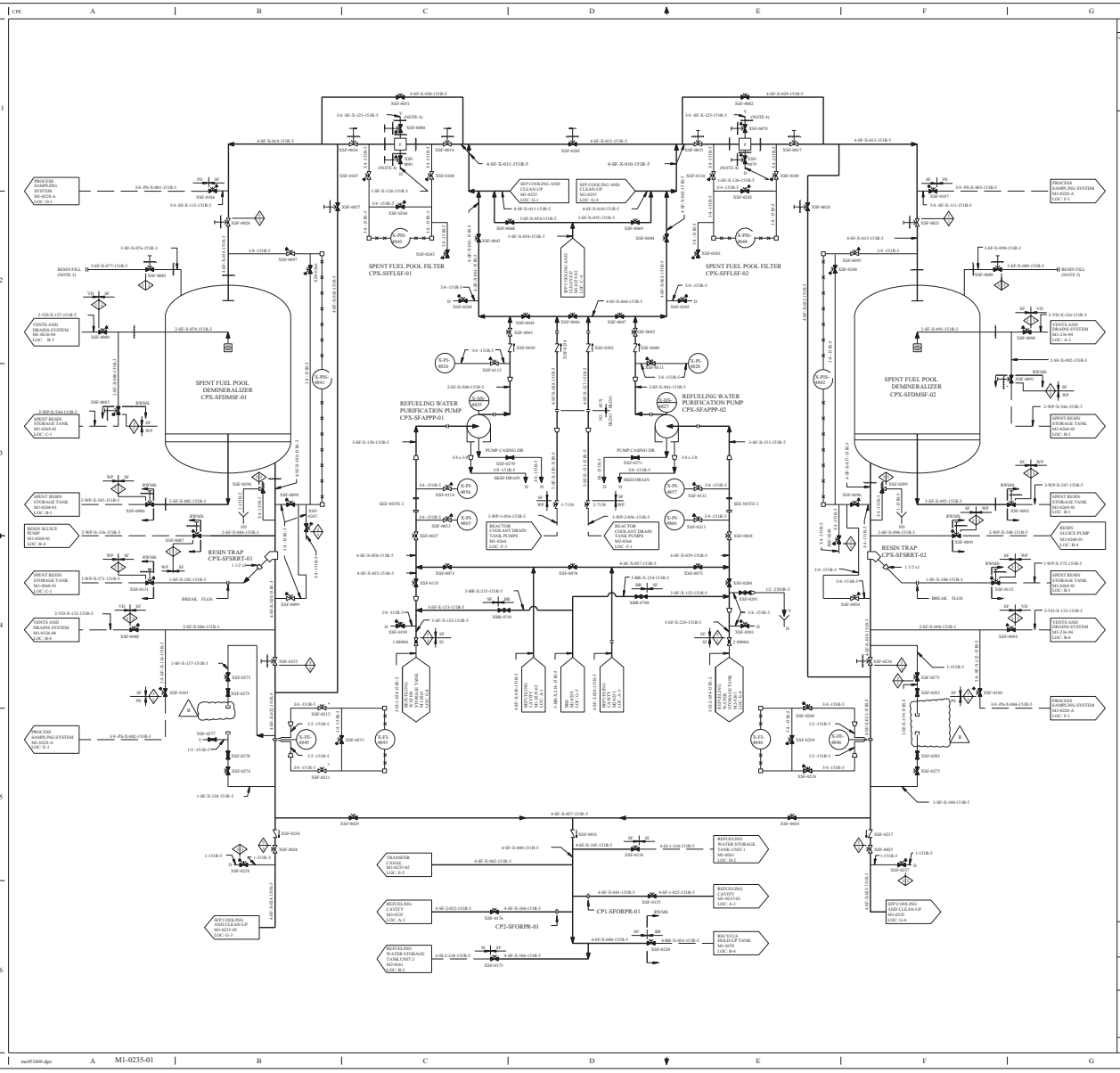

REV.	DWN	CHK	APPD	REMARKS
B-19	TCN 02-0002	TCN 02-0002	TCN 02-0002	CTMS DRAWING REVISED TO INCORPORATE DESIGN CHANGES TCN1-TPW-00-0471, 04-00 PER MC-0003-99-0010371-04-01.

NOTES:

1. FOR MECHANICAL SYMBOLS AND NOTES SEE DRAWING M1-0206.
2. SPOOL PIECES ARE AVAILABLE TO INSTALL TEMPORARY STRAINERS AS REQUIRED.
3. 600 LB R.F. FLANGE TO MATCH 600 LB FLANGE ON RESIN FILL TANK.
4. FILTER VENTS AND DRAINS ROUTED INTO THE COMPARTMENT. FLOOR DRAINS IN FILTER
5. CAPS WILL NOT BE PROVIDED ON VENT AND DRAIN LINES.
6. DELETED
7. DELETED
8. DELETED

FSAR FIGURE 9.1-13

CTMS DRAWING GENERATED FOR TRACEABILITY

CLASS I
(NUCLEAR SAFETY-RELATED)
SAFETY CLASS 1 SEISMIC CATEGORY I
SAFETY CLASS 2 CLASS 1E
SAFETY CLASS 3 ASSOCIATED CIRCUITS

TXU ENERGY
CPSES
GLEN ROSE, TEXAS

FLOW DIAGRAM
SPENT FUEL POOL COOLING
AND CLEAN-UP SYSTEM

DWG. NO. M1-0235 | SH. NO. 01 | REV. CP-19

M1-0235-01

rm453600.dgn

BEGIN DRAWING CTMS0101

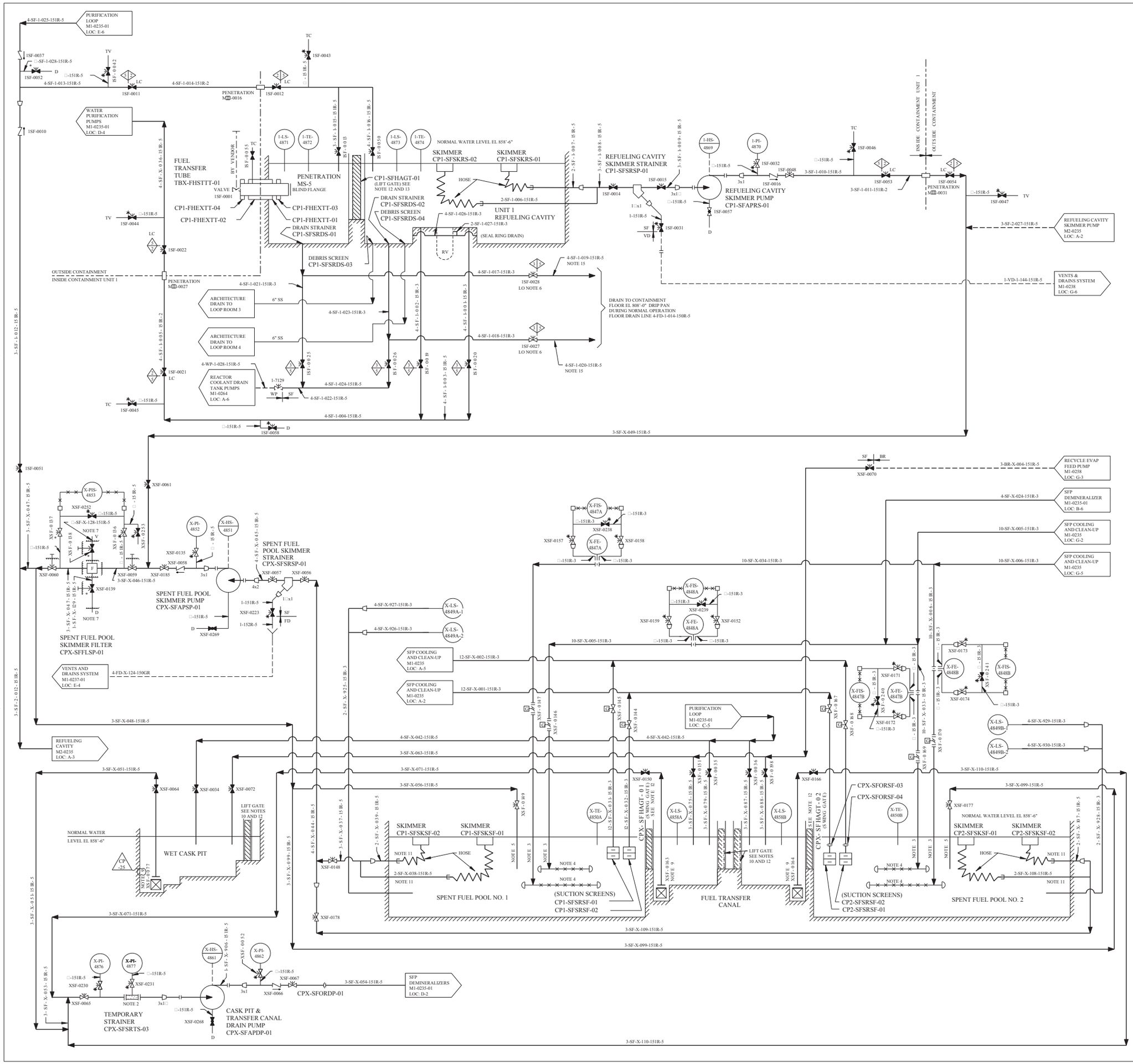

REV	DWN	CHKD	APVD	REMARKS
CP-25	DLK 08-29-2013			THIS DRAWING REVISED TO INCORPORATE AI-CR-2013-008850-1 TO EDITORIALLY CORRECT NOTE 7 AT VALVE XSF-0077 TO INDICATE NOTE 9.

NOTES:

1. FOR MECHANICAL SYMBOLS AND NOTES SEE DRAWING M1-0200.
2. TEMPORARY STRAINERS ARE INSTALLED IN SPOOL PIECES DURING INITIAL FLUSHING OPERATIONS STRAINERS AND TEMPORARY PRESSURE GAUGES ARE REMOVED PRIOR TO SYSTEM START-UP.
3. LOCATE □ INCH HOLE IN PIPE 1'-0" BELOW NORMAL WATER LEVEL.
4. SPARGER LOCATED 6 FEET ABOVE FUEL ASSEMBLIES.
5. LOCATE □ INCH HOLE IN PIPE 1'-0" BELOW NORMAL WATER LEVEL.
6. LOCK OPEN IN MODES 1-4.
7. FILTER VENTS ARE DRAINS ROUTED INTO THE FLOOR DRAINS IN FILTER COMPARTMENT.
8. CAPS WILL NOT BE PROVIDED ON VENTS AND DRAINS LINES.
9. VALVES ARE VAL-MATIC CO 3"-125 LB MODEL 1903 SURE SEAL FOOT VALVES ALL 304 SS CONSTRUCTION WITH NEOPRENE SEAL RING.
10. THE TRANSFER CANAL LIFT GATE (CPX-SFHAGT-03) IS NORMALLY STORED IN THE WET CASK LOADING PIT, BUT CAN BE USED IN ANY OF THE THREE LOCATIONS IN THE FUEL TRANSFER CANAL. THIS IS A REMOVABLE TYPE GATE.
11. ANTISIPHON DEVICES LOCATED ON SUCTION LINES TO SKIMMER PUMP. INLET TO ANTISIPHON DEVICE IS ONE FOOT BELOW SUCTION LINE.
12. WHEN A GATE IS IN POSITION, THE WATER LEVEL ON EITHER SIDE OF THE GATE MAY VARY.
13. THE REFUELING CAVITY LIFT GATE (CP1-SFHAGT-01) IS NORMALLY STORED IN A LOCAL RACK. THIS IS A REMOVABLE TYPE GATE.
14. CAUTION: CONSULT APPLICABLE BRP'S FOR PHYSICAL LAYOUT, ARRANGEMENT OF PIPING ENTERING, EXITING SPENT FUEL POOLS.
15. CAVITY DRAIN PIPE SHALL NOT BE REDUCED TO LESS THAN 4" DURING POWER OPERATION. THIS IS NEEDED TO MAINTAIN CAVITY DRAINAGE DURING AN ACCIDENT SCENARIO, REFER TO FDA 2005-003364-14.

FSAR FIGURE 9.1-13

THIS DRAWING CREATED ELECTRONICALLY

CLASS I
(NUCLEAR SAFETY-RELATED)
SAFETY CLASS 1 — SEISMIC CATEGORY I
SAFETY CLASS 2 — CLASS 1E
SAFETY CLASS 3 — ASSOCIATED CIRCUITS

LUMINANT
CPNPP
GLEN ROSE, TEXAS

FLOW DIAGRAM
SPENT FUEL POOL COOLING
AND CLEAN-UP SYSTEM

DWG. NO. M1-0235 | SH. NO. 02 | REV. CP-25

REF CKD CP-19 1/20/98

SSSSSSSDATESSSSSS

me101920.dgn A M1-0235-02

< FINAL PRINT >

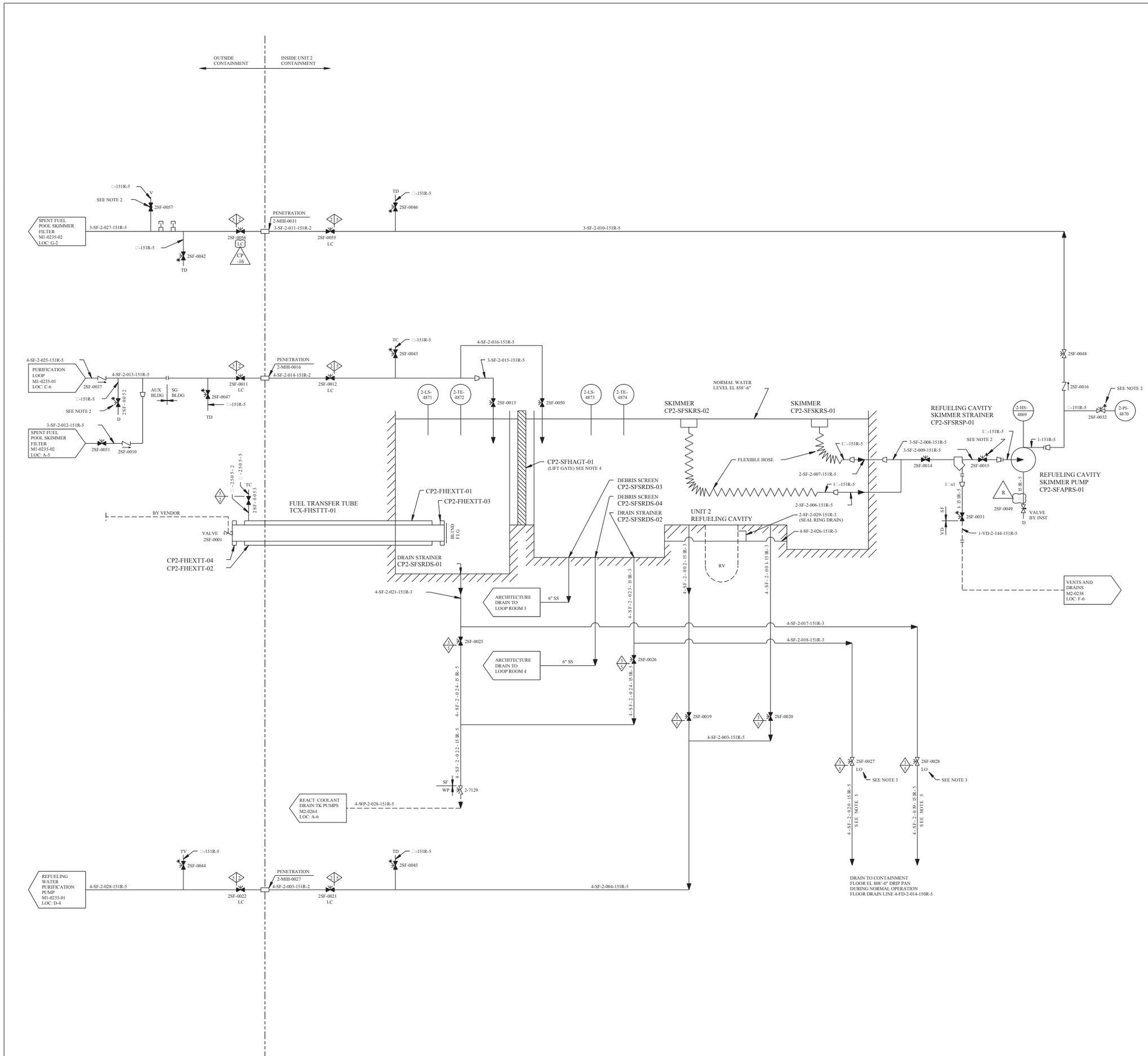

REV	DWN	CHKD	APVD	REMARKS
CP-17	BMC 10-20-2014	BMG 10-22-2014		THIS DRAWING REVISED TO INCORPORATE DESIGN CHANGE FDA-2014-000244-01-00 PER SK-0001-14-000244-01-00.

NOTES:

1. FOR MECHANICAL SYMBOLS AND NOTES SEE DRAWING M1-0200.
2. VALVE TYPE PER QC WALKDOWN VERIFICATION.
3. LOCK OPEN IN MODES 1-4.
4. WHEN THE GATE IS IN POSITION, THE WATER LEVEL ON EITHER SIDE OF THE GATE MAY VARY. CP2-SFHAGT-01 IS NORMALLY STORED IN A LOCAL RACK. THIS IS REMOVABLE TYPE GATE.
5. CAVITY DRAIN PIPE SHALL NOT BE REDUCED TO LESS THAN 4" DURING POWER OPERATION. THIS IS NEEDED TO MAINTAIN CAVITY DRAINAGE DURING AN ACCIDENT SCENARIO, REFER TO FDA 2005-003364-04.

FSAR FIGURE 9.1-13

THIS DRAWING CREATED ELECTRONICALLY

CLASS I
(NUCLEAR SAFETY-RELATED)
SAFETY CLASS 1 — SEISMIC CATEGORY I
SAFETY CLASS 2 — CLASS 1E
SAFETY CLASS 3 — ASSOCIATED CIRCUITS

LUMINANT
CPNPP
GLEN ROSE, TEXAS

FLOW DIAGRAM
SPENT FUEL POOL COOLING
AND CLEAN-UP SYSTEM

DWG. NO. M2-0235 | SH. NO. - | REV. CP-17

SSSSSSSDATESSSSSS

me101930.dgn M2-0235 < FINAL PRINT >

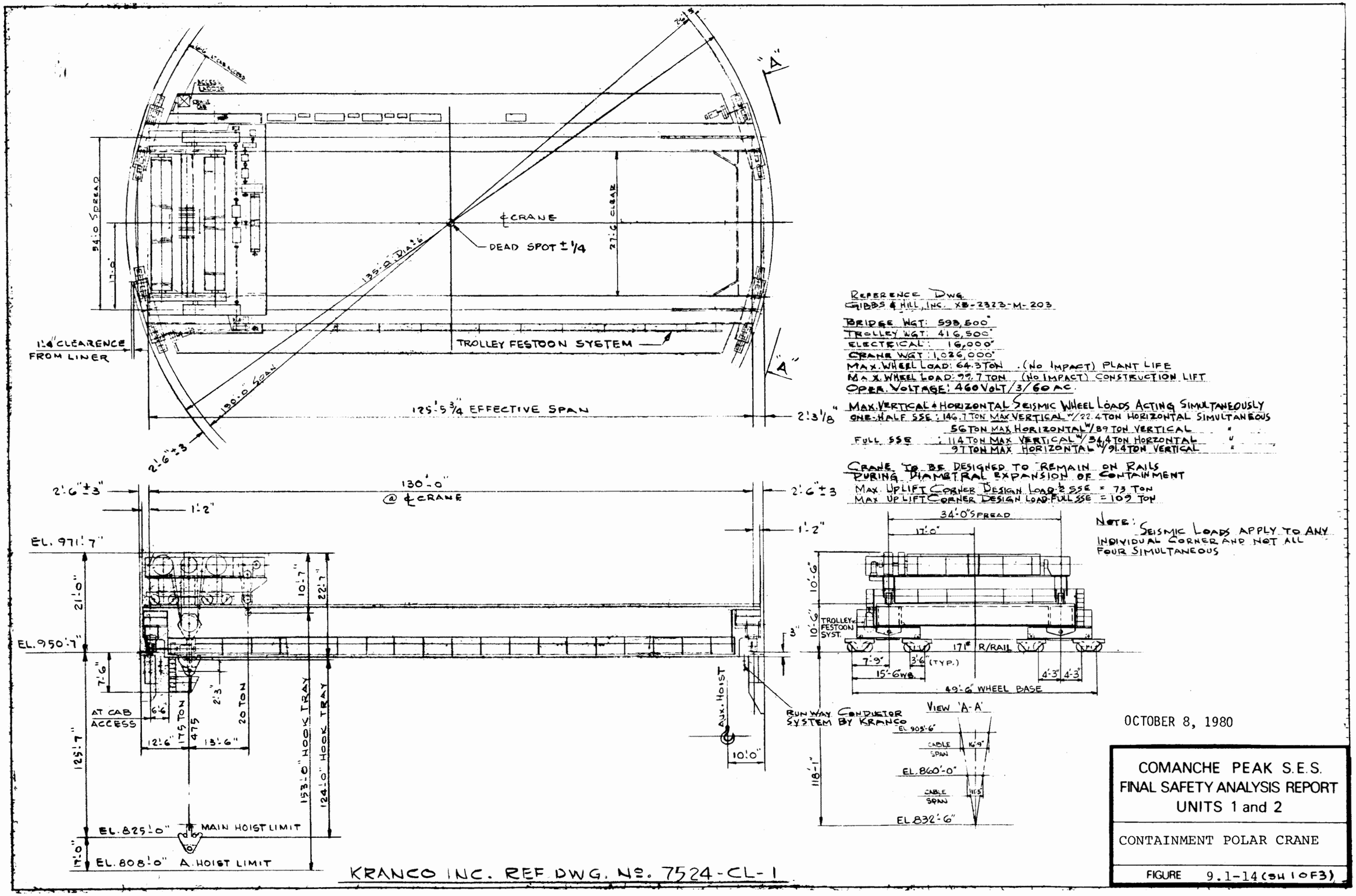

REFERENCE DWG
GIBBS & HILL, INC. XB-2323-M-203

BRIDGE WGT: 593,500#
TROLLEY WGT: 416,500#
ELECTRICAL: 16,000#
CRANE WGT: 1,026,000#
MAX. WHEEL LOAD: 64.3 TON (NO IMPACT) PLANT LIFE
MAX. WHEEL LOAD: 99.7 TON (NO IMPACT) CONSTRUCTION LIFT
OPER. VOLTAGE: 460 VOLT/3/60 AC

MAX. VERTICAL + HORIZONTAL SEISMIC WHEEL LOADS ACTING SIMULTANEOUSLY
ONE-HALF SSE: 146.7 TON MAX VERTICAL W/22.4 TON HORIZONTAL SIMULTANEOUS
56 TON MAX HORIZONTAL W/89 TON VERTICAL "
FULL SSE: 114 TON MAX VERTICAL W/34.4 TON HORZONTAL "
97 TON MAX HORIZONTAL W/91.4 TON VERTICAL "

CRANE TO BE DESIGNED TO REMAIN ON RAILS DURING DIAMETRAL EXPANSION OF CONTAINMENT
MAX. UPLIFT CORNER DESIGN LOAD ½ SSE = 73 TON
MAX. UPLIFT CORNER DESIGN LOAD FULL SSE = 109 TON

NOTE: SEISMIC LOADS APPLY TO ANY INDIVIDUAL CORNER AND NOT ALL FOUR SIMULTANEOUS

OCTOBER 8, 1980

COMANCHE PEAK S.E.S.
FINAL SAFETY ANALYSIS REPORT
UNITS 1 and 2

CONTAINMENT POLAR CRANE

FIGURE 9.1-14 (SH 1 OF 3)

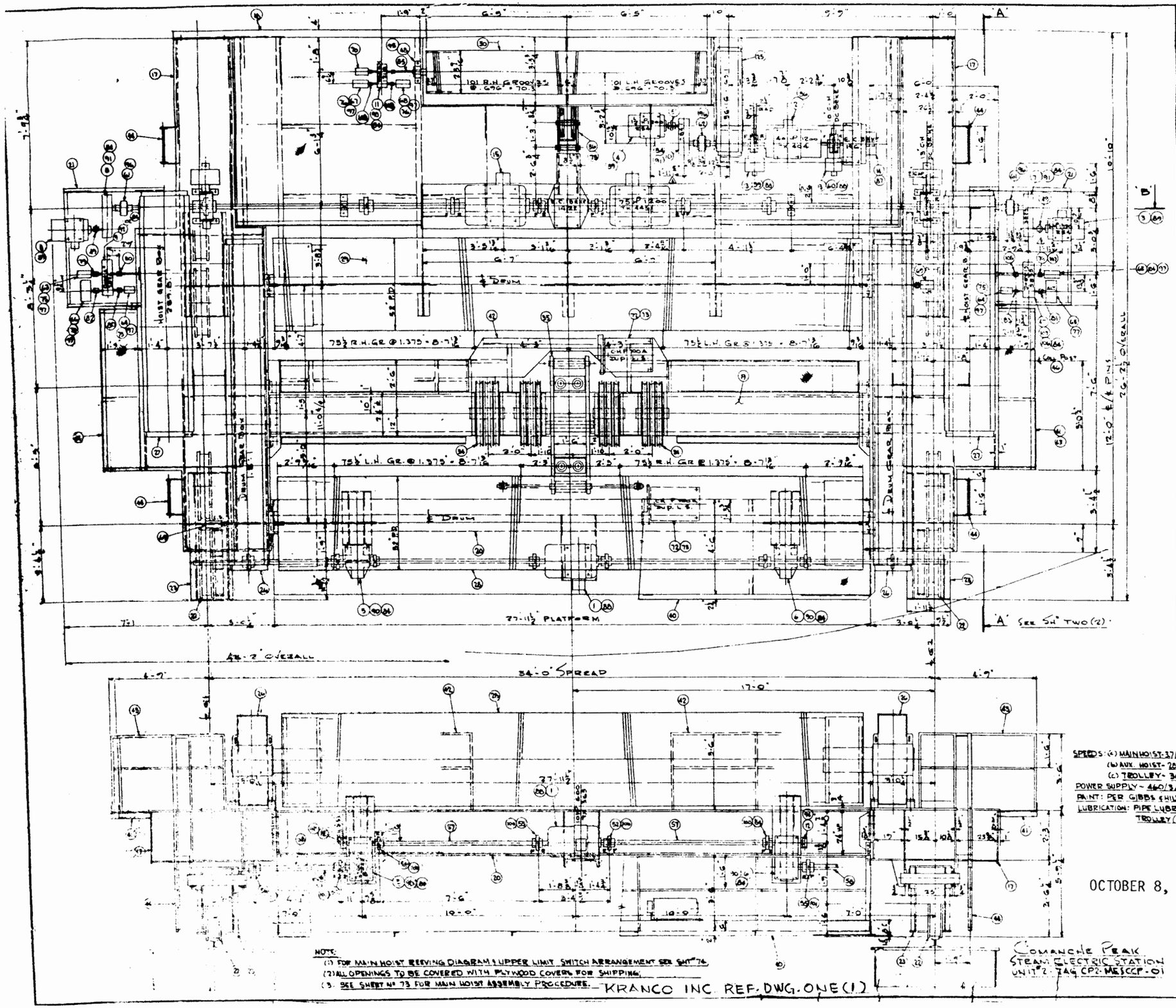

MATERIAL FOR ___ UNITS. ___ UNITS REQ'D PER CRANE ___ CRANES REQ'D.

ITEM	NO. REQ'D	REF NO.	DESCRIPTION	MAT'L	WGT	REMARKS
	1	MC-1A	TROLLEY ASSEMBLY	Totals	383,844#	
1	1		GE MOTOR 10 HP, 600 RPM, FR. 365	-	840	✓
			460, 3/60, WOUND ROTOR, TYPE MP,		—	
			60 MIN, CL. H INSUL. CL. B RISE,		—	
			50°C AMBIENT, TENV, DBL STR SHAFT		—	
			FI CONDUIT BOX MTG & SPACE HEATER		—	
2	1		DITTO EXCEPT 40 HP, 1200 RPM	-	990	✓
			FR. 404		—	
3	2		GE MOTOR 5 HP, 1800 RPM, FR. 254	-	582	✓
			460, 3/60, WOUND ROTOR, TYPE M,		—	
			CONTINUOUS DUTY, CL. H INSUL.,		—	
			CL. B RISE, 50°C AMBIENT, TEFC,		—	
			SINGLE STR SHAFT, FI CONDUIT BOX		—	
			MTG & SPACE HEATER		—	
4	1		DITTO EXCEPT 7½ HP, 1800 RPM, FR 254	-	276	✓
5	1		DORRIS RED # 6335 LH-DI (35:1 RED)	-	475	✓
6	1		DORRIS RED # 6336 RH-DI (35:1 RED)	-	475	✓
7	1		DORRIS RED # 3873 RH (22.8:1 RED)	-	221	✓
8	1		DORRIS RED # 3873 LH (22.8:1 RED)	-	221	✓
9	1		DORRIS RED # 2636 DI-DO (36.2 RED)	-	161	✓
10	1		DORRIS RED # 3841 RH (41.2:1 RED)	-	221	✓
11	1		DORRIS RED # 2181 DI-DO (17.8:1 RED)	-	89	✓
12	2		GH 5-5/8 BRAKE # 5114460-41 WITH	-	67	✓
			BRAKE MODEL # 5114160-7		—	
13	2		GH 10" & MAGNETIC OPERATED	-	526	✓
			BRAKE TYPE 505 % BRAKE WHL		—	
14	1		GH MAGNETIC CRANE CONTROLLER	-	650	✓
			MODEL # 166 % ALTERNATOR		—	
15	1	MC-60A	CONSTRICTION LIFT MACH ASSY	-	3,732	
16	1	MC-60B	PLANT LIFT MACHINERY ASSY	-	—	
17	1	MC-16A	TROLLEY SIDES	-	24,276	
18	1	MC-16A	AUX HOIST FRAME	-	16,383	
19	1	MC-16A	TROLLEY LOAD GIRT	-	26,915	
20	1	MC-19A	AUXILIARY GIRT	-	4,[illegible]0	
21	1	MC-20A	MACHINERY SUPPORT	-	3,[illegible]	
22	1	MC-10A	TROLLEY WHL ASSY (36" DIA)	-	20,368	
23	1	MC-12A	TROLLEY DRIVE TRUCK	-	4,127	
24	2	MC-13A	TROLLEY IDLE TRUCK	-	3,811	
25	1	36-16	KRANCO REDUCER (#985:1 RATIO)	-	2429	
26	1	36-90	KRANCO REDUCER (DRUM GEAR BOX)	-	49,274	
27	1	36-91	KRANCO REDUCER (HOIST GEAR BOX)	-	37,576	
28	1	MC-25A	MAIN HOIST DRUM	-	44,290	
29	1	MC-26A	MAIN HOIST DRUM	-	44,290	
30	1	MC-24A	AUX. HOIST DRUM	-	8,266	
31	1	MC-33A	KRANCO DUAL BOTTOM BLOCK	-	38,299	
33	1		JOHNSON BOTTOM BLOCK # 300 KPTA	-	617	✓
			RATED @ 20 TON GROOVE FOR ¾" ROPE		—	
34	2	MC-52A	MAIN HOIST UPPER SHEAVE ASSY	-	12,592	
35	1	MC-49A	M.H. UPPER EQUALIZER BAR ASSY	-	4031	
36	1	MC-23A	AUX. HOIST UPPER SHEAVE ASSY	-	130	
37	2		1¼" PREFORMED PREMIUM WHYTE	-	6722	✓
-			STRAND 7-FLEX IWRC WIRE		—	
			ROPE = 1163 FT. LG		—	
38	2		DITTO EXCEPT 1163 FT LG.	-	6835	✓
39	1		9/16" DIA. 6 × 37 IPS-IWRC		706	✓
			WIRE ROPE × 1307 FT. LG		—	
40	1	MC-21A	TROLLEY PLATFORM	-	2,679	
41	2	MC-22A	TROLLEY SIDE PLATFORM	-	447	
42	1	MC-47A	TR LOAD GIRT PLATFORM & HANDRAIL	-	982	
43	1	MC-48A	TROLLEY HANDRAIL	-	489	
44	4	MC-48B	TROLLEY LADDERS	-	283	
45	2	MC-45A	TROLLEY SPRING BUMPERS	-	364	
46	1	MC-46A	TROLLEY COLLECTOR POST	-	516	
47	1		DORRIS RED # 3835 DI-DO (36.2:1 RED)	-	363	✓
		BILL OF MATERIAL CONT. ON SHT # 2				

SPEEDS: (a) MAIN HOIST - 27/.25 FPM. 5 SV/SS
(b) AUX. HOIST - 28/1 FPM 5 SV/SS
(c) TROLLEY - 30 FPM 5 SV
POWER SUPPLY - 460/3/60 AC.
PAINT: PER GIBBS & HILL SPECIFICATION № 2328-QS-900 DATED AUG. 27, 1974, REV # 1
LUBRICATION: PIPE LUBRICATION POINTS TO ONE ACCESSIBLE CENTRAL LOCATION ON THE TROLLEY (ACCESSIBLE FROM THE FRONT PLATFORM MC-43A)

NOTE:
(1) FOR MAIN HOIST REEVING DIAGRAM & UPPER LIMIT SWITCH ARRANGEMENT SEE SHT # 74.
(2) ALL OPENINGS TO BE COVERED WITH PLYWOOD COVERS FOR SHIPPING.
(3. SEE SHEET № 73 FOR MAIN HOIST ASSEMBLY PROCEDURE.

KRANCO INC REF. DWG. ONE (1)

COMANCHE PEAK STEAM ELECTRIC STATION UNIT # 2 - TAG CP2-MESCCP-01

OCTOBER 8, 1980

COMANCHE PEAK S.E.S.
FINAL SAFETY ANALYSIS REPORT
UNITS 1 and 2

CONTAINMENT POLAR CRANE

FIGURE 9.1-14 Sh. 2 of 3

102	1	MK-77A	REDUCER BASE FOR DORRIS RED# 2250	A-36	46		
103		MK-77B	REDUCER BASE FOR DORRIS RED# 5250	A-36	73		
104	1	MK-76A	OVERSEED LIMIT SWITCH BASE	A-36	3		
105	1	MK-63D	COUP~ FALK# G20-25G	F/F	—	55	
106	4		7/8"×3½" LG HUMB 7 NUTS LW		STL	4	
107	1	MK-76B	SHAFT EXTENSION		A-36 HOT ROLL	22	
108	2		COUP LOVE JOY L075 B8 5/8 × 1/4		STEEL	8	
109							

MATERIAL FOR ___ UNITS. ___ UNITS REQ'D PER CRANE ___ CRANES REQ'D

ITEM NO.	NO. REQ'D	REF. NO	DESCRIPTION	MAT'L	WGT.	REMARKS
			MATERIAL CONT FROM SHT# 1			
48	1		PILLOW BLOCK-REX# 2207 (2 3/4")	-	15	
49	2	MK-62G	COUPLING-FALK# G20-15G	F/F	40	
50	1	MK-62H	" -FALK# G20-15G	F/F	20	
51	1	MK-62J	COUPLING-FALK# G20-15G	F/F	20	

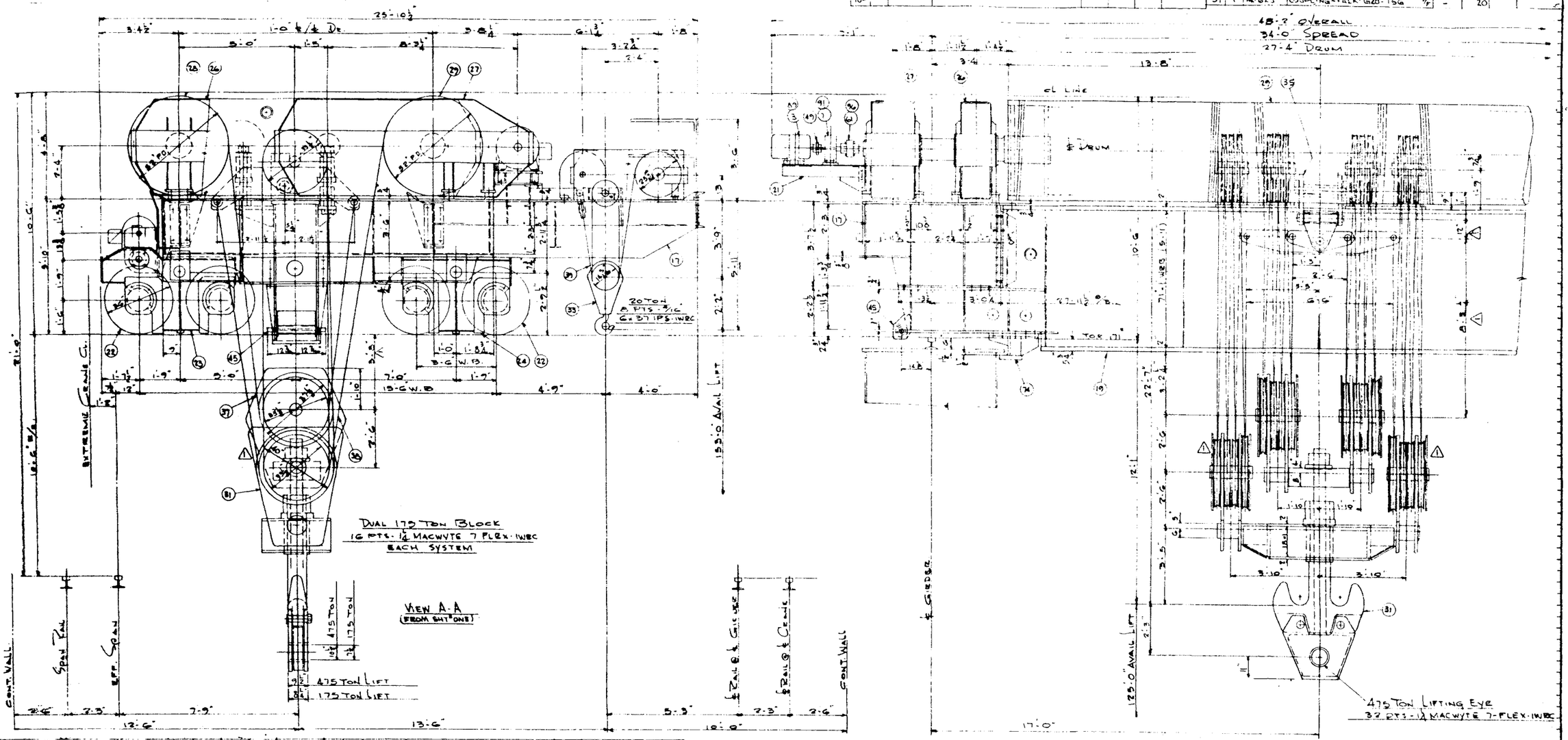

101	4		KEY~ 3/4" SQ. × 3½" LG SQ ENDS	KEY STOCK	30	81	1	MK-63E	COUP~ FALK# G20-25G	F/F	-	55		61	2	MK-70A	DINGS MAGNETIC CLUTCH COUP	-	50
100	4		KEY~ 1/2" SQ × 2" LG SQ ENDS	KEY STOCK		80	1		COUP~ LOVEJOY# L-095B2 (5/8×1/2)	"	2			60	1	MK-65C	BRAKE WHEEL COUP~ 10"×3¾"	-	50
99	4		7/8" × 3½" LG HUMB 7 NUT & LW	STL		79	2		COUP~ LOVEJOY# L-150B2 (1/2×2)	SHIFTING HUB	14			59	1	MK-65B	BRAKE WHEEL COUP~ 10"×3¾"	-	50
98				-		78	1	MK-61E	TACHOMETER GENERATOR BASE	-	7			58	2	MK-64E	DRIVE SHAFT ~ 2 3/8" DIA	1018CF	187
97	24		1/4" × 1½" LG TC SUIT HUMB 7/N4 LW	"		77	1	MK-77C	ALTERNATOR BASE	-	70			57	2	MK-64D	DRIVE SHAFT ~ 1 7/16 DIA	1018CF	114
96	12		1/2" × 2" LG HUMB 7 NUT & LW	"		76	2	MK-69A	OVERSPEED L.S. BASE	-	6			56	2	MK-62P	COUPLING~ FALK# GS2-25G	F/R	110
95	2		5/8" × 3½" LG HUMB 7 NUT & LW			75	3	MK-68A	OVERSPEED L.S BASE	-	9			55	2	MK-62N	" ~ FALK# GS2-25G	F/R	110
94	4		5/16" × 1½" LG TO SUIT HUMB 7 NUTS LW			74	2	MK-71A	TROLLEY HOLD DOWN LUGS		1092			54	2	MK-62M	" ~ FALK# GS2-15G	F/R	40
93	4		1/4" × 2½" LG HUMB 7 NUT & LW			73	3		A.B. LIMIT SWITCH 801-FSC1N6	-	70			53	1	MK-62L	" ~ FALK# GS2-15G	F/R	20
92	4		5/8" × 3¾" LG HUMB 7 NUT & LW			72	2		CHAPMAN LS TYPE D-100		778			52	1	MK-62K	COUPLING ~ FALK# GS2-15G	F/R	20
91	12		5/16" × 3½" LG HUMB 7 NUT & LW			71	1	MK-75A	TROLLEY TRAVEL LIMIT SWITCH	-	32								
90	6		5/8" × 3¾" LG HUMB 7 NUT & LW			70	1	MK-67A	AUX HOIST DRUM LIMIT SWITCH	-	10								
89	12		1/2" × 2¾" LG HUMB 7 NUT & LW			69	2	MK-66A	MAIN HOIST DRUM LIMIT SWITCH	-	14								
88	14		5/8" × 3¾" LG HUMB 7 NUT & LW	STL		68	1		OVERSPEED L.S-HUB# 2210-32CC4-NM	-	5								
87	4	MK-63F	MOUNTING PADS	-	11	67	1		OVERSPEED L.S-HUB# 2210-32CC4-55-NM	-	5								
86	4	MK-61E	MOUNTING PADS	-	37	66	1		TACHOMETER GENERATOR-GK TYPE BC-6	-	60								
85	1	MK-72A	EXTENSION-HAYFORD AUX HOIST L.S.	-	3	65	1		ALTERNATOR	-	450								
84	8		BEARING CAP. 3/8" P TWO	-	—	64	2		OVERSPEED L.S-HUB# 2210-32CC4-NM	-	9								
83	1		COUP ~ LOVEJOY# L-100B2	-	8	63	2		OVERSPEED L.S-HUB# 2210-32CC4-55-NM	-	10								
82	1		COUP ~ LOVEJOY# L095B2	-	3	62	1	MK-70B	DINGS MAGNETIC CLUTCH COUP	-	75								

CERTIFIED FOR CONSTRUCTION
BY _____

COMANCHE PEAK STEAM ELECTRIC STATION - UNIT 2 TAG CP2-MESCCP-01

KRANCO, INC. REF. DWG. TWO (2)

OCTOBER 8, 1980

COMANCHE PEAK S.E.S.
FINAL SAFETY ANALYSIS REPORT
UNITS 1 and 2

CONTAINMENT POLAR CRANE

FIGURE 9.1-14 Sh. 3 of 3

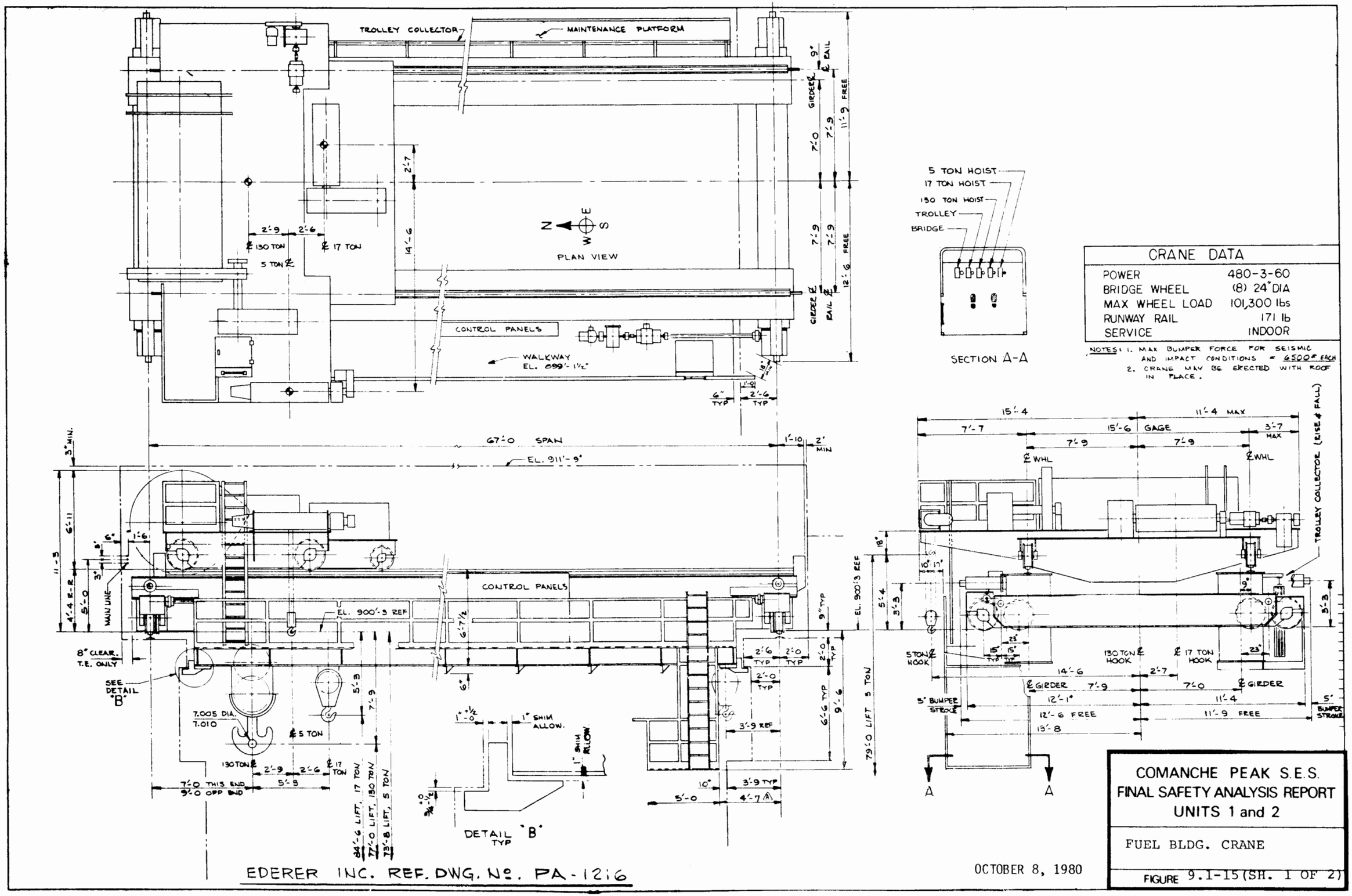

CRANE DATA	
POWER	480-3-60
BRIDGE WHEEL	(8) 24" DIA
MAX WHEEL LOAD	101,300 lbs
RUNWAY RAIL	171 lb
SERVICE	INDOOR

NOTES: 1. MAX BUMPER FORCE FOR SEISMIC AND IMPACT CONDITIONS = 6500# EACH
2. CRANE MAY BE ERECTED WITH ROOF IN PLACE.

COMANCHE PEAK S.E.S.
FINAL SAFETY ANALYSIS REPORT
UNITS 1 and 2

FUEL BLDG. CRANE

FIGURE 9.1-15 (SH. 1 OF 2)

REVISIONS								
LTR	DESCRIPTION	DATE	BY	CHK	ENG	APPD	APPD	APPD
A	REMOVED CAB FROM TROLLEY. 5 TON HOIST: 6'-9 WAS 54". 30" WAS 6". 7'-7 WAS 8'-3. GIRDER ℄'S: 14'-9 WAS 14'-0. 43" WAS 48". RAIL TO RAIL: 52" WAS 54". 6'-11 WAS 6'-9 12'-1 WAS 12'-3, 9'-7 WAS 9'-9	29 JAN 79	[illegible]	RAJ	[illegible]	[illegible]	[illegible]	

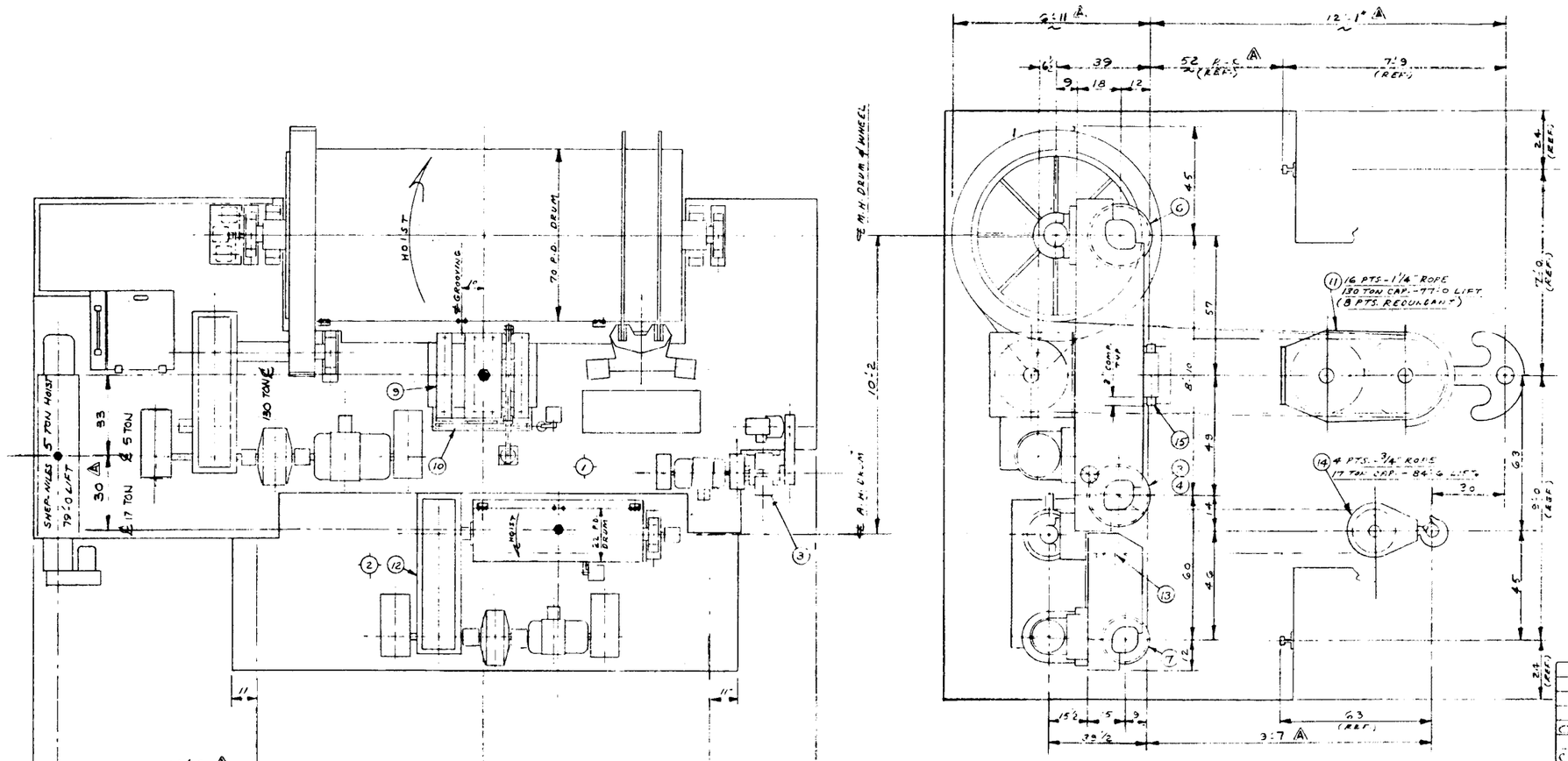

	15	BUMPER ASSY	2	B-14191	
CI	14	A.H. L-BLOCK ASSY.	1	B-14190	
	13	A.H. EQUALIZER ASSY.	1	B-14189	
CI	12	AUX HOIST ASSY.	1	A-11165	
CI	11	M.H. L-BLOCK ASSY	1	A-11164	
CI	10	M.H. TPEN. SHEAVE ASSY.	1	B-14185	
CI	9	M.H. U BLOCK ASSY.	1	A-11163	
	8	MAIN HOIST ASSY.	1	A-11162	
	7	18" IDLER WHL ASSY.	2	B-14127	
	6	24" IDLER WHL ASSY.	2	B-14126	
CI	5	24" DR. DRIVE WHL ASSY.	1	B-14125	
CI	4	24" DR. DRIVEN WHL ASSY	1	B-14124	
	3	TROLL. DRIVE ASSY.	1	A-11161	
CI	2	TROLLER TROLL. FRAME	1	A-11159	
CI	1	MAIN TROLL. FRAME	1	A-11154	

EDERER INC. REF. DWG. No A-11166

OCTOBER 8, 1980

COMANCHE PEAK S.E.S.
FINAL SAFETY ANALYSIS REPORT
UNITS 1 and 2

FUEL BLDG. CRANE

FIGURE 9.1-15 (SH. 2OF2)

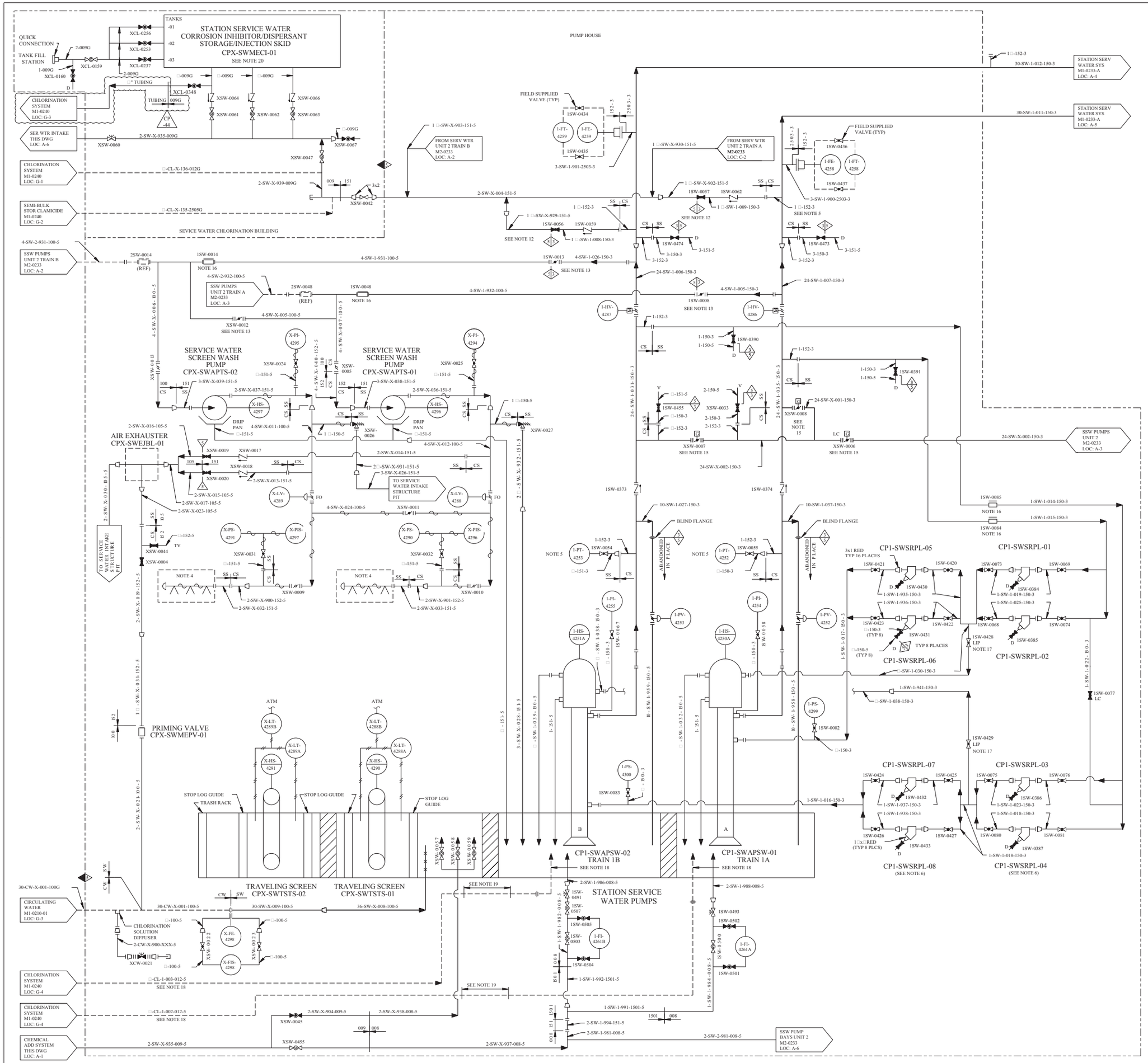

REV	DWN	CHKD	APVD	REMARKS
CP-44	DLK 10-28-2015	MM 06-01-2015	MHF 06-09-2015	THIS DRAWING REVISED TO INCORPORATE AI-CR-2015-004313-1 TO EDITORIALLY ADD CONTINUATION BLOCK TO M1-0240.

NOTES:

1. THIS SYSTEM IS NUCLEAR SAFETY CLASS 3 EXCEPT FOR THE FOLLOWING, WHICH ARE NON-NUCLEAR SAFETY RELATED: CHLORINATION PIPING AND ASSOCIATED COMPONENTS, INCLUDING SPARGERS; SCREEN WASH PUMPS AND ASSOCIATED PIPING AND COMPONENTS; CIRCULATING WATER MAKEUP TO THE SSI; BIOCIDE INJECTION SYSTEM; CORROSION INHIBITION SYSTEM; AND RECIRCULATION LINE (ABANDONED IN PLACE).
2. FOR MECHANICAL SYMBOLS AND NOTES SEE DRAWING M1-0200.
3. ALL UNIT 2 LINES THAT ARE SHOWN WILL BE INSTALLED WITH UNIT 1 CONSTRUCTION.
4. TRAVELING SCREEN SPRAY HEADERS ARE SUPPLIED BY THE TRAVELING SCREEN MANUFACTURER.
5. 3□" AND SMALLER BRANCH CONNECTIONS TO MAIN LINES SHALL BE IN ACCORDANCE WITH THE DETAIL ON DRAWING M1-1103-01 (LOC: F-6). INSTRUMENTATION CONNECTIONS SHALL BE IN ACCORDANCE WITH SKETCHES XA-2323-M-309 AND XA-2323-M-757.
6. THREE (3") INCH Y-STRAINERS. STRAINERS CP1-SWSRPL-01/02/03/04 SHALL HAVE 40 MESH BASKETS MINIMUM AND STRAINERS CP1-SWSRPL-05/06/07/08 SHALL HAVE 200 MESH BASKETS MINIMUM.
7. FOR TYP VENT AND DRAIN DETAILS SEE DRAWING M1-0740-01.
8. INSTRUMENTATION AND CONTROL LOGIC PROVIDED BY CHLORINATION SYSTEM VENDOR.
9. UNLESS OTHERWISE NOTED ALL DRAINS COLLECTED BY LOCAL DRAIN SYSTEM.
10. DELETED
11. FOR TRASH BASKET DETAILS REFER TO STRUCTURAL DRAWINGS S-1107 AND S-1108 (CPX-SWSNTR-01
12. CHLORINATION HEADER SUPPLY VALVES 1SW-0056 ,1SW-0057 , 2SW-0056 AND 2SW-0057 ARE NORMALLY CLOSED. DURING CHLORINATION OPERATIONS, ONLY ONE OF THE FOUR VALVES IS OPENED, THUS PRESERVING TRAIN AND UNIT SEPARATION.
13. SCREEN WASH HEADER SUPPLY CROSSTIE VALVE XSW-0012 IS NORMALLY CLOSED. TRAIN A SCREEN WASH HEADER SUPPLY VALVES 1SW-0008 AND 2SW-0008 ARE ALIGNED SUCH THAT ONLY ONE VALVE IS OPEN AT A TIME. TRAIN B SCREEN WASH HEADER SUPPLY VALVES 1SW-0013 AND 2SW-0013 ARE ALIGNED SUCH THAT ONLY ONE VALVE IS OPEN AT A TIME. THUS, TRAIN AND UNIT SEPARATION IS PRESERVED.
14. DELETED
15. CROSS-CONNECT OPERABILITY FOR GDC-5 AND GDC-44

CONDITION	UNIT (MODE 1-4) TRAIN ISOL VLV	UNIT (MODE 1-4) TRAIN ISOL VLV	CROSSTIE XSW-0006 ISOL VLV	UNIT (MODE 1-4) TRAIN ISOL VLV	UNIT (MODE 1-4) TRAIN ISOL VLV
a. NORMAL	NC*	NC*	LC*	NC*	NC*
b. 1 TRAIN ISOLATION ISOLATION VALVE OPEN	LO	LC	LC*	NC*	NC*
c. THE UNIT CROSSTIE ISOLATION VALVE OPEN	LC*	LC*	LO	NC*	NC*
d. b + c	LO	LC	LO	LC*	LC*
e. 1 TRAIN ISOLATION VALVE OPEN ON EACH UNIT	LO	LC	LC*	LO	LC

* VALVES MAY BE CYCLED ONE AT A TIME IN ACCORDANCE WITH TECHNICAL SPECIFICATION 3.7.8 REQUIREMENTS AS DESCRIBED IN THE LCO BASES.

16. CHECK VALVE INTERNALS REMOVED, VALVE BODIES ABANDONED IN PLACE.
17. 1SW-0428 AND 1SW-0429 TO BE USED AS THROTTLING VALVES AND THEN LOCKED IN POSITION.
18. PROCESS TUBING IS ROUTED INSIDE CPVC OR PVC PIPE.
19. PROCESS TUBING IS ROUTED INSIDE METALLIC PIPE, PIPE ACTS AS A FIRE BREAK.
20. TAGS ASSOCIATED WITH THE SWIS CORROSION INHIBITOR/ DISPERSANT STORAGE AND INJECTION SKID ARE:

CPX-SWPMCI-01	SSW CORROSION INHIBITOR PHOSPHORIC ACID PUMP X-01
CPX-SWPMCI-02	SSW CORROSION INHIBITOR POLYMER PUMP X-02
CPX-SWPMCI-03	SSW CORROSION INHIBITOR HEDP PUMP X-03
CPX-SWTNCI-01	SSW CORROSION INHIBITOR PHOSPHORIC ACID TANK-01
CPX-SWTNCI-02	SSW CORROSION INHIBITOR POLYMER TANK-02
CPX-SWTNCI-03	SSW CORROSION INHIBITOR HEDP TANK-03
X-LT-3596A	SSW CORROSION INHIBITOR PHOSPHORIC ACID TANK LEVEL TRANSMITTER
X-LT-3596B	SSW CORROSION INHIBITOR POLYMER TANK LEVEL TRANSMITTER
X-LT-3596C	SSW CORROSION INHIBITOR HEDP TANK LEVEL TRANSMITTER

FSAR FIGURE 9.2-1

THIS DRAWING CREATED ELECTRONICALLY

DRAWING 2323-M1-0233 REV CP-10
HAS BEEN SPLIT INTO THE FOLLOWING SHEETS:
M1-0233
M1-0233-A

CLASS I
(NUCLEAR SAFETY-RELATED)
SAFETY CLASS 1 / SAFETY CLASS 2 / SAFETY CLASS 3 — SEISMIC CATEGORY I / CLASS 1E / ASSOCIATED CIRCUITS

LUMINANT
CPNPP
GLEN ROSE, TEXAS

FLOW DIAGRAM
STATION SERVICE WATER
SYSTEM

DWG. NO. M1-0233 | SH. NO. - | REV. CP-44

REF CKD CP-29 10/15/97
SSSSSSSSDATESSSSSS

me103690.dgn M1-0233 < FINAL PRINT >

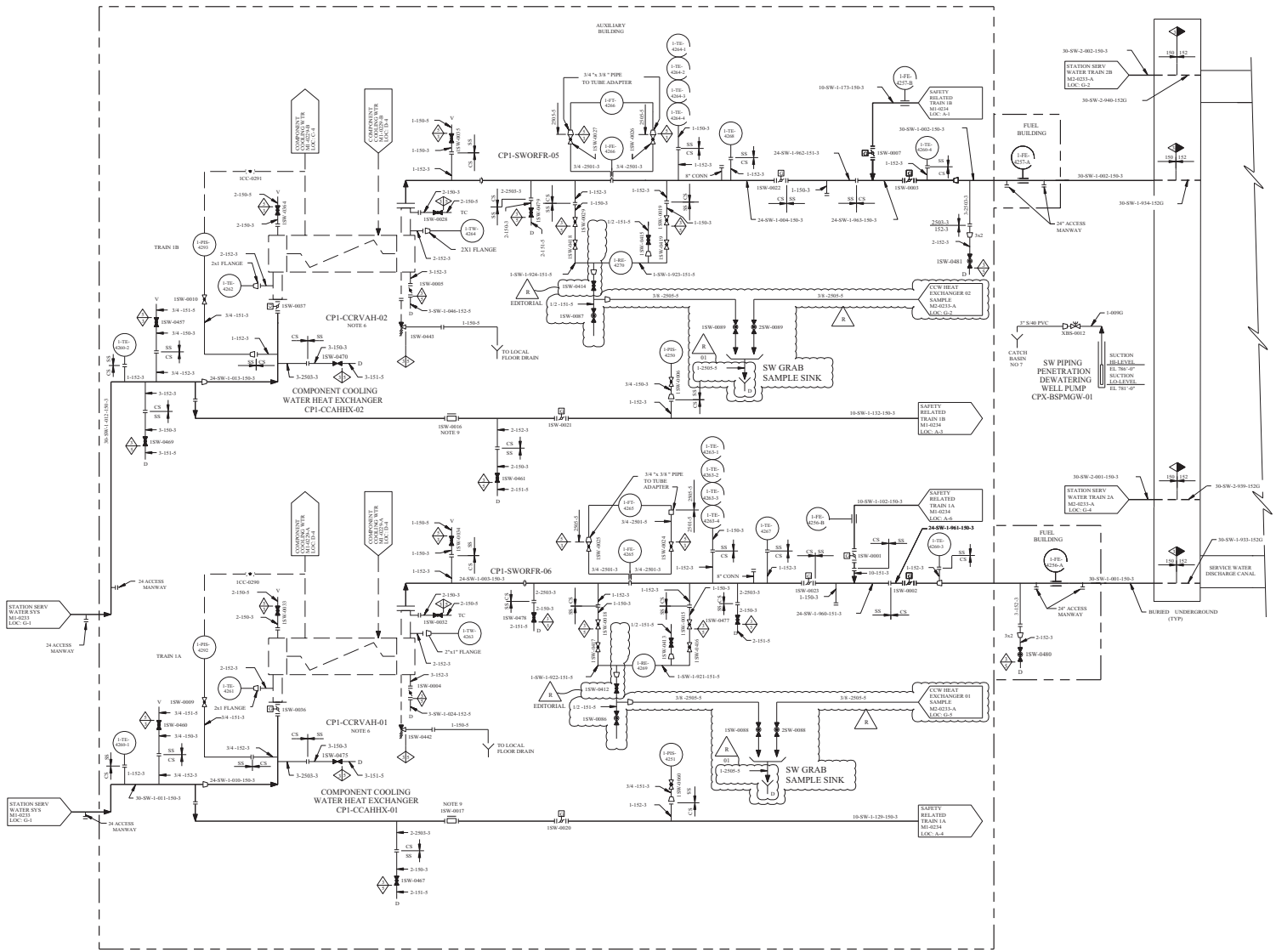

REV	DWN	CHK	APPD	REMARKS
CP-18	SEAL 2003	SEB 2003		THIS DRAWING REVISED TO INCORPORATE DESIGN CHANGE FDA 2000-0014/58-01-01 PER SK-0002-00-01/01-01-01.

NOTES:

1. DELETED
2. THIS SYSTEM IS NUCLEAR SAFETY CLASS 3 EXCEPT AS NOTED
3. FOR MECHANICAL SYMBOLS AND NOTES SEE DRAWING M1-0200.
4. ALL UNIT 2 LINES THAT ARE SHOWN WILL BE INSTALLED WITH UNIT 1 CONSTRUCTION.
5. 3 1/2 " AND SMALLER BRANCH CONNECTIONS TO MAIN LINES SHALL BE IN ACCORDANCE WITH THE DETAIL ON DRAWING M1-1103-01 (ZONE F-6). INSTRUMENTATION CONNECTIONS SHALL BE IN ACCORDANCE WITH SKETCHES XA-2323-M-309 AND XA-2323-M-797.
6. RELIEF VALVES SUPPLIED WITH HEAT EXCHANGER SUPPLIED BY STRUTHERS WELLS.
7. FOR TYPICAL VENT AND DRAIN DETAILS SEE DRAWING M1-0740-01.
8. UNLESS OTHERWISE NOTED ALL DRAINS COLLECTED BY LOCAL DRAIN SYSTEM.
9. REMOVE CHECK VALVE 1SW-0016 , 1SW-0017 INTERNALS, ABANDON IN PLACE PER DCN 6537 REV 0.

FSAR FIGURE 9.2-1

THIS DRAWING CREATED ELECTRONICALLY

DRAWING 2323-M1-0233 REV CP-10
HAS BEEN SPLIT INTO THE FOLLOWING SHEETS:
M1-0233
M1-0233-A

CLASS I
(NUCLEAR SAFETY-RELATED)
SAFETY CLASS 1 — SEISMIC CATEGORY I
SAFETY CLASS 2 — CLASS 1E
SAFETY CLASS 3 — ASSOCIATED CIRCUITS

TXU ELECTRIC
CPSES
GLEN ROSE, TEXAS

FLOW DIAGRAM
STATION SERVICE WATER
SYSTEM

DWG. NO. M1-0233 | SIZE A | REV. CP-18

$$$$$$DATE$$$$$$

mz379900.dgn M1-0233-A

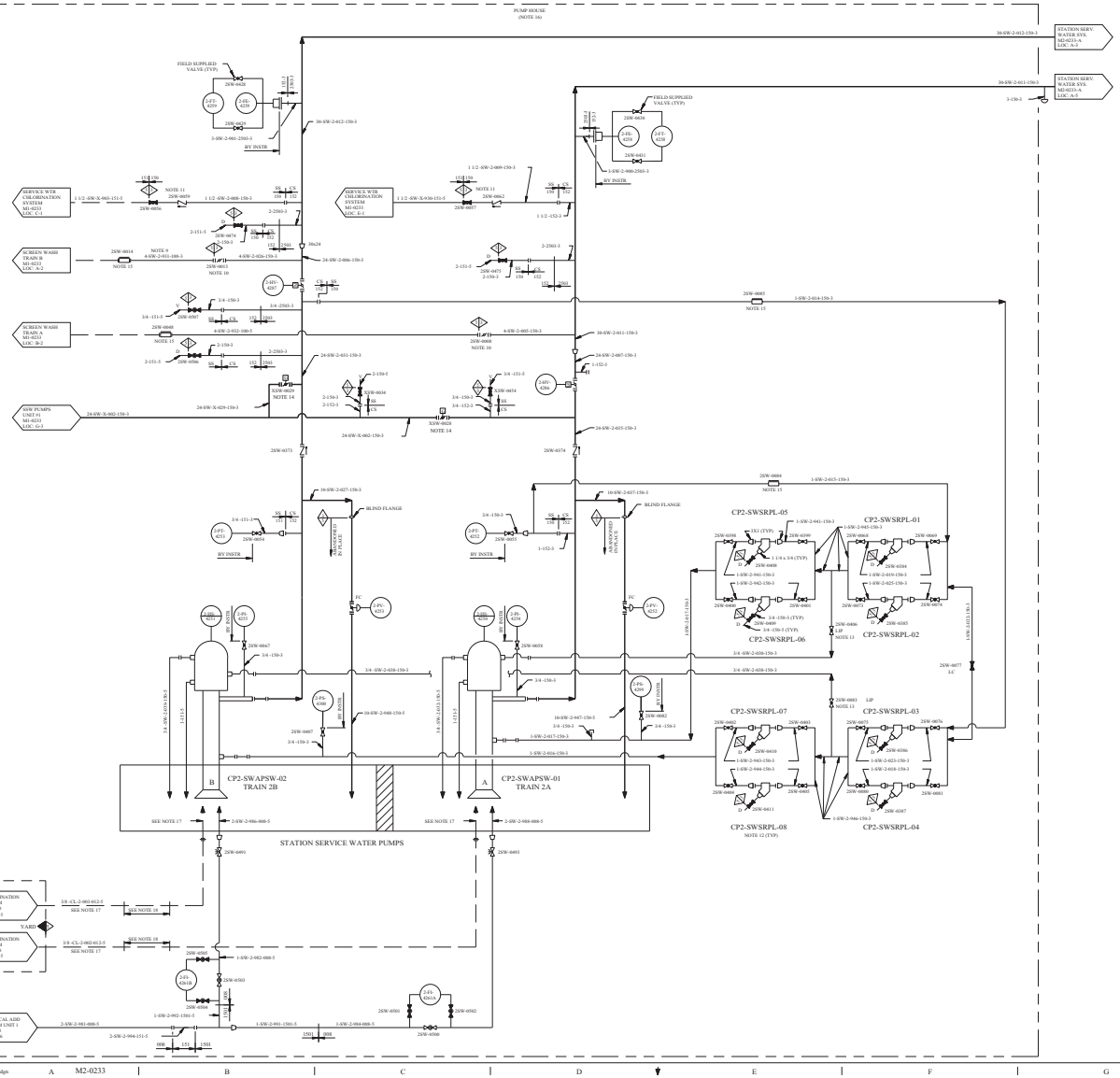

REV.	DWN	CHKD	APPD	REMARKS
CP-19				THIS DRAWING REVISED TO INCORPORATE DESIGN CHANGE FDA, DSD-00-0431-01-01/PER SL-0002-01-01/0101-01-06.

NOTES:

1. THIS SYSTEM IS NUCLEAR SAFETY CLASS 3 EXCEPT FOR THE FOLLOWING, WHICH ARE NON-NUCLEAR SAFETY RELATED: CHLORINATION PIPING AND ASSOCIATED COMPONENTS, INCLUDING SPARGERS; SCREEN WASH PUMPS AND ASSOCIATED PIPING AND COMPONENTS; CIRCULATING WATER MAKEUP TO THE SSW; BIOCIDE INJECTION SYSTEM; CORROSION INHIBITION SYSTEM; AND RECIRCULATION LINE (ABANDONED IN PLACE).
2. FOR MECHANICAL SYMBOLS AND NOTES SEE DWG M1-0200.
3. DELETED
4. DELETED
5. UNLESS OTHERWISE NOTED ALL DRAINS COLLECTED BY LOCAL DRAIN SYSTEM.
6. THREE INCH Y STRAINERS.
7. DELETED
8. FOR TYPICAL VENT AND DRAIN DETAILS SEE DWG M1-0740-01.
9. UNIT 2 LINE SHALL BE SHIELDED/LAGGED PER THE REQUIREMENTS PROVIDED IN PIPELINE DESIGNATION LIST, CPSES M-1017, PRIOR TO PRESSURIZATION (i.e. START-UP FLUSHING, HYDRO TESTING).
10. SCREEN WASH HEADER SUPPLY CROSSTIE VALVE SSW-0012 IS NORMALLY CLOSED. TRAIN A SCREEN WASH HEADER SUPPLY VALVES 15W-0008 AND 25W-0008 ARE ALIGNED SUCH THAT ONLY ONE VALVE IS OPEN AT A TIME. TRAIN B SCREEN WASH HEADER SUPPLY VALVES 15W-0013 AND 25W-0013 ARE ALIGNED SUCH THAT ONLY ONE VALVE IS OPEN AT A TIME. THUS, TRAIN AND UNIT SEPERATION IS PRESERVED.
11. CHLORINATION HEADER SUPPLY VALVES 15W-0056 , 15W-0057 , 25W-0056 AND 25W-0057 ARE NORMALLY CLOSED, DURING CHLORINATION OPERATIONS, ONLY ONE OF THE FOUR VALVES IS OPENED. THUS PRESERVING TRAIN AND UNIT SEPERATION.
12. THREE (3") INCH Y-STRAINERS. STRAINERS CP2-SWSRPL-01 CP2-SWSRPL-02 , CP2-SWSRPL-03 AND CP2-SWSRPL-04 SHALL HAVE 40 MESH BASKETS AMD STRAINERS CP2-SWSRPL-05 , CP2-SWSRPL-06 , CP2-SWSRPL-07 AND CP2-SWSRPL-08 SHALL HAVE 325 MESH BASKETS
13. 25W-0486 AND 25W-0003 TO BE USED AS THROTTLING VALVES AND THEN LOCKED IN POSITION.
14. CROSS-CONNECT OPERABILITY FOR GDC-5 AND GDC-44

CONDITION	UNIT (MODE 1-4) TRAIN 2SOL VLV.	UNIT (MODE 1-4) TRAIN 2SOL VLV.	CROSSTIE SSW-0006 1SOL VLV.	UNIT (MODE 1-4) TRAIN 1SOL VLV.	UNIT (MODE 1-4) TRAIN 1SOL VLV.
a. NORMAL	NC*	NC*	LC*	NC*	NC*
b. 1 TRAIN ISOLATION VALVE OPEN	LO	LC	LC*	NC*	NC*
c. THE UNIT CROSSTIE ISOLATION VALVE OPEN	LC*	LC*	LO	NC*	NC*
d. b + c	LO	LC	LO	LC*	LC*
e. 1 TRAIN ISOLATION VALVE OPEN ON EACH UNIT	LO	LC	LC*	LO	LC

* VALVES MAY BE CYCLED ONE AT A TIME IN ACCORDANCE WITH TECHNICAL SPECIFICATION 3.7.8 REQUIREMENTS AS DESCRIBED IN THE LCO BASES.

15. CHECK VALVE INTERNALS REMOVED, VALVE BODY ABANDONED IN PLACE.
16. ALL COMPONENTS ON THIS DRAWING ARE LOCATED INSIDE THE PUMP HOUSE. SEE M1-0233 FOR UNIT 1 COMPONENTS ALSO LOCATED IN THE SAME PUMP HOUSE.
17. PROCESS TUBING IS ROUTED INSIDE CPVC OR PVC PIPE.
18. PROCESS TUBING IS ROUTED INSIDE METALLIC PIPE, PIPE ACTS AS A FIRE BREAK.

FSAR FIGURE 9.2-1

THIS DRAWING CAN BE AUTHED BY TRONICALLY

DRAWING M2-0233 REV CP-2
HAS BEEN SPLIT INTO THE FOLLOWING SHEETS:

M2-0233
M2-0233-A

CLASS I
(NUCLEAR SAFETY-RELATED)
SAFETY CLASS 1 SEISMIC CATEGORY I
SAFETY CLASS 2 ASSOCIATED CIRCUITS
SAFETY CLASS 3

TXU ENERGY
CPSES
GLEN ROSE, TEXAS

FLOW DIAGRAM
STATION SERVICE WATER
SYSTEM

DWG. NO. M2-0233 | SH. NO. - | REV. CP-19

REF CKD CP-11 2/10/08

$$$$$$$$DATE$$$$$$$$

ma592100.dgn A M2-0233 B C D E F G H

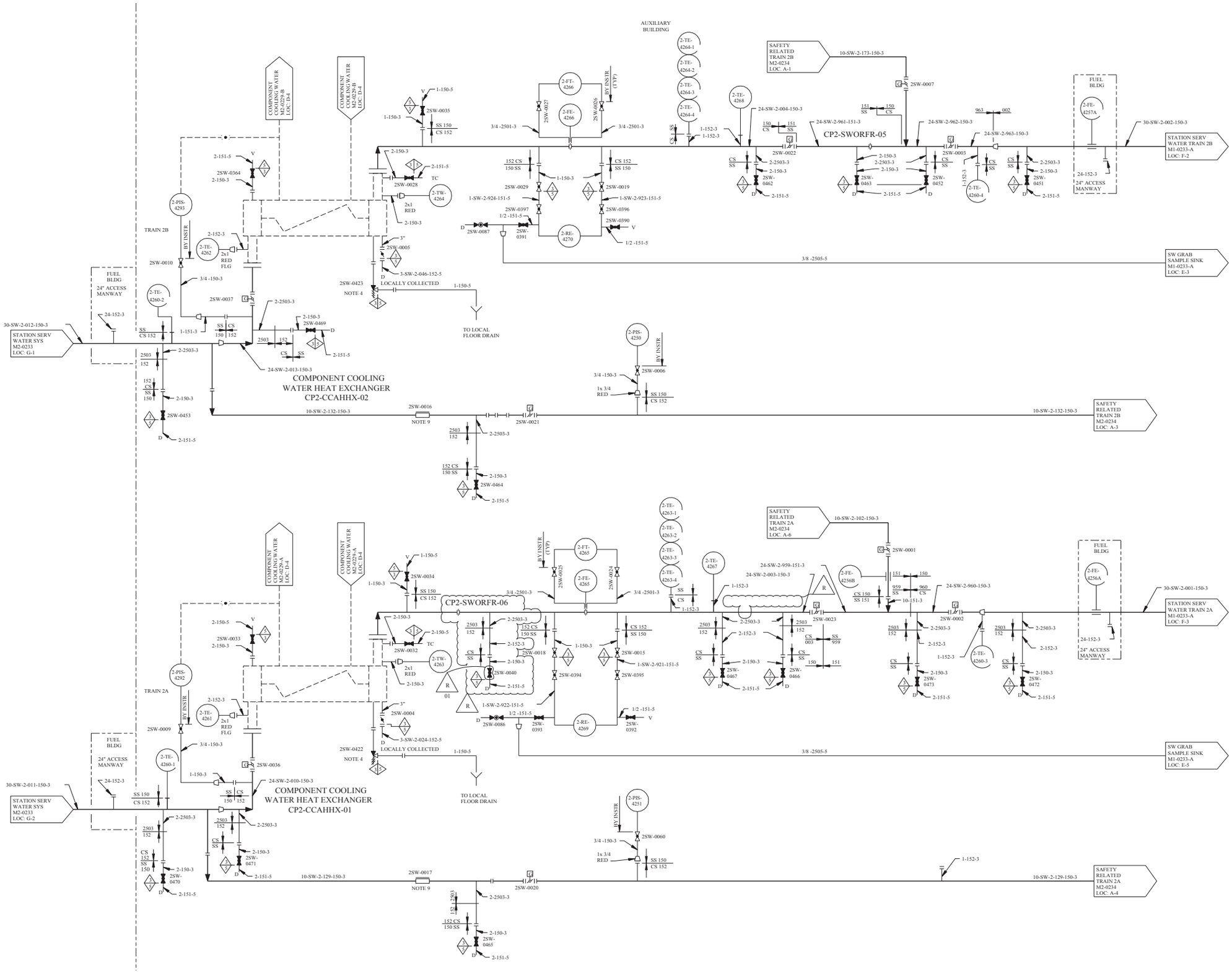

REV	DWN	CHKD	APVD	REMARKS
CP-8	MM 03-10 2008	MHF 03-10 2008		THIS DRAWING REVISED TO INCORPORATE DESIGN CHANGE FDA 2001-000461-02-01 PER SK-00011-01-000461-02-01.

NOTES:

1. THIS SYSTEM IS NUCLEAR SAFETY CLASS 3 EXCEPT FOR THE FOLLOWING, WHICH ARE NON-NUCLEAR SAFETY RELATED:
   CHLORINATION PIPING AND ASSOCIATED COMPONENTS, INCLUDING SPARGERS;
   SCREEN WASH PUMPS AND ASSOCIATED PIPING AND COMPONENTS;
   CIRCULATING WATER MAKEUP TO THE SSI;
   BIOCIDE INJECTION SYSTEM; AND
   RECIRCULATION LINE (ABANDONED IN PLACE).
2. FOR MECHANICAL SYMBOLS AND NOTES SEE DWG M1-0200.
3. DELETED
4. RELIEF VALVE SUPPLIED WITH THE HEAT EXCHANGER.
5. UNLESS OTHERWISE NOTED ALL DRAINS COLLECTED BY LOCAL DRAIN SYSTEM.
6. DELETED
7. DELETED
8. FOR TYPICAL VENT AND DRAIN DETAILS SEE DWG M1-0740-01.
9. CHECK VALVE INTERNAL REMOVED, VALVE BODY ABANDONED IN PLACE.

FSAR FIGURE 9.2-1

THIS DRAWING CREATED ELECTRONICALLY

DRAWING M2-0233 REV CP-2
HAS BEEN SPLIT INTO THE FOLLOWING SHEETS:
M2-0233
M2-0233-A

CLASS I
(NUCLEAR SAFETY-RELATED)
SAFETY CLASS 1 / SAFETY CLASS 2 / SAFETY CLASS 3 — SEISMIC CATEGORY I / CLASS 1E / ASSOCIATED CIRCUITS

LUMINANT
CPSES
GLEN ROSE, TEXAS

FLOW DIAGRAM
STATION SERVICE WATER
SYSTEM
SHEET 2 OF 3

DWG. NO. M2-0233 | SH. NO. A | REV. CP-8

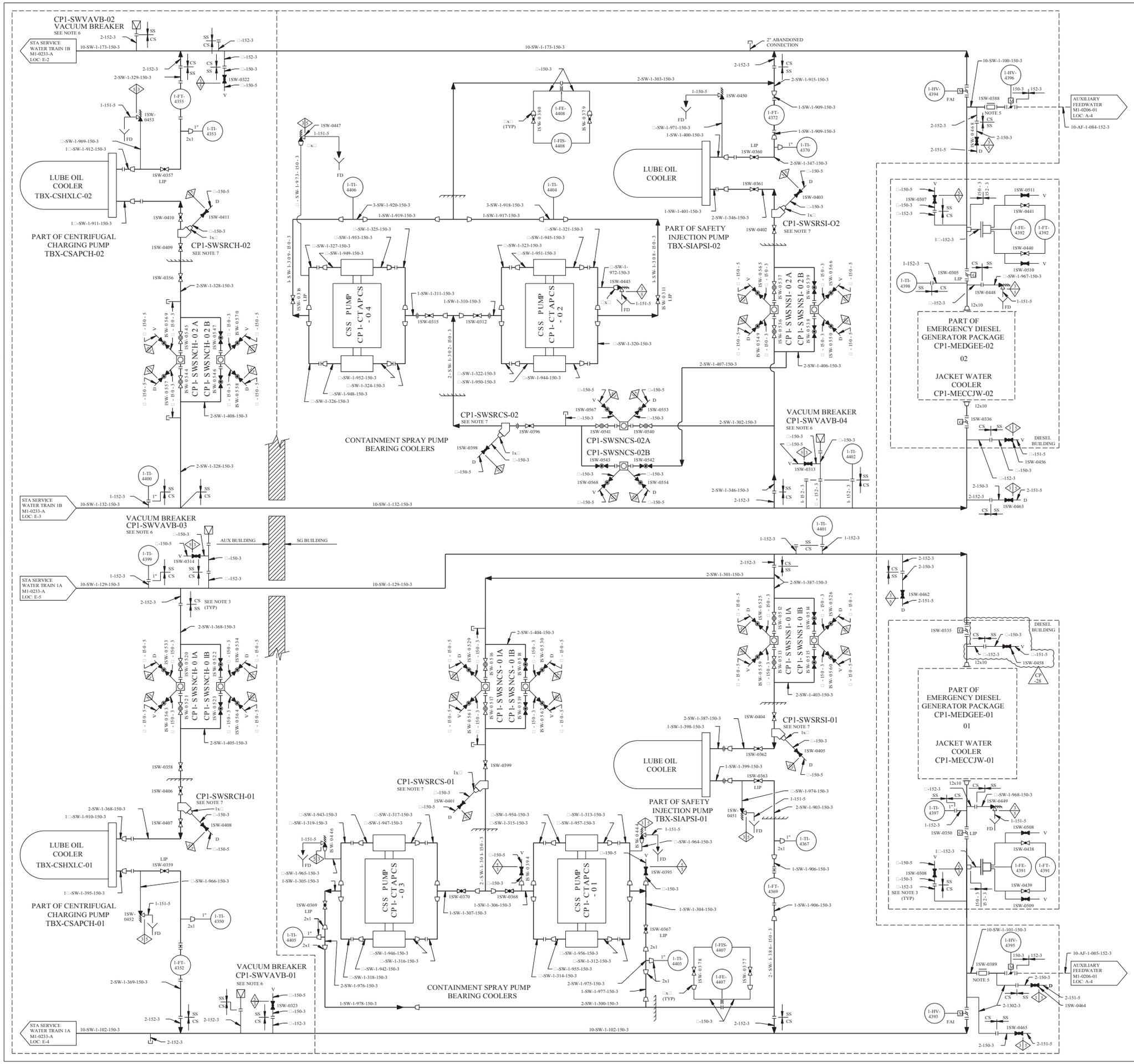

REV	DWN	CHKD	APVD	REMARKS
CP-28	DLK 06-05 2014			THIS DRAWING REVISED TO INCORPORATE AI-CR-2014-006575-1 TO EDITORIALLY CORRECT THE LOCATION OF VENT VALVE 1SW-0458 TO AGREE WITH BRP-SW-1-DG-003 REV CP-5.

NOTES:

1. THIS SYSTEM IS NUCLEAR SAFETY CLASS 3.
2. FOR MECHANICAL SYMBOLS AND NOTES SEE DRAWING M1-0200.
3. 3□" AND SMALLER BRANCH CONNECTIONS TO MAIN LINES SHALL BE IN ACCORDANCE WITH THE DETAIL ON DRAWING M1-1103-01 (ZONE F-6). INSTRUMENTATION CONNECTIONS SHALL BE IN ACCORDANCE WITH SKETCHES XA-2323-M-309 AND XA-2323-M-757.
4. UNLESS OTHERWISE NOTED ALL DRAINS TO BE COLLECTED LOCALLY UNDER ADMINISTRATIVE CONTROL.
5. CHECK VALVE INTERNALS ARE REMOVED, VALVE BODIES ARE ABANDONED IN PLACE.
6. VACUUM BREAKER SET POINT 1 0.5 PSID.
7. Y-STRAINER SCREEN HAS BEEN REMOVED FOR CP1-SWSRCH-01, CP1-SWSRCH-02, CP1-SWSRCS-01, CP1-SWSRCS-02, CP1-SWSRSI-01 AND CP1-SWSRSI-02.
8. DELETED

FSAR FIGURE 9.2-1

THIS DRAWING CREATED ELECTRONICALLY

CLASS I
(NUCLEAR SAFETY-RELATED)
SAFETY CLASS 1 — SEISMIC CATEGORY I
SAFETY CLASS 2 — CLASS 1E
SAFETY CLASS 3 — ASSOCIATED CIRCUITS

LUMINANT
CPNPP
GLEN ROSE, TEXAS

FLOW DIAGRAM
STATION SERVICE WATER
SYSTEM

DWG. NO. M1-0234 | SH. NO. - | REV. CP-28

< FINAL PRINT >

me103910.dgn M1-0234

REF CKD 8-5-98 CP-21

$$$$$$$DATE$$$$$$

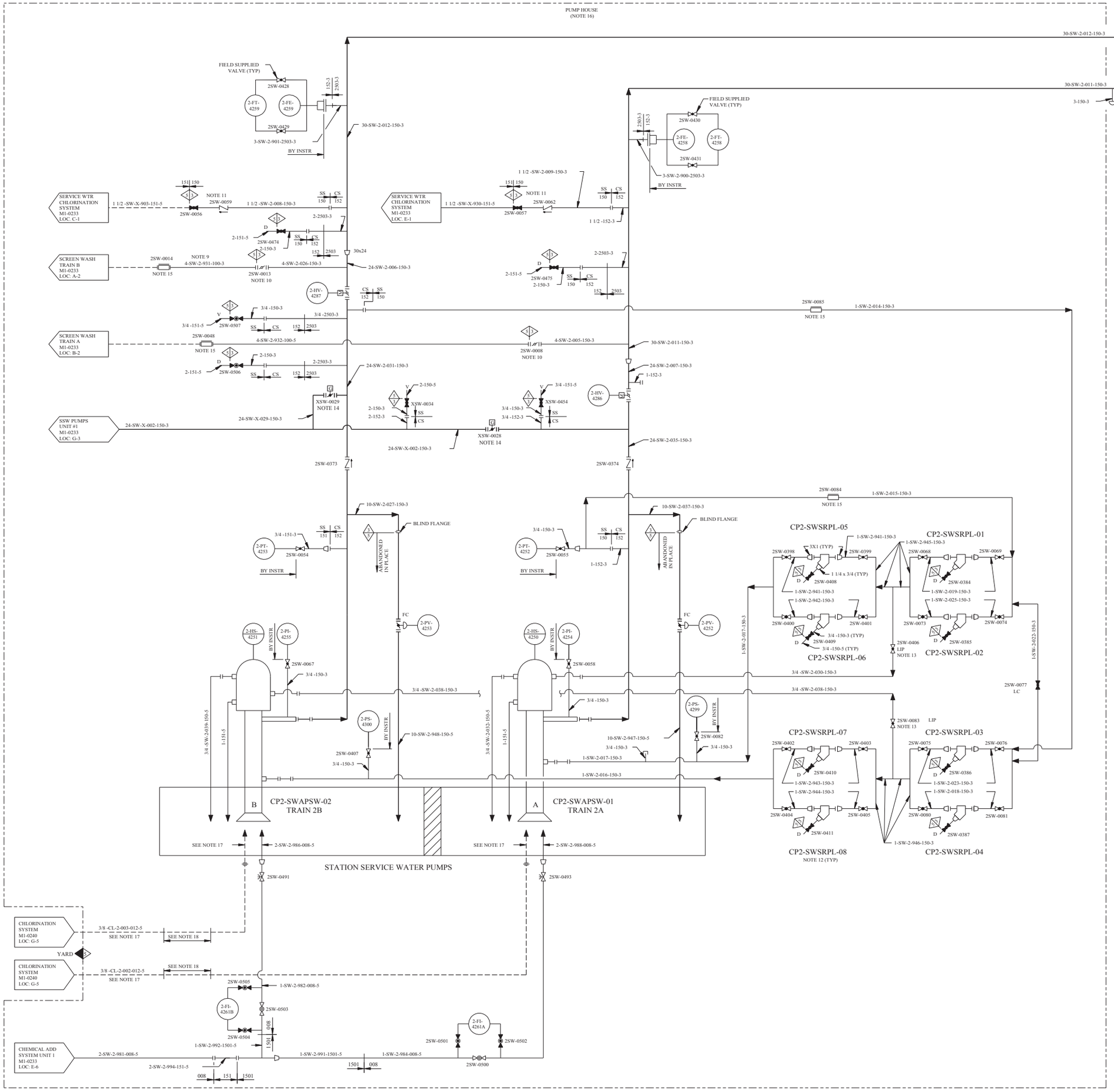

REV	DWN	CHKD	APVD	REMARKS
CP-20	BGG 02-08 2011	DEK 02-02 2011		THIS DRAWING REVISED TO INCORPORATE DESIGN CHANGE FDA 2006-000911-01-00 PER SK-0001-06-000911-01-00.

NOTES:

1. THIS SYSTEM IS NUCLEAR SAFETY CLASS 3 EXCEPT FOR THE FOLLOWING, WHICH ARE NON-NUCLEAR SAFETY RELATED:
   CHLORINATION PIPING AND ASSOCIATED COMPONENTS, INCLUDING SPARGERS;
   SCREEN WASH PUMPS AND ASSOCIATED PIPING AND COMPONENTS;
   CIRCULATING WATER MAKEUP TO THE SSI;
   BIOCIDE INJECTION SYSTEM; CORROSION INHIBITION SYSTEM; AND RECIRCULATION LINE (ABANDONED IN PLACE).
2. FOR MECHANICAL SYMBOLS AND NOTES SEE DWG M1-0200.
3. DELETED
4. DELETED
5. UNLESS OTHERWISE NOTED ALL DRAINS COLLECTED BY LOCAL DRAIN SYSTEM.
6. THREE INCH Y STRAINERS.
7. DELETED
8. FOR TYPICAL VENT AND DRAIN DETAILS SEE DWG M1-0740-01.
9. UNIT 2 LINE SHALL BE SHIELDED/LAGGED PER THE REQUIREMENTS PROVIDED IN PIPELINE DESGINATION LIST, CPSES-M-1017, PRIOR TO PRESSURIZATION (i.e. START-UP FLUSHING, HYDRO TESTING).
10. SCREEN WASH HEADER SUPPLY CROSSTIE VALVE XSW-0012 IS NORMALLY CLOSED. TRAIN A SCREEN WASH HEADER SUPPLY VALVES 1SW-0008 AND 2SW-0008 ARE ALIGNED SUCH THAT ONLY ONE VALVE IS OPEN AT A TIME TRAIN B SCREEN WASH HEADER SUPPLY VALVES 1SW-0013 AND 2SW-0013 ARE ALIGNED SUCH THAT ONLY ONE VALVE IS OPEN AT A TIME. THUS, TRAIN AND UNIT SEPERATION IS PRESERVED.
11. CHLORINATION HEADER SUPPLY VALVES 1SW-0056 , 1SW-0057 , 2SW-0056 AND 2SW-0057 ARE NORMALLY CLOSED, DURING CHLORINATION OPERATIONS, ONLY ONE OF THE FOUR VALVES IS OPENED. THUS PRESERVING TRAIN AND UNIT SEPERATION.
12. THREE (3") INCH Y-STRAINERS. STRAINERS CP2-SWSRPL-01 , CP2-SWSRPL-02 , CP2-SWSRPL-03 AND CP2-SWSRPL-04 SHALL HAVE 40 MESH BASKETS MINIMUM AND STRAINERS CP2-SWSRPL-05 CP2-SWSRPL-06 , CP2-SWSRPL-07 AND CP2-SWSRPL-08 SHALL HAVE 200 MESH BASKETS MINIMUM. R
13. 2SW-0406 AND 2SW-0083 TO BE USED AS THROTTLING VALVES AND THEN LOCKED IN POSITION.
14. CROSS-CONNECT OPERABILITY FOR GDC-5 AND GDC-44

CONDITION	UNIT (MODE 1-4) TRAIN ISOL VLV	UNIT (MODE 1-4) TRAIN ISOL VLV	CROSSTIE XSW-0006 ISOL VLV	UNIT (MODE 1-4) TRAIN ISOL VLV	UNIT (MODE 1-4) TRAIN ISOL VLV
a. NORMAL	NC*	NC*	LC*	NC*	NC*
b. 1 TRAIN ISOLATION ISOLATION VALVE OPEN	LO	LC	LC*	NC*	NC*
c. THE UNIT CROSSTIE ISOLATION VALVE OPEN	LC*	LC*	LO	NC*	NC*
d. b + c	LO	LC	LO	LC*	LC*
e. 1 TRAIN ISOLATION VALVE OPEN ON EACH UNIT	LO	LC	LC*	LO	LC

* VALVES MAY BE CYCLED ONE AT A TIME IN ACCORDANCE WITH TECHNICAL SPECIFICATION 3.7.8 REQUIREMENTS AS DESCRIBED IN THE LCO BASES.

15. CHECK VALVE INTERNALS REMOVED, VALVE BODY ABANDONED IN PLACE.
16. ALL COMPONENTS ON THIS DRAWING ARE LOCATED INSIDE THE PUMP HOUSE. SEE M1-0233 FOR UNIT 1 COMPONENTS ALSO LOCATED IN THE SAME PUMP HOUSE.
17. PROCESS TUBING IS ROUTED INSIDE CPVC OR PVC PIPE.
18. PROCESS TUBING IS ROUTED INSIDE METALLIC PIPE, PIPE ACTS AS A FIRE BREAK.

FSAR FIGURE 9.2-1

THIS DRAWING CREATED ELECTRONICALLY

DRAWING M2-0233 REV CP-2
HAS BEEN SPLIT INTO THE FOLLOWING SHEETS:
M2-0233
M2-0233-A

CLASS I
(NUCLEAR SAFETY-RELATED)
SAFETY CLASS 1 / SAFETY CLASS 2 / SAFETY CLASS 3 — SEISMIC CATEGORY I / CLASS 1E / ASSOCIATED CIRCUITS

LUMINANT
CPNPP
GLEN ROSE, TEXAS

FLOW DIAGRAM
STATION SERVICE WATER
SYSTEM

DWG. NO. M2-0233 | SH. NO. - | REV. CP-20

FINAL PRINT

REF CKD CP-11 2/19/98

mc102890.dgn A M2-0233

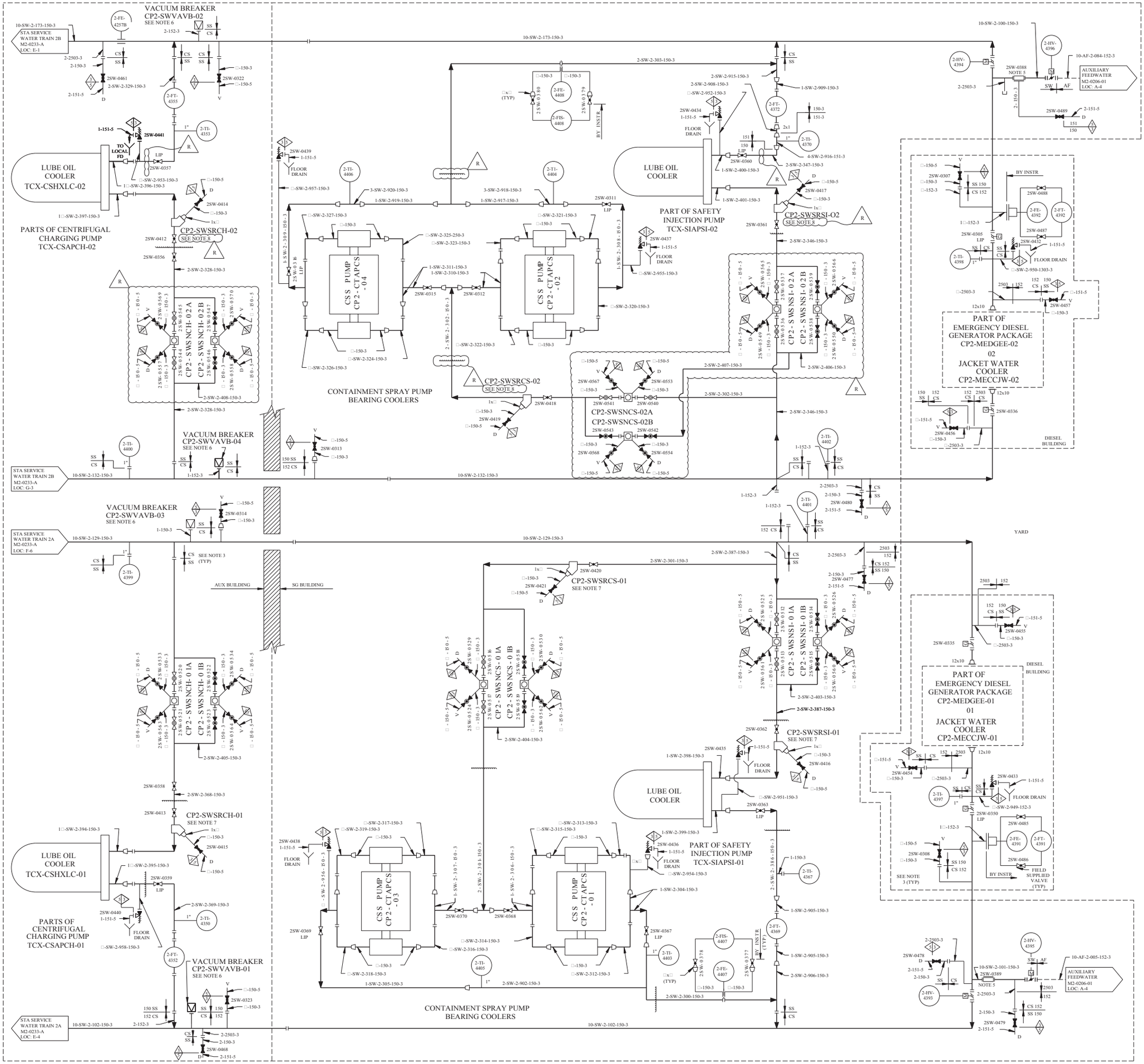

REV	DWN	CHKD	APVD	REMARKS
CP-11	JRMC 11-01-2012	EES 11-01-2012		THIS DRAWING REVISED TO INCORPORATE DESIGN CHANGE FDA 2009-001570-06-00 PER SK-0001-09-001570-06-00.

NOTES:

1. THIS SYSTEM IS NUCLEAR SAFETY CLASS 3.
2. FOR MECHANICAL SYMBOLS AND NOTES SEE DRAWING M1-0200.
3. 3□" AND SMALLER BRANCH CONNECTIONS TO MAIN LINES SHALL BE IN ACCORDANCE WITH THE DETAIL ON DRAWING M2-1103-01 INSTRUMENTATION CONNECTIONS SHALL BE IN ACCORDANCE WITH SKETCHES XA-2323-M-309 AND XA-2323-M-757.
4. ALL DRAINS SHALL BE COLLECTED IN LOCAL DRAIN SYSTEM UNLESS OTHERWISE SPECIFIED.
5. CHECK VALVE INTERNALS ARE REMOVED, VALVE BODIES ARE ABANDONED IN PLACE.
6. VACUUM BREAKER SET POINT 1 0.5 PSID.
7. Y-STRAINER SCREEN HAS BEEN REMOVED FOR CP2-SWSRCS-01, CP2-SWSRSI-01, CP2-SWSRCH-01, CP2-SWSRCS-02 CP2-SWSRSI-02.
8. Y-STRAINER SCREEN HAS BEEN REMOVED FOR CP2-SWSRCS-02, CP2-SWSRSI-02, CP2-SWSRCH-02.

R

FSAR FIGURE 9.2-1

THIS DRAWING CREATED ELECTRONICALLY

CLASS I
(NUCLEAR SAFETY-RELATED)
SAFETY CLASS 1 — SEISMIC CATEGORY I
SAFETY CLASS 2 — CLASS 1E
SAFETY CLASS 3 — ASSOCIATED CIRCUITS

LUMINANT
CPNPP
GLEN ROSE, TEXAS

FLOW DIAGRAM
STATION SERVICE WATER
SYSTEM

DWG. NO.	SH. NO.	REV.
M2-0234	-	CP-11

REF CHKD 6/19/2001

SSSSSSSDATESSSSSS

REV	DWN	CHKD	APVD	REMARKS
CP-16	DLK 05-28-2015	MM 06-08-2015	MHF 06-09-2015	THIS DRAWING REVISED TO INCORPORATE AI-CR-2015-004313-1 TO EDITORIALLY ADD CONTINUATION BLOCK FROM M1-0233.

NOTES:

1. FOR MECHANICAL SYMBOLS AND NOTES SEE DRAWING M1-0200.
2. UNLESS OTHERWISE NOTED ALL DRAINS COLLECTED BY LOCAL DRAIN SYSTEM.
3. DELETED
4. LINE CL-X-205 FROM VALVE XCL-0326 TO ITS DISCHARGE IN THE STATION SERVICE WATER DISCHARGE OPEN CANAL SHALL BE A DOUBLE CONTAINMENT CONFIGURATION CONSISTING OF AN 1□" PVC (009) PIPE WITH □" CPVC (008) INSIDE.

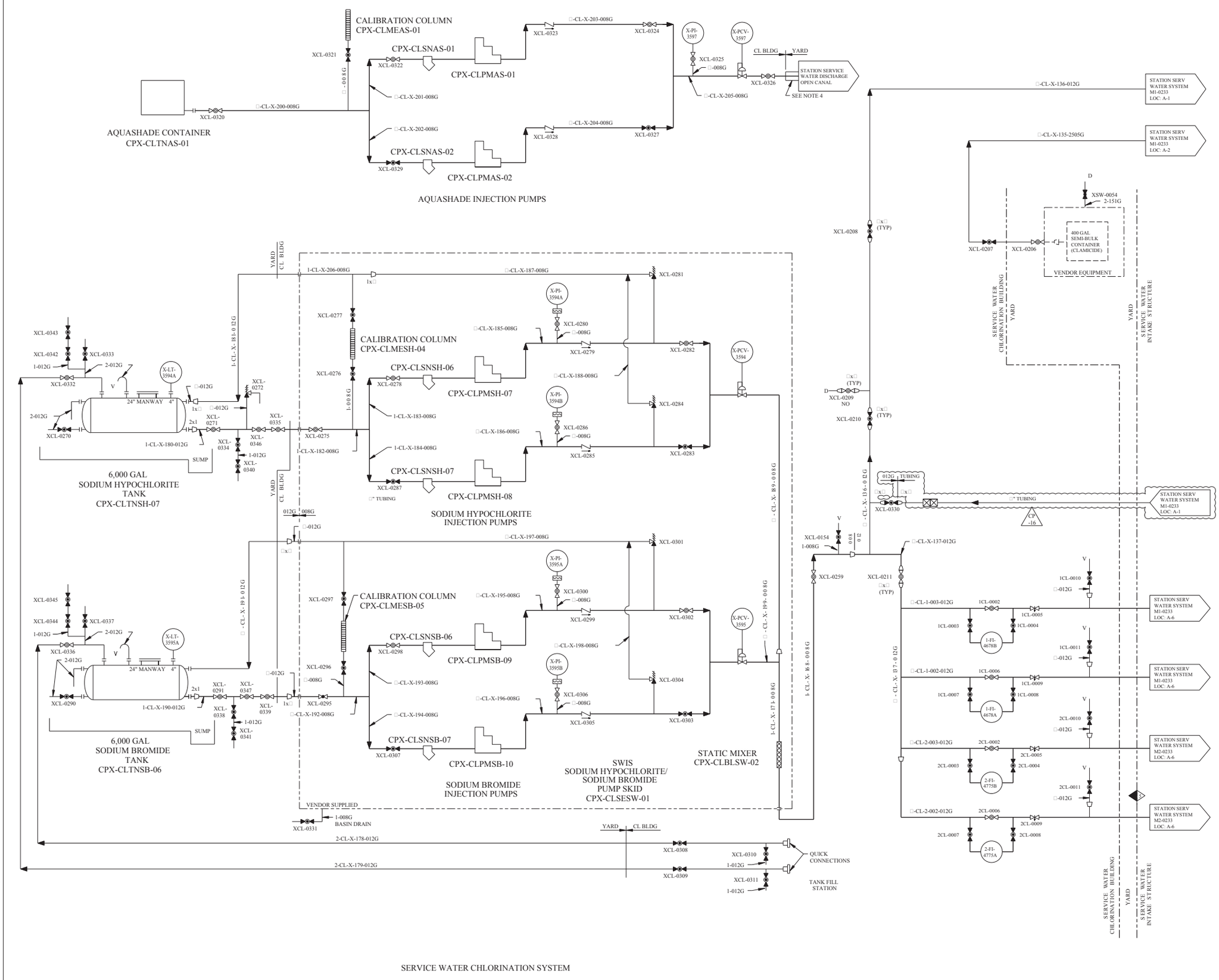

FSAR FIGURE 9.2-1

THIS DRAWING CREATED ELECTRONICALLY

CLASS II

LUMINANT
CPNPP
GLEN ROSE, TEXAS

FLOW DIAGRAM
CHLORINATION SYSTEM

DWG. NO. M1-0240 | SH. NO. - | REV. CP-16

REF CKD 02/24/10 CP-13

$$$$$$$$DATE$$$$$$$$

me994600.dgn

< FINAL PRINT >

Figure 9.2-2 has been deleted.

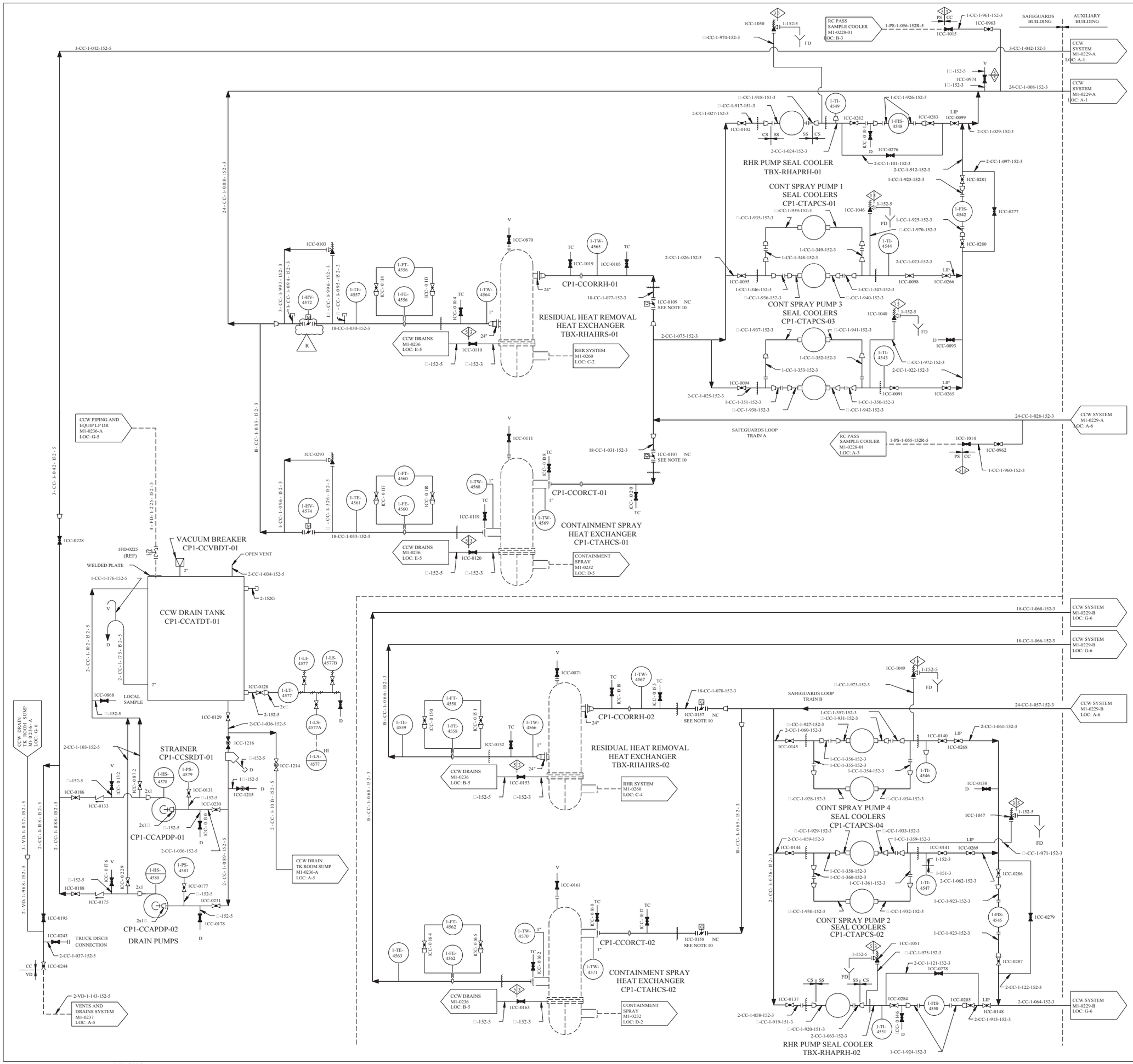

REV	DWN	CHKD	APVD	REMARKS
CP-23	DLK 10-22-2012	GAW 10-22-2012		THIS DRAWING REVISED TO INCORPORATE DESIGN CHANGE: FDA 2012-000187-01-00 PER SK-0001-12-000187-01-00.

NOTES:

1. CCW SYSTEM IS SAFETY CLASS 3 EXCEPT AS NOTED.
2. DELETED
3. DELETED
4. DELETED
5. UNLESS OTHERWISE NOTED, ALL DRAINS TO BE LOCALLY COLLECTED UNDER ADMINISTRATIVE CONTROL.
6. FOR GENERAL NOTES AND SYMBOLS SEE DWG M1-0200.
7. THIS FLOW DIAGRAM SHOWS VALVE POSITIONS UNIT 1 AND 2 IN OPERATION.
8. ALL VALVES IDENTIFIED AS LIP SHALL BE LOCKED IN POSITION IMMEDIATELY AFTER FINAL BALANCING TO ENSURE THROTTLED POSITION IS MAINTAINED.
9. DELETED
10. VALVES 1CC-0107 , 1CC-0109 , 1CC-0157 AND 1CC-0158 HAVE MODIFIED DISCS THAT FUNCTION AS RESTRICTIVE ORIFICES. THEY CANNOT BE USED FOR ISOLATION PURPOSES.

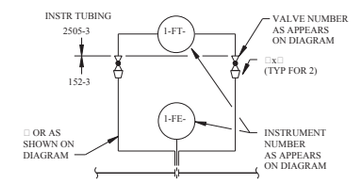

TYPICAL FLOW STATION DETAIL
(UNLESS OTHERWISE NOTED)

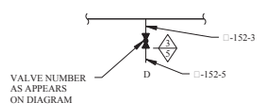

TYPICAL DRAIN DETAIL
(UNLESS OTHERWISE NOTED)

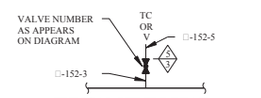

TYPICAL VENT DETAIL
(UNLESS OTHERWISE NOTED)
TYPICAL ALSO FOR TEST CONN (TC)

FSAR FIGURE 9.2-3

THIS DRAWING CREATED ELECTRONICALLY

DRAWING 2323-M1-0229 REV CP-5
HAS BEEN SPLIT INTO THE FOLLOWING SHEETS:

M1-0229
M1-0229-A
M1-0229-B

CLASS I
(NUCLEAR SAFETY-RELATED)
SAFETY CLASS 1 / SAFETY CLASS 2 / SAFETY CLASS 3
SEISMIC CATEGORY I
CLASS 1E
ASSOCIATED CIRCUITS

LUMINANT
CPNPP
GLEN ROSE, TEXAS

FLOW DIAGRAM
COMPONENT COOLING WATER
SYSTEM
SHEET 1 OF 8

DWG. NO. M1-0229 | SH. NO. - | REV. CP-23

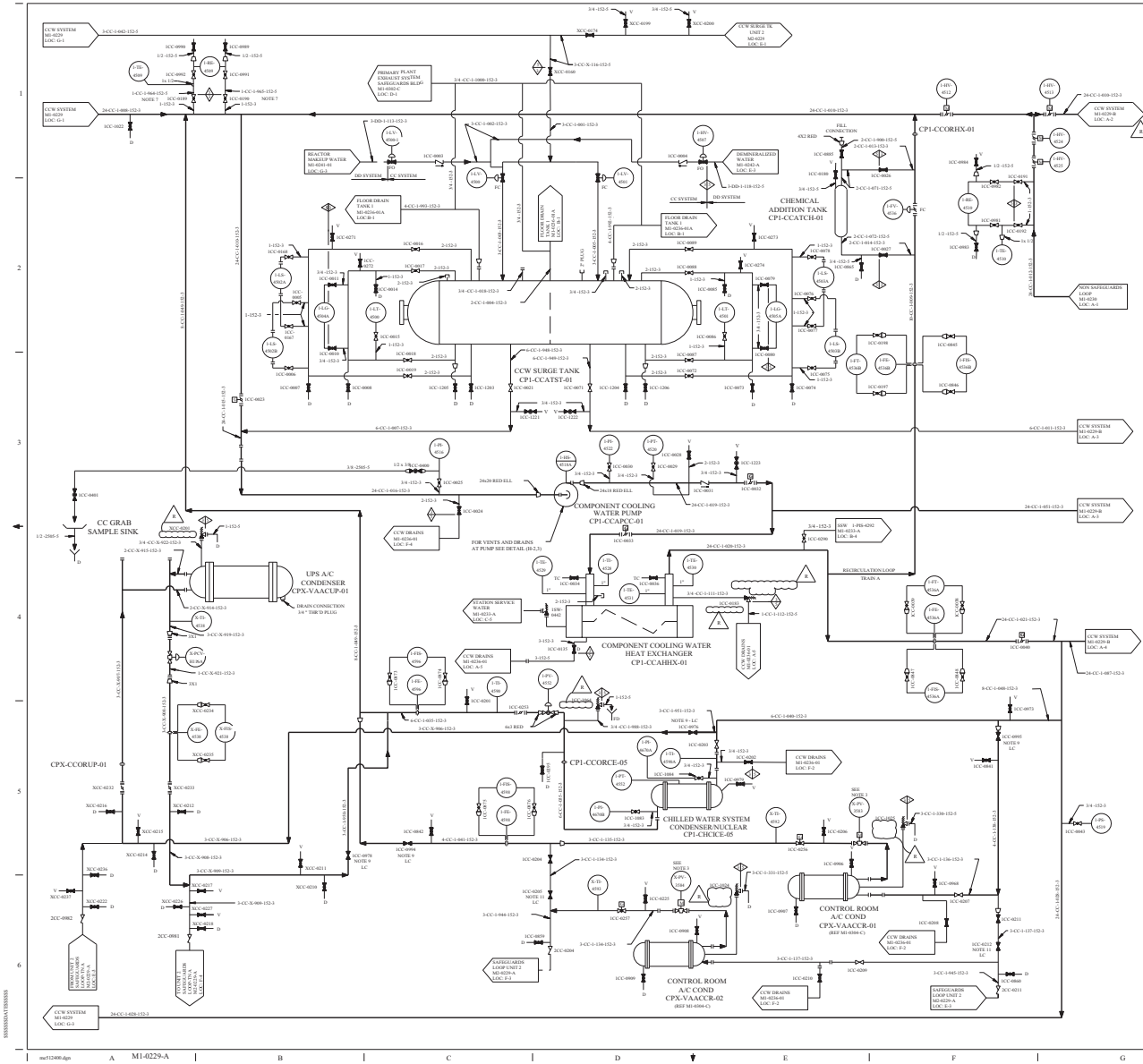

REV.	DRWN	CHKD	APVD	REMARKS
CP-21				THIS DRAWING REVISED TO INCORPORATE DESIGN CHANGE FSA, ESIG-0010-01-01 PER DL-0004-02, 0010-01-01.

NOTES:

1. CCW SYSTEM IS SAFETY CLASS 3 EXCEPT AS NOTED.
2. DELETED
3. PUMPS SUPPLIED BY CVI CORP.
4. UNLESS OTHERWISE NOTED, ALL DRAINS TO BE LOCALLY COLLECTED UNDER ADMINISTRATIVE CONTROL.
5. FOR GENERAL NOTES AND SYMBOLS SEE DWG M1-0200.
6. THIS FLOW DIAGRAM SHOWS VALVES POSITION UNIT 1 AND 2 IN OPERATION.
7. PIPES ARE SEISMICALLY ANALYZED AND SUPPORTED.
8. ALL VALVES IDENTIFIED AS LP SHALL BE LOCKED IN POSITION IMMEDIATELY AFTER FINAL BALANCING TO ENSURE THROTTLED POSITION IS MAINTAINED.
9. THIS IS A UNIT ISOLATION VALVE AND SHALL BE LOCKED CLOSED WHEN CCW IS SUPPLIED FROM UNIT 2. OPEN WHEN SUPPLIED FROM UNIT 1.
10. DELETED
11. THIS VALVE IS A UNIT ISOLATION VALVE WHEN CRAC 1 & 2 ARE SUPPLIED WITH CCW FROM UNIT 1 & 2 RESPECTIVELY AND UNDER THESE CONDITIONS SHALL BE LOCKED CLOSED.
12. DELETED
13. DELETED

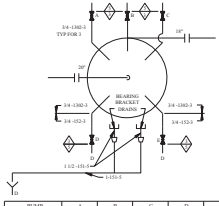

PUMP	A	B	C	D	E
CP1-CCAPCC-01	ICC-0232	ICC-0233	ICC-0234	ICC-0235	ICC-0236

PUMP CP1-CCAPCC-01 VENTS AND DRAINS DETAIL

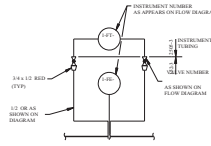

TYPICAL FLOW STATION DETAIL
(UNLESS OTHERWISE NOTED)

TYPICAL DRAIN DETAIL
(UNLESS OTHERWISE NOTED)

TYPICAL VENT DETAIL
(UNLESS OTHERWISE NOTED)
ALSO TYPICAL FOR TEST CONNECTION (TC)

DRAWING 2323-M1-0229 REV CP-5 HAS BEEN SPLIT INTO THE FOLLOWING SHEETS:
M1-0229
M1-0229-A
M1-0229-B

FSAR FIGURE 9.2-3

THIS DRAWING CAN BE ACCESSED ELECTRONICALLY

CLASS I
(NUCLEAR SAFETY-RELATED)
SAFETY CLASS 1 SEISMIC CATEGORY I
SAFETY CLASS 2 QUALITY GROUP A
SAFETY CLASS 3 ASSOCIATED CIRCUITS

TXU POWER
CPSES
GLEN ROSE, TEXAS

FLOW DIAGRAM
COMPONENT COOLING WATER SYSTEM

DWG. NO. M1-0229 SH. NO. A REV. CP-21

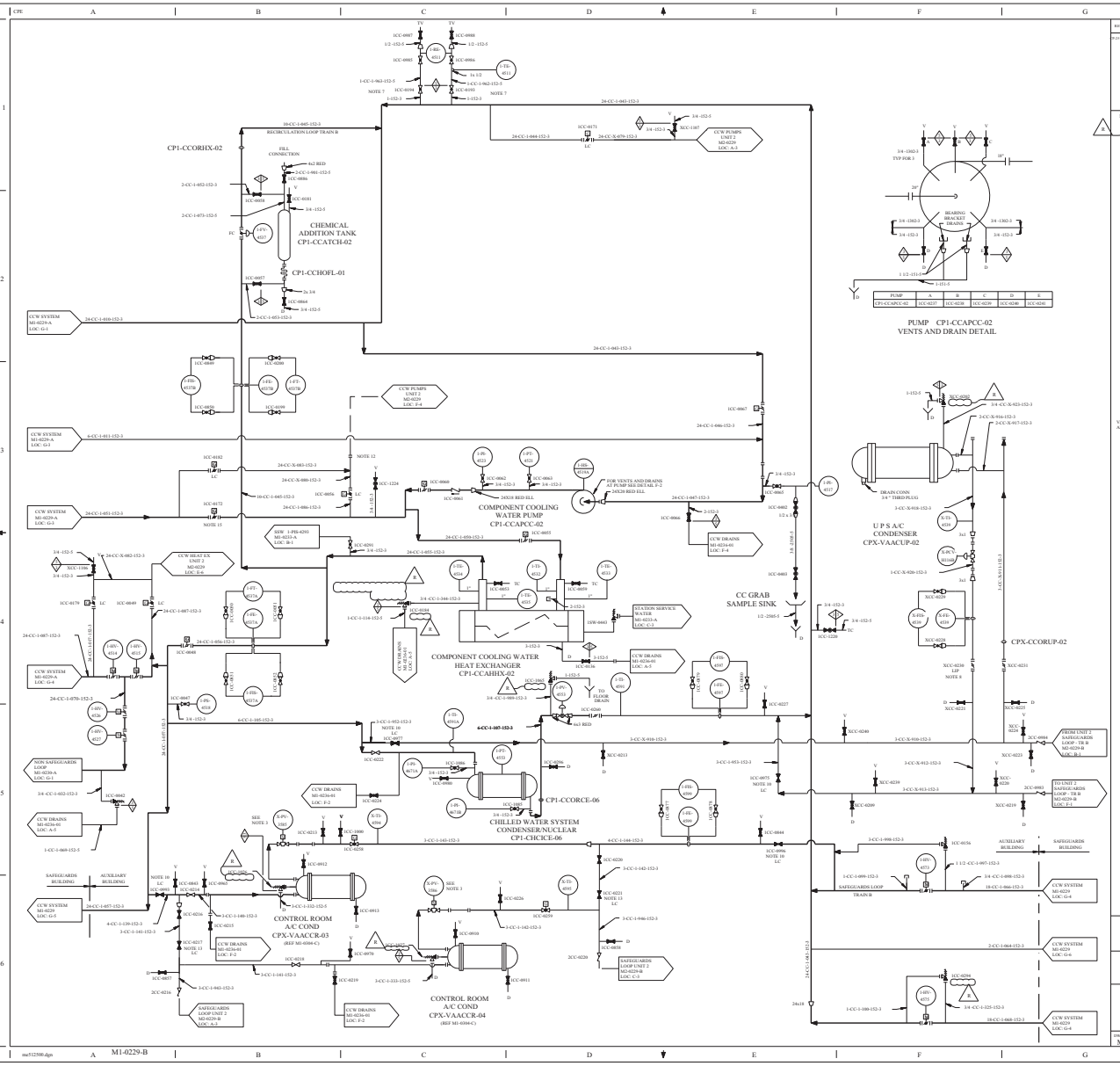

REV	DRWN	CHKD	APVD	REMARKS
CP-21				THIS DRAWING REVISED TO INCORPORATE DESIGN CHANGE FDA-2002-0016-0.01 OR PIRL SR-2000-02-00-0016-01-00.

NOTES:

1. CCW SYSTEM IS SAFETY CLASS 3 EXCEPT AS NOTED.
2. DELETED
3. VALVE SUPPLIED BY CVI CORP.
4. UNLESS OTHERWISE NOTED: ALL DRAINS TO BE LOCALLY COLLECTED UNDER ADMINISTRATIVE CONTROL.
5. FOR GENERAL NOTES AND SYMBOLS SEE DWG M1-0200.
6. THIS FLOW DIAGRAM SHOWS VALVES POSITION UNIT 1 AND 2 IN OPERATION.
7. PIPING HAS BEEN SEISMICALLY ANALYZED AND SUPPORTED.
8. XCC-0230 IS THROTTLED WHEN ALIGNED FOR SERVICE WITH UNIT 1 AND FULL OPENED WHEN ALIGNED FOR SERVICE WITH UNIT 2.
9. DELETED
10. THIS IS A UNIT ISOLATION VALVE AND SHALL BE LOCKED CLOSED WHEN CCW IS SUPPLIED FROM UNIT 2, AND OPEN WHEN SUPPLIED FROM UNIT 1.
11. DELETED
12. BLIND FLANGE INSTALLED.
13. THIS VALVE IS A UNIT ISOLATION VALVE WHEN CRAC 3 & 4 ARE SUPPLIED WITH CCW FROM UNIT 1 & 2 RESPECTIVELY AND UNDER THESE CONDITIONS SHALL BE LOCKED CLOSED.
14. DELETED
15. ICC-0172 CAN NOT BE OPENED. THE VALVE HAS BEEN SEAL WELDED IN THE CLOSED POSITION AND THE HANDWHEEL HAS BEEN REMOVED.
16. DELETED

PUMP	A	B	C	D	E
CP1-CCAPCC-02	ICC-0237	ICC-0238	ICC-0239	ICC-0240	ICC-0241

THIS DRAWING CONTAINS ATTACHED FILE(S) PERMANENTLY

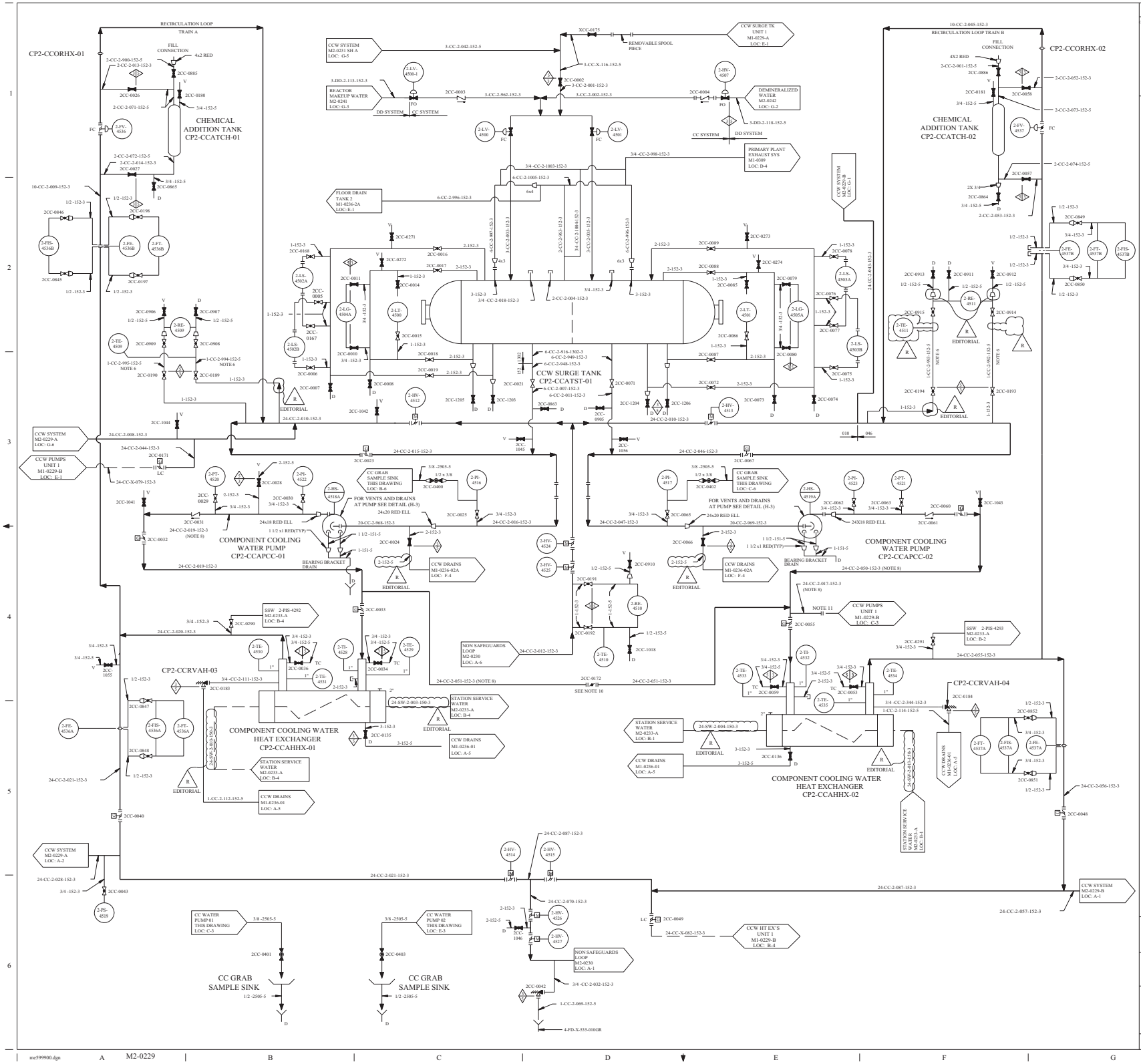

REV	DWN	CHKD	APVD	REMARKS
CP-19	MRC 10-04-2005	DLA 10-04-2005		THIS DRAWING REVISED TO INCORPORATE DESIGN CHANGE FDA-2004-002952-01-00 PER SK-0001-04-002952-01-00. EDITORIAL CHANGES AS NOTED.

NOTES:

1. CCW SYSTEM IS SAFETY CLASS 3 EXCEPT AS NOTED.
2. DELETED
3. UNLESS OTHERWISE NOTED ALL DRAINS TO BE LOCALLY COLLECTED UNDER ADMINISTRATIVE CONTROL.
4. FLOW INDICATED AT ALL TEST CONNECTIONS. VENTS AND DRAINS SHOULD BE DIRECTED AWAY FROM THE PROCESS PIPING.
5. DURING UNIT 2 CONSTRUCTION, UNIT 2 PIPING IS TO BE PHYSICALLY ISOLATED FROM UNIT 1 PIPING BY REMOVAL OF A SPOOL PIECE TO PROVIDE AN INTERIM PIPING CONFIGURATION. BLIND FLANGES SHALL BE INSTALLED AS INDICATED ON DETAIL Y ON THE PIPING ISOMETRIC DRAWINGS. THE SPOOL PIECE, AFTER REMOVAL, SHALL BE STORED AS REQUIRED UNTIL RE-INSTALLATION.
6. PIPING HAS BEEN SEISMICALLY ANALYZED AND SUPPORTED.
7. DELETED
8. UNIT 2 LINE SHALL BE SHIELDED/LAGGED PER THE REQUIREMENTS PROVIDED IN PIPELINE DESIGNATION LIST, CPES-M-1017, PRIOR TO PRESSURIZATION (i.e. START-UP FLUSHING, HYDRO TESTING).
9. FOR MECHANICAL SYMBOLS AND NOTES SEE M1-0200.
10. 2CC-0172 CANNOT BE OPENED. THE VALVE HAS BEEN SEAL WELDED IN THE CLOSED POSITION AND THE HANDWHEEL HAS BEEN REMOVED.
11. BLIND FLANGE INSTALLED.
12. DELETED
13. DELETED

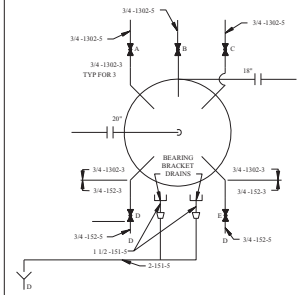

PUMP	A	B	C	D	E
CP2-CCAPCC-01	2CC-0232	2CC-0233	2CC-0234	2CC-0235	2CC-0236
CP2-CCAPCC-02	2CC-0237	2CC-0238	2CC-0239	2CC-0240	2CC-0241

PUMPS CP2-CCAPCC-01/02
VENTS AND DRAINS DETAIL

TYPICAL VENT CONNECTION
(UNLESS OTHERWISE NOTED)

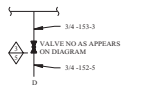

TYPICAL DRAIN CONNECTION
(UNLESS OTHERWISE NOTED)

FSAR FIGURE 9.2-3

THIS DRAWING CREATED ELECTRONICALLY

DRAWING 2323-M2-0229 REV CP-4
HAS BEEN SPLIT INTO THE FOLLOWING SHEETS:
M2-0229
M2-0229-A
M2-0229-B

CLASS I
(NUCLEAR SAFETY-RELATED)
SAFETY CLASS 1 — SEISMIC CATEGORY I
SAFETY CLASS 2 — CLASS 1E
SAFETY CLASS 3 — ASSOCIATED CIRCUITS

TXU POWER
CPSES
GLEN ROSE, TEXAS

FLOW DIAGRAM
COMPONENT COOLING WATER
SYSTEM

DWG. NO. M2-0229 | SH. NO. - | REV. CP-19

FINAL PRINT

REF CKD 11/25/97 CP-13

me599900.dgn M2-0229

REV	DWN	CHKD	APVD	REMARKS
CP-14	DLK 10-22-2012	GAW 10-22-2012		THIS DRAWING REVISED TO INCORPORATE DESIGN CHANGE: FDA 2012-000187-01-00 PER SK-0003-12-000187-01-00.

NOTES:

1. CCW SYSTEM IS SAFETY CLASS 3 EXCEPT AS NOTED.
2. FLOW INDICATED AT ALL TEST CONNECTIONS, VENTS AND DRAINS SHOULD BE DIRECTED AWAY FROM THE PROCESS PIPING.
3. DELETED
4. UNLESS OTHERWISE NOTED, ALL DRAINS TO BE LOCALLY COLLECTED UNDER ADMINISTRATIVE CONTROL.
5. ALL VALVES IDENTIFIED AS LIP SHALL BE LOCKED IN POSITION IMMEDIATELY AFTER FINAL BALANCING TO ENSURE THROTTLED POSITION IS MAINTAINED.
6. DELETED
7. FOR MECHANICAL SYMBOLS AND NOTES SEE M1-0200.
8. THIS IS A UNIT ISOLATION VALVE WHICH SHALL BE LOCKED CLOSED WHEN CCW IS SUPPLIED FROM UNIT 1, AND OPEN WHEN SUPPLIED FROM UNIT 2.
9. DELETED
10. VALVES 2CC-0197 2CC-0198 HAVE MODIFIED DISCS THAT FUNCTION AS RESTRICTIVE ORIFICES. THEY CANNOT BE USED FOR ISOLATION PURPOSES.

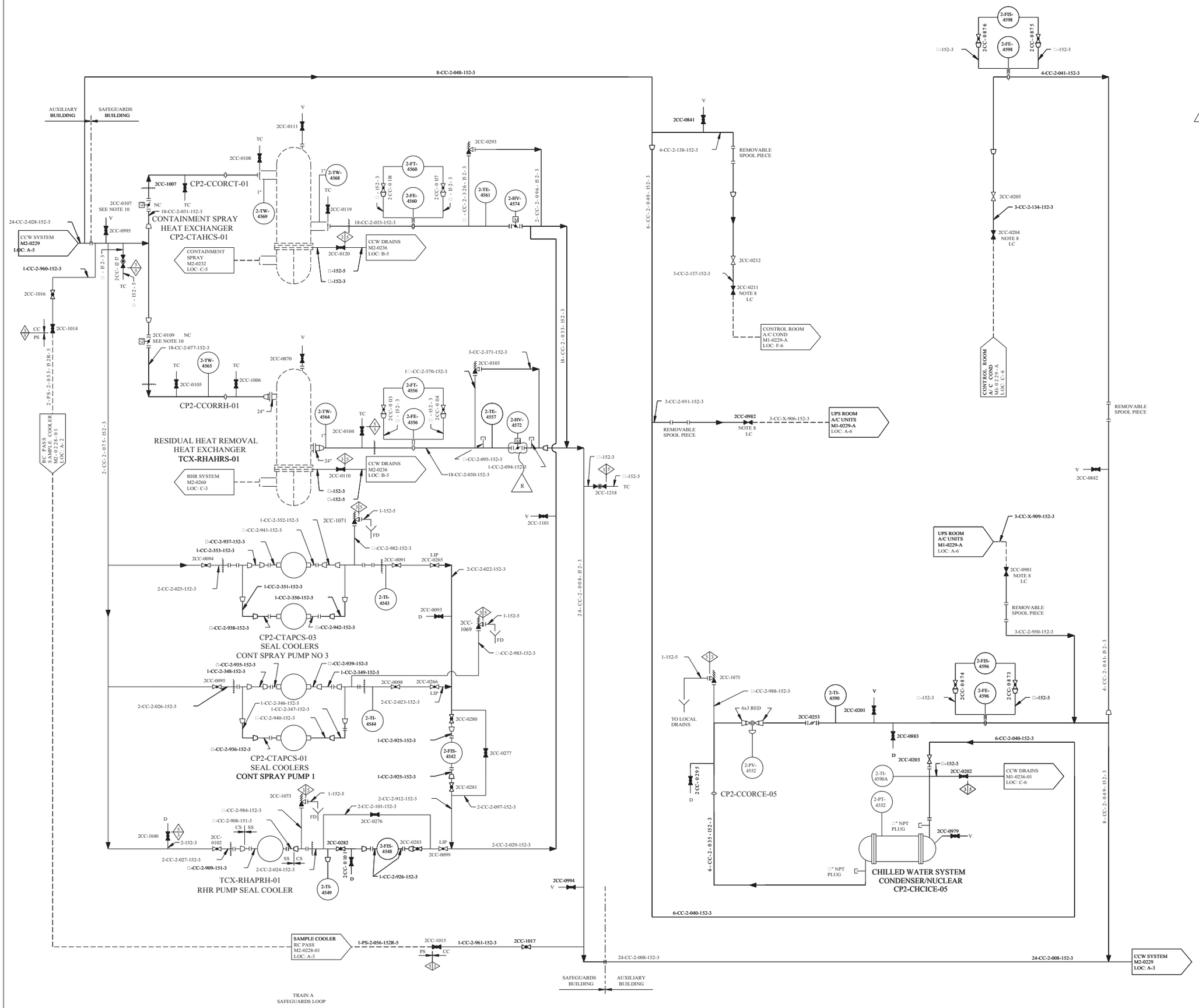

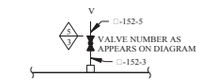

TYPICAL VENT DETAIL
(UNLESS OTHERWISE NOTED)

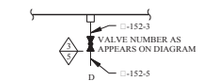

TYPICAL DRAIN DETAIL
(UNLESS OTHERWISE NOTED)

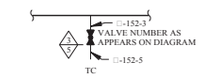

TYPICAL TEST CONNECTION DETAIL
(UNLESS OTHERWISE NOTED)

FSAR FIGURE 9.2-3

THIS DRAWING CREATED ELECTRONICALLY

DRAWING 2323-M2-0229	REV CP-4
HAS BEEN SPLIT INTO THE FOLLOWING SHEETS:	
M2-0229	
M2-0229-A	
M2-0229-B	

CLASS I
(NUCLEAR SAFETY-RELATED)

SAFETY CLASS 1	SEISMIC CATEGORY I
SAFETY CLASS 2	CLASS 1E
SAFETY CLASS 3	ASSOCIATED CIRCUITS

LUMINANT
CPNPP
GLEN ROSE, TEXAS

FLOW DIAGRAM
COMPONENT COOLING WATER SYSTEM
SHEET 2 OF 7

DWG. NO.	SH. NO.	REV.
M2-0229	A	CP-14

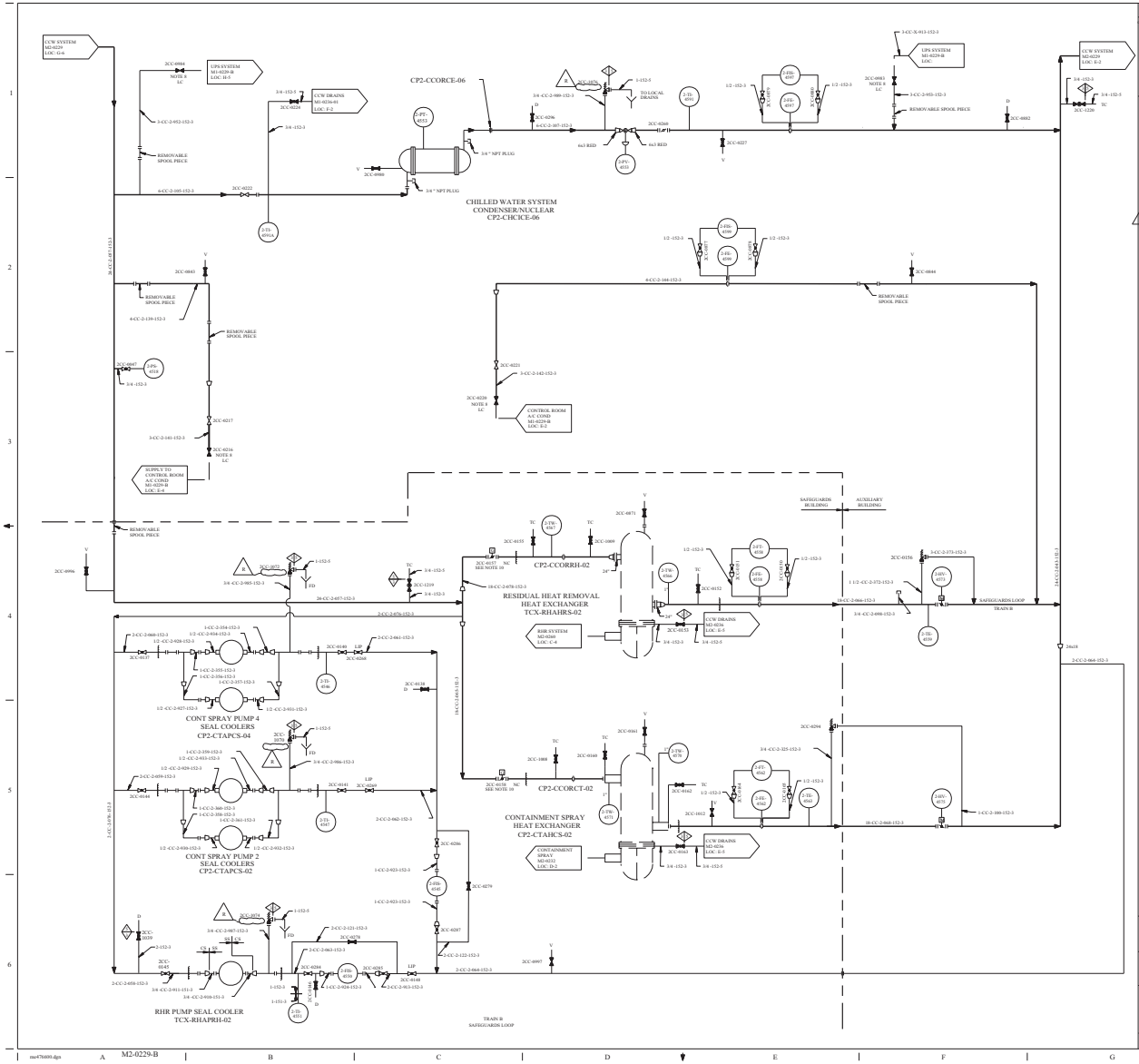

REV	DRWN	CHKD	APVD	REMARKS
CP-15	MAR 2002	MAR 2002	MAR 2002	THIS DRAWING REVISED TO INCORPORATE DESIGN CHANGE FDA 2002-00163-L00-00 PER SE-0600-02-00010-00-00

NOTES:

1. CCW SYSTEM IS SAFETY CLASS 3 EXCEPT AS NOTED.
2. FLOW INDICATED AT ALL TEST CONNECTIONS, VENTS AND DRAINS SHOULD BE DIRECTED AWAY FROM THE PROCESS PIPING.
3. DELETED
4. UNLESS OTHERWISE NOTED, ALL DRAINS TO BE LOCALLY COLLECTED UNDER ADMINISTRATIVE CONTROL.
5. ALL VALVES IDENTIFIED AS LIP SHALL BE LOCKED IN POSITION IMMEDIATELY AFTER FINAL BALANCING TO ENSURE THROTTLED POSITION IS MAINTAINED.
6. DELETED
7. FOR MECHANICAL SYMBOLS AND NOTES SEE M1-0200.
8. THIS IS A UNIT ISOLATION VALVE WHICH SHALL BE LOCKED CLOSED WHEN CCW IS SUPPLIED FROM UNIT 1, AND OPEN WHEN SUPPLIED FROM UNIT 2.
9. DELETED
10. VALVES 2CCO0187 AND 2CCO0188 HAVE MODIFIED DISCS THAT FUNCTION AS RESTRICTIVE ORIFICES. THEY CANNOT BE USED FOR ISOLATION PURPOSES.

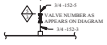

TYPICAL VENT DETAIL
(UNLESS OTHERWISE NOTED)

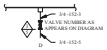

TYPICAL DRAIN DETAIL
(UNLESS OTHERWISE NOTED)

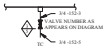

TYPICAL TEST CONNECTION DETAIL
(UNLESS OTHERWISE NOTED)

FSAR FIGURE 9.2-3

THIS DRAWING CREATED FOR PERSONAL USE

DRAWING 2123-M2-0229 REV CP-4
HAS BEEN SPLIT INTO THE FOLLOWING SHEETS:

M2-0229
M2-0229-A
M2-0229-B

CLASS I
(NUCLEAR SAFETY-RELATED)
SAFETY CLASS 1 SEISMIC CATEGORY I
SAFETY CLASS 2 QUALITY GROUP D
SAFETY CLASS 3 ASSOCIATED CIRCUITS

TXU ENERGY
CPSES
GLEN ROSE, TEXAS

FLOW DIAGRAM
COMPONENT COOLING WATER SYSTEM
SHEET 3 OF 7

DWG. NO. M2-0229 | SH. NO. B | REV. CP-15

M2-0229-B

ms476600.dgn

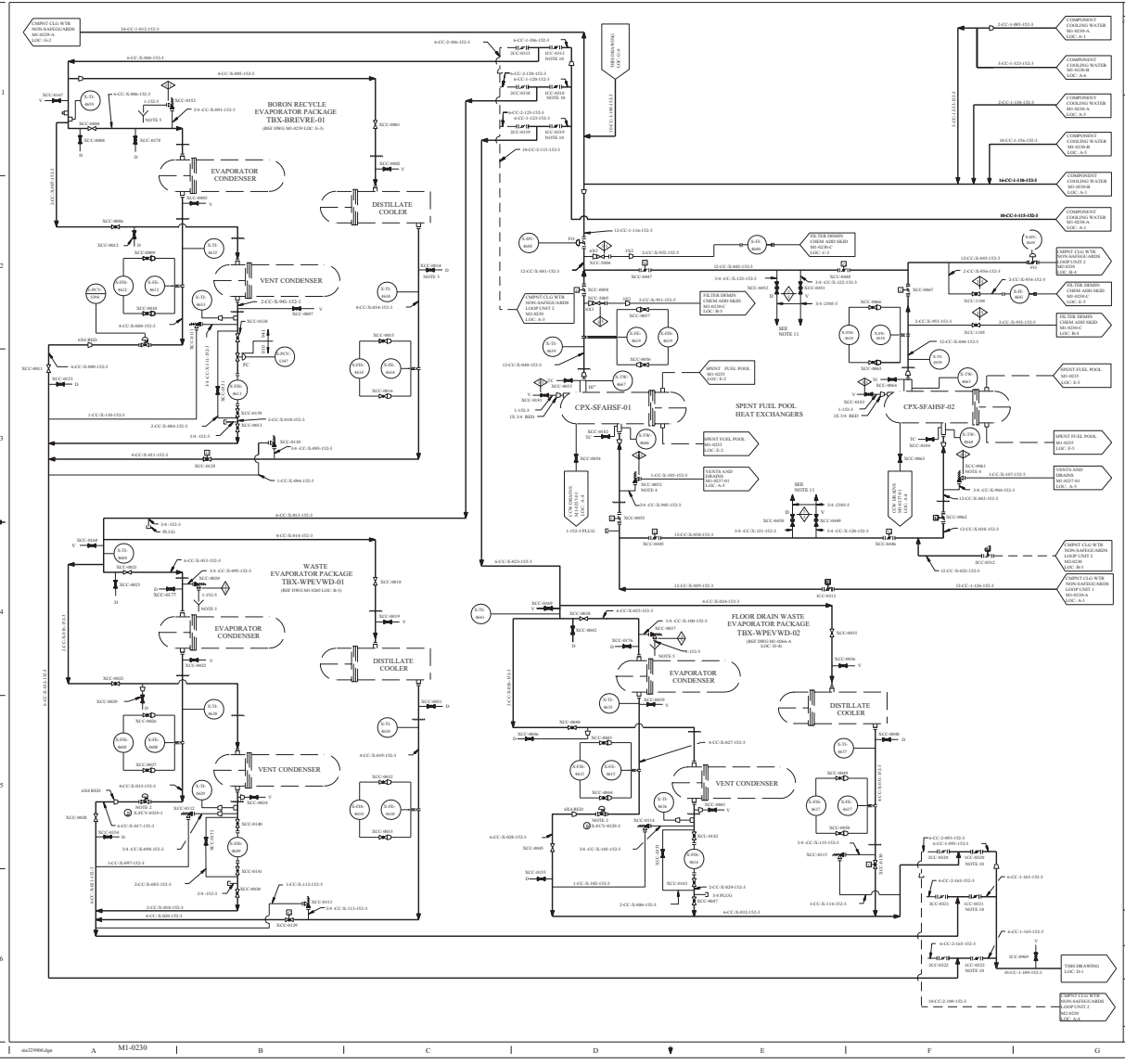

REV	DRWG	MOD	APVD	REMARKS
CP-26	04-26-2005	04-26-2005		THIS DRAWING REVISED TO INCORPORATE DESIGN CHANGE FCL 1999-0063-07-07,10-FER 00L,000,-99-00,107-07,108.

NOTES:

1. CCW SYSTEM IS NUCLEAR SAFETY CLASS 3 EXCEPT AS NOTED
2. PROVIDED BY WESTINGHOUSE.
3. ALL UNIT 2 VALVES AND LINES SHOWN ON THIS DIAGRAM WILL BE INSTALLED WITH UNIT 1.
4. RELIEF VALVE SUPPLIED BY THE JOSEPH OAT CORP.
5. DRAIN TO CCW DRAIN SYSTEM.
6. THIS FLOW DIAGRAM SHOWS VALVES POSITION FOR UNIT 1 AND UNIT 2 IN OPERATION.
7. UNLESS OTHERWISE NOTED, ALL DRAINS TO BE LOCALLY COLLECTED UNDER ADMINISTRATIVE CONTROL.
8. FOR GENERAL NOTES AND SYMBOLS SEE DWG M1-0200.
9. DELETED
10. THIS IS A UNIT ISOLATION VALVE WHICH SHALL BE CLOSED WHEN CCW IS SUPPLIED FROM UNIT 2 AND OPEN WHEN SUPPLIED FROM UNIT 1.
11. ROUTE TUBING TO NON-RAD FLOOR DRAIN IN ROOM X-249A, FLOW DIAGRAM M1-0217-01 LOC. A-4.

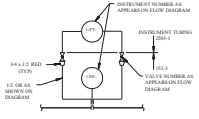

TYPICAL FLOW STATION DETAIL
(UNLESS OTHERWISE NOTED)

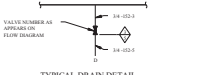

TYPICAL DRAIN DETAIL
(UNLESS OTHERWISE NOTED)

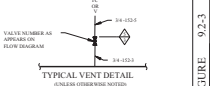

TYPICAL VENT DETAIL
(UNLESS OTHERWISE NOTED)
ALSO TYPICAL FOR TEST CONNECTION (SC)

FSAR FIGURE 9.2-3

DRAWING M1-0230	REV CP-19
HAS BEEN SPLIT INTO THE FOLLOWING SHEETS:	
M1-0230	
M1-0230-C	

DRAWING 2323-M1-0230	REV CP-9
HAS BEEN SPLIT INTO THE FOLLOWING SHEETS:	
M1-0230	
M1-0230-A	
M1-0230-B	

CLASS I
(NUCLEAR SAFETY-RELATED)
SAFETY CLASS 1 — SAFETY CLASS 2 — SAFETY CLASS 3 — NON-SAFETY RELATED — SEISMIC CATEGORY I — ASSOCIATED CIRCUITS

TU ELECTRIC
CPSES
GLEN ROSE, TEXAS

FLOW DIAGRAM
COMPONENT COOLING WATER
SYSTEM

DWG. NO. M1-0230 | SH. NO. – | REV. CP-26

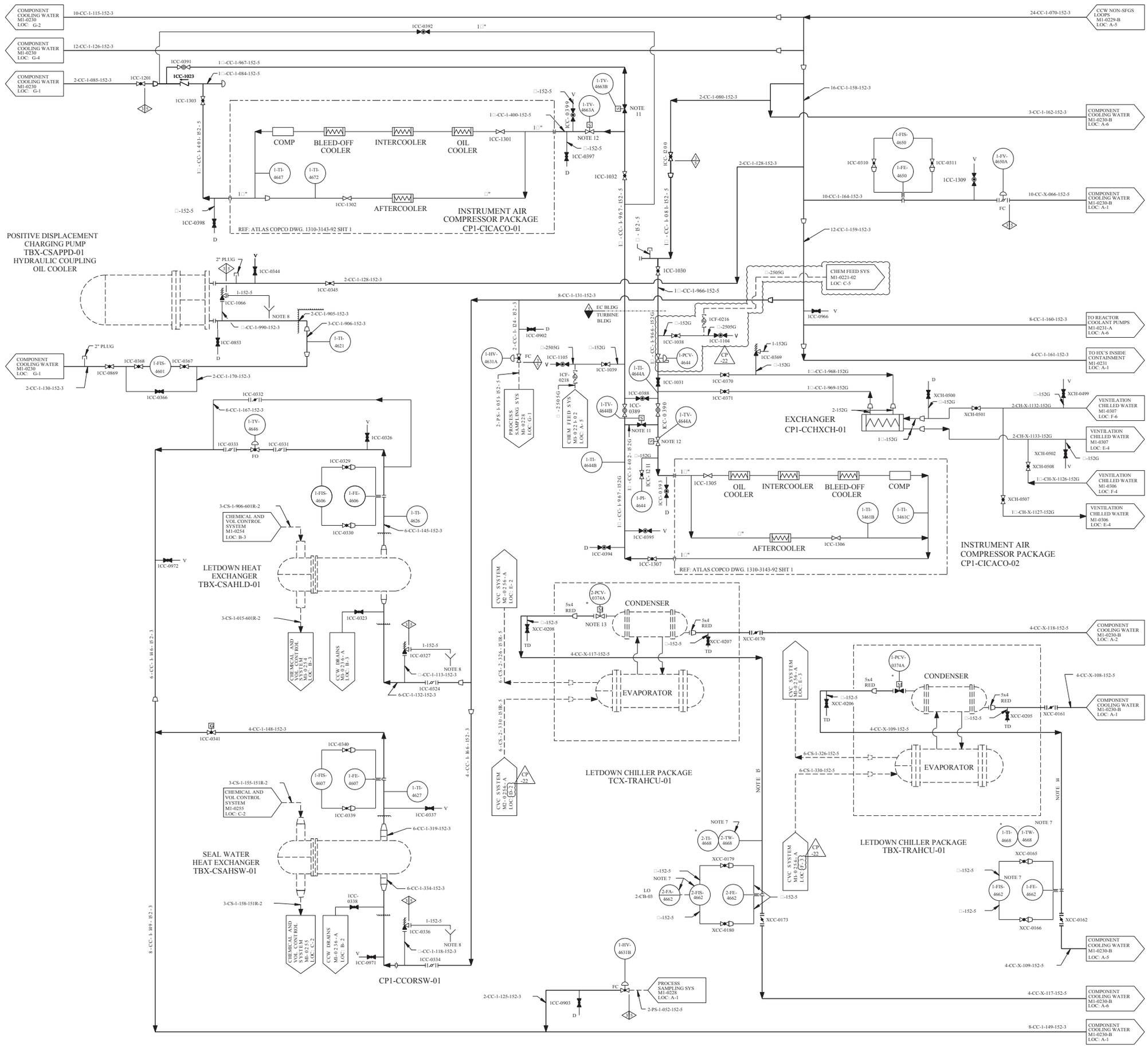

REV	DWN	CHKD	APVD	REMARKS
CP-22	DLK 07-03 2014			THIS DRAWING REVISED TO INCORPORATE AI-CR-2014-007702-1 TO EDITORIALLY CORRECT THE LOCATION OF VALVE 1CC-1038 TO AGREE WITH BRP-CC-1-TB-002 REV CP-3. EDITORIAL CHANGES AS NOTED.

NOTES:

1. CCW SYSTEM IS NUCLEAR SAFETY CLASS 3 EXCEPT AS NOTED.
2. UNLESS OTHERWISE NOTED ALL DRAINS TO BE LOCALLY COLLECTED UNDER ADMINISTRATIVE CONTROL.
3. ALL UNIT 2 VALVES AND LINES SHOWN ON THIS DIAGRAM WILL BE INSTALLED WITH UNIT 1.
4. INDICATES SELF-CONTAINED □" THERMOSTATIC VALVE VENDOR SUPPLIED ITEM.
5. ALL VALVES IDENTIFIED AS LIP SHALL BE LOCKED IN POSITION IMMEDIATELY AFTER FINAL BALANCING TO ENSURE THROTTLED POSITION IS MAINTAINED.
6. * INDICATES VENDOR SUPPLIED ITEM.
7. PROVIDED BY FIELD.
8. DRAIN TO CCW DRAIN SYSTEM.
9. THIS FLOW DIAGRAM SHOWS VALVES POSITION FOR UNIT 1 AND UNIT 2 IN OPERATION.
10. FOR GENERAL NOTES AND SYMBOLS SEE DRAWING M1-0200.
11. VALVE CLOSED WHEN COMPRESSOR IS ON. VALVE OPEN WHEN COMPRESSOR IS OFF.
12. VALVE OPEN WHEN COMPRESSOR IS ON. VALVE CLOSED WHEN COMPRESSOR IS OFF.
13. VALVE THROTTLED, OPERATOR DEGRADED.
14. SYSTEM DRAINED BETWEEN XCC-0161 AND XCC-0162 WHILE IN LAYUP. REFERENCE FDA-2002-0162-05-01.
15. SYSTEM DRAINED BETWEEN XCC-0170 AND XCC-0173 WHILE IN LAYUP. REFERENCE FDA-2002-0162-05-01.

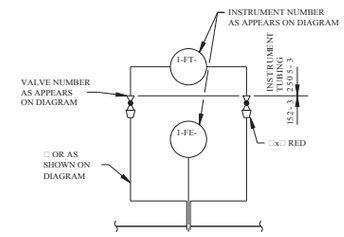

TYPICAL FLOW STATION DETAIL
(UNLESS OTHERWISE NOTED)

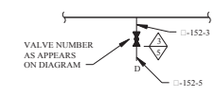

TYPICAL DRAIN DETAIL
(UNLESS OTHERWISE NOTED)

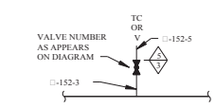

TYPICAL VENT DETAIL
(UNLESS OTHERWISE NOTED)
TYPICAL ALSO FOR TEST CONNECTION (TC)

FSAR FIGURE 9.2-3

THIS DRAWING CREATED ELECTRONICALLY

DRAWING 2323-M1-0230 REV CP-9
HAS BEEN SPLIT INTO THE FOLLOWING SHEETS:
M1-0230
M1-0230-A
M1-0230-B

CLASS I
(NUCLEAR SAFETY-RELATED)
SAFETY CLASS 1 — SEISMIC CATEGORY I
SAFETY CLASS 2 — CLASS 1E
SAFETY CLASS 3 — ASSOCIATED CIRCUITS

LUMINANT
CPNPP
GLEN ROSE, TEXAS

FLOW DIAGRAM
COMPONENT COOLING WATER SYSTEM

DWG. NO. M1-0230 | SH. NO. A | REV. CP-22

REV	DWN	CHKD	APVD	REMARKS
CP-23	DLK 01-26 2015			THIS DRAWING REVISED TO INCORPORATE AI-CR-2015-000645-1 TO EDITORIALLY CORRECT LOCATION (TAG) NUMBER X-PIC-4674 TO X-PIC-4674A.

NOTES:

1. CCW SYSTEM IS NUCLEAR SAFETY CLASS 3 EXCEPT AS NOTED.
2. ALL UNIT 2 VALVES AND LINES SHOWN ON THIS DIAGRAM WILL BE INSTALLED WITH UNIT 1.
3. THIS FLOW DIAGRAM SHOWS VALVES POSITION FOR UNIT 1 AND UNIT 2 IN OPERATION.
4. DELETED
5. UNLESS OTHERWISE NOTED ALL DRAINS TO BE LOCALLY COLLECTED UNDER ADMINISTRATIVE CONTROL.
6. DELETED
7. FOR GENERAL NOTES AND SYMBOLS SEE DWG M1-0200.
8. THIS IS A UNIT ISOLATION VALVE WHICH SHALL BE CLOSED WHEN CCW IS SUPPLIED FROM UNIT 2 AND OPEN WHEN SUPPLIED FROM UNIT 1.
9. REMOVE CHECK VALVE 1CC-0317 INTERNALS, ABANDON BODY IN PLACE PER DCN 6533 REV 0.
10. VALVE ACTUATORS WILL BE LOCKED AND REMAIN IN THEIR LAST POSITION ON LOSS OF INSTRUMENT AIR ABOVE THE DIAPHRAGM. THE BYPASS VALVES WILL FAIL CLOSED AND THE INLET VALVES WILL FAIL OPEN ON LOSS OF SIGNAL FROM THE VENTILATION CHILLER CONDENSER PRESSURE INDICATING CONTROLLER.
11. FLOW SWITCH X-FS-6060A, X-FS-6060B, X-FS-6060C, AND X-FS-6060D ARE SPARED IN PLACE.

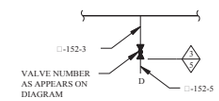

TYPICAL DRAIN DETAIL

(UNLESS OTHERWISE NOTED)

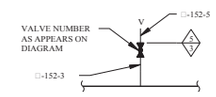

TYPICAL VENT DETAIL

(UNLESS OTHERWISE NOTED)

FSAR FIGURE 9.2-3

THIS DRAWING CREATED ELECTRONICALLY

DRAWING 2323-M1-0230 REV CP-9
HAS BEEN SPLIT INTO THE FOLLOWING SHEETS:
M1-0230
M1-0230-A
M1-0230-B

CLASS I

(NUCLEAR SAFETY-RELATED)

SAFETY CLASS 1 — SEISMIC CATEGORY I
SAFETY CLASS 2 — CLASS 1E
SAFETY CLASS 3 — ASSOCIATED CIRCUITS

LUMINANT
CPNPP
GLEN ROSE, TEXAS

FLOW DIAGRAM
COMPONENT COOLING WATER
SYSTEM
SHEET 6 OF 8

DWG. NO.	SH. NO.	REV.
M1-0230	B	CP-23

REV	DWN	CHKD	APVD	REMARKS
CP-8	JRMC 07-30 2008	DJL 07-31 2008		THIS DRAWING REVISED TO INCORPORATE DESIGN CHANGE FDA-2008-002401-01-00 PER SK-0001-08-002401-01-00.

NOTES:

1. CCW SYSTEM IS NUCLEAR SAFETY CLASS 3 EXCEPT AS NOTED.
2. DELETED
3. THIS FLOW DIAGRAM SHOWS VALVES POSITION FOR UNIT 1 AND UNIT 2 IN OPERATION.
4. UNLESS OTHERWISE NOTED, ALL DRAINS TO BE LOCALLY COLLECTED UNDER ADMINISTRATIVE CONTROL.
5. FOR GENERAL NOTES AND SYMBOLS SEE DWG M1-0200.

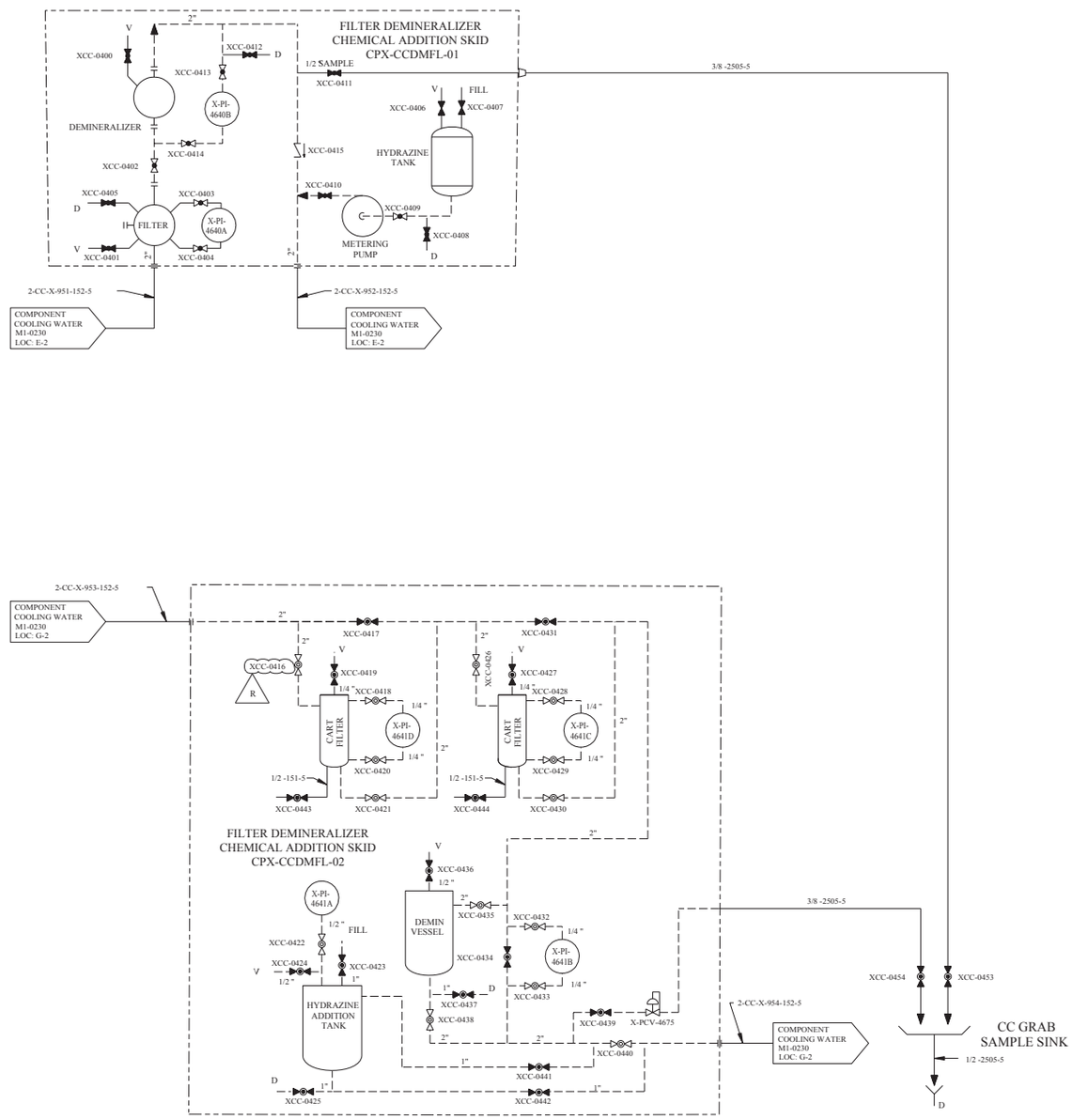

FSAR FIGURE 9.2-3

THIS DRAWING CREATED ELECTRONICALLY

DRAWING M1-0230	REV CP-19
HAS BEEN SPLIT INTO THE FOLLOWING SHEETS:	
M1-0230	
M1-0230-C	

CLASS II

LUMINANT
CPNPP
GLEN ROSE, TEXAS

FLOW DIAGRAM
COMPONENT COOLING WATER
SYSTEM

DWG. NO.	SH. NO.	REV.
M1-0230	C	CP-8

REF CHKD 7/20/2001

$$$$$$$DATE$$$$$$

me886500.dgn A M1-0230-C

< FINAL PRINT >

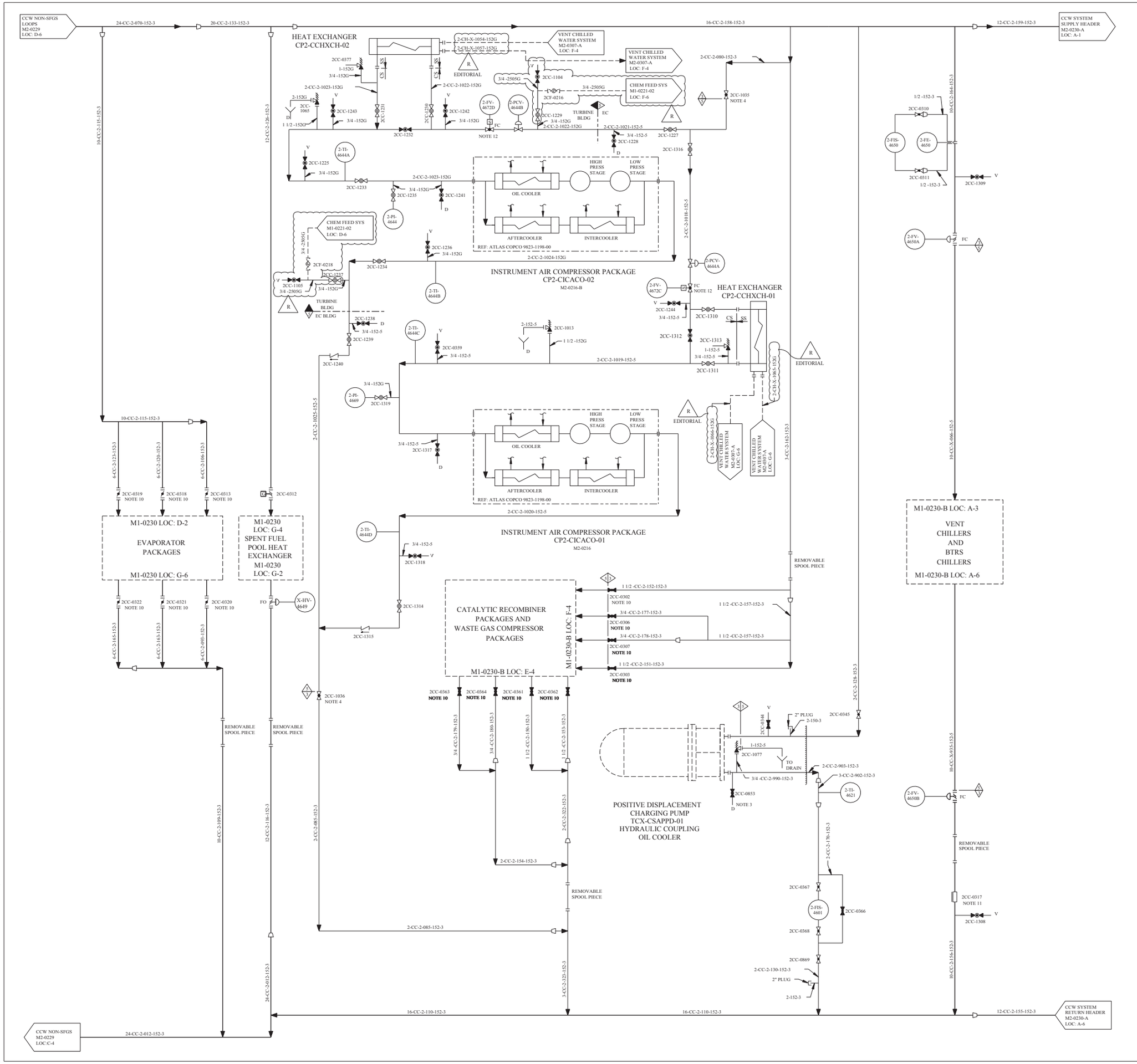

REV	DWN	CHKD	APVD	REMARKS
CP-19	DLK 10-05-2009	MM 10-05-2009		THIS DRAWING REVISED TO INCORPORATE DESIGN CHANGE EDA 2008-002537-01-00 PER SK-0003-08-002537-01-00. EDITORIAL CHANGES AS NOTED.

NOTES:

1. DELETED
2. DELETED
3. UNLESS OTHERWISE NOTED ALL DRAINS TO BE LOCALLY COLLECTED UNDER ADMINISTRATIVE CONTROL.
4. VALVES 2CC-1035 AND 2CC-1036 (FORMERLY 2-HV-4663A AND 2-HV-4663B) HAVE HAD AIR SUPPLIES REMOVED AND ARE NOW OPERATED MANUALLY.
5. FLOW INDICATED AT ALL CONNECTIONS, VENTS AND DRAINS SHOULD BE DIRECTED AWAY FROM THE PROCESS PIPING.
6. DELETED
7. DELETED
8. DELETED
9. FOR MECHANICAL SYMBOLS AND NOTES SEE M1-0200.
10. THIS IS A UNIT ISOLATION VALVE WHICH SHALL BE CLOSED WHEN CCW IS SUPPLIED FROM UNIT 1 AND OPEN WHEN SUPPLIED FROM UNIT 2.
11. CHECK VALVE INTERNAL REMOVED, VALVE BODY ABANDONED IN PLACE.
12. VALVE OPEN WHEN COMPRESSOR IS ON. VALVE CLOSED WHEN COMPRESSOR IS OFF.
13. DELETED
14. DELETED

TYPICAL VENT DETAIL
(UNLESS OTHERWISE NOTED)

TYPICAL DRAIN DETAIL
(UNLESS OTHERWISE NOTED)

FSAR FIGURE 9.2-3

THIS DRAWING CREATED ELECTRONICALLY

DRAWING 2323-M2-0230	REV CP-2
HAS BEEN SPLIT INTO THE FOLLOWING SHEETS:	
M2-0230	
M2-0230-A	

CLASS I
(NUCLEAR SAFETY-RELATED)
SAFETY CLASS 1 — SEISMIC CATIGORY I
SAFETY CLASS 2 — CLASS 1E
SAFETY CLASS 3 — ASSOCIATED CIRCUITS

LUMINANT
CPNPP
GLEN ROSE, TEXAS

FLOW DIAGRAM
COMPONENT COOLING WATER SYSTEM
SHEET 4 OF 7

DWG. NO.	SH. NO.	REV.
M2-0230	-	CP-19

REF CHK D 5-20-98 CP-11

$$$$$$$D ATE$$$$$$

me966700.dgn M2-0230 < FINAL PRINT >

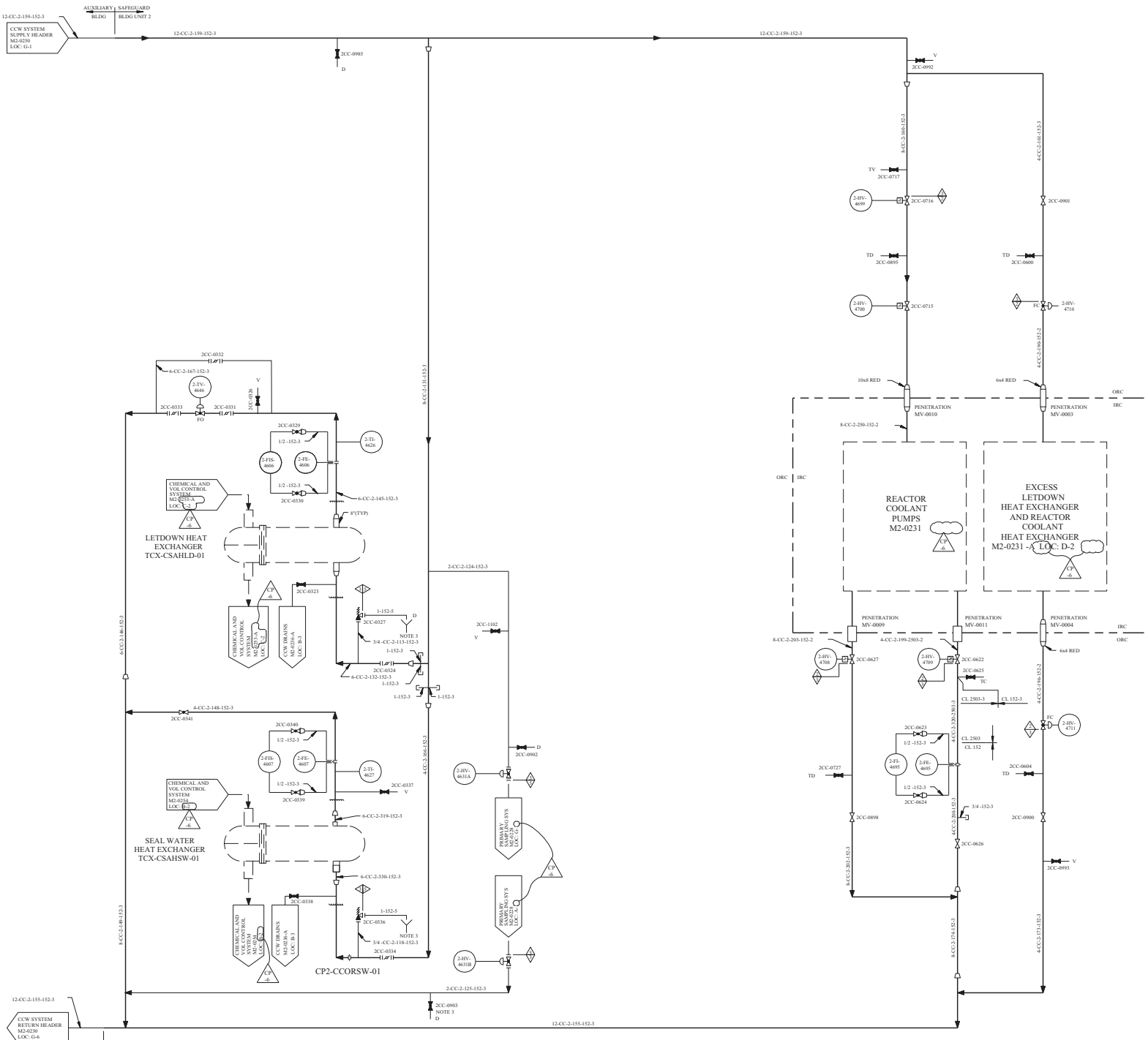

REV	DWN	CHKD	APVD	REMARKS
CP-6	C.A. 11-02-1996			THIS DRAWING REVISED TO INCORPORATE EDITORIAL CHANGES AS NOTED.

NOTES

1. * INDICATES VENDOR SUPPLIED ITEM.
2. UNLESS OTHERWISE NOTED ALL DRAINS TO BE LOCALLY COLLECTED
3. UNDER ADMINISTRATIVE CONTROL.
4. FLOW INDICATED AT ALL TEST CONNECTIONS, VENTS AND DRAINS SHOULD BE DIRECTED AWAY FROM THE PROCESS PIPING.
5. FOR MECHANICAL SYMBOLS AND NOTES SEE DWG M1-0200.

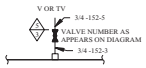

TYPICAL VENT DETAIL
(UNLESS OTHERWISE NOTED)

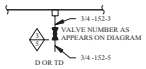

TYPICAL DRAIN DETAIL
(UNLESS OTHERWISE NOTED)

FSAR FIGURE 9.2-3

THIS DRAWING CREATED ELECTRONICALLY

DRAWING 2323-M2-0230 REV CP-2
HAS BEEN SPLIT INTO THE FOLLOWING SHEETS:
M2-0230
M2-0230-A

CLASS I
(NUCLEAR SAFETY-RELATED)
SAFETY CLASS 1 — SEISMIC CATEGORY I
SAFETY CLASS 2 — CLASS 1E
SAFETY CLASS 3 — ASSOCIATED CIRCUITS

TXU ELECTRIC
CPSES
GLEN ROSE, TEXAS

FLOW DIAGRAM
COMPONENT COOLING WATER SYSTEM

DWG. NO. M2-0230 | SH. NO. A | REV. CP-6

REF CKD CP6 11-1-96

$$$$$$$D\A\TESSSSS

vs0000tg.dgn

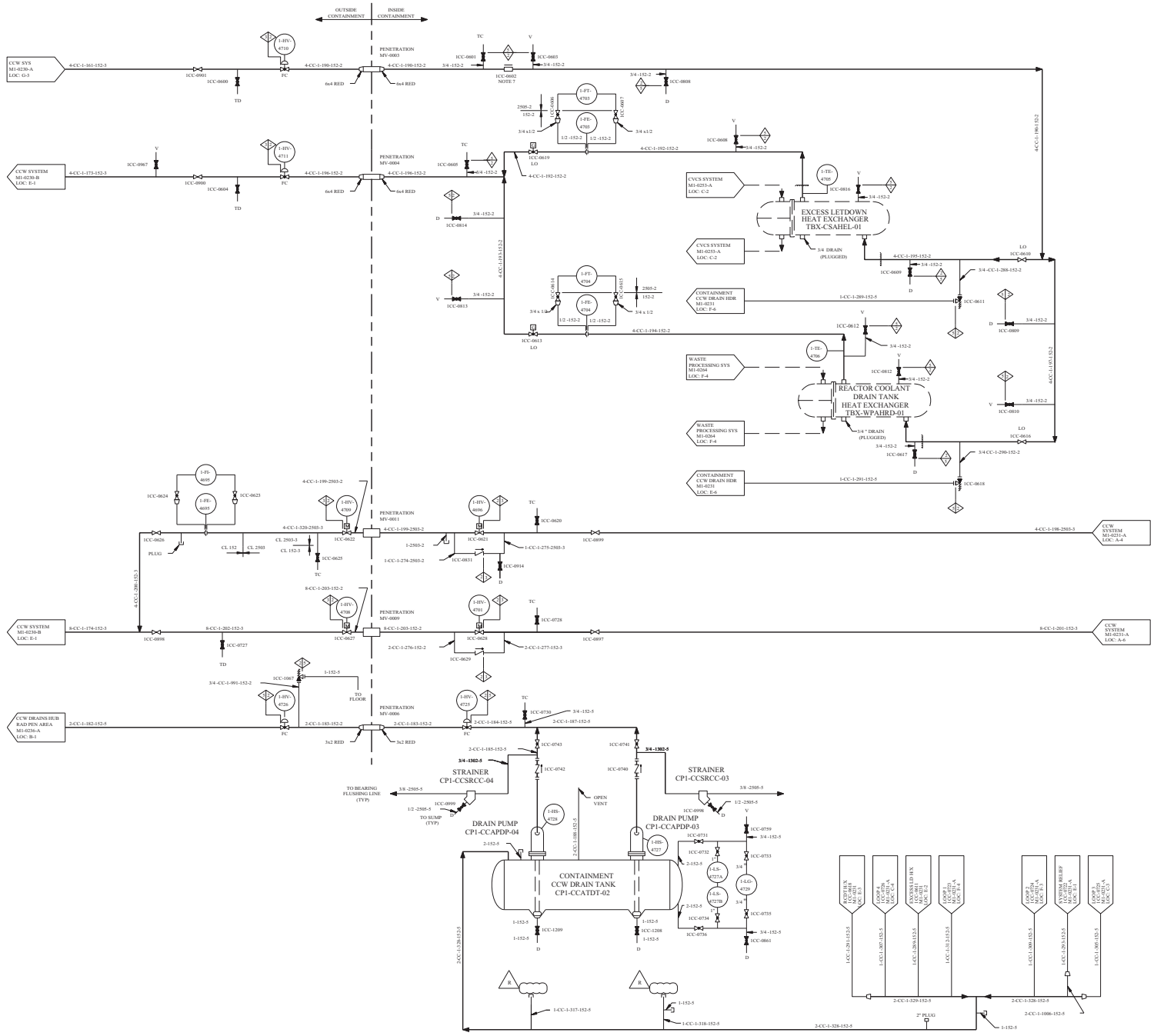

REV	DWN	CHK	APPD	REMARKS
CP-24	SK 10-15-2001	CS 10-17-2001		THIS DRAWING REVISED TO INCORPORATE DESIGN CHANGE FDA-2001-002002-01-00 PER SK-0001-01-002002-01-00.

NOTES:

1. CCW SYSTEM IS SAFETY CLASS 3 EXCEPT AS NOTED.
2. DRAIN LINES, UNLESS OTHERWISE NOTED, MAY BE ROUTED TO THE CONTAINMENT CCW DRAIN TANK HEADER.
3. DELETED.
4. THIS FLOW DIAGRAM SHOWS VALVES POSITION FOR UNIT 1 AND UNIT 2 IN OPERATION.
5. DELETED
6. FOR GENERAL NOTES AND SYMBOLS SEE DWG M1-0200.
7. REMOVE CHECK VALVE 1CC-0602 INTERNALS, ABANDON BODY IN PLACE PER DCN 6554 REV 0.

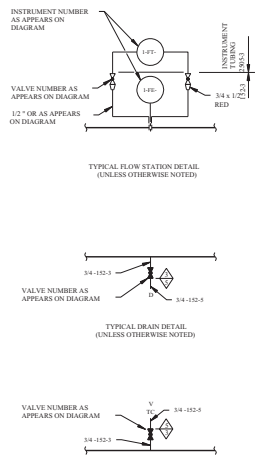

FSAR FIGURE 9.2-3

THIS DRAWING CREATED ELECTRONICALLY

DRAWING 2323-M1-0231	REV CP-7
HAS BEEN SPLIT INTO THE FOLLOWING SHEETS:	
M1-0231	
M1-0231-A	

CLASS I

(NUCLEAR SAFETY-RELATED)

SAFETY CLASS 1 — SEISMIC CATEGORY I
SAFETY CLASS 2 — CLASS II
SAFETY CLASS 3 — ASSOCIATED CIRCUITS

TXU ELECTRIC
CPSES
GLEN ROSE, TEXAS

FLOW DIAGRAM
COMPONENT COOLING WATER
SYSTEM

DWG. NO.	SH. NO.	REV.
M1-0231	-	CP-24

REF CKD CP-20 11-13-96

$$$$$$$$$$$$$$$$

mc371600.dgn M1-0231

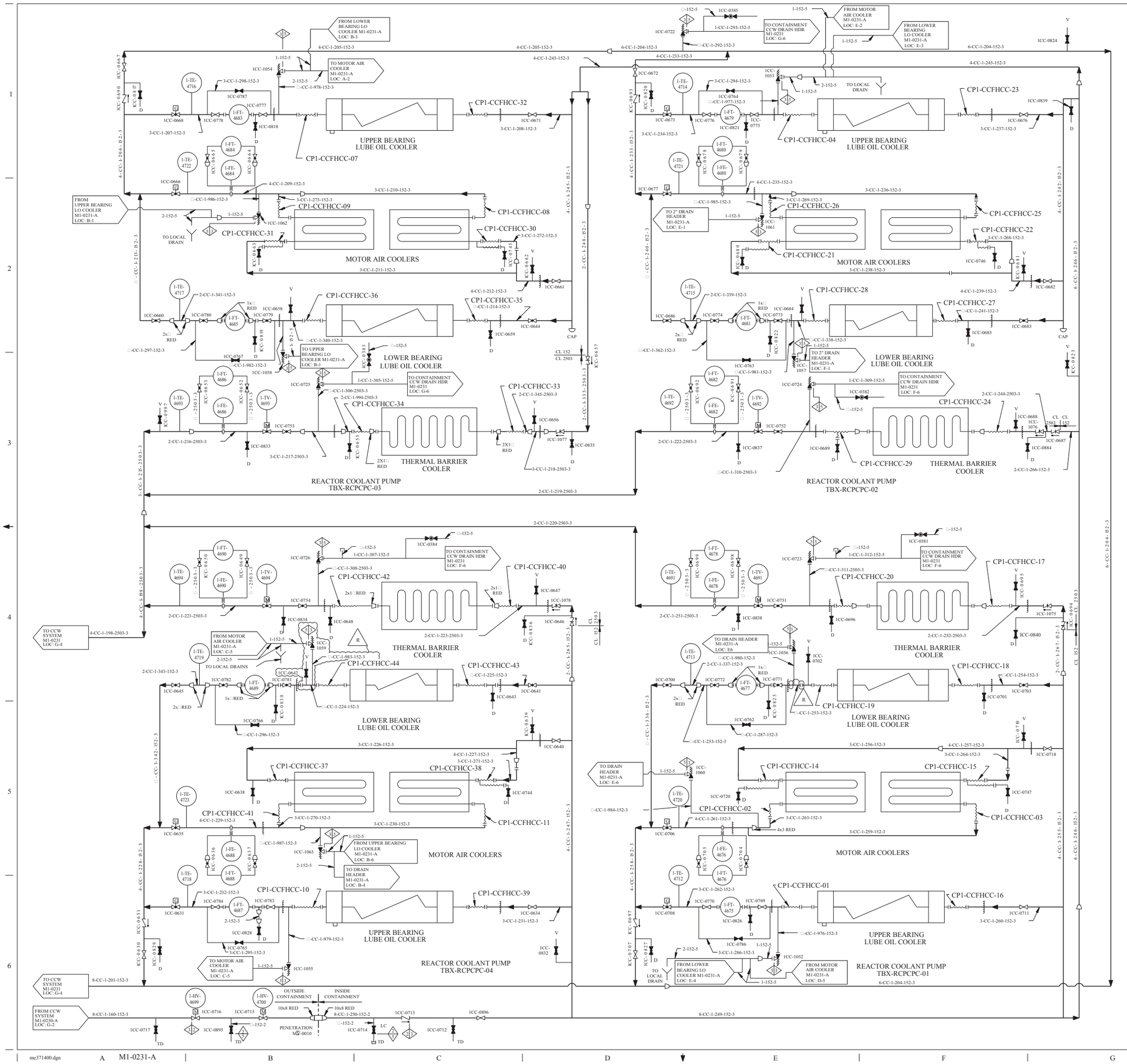

REV	DWN	CHK	APVD	REMARKS
CP-14	DLK 04-01 2014	SM 04-01 2014		THIS DRAWING REVISED TO INCORPORATE DESIGN CHANGE FDA-2014-000055-01-00 PER SK-0001-14-000055-01-00.

NOTES:

1. CCW SYSTEM IS SAFETY CLASS 3 EXCEPT AS NOTED.
2. DRAIN LINES, UNLESS OTHERWISE NOTED, MAY BE ROUTED TO THE CONTAINMENT CCW DRAIN TANK HEADER.
3. DELETED
4. DELETED
5. FOR GENERAL NOTES AND SYMBOLS SEE DWG M1-0200.
6. DELETED

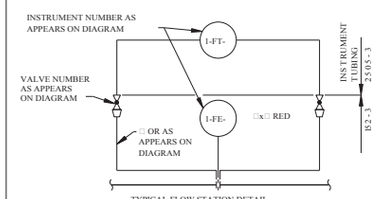

TYPICAL FLOW STATION DETAIL (UNLESS OTHERWISE NOTED)

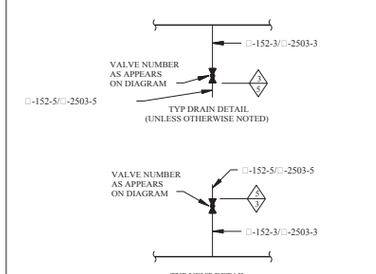

FSAR FIGURE 9.2-3

THIS DRAWING CREATED ELECTRONICALLY

DRAWING 2323-M1-0231 REV CP-7
HAS BEEN SPLIT INTO THE FOLLOWING SHEETS:
M1-0231
M1-0231-A

CLASS I
(NUCLEAR SAFETY-RELATED)
SAFETY CLASS 1 / SAFETY CLASS 2 / SAFETY CLASS 3 — SEISMIC CATEGORY I / CLASS IE / ASSOCIATED CIRCUITS

LUMINANT
CPNPP
GLEN ROSE, TEXAS

FLOW DIAGRAM
COMPONENT COOLING WATER SYSTEM

DWG. NO. M1-0231 | SH. NO. A | REV. CP-14

REF CKD 4/23/98 CP-9

SSSSSSSDATESSSSSSS

mc371400.dgn A M1-0231-A

< FINAL PRINT >

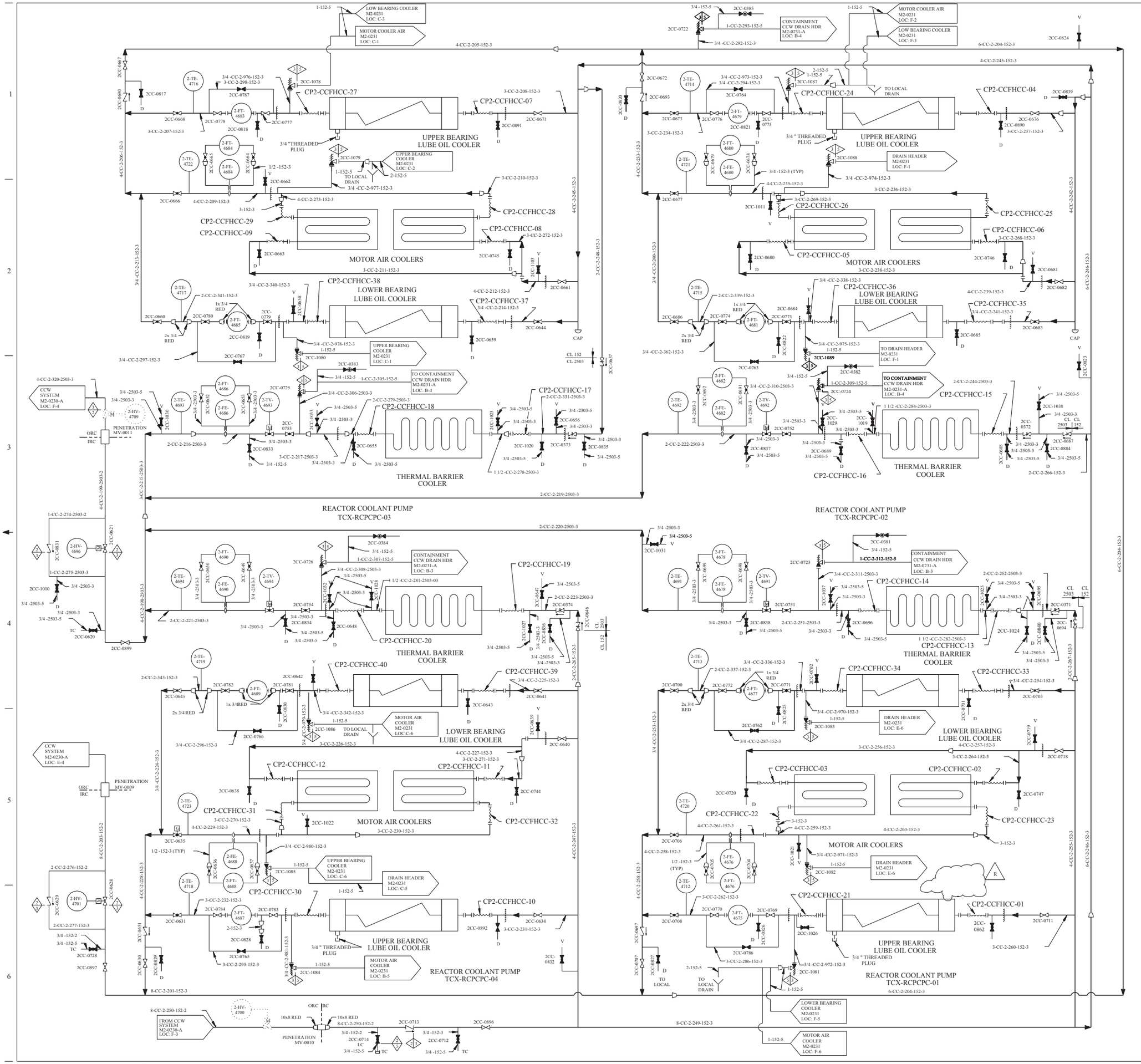

REV	DWN	CHKD	APVD	REMARKS
CP-16	EES 06-04-2007	MHF 06-04-2007		THIS DRAWING REVISED TO INCORPORATE DESIGN CHANGE FDA 1999-003465-06-00 PER SK-0006-99-003465-06-00.

NOTES:

1. CCW SYSTEM IS SAFETY CLASS 3 EXCEPT AS NOTED.
2. DRAIN LINES, UNLESS OTHERWISE NOTED, MAY BE ROUTED TO THE CONTAINMENT CCW DRAIN TANK HEADER.
3. FOR GENERAL NOTES AND SYMBOLS SEE DWG M1-0200.
4. FLOW INDICATED AT ALL TEST CONNECTIONS, VENTS AND DRAINS SHOULD BE DIRECTED AWAY FROM THE PROCESS PIPING.

R

V 3/4 -152-5 VALVE NUMBER AS APPEARS ON DIAGRAM 3/4 -152-3

TYPICAL VENT DETAIL
(UNLESS OTHERWISE NOTED)

3/4 -152-3 VALVE NUMBER AS APPEARS ON DIAGRAM 3/4 -152-5 D

TYPICAL DRAIN DETAIL
(UNLESS OTHERWISE NOTED)

FSAR FIGURE 9.2-3

THIS DRAWING CREATED ELECTRONICALLY

DRAWING 2323-M2-0231 REV CP-2
HAS BEEN SPLIT INTO THE FOLLOWING SHEETS:
M2-0231
M2-0231-A

CLASS I
(NUCLEAR SAFETY-RELATED)
SAFETY CLASS 1 / SAFETY CLASS 2 / SAFETY CLASS 3 — SEISMIC CATEGORY I / CLASS 1E / ASSOCIATED CIRCUITS

LUMINANT
CPSES
GLEN ROSE, TEXAS

FLOW DIAGRAM
COMPONENT COOLING WATER SYSTEM

DWG. NO. M2-0231 | SH. NO. - | REV. CP-16

FINAL PRINT

me873300.dgn M2-0231

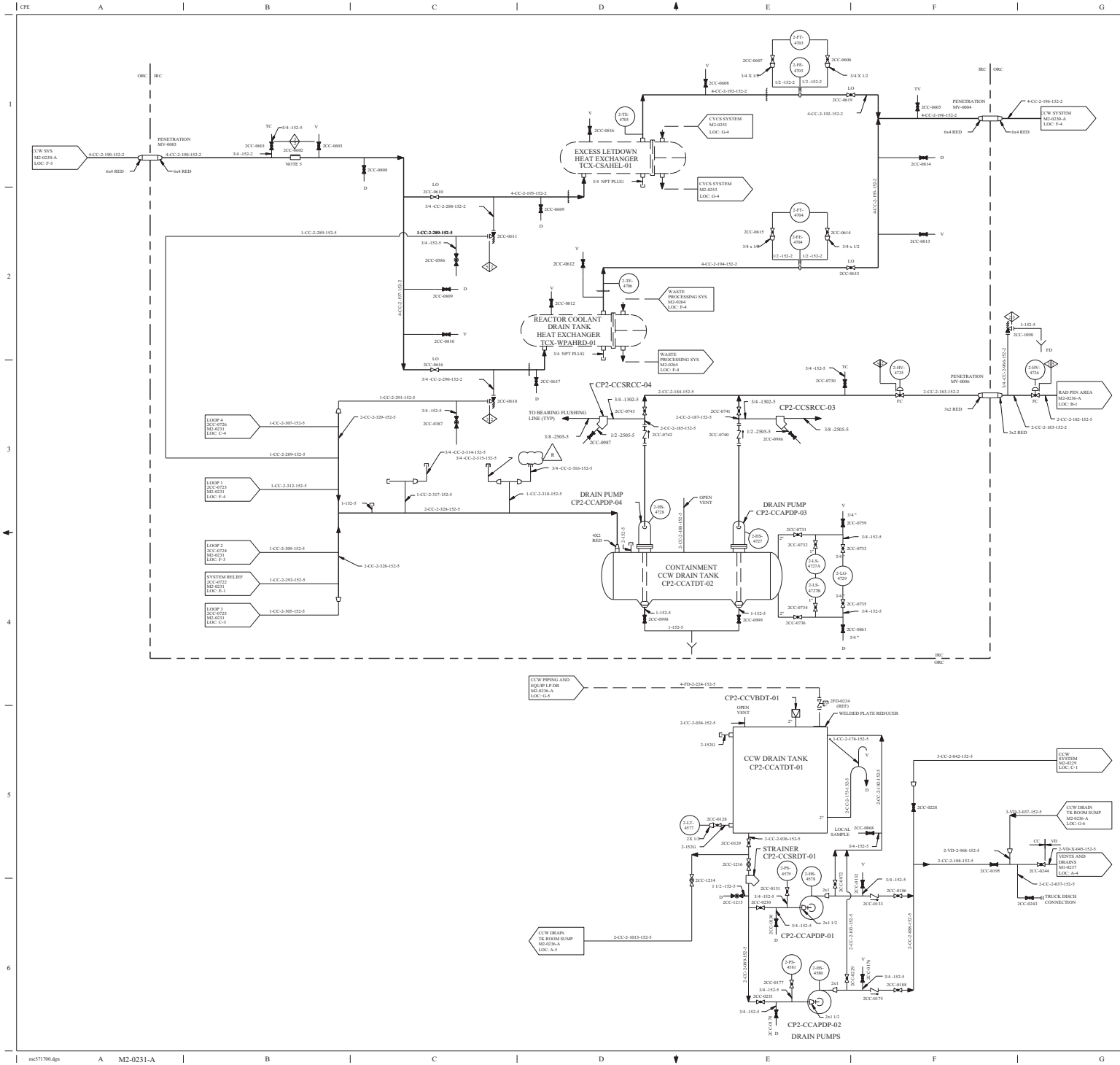

REV	DWN	CHK	APPD	REMARKS
CP-15	SK 10-15-2001	CJS 10-15-2001		THIS DRAWING REVISED TO INCORPORATE DESIGN CHANGE FDA-2001-002002-01-00 PER SK-0003-01-002002-01-00.

NOTES

1. CCW SYSTEM IS SAFETY CLASS 3 EXCEPT AS NOTED.
2. DRAIN LINES, UNLESS OTHERWISE NOTED, MAY BE ROUTED TO THE CONTAINMENT CCW DRAIN TANK HEADER.
3. FOR GENERAL NOTES AND SYMBOLS SEE DWG M1-0200.
4. FLOW INDICATED AT ALL TEST CONNECTIONS, VENTS AND DRAINS SHOULD BE DIRECTED AWAY FROM THE PROCESS PIPING.
5. CHECK VALVE INTERNAL REMOVED, VALVE BODY ABANDONED IN PLACE.

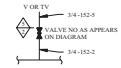

TYPICAL VENT CONNECTION
(UNLESS OTHERWISE NOTED)

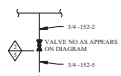

TYPICAL DRAIN CONNECTION
(UNLESS OTHERWISE NOTED)

FSAR FIGURE 9.2-3

THIS DRAWING CREATED ELECTRONICALLY

DRAWING 2323-M2-0231 REV CP-2
HAS BEEN SPLIT INTO THE FOLLOWING SHEETS:
M2-0231
M2-0231-A

CLASS I
(NUCLEAR SAFETY-RELATED)
SAFETY CLASS 1 — SEISMIC CATEGORY I
SAFETY CLASS 2 — CLASS II
SAFETY CLASS 3 — ASSOCIATED CIRCUITS

TXU ELECTRIC
CPSES
GLEN ROSE, TEXAS

FLOW DIAGRAM
COMPONENT COOLING WATER SYSTEM

DWG. NO. M2-0231 | SIZE A | REV. CP-15

REF CHKD 11/15/2000

$$$$$$$$DATE$$$$$$

me171700.dgn A M2-0231-A

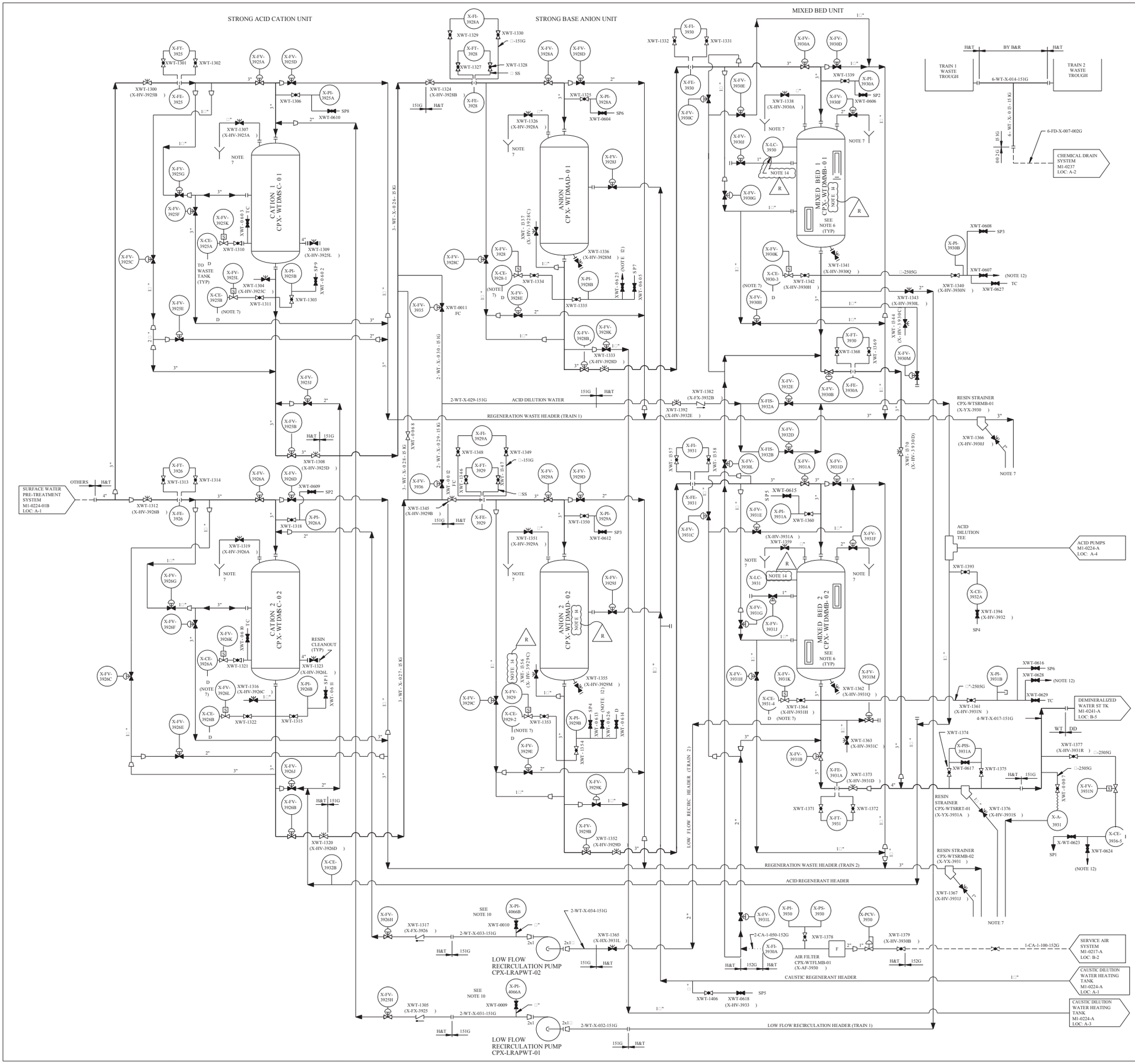

REV	DWN	CHK	APVD	REMARKS
CP-17	DJL 11-11-2014	RSK 11-11-2014		THIS DRAWING REVISED TO INCORPORATE DESIGN CHANGE FDA-2014-000184-01-00 PER SK-0001-14-000184-01-00.

NOTES

1. A SET OF CHANNEL NUMBERS IS GIVEN TO SYSTEM SUPPLIED IN SPECIFICATION MS-150. ALL THE INSTRUMENTATION AND CONTROL NUMBERS WILL BE ASSIGNED BY SYSTEM SUPPLIED IN THAT RANGE.
2. SEE DRAWING M1-2200-1 FOR INSTRUMENTATION AND CONTROL LEGEND AND MEANING OF IDENTIFICATION LETTERS.
3. SEE MANUFACTURERS DRAWING (LATER) FOR INSTRUMENTATION AND CONTROL LOGIC.
4. THE FOLLOWING SYMBOLS ARE DEFINED AS FOLLOWS:
   - CE – CONDUCTIVITY ANALYZER
   - A – SILICA ANALYZER
5. THE MANUFACTURER SHALL FURNISH ALL EQUIPMENT ON THIS DRAWING INCLUDING INTERCONNECTING PIPE AND VALVES AS DETAILED IN SPECIFICATION 2323-MS-150.
6. THIS DENOTES THE 3"X12" OBSERVATION WINDOWS FURNISHED FOR THE MIXED BED VESSELS.
7. ALL DRAINS TO HUNGERFORD AND TERRY SUPPLIED DRAIN TROUGHS LOC: F-1.
8. BY H&T – SUPPLIED BY HUNGERFORD AND TERRY ON CP-0150.
9. FOR PIPING CODES ON VENDOR SUPPLIED PIPING SEE MANUFACTURERS DRAWING 28300-A1, CP-0150.
10. INSTRUMENT MANIFOLDING ARRANGEMENT FOR X-PI-4066A AND X-PI-4066B .

INSTRUMENT TAG NO	A	B	C
XPI-4066A	XWT-0009	XWT-0619	XWT-0620
XPI-4066B	XWT-0010	XWT-0621	XWT-0622

11. TAG NUMBERS IN PARENTHESES INDICATE VENDOR TAG NUMBERS.
12. SAMPLING MANIFOLD ARRANGEMENT.
13. SAMPLING AT POINTS OTHER THAN IDENTIFIED ON THIS DRAWING SERIES IS ACCEPTABLE PROVIDED NO CONTROL FUNCTION IS AFFECTED.

14. THIS LOCATION IS ABANDONED IN PLACE PER FDA-2014-000184-01.

DRAWING 2323-M1-0224 REV CP-5
HAS BEEN SPLIT INTO THE FOLLOWING SHEETS:
M1-0224
M1-0224-A

NON–SAFETY

LUMINANT
CPNPP
GLEN ROSE, TEXAS

FLOW DIAGRAM
WATER TREATMENT

DWG. NO. M1-0224 | SH. NO. - | REV. CP-17

FSAR FIGURE 9.2-4

THIS DRAWING CREATED ELECTRONICALLY

< FINAL PRINT >

me00011z.dgn A M1-0224

REF CKD 6-1-98 CP-16

$$$$$$$DATE$$$$$$

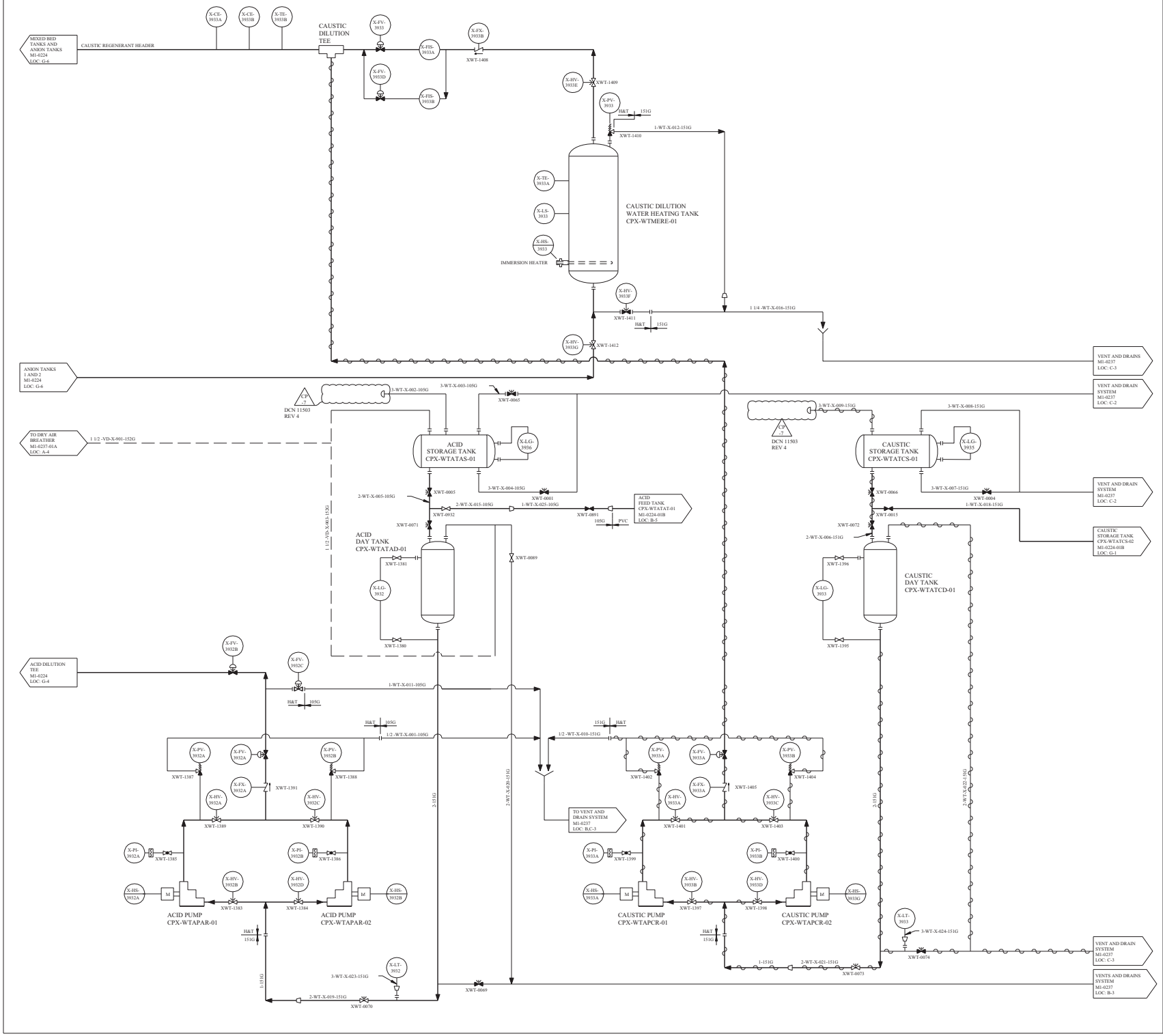

REV	DWN	CHKD	APVD	REMARKS
CP-7	CA 08/07/1998			THIS DRAWING REVISED TO INCORPORATE DESIGN CHANGE DCN 11503 REV 4.

NOTE:

1. GENERAL NOTES AND REFERENCE DWGS SEE DWG M1-0224.

FSAR FIGURE 9.2-4

THIS DRAWING CREATED ELECTRONICALLY

DRAWING 2323-M1-0224 REV CP-5
HAS BEEN SPLIT INTO THE FOLLOWING SHEETS:
M1-0224
M1-0224-A

NON-SAFETY

TXU ELECTRIC
CPSES
GLEN ROSE, TEXAS

FLOW DIAGRAM
WATER TREATMENT

DWG. NO. M1-0224 | SH. NO. A | REV. CP-7

$$$$$$$D\ITESSSSS

me000175.dgn

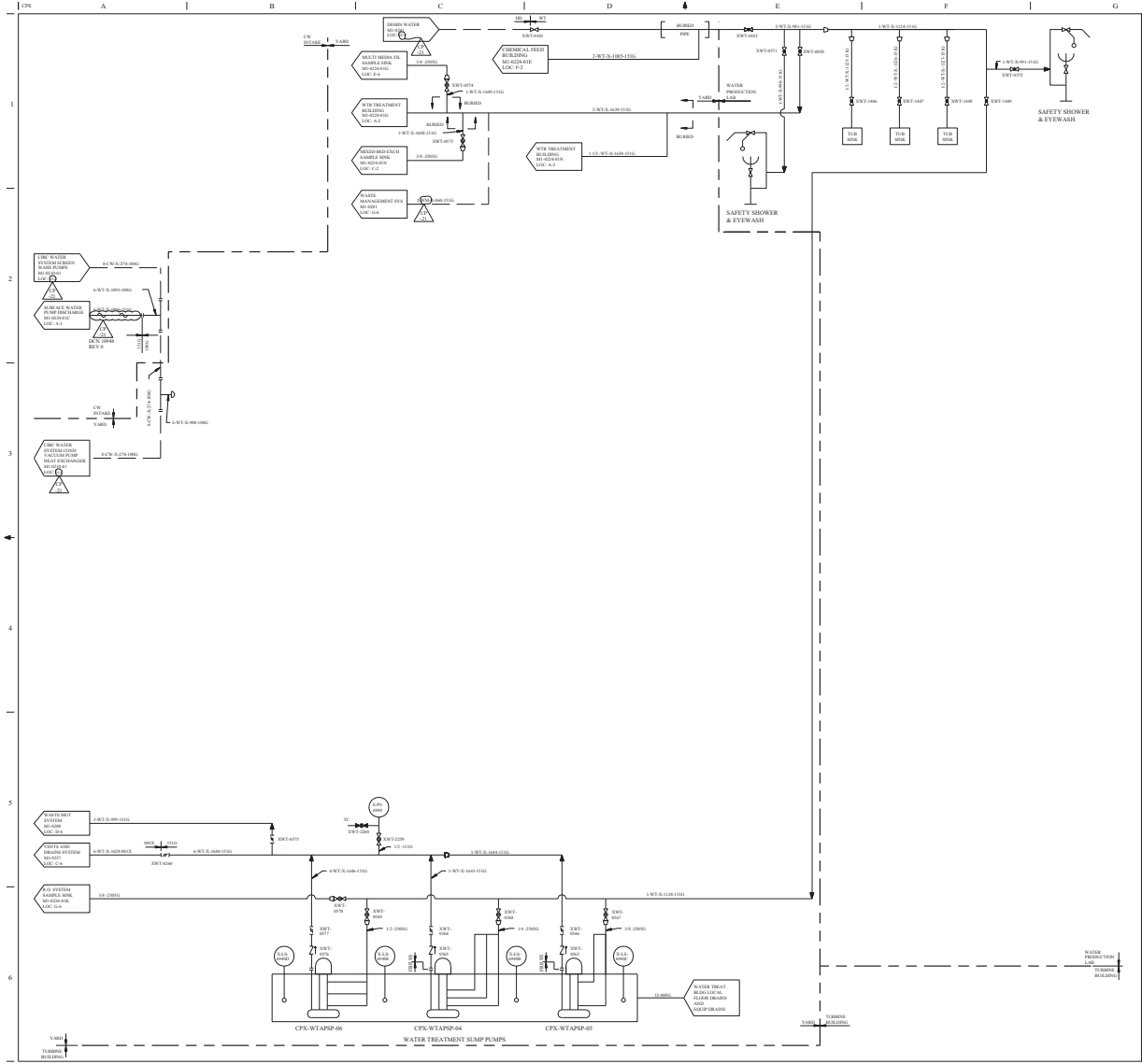

REV	DRN	DSN	CHK	APVD	REMARKS
CP-21					THIS DRAWING REVISED TO INCORPORATE DESIGN CHANGE DCN 10948 REV 0. EDITORIAL CLEANUP AS NOTED.

NOTES:

1. FOR MECHANICAL SYMBOLS AND NOTES SEE DWG M1-0200.
2. UNLESS OTHERWISE NOTED, DRAINS TO BE COLLECTED BY LOCAL FLOOR DRAIN SYSTEM.

DRAWING M1-0224-01	REV CP-17
HAS BEEN SPLIT INTO THE FOLLOWING SHEETS:	
M1-0224-01	
M1-0224-01F	
M1-0224-01G	
M1-0224-01H	
M1-0224-01J	
M1-0224-01K	
M1-0224-01L	
M1-0224-01M	
M1-0224-01N	

DRAWING M1-0224-01	REV CP-15
HAS BEEN SPLIT INTO THE FOLLOWING SHEETS:	
M1-0224-01C	
M1-0224-01E	

DRAWING M1-0224-01	REV CP-10
HAS BEEN SPLIT INTO THE FOLLOWING SHEETS:	
M1-0224-01	
M1-0224-01C	
M1-0224-01D	

DRAWING 2323-M1-0224-01	REV CP-7
HAS BEEN SPLIT INTO THE FOLLOWING SHEETS:	
M1-0224-01	
M1-0224-01A	
M1-0224-01B	

FSAR FIGURE 9.2-4A

THIS DOCUMENT CONTAINS CONTROLLED INFORMATION

NON-SAFETY

TXU ELECTRIC
CPSES
GLEN ROSE, TEXAS

FLOW DIAGRAM
SURFACE WATER
PRE-TREATMENT SYSTEM

DWG. NO.	SH. NO.	REV.
M1-0224	01	CP-21

FINAL PRINT

REF XRD CP-21 5-6-98

ma00010a.dgn

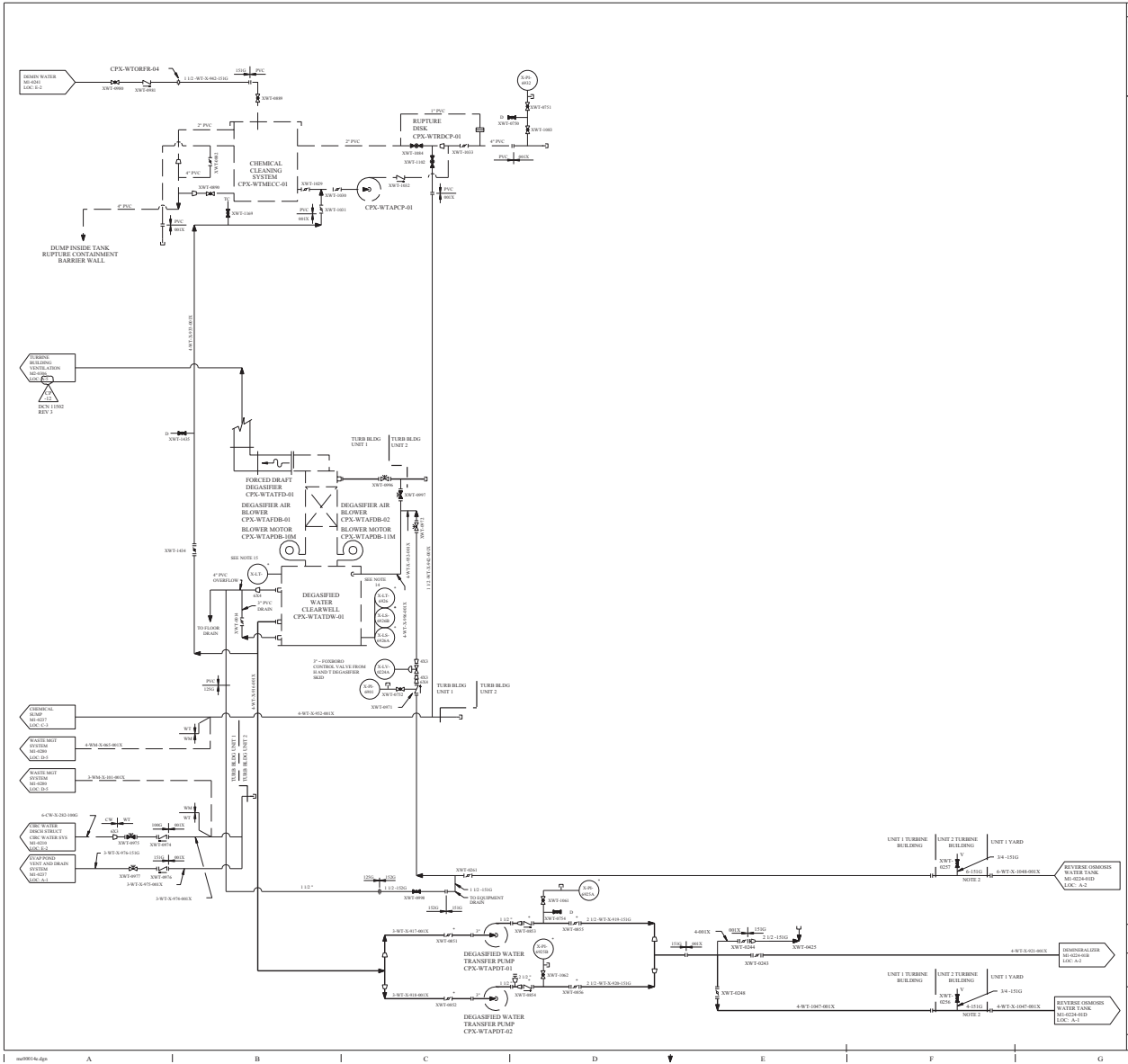

REV	DWN	CHKD	APVD	REMARKS
CP-13	11 JAN 1999			THIS DRAWING REVISED TO INCORPORATE DESIGN CHANGE DCN 11502 REV 3.

NOTES:

1. ALL PREASSEMBLED EQUIPMENT OR SKID MOUNTED EQUIPMENT AND PIPING SUPPLIED BY GRAVER IS SHOWN IN FRANTOM. ALL EQUIPMENT SUPPLIED BY GRAVER LOOSE FOR INSTALLATION IN PURCHASERS PIPING IS INDICATED BY *.
2. CAT 316G AND 601G TO BE 17/4 STAINLESS STEEL.
3. PIPE AND FITTINGS TO BE CARBONTER ALLOY 20.
4. SEE DRAWING M1-2227-01 AND M1-2227-02 FOR CONTROL LOGIC.
5. FOR MECHANICAL NOTES AND SYMBOLS SEE M1-0200.
6. ALL DRAINS TO BE COLLECTED LOCALLY UNLESS OTHERWISE NOTED.
7. FOR CONTROL LOGIC SEE ECODYNE-GRAVER DRAWINGS T-29241 AND T-29369.
8. 4" - 1. XWT-0072 , XWT-0096 AND XWT-0097) AND 3" - 1. XWT-0075 (FLANGED SARAN LINED DIAPHRAGM VALVE SALVAGED FROM HUNGERFORD AND TERRY DEGASIFIER SKID.
9. THIS FLOW DIAGRAM HAS BEEN REDRAWN FROM ECODYNE GRAVER DRAWINGS T-29241 & AND T-29369-C WITH FIELD CHANGES INCORPORATED.
10. DELETED.
11. DELETED.
12. DELETED.
13. DELETED.
14. INSTRUMENT TREE DETAIL.

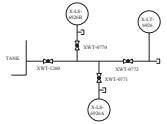

15. LEVEL TRANSMITTER ABANDONED IN PLACE.

FSAR FIGURE 9.2-4A

THIS DRAWING HAS BEEN SPLIT INTO THE FOLLOWING SHEETS

DRAWING	2203-M1-0224-01	REV	CP-7
HAS BEEN SPLIT INTO THE FOLLOWING SHEETS:			
M1-0224-01			
M1-0224-01A			
M1-0224-01B			

NON-SAFETY

TXU ELECTRIC
CPSES
GLEN ROSE, TEXAS

FLOW DIAGRAM
SURFACE WATER
PRE-TREATMENT SYSTEM

DWG. NO. M1-0224 | SCALE 01A | REV. CP-13

FINAL PRINT

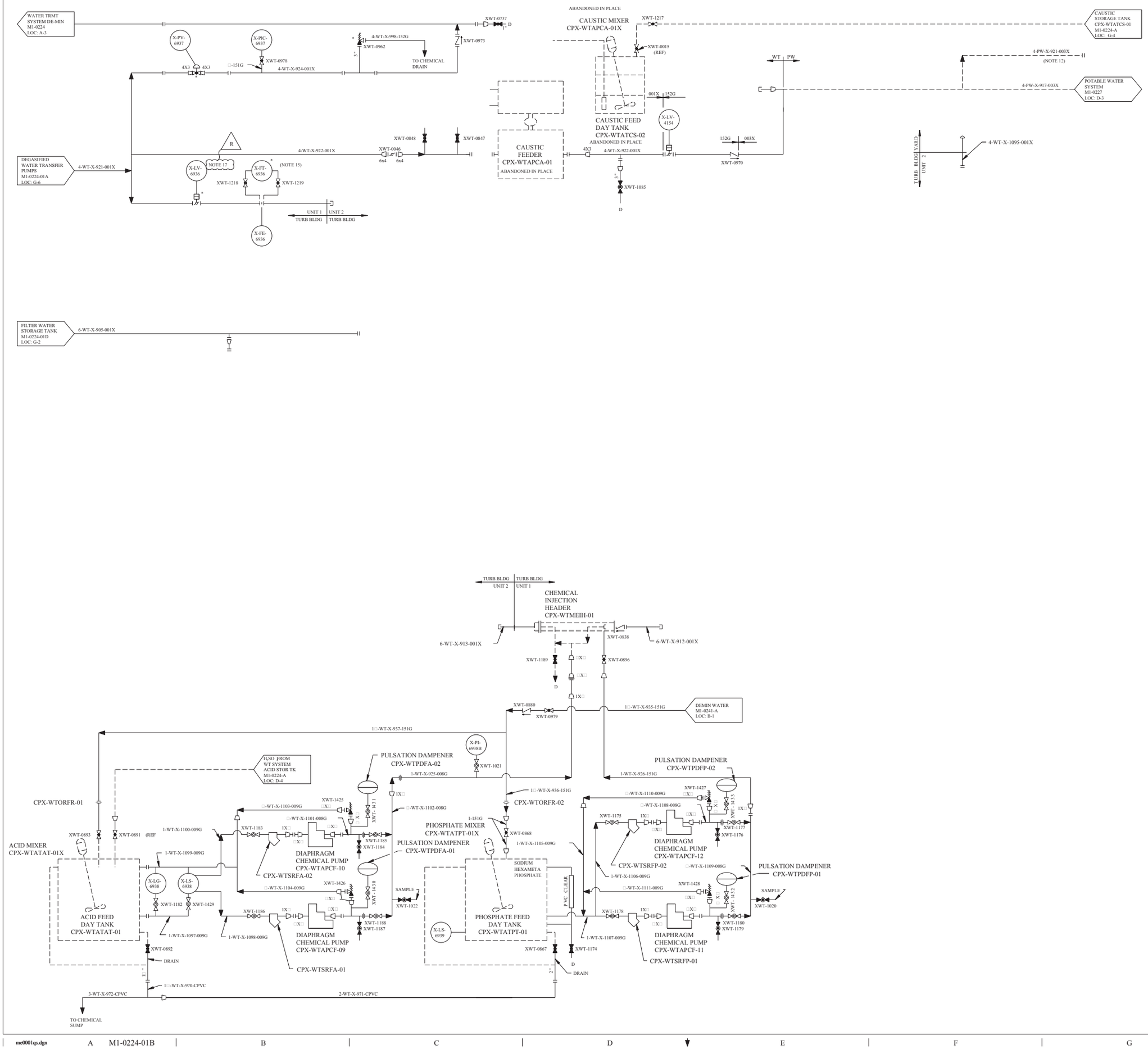

REV	DWN	CHKD	APVD	REMARKS
CP-18	DJL 11-11-2014	JRMC 11-11-2014		THIS DRAWING REVISED TO INCORPORATE DESIGN CHANGE FDA-2014-000184-01-00 PER SK-0007-14-000184-01-00.

NOTES:

1. ALL PREASSEMBLED EQUIPMENT OR SKID MOUNTED EQUIPMENT AND PIPING SUPPLIED BY GRAVER IS SHOWN IN PHANTOM. ALL EQUIPMENT SUPPLIED BY GRAVER LOOSE FOR INSTALLATION IN PURCHASERS PIPING IS INDICATED BY *.
2. CAT 151G AND 601G TO BE F316 STAINLESS STEEL.
3. FOR CONTROL LOGIC SEE ECODYNE-GRAVER DRAWINGS T-29241 AND T-29569.
4. ALL LINES 6" AND SMALLER LOCATED ABOVE GROUND OUTDOORS WITH THE EXCEPTION OF THE FOLLOWING LINES: 3-WT-X-990-152G,3-WT-X-991-152G, 3-WT-X-992-152G, 3-WT-X-999-152G (DOWNSTREAM OF VALVE XWT-9881), 6-WT-X-956-002X (DOWNSTREAM OF VALVE XWT-8101) SHALL BE INSULATED.
5. THIS FLOW DIAGRAM HAS BEEN REDRAWN FROM ECODYNE-GRAVER DRAWINGS T-29241-B AND T-29569-C WITH FIELD CHANGES INCORPORATED.
6. FOR GENERAL NOTES AND SYMBOLS SEE DRAWING M1-0200.
7. DELETED
8. DELETED
9. UNLESS OTHERWISE NOTED, ALL DRAINS TO BE COLLECTED BY LOCAL DRAIN SYSTEM.
10. THE FOLLOWING VALVES ARE TO BE BALL VALVES, MANUFACTURED BY NIBCO/CHEMTROL, "TRUE BLOC" TRUE UNION IN CPVC BODY MATERIAL:

    XWT-1020 , XWT-1021 , XWT-1022 , XWT-1175 , XWT-1176 , XWT-1177 , XWT-1178 , XWT-1179 , XWT-1180 , XWT-1182 , XWT-1183 , XWT-1184 , XWT-1185 , XWT-1186 , XWT-1187 , XWT-1188 , XWT-1429 , XWT-1430 ,XWT-1431 , XWT-1432 ,XWT-1433
11. THE FOLLOWING VALVES ARE TO BE RELIEF VALVES IN CARPENTER 20 ALLOY (ALLOY 20) BODY MATERIAL, □" ELO VR-6D-1 ALLOY 20 WITH A 115 PSI SET PRESSURE:

    XWT-1425 , XWT-1426

    THE FOLLOWING VALVES ARE TO BE RELIEF VALVES IN 316 SS BODY MATERIAL, □" ELO VR-6A-1 TYPE 316 WITH A 115 PSI SET PRESSURE:

    XWT-1427 , XWT-1428
12. PIPING BLANKED OFF AT THE DEGASIFIED WATER CLEAR WELL.(CPX-WTATDW-01) AREA.
13. DELETED.
14. DELETED.
15. MANIFOLDING ARRANGEMENT FOR X-FT-6936 :

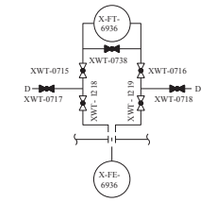

16. DELETED.
17. THIS LOCATION IS ABANDONED IN PLACE PER FDA-2014-000184-01.

R

FSAR FIGURE 9.2-4A

THIS DRAWING CREATED ELECTRONICALLY

DRAWING 2323-M1-0224-01 REV CP-7
HAS BEEN SPLIT INTO THE FOLLOWING SHEETS:
M1-0224-01
M1-0224-01A
M1-0224-01B

NON-SAFETY

LUMINANT
CPNPP
GLEN ROSE, TEXAS

FLOW DIAGRAM
SURFACE WATER
PRE-TREATMENT SYSTEM

DWG. NO.	SH. NO.	REV.
M1-0224	01B	CP-18

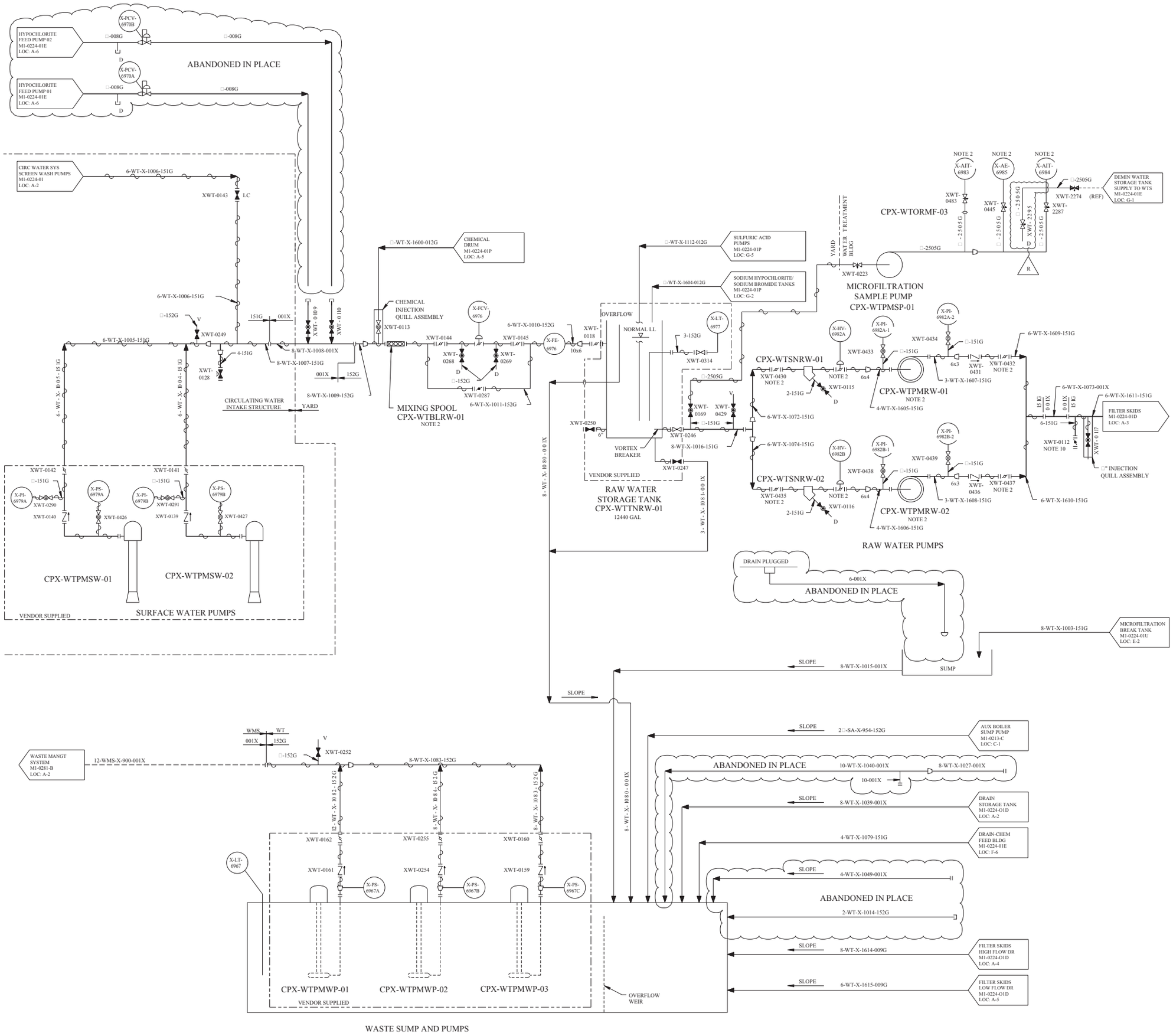

REV	DWN	CHKD	APVD	REMARKS
CP-20	DLK 09-28-2014	MM 09-28-2014		THIS DRAWING REVISED TO INCORPORATE DESIGN CHANGE FDA 2014-000133-01-00 PER SK-0005-14-000133-01-00.

NOTES:

1. FOR GENERAL NOTES AND SYMBOLS SEE DRAWING M1-0200.
2. COMPONENTS FURNISHED LOOSE BY WATER PRE-TREATMENT SYSTEM VENDOR FOR INSTALLATION IN CUSTOMER PIPING.
3. DELETED
4. DELETED
5. DELETED
6. DELETED
7. FOR HEAT TRACING SEE DCN-1103.
8. DELETED
9. DELETED
10. VALVE XWT-0112 IS INTENDED AS THE CONNECTION POINT OF AN ALTERNATE FILTRATION UNIT (MOBILE FILTRATION TRAILER). THIS VALVE SERVES AS THE SUPPLY VALVE TO THE ALTERNATE UNIT. THIS ALTERNATE FILTRATION UNIT MAY BE CONNECTED AT THE DISCRETION OF CHEMISTRY TO THE WT SYSTEM DURING AN EXTENDED OUTAGE OF THE PERMANENT MICROFILTRATION SYSTEM.

FSAR FIGURE 9.2-4A

THIS DRAWING CREATED ELECTRONICALLY

DRAWING M1-0224-01 REV CP-10
HAS BEEN SPLIT INTO THE FOLLOWING SHEETS:

M1-0224-01
M1-0224-01C
M1-0224-01D

NON-SAFETY

LUMINANT
CPNPP
GLEN ROSE, TEXAS

FLOW DIAGRAM
SURFACE WATER
PRE-TREATMENT SYSTEM

DWG NO. M1-0224 | SH NO. 01C | REV. CP-20

< FINAL PRINT >

$$$$$$$$DATE$$$$$$ REF CKD 5-8-98 CP-12

me105360.dgn M1-0224-01C

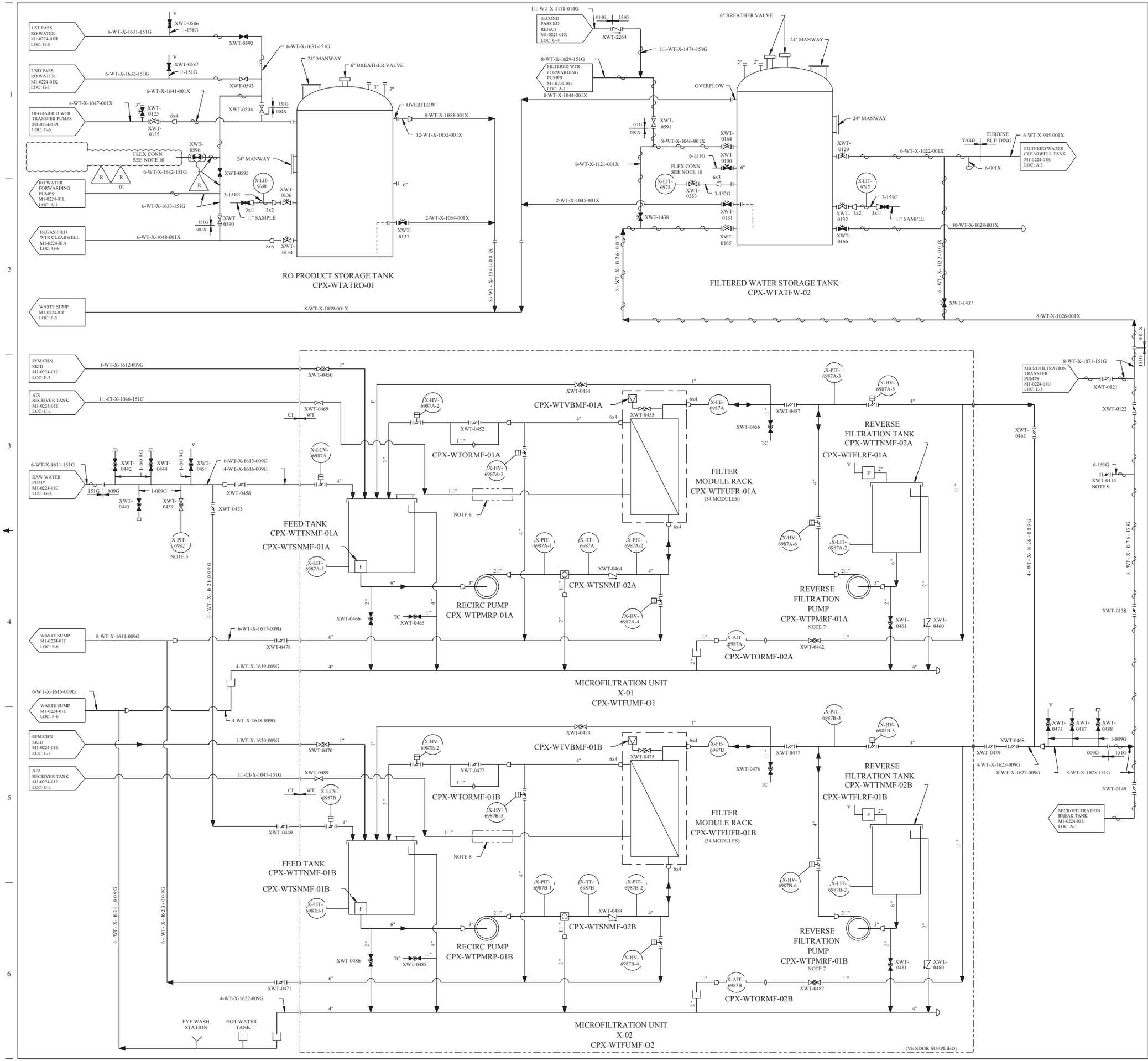

REV	DWN	CHKD	APVD	REMARKS
CP-17	DLK 09-12 2014	MM 09-12 2014		THIS DRAWING REVISED TO INCORPORATE DESIGN CHANGE FDA 2013-000008-11-01 PER SK-0001-13-000008-11-01.

NOTES:

1. FOR GENERAL NOTES AND SYMBOLS SEE DRAWING M1-0200.
2. FOR HEAT TRACING SEE DCN-1103.
3. COMPONENTS FURNISHED LOOSE BY WATER PRE-TREATMENT SYSTEM VENDOR FOR INSTALLATION IN CUSTOMER PIPING.
4. DELETED
5. DELETED
6. DELETED
7. THE WATER TREATMENT MICROFILTRATION VENDOR INDICATES THAT THE REVERSE FILTRATION PUMPS ROTATE BACKWARDS DURING THE FILTER MODULE CLEANING AND BACK FLUSHING ACTIVITIES.
8. REFER TO VENDOR DRAWING 10000022051 SHEET 3 FOR ADDITIONAL DETAILS OF THE X-01 AND X-02 SKID MOUNTED INSTRUMENT AIR SYSTEM DESIGN, LAYOUT AND COMPONENTS.
9. VALVE XWT-0114 IS INTENDED AS THE CONNECTION POINT OF AN ALTERNATE FILTRATION UNIT (MOBILE FILTRATION TRAILER). THIS VALVE SERVES AS THE DISCHARGE VALVE TO THE ALTERNATE UNIT. THIS ALTERNATE FILTRATION UNIT MAY BE CONNECTED AT THE DISCRETION OF CHEMISTRY TO THE WT SYSTEM DURING AN EXTENDED OUTAGE OF THE PERMANENT MICROFILTRATION SYSTEM.
10. FLEX CONNECTION - MAY BE A PIPE CAP OR STORZ FITTING.

R 01

FSAR FIGURE 9.2-4A

THIS DRAWING CREATED ELECTRONICALLY

DRAWING	M1-0224-01	REV	CP-10
HAS BEEN SPLIT INTO THE FOLLOWING SHEETS:			
M1-0224-01			
M1-0224-01C			
M1-0224-01D			

NON-SAFETY

LUMINANT
CPNPP
GLEN ROSE, TEXAS

FLOW DIAGRAM
SURFACE WATER
PRE-TREATMENT SYSTEM

DWG. NO. M1-0224 | SH. NO. 01D | REV. CP-17

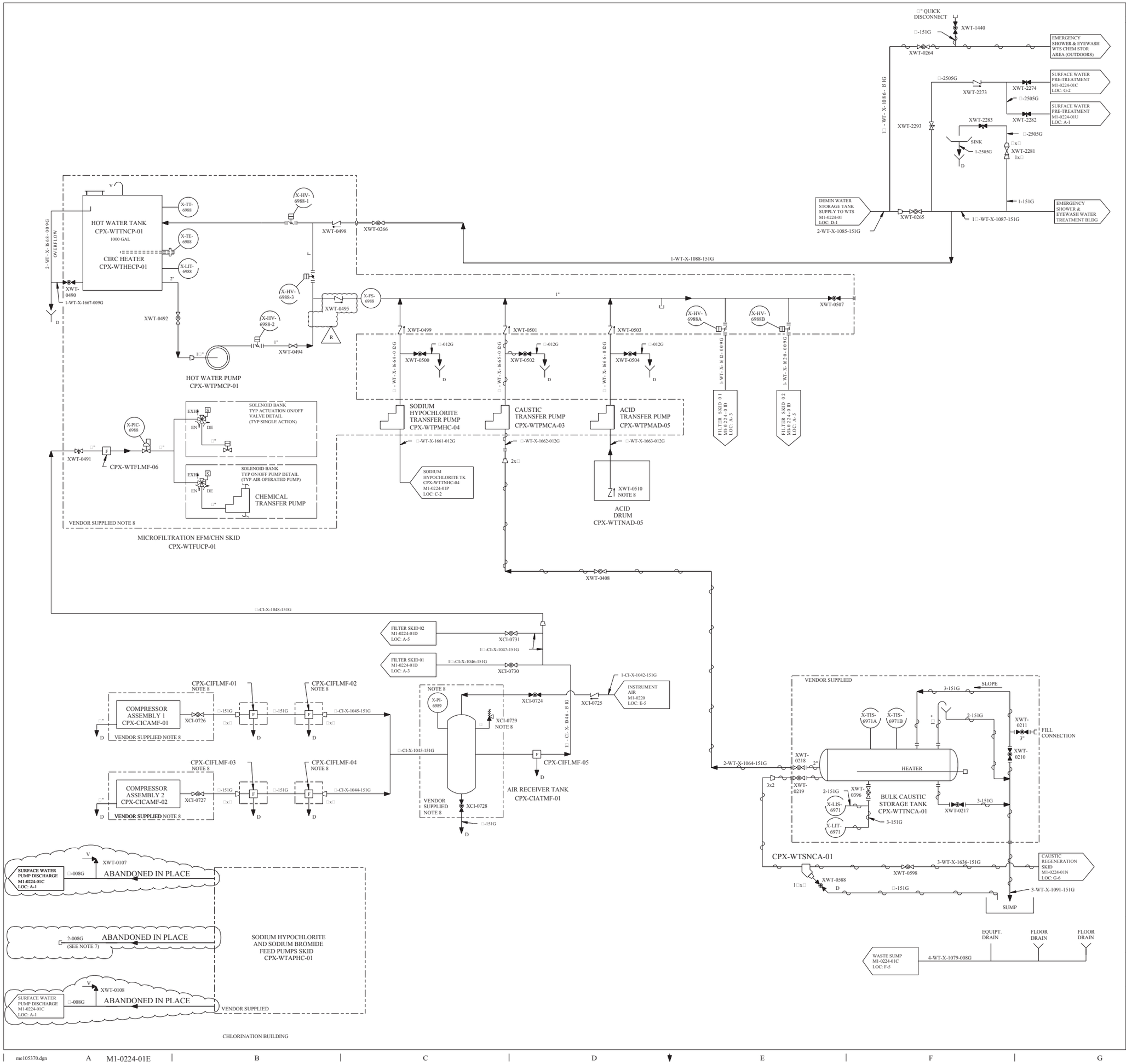

REV	DWN	CHKD	APVD	REMARKS
CP-15	DLK 12-18 2013	MM 12-18 2013		THIS DRAWING REVISED TO INCORPORATE DESIGN CHANGE FDA 2013-000191-01-00 PER SK-0001-13-000191-01-00.

NOTES:

1. FOR GENERAL NOTES AND SYMBOLS ON DRAWING M1-0200.
2. DELETED
3. INSULATION AND HEAT TRACING TO BE PROVIDED ON ALL CAUSTIC LINES AND BULK CAUSTIC STORAGE TANK.
4. * DENOTES SCHEDULE 80 PVC PIPE SUPPLIED BY VENDOR OR 008G IF PROVIDED BY FIELD.
5. FOR HEAT TRACING SEE DCN 1103.
6. VENT VALVES PROVIDED BY CUSTOMER ON VENDOR FURNISHED SKID.
7. DENOTES PVDF OR KYNAR LINED CPVC.
8. COMPONENTS FURNISHED LOOSE BY WATER PRE-TREATMENT SYSTEM VENDOR FOR INSTALLATION IN CUSTOMER PIPING.
9. □" AND □" CATGORY 012G KYNAR CHEMICAL INJECTION LINE SEGMENTS SHALL BE ROUTED INSIDE 1□" PVC SCHEDULE 80 GUARD PIPE.

FSAR FIGURE 9.2-4A

THIS DRAWING CREATED ELECTRONICALLY

DRAWING M1-0224-01 REV CP-13
HAS BEEN SPLIT INTO THE FOLLOWING SHEETS:
M1-0224-01
M1-0224-01E

NON-SAFETY

LUMINANT
CPNPP
GLEN ROSE, TEXAS

FLOW DIAGRAM
SURFACE WATER
PRE-TREATMENT SYSTEM

DWG. NO. M1-0224 | SH. NO. 01E | REV. CP-15

REF CHKD 09-02-2003

$$$$$$$$ DATES $$$$$$

me105370.dgn A M1-0224-01E

< FINAL PRINT >

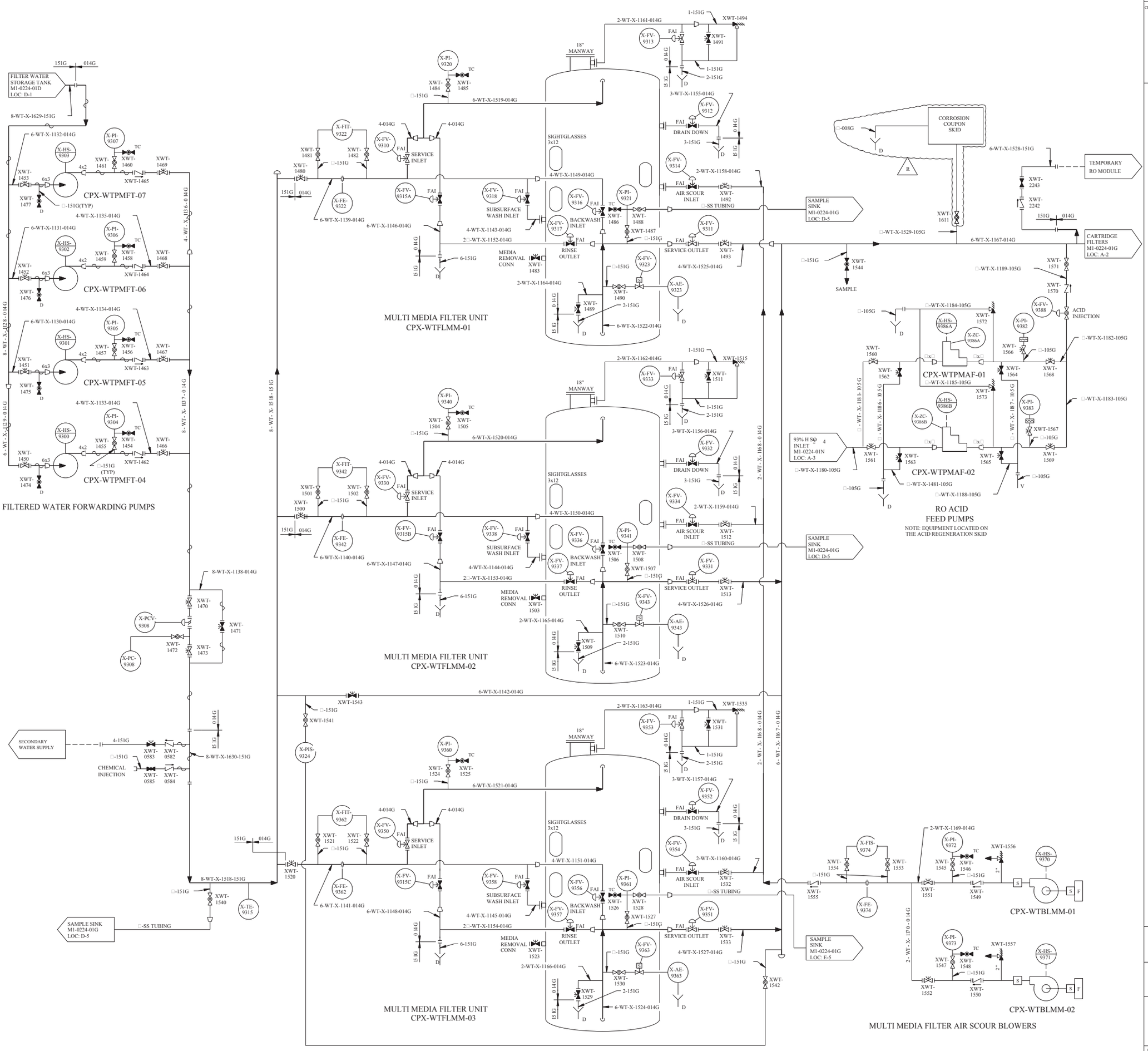

REV	DWN	CHKD	APVD	REMARKS
CP-7	JRMC 10-10-2012	DJL 10-12-2012		THIS DRAWING REVISED TO INCORPORATE DESIGN CHANGE FDA 2012-00152-01-00 PER SK-0001-12-000152-01-00.

NOTES:

1. FOR GENERAL NOTES AND SYMBOLS SEE DRAWING M1-0200.
2. UNLESS OTHERWISE NOTED ALL DRAINS COLLECTED BY LOCAL DRAIN SYSTEM.
3. GLEGG WATER CONDITIONING, INC DRAWING 2011P1-1.

FSAR FIGURE 9.2-4A

THIS DRAWING CREATED ELECTRONICALLY

DRAWING M1-0224-01 REV CP-17
HAS BEEN SPLIT INTO THE FOLLOWING SHEETS:

- M1-0224-01
- M1-0224-01F
- M1-0224-01G
- M1-0224-01H
- M1-0224-01J
- M1-0224-01K
- M1-0224-01L
- M1-0224-01M
- M1-0224-01N

NON-SAFETY

LUMINANT
CPNPP
GLEN ROSE, TEXAS

FLOW DIAGRAM
SURFACE WATER
PRE-TREATMENT SYSTEM

DWG. NO. M1-0224 | SH. NO. 01F | REV. CP-7

< FINAL PRINT >

me103420.dgn A M1-0224-01F

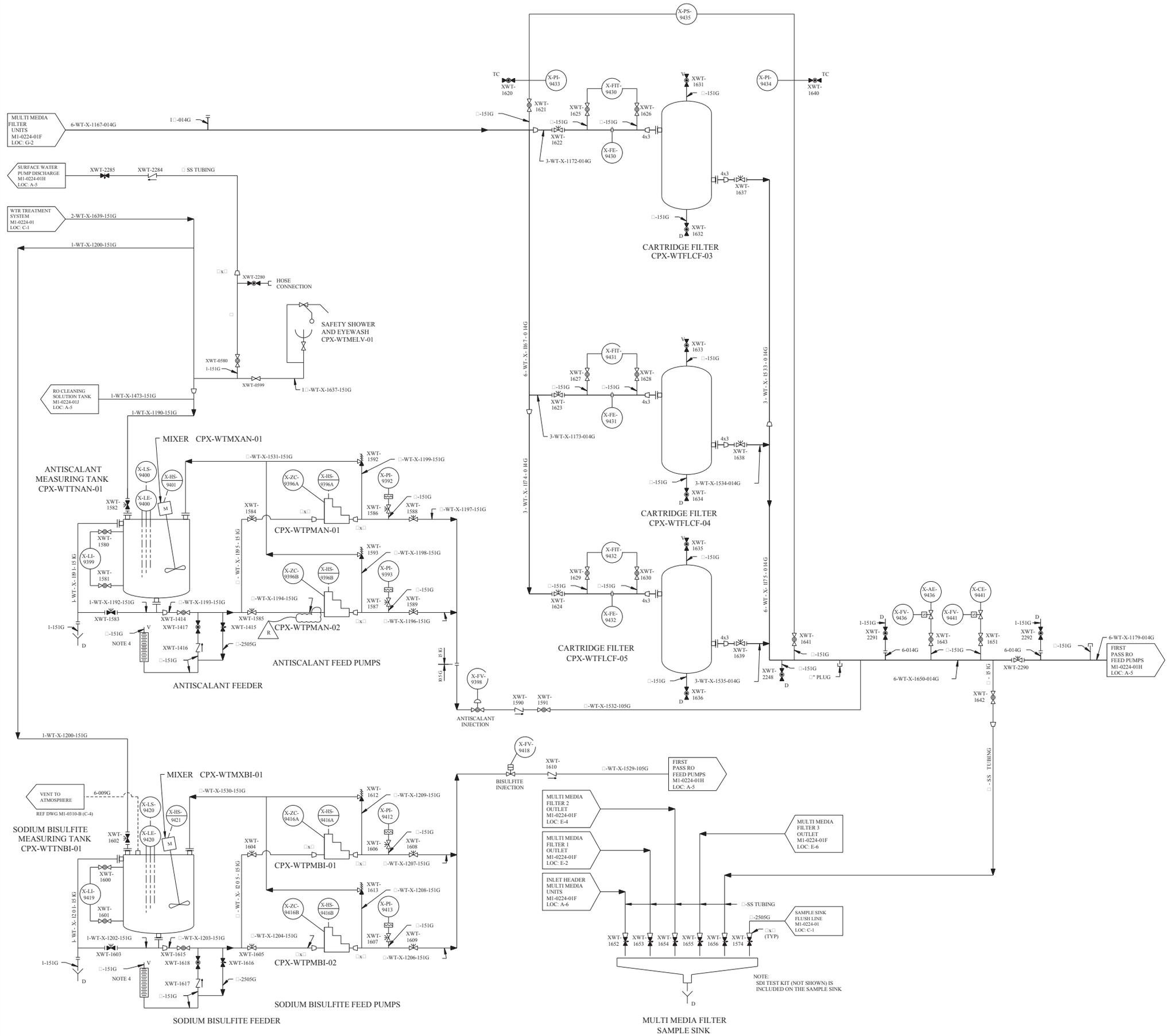

REV	DWN	CHKD	APVD	REMARKS
CP-8	DJL 12-21 2011	MF 12-21 2011		THIS DRAWING REVISED TO INCORPORATE DESIGN CHANGE FDA-2011-000224-01-00 PER SK-0001-11-000224-01-00.

NOTES:

1. FOR GENERAL NOTES AND SYMBOLS SEE DRAWING M1-0200.
2. UNLESS OTHERWISE NOTED ALL DRAINS COLLECTED BY LOCAL DRAIN SYSTEM.
3. GLEGG WATER CONDITIONING, INC DRAWING 2011P1-2.
4. 500 ML GRADUATED CALIBRATION CYLINDER.

FSAR FIGURE 9.2-4A

THIS DRAWING CREATED ELECTRONICALLY

DRAWING M1-0224-01 REV CP-17 HAS BEEN SPLIT INTO THE FOLLOWING SHEETS:
M1-0224-01
M1-0224-01F
M1-0224-01G
M1-0224-01H
M1-0224-01J
M1-0224-01K
M1-0224-01L
M1-0224-01M
M1-0224-01N

NON-SAFETY

LUMINANT
CPNPP
GLEN ROSE, TEXAS

FLOW DIAGRAM
SURFACE WATER
PRE-TREATMENT SYSTEM

DWG. NO. M1-0224 | SH. NO. 01G | REV. CP-8

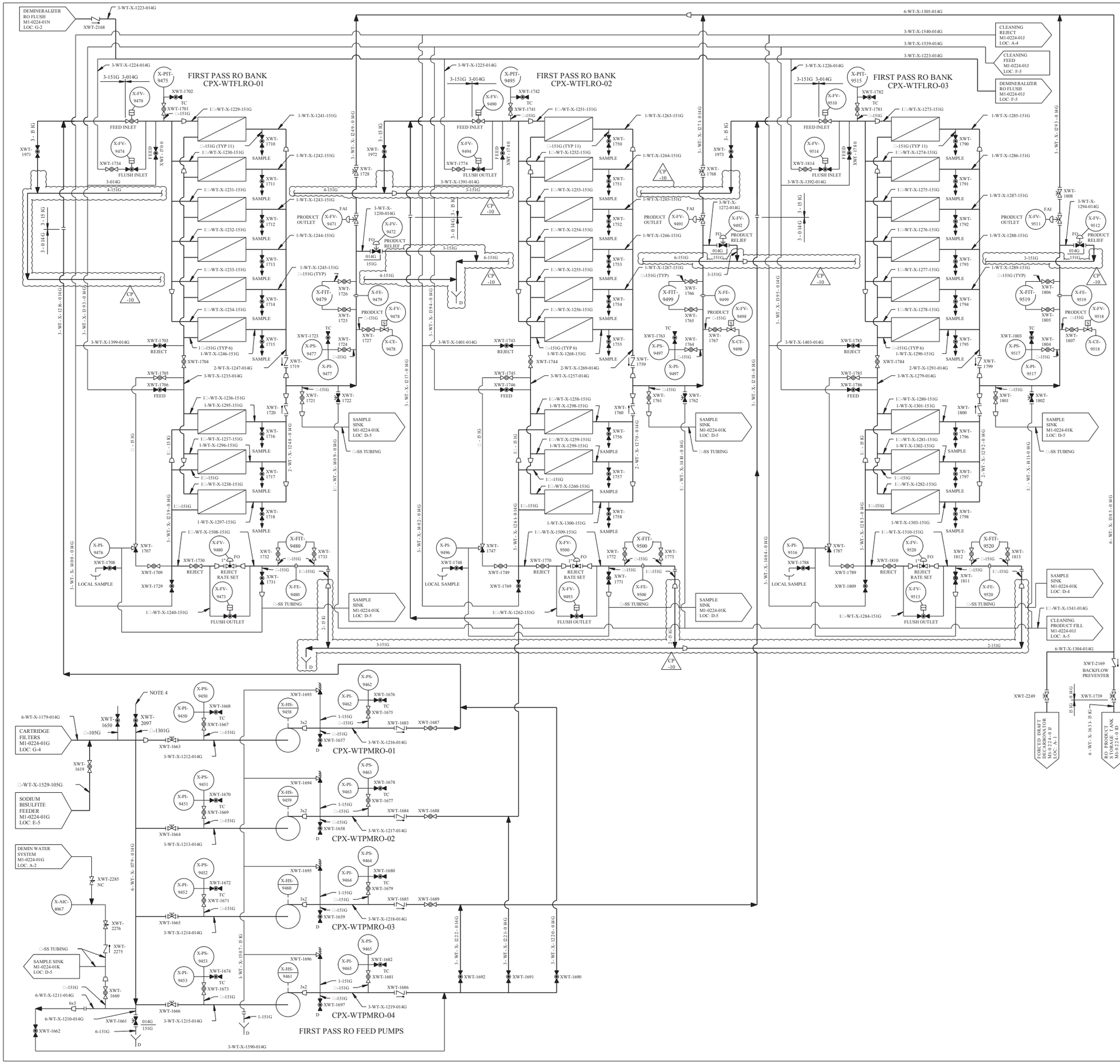

REV	DWN	CHKD	APVD	REMARKS
CP-10	DLK 06-10 2014			THIS DRAWING REVISED TO INCORPORATE AI-CR-2014-006805-1 TO EDITORIALLY CORRECT THE DRAIN LINES DOWN STREAM OF X-FV-9480, X-FV-9500 AND X-FV-9520. ALSO EDITORIALLY CORRECT THE DRAIN LINES DOWN STREAM OF X-FV-9472, X-FV-9492, X-FV-9512, XWT-1971, XWT-1972 AND XWT-1973.

NOTES:

1. FOR GENERAL NOTES AND SYMBOLS SEE DRAWING M1-0200.
2. UNLESS OTHERWISE NOTED ALL DRAINS COLLECTED BY LOCAL DRAIN SYSTEM.
3. GLEGG WATER CONDITIONING, INC. DRAWING 2011P1-3.
4. CHEMICAL INJECTION FITTING FOR USE AT THE DISCRETION OF THE CHEMISTRY DEPARTMENT.

FSAR FIGURE 9.2-4A

THIS DRAWING CREATED ELECTRONICALLY

DRAWING M1-0224-01 REV CP-17
HAS BEEN SPLIT INTO THE FOLLOWING SHEETS:

- M1-0224-01
- M1-0224-01F
- M1-0224-01G
- M1-0224-01H
- M1-0224-01J
- M1-0224-01K
- M1-0224-01L
- M1-0224-01M
- M1-0224-01N

NON-SAFETY

LUMINANT
CPNPP
GLEN ROSE, TEXAS

FLOW DIAGRAM
SURFACE WATER
PRE-TREATMENT SYSTEM

DWG. NO. M1-0224 | SH. NO. 01H | REV. CP-10

REF CKD 1'20/97 CP-5

SSSSSSSSDATESSSSSS

me103190.dgn M1-0224-01H

< FINAL PRINT >

REV	DWN	CHKD	APVD	REMARKS
CP-4	CA 08-05-1999			THIS DRAWING REVISED TO INCORPORATE DESIGN CHANGE DCN 10745 REV 1.

NOTES:

1. FOR GENERAL NOTES AND SYMBOLS SEE DRAWING M1-0200.
2. UNLESS OTHERWISE NOTED, ALL DRAINS COLLECTED BY LOCAL DRAIN SYSTEM.
3. GLEGG WATER CONDITIONING, INC DRAWING 2011P1-4.
4. FORCED DRAFT DECARBONATOR FAN FILTER IS A HEPA TYPE FILTER.
5. REMOVE BACKFLOW PREVENTER INTERNALS, ABANDON VALVE BODY XWT-2165 IN PLACE.

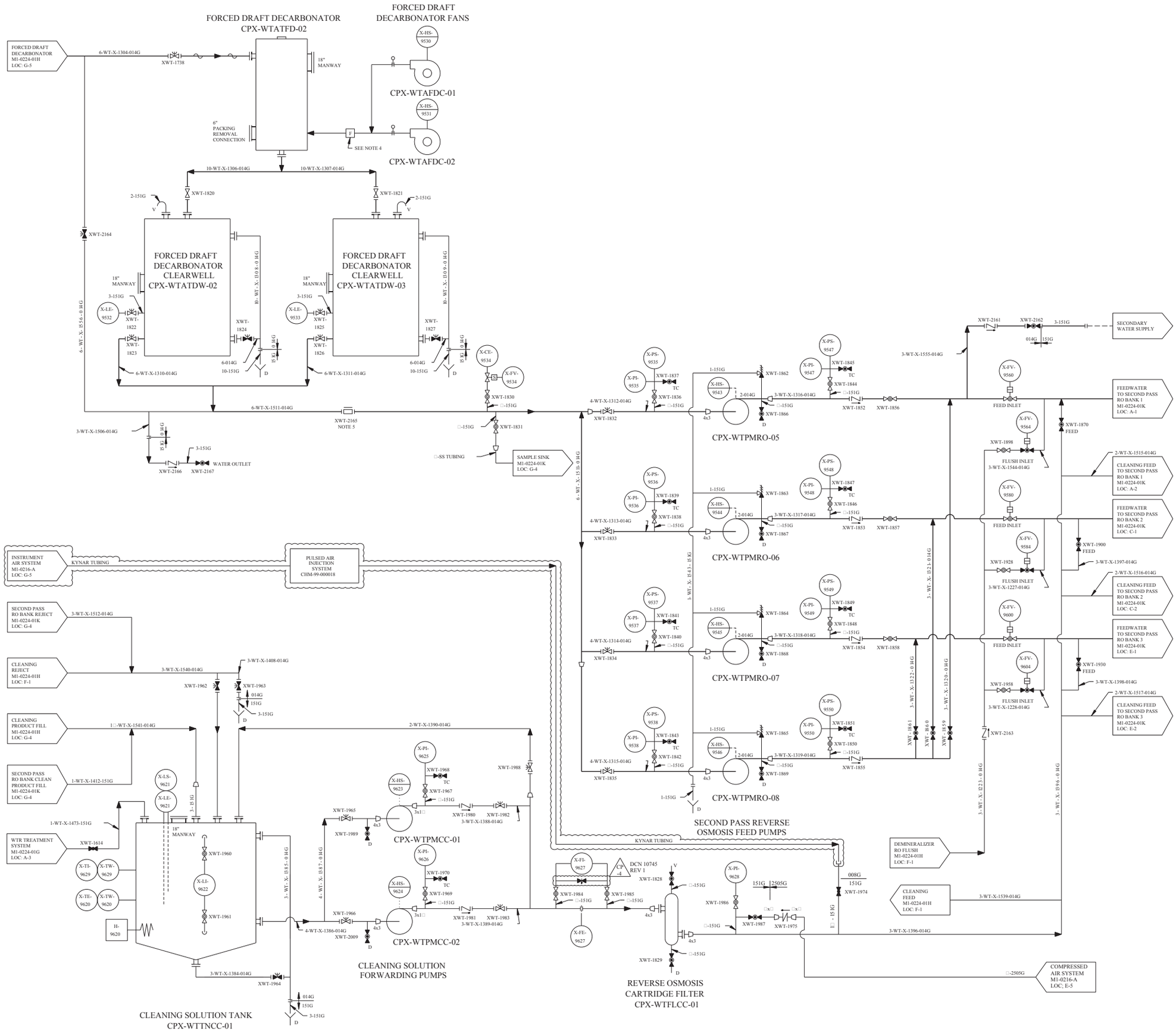

FSAR FIGURE 9.2-4A

THIS DRAWING CREATED ELECTRONICALLY

DRAWING M1-0224-01 REV CP-17 HAS BEEN SPLIT INTO THE FOLLOWING SHEETS:
M1-0224-01
M1-0224-01F
M1-0224-01G
M1-0224-01H
M1-0224-01J
M1-0224-01K
M1-0224-01L
M1-0224-01M
M1-0224-01N

NON-SAFETY

LUMINANT
CPNPP
GLEN ROSE, TEXAS

FLOW DIAGRAM
SURFACE WATER
PRE-TREATMENT SYSTEM

DWG. NO. M1-0224 | SH. NO. 01J | REV. CP-4

< FINAL PRINT >

me0001qj.dgn

SSSSSSSDATESSSSSS

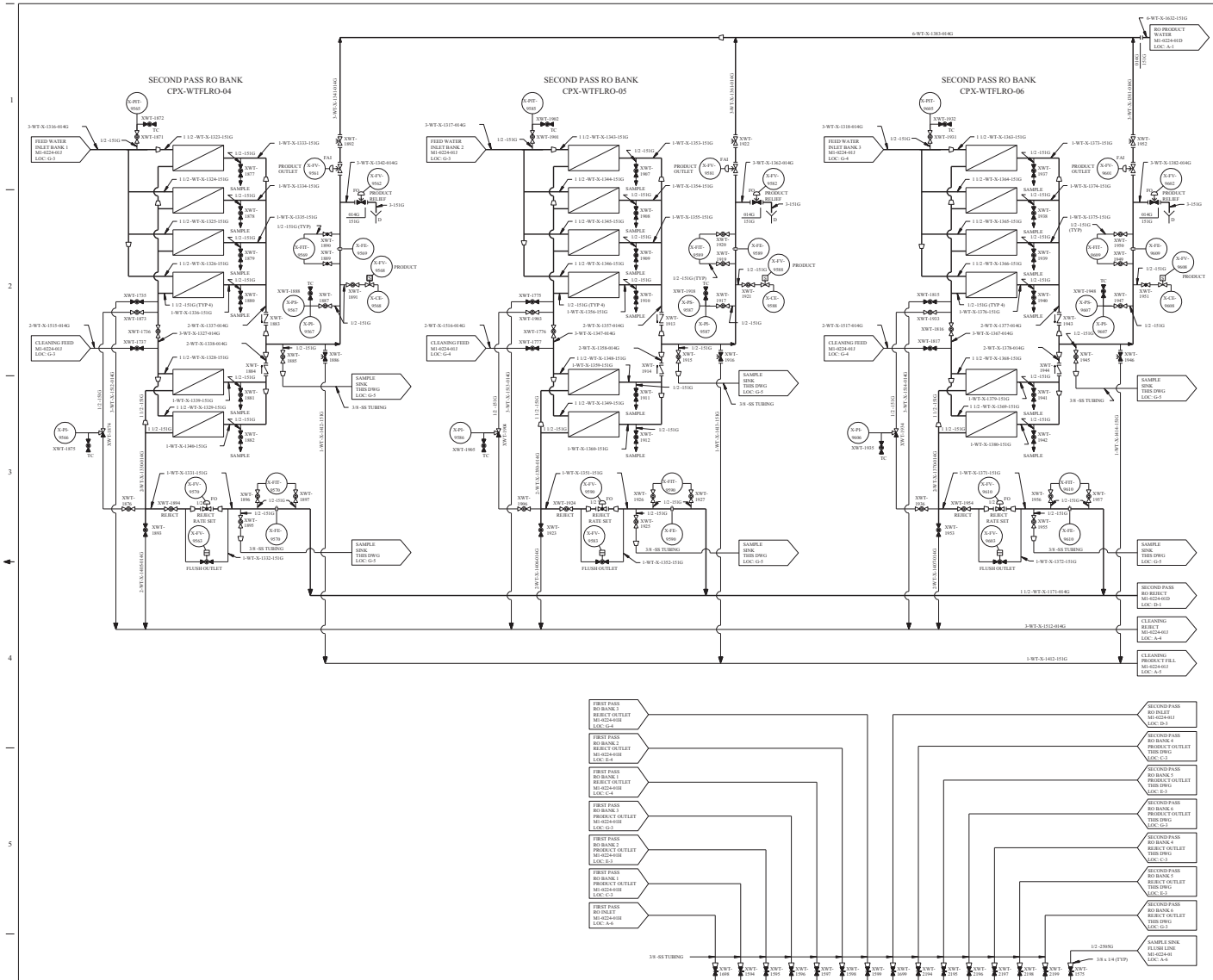

NOTE:
SAMPLE LINES ARE PROVIDED FROM EACH RO TUBE TO THE APPROPRIATE SAMPLE SINK. THESE LINES ARE NOT SHOWN.

REV	DWN	CHKD	APVD	REMARKS
CP-2	JOHN SMITH 1994			THIS DRAWING REVISED TO ADD THE FSAR FIGURE NUMBER AS AN EDITORIAL CHANGE.

NOTES

1. FOR GENERAL NOTES AND SYMBOLS SEE DWG M1-0200.
2. UNLESS OTHERWISE NOTED ALL DRAINS COLLECTED BY LOCAL DRAIN SYSTEM.
3. GLEGG WATER CONDITIONING, INC. DRAWING 2011P1-5.

FSAR FIGURE 9.2-4A

THIS DRAWING CONTAINS ELEVEN (11) SHEETS

DRAWING M1-0224-01 REV CP-17 HAS BEEN SPLIT INTO THE FOLLOWING SHEETS:
M1-0224-01
M1-0224-01F
M1-0224-01G
M1-0224-01H
M1-0224-01J
M1-0224-01K
M1-0224-01L
M1-0224-01M
M1-0224-01N

NON-SAFETY

TXU ELECTRIC
CPSES
GLEN ROSE, TEXAS

FLOW DIAGRAM
SURFACE WATER
PRE-TREATMENT SYSTEM

DWG. NO.	SH. NO.	REV.
M1-0224	01K	CP-2

FINAL PRINT

vs00008a.dgn

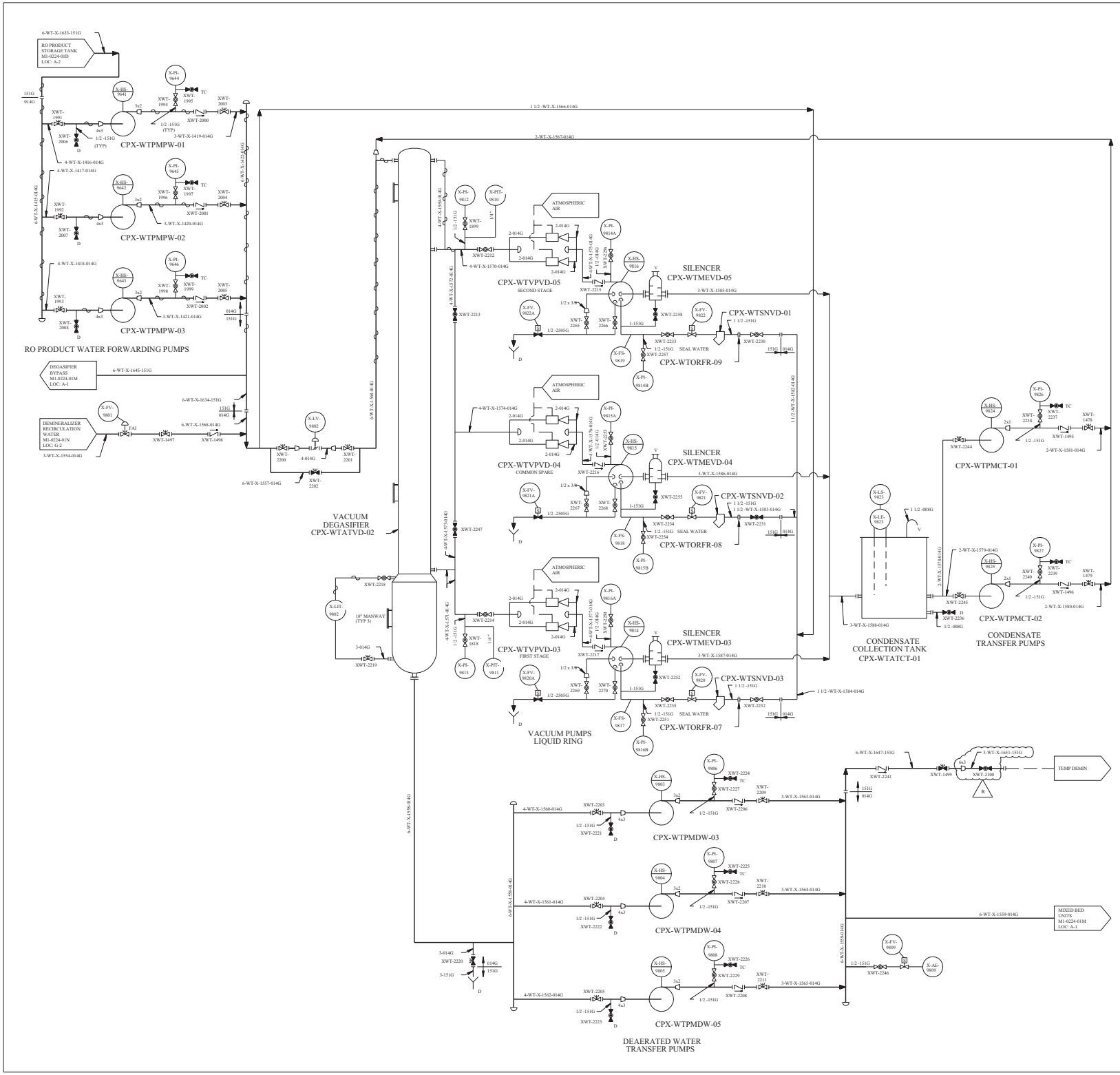

REV	DWN	CHK	APVD	REMARKS
CP-7				THIS DRAWING REVISED TO INCORPORATE DESIGN CHANGE FDA-2003-00157-01-00 PER SK-0001-01-00173-01-00.

NOTES

1. FOR GENERAL NOTES AND SYMBOLS SEE DRAWING M1-0200.
2. UNLESS OTHERWISE NOTED, ALL DRAINS COLLECTED BY LOCAL DRAIN SYSTEM.
3. GLEGG WATER CONDITIONING, INC DRAWING 2011P1-6 AND 2024P1-1.

FSAR FIGURE 9.2.4A

THIS DRAWING CREATED ELECTRONICALLY

DRAWING M1-0224-01	REV CP-17
HAS BEEN SPLIT INTO THE FOLLOWING SHEETS:	
M1-0224-01	
M1-0224-01F	
M1-0224-01G	
M1-0224-01H	
M1-0224-01J	
M1-0224-01K	
M1-0224-01L	
M1-0224-01M	
M1-0224-01N	

NON-SAFETY

TXU POWER
CPSES
GLEN ROSE, TEXAS

FLOW DIAGRAM
SURFACE WATER
PRE-TREATMENT SYSTEM

DWG. NO.	SH. NO.	REV.
M1-0224	01L	CP-7

FINAL PRINT

REF: CKD 12/08/04 CP-6

me588000.dgn M1-0224-01L

REV	DWN	CHKD	APVD	REMARKS
CP-7	JBMC 10-07-2008	DJL 10-08-2008		THIS DRAWING REVISED TO INCORPORATE DESIGN CHANGE FDA-2008-001837-01-00 PER SK-0001-08-001837-01-00.

NOTES

1. FOR GENERAL NOTES AND SYMBOLS SEE DRAWING M1-0200.
2. UNLESS OTHERWISE NOTED, ALL DRAINS COLLECTED BY LOCAL DRAIN SYSTEM.
3. GLEGG WATER CONDITIONING, INC DRAWING 2011P1-6.
4. MIXED BED VALVE POSITIONS ARE CONTROLLED BY PLC.
5. A CHEMISTRY LAB INSTRUMENT LOCATED IN THE WATER PRODUCTION LAB, USED TO MONITOR MIXED BED EFFLUENT.

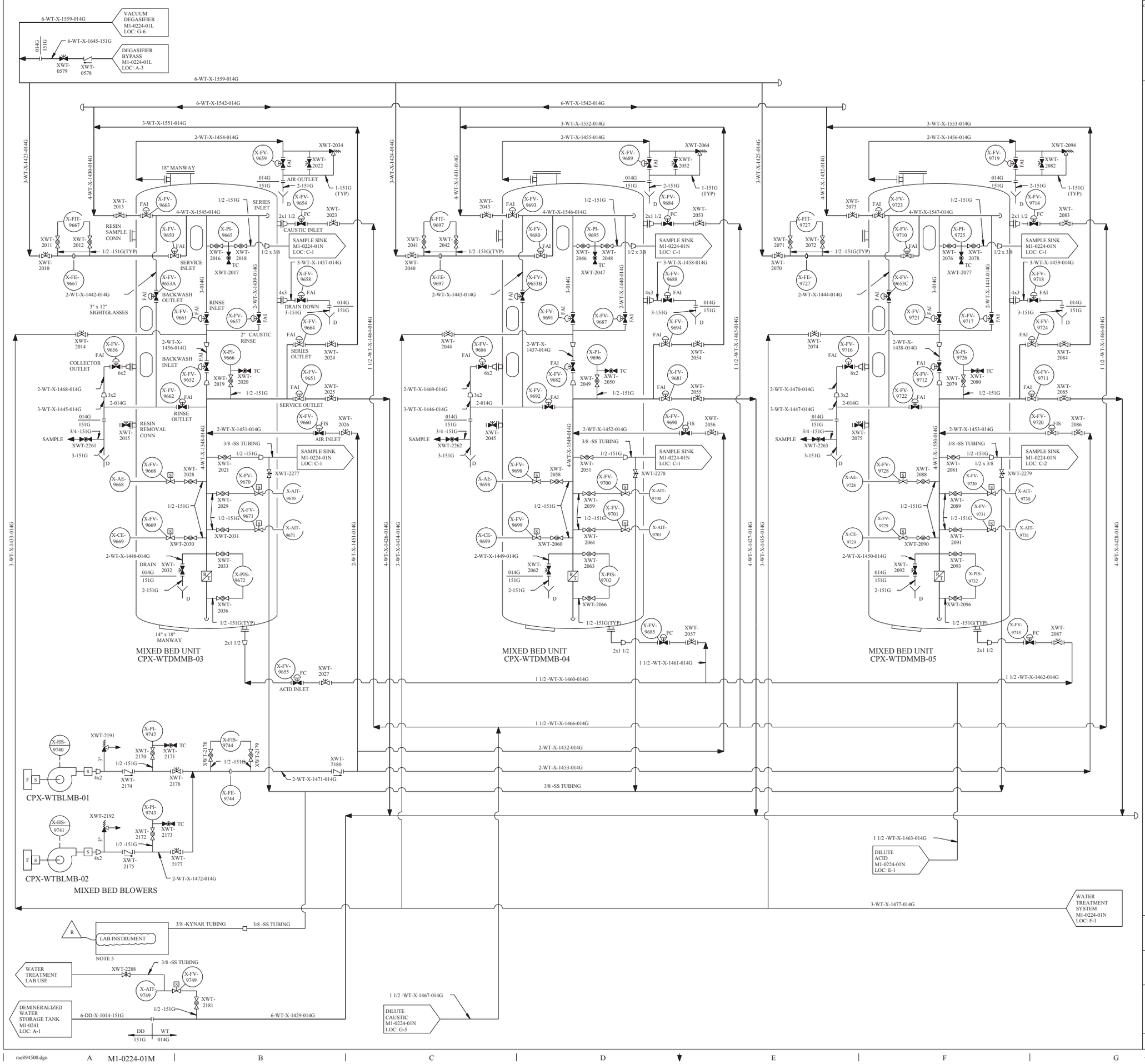

FSAR FIGURE 9.2-4A

THIS DRAWING CREATED ELECTRONICALLY

DRAWING M1-0224-01 REV CP-17
HAS BEEN SPLIT INTO THE FOLLOWING SHEETS:

M1-0224-01
M1-0224-01F
M1-0224-01G
M1-0224-01H
M1-0224-01J
M1-0224-01K
M1-0224-01L
M1-0224-01M
M1-0224-01N

NON-SAFETY

LUMINANT
CPNPP
GLEN ROSE, TEXAS

FLOW DIAGRAM
SURFACE WATER
PRE-TREATMENT SYSTEM

DWG. NO. M1-0224 | SH. NO. 01M | REV. CP-7

< FINAL PRINT >

REF CHKD 07/02/2002

SSSSSSDATESSSSS

me894500.dgn M1-0224-01M

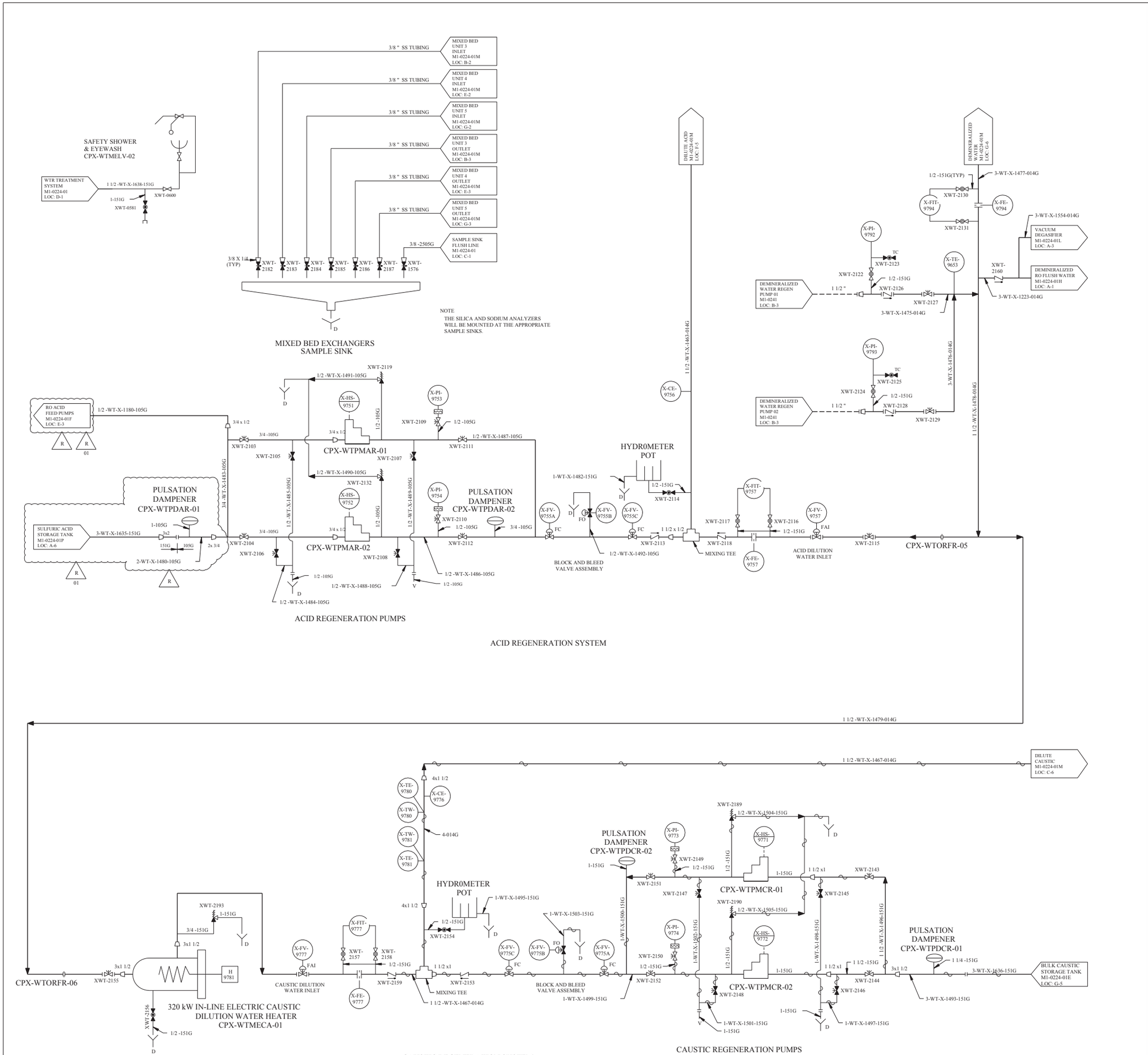

REV	DWN	CHKD	APVD	REMARKS
CP-3	MM 01-27 2011	MH 01-27 2011		THIS DRAWING REVISED TO INCORPORATE DESIGN CHANGE FDA 2007-003115-01-02 PER SK-0053-07-003115-01-01.

NOTES:

1. FOR GENERAL NOTES AND SYMBOLS SEE M1-0200.
2. INSULATION AND HEAT TRACING TO BE PROVIDED ON ALL CAUSTIC LINES.
3. UNLESS OTHERWISE NOTED, ALL DRAINS COLLECTED BY LOCAL DRAIN SYSTEM.
4. GLEGG WATER CONDITIONING INC. DRAWING 2011P1-7.

LEGEND:

- PULSATION DAMPENER

FSAR FIGURE 9.2-4A

THIS DRAWING CREATED ELECTRONICALLY

DRAWING M1-0224-01 REV CP-17
HAS BEEN SPLIT INTO THE FOLLOWING SHEETS:

M1-0224-01
M1-0224-01F
M1-0224-01G
M1-0224-01H
M1-0224-01J
M1-0224-01K
M1-0224-01L
M1-0224-01M
M1-0224-01N

NON-SAFETY

LUMINANT
CPNPP
GLEN ROSE, TEXAS

FLOW DIAGRAM
SURFACE WATER
PRE-TREATMENT SYSTEM

DWG. NO. M1-0224 | SH. NO. 01N | REV. CP-3

FINAL PRINT

me103580.dgn A M1-0224-01N

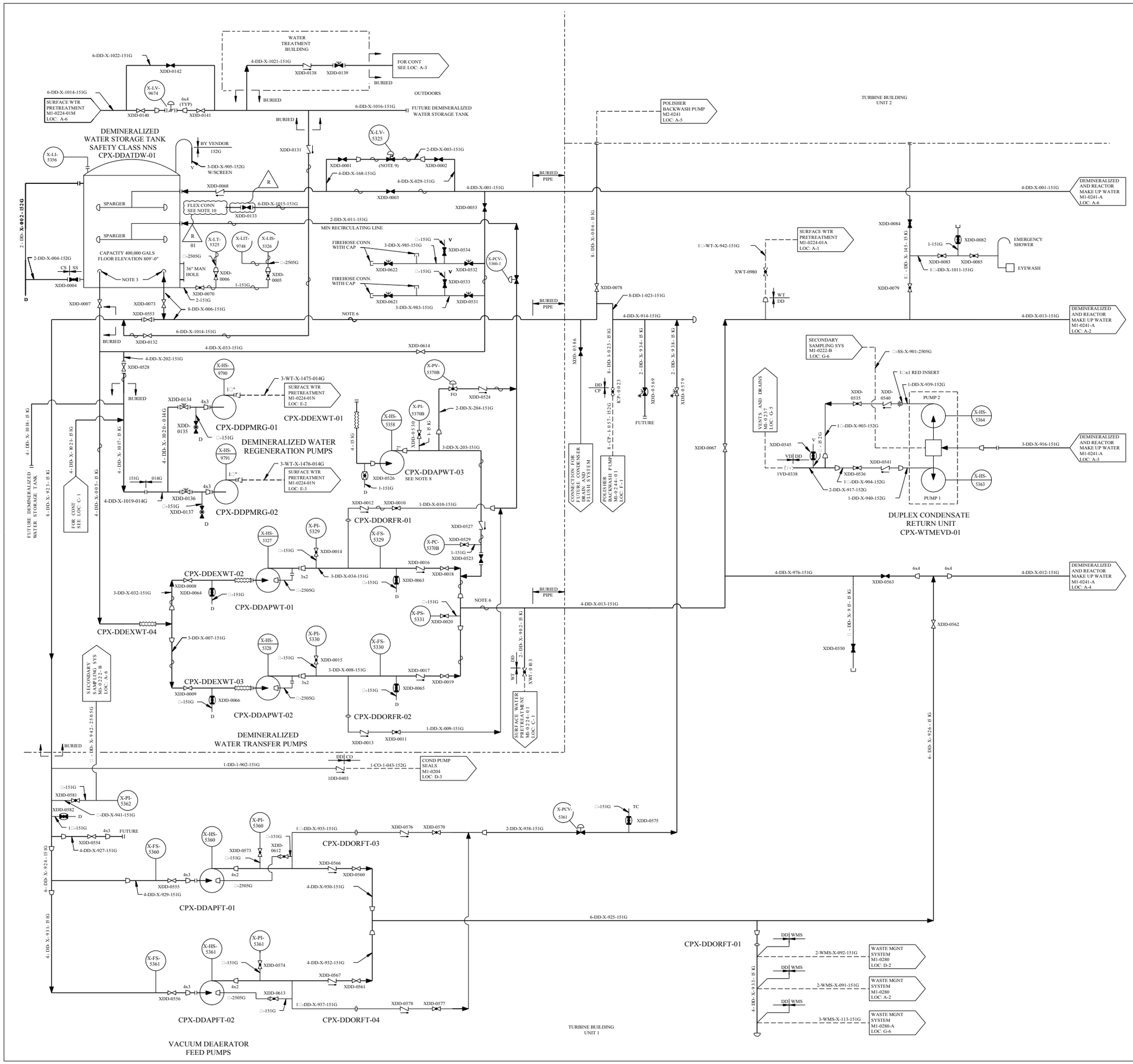

REV	DWN	CHKD	APVD	REMARKS
CP-32	MM 01-23-2013	DLK 01-23-2013		THIS DRAWING REVISED TO INCORPORATE DESIGN CHANGE FDA 2013-000008-10-01 PER SK-0001-13-000008-10-01.

NOTES:

1. FOR MECHANICAL SYMBOLS AND NOTES SEE DWG M1-0200.
2. INSTRUMENT ROOT VALVES AND TEST CONNECTIONS WILL BE □" UNLESS OTHERWISE NOTED. ALL INSTRUMENT PIPING WILL BE STAINLESS STEEL CATEGORY 151G OR 151-3 OR AS NOTED.
3. ALL NOZZLE CONNECTIONS TO DWST WILL BE 150 LB RF FLANGES.
4. ALL 1" SERVICE VALVE CONNECTIONS WILL BE FIELD PROCURED CHICAGO FITTINGS.
5. SEE HUNGERFORD AND TERRY DWG 28300-B6 FOR VENDOR VALVE IDENTIFICATIONS.
6. FREEZE PROTECTION REQUIREMENT ONLY APPLIES TO THAT PORTION OF THE LINE WHICH IS EITHER EXPOSED OUTDOORS IN THE YARD OR IS ROUTED WITHIN THE PIPE TUNNELS.
7. **UNLESS OTHERWISE NOTED, DRAINS TO BE COLLECTED BY LOCAL FLOOR DRAIN SYSTEM.**
8. **TRANSFER PUMP CPX-DDAPWT-03 IS ABANDONED IN PLACE BY DCA 87913 REV 0.**
9. THIS VALVE IS NOT USED FOR AUTO FILL OF THE DWST AND IS PLACED IN THE CLOSED POSITION PER FDA-2006-000953-01.
10. FLEX CONNECTION - MAY BE A PIPE CAP OR STORZ FITTING.

R 01

FSAR FIGURE 9.2-5

THIS DRAWING CREATED ELECTRONICALLY

DRAWING 2323-M1-0241 REV CP-8
HAS BEEN SPLIT INTO THE FOLLOWING SHEETS:
M1-0241
M1-0241-A

NON-SAFETY

LUMINANT
CPNPP
GLEN ROSE, TEXAS

FLOW DIAGRAM
DEMINERALIZED AND REACTOR
MAKE UP WATER

DWG. NO. M1-0241 | SH. NO. - | REV. CP-32

< FINAL PRINT >

me887000.dgn M1-0241

SSSSSSSDATESSSSSS

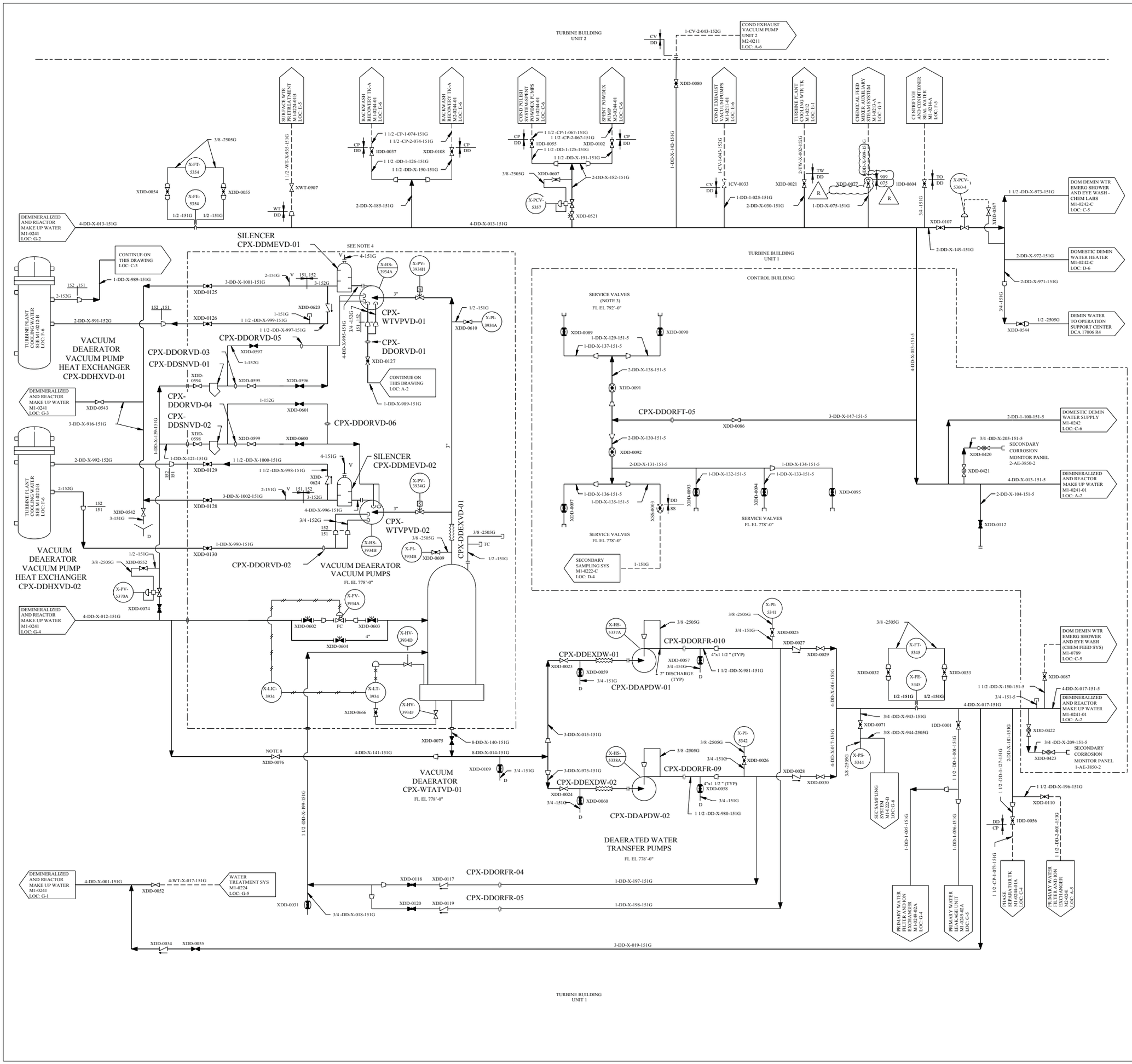

REV	DWN	CHKD	APVD	REMARKS
CP-31	RSK 11-21-2011	DJL 11-21-2011		THIS DRAWING REVISED TO INCORPORATE DESIGN CHANGE FDA 2011-000015-01-00 PER SK-0002-11-000018-01-00.

NOTES:

1. FOR MECHANICAL SYMBOLS AND NOTES SEE DWG M1-0200.
2. INSTRUMENT ROOT VALVES AND TEST CONNECTIONS WILL BE 3/4 " UNLESS OTHERWISE NOTED. ALL INSTRUMENT PIPING WILL BE STAINLESS STEEL CATEGORY 151G OR 151-3 OR AS NOTED.
3. ALL 1" SERVICE VALVE CONNECTIONS WILL BE FIELD PROCURED CHICAGO FITTINGS.
4. SEE HUNGERFORD AND TERRY DWG 28300-B6 FOR VENDOR VALVE IDENTIFICATIONS.
5. FREEZE PROTECTION REQUIREMENT ONLY APPLIES TO THAT PORTION OF THE LINE WHICH IS EITHER EXPOSED OUTDOORS, IN THE YARD OR IS ROUTED WITHIN THE PIPE TUNNELS.
6. UNLESS OTHERWISE NOTED DRAINS TO BE COLLECTED BY LOCAL FLOOR DRAIN SYSTEM.
7. XDD-0595 / XDD-0599 OR XDD-0596 / XDD-0600 MAY BE CLOSED AND XDD-0597 OR XDD-0601 MAY BE OPENED TO FLOW DEMIN WATER AT A LOSS THROUGH CPX-WTVPVD-01 OR CPX-WTVPVD-02 . CLOSE XDD-0127 OR XDD-0130 TO ISOLATE THE SEAL LOOP RESPECTIVELY.
8. VALVE NORMALLY OPEN UNLESS DEAERATED WATER TRANSFER PUMPS ARE RETURNED TO SERVICE. AT THAT TIME VALVE TO BE XDD-0076 LOCKED CLOSED.

R

FSAR FIGURE 9.2-5

THIS DRAWING CREATED ELECTRONICALLY

DRAWING 2323-M1-0241	REV CP-8
HAS BEEN SPLIT INTO THE FOLLOWING SHEETS:	
M1-0241	
M1-0241-A	

CLASS II

LUMINANT
CPNPP
GLEN ROSE, TEXAS

FLOW DIAGRAM
DEMINERALIZED AND REACTOR
MAKE UP WATER
SHEET 2 OF 6

DWG. NO.	SH. NO.	REV.
M1-0241	A	CP-31

FINAL PRINT

REF CHKD 9/13/2001

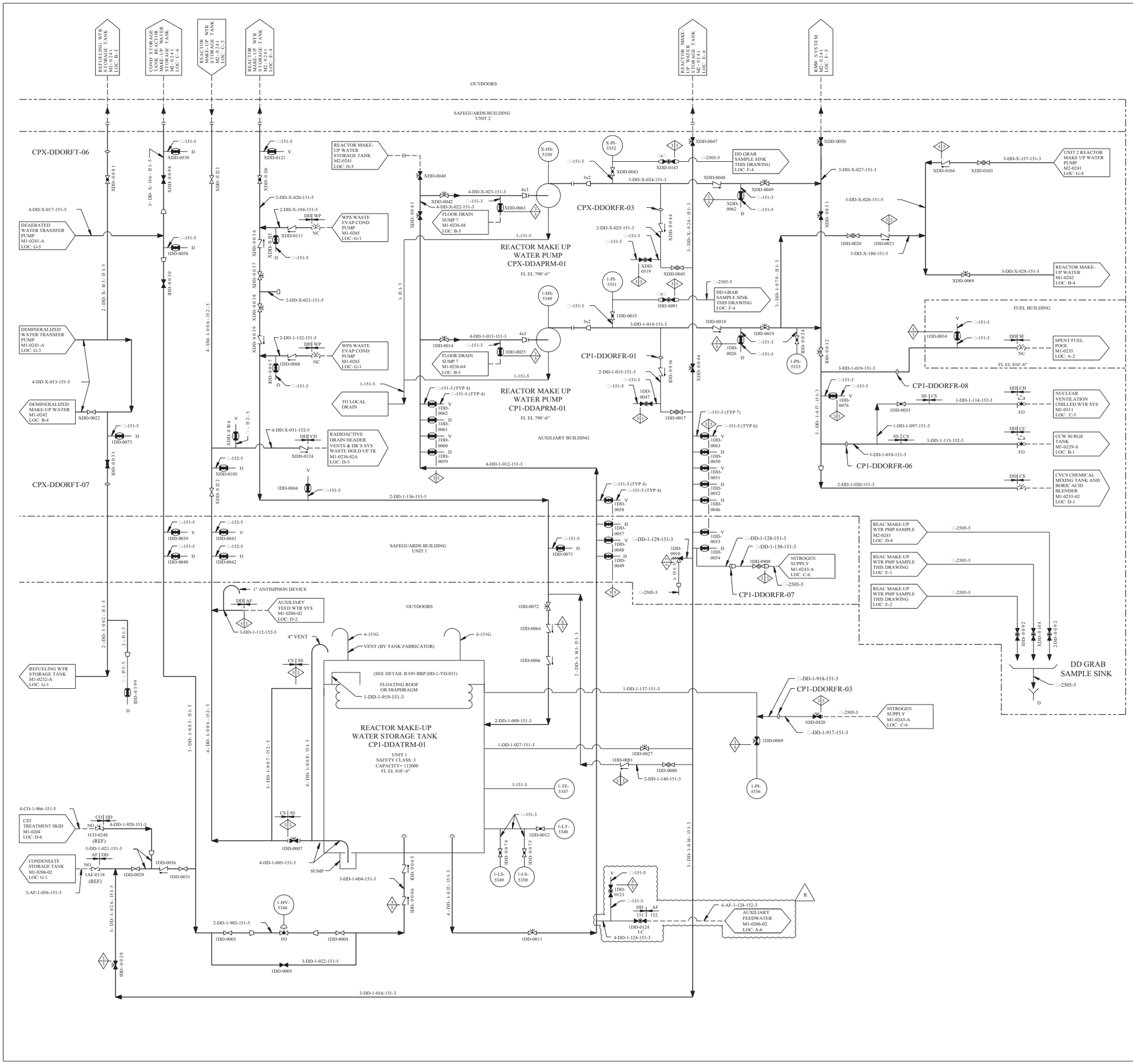

REV	DWN	CHKD	APVD	REMARKS
CP-28	DLK 03-31 2014	SM 03-31 2014		THIS DRAWING REVISED TO INCORPORATE DESIGN CHANGE FDA 2013-000008-15-00 PER SK-0006-13-000008-15-00.

NOTES:

1. FOR MECHANICAL SYMBOLS AND NOTES SEE DWG. M1-0200.

2. INSTRUMENT ROOT VALVES AND TEST CONNECTIONS WILL BE □" UNLESS OTHERWISE NOTED. ALL INSTRUMENT PIPING WILL BE STAINLESS STEEL CATEGORY 151G, 151-3 OR AS NOTED.

3. FREEZE PROTECTION REQUIREMENT ONLY APPLIES TO THAT PORTION OF THE LINE WHICH IS EITHER EXPOSED OUTDOORS IN THE YARD OR IS ROUTED WITHIN UNHEATED PIPE TUNNELS.

4. UNLESS OTHERWISE NOTED DRAINS TO BE COLLECTED BY LOCAL FLOOR DRAIN SYSTEM.

5. DELETED

6. DELETED

FSAR FIGURE 9.2-5

THIS DRAWING CREATED ELECTRONICALLY

CLASS I

(NUCLEAR SAFETY-RELATED)

SAFETY CLASS 1 — SAFETY CLASS 2 — SAFETY CLASS 3 — SEISMIC CATEGORY I — CLASS 1E — ASSOCIATED CIRCUITS

LUMINANT
CPNPP
GLEN ROSE, TEXAS

FLOW DIAGRAM
DEMINERALIZED AND REACTOR
MAKE UP WATER

DWG. NO. M1-0241 | SH. NO. 01 | REV. CP-28

< FINAL PRINT >

REF CKD 12/ 11/ 97 CP- 16

$$$$$$$DATE$$$$$$$

me744600.dgn A M1-0241-01

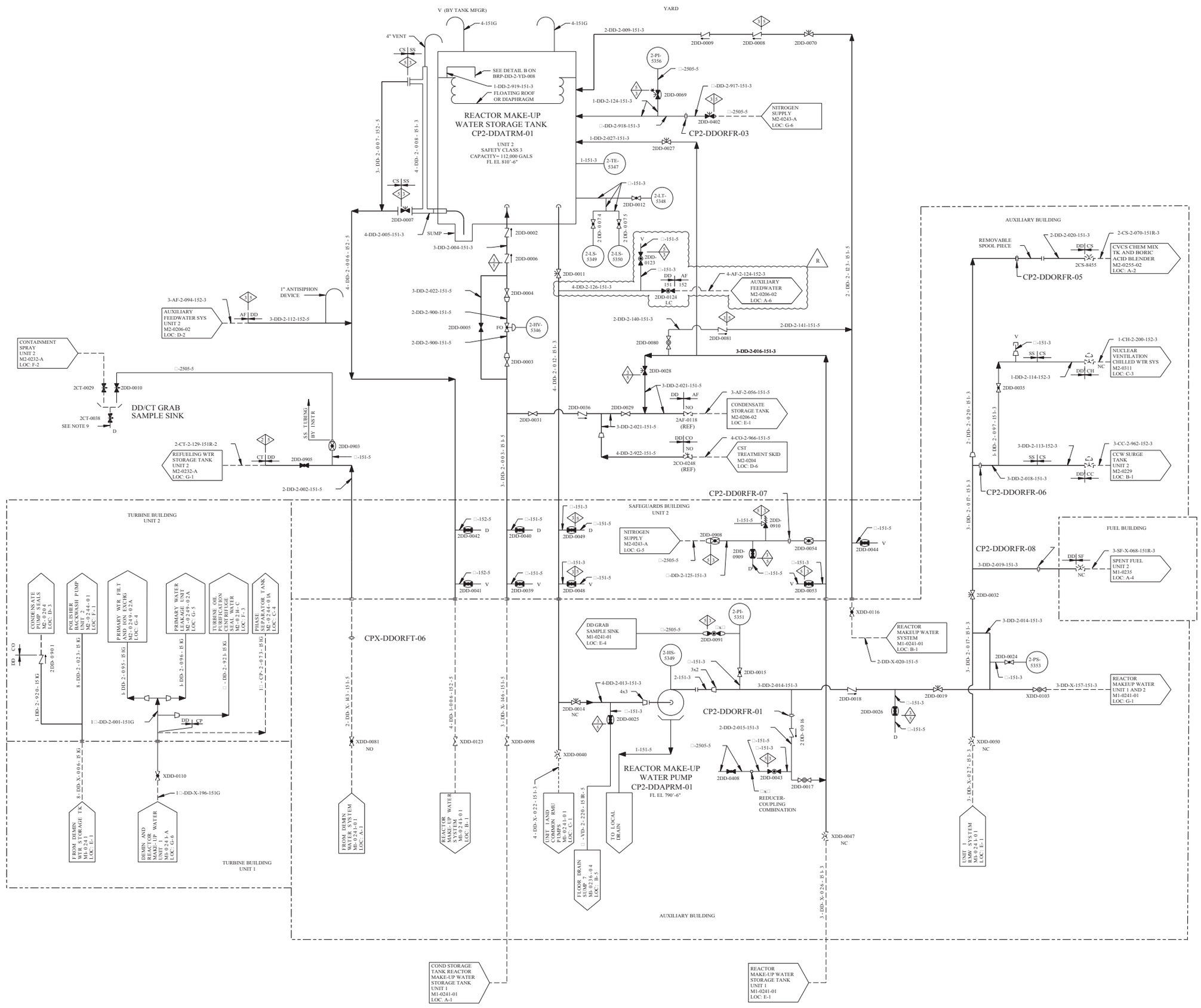

REV	DWN	CHK	APVD	REMARKS
CP-22	DLK 10-08-2014	MM 10-18-2014		THIS DRAWING REVISED TO INCORPORATE DESIGN CHANGE FDA 2013-000008-16-00 PER SK-0002-13-000008-16-00.

NOTES:

1. FOR MECHANICAL SYMBOLS AND NOTES SEE DWG M1-0200.
2. INSTRUMENT ROOT VALVES AND TEST CONNECTIONS WILL BE □" UNLESS OTHERWISE NOTED. ALL INSTRUMENT PIPING WILL BE STAINLESS STEEL CATEGORY 151G OR 151-3 AS NOTED.
3. ALL 1" SERVICE VALVE CONNECTIONS SHOWN ON DRAWING M2-0242 WILL BE FIELD PROCURED CHICAGO FITTINGS. ALL 1□" SERVICE VALVE CONNECTIONS WILL BE FIRE HOSE CONNECTIONS.
4. DELETED
5. DELETED
6. DELETED
7. UNLESS OTHERWISE NOTED DRAINS TO BE COLLECTED BY LOCAL FLOOR DRAIN SYSTEM.
8. DELETED
9. SAMPLE SINK DRAIN COLLECTED IN A CONTAINER AND TRANSPORTED TO A DRAIN CAPABLE OF ACCEPTING RADIOACTIVE FLUIDS.
10. ACCEPTABLE SAMPLE POINT.

FSAR FIGURE 9.2-5

THIS DRAWING CREATED ELECTRONICALLY

CLASS I
(NUCLEAR SAFETY-RELATED)
SAFETY CLASS 1 — SEISMIC CATEGORY I
SAFETY CLASS 2 — CLASS 1E
SAFETY CLASS 3 — ASSOCIATED CIRCUITS

LUMINANT
CPNPP
GLEN ROSE, TEXAS

FLOW DIAGRAM
DEMINERALIZED AND REACTOR MAKE UP WATER
SHEET 1 OF 2

DWG. NO. M2-0241 | SH. NO. - | REV. CP-22

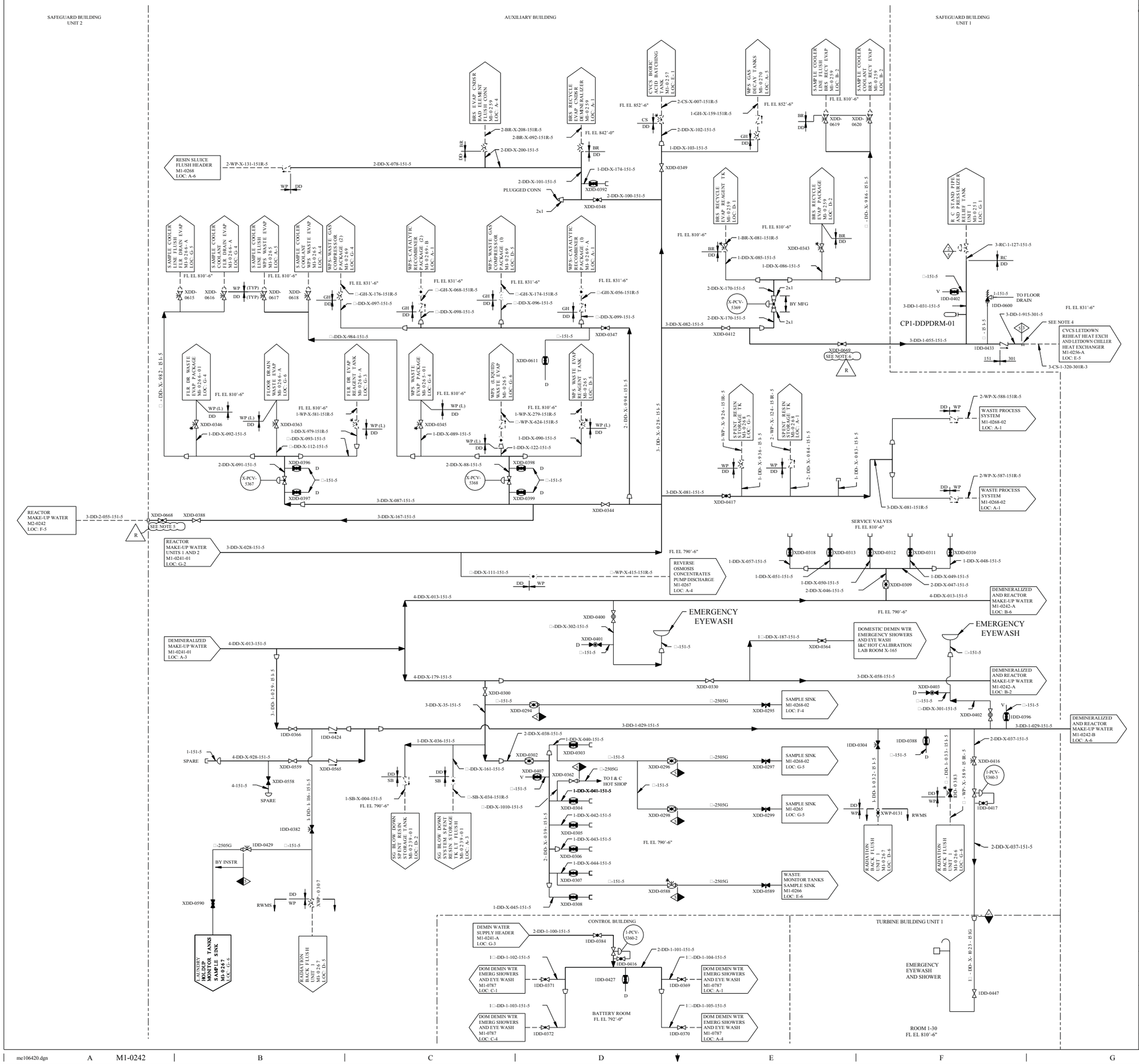

REV	DWN	CHKD	APVD	REMARKS
CP-32	DLK 04-24-2012	MHF 04-24-2012		THIS DRAWING REVISED TO INCORPORATE DESIGN CHANGE FDA 2012-000071-01-00 PER SK-0001-12-000071-01-00

NOTES:

1. FOR GENERAL NOTES SEE DRAWINGS M1-0200 AND M1-0241.
2. DELETED
3. UNLESS OTHERWISE NOTED ALL DRAINS TO BE COLLECTED BY LOCAL FLOOR DRAIN SYSTEM.
4. BLANK AND FLANGES INSTALLED PER FDA 2002-002085-01.
5. XDD-0388 IS USED AS THE ISOLATION VALVE VICE USING XDD-0668, BECAUSE XDD-0668 IS NORMALLY THROTTLED TO PROVIDE 60 (+/-2) GPM FLOW TO THE PRT TO REDUCE PRESSURE OSCILLATIONS WHILE FILLING THE RCP STANDPIPES, AND PREVENT RELIEF VALVES 2RC-0036 AND 2DD-0600 FROM OPENING. IF VALVE IS EVER TAKEN OUT OF THE ABOVE THROTTLED POSITION, THEN THE OPPOSITE UNIT'S AOV (1/1-8047) SHOULD BE PLACED IN "CLOSE", AND PROMPT TEAM CONTACTED TO SET UP A FLOW INSTRUMENT FOR RE-POSITIONING.
6. XDD-0412 IS USED AS THE ISOLATION VALVE VICE USING XDD-0669, BECAUSE XDD-0669 IS NORMALLY THROTTLED TO PROVIDE 60 (+/-2) GPM FLOW TO THE PRT TO REDUCE PRESSURE OSCILLATIONS WHILE FILLING THE RCP STANDPIPES, AND PREVENT RELIEF VALVES 1RC-0036 AND 1DD-0600 FROM OPENING. IF VALVE IS EVER TAKEN OUT OF THE ABOVE THROTTLED POSITION, THEN THE OPPOSITE UNIT'S AOV (1/2-8047) SHOULD BE PLACED IN "CLOSE", AND PROMPT TEAM CONTACTED TO SET UP A FLOW INSTRUMENT FOR RE-POSITIONING.

R

FSAR FIGURE 9.2-5

THIS DRAWING CREATED ELECTRONICALLY

DRAWING 2323-M1-0242 REV CP-6
HAS BEEN SPLIT INTO THE FOLLOWING SHEETS:

M1-0242
M1-0242-A
M1-0242-B

CLASS II

LUMINANT
CPNPP
GLEN ROSE, TEXAS

FLOW DIAGRAM
DEMINERALIZED AND REACTOR
MAKE-UP WATER

DWG. NO.	SH. NO.	REV.
M1-0242	-	CP-32

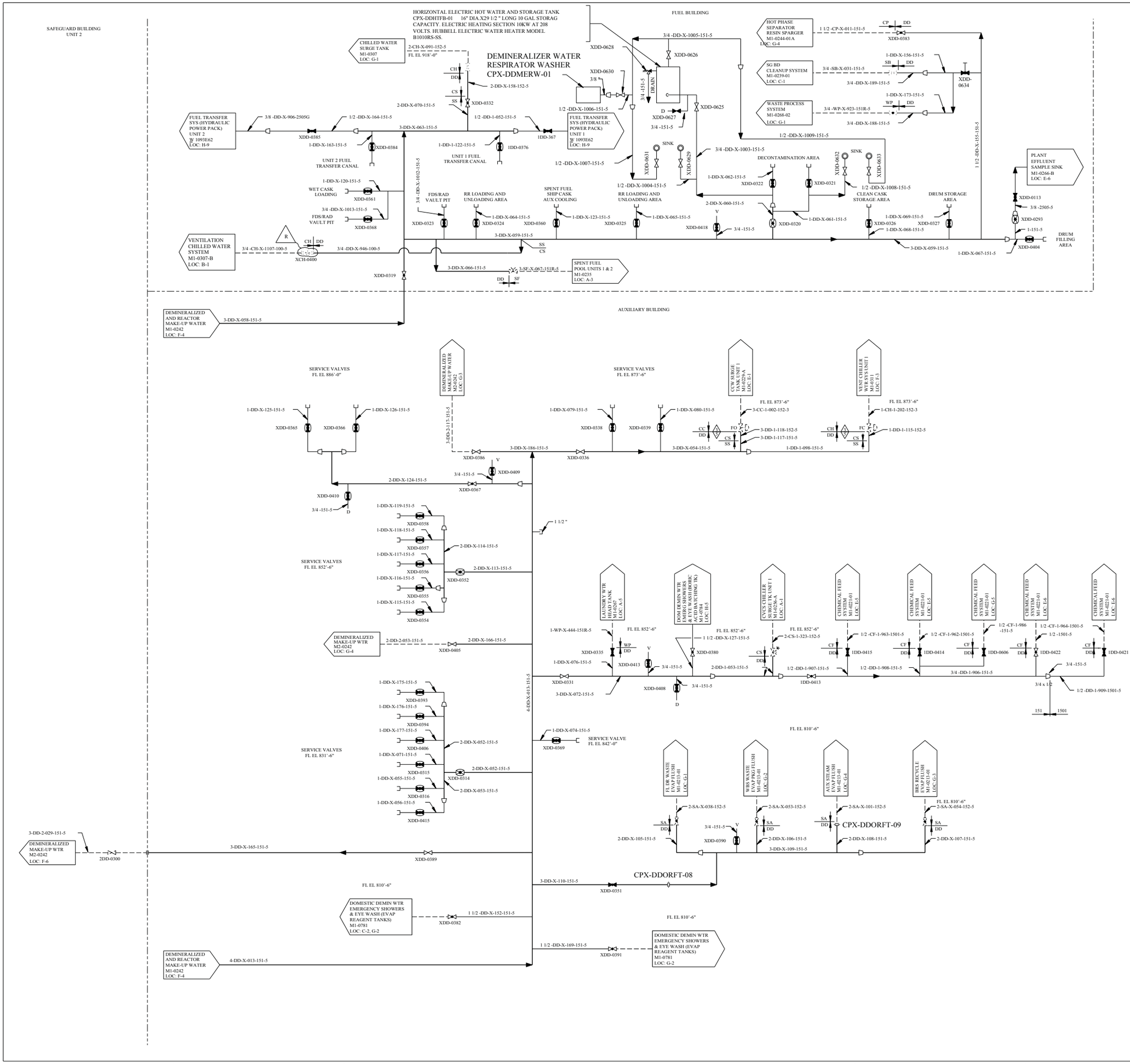

REV	DWN	CHKD	APVD	REMARKS
CP-19	G&K 05-12-2011	MM 05-12-2011		THIS DRAWING REVISED TO INCORPORATE DESIGN CHANGE FDA 2009-000859-06-03 PER SK-0039-09-000859-06-00.

NOTES:

1. FOR MECHANICAL SYMBOLS AND NOTES SEE DRAWING M1-0200.
2. FLANGED CONNECTION WITH BLIND FLANGE TO BE INSTALLED WITH UNIT 1 CONSTRUCTION.
3. UNLESS OTHERWISE NOTED ALL DRAINS TO BE COLLECTED BY LOCAL FLOOR DRAIN SYSTEM.

FSAR FIGURE 9.2-5

THIS DRAWING CREATED ELECTRONICALLY

DRAWING 2323-M1-0242 REV CP-6
HAS BEEN SPLIT INTO THE FOLLOWING SHEETS:
M1-0242
M1-0242-A
M1-0242-B

CLASS III

LUMINANT
CPNPP
GLEN ROSE, TEXAS

FLOW DIAGRAM
DEMINERALIZED AND REACTOR
MAKE-UP WATER

DWG. NO. M1-0242 | SH. NO. A | REV. CP-19

FINAL PRINT

REF CKD CP-14 10/26/96

me102270.dgn A M1-0242-A

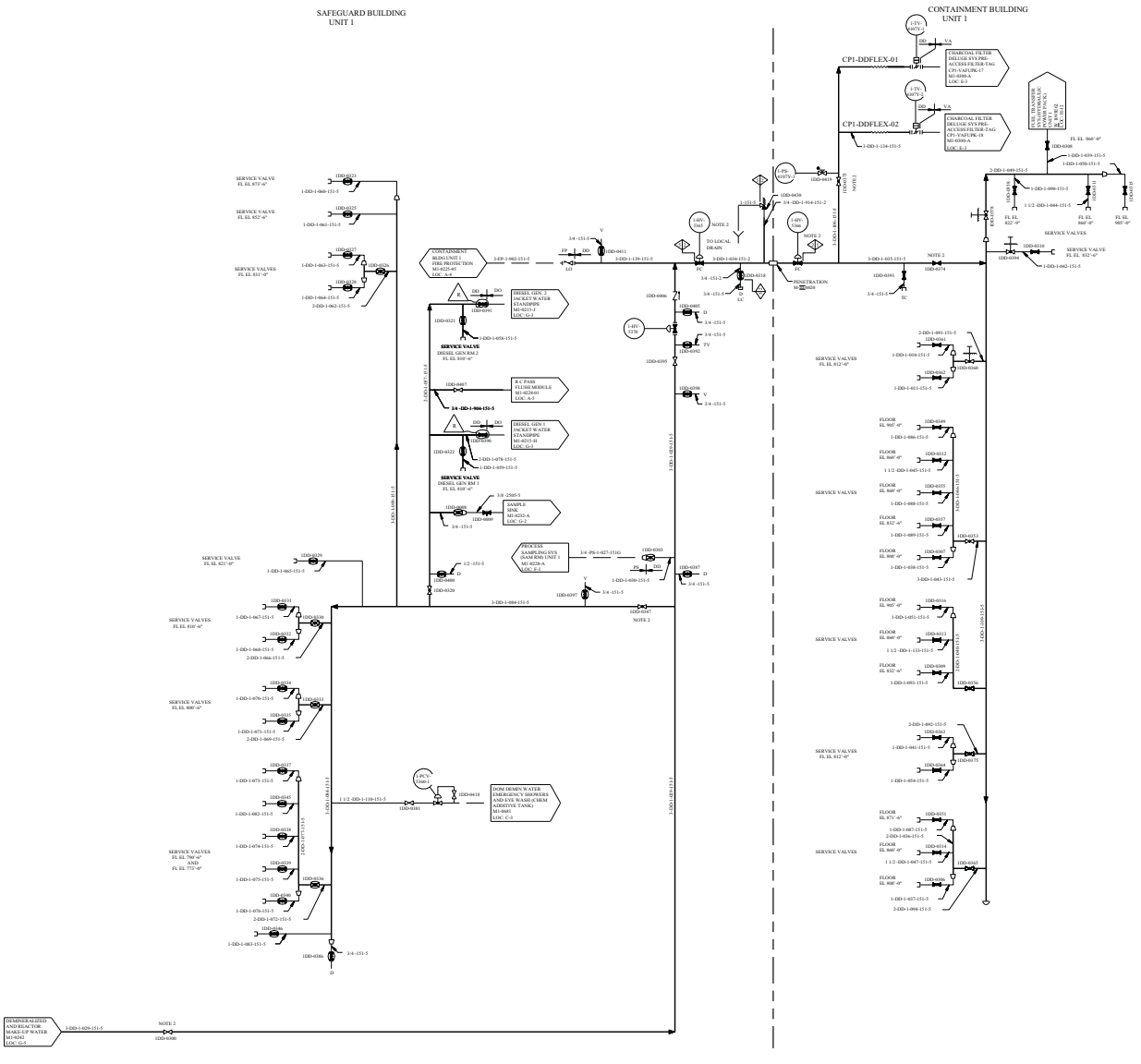

REV	DWN	CHKD	APVD	REMARKS
CP-14	SS 10-01 2001	DLK 10-02 2001		THIS DRAWING REVISED TO INCORPORATE DESIGN CHANGE FDA-2001-002080-01-00 PER SK-0001-01-002080-01-00.

NOTES:

1. FOR GENERAL NOTES SEE DWG M1-0200 AND M1-0241.
2. FOR TYPE "C" TESTING OF VALVES 1-HV-5365 AND 1-HV-5366 VALVES 1DD-0300 , 1DD-0347 , 1DD-0373 AND 1DD-0374 MUST BE CLOSED.
3. UNLESS OTHERWISE NOTED ALL DRAINS TO BE COLLECTED BY LOCAL FLOOR DRAIN SYSTEM.

FSAR FIGURE 9.2-5

THIS DRAWING CREATED ELECTRONICALLY

DRAWING 2323-M1-0242 REV CP-6
HAS BEEN SPLIT INTO THE FOLLOWING SHEETS:

M1-0242
M1-0242-A
M1-0242-B

CLASS I
(NUCLEAR SAFETY-RELATED)
SAFETY CLASS 1 SEISMIC CATEGORY I
SAFETY CLASS 2 CLASS 1E
SAFETY CLASS 3 ASSOCIATED CIRCUITS

TXU ENERGY
CPSES
GLEN ROSE, TEXAS

FLOW DIAGRAM
DEMINERALIZED AND REACTOR
MAKE-UP WATER

DWG. NO. M1-0242
SH. NO. B
REV. CP-14

REF CKD 3/19/97 CP-12

$$$$$$SDATE$$$$$$

me384500.dgn

M1-0242-B

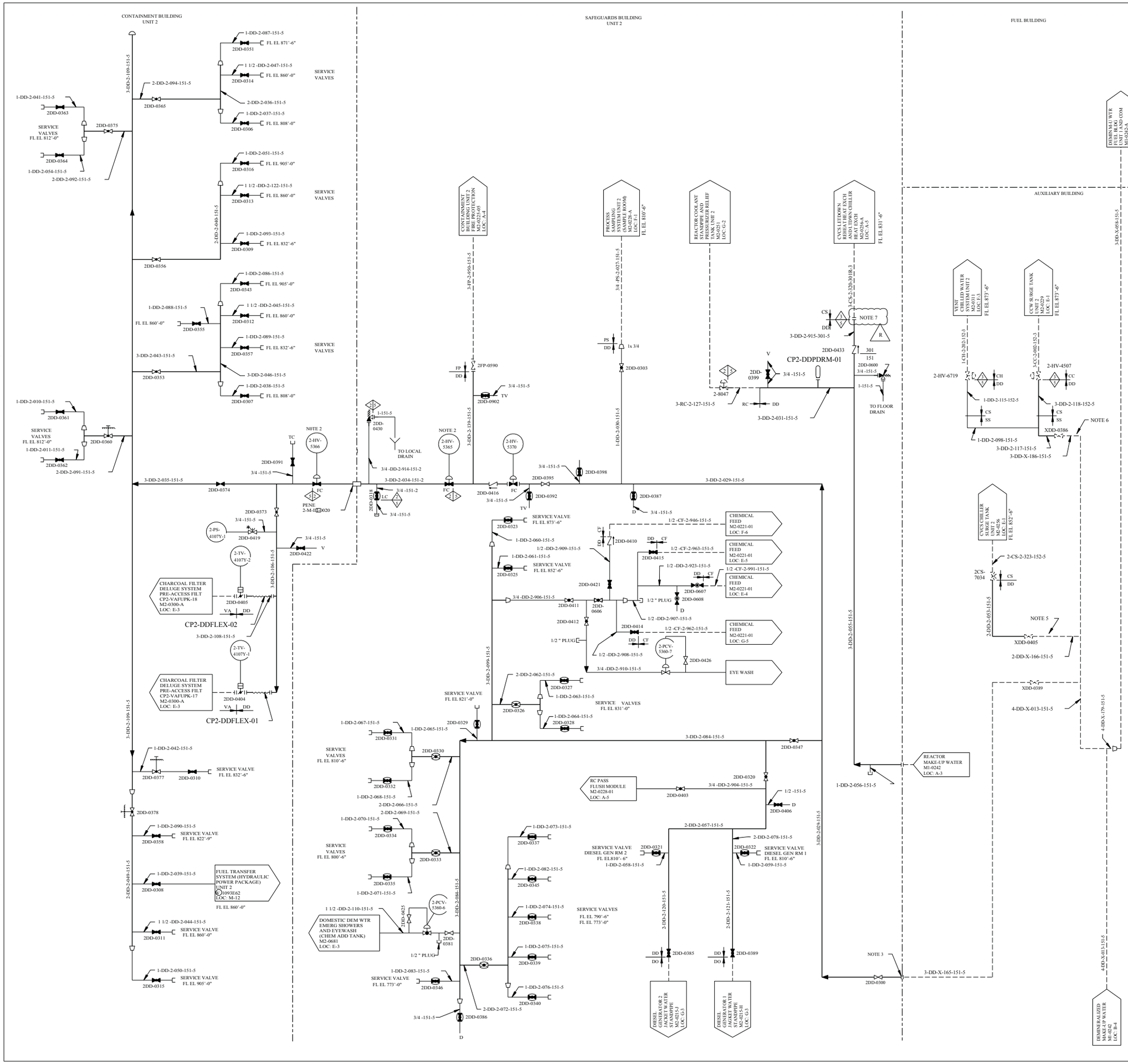
CONTAINMENT BUILDING UNIT 2
SAFEGUARDS BUILDING UNIT 2
FUEL BUILDING
AUXILIARY BUILDING
SERVICE VALVES
CP2-DDPDRM-01
CP2-DDFLEX-02
CP2-DDFLEX-01
CHARCOAL FILTER DELUGE SYSTEM PRE-ACCESS FILT CP2-VAFUPK-18 M2-0300-A LOC: E-3
CHARCOAL FILTER DELUGE SYSTEM PRE-ACCESS FILT CP2-VAFUPK-17 M2-0300-A LOC: E-3
FUEL TRANSFER SYSTEM (HYDRAULIC POWER PACKAGE) UNIT 2 1093E62 LOC: M-12
DOMESTIC DEM WTR EMERG SHOWERS AND EYEWASH (CHEM ADD TANK) M2-0681 LOC: E-3
RC PASS FLUSH MODULE M2-0228-01 LOC: A-5
REACTOR MAKE-UP WATER M1-0242 LOC: A-3
EYE WASH
TO LOCAL DRAIN
TO FLOOR DRAIN
NOTE 2
NOTE 3
NOTE 5
NOTE 6
NOTE 7
CHEMICAL FEED M2-0221-01 LOC: F-6
CHEMICAL FEED M2-0221-01 LOC: E-5
CHEMICAL FEED M2-0221-01 LOC: E-4
CHEMICAL FEED M2-0221-01 LOC: G-5
SERVICE VALVE DIESEL GEN RM 2 FL EL810'- 6"
SERVICE VALVE DIESEL GEN RM 1 FL EL 810'-6"
SERVICE VALVES FL EL 790'-6" FL EL 773'-0"
SERVICE VALVES FL EL 810'-6"
SERVICE VALVES FL EL 800'-6"
SERVICE VALVES FL EL 821'-0"
SERVICE VALVES FL EL 831'-0"
SERVICE VALVE FL EL 832'-6"
SERVICE VALVE FL EL 822'-9"
SERVICE VALVE FL EL 860'-0"
SERVICE VALVE FL EL 905'-0"
SERVICE VALVE FL EL 773'-0"
SERVICE VALVE FL EL 873'-6"
SERVICE VALVE FL EL 852'-6"
DIESEL GENERATOR 2 JACKET WATER STANDPIPE M2-0215-5 LOC: G-3
DIESEL GENERATOR 1 JACKET WATER STANDPIPE M2-0215-4 LOC: G-3
DEMINERALIZED MAKE-UP WATER M2-0242 LOC: B-4
DEMIN MAKE-UP WTR FUEL BLDG UNIT 1 AND COM M2-0242-A LOC: B-2
VENT CHILLED WATER SYSTEM UNIT 2 M2-0311 LOC: F-5 FL EL 873'-6"
CCW SURGE TANK UNIT 2 M2-0220 LOC: E-3 FL EL 873'-6"
CVCS CHILLER SURGE TANK UNIT 2 M2-0256 LOC: F-1 FL EL 852'-6"
CONTAINMENT ATMOSPHERE FIRE PROTECTION M2-0225-05 LOC: A-4
PROCESS SAMPLING SYSTEM UNIT 2 (SAMPLE ROOM) M2-0250A LOC: F-1 FL EL 810'-6"
REACTOR COOLANT STANDPIPE AND PRESSURIZER RELIEF TANK UNIT 2 M2-0251 LOC: G-2
CVCS LETDOWN REHEAT HEAT EXCH AND LTDWN CHILLER UNIT 2 M2-0256A LOC: A-5 FL EL 831'-6"
REV | DWN | CHKD | APVD | REMARKS
CP-17 | DLK 05-25-2006 | MM 05-25-2006 | THIS DRAWING REVISED TO INCORPORATE DESIGN CHANGE FDA 2002-002085-01-00 PER SK-0010-02-002085-01-00.
NOTES:
1. FOR GENERAL NOTES AND SYMBOLS SEE DRAWINGS M1-0200 AND M2-0241.
2. FOR TYPE C TESTING OF VALVES, 2-HV-5365 AND 2-HV-5366 , VALVES 2DD-0300 , 2DD-0347 , 2DD-0373 AND 2DD-0374 MUST BE CLOSED.
3. SEE UNIT 1 DWG M1-0242-A LOCATION A-5 FOR CONTINUATION.
4. ALL DRAINS TO BE CONNECTED BY LOCAL FLOOR DRAIN SYSTEM UNLESS OTHERWISE NOTED.
5. SEE M1-0242-A LOCATION C-4.
6. SEE M1-0242-A LOCATION C-3.
7. BLIND FLANGE INSTALLED PER FDA 2002-002085-01.
FSAR FIGURE 9.2-5
THIS DRAWING CREATED ELECTRONICALLY
CLASS I
(NUCLEAR SAFETY-RELATED)
SAFETY CLASS 1 SAFETY CLASS 2 SAFETY CLASS 3
SEISMIC CATEGORY I CLASS 1E ASSOCIATED CIRCUITS
LUMINANT
CPSES
GLEN ROSE, TEXAS
FLOW DIAGRAM
DEMINERALIZED AND REACTOR MAKE-UP WATER
DWG. NO. M2-0242
SH. NO. -
REV. CP-17
FINAL PRINT
REF CKD CP11 11-1-96
me871800.dgn
M2-0242

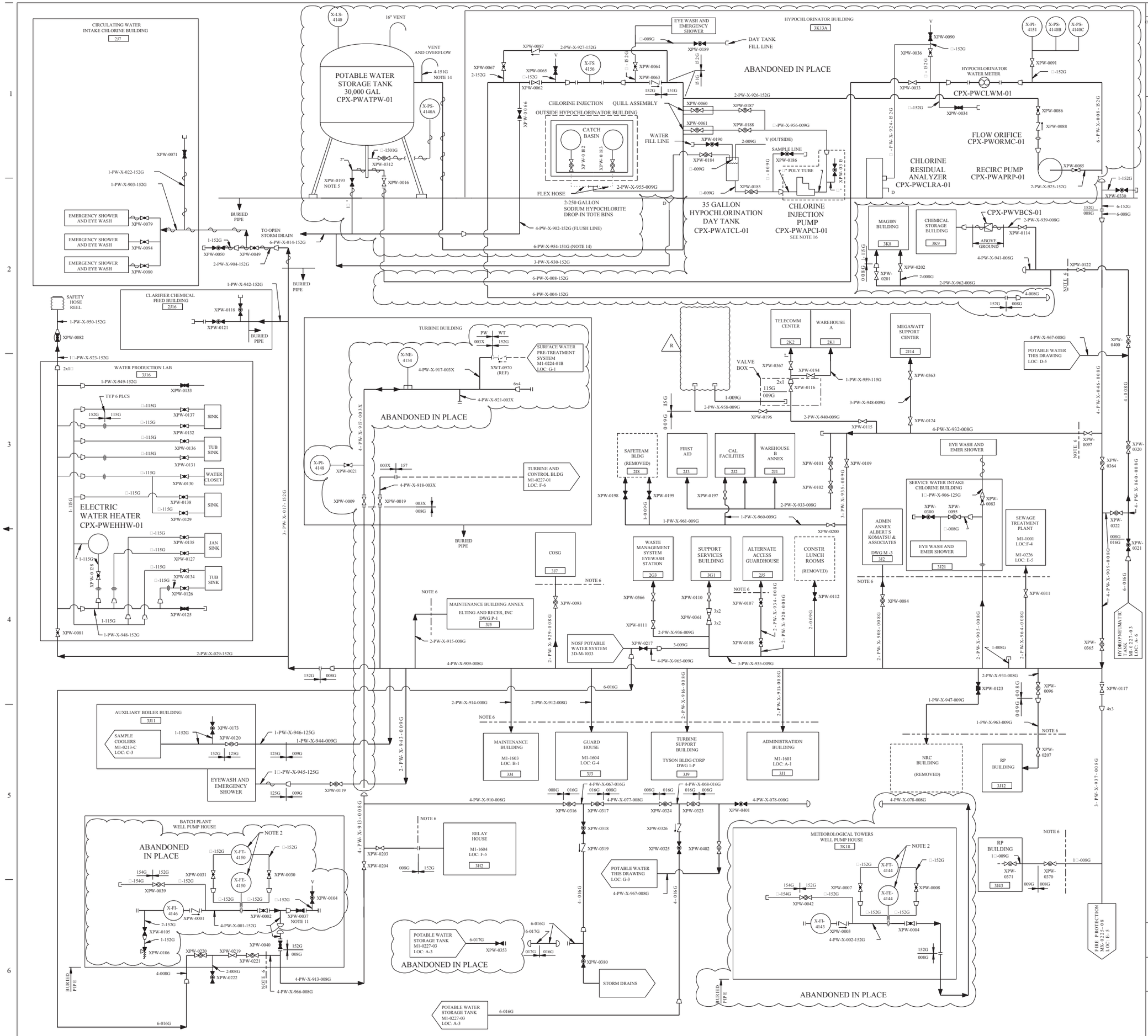

REV	DWN	CHKD	APVD	REMARKS
CP-60	DLK 02-10-2014	MM 02-10-2014		THIS DRAWING REVISED TO INCORPORATE DESIGN CHANGE FDA 2013-000008-26-00 PER SK-0001-13-000008-26-00.

NOTES:

1. FOR MECHANICAL SYMBOLS AND NOTES SEE M1-0200.
2. COMPONENTS ARE ABANDONED IN PLACE.
3. DELETED
4. HYPOCHLORINATOR FIELD PROCURED FROM WALLACE & TIERNAN HYPOCHLORINATOR DESIGNED TO CHLORINATE 200 GPM FLOW RATE.
5. 2" THREADED ANGLE DRAIN VALVE WITH 1□" THREADED OUTLET SUPPLIED BY TANK SUPPLIER.
6. YARD PIPING TERMINATES AT MATCH LINE WELD ENDS. PIPELINE DESIGNATION NUMBER CHANGES AT WELD OR FIRST FLANGE. PIPING DOWNSTREAM OF DOTTED LINE IS THE RESPONSIBILITY OF SITE FACILITIES ENGINEERING.
7. DELETED
8. PROTECTIVE HOUSING IS PROVIDED FOR HYPOCHLORINATOR, SOLUTION TANKS AND INSTRUMENTS XPI-4151 AND XPS-4153 .
9. PROTECTIVE HOUSING IS PROVIDED FOR THE BATCH PLANT WELL AND METEOROLOGICAL TOWER WELL PUMPS, THE ABOVE GROUND DISCHARGE PIPING AND INSTRUMENTATION.
10. DELETED
11. DELETED
12. THE NOSF POTABLE WATER SYSTEM IS THE RESPONSIBILITY OF SITE FACILITIES ENGINEERING.
13. XXXX INDICATES BUILDING NUMBER.
14. PIPE IS FABRICATED FROM 316L SS FROM CPX-PWATPW-01 TO XPW-0063 PER DCN 6593
15. DELETED
16. CHLORINE INJECTION PUMP CPX-PWAPCI-01 IS MOUNTED ON A PORTABLE SKID AND IS POWERED BY 120 VOLT AC STANDARD WALL OUTLET.

FSAR FIGURE 9.2-6

THIS DRAWING CREATED ELECTRONICALLY

DRAWING M1-0227 REV CP-32 HAS BEEN SPLIT INTO THE FOLLOWING SHEETS:
M1-0227
M1-0227-01

NON-SAFETY

LUMINANT
CPNPP
GLEN ROSE, TEXAS

FLOW DIAGRAM
POTABLE AND SANITARY
WATER SYSTEM

DWG. NO. M1-0227 | SH. NO. - | REV. CP-60

< FINAL PRINT >

REF CHKD 01/30/2003

$$$$$$$DATE$$$$$$

me105580.dgn A M1-0227

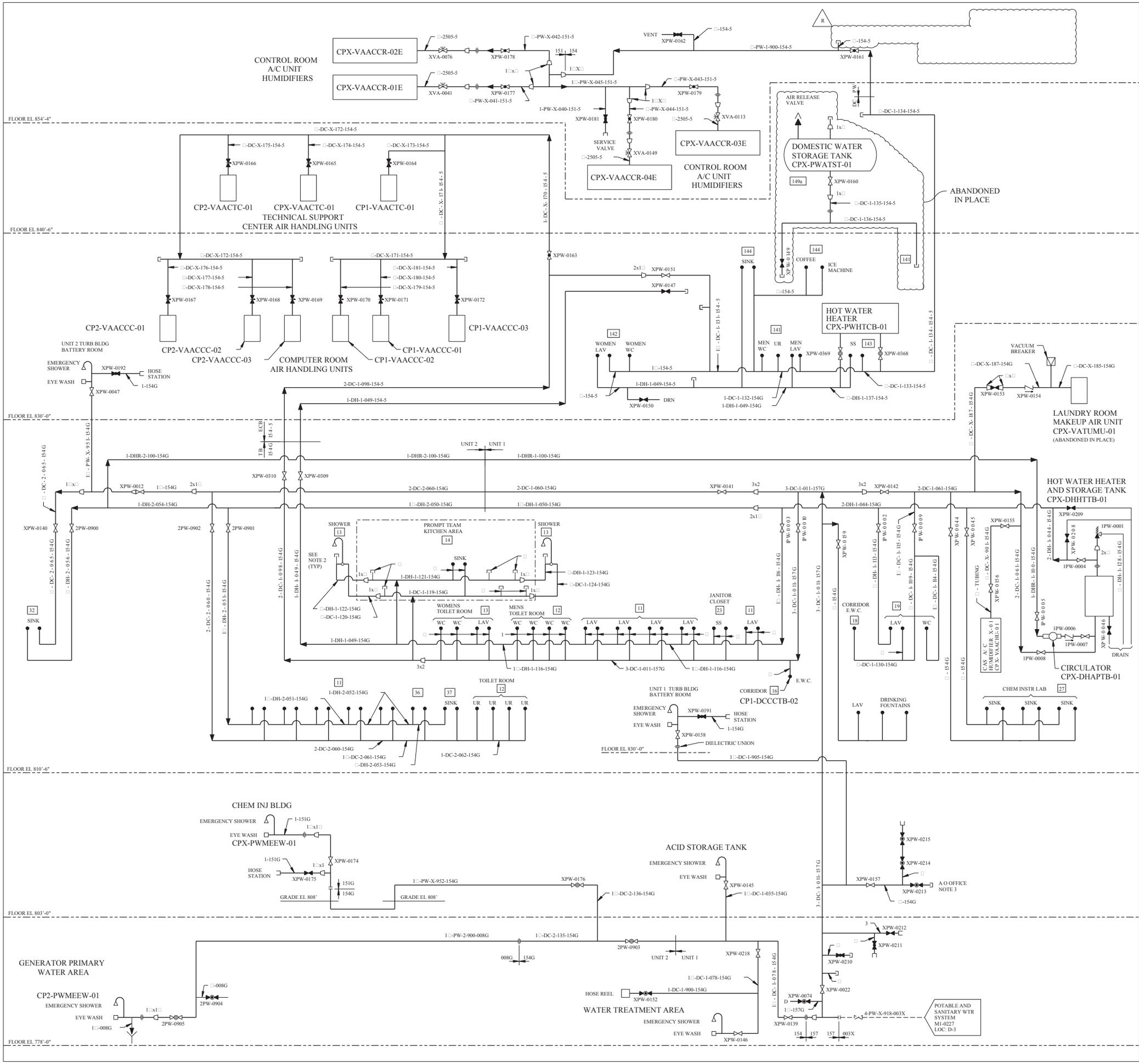

REV	DWN	CHKD	APVD	REMARKS
CP-15	DKK 05-30-2012	GAW 07-30-2012		THIS DRAWING REVISED TO INCORPORATE DESIGN CHANGE FDA 2009-001966-01-00 PER SK-0019-09-001966-01-00.

NOTES:

1. FOR GENERAL NOTES AND SYMBOL LIST SEE DRAWING M1-0200.
2. FULL SIZE AIR CHAMBERS (EACH 1'-0" LONG) ARE TO BE PROVIDED ON WATER SUPPLY BRANCHES AT EACH PLUMBING FIXTURE.
3. A. O. OFFICE IS ABANDONED AND THE POTABLE WATER SUPPLY IS DISCONNECTED AND CAPPED.
4. XX INDICATES ROOM NUMBER

REFERENCE DRAWINGS:

1.	M1-0788	PLUMBING AUXILIARY BUILDING PLAN
2.	M1-0481	PLUMBING TURBINE BUILDING PLAN
3.	M1-0484	PLUMBING TURBINE BUILDING PLAN
4.	M2-0481	PLUMBING TURBINE BUILDING PLAN

FSAR FIGURE 9.2-6

THIS DRAWING CREATED ELECTRONICALLY

DRAWING	M1-0227	REV	CP-32
HAS BEEN SPLIT INTO THE FOLLOWING SHEETS:			
M1-0227			
M1-0227-01			

NON-SAFETY

LUMINANT
CPNPP
GLEN ROSE, TEXAS

PLUMBING
TURBINE & ELEC CONTROL BLDGS
DOMESTIC WATER RISER
DIAGRAM

DWG. NO. M1-0227 | SH. NO. 01 | REV. CP-15

REF CHKD 05/12/2003

$$$$$$$DATE$$$$$$

me105710.dgn A M1-0227-01

< FINAL PRINT >

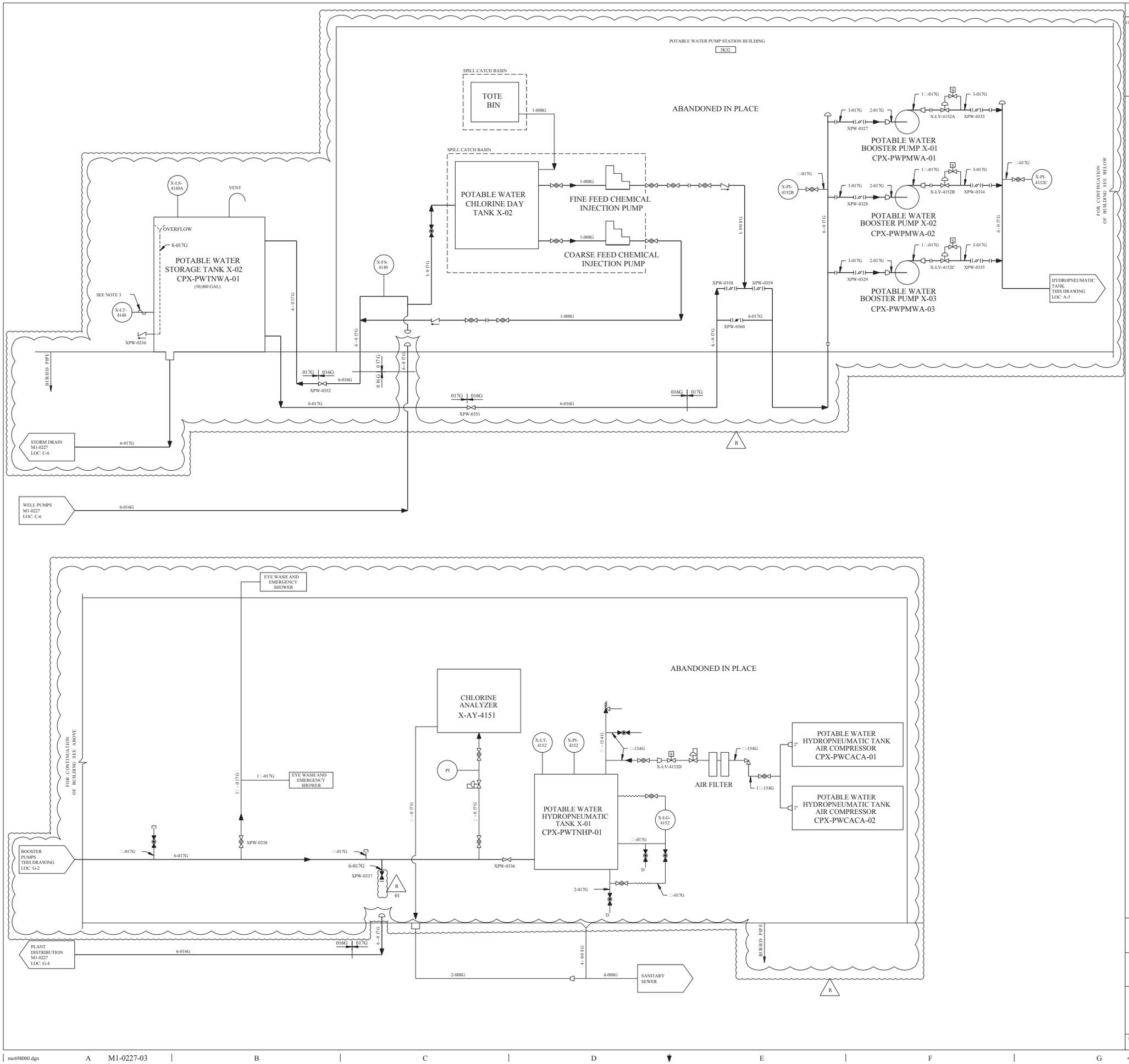

REV	DWN	CHKD	APVD	REMARKS
CP-7	DLK 10-23 2013	MM 10-23 2013		THIS DRAWING REVISED TO INCORPORATE DESIGN CHANGE FDA 2013-000044-01-02 PER SK-0002-13-000044-01-01.

NOTES:

1. FOR MECHANICAL SYMBOLS AND NOTES SEE M1-0200.
2. INSTALLED UNDER SFER 01-000017. SEE SFER FOR SUPPORTING DOCUMENTATION.
3. HEAT TRACE INSTALLED UNDER SFER 03-00007, REF DWG FN-PWE-4.

FSAR FIGURE 9.2-6

THIS DRAWING CREATED ELECTRONICALLY

NON-SAFETY

LUMINANT
CPNPP
GLEN ROSE, TEXAS

FLOW DIAGRAM
POTABLE WATER SYSTEM

DWG. NO. M1-0227 | SH. NO. 03 | REV. CP-7

< FINAL PRINT >

me698000.dgn M1-0227-03

$$$$$$$$DATE$$$$$ REF CHKD 01/30/2003 CP-2

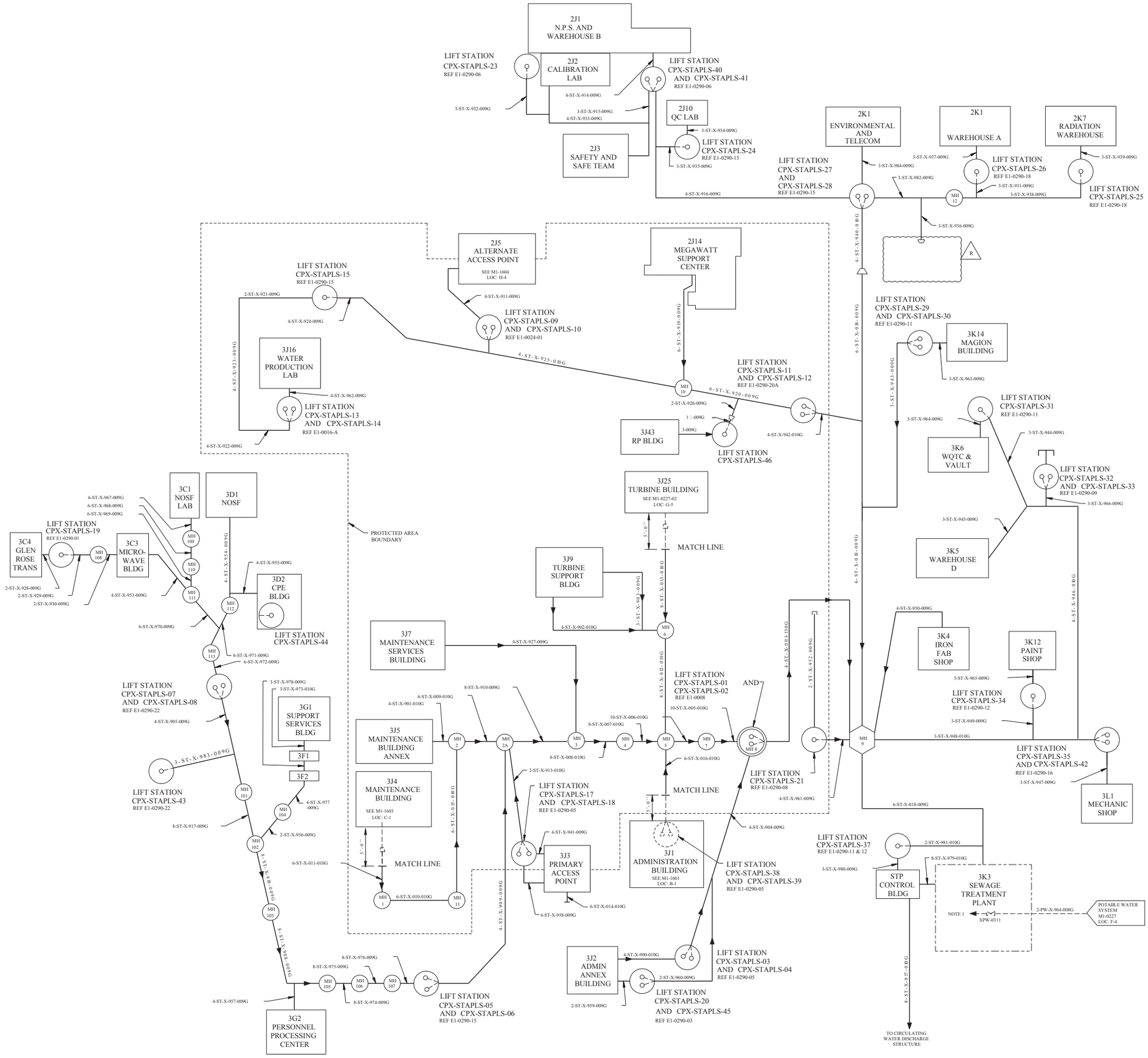

REV	DWN	CHKD	APVD	REMARKS
CP-25	DLK 01-21-2014	MM 01-22-2014		THIS DRAWING REVISED TO INCORPORATE DESIGN CHANGE FDA 2013-000008-26-00 PER SK-0002-13-000008-26-00.

NOTES:

1. CHLORINATION WATER SUPPLY. SYPHON BREAKER IS NOT REQUIRED BECAUSE A DIRECT CONNECTION TO SEWAGE IN THE PLANT DOES NOT EXIST.
2. 2" DISCHARGE LINE 2-ST-X-913-010G IS ENCASED IN 4" SCH 80 PVC PIPE.
3. THIS DRAWING HAS BEEN COMPLETELY REDRAWN TO SHOW THE GENERAL ARRANGEMENT AND TAG NUMBERS OF THE LIFT STATIONS.
4. THE FOLLOWING LINE NUMBERS ARE CAST STEEL WITH WELDED FITTINGS: 4-ST-X-940-010G
   6-ST-X-941-010G
   4-ST-X-946-010G
   4-ST-X-948-010G

REFERENCE DRAWINGS:

1. E1-0290 SERIES DRAWINGS
2. E1-0024-01

FSAR FIGURE 9.2-7

THIS DRAWING CREATED ELECTRONICALLY

NON-SAFETY

LUMINANT
CPNPP
GLEN ROSE, TEXAS

FLOW DIAGRAM
SEWAGE TREATMENT SYSTEM

DWG. NO. M1-0226 | SH. NO. - | REV. CP-25

me970400.dgn M1-0226 < FINAL PRINT >

$$$$$$$$ DATE$$$$$$$$

FIGURE 9.2-8

THIS FIGURE HAS BEEN DELETED. | 68

- DELETED -

AMENDMENT 10
MARCH 31, 1980

COMANCHE PEAK S.E.S.
FINAL SAFETY ANALYSIS REPORT
UNITS 1 and 2

FIGURE 9.2-9

FIGURE 9.2-10

THIS FIGURE HAS BEEN DELETED. | 68

THIS FIGURE HAS BEEN DELETED.

COMANCHE PEAK S.E.S.
FINAL SAFETY ANALYSIS REPORT
UNITS 1 and 2

FIGURE 9.2-11

DELETED

JULY 31, 1980

COMANCHE PEAK S.E.S.
FINAL SAFETY ANALYSIS REPORT
UNITS 1 and 2

FIGURE 9.2-12

DELETED

JULY 31, 1980

COMANCHE PEAK S.E.S.
FINAL SAFETY ANALYSIS REPORT
UNITS 1 and 2

FIGURE 9.2-13

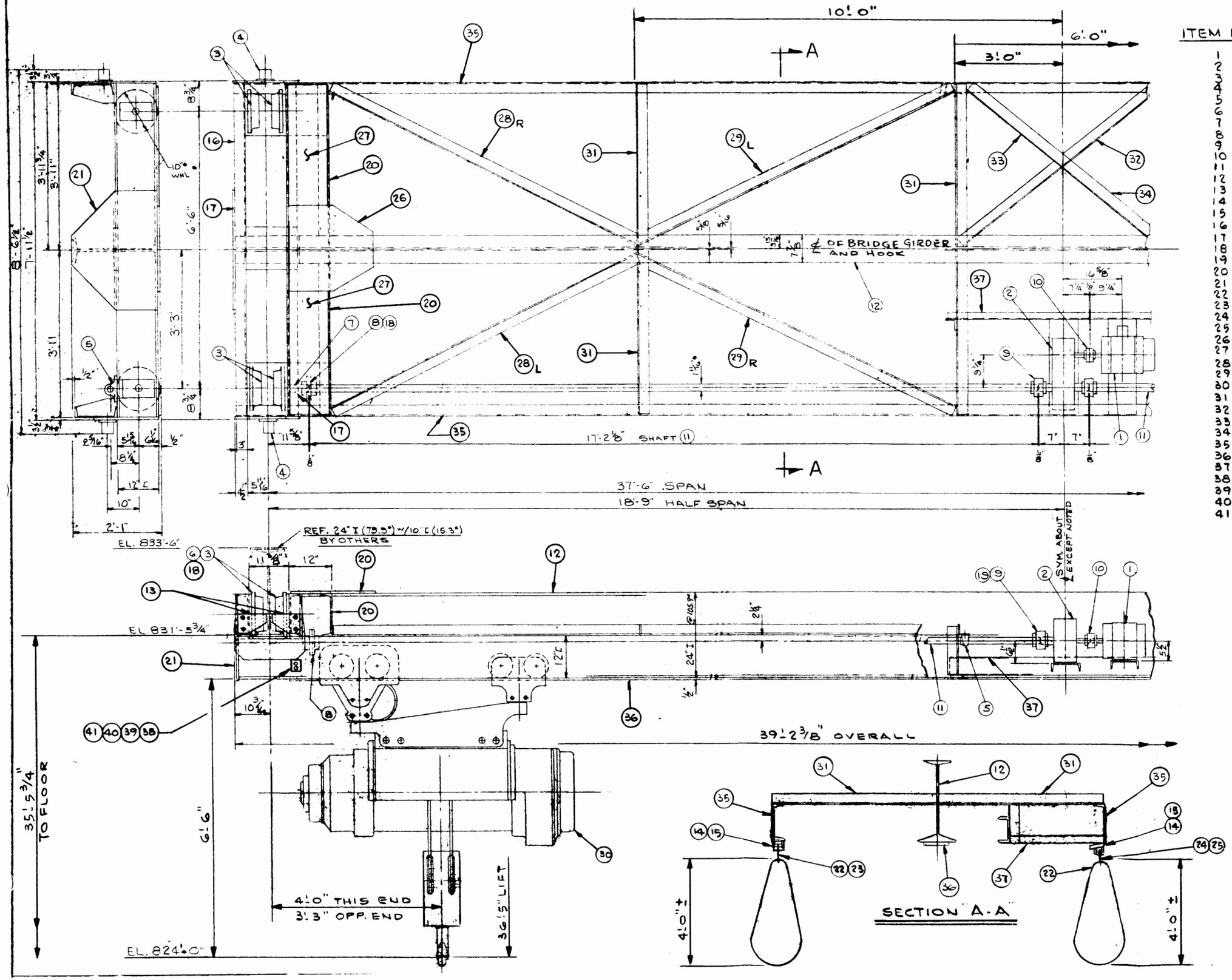

LEGEND

ITEM NO.	COMPONENT
1	BRIDGE MOTOR & BRAKE
2	REDUCER
3	WHEEL ASSEMBLY
4	BUMPER
5	PILLOW BLOCK
6	PINION
7	SHAFT
8	COUPLING
9	COUPLING
10	COUPLING
11	SHAFT
12	GIRDER
13	SAFETY LUG
14	UNISTRUT
15	UNISTRUT
16	END TRUCKS
17	KEY
18	KEY
19	KEY
20	CHANNEL
21	GIRDER END TIE PLATE
22	COIL CHAIN
23	SUPPORT
24	SUPPORT
25	SUPPORT
26	GIRDER TOP TIE PLATE
27	PLATE
28	ANGLE
29	ANGLE
30	HOIST 7.5 TON
31	ANGLE
32	ANGLE
33	ANGLE
34	ANGLE
35	CHANNEL
36	PLATE
37	MOTOR & REDUCER SUPPORT
38	TROLLEY STOP
39	BOLT
40	NUT
41	WASHER

JULY 31, 1980

COMANCHE PEAK S.E.S.
FINAL SAFETY ANALYSIS REPORT
UNITS 1 and 2

SERVICE WATER INTAKE STRUCTURE CRANE

FIGURE 9.2-14

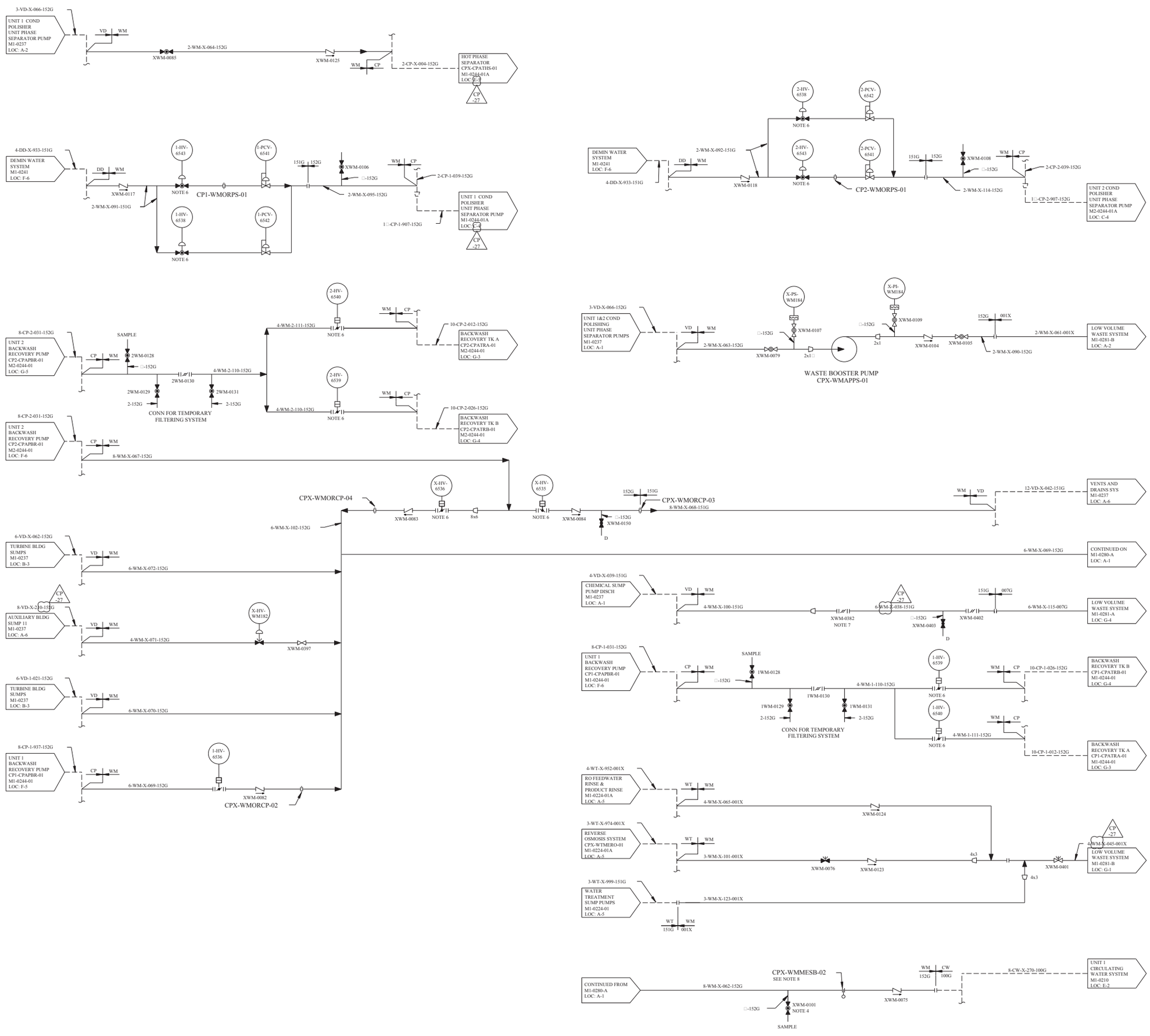

REV	DWN	CHKD	APVD	REMARKS
CP-27	DCK 09-16 2014			THIS DRAWING REVISED TO INCORPORATE AI-CR-2014-010053-1 TO EDITORIALLY CORRECT LINE NUMBER FROM WMS-X-045 TO WM-X-045 AND WMS-X-038 TO WM-X-038. EDITORIAL CHANGES AS NOTED.

NOTES:

1. UNLESS OTHERWISE NOTED, DRAINS TO BE COLLECTED BY LOCAL FLOOR DRAIN SYSTEM.
2. DELETED
3. DELETED
4. GRAB SAMPLE ADDED TO 8-WM-X-062-152G TO MONITOR OUTFALL 004 PRIOR TO DILUTION.
5. FOR MECHANICAL SYMBOLS AND NOTES SEE DRAWING M1-0200.
6. F.C. FOR LOSS OF POWER AND F.A.I. FOR LOSS OF AIR.
7. VALVE POSITION IS PROCEDURALLY CONTROLLED BY OPERATIONS/RADWASTE AND MAY BE OPEN OR CLOSED DEPENDING ON PLANT CONDITIONS AND EFFLUENT SAMPLE RESULTS.
8. **SPECTACLE FLANGE IS INSTALLED IN THE OPEN POSITION.**

FSAR FIGURE 9.2-15

THIS DRAWING CREATED ELECTRONICALLY

DRAWING TNE-M1-0280 REV CP-6
HAS BEEN SPLIT INTO THE FOLLOWING SHEETS:
M1-0280
M1-0280-A

NON-SAFETY

LUMINANT
CPNPP
GLEN ROSE, TEXAS

FLOW DIAGRAM
WASTE MANAGEMENT SYSTEM
CO-CURRENT WASTE

DWG. NO. M1-0280 | SH. NO. - | REV. CP-27

< FINAL PRINT >

$$$$$$$DATE$$$$$$ REF CHK COMP CP-27 9-16-2014

mc582700.dgn A M1-0280

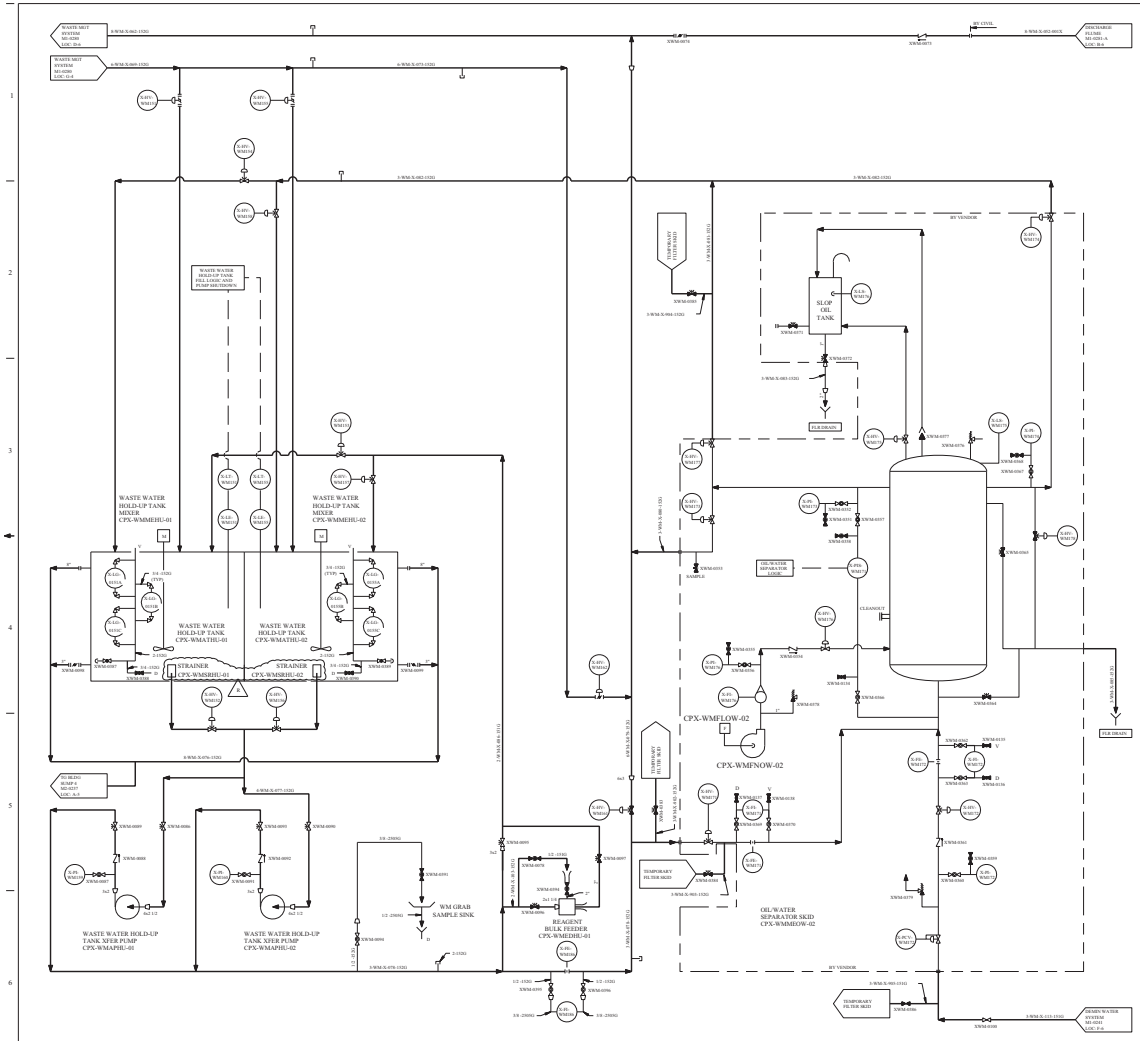

REV.	DRAWING CHANGE	OPER.	REMARKS
A	M1-0280-A		THIS DRAWING REVISED TO INCORPORATE DESIGN CHANGE ECN-2000-00026-01 AND FOR M1-0280-A1,M1-0280-A2,M1-0280-A3

NOTES:

1. DELETED
2. UNLESS OTHERWISE NOTED, DRAINS TO BE COLLECTED BY LOCAL FLOOR DRAIN SYSTEM.
3. DELETED
4. HEAT TRACE ABOVE GROUND ONLY.
5. FOR MECHANICAL SYMBOLS AND NOTES SEE DRAWING M1-0200.

DRAWING	TNX-M1-0280	REV	CP-6
THIS DRAWING HAS BEEN SPLIT INTO THE FOLLOWING SHEETS:			
M1-0280			
M1-0280-A			

FSAR FIGURE 9.2-15

NON-SAFETY

TXU POWER
CPSES
GLEN ROSE, TEXAS

FLOW DIAGRAM
WASTE MANAGEMENT SYSTEM
CO-CURRENT WASTE

DWG. NO. M1-0280 | REV. A | SH. NO. CP-15

REF. CHK. CHKP. CV-1 CV-2 CV-3 CV-4

mc562500.dgn M1-0280-A

REV	DWN	CHKD	APVD	REMARKS
CP-17	DUK 06-26-2012	MM 06-26-2012		THIS DRAWING REVISED TO INCORPORATE DESIGN CHANGE FDA 2012-000103-01-00 PER SK-0001-12-000103-01-00.

NOTES:

1. UNLESS OTHERWISE NOTED, ALL DRAINS COLLECTED BY LOCAL DRAIN SYSTEM.
2. DELETED
3. DELETED
4. DELETED
5. DELETED
6. DELETED
7. HEAT TRACE ABOVE GROUND ONLY.
8. DELETED

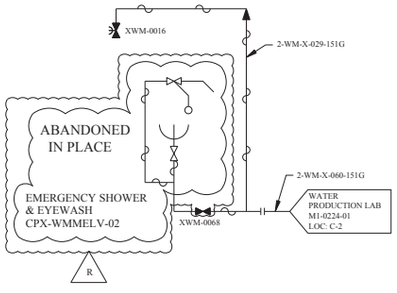

DRAWING TNE-M1-0281 REV CP-7
HAS BEEN SPLIT INTO THE FOLLOWING SHEETS:
M1-0281
M1-0281-A

DRAWING M1-0281 REV CP-14
HAS BEEN SPLIT INTO THE FOLLOWING SHEETS:
M1-0281
M1-0281-B

NON-SAFETY

LUMINANT
CPNPP
GLEN ROSE, TEXAS

FLOW DIAGRAM
WASTE MANAGEMENT SYSTEM
LOW VOLUME WASTE

DWG. NO. M1-0281 | SH. NO. - | REV. CP-17

FSAR FIGURE 9.2-16

THIS DRAWING CREATED ELECTRONICALLY

CPE A B C D E F G H

SSSSSSSSDATESSSSSSSS REF CHK COMP CP-16 4-17-98

me0000vc.dgn A M1-0281 B C D E F G < FINAL PRINT > H

REV	DWN	CHKD	APVD	REMARKS
CP-14	CA 08/07/1998			THIS DRAWING REVISED TO INCORPORATE DESIGN CHANGE DCN 11503 REV 4.

NOTES:

1. UNLESS OTHERWISE NOTED, ALL DRAINS COLLECTED BY LOCAL DRAIN SYSTEM.
2. FOR MECHANICAL NOTES AND SYMBOLS SEE M1-0200.
3. EXISTING VALVES ARE TO BE LOCKED CLOSED UPON COMPLETION OF API SEPARATOR AND DISCHARGE TO LVW POND.
4. LVW POND IS EXISTING EAST EVAPORATION POND.
5. EVAPORATION POND HAS NO DISCHARGE OR OUTLETS.
6. NATURAL NEUTRALIZATION BASIN IS FILLED WITH 1633 CUBIC YARDS OF CRUSHED LIMESTONE.
7. HEAT TRACE ABOVE GROUND ONLY.
8. REPOSITIONING OF THE SPOOL PIECE IS SUBJECT TO SITE ADMINISTRATIVE CONTROL.
9. LINE 6-WMS-X-115-007G HAS A 1/2" DIAMETER HOLE ON TOP PORTION OF PIPE WHICH WILL ALLOW FOR FUTURE VACUUM BREAKING CAPABILITIES.

CP -14 DCN 11503 REV 4

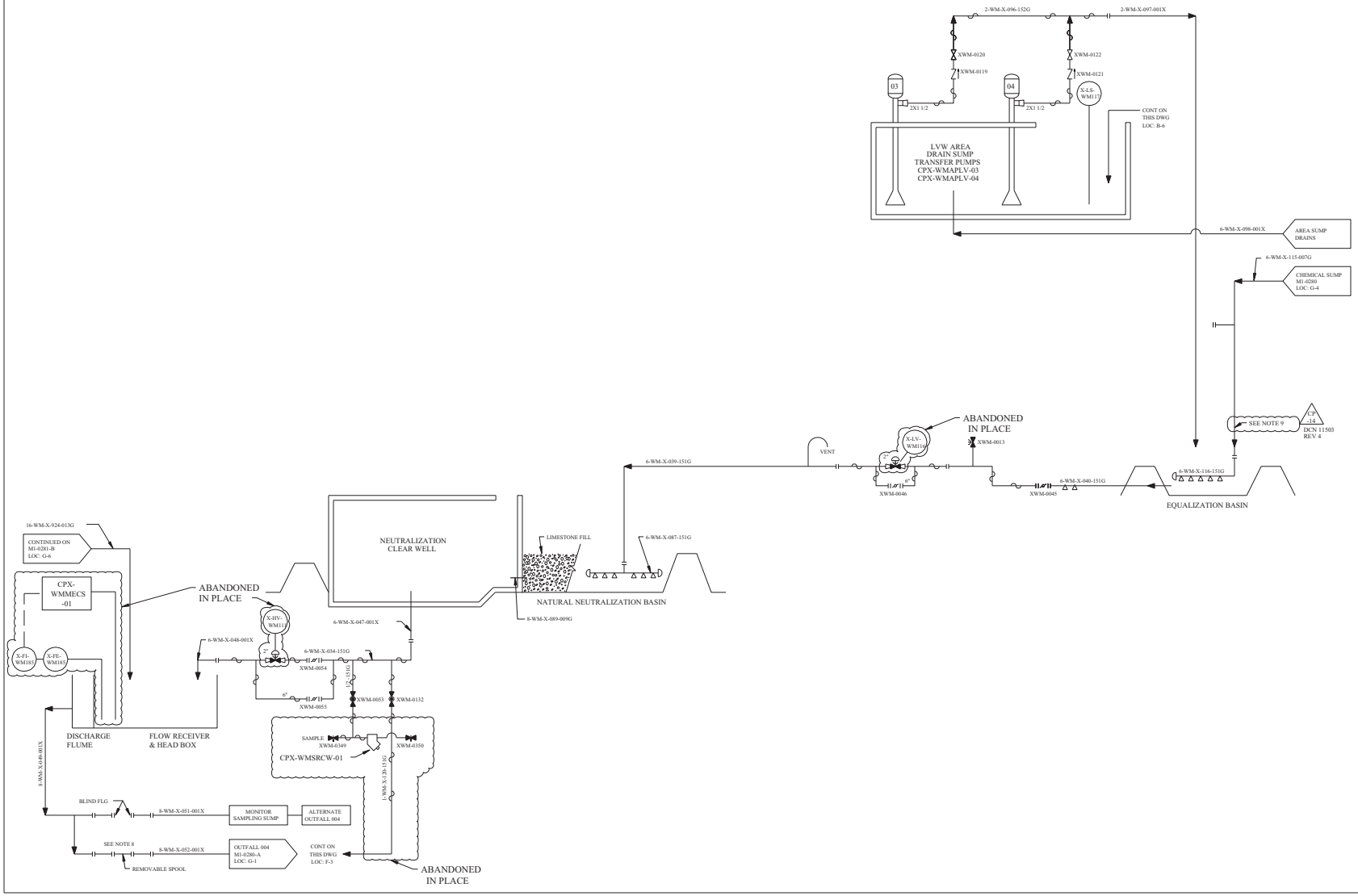

FSAR FIGURE 9.2-16

THIS DRAWING CREATED ELECTRONICALLY

DRAWING TNE-M1-0281 REV CP-7
HAS BEEN SPLIT INTO THE FOLLOWING SHEETS:
M1-0281
M1-0281-A

NON-SAFETY

TXU ELECTRIC
CPSES
GLEN ROSE, TEXAS

FLOW DIAGRAM
WASTE MANAGEMENT SYSTEM
LOW VOLUME WASTE

DWG. NO.	SH. NO.	REV.
M1-0281	A	CP-14

REF CIR COMP CP-13 4-17-98

$$$$$$$$DATESSSSS

me000173.dgn

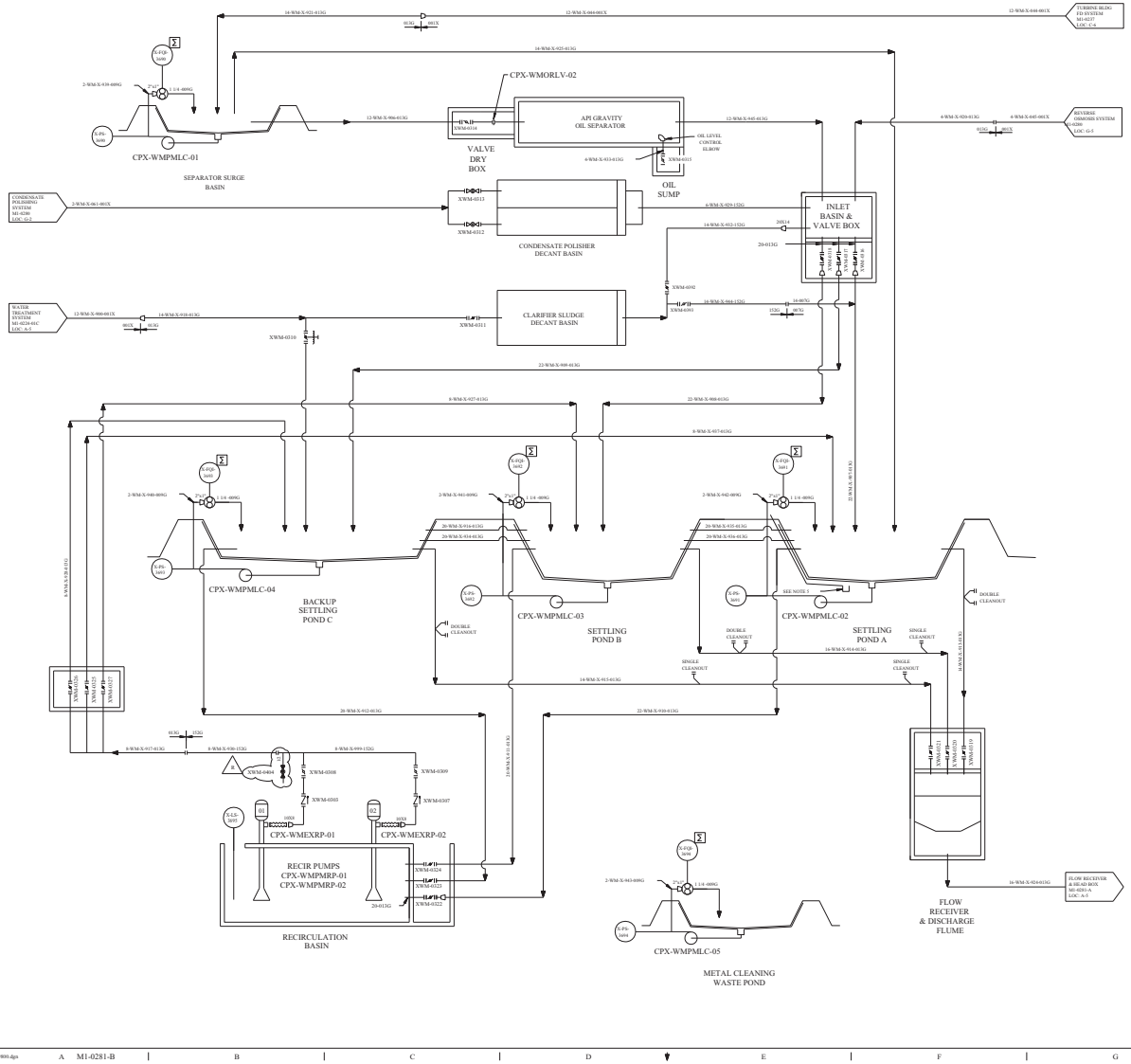

REV	DWN	CHKD	APVD	REMARKS
CP-10				THIS DRAWING REVISED TO INCORPORATE DESIGN CHANGE FDA-2000-00019-01-00 PER SL-0001-00-00019-01-00.

NOTES:

1. FOR MECHANICAL NOTES AND SYMBOLS SEE MI-0200.
2. UNLESS OTHERWISE NOTED, ALL DRAINS COLLECTED BY LOCAL DRAIN SYSTEM.
3. HEAT TRACE ABOVE GROUND ONLY.
4. TO DETERMINE THE CORRECT PIPE SCHEDULE at PRESSURE/ TEMPERATURE RATING FOR ANY CATEGORY 013G PIPE, SEE THE MASTER EQUIPMENT LIST AND THE "COMMENTS" THEREIN.
5. CATCH BASIN - REFER TO VENDOR DWG TJV-2000-301 SH 01.

FSAR FIGURE 9-2-16

THIS DRAWING CREATED FROM CALC.

DRAWING M1-0281 REV CP-14 HAS BEEN SPLIT INTO THE FOLLOWING SHEETS:
M1-0281
M1-0281-B

NON-SAFETY

TXU ENERGY
CPSES
GLEN ROSE, TEXAS

FLOW DIAGRAM
WASTE MANAGEMENT SYSTEM
LOW VOLUME WASTE

DWG. NO. M1-0281 | SH. NO. B | REV. CP-10

REF CADD 10 TTV CN7

SRSSSSSAAES SSSRS

zm249800.dgn A M1-0281-B

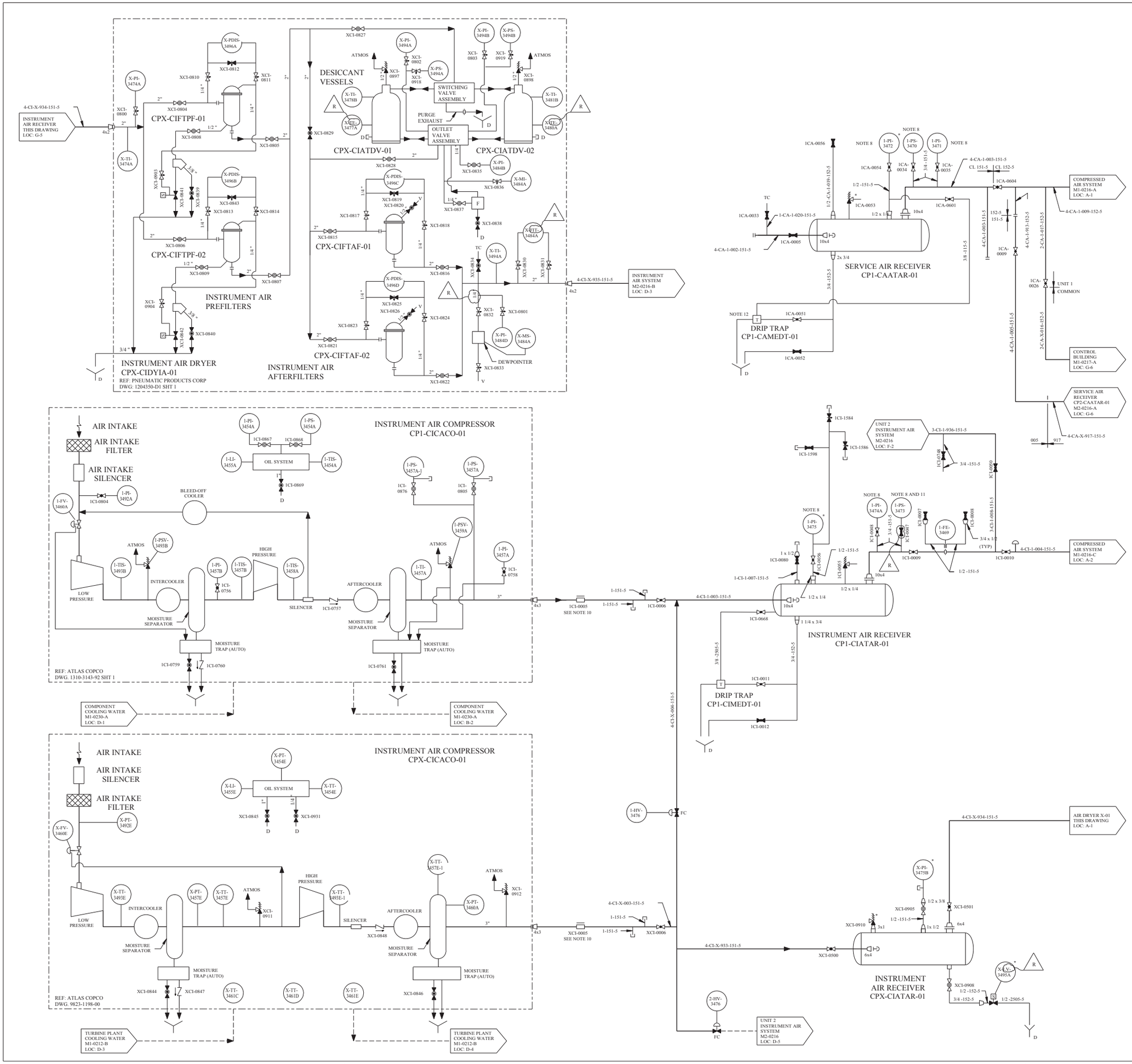

REV	DWN	CHKD	APVD	REMARKS
CP-45	DGK 12-08 2004	MM 12-08 2004		THIS DRAWING REVISED TO INCORPORATE DESIGN CHANGE FDA 2001-000158-08-00 PER SK-0014-01-000158-08-00.

NOTES:

1. FOR MECHANICAL SYMBOLS AND NOTES SEE DRAWING M1-0200.
2. * SUPPLIED BY VENDOR.
3. ALL DRAINS ARE 3/4 " UNLESS OTHERWISE NOTED.
4. DELETED
5. DELETED
6. UNLESS OTHERWISE NOTED, ALL DRAINS TO BE COLLECTED BY LOCAL FLOOR DRAIN SYSTEM.
7. INSTRUMENT AIR SHALL NOT BE USED FOR BREATHING AIR WITHOUT APPROPRIATE IN LINE CHEMICAL ABSORBERS AND PARTICULATE FILTRATION. TOXIC VAPORS, FUMES AND PARTICULATES MAY BE PRESENT. REF OSHA 1910.134 (d).
8. TYPICAL CONFIGURATION FOR LOCAL MOUNTED PRESSURE SWITCHES AND INDICATORS.

COMPONENT-A	B	C	D
1-PI-3471	1CA-1001	1CA-0035	1CA-1003
1-PI-3472	1CA-1004	1CA-0054	1CA-1006
1-PS-3470	1CA-1007	1CA-0034	1CA-1009
1-PI-3474A	1CI-1601	1CI-0048	1CI-1603
1-PI-3475	1CI-1578	1CI-0056	1CI-1580
1-PS-3473	1CI-1587	1CI-0047	1CI-1589

9. DELETED
10. CHECK VALVES 1CI-0005 AND XCI-0005 INTERNALS HAVE BEEN REMOVED AND IT HAS BEEN ABANDONED IN PLACE.
11. PRESSURE SWITCH 1-PS-3473 CONTACTS ARE SPARED (REF FDA-2001-1143).
12. THE GASKET FACES OF DRIP TRAP CP1-CAMEDT-01 WERE REPAIRED PER FDA-2004-002856-01.

FSAR FIGURE 9.3-1

DRAWING 2323-M1-0216	REV CP-10
HAS BEEN SPLIT INTO THE FOLLOWING SHEETS:	
M1-0216	
M1-0216-B	

DRAWING 2323-M1-0216	REV CP-9
HAS BEEN SPLIT INTO THE FOLLOWING SHEETS:	
M1-0216	
M1-0216-A	

THIS DRAWING CREATED ELECTRONICALLY

CLASS II

TXU POWER
CPSES
GLEN ROSE, TEXAS

FLOW DIAGRAM
COMPRESSED AIR SYSTEM

DWG. NO. M1-0216 | SH. NO. - | REV. CP-45

FINAL PRINT

REF CKD CP-36 010997

me614400.dgn

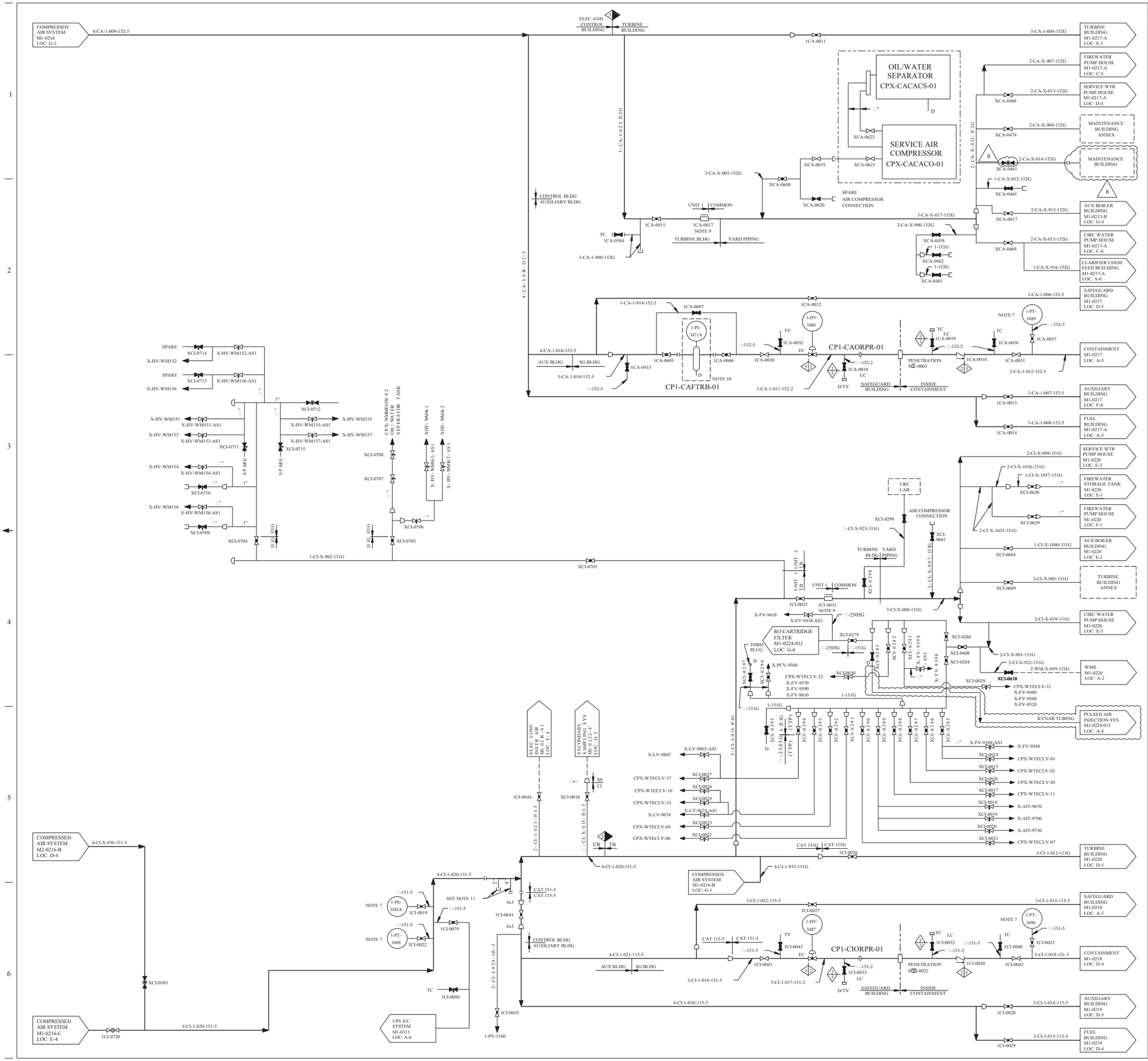

REV	DWN	CHKD	APVD	REMARKS
CP-41	JRMC 10-01-2011	TES 10-01-2011		THIS DRAWING REVISED TO INCORPORATE DESIGN CHANGE FDA 2011-000154-01-00 PER SK-0001-11-000154-01-00.

NOTES:

1. FOR MECHANICAL SYMBOLS AND NOTES SEE DRAWING M1-0200.
2. DELETED
3. ALL DRAINS ARE □" UNLESS OTHERWISE NOTED.
4. UNLESS OTHERWISE NOTED, ALL DRAINS TO BE COLLECTED BY LOCAL FLOOR DRAIN SYSTEM.
5. INSTRUMENT AIR SHALL NOT BE USED FOR BREATHING AIR WITHOUT APPROPRIATE IN-LINE CHEMICAL ABSORBERS AND PARTICULATE FILTRATION. TOXIC VAPORS, FUMES AND PARTICULATES MAY BE PRESENT. REF OSHA 1910.134(d).
6. DRAIN VALVE WITH INTEGRAL PILOT OPERATED SOLENOID VALVE AND SOLID STATE TIMER.
7. TYPICAL CONFIGURATION FOR LOCAL MOUNTED PRESSURE SWITCHES/INDICATORS.

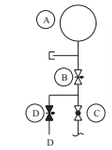

INSTRUMENT	VALVES		
A	B	C	D
1-PS-3485A	1CI-1608	1CI-0019	1CI-1609
1-PT-3488	1CI-1610	1CI-0022	1CI-1611
1-PT-3490	1CI-1612	1CI-1614	1CI-1615
1-PT-3489	1CA-1020	1CA-0037	1CA-1021

8. DELETED
9. REMOVE CHECK VALVE INTERNALS, ABANDON VALVE BODY 1CA-0017 AND 1CI-0031 IN PLACE.
10. VAN AIR FILTER F100-750.
11. HOT TAP LOCATION FOR A VENDOR SUPPLIED 4" TYPE SHORTSTOPP WELDING FITTING WITH INTERNAL PLUG WITH A BLIND FLANGE AND A 2" TOR NIPPLE SCARFED INSTALLED PER FDA 2001-000158-10, NOT AVAILABLE FOR OTHER USES. II

FSAR FIGURE 9.3-1

THIS DRAWING CREATED ELECTRONICALLY

DRAWING 2323-M1-0216	REV CP-9
HAS BEEN SPLIT INTO THE FOLLOWING SHEETS:	
M1-0216	
M1-0216-A	

DRAWING M1-0216-A	REV CP-27
HAS BEEN SPLIT INTO THE FOLLOWING SHEETS:	
M1-0216-A	
M1-0216-C	

CLASS I

(NUCLEAR SAFETY-RELATED)

SAFETY CLASS 1 SEISMIC CATEGORY I
SAFETY CLASS 2 CLASS 1E
SAFETY CLASS 3 ASSOCIATED CIRCUITS

LUMINANT
CPNPP
GLEN ROSE, TEXAS

FLOW DIAGRAM
COMPRESSED AIR SYSTEM

DWG. NO. M1-0216 | SH. NO. A | REV. CP-41

< FINAL PRINT >

$$$$$$$$ DATE$$$$$$$$ REF CKD CP-33 10/26/97

me103750.dgn A M1-0216-A

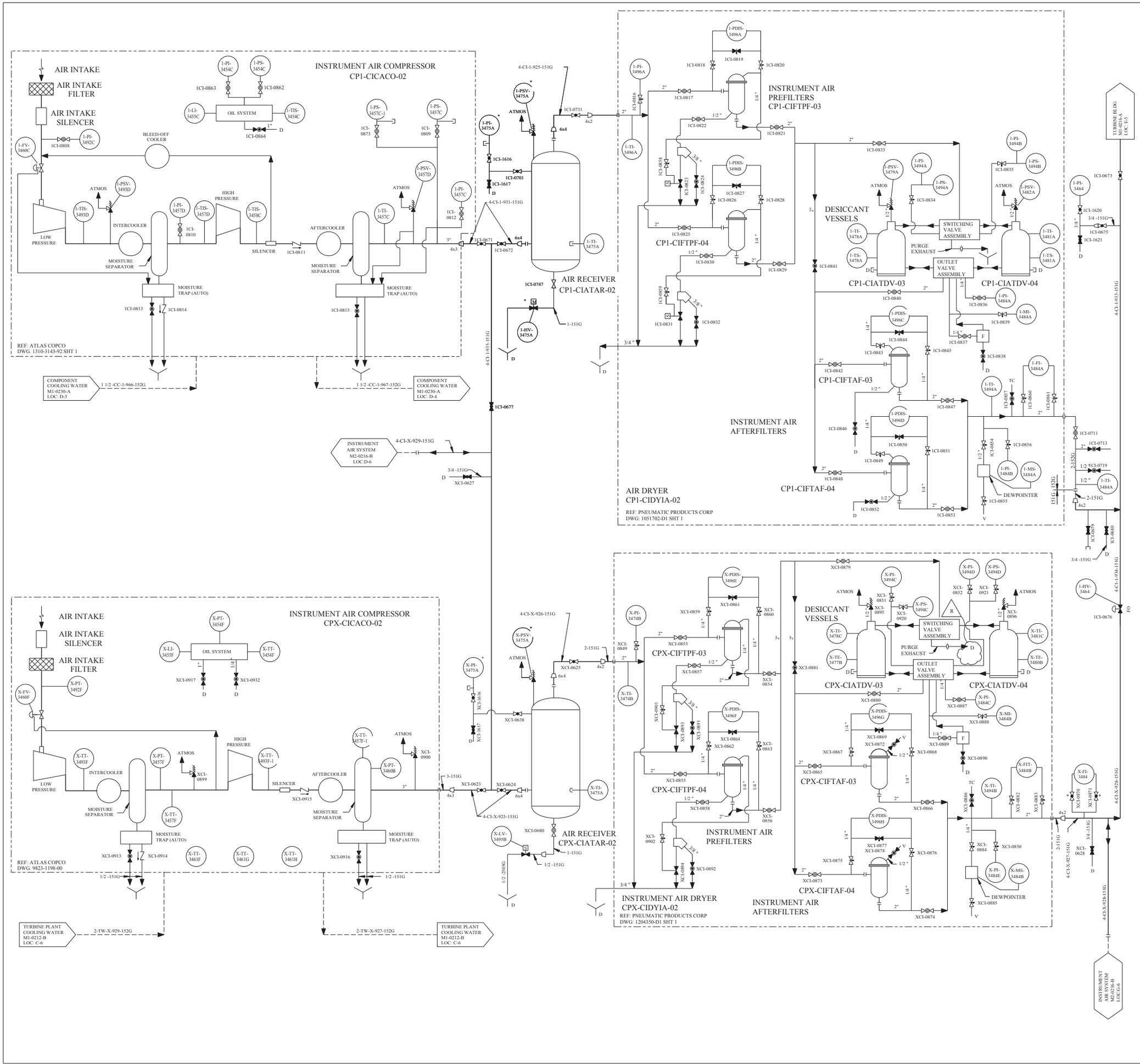

REV	DWN	CHKD	APVD	REMARKS
CP-21	JRMC 07-26-2006	SM 07-27-2006		THIS DRAWING REVISED TO INCORPORATE DESIGN CHANGE FDA 2005-003409-01-00 PER SK-0002-05-003409-01-00.

NOTES:

1. FOR MECHANICAL SYMBOLS AND NOTES SEE M1-0200.
2. * SUPPLIED BY VENDOR.
3. ALL DRAINS ARE 3/4 " UNLESS OTHERWISE NOTED.
4. DELETED
5. DELETED
6. DELETED
7. UNLESS OTHERWISE NOTED, ALL DRAINS TO BE COLLECTED BY LOCAL FLOOR DRAIN SYSTEM.
8. INSTRUMENT AIR SHALL NOT BE USED FOR BREATHING AIR WITHOUT APPROPRIATE IN LINE CHEMICAL ABSORBERS AND PARTICULATE FILTRATION. TOXIC VAPORS, FUMES AND PARTICULATES MAY BE PRESENT. REF OSHA 1910.134 (d).
9. PALLMATIC II DRAIN VALVE WITH INTEGRAL PILOT OPERATED SOLENOID VALVE AND SOLID STATE TIMER.
10. DRAIN LINES MAY BE 151-5 OR SS TUBING.

FSAR FIGURE 9.3-1

THIS DRAWING CREATED ELECTRONICALLY

DRAWING 2323-M1-0216 REV CP-10
HAS BEEN SPLIT INTO THE FOLLOWING SHEETS:
M1-0216
M1-0216-B

NON-SAFETY

LUMINANT
CPSES
GLEN ROSE, TEXAS

FLOW DIAGRAM
COMPRESSED AIR SYSTEM

DWG. NO. M1-0216 | SH. NO. B | REV. CP-21

FINAL PRINT

REF CKD CP-13 5/1/98

me814700.dgn M1-0216-B

REV	DWN	CHKD	APVD	REMARKS
CP-11	BEMC 08-04 2009	SM 08-03 2009		THIS DRAWING REVISED TO INCORPORATE DESIGN CHANGE FDA 2009-002126-01-00 PER SK-0001-09-002126-01-00.

NOTES:

1. FOR MECHANICAL SYMBOLS AND NOTES SEE DRAWING M1-0200.
2. UNLESS OTHERWISE NOTED, ALL DRAINS TO BE COLLECTED BY LOCAL FLOOR DRAIN SYSTEM.

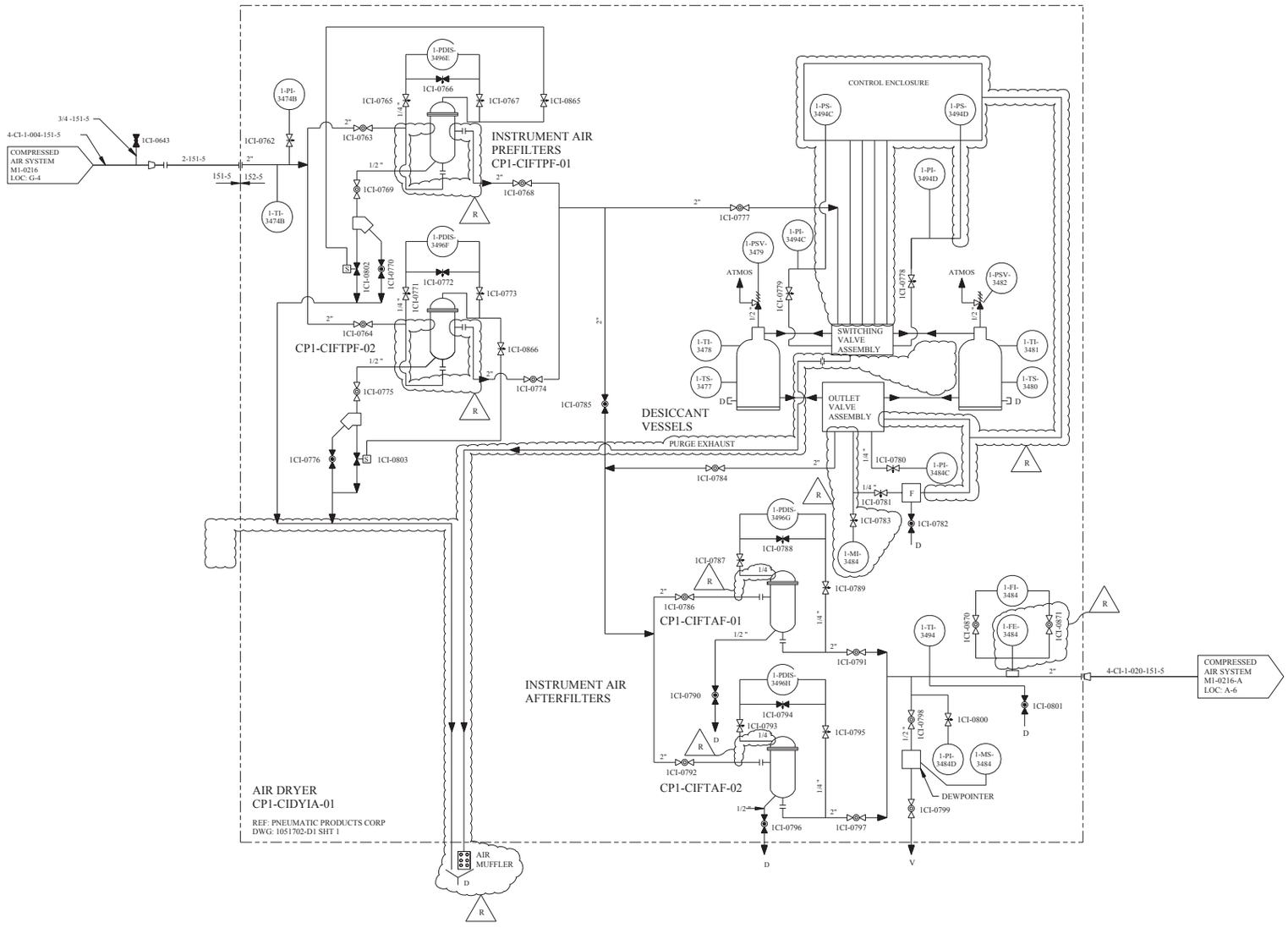

FSAR FIGURE 9.3-1

THIS DRAWING CREATED ELECTRONICALLY

CLASS II

LUMINANT
CPNPP
GLEN ROSE, TEXAS

FLOW DIAGRAM
COMPRESSED AIR SYSTEM

DWG. NO. M1-0216 | SH. NO. C | REV. CP-11

REF CKD 5-21-98 CP-6

$$$$$$$DATE$$$$$$$

me936200.dgn M1-0216-C

< FINAL PRINT >

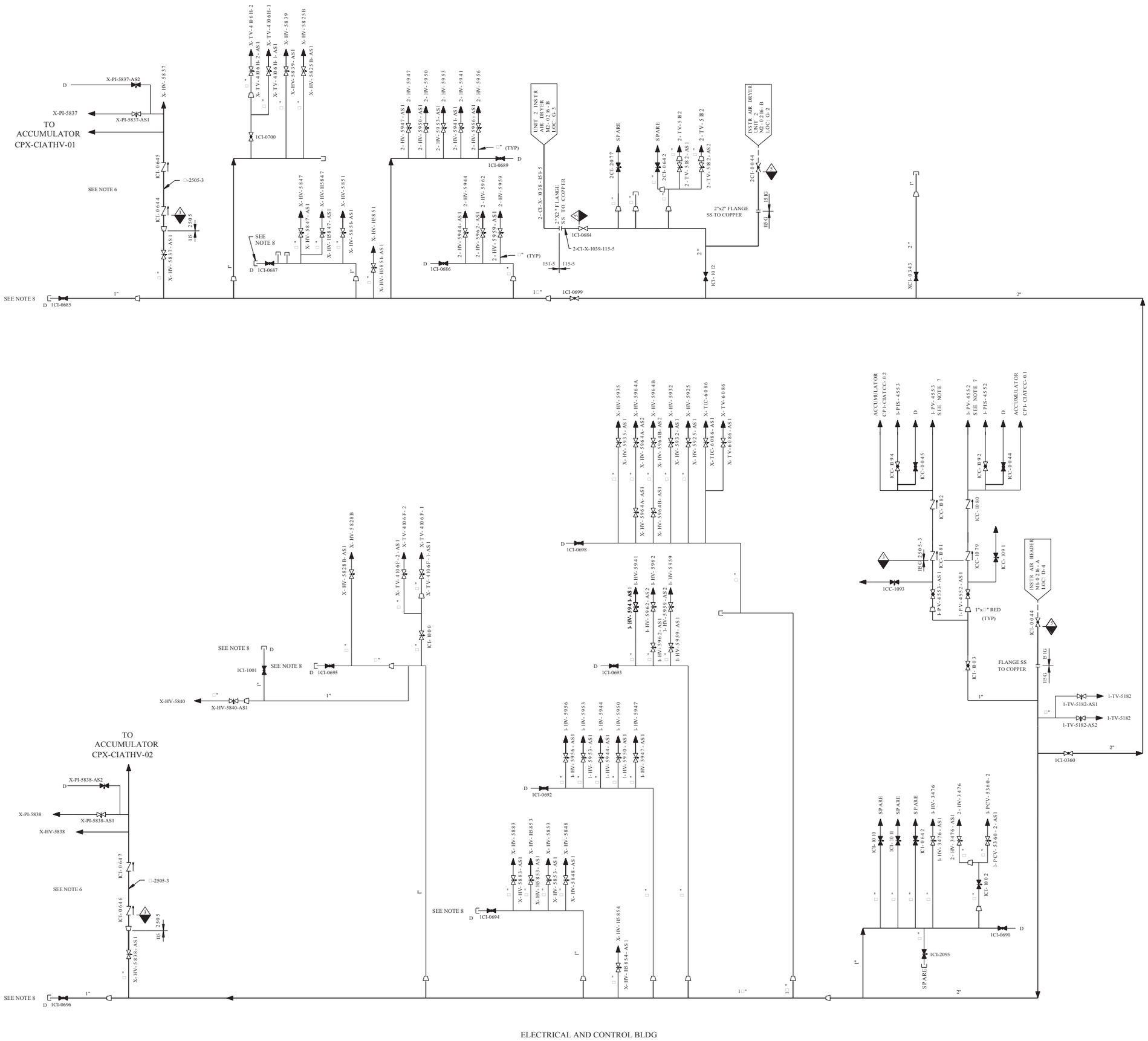

REV	DWN	CHKD	APVD	REMARKS
CP-28	SM 07-28-2014			THIS DRAWING REVISED TO INCORPORATE AN EDITORIAL CHANGE AS NOTED PER AI-CR-2014-008461-1.

NOTES:

1. FOR MECHANICAL SYMBOLS AND NOTES SEE DRAWING M1-0200.
2. FOR VALVE/CHANNEL IDENTIFICATION SEE DRAWING M1-2200-02.
3. ALL LINES ARE CATEGORY 115G COPPER AND BRONZE PER SPEC MS-44B, EXCEPT AS NOTED.
4. DANGER - INSTRUMENT AIR SHALL NOT BE USED FOR BREATHING AIR WITHOUT APPROPRIATE IN-LINE CHEMICAL ABSORBERS AND PARTICULATE FILTERS. TOXIC VAPORS OR PARTICULATES MAY BE PRESENT.
5. BAS - BREATHING AIR STATION.
6. SEE M1-2120-02 FOR DETAIL.
7. SEE M1-2120-03 FOR INSTRUMENT DETAIL.
8. PIPE CAPS ADDED TO ISOLATION VALVES TO MITIGATE UNFILTERED AIR INLEAKAGE INTO ROOMS 150 AND 150A PER FDA 1999-002168-01.

CP-28

FSAR FIGURE 9.3{1}

THIS DRAWING CREATED ELECTRONICALLY

CLASS I
(NUCLEAR SAFETY-RELATED)
SAFETY CLASS 1 — SEISMIC CATEGORY I
SAFETY CLASS 2 — CLASS IE
SAFETY CLASS 3 — ASSOCIATED CIRCUITS

LUMINANT
CPNPP
GLEN ROSE, TEXAS

FLOW DIAGRAM
INSTRUMENT AIR SUPPLY
ELECTRICAL AND CONTROL

DWG. NO. M1-0216 | SH. NO. 01 | REV. CP-28

FINAL PRINT

REF CKD CP-23 2/24/98

me573600.dgn M1-0216-01

REV	DWN	CHKD	APVD	REMARKS
CP-21	G&K 06-02 2004	MM 07-08 2004		THIS DRAWING REVISED TO INCORPORATE DESIGN CHANGE FDA 2001-000158-08-00 PER SK-0001-01-000158-08-00.

NOTES:

1. FOR MECHANICAL SYMBOLS AND NOTES SEE DWG M1-0200.
2. * SUPPLIED BY VENDOR.
3. ALL DRAINS ARE 3/4 " UNLESS OTHERWISE NOTED.
4. FLANGED CONNECTION WITH BLIND FLANGE TO BE INSTALLED WITH UNIT 1 CONSTRUCTION.
5. DELETED
6. DELETED
7. UNLESS OTHERWISE NOTED ALL DRAINS TO BE COLLECTED BY LOCAL FLOOR DRAIN SYSTEM.
8. INSTRUMENT AIR SHALL NOT BE USED FOR BREATHING AIR WITHOUT APPROPRIATE INLINE CHEMICAL ABSORBERS AND PARTICULATE FILTRATION. TOXIC VAPORS, FUMES AND PARTICULATES MAY BE PRESENT. "REF OSHA 1910.134(d)."
9. CHECK VALVE 2CI-0005 INTERNALS HAVE BEEN REMOVED AND THE VALVE BODY HAS BEEN ABANDONED IN PLACE.
10. DRAIN LINES MAY BE 151-5 OR SS TUBING.
11. PRESSURE SWITCH 2-PS-3473 CONTACTS ARE SPARED (REF FDA-2001-1143).

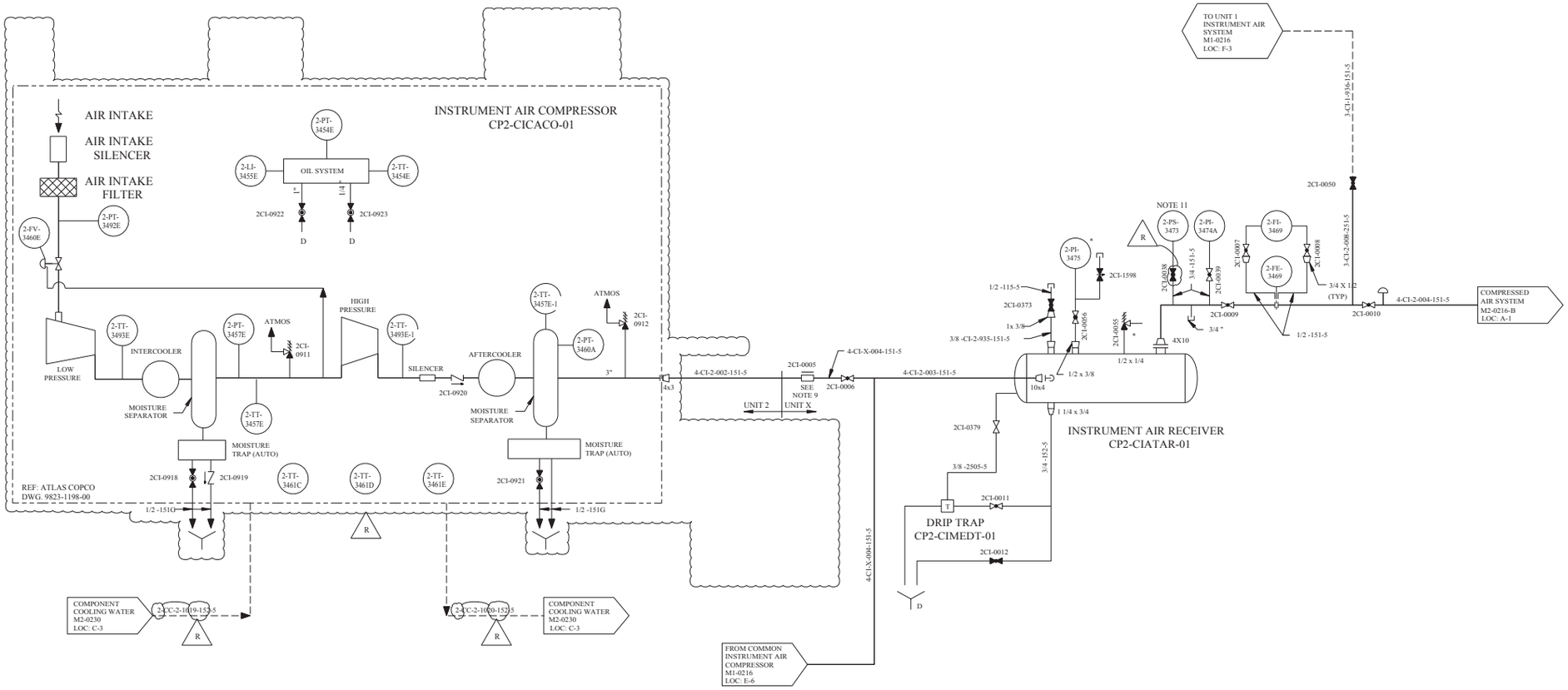

FSAR FIGURE 9.3-1

THIS DRAWING CREATED ELECTRONICALLY

DRAWING 2323-M2-0216	REV CP-2
HAS BEEN SPLIT INTO THE FOLLOWING SHEETS:	
M2-0216	
M2-0216-A	
M2-0216-B	

CLASS II

LUMINANT
CPSES
GLEN ROSE, TEXAS

FLOW DIAGRAM
COMPRESSED AIR SYSTEM

DWG. NO.	SH. NO.	REV.
M2-0216	-	CP-21

FINAL PRINT

REF CKD 5-20-98 CP-16

me614100.dgn A M2-0216

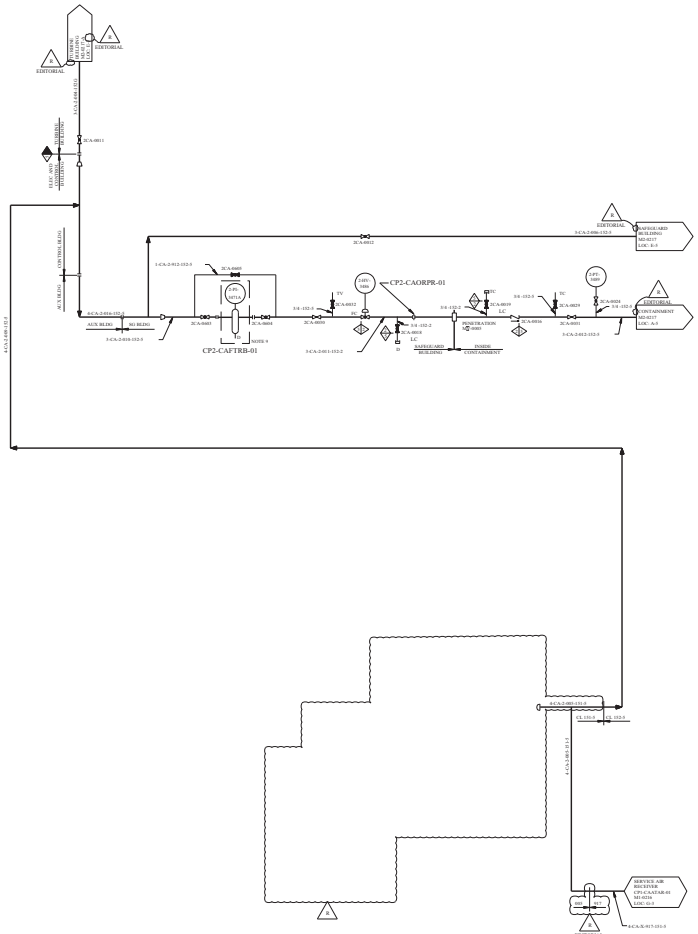

REV	DWN	CHKD	APPD	REMARKS
CP-10	TCW 08/07	TRF 08/07	TRF 08/07	THIS DRAWING REVISED TO INCORPORATE DESIGN CHANGE FCN 2008-0003 TRACKING PER DCP 08-0003-01-0000 TO ADD 4 EDITORIAL CHANGE AS NOTED.

NOTES:

1. FOR MECHANICAL SYMBOLS AND NOTES SEE DWG M1-0200.
2. * SUPPLIED BY VENDOR.
3. ALL DRAINS ARE 3/4 " UNLESS OTHERWISE NOTED.
4. DELETED
5. DELETED
6. DELETED
7. DELETED
8. DELETED
9. **VAN AIR FILTER F100-750.**

FSAR FIGURE 9.3-1

THIS DRAWING IS LISTED IN FSAR TABLE 1.7-1

DRAWING# 2323-M2-0216	REV CP-2
WAS REEN SPLIT INTO THE FOLLOWING SHEETS:	
M2-0216	
M2-0216-A	
M2-0216-B	

CLASS I
(NUCLEAR SAFETY-RELATED)
SAFETY CLASS 1 SEISMIC CATEGORY I
SAFETY CLASS 2 CLASS 1E
SAFETY CLASS 3 ASSOCIATED CIRCUITS

TXU POWER
CPSES
GLEN ROSE, TEXAS

FLOW DIAGRAM
COMPRESSED AIR SYSTEM

DWG. NO. M2-0216 | REV. A | REV. CP-10

REFERENCE DRAWINGS

M2-0216-A

ma5363500.dgn

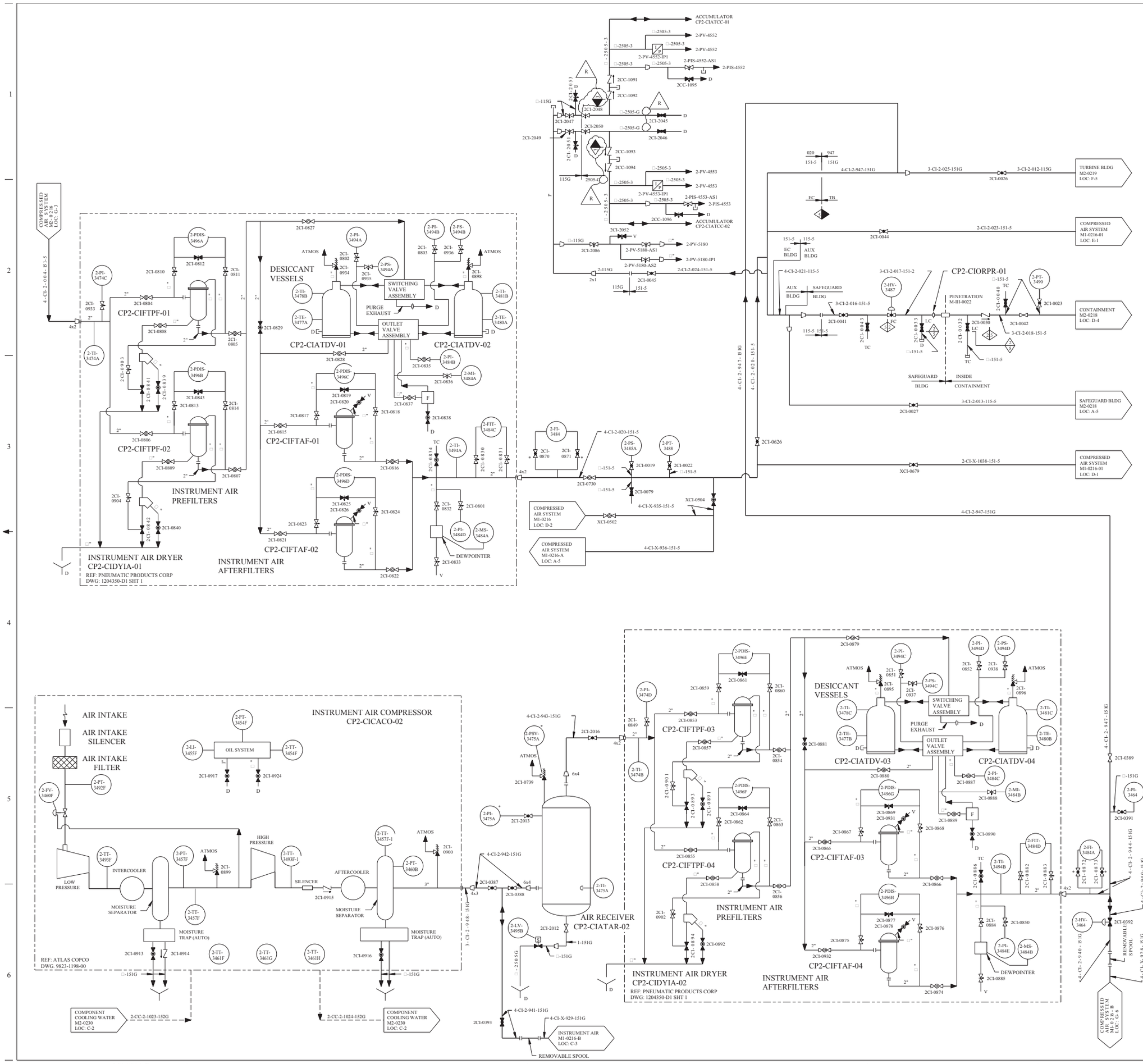

REV	DWN	CHKD	APVD	REMARKS
CP-20	JRSK 04-28-2008	DJG 04-28-2008		THIS DRAWING REVISED TO INCORPORATE DESIGN CHANGE FDA 2005-004851-04-00 PER SK-0002-05-004851-04-00.

NOTES:

1. FOR MECHANICAL SYMBOLS AND NOTES SEE DWG M1-0200.
2. * SUPPLIED BY VENDOR.
3. ALL DRAINS ARE □" UNLESS OTHERWISE NOTED.
4. DELETED
5. INSTRUMENTS ARE SUPPLIED BY INGERSOLL RAND AND ARE MOUNTED ON THE COMPRESSOR.
6. FIELD INSTALLED CONTROL AIR LINES FOR OPERATION OF THE FREE AIR UNLOADERS ON THE UNIT 2 COMMON INSTRUMENT AIR COMPRESSORS.
7. UNLESS OTHERWISE NOTED ALL DRAINS TO BE COLLECTED BY LOCAL FLOOR DRAIN SYSTEM.
8. INSTRUMENT AIR SHALL NOT BE USED FOR BREATHING AIR WITHOUT APPROPRIATE INLINE CHEMICAL ABSORBERS AND PARTICULATE FILTRATION. TOXIC VAPORS, FUMES AND PARTICULATES MAY BE PRESENT. "REF OSHA 1910.134(d)."
9. DRAIN TRAP TIMER.
10. DELETED

FSAR FIGURE 9.3-1

THIS DRAWING CREATED ELECTRONICALLY

DRAWING 2323-M2-0216 REV CP-1
HAS BEEN SPLIT INTO THE FOLLOWING SHEETS:
M2-0216
M2-0216-A
M2-0216-B

CLASS I
(NUCLEAR SAFETY-RELATED)
SAFETY CLASS 1 — SEISMIC CATEGORY I
SAFETY CLASS 2 — CLASS 1E
SAFETY CLASS 3 — ASSOCIATED CIRCUITS

LUMINANT
CPNPP
GLEN ROSE, TEXAS

FLOW DIAGRAM
INSTRUMENT AIR SYSTEM

DWG. NO. M2-0216 | SH. NO. B | REV. CP-20

FINAL PRINT

REF CHKD 5/3/2001

me873600.dgn A M2-0216-B

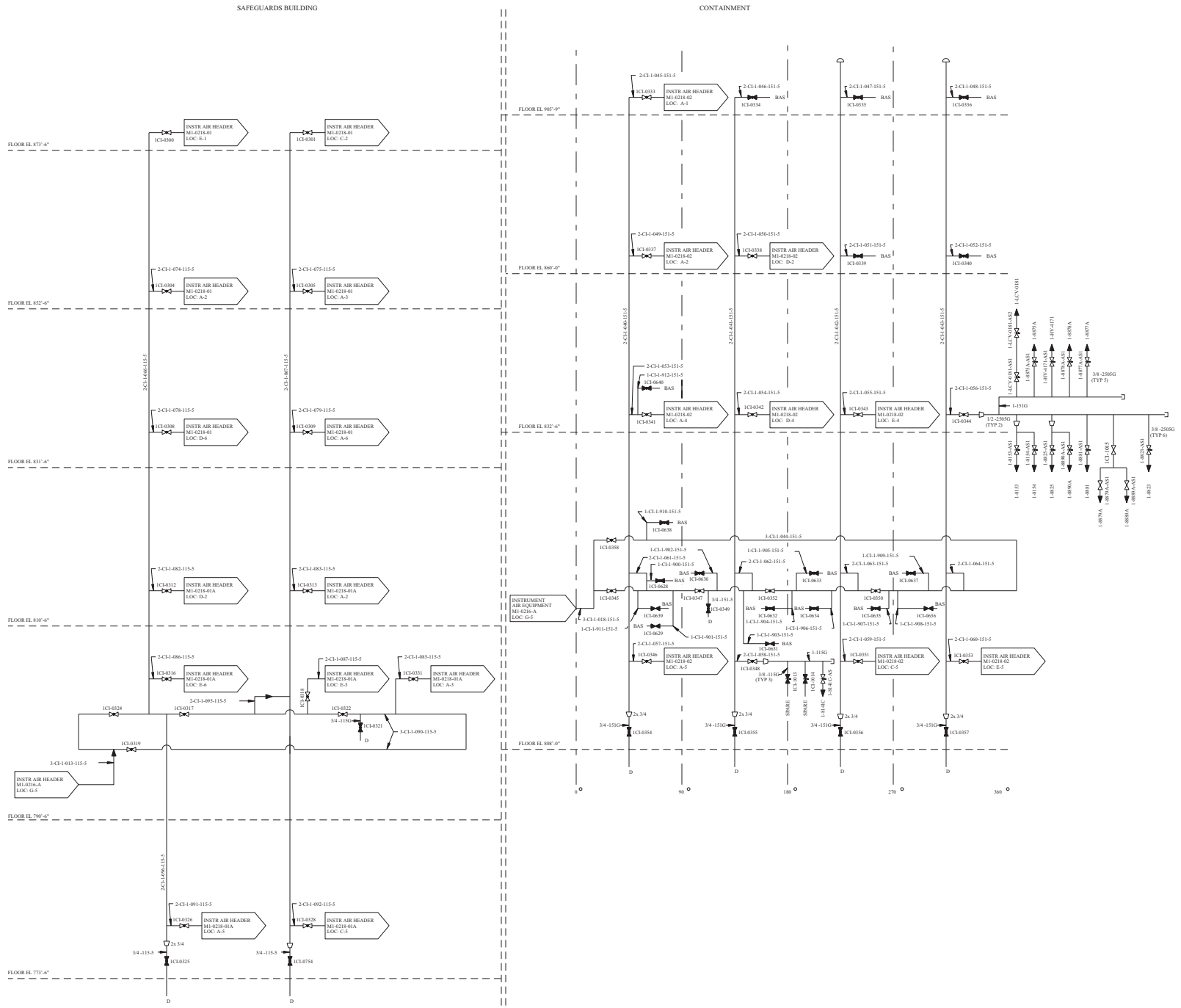

REV	DWN	CHKD	APVD	REMARKS
CP-14	ALTO 05-23-1996			THIS DRAWING REVISED TO ADD THE FSAR FIGURE NUMBER AS AN EDITORIAL CHANGE.

NOTES

1. FOR MECHANICAL SYMBOLS AND NOTES SEE DRAWING M1-0200.
2. UNLESS OTHERWISE NOTED, DRAINS COLLECTED BY LOCAL DRAIN SYSTEM.
3. TYPICAL INSTRUMENT AIR SUPPLIED TO INSTRUMENT AIR ACTUATED DIAPHRAGM WITH VALVE POSITIONER.

4. DANGER - INSTRUMENT AIR SHALL NOT BE USED FOR BREATHING AIR WITHOUT APPROPRIATE IN-LINE CHEMICAL ABSORBERS AND PARTICULATE FILTERS. TOXIC VAPORS OR PARTICULATES MAY BE PRESENT.
5. FOR VALVE CHANNEL NUMBER IDENTIFICATION SEE DRAWING M1-2200-02.
6. VALVES DESIGNATED BAS WILL HAVE A HANSEN FITTING FOR CONNECTION TO A USER APPARATUS.

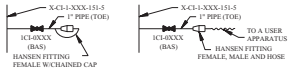

7. HANSEN FITTINGS INSIDE CONTAINMENT ARE TO BE STAINLESS STEEL.

CP 14

FSAR FIGURE 9.3-1

THIS DRAWING CREATED ELECTRONICALLY

CLASS II

TXU ELECTRIC
CPSES
GLEN ROSE, TEXAS

FLOW DIAGRAM
INSTRUMENT AIR

DWG. NO.	SH. NO.	REV.
M1-0218	-	CP-14

vs00007p.dgn

$$$$$$$D/A TE$$$$$$

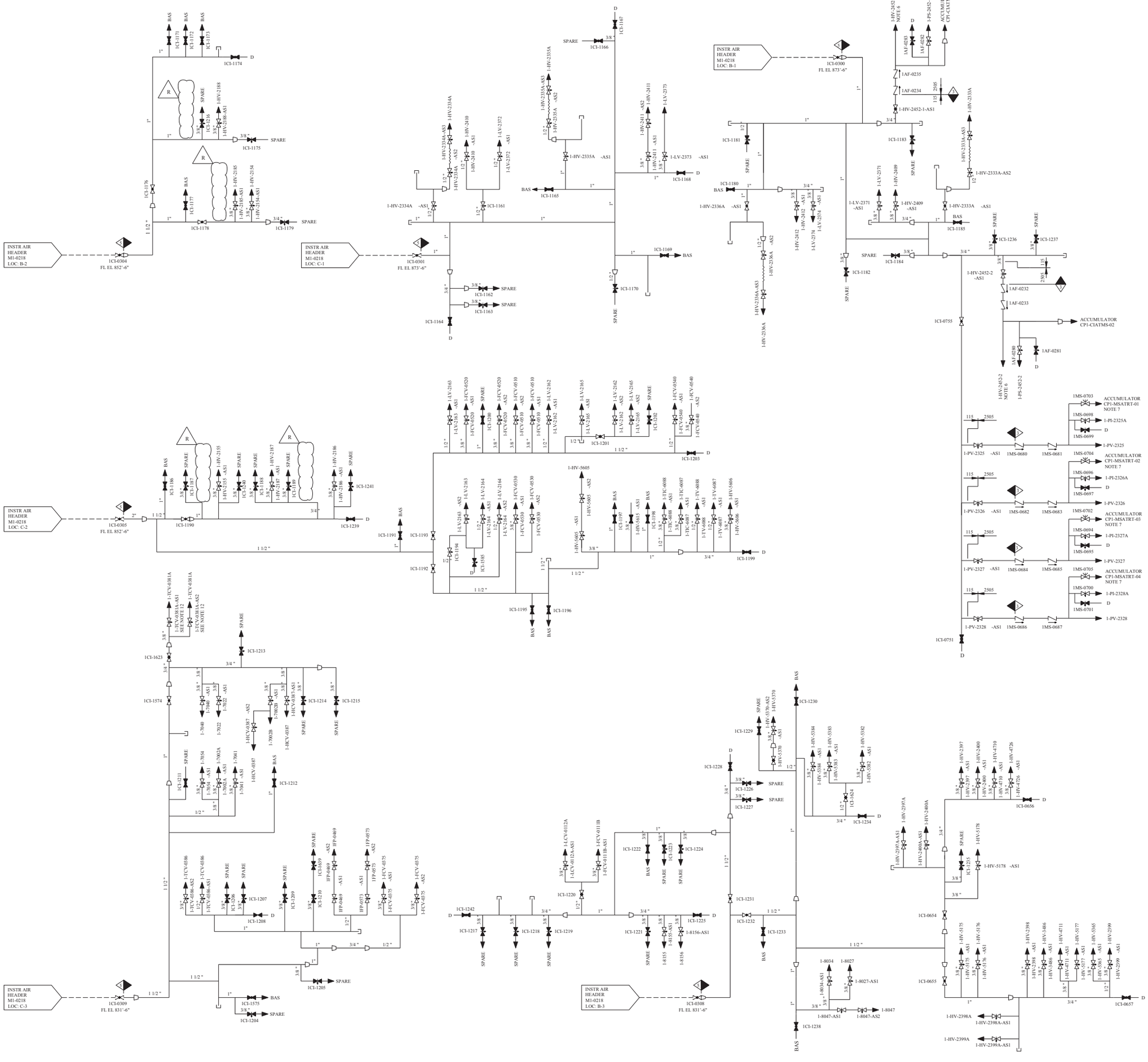

REV	DWN	CHKD	APVD	REMARKS
CP-20	SM 04-14 2007	DE 04-14 2007		THIS DRAWING REVISED TO INCORPORATE DESIGN CHANGE FDA-2005-000224-06-04 PER SK-0245-05-000224-06-00.

NOTES:

1. SEE MECHANICAL DRAWING M1-0200 FOR SYMBOLS AND NOTES.
2. FOR VALVE/CHANNEL NUMBER IDENTIFICATION SEE DRAWING M1-2200-02.
3. ALL LINES ARE 115G EXCEPT AS NOTED.
4. ALL LINES 3/4" AND GREATER ARE COPPER ASTM B88, SWEAT CONNECTIONS, EXCEPT AS NOTED.
5. ALL LINES 1/2" AND SMALLER ARE COPPER ASTM B68 OR B75 SWAGELOK COMPRESSION FITTINGS EXCEPT AS NOTED.
6. SEE M1-2120-01 FOR INSTRUMENT DETAIL.
7. SEE M1-2120-03 FOR INSTRUMENT DETAIL.
8. BAS - BREATHING AIR STATION.
9. DANGER - INSTRUMENT AIR SHALL NOT BE USED FOR BREATHING AIR WITHOUT APPROPRIATE IN-LINE CHEMICAL ABSORBERS AND PARTICULATE FILTERS. TOXIC VAPORS OR PARTICULATES MAY BE PRESENT.
10. HANSEN FITTINGS INSIDE CONTAINMENT ARE TO BE STAINLESS STEEL.
11. VALVES DESIGNATED BAS WILL HAVE A HANSEN FITTING FOR CONNECTION TO A USER APPARATUS.

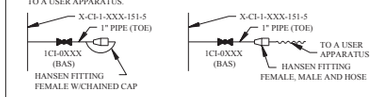

12. THESE VALVES ARE CLOSED WHEN THE TUBE SIDE OF THE LETDOWN REHEAT HEAT EXCHANGER TBX-TRAHLR-01 IS ISOLATED AND DRAINED.

FSAR FIGURE 9.3-1

THIS DRAWING CIRCULATED ELECTRONICALLY

DRAWING TNE-M1-0218-01	REV CP-1
HAS BEEN SPLIT INTO THE FOLLOWING SHEETS:	
M1-0218-01	
M1-0218-01A	

CLASS I
(NUCLEAR SAFETY-RELATED)
SAFETY CLASS 1 — SEISMIC CATEGORY I
SAFETY CLASS 2 — CLASS 1E
SAFETY CLASS 3 — ASSOCIATED CIRCUITS

LUMINANT
CPSES
GLEN ROSE, TEXAS

FLOW DIAGRAM
INSTRUMENT AIR
SAFEGUARDS BUILDING

DWG. NO.	SH. NO.	REV.
M1-0218	01	CP-20

FINAL PRINT

REF CKD CP-15 10/28/97

me757400.dgn M1-0218-01

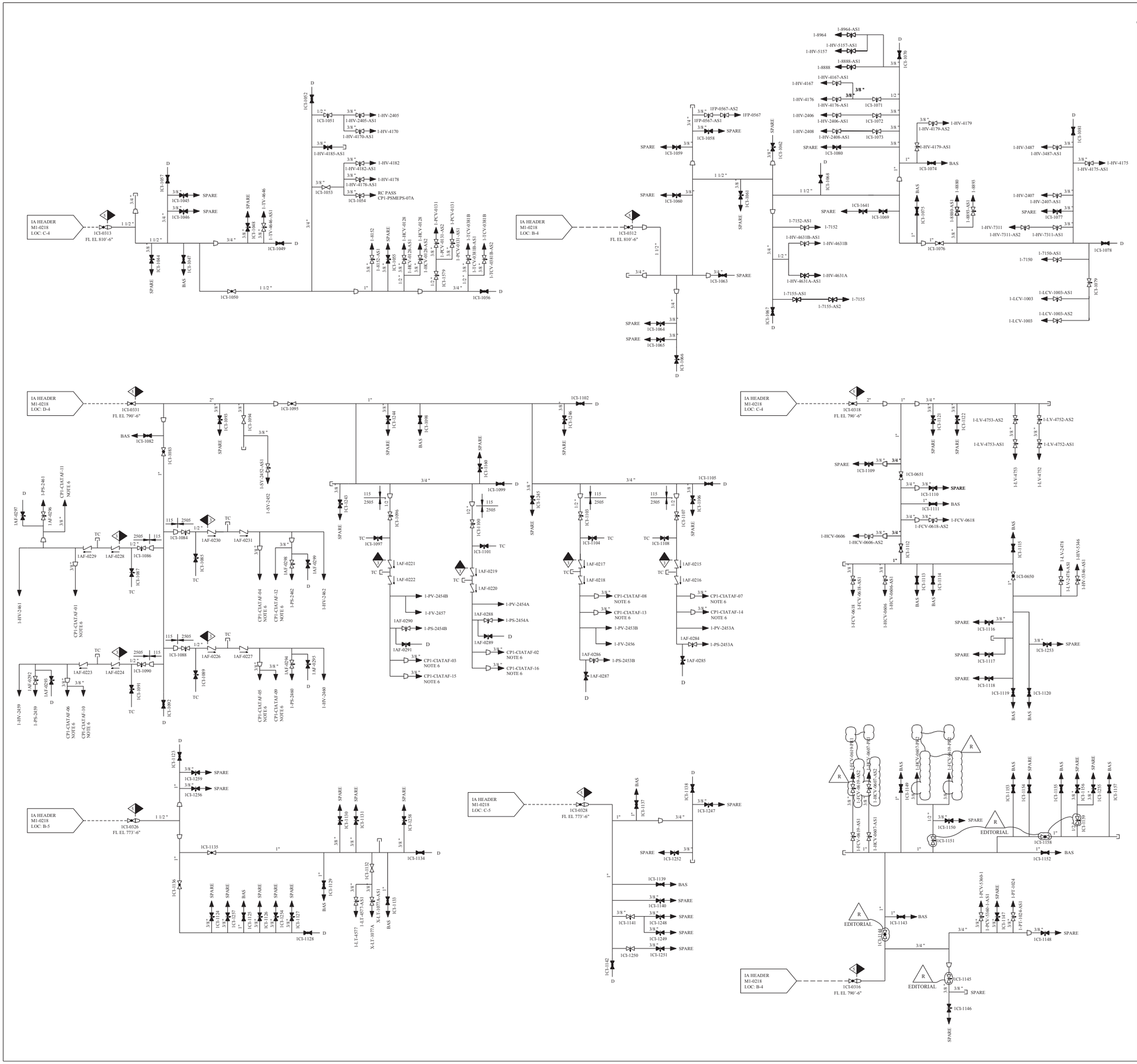

REV	DWN	CHKD	APVD	REMARKS
CP-20	DGK 08-05 2005	MM 08-05 2005		THIS DRAWING REVISED TO INCORPORATE DESIGN CHANGE FDA-2005-000647-01-00 PER SK-0001-05-000647-01-00. EDITORIAL CHANGES AS NOTED.

NOTES:

1. SEE MECHANICAL DRAWING M1-0200 FOR SYMBOLS AND NOTES.
2. FOR VALVE/CHANNEL NO. IDENTIFICATION SEE DRAWING M1-2200-02.
3. ALL LINES ARE 115G EXCEPT AS NOTED.
4. ALL LINES 3/4" AND GREATER ARE COPPER ASTM B88, SWEAT CONNECTIONS, EXCEPT AS NOTED.
5. ALL LINES 1/2" AND SMALLER ARE COPPER ASTM B68 OR B75 SWAGELOK COMPRESSION FITTINGS EXCEPT AS NOTED.
6. ACCUMULATORS: SEE M1-2120-01 FOR INSTRUMENT DETAIL.
7. DELETED
8. BAS - BREATHING AIR STATION.
9. DANGER - INSTRUMENT AIR SHALL NOT BE USED FOR BREATHING AIR WITHOUT APPROPRIATE IN-LINE CHEMICAL ABSORBERS AND PARTICULATE FILTERS. TOXIC VAPORS OR PARTICULATES MAY BE PRESENT.
10. VALVE WILL REQUIRE LADDER FOR ACCESS.
11. VALVES DESIGNATED BAS WILL HAVE A HANSEN FITTING FOR CONNECTION TO A USER APPARATUS.

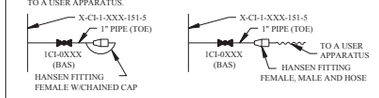

12. HANSEN FITTINGS INSIDE CONTAINMENT ARE TO BE STAINLESS STEEL.

FSAR FIGURE 9.3-1

THIS DRAWING CREATED ELECTRONICALLY

DRAWING	TNE-M1-0218-01	REV	CP-1
HAS BEEN SPLIT INTO THE FOLLOWING SHEETS:			
M1-0218-01			
M1-0218-01A			

CLASS I
(NUCLEAR SAFETY-RELATED)
SAFETY CLASS 1 — SEISMIC CATEGORY I
SAFETY CLASS 2 — CLASS 1E
SAFETY CLASS 3 — ASSOCIATED CIRCUITS

TXU POWER
CPSES
GLEN ROSE, TEXAS

FLOW DIAGRAM
INSTRUMENT AIR
SAFEGUARDS BUILDING

DWG. NO. M1-0218 | SH. NO. 01A | REV. CP-20

FINAL PRINT

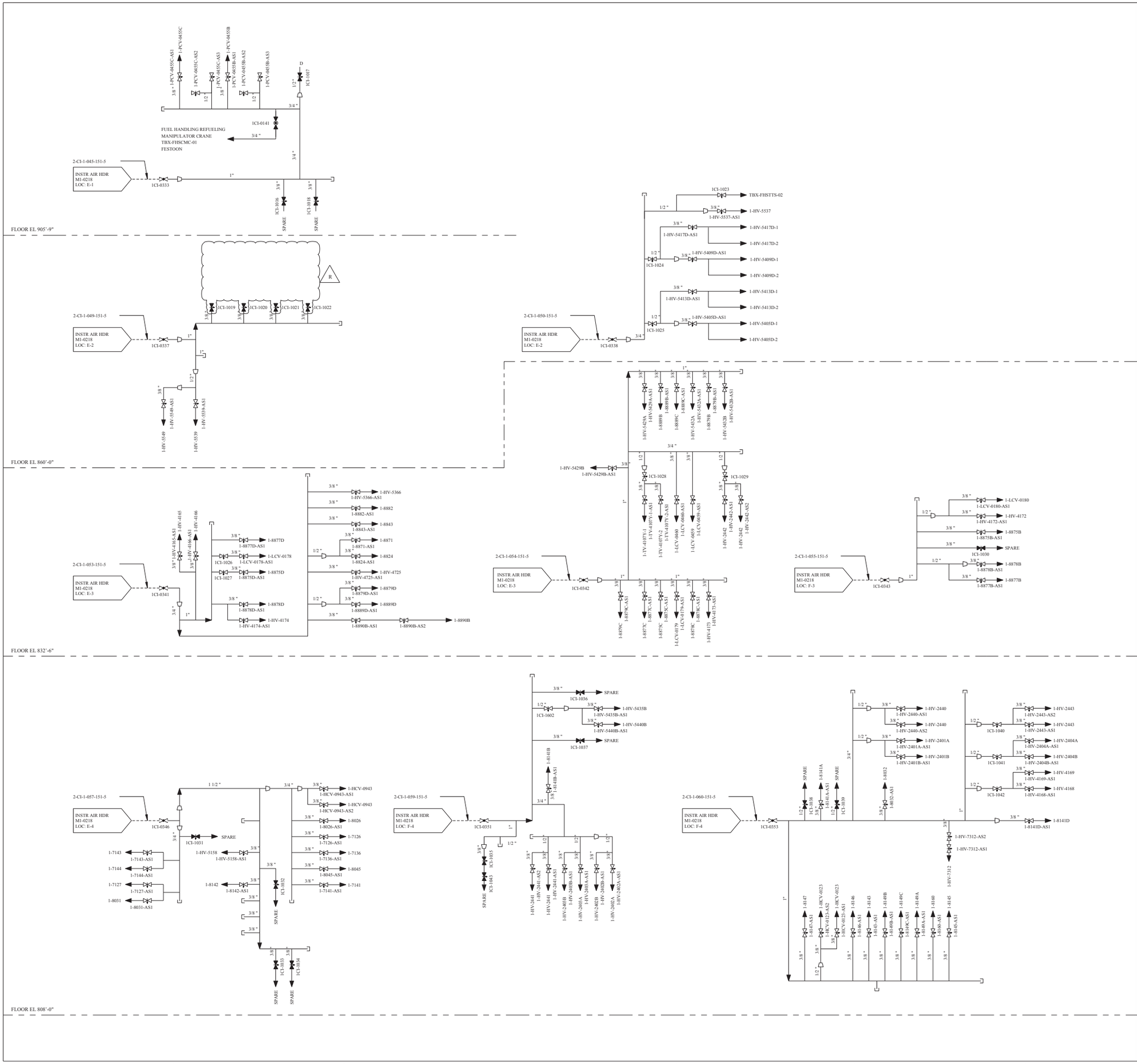

REV	DWN	CHKD	APVD	REMARKS
CP-17	EES 10-28 2005	GAW 10-30 2005		THIS DRAWING REVISED TO INCORPORATE DESIGN CHANGE FDA-2005-000224-06-00 PER SK-0246-05-000224-06-00.

NOTES:

1. SEE MECHANICAL DWG M1-0200 FOR SYMBOLS AND NOTES.
2. FOR VALVE/CHANNEL NUMBER IDENTIFICATION SEE DWG M1-2200-02.
3. ALL PIPE 2" & CATEGORY 151G, INSTRUMENT TUBING IS CATEGORY 2505G.
4. VALVES DESIGNATED BAS WILL HAVE A HANSEN FITTING FOR CONNECTION TO A USER APPARATUS.

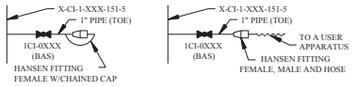

5. HANSEN FITTINGS INSIDE CONTAINMENT ARE TO BE STAINLESS STEEL.

FSAR FIGURE 9.3-1

THIS DRAWING CREATED ELECTRONICALLY

NON-SAFETY

LUMINANT
CPSES
GLEN ROSE, TEXAS

FLOW DIAGRAM
CONTAINMENT INSTRUMENT
AIR SYSTEM

DWG. NO. M1-0218 | SH. NO. 02 | REV. CP-17

REF CKD 04/02/97

me756200.dgn A M1-0218-02 FINAL PRINT

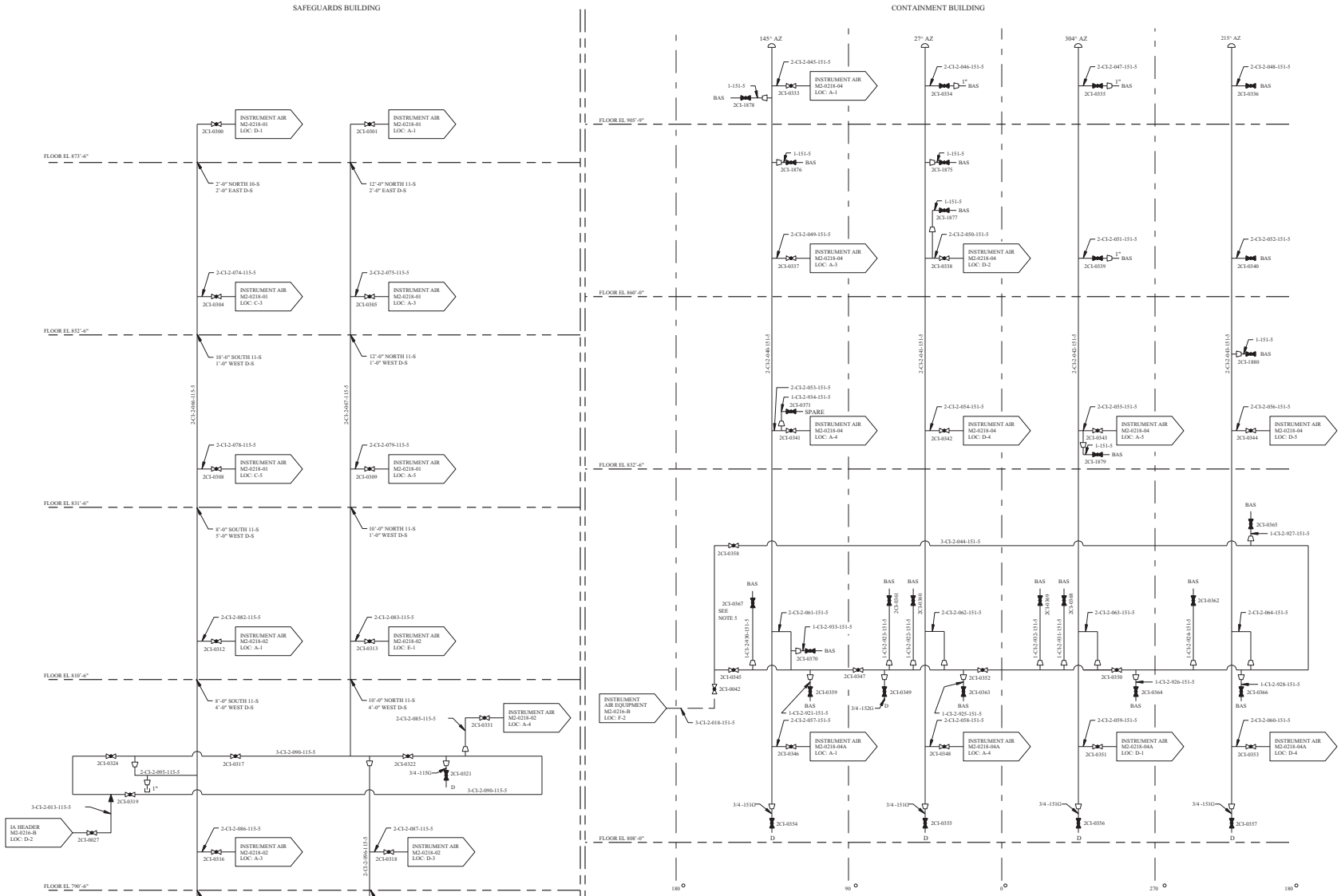

REV	DWN	CHKD	APVD	REMARKS
CP-8	AUTO 05-23-1996			THIS DRAWING REVISED TO ADD THE FSAR FIGURE NUMBER AS AN EDITORIAL CHANGE.

NOTES:

1. FOR MECHANICAL SYMBOLS AND NOTES SEE DRAWING M1-0200.
2. THE INSTRUMENT AIR BRANCH LINES ARE CONTINUED ON THE M2-2700 SERIES INSTRUMENT AIR PIPING DRAWINGS.
3. UNLESS OTHERWISE NOTED, ALL DRAINS ON THIS DRAWING TO BE COLLECTED BY LOCAL FLOOR DRAIN SYSTEM.
4. INSTRUMENT AIR SHALL NOT BE USED FOR BREATHING AIR WITHOUT APPROPRIATE IN-LINE CHEMICAL ABSORBERS AND PARTICULATE FILTRATION. TOXIC VAPORS, FUMES AND PARTICULATES MAY BE PRESENT. REF: OSHA 1910.134(d).
5. BAS - BREATHING AIR SUPPLY. VALVES DESIGNATED BAS WILL HAVE A HANSEN FITTING FOR CONNECTION TO A USER APPARATUS.

a) INSTALLED CONDITION

b) INSTALLED CONDITION

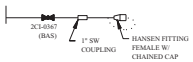

c) WHEN IN USE

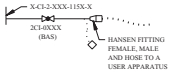

CP 8

FSAR FIGURE 9.3-1

THIS DRAWING CREATED ELECTRONICALLY

CLASS II

TXU ELECTRIC
CPSES
GLEN ROSE, TEXAS

FLOW DIAGRAM
INSTRUMENT AIR

DWG. NO.	SH. NO.	REV.
M2-0218	-	CP-8

vs00007q.dgn

$$$$$$$D:\TESSSSS

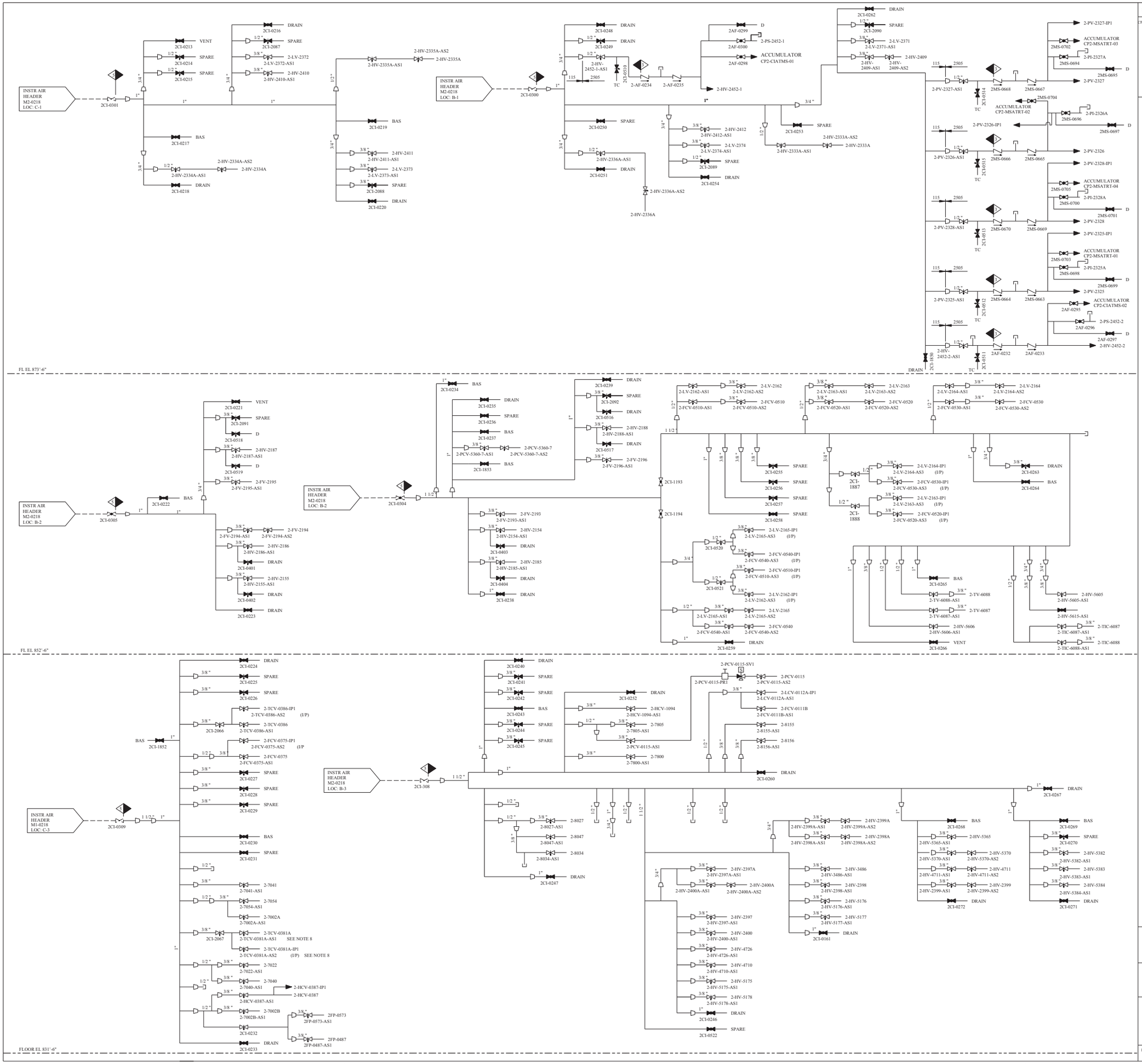

REV	DWN	CHKD	APVD	REMARKS
CP-19	JRMC 09-18 2006	SM 09-18 2006		THIS DRAWING REVISED TO INCORPORATE DESIGN CHANGE FDA 2005-003416-01-00 PER SK-0006-05-003416-01-00.

NOTES:

1. TUBING CATEGORY IS 158G COPPER PER MS-626, PIPE IS 115G PER SPEC MS-44B EXCEPT AS NOTED.
2. FOR VALVE/CHANNEL NUMBER IDENTIFICATION SEE M2-2200-02.
3. DRAINS ON THIS DRAWING TO BE COLLECTED BY LOCAL FLOOR DRAINS.
4. FOR MECHANICAL SYMBOLS AND NOTES SEE DRAWING M1-0200.
5. DANGER - INSTRUMENT AIR SHALL NOT BE USED FOR BREATHING AIR WITHOUT APPROPRIATE IN LINE CHEMICAL ABSORBERS AND PARTICULATE FILTRATION. TOXIC VAPORS AND PARTICULATES MAY BE PRESENT.
6. BAS - BREATHING AIR SUPPLY. VALVES DESIGNATED BAS WILL HAVE A HANSEN FITTING FOR CONNECTION TO A USER APPARATUS.
   a) INSTALLED CONDITION

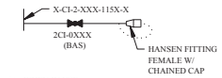

   b) WHEN IN USE

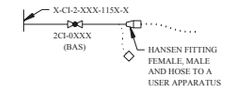

7. NEEDLE VALVES SHOWN ON THIS DRAWING ARE INSTRUMENT AIR ISOLATION VALVES FOR INDICATED MAIN PROCESS CONTROL VALVES ONLY.
8. THESE VALVES ARE CLOSED WHEN THE TUBE SIDE OF THE LETDOWN REHEAT HEAT EXCHANGER TCX-TRAHLR-01 IS ISOLATED AND DRAINED.

FSAR FIGURE 9.3-1

THIS DRAWING CREATED ELECTRONICALLY

REF CKD 12/2/97 CP-15

CLASS I
(NUCLEAR SAFETY-RELATED)
SAFETY CLASS 1 — SEISMIC CATEGORY I
SAFETY CLASS 2 — CLASS 1E
SAFETY CLASS 3 — ASSOCIATED CIRCUITS

TXU POWER
CPSES
GLEN ROSE, TEXAS

FLOW DIAGRAM
INSTRUMENT AIR
SAFEGUARDS BUILDING UNIT 2

DWG. NO. M2-0218 | SH. NO. 01 | REV. CP-19

me730300.dgn A M2-0218-01 FINAL PRINT

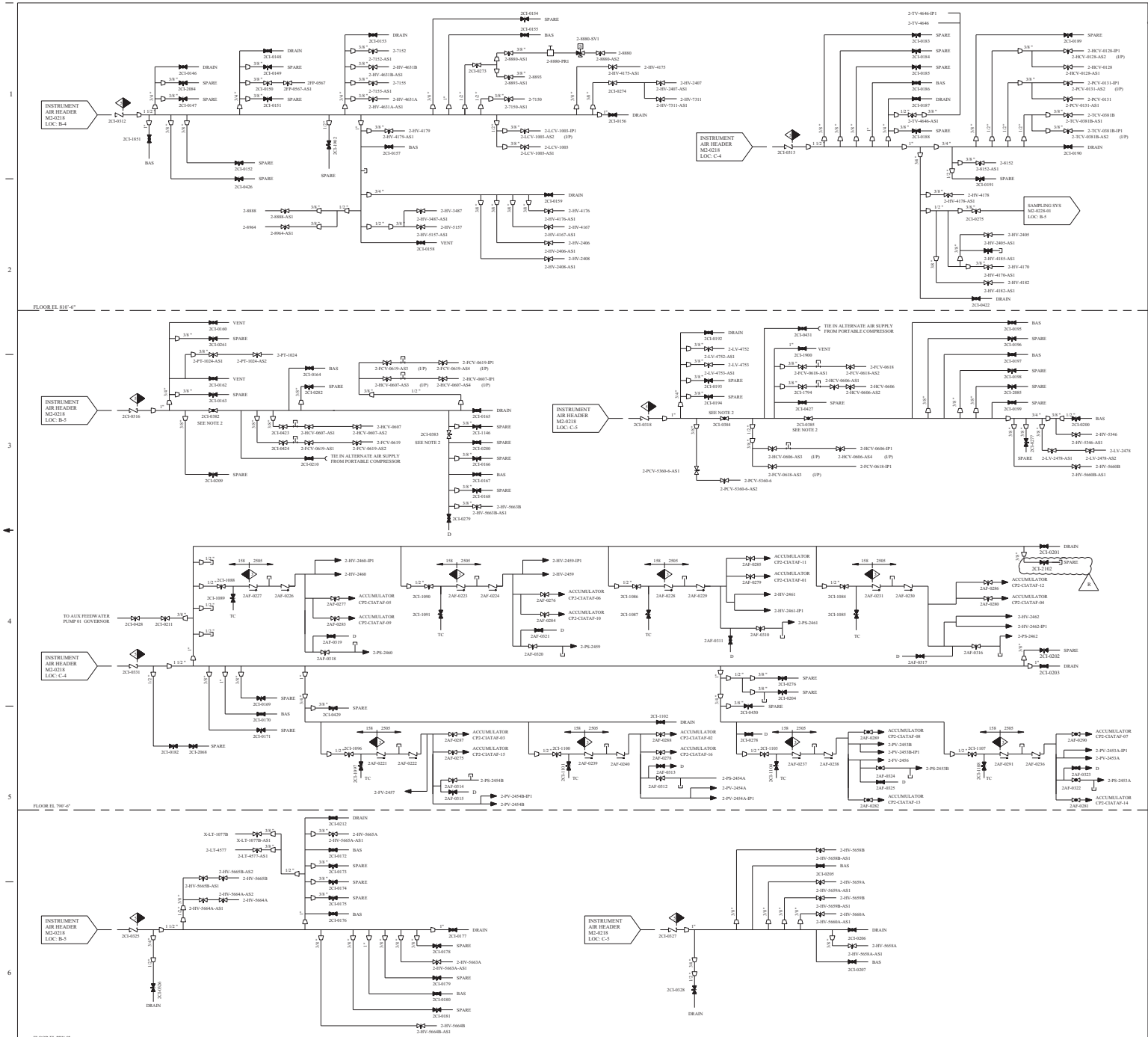

REV	DWN	CHKD	APVD	REMARKS
CP-12	MAE 06/08/2002	HIS 06/08/2002		THIS DRAWING REVISED TO INCORPORATE DESIGN CHANGE FDA-2001-002985-01-00 PER SK-0002-01-002985-01-00.

NOTES:

1. FOR GENERAL NOTES SEE M2-0218-01.
2. NEW 1" VALVES (2CI-0382 , 2CI-0383 , 2CI-0384 , AND 2CI-0385) ARE TE 2105 TEMA TYPE VALVES.
3. VALVES DESIGNATED BAS WILL HAVE A HANSEN FITTING FOR CONNECTION TO A USER APPARATUS.
   a) INSTALLED CONDITION
   b) WHEN IN USE

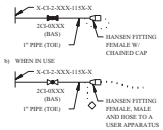

FSAR FIGURE 9.3-1

THIS DRAWING CREATED ELECTRONICALLY

CLASS I

(NUCLEAR SAFETY-RELATED)

SAFETY CLASS 1 SAFETY CLASS 2 SAFETY CLASS 3 — SEISMIC CATEGORY I — CLASS 1E — ASSOCIATED CIRCUITS

TXU ELECTRIC
CPSES
GLEN ROSE, TEXAS

FLOW DIAGRAM
INSTRUMENT AIR
SAFEGUARDS BUILDING UNIT 2

DWG. NO. M2-0218 | SH. NO. 02 | REV. CP-12

REF CKD 3/14/97 CP-10

$$$$$DATE$$$$$

me416500.dgn M2-0218-02

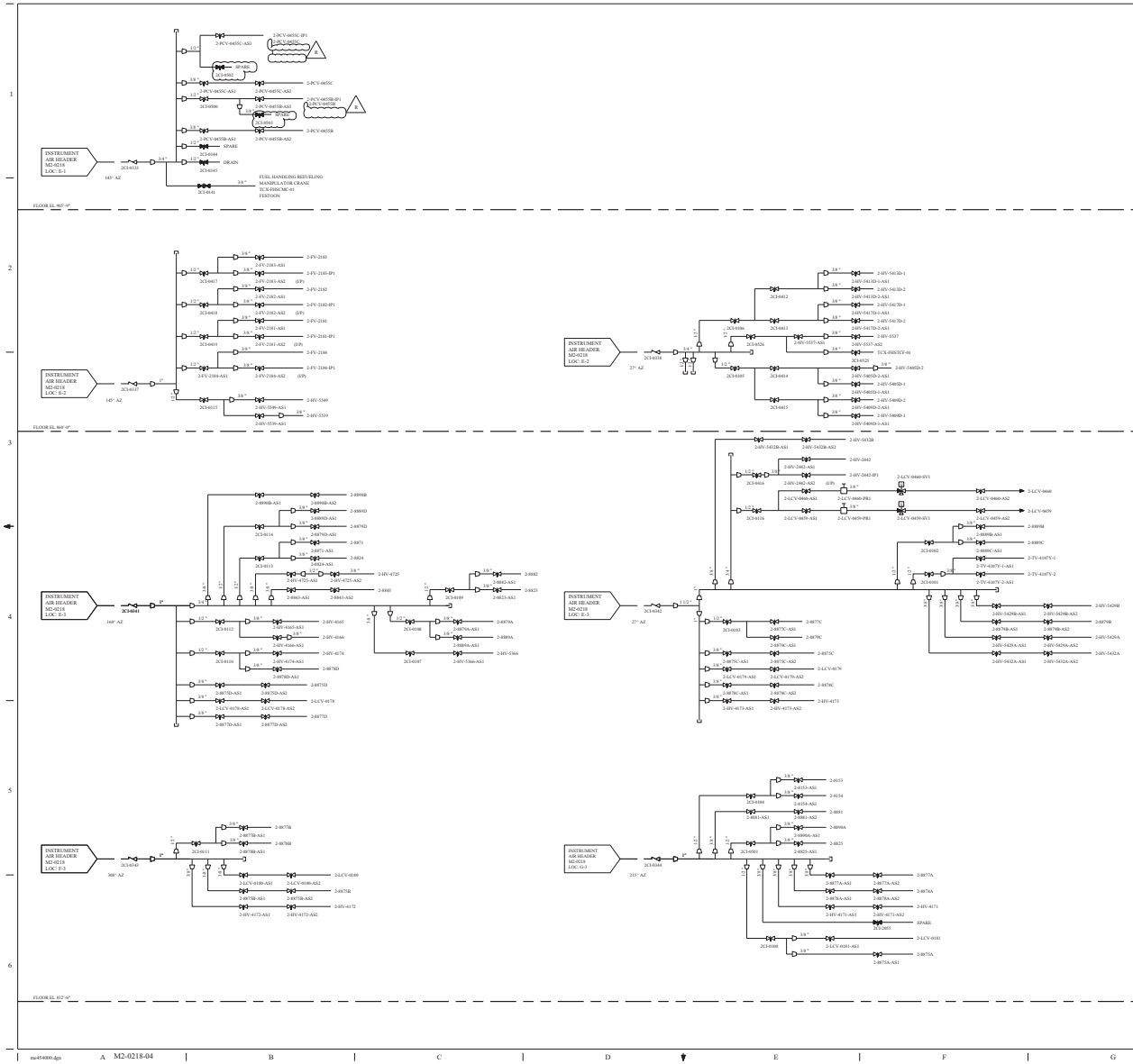

REV	DWN	CHKD	APVD	REMARKS
P-10				THIS DRAWING REVISED TO INCORPORATE DESIGN CHANGE FDA-2002-00370-01-00 AND BL-000-02-00137-01-00.

NOTES:

1. TUBING CATEGORY IS 2S01G (SS) PER SPEC MS-63b.
   PIPING CATEGORY IS 1S-1 (SS) PER SPEC MS-64B.
2. FOR VALVE/CHANNEL NUMBER IDENTIFICATION SEE M2-2200-02.
3. DRAINS ON THIS DRAWING TO BE COLLECTED BY LOCAL FLOOR DRAIN SYSTEM.
4. FOR MECHANICAL SYMBOLS AND NOTES SEE DRAWING M1-0200.
5. LINE DIAMETERS OF < 1 1/2" IS TUBING AND GREATER THAN 1/2" IS PIPE.
6. "DANGER" - INSTRUMENT AIR SHALL NOT BE USED FOR BREATHING AIR WITHOUT APPROPREATE IN LINE CHEMICAL ABSORBERS AND PARTICULATE FILTRATION. TOXIC VAPORS, FUMES AND PARTICULATES MAY BE PRESENT. REFERENCE OSHA 1910.134 (d).

FSAR FIGURE 9.3-1

THIS DRAWING CREATED FOR TROUBLE-SHOOTING

DRAWING	TNX-M2-0218-04	REV	CP-2
HAS BEEN SPLIT INTO THE FOLLOWING SHEETS:			
M2-0218-04			
M2-0218-04A			

CLASS II

TXU ENERGY
CPSES
GLEN ROSE, TEXAS

FLOW DIAGRAM
INSTRUMENT AIR
CONTAINMENT BUILDING

DWG. NO.	BK NO.	REV.
M2-0218	04	CP-10

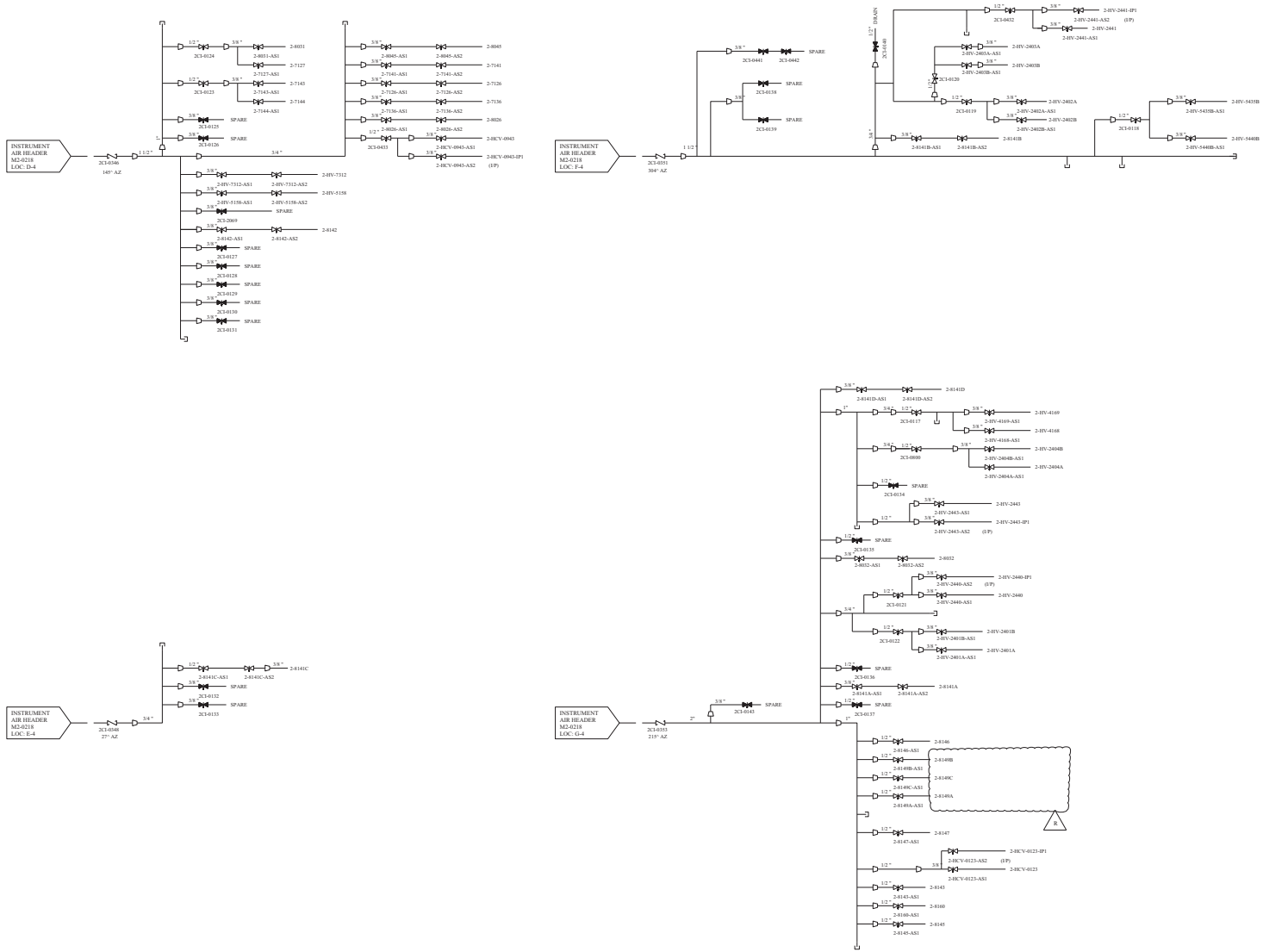

REV	DWN	CHK	APVD	REMARKS
CP-8	SK-04-18-2002	DHK-04-03-2002		THIS DRAWING REVISED TO INCORPORATE DESIGN CHANGE FDA-2002-001150-02-00 PER SK-0001-02-001150-02-00.

NOTES:

1. TUBING CATEGORY IS 2S0SG (SS) PER SPEC MS-626, PIPING CATEGORY IS 151-5 (SS) PER SPEC MS-448.
2. FOR VALVE/CHANNEL NUMBER IDENTIFICATION SEE M2-2200-02.
3. DRAINS ON THIS DRAWING TO BE COLLECTED BY LOCAL FLOOR DRAIN SYSTEM.
4. FOR MECHANICAL SYMBOLS AND NOTES SEE DRAWING M1-0200.
5. LINE DIAMETERS OF < 1½" IS TUBING AND GREATER THAN 1½" IS PIPE.
6. "DANGER" - INSTRUMENT AIR SHALL NOT BE USED FOR BREATHING AIR WITHOUT APPROPRIATE IN LINE CHEMICAL ABSORBERS AND PARTICULATE FILTRATION. TOXIC VAPORS, FUMES AND PARTICULATES MAY BE PRESENT. REFERENCE OSHA 1910.134 (d).
7. DELETED

R

R

DRAWING TNE-M2-0218-04	REV CP-2
HAS BEEN SPLIT INTO THE FOLLOWING SHEETS:	
M2-0218-04	
M2-0218-04A	

FSAR FIGURE 9.3-1

THIS DRAWING CREATED ELECTRONICALLY

CLASS II

TXU ELECTRIC
CPSES
GLEN ROSE, TEXAS

FLOW DIAGRAM
INSTRUMENT AIR
CONTAINMENT BUILDING

DWG NO.	SH. NO.	REV.
M2-0218	04A	CP-8

$$$$$$$D\A\T$$$$$$

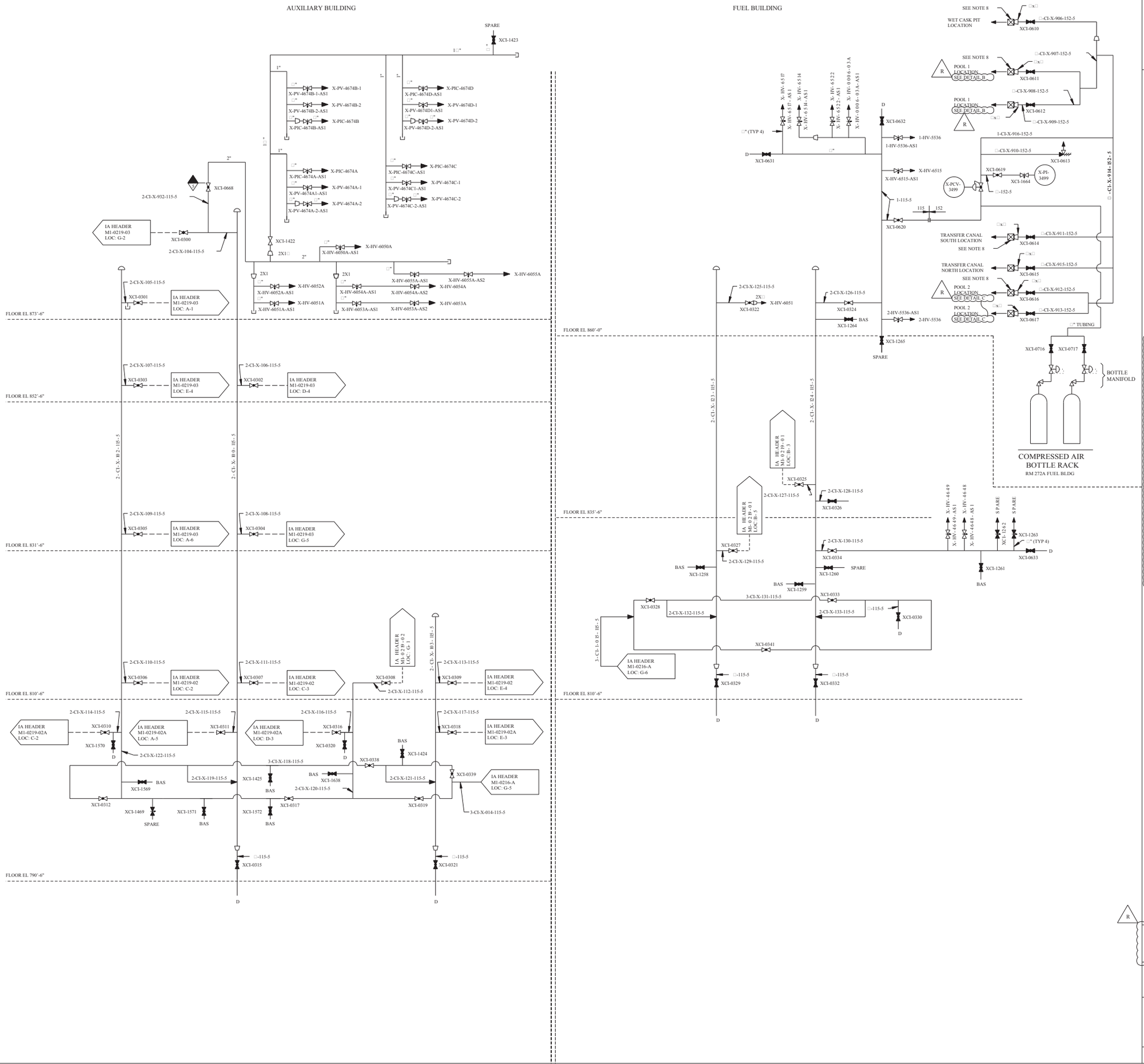

REV	DWN	CHKD	APVD	REMARKS
CP-21	MM 04-23-2014	DLK 04-24-2014		THIS DRAWING REVISED TO INCORPORATE DESIGN CHANGE FDA-2013-000052-01-00 PER SK-0001-13-000052-01-00.

NOTES:

1. FOR MECHANICAL SYMBOLS AND NOTES, SEE DRAWING M1-0200.
2. ALL DRAINS ARE □" UNLESS OTHERWISE NOTED.
3. ENTIRE INSTRUMENT AIR SYSTEM SHALL BE COPPER TUBING UNLESS OTHERWISE NOTED.
4. BAS - BREATHING AIR STATION.
5. DANGER - INSTRUMENT AIR SHALL NOT BE USED FOR BREATHING AIR WITHOUT APPROPRIATE IN-LINE CHEMICAL ABSORBERS AND PARTICULATE FILTERS. TOXIC VAPORS OR PARTICULATES MAY BE PRESENT.
6. FOR VALVE/CHANNEL NUMBER IDENTIFICATION, SEE DRAWING M1-2200-02.
7. VALVES DESIGNATED BAS WILL HAVE A HANSEN FITTING FOR CONNECTION TO A USER APPARATUS.

X-CI-1-XXX-151-5 — 1" PIPE (TOE) — 1CI-0XXX (BAS) — HANSEN FITTING FEMALE W/CHAINED CAP

X-CI-1-XXX-151-5 — 1" PIPE (TOE) — 1CI-0XXX (BAS) — TO A USER APPARATUS — HANSEN FITTING FEMALE, MALE AND HOSE

8. EACH GATE PROVIDED WITH HOSE ASSEMBLY AS SHOWN IN DETAIL A.

SEE NOTE 9 — TO GATE — SUPPLY — * CHECK VALVE

DETAIL A

9. POOLS 1 AND 2 FLEX HOSE ASSEMBLY AND CAP CAN BE MOVED TO EITHER SEAL. AIR SUPPLY CAN BE EITHER XCI-0611 OR XCI-0612 FOR POOL 1 AND XCI-0616 OR XCI-0617 FOR POOL 2.

SFP GATE X-01 — X-PI-3499A — OUTER SEAL — XCI-0611A — SEE NOTE 9 — SUPPLY XCI-0611 (REF) — * CHECK VALVE
INNER SEAL — X-PI-3499B — XCI-0611B — SEE NOTE 9 — ALTERNATE INSTRUM AIR SUPPLY TO POOL 1 — SUPPLY XCI-0612 (REF)

DETAIL B

SFP GATE X-02 — X-PI-3499C — OUTER SEAL — XCI-0616C — SEE NOTE 9 — SUPPLY XCI-0616 (REF) — * CHECK VALVE
INNER SEAL — X-PI-3499D — XCI-0616D — SEE NOTE 9 — ALTERNATE INSTRUM AIR SUPPLY TO POOL 2 — SUPPLY XCI-0617 (REF)

DETAIL C

FSAR FIGURE 9.3-1

THIS DRAWING CREATED ELECTRONICALLY

CLASS I
(NUCLEAR SAFETY-RELATED)

SAFETY CLASS 1	SEISMIC CATEGORY I
SAFETY CLASS 2	CLASS 1E
SAFETY CLASS 3	ASSOCIATED CIRCUITS

LUMINANT
CPNPP
GLEN ROSE, TEXAS

FLOW DIAGRAM
INSTRUMENT AIR

DWG. NO. M1-0219 | SH. NO. - | REV. CP-21

REV	DWN	CHKD	APVD	REMARKS
CP-15	AUTO 05-21-1996			THIS DRAWING REVISED TO ADD THE FSAR FIGURE NUMBER AS AN EDITORIAL CHANGE.

NOTES:

1. SEE MECHANICAL DWG M1-0200 FOR SYMBOLS AND NOTES.
2. BAS - BREATHING AIR STATION.
3. DANGER - INSTRUMENT AIR SHALL NOT BE USED FOR BREATHING AIR WITHOUT APPROPRIATE IN-LINE CHEMICAL ABSORBERS AND PARTICULATE FILTERS. TOXIC VAPORS OR PARTICULATES MAY BE PRESENT.
4. ALL LINES ARE CATEGORY 115G COPPER AND BRONZE PER SPEC MS-44B EXCEPT AS NOTED.
5. FOR VALVE/CHANNEL NUMBER IDENTIFICATION SEE DWG M1-2200-02.
6. VALVES DESIGNATED BAS WILL HAVE A HANSEN FITTING FOR CONNECTION TO A USER APPARATUS.

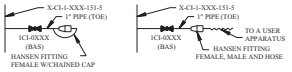

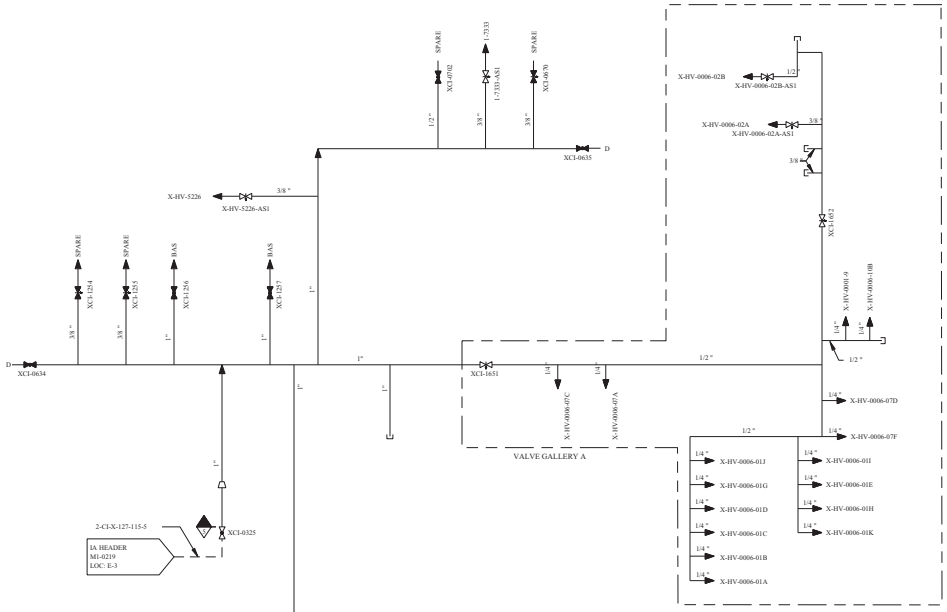

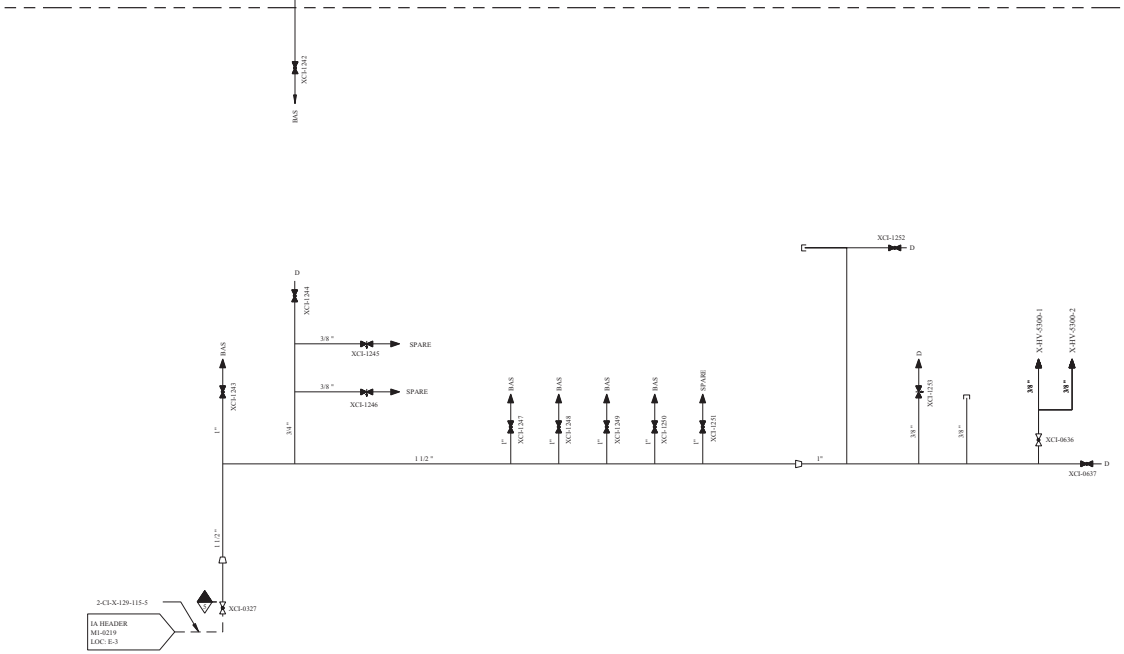

FSAR FIGURE 9.3-1

CP 15

THIS DRAWING CREATED ELECTRONICALLY

NON-SAFETY

TXU ELECTRIC
CPSES
GLEN ROSE, TEXAS

FLOW DIAGRAM
INSTRUMENT AIR SUPPLY
FUEL BUILDING

DWG. NO.	SH. NO.	REV.
M1-0219	01	CP-15

$$$$$$$D:\TESS$$$$$

vs00007z.dgn

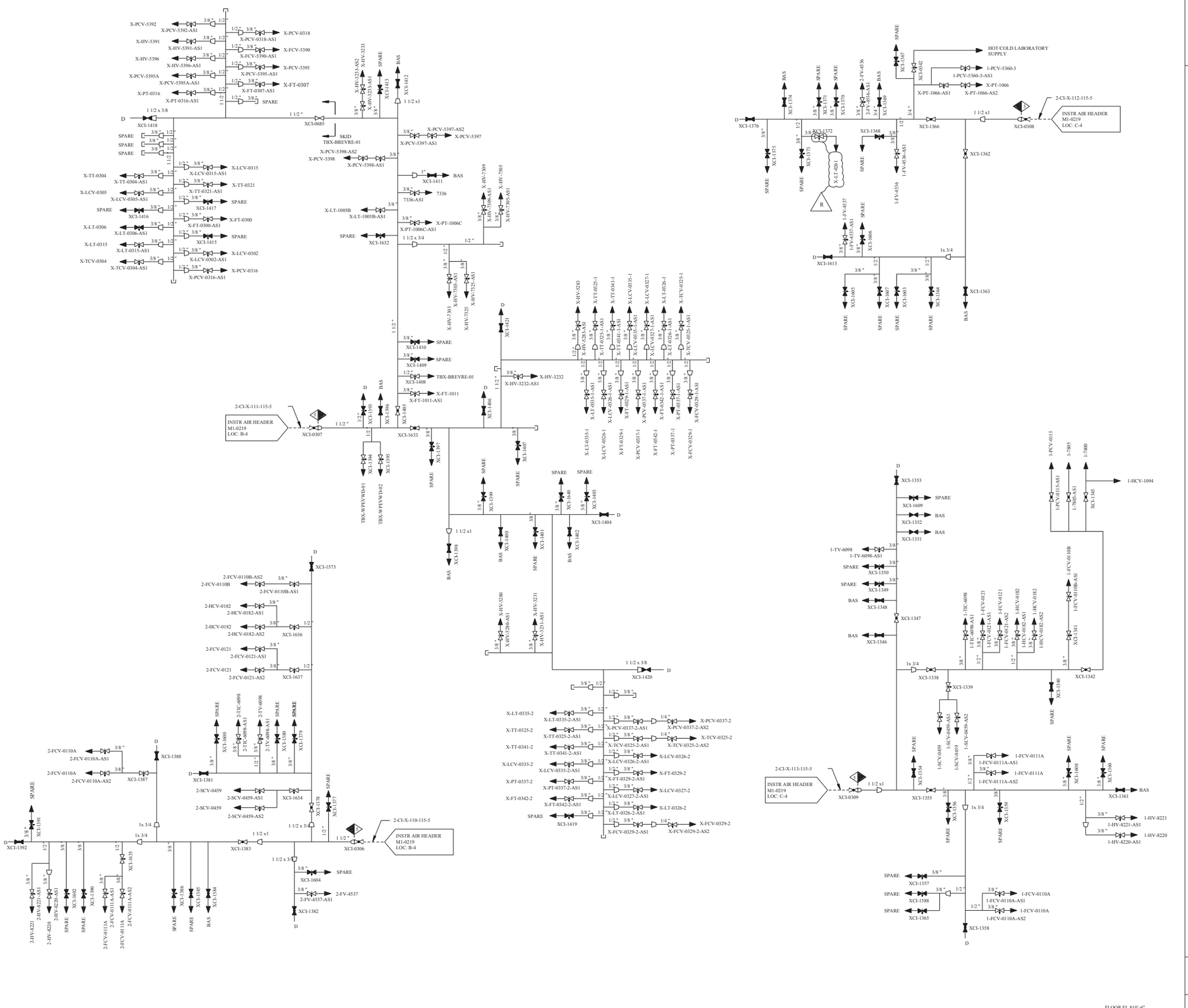

REV	DWN	CHKD	APVD	REMARKS
CP-20	SM 01-26-2010	BH 01-27-2010		THIS DRAWING REVISED TO INCORPORATE DESIGN CHANGE FDA-2009-002311-01-00 PER SK-0005-09-002311-01-00.

NOTES:

1. FOR MECHANICAL SYMBOLS AND NOTES SEE DWG M1-0200.
2. FOR VALVE/CHANNEL NUMBER IDENTIFICATION SEE DWG M1-2200-02.
3. ALL LINES ARE CATEGORY 115G, COPPER AND BRONZE PER SPEC MS-44B, EXCEPT AS NOTED.
4. BAS - BREATHING AIR STATION.
5. DANGER - INSTRUMENT AIR SHALL NOT BE USED FOR BREATHING WITHOUT APPROPRIATE IN-LINE CHEMICAL ABSORBERS AND PARTICULATE FILTERS. TOXIC VAPORS OR PARTICULATES MAY BE PRESENT.
6. UNLESS OTHERWISE NOTED, ALL DRAINS TO BE COLLECTED BY LOCAL FLOOR DRAIN SYSTEM.
7. VALVES DESIGNATED BAS WILL HAVE A HANSEN FITTING FOR CONNECTION TO A USER APPARATUS.

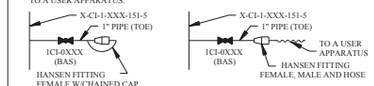

FSAR FIGURE 9.3-1

THIS DRAWING CREATED ELECTRONICALLY

DRAWING M1-0219-02	REV 07
HAS BEEN SPLIT INTO THE FOLLOWING SHEETS:	
M1-0219-02	
M1-0219-02A	

NON-SAFETY

LUMINANT
CPNPP
GLEN ROSE, TEXAS

FLOW DIAGRAM
INSTRUMENT AIR SUPPLY
AUXILIARY BUILDING

DWG. NO.	SH. NO.	REV.
M1-0219	02	CP-20

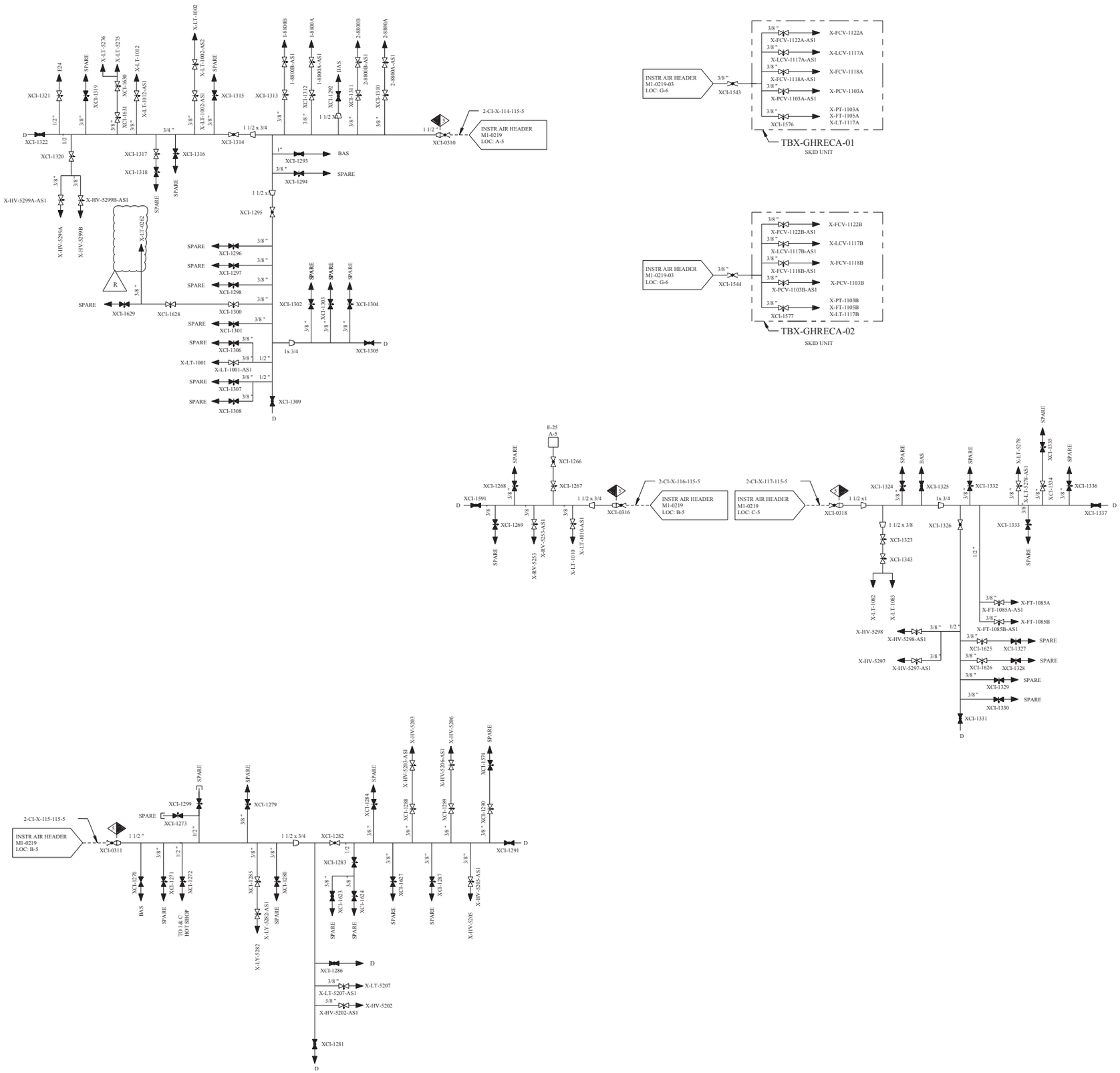

REV	DWN	CHKD	APVD	REMARKS
CP-15	SM 01-26-2010	DJL 01-27-2010		THIS DRAWING REVISED TO INCORPORATE DESIGN CHANGE FDA-2009-002311-01-00 PER SK-0004-09-002311-01-00.

NOTES:

1. FOR MECHANICAL SYMBOLS AND NOTES SEE DWG M1-0200.
2. FOR VALVE/CHANNEL NUMBER IDENTIFICATION SEE DWG M1-2200-02.
3. ALL LINES ARE CATEGORY 115G, COPPER AND BRONZE PER SPEC MS-44B, EXCEPT AS NOTED.
4. BAS - BREATHING AIR STATION.
5. DANGER - INSTRUMENT AIR SHALL NOT BE USED FOR BREATHING WITHOUT APPROPRIATE IN-LINE CHEMICAL ABSORBERS AND PARTICULATE FILTERS. TOXIC VAPORS OR PARTICULATES MAY BE PRESENT.
6. UNLESS OTHERWISE NOTED, ALL DRAINS TO BE COLLECTED BY LOCAL FLOOR DRAIN SYSTEM.
7. VALVES DESIGNATED BAS WILL HAVE A HANSEN FITTING FOR CONNECTION TO A USER APPARATUS.

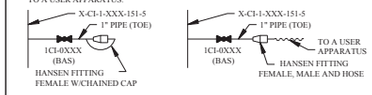

FSAR FIGURE 9.3-1

THIS DRAWING CREATED ELECTRONICALLY

DRAWING M1-0219-02	REV CP-7
HAS BEEN SPLIT INTO THE FOLLOWING SHEETS:	
M1-0219-02	
M1-0219-02A	

NON-SAFETY

LUMINANT
CPNPP
GLEN ROSE, TEXAS

FLOW DIAGRAM
INSTRUMENT AIR SUPPLY
AUXILIARY BUILDING

DWG. NO.	SH. NO.	REV.
M1-0219	02A	CP-15

FINAL PRINT

REF CKD CP-10 7/18/967

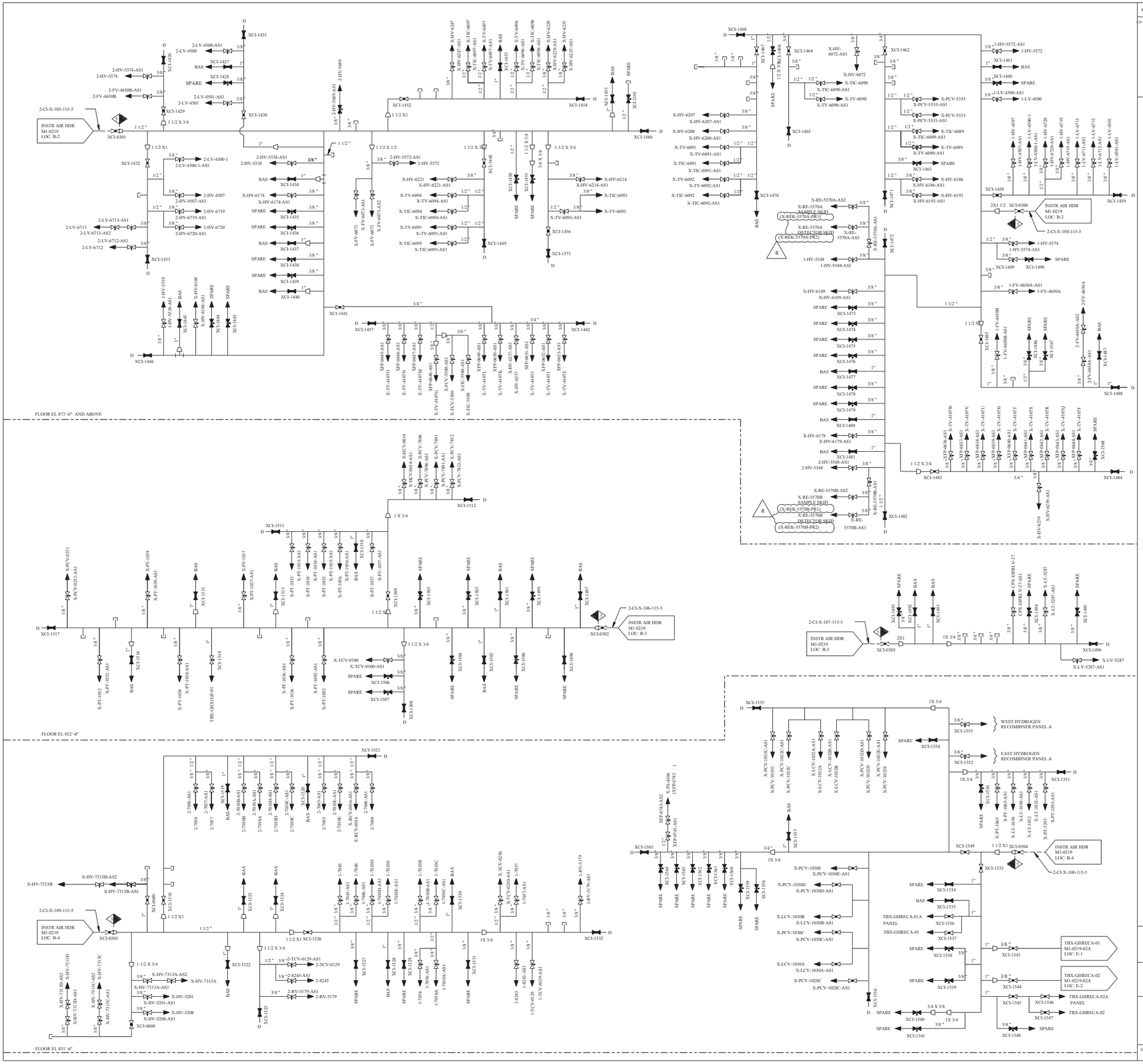

REV	DWN	CHKD	APVD	REMARKS
CP-25	SM 05-08-2006	JBM 05-08-2006		THIS DRAWING REVISED TO INCORPORATE DESIGN CHANGE FDA-2005-003009-01-00 PER SK-0002-05-003009-01-00.

NOTES:

1. SEE MECHANICAL DRAWING M1-0200 FOR SYMBOLS AND NOTES.
2. FOR VALVE/CHANNEL NUMBER IDENTIFICATION SEE DRAWING M1-2200-02.
3. ALL LINES ARE CATEGORY 115G, COPPER AND BRONZE PER SPEC MS-44B, EXCEPT AS NOTED.
4. BAS - BREATHING AIR STATION.
5. DANGER - INSTRUMENT AIR SHALL NOT BE USED FOR BREATHING WITHOUT APPROPRIATE INLINE CHEMICAL ABSORBERS AND PARTICULATE FILTERS. TOXIC VAPORS OR PARTICULATE MAY BE PRESENT.
6. VALVES DESIGNATED BAS WILL HAVE A HANSEN FITTING FOR CONNECTION TO A USER APPARATUS.

FSAR FIGURE 9.3-1

THIS DRAWING CREATED ELECTRONICALLY

NON-SAFETY

TXU POWER
CPSES
GLEN ROSE, TEXAS

FLOW DIAGRAM
INSTRUMENT AIR SUPPLY
AUXILIARY BUILDING

DWG. NO. M1-0219 | SH. NO. 03 | REV. CP-25

FINAL PRINT

me679300.dgn M1-0219-03

REF CKD CP-20718/97

REV	DWN	CHKD	APVD	REMARKS
CP-15	MHF 12-17-2008	HES 12-17-2008		THIS DRAWING REVISED TO INCORPORATE DESIGN CHANGE FDA-2006-003080-40-00 PER SK-0036-06-003080-40-00.

NOTES:

1. FOR MECHANICAL SYMBOLS AND NOTES SEE DRAWING M1-0200.
2. THE INSTRUMENT AIR BRANCH LINES ARE CONTINUED ON THE M2-2700 SERIES INSTRUMENT AIR PIPING DRAWINGS.
3. ALL DRAINS ON THIS DRAWING TO BE COLLECTED BY LOCAL FLOOR DRAIN SYSTEM.

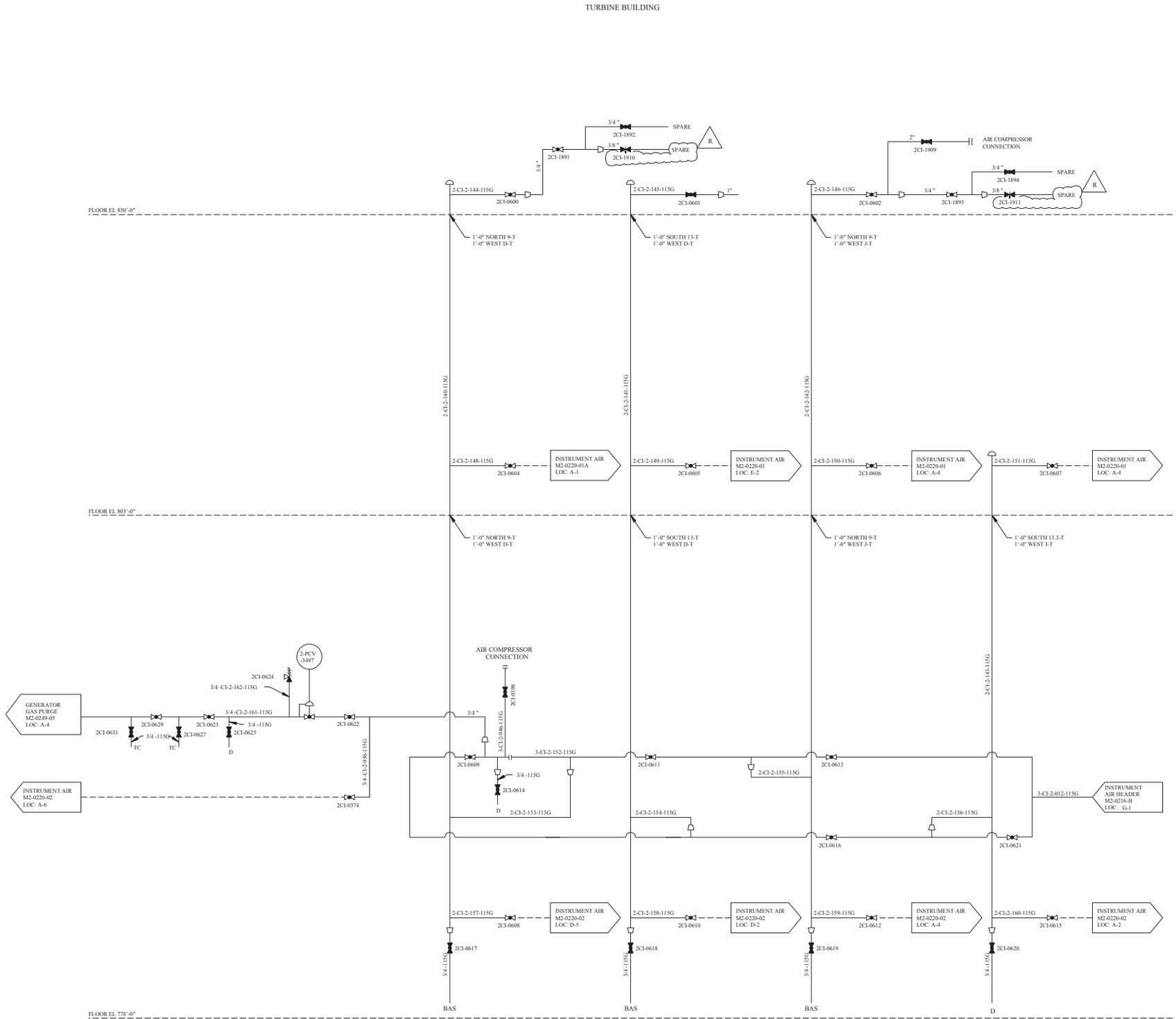

FSAR FIGURE 9.3-1

THIS DRAWING CREATED ELECTRONICALLY

NON-SAFETY

LUMINANT
CPNPP
GLEN ROSE, TEXAS

FLOW DIAGRAM
INSTRUMENT AIR
UNIT 2

DWG. NO.	SH. NO.	REV.
M2-0219	-	CP-15

REF CKD 10/7/97 CP-9

$$$$$$$DATE$$$$$$

me950700.dgn A M2-0219 < FINAL PRINT >

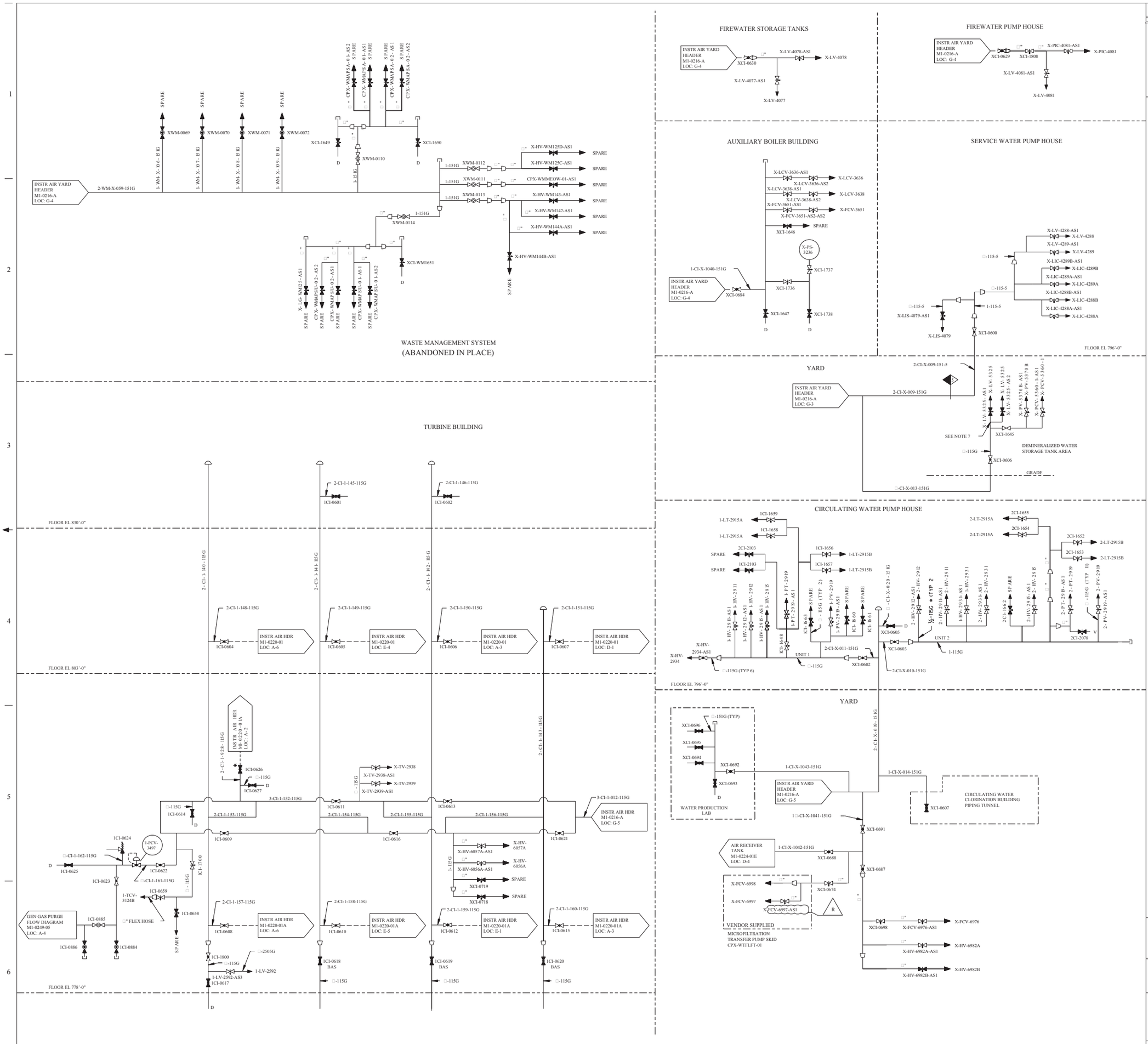

REV	DWN	CHKD	APVD	REMARKS
CP-52	MHP 01-09-2012	GAW 01-09-2012		THIS DRAWING REVISED TO INCORPORATE DESIGN CHANGE FDA 2007-003115-06-04 PER SK-0065-07-003115-06-00.

NOTES:

1. FOR MECHANICAL SYMBOLS AND NOTES SEE DRAWING M1-0200.
2. * VALVES SUPPLIED BY FIELD.
3. COMPRESSION FITTINGS FOR □" OR SMALLER LINES TO BE ASTM B68 OR B75.
4. DANGER - INSTRUMENT AIR SHALL NOT BE USED FOR BREATHING AIR WITHOUT APPROPRIATE IN-LINE CHEMICAL ABSORBERS AND PARTICULATE FILTERS. TOXIC VAPORS OR PARTICULATE MAY BE PRESENT.
5. DELETED
6. VALVES DESIGNATED BAS WILL HAVE A HANSEN FITTING FOR CONNECTION TO A USER APPARATUS.

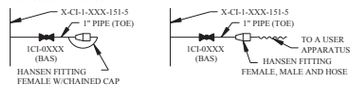

7. THE INSTRUMENT AIR ISOLATION VALVES MUST REMAIN CLOSED. NO LONGER HAS AUTO FUNCTION PER FDA-2006-000953-01. X-LV-5325

FSAR FIGURE 9.3-1

TUBS DRAWING CREATED ELECTRONICALLY

CLASS II

LUMINANT
CPNPP
GLEN ROSE, TEXAS

FLOW DIAGRAM
INSTRUMENT AIR

DWG. NO. M1-0220 | SH. NO. - | REV. CP-52

< FINAL PRINT >

REF CKD 5/8/98 CP-38

$$$$$$$ DATE$$$$$$

mc105520.dgn M1-0220

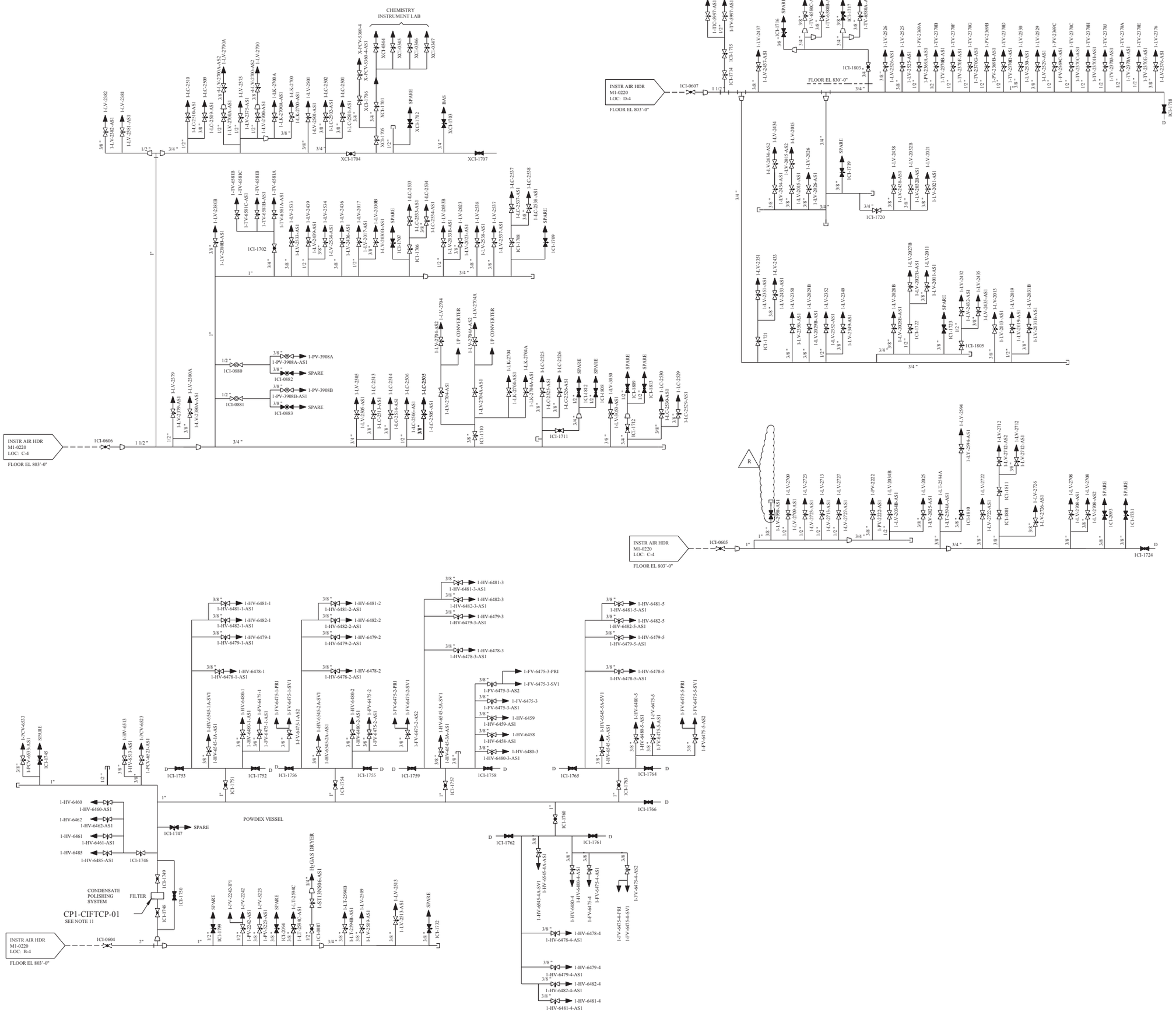

REV	DWN	CHKD	APVD	REMARKS
CP-33	DLK 10-20-2008	MM 10-20-2008		THIS DRAWING REVISED TO INCORPORATE DESIGN CHANGE FDA-2005-004951-02-00 PER SK-0016-05-004951-02-00.

NOTES:

1. ALL LINES 3/4" AND GREATER TO BE COPPER ASTM B88 SWEAT JOINED. CATEGORY 115G PER MS-44B.
2. ALL LINES 1/2" AND SMALLER TO BE ASTM B68 OR B75 COMPRESSION FITTINGS, CATEGORY 158G PER MS-626.
3. FOR MECHANICAL SYMBOLS AND NOTES SEE M1-0200
4. BAS - BREATHING AIR STATION.
5. DANGER - INSTRUMENT AIR SHALL NOT BE USED FOR BREATHING AIR WITHOUT APPROPRIATE IN-LINE CHEMICAL ABSORBERS AND PARTICULATE FILTERS. TOXIC VAPORS OR PARTICULATES MAY BE PRESENT.
6. TYPICAL - INSTRUMENT AIR SUPPLIED TO AIR ACTUATED DIAPHRAGM WITH VALVE POSITIONER.
7. NO LINE NUMBERS ARE ASSIGNED SINCE THEY ARE TUBING WITH DIAMETER LESS THAN 2" BY INSTRUMENTATION.
8. ALL DRAINS COLLECTED BY LOCAL DRAIN SYSTEM, UNLESS OTHERWISE NOTED.
9. FOR VALVE CHANNEL NO. IDENTIFICATION SEE DWG M1-2200-02.
10. VALVES DESIGNATED BAS WILL HAVE A HANSEN FITTING FOR CONNECTION TO A USER APPARATUS.

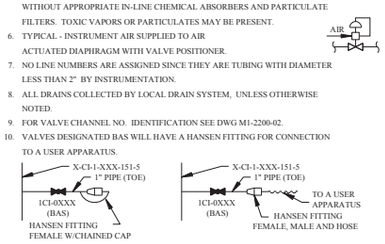

11. FILTER CP1-CIFTCP-01 INTERNALS HAVE BEEN REMOVED.

FSAR FIGURE 9.3-1

THIS DRAWING CREATED ELECTRONICALLY

DRAWING	M1-0220	REV	CP-6
HAS BEEN SPLIT INTO THE FOLLOWING SHEETS:			
M1-0220-01			
M1-0220-01A			

NON-SAFETY

LUMINANT
CPNPP
GLEN ROSE, TEXAS

FLOW DIAGRAM
INSTRUMENT AIR
TURBINE BUILDING

DWG. NO.	SH. NO.	REV.
M1-0220	01	CP-33

REF CKD 5-13-98 CP-20

SSSSSSDDATESSSSSS

me901500.dgn M1-0220-01 < FINAL PRINT >

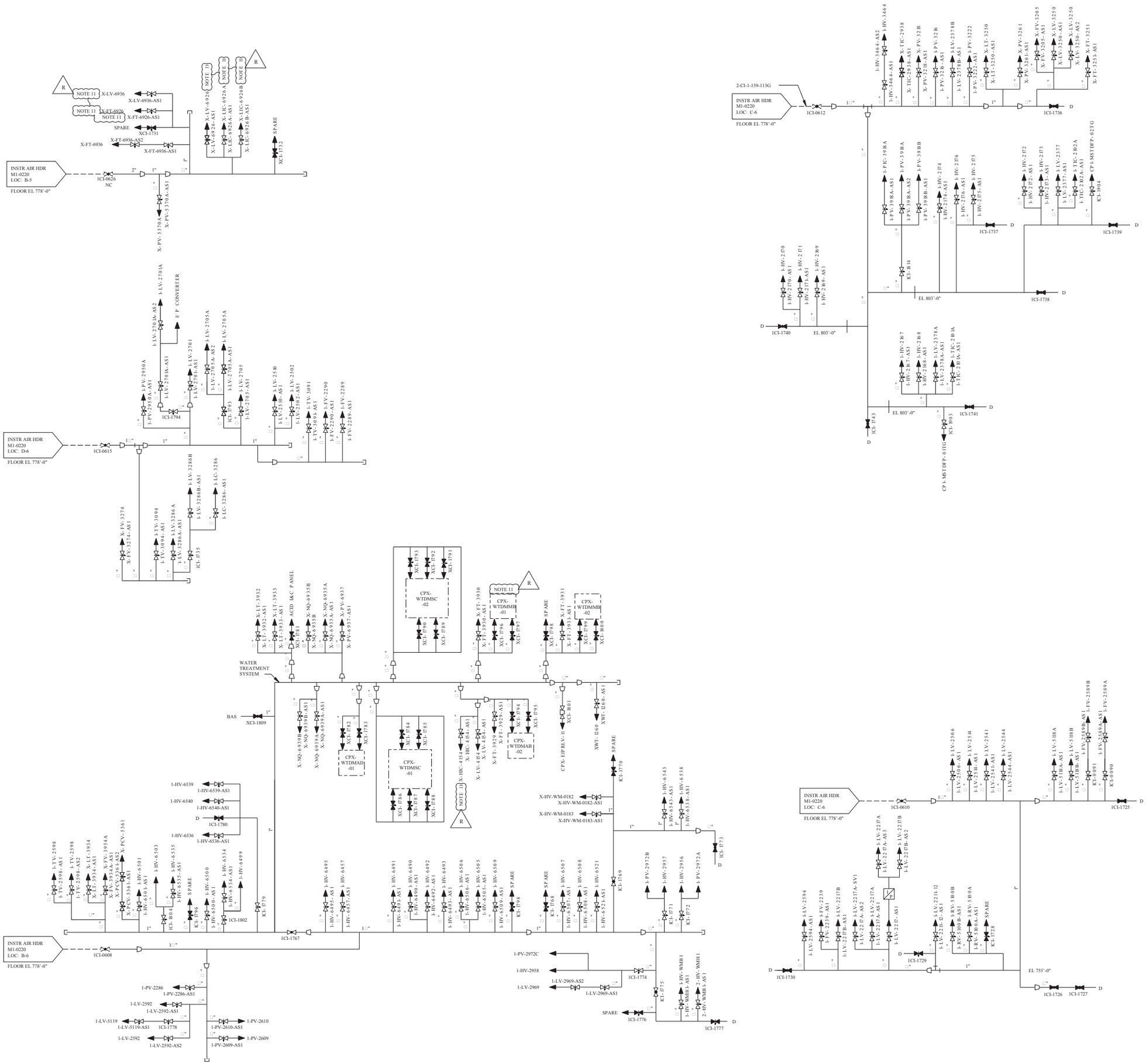

REV	DWN	CHKD	APVD	REMARKS
CP-28	BMC 01-15-2015	DJL 01-15-2015		THIS DRAWING REVISED TO INCORPORATE DESIGN CHANGE FDA-2014-000184-01-00 PER SK-0002-14-000184-01-00.

NOTES:

1. ALL LINES □" AND GREATER TO BE COPPER ASTM B88 SWEAT JOINED. CATEGORY 115G PER MS-44B.
2. ALL LINES □" AND SMALLER TO BE ASTM B68 OR B75 COMPRESSION FITTINGS, CATEGORY 158G PER MS-626.
3. FOR MECHANICAL SYMBOLS AND NOTES SEE M1-0200
4. BAS - BREATHING AIR STATION.
5. DANGER - INSTRUMENT AIR SHALL NOT BE USED FOR BREATHING AIR WITHOUT APPROPRIATE IN-LINE CHEMICAL ABSORBERS AND PARTICULATE FILTERS. TOXIC VAPORS OR PARTICULATES MAY BE PRESENT.
6. TYPICAL - INSTRUMENT AIR SUPPLIED TO AIR ACTUATED DIAPHIRAGM WITH VALVE POSITIONER.
7. NO LINE NUMBERS ARE ASSIGNED SINCE THEY ARE TUBING WITH DIAMETER LESS THAN 2" BY INSTRUMENTATION.
8. ALL DRAINS COLLECTED BY LOCAL DRAIN SYSTEM, UNLESS OTHERWISE NOTED.
9. FOR VALVE CHANNEL NO. IDENTIFICATION SEE DWG M1-2200-02.
10. VALVES DESIGNATED BAS WILL HAVE A HANSEN FITTING FOR CONNECTION TO A USER APPARATUS.

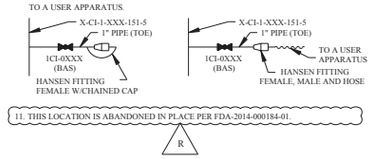

11. THIS LOCATION IS ABANDONED IN PLACE PER FDA-2014-000184-01.

FSAR FIGURE 9.3-1

THIS DRAWING CREATED ELECTRONICALLY

DRAWING M1-0220 REV CP-6
HAS BEEN SPLIT INTO THE FOLLOWING SHEETS:
M1-0220-01
M1-0220-01A

NON-SAFETY

LUMINANT
CPNPP
GLEN ROSE, TEXAS

FLOW DIAGRAM
INSTRUMENT AIR
TURBINE BUILDING

DWG. NO.	SH. NO.	REV.
M1-0220	01A	CP-28

< FINAL PRINT >

REF CKD 1/ 14/ 98 CP-20

SSSSSSSS DATE SSSSSSS

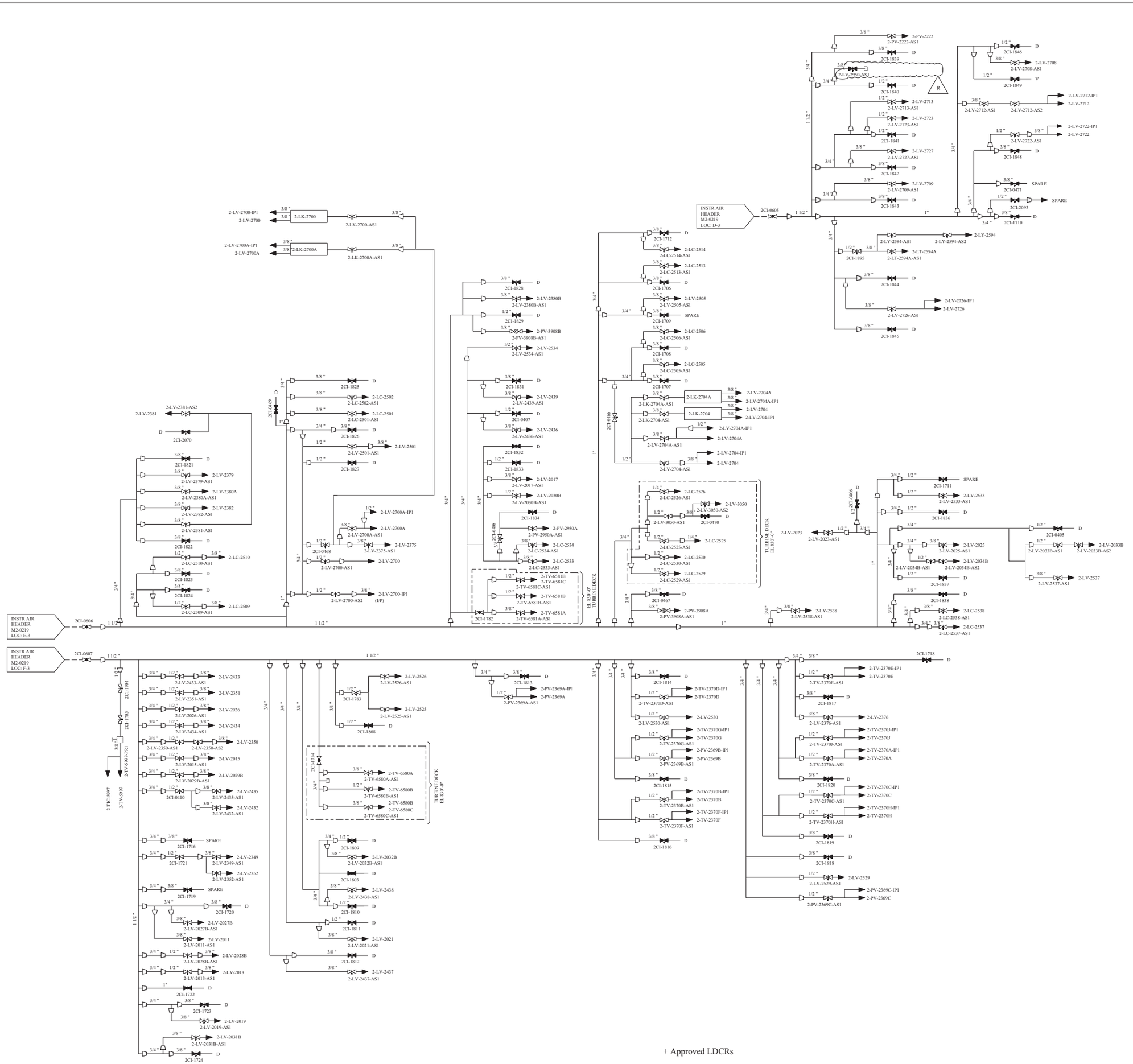

+ Approved LDCRs

REV	DWN	CHKD	APVD	REMARKS
CP-12	SM 09-27-2007	JRMC 09-27-2007		THIS DRAWING REVISED TO INCORPORATE DESIGN CHANGES FDA-2005-004951-01-01 PER SK-0023-05-004951-01-00.

NOTES:

1. THIS DRAWING VOIDS AND SUPERSEDES FSI-00077F.
2. FOR ADDITIONAL TURBINE BUILDING INSTRUMENT AIR SEE M2-0220-02.
3. TUBING CATEGORY IS 115G, COPPER AND BRONZE PER SPEC MS-44B, SAME AS INSTRUMENT AIR HEADER.
4. FOR VALVE/CHANNEL NUMBER IDENTIFICATION SEE M2-2200-02.
5. DRAINS ON THIS DRAWING TO BE COLLECTED BY LOCAL FLOOR DRAIN SYSTEM.
6. FOR MECHANICAL SYMBOLS AND NOTES SEE M1-0200.
7. DANGER - INSTRUMENT AIR SHALL NOT BE USED FOR BREATHING AIR WITHOUT APPROPRIATE IN-LINE CHEMICAL ABSORBERS AND PARTICULATE FILTRATION. TOXIC VAPORS, FUMES AND PARTICULATES MAY BE PRESENT.

FSAR FIGURE 9.3-1

THIS DRAWING CREATED ELECTRONICALLY

DRAWING M2-0220-01 REV CP-3
HAS BEEN SPLIT INTO THE FOLLOWING SHEETS:
M2-0220-01
M2-0220-01A

NON-SAFETY

LUMINANT
CPSES
GLEN ROSE, TEXAS

FLOW DIAGRAM
INSTRUMENT AIR
TURBINE BUILDING

DWG. NO. M2-0220 | SH. NO. 01 | REV. CP-12

FINAL PRINT

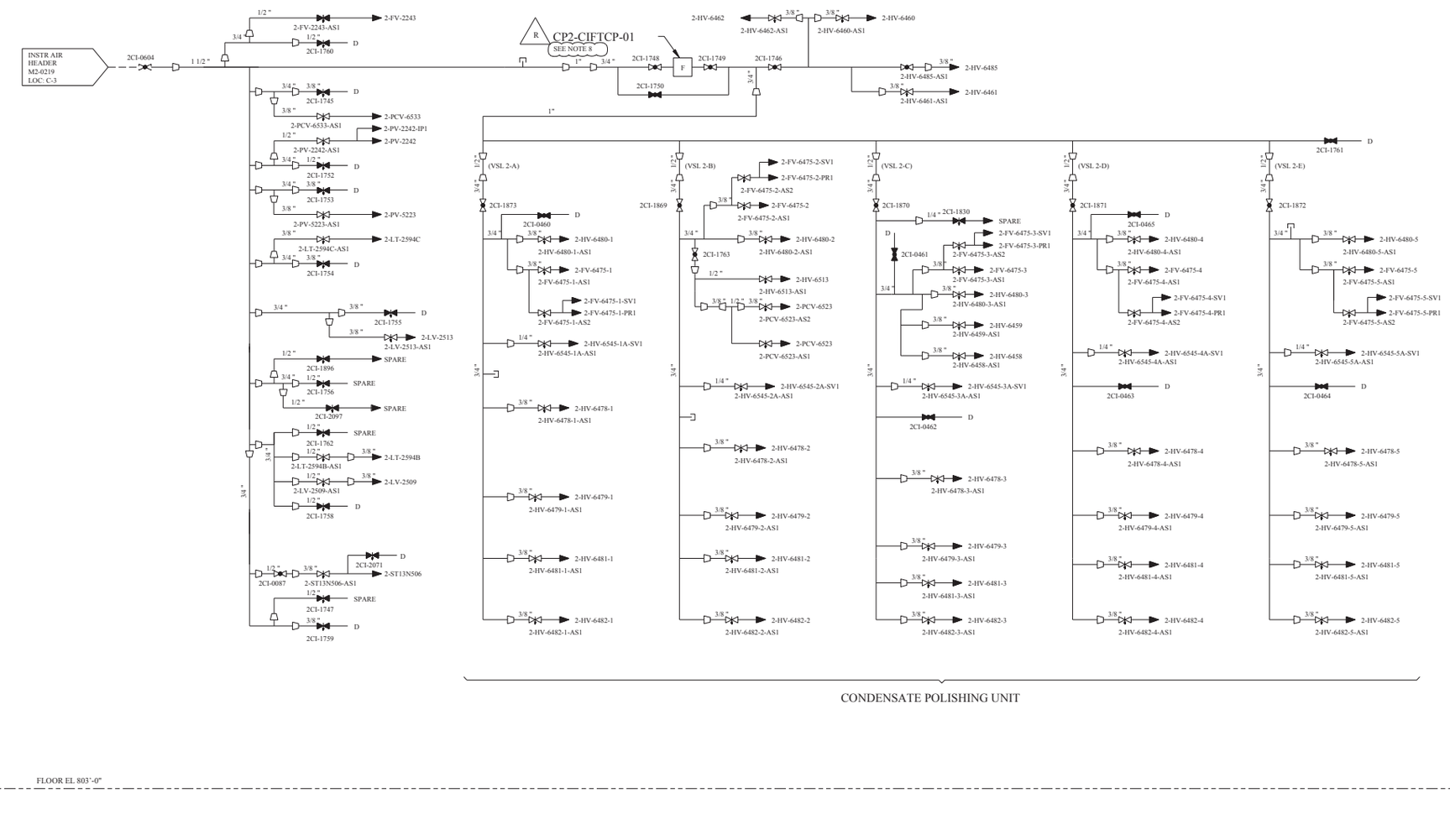

REV	DWN	CHKD	APVD	REMARKS
CP-9	G.K. 10-12 2005	MM 10-12 2005		THIS DRAWING REVISED TO INCORPORATE DESIGN CHANGE FDA 2004-003147-01-00 PER SK-0002-04-003147-01-00.

NOTES:

1. THIS DRAWING VOIDS AND SUPERCEDES FSI-00077F.
2. FOR ADDITIONAL TURBINE BUILDING INSTRUMENT AIR SEE M2-0220-02.
3. TUBING CATEGORY IS 115G, COPPER AND BRONZE PER SPEC MS-44B, SAME AS INSTRUMENT AIR HEADER.
4. FOR VALVE/CHANNEL NUMBER IDENTIFICATION SEE M2-2200-02.
5. DRAINS ON THIS DRAWING TO BE COLLECTED BY LOCAL FLOOR DRAIN SYSTEM.
6. FOR MECHANICAL SYMBOLS AND NOTES SEE M1-0200.
7. DANGER - INSTRUMENT AIR SHALL NOT BE USED FOR BREATHING AIR WITHOUT APPROPRIATE IN-LINE CHEMICAL ABSORBERS AND PARTICULATE FILTRATION. TOXIC VAPORS, FUMES AND PARTICULATES MAY BE PRESENT.
8. FILTER CP2-CIFTCP01 INTERNALS HAVE BEEN REMOVED.

R

FSAR FIGURE 9.3-1

THIS DRAWING CREATED ELECTRONICALLY

DRAWING M2-0220-01 REV CP-3
HAS BEEN SPLIT INTO THE FOLLOWING SHEETS:
M2-0220-01
M2-0220-01A

NON-SAFETY

LUMINANT
CPSES
GLEN ROSE, TEXAS

FLOW DIAGRAM
INSTRUMENT AIR
TURBINE BUILDING

DWG. NO. M2-0220 | SH. NO. 01A | REV. CP-9

FINAL PRINT

REF CKD CP-7 6-30-98

me625300.dgn M2-0220-01A

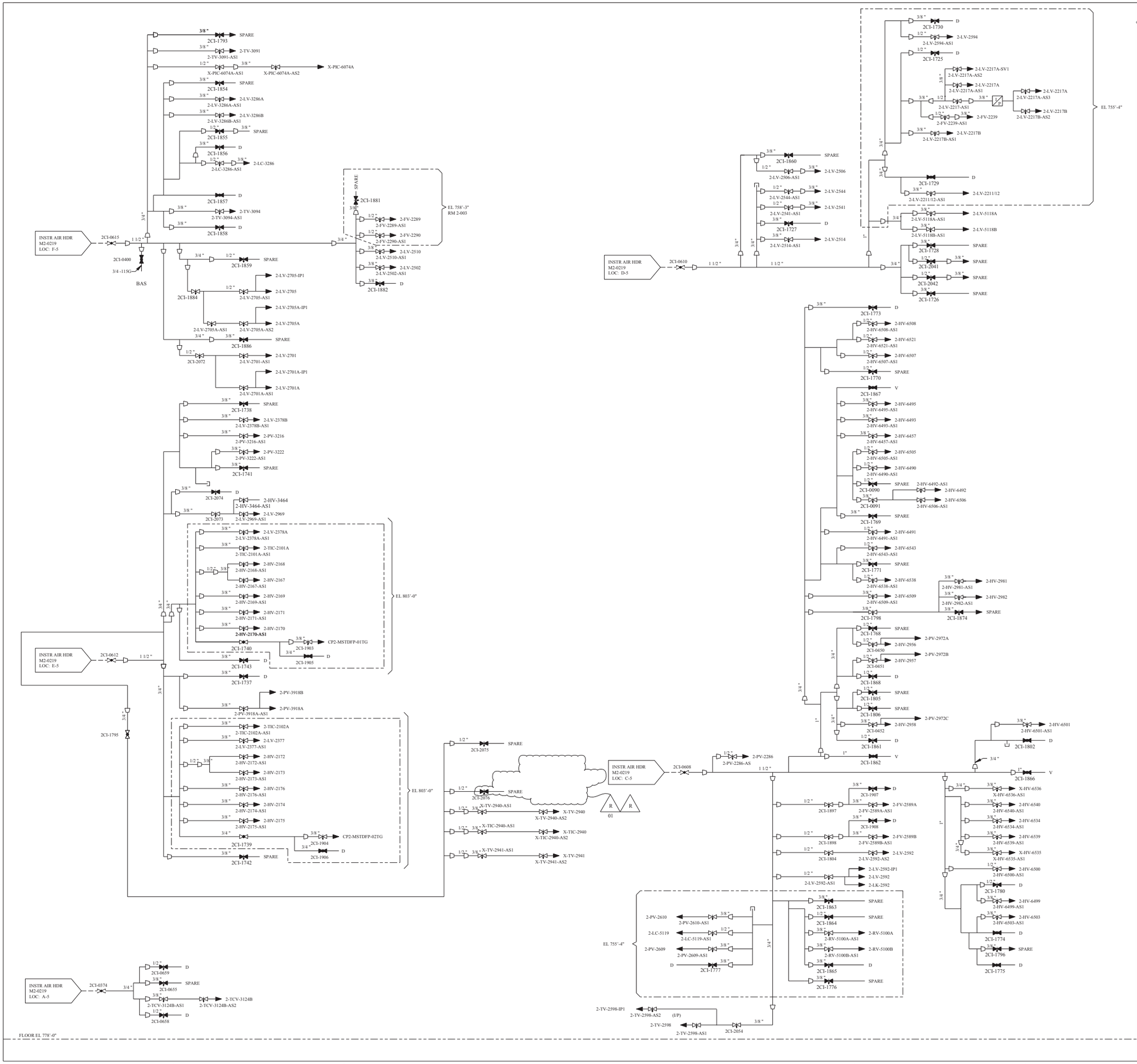

REV	DWN	CHKD	APVD	REMARKS
CP-24	DGK 06-09 2011	MSH 06-09 2011		THIS DRAWING REVISED TO INCORPORATE DESIGN CHANGE FDA-2008-003933-01-03 PER SK-0022-08-003933-01-01.

NOTES:

1. THIS DRAWING VOIDS AND SUPERCEDES FSI-00077F.
2. FOR ADDITIONAL TURBINE BUILDING INSTRUMENT AIR SEE M2-0220-01.
3. TUBING CATEGORY IS 115G, COPPER AND BRONZE PER SPEC MS-44B, SAME AS INSTRUMENT AIR HEADER.
4. FOR VALVE/CHANNEL NUMBER IDENTIFICATION SEE M2-2200-02.
5. DRAINS ON THIS DRAWING TO BE COLLECTED BY LOCAL FLOOR DRAIN SYSTEM.
6. FOR MECHANICAL SYMBOLS AND NOTES SEE M1-0200.
7. DANGER - INSTRUMENT AIR SHALL NOT BE USED FOR BREATHING AIR WITHOUT APPROPRIATE IN-LINE CHEMICAL ABSORBERS AND PARTICULATE FILTRATION. TOXIC VAPORS, FUMES AND PARTICULATES MAY BE PRESENT.

FSAR FIGURE 9.3-1

THIS DRAWING CREATED ELECTRONICALLY

NON-SAFETY

LUMINANT
CPNPP
GLEN ROSE, TEXAS

FLOW DIAGRAM
INSTRUMENT AIR
UNIT 2 TURBINE BUILDING

DWG. NO. M2-0220 | SH. NO. 02 | REV. CP-24

FINAL PRINT

REF CKD 10/797 CP-14

me102510.dgn M2-0220-02

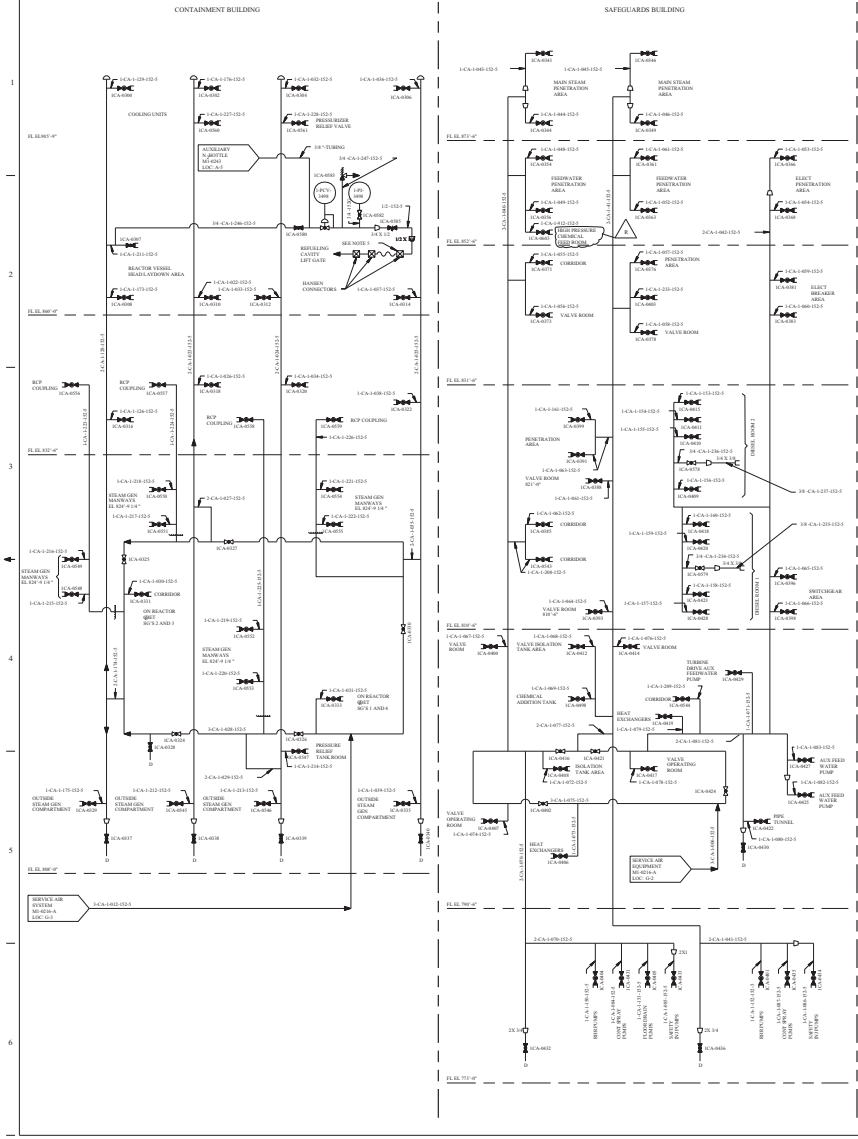

REV	DRWN	CHKD	APVD	REMARKS
CP-19				THIS DRAWING REVISED TO INCORPORATE DESIGN CHANGE FDA-2000-00041 T-01-00 PER DL-0011-01-00167-01-00.

NOTES:

1. FOR MECHANICAL SYMBOLS AND NOTES SEE DRAWING M1-0200.
2. ALL DRAINS ARE 3/4 " UNLESS OTHERWISE NOTED.
3. ALL SERVICE AIR HALL VALVES HAVE THREADED END CONNECTIONS. BROWN ANODIZED ALUMINUM HANDLES. ALL VALVES TO BE CHICAGO PNEUMATIC NO. C31D5PV ON THE DOWNSTREAM END OF EACH VALVE.
4. CONTAINMENT PENETRATIONS M5-0007 AND M05-0009 TRANSFERRED TO FLOW DIAGRAM M1-0301.
5. GATE PROVIDED WITH HOSE ASSEMBLY AS SHOWN IN DETAIL A.

TO GATE — SUPPLY

* CHECK VALVE

DETAIL A

FLEX HOSE ASSEMBLY	LOCATION
CP-1, A5#0008-01	UNIT 1 CONTAINMENT LIFT GATE

FSAR FIGURE 9.3-2

THIS DRAWING CREATED FOR PROMOTION A

DRAWING	2323-M1-0217	REV	CP-7
HAS BEEN SPLIT INTO THE FOLLOWING SHEETS:			
M1-0217			
M1-0217-A			

CLASS II

TXU POWER
CPSES
GLEN ROSE, TEXAS

FLOW DIAGRAM
SERVICE AIR SYSTEM

DWG. NO. M1-0217 | SH. NO. - | REV. CP-19

REF CHKD 11/24/2003

SIS0SSSSAVE.DSSRS

mc526200.dgn A M1-0217 B C D E F G H

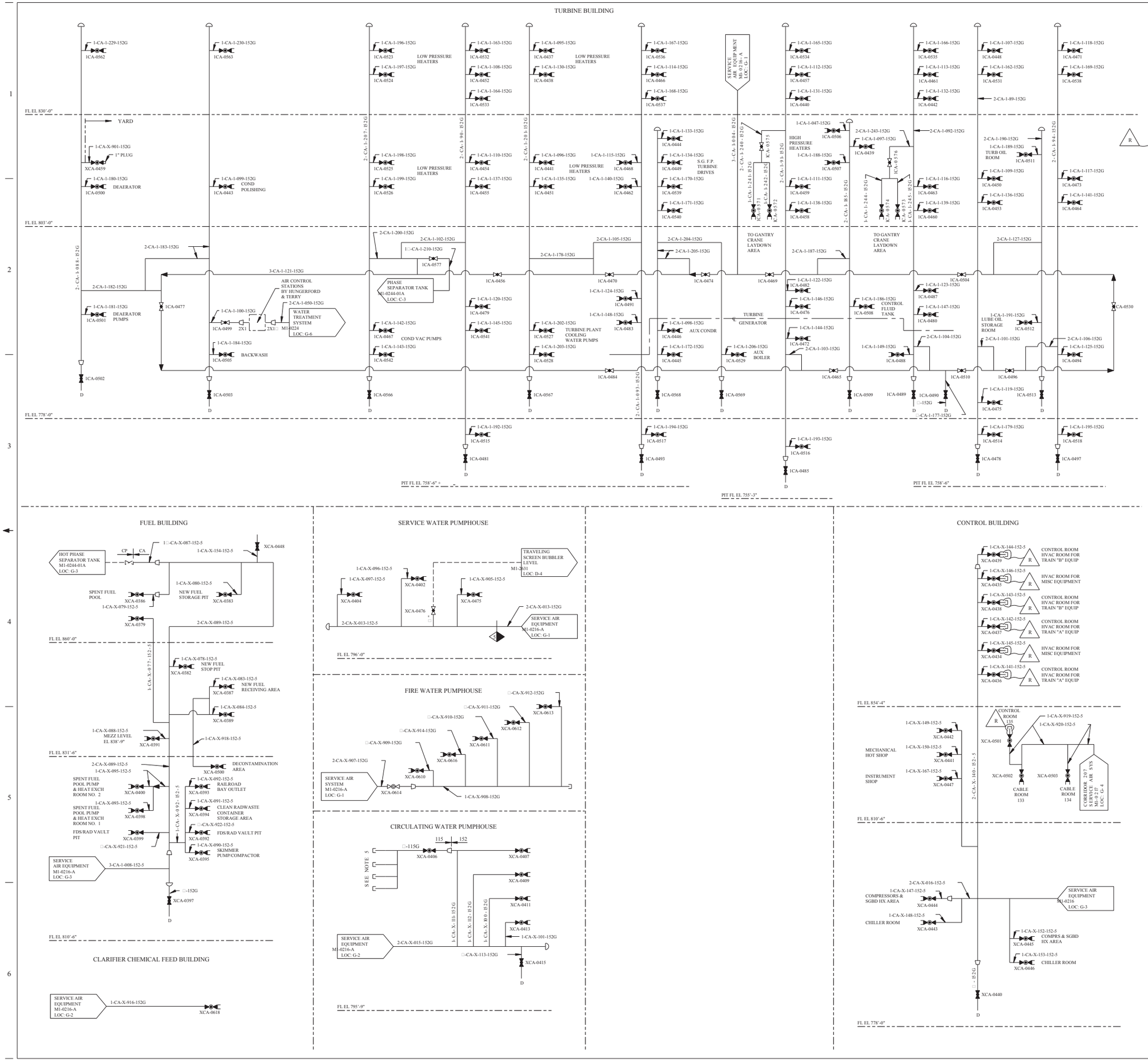

REV	DWN	CHKD	APVD	REMARKS
CP-19	JEMC 06-23-2012	DJL 06-23-2012		THIS DRAWING REVISED TO INCORPORATE DESIGN CHANGE FDA 2012-000051-01-00 PER SK-0001-12-000051-01-00.

NOTES:

1. FOR MECHANICAL SYMBOLS AND NOTES SEE DRAWING M1-0200.
2. ALL DRAINS ARE □" UNLESS OTHERWISE NOTED.
3. UNLESS OTHERWISE SHOWN, ALL SERVICE AIR BALL VALVES HAVE THREADED END CONNECTIONS AND QUICK DISCONNECT FITTING (CHICAGO PNEUMATIC NO. C15120Y) ON THE DOWNSTREAM END OF EACH VALVE.
4. MOISTURE FILTER SUCH AS NORGREN MODEL F18-C00A OR EQUIVALENT MAY BE ADDED TO REMOVE WATER IN SUPPLY LINE.
5. CONNECTION PROVIDED AT EACH LEVEL PROBE FOR FLUSHING.
6. VALVES XCA-0434 THRU -0439 AND -0501 ARE CAPPED TO ENSURE THE INTEGRITY OF THE CONTROL ROOM ENVELOPE WHEN VALVES ARE NOT IN SERVICE.

R

FSAR FIGURE 9.3-2

THIS DRAWING CREATED ELECTRONICALLY

DRAWING 2323-M1-0217 REV CP-7
HAS BEEN SPLIT INTO THE FOLLOWING SHEETS:
M1-0217
M1-0217-A

CLASS II

LUMINANT
CPNPP
GLEN ROSE, TEXAS

FLOW DIAGRAM
SERVICE AIR SYSTEM

DWG. NO. M1-0217 | SH. NO. A | REV. CP-19

< FINAL PRINT >

me103740.dgn M1-0217-A

$$$$$$$DATE$$$$$ REF CHKD 07/30/2002

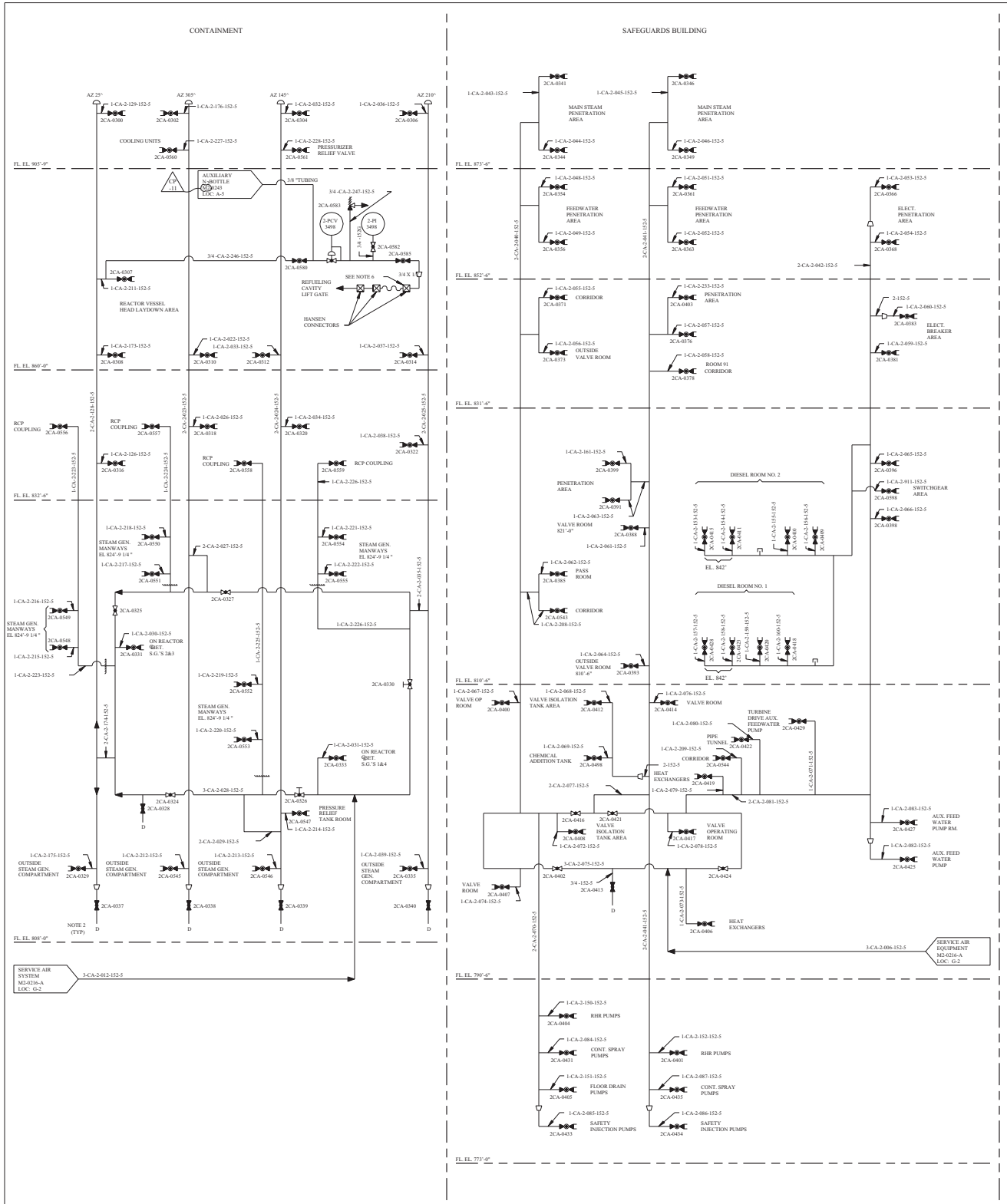

REV	DWN	CHKD	APVD	REMARKS
CP-11	DLK 06-01-1999			THIS DRAWING REVISED FOR EDITORIAL CHANGE AS NOTED.

NOTES:

1. FOR MECHANICAL SYMBOLS AND NOTES SEE DRAWING M1-0200.
2. ALL DRAINS ARE 3/4 " UNLESS OTHERWISE NOTED.
3. ALL SERVICE AIR BALL VALVES ARE SUPPLIED WITH THREADED CONNECTIONS. BROWN & ROOT WILL ATTACH A QUICK DISCONNECT FITTING ON THE DOWNSTREAM END OF EACH VALVE. (CHICAGO PNEUMATIC NUMBER 1512DY)
4. FABRIC REINFORCED HOSE (AEROQUIP NUMBER 2575-4 OR EQUAL) WITH 1/4 " HOSE TO 1/4 " MALE NPT SLIP-ON HOSE CONNECTORS (AEROQUIP NUMBER 4718-4-4 OR EQUAL) SEE THE RESPECTIVE PRESPRAY CORP GATE DRAWING FOR DETAILS ABOUT THE CONNECTION WITH THE VENDOR SUPPLIED HOSE COUPLING.
5. UNLESS OTHERWISE NOTED ALL DRAINS COLLECTED BY LOCAL FLOOR DRAIN SYSTEM.
6. GATE PROVIDED WITH HOSE ASSEMBLY AS SHOWN IN DETAIL A.

TO GATE — SUPPLY

* CHECK VALVE

DETAIL A

FLEX HOSE ASSEMBLY	LOCATION
CP2-LAFHRB-01	UNIT 2 CONTAINMENT LIFT GATE

FSAR FIGURE 9.3-2

THIS DRAWING CREATED ELECTRONICALLY

CLASS II

TXU ELECTRIC
CPSES
GLEN ROSE, TEXAS

FLOW DIAGRAM
SERVICE AIR SYSTEM

DWG. NO.	SH. NO.	REV.
M2-0217	-	CP-11

$$$$$$$D/A TESSSSS

me0001ov.dgn

REV	DWN	CHKD	APVD	REMARKS
CP-5	C.A. 11-02-1996			THIS DRAWING REVISED TO INCORPORATE EDITORIAL CHANGES AS NOTED.

NOTES

1. FOR MECHANICAL SYMBOLS AND NOTES SEE DRAWING M1-0200.
2. ALL DRAINS ARE 3/4 " UNLESS OTHERWISE NOTED.
3. ALL SERVICE AIR BALL VALVES ARE SUPPLIED WITH THREADED CONNECTIONS. BROWN & ROOT WILL ATTACH A QUICK DISCONNECT FITTING ON THE DOWNSTREAM END OF EACH VALVE. (CHICAGO PNEUMATIC NUMBER 1512DY).
4. FABRIC REINFORCED HOSE (AEROQUIP NUMBER 2575-4 OR EQUAL) WITH 1/4 " HOSE TO 1/4 " MALE NPT SLIP-ON HOSE CONNECTORS (AEROQUIP NUMBER 4738-4-4 OR EQUAL) SEE THE RESPECTIVE PRESPRAY CORP GATE DRAWING FOR DETAILS ABOUT THE CONNECTION WITH THE VENDOR SUPPLIED HOSE COUPLING.
5. UNLESS OTHERWISE NOTED ALL DRAINS COLLECTED BY LOCAL FLOOR DRAIN SYSTEM.

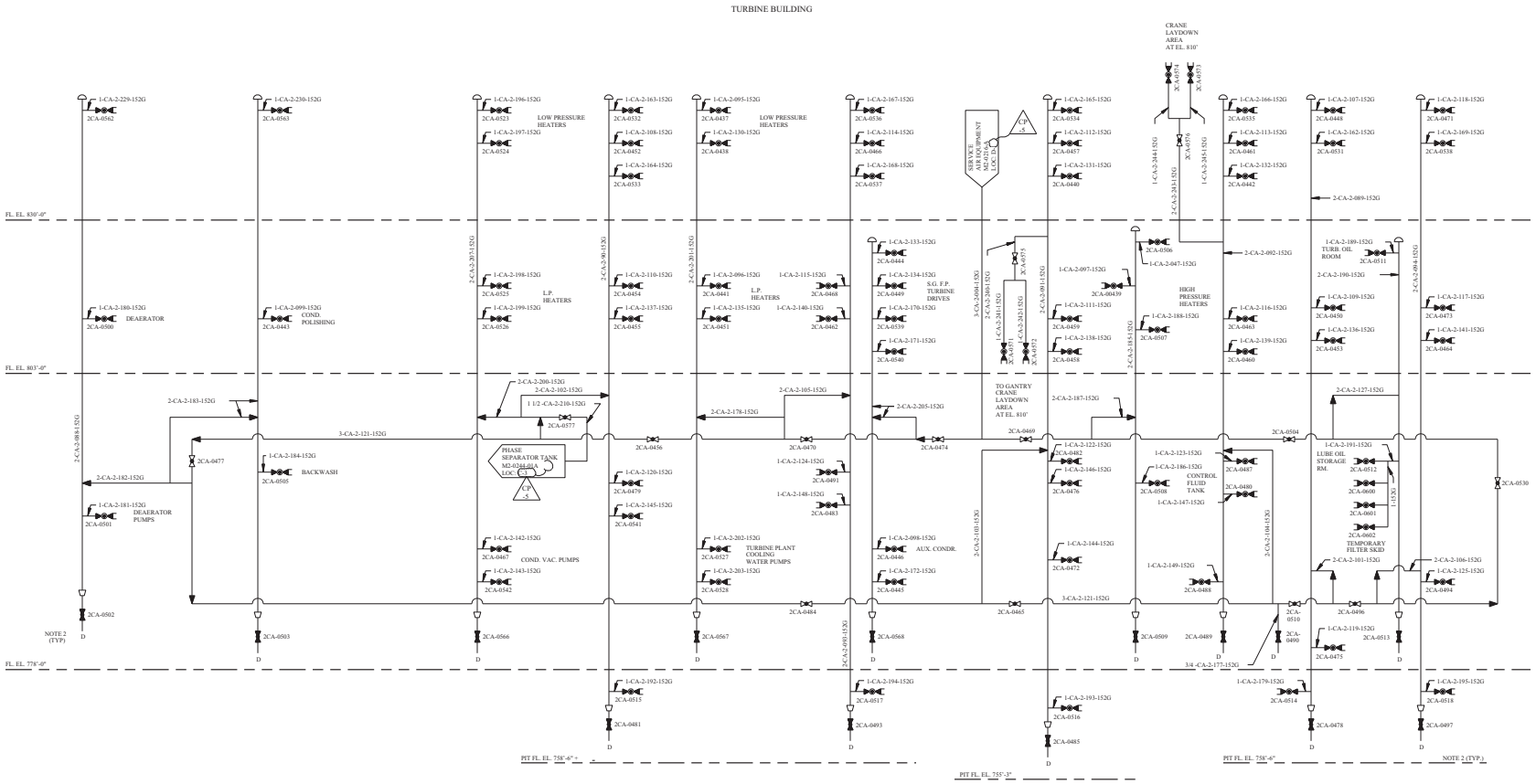

FSAR FIGURE 9.3-2

THIS DRAWING CREATED ELECTRONICALLY

CLASS II
(NUCLEAR SAFETY-RELATED)
SAFETY CLASS 1 SEISMIC CATEGORY 1
SAFETY CLASS 2 CLASS 1E
SAFETY CLASS 3 ASSOCIATED CIRCUITS

TXU ELECTRIC
CPSES
GLEN ROSE, TEXAS

FLOW DIAGRAM
SERVICE AIR SYSTEM

DWG. NO.	SH. NO.	REV.
M2-0217	A	CP-5

$$$$$$$D/A TE$$$$$$

vs0000th.dgn

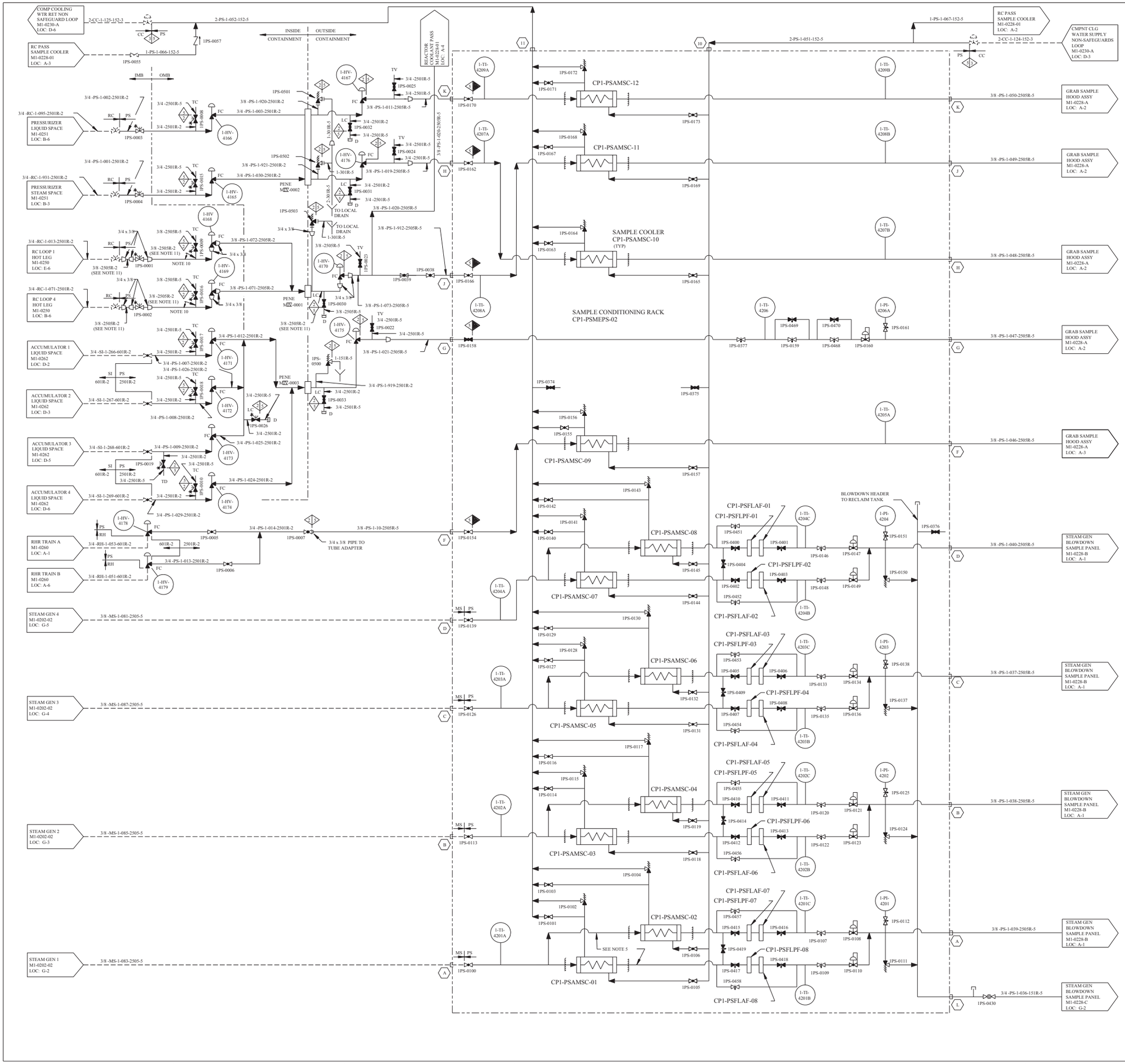

REV	DWN	CHKD	APVD	REMARKS
CP-32	JRMC 03-06-2006	DJL 03-10-2006		THIS DRAWING REVISED TO INCORPORATE DESIGN CHANGE FDA 2004-000371-01-00 PER SK-0001-04-000371-01-00.

NOTES:

1. TAG NUMBERS:
   GRAB SAMPLE HOOD ASSEMBLY CP1-PSMEPS-01 ,
   SAMPLE CONDITIONING RACK CP1-PSMEPS-02 ,
   STEAM GENERATOR BLOWDOWN SAMPLE PANEL CP1-PSMEPS-03 .
2. RADIATION MONITOR LOCATED REMOTELY OUTSIDE SAMPLE ROOM.
3. FOR MECHANICAL SYMBOLS AND NOTES SEE DRAWING M1-0200.
4. ⬡ INDICATE EQUIPMENT NOZZLE CONNECTIONS IN ACCORDANCE WITH WATER EQUIPMENT INC DWG 58696, 58697, AND 58698.
5. PARALLEL SAMPLE COOLERS PRESSURE REDUCERS, AND REGULATORS ARE PROVIDED TO ASSURE ADEQUATE SAMPLE FLOW.
6. PARALLEL PRESSURE REGULATORS AND RELATED HARDWARE WERE ADDED TO ASSURE ADEQUATE SAMPLE PURGE RATES.
7. ALL pH AND CONDUCTIVITY HAVE AUTOMATIC TEMPERATURE COMPENSATION.
8. TUBING IN RACK 3/8 "-.065 WALL - 316 SS
   TUBING IN BLOWDOWN SAMPLE PANEL AND GRAB SAMPLE HOOD IS 3/8 " OR 1/4 "-.065 WALL -316 SS TO PRESSURE REDUCING VALVES; 3/8 " -.049 WALL - 316 SS TO FLOW METERS FOR ANALYZERS AND GRAB SAMPLE VALVES; 1/4 "-.049. ALL 316 SS TO ANALYZERS AND GRAB SAMPLE VALVES; ALL PER ASTM-A-213.
9. DELETED
10. SAMPLE DELAY TIME OF 60 SECONDS INSIDE MISSILE BARRIER (IMB) REQUIRED FOR N-16 DECAY.
11. SAFETY CLASS 2 TUBING MATERIAL:
    SA213, TYPE 316, TUBING
    3/8 OD x 0.049 WALL
    DESIGN PRESS 2485 PSIG
    DESIGN TEMP 650°

FSAR FIGURE 9.3-4

THIS DRAWING CREATED ELECTRONICALLY

DRAWING 2323-M1-0228	REV CP-7
HAS BEEN SPLIT INTO THE FOLLOWING SHEETS:	
M1-0228	
M1-0228-A	
M1-0228-B	

CLASS I
(NUCLEAR SAFETY-RELATED)

SAFETY CLASS 1	SEISMIC CATEGORY I
SAFETY CLASS 2	CLASS 1E
SAFETY CLASS 3	ASSOCIATED CIRCUITS

TXU POWER
CPSES
GLEN ROSE, TEXAS

FLOW DIAGRAM
PROCESS SAMPLING
SYSTEM

DWG. NO.	SH. NO.	REV.
M1-0228	-	CP-32

FINAL PRINT

REF CKD 9/3/97 CP-26

me698200.dgn M1-0228

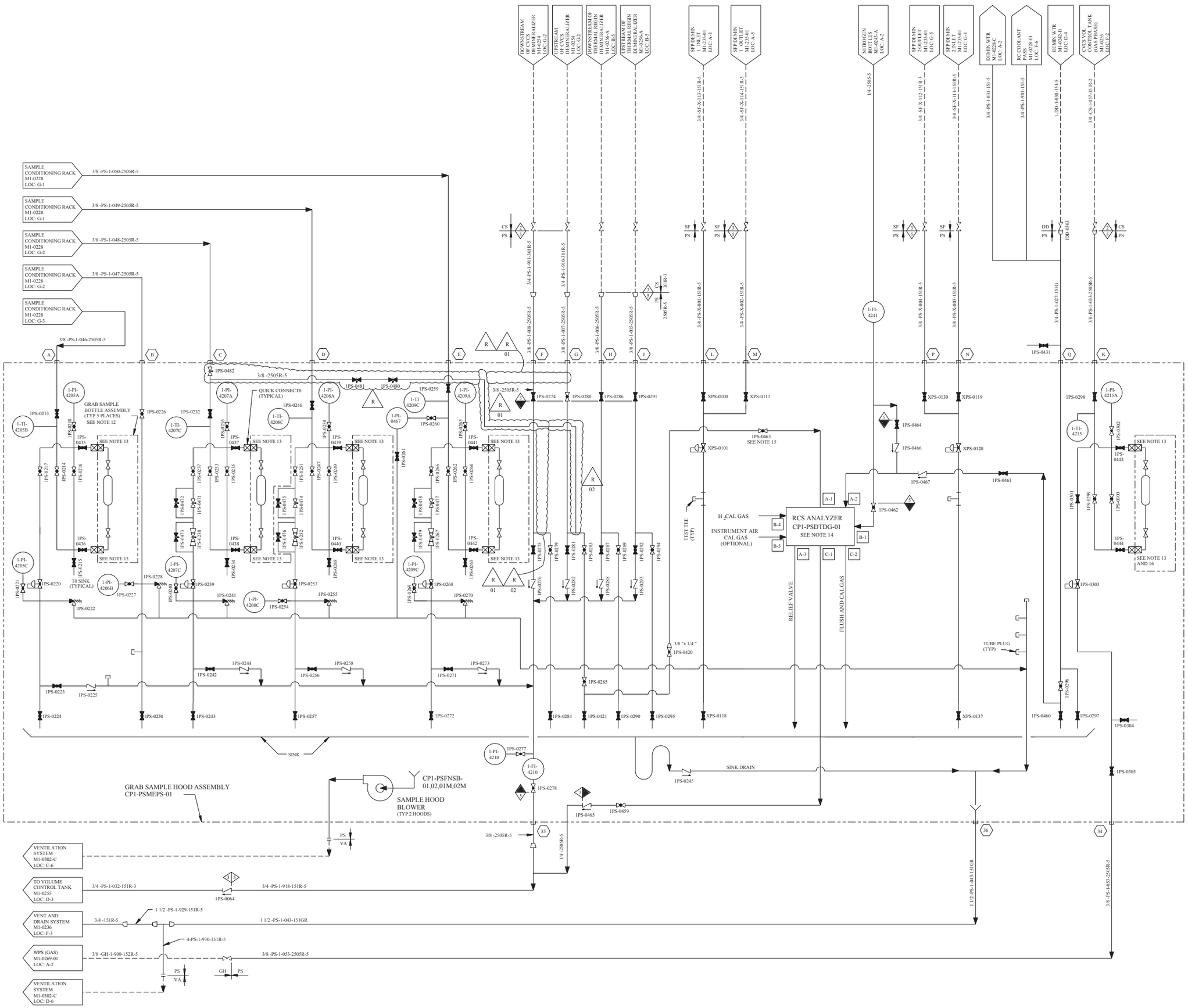

REV	DWN	CHKD	APVD	REMARKS
CP-22	TJS 07-21 2007	RMO 07-21 2007		THIS DRAWING REVISED TO INCORPORATE DESIGN CHANGE FDA 2007-002268-01-02 PER SK-0001-07-002268-01-02.

NOTES:

1. TAG NUMBERS
   GRAB SAMPLE HOOD ASSEMBLY CP1-PSMEPS-01 ,
   SAMPLE CONDITIONING RACK CP1-PSEMPS-02 ,
   STEAM GENERATOR BLOWDOWN SAMPLE PANEL CP1-PSMEPS-03 .
2. RADIATION MONITOR LOCATED REMOTELY OUTSIDE SAMPLE ROOM.
3. FOR MECHANICAL SYMBOLS AND NOTES SEE DRAWING M1-0200.
4. ⬡ INDICATE EQUIPMENT NOZZLE CONNECTIONS IN ACCORDANCE WITH WATER EQUIPMENT INC DWG 58696, 58697, AND 58698.
5. PARALLEL SAMPLE COOLERS PRESSURE REDUCERS, AND REGULATORS ARE PROVIDED TO ASSURE ADEQUATE SAMPLE FLOW.
6. PARALLEL PRESSURE REGULATORS AND RELATED HARDWARE WERE ADDED TO ASSURE ADEQUATE SAMPLE FLOW.
7. ALL pH AND CONDUCTIVITY HAVE AUTOMATIC TEMPERATURE COMPENSATION.
8. TUBING IN RACK 3/8 "-.065 WALL - 316 SS
   TUBING IN BLOWDOWN SAMPLE PANEL AND GRAB SAMPLE HOOD IS 3/8 "-.049 WALL OR 1/4 "-.065 WALL - 316 SS TO PRESSURE REDUCING VALVES; 3/8 "-.049 WALL - 316 SS TO FLOW METERS FOR ANALYZERS AND GRAB SAMPLE VALVES; 1/4 "-.049 WALL - 316 SS TO ANALYZERS AND GRAB SAMPLE VALVES, ALL PER ASTM-A-213.
9. DELETED
10. SAMPLE DELAY TIME OF 60 SECONDS INSIDE MISSILE BARRIER (IMB) REQUIRED FOR N-16 DECAY.
11. ISOLATION VALVES ASSOCIATED WITH THE GRAB SAMPLE VESSELS ASSEMBLIES ARE TO BE CLOSED EXCEPT DURING GRAB SAMPLE OPERATION.
12. SAMPLE BOTTLE ASSEMBLY IS STORED AT A REMOTE LOCATION BY CHEMISTRY.
13. GRAB SAMPLE QUICK DISCONNECT FITTINGS MAY BE UTILIZED FOR OTHER IN-LINE SAMPLING INSTRUMENTATION.
14. ☐ INDICATES EQUIPMENT CONNECTIONS IN ACCORDANCE WITH ORBISPHERE LABORATORIES DWG 4586-S-100.
15. THERMAL SHUTOFF VALVE BY SENTRY EQUIPMENT CORPORATION.
16. GRAB SAMPLE QUICK DISCONNECT FITTINGS MAY BE UTILIZED AT THIS LOCATION FOR ARGON INJECTION TO VOLUME CONTROL TANK REFERENCE M1-0243-01 (B-6).

FSAR FIGURE 9.3-4

THIS DRAWING CREATED ELECTRONICALLY

DRAWING 2323-M1-0228 REV CP-7
HAS BEEN SPLIT INTO THE FOLLOWING SHEETS:
M1-0228
M1-0228-A
M1-0228-B

CLASS I
(NUCLEAR SAFETY-RELATED)
SAFETY CLASS 1 SAFETY CLASS 2 SAFETY CLASS 3 — SEISMIC CATEGORY I CLASS 1E ASSOCIATED CIRCUITS

LUMINANT
CPSES
GLEN ROSE, TEXAS

FLOW DIAGRAM
PROCESS SAMPLING
SYSTEM

DWG. NO. M1-0228 | SH. NO. A | REV. CP-22

FINAL PRINT

me0006ge.dgn M1-0228-A

REF CHKD 11/06/2002

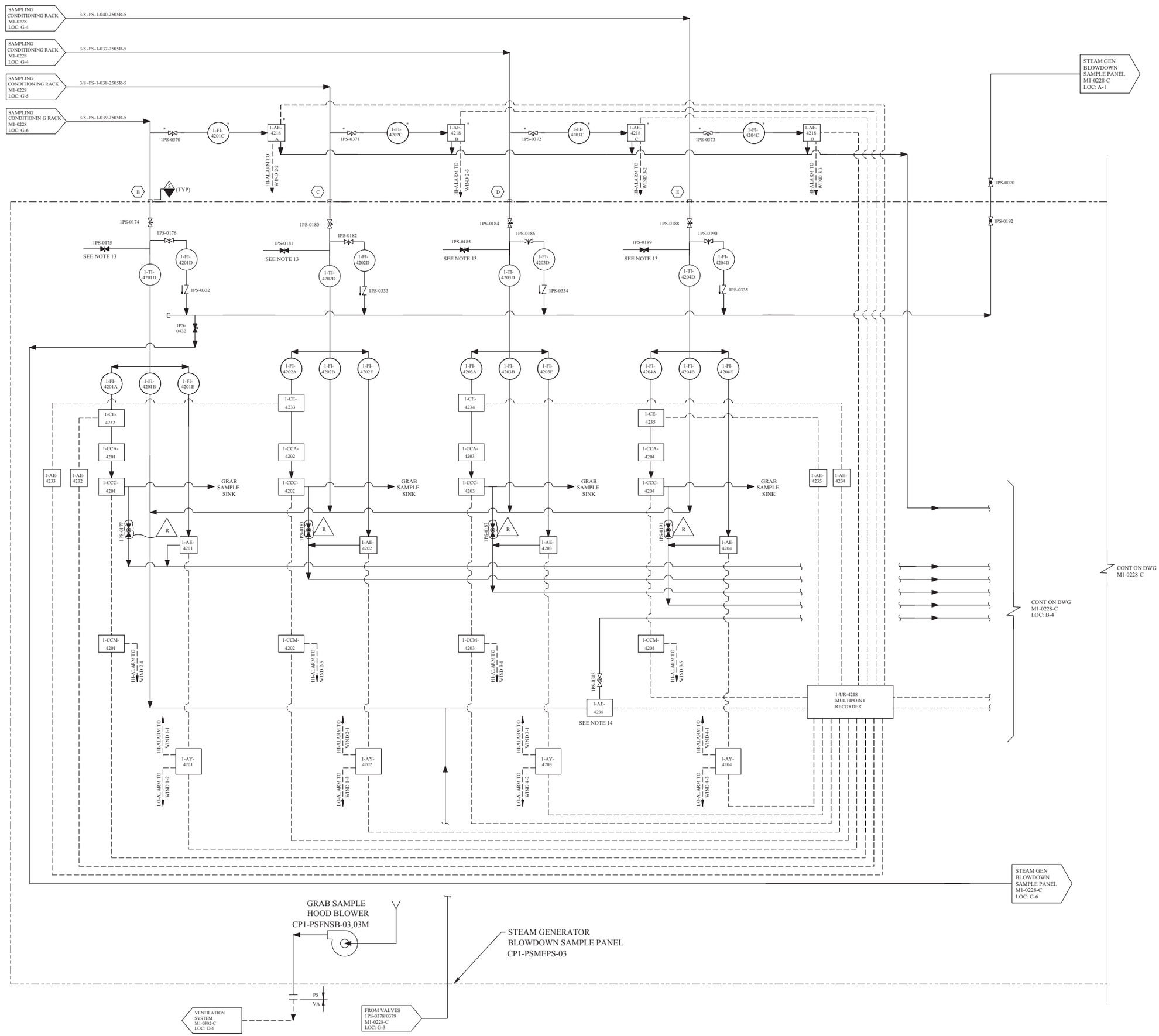

REV	DWN	CHKD	APVD	REMARKS
CP-14	DGK 07-06-2004	MM 07-07-2004		THIS DRAWING REVISED TO INCORPORATE DESIGN CHANGE FDA 2000-0032261-02-00 PER SK-0018-00-00261-02-00.

NOTES:

1. TAG NUMBERS:
   GRAB SAMPLE HOOD ASSEMBLY CP1-PSMEPS-01 ,
   SAMPLE CONDITIONING RACK CP1-PSMEPS-02 ;
   STEAM GENERATOR BLOWDOWN SAMPLE PANEL CP1-PSMEPS-03 .
2. RADIATION MONITOR LOCATED REMOTELY OUTSIDE SAMPLE ROOM.
3. FOR MECHANICAL SYMBOLS AND NOTES SEE DRAWING M1-0200.
4. ⬡ INDICATE EQUIPMENT NOZZLE CONNECTIONS IN ACCORDANCE WITH WATER EQUIPMENT INC DWG 58696, 58697, AND 58698.
5. PARALLEL SAMPLE COOLERS PRESURE REDUCERS, AND REGULATOR ARE PROVIDED TO ASSURE ADEQUATE SAMPLE PURGE RATES.
6. PARALLEL PRESSURE REGULATORS AND RELATED HARDWARE WERE ADDED TO ASSURE ADEQUATE SAMPLE PURGE RATES.
7. ALL pH AND CONDUCTIVITY HAVE AUTOMATIC TEMPERATURE COMPENSATION.
8. TUBING IN RACK 3/8 "- .065 WALL - 316 SS
   TUBING IN BLOWDOWN SAMPLE PANEL AND GRAB SAMPLE HOOD IS 3/8 " OR 1/4 "- .065 WALL -316 SS TO PRESSURE REDUCING VALVES; 3/8 " - .049 WALL - 316 SS TO FLOW METERS FOR ANALYZERS AND GRAB SAMPLE VALVES; 1/4 "- .049. ALL 316 SS TO ANALYZERS AND GRAB SAMPLE VALVES; ALL PER ASTM-A-213.
9. RECORDER CHART SPEED - 2 INCHES PER HOUR.
10. SAMPLE DELAY TIME OF 60 SECONDS INSIDE MISSILE BARRIER (IMB) REQUIRED FOR N-16 DECAY.
11. SAFETY CLASS 2 TUBING MATERIAL:
    SA213, TYPE 316 TUBING
    3/8 OD x 0.049 WALL
    DESIGN PRESS 2485 PSIG
    DESIGN TEMP 650°
12. * MOUNTED LOCALLY OFF PANEL.
13. VALVE LOCATED AT GRAB SAMPLE SINK.
14. 1-AE-4238 IS MOUNTED ON THE WALL.

FSAR FIGURE 9.3-4

THIS DRAWING CREATED ELECTRONICALLY

DRAWING M1-0228-B REV CP-5
HAS BEEN SPLIT INTO THE FOLLOWING SHEETS:
M1-0228-B
M1-0228-C

DRAWING M1-0228 REV CP-7
HAS BEEN SPLIT INTO THE FOLLOWING SHEETS:
M1-0228
M1-0228-A
M1-0228-B

CLASS II

LUMINANT
CPSES
GLEN ROSE, TEXAS

FLOW DIAGRAM
PROCESS SAMPLING
SYSTEM

DWG. NO. M1-0228 | SH. NO. B | REV. CP-14

FINAL PRINT

REF CKD 3-26-98 CP-12

me573200.dgn M1-0228-B

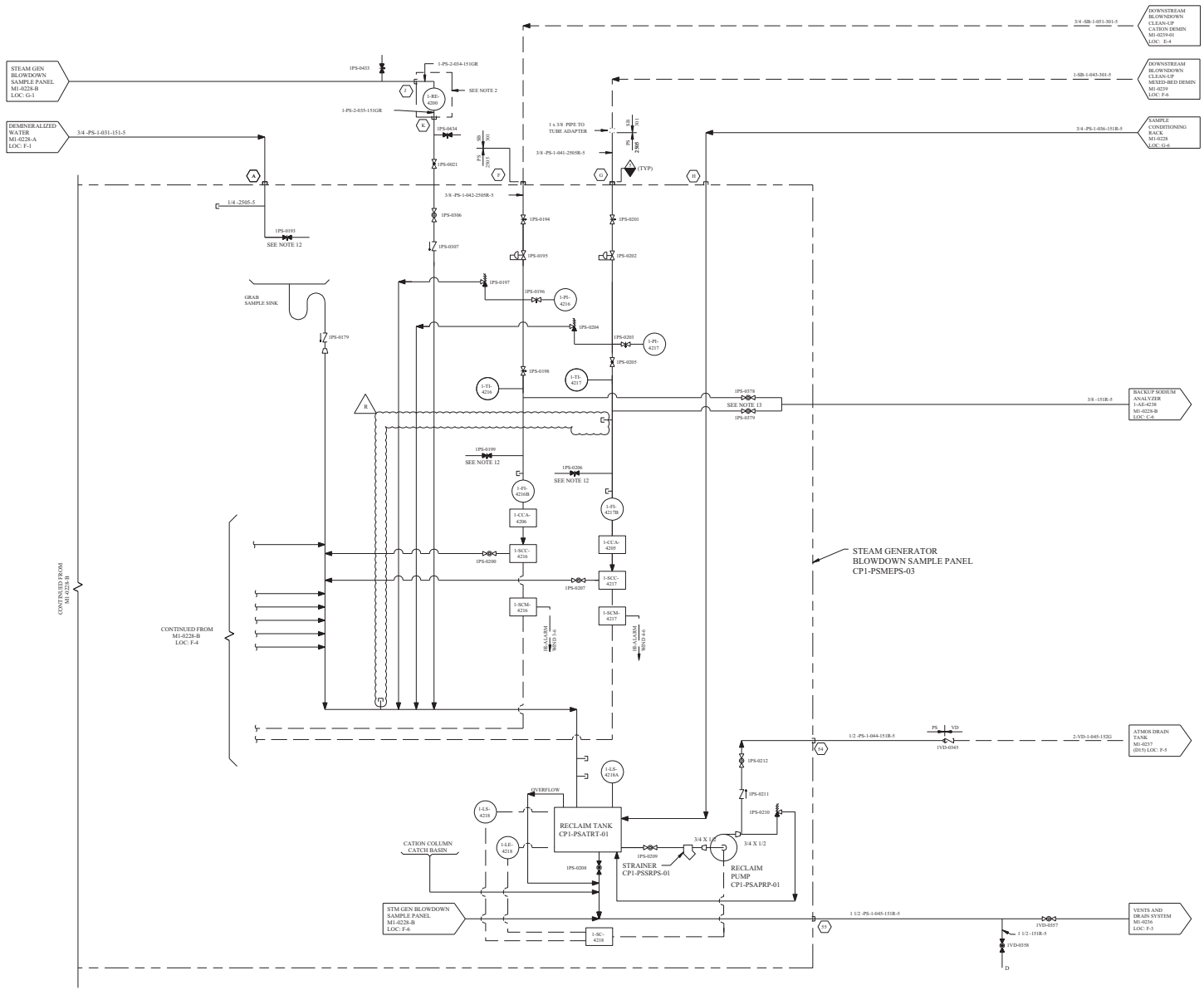

REV	DWN	CHKD	APVD	REMARKS
CP-10	SLK 06-27-2002	HOU 06-28-2002		THIS DRAWING REVISED TO INCORPORATE DESIGN CHANGE FDA 1999-002673-01-00 PER SK-0665-99-002673-01-00.

NOTES:

1. TAG NUMBERS:
   GRAB SAMPLE HOOD ASSEMBLY CP1-PSMEPS-01
   SAMPLE CONDITIONING RACK CP1-PSMEPS-02
   STEAM GENERATOR BLOWDOWN SAMPLE PANEL CP1-PSMEPS-03
2. RADIATION MONITOR LOCATED REMOTELY OUTSIDE SAMPLE ROOM.
3. FOR MECHANICAL SYMBOLS AND NOTES SEE DRAWING M1-0200.
4. ⬡ INDICATE EQUIPMENT NOZZLE CONNECTIONS IN ACCORDANCE WITH WATER EQUIPMENT INC. DWG 58696, 58697, AND 58698.
5. PARALLEL SAMPLE COOLERS PRESURE REDUCERS, AND REGULATOR ARE PROVIDED TO ASSURE ADEQUATE SAMPLE PURGE RATES.
6. PARALLEL PRESSURE REGULATORS AND RELATED HARDWARE WERE ADDED TO ASSURE ADEQUATE SAMPLE PURGE RATES.
7. ALL pH AND CONDUCTIVITY HAVE AUTOMATIC TEMPERATURE COMPENSATION.
8. TUBING IN RACK 3/8 "- 065 WALL - 316 SS
   TUBING IN BLOWDOWN SAMPLE PANEL AND GRAB SAMPLE HOOD IS 3/8 "
   OR 1/4 "- 065 WALL -316 SS TO PRESSURE REDUCING VALVES; 5/8 "- .049 WALL -316 SS TO FLOW METERS FOR ANALYZERS AND GRAB SAMPLE VALVES; 1/4 "- .049 ALL 316 SS TO ANALYZERS AND GRAB SAMPLE VALVES; ALL PER ASTM-A-213.
9. DELETED
10. SAMPLE DELAY TIME OF 60 SECONDS INSIDE MISSILE BARRIER (IMB) REQUIRED FOR N-16 DECAY.
11. SAFETY CLASS 2 TUBING MATERIAL:
    SA213, TYPE 316 TUBING
    3/8 OD x 0.049 WALL
    DESIGN PRESS 2485 PSIG
    DESIGN TEMP 650°
12. VALVE TO BE LOCATED AT GRAB SAMPLE SINK.
13. EITHER 1PS-0378 OR 1PS-0379 IS NORMALLY OPEN; THE OTHER IS NORMALLY CLOSED.

FSAR FIGURE 9.3-4

THIS DRAWING CREATED ELECTRONICALLY

DRAWING M1-0228-B	REV CP-5
HAS BEEN SPLIT INTO THE FOLLOWING SHEETS:	
M1-0228-B	
M1-0228-C	

DRAWING M1-0228	REV CP-7
HAS BEEN SPLIT INTO THE FOLLOWING SHEETS:	
M1-0228	
M1-0228-A	
M1-0228-B	

CLASS II

TXU ENERGY
CPSES
GLEN ROSE, TEXAS

FLOW DIAGRAM
PROCESS SAMPLING
SYSTEM

DWG. NO.	SH. NO.	REV.
M1-0228	C	CP-10

REF CKD 7-26-01 CP-6

SSSSSSDATSSSSS

mc449800.dgn M1-0228-C

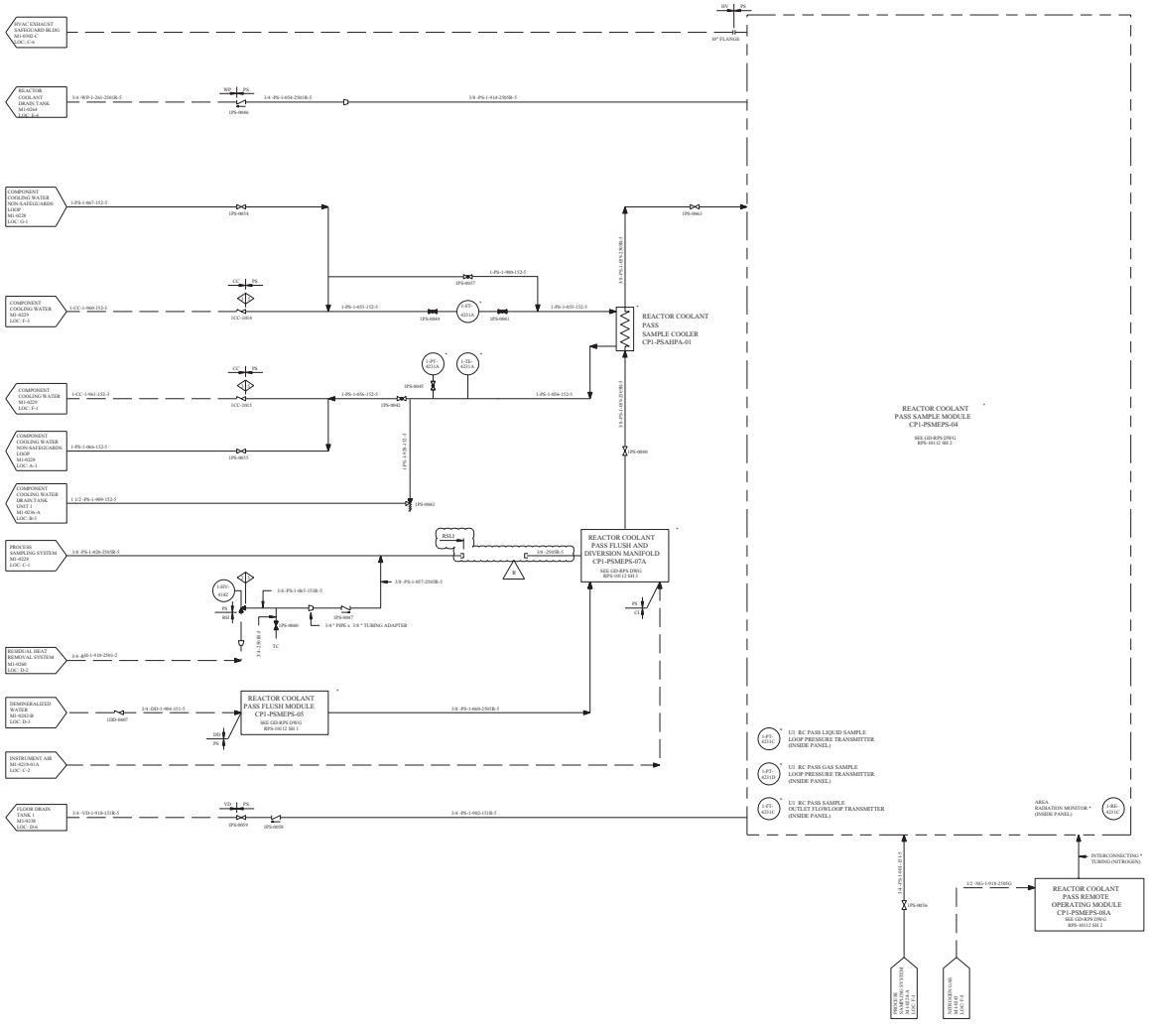

REV	DWN	CHK	APVD	REMARKS
0-20	N/A	N/A	N/A	THIS DRAWING REVISED TO INCORPORATE DESIGN CHANGE PDA 2003-00010,SEE SHEET 2 FOR DETAILS. EDITORIAL CHANGE AS NOTED.

NOTES:

1. THE INTERNAL DETAILS OF THE POST-ACCIDENT SAMPLE SYSTEM ARE SHOWN ON THE GENERAL DYNAMIC REACTOR PLANT SERVICES DRAWING INDICATED.
2. ALL ASTERISKED (*) EQUIPMENT IS SUPPLIED BY GENERAL DYNAMICS - REACTOR PLANT SERVICES.
3. ALL TUBING COMPRESSION FITTINGS ON THE RC PASS SAMPLE LINES WILL BE SEAL WELDED PER WELDING/PROCEDURE WPS-00021. NO VENDOR EQUIPMENT IS AFFECTED. THE AFFECTED LINES ARE AS FOLLOWS:

   1/8 -PS-1-620-250SR-5

   3/8 -PS-1-657-250SR-5

   3/8 -PS-1-659-250SR-5

   3/8 -PS-1-914-250SR-5

4. FOR MECHANICAL SYMBOLS AND NOTES SEE DRAWING M1-0200.
5. UNLESS OTHERWISE NOTED ALL DRAINS TO BE COLLECTED BY LOCAL FLOOR DRAIN SYSTEM.

EDITORIAL

FSAR FIGURE 9.3-4

THIS DRAWING IS REQUIRED FOR TRACEABILITY

CLASS I

(NUCLEAR SAFETY-RELATED)

SAFETY CLASS 1 — SEISMIC CATEGORY I
SAFETY CLASS 2 — CLASS 1E
SAFETY CLASS 3 — ASSOCIATED CIRCUITS

TXU ENERGY
CPSES
GLEN ROSE, TEXAS

FLOW DIAGRAM
POST-ACCIDENT
SAMPLING SYSTEM
REACTOR COOLANT

DWG. NO.	SH. NO.	REV.
M1-0228	01	CP-20

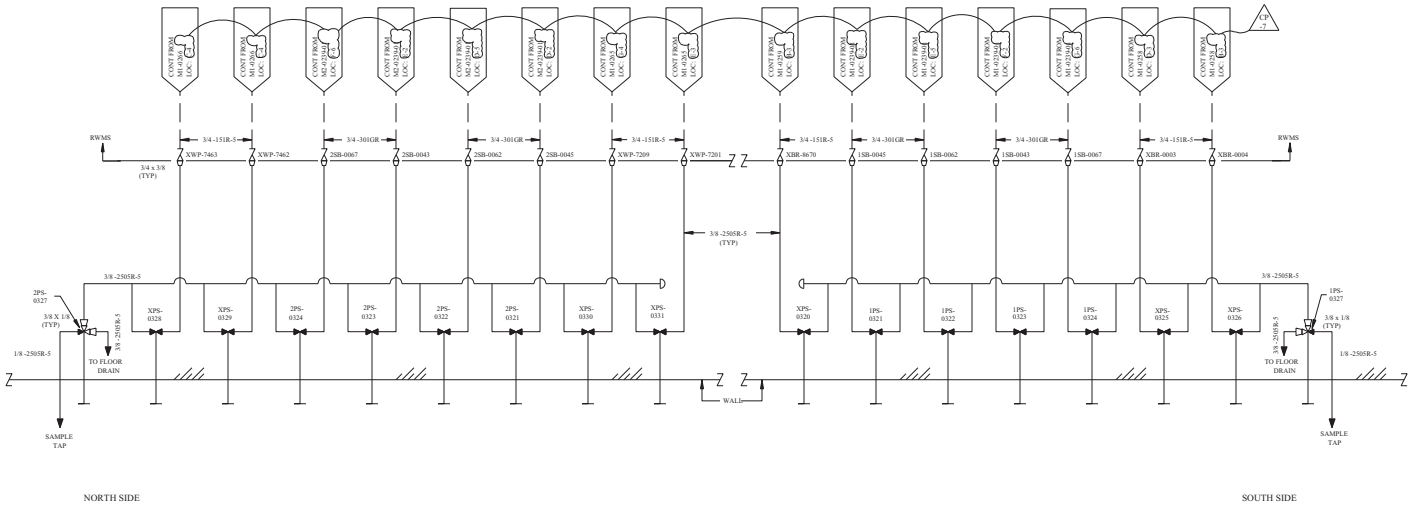

NORTH SIDE

SOUTH SIDE

REV	DWN	CHKD	APVD	REMARKS
CP-7	J.C. 02/11/1997			THIS DRAWING REVISED TO INCORPORATE EDITORIAL CHANGES AS NOTED.

NOTES:

1. FOR MECHANICAL SYMBOLS AND NOTES SEE DWG M1-0200.

CP-7

FSAR FIGURE 9.3-4

THIS DRAWING CREATED ELECTRONICALLY

CP-7

CLASS II

TXU ELECTRIC
CPSES
GLEN ROSE, TEXAS

FLOW DIAGRAM
AUXILIARY BUILDING DEMINERALIZER
SAMPLING STATION

DWG. NO.	SH. NO.	REV.
M1-0228	02	CP-7

vs0000zm.dgn

$$$$$$$D:\TESS$$$$$

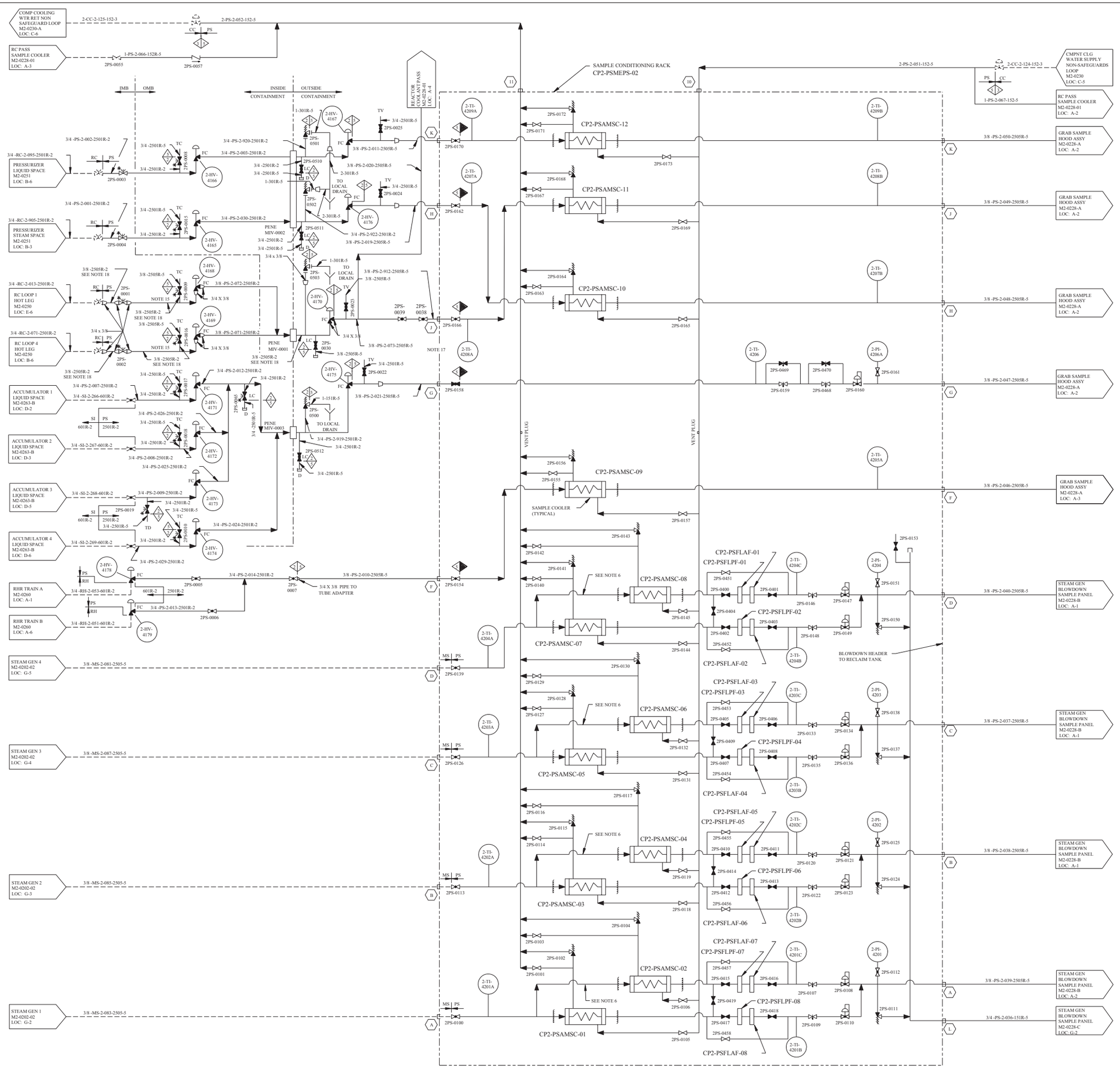

REV	DWN	CHKD	APVD	REMARKS
CP-17	JRMC 03-06-2006	DJL 03-10-2006		THIS DRAWING REVISED TO INCORPORATE DESIGN CHANGE FDA 2004-000371-01-00 PER SK-0004-04-000371-01-00.

NOTES:

1. TAG NUMBERS
   GRAB SAMPLE HOOD ASSEMBLY CP2-PSMEPS-01
   SAMPLE CONDITIONING RACK CP2-PSMEPS-02
   STEAM GENERATOR BLOWDOWN SAMPLE PANEL CP2-PSMEPS-03
2. RADIATION MONITOR LOCATED REMOTELY OUTSIDE SAMPLE ROOM.
3. FOR MECHANICAL SYMBOLS AND NOTES SEE DWG M1-0200.
4. DELETED
5. ⬡ INDICATES EQUIPMENT NOZZLE CONNECTIONS IN ACCORDANCE WITH WATER EQUIPMENT INC DWG 58696, 58697 AND 58698.
6. PARALLEL SAMPLE COOLERS PRESSURE REDUCERS AND REGULATORS ARE PROVIDED TO ASSURE ADEQUATE SAMPLE PURGE RATES.
7. PARALLEL PRESSURE REGULATORS AND RELATED HARDWARE WERE ADDED TO ASSURE ADEQUATE SAMPLE PURGE RATES.
8. ALL pH AND CONDUCTIVITY HAVE AUTOMATIC TEMPERATURE COMPENSATION.
9. DELETED
10. DELETED
11. TUBING IN RACK 3/8 "- .065" WALL - 316 SS
    TUBING IN BLOWDOWN SAMPLE PANEL AND GRAB SAMPLE HOOD IS 3/8 " OR 1/4 " -.065" WALL - 316 SS TO PRESSURE REDUCING VALVES; 3/8 "-.049" WALL - 316 SS TO FLOW METERS FOR ANALYZERS AND GRAB SAMPLE VALVES; 1/4 "-.049" WALL - 316 SS TO ANALYZERS AND GRAB SAMPLE VALVES-ALL PER ASTM-A-213.
12. RECORDER CHART SPEED - 2 INCHES PER HOUR.
13. DELETED
14. DELETED
15. SAMPLE DELAY TIME OF 60 SECONDS OR GREATER IS REQUIRED FOR N-16 DECAY.
16. TUBE FITTINGS ON RC PASS TO BE SEAL WELDED PER WPS-88023.
17. TUBE-SIDE SWAGELOK FITTING TO BE SEAL WELDED.
18. SAFETY CLASS 2 TUBING MATERIAL:
    SA213, TYPE 316; TUBING
    3/8 " ODx0.049" WALL
    DESIGN PRESS 2485 PSIG
    DESIGN TEMP 650^

FSAR FIGURE 9.3-4

THIS DRAWING CREATED ELECTRONICALLY

DRAWING 2323-M2-0228	REV CP-2
HAS BEEN SPLIT INTO THE FOLLOWING SHEETS:	
M2-0228	
M2-0228-A	
M2-0228-B	
M2-0228-C	

CLASS I
(NUCLEAR SAFETY-RELATED)
SAFETY CLASS 1 — SEISMIC CATEGORY I
SAFETY CLASS 2 — CLASS 1E
SAFETY CLASS 3 — ASSOCIATED CIRCUITS

TXU POWER
CPSES
GLEN ROSE, TEXAS

FLOW DIAGRAM
PROCESS SAMPLING
SYSTEM

DWG. NO.	SH. NO.	REV.
M2-0228	-	CP-17

FINAL PRINT

REF CKD 3/14/97 CP-12

me698500.dgn A M2-0228

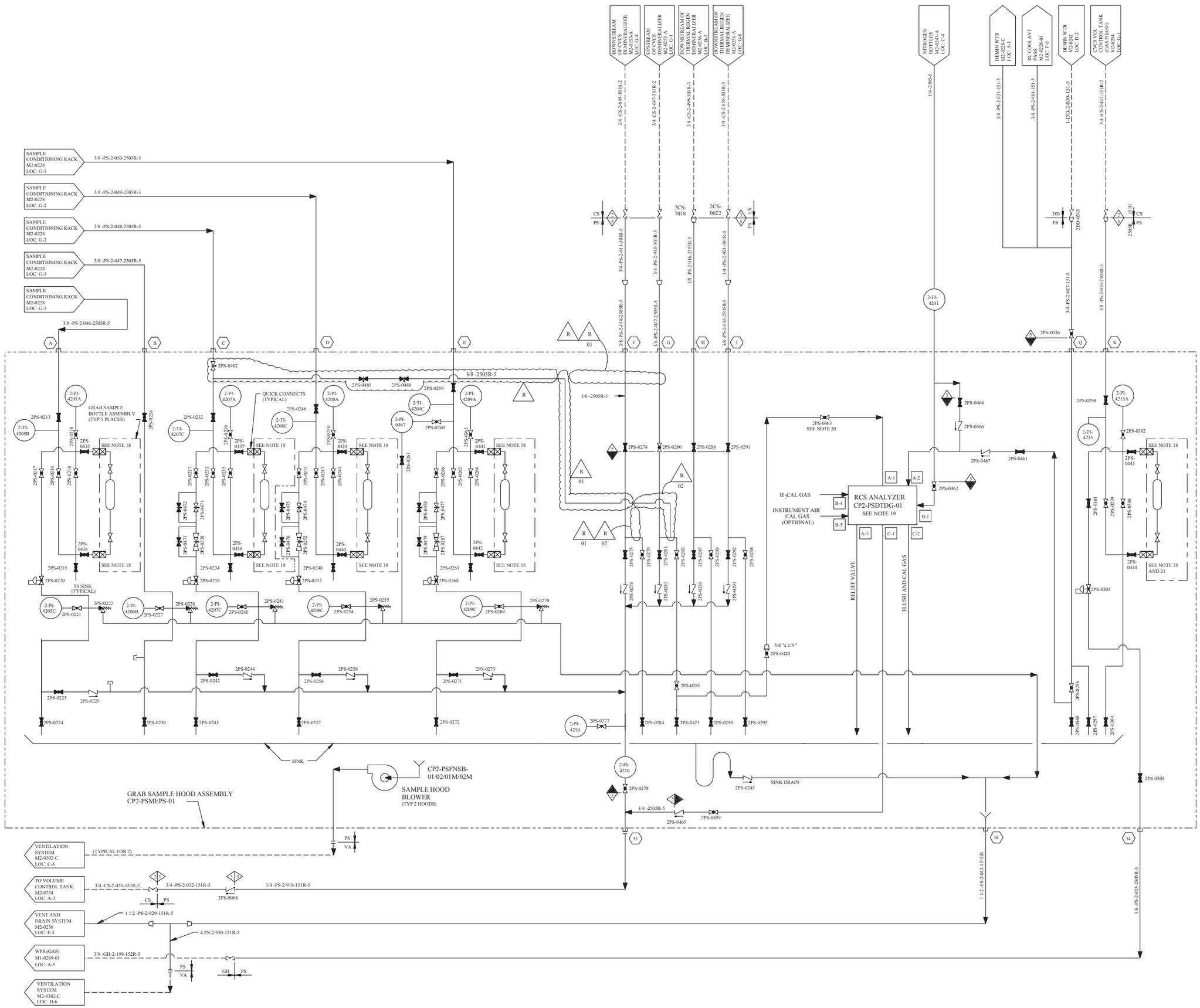

REV	DWN	CHKD	APVD	REMARKS
CP-15	GES 07-21 2007	RMO 07-21 2007		THIS DRAWING REVISED TO INCORPORATE DESIGN CHANGE FDA 2007-002268-01-02 PER SK-0002-07-002268-01-02.

NOTES:

1. DELETED
2. DELETED
3. FOR MECHANICAL SYMBOLS AND NOTES SEE DWG M1-0200.
4. DELETED
5. ⬡ INDICATES EQUIPMENT NOZZLE CONNECTIONS IN ACCORDANCE WITH WATER EQUIPMENT INC DWG 58696, 58697 AND 58698.
6. DELETED
7. DELETED
8. DELETED
9. DELETED
10. DELETED
11. TUBING IN RACK 3/8 "-.065" WALL - 316 SS
    TUBING IN BLOWDOWN SAMPLE PANEL AND GRAB SAMPLE HOOD IS 3/8 " OR 1/4 " -.065" WALL - 316 SS TO PRESSURE REDUCING VALVES; 3/8 "-.049" WALL - 316 SS TO FLOW METERS FOR ANALYZERS AND GRAB SAMPLE VALVES; 1/4 "-.049" WALL - 316 SS TO ANALYZERS AND GRAB SAMPLE VALVES-ALL PER ASTM-A-213.
12. DELETED
13. DELETED
14. DELETED
15. DELETED
16. DELETED
17. SAMPLE BOTTLE ASSEMBLY IS STORED AT A REMOTE LOCATION BY CHEMISTRY.
18. GRAB SAMPLE QUICK DISCONNECT FITTINGS MAY BE UTILIZED FOR OTHER IN-LINE SAMPLING INSTRUMENTATION.
19. ☐ INDICATES EQUIPMENT CONNECTIONS IN ACCORDANCE WITH ORBISPHERE LABORATORIES DWG 4565-S-100.
20. THERMAL SHUTOFF VALVE BY SENTRY EQUIPMENT CORPORATION.
21. GRAB SAMPLE QUICK DISCONNECT FITTINGS MAY BE UTILIZED AT THIS LOCATION FOR ARGON INJECTION TO VOLUME CONTROL TANK REFERENCE M2-0243-02 (C-5).

FSAR FIGURE 9.3-4

THIS DRAWING CREATED ELECTRONICALLY

DRAWING 2323-M2-0228 REV CP-2
HAS BEEN SPLIT INTO THE FOLLOWING SHEETS:

M2-0228
M2-0228-A
M2-0228-B
M2-0228-C

CLASS I
(NUCLEAR SAFETY-RELATED)
SAFETY CLASS 1 — SEISMIC CATEGORY I
SAFETY CLASS 2 — CLASS 1E
SAFETY CLASS 3 — ASSOCIATED CIRCUITS

LUMINANT
CPSES
GLEN ROSE, TEXAS

FLOW DIAGRAM
PROCESS SAMPLING
SYSTEM

DWG. NO. M2-0228 | SH. NO. A | REV. CP-15

FINAL PRINT

REF CHKD 11/06/2002

me0006gf.dgn A M2-0228-A

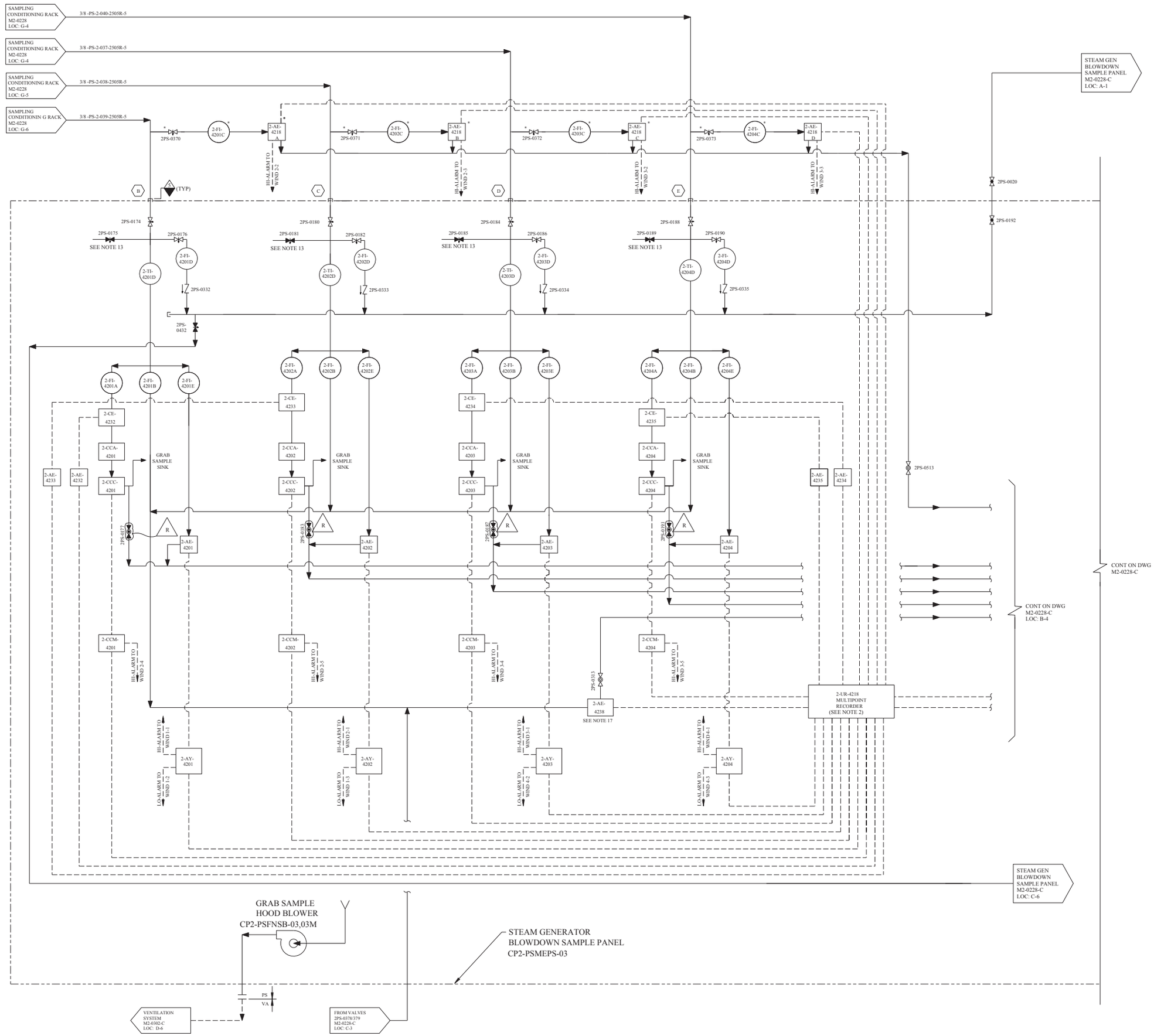

REV	DWN	CHKD	APVD	REMARKS
CP-11	G.K. 07-06-2004	MM 07-07-2004		THIS DRAWING REVISED TO INCORPORATE DESIGN CHANGE FDA 2000-003261-02-00 PER SK-0019-00-003261-02-00.

NOTES:

1. TAG NUMBERS:
   GRAB SAMPLE HOOD ASSEMBLY CP2-PSMEPS-01
   SAMPLE CONDITIONING RACK CP2-PSMEPS-02
   STEAM GENERATOR BLOWDOWN SAMPLE PANEL CP2-PSMEPS-03
2. RADIATION MONITOR LOCATED REMOTELY OUTSIDE SAMPLE ROOM.
3. **FOR MECHANICAL SYMBOLS AND NOTES SEE DWG M1-0200.**
4. * MOUNTED LOCALLY OFF PANEL.
5. ⬡ **INDICATES EQUIPMENT NOZZLE CONNECTIONS IN ACCORDANCE WITH** WATER EQUIPMENT INC DWG 58696, 58697 AND 58698.
6. PARALLEL SAMPLE COOLERS PRESSURE REDUCERS AND REGULATORS ARE PROVIDED TO ASSURE ADEQUATE SAMPLE FLOW.
7. PARALLEL PRESSURE REGULATORS AND RELATED HARDWARE WERE ADDED TO ASSURE ADEQUATE SAMPLE PURGE RATES.
8. ALL pH AND CONDUCTIVITY HAVE AUTOMATIC TEMPERATURE COMPENSATION.
9. DELETED
10. DELETED
11. TUBING IN RACK 3/8 "- .065" WALL - 316 SS
    TUBING IN BLOWDOWN SAMPLE PANEL AND GRAB SAMPLE HOOD IS 3/8 " OR 1/4 " - .065" WALL - 316 SS TO PRESSURE REDUCING VALVES; 3/8 "- .049" WALL - 316 SS TO FLOW METERS FOR ANALYZERS AND GRAB SAMPLE VALVES; 1/4 "- .049" WALL - 316 SS TO ANALYZERS AND GRAB SAMPLE VALVES-ALL PER ASTM-A-213.
12. **RECORDER CHART SPEED - 2 INCHES PER HOUR.**
13. VALVE LOCATED AT GRAB SAMPLE SINK.
14. **DELETED**
15. SAMPLE DELAY TIME OF 60 SECONDS OR GREATER IS REQUIRED FOR N-16 DECAY.
16. TUBE FITTINGS ON RC PASS TO BE SEAL WELDED PER WPS-88023.
17. 2-AE-4238 MOUNTED ON WALL.

FSAR FIGURE 9.3-4

THIS DRAWING CREATED ELECTRONICALLY

DRAWING 2323-M2-0228 REV CP-2
HAS BEEN SPLIT INTO THE FOLLOWING SHEETS:

M2-0228
M2-0228-A
M2-0228-B
M2-0228-C

CLASS II

LUMINANT
CPSES
GLEN ROSE, TEXAS

FLOW DIAGRAM
PROCESS SAMPLING
SYSTEM

DWG. NO. M2-0228 | SH. NO. B | REV. CP-11

FINAL PRINT

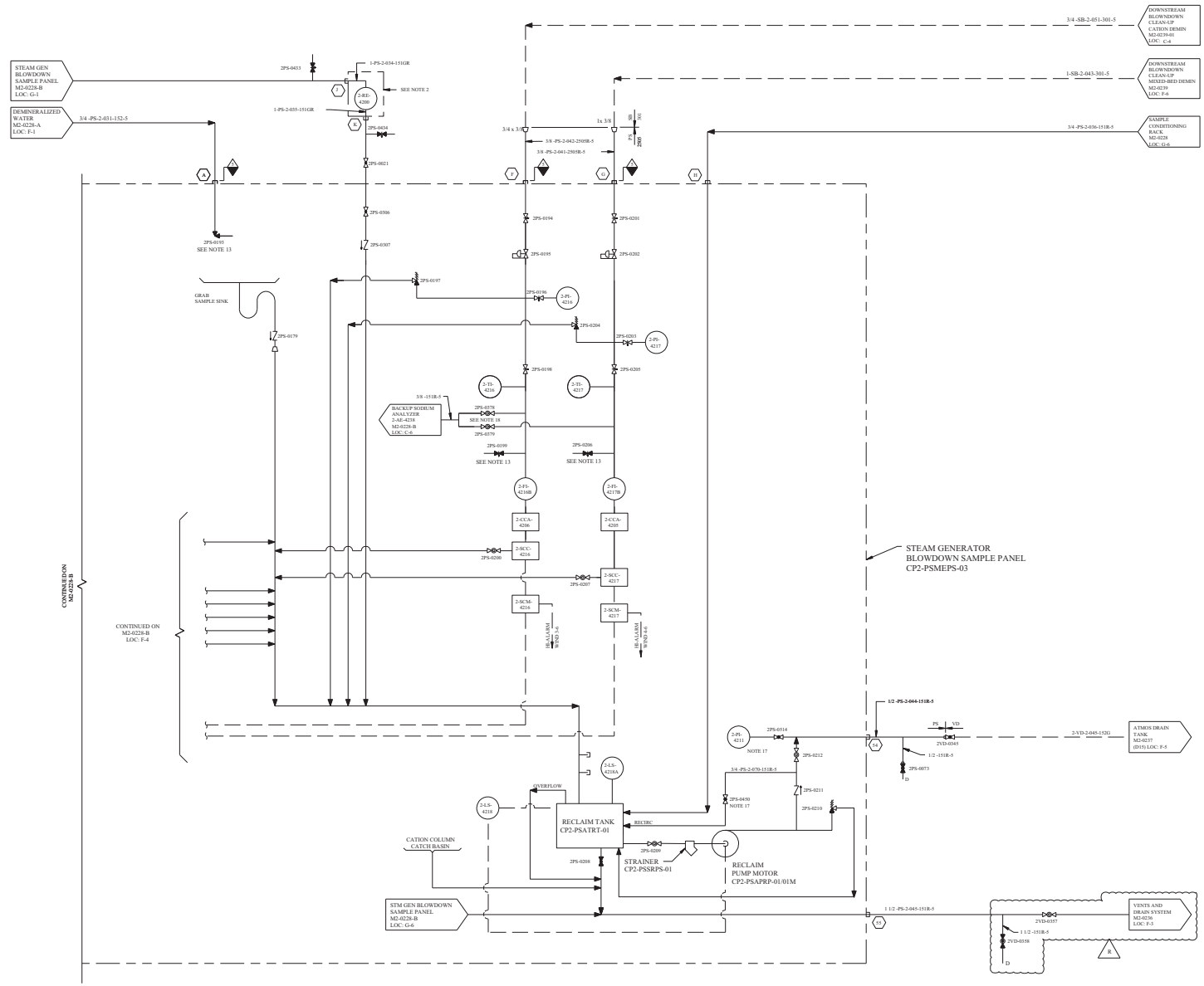

REV	DWN	CHKD	APVD	REMARKS
CP-9	HCR 10-15-2001	HFE 10-15-2001		THIS DRAWING REVISED TO INCORPORATE DESIGN CHANGE EDA 1999-008214-01-00 FER SK-0002-99-008214-01-00.

NOTES:

1. TAG NUMBERS
   GRAB SAMPLE HOOD ASSEMBLY CP2-PSMEPS-01
   SAMPLE CONDITIONING RACK CP2-PSMEPS-02
   STEAM GENERATOR BLOWDOWN SAMPLE PANEL CP2-PSMEPS-03
2. RADIATION MONITOR LOCATED REMOTELY OUTSIDE SAMPLE ROOM.
3. FOR MECHANICAL SYMBOLS AND NOTES SEE DWG M1-0200.
4. DELETED
5. ◯ INDICATES EQUIPMENT NOZZLE CONNECTIONS IN ACCORDANCE WITH WATER EQUIPMENT INC DWG 58696, 58697 AND 58698.
6. PARALLEL SAMPLE COOLERS PRESSURE REDUCERS AND REGULATORS ARE PROVIDED TO ASSURE ADEQUATE SAMPLE FLOW.
7. PARALLEL PRESSURE REGULATORS AND RELATED HARDWARE WERE ADDED TO ASSURE ADEQUATE PURGE RATES.
8. ALL pH AND CONDUCTIVITY HAVE AUTOMATIC TEMPERATURE COMPENSATION.
9. DELETED
10. DELETED
11. TUBING IN RACK 3/8 "-.065" WALL - 316 SS
    TUBING IN BLOWDOWN SAMPLE PANEL AND GRAB SAMPLE HOOD IS 3/8 " OR 1/4 " -.065" WALL - 316 SS TO PRESSURE REDUCING VALVES; 3/8 "-.049" W ALL - 316 SS TO FLOW METERS FOR ANALYZERS AND GRAB SAMPLE VALVES; 1/4 "-.049" WALL - 316 SS TO ANALYZERS AND GRAB SAMPLE VALVES-ALL PER ASTM-A-213.
12. RECORDER CHART SPEED - 2 INCHES PER HOUR.
13. VALVE TO BE LOCATED AT GRAB SAMPLE SINK.
14. DELETED
15. SAMPLE DELAY TIME OF 60 SECONDS OR GREATER IS REQUIRED FOR N-16 DECAY.
16. TUBE FITTINGS ON RC PASS TO BE SEAL WELDED PER WPS-80023.
17. THROTTLE RECIRC VALVE, 2PS-0450 , TO OBTAIN A PRESSURE BETWEEN 60 PSIG (MIN) AND 80 PSIG (MAX) AT 2-PI-4211 FOR PROPER FLOW RATE FROM RECLAIM TANK.
18. EITHER 2PS-0378 OR 2PS-0379 IS NORMALLY OPEN; THE OTHER ONE IS NORMALLY CLOSED.

FSAR FIGURE 9.3-4

THIS DRAWING CREATED ELECTRONICALLY

DRAWING 2323-M2-0228 REV CP-2 HAS BEEN SPLIT INTO THE FOLLOWING SHEETS:
M2-0228
M2-0228-A
M2-0228-B
M2-0228-C

CLASS II

TXU ELECTRIC
CPSES
GLEN ROSE, TEXAS

FLOW DIAGRAM
PROCESS SAMPLING
SYSTEM

DWG. NO.	DH. NO.	REV.
M2-0228	C	CP-9

mc346100.dgn M2-0228-C

REV	DWN	CHKD	APVD	REMARKS
CP-10	DLK 06-23 2003	MM 06-23 2003		THIS DRAWING REVISED TO INCORPORATE DESIGN CHANGE FDA 2001-002362-01-00 PER SK-0037-01-002362-01-00. EDITORIAL CHANGE AS NOTED.

NOTES:

1. THE INTERNAL DETAILS OF THE POST-ACCIDENT SAMPLE SYSTEM ARE SHOWN ON THE GENERAL DYNAMICS REACTOR PLANT SERVICES DRAWING INDICATED.
2. ALL ASTERISKED (*) EQUIPMENT IS SUPPLIED BY GENERAL DYNAMICS - REACTOR PLANT SERVICES. (GD-RPS)
3. PASS IS POST ACCIDENT SAMPLING SYSTEM.
4. ALL 3/8 RC AND RH SAMPLE TUBE FITTINGS ARE TO BE SEAL WELDED, PER WPS88023.
5. TUBE FITTINGS ON RC PASS TO BE SEAL WELDED PER WPS 88023.
6. FOR MECHANICAL SYMBOLS AND NOTES SEE DRAWING M1-0200.
7. UNLESS OTHERWISE NOTED ALL DRAINS TO BE COLLECTED BY LOCAL FLOOR DRAIN SYSTEM.

R
EDITORIAL

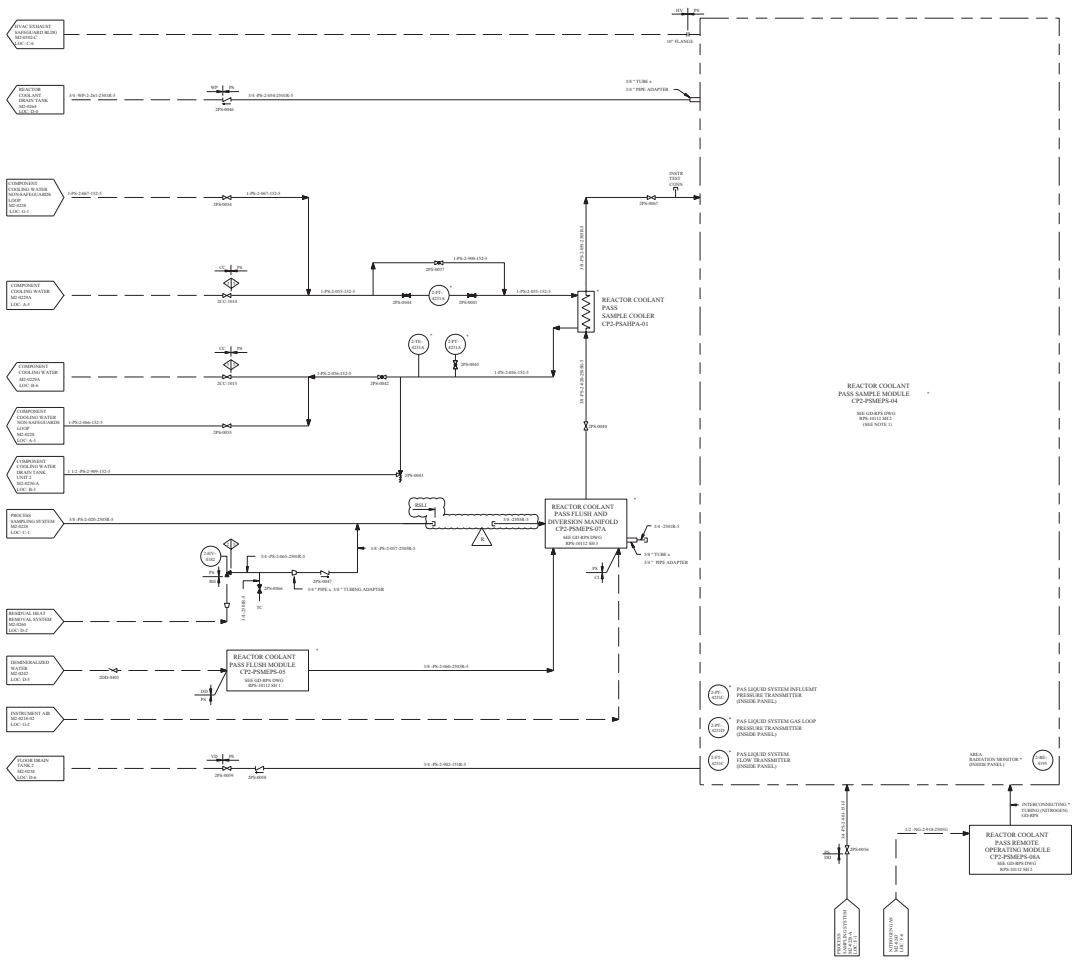

FSAR FIGURE 9.3-4

THIS DRAWING CREATED ELECTRONICALLY

CLASS I
(NUCLEAR SAFETY-RELATED)
SAFETY CLASS 1 SEISMIC CATEGORY I
SAFETY CLASS 2 CLASS 1E
SAFETY CLASS 3 ASSOCIATED CIRCUITS

TXU POWER
CPSES
GLEN ROSE, TEXAS

FLOW DIAGRAM
POST-ACCIDENT
SAMPLING SYSTEM
REACTOR COOLANT

DWG. NO.	SH. NO.	REV.
M2-0228	01	CP-10

REF CKD CP-8 12/11/96

$$$$$$$$DATE$$$$$$$$

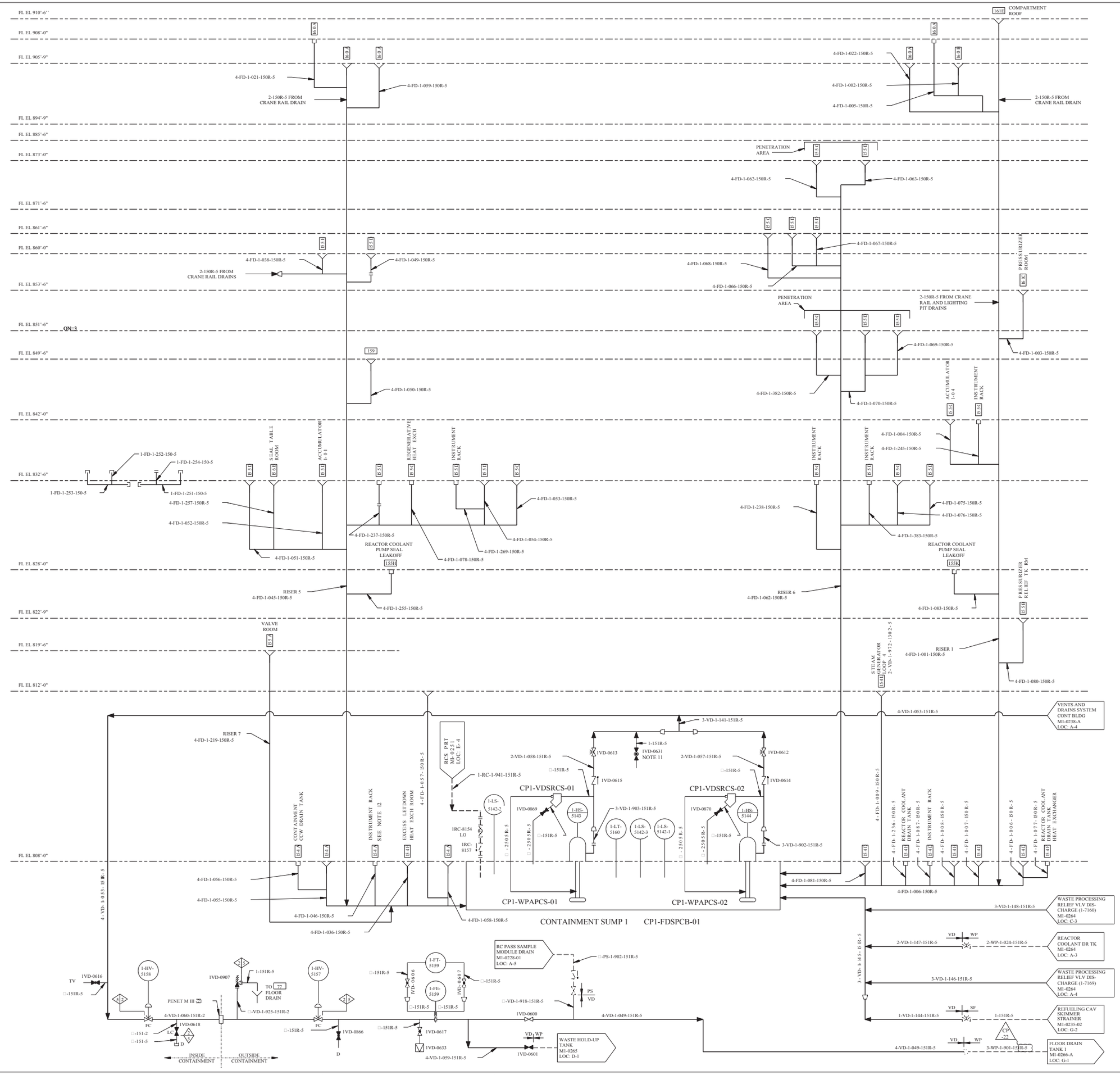

REV	DWN	CHK	APVD	REMARKS
CP-22	DCK 10-28 2015	EGW 10-28 2015	MHF 10-29 2015	THIS DRAWING REVISED TO INCORPORATE AI-CR-2015-010410-1 TO EDITORIALLY ADD R TO LINE NUMBER 3-WP-1-901-151-5.

NOTES:

1. DELETED
2. FOR MECHANICAL SYMBOLS AND NOTES SEE DWG M1-0200.
3. THE BOXED-IN NUMBERS DESIGNATE THE SPECIFIC ROOM NUMBERS ON THE PLUMBING DRAWING SHOWING VARIOUS DRAIN LOCATIONS.
4. FOR DRAIN SYMBOLS SEE DWG M1-0236 NOTE 4.
5. THIS SYSTEM IS NON-NUCLEAR SAFETY CLASS EXCEPT AS NOTED.
6. DELETED
7. TEST GROOVE DRAINS ARE □" SS TUBING.
8. PIPING DESIGNATED FD IS PROCURED BY SPECIFICATION MS-73. PIPING DESIGNATED VD IS PROCURED BY SPECIFICATION MS-43A AND MS-44A.
9. FOR CONDENSATE MEASURING SYSTEM SEE DWG M1-0238-0A, LOC: H-3.
10. UNLESS OTHERWISE NOTED DRAINS COLLECTED BY LOCAL DRAIN SYSTEM.
11. ISOLATION VALVE PROVIDED FOR TEMPORARY SUMP PUMP CONNECTION.
12. EQUIPMENT DRAIN IS COVERED WITH REMOVABLE CAP.

FSAR FIGURE 9.3-5

THIS DRAWING CREATED ELECTRONICALLY

DRAWING 2323-M1-0238 REV CP-5
HAS BEEN SPLIT INTO THE FOLLOWING SHEETS:
M1-0238
M1-0238-A

CLASS I
(NUCLEAR SAFETY-RELATED)
SAFETY CLASS 1 / SAFETY CLASS 2 / SAFETY CLASS 3 — SEISMIC CATEGORY I / CLASS IE / ASSOCIATED CIRCUITS

LUMINANT
CPNPP
GLEN ROSE, TEXAS

FLOW DIAGRAM
VENTS AND DRAINS SYSTEM
CONTAINMENT BUILDING

DWG. NO. M1-0238 | SH. NO. - | REV. CP-22

< FINAL PRINT >

me848500.dgn M1-0238

REF CHKD 11/03/2003

$$$$$$$DATE$$$$$$

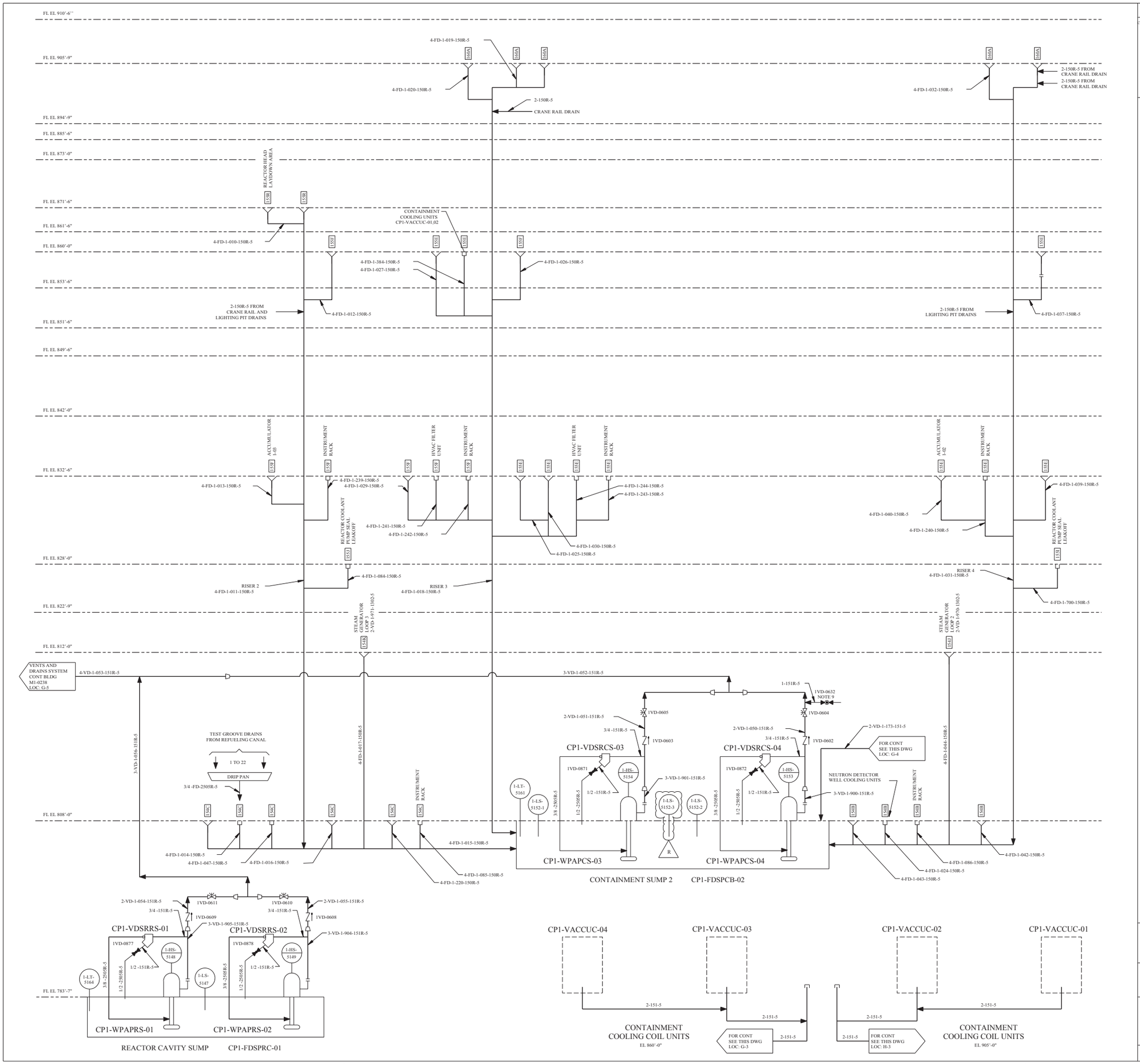

REV	DWN	CHKD	APVD	REMARKS
CP-12	DGK 07-11 2005	MM 07-12 2005		THIS DRAWING REVISED TO INCORPORATE DESIGN CHANGE FDA 2005-002581-01-00 PER SK-0004-05-002581-01-00.

NOTES:

1. DELETED
2. FOR MECHANICAL SYMBOLS AND NOTES SEE DWG M1-0200.
3. THE BOXED-IN NUMBERS DESIGNATE THE SPECIFIC ROOM NUMBERS ON THE PLUMBING DRAWING SHOWING VARIOUS DRAIN LOCATIONS.
4. FOR DRAIN SYMBOLS SEE DWG M1-0236 NOTE 4.
5. THIS SYSTEM IS NON-NUCLEAR SAFETY CLASS EXCEPT AS NOTED.
6. TEST GROOVE DRAINS ARE 3/4 " S.S. TUBING.
7. PIPING DESIGNATED "FD" IS PROCURED BY SPECIFICATION MS-73. PIPING DESIGNATED "VD" IS PROCURED BY SPECIFICATION MS-43A AND MS-44A.
8. UNLESS OTHERWISE NOTED DRAINS COLLECTED BY LOCAL DRAIN SYSTEM.
9. ISOLATION VALVE PROVIDED FOR TEMPORARY SUMP PUMP CONNECTION.

R

CONTAINMENT COOLING UNITS CONDENSATE MEASURING SYSTEM

(2 PER CONTAINMENT)

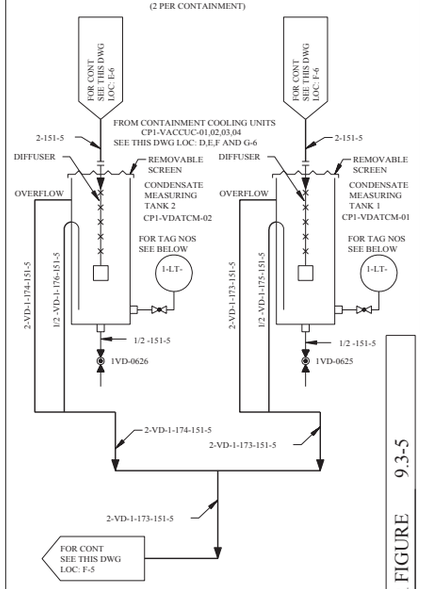

LEVEL TRANSMITTER AND BLOCK VALVE TAG NOS

CONDENSATE MEASURING TANK	FLOOR EL	1-LT-	1VD-
CP1-VDATCM-02	860'-0"	5162	0619
CP1-VDATCM-01	905'-9"	5163	0620

FSAR FIGURE 9.3-5

THIS DRAWING CREATED ELECTRONICALLY

DRAWING 2323-M1-0238 REV CP-5
HAS BEEN SPLIT INTO THE FOLLOWING SHEETS:
M1-0238
M1-0238-A

CLASS II

TXU POWER
CPSES
GLEN ROSE, TEXAS

FLOW DIAGRAM
VENTS AND DRAINS SYSTEM
CONTAINMENT BUILDING

DWG. NO.	SH. NO.	REV.
M1-0238	A	CP-12

FINAL PRINT

REF CHKD 11/03/2003

me609700.dgn A M1-0238-A

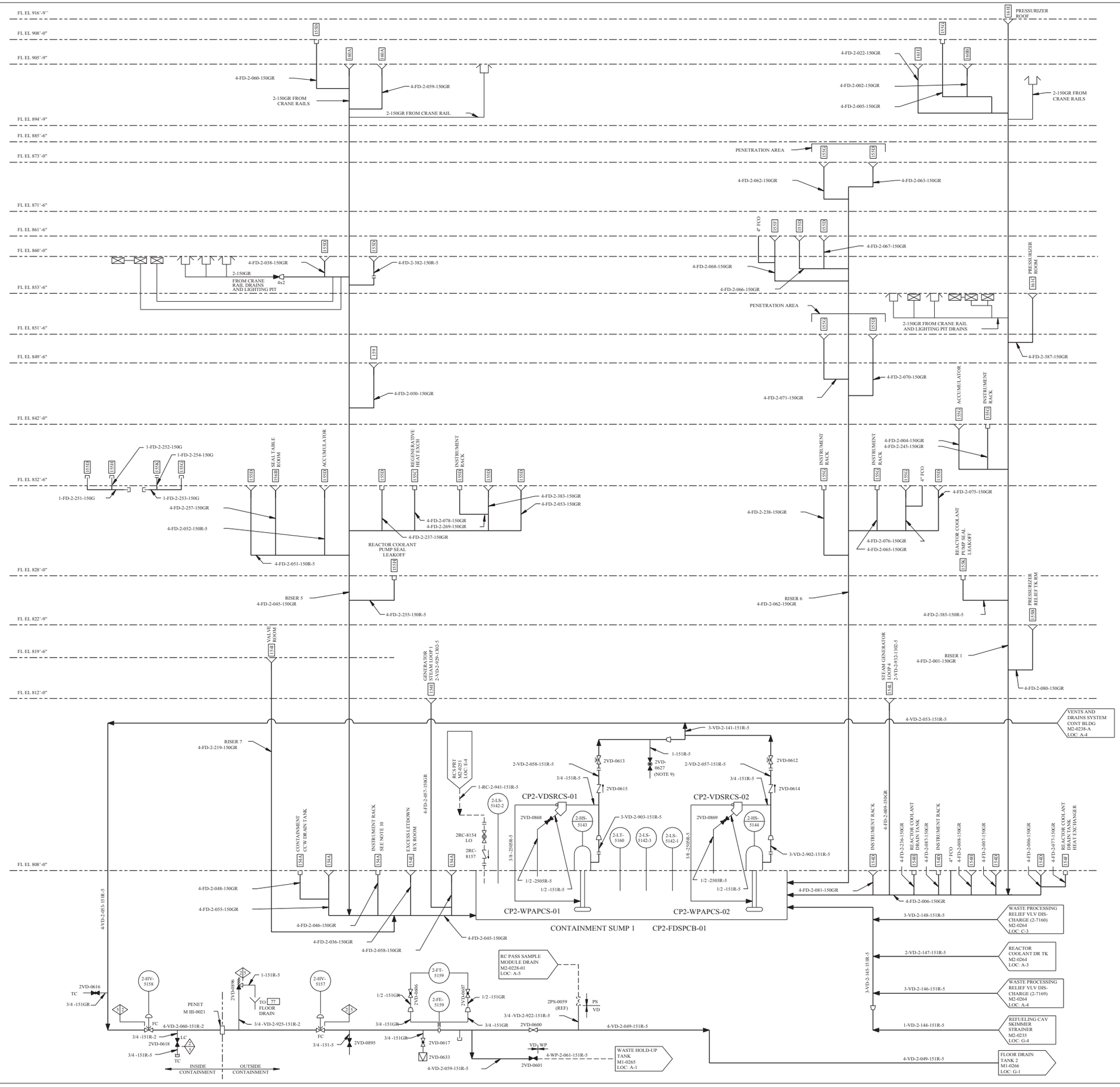

REV	DWN	CHKD	APVD	REMARKS
CP-14	DLK 08-17 2009	MM 08-17 2009		THIS DRAWING REVISED TO INCORPORATE DESIGN CHANGE FDA 2009-001707-01-00 PER SK-0008-09-001707-01-00.

NOTES:

1. FOR MECHANICAL SYMBOLS AND NOTES SEE DWG M1-0200.
2. THE BOXED-IN NUMBERS DESIGNATE THE SPECIFIC ROOM NUMBERS ON THE PLUMBING DRAWING SHOWING VARIOUS DRAIN LOCATIONS.
3. DRAIN SYMBOLS ARE AS FOLLOWS:
   - FLOOR DRAIN WITHOUT BACKWATER VALVE.
   - FLOOR DRAIN WITH BACKWATER VALVE (SEE NOTE 8 AND 11).
   - EQUIPMENT DRAIN WITHOUT BACKWATER VALVE.
   - EQUIPMENT DRAIN WITH BACKWATER VALVE. (SEE NOTE 8 AND 11)
   - CRANE RAIL DRAIN
   - LIGHTING PIT DRAIN
4. THIS SYSTEM IS NON-NUCLEAR SAFETY CLASS EXCEPT AS NOTED.
5. TEST GROVE DRAINS ARE 3/4 " SS TUBING.
6. PIPING DESIGNATED "FD" IS PROCURED BY SPECIFICATION MS-73. PIPING DESIGNATED "VD" IS PROCURED BY SPECIFICATION MS-43A AND MS-44A.
7. UNLESS OTHERWISE NOTED DRAINS COLLECTED BY LOCAL DRAIN SYSTEM.
8. UNLESS OTHERWISE NOTED, EQUIPMENT TAG NUMBERS FOR BACKWATER VALVES SHOULD CORRESPOND TO THE UNIT IN WHICH THEY ARE INSTALLED AND THE NUMBER OF THE PIPE IN WHICH IT IS INSTALLED, THAT IS, THE BACKWATER VALVE IN LINE NUMBER 6-FD-2-454-010-5 SHOULD BE **2FD-0454.**
9. ISOLATION VALVE PROVIDED FOR TEMPORARY SUMP PUMP CONNECTION.
10. EQUIPMENT DRAIN IS COVERED WITH REMOVABLE CAP.
11. FOR LOCATION OF BACKWATER VALVES AT FLOOR ELEVATIONS 773' AND 785' SEE DCN 7245 REV 0.

R

FSAR FIGURE 9.3-5

THIS DRAWING CREATED ELECTRONICALLY

DRAWING 2323-M2-0238 REV CP-2
HAS BEEN SPLIT INTO THE FOLLOWING SHEETS:
M2-0238
M2-0238-A

CLASS I
(NUCLEAR SAFETY-RELATED)
SAFETY CLASS 1 — SEISMIC CATEGORY I
SAFETY CLASS 2 — CLASS 1E
SAFETY CLASS 3 — ASSOCIATED CIRCUITS

LUMINANT
CPNPP
GLEN ROSE, TEXAS

FLOW DIAGRAM
VENTS AND DRAINS SYSTEM
CONTAINMENT BUILDING

DWG. NO. M2-0238 | SH. NO. - | REV. CP-14

< FINAL PRINT >

REF CKD CP-8 10/27/97

SSSSSSDATESSSSS

me938500.dgn M2-0238

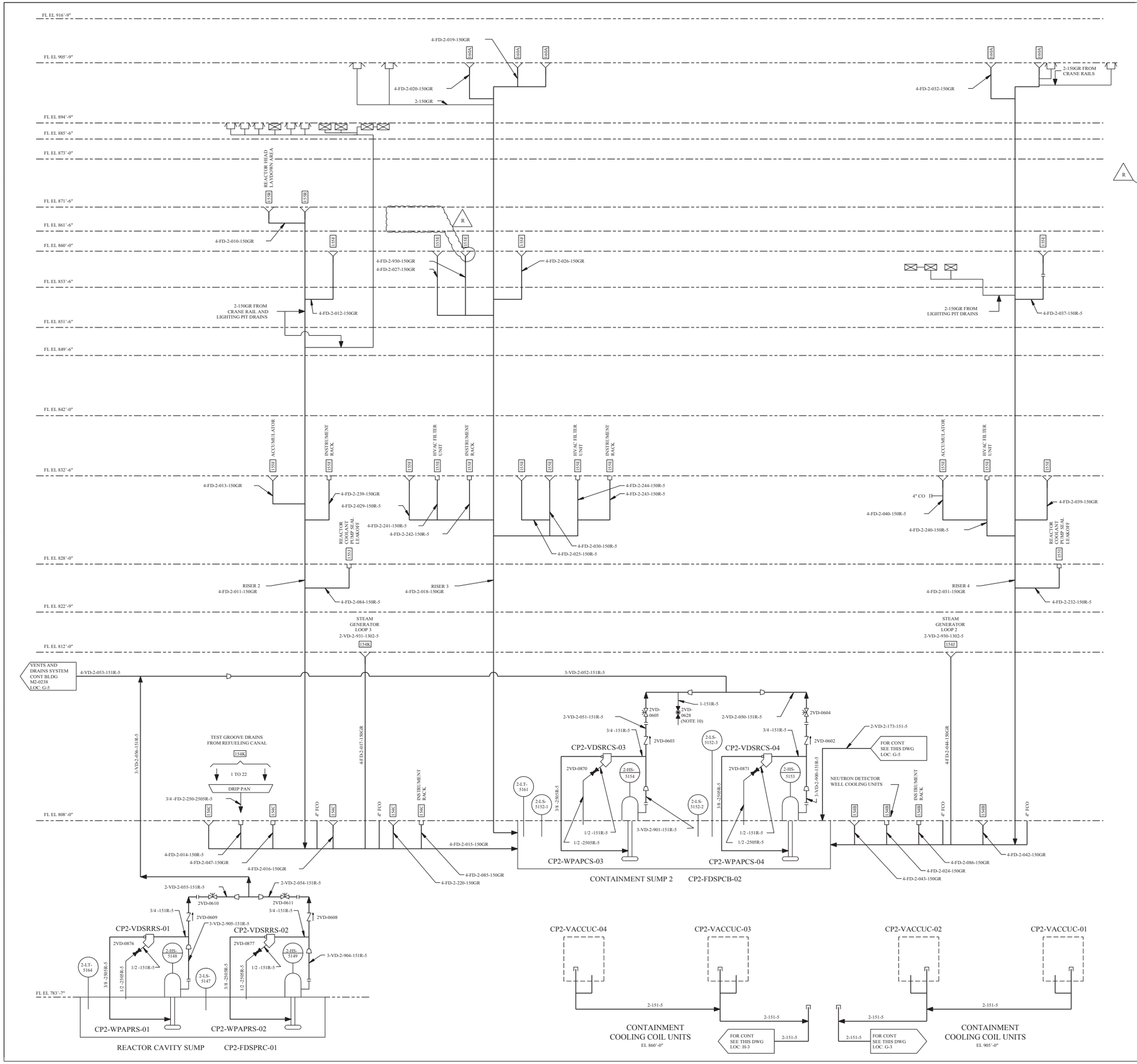

REV	DWN	CHKD	APVD	REMARKS
CP-12	JRMC 08-27-2007	BBB 08-27-2007		THIS DRAWING REVISED TO INCORPORATE DESIGN CHANGE FDA-2005-001856-01-00 PER SK-0001-05-001856-01-00.

NOTES

1. FOR MECHANICAL SYMBOLS AND NOTES SEE DWG M1-0200.
2. THE BOXED-IN NUMBERS DESIGNATE THE SPECIFIC ROOM NUMBERS ON THE PLUMBING DRAWING SHOWING VARIOUS DRAIN LOCATIONS.
3. FOR TYPICAL DRAIN SYMBOLS SEE DWG M2-0238 NOTE 3.
4. THIS SYSTEM IS NON-NUCLEAR SAFETY CLASS EXCEPT AS NOTED.
5. TEST GROVE DRAINS ARE 3/4 " SS TUBING.
6. PIPING DESIGNATED "FD" IS PROCURED BY SPECIFICATION MS-73. PIPING DESIGNATED "VD" IS PROCURED BY SPECIFICATION MS-43A AND MS-44A.
7. DELETED.
8. UNLESS OTHERWISE NOTED, DRAINS COLLECTED BY LOCAL DRAIN SYSTEM.
9. FOR CONDENSATE MEASURING TANK DIFFUSER DETAILS SEE DCA 20715 REV 1.
10. ISOLATION VALVE PROVIDED FOR TEMPORARY SUMP PUMP CONNECTION.

CONTAINMENT COOLING UNITS
CONDENSATE MEASURING SYSTEM
(2 PER CONTAINMENT)

LEVEL TRANS TAG NUMBERS

CONDENSATE MEASURING TANK		TAG NUMBERS	
CP2-VDATCM-02		2-LT-5163	2VD-0619
CP2-VDATCM-01		2-LT-5162	2VD-0620

DRAWING 2323-M2-0238 REV CP-2
HAS BEEN SPLIT INTO THE FOLLOWING SHEETS:
M2-0238
M2-0238-A

FSAR FIGURE 9.3-5

THIS DRAWING CREATED ELECTRONICALLY

CLASS II

LUMINANT
CPSES
GLEN ROSE, TEXAS

FLOW DIAGRAM
VENTS AND DRAINS SYSTEM
CONTAINMENT BUILDING

DWG. NO. M2-0238 | SH. NO. A | REV. CP-12

FINAL PRINT

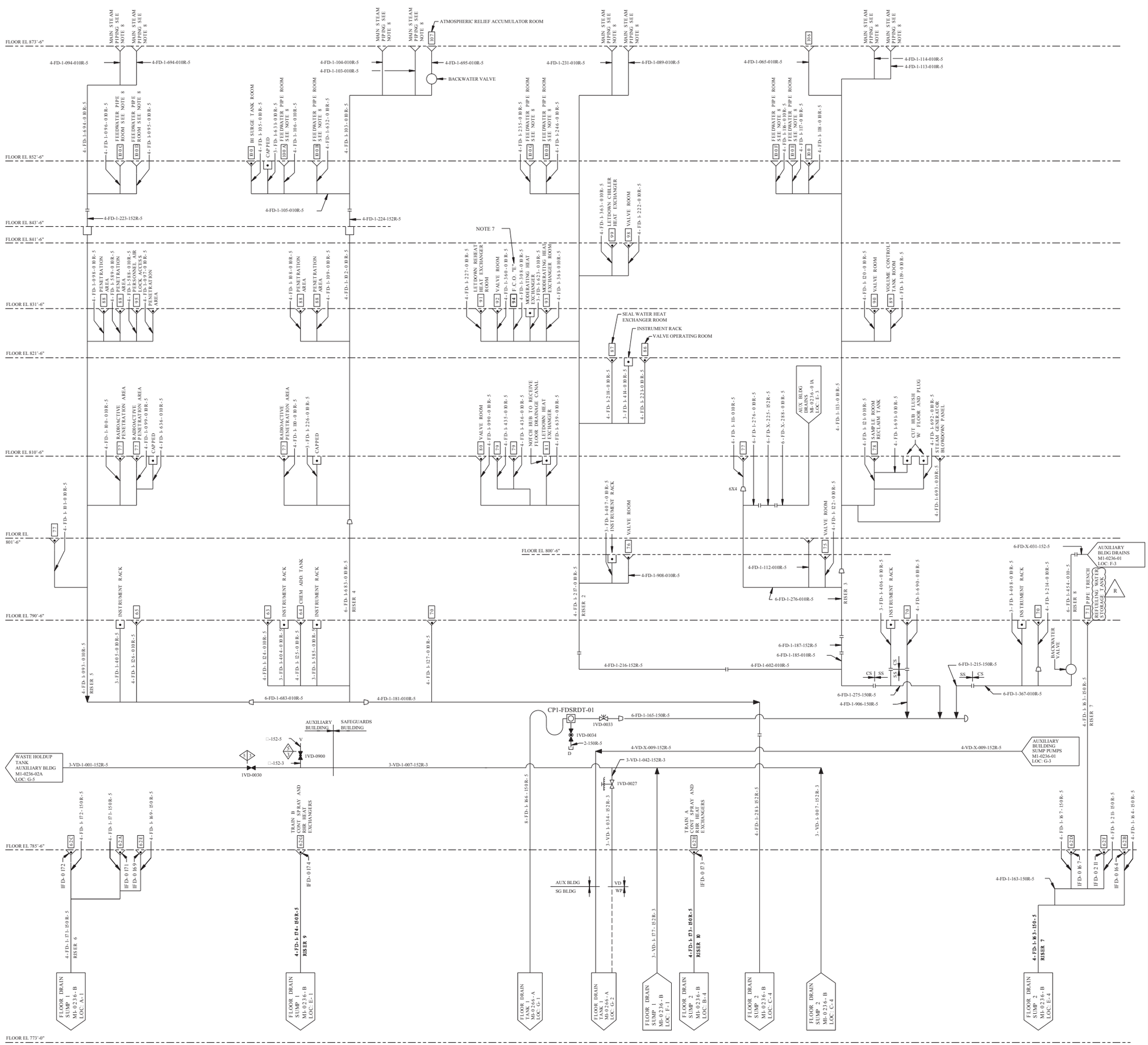

REV	DWN	CHKD	APVD	REMARKS
CP-21	DLK 03-12-2013	MM 03-14-2013		THIS DRAWING REVISED TO INCORPORATE DESIGN CHANGE FDA 2013-000024-01-00 PER SK-0005-13-000024-01-00.

NOTES:

1. DELETED
2. FOR MECHANICAL SYMBOLS AND NOTES SEE DRAWING M1-0200.
3. THE BOXED-IN NUMBERS DESIGNATE THE SPECIFIC ROOM NUMBERS ON THE PLUMBING DRAWINGS WHICH SHOW VARIOUS DRAIN LOCATIONS.
4. DRAIN SYMBOLS ARE AS FOLLOWS:
   - FOR DRAIN WITHOUT BACKWATER VALVE.
   - FLOOR DRAIN WITH BACKWATER VALVE. (SEE NOTE 6 AND 9)
   - EQUIPMENT DRAIN WITHOUT BACKWATER VALVE.
   - EQUIPMENT DRAIN WITH BACKWATER VALVE. (SEE NOTE 6 AND 9)
5. PIPING DESIGNATED FD IS PROCURED BY SPECIFICATION 2323-MS-73 AND PIPING DESIGNATED VD IS PROCURED BY SPECIFICATIONS 2323-MS-43B AND 2323-MS-44B.
6. UNLESS OTHERWISE NOTED, EQUIPMENT TAG NUMBERS FOR BACKWATER VALVES SHOULD CORRESPOND TO THE NUMBER OF THE PIPE IN WHICH IT IS INSTALLED. THAT IS, THE BACKWATER VALVE IN LINE NUMBER 6-FD-1-454-010-5 SHOULD BE 1FD-0454.
7. F.C.O. : FLOOR CLEAN-OUT. FOR DETAIL "E" SEE DRAWING 2323-M1-0680.
8. FEEDWATER DRAINS AT ELEV 852'-6" AND MAIN STEAM DRAINS AT ELEV 873'-6" ARE EQUIPPED WITH BALL FLOATS. NO BACKWATER VALVES ARE INSTALLED AT THOSE LOCATIONS. SEE DWG 2323-M1-0680 FOR BALL FLOAT DETAIL. THE BALL FLOAT TAG NUMBER WILL CORRESPOND TO THE NUMBER OF THE PIPE IN WHICH IT IS INSTALLED. (EXAMPLE: BALL FLOAT IN LINE NUMBER 4-FD-1-103-010R-5 WILL HAVE TAG NUMBER "1-103-BF").
9. FOR LOCATION OF BACKWATER VALVES AT FLOOR ELEVATIONS 773' AND 785' SEE DCN 7245 REV 0.

FSAR FIGURE 9.3-6

THIS DRAWING CREATED ELECTRONICALLY

DRAWING M1-0236 REV CP-14
HAS BEEN SPLIT INTO THE FOLLOWING SHEETS:
M1-0236
M1-0236-B

DRAWING 2323-M1-0236 REV CP-6
HAS BEEN SPLIT INTO THE FOLLOWING SHEETS:
M1-0236
M1-0236-A

CLASS I
(NUCLEAR SAFETY-RELATED)
SAFETY CLASS 1 / SAFETY CLASS 2 / SAFETY CLASS 3 — SEISMIC CATEGORY I — CLASS 1E — ASSOCIATED CIRCUITS

LUMINANT
CPNPP
GLEN ROSE, TEXAS

FLOW DIAGRAM
VENTS AND DRAINS SYSTEM
SAFEGUARDS AND AUXILIARY BUILDING

DWG. NO. M1-0236 | SH. NO. - | REV. CP-21

< FINAL PRINT >

me938000.dgn M1-0236

REF CKD CP-20 3/12/13 $$$$$$$$DATE$$$$$$$$

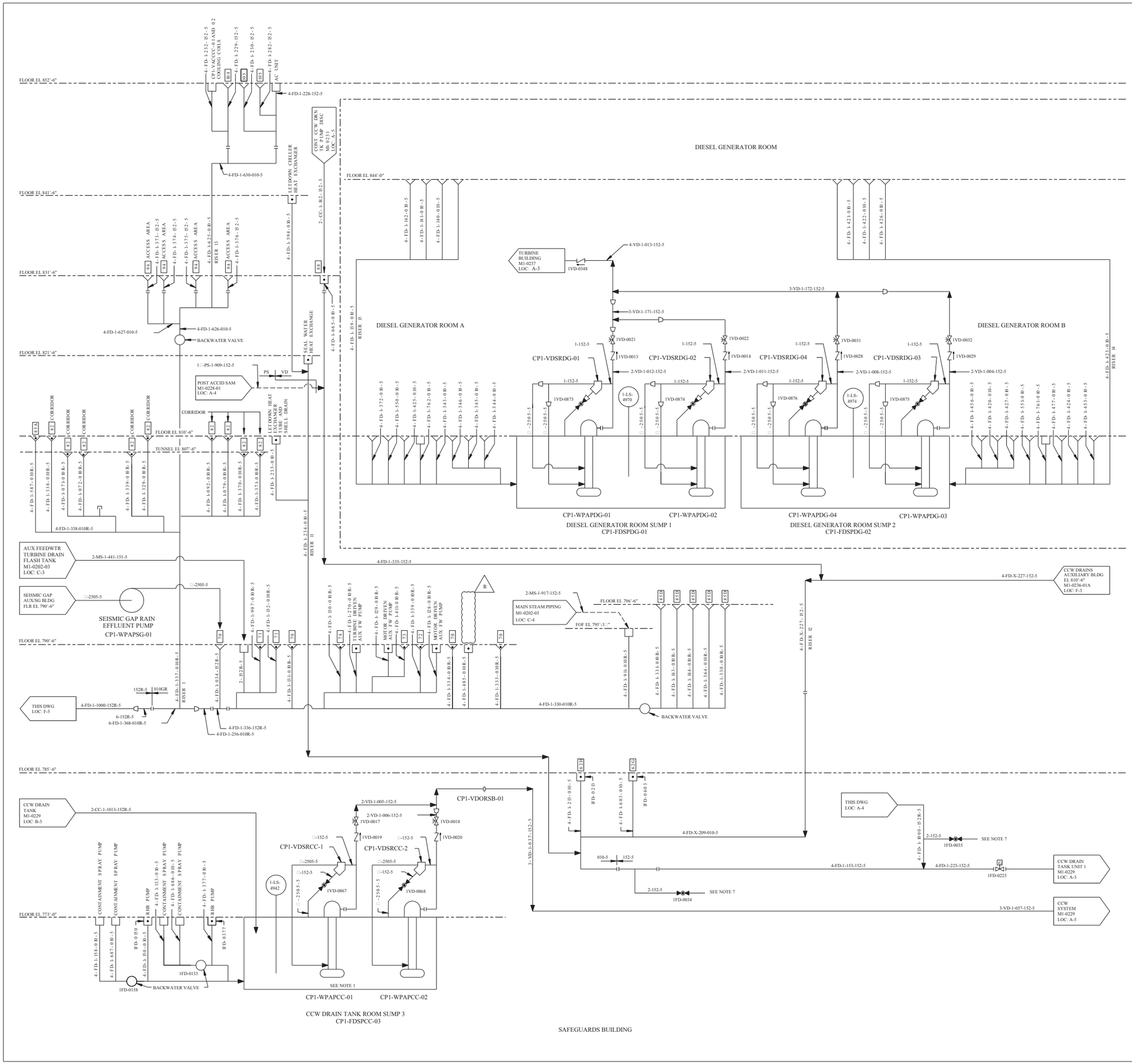

REV	DWN	CHKD	APVD	REMARKS
CP-21	DLK 03-12-2013	MM 03-14-2013		THIS DRAWING REVISED TO INCORPORATE DESIGN CHANGE FDA 2013-000024-01-00 PER SK-0004-13-000024-01-00.

NOTES:

1. FOR SWITCH LEVEL SYSTEM AND PUMP CONTROL SEE TYPICAL SUMP DETAIL.
2. FOR MECHANICAL SYMBOLS AND NOTES SEE DRAWING M1-0200.
3. THE BOXED-IN NUMBERS DESIGNATE THE SPECIFIC ROOM NUMBERS ON THE PLUMBING DRAWINGS WHICH SHOW VARIOUS DRAIN LOCATIONS.
4. FOR DRAIN SYMBOLS SEE M1-0236, NOTE 4.
5. OPERATIONS MAY INSTALL RAISED HUBS AND/OR PLUGS FOR NON RADIOACTIVE DRAINS THAT DUE TO THEIR PROXIMITY TO A RADIOACTIVE DRAIN COULD COLLECT RADIOACTIVE FLUIDS.
6. PIPING DESIGNATED FD IS PROCURED BY SPECIFICATION MS-73 AND PIPING DESIGNATED VD IS PROCURED BY SPECIFICATIONS MS-43A AND MS-44A.
7. ALTERNATE DRAIN PATH.

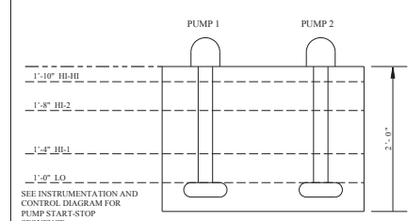

SEE INSTRUMENTATION AND CONTROL DIAGRAM FOR PUMP START-STOP SEQUENCE

TYPICAL SUMP DETAIL

FSAR FIGURE 9.3-6

THIS DRAWING CREATED ELECTRONICALLY

DRAWING 2323-M1-0236 REV CP-6
HAS BEEN SPLIT INTO THE FOLLOWING SHEETS:
M1-0236
M1-0236-A

CLASS II

LUMINANT
CPNPP
GLEN ROSE, TEXAS

FLOW DIAGRAM
VENTS AND DRAINS SYSTEM
SAFEGUARDS BUILDING

DWG. NO.	SH. NO.	REV.
M1-0236	A	CP-21

REF CKD 3/12/13 CP-20

$$$$$$$DATE$$$$$$

me937900.dgn A M1-0236-A

< FINAL PRINT >

REV	DWN	CHKD	APVD	REMARKS
CP-3	DLK 08-13-2009	MM 08-17-2009		THIS DRAWING REVISED TO INCORPORATE DESIGN CHANGE FDA 2009-001707-01-00 PER SK-0003-09-001707-01-00. EDITORIAL CHANGE AS NOTED.

NOTES:

1. FOR SWITCH LEVEL SYSTEM AND PUMP CONTROL SEE TYPICAL SUMP DETAIL.
2. FOR MECHANICAL SYMBOLS AND NOTES SEE DRAWING M1-0200.
3. THE BOXED-IN NUMBERS DESIGNATE THE SPECIFIC ROOM NUMBERS ON THE PLUMBING DRAWINGS WHICH SHOW VARIOUS DRAIN LOCATIONS.
4. FOR DRAIN SYMBOLS SEE M1-0236, NOTE 4.
5. PIPING DESIGNATED FD IS PROCURED BY SPECIFICATION 2323-MS-73 AND PIPING DESIGNATED VD IS PROCURED BY SPECIFICATIONS 2323-MS-43B AND 2323-MS-44B.

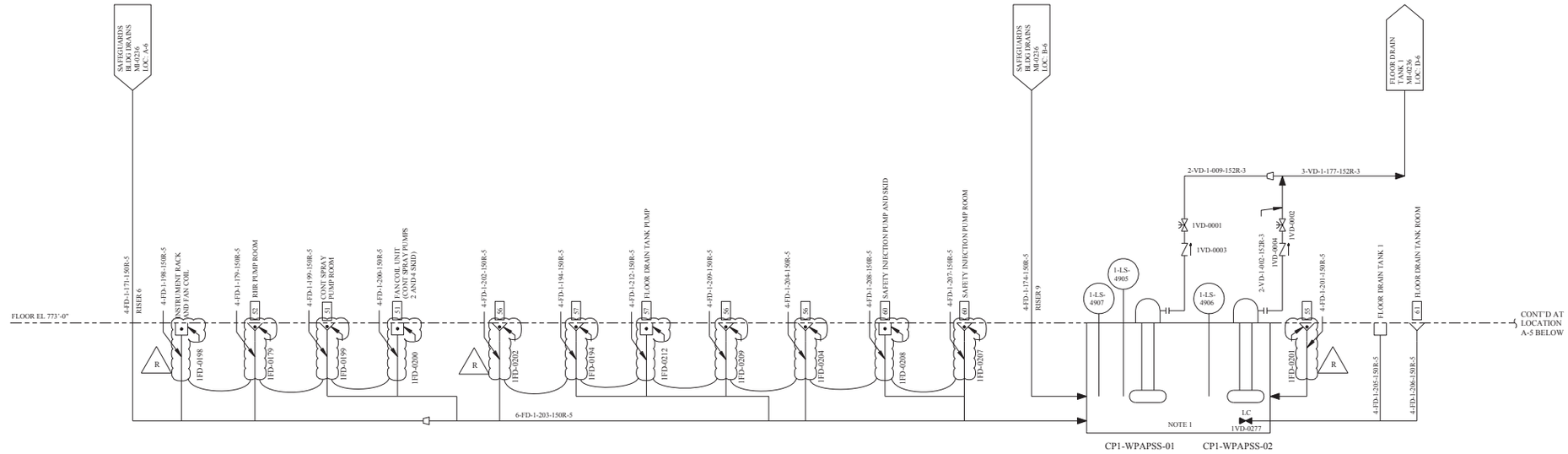

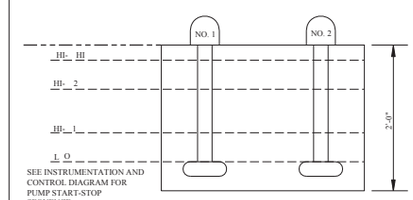

SAFEGUARDS SUMP DETAIL

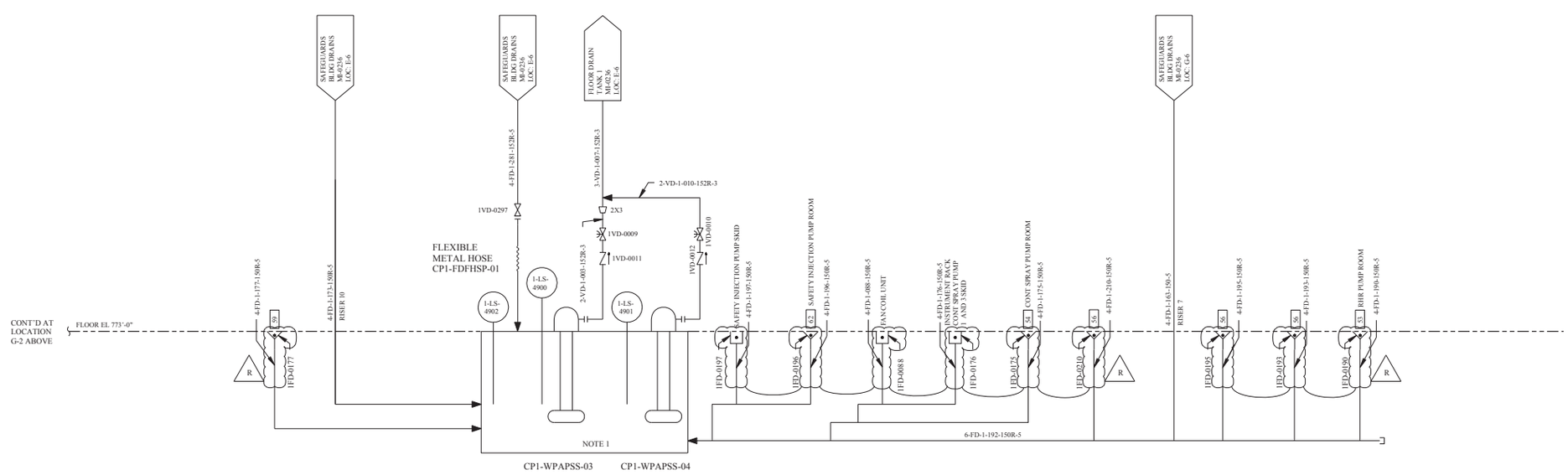

FSAR FIGURE 9.3-6

EDITORIAL

THIS DRAWING CREATED ELECTRONICALLY

DRAWING M1-0236 REV CP-14 HAS BEEN SPLIT INTO THE FOLLOWING SHEETS:
M1-0236
M1-0236-B

CLASS I
(NUCLEAR SAFETY-RELATED)
SAFETY CLASS 1
SAFETY CLASS 2
SAFETY CLASS 3
SEISMIC CATEGORY I
CLASS 1E
ASSOCIATED CIRCUITS

LUMINANT
CPNPP
GLEN ROSE, TEXAS

FLOW DIAGRAM
VENTS AND DRAINS SYSTEM
SAFEGUARDS AND AUXILIARY BUILDING

DWG. NO. M1-0236 | SH. NO. B | REV. CP-3

REF CKD CP-1 10/27/97

$$$$$$$$DATE$$$$$$$

me938100.dgn A M1-0236-B

< FINAL PRINT >

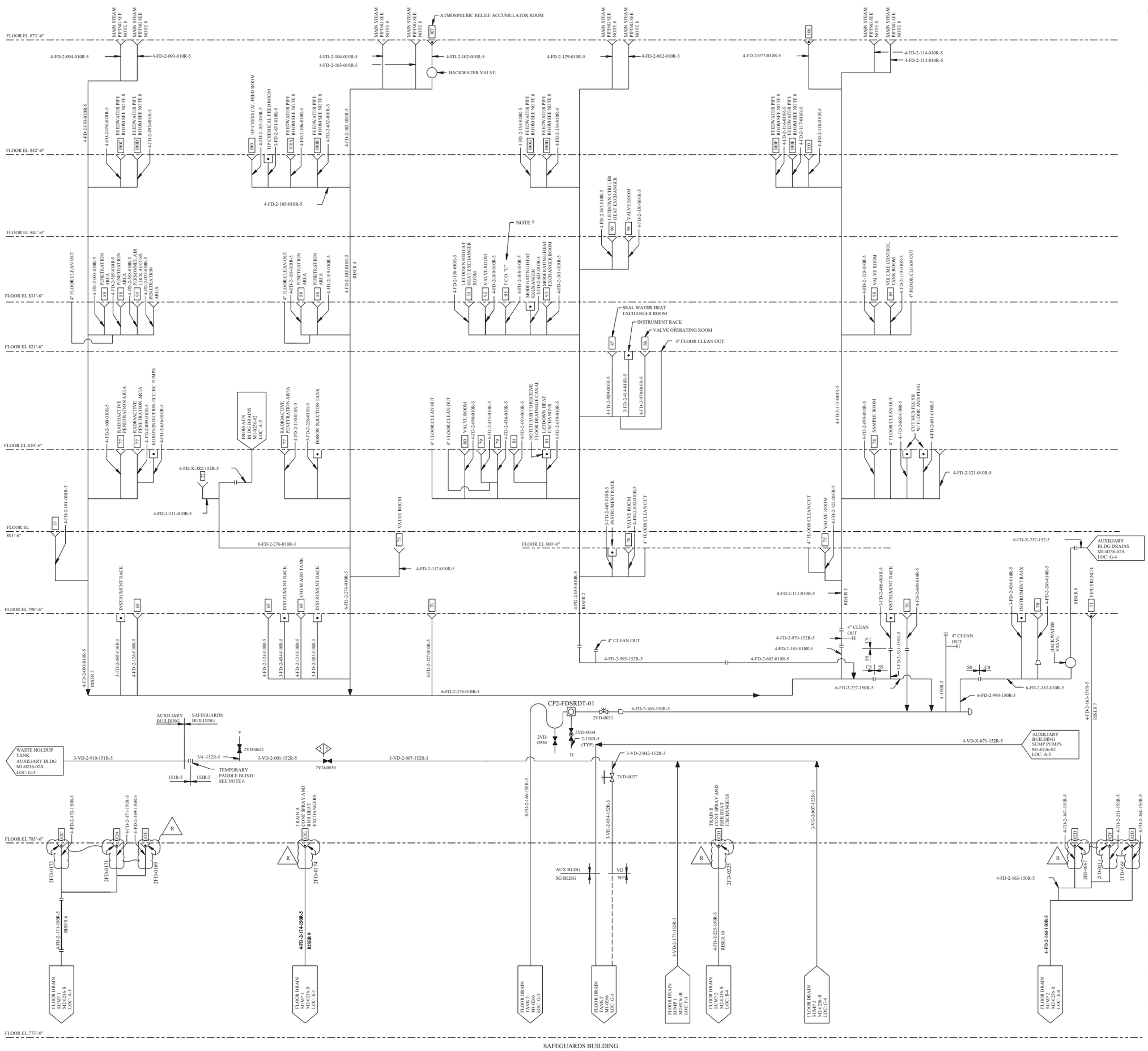

REV	DWN	CHKD	APVD	REMARKS
CP-20	DLK 08-13-2009	MM 08-17-2009		THIS DRAWING REVISED TO INCORPORATE DESIGN CHANGE FDA 2009-001707-01-00 PER SK-0004-09-001707-01-00.

NOTES:

1. FOR MECHANICAL SYMBOLS AND NOTES SEE DRAWING M1-0200.
2. THE BOX-IN NUMBERS DESIGNATE THE SPECIFIC ROOM NUMBERS ON THE PLUMBING DRAWINGS SHOWING VARIOUS DRAIN LOCATIONS.
3. FOR TYPICAL DRAIN SYMBOLS SEE DRAWING M2-0238 NOTE 3.
4. OPERATIONS MAY INSTALL RAISED HUBS AND/OR PLUGS FOR NON RADIOACTIVE DRAINS THAT DUE TO THEIR PROXIMITY TO A RADIOACTIVE DRAIN COULD COLLECT RADIOACTIVE FLUIDS.
5. PIPING DESIGNATED FD IS PROCURED BY SPECIFICATION MS-73 AND PIPING DESIGNATED VD IS PROCURED BY SPECIFICATIONS MS-43B AND MS-44B.
6. THIS PADDLE BLIND TO BE INSTALLED OR REMOVED ONLY AT THE DIRECTION OF NUCLEAR OPERATIONS.
7. F.C.O. : FLOOR CLEAN-OUT. FOR DETAIL "E" SEE DRAWING 2323-M1-0680.
8. FEEDWATER DRAINS AT ELEV 852'-6" AND MAIN STEAM DRAINS AT ELEV 873'-6" ARE EQUIPPED WITH BALL FLOATS. NO BACKWATER VALVES ARE INSTALLED AT THOSE LOCATIONS. SEE DWG 2323-M1-0680 FOR BALL FLOAT DETAIL. THE BALL FLOAT TAG NUMBER WILL CORRESPOND TO THE NUMBER OF THE PIPE IN WHICH IT IS INSTALLED. (EXAMPLE: BALL FLOAT IN LINE NUMBER 4-FD-2-103-010R-5 WILL HAVE TAG NUMBER "2-103-BF").

FSAR FIGURE 9.3-6

THIS DRAWING CREATED ELECTRONICALLY

DRAWING M2-0236 REV CP-12
HAS BEEN SPLIT INTO THE FOLLOWING SHEETS:
M2-0236
M2-0236-B

DRAWING 2323-M2-0236 REV CP-1
HAS BEEN SPLIT INTO THE FOLLOWING SHEETS:
M2-0236
M2-0236-A

CLASS I
(NUCLEAR SAFETY-RELATED)
SAFETY CLASS 1 — SEISMIC CATEGORY I
SAFETY CLASS 2 — CLASS 1E:
SAFETY CLASS 3 — ASSOCIATED CIRCUITS

LUMINANT
CPNPP
GLEN ROSE, TEXAS

FLOW DIAGRAM
VENTS AND DRAINS SYSTEM
SAFEGUARDS AND AUXILIARY BUILDING

DWG. NO. M2-0236 | SH. NO. - | REV. CP-20

< FINAL PRINT >

me938200.dgn M2-0236

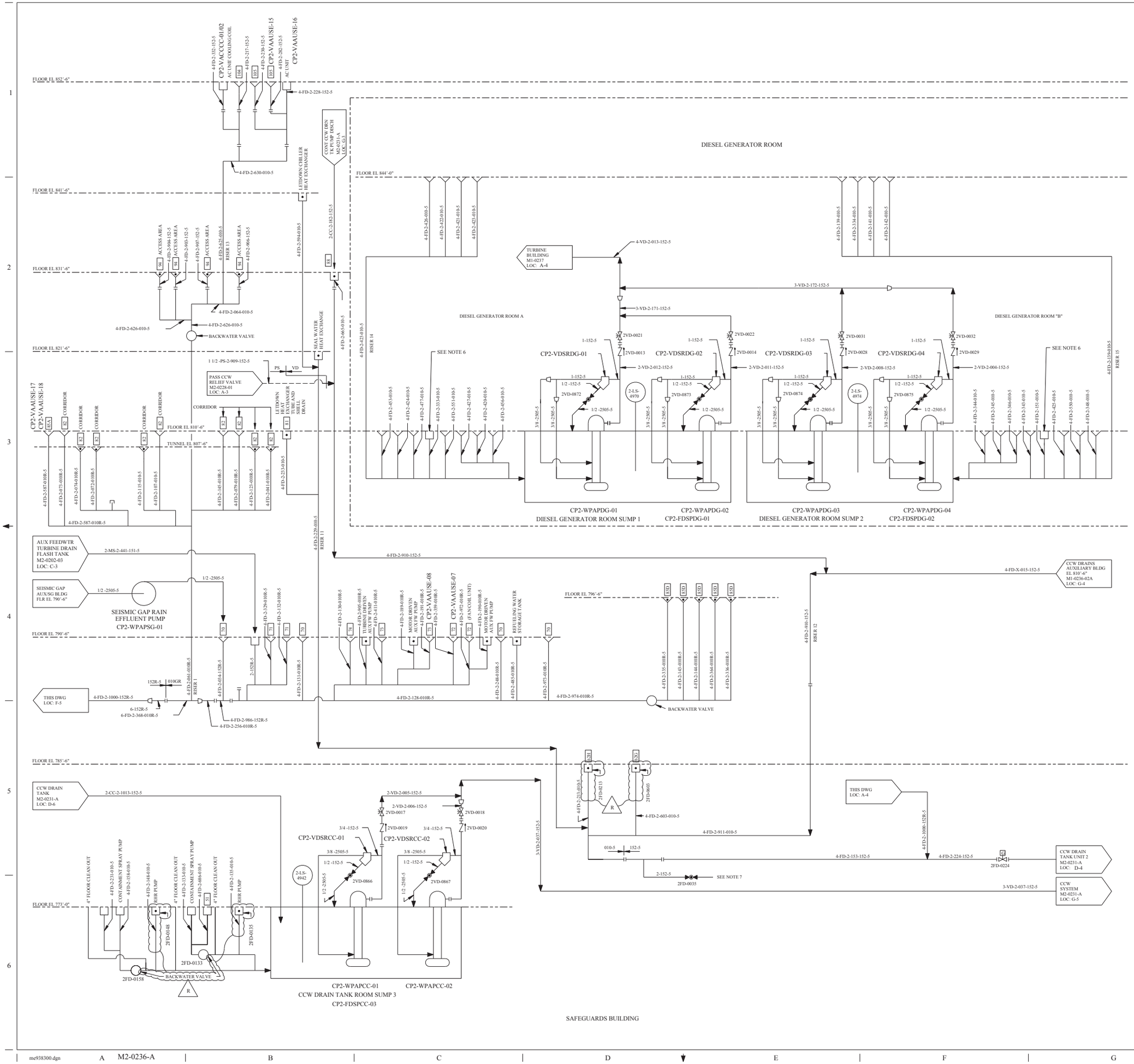

REV	DWN	CHKD	APVD	REMARKS
CP-15	DLK 08-13 2009	MM 08-17 2009		THIS DRAWING REVISED TO INCORPORATE DESIGN CHANGE FDA 2009-001707-01-00 PER SK-0005-09-001707-01-00.

NOTES:

1. FOR MECHANICAL SYMBOLS AND NOTES SEE DRAWING M1-0200.
3. FOR TYPICAL DRAIN SYMBOLS, SEE DRAWING M2-0238 NOTE 3.
4. OPERATIONS MAY INSTALL RAISED HUBS AND/OR PLUGS FOR NON RADIOACTIVE DRAINS THAT DUE TO THEIR PROXIMITY TO A RADIOACTIVE DRAIN COULD COLLECT RADIOACTIVE FLUIDS.
5. PIPING DESIGNATED FD IS PROCURED BY SPECIFICATION MS-73 AND PIPING DESIGNATED VD IS PROCURED BY SPECIFICATIONS MS-43B AND MS-44B.
6. FLOOR DRAINS IN TUBING TRENCH HAVE BEEN FILLED WITH GROUT AND ABANDONED IN PLACE.
7. ALTERNATE DRAIN FLOW PATH.

FSAR FIGURE 9.3-6

THIS DRAWING CREATED ELECTRONICALLY

DRAWING 2323-M2-0236 REV CP-1
HAS BEEN SPLIT INTO THE FOLLOWING SHEETS:
M2-0236
M2-0236-A

CLASS II

LUMINANT
CPNPP
GLEN ROSE, TEXAS

FLOW DIAGRAM
VENTS AND DRAINS SYSTEM
SAFEGUARDS BUILDING

DWG. NO. M2-0236 | SH. NO. A | REV. CP-15

REF CKD 3/6/97 CP-8

$$$$$$$DATE$$$$$$

me938300.dgn A M2-0236-A

< FINAL PRINT >

REV	DWN	CHKD	APVD	REMARKS
CP-4	DGK 01-29 2013			THIS DRAWING REVISED TO EDITORIALLY CORRECT THE LINE SEGMENT NUMBER VD-2-177 SAFETY CLASS FROM 5 TO 3. THIS LATENT ERROR OCCURRED IN 1997 WHEN M2-0236-B REV CP-1 WAS CREATED WHEN SPLITTING FROM M2-0236 REV CP-11. THIS ADMINISTRATIVE/EDITORIAL CHANGE WILL BE IN AGREEMENT WITH APPROVE DESIGN DOCUMENTS M2-0236 REV CP-20 AND MAXIMO.

NOTES:

1. FOR MECHANICAL SYMBOLS AND NOTES SEE DRAWING M1-0200.
2. THE BOXED-IN NUMBERS DESIGNATE THE SPECIFIC ROOM NUMBERS ON THE PLUMBING DRAWINGS WHICH SHOW VARIOUS DRAIN LOCATIONS.
3. FOR TYPICAL DRAIN SYMBOLS SEE DRAWING M2-0238 NOTE 3.
4. OPERATIONS MAY INSTALL RAISED HUBS AND/OR PLUGS FOR NON RADIOACTIVE DRAINS THAT DUE TO THEIR PROXIMITY TO A RADIOACTIVE DRAIN COULD COLLECT RADIOACTIVE FLUIDS.
5. PIPING DESIGNATED FD IS PROCURED BY SPECIFICATION MS-73 AND PIPING DESIGNATED VD IS PROCURED BY SPECIFICATIONS MS-43B AND MS-44B.

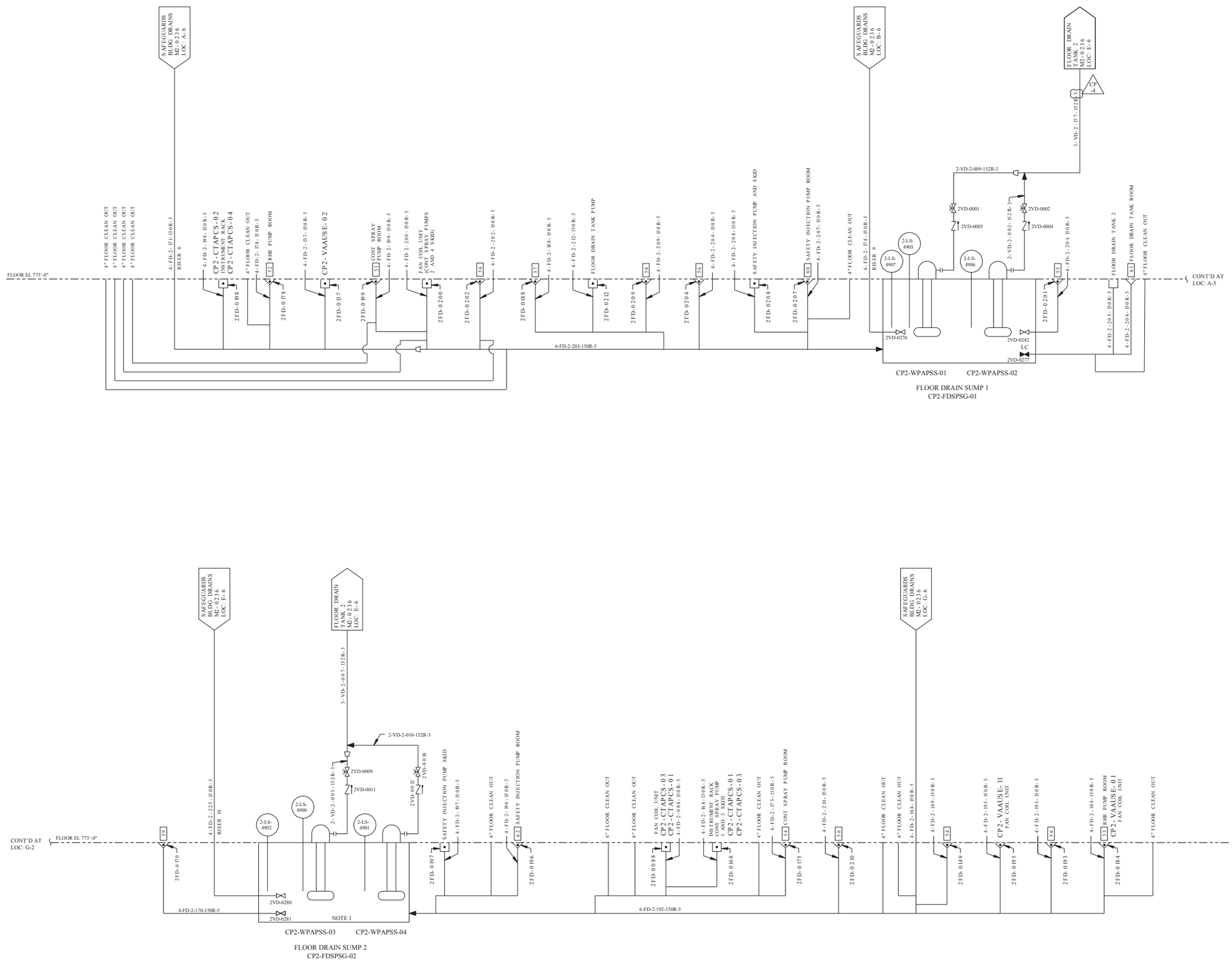

FSAR FIGURE 9.3-6

THIS DRAWING CREATED ELECTRONICALLY

DRAWING M2-0236 REV CP-11
HAS BEEN SPLIT INTO THE FOLLOWING SHEETS:
M2-0236
M2-0236-B

CLASS I
(NUCLEAR SAFETY-RELATED)
SAFETY CLASS 1 / SAFETY CLASS 2 / SAFETY CLASS 3 — SEISMIC CATEGORY I / CLASS 1E / ASSOCIATED CIRCUITS

LUMINANT
CPNPP
GLEN ROSE, TEXAS

FLOW DIAGRAM
VENTS AND DRAINS SYSTEM
SAFEGUARDS AND AUXILIARY BUILDING

DWG. NO. M2-0236 | SH. NO. B | REV. CP-4

me938400.dgn M2-0236-B < FINAL PRINT >

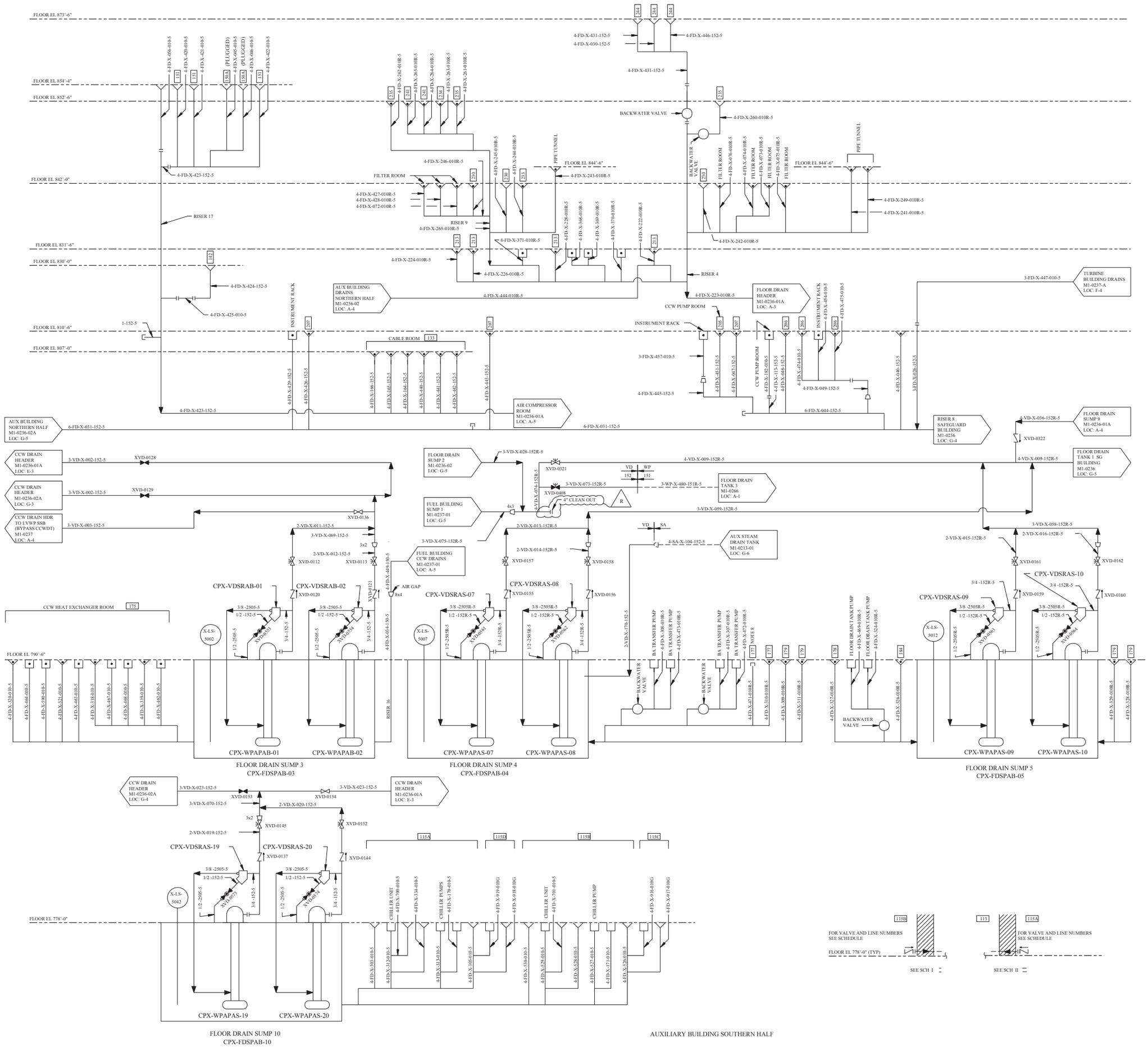

REV	DWN	CHKD	APVD	REMARKS
CP-17	DGK 03-06-2006	MSD 03-07-2006		THIS DRAWING REVISED TO INCORPORATE DESIGN CHANGE FDA-2004-001444-01-00 PER SK-0002-04-001444-01-00.

NOTES:

1. FOR SWITCH LEVEL SYSTEM AND PUMP CONTROL SEE TYPICAL SUMP DETAIL.
2. THE BOXED IN NUMBERS DESIGNATE THE SPECIFIC ROOM NUMBERS ON THE PLUMBING DRAWING SHOWING VARIOUS DRAIN LOCATIONS.
3. FOR DRAIN SYMBOLS SEE M1-0236, NOTE 4.
4. ALL PIPING IS NON-NUCLEAR SAFETY CLASS.
5. FOR MECHANICAL SYMBOLS AND NOTES SEE DRAWING M1-0200.
6. DELETED
7. PIPING DESIGNATED FD IS PROCURED BY SPECIFICATION MS-73 AND PIPING DESIGNATED VD IS PROCURED BY SPECIFICATION MS-44B.
8. PIPING IS PLUGGED BELOW FLOOR.

SCHEDULE I

VALVE NUMBER	LINE NUMBER
XFD-0900I	6-FD-X-929-150-5
XFD-0900J	6-FD-X-930-150-5
XFD-0900K	6-FD-X-931-150-5
XFD-0900L	6-FD-X-932-150-5
XFD-0900M	6-FD-X-933-150-5
XFD-0900N	6-FD-X-934-150-5
XFD-0900O	6-FD-X-935-150-5
XFD-0900P	6-FD-X-936-150-5

SCHEDULE II

VALVE NUMBER	LINE NUMBER
XFD-0900A	6-FD-X-921-150-5
XFD-0900B	6-FD-X-922-150-5
XFD-0900C	6-FD-X-923-150-5
XFD-0900D	6-FD-X-924-150-5
XFD-0900E	6-FD-X-925-150-5
XFD-0900F	6-FD-X-926-150-5
XFD-0900G	6-FD-X-927-150-5
XFD-0900H	6-FD-X-928-150-5

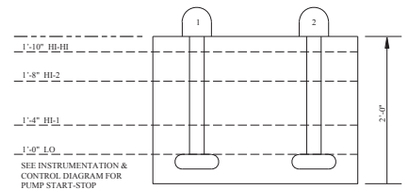

TYPICAL SUMP DETAIL

FSAR FIGURE 9.3-7

THIS DRAWING CREATED ELECTRONICALLY

DRAWING 2323-M1-0236-01 REV CP-4
HAS BEEN SPLIT INTO THE FOLLOWING SHEETS:
M1-0236-01
M1-0236-01A

CLASS II

TXU POWER
CPSES
GLEN ROSE, TEXAS

FLOW DIAGRAM
VENTS AND DRAINS SYSTEM
AUXILIARY BUILDING

DWG. NO. M1-0236 | SH. NO. 01 | REV. CP-17

FINAL PRINT

me679000.dgn M1-0236-01

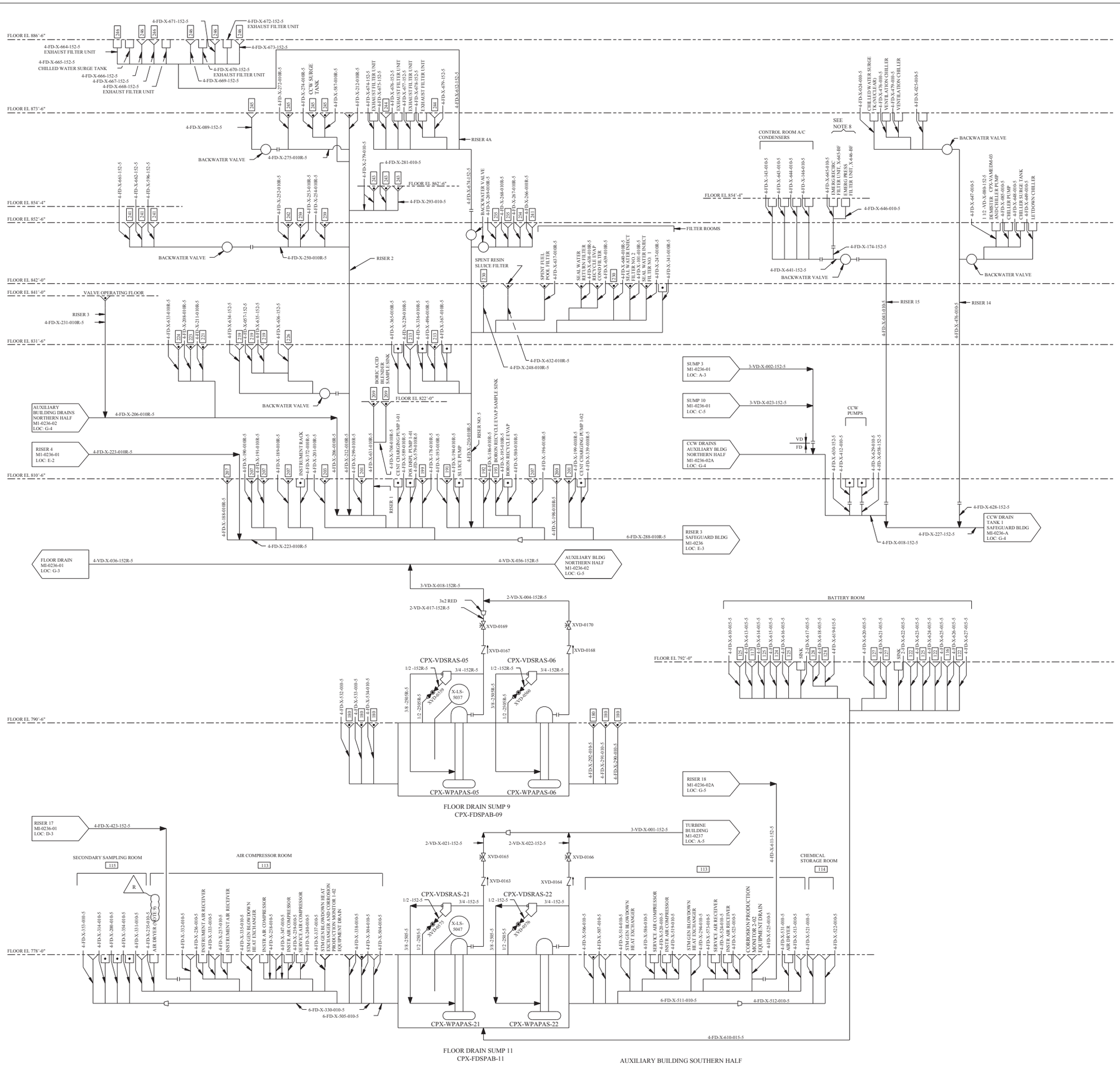

REV	DWN	CHKD	APVD	REMARKS
CP-13	JRMC 08-10 2009	DJL 08-11 2009		THIS DRAWING REVISED TO INCORPORATE DESIGN CHANGE FDA 2009-003898-01-00 PER SK-0001-09-003898-01-00.

NOTES:

1. FOR SWITCH LEVEL SYSTEM AND PUMP CONTROL SEE TYPICAL SUMP DETAIL.
2. THE BOXED IN NUMBERS DESIGNATE THE SPECIFIC ROOM NUMBERS ON THE PLUMBING DRAWING SHOWING VARIOUS DRAIN LOCATIONS.
3. FOR DRAIN SYMBOLS SEE M1-0236, NOTE 4.
4. ALL PIPING IS NON-NUCLEAR SAFETY CLASS.
5. FOR MECHANICAL SYMBOLS AND NOTES SEE DRAWING M1-0200.
6. DELETED
7. PIPING DESIGNATED FD IS PROCURED BY SPECIFICATION MS-73 AND PIPING DESIGNATED VD IS PROCURED BY SPECIFICATION MS-44B.
8. EMERG RECIRC AND EMREG PRESS UNIT DRAINS AT EL 854'-4" ARE EQUIPPED WITH BALL FLOATS TO MITIGATE UNFILTERED AIR INLEAKAGE INTO ROOM 150A PER FDA 1999-002168-01.
9. BACKSPLASH ENCLOSURE MAY BE INSTALLED PER FDA-2009-003898-01. R

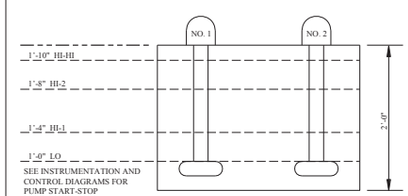

TYPICAL SUMP DETAIL

FSAR FIGURE 9.3-7

THIS DRAWING CREATED ELECTRONICALLY

DRAWING 2323-M1-0236-01 REV CP-4
HAS BEEN SPLIT INTO THE FOLLOWING SHEETS:
M1-0236-01
M1-0236-01A

CLASS II

LUMINANT
CPNPP
GLEN ROSE, TEXAS

FLOW DIAGRAM
VENTS & DRAINS SYSTEM
AUXILIARY BUILDING

DWG. NO. M1-0236 | SH. NO. 01A | REV. CP-13

SSSSSSSDATISSSSSS

me934500.dgn A M1-0236-01A

< FINAL PRINT >

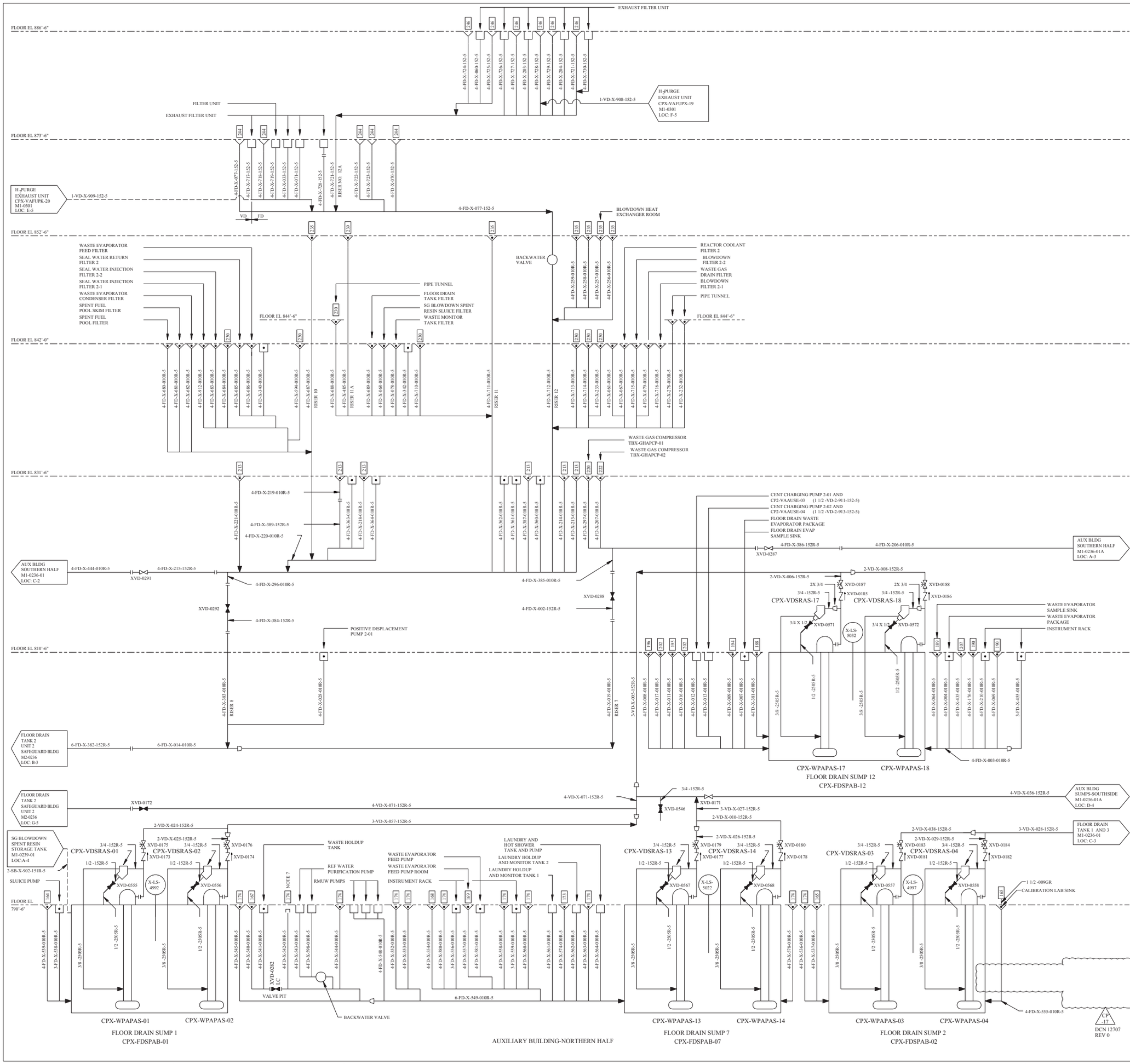

REV	DWN	CHKD	APVD	REMARKS
CP-17	CA 09-27-1999			THIS DRAWING REVISED TO INCORPORATE DESIGN CHANGE DCN 12707 REV 0.

NOTES:

1. FOR SWITCH LEVEL SYSTEM AND PUMP CONTROL SEE TYPICAL SUMP DETAIL.
2. THE BOXED IN NUMBERS DESIGNATE THE SPECIFIC ROOM NUMBERS ON THE PLUMBING DRAWINGS SHOWING VARIOUS DRAIN LOCATIONS.
3. FOR DRAIN SYMBOLS SEE M1-0236, NOTE 4.
4. ALL PIPING IS NON-NUCLEAR SAFETY CLASS.
5. FOR MECHANICAL SYMBOLS AND NOTES SEE DRAWING M1-0200.
6. PIPING DESIGNATED FD IS PROCURED BY SPECIFICATION MS-73 AND PIPING DESIGNATED VD IS PROCURED BY SPECIFICATION MS-44B.
7. PIPING IS PLUGGED BELOW FLOOR.

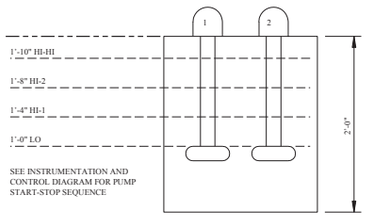

TYPICAL SUMP DETAIL

FSAR FIGURE 9.3-7

THIS DRAWING CREATED ELECTRONICALLY

DRAWING 2323-M1-0236-02	REV CP-6
HAS BEEN SPLIT INTO THE FOLLOWING SHEETS:	
M1-0236-02	
M1-0236-02A	

CLASS II

LUMINANT
CPSES
GLEN ROSE, TEXAS

FLOW DIAGRAM
VENTS AND DRAINS SYSTEM
AUXILIARY BUILDING

DWG. NO.	SH. NO.	REV.
M1-0236	02	CP-17

FINAL PRINT

REF CKD CP-14 2/16/98

me0001s2.dgn

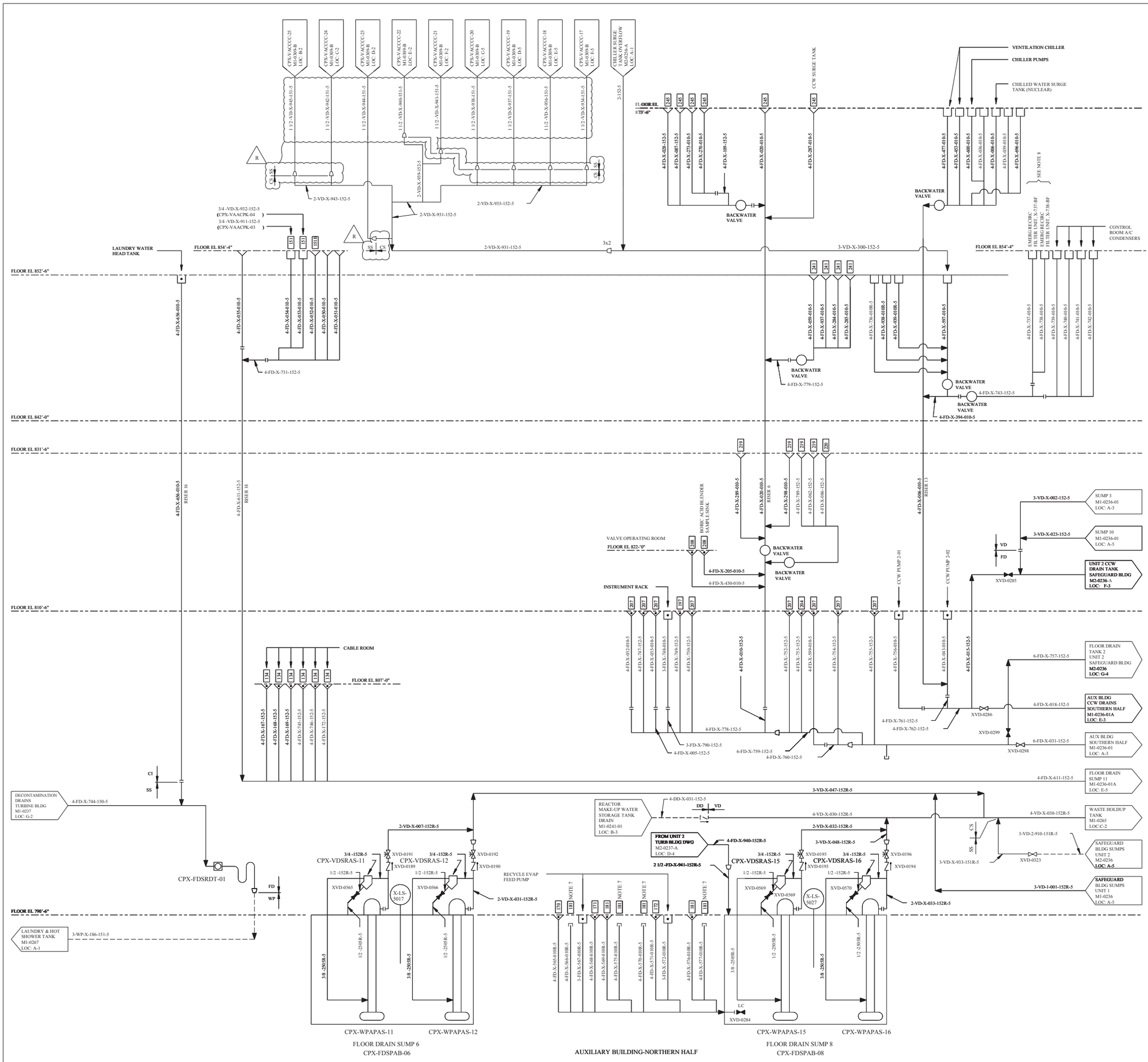

REV	DWN	CHKD	APVD	REMARKS
CP-13	DLK 05-13-2010	EES 05-26-2010		THIS DRAWING REVISED TO INCORPORATE DESIGN CHANGE FDA 2003-001871-03-00 PER SK-0001-03-001871-03-00.

NOTES:

1. FOR SWITCH LEVEL SYSTEM AND PUMP CONTROL SEE TYPICAL SUMP DETAIL.
2. THE BOXED IN NUMBERS DESIGNATE THE SPECIFIC ROOM NUMBERS ON THE PLUMBING DRAWINGS SHOWING VARIOUS DRAIN LOCATIONS.
3. FOR DRAIN SYMBOLS SEE M1-0236, NOTE 4.
4. ALL PIPING IS NON-NUCLEAR SAFETY CLASS.
5. FOR MECHANICAL SYMBOLS AND NOTES SEE DRAWING M1-0200.
6. PIPING DESIGNATED FD IS PROCURED BY SPECIFICATION MS-73 AND PIPING DESIGNATED VD IS PROCURED BY SPECIFICATION MS-44A.
7. PIPING IS PLUGGED BELOW FLOOR.
8. EMERG RECIRC AND EMREG PRESS UNIT DRAINS AT EL 854'-4" ARE EQUIPPED WITH BALL FLOATS TO MITIGATE UNFILTERED AIR INLEAKAGE INTO ROOM 150 PER FDA 1999-002168-01.

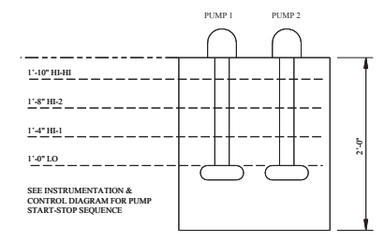

TYPICAL SUMP DETAIL

FSAR FIGURE 9.3-7

THIS DRAWING CREATED ELECTRONICALLY

DRAWING 2323-M1-0236-02	REV CP-6
HAS BEEN SPLIT INTO THE FOLLOWING SHEETS:	
M1-0236-02	
M1-0236-02A	

CLASS II

LUMINANT
CPNPP
GLEN ROSE, TEXAS

FLOW DIAGRAM
VENTS AND DRAIN SYSTEM
AUXILIARY BUILDING

DWG. NO.	SH. NO.	REV.
M1-0236	02A	CP-13

FINAL PRINT

me996500.dgn M1-0236-02A

REF CKD CP-10 05/14/98

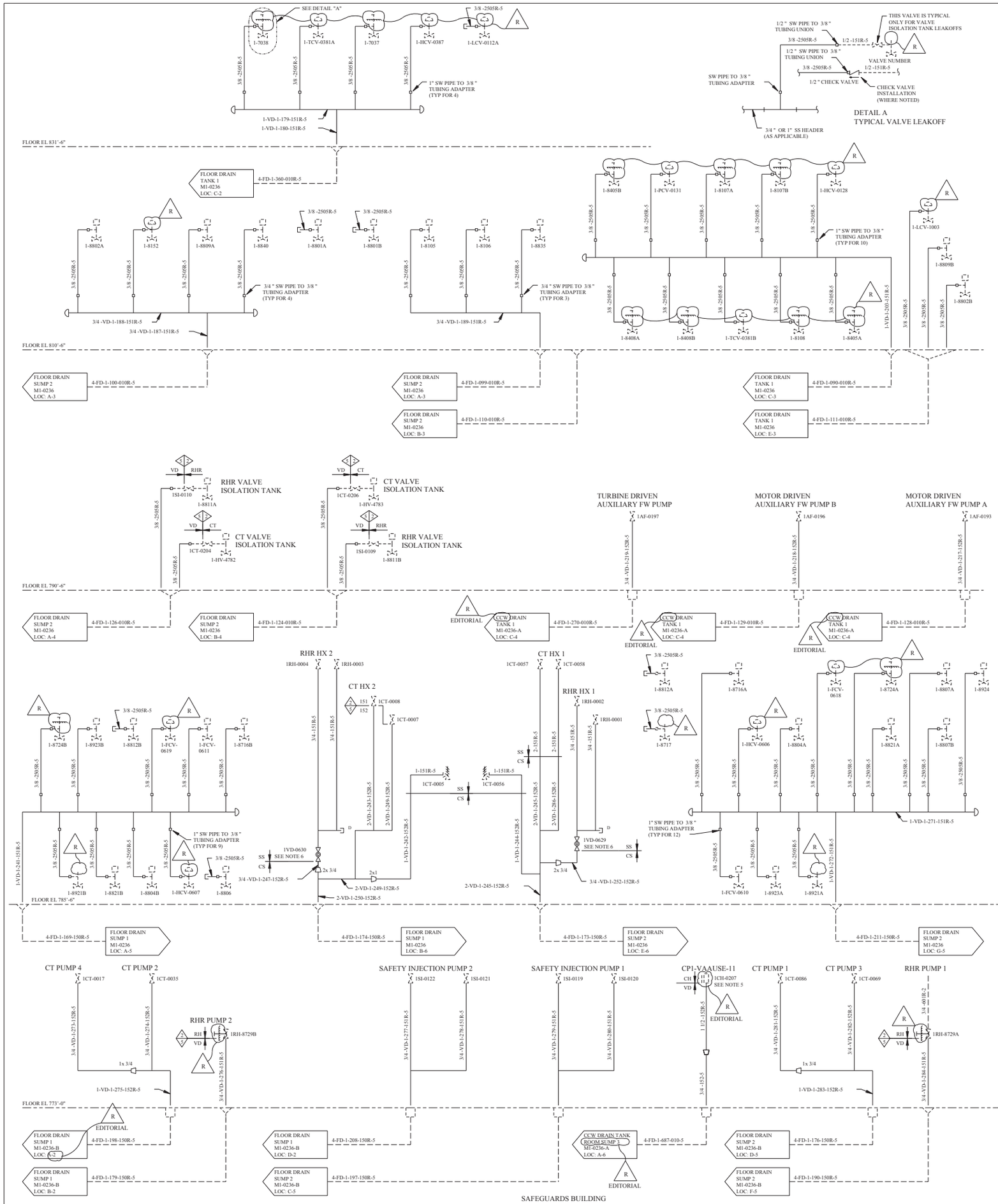

VALVE LEAKOFFS - SAFEGUARDS BUILDING

VALVE NO.	LOCATION	REFERENCE		
1-7037	B-1	CVCS	M1-0256-A	(LOC: E-4)
1-7038	B-1	CVCS	M1-0256-A	(LOC: G-6)
1-8105	C-2	CVCS	M1-0255-01	(LOC: A-2)
1-8106	C-2	CVCS	M1-0255-01	(LOC: A-2)
1-8107A	D-1	CVCS	M1-0254	(LOC: A-2)
1-8107B	D-1	CVCS	M1-0254	(LOC: A-1)
1-8108	E-2	CVCS	M1-0254	(LOC: A-1)
1-8152	A-2	CVCS	M1-0253-A	(LOC: G-2)
1-8405A	E-2	CVCS	M1-0254	(LOC: A-1)
1-8405B	D-1	CVCS	M1-0254	(LOC: A-2)
1-8408A	D-2	CVCS	M1-0254	(LOC: C-2)
1-8408B	D-2	CVCS	M1-0254	(LOC: C-1)
1-8716A	D-4	RHR	M1-0260	(LOC: A-3)
1-8716B	B-4	RHR	M1-0260	(LOC: A-4)
1-8717	D-4	RHR	M1-0260	(LOC: B-4)
1-8724A	E-4	RHR	M1-0260	(LOC: D-2)
1-8724B	A-4	RHR	M1-0260	(LOC: D-4)
1-8801A	B-2	SIS	M1-0261	(LOC: C-2)
1-8801B	B-2	SIS	M1-0261	(LOC: C-2)
1-8802A	A-2	SIS	M1-0263-A	(LOC: A-1)
1-8802B	E-2	SIS	M1-0263-A	(LOC: A-3)
1-8804A	E-4	SIS	M1-0261	(LOC: G-4)
1-8804B	A-5	SIS	M1-0263-A	(LOC: F-3)
1-8806	B-5	SIS	M1-0263-A	(LOC: G-2)
1-8807A	E-4	SIS	M1-0261	(LOC: E-4)
1-8807B	E-4	SIS	M1-0261	(LOC: G-5)
1-8809A	B-2	SIS	M1-0263-B	(LOC: A-1)
1-8809B	E-2	SIS	M1-0263-B	(LOC: A-3)
1-8811A	B-3	SIS	M1-0263-B	(LOC: C-6)
1-8811B	B-3	SIS	M1-0263-B	(LOC: C-5)
1-8812A	D-4	SIS	M1-0263-B	(LOC: F-2)
1-8812B	A-4	SIS	M1-0263-B	(LOC: F-3)
1-8821A	E-4	SIS	M1-0263-A	(LOC: C-3)
1-8821B	A-5	SIS	M1-0263-A	(LOC: C-4)
1-8921A	E-5	SIS	M1-0263-A	(LOC: C-2)
1-8921B	A-5	SIS	M1-0263-A	(LOC: C-3)
1-8923A	D-5	SIS	M1-0263-A	(LOC: F-2)
1-8923B	A-4	SIS	M1-0263-A	(LOC: F-3)
1-8924	E-4	SIS	M1-0261	(LOC: E-4)
1-8835	C-2	SIS	M1-0263-A	(LOC: A-4)
1-8840	B-2	SIS	M1-0263-B	(LOC: A-2)
1-FCV-0610	D-5	RHR	M1-0260	(LOC: E-1)
1-FCV-0611	B-4	RHR	M1-0260	(LOC: E-6)
1-FCV-0618	E-4	RHR	M1-0260	(LOC: C-3)
1-FCV-0619	A-4	RHR	M1-0260	(LOC: C-6)
1-HCV-0128	E-1	CVCS	M1-0254	(LOC: A-2)
1-HCV-0387	C-1	CVCS	M1-0256-A	(LOC: G-6)
1-HCV-0606	D-4	RHR	M1-0260	(LOC: A-2)
1-HCV-0607	A-5	RHR	M1-0260	(LOC: A-4)
1-HIV-4782	B-3	CT	M1-0232-A	(LOC: D-5)
1-HIV-4783	B-3	CT	M1-0232-A	(LOC: D-6)
1-LCV-1003	E-2	WP	M1-0264	(LOC: E-3)
1-LCV-0112A	C-1	CVCS	M1-0254	(LOC: F-3)
1-PCV-0131	D-1	CVCS	M1-0254	(LOC: C-1)
1-TCV-0381A	B-1	CVCS	M1-0256-A	(LOC: G-6)
1-TCV-0381B	D-2	CVCS	M1-0254	(LOC: A-1)

A-5 R EDITORIAL

R EDITORIAL

EQUIPMENT DRAINS - SAFEGUARDS BUILDING

VALVE NO.	LOCATION	REFERENCE		
1AF-0193	E-3	AFS	M1-0206-01	(LOC: B-2)
1AF-0196	E-3	AFS	M1-0206-01	(LOC: B-3)
1AF-0197	D-3	AFS	M1-0206-01	(LOC: B-4)
1CH-0207	D-5	CH	M1-0311-A	(LOC: E-6)
1CT-0005	C-4	CT	M1-0232	(LOC: C-3)
1CT-0007	B-4	CT	M1-0232	(LOC: C-3)
1CT-0008	B-4	CT	M1-0232	(LOC: C-3)
1CT-0017	A-5	CT	M1-0232	(LOC: G-3)
1CT-0035	A-5	CT	M1-0232	(LOC: G-3)
1CT-0056	C-4	CT	M1-0232	(LOC: C-5)
1CT-0057	C-4	CT	M1-0232	(LOC: C-5)
1CT-0058	C-4	CT	M1-0232	(LOC: C-5)
1CT-0069	E-5	CT	M1-0232	(LOC: G-3)
1CT-0086	E-5	CT	M1-0232	(LOC: G-3)
1CT-0204	B-3	CT	M1-0232-A	(LOC: D-5)
1CT-0206	B-3	CT	M1-0232-A	(LOC: D-6)
1RH-0001	D-4	RHR	M1-0260	(LOC: C-3)
1RH-0002	C-4	RHR	M1-0260	(LOC: C-3)
1RH-0003	B-4	RHR	M1-0260	(LOC: B-5)
1RH-0004	B-4	RHR	M1-0260	(LOC: B-5)
1RH-8729A	E-6	RHR	M1-0260	(LOC: D-4)
1RH-8729B	B-6	RHR	M1-0260	(LOC: D-6)
1SI-0109	B-3	SIS	M1-0263-B	(LOC: C-5)
1SI-0110	A-3	SIS	M1-0263-B	(LOC: C-6)
1SI-0119	C-5	SIS	M1-0263-A	(LOC: F-3)
1SI-0120	D-5	SIS	M1-0263-A	(LOC: F-3)
1SI-0121	C-5	SIS	M1-0263-A	(LOC: F-4)
1SI-0122	C-5	SIS	M1-0263-A	(LOC: F-4)

R EDITORIAL

REV	DWN	CHKD	APVD	REMARKS
CP-15	DLK 08-12-2008	MM 08-19-2008		THIS DRAWING REVISED TO INCORPORATE DESIGN CHANGE FDA 2008-002198-01-00 PER SK-0002-08-002198-01-00. EDITORIAL CHANGES AS NOTED.

NOTES:

1. FOR MECHANICAL SYMBOLS AND NOTES SEE DRAWING M1-0200.
2. FOR DRAIN SYMBOLS SEE M1-0236 NOTE 4.
3. ALL PIPING IS NON-NUCLEAR SAFETY CLASS.
4. PIPING DESIGNATED FD IS PROCURED BY SPECIFICATION MS-73 AND PIPING DESIGNATED VD IS PROCURED BY SPECIFICATION MS-44A.
5. INTERNALS REMOVED FROM VALVE 1CH-0207.
6. VALVES 1VD-0629 AND 1VD-0630 ARE THE NORMAL DRAIN PATH FOR RHR HEAT EXCHANGER DRAINING.

FSAR FIGURE 9.3-7

THIS DRAWING CREATED ELECTRONICALLY

CLASS II

LUMINANT
CPNPP
GLEN ROSE, TEXAS

FLOW DIAGRAM
VENTS AND DRAINS SYSTEM
SAFEGUARDS BUILDING

DWG. NO. M1-0236 | SH. NO. 03 | REV. CP-15

REF CHKD 05/05/2003

SSSSSSDA TESSSSSS

me903500.dgn A M1-0236-03 < FINAL PRINT >

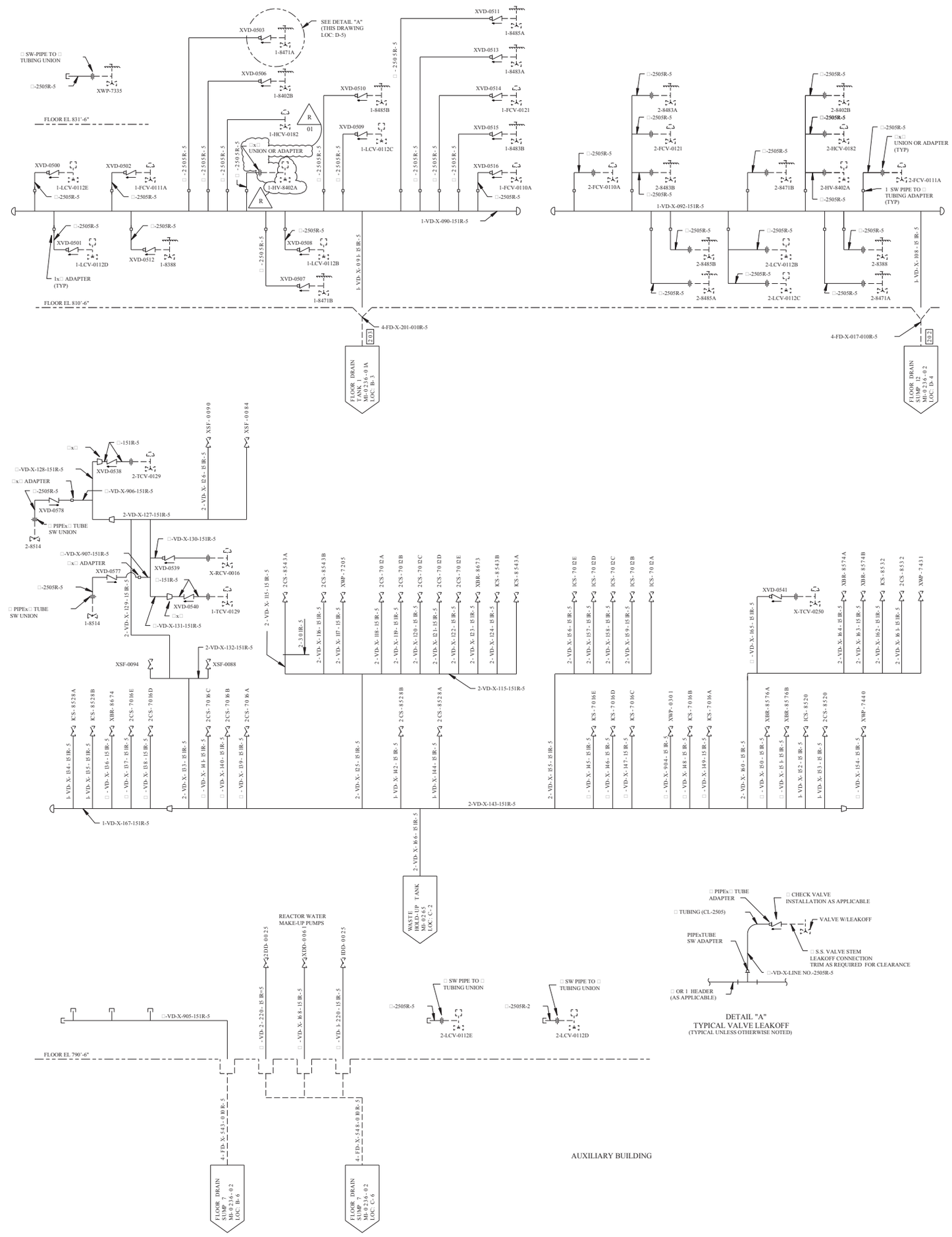

VALVE LEAKOFFS - AUXILIARY BUILDING

VALVE NO.	LOCATION	REFERENCE		
1-8388	A-2	CVCS, F.D.	M1-0255-01	(LOC: C-2)
1-HV-8402A	B-1	CVCS, F.D.	M1-0255-01	(LOC: B-2)
1-8402B	B-1	CVCS, F.D.	M1-0255-01	(LOC: B-2)
1-8471A	B-1	CVCS, F.D.	M1-0255-01	(LOC: G-3)
1-8471B	B-2	CVCS, F.D.	M1-0255-01	(LOC: G-5)
1-8483A	C-1	CVCS, F.D.	M1-0255-01	(LOC: D-3)
1-8483B	C-1	CVCS, F.D.	M1-0255-01	(LOC: D-3)
1-8485A	C-1	CVCS, F.D.	M1-0255-01	(LOC: D-3)
1-8485B	B-1	CVCS, F.D.	M1-0255-01	(LOC: C-5)
1-8514	A-3	CVCS, F.D.	M1-0254	(LOC: G-6)
1-FCV-0110A	C-1	CVCS, F.D.	M1-0255-02	(LOC: E-5)
1-FCV-0111A	A-1	CVCS, F.D.	M1-0255-02	(LOC: C-1)
1-FCV-0121	C-1	CVCS, F.D.	M1-0255-01	(LOC: D-3)
1-HCV-0182	B-1	CVCS, F.D.	M1-0255-01	(LOC: B-2)
1-LCV-0112B	B-2	CVCS, F.D.	M1-0255	(LOC: E-5)
1-LCV-0112C	B-1	CVCS, F.D.	M1-0255	(LOC: D-5)
1-LCV-0112D	A-2	CVCS, F.D.	M1-0255	(LOC: A-5)
1-LCV-0112E	A-1	CVCS, F.D.	M1-0255	(LOC: D-4)
1-TCV-0129	B-3	CVCS, F.D.	M1-0254	(LOC: G-2)
2-8388	E-2	CVCS, F.D.	M2-0254	(LOC: G-4)
2-HV-8402A	E-1	CVCS, F.D.	M2-0255	(LOC: B-1)
2-8402B	E-1	CVCS, F.D.	M2-0255	(LOC: B-1)
2-8471A	E-2	CVCS, F.D.	M2-0254	(LOC: D-5)
2-8471B	D-1	CVCS, F.D.	M2-0254	(LOC: D-6)
2-8483A	D-1	CVCS, F.D.	M2-0254	(LOC: G-5)
2-8483B	D-1	CVCS, F.D.	M2-0254	(LOC: G-5)
2-8485A	D-2	CVCS, F.D.	M2-0254	(LOC: G-5)
2-8485B	D-2	CVCS, F.D.	M2-0254	(LOC: G-6)
2-8514	A-3	CVCS, F.D.	M2-0253-A	(LOC: D-4)
2-FCV-0110A	C-1	CVCS, F.D.	M2-0255-02	(LOC: C-1)
2-FCV-0111A	E-1	CVCS, F.D.	M2-0255-02	(LOC: C-1)
2-FCV-0121	D-1	CVCS, F.D.	M2-0254	(LOC: G-5)
2-HCV-0182	E-1	CVCS, F.D.	M2-0255	(LOC: B-1)
2-LCV-0112B	D-2	CVCS, F.D.	M2-0254	(LOC: D-3)
2-LCV-0112C	D-2	CVCS, F.D.	M2-0254	(LOC: D-4)
2-LCV-0112D	C-5	CVCS, F.D.	M2-0254	(LOC: B-4)
2-LCV-0112E	C-5	CVCS, F.D.	M2-0254	(LOC: B-5)
2-TCV-0129	A-3	CVCS, F.D.	M2-0253-A	(LOC: E-3)
X-RCV-0016	B-3	BRS	M1-0259	(LOC: A-4)
X-TCV-0250	E-3	BRS	M1-0258	(LOC: B-1)
XWP-7335	A-1	WP	M1-0268	(LOC: A-6)

EQUIPMENT DRAIN VALVES AUXILIARY BUILDING

VALVE NO.	LOCATION	REFERENCE		
1CS-7012A	D-3	CVCS	M1-0256	(LOC: F-3)
1CS-7012B	D-3	CVCS	M1-0256	(LOC: E-3)
1CS-7012C	C-3	CVCS	M1-0256	(LOC: D-3)
1CS-7012D	C-3	CVCS	M1-0256	(LOC: C-3)
1CS-7012E	C-3	CVCS	M1-0256	(LOC: B-3)
1CS-7016A	D-4	CVCS	M1-0256	(LOC: E-4)
1CS-7016B	D-4	CVCS	M1-0256	(LOC: D-4)
1CS-7016C	D-4	CVCS	M1-0256	(LOC: C-4)
1CS-7016D	C-4	CVCS	M1-0256	(LOC: B-4)
1CS-7016E	C-4	CVCS	M1-0256	(LOC: A-4)
1CS-8520	D-4	CVCS	M1-0254	(LOC: G-6)
1CS-8528A	A-4	CVCS	M1-0254	(LOC: D-6)
1CS-8528B	A-4	CVCS	M1-0254	(LOC: B-6)
1CS-8532	E-3	CVCS	M1-0254	(LOC: G-5)
1CS-8543A	C-3	CVCS	M1-0254	(LOC: D-5)
1CS-8543B	C-3	CVCS	M1-0254	(LOC: B-5)
2CS-7012A	B-3	CVCS	M2-0256-B	(LOC: B-2)
2CS-7012B	B-3	CVCS	M2-0256-B	(LOC: C-2)
2CS-7012C	C-3	CVCS	M2-0256-B	(LOC: D-2)
2CS-7012D	C-3	CVCS	M2-0256-B	(LOC: E-2)
2CS-7012E	C-3	CVCS	M2-0256-B	(LOC: F-2)
2CS-7016A	B-4	CVCS	M2-0256-B	(LOC: B-4)
2CS-7016B	B-4	CVCS	M2-0256-B	(LOC: C-4)
2CS-7016C	B-4	CVCS	M2-0256-B	(LOC: D-4)
2CS-7016D	A-4	CVCS	M2-0256-B	(LOC: E-4)
2CS-7016E	A-4	CVCS	M2-0256-B	(LOC: F-4)
2CS-8520	E-4	CVCS	M2-0253-A	(LOC: D-6)
2CS-8528A	C-4	CVCS	M2-0253-A	(LOC: B-4)
2CS-8528B	B-4	CVCS	M2-0253-A	(LOC: A-4)
2CS-8532	E-3	CVCS	M2-0253-A	(LOC: D-5)
2CS-8543A	B-3	CVCS	M2-0253-A	(LOC: D-3)
2CS-8543B	B-3	CVCS	M2-0253-A	(LOC: B-3)
XBR-8574A	E-3	BRS	M1-0258	(LOC: B-1)
XBR-8574B	E-3	BRS	M1-0258	(LOC: D-1)
XBR-8576A	D-4	BRS	M1-0258	(LOC: C-3)
XBR-8576B	D-4	BRS	M1-0258	(LOC: F-3)
XBR-8673	C-3	BRS	M1-0259	(LOC: B-1)
XBR-8674	A-4	BRS	M1-0259	(LOC: B-3)
XSF-0084	B-3	SFP	M1-0235-01	(LOC: A-2)
XSF-0088	B-4	SFP	M1-0235-01	(LOC: A-4)
XSF-0090	B-3	SFP	M1-0235-01	(LOC: G-2)
XSF-0094	A-4	SFP	M1-0235-01	(LOC: G-4)
XWP-0301	D-4	WPS	M1-0265	(LOC: C-1)
XWP-7205	B-3	WPS	M1-0265	(LOC: E-4)
XWP-7431	E-3	WPS	M1-0266	(LOC: A-4)
XWP-7440	E-4	WPS	M1-0266	(LOC: A-5)
1DD-0025	B-5	DD	M1-0241-01	(LOC: C-3)
XDD-0061	B-5	DD	M1-0241-01	(LOC: C-2)
2DD-0025	B-5	DD	M2-0241	(LOC: D-5)

REV	DWN	CHKD	APVD	REMARKS
CP-15	MHF 03-12-2013	GAW 03-12-2013		THIS DRAWING REVISED TO INCORPORATE DESIGN CHANGE FDA 2010-000172-01-04 PER SK-0009-10-000172-01-01.

NOTES:

1. FOR MECHANICAL SYMBOLS AND NOTES SEE DRAWING M1-0200.
2. FOR DRAIN SYMBOLS SEE M1-0236 NOTE 4.
3. ALL PIPING IS NON-NUCLEAR SAFETY CLASS.
4. PIPING DESIGNATED FD IS PROCURED BY SPECIFICATION MS-73 AND PIPING DESIGNATED VD IS PROCURED BY SPECIFICATION MS-44A.
5. DELETED

FSAR FIGURE 9.3-7

THIS DRAWING CREATED ELECTRONICALLY

CLASS II

LUMINANT
CPNPP
GLEN ROSE, TEXAS

VENTS & DRAINS SYSTEM
FLOW DIAGRAM
AUXILIARY BUILDING LEAK-OFFS

DWG. NO. M1-0236 | SH. NO. 04 | REV. CP-15

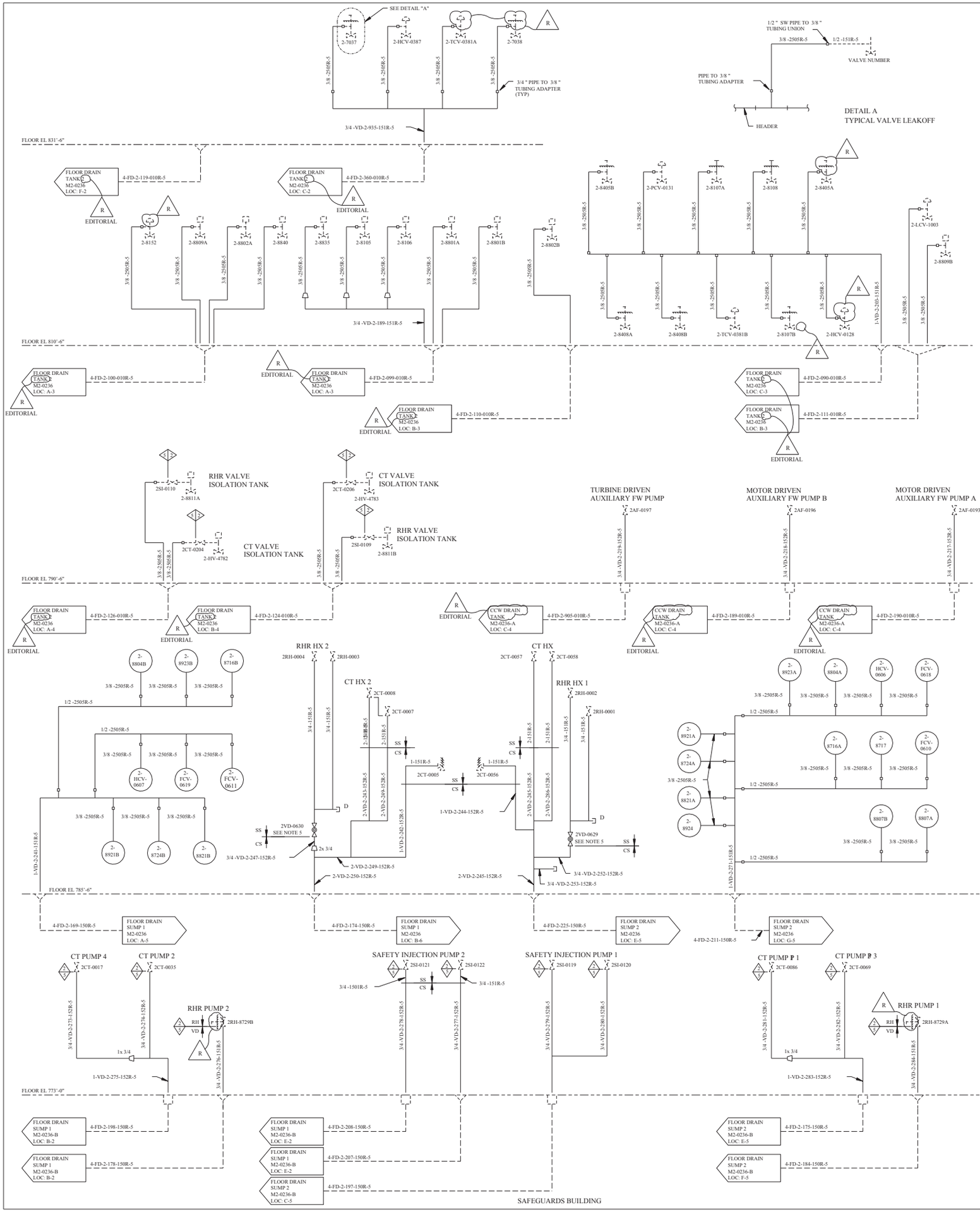

DETAIL A
TYPICAL VALVE LEAKOFF

1/2 " SW PIPE TO 3/8 " TUBING UNION
3/8 -2505R-5
1/2 -151R-5
VALVE NUMBER
PIPE TO 3/8 " TUBING ADAPTER
HEADER

VALVE LEAKOFFS - SAFEGUARDS BUILDING

VALVE NO.	LOCATION		REFERENCE	
2-7037	B-1	CS	M2-0256-A	(LOC: E-3)
2-7038	C-1	CS	M2-0256-A	(LOC: F-6)
2-8105	C-2	CS	M2-0255	(LOC: D-1)
2-8106	C-2	CS	M2-0255	(LOC: C-1)
2-8107A	D-1	CS	M2-0253-A	(LOC: A-2)
2-8107B	D-2	CS	M2-0253-A	(LOC: A-1)
2-8108	D-1	CS	M2-0253-A	(LOC: A-1)
2-8152	A-2	CS	M2-0253	(LOC: G-3)
2-8405A	E-2	CS	M2-0253-A	(LOC: C-2)
2-8405B	D-1	CS	M2-0253-A	(LOC: D-1)
2-8408A	D-2	CS	M2-0253-A	(LOC: E-1)
2-8408B	D-2	CS	M2-0253-A	(LOC: F-1)
2-8716A	E-4	RH	M2-0260	(LOC: A-3)
2-8716B	B-4	RH	M2-0260	(LOC: A-4)
2-8717	E-4	RH	M2-0260	(LOC: A-3)
2-8724A	D-4	RH	M2-0260	(LOC: D-2)
2-8724B	A-5	RH	M2-0260	(LOC: D-5)
2-8801A	C-2	SI	M2-0261	(LOC: C-5)
2-8801B	C-2	SI	M2-0261	(LOC: E-5)
2-8804A	E-4	SI	M2-0261	(LOC: A-5)
2-8804B	A-4	SI	M2-0262	(LOC: B-4)
2-8807A	E-5	SI	M2-0261	(LOC: C-6)
2-8807B	E-5	SI	M2-0261	(LOC: A-6)
2-8809A	B-2	SI	M2-0263-A	(LOC: F-1)
2-8809B	E-2	SI	M2-0263-A	(LOC: F-3)
2-8811A	B-3	SI	M2-0263-A	(LOC: C-5)
2-8811B	B-3	SI	M2-0263-A	(LOC: C-6)
2-8821A	D-4	SI	M2-0262	(LOC: E-3)
2-8821B	B-5	SI	M2-0262	(LOC: E-4)
2-8921A	D-4	SI	M2-0262	(LOC: D-1)
2-8921B	A-5	SI	M2-0262	(LOC: D-4)
2-8923A	E-4	SI	M2-0262	(LOC: A-1)
2-8923B	B-4	SI	M2-0262	(LOC: A-4)
2-8924	D-5	SI	M2-0261	(LOC: C-5)
2-8840	B-2	SI	M2-0263-A	(LOC: F-2)
2-8802A	B-2	SI	M2-0262	(LOC: F-1)
2-8802B	C-2	SI	M2-0262	(LOC: F-4)
2-8835	B-2	SI	M2-0262	(LOC: F-3)
2-FCV-0610	E-4	RH	M2-0260	(LOC: G-1)
2-FCV-0611	B-4	RH	M2-0260	(LOC: G-6)
2-FCV-0618	E-4	RH	M2-0260	(LOC: C-3)
2-FCV-0619	A-4	RH	M2-0260	(LOC: C-6)
2-HCV-0128	E-2	CS	M2-0253-A	(LOC: A-1)
2-HCV-0387	C-1	CS	M2-0256-A	(LOC: E-6)
2-HCV-0606	E-4	RH	M2-0260	(LOC: A-2)
2-HCV-0607	A-4	RH	M2-0260	(LOC: A-4)
2-HV-4782	B-3	CT	M2-0232-A	(LOC: D-5)
2-HV-4783	B-3	CT	M2-0232-A	(LOC: D-6)
2-LCV-1003	E-2	WP	M2-0264	(LOC: C-2)
2-PCV-0131	D-1	CS	M2-0253-A	(LOC: E-1)
2-TCV-0381A	C-1	CS	M2-0256-A	(LOC: F-5)
2-TCV-0381B	D-2	CS	M2-0253-A	(LOC: A-2)

EDITORIAL

EQUIPMENT DRAINS - SAFEGUARDS BUILDING

VALVE NO.	LOCATION		REFERENCE	
2AF-0193	E-3	AF	M2-0206-01	(LOC: C-2)
2AF-0196	E-3	AF	M2-0206-01	(LOC: C-3)
2AF-0197	D-3	AF	M2-0206-01	(LOC: C-5)
2CT-0005	C-4	CT	M2-0232	(LOC: C-3)
2CT-0007	B-4	CT	M2-0232	(LOC: C-3)
2CT-0008	B-4	CT	M2-0232	(LOC: C-3)
2CT-0017	A-5	CT	M2-0232	(LOC: G-3)
2CT-0035	A-5	CT	M2-0232	(LOC: G-3)
2CT-0056	C-4	CT	M2-0232	(LOC: C-5)
2CT-0057	C-4	CT	M2-0232	(LOC: C-5)
2CT-0058	C-4	CT	M2-0232	(LOC: C-5)
2CT-0069	E-5	CT	M2-0232	(LOC: G-3)
2CT-0086	E-5	CT	M2-0232	(LOC: G-3)
2CT-0204	B-3	CT	M2-0232-A	(LOC: D-5)
2CT-0206	B-3	CT	M2-0232-A	(LOC: D-6)
2RH-0001	D-4	RH	M2-0260	(LOC: C-3)
2RH-0002	C-4	RH	M2-0260	(LOC: C-3)
2RH-0003	B-4	RH	M2-0260	(LOC: C-6)
2RH-0004	B-4	RH	M2-0260	(LOC: C-6)
2RH-8729A	E-6	RH	M2-0260	(LOC: E-1)
2RH-8729B	B-6	RH	M2-0260	(LOC: E-6)
2SI-0109	B-3	SI	M2-0263-A	(LOC: C-6)
2SI-0110	A-3	SI	M2-0263-A	(LOC: C-5)
2SI-0119	C-5	SI	M2-0262	(LOC: C-2)
2SI-0120	D-5	SI	M2-0262	(LOC: C-2)
2SI-0121	C-5	SI	M2-0262	(LOC: D-5)
2SI-0122	C-5	SI	M2-0262	(LOC: B-5)

EDITORIAL

REV	DWN	CHKD	APVD	REMARKS
CP-16	DLK 08-11 2008	MM 08-13 2008		THIS DRAWING REVISED TO INCORPORATE DESIGN CHANGE FDA 2008-002198-01-00 PER SK-0001-08-002198-01-00. EDITORIAL CHANGES AS NOTED.

NOTES:

1. FOR MECHANICAL SYMBOLS AND NOTES SEE DRAWING M1-0200.
2. FOR TYPICAL DRAIN SYMBOLS, SEE DRAWING M2-0238 NOTE 3.
3. PIPING DESIGNATED FD IS PROCURED BY SPECIFICATION MS-73 AND PIPING DESIGNATED VD IS PROCURED BY SPECIFICATION MS-43B AND MS-44B.
4. DELETED
5. VALVES 2VD-0629 AND 2VD-0630 ARE THE NORMAL DRAIN PATH FOR RHR HEAT EXCHANGER DRAINING.
6. DELETED

FSAR FIGURE 9.3-7

THIS DRAWING CREATED ELECTRONICALLY

CLASS II

LUMINANT
CPNPP
GLEN ROSE, TEXAS

FLOW DIAGRAM
VENTS AND DRAINS SYSTEM
SAFEGUARDS BUILDING

DWG. NO. M2-0236 | SH. NO. 03 | REV. CP-16

REF CHKD 04-28-2003

SSSSSSDATESSSSS

me903400.dgn A M2-0236-03

< FINAL PRINT >

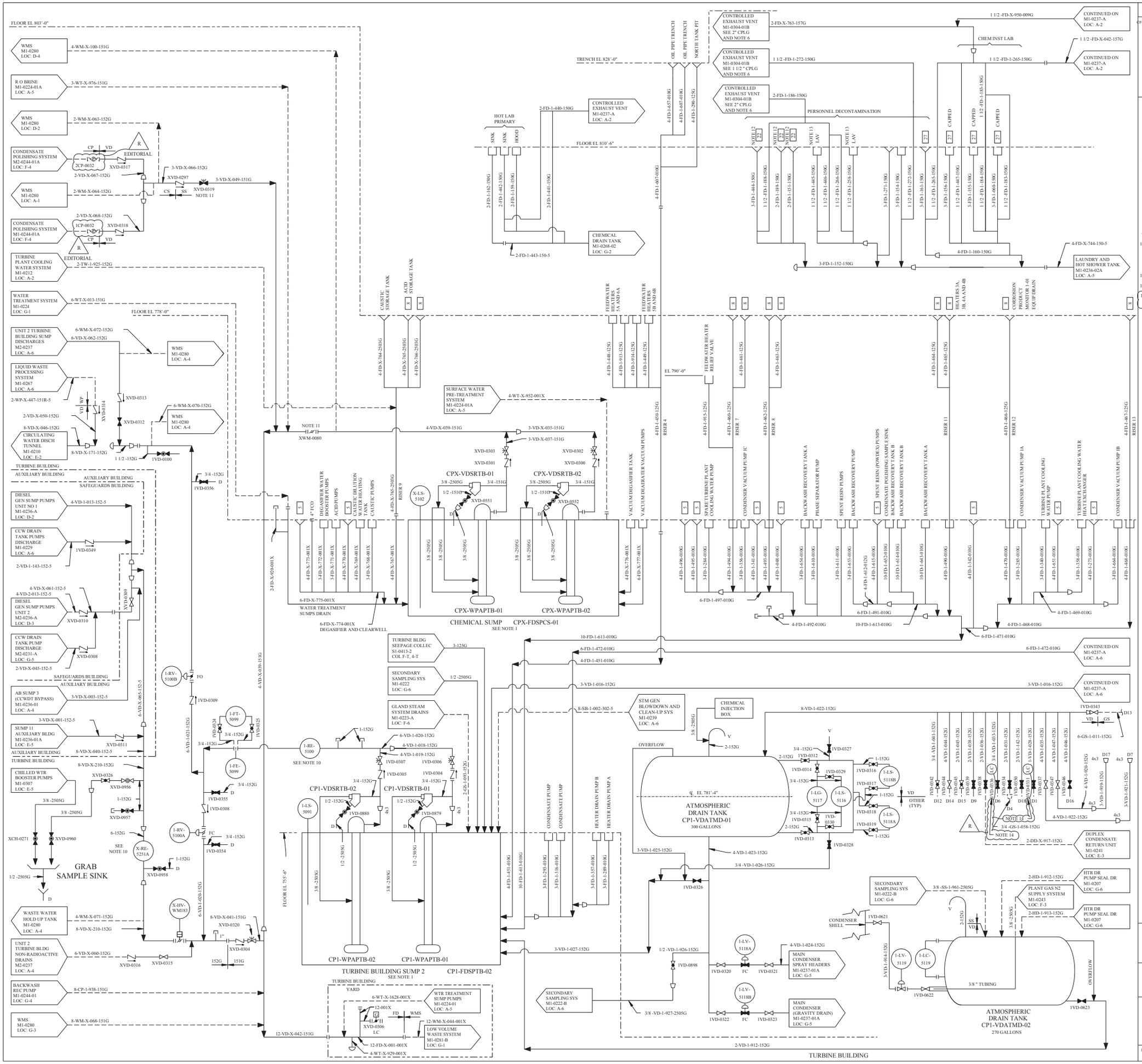

REV	DWN	CHKD	APVD	REMARKS
CP-49	DLK 10-13 2009	GAW 10-16 2009		THIS DRAWING REVISED TO INCORPORATE DESIGN CHANGE FDA 2009-003957-01-00 PER SK-0005-09-003957-01-00. EDITORIAL CHANGES AS NOTED

NOTES:

1. FOR SWITCH LEVEL SYSTEM AND PUMP CONTROL SEE TYPICAL SUMP DETAIL, LOCATION H-3 THIS DRAWING.
2. THE BOXED IN NUMBERS DESIGNATE THE SPECIFIC ROOM NUMBERS ON THE PLUMBING DRAWINGS SHOWING VARIOUS DRAIN LOCATIONS.
3. FOR DRAIN SYMBOLS SEE DRAWING M1-0236 NOTE 4.
4. FOR MECHANICAL SYMBOLS AND NOTES SEE M1-0200.
5. ALL PIPING IS NON-NUCLEAR SAFETY CLASS.
6. PIPING DESIGNATED FD IS PROCURED BY SPECIFICATION MS-73 AND PIPING DESIGNATED VD IS PROCURED BY SPECIFICATION MS-44A.
7. TURBINE BUILDING SUMP 1 HAS AN AIRTIGHT COVER WITH A VENT LINE, PENETRATING THE COVER.
8. PIPING DESIGNATED FD IS PROCURED BY SPECIFICATION MS-73. PIPING DESIGNATED VD IS PROCURED BY SPECIFICATIONS MS-43A AND MS-43B.
9. DELETED
10. "ADJACENT-TO-LINE" RADIATION DETECTOR.
11. VALVE POSITION IS PROCEDURALLY CONTROLLED BY OPERATIONS/RADWASTE AND MAY BE OPEN OR CLOSED DEPENDING ON PLANT CONDITIONS AND EFFLUENT SAMPLE RESULTS.
12. FLOOR DRAINS PLUGGED BY NON-SHRINK GROUT.
13. LAV DRAINS TO BE CAPPED.
14. VALVES 1VD-0331 AND 1VD-0336 ARE LOCKED CLOSED TO ISOLATE THE ABANDONED IN PLACE ELECTRIC AUXILIARY BOILER.

R

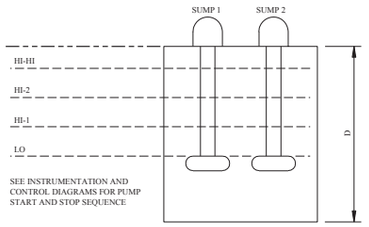

TYPICAL SUMP DETAIL

SUMP NUMBER	D	LO	HI-1	HI-2	HI-HI
1	4'-6"	1'-0"	1'-9"	3'-0"	4'-0"
2	3'-5"	1'-0"	2'-6"	2'-8"	3'-0"
CHEMICAL	11'-11"	3'-4"	5'-10"	6'-8"	10'-0"

ACTUATOR LEVELS
(MEASURED FROM SUMP BOTTOM)

ATMOSPHERIC DRAIN TANK DRAIN REFERENCE
(SEE LOCATION F-5 AND G-5 THIS DRAWING)

DRAIN NUMBER	REFERENCE
D1	AUXILIARY BOILER FW PUMP DISCHARGE M1-0213-A, LOC: G-5
D4	ACPSI CONNECTION NO T18 M1-0223, LOC: G-4
D6	AUXILIARY BOILER CIRC PUMP COOLING WATER DRAIN M1-0213-A, LOC: G-5
D7	SG FEEDWATER PUMP 1-B PRIMARY STUFFING BOX LEAKAGE CONNECTION M1-0203, LOC: B-6
D9	SPARE CONNECTION
D12	CV AND WBP SYSTEM, MAIN CONDENSER VACUUM BREAKER SEALS M1-0211, LOC: G-1
D13	GLAND STEAM CONDENSER M1-0223, LOC: G-6
D14	AUXILIARY GLAND STEAM CONDENSER M1-0223-A LOC: F-6
D15	PRIMARY SAMPLING SYSTEM M1-0228-C, LOC: F-5
D16	SPARE CONNECTION
D17	SG FEEDWATER PUMP 1-A PRIMARY STUFFING BOX LEAKAGE CONNECTION M1-0203, LOC: B-3
D18	AUXILIARY STEAM DRAIN PUMPS DISCHARGE M1-0213-01, LOC: G-4

DRAWING 2323-M1-0237 REV CP-6
HAS BEEN SPLIT INTO THE FOLLOWING SHEETS:
M1-0237
M1-0237-A

FSAR FIGURE 9.3-8

THIS DRAWING CREATED ELECTRONICALLY

CLASS II

LUMINANT
CPNPP
GLEN ROSE, TEXAS

FLOW DIAGRAM
VENTS AND DRAINS SYSTEM
TURBINE AND FUEL HANDLING BUILDING

DWG. NO. M1-0237 | SH. NO. - | REV. CP-49

FINAL PRINT

REF CHKD CP-41 10/04/99

me103120.dgn M1-0237

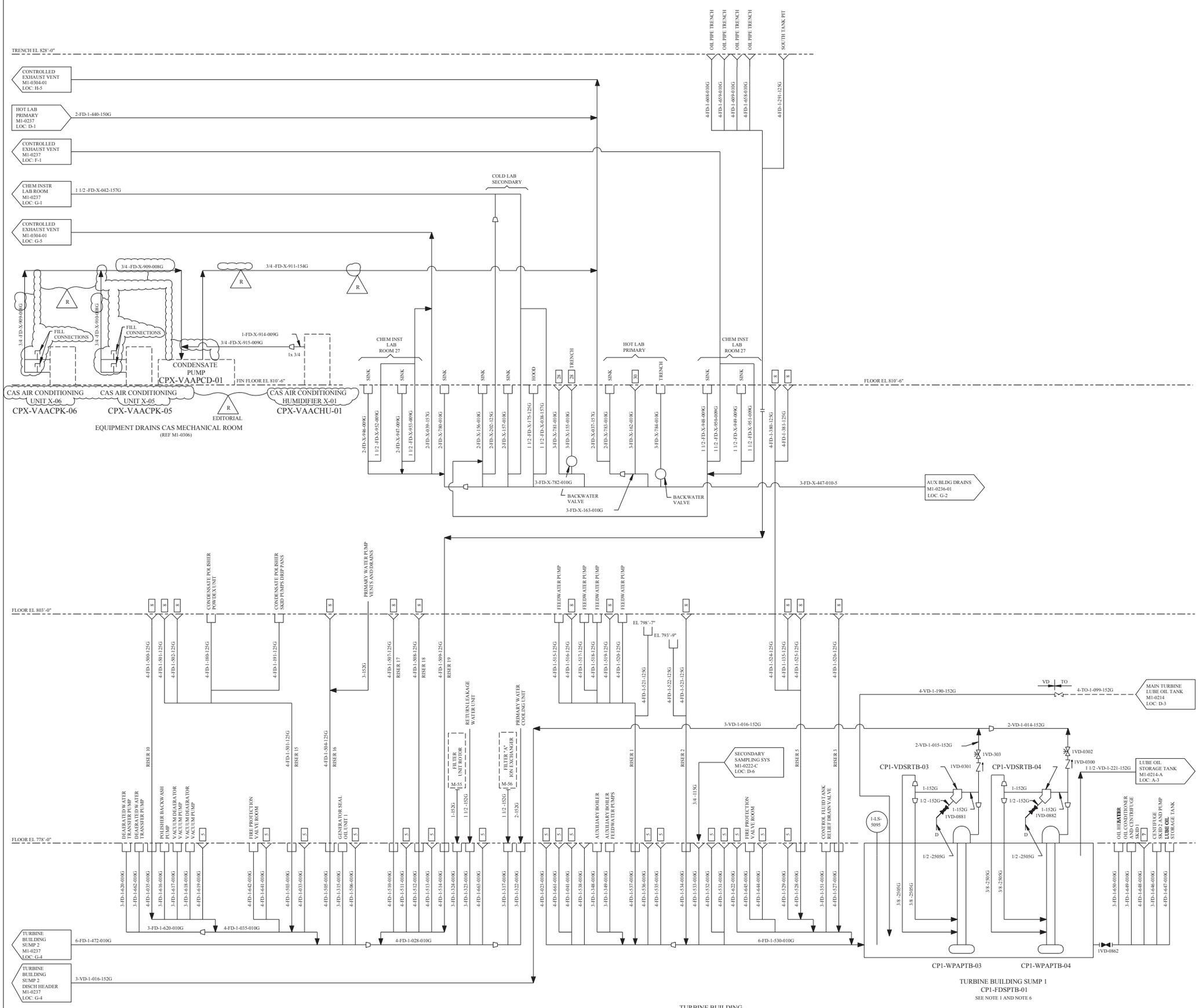

REV	DWN	CHKD	APVD	REMARKS
CP-14	MM 10-07-2004	DLK 10-07-2004		THIS DRAWING REVISED TO INCORPORATE DESIGN CHANGE FDA-2002-002767-01-00 PER SK-0908-02-002767-01-00. EDITORIAL CHANGES AS NOTED.

NOTES:

1. FOR SWITCH LEVEL SYSTEM AND PUMP CONTROL SEE TYPICAL SUMP DETAIL, LOCATION H-3 THIS DRAWING.
2. THE BOXED IN NUMBERS DESIGNATE THE SPECIFIC ROOM NUMBERS ON THE PLUMBING DRAWINGS SHOWING VARIOUS DRAIN LOCATIONS.
3. FOR DRAIN SYMBOLS SEE DRAWING M1-0236 NOTE 4.
4. FOR MECHANICAL SYMBOLS AND NOTES SEE M1-0200. **0200**.
5. **PIPING DESIGNATED FD IS PROCURED BY SPECIFICATION MS-73** AND PIPING DESIGNATED VD IS PROCURED BY SPECIFICATION MS-44A.
6. TURBINE BUILDING SUMP 1 HAS AN AIRTIGHT COVER WITH A VENT LINE, PENETRATING THE COVER.
7. PIPING DESIGNATED FD IS PROCURED BY SPECIFICATION MS-73. PIPING DESIGNATED VD IS PROCURED BY SPECIFICATIONS MS-43A AND MS-43B.

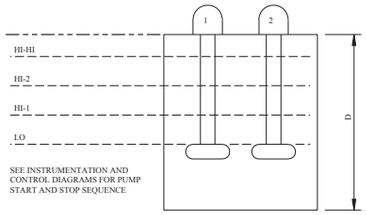

TYPICAL SUMP DETAIL

SUMP NUMBER	D	LO	HI-1	HI-2	HI-HI
1	4'-6"	1'-0"	1'-9"	3'-0"	4'-0"
2	3'-5"	1'-0"	2'-6"	2'-8"	3'-0"
CHEMICAL	11'-11"	5'-0"	7'-6"	8'-9"	10'-0"

ACTUATOR LEVELS
(MEASURED FROM SUMP BOTTOM)

FSAR FIGURE 9.3-8

THIS DRAWING CREATED ELECTRONICALLY

DRAWING 2323-M1-0237 REV CP-6
HAS BEEN SPLIT INTO THE FOLLOWING SHEETS:
M1-0237
M1-0237-A

CLASS II

TXU POWER
CPSES
GLEN ROSE, TEXAS

FLOW DIAGRAM
VENTS AND DRAINS SYSTEM
TURBINE BUILDING

DWG. NO. M1-0237 | SH. NO. A | REV. CP-14

me608300.dgn A M1-0237-A

FINAL PRINT

ATMOSPHERIC DRAIN TANK DRAIN REFERENCE

(SEE LOCATION F-5 AND G-5 THIS DRAWING)

DRAIN NUMBER	REFERENCE	DRAIN NUMBER	REFERENCE
D1	AUXILIARY BOILER FW PUMP DISCHARGE M1-0213-A, LOC: G-5		
		D12	CV AND WBP SYSTEM, MAIN CONDENSER VACUUM BREAKER SEALS M2-0211, LOC: G-1
		D13	GLAND STEAM CONDENSER M2-0223, LOC: F-6
D4	SPARE CONNECTION	D14	AUXILIARY GLAND STEAM CONDENSER M2-0223, LOC: C-6
		D15	PRIMARY SAMPLING SYSTEM M2-0228-C, LOC: G-5
		D16	SG FEEDWATER PUMP 2-A STUFFING LEAKAGE M2-0203 LOC: A-4
D7	SPARE CONNECTION	D17	SG FEEDWATER PUMP 2-B STUFFING LEAKAGE M2-0203 LOC: A-6
D8	SPARE CONNECTION	D18	AUXILIARY STEAM DRAIN PUMPS DISCHARGE M1-0813-01 LOC: C-5
D9	SPARE CONNECTION		

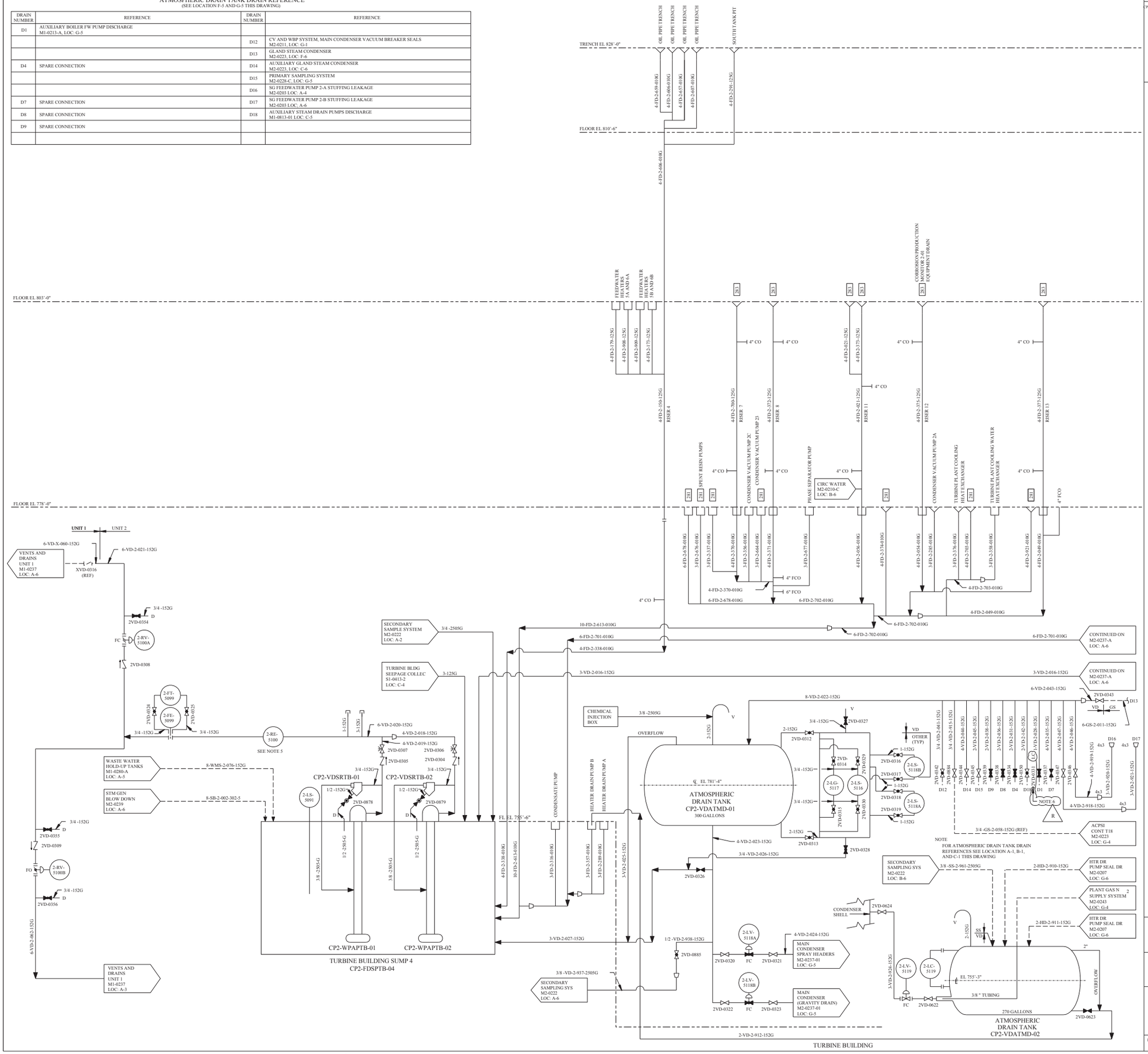

REV	DWN	CHKD	APVD	REMARKS
CP-19	DLK 10-13 2009	GAW 10-16 2009		THIS DRAWING REVISED TO INCORPORATE DESIGN CHANGE FDA 2009-003957-01-00 PER SK-0006-09-003957-01-00.

NOTES:

1. THE BOXED-IN NUMBERS DESIGNATE THE SPECIFIC ROOM NUMBERS ON THE PLUMBING DRAWINGS SHOWING VARIOUS DRAIN LOCATIONS.
2. FOR TYPICAL DRAIN SYMBOLS SEE DRAWING M2-0238 NOTE 3.
3. FOR MECHANICAL SYMBOLS AND NOTES SEE DRAWING M1-0200.
4. PIPING DESIGNATED FD IS PROCURED BY SPECIFICATION MS-73 AND PIPING DESIGNATED VD IS PROCURED BY SPECIFICATION MS-44A, MS-43A AND MS-43B.
5. "ADJACENT-TO-LINE" RADIATION DETECTOR.
6. VALVE 2VD-0331 IS LOCKED CLOSED TO ISOLATE THE ABANDONED IN PLACE ELECTRIC AUXILIARY BOILER.

R

FSAR FIGURE 9.3-8

THIS DRAWING CREATED ELECTRONICALLY

DRAWING 2323-M2-0237 REV CP-3
HAS BEEN SPLIT INTO THE FOLLOWING SHEETS:
M2-0237
M2-0237-A

NON-SAFETY

LUMINANT
CPNPP
GLEN ROSE, TEXAS

FLOW DIAGRAM
VENTS AND DRAINS SYSTEM
TURBINE AND FUEL HANDLING BUILDING

DWG. NO. M2-0237 | SH. NO. - | REV. CP-19

FINAL PRINT

me103130.dgn M2-0237

REV	DWN	CHKD	APVD	REMARKS
CP-9	C.A. 10-27-1999			THIS DRAWING REVISED TO INCORPORATE DESIGN CHANGE DCN 12596 REV 1.

NOTES:

1. THE BOXED-IN NUMBERS DESIGNATE THE SPECIFIC ROOM NUMBERS ON THE PLUMBING DRAWINGS SHOWING VARIOUS DRAIN LOCATIONS.
2. FOR TYPICAL DRAIN SYMBOLS SEE DRAWING M2-0238 NOTE 3.
3. FOR MECHANICAL SYMBOLS AND NOTES SEE DRAWING M1-0200.
4. PIPING DESIGNATED FD IS PROCURED BY SPECIFICATION MS-73 AND PIPING DESIGNATED VD IS PROCURED BY SPECIFICATION MS-44A, MS-43A AND MS-43B.
5. TURBINE BUILDING SUMP NUMBER 5 HAS AN AIRTIGHT COVER WITH A VENT LINE PENETRATING THE COVER.

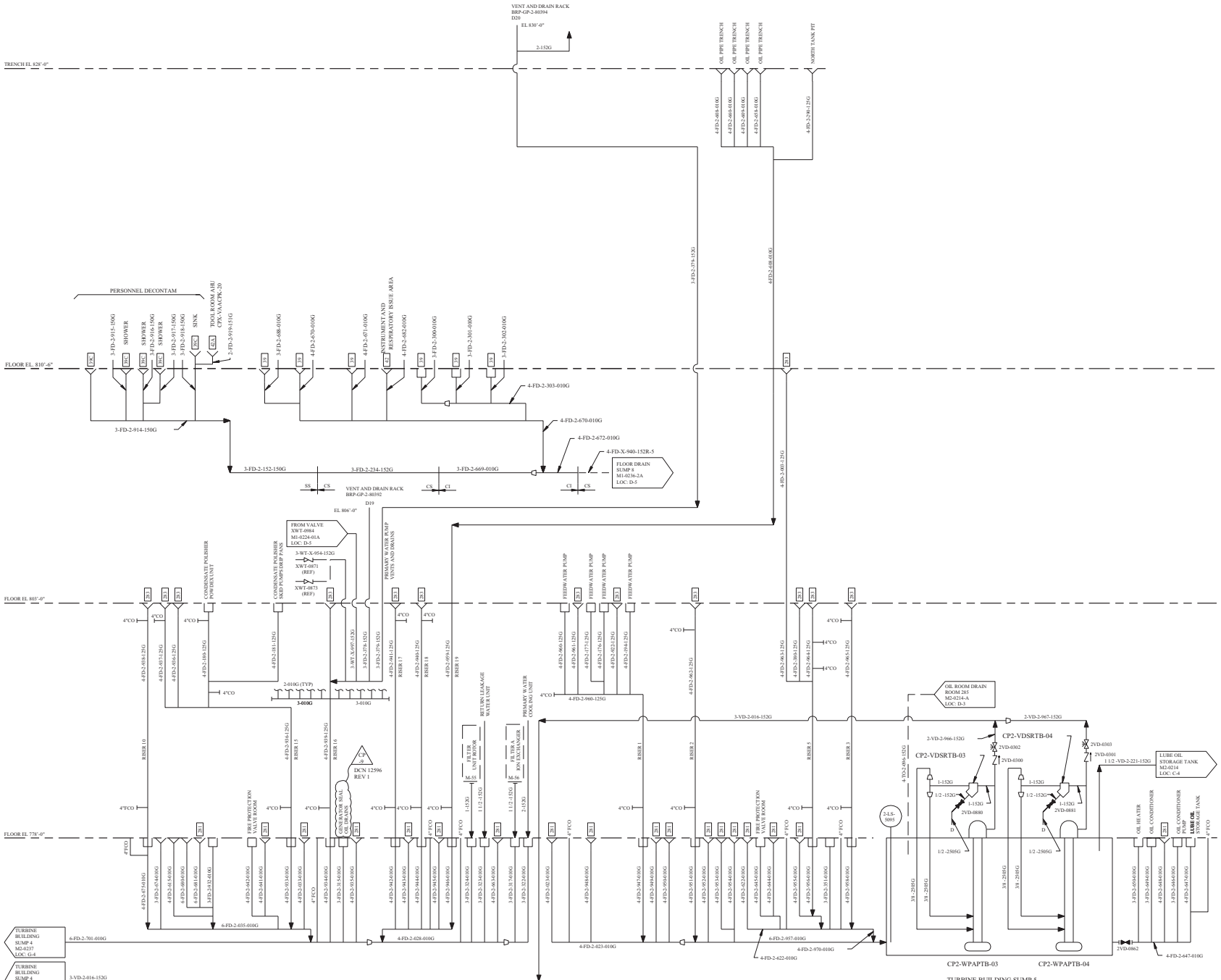

FSAR FIGURE 9.3-8

THIS DRAWING CREATED ELECTRONICALLY

DRAWING	2323-M2-0237	REV	CP-6
HAS BEEN SPLIT INTO THE FOLLOWING SHEETS:			
M2-0237			
M2-0237-A			

NON-SAFETY

TXU ELECTRIC
CPSES
GLEN ROSE, TEXAS

FLOW DIAGRAM
VENTS AND DRAINS SYSTEM
TURBINE BUILDING

DWG. NO.	SH. NO.	REV.
M2-0237	A	CP-9

me9001v8.dgn

REV	DWN	CHKD	APVD	REMARKS
CP-16	SJL 09-12 2001	DJL 09-12 2001		THIS DRAWING REVISED TO INCORPORATE DESIGN CHANGE FDA-2000-000409-02-00 PER SK-0001-00-000409-02-00.

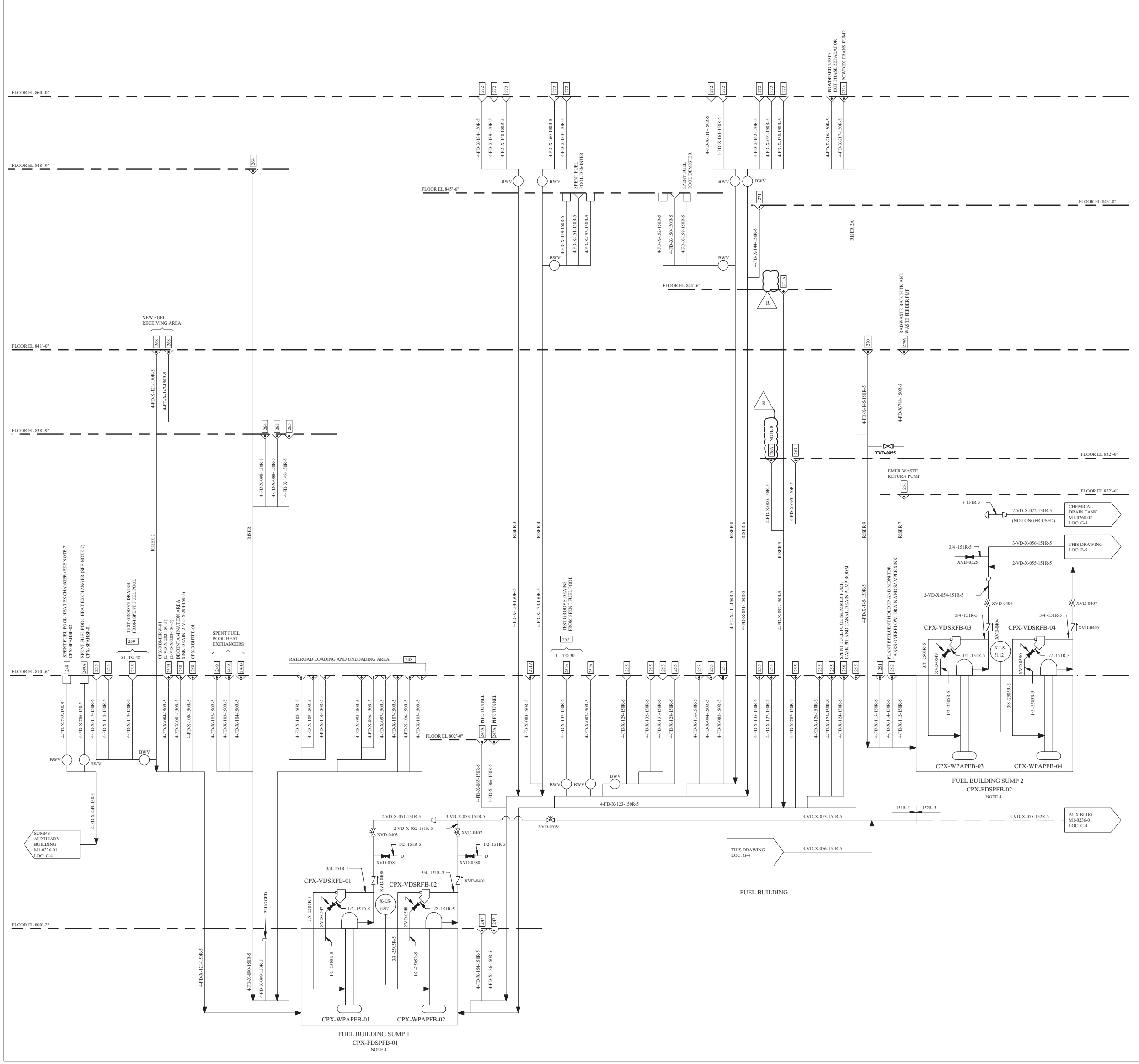

NOTES

1. FOR MECHANICAL SYMBOLS AND NOTES, SEE DRAWING M1-0200.
2. FOR DRAIN SYMBOLS, SEE DRAWING M1-0236 NOTE 4.
3. BOXED NUMBERS DESIGNATE THE SPECIFIC ROOM NUMBERS ON THE PLUMBING DRAWINGS SHOWING VARIOUS DRAIN LOCATIONS.
4. FOR SWITCH LEVEL SYSTEM AND PUMP CONTROL, SEE TYPICAL SUMP DETAIL, LOC: H-3 ON THIS DRAWING.
5. THIS DRAWING IS NON-NUCLEAR SAFETY RELATED.
6. PIPING DESIGNATED FD IS PROCURED BY SPECIFICATION MS-73 AND PIPING DESIGNATED VD IS PROCURED BY SPECIFICATIONS MS-44A.
7. OPERATIONS MAY INSTALL RAISED HUBS AND/OR PLUGS FOR NON RADIOACTIVE DRAINS THAT DUE TO THEIR PROXIMITY TO A RADIOACTIVE DRAIN COULD COLLECT RADIOACTIVE FLUIDS.
8. FLOOR DRAIN MAY BE PLUGGED TO PREVENT FLOOR DRAIN SYSTEM CONTAMINATION DURING MAINTENANCE ACTIVITIES.

R

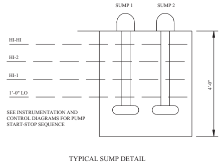

SEE INSTRUMENTATION AND CONTROL DIAGRAMS FOR PUMP START-STOP SEQUENCE

TYPICAL SUMP DETAIL

FSAR FIGURE 9.3-9

THIS DRAWING CREATED ELECTRONICALLY

DRAWING M1-0237-01	REV CP-4
HAS BEEN SPLIT INTO THE FOLLOWING SHEETS:	
M1-0237-01	
M1-0237-01A	

CLASS II

TXU ENERGY
CPSES
GLEN ROSE, TEXAS

FLOW DIAGRAM
VENTS AND DRAINS SYSTEM
TURBINE AND FUEL HANDLING BLDG

DWG. NO. M1-0237
SH. NO. 01
REV. CP-16

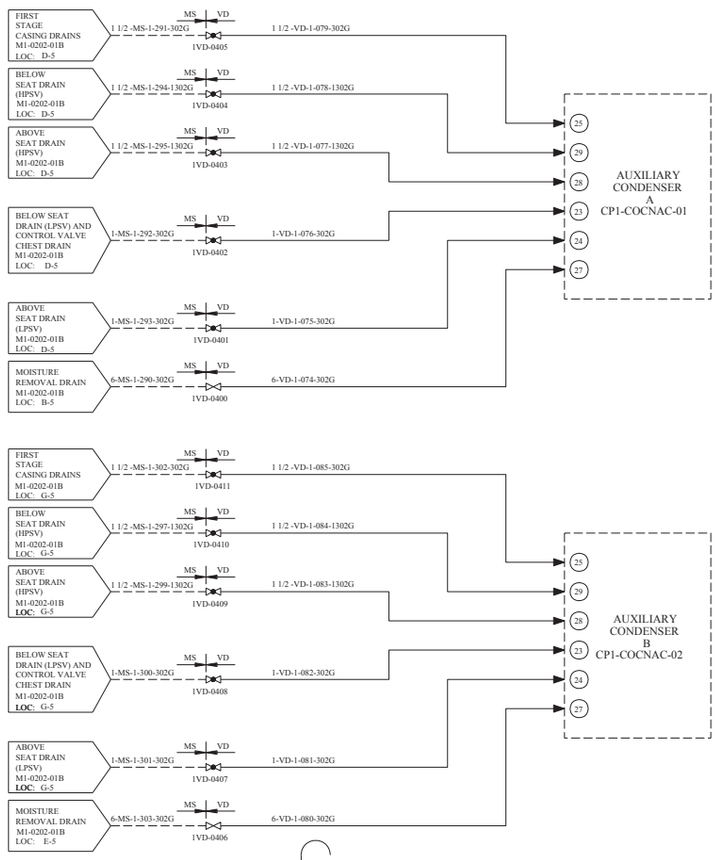

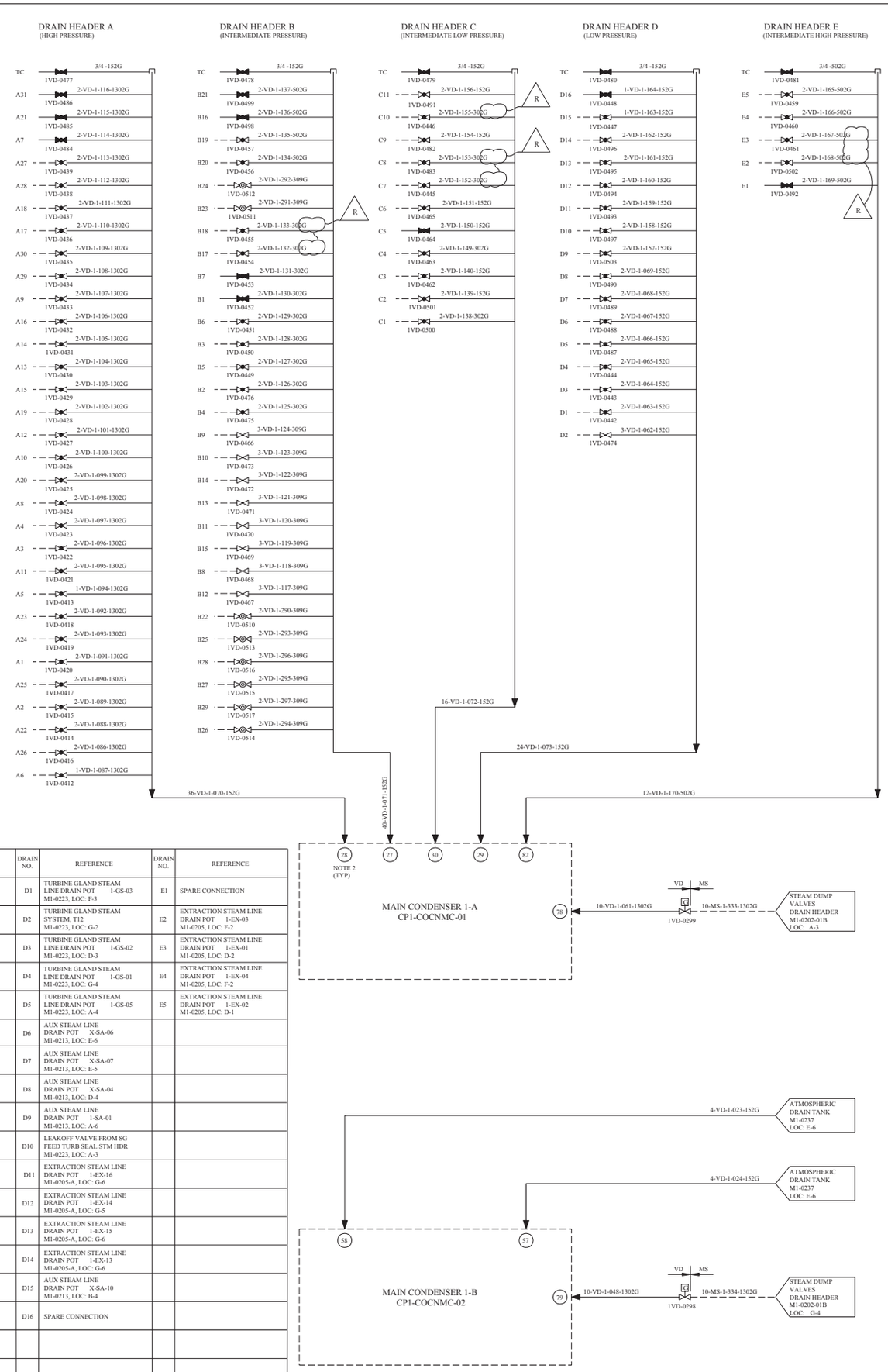

DRAIN NO.	REFERENCE	DRAIN NO.	REFERENCE	DRAIN NO.	REFERENCE	DRAIN NO.		DRAIN NO.	REFERENCE	DRAIN NO.	REFERENCE	DRAIN NO.	REFERENCE
A1	HOT REHEAT LINE DRAIN POT 1-MS-08 M1-0202-01A, LOC: A-4	A22	HP TURBINE S AND CV DRAIN T2 M1-0202-01, LOC: G-3	B1	SPARE CONNECTION	B22	COLD REHEAT DRAIN M1-0202-01A, LOC: B-6	C1	TURBINE GLAND STEAM LINE DRAIN POT 1-GS-04 M1-0223, LOC: E-4	D1	TURBINE GLAND STEAM LINE DRAIN POT 1-GS-03 M1-0223, LOC: F-3	E1	SPARE CONNECTION
A2	HOT REHEAT LINE DRAIN POT 1-MS-07 M1-0202-01A, LOC: A-5	A23	HP TURBINE S AND CV DRAIN T2 M1-0202-01, LOC: A-4	B2	14" LP STM SUPPLY LINE TO STM GEN FEED PUMP TURB M1-0202-01B, LOC: F-6	B23	COLD REHEAT DRAIN M1-0202-01A, LOC: B-3	C2	AUX STEAM LINE DRAIN POT 1-SA-05,08 M1-0213, LOC: C-5	D2	TURBINE GLAND STEAM SYSTEM, T12 M1-0223, LOC: G-2	E2	EXTRACTION STEAM LINE DRAIN POT 1-EX-03 M1-0205, LOC: F-2
A3	HOT REHEAT LINE DRAIN POT 1-MS-06 M1-0202-01A, LOC: A-1	A24	HP TURBINE S AND CV DRAIN T2 M1-0202-01, LOC: G-4	B3	14" LP STM SUPPLY LINE TO STM GEN FEED PUMP TURB M1-0202-01B, LOC: B-6	B24	COLD REHEAT DRAIN M1-0202-01A, LOC: A-3	C3	AUX STEAM LINE DRAIN POT 1-SA-03,09 M1-0213, LOC: B-4	D3	TURBINE GLAND STEAM LINE DRAIN POT 1-GS-02 M1-0223, LOC: D-3	E3	EXTRACTION STEAM LINE DRAIN POT 1-EX-01 M1-0205, LOC: D-2
A4	HOT REHEAT LINE DRAIN POT 1-MS-05 M1-0202-01A, LOC: A-2	A25	HP TURBINE S AND CV DRAIN T2 M1-0202-01, LOC: A-3	B4	14" LP STM SUPPLY LINE TO STM GEN FEED PUMP TURB M1-0202-01B, LOC: D-6	B25	COLD REHEAT DRAIN M1-0202-01A, LOC: B-5	C4	AUX STEAM LINE DRAIN POT 1-SA-02 M1-0213, LOC: A-6	D4	TURBINE GLAND STEAM LINE DRAIN POT 1-GS-01 M1-0223, LOC: G-4	E4	EXTRACTION STEAM LINE DRAIN POT 1-EX-04 M1-0205, LOC: F-2
A5	HOT REHEAT DRAIN, T14 M1-0202-01A, LOC: A-4	A26	HP TURBINE S AND CV DRAIN T3 M1-0202-01, LOC: G-3	B5	14" LP STM SUPPLY LINE TO STM GEN FEED PUMP TURB M1-0202-01B, LOC: G-6	B26	COLD REHEAT DRAIN M1-0202-01A, LOC: D-6	C5	SPARE CONNECTION	D5	TURBINE GLAND STEAM LINE DRAIN POT 1-GS-05 M1-0223, LOC: A-4	E5	EXTRACTION STEAM LINE DRAIN POT 1-EX-02 M1-0205, LOC: D-1
A6	HOT REHEAT DRAIN, T14 M1-0202-01A, LOC: A-1	A27	32" MAIN STEAM LINE DRAIN POT 1-MS-23 M1-0202, LOC: C-2	B6	14" LP STM SUPPLY LINE TO STM GEN FEED PUMP TURB M1-0202-01B, LOC: E-6	B27	COLD REHEAT DRAIN M1-0202-01A, LOC: D-3	C6	EXTRACTION STEAM LINE DRAIN POT 1-EX-17 M1-0205, LOC: G-4	D6	AUX STEAM LINE DRAIN POT X-SA-06 M1-0213, LOC: E-6		
A7	SPARE CONNECTION	A28	32" MAIN STEAM LINE DRAIN POT 1-MS-24 M1-0202, LOC: C-3	B7	SPARE CONNECTION	B28	COLD REHEAT DRAIN M1-0202-01A, LOC: D-3	C7	EXTRACTION STEAM LINE DRAIN POT 1-EX-10 M1-0205, LOC: D-5	D7	AUX STEAM LINE DRAIN POT X-SA-07 M1-0213, LOC: E-5		
A8	34" MAIN STEAM LINE DRAIN POT 1-MS-04 M1-0202-01, LOC: A-5	A29	32" MAIN STEAM LINE DRAIN POT 1-MS-25 M1-0202, LOC: C-4	B8	COLD REHEAT DRAIN T7 M1-0202-01A, LOC: E-3	B29	COLD REHEAT DRAIN M1-0202-01A, LOC: D-5	C8	EXTRACTION STEAM LINE DRAIN POT 1-EX-11 M1-0205, LOC: G-5	D8	AUX STEAM LINE DRAIN POT X-SA-04 M1-0213, LOC: D-4		
A9	34" MAIN STEAM LINE DRAIN POT 1-MS-01 M1-0202-01, LOC: G-2	A30	32" MAIN STEAM LINE DRAIN POT 1-MS-26 M1-0202, LOC: C-5	B9	COLD REHEAT DRAIN T6 M1-0202-01A, LOC: C-3			C9	EXTRACTION STEAM LINE DRAIN POT 1-EX-09 M1-0205, LOC: D-4	D9	AUX STEAM LINE DRAIN POT 1-SA-01 M1-0213, LOC: A-6		
A10	34" MAIN STEAM LINE DRAIN POT 1-MS-02 M1-0202-01, LOC: A-2	A31	SPARE CONNECTION	B10	COLD REHEAT DRAIN T6 M1-0202-01A, LOC: C-6			C10	EXTRACTION STEAM LINE DRAIN POT 1-EX-12 M1-0205, LOC: G-5	D10	LEAKOFF VALVE FROM SG FEED TURB SEAL STM HDR M1-0223, LOC: A-3		
A11	34" MAIN STEAM LINE DRAIN POT 1-MS-03 M1-0202-01, LOC: G-5			B11	COLD REHEAT DRAIN T7 M1-0202-01A, LOC: E-6			C11	AUX STEAM LINE DRAIN POT X-SA-11,12 M1-0213, LOC: F-2	D11	EXTRACTION STEAM LINE DRAIN POT 1-EX-16 M1-0205-A, LOC: G-6		
A12	3" AUX. STEAM LINE DRAIN POT 1-MS-28 M1-0202-01B, LOC: A-5			B12	COLD REHEAT DRAIN T7 M1-0202-01A, LOC: E-3					D12	EXTRACTION STEAM LINE DRAIN POT 1-EX-14 M1-0205-A, LOC: G-5		
A13	26" STEAM DUMP HEADER DRAIN POT 1-MS-22 M1-0202-01B, LOC: B-3			B13	COLD REHEAT DRAIN T6 M1-0202-01A, LOC: C-3					D13	EXTRACTION STEAM LINE DRAIN POT 1-EX-15 M1-0205-A, LOC: G-6		
A14	26" STEAM DUMP HEADER DRAIN POT 1-MS-13 M1-0202-01B, LOC: F-2			B14	COLD REHEAT DRAIN T6 M1-0202-01A, LOC: C-6					D14	EXTRACTION STEAM LINE DRAIN POT 1-EX-13 M1-0205-A, LOC: G-6		
A15	6" SG FW PUMP TURB STM SUPPLY DRAIN POT 1-MS-20 M1-0202-01B, LOC: C-5			B15	COLD REHEAT DRAIN T7 M1-0202-01A, LOC: E-6					D15	AUX STEAM LINE DRAIN POT X-SA-10 M1-0213, LOC: B-4		
A16	6" SG FW PUMP TURB STM SUPPLY DRAIN POT 1-MS-19 M1-0202-01B, LOC: E-4			B16	SPARE CONNECTION					D16	SPARE CONNECTION		
A17	34" MAIN STEAM LINE STRAINER DR POT 1-MS-12 M1-0202-01, LOC: G-2			B17	EXTRACTION STEAM LINE DRAIN POT 1-EX-08 M1-0205, LOC: F-4								
A18	34" MAIN STEAM LINE STRAINER DR POT 1-MS-11 M1-0202-01, LOC: A-2			B18	EXTRACTION STEAM LINE DRAIN POT 1-EX-06 M1-0205, LOC: D-3								
A19	34" MAIN STEAM LINE STRAINER DR POT 1-MS-10 M1-0202-01, LOC: A-6			B19	EXTRACTION STEAM LINE DRAIN POT 1-EX-07 M1-0205, LOC: G-4								
A20	34" MAIN STEAM LINE STRAINER DR POT 1-MS-09 M1-0202-01, LOC: G-6			B20	EXTRACTION STEAM LINE DRAIN POT 1-EX-05 M1-0205, LOC: D-3								
A21	SPARE CONNECTION			B21	SPARE CONNECTION								

MAIN CONDENSER 1-A DRAIN REFERENCES

REV	DWN	CHKD	APVD	REMARKS
CP-11	SM 10-09 2007	JBSR 10-09 2007		THIS DRAWING REVISED TO INCORPORATE DESIGN CHANGE FDA 2004-003813-01-00 PER SK-0004-04-003813-01-00.

NOTES:

1. GENERAL NOTES AND SYMBOLS SEE DWG M1-0200.
2. CIRCLED NUMBERS REPRESENT CONDENSER PENETRATION NUMBERS.
3. T NUMBERS, SUCH AS T16, DESIGNATE UPC CONNECTION NUMBERS.
4. CAPS ON SPARE DRAIN CONNECTIONS SHALL BE THREADED.
5. ALL DRAIN HEADERS SHALL BE SLOPED TOWARDS THE CONDENSER.
6. DRAIN VALVES SHALL BE LOCATED AS CLOSE AS POSSIBLE TO DRAIN HEADERS.
7. EXCEPT FOR SPARE CONNECTIONS, ALL DRAIN VALVES SHALL BE LOCKED OPEN.

FSAR FIGURE 9.3-9

THIS DRAWING CREATED ELECTRONICALLY

DRAWING 2323-M1-0237-01 REV CP-4
HAS BEEN SPLIT INTO THE FOLLOWING SHEETS:
M1-0237-01
M1-0237-01A

NON-SAFETY

LUMINANT
CPSES
GLEN ROSE, TEXAS

FLOW DIAGRAM
VENTS AND DRAINS SYSTEM
TURBINE BUILDING

DWG. NO. M1-0237 | SH. NO. 01A | REV. CP-11

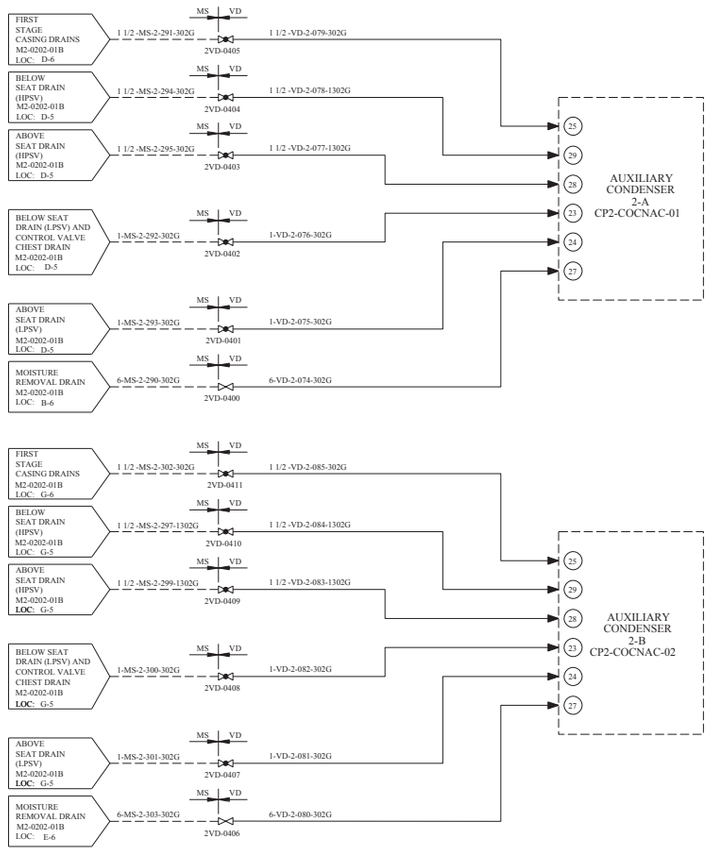

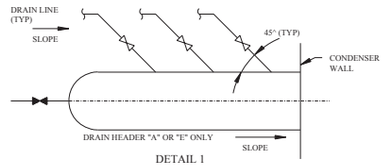

DETAIL 1
NOTE 7

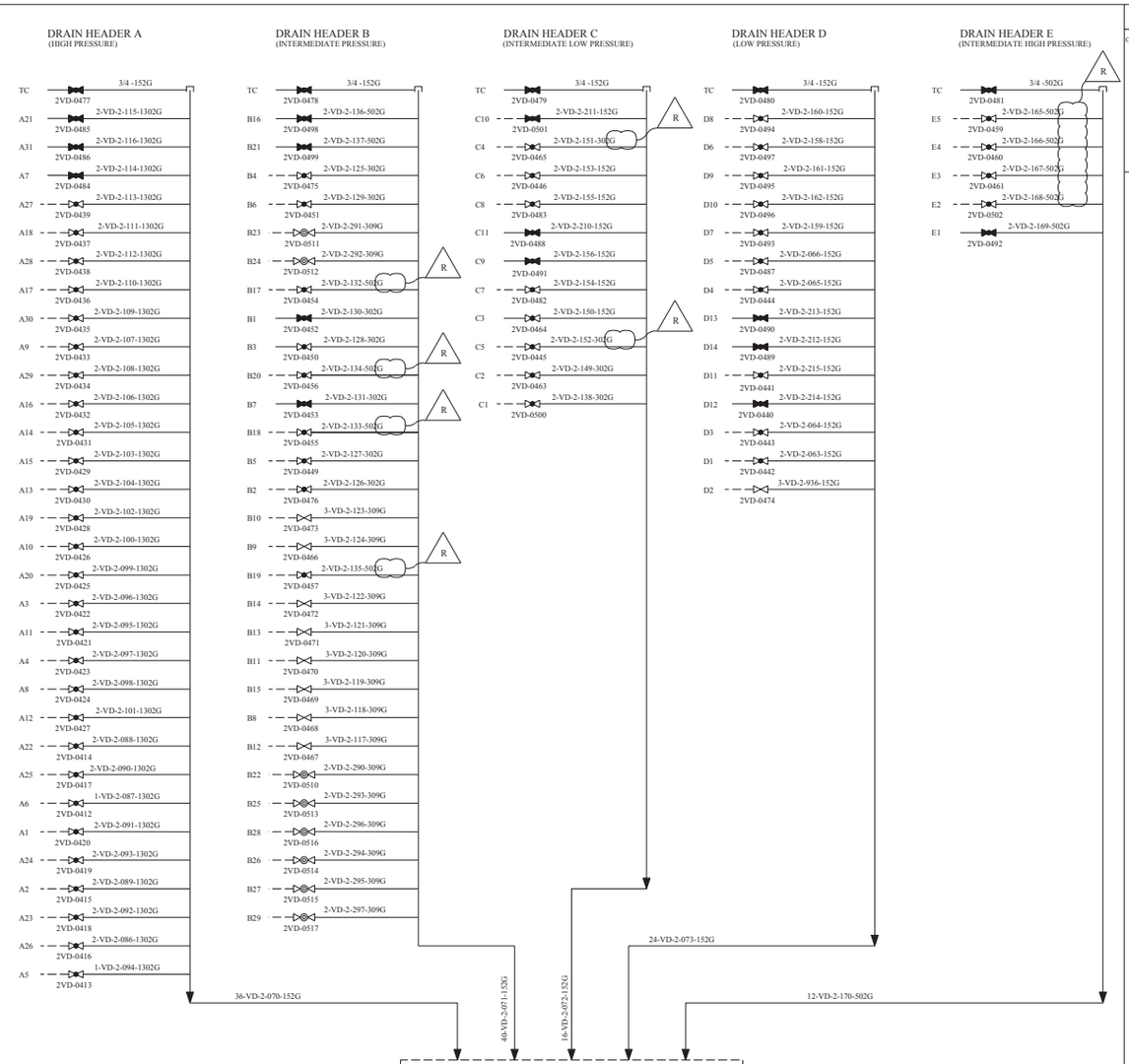

DRAIN NO.	REFERENCE	DRAIN NO.	REFERENCE	DRAIN NO.	REFERENCE	DRAIN NO.		DRAIN NO.	REFERENCE	DRAIN NO.	REFERENCE	DRAIN NO.	REFERENCE
A1	HOT REHEAT LINE DRAIN POT 2-MS-08 M2-0202-01A, LOC: A-4	A22	HP TURBINE S AND CV DRAIN T2 M2-0202-01, LOC: G-3	B1	SPARE CONNECTION	B22	COLD REHEAT DRAIN M2-0202-01A, LOC: B-6	C1	TURBINE GLAND STEAM LINE DRAIN POT 2-GS-04 M2-0223, LOC: B-5	D1	TURBINE GLAND STEAM LINE DRAIN POT 2-GS-03 M2-0223, LOC: B-4	E1	SPARE CONNECTION
A2	HOT REHEAT LINE DRAIN POT 2-MS-07 M2-0202-01A, LOC: A-5	A23	HP TURBINE S AND CV DRAIN T2 M2-0202-01, LOC: A-4	B2	14" LP STM SUPPLY LINE TO STM GEN FEED PUMP TURB M2-0202-01B, LOC: F-6	B23	COLD REHEAT DRAIN M2-0202-01A, LOC: B-3	C2	AUX STEAM LINE DRAIN POT 2-SA-02 M1-0213, LOC: A-3	D2	TURBINE GLAND STEAM SYSTEM, T12 M2-0223, LOC: G-2	E2	EXTRACTION STEAM LINE DRAIN POT 2-EX-03 M2-0205, LOC: F-2
A3	HOT REHEAT LINE DRAIN POT 2-MS-06 M2-0202-01A, LOC: A-1	A24	HP TURBINE S AND CV DRAIN T2 M2-0202-01, LOC: G-4	B3	14" LP STM SUPPLY LINE TO STM GEN FEED PUMP TURB M2-0202-01B, LOC: B-6	B24	COLD REHEAT DRAIN M2-0202-01A, LOC: A-3	C3	AUX STEAM LINE DRAIN POT 2-SA-03 M1-0213, LOC: G-1	D3	TURBINE GLAND STEAM LINE DRAIN POT 2-GS-02 M2-0223, LOC: A-4	E3	EXTRACTION STEAM LINE DRAIN POT 2-EX-01 M2-0205, LOC: D-2
A4	HOT REHEAT LINE DRAIN POT 2-MS-05 M2-0202-01A, LOC: A-2	A25	HP TURBINE S AND CV DRAIN T2 M2-0202-01, LOC: A-3	B4	14" LP STM SUPPLY LINE TO STM GEN FEED PUMP TURB M2-0202-01B, LOC: D-6	B25	COLD REHEAT DRAIN M2-0202-01A, LOC: A-5	C4	AUX STEAM LINE DRAIN POT 2-EX-12 M2-0205, LOC: G-5	D4	TURBINE GLAND STEAM LINE DRAIN POT 2-GS-01 M2-0223, LOC: C-5	E4	EXTRACTION STEAM LINE DRAIN POT 2-EX-04 M2-0205, LOC: F-2
A5	HOT REHEAT DRAIN, T16 M2-0202-01A, LOC: A-4	A26	HP TURBINE S AND CV DRAIN T3 M2-0202-01, LOC: G-3	B5	14" LP STM SUPPLY LINE TO STM GEN FEED PUMP TURB M2-0202-01B, LOC: G-6	B26	COLD REHEAT DRAIN M2-0202-01A, LOC: D-6	C5	EXTRACTION STEAM LINE DRAIN POT 2-EX-10 M2-0205, LOC: D-5	D5	TURBINE GLAND STEAM LINE DRAIN POT 2-GS-05 M2-0223-A, LOC: A-4	E5	EXTRACTION STEAM LINE DRAIN POT 2-EX-02 M2-0205, LOC: D-1
A6	HOT REHEAT DRAIN, T16 M2-0202-01A, LOC: A-1	A27	32" MAIN STEAM LINE DRAIN POT 2-MS-23 M2-0202, LOC: C-2	B6	14" LP STM SUPPLY LINE TO STM GEN FEED PUMP TURB M2-0202-01B, LOC: E-6	B27	COLD REHEAT DRAIN M2-0202-01A, LOC: D-3	C6	EXTRACTION STEAM LINE DRAIN POT 2-EX-17 M2-0205, LOC: G-4	D6	LEAKOFF VALVE FROM SG FEED TURB SEAL STM HDR M2-0223-A, LOC: A-3		
A7	SPARE CONNECTION	A28	32" MAIN STEAM LINE DRAIN POT 2-MS-24 M2-0202, LOC: C-3	B7	SPARE CONNECTION	B28	COLD REHEAT DRAIN M2-0202-01A, LOC: D-3	C7	EXTRACTION STEAM LINE DRAIN POT 2-EX-09 M2-0205, LOC: D-5	D7	EXTRACTION STEAM LINE DRAIN POT 2-EX-16 M2-0205-A, LOC: G-6		
A8	34" MAIN STEAM LINE DRAIN POT 2-MS-04 M2-0202-01, LOC: A-5	A29	32" MAIN STEAM LINE DRAIN POT 2-MS-25 M2-0202, LOC: C-4	B8	COLD REHEAT DRAIN T6 M2-0202-01A, LOC: E-3	B29	COLD REHEAT DRAIN M2-0202-01A, LOC: D-5	C8	EXTRACTION STEAM LINE DRAIN POT 2-EX-11 M2-0205, LOC: G-5	D8	EXTRACTION STEAM LINE DRAIN POT 2-EX-14 M2-0205-A, LOC: G-5		
A9	34" MAIN STEAM LINE DRAIN POT 2-MS-01 M2-0202-01, LOC: G-2	A30	32" MAIN STEAM LINE DRAIN POT 2-MS-26 M2-0202, LOC: C-5	B9	COLD REHEAT DRAIN T6 M2-0202-01A, LOC: C-3			C9	SPARE CONNECTION	D9	EXTRACTION STEAM LINE DRAIN POT 2-EX-15 M2-0205-A, LOC: G-6		
A10	34" MAIN STEAM LINE DRAIN POT 2-MS-02 M2-0202-01, LOC: A-2	A31	SPARE CONNECTION	B10	COLD REHEAT DRAIN T7 M2-0202-01A, LOC: C-6			C10	SPARE CONNECTION	D10	EXTRACTION STEAM LINE DRAIN POT 2-EX-13 M2-0205-A, LOC: G-5		
A11	34" MAIN STEAM LINE DRAIN POT 2-MS-03 M2-0202-01, LOC: G-5			B11	COLD REHEAT DRAIN T7 M2-0202-01A, LOC: E-6			C11	SPARE CONNECTION	D11	AUX STEAM LINE DRAIN POT 2-SA-01 M1-0213, LOC: G-1		
A12	3" AUX. STEAM LINE DRAIN POT 2-MS-28 M2-0202-01B, LOC: A-5			B12	COLD REHEAT DRAIN T6 M2-0202-01A, LOC: E-3					D12	SPARE CONNECTION		
A13	26" STEAM DUMP HEADER DRAIN POT 2-MS-22 M2-0202-01B, LOC: B-3			B13	COLD REHEAT DRAIN T7 M2-0202-01A, LOC: C-3					D13	SPARE CONNECTION		
A14	26" STEAM DUMP HEADER DRAIN POT 2-MS-13 M2-0202-01B, LOC: F-2			B14	COLD REHEAT DRAIN T7 M2-0202-01A, LOC: C-6					D14	SPARE CONNECTION		
A15	6" SG FW PUMP TURB STM SUPPLY DRAIN POT 2-MS-20 M2-0202-01B, LOC: C-5			B15	COLD REHEAT DRAIN T6 M2-0202-01A, LOC: E-6								
A16	6" SG FW PUMP TURB STM SUPPLY DRAIN POT 2-MS-19 M2-0202-01B, LOC: E-4			B16	SPARE CONNECTION								
A17	34" MAIN STEAM LINE STRAINER DR POT 2-MS-12 M2-0202-01, LOC: G-2			B17	EXTRACTION STEAM LINE DRAIN POT 2-EX-08 M2-0205, LOC: G-4								
A18	34" MAIN STEAM LINE STRAINER DR POT 2-MS-11 M2-0202-01, LOC: A-2			B18	EXTRACTION STEAM LINE DRAIN POT 2-EX-06 M2-0205, LOC: D-3								
A19	34" MAIN STEAM LINE STRAINER DR POT 2-MS-10 M2-0202-01, LOC: A-6			B19	EXTRACTION STEAM LINE DRAIN POT 2-EX-07 M2-0205, LOC: G-4								
A20	34" MAIN STEAM LINE STRAINER DR POT 2-MS-09 M2-0202-01, LOC: G-6			B20	EXTRACTION STEAM LINE DRAIN POT 2-EX-05 M2-0205, LOC: D-3								
A21	SPARE CONNECTION			B21	SPARE CONNECTION								

MAIN CONDENSER 2-A DRAIN REFERENCES

REV	DWN	CHKD	APVD	REMARKS
CP-9	JRMC 11-17 2009	SM 11-17 2009		THIS DRAWING REVISED TO INCORPORATE DESIGN CHANGE FDA 2004-003813-01-00 PER SK-0002-04-003813-01-00.

NOTES:

1. FOR MECHANICAL SYMBOLS AND NOTES SEE DRAWING M1-0200.
2. FOR TYPICAL DRAIN SYMBOLS SEE DRAWING M2-0238, NOTE 3.
3. CIRCLED NUMBERS REPRESENT CONDENSER PENETRATION NUMBERS.
4. PIPING DESIGNATED VD IS PROCURED BY SPECIFICATION MS-44A.
5. T NUMBERS, SUCH AS TI6, DESIGNATE ALLIS CHALMERS CONNECTION NUMBERS.
6. CAPS ON SPARE DRAIN CONNECTIONS SHALL BE THREADED.
7. ALL DRAIN HEADERS SHALL BE SLOPED TOWARDS THE CONDENSER.
9. DRAIN VALVES SHALL BE LOCATED AS CLOSE AS POSSIBLE TO DRAIN HEADERS.
10. EXCEPT FOR SPARE CONNECTIONS, ALL DRAIN VALVES SHALL BE LOCKED OPEN.

FSAR FIGURE 9.3-9

THIS DRAWING CREATED ELECTRONICALLY

NON-SAFETY

LUMINANT
CPNPP
GLEN ROSE, TEXAS

FLOW DIAGRAM
VENTS AND DRAINS SYSTEM
TURBINE BUILDING

DWG. NO. M2-0237 | SH. NO. 01 | REV. CP-9

< FINAL PRINT >

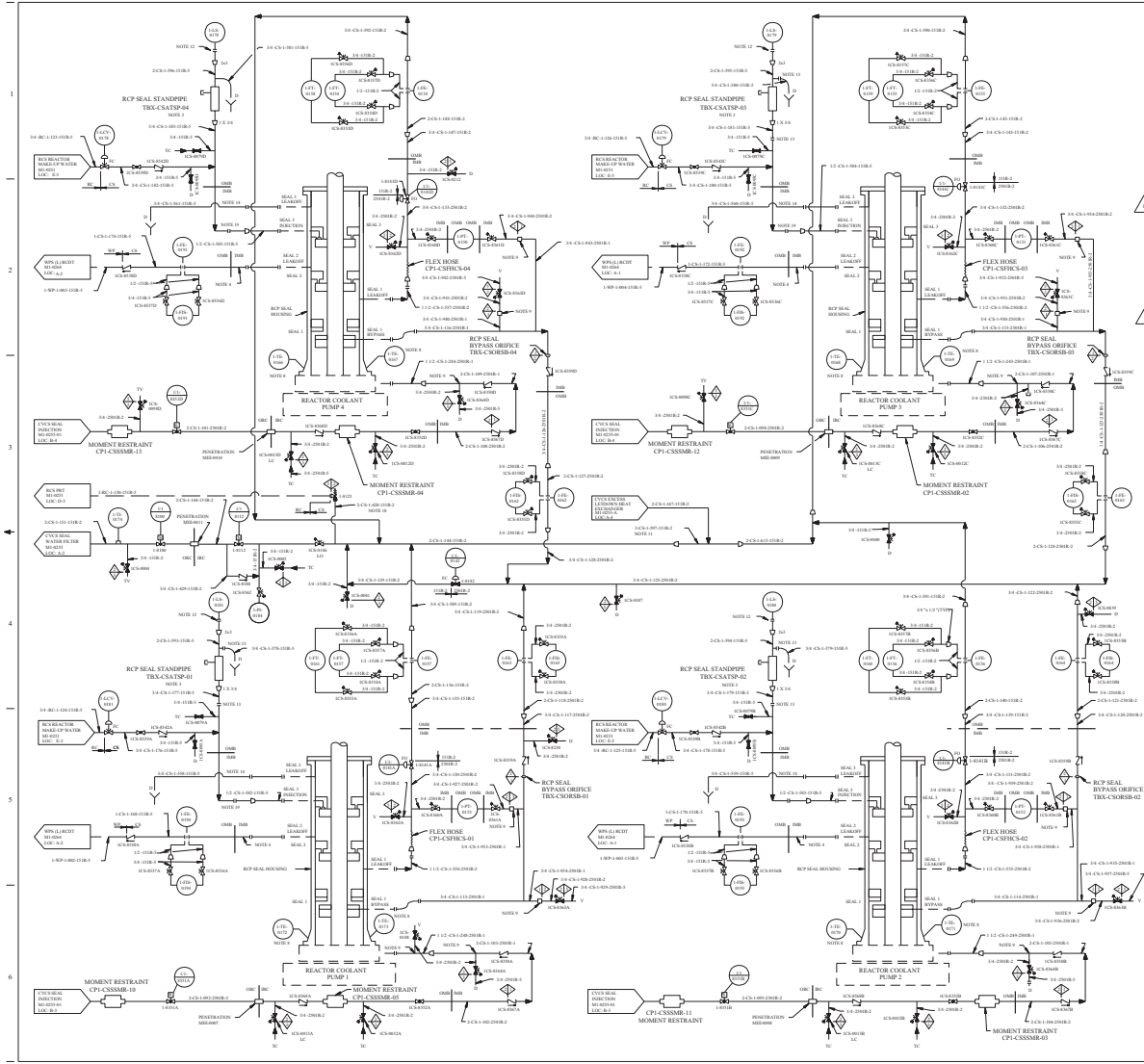

REV.	DRAWN	DATE	APPD.	REMARKS
A-0	Jesse Jones	7/1/2002	N/A	THIS REVISION ISSUED TO REFORMAT THE DRAWING FOR CLARITY AS SUCCESSOR REF FDA-2001-00767 AS AN PER BC-2001-00-0207-01-00

NOTES:

1. DELETED
2. DELETED
3. BOTTOM OF STANDPIPE LOCATED 12 ± 1 FT ABOVE THE CONNECTION TO THE REACTOR COOLANT PUMP SEAL 3.
4. PIPING TO RUN HORIZONTAL OR SLOPING THROUGHOUT ENTIRE RUN FROM RCP SEAL 2 LEAKOFF CONNECTION TO RCDT. DO NOT POCKET ANY PART OF LINE. LOCATE CHECK VALVE BELOW THE SEAL 2 LEAKOFF NOZZLE AT A DISTANCE EQUAL TO OR GREATER THAN THE HEAD OF WATER EQUIVALENT TO THE CHECK VALVE CRACKING PRESSURE.
5. DELETED
6. DELETED
7. DELETED
8. 1-TS-0172 AND 3-TS-0173 ETC. ARE FURNISHED WITH RC PUMPS.
9. 3/8 " ID FLOW RESTRICTOR PROVIDED FOR CLASS 1 - CLASS 2 TRANSITION SIMILAR TO ARRANGEMENT SHOWN IN NOTE 11 ON MECHANICAL SYMBOLS AND NOTES SHEET DRAWING M1-0200.
10. FOR MECHANICAL NOTES AND SYMBOLS SEE DRAWING M1-0200.
11. 3 IN DIA DELAY LINE - 24 FT LONG.
12. 3 IN OR LB RAISED FACE FLANGE.
13. 150 LB FLANGES TO PERMIT REMOVAL OF STANDPIPE FOR LEVEL SWITCH MAINTENANCE ON LOOPS 1, 2 AND 3 ONLY.
14. PIPING SHOULD BE SLOPED DOWNWARD FROM THIS POINT TO ASSURE 0 PSIG BACK PRESSURE ON SEAL 1.
15. DELETED
16. DELETED
17. DELETED
18. A SECTION OF PIPE HAS BEEN UPGRADED TO SCHEDULE 80 ON LINE 2-CS-1-428-150R-2.
19. FOR LOOPS 1,3 AND 4,THE 3-4 " FLANGE (SECOND FLANGE FROM THE REACTOR COOLANT PUMP) HAS BEEN REPLACED BY A 1" FLANGE WITH 1"X 3/4 " REDUCER ON BOTH SIDES.
20. DELETED
21. DELETED

FSAR FIGURE 9.3-10

DRAWING 2333-M1-0033 REV CP-0
HAS BEEN SPLIT INTO THE FOLLOWING SHEETS:
M1-0253
M1-0253-A

THIS DRAWING CONTAINS A TRACKING LIST

CLASS I
(NUCLEAR SAFETY-RELATED)
SAFETY CLASS 1 SEISMIC CATEGORY I
SAFETY CLASS 2 CLASS 1E
SAFETY CLASS 3 ASSOCIATED CIRCUITS

TU ELECTRIC
CPSES
GLEN ROSE, TEXAS

FLOW DIAGRAM
CHEMICAL AND VOLUME
CONTROL SYSTEM

DWG. NO. M1-0253 SH. NO. - REV. CP-21

REF FORZO (9/15/01)

SHSHSHSAVSHSHSH

ma116000.dgn A M1-0253

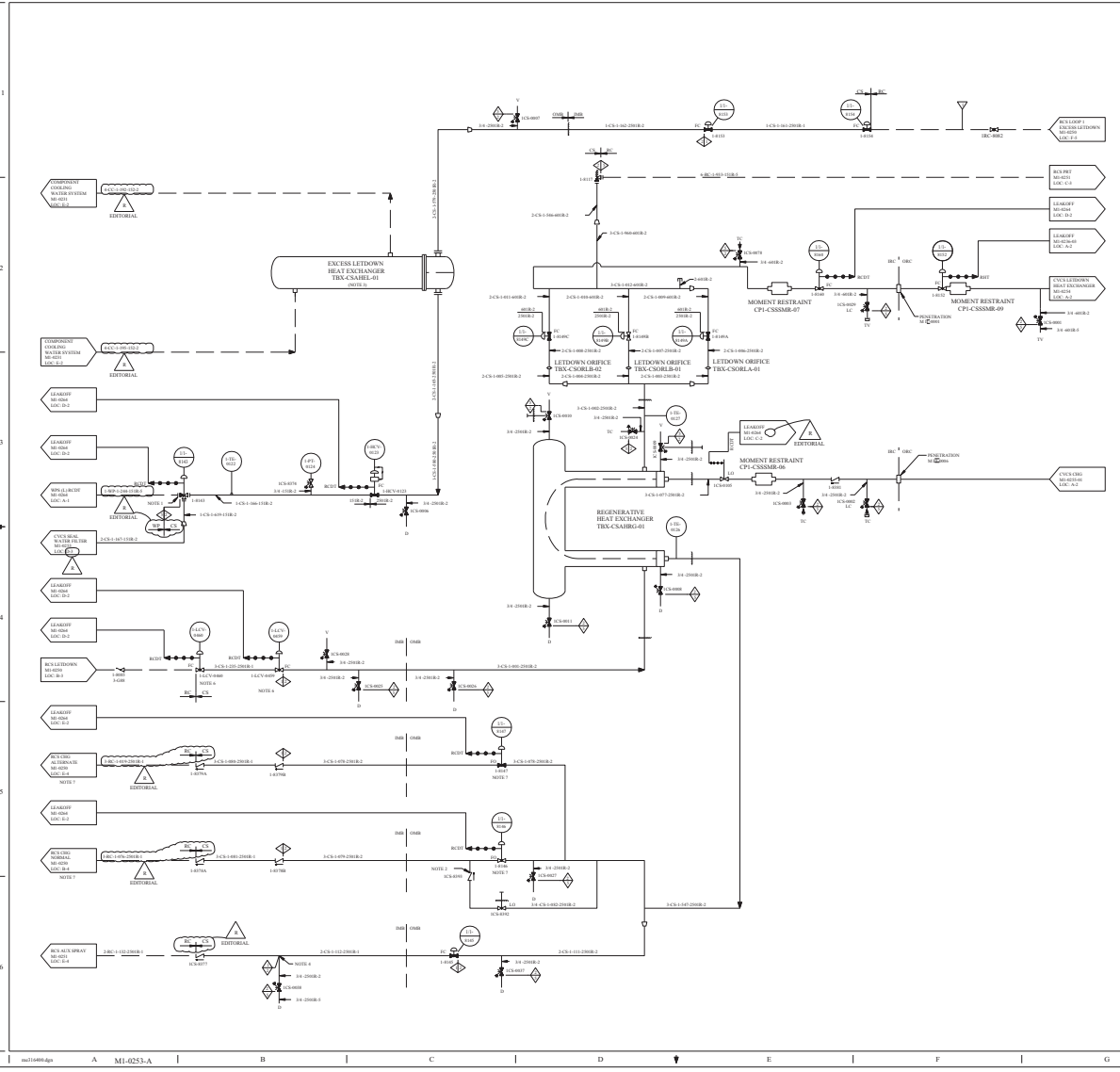

REV	DWN	CHKD	APVD	REMARKS
CP-10	SJL 03-16 2001	MAM 03-16 2001		THIS DRAWING REVISED TO INCORPORATE DESIGN CHANGE FDA-2000-003367-01-00 PER SK-0004-00-003367-01-00. EDITORIAL CHANGES AS NOTED.

NOTES

1. THREE WAY VALVE ORIENTED IN PIPING AS SHOWN SO THAT VALVE FAILS WITH FLOW TO SEAL WATER FILTER.
2. SPRING LOADED CHECK VALVE.
3. ALL SHELL SIDE CONNECTIONS ARE SHOWN ON THE COMPONENT COOLING WATER FLOW DIAGRAM M1-0231.
4. 3/8 IN ID FLOW RESTRICTOR FOR CLASS 1-CLASS 2 TRANSITION SIMILAR TO ARRANGEMENT SHOWN IN NOTE 15 ON MECHANICAL SYMBOLS AND NOTES SHEET DRAWING M1-0200.
5. FOR MECHANICAL NOTES AND SYMBOLS SEE DRAWING M1-0200.
6. PRESSURIZER LOW LEVEL SIGNAL CLOSES VALVE.
7. USE OF THE NORMAL CHARGING LINE AND ALTERNATE CHARGING LINE SHOULD BE ALTERNATED OVER THE PLANT LIFE SUCH THAT NEITHER PATH WILL BE EXPOSED TO MORE THAN 60% OF THE DESIGN TRANSIENTS INVOLVING COMPLETE STOPPAGE OF LETDOWN AND/OR CHARGING FLOW. TRANSFER FROM ONE PATH TO THE OTHER SHOULD BE PERFORMED ONLY AT COLD SHUTDOWN CONDITIONS TO AVOID SUBJECTING THE CHARGING LINES TO UNNECESSARY THERMAL TRANSIENTS.

REFERENCES

THIS FLOW DIAGRAM HAS BEEN REDRAWN FROM WESTINGHOUSE DRAWING 1138E94-01 REV 6 WITH EXCEPTIONS AS FOLLOWS:

a. VALVES AND LINE NUMBERS HAVE BEEN ADDED.
b. CONTROL LOOPS HAVE BEEN DELETED EXCEPT FOR THE PRIMARY AND THE FINAL ELEMENTS. THE DETAILS OF THE CONTROL LOOPS WILL BE SHOWN ON INSTRUMENTATION AND CONTROL DIAGRAM.

FSAR FIGURE 9.3-10

THIS DRAWING CREATED ELECTRONICALLY

DRAWING 2323-M1-0253 REV CP-6
HAS BEEN SPLIT INTO THE FOLLOWING SHEETS:
M1-0253
M1-0253-A

CLASS I
(NUCLEAR SAFETY-RELATED)
SAFETY CLASS 1 SEISMIC CATEGORY I
SAFETY CLASS 2 CLASS 1E
SAFETY CLASS 3 ASSOCIATED CIRCUITS

TU ELECTRIC
CPSES
GLEN ROSE, TEXAS

FLOW DIAGRAM
CHEMICAL AND VOLUME CONTROL SYSTEM

DWG. NO. M1-0253
SH. NO. A
REV. CP-10

REF CHKD 3/16/2001

$$$$$$DATE$$$$$$

me316400.dgn

M1-0253-A

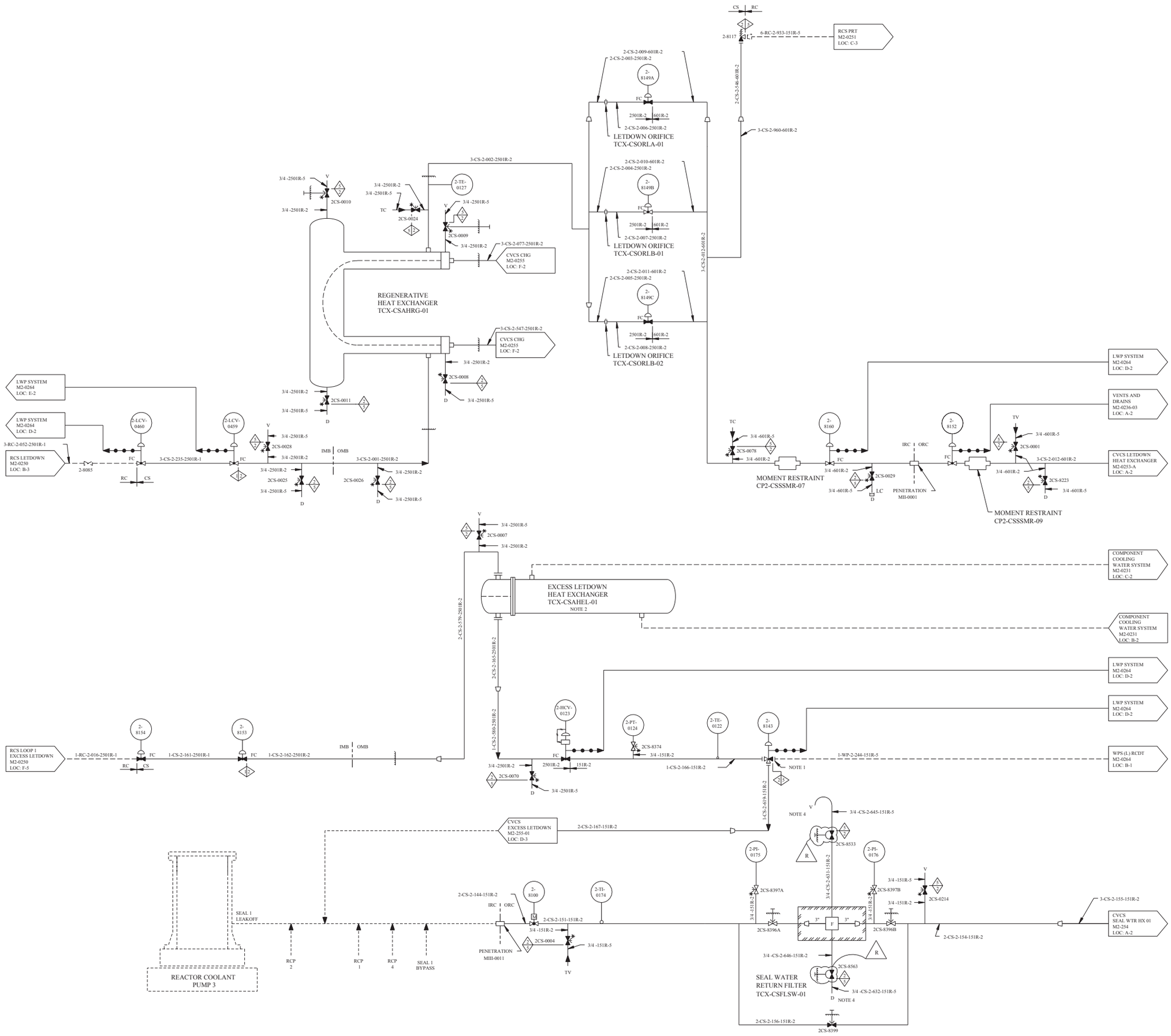

REV	DWN	CHKD	APVD	REMARKS
CP-7	MM 01-31 2006	DLK 01-31 2006		THIS DRAWING REVISED TO INCORPORATE DESIGN CHANGE FDA-2004-001193-04-00 PER SK-0011-04-001193-04-00.

NOTES:

1. THREE WAY VALVE ORIENTED IN PIPING AS SHOWN SO THAT VALVE FAILS WITH FLOW TO SEAL WATER FILTER.
2. ALL SHELL SIDE CONNECTIONS ARE SHOWN ON THE COMPONENT COOLING WATER FLOW DIAGRAM M2-0231-0.
3. FOR MECHANICAL NOTES AND SYMBOLS SEE DRAWING M1-0200-0.
4. DRAIN AND VENT LINES ROUTED TO FLOOR DRAIN IN FILTER COMPARTMENT.
5. UNLESS OTHERWISE NOTED, ALL DRAINS ON THIS DRAWING ARE DRAINED TO CHANNEL B.

FSAR FIGURE 9.3-10

THIS DRAWING CREATED ELECTRONICALLY

CLASS I
(NUCLEAR SAFETY-RELATED)
SAFETY CLASS 1 — SEISMIC CATEGORY I
SAFETY CLASS 2 — CLASS 1E
SAFETY CLASS 3 — ASSOCIATED CIRCUITS

LUMINANT
CPSES
GLEN ROSE, TEXAS

FLOW DIAGRAM
CHEMICAL AND VOLUME
CONTROL SYSTEM

DWG. NO. M2-0253 | SH. NO. - | REV. CP-7

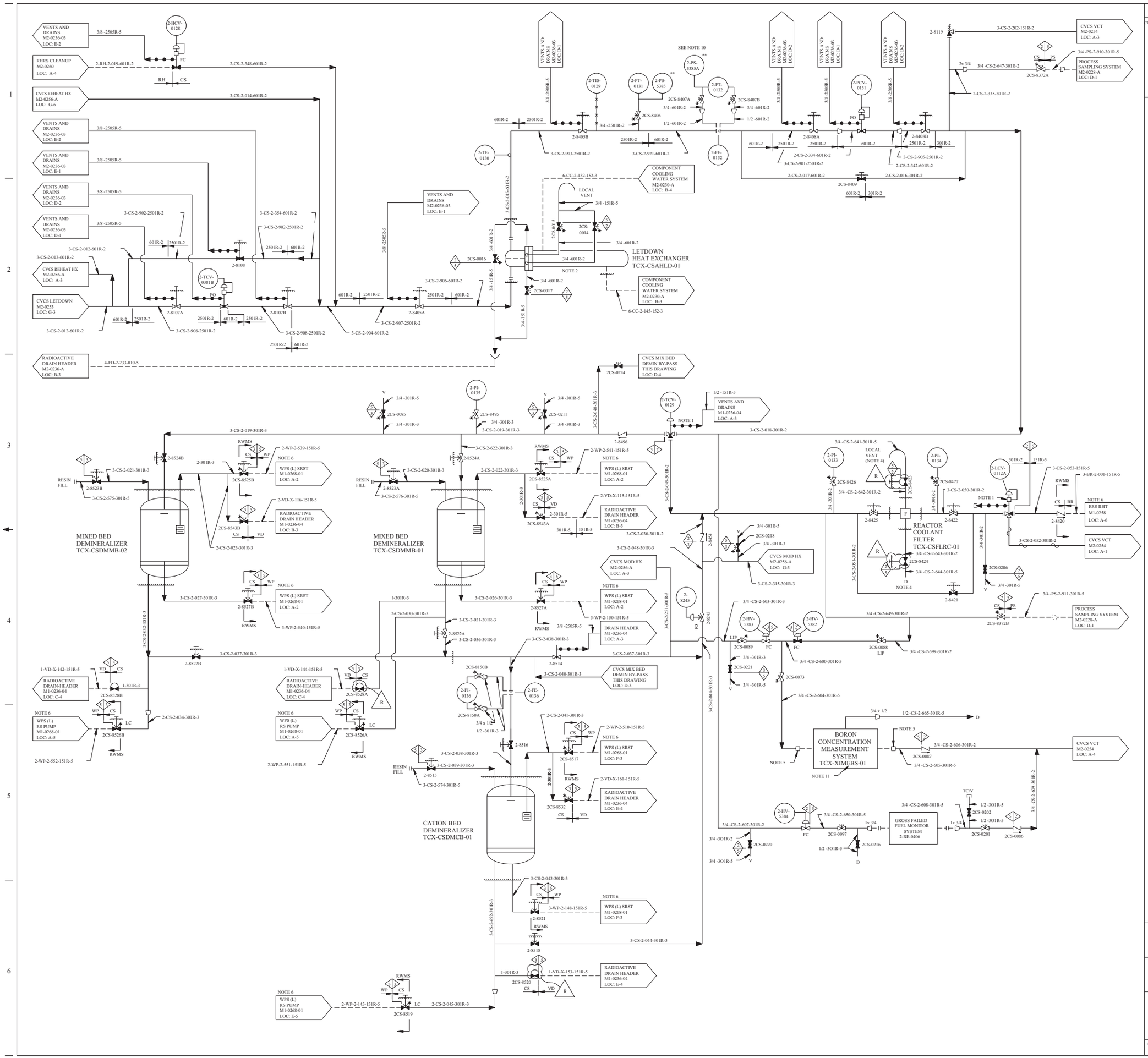

REV	DWN	CHKD	APVD	REMARKS
CP-16	DLK 01-12 2009	MHF 01-12 2009		THIS DRAWING REVISED TO INCORPORATE DESIGN CHANGE FDA 2004-001193-04-00 PER SK-0012-04-001193-04-00.

NOTES:

1. THREE-WAY VALVE ORIENTED IN PIPING AS SHOWN SO THAT VALVE FAILS WITH FLOW TO THE VCT.
2. ALL SHELL SIDE CONNECTIONS ARE SHOWN ON THE COMPONENT COOLING WATER SYSTEM DRAWING M2-0230.
3. FOR MECHANICAL SYMBOLS AND NOTES SEE DRAWING M1-0200.
4. DRAIN AND VENT LINES ROUTED TO FLOOR DRAIN IN FILTER COMPARTMENT.
5. COMPRESSION FITTING.
6. DENOTES RADIOACTIVE WASTE MANAGEMENT SYSTEM CONTINUES ON IDENTIFIED DRAWING.
7. ** EQUIPMENT USED IN MITIGATION OF HELB.
8. DELETED
9. ALL DRAINS ON THIS DRAWING DRAIN TO DRAIN CHANNEL B UNLESS OTHERWISE NOTED.
10. PRESSURE SWITCH 2-PS-5385A ALSO PROVIDES LOCAL PRESSURE INDICATION.
11. THE BCMS IS ABANDONED IN PLACE.

FSAR FIGURE 9.3-10

THIS DRAWING CREATED ELECTRONICALLY

CLASS I
(NUCLEAR SAFETY-RELATED)
SAFETY CLASS 1 — SEISMIC CATEGORY I
SAFETY CLASS 2 — CLASS 1E
SAFETY CLASS 3 — ASSOCIATED CIRCUITS

LUMINANT
CPNPP
GLEN ROSE, TEXAS

FLOW DIAGRAM
CHEMICAL AND VOLUME
CONTROL SYSTEM

DWG. NO. M2-0253 | SH. NO. A | REV. CP-16

REF CKD 3/5/97 CP-8

$$$$$$$DATESSSSS$

me917900.dgn M2-0253-A < FINAL PRINT >

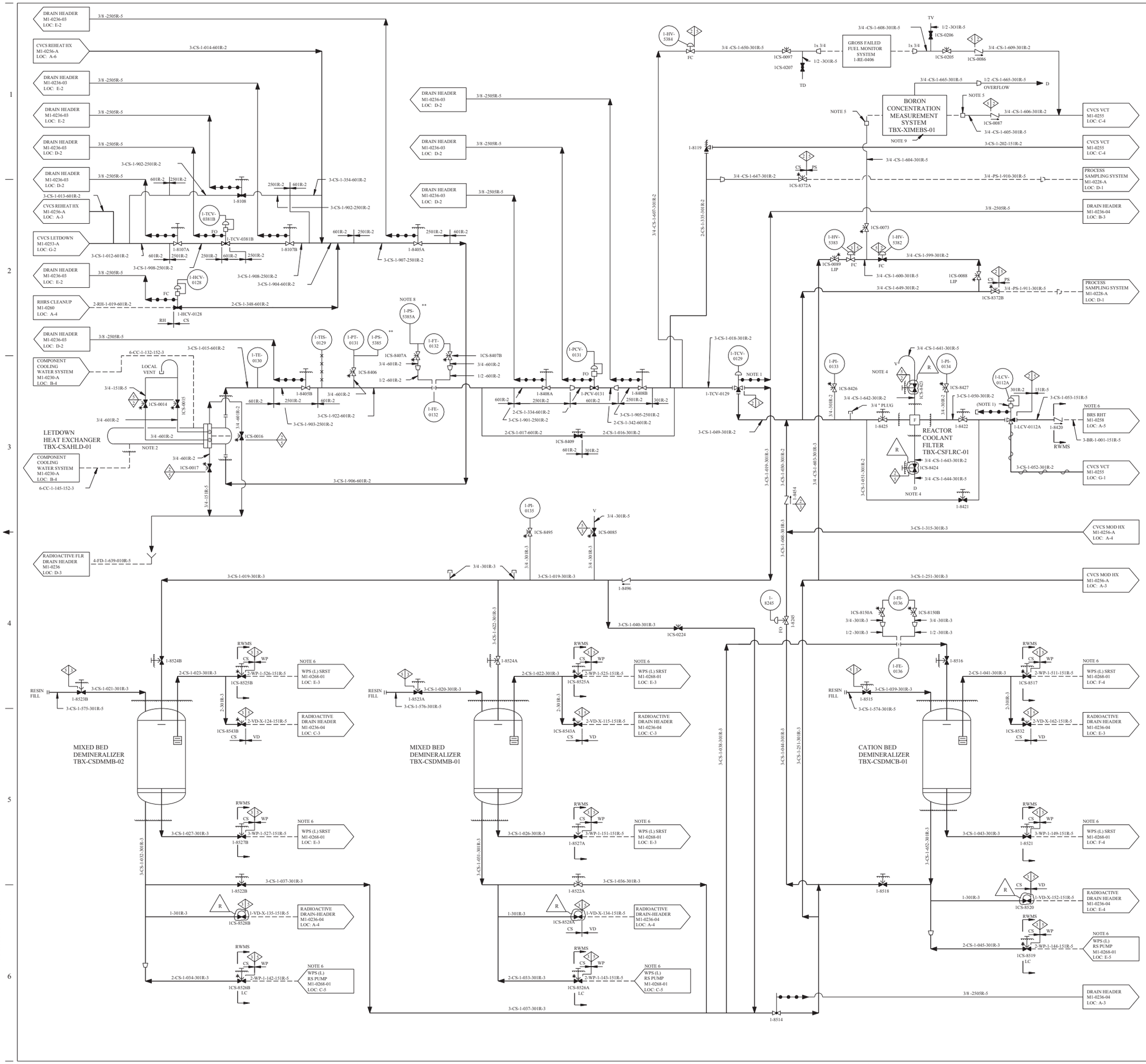

REV	DWN	CHKD	APVD	REMARKS
CP-25	DLK 09-14-2006	MM 09-14-2006		THIS DRAWING REVISED TO INCORPORATE DESIGN CHANGE FDA-2004-001193-03-00 PER SK-0019-04-001193-03-00.

NOTES:

1. THREE-WAY VALVE ORIENTED IN PIPING AS SHOWN SO THAT VALVE FAILS WITH FLOW TO THE VCT.
2. ALL SHELL SIDE CONNECTIONS ARE SHOWN ON THE COMPONENT COOLING WATER SYSTEM DRAWING M1-0230-A, LOC C-4.
3. FOR MECHANICAL SYMBOLS AND NOTES SEE DRAWING M1-0200.
4. DRAIN AND VENT LINES ROUTED TO FLOOR DRAIN IN FILTER COMPARTMENT.
5. COMPRESSION FITTING.
6. DENOTES RADIOACTIVE WASTE MANAGEMENT SYSTEM CONTINUES ON IDENTIFIED DRAWING.
7. ** EQUIPMENT USED IN MITIGATION OF HELB.
8. PRESSURE SWITCH 1-PS-5385A ALSO PROVIDES LOCAL PRESSURE INDICATION.
9. THE BCMS IS ABANDONED IN PLACE.

REFERENCE NOTES:

THIS FLOW DIAGRAM HAS BEEN REDRAWN FROM WESTINGHOUSE DRAWING 1138E94 (SH 2) REV 6, WITH EXCEPTIONS AS FOLLOWS:

a.) VALVE AND LINE NUMBERS HAVE BEEN ADDED.

b.) CONTROL LOOPS HAVE BEEN DELETED EXCEPT FOR THE PRIMARY AND THE FINAL ELEMENTS. THE DETAILS OF THE CONTROL LOOPS WILL BE SHOWN ON INSTRUMENTATION AND CONTROL DIAGRAM.

FSAR FIGURE 9.3-10

THIS DRAWING CREATED ELECTRONICALLY

CLASS I
(NUCLEAR SAFETY-RELATED)
SAFETY CLASS 1 — SEISMIC CATEGORY I
SAFETY CLASS 2 — CLASS 1E
SAFETY CLASS 3 — ASSOCIATED CIRCUITS

LUMINANT
CPSES
GLEN ROSE, TEXAS

FLOW DIAGRAM
CHEMICAL AND VOLUME
CONTROL SYSTEM

DWG. NO. M1-0254 | SH. NO. - | REV. CP-25

FINAL PRINT

REF CKD 3/5/97 CP-19

mc868700.dgn M1-0254

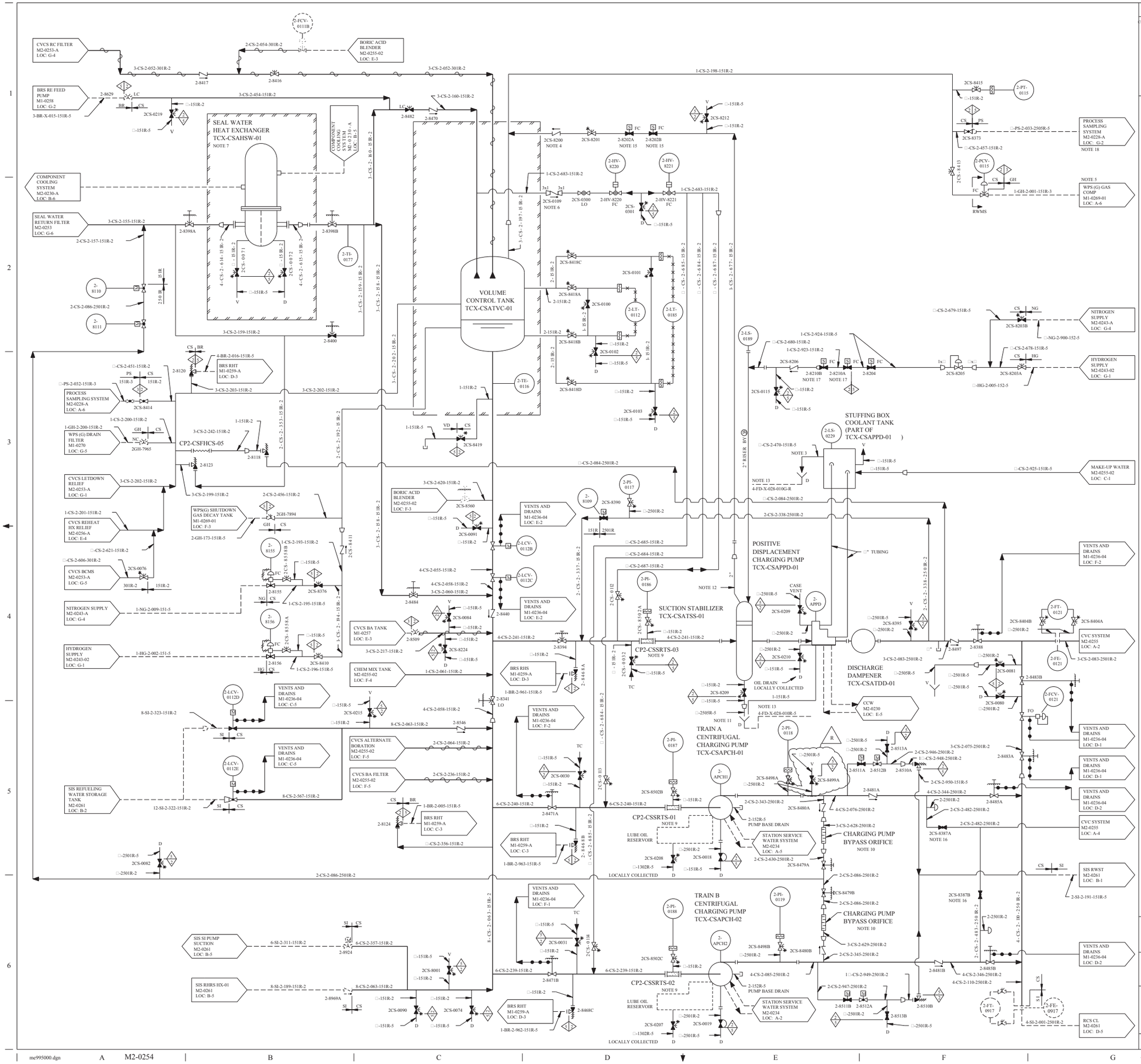

REV	DWN	CHKD	APVD	REMARKS
CP-26	JRMC 03-28 2012	DLK 03-29 2012		THIS DRAWING REVISED TO INCORPORATE DESIGN CHANGE FDA-2012-000052-01-00 PER SK-0003-12-000052-01-00.

NOTES:

1. FOR MECHANICAL SYMBOLS AND NOTES SEE DRAWING M1-0200.
2. DELETED
3. OVERFLOW FROM PUMP COOLANT HEAD TANK.
4. CHECK VALVE MUST BE IN HORIZONTAL PIPE AT HIGH POINT OF PIPE FROM STABILIZER TO VCT VENT.
5. DENOTES RADIOACTIVE WASTE MANAGEMENT SYSTEM CONTINUES ON IDENTIFIED DRAWING.
6. CHECK VALVE 2CS-0109 INSTALLED IN 45□V ANGLE SO FLAPPER REMAINS OPEN TO ALLOW GAS TO BACKFLOW UNDER LOW VELOCITY. HIGH FLOW CONDITIONS WILL CAUSE FLAPPER TO CLOSE.
7. FOR ALL SHELL SIDE CONNECTIONS SEE COMPONENT COOLING WATER SYSTEM FLOW DIAGRAM M2-0230 LOC: F-4.
8. ALL VENTS AND DRAINS ON THIS DRAWING DRAIN TO DRAIN CHANNEL B, UNLESS OTHERWISE NOTED.
9. TEMPORARY STRAINER IS PLACED IN THE SPOOL PIECE DURING INITIAL FLUSHING OPERATIONS. STRAINER MUST BE REMOVED AT PLANT START-UP, INSTALL PRESSURE GAUGE USING □" CAPPED CONNECTION. STRAINER AND PRESSURE GAUGE TO BE SUPPLIED BY OTHERS. THE TEMPORARY STRAINERS CAN BE RE-INSTALLED FOR POST MAINTENANCE ACTIVITY.
10. MINIMUM OF 5 FEET OF STRAIGHT RUN AFTER MINIMUM FLOW ORIFICE. ORIFICE SUPPLIED BY PUMP MANUFACTURER.
11. PLUNGER POT DRAIN.
12. PIPE FROM SUCTION STABILIZER MUST BE CONTINUOUSLY SLOPED UP TO CHECK VALVE.
13. FOR CONTINUATION SEE M1-0236-02 LOC: A-4.
14. DELETED
15. VALVES MAINTAINED IN NORMALLY CLOSED POSITION, EXCEPT WHEN THE POSITIVE DISPLACEMENT PUMP IS IN OPERATION, WHEN THEY ARE OPENED.
16. REMOTE OPERATORS FOR VALVES 2CS-8387A AND 2CS-8387B REMOVED PER DCN 8662.
17. VALVES MAINTAINED IN NORMALLY CLOSED POSITION, EXCEPT UPON INDICATION OF HI LEVEL IN SUCTION STABILIZER, WHEN THEY ARE MANUALLY OPERATED.
18. ARGON INJECTION PATH REFERENCE M2-0228-A (G-4) AND NOTE 21.

FSAR FIGURE 9.3-10

THIS DRAWING CREATED ELECTRONICALLY

CLASS I
(NUCLEAR SAFETY-RELATED)
SAFETY CLASS 1 / SAFETY CLASS 2 / SAFETY CLASS 3 — SEISMIC CATEGORY I / CLASS IE / ASSOCIATED CIRCUITS

LUMINANT
CPNPP
GLEN ROSE, TEXAS

FLOW DIAGRAM
CHEMICAL AND VOLUME CONTROL SYSTEM
VOLUME CONTROL TANK LOOP

DWG. NO. M2-0254 | SH. NO. - | REV. CP-26

< FINAL PRINT >

REF CKD CP-16 11/24/97

$$$$$$$DATE$$$$$$

me995000.dgn A M2-0254

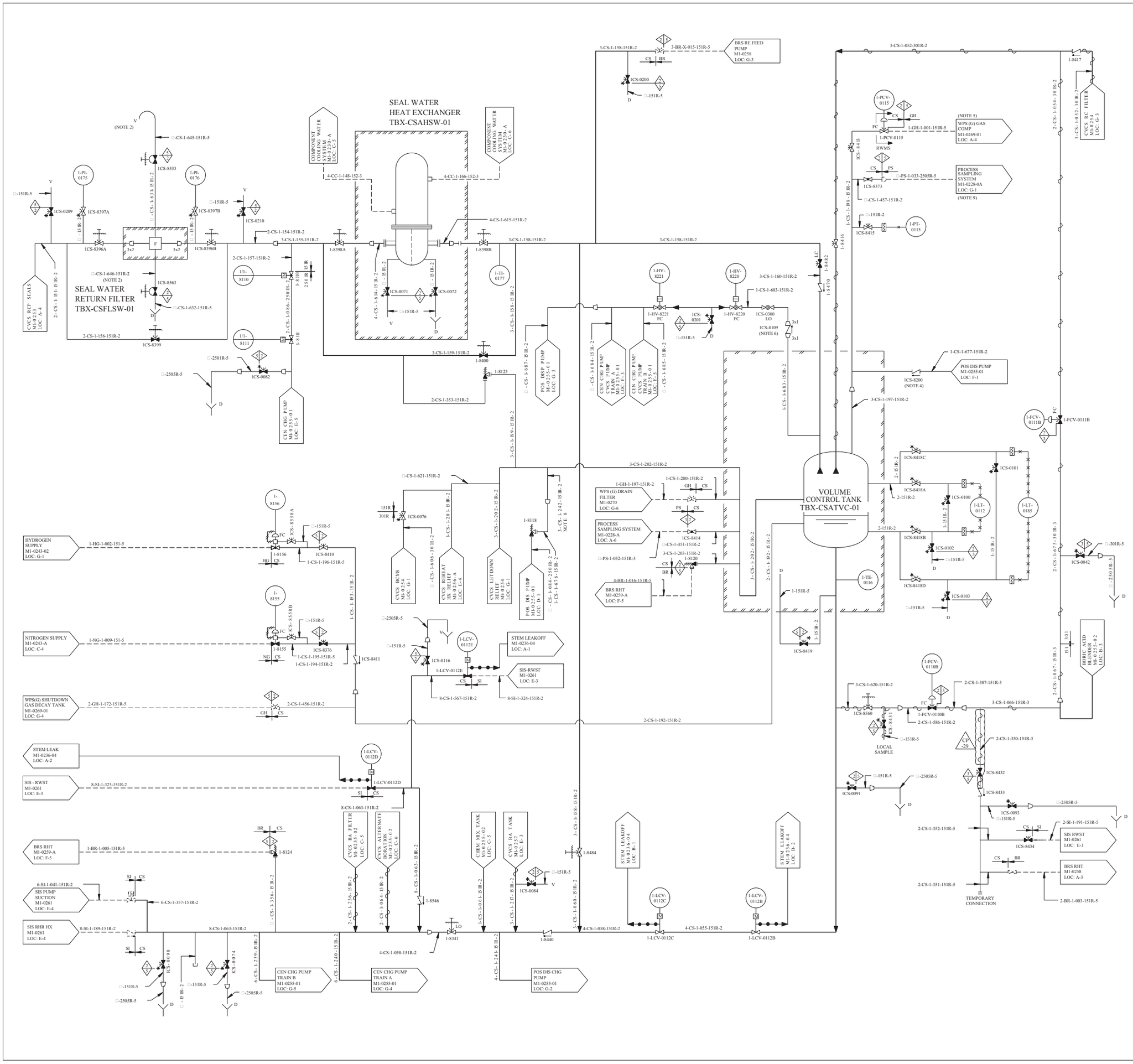

REV	DWN	CHK	APVD	REMARKS
CP-29	JEMC 07-29-2014			THIS DRAWING REVISED TO INCORPORATE EDITORIAL CHANGES PER AI-CR-2014-006921-2.

NOTES:

1. FOR MECHANICAL SYMBOLS AND NOTES SEE DRAWING M1-0200.
2. DRAIN AND VENT LINES ROUTED TO FLOOR DRAIN IN FILTER COMPARTMENT.
3. DELETED
4. CHECK VALVE MUST BE IN HORIZONTAL PIPE AT HIGH POINT OF PIPE FROM STABILIZER TO VCT VENT.
5. DENOTES RADIOACTIVE WASTE MANAGEMENT SYSTEM CONTINUES ON IDENTIFIED DRAWING.
6. CHECK VALVE 1CS-0109 INSTALLED IN 45□ V ANGLE SO FLAPPER REMAINS OPEN TO ALLOW GAS TO BACKFLOW UNDER LOW VELOCITY. HIGH FLOW CONDITIONS WILL CAUSE FLAPPER TO CLOSE.
7. FLOW DIAGRAM ORIGINALLY REDRAWN FROM WESTINGHOUSE DRAWING 113E94 (SH 3) REV 6.
8. LINE 3-CS-1-242-151R-2 HAS A SCHEDULE 160 PIECE OF PIPE IN IT, SEE BRP-CS-1-SB-010.
9. ARGON INJECTION PATH REFERENCE M1-0228-A (G-4) AND NOTE 16.

FSAR FIGURE 9.3-10

THIS DRAWING CREATED ELECTRONICALLY

CLASS I
(NUCLEAR SAFETY-RELATED)
SAFETY CLASS 1 SEISMIC CATEGORY I
SAFETY CLASS 2 CLASS IE
SAFETY CLASS 3 ASSOCIATED CIRCUITS

LUMINANT
CPNPP
GLEN ROSE, TEXAS

FLOW DIAGRAM
CHEMICAL & VOLUME CONTROL SYSTEM
VOLUME CONTROL TANK LOOP

DWG. NO. M1-0255 | SH. NO. - | REV. CP-29

REF CHKD 3/9/2001

$$$$$$$$DATE$$$$$$$

me872700.dgn A M1-0255 B C D E F G H

< FINAL PRINT >

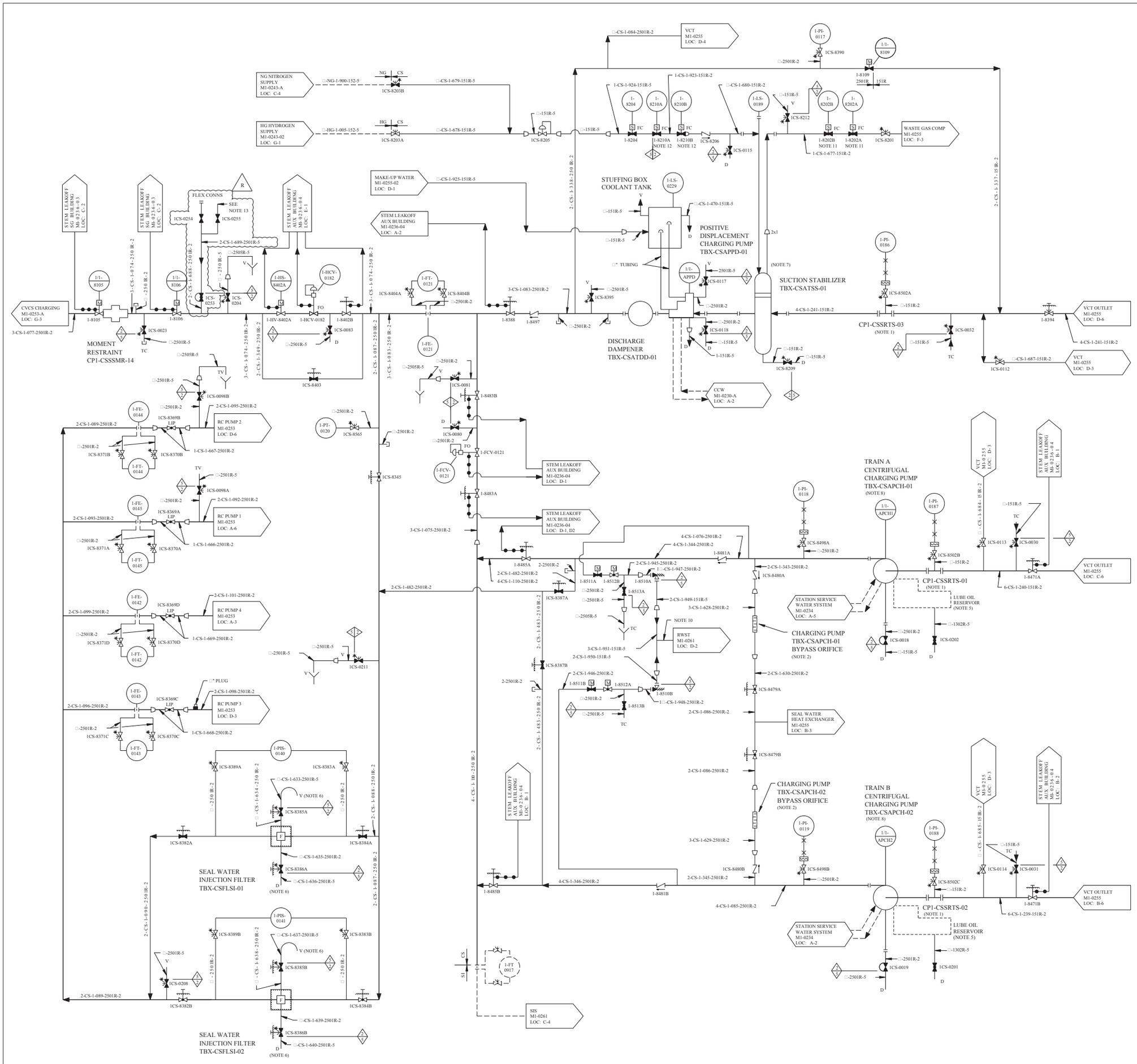

REV	DWN	CHKD	APVD	REMARKS
CP-27	DLK 04-09-2014	SM 04-09-2014		THIS DRAWING REVISED TO INCORPORATE DESIGN CHANGE FDA 2013-000008-05-00 PER SK-0006-13-000008-05-00.

NOTES:

1. TEMPORARY STRAINERS CP1-CSSRTS-01,02,03 ARE PLACED IN THE SPOOL PIECE DURING INITIAL FLUSHING OPERATIONS. STRAINER MUST BE REMOVED AT PLANT START-UP, INSTALL PRESSURE GAUGE USING □* CAPPED CONNECTION. STRAINER AND PRESSURE GAUGE TO BE SUPPLIED BY OTHERS. THE TEMPORARY STRAINERS CAN BE RE-INSTALLED FOR POST MAINTENANCE ACTIVITIES.
2. MINIMUM OF 5 FEET OF STRAIGHT RUN AFTER MINIMUM FLOW ORIFICE SUPPLIED BY PUMP MANUFACTURER.
3. FOR MECHANICAL SYMBOLS AND NOTES SEE DRAWING M1-0200.
4. OVERFLOW FROM PUMP COOLANT HEAD TANK.
5. PLUNGER POT DRAIN.
6. DRAIN AND VENT LINES ROUTED TO FLOOR DRAIN IN FILTER COMPARTMENT.
7. PIPE FROM SUCTION STABILIZER MUST BE CONTINUOUSLY SLOPED UP TO CHECK VALVE.
8. NON-NUCLEAR SAFETY RELATED □* SS TUBING DRIP POCKET DRAINS, ROUTED TO EQUIPMENT DRAINS PROVIDED FOR TBX-CSAPCH-01,02
9. FLOW DIAGRAM ORIGINALLY REDRAWN FROM WESTINGHOUSE DRAWING 1138E94 (SH 3) REV 6.
10. PIPING FROM THE OUTLET OF THE RELIEF VALVES TO THE RWST SHALL BE SUPPORTED SUCH THAT THE PRESSURE BOUNDARY WILL REMAIN INTACT AND ALLOW FLOW PATH THROUGH THE LINE FOLLOWING A SAFE SHUTDOWN EARTHQUAKE.
11. VALVES MAINTAINED IN NORMALLY CLOSED POSITION, EXCEPT WHEN THE POSITIVE DISPLACEMENT PUMP IS IN OPERATION, WHEN THEY ARE OPENED.
12. VALVES MAINTAINED IN NORMALLY CLOSED POSITION, EXCEPT UPON INDICATION OF HI LEVEL IN SUCTION STABILIZER, WHEN THEY ARE MANUALLY OPERATED.
13. FLEX CONNECTION - MAY BE A PIPE CAP OR STORZ CONNECTION.

R

FSAR FIGURE 9.3-10

THIS DRAWING CREATED ELECTRONICALLY

CLASS I
(NUCLEAR SAFETY-RELATED)
SAFETY CLASS 1 — SEISMIC CATEGORY I
SAFETY CLASS 2 — CLASS 1E
SAFETY CLASS 3 — ASSOCIATED CIRCUITS

LUMINANT
CPNPP
GLEN ROSE, TEXAS

FLOW DIAGRAM
CHEMICAL AND VOLUME CONTROL
SYSTEM CHARGING AND POSITIVE
DISPLACEMENT PUMP TRAINS

DWG. NO. M1-0255 | SH. NO. 01 | REV. CP-27

REF CKD CP-18 II/24/97

SSSSSSSDATESSSSS

me919600.dgn A M1-0255-01

< FINAL PRINT >

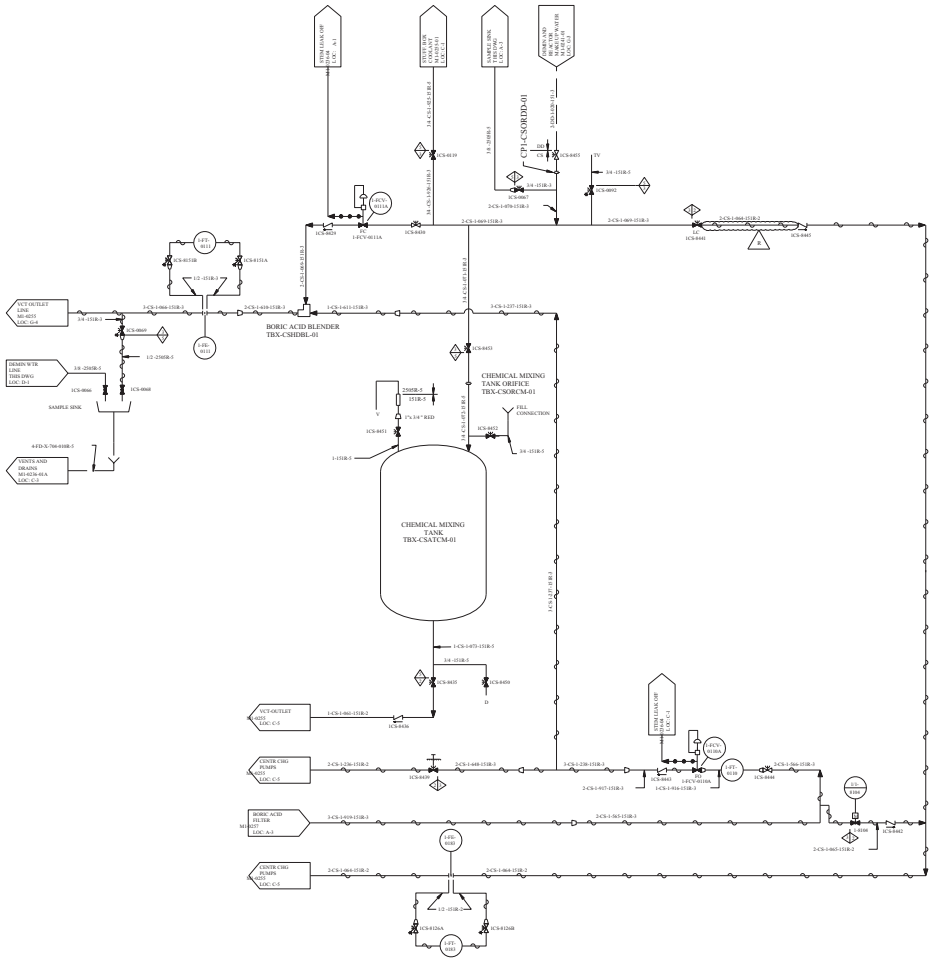

REV	DWN	CHK	APPD	REMARKS
0-14	11-14-00 REV			THIS DRAWING REVISED TO ON-DEPARTS CY 2000ECCS CHANGE FILE, 1999-00154R-01-00 PER SK-2017-99-00154R-01-00.

NOTES:

1. FOR MECHANICAL SYMBOLS AND NOTES SEE DRAWING M1-0200.
2. FLOW DIAGRAM ORIGINALLY REDRAWN FROM WESTINGHOUSE DRAWING 113E894 SH 1 REV A.
3. UNLESS OTHERWISE NOTED ALL DRAINS COLLECTED BY LOCAL DRAIN SYSTEM TO DRAIN CHANNEL B.

FSAR FIGURE 9.3-10

THIS DRAWING GENERATED FOR TRACEABILITY

CLASS I

(NUCLEAR SAFETY-RELATED)

SAFETY CLASS 1 SEISMIC CATEGORY I
SAFETY CLASS 2 CLASS 1E
SAFETY CLASS 3 ESSENTIAL ELECTRICAL CIRCUITS

TXU ENERGY
CPSES
GLEN ROSE, TEXAS

FLOW DIAGRAM
CHEMICAL & VOLUME
CONTROL SYSTEM

DWG. NO.	SH. NO.	REV.
M1-0255	02	CP-14

REGISTRATION STAMPS

mc462300.dgn M1-0255-02

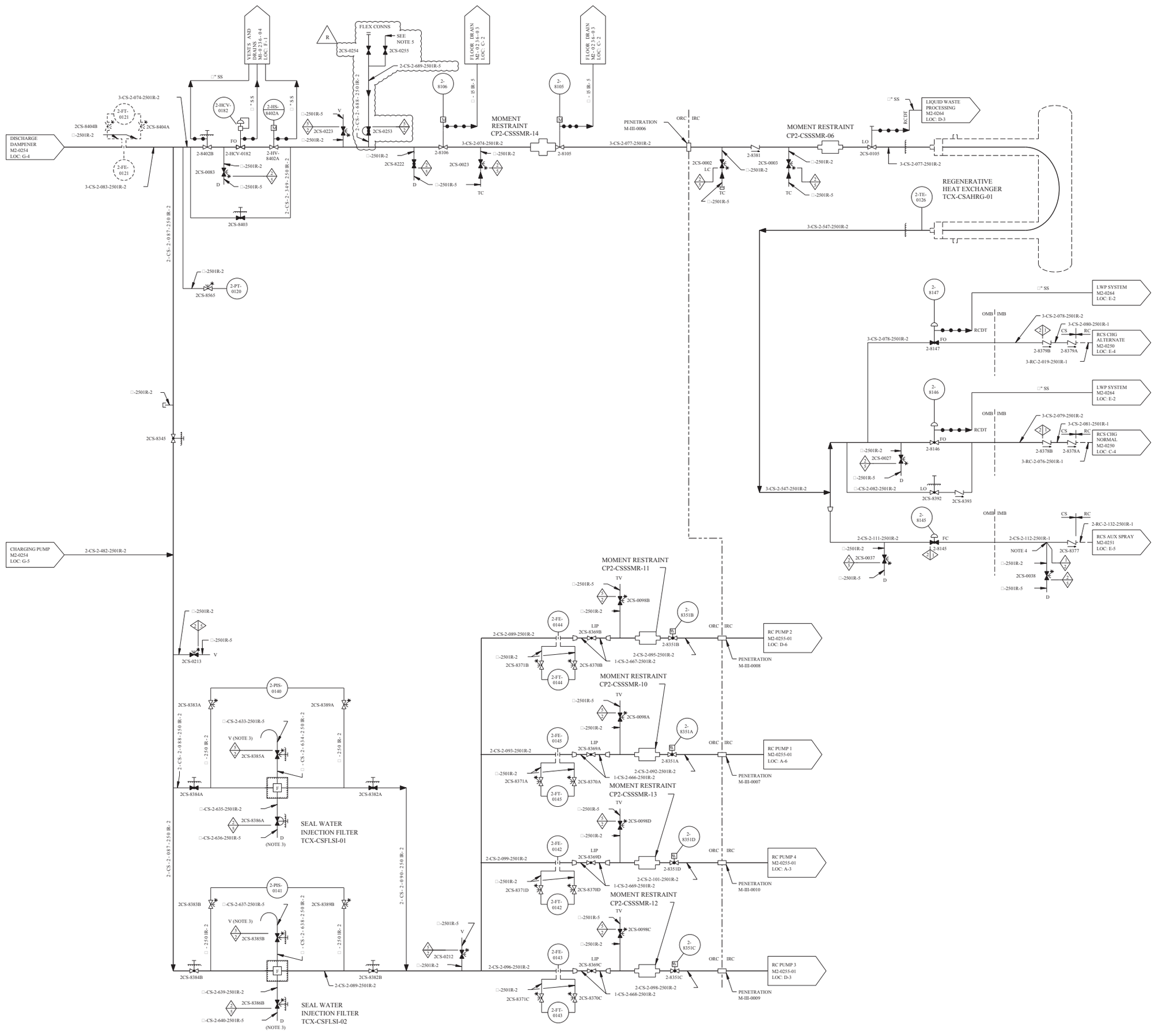

REV	DWN	CHKD	APVD	REMARKS
CP-14	DLK 10-19-2014	MM 10-21-2014		THIS DRAWING REVISED TO INCORPORATE DESIGN CHANGE FDA 2013-000008-06-00 PER SK-0001-13-000008-06-00.

NOTES:

1. LOCATED AS CLOSE TO CONTAINMENT AS POSSIBLE.
2. FOR MECHANICAL SYMBOLS AND NOTES SEE DRAWING M1-0200.
3. DRAIN AND VENT LINES ROUTED TO FLOOR DRAIN IN FILTER COMPARTMENT.
4. ALL VENTS AND DRAINS ON THIS DRAWING DRAIN TO DRAIN CHANNEL B UNLESS OTHERWISE NOTED.
5. FLEX CONNECTION - MAY BE A PIPE CAP OR STORZ CONNECTION.

FSAR FIGURE 9.3-10

THIS DRAWING CREATED ELECTRONICALLY

CLASS I
(NUCLEAR SAFETY-RELATED)
SAFETY CLASS 1 — SEISMIC CATEGORY I
SAFETY CLASS 2 — CLASS 1E
SAFETY CLASS 3 — ASSOCIATED CIRCUITS

LUMINANT
CPNPP
GLEN ROSE, TEXAS

FLOW DIAGRAM
CHEMICAL AND VOLUME CONTROL SYSTEM

DWG. NO. M2-0255 | SH. NO. - | REV. CP-14

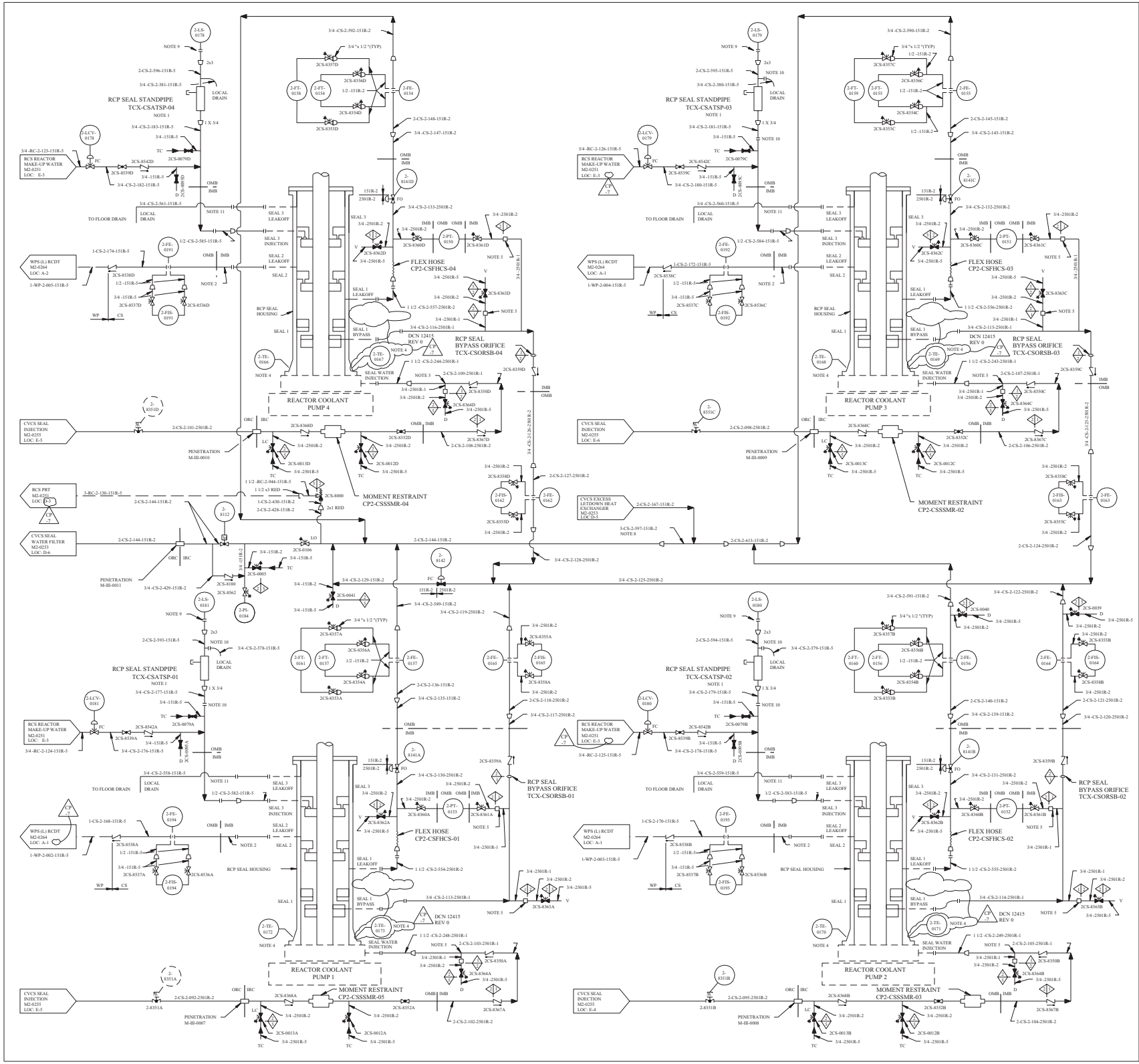

REV	DWN	CHK	APVD	REMARKS
CP-7	DED 09/02 1998			THIS DRAWING REVISED TO INCORPORATE DESIGN CHANGE DCN 12415 REV 0.

NOTES

1. BOTTOM OF STANDPIPE LOCATED 22 0.5 FT ABOVE THE CONNECTION TO THE REACTOR COOLANT PUMP SEAL 3.
2. PIPING TO RUN HORIZONTAL OR SLOPING THROUGHOUT ENTIRE RUN FROM RCP SEAL 2 LEAKOFF CONNECTION TO RCDT. DO NOT POCKET ANY PART OF LINE. LOCATE CHECK VALVE BELOW THE SEAL 2 LEAKOFF NOZZLE AT A DISTANCE EQUAL TO OR GREATER THAN THE HEAD OF WATER EQUIVALENT TO THE CHECK VALVE CRACKING PRESSURE.
3. DELETED
4. 2-TE-0172 AND 2-TE-0173 ETC. ARE FURNISHED WITH RC PUMPS.
5. 3/8 " ID FLOW RESTRICTOR PROVIDED FOR CLASS I - CLASS 2 TRANSITION: SIMILAR TO ARRANGEMENT SHOWN IN NOTE 15 ON MECHANICAL SYMBOLS AND NOTES SHEET DRAWING M1-0200.
6. FOR MECHANICAL NOTES AND SYMBOLS SEE DRAWING M1-0200.
7. DELETED
8. 3 IN DIA DELAY LINE - 24 FT LONG.
9. 3 IN 150 LB RAISED FACE FLANGE.
10. 150 LB FLANGES TO PERMIT REMOVAL OF STANDPIPE FOR LEVEL SWITCH MAINTENANCE ON LOOPS 1, 2 AND 3 ONLY.
11. PIPING SHOULD BE SLOPED DOWNWARD FROM THIS POINT TO ASSURE 0 PSIG.
12. ALL DRAINS ON THIS DRAWING ARE DRAINED TO CHANNEL B, UNLESS OTHERWISE NOTED.

FSAR FIGURE 9.3-10

THIS DRAWING CREATED ELECTRONICALLY

CLASS I

(NUCLEAR SAFETY-RELATED)

SAFETY CLASS 1 — SEISMIC CATEGORY I
SAFETY CLASS 2 — CLASS 1E
SAFETY CLASS 3 — ASSOCIATED CIRCUITS

TXU ELECTRIC
CPSES
GLEN ROSE, TEXAS

FLOW DIAGRAM
CHEMICAL AND VOLUME
CONTROL SYSTEM

DWG. NO.	SH. NO.	REV.
M2-0255	01	CP-7

me000199.dgn

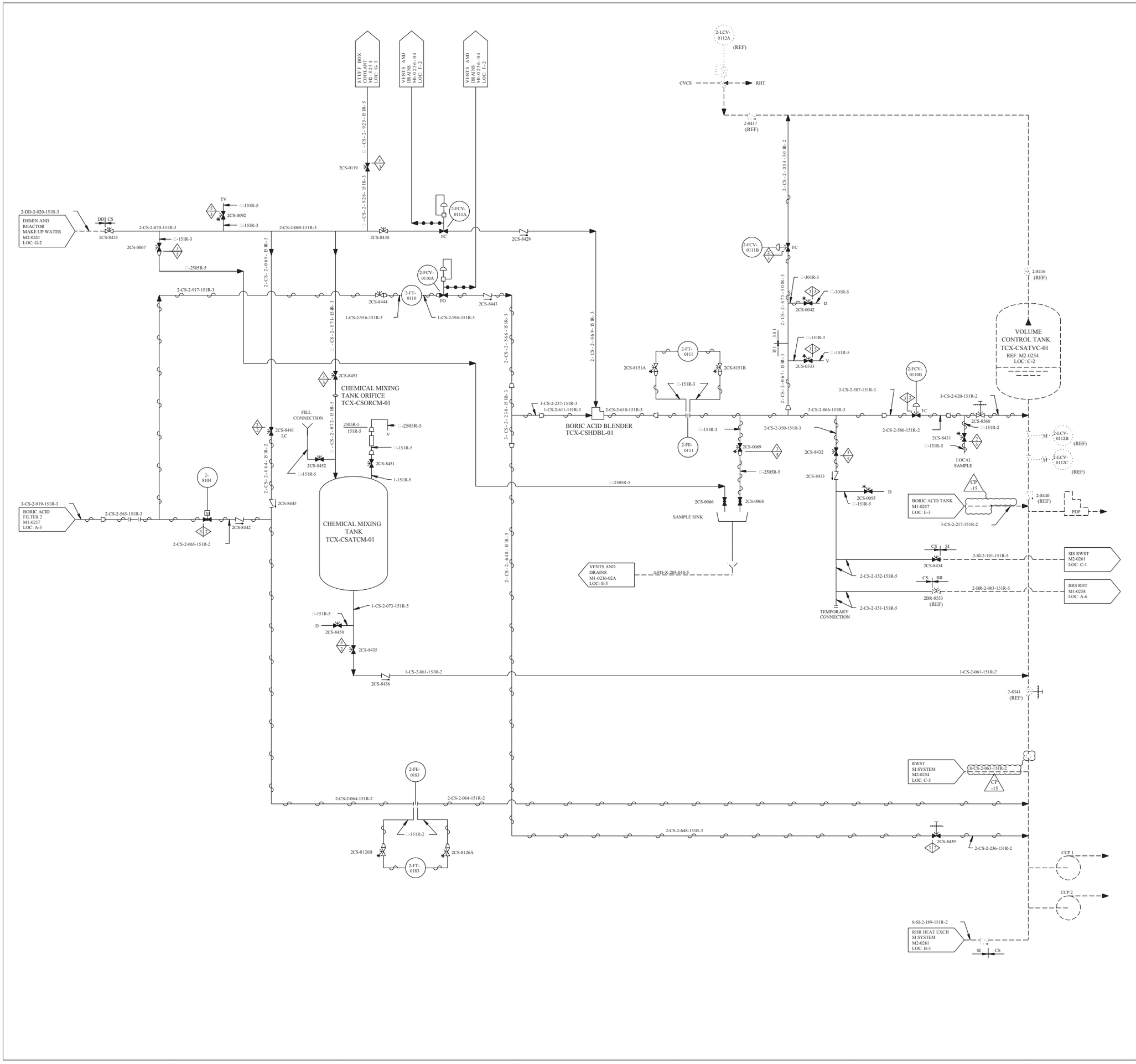

REV	DWN	CHKD	APVD	REMARKS
CP-15	DLK 02-04-2015			THIS DRAWING REVISED TO INCORPORATE AL-CR-2015-001056-1 TO EDITORIALLY REMOVE "MAIN EMERGENCY BORATE" FROM LINE NUMBER 3-CS-2-217-151R-2. EDITORIAL CHANGES AS NOTED.

NOTES:

1. FOR MECHANICAL SYMBOLS AND NOTES SEE DRAWING M1-0200.
2. ALL VENTS AND DRAINS ON THIS DRAWING DRAIN TO DRAIN CHANNEL B, UNLESS OTHERWISE NOTED.
3. DELETED
4. DELETED

FSAR FIGURE 9.3-10

THIS DRAWING CREATED ELECTRONICALLY

CLASS I
(NUCLEAR SAFETY-RELATED)
SAFETY CLASS 1 — SEISMIC CATEGORY I
SAFETY CLASS 2 — CLASS 1E
SAFETY CLASS 3 — ASSOCIATED CIRCUITS

LUMINANT
CPNPP
GLEN ROSE, TEXAS

FLOW DIAGRAM
CHEMICAL AND VOLUME
CONTROL SYSTEM

DWG. NO. M2-0255 | SH. NO. 02 | REV. CP-15

SSSSSSSDATESSSSSSS REF CHKD 11/04/2000

me0006el.dgn A M2-0255-02 < FINAL PRINT >

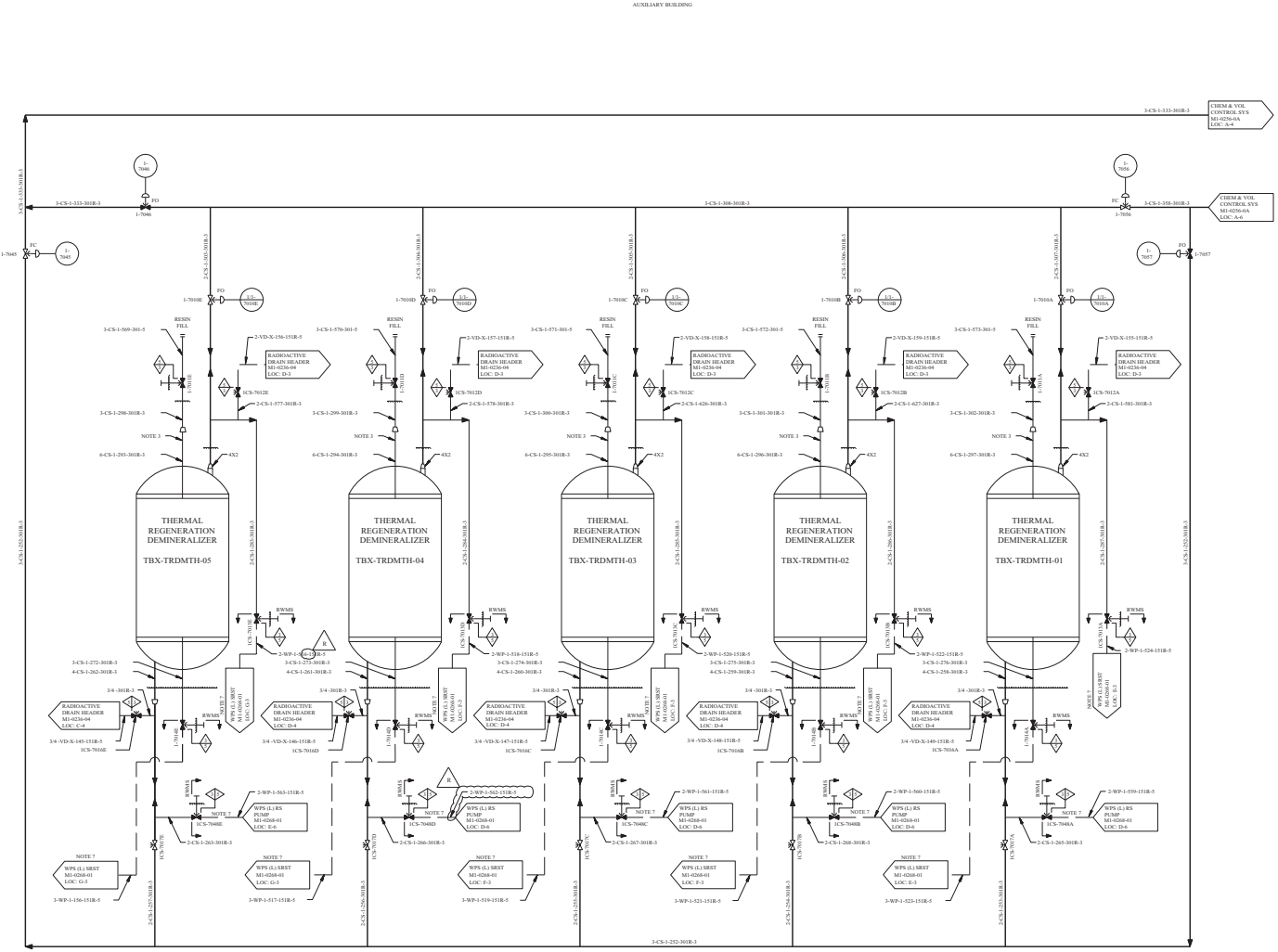

REV	DWN	CHKD	APVD	REMARKS
CP-11				THIS DRAWING REVISED TO INCORPORATE DESIGN CHANGE FDA 2000-002923-01-00 PER SK-0001-00-002923-01-00.

NOTES:

1. ALL VALVES ALIGNED FOR BORON REMOVAL (DILUTION).
2. DELETED
3. 6 FEET OF 6 INCH PIPE PROVIDED BETWEEN DEMINERALIZER AND REDUCER.
4. DELETED
5. DELETED
6. DELETED
7. INDICATES RADIOACTIVE WASTE MANAGEMENT SYSTEM CONTINUES ON IDENTIFIED DRAWING.

REFERENCE DRAWINGS:

THIS FLOW DIAGRAM HAS BEEN REDRAWN FROM DWG. 113[illegible]4, SH 4 REV. 5 WITH THE EXCEPTION AS FOLLOWS:

a. VALVES AND LINE NUMBERS HAVE BEEN ADDED
b. CONTROL LOOPS HAVE BEEN DELETED EXCEPT FOR THE PRIMARY AND THE FINAL ELEMENTS. THE CONTROL LOOPS WILL BE SHOWN ON THE INSTUMENTATION AND CONTROL DIAGRAM

FSAR FIGURE 9.3-10

THIS DRAWING CREATED FLAT FROM CAD

DRAWING 2323-M1-0256 REV CP-5
HAS BEEN SPLIT INTO THE FOLLOWING SHEETS:
M1-0256
M1-0256-A

CLASS I
(NUCLEAR SAFETY-RELATED)
SAFETY CLASS 1, SEISMIC CATEGORY I
SAFETY CLASS 2, CLASS III
SAFETY CLASS 3 ASSOCIATED CIRCUITS

TXU ELECTRIC
CPSES
GLEN ROSE, TEXAS

FLOW DIAGRAM
CHEMICAL & VOLUME
CONTROL SYSTEM

DWG. NO.	SH. NO.	REV.
M1-0256	-	CP-11

FINAL PRINT

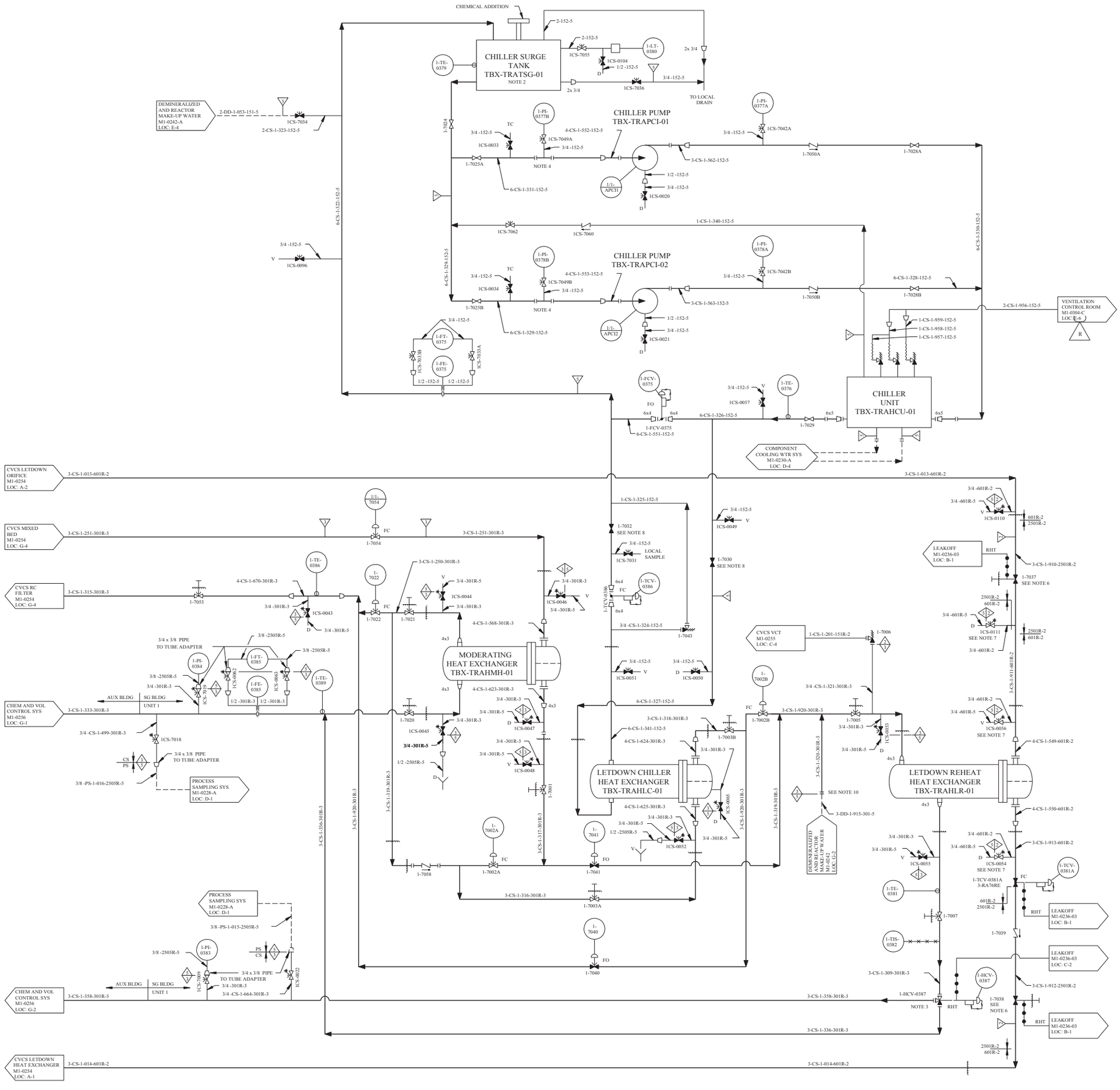

REV	DWN	CHKD	APVD	REMARKS
CP-18	MM 05-27 2008	DLK 05-27 2008		THIS DRAWING REVISED TO INCORPORATE DESIGN CHANGE FDA 2008-001745-01-00 PER SK-0002-08-001745-01-00.

NOTES:

1. ALL VALVES SHOWN ALIGNED FOR BORON REMOVAL (DILUTION).
2. CHILLER SURGE TANK IS LOCATED AT HIGH POINT IN THE CHILLER CIRCUIT.
3. THREE-WAY VALVES SHOULD BE ORIENTED IN PIPING AS SHOWN SO FAILURE IS WITH FLOW TO DEMINERALIZERS.
4. TEMPORARY STRAINERS CP1-CSSRTS-04 AND -05 ARE PLACED IN SPOOL PIECE DURING INITIAL FLUSHING OPERATION. STRAINER MUST BE REMOVED BEFORE PLANT START-UP. THE TEMPORARY STRAINERS CAN BE RE-INSTALLED FOR POST MAINTENANCE ACTIVITY.
5. INDICATES HERMETICALLY SEALED VALVE.
6. THIS VALVE IS CLOSED WHEN THE TUBE SIDE OF THE LETDOWN REHEAT HEAT EXCHANGER IS ISOLATED AND DRAINED.
7. THIS VALVE IS OPEN WHEN THE TUBE SIDE OF THE LETDOWN REHEAT HEAT EXCHANGER IS ISOLATED AND DRAINED.
8. VALVES CLOSED WHILE SYSTEM IS IN LAYUP.
9. FOR MECHANICAL SYMBOLS AND NOTES SEE DRAWING M1-0200.
10. VALVE 1-7004 HAS BEEN REMOVED AND A BLANK AND FLANGES HAS BEEN INSTALLED IN ITS PLACE PER FDA 2002-002085-01.

REFERENCE NOTES:

THIS FLOW DIAGRAM HAS BEEN REDRAWN FROM DWG 11[illegible]94 (SH 4) REV 5 WITH THE EXCEPTION AS FOLLOWS:

a. VALVES AND LINE NUMBERS HAVE BEEN ADDED.

b. CONTROL LOOPS HAVE BEEN DELETED EXCEPT FOR THE PRIMARY AND THE FINAL ELEMENTS. THE DETAILS OF THE CONTROL LOOPS WILL BE SHOWN ON THE INSTRUMENTATION AND CONTROL DIAGRAM.

FSAR FIGURE 9.3-10

THIS DRAWING CREATED ELECTRONICALLY

DRAWING 2323-M1-0256 REV CP-5
HAS BEEN SPLIT INTO THE FOLLOWING SHEETS:
M1-0256
M1-0256-A

CLASS I
(NUCLEAR SAFETY-RELATED)
SAFETY CLASS 1 / SAFETY CLASS 2 / SAFETY CLASS 3
SEISMIC CATEGORY I / CLASS 1E / ASSOCIATED CIRCUITS

LUMINANT
CPSES
GLEN ROSE, TEXAS

FLOW DIAGRAM
CHEMICAL AND VOLUME
CONTROL SYSTEM

DWG. NO. M1-0256 | SH. NO. A | REV. CP-18

FINAL PRINT

REF CHKD 01-02-2003

me879300.dgn A M1-0256-A

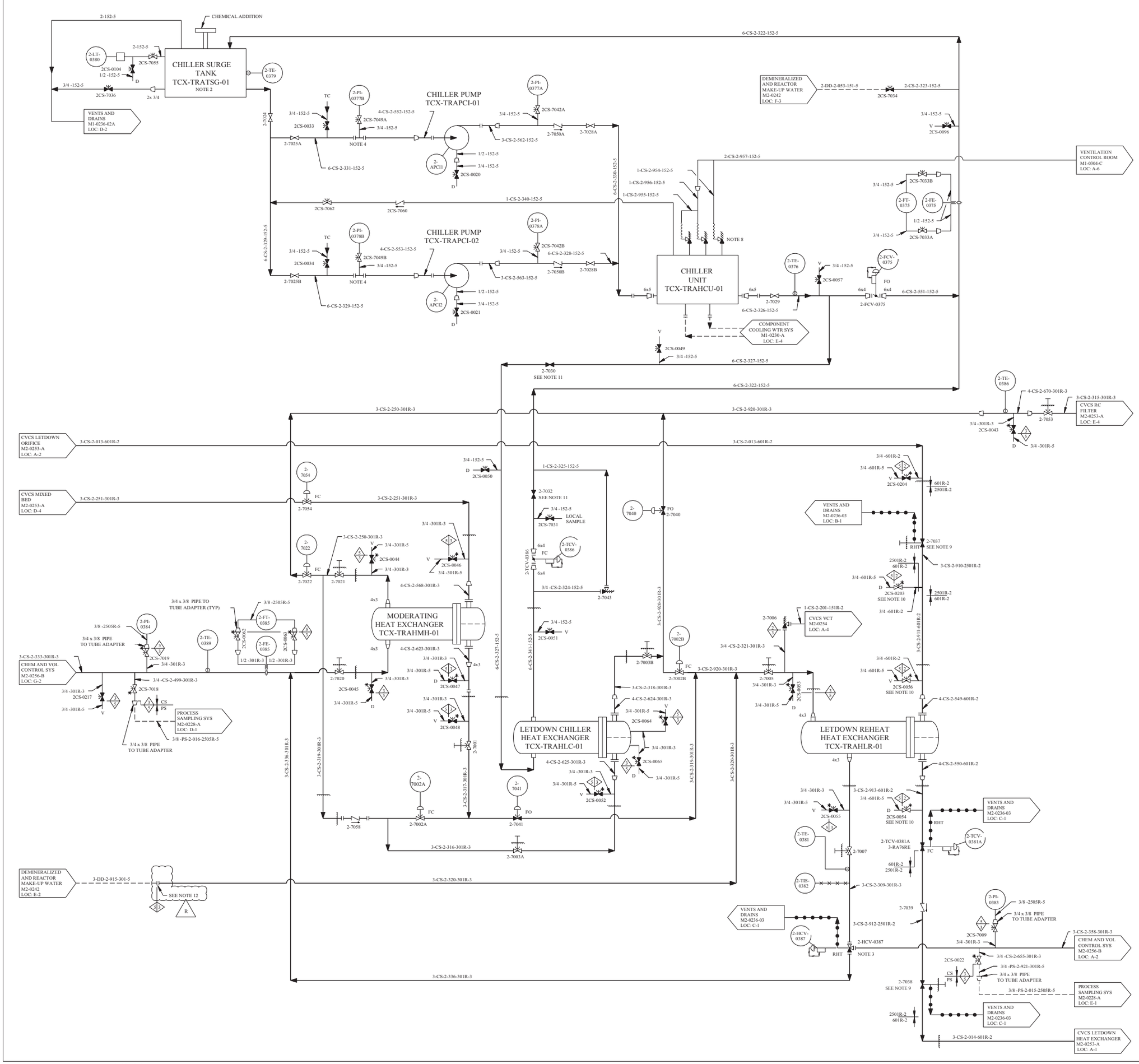

REV	DWN	CHKD	APVD	REMARKS
CP-14	MHF 08-15-2006	DEK 08-15-2006		THIS DRAWING REVISED TO INCORPORATE DESIGN CHANGE FDA 2002-002085-01-00 PER SK-0009-02-002085-01-00

NOTES:

1. ALL VALVES SHOWN ALIGNED FOR BORON REMOVAL (DILUTION).
2. CHILLER SURGE TANK IS LOCATED AT HIGH POINT IN THE CHILLER CIRCUIT.
3. THREE-WAY VALVE SHOULD BE ORIENTED IN PIPING AS SHOWN SO FAILURE IS WITH FLOW TO DEMINERALIZERS.
4. TEMPORARY STRAINERS CP2-CSSRTS-04 AND CP2-CSSRTS-05 ARE PLACED IN SPOOL PIECE DURING INITIAL FLUSHING OPERATION. STRAINER MUST BE REMOVED BEFORE PLANT START-UP. THE TEMPORARY STRAINERS CAN BE RE-INSTALLED FOR POST MAINTENANCE ACTIVITY.
5. FOR MECHANICAL SYMBOLS AND NOTES SEE DRAWING M1-0200.
6. DELETED
7. ALL DRAINS ON THIS DRAWING ARE DRAINED TO DRAIN CHANNEL B UNLESS OTHERWISE NOTED.
8. RELIEF VALVES BY VENDOR.
9. THIS VALVE IS CLOSED WHEN THE TUBE SIDE OF THE LETDOWN REHEAT HEAT EXCHANGER IS ISOLATED AND DRAINED.
10. THIS VALVE IS OPEN WHEN THE TUBE SIDE OF THE LETDOWN REHEAT HEAT EXCHANGER IS ISOLATED AND DRAINED.
11. VALVES CLOSED WHILE SYSTEM IS IN LAYUP.
12. VALVE 2-7004 HAS BEEN REMOVED AND A BLIND FLANGE HAS BEEN INSTALLED IN ITS PLACE PER FDA 2002-002085-01.

R

FSAR FIGURE 9.3-10

THIS DRAWING CREATED ELECTRONICALLY

CLASS I
(NUCLEAR SAFETY-RELATED)
SAFETY CLASS 1 — SEISMIC CATEGORY I
SAFETY CLASS 2 — CLASS 1E
SAFETY CLASS 3 — ASSOCIATED CIRCUITS

LUMINANT
CPSES
GLEN ROSE, TEXAS

FLOW DIAGRAM
CHEMICAL AND VOLUME
CONTROL SYSTEM

DWG. NO. M2-0256 | SH. NO. A | REV. CP-14

FINAL PRINT

REF CKD 318-97 CP-8

me871700.dgn

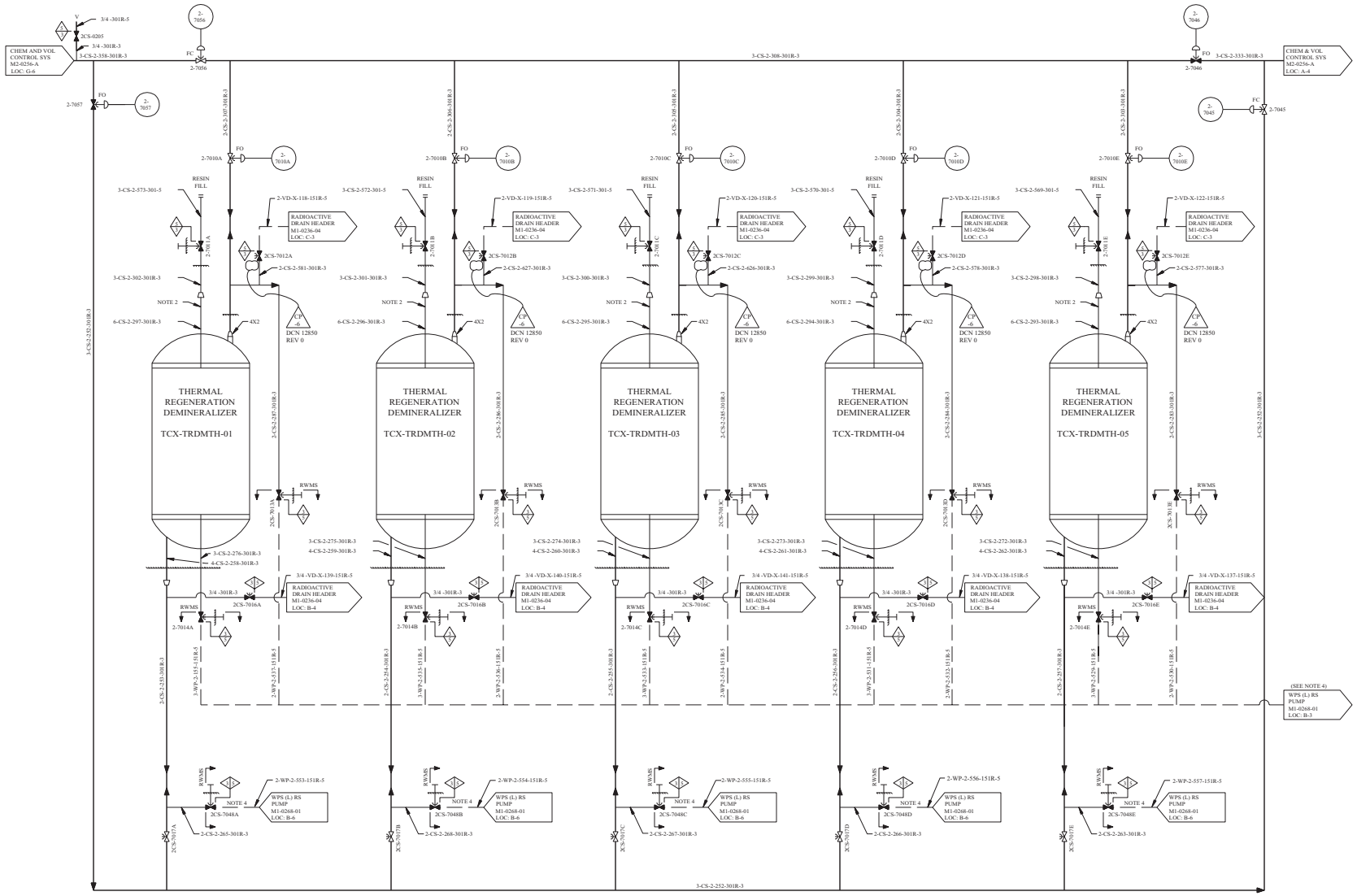

REV	DWN	CHKD	APVD	REMARKS
CP-6	CA 10-08-1999			THIS DRAWING REVISED TO INCORPORATE DESIGN CHANGE DCN 12850 REV 0.

NOTES

1. ALL VALVES SHOWN ALIGNED FOR BORON REMOVAL (DILUTION).
2. 6 FEET OF 6 INCH PIPE PROVIDED BETWEEN DEMINERALIZER AND REDUCER.
3. FOR MECHANICAL SYMBOLS AND NOTES SEE DRAWING M1-0200.
4. DENOTES RADIOACTIVE WASTE MANAGEMENT SYSTEMS CONTINUES ON IDENTIFIED DRAWING.
5. ALL DRAINS ON THIS DRAWING ARE DRAINED TO DRAIN CHANNEL B UNLESS OTHERWISE NOTED.
6. DURING UNIT 2 CONSTRUCTION, UNIT 2 PIPING IS TO BE PHYSICALLY ISOLATED FROM UNIT 1 PIPING BY REMOVAL OF A SECTION OF PIPE TO PROVIDE AN INTERIM PIPING CONFIGURATION. END CONNECTIONS SHALL BE INSTALLED AS INDICATED ON THE PIPING ISOMETRIC DRAWING. THE FINAL DESIGN CONFIGURATION, FOR UNIT 2 OPERATION SHALL REFLECT WELDED PIPE.

FSAR FIGURE 9.3-10

THIS DRAWING CREATED ELECTRONICALLY

CLASS I

(NUCLEAR SAFETY-RELATED)

SAFETY CLASS 1 — SEISMIC CATEGORY I
SAFETY CLASS 2 — CLASS 1E
SAFETY CLASS 3 — ASSOCIATED CIRCUITS

TXU ELECTRIC
CPSES
GLEN ROSE, TEXAS

FLOW DIAGRAM
CHEMICAL AND VOLUME
CONTROL SYSTEM

DWG. NO.	SH. NO.	REV.
M2-0256	B	CP-6

me000113.dgn

$$$$$$$D:\TESS$$$$$

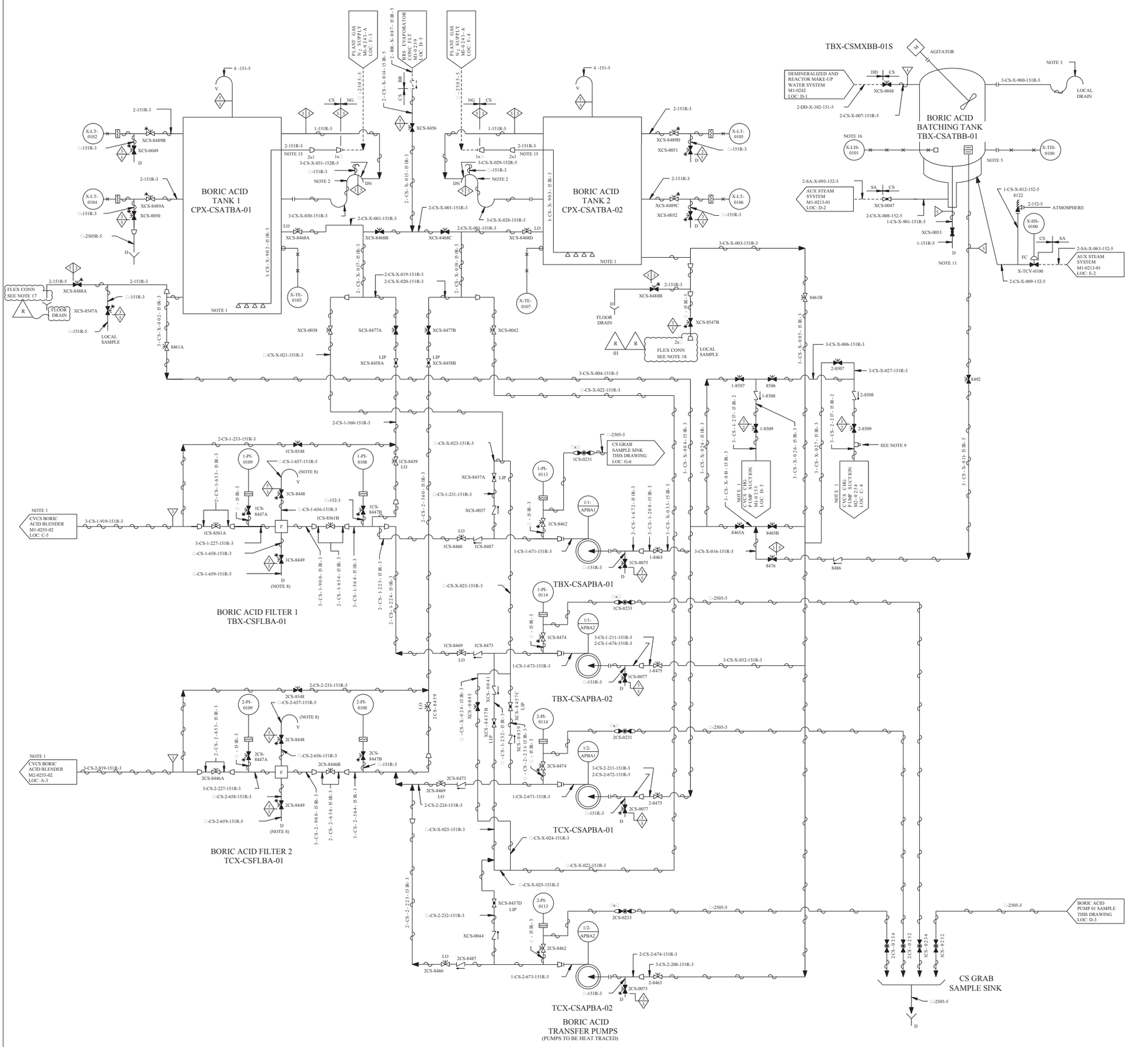

REV	DWN	CHKD	APVD	REMARKS
CP-32	DLK 10-13-2014	SM 10-13-2014		THIS DRAWING REVISED TO INCORPORATE DESIGN CHANGE FDA 2013-000008-05-02 PER SK-0007-000008-05-02.

NOTES:

1. ALL EQUIPMENT AND PIPING SHOWN TO BE MAINTAINED AT A MINIMUM TEMPERATURE OF 65□ F.
2. LOWER LOOP TO EXTEND 12 INCHES BELOW NOZZLE. UPPER LOOP TO EXTEND TO 6 INCHES BELOW THE DIAPHRAGM FLANGE DIRECT OVERFLOW INTO FUNNEL SYPHON BREAK LOCATED AT TOP OF PIPE.
3. LOOP SEAL TO EXTEND 12 INCHES BELOW AND ABOVE OVERFLOW NOZZLE.
4. FOR MECHANICAL SYMBOLS AND NOTES SEE DRAWING M1-0200.
5. TEMPERATURE WELL WITH FLANGE PROVIDED.
6. INDICATES HERMETICALLY SEALED VALVE.
7. INDICATES HEAT TRACED.
8. FILTER VENT AND DRAIN LINES ROUTED TO FLOOR DRAIN IN FILTER COMPARTMENT.
9. PLUGGED □ INCH SOCKET WELD CONNECTION.
10. UNLESS OTHERWISE NOTED ALL DRAINS COLLECTED BY LOCAL DRAIN SYSTEM TO DRAIN CHANNEL B.
11. DRAIN LINE TO BE USED AS A LOCAL SAMPLE LINE.
12. DELETED
13. DELETED
14. DELETED
15. REDUCER IS DRILLED OUT TO ONE INCH PIPE DIAMETER. LINE 1-CS-X-902-151R-3 ON TANK 1 AND 1-CS-X-903-151R-3 ON TANK 2 EXTENDS THROUGH THE TWO INCH PIPE AND REDUCER TO CONNECT WITH A 1"x□" REDUCER COUPLING.
16. X-LIS-0101 (PRESSURE BOUNDARY ONLY): ALL WIRING DETERMINATED VIA DCN 0656 REV 0 AND DCN 0665 REV 0.
17. FLEX CONNECTION - STORZ CONNECTION MAINTAINED IN FLEX EQUIPMENT STORAGE BUILDING (X-FX-2K19).
18. FLEX CONNECTION - MAY BE A PIPE CAP OR STORZ CONNECTION.

R R
02

REFERENCE NOTE:

THIS FLOW DIAGRAM HAS BEEN REDRAWN FROM WESTINGHOUSE DRAWING 1138E96 REV 6 WITH EXCEPTIONS AS FOLLOWS:

a. VALVE AND LINE NUMBERS HAVE BEEN ADDED.

b. CONTROL LOOPS HAVE BEEN DELETED EXCEPT FOR THE PRIMARY AND THE FINAL ELEMENTS. THE DETAILS OF THE CENTRAL LOOPS WILL BE SHOWN ON INSTRUMENTATION AND CONTROL DIAGRAM.

FSAR FIGURE 9.3-10

THIS DRAWING CREATED ELECTRONICALLY

CLASS I
(NUCLEAR SAFETY-RELATED)
SAFETY CLASS 1 — SEISMIC CATEGORY I
SAFETY CLASS 2 — CLASS 1E
SAFETY CLASS 3 — ASSOCIATED CIRCUITS

LUMINANT
CPNPP
GLEN ROSE, TEXAS

FLOW DIAGRAM
CHEMICAL AND VOLUME
CONTROL SYSTEM (COMMON)

DWG. NO. M1-0257 | SH. NO. - | REV. CP-32

< FINAL PRINT >

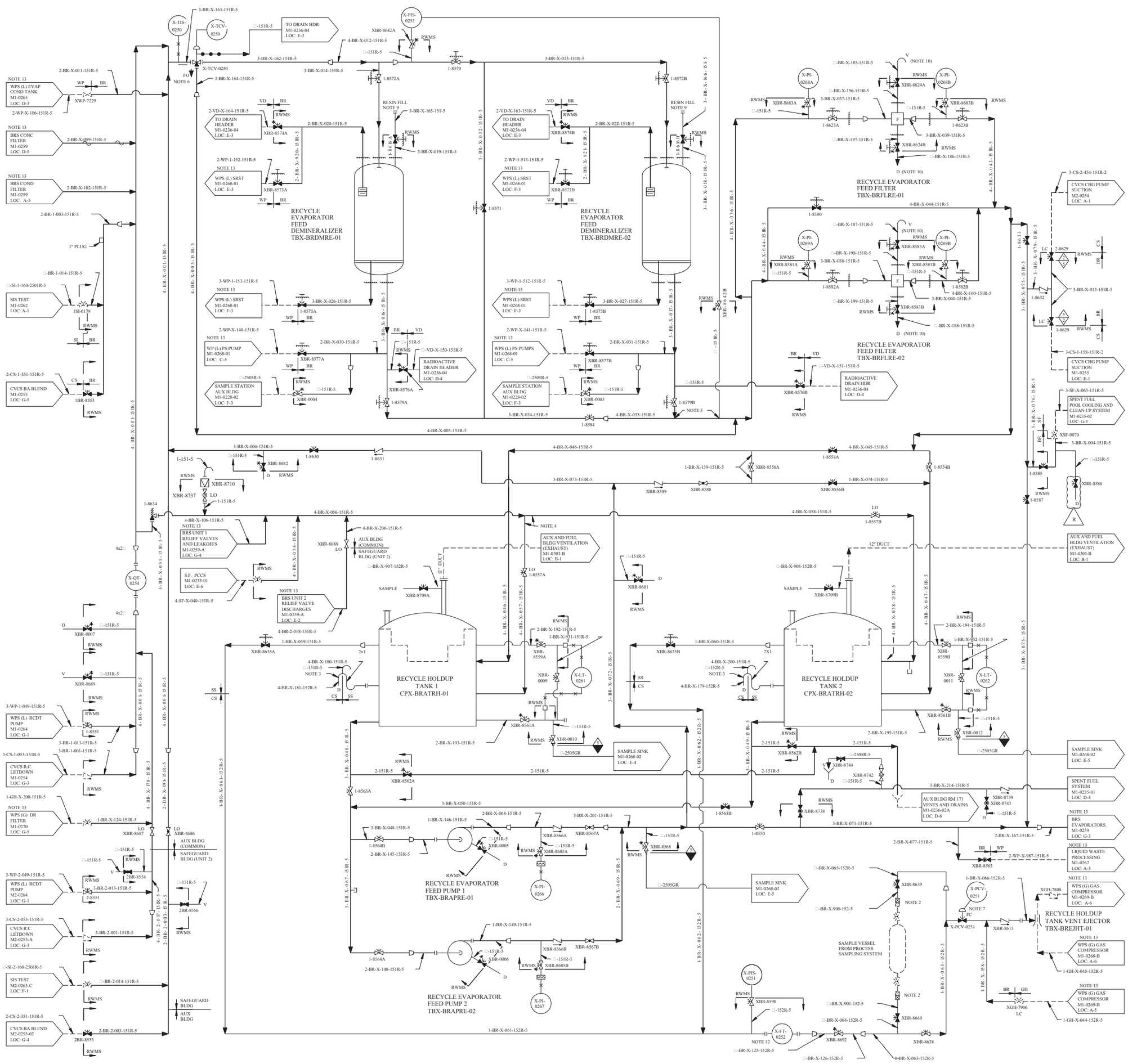

REV	DWN	CHKD	APVD	REMARKS
CP-31	JRMC 05-08-2014	DJL 05-07-2014		THIS DRAWING REVISED TO INCORPORATE DESIGN CHANGE FDA 2014-000109-01-00 PER SK-0001-14-000109-01-00.

NOTES:

1. RHT LEVEL INDICATION MUST BE VISIBLE FROM RE FEED PUMP LOCAL CONTROL.
2. QUICK DISCONNECT COUPLING TO MATE WITH HALF COUPLING PROVIDED WITH SAMPLE VESSEL.
3. LOWER LOOP TO EXTEND 20 INCHES BELOW OVERFLOW CONNECTION AND UPPER LOOP 6 INCHES BELOW DIAPHRAGM FLANGE. LOCATE SYPHON BREAK VENT ON TOP OF UPPER LOOP.
4. HIGH POINT OF PIPE CROSS CONNECTION BETWEEN RHT'S TO BE 12 INCHES BELOW DIAPHRAGM FLANGE.
5. LOCATE THESE CONNECTIONS AS CLOSE TOGETHER AS POSSIBLE.
6. ORIENT 3-WAY VALVE AS SHOWN SO IT FAILS WITH FLOW TO THE RECYCLE EVAPORATOR FILTER.
7. LOCATE CLOSE TO WPS (G) GAS COMPRESSOR.
8. FOR MECHANICAL SYMBOLS AND NOTES SEE DRAWING M1-0200.
9. 400 LB RF FLANGE TO MATCH 400 LB FLANGE ON RESIN FILL TANK.
10. FILTER VENT AND DRAIN LINES ROUTED TO FLOOR DRAIN IN FILTER COMPARTMENT.
11. DELETED
12. PROTECT TURBINE METER FROM CONDENSATE IN DRAINAGE BY INSTALLING 17 AT A LOCAL HIGH POINT. SLOPE INLET AND OUTLET PIPING DOWNWARD FROM THE METER.
13. DENOTES RADIOACTIVE WASTE MANAGEMENT SYSTEM CONTINUES ON IDENTIFIED DRAWINGS.
14. FLOW DIAGRAM REDRAWN FROM WESTINGHOUSE DRAWING 1138E95 SH 1, REV 4 AND DESIGN VERIFIED AGAINST LATEST ISSUED REVISION, REV 7.

FSAR FIGURE 9.3-11

THIS DRAWING CREATED ELECTRONICALLY

CLASS II

LUMINANT
CPNPP
GLEN ROSE, TEXAS

FLOW DIAGRAM
BORON RECYCLE SYSTEM

DWG. NO. M1-0258 | SH. NO. - | REV. CP-31

< FINAL PRINT >

REF CKD 2/6/97 CP-24

$$$$$$$ DATE $$$$$$

me990500.dgn M1-0258

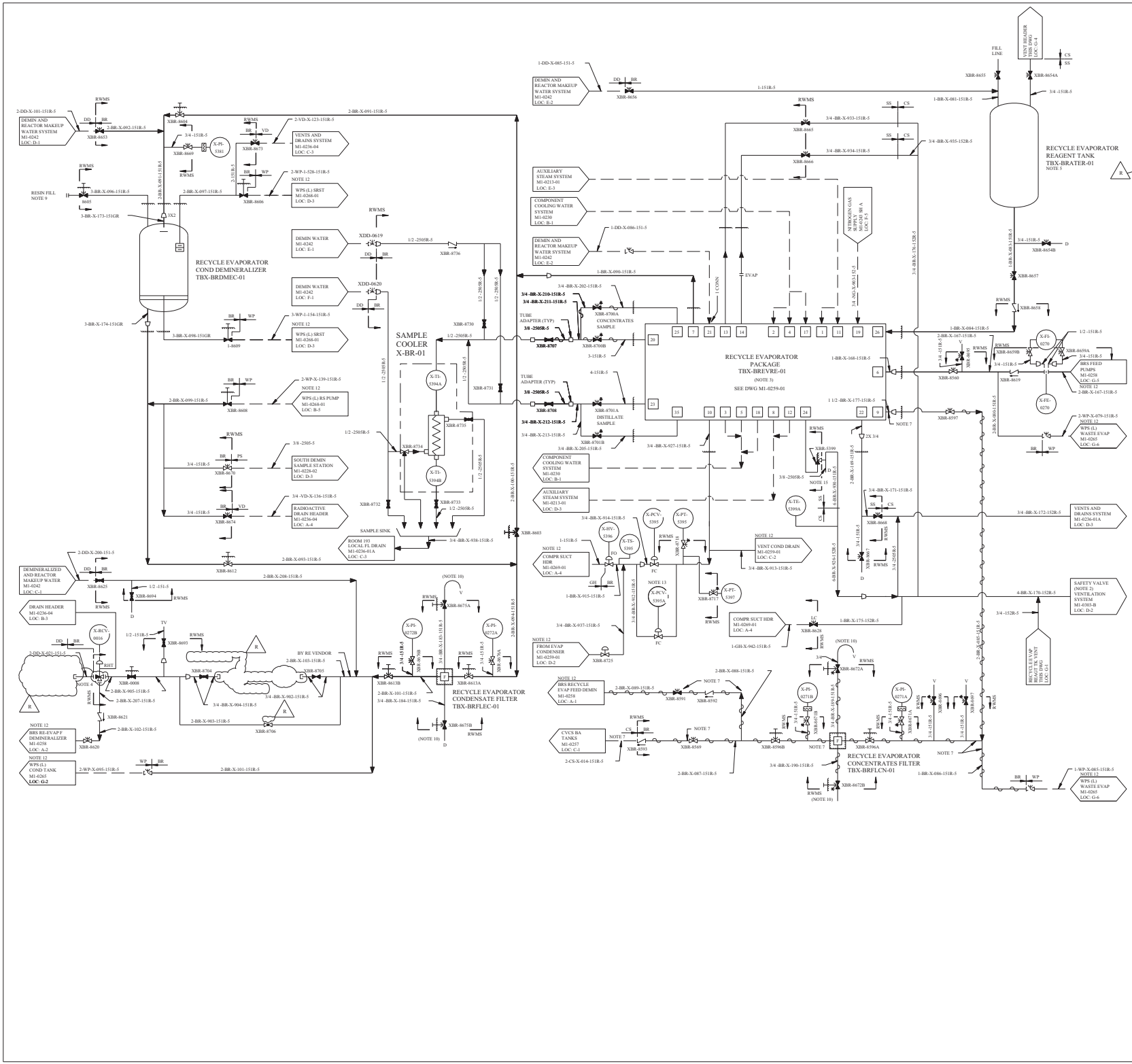

REV	DWN	CHKD	APVD	REMARKS
CP-23	MHF 02-22-2002	TA 02-22-2002		THIS DRAWING REVISED TO INCORPORATE DESIGN CHANGE FDA-1999-003471-01-00 PER SK-0019-99-003471-01-00.

NOTES

1. SEE M1-0260 FOR MECHANICAL NOTES AND SYMBOLS.
2. CONNECTION PERMANENTLY CONNECTED TO PLANT VENT UPSTREAM OF RADIATION MONITOR RT-014.
3. RECYCLE EVAPORATOR PACKAGE TBX-BREVRE-01 WAS FURNISHED BY WESTINGHOUSE. SEE VENDOR DWG 730376 FOR DIMENSIONAL OUTLINE AND CONNECTION SIZES. REFERENCE P.O. CP-0001 AND S.O. 232. SEE M1-0259-01 AND M1-2259 SERIES FOR PIPING AND INSTRUMENTATION.
4. THREE-WAY VALVE SHOULD BE ORIENTED IN PIPING AS SHOWN SO THAT VALVE FAILS WITH FLOW TO THE RECYCLE EVAPORATOR FEED DEMINERALIZER.
5. LOCATE REAGENT TANK AND PIPING TO ALLOW FOR GRAVITY DRAIN INTO EVAPORATOR.
6. MUST BE ROUTED THRU SFPC'S DEMINERALIZERS AND FILTER.
7. THIS EQUIPMENT AND PIPING TO BE HEAT TRACED.
8. DELETED
9. 400 LB RF FLANGE TO MATCH 400 LB FLANGE ON RESIN FILL TANK.
10. FILTER VENT AND DRAIN LINES ROUTED TO FLOOR DRAIN IN FILTER COMPARTMENT.
12. DENOTES RADIOACTIVE WASTE MANAGEMENT SYSTEM CONTINUES ON IDENTIFIED DRAWING.
13. LOCATE PRESS SENSOR TAP FOR THESE TWO PCV'S UPSTREAM OF THESE PCV'S ON LINE NUMBER 3/4 -BR-X-927-151R-5.
14. DELETED
15. NON-NUCLEAR SAFETY CLASS 3/8 " SS TUBING SHALL BE INSTALLED PER SPECIFICATION CPES-4-1017.
16. DELETED

REFERENCE DRAWINGS

THIS FLOW DIAGRAM HAS BEEN REDRAWN FROM WESTINGHOUSE DRAWING 113E395 (SH 2) REV 7 WITH EXCEPTIONS AS FOLLOWS:

a) VALVES AND LINES NUMBERS HAVE BEEN ADDED.

b) CONTROL LOOPS HAVE BEEN DELETED EXCEPT FOR THE PRIMARY AND THE FINAL ELEMENTS. THE DETAILS OF THE CONTROL LOOPS WILL BE SHOWN ON INSTRUMENTATION AND CONTROL DIAGRAM.

FSAR FIGURE 9.3-11

THIS DRAWING CREATED ELECTRONICALLY

DRAWING	M1-0259	REV	CP-15
HAS BEEN SPLIT INTO THE FOLLOWING SHEETS:			
M1-0259			
M1-0259-A			

CLASS II

TXU ENERGY
CPSES
GLEN ROSE, TEXAS

FLOW DIAGRAM
BORON RECYCLE SYSTEM

DWG. NO.	SH. NO.	REV.
M1-0259	-	CP-23

FINAL PRINT

REF CKD 1/21/97 CP-21

me421400.dgn M1-0259

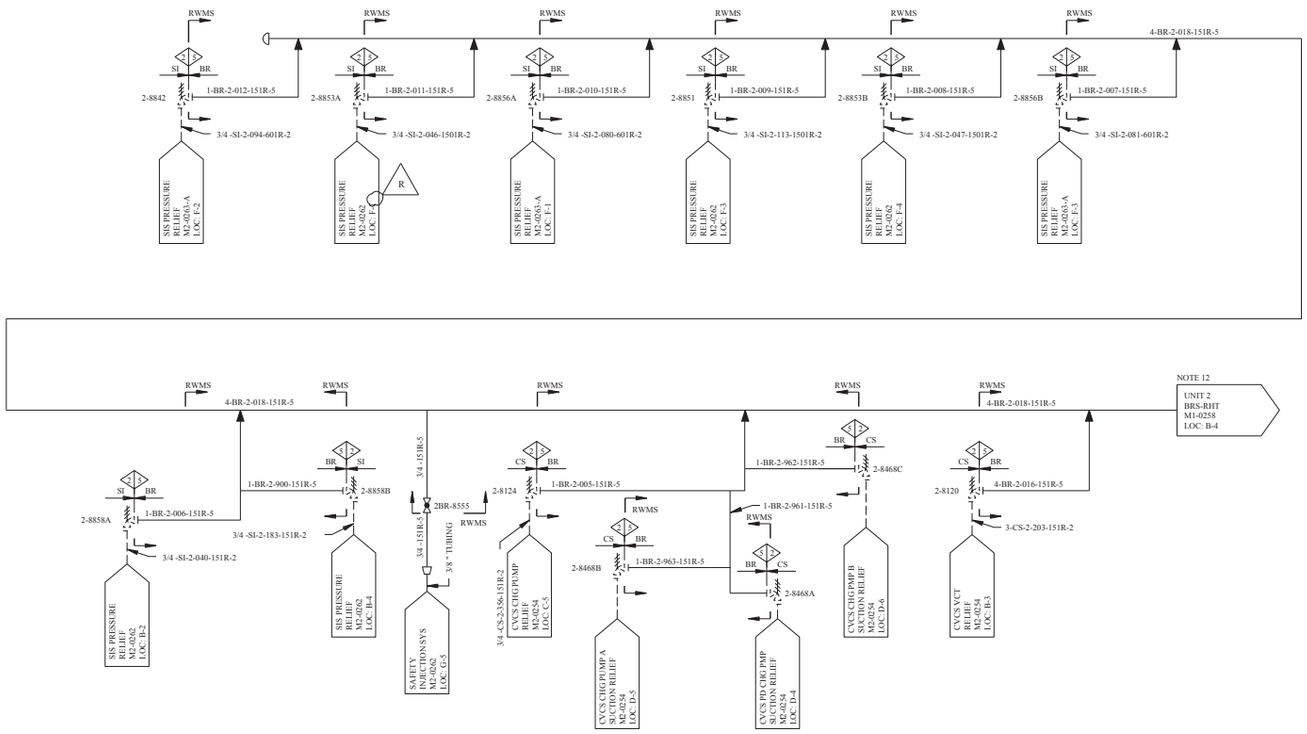

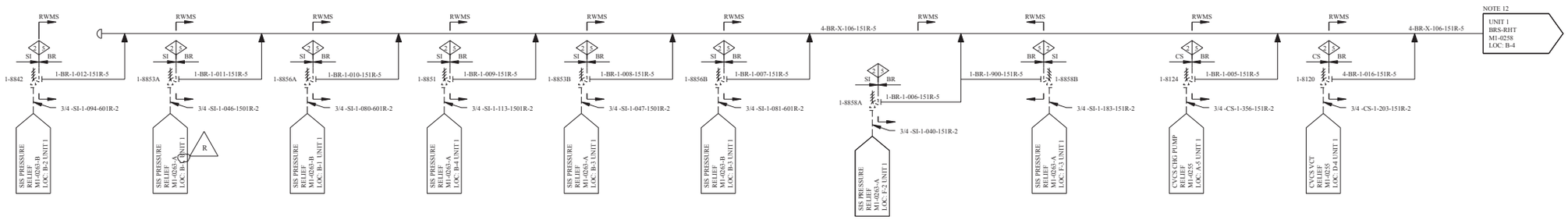

REV	DWN	CHKD	APVD	REMARKS
CP-8	DGK 06-08 2009	EES 06-08 2009		THIS DRAWING REVISED TO INCORPORATE DESIGN CHANGE FDA 2009-002540-01-00 PER SK-0001-09-002540-01-00.

NOTES:

1. SEE M1-0200 FOR MECHANICAL NOTES AND SYMBOLS.
2. DELETED
3. DELETED
4. DELETED
5. DELETED
6. DELETED
7. DELETED
8. DELETED
9. DELETED
10. DELETED
12. DENOTES RADIOACTIVE WASTE MANAGEMENT SYSTEM CONTINUES ON IDENTIFIED DRAWING.
13. DELETED
14. DELETED
15. DELETED
16. DELETED

REFERENCE DRAWINGS:

THIS FLOW DIAGRAM HAS BEEN REDRAWN FROM WESTINGHOUSE DRAWING 1138E95 (SH 2) REV 7 WITH EXCEPTIONS AS FOLLOWS:

a) VALVES AND LINES NUMBERS HAVE BEEN ADDED.

b) CONTROL LOOPS HAVE BEEN DELETED EXCEPT FOR THE PRIMARY AND THE FINAL ELEMENTS. THE DETAILS OF THE CONTROL LOOPS WILL BE SHOWN ON INSTRUMENTATION AND CONTROL DIAGRAM.

REFERENCE DRAWINGS:

THIS FLOW DIAGRAM HAS BEEN REDRAWN FROM WESTINGHOUSE DRAWING 1138E95 (SH 2) REV 7 WITH EXCEPTIONS AS FOLLOWS:

a) VALVES AND LINES NUMBERS HAVE BEEN ADDED.

b) CONTROL LOOPS HAVE BEEN DELETED EXCEPT FOR THE PRIMARY AND THE FINAL ELEMENTS. THE DETAILS OF THE CONTROL LOOPS WILL BE SHOWN ON INSTRUMENTATION AND CONTROL DIAGRAM.

FSAR FIGURE 9.3-11

THIS DRAWING CREATED ELECTRONICALLY

DRAWING M1-0259 REV CP-15
HAS BEEN SPLIT INTO THE FOLLOWING SHEETS:
M1-0259
M1-0259-A

CLASS II

LUMINANT
CPNPP
GLEN ROSE, TEXAS

FLOW DIAGRAM
BORON RECYCLE SYSTEM

DWG. NO. M1-0259 | SH. NO. A | REV. CP-8

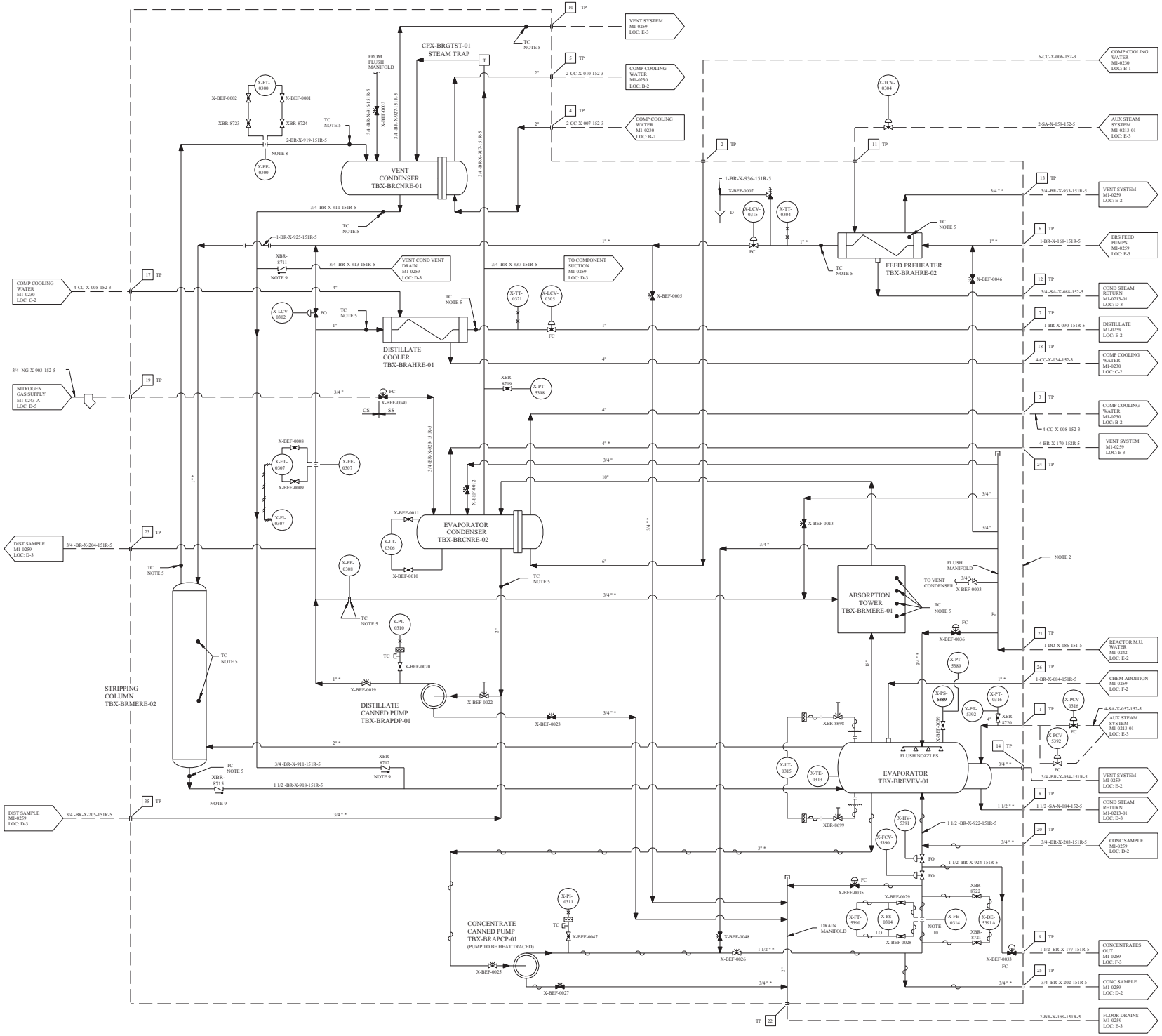

REV	DWN	CHK	APVD	REMARKS
CP-10	RMS 05-24-096			THIS DRAWING REVISED TO ADD THE FSAR FIGURE NUMBER AS AN EDITORIAL CHANGE.

NOTES:

1. FOR MECHANICAL NOTES AND SYMBOLS SEE DRAWING M1-0200.
2. 15 GPM RECYCLE EVAPORATOR SUPPLY BY WESTINGHOUSE DRAWING 4667036 PIPING AND EQUIPMENT SUPPLIED ON A SKID, SHOP ORDER NUMBER 232 WNES SPIN NUMBER TBX-BREVRE-01.
3. ALL LINES MARKED WITH * ARE CLASS 151R. THIS IS A DESIGNATION ONLY AND NO ADDITIONAL INSPECTION HAS BEEN PERFORMED ON THIS PIPING. ALL OTHER PIPE IS CLASS 151.
4. TP [NN] INDICATES "TERMINAL POINT" AND NOZZLE NUMBER ON EVAPORATOR, SEE WESTINGHOUSE DRAWING 7301376, R-10.
5. TC INDICATES "TEST CONNECTIONS" FOR FIELD TEST, 1/2 " NPT PLUGGED BOSSES.
6. FOR INSTALLATION DETAILS OF INSTRUMENTATION FOR THE EVAPORATOR SKID, SEE WESTINGHOUSE DRAWING 7373884, R-1A.
7. FOR EQUIPMENT LOGIC DIAGRAM SEE INSTRUMENTATION AND CONTROL DIAGRAM NUMBER M1-2259-SERIES.
8. INSTALL ORIFICE IN VERTICAL SECTION IMMEDIATELY ABOVE THE VENT CONDENSER.
9. REMOVE INTERNAL SPRING FROM XBR-8711, XBR-8712 AND XBR-8715.
10. REPLACED WITH A NEW ORIFICE PLATE PER DCA 80218 REV 2.

FSAR FIGURE 9.3-11

CP 10

THIS DRAWING CREATED ELECTRONICALLY

CLASS I
(NUCLEAR SAFETY-RELATED)
SAFETY CLASS 1 — SEISMIC CATEGORY I
SAFETY CLASS 2 — CLASS 1E
SAFETY CLASS 3 — ASSOCIATED CIRCUITS

TXU ELECTRIC
CPSES
GLEN ROSE, TEXAS

FLOW DIAGRAM
BORON RECYCLE SYSTEM

DWG. NO. M1-0259 | SH. NO. 01 | REV. CP-10

$$$$$$$D:\TESSSSS

vs0000cu.dgn

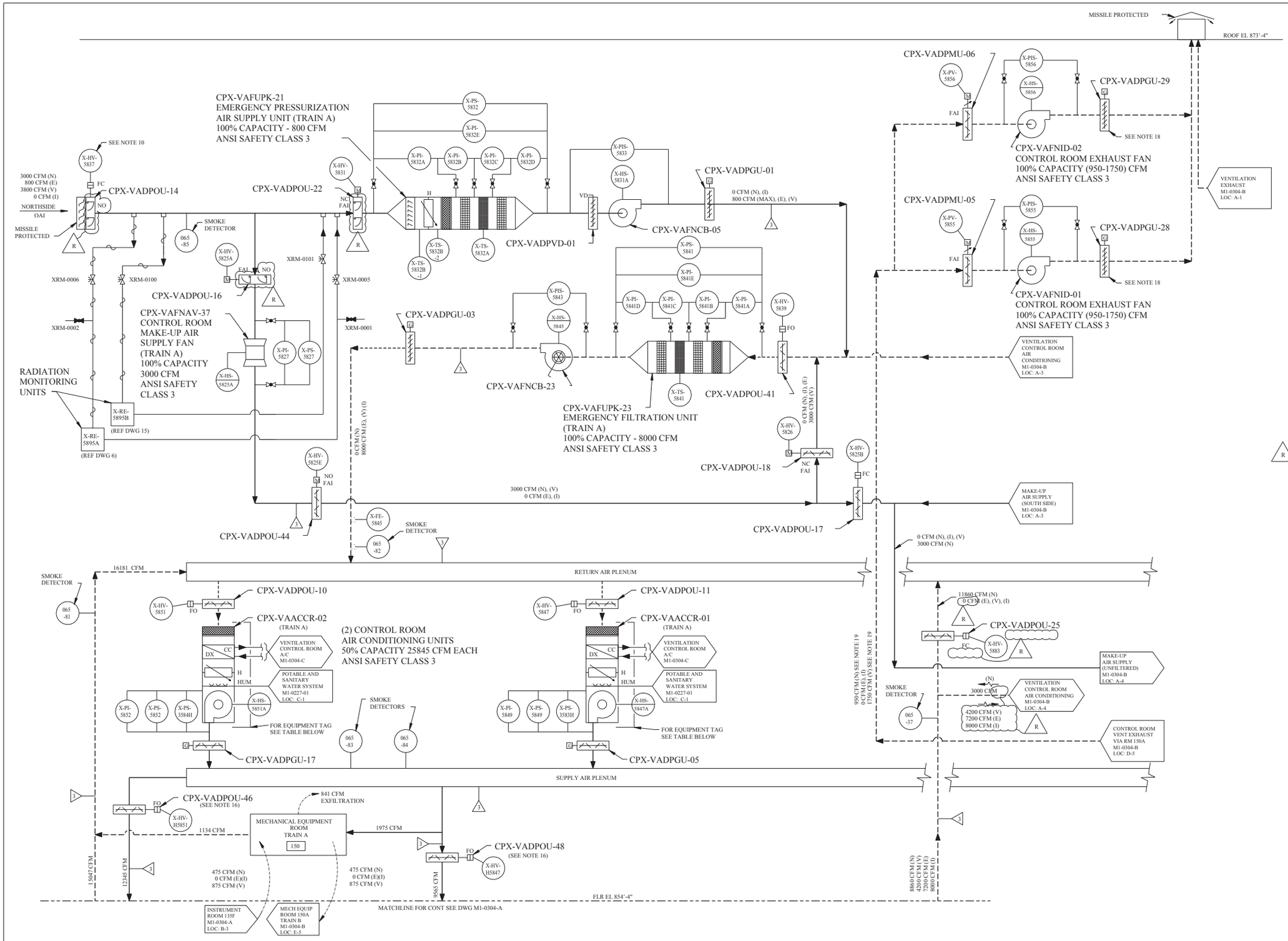

CONTROL ROOM AIR CONDITIONING SYSTEM
SAFETY CLASS 3 (EXCEPT AS NOTED)

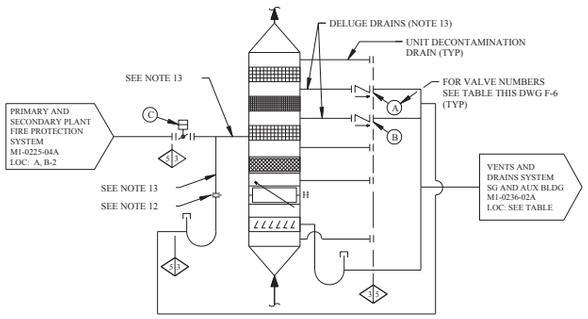

TYPICAL DELUGE AND DRAIN CONNECTION
FOR EMERGENCY PRESSURIZATION UNITS

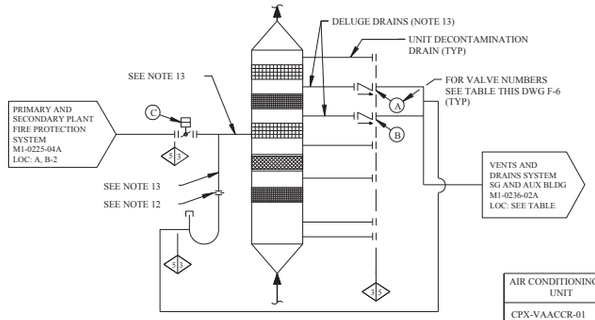

TYPICAL DELUGE AND DRAIN CONNECTION
FOR EMERGENCY FILTRATION UNITS

FILTRATION UNIT NUMBER	DELUGE DRAIN VALVES		DELUGE SUPPLY VALVE	DRAIN CONNECTION REFERENCE DWG AND LOCATION
	A	B	C	
CPX-VAFUPK-21	CPX-VADPCK-37	CPX-VADPCK-38	XFP-0654	M1-0236-02A LOC: G-2
CPX-VAFUPK-23	CPX-VADPCK-41	CPX-VADPCK-42	XFP-0656	M1-0236-02A LOC: G-2

AIR CONDITIONING UNIT	PREFILTER	COOLING COIL	ELECTRIC HEATER	CENTRIFUGAL FAN	HUMIDIFIER	CONDENSER	COMPRESSOR
CPX-VAACCR-01	CPX-VAACCR-01A	CPX-VAACCR-01B	CPX-VAACCR-01H	CPX-VAACCR-01D	CPX-VAACCR-01E	CPX-VAACCR-01F	CPX-VAACCR-01G
CPX-VAACCR-02	CPX-VAACCR-02A	CPX-VAACCR-02B	CPX-VAACCR-02H	CPX-VAACCR-02D	CPX-VAACCR-02E	CPX-VAACCR-02F	CPX-VAACCR-02G

REV	DWN	CHKD	APVD	REMARKS
CP-34	MM 11-18 2005	DLK 11-18 2005		THIS DRAWING REVISED TO INCORPORATE DESIGN CHANGE FDA 2001-002847-01-03 PER SK-0021-01-002847-01-00.

NOTES:

1. THIS DIAGRAM IS A SCHEMATIC REPRESENTATION AND IS INTENDED TO SHOW GENERAL AIR DISTRIBUTION AND FLOW PATHS. AIR FLOWS MAY VARY SLIGHTLY DEPENDING ON OPERATING AIR CONDITIONERS.
2. BALANCING DAMPERS, REGISTERS, DIFFUSERS, FLEXIBLE CONNECTIONS AND ALL OTHER RELATED ACCESSORIES NOT SHOWN ON THIS DIAGRAM SHALL BE PROVIDED AS INDICATED ON THE HVAC ARRANGEMENT DRAWINGS AND SPECIFICATIONS.
3. FOR ABBREVIATIONS AND SYMBOLS SEE DRAWINGS M1-0313 AND M1-0200.
4. DELETED
5. WORK THIS DRAWING WITH M1-0308.
6. THIS FLOW DIAGRAM IS COMMON FOR UNIT 1 AND 2.
7. THE CONTROL ROOM AREA WILL BE MAINTAINED AT A POSITIVE PRESSURE OF 0.125 INCHES WG.
8. THIS EXFILTRATION WILL OCCUR DURING EMERGENCY RECIRCULATION AND ISOLATION MODES WHEN THE KITCHEN AND TOILET EXHAUST FANS ARE NOT OPERATING.
9. DELETED
10. CONTROL VALVE HAS AN ASSOCIATED SAFETY CLASS 3 AIR ACCUMULATOR CPX-CICATHV-01 .
11. CONTROL VALVE HAS AN ASSOCIATED SAFETY CLASS 3 AIR ACCUMULATOR CPX-CIATHV-02 .
12. FOR DRAIN FLOW ORIFICE NUMBER AND LINE CONTINUATION SEE DRAWING M1-0225-04A LOC: A, B, C, & D-2
13. NOT WITHIN ASME CODE BOUNDARY.
14. AIR FLOW QUANTITIES SHOWN ARE BASED ON A DENSITY OF 0.075 LB/FT OCCURRING AT THE STANDARD CONDITION OF DRY AIR AT 70°F AND 29.92" HG BAROMETRIC PRESSURE. QUANTITIES IN PARENTHESES ARE ACTUAL AIR FLOW RATES BASED ON DENSITY AT DESIGN CONDITIONS.
15. MAXIMUM EXFILTRATION FROM CONTROL ROOM ENVELOPE DURING ALL MODES OF OPERATION EXCEPT ISOLATION MODE.
16. DAMPER MANUALLY POSITIONED FOR FLOW BALANCING PURPOSE.
17. DELETED
18. DAMPERS CPX-VADPGU-28 AND 29 WEIGHT AND ARM POSITIONS HAVE BEEN REPOSITIONED TO RETAIN .25 INCHES OF WATER PRESSURE PRIOR TO OPENING.
19. VALUES SHOWN ARE MINIMUM AIR FLOWS. ACTUAL AIR FLOW DEPENDS ON THE LEAK TIGHTNESS OF THE CONTROL ROOM PRESSURE BOUNDARY.
20. THE AMOUNT OF RETURN AIR FLOW WAS CALCULATED BASED ON EXISTING READINGS AS WELL AS NEW READINGS AND FROM TRAVERSE READINGS TAKEN DOWNSTREAM.

REFERENCES:

1. M1-0313	FLOW DIAGRAM VENTILATION AAP BLDG AND CONTROL BLDG UPS AREA A/C SYSTEMS
M1-0200	MECHANICAL SYMBOLS AND NOTES
3. M1-0308	FLOW DIAGRAM VENTILATION CONTROL ROOM AIR CONDITIONING
4. M1-0236-01 AND M1-0236-02	FLOW DIAGRAM VENTS AND DRAINS SYSTEM SAFEGUARDS AND AUXILIARY BUILDINGS
5. M1-0227	FLOW DIAGRAM POTABLE AND SANITARY WATER SYSTEM
6. ELD-353-1800	GENERAL ATOMIC COMPANY OUTLINE GAS SAMPLER WITH PUMP
7. M1-0788	PLUMBING AUXILIARY BUILDING PLANT AT EL. 830'-0"
8. M1-0306	FLOW DIAGRAM VENTILATION TURBINE BUILDING
9. M2-0306	FLOW DIAGRAM VENTILATION TURBINE BUILDING
10. M1-0304-A	FLOW DIAGRAM VENTILATION CONTROL ROOM AIR CONDITIONING
11. M1-0304-B	FLOW DIAGRAM VENTILATION CONTROL ROOM AIR CONDITIONING
12. M1-0225-04	FLOW DIAGRAM PRIMARY AND SECONDARY PLANT FIRE PROTECTION SYSTEM
13. M2-0256	FLOW DIAGRAM CHEMICAL AND VOLUME CONTROL SYSTEM
14. M1-0229	FLOW DIAGRAM COMPONENT COOLING WATER SYSTEM
15. 353-1100	OUTLINE NOBLE GAS MONITOR (SORRENTO ELECTRONICS)

LEGEND:

(N) CFM FOR NORMAL OPERATION MODE
(E) CFM FOR EMERGENCY RECIRCULATION MODE
(V) CFM FOR EMERGENCY VENTILATION MODE
(I) CFM FOR ISOLATION MODE

DRAWING M1-0304 REV CP-12
HAS BEEN SPLIT INTO THE FOLLOWING SHEETS:
M1-0304
M1-0304-A

DRAWING M1-0304 REV CP-13
HAS BEEN SPLIT INTO THE FOLLOWING SHEETS:
M1-0304
M1-0304-B

DRAWING M1-0304 REV CP-20
HAS BEEN SPLIT INTO THE FOLLOWING SHEETS:
M1-0304
M1-0304-C
M1-0304-D

FSAR FIGURE 9.4-1

THIS DRAWING CREATED ELECTRONICALLY

CLASS I
(NUCLEAR SAFETY-RELATED)
SAFETY CLASS 1 SEISMIC CATEGORY I
SAFETY CLASS 2 CLASS 1E
SAFETY CLASS 3 ASSOCIATED CIRCUITS

LUMINANT
CPSES
GLEN ROSE, TEXAS

FLOW DIAGRAM
VENTILATION CONTROL ROOM
AIR CONDITIONING

DWG. NO. M1-0304 | SH. NO. - | REV. CP-34

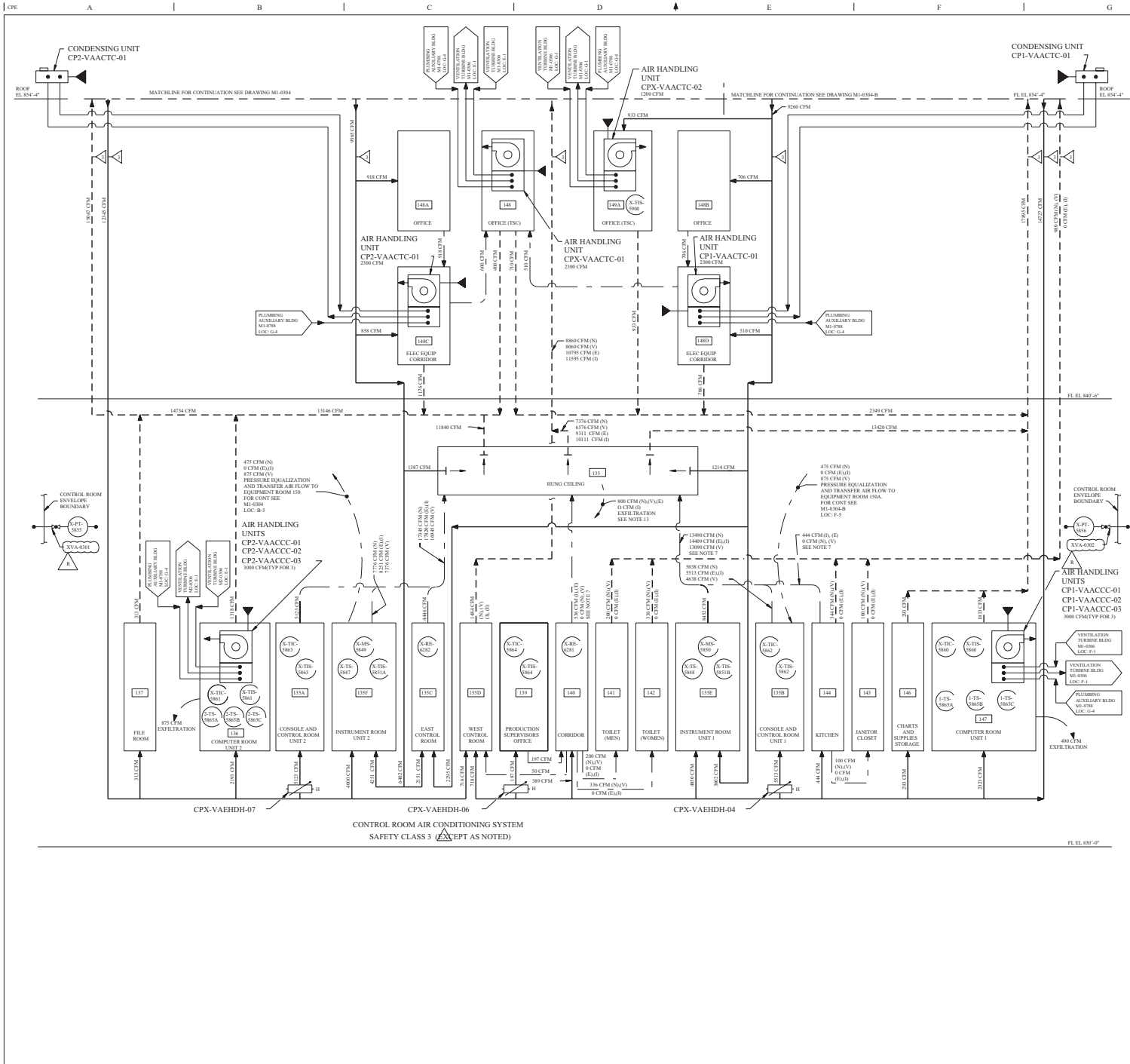

REV.	DWN	CHKD	APVD	REMARKS
B-14	NJS 10-11-2002	DJS 10-11-2002		THIS DRAWING REVISED TO INCORPORATE DESIGN CHANGE EDA-2002-00087S-01-00 PER SK-0001-02-00087S-01-00.

NOTES:

1. **THIS DIAGRAM IS A SCHEMATIC REPRESENTATION AND IS INTENDED TO SHOW GENERAL AIR DISTRIBUTION AND FLOW PATHS.** AIR FLOWS MAY VARY SLIGHTLY DEPENDING ON OPERATING AIR CONDITIONERS.
2. BALANCING DAMPERS, REGISTERS, DIFFUSERS, FLEXIBLE CONNECTIONS AND ALL OTHER RELATED ACCESSORIES NOT SHOWN ON THIS DIAGRAM SHALL BE PROVIDED AS INDICATED ON THE HVAC ARRANGEMENT DRAWINGS AND SPECIFICATIONS.
3. FOR ABBREVIATIONS AND SYMBOLS SEE DRAWINGS M1-0313 AND M1-0200.
4. WORK THIS DRAWING WITH M1-0308.
5. THIS FLOW DIAGRAM IS COMMON FOR UNIT 1 AND 2.
6. THE CONTROL ROOM AREA WILL BE MAINTAINED AT A POSITIVE PRESSURE OF 0.125 INCHES WG.
7. THIS EXFILTRATION WILL OCCUR DURING EMERGENCY RECIRCULATION AND ISOLATION MODES WHEN THE KITCHEN AND TOILET EXHAUST FANS ARE NOT OPERATING.
8. CONTROL VALVE HAS AN ASSOCIATED SAFETY CLASS 3 AIR ACCUMULATOR CPX-CICATHV-01
9. CONTROL VALVE HAS AN ASSOCIATED SAFETY CLASS 3 AIR ACCUMULATOR CPX-CIATHV-02
10. FOR DRAIN FLOW ORIFICE NUMBER AND LINE CONTINUATION SEE DRAWING M1-0225-04 LOC: C, D, E AND F-2.
11. FIELD INSTALLED PIPE IN ACCORDANCE WITH MS-44B, LINE CATEGORY 152G AND VENDOR RECOMMENDATIONS THE SAFETY CLASS 3 PIPING IDENTIFIED ON THE TYPICAL DELUGE AND DRAIN CONNECTION DETAIL (A-6) HAS BEEN FABRICATED AND INSTALLED TO THE REQUIREMENTS OF CLASS 5 PIPING. (REF NCR 88-15777 REV 0).
12. AIR FLOW QUANTITIES SHOWN ARE BASED ON A DENSITY OF 0.075 LB/FT CCUBRING AT THE STANDARD CONDITION OF DRY AIR AT 70°F AND 29.92" HG BAROMETRIC PRESSURE. QUANTITIES IN PARENTHESES ARE ACTUAL AIR FLOW RATES BASED ON DENSITY AT DESIGN CONDITIONS.
13. MAXIMUM EXFILTRATION FROM CONTROL ROOM ENVELOPE DURING ALL MODES OF OPERATION EXCEPT ISOLATION MODE.
14. DAMPER MANUALLY POSITIONED FOR FLOW BALANCING PURPOSE.
15. DAMPER FAILS TO A PRESET POSITION DETERMINED BY FLOW BALANCING.
16. THE AMOUNT OF RETURN AIR FLOW WAS CALCULATED BASED ON EXISTING READINGS AS WELL AS NEW READINGS AND FROM TRAVERSE READINGS TAKEN DOWNSTREAM.

REFERENCES:

1. M1-0313	FLOW DIAGRAM VENTILATION AAP BLDG AND CONTROL BLDG UPS AREA A/C SYSTEMS
2. M1-0200	MECHANICAL SYMBOLS AND NOTES
3. M1-0308	FLOW DIAGRAM VENTILATION CONTROL ROOM AIR CONDITIONING
4. M1-0236-01 AND M1-0236-02	FLOW DIAGRAM VENTS AND DRAINS SYSTEM SAFEGUARDS AND AUXILIARY BUILDINGS
5. M1-0227	FLOW DIAGRAM POTABLE AND SANITARY WATER SYSTEM
6. ELD-353-1800	GENERAL ATOMIC COMPANY OUTLINE GAS SAMPLER WITH PUMP
7. M1-0788	PLUMBING AUXILIARY BUILDING PLANT AT EL 830'-0"
8. M1-0306	FLOW DIAGRAM VENTILATION TURBINE BUILDING
9. M2-0306	FLOW DIAGRAM VENTILATION TURBINE BUILDING
10. M1-0304-A	FLOW DIAGRAM VENTILATION CONTROL ROOM AIR CONDITIONING
11. M1-0304-B	FLOW DIAGRAM VENTILATION CONTROL ROOM AIR CONDITIONING
12. M1-0225-04	FLOW DIAGRAM PRIMARY AND SECONDARY PLANT FIRE PROTECTION SYSTEM
13. M2-0256	FLOW DIAGRAM CHEMICAL AND VOLUME CONTROL SYSTEM
14. M1-0229	FLOW DIAGRAM COMPONENT COOLING WATER SYSTEM
15. 353-1100	OUTLINE NOBLE GAS MONITOR (SORRENTO ELECTRONICS)

LEGEND:

(N) CFM FOR NORMAL OPERATION MODE

(E) CFM FOR EMERGENCY RECIRCULATION MODE

(V) CFM FOR EMERGENCY VENTILATION MODE

(I) CFM FOR ISOLATION MODE

FSAR FIGURE 9.4-1

THIS DRAWING CROSS VERIFIED ELECTRONIC AGLY

CLASS I
(NUCLEAR SAFETY-RELATED)
SAFETY CLASS 1 SEISMIC CATEGORY I
SAFETY CLASS 2 CLASS 1E
SAFETY CLASS 3 ASSOCIATED CIRCUITS

TXU ENERGY
CPSES
GLEN ROSE, TEXAS

FLOW DIAGRAM-VENTILATION
CONTROL ROOM AIR CONDITIONING

DWG. NO. M1-0304 | SH. NO. A | REV. CP-14

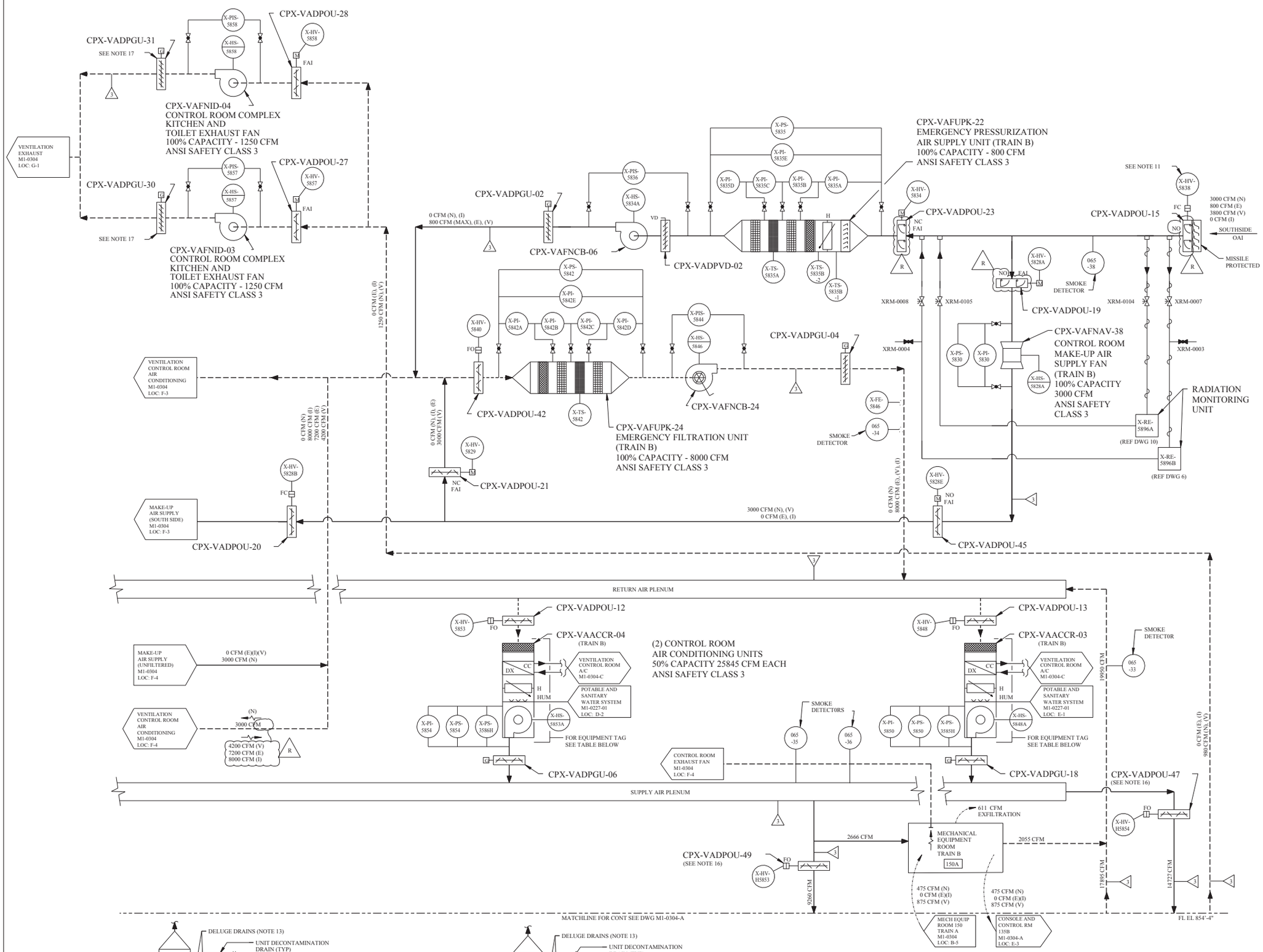

CONTROL ROOM AIR CONDITIONING SYSTEM
SAFETY CLASS 3 (EXCEPT AS NOTED)

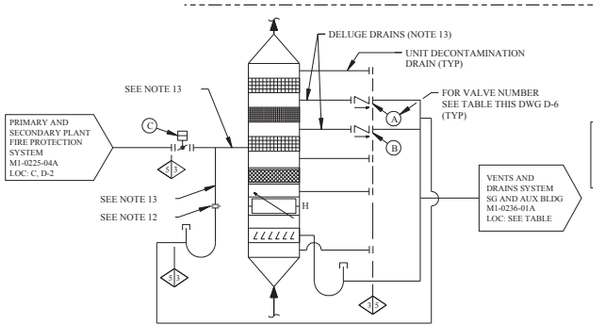

TYPICAL DELUGE AND DRAIN CONNECTION
FOR EMERGENCY PRESSURIZATION UNITS

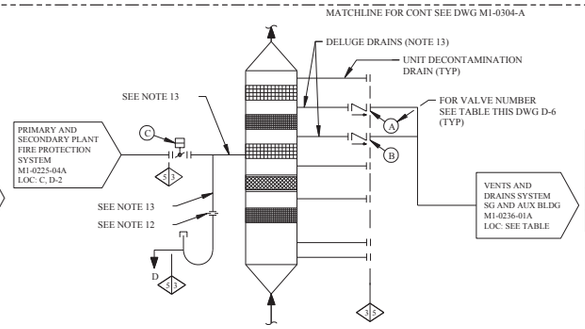

TYPICAL DELUGE AND DRAIN CONNECTION
FOR EMERGENCY FILTRATION UNITS

FILTRATION UNIT NUMBER	DELUGE DRAIN VALVES		DELUGE SUPPLY VALVE	DRAIN CONNECTION REFERENCE DWG AND LOCATION
	(A)	(B)	(C)	
CPX-VAFUPK-22	CPX-VADPCK-39	CPX-VADPCK-40	XFP-0655	M1-0236-01A LOC: F-2
CPX-VAFUPK-24	CPX-VADPCK-43	CPX-VADPCK-44	XFP-0657	M1-0236-01A LOC: F-2

AIR CONDITIONING UNIT	PREFILTER	COOLING COIL	ELECTRIC HEATER	CENTRIFUGAL FAN	HUMIDIFIER	CONDENSER	COMPRESSOR
CPX-VAACCR-03	CPX-VAACCR-03A	CPX-VAACCR-03B	CPX-VAACCR-03H	CPX-VAACCR-03D	CPX-VAACCR-03E	CPX-VAACCR-03F	CPX-VAACCR-03G
CPX-VAACCR-04	CPX-VAACCR-04A	CPX-VAACCR-04B	CPX-VAACCR-04H	CPX-VAACCR-04D	CPX-VAACCR-04E	CPX-VAACCR-04F	CPX-VAACCR-04G

REV	DWN	CHKD	APVD	REMARKS
CP-19	MM 11-18 2005	DLK 11-18 2005		THIS DRAWING REVISED TO INCORPORATE DESIGN CHANGE FDA 2001-002847-01-03 PER SK-0022-01-002847-01-00.

NOTES:

1. THIS DIAGRAM IS A SCHEMATIC REPRESENTATION AND IS INTENDED TO SHOW GENERAL AIR DISTRIBUTION AND FLOW PATHS. AIR FLOWS MAY VARY SLIGHTLY DEPENDING ON OPERATING AIR CONDITIONERS.
2. BALANCING DAMPERS, REGISTERS, DIFFUSERS, FLEXIBLE CONNECTIONS AND ALL OTHER RELATED ACCESSORIES NOT SHOWN ON THIS DIAGRAM SHALL BE PROVIDED AS INDICATED ON THE HVAC ARRANGEMENT DRAWINGS AND SPECIFICATIONS.
3. FOR ABBREVIATIONS AND SYMBOLS SEE DRAWINGS M1-0313 AND M1-0200.
4. DELETED
5. WORK THIS DRAWING WITH M1-0308.
6. THIS FLOW DIAGRAM IS COMMON FOR UNIT 1 AND 2.
7. THE CONTROL ROOM AREA WILL BE MAINTAINED AT A POSITIVE PRESSURE OF 0.125 INCHES WG.
8. THIS EXFILTRATION WILL OCCUR DURING EMERGENCY RECIRCULATION AND ISOLATION MODES WHEN THE KITCHEN AND TOILET EXHAUST FANS ARE NOT OPERATING.
9. DELETED
10. CONTROL VALVE HAS AN ASSOCIATED SAFETY CLASS 3 AIR ACCUMULATOR CPX-CIATHV-01 .
11. CONTROL VALVE HAS AN ASSOCIATED SAFETY CLASS 3 AIR ACCUMULATOR CPX-CIATHV-02 .
12. FOR DRAIN FLOW ORIFICE NUMBER AND LINE CONTINUATION SEE DRAWING M1-0225-04A LOC: A, B, C & D-2.
13. NOT WITHIN ASME CODE BOUNDARY.
14. AIR FLOW QUANTITIES SHOWN ARE BASED ON A DENSITY OF 0.075 LB/FT OCCURRING AT THE STANDARD CONDITION OF DRY AIR AT 70°F AND 29.92" HG BAROMETRIC PRESSURE. QUANTITIES IN PARENTHESES ARE ACTUAL AIR FLOW RATES BASED ON DENSITY AT DESIGN CONDITIONS.
15. MAXIMUM EXFILTRATION FROM CONTROL ROOM ENVELOPE DURING ALL MODES OF OPERATION EXCEPT ISOLATION MODE.
16. DAMPER MANUALLY POSITIONED FOR FLOW BALANCING PURPOSE.
17. DAMPERS CPX-VADPGU-30 AND 31 WEIGHT AND ARM POSITIONS HAVE BEEN REPOSITIONED TO RETAIN .25 INCHES OF WATER PRESSURE PRIOR TO OPENING.
18. THE AMOUNT OF RETURN AIR FLOW WAS CALCULATED BASED ON EXISTING READINGS AS WELL AS NEW READINGS AND FROM TRAVERSE READINGS TAKEN DOWNSTREAM.

REFERENCES:

1.	M1-0313	FLOW DIAGRAM VENTILATION AAP BUILDING AND CONTROL BUILDING UPS AREA A/C SYSTEM.
2.	M1-0200	MECHANICAL SYMBOLS AND NOTES
3.	M1-0308	FLOW DIAGRAM VENTILATION CONTROL ROOM AIR CONDITIONING
4.	M1-0236-01 AND M1-0236-02	FLOW DIAGRAM VENTS AND DRAINS SYSTEM SAFEGUARDS AND AUXILIARY BUILDINGS
5.	M1-0227	FLOW DIAGRAM POTABLE AND SANITARY WATER SYSTEM
6.	ELD-353-1800	GENERAL ATOMIC COMPANY OUTLINE GAS SAMPLER WITH PUMP
7.	M1-0304	FLOW DIAGRAM VENTILATION CONTROL ROOM AIR CONDITIONING
8.	M1-0304-A	FLOW DIAGRAM VENTILATION CONTROL ROOM AIR CONDITIONING
9.	M1-0225-04	FLOW DIAGRAM PRIMARY AND SECONDARY PLANT FIRE PROTECTION SYSTEM.
10.	353-1100	OUTLINE NOBLE GAS MONITOR (SORRENTO ELECTRONICS)

LEGEND:

(N) CFM FOR NORMAL OPERATION MODE
(E) CFM FOR EMERGENCY RECIRCULATION MODE
(V) CFM FOR EMERGENCY VENTILATION MODE
(I) CFM FOR ISOLATION MODE

FSAR FIGURE 9.4-1

THIS DRAWING CREATED ELECTRONICALLY

DRAWING M1-0304 REV CP-13
HAS BEEN SPLIT INTO THE FOLLOWING SHEETS:
M1-0304
M1-0304-B

CLASS I
(NUCLEAR SAFETY-RELATED)
SAFETY CLASS 1 — SEISMIC CATEGORY I
SAFETY CLASS 2 — CLASS 1E
SAFETY CLASS 3 — ASSOCIATED CIRCUITS

LUMINANT
CPSES
GLEN ROSE, TEXAS

FLOW DIAGRAM
VENTILATION CONTROL ROOM
AIR CONDITIONING

DWG. NO. M1-0304 | SH. NO. B | REV. CP-19

FINAL PRINT

me651600.dgn A M1-0304-B

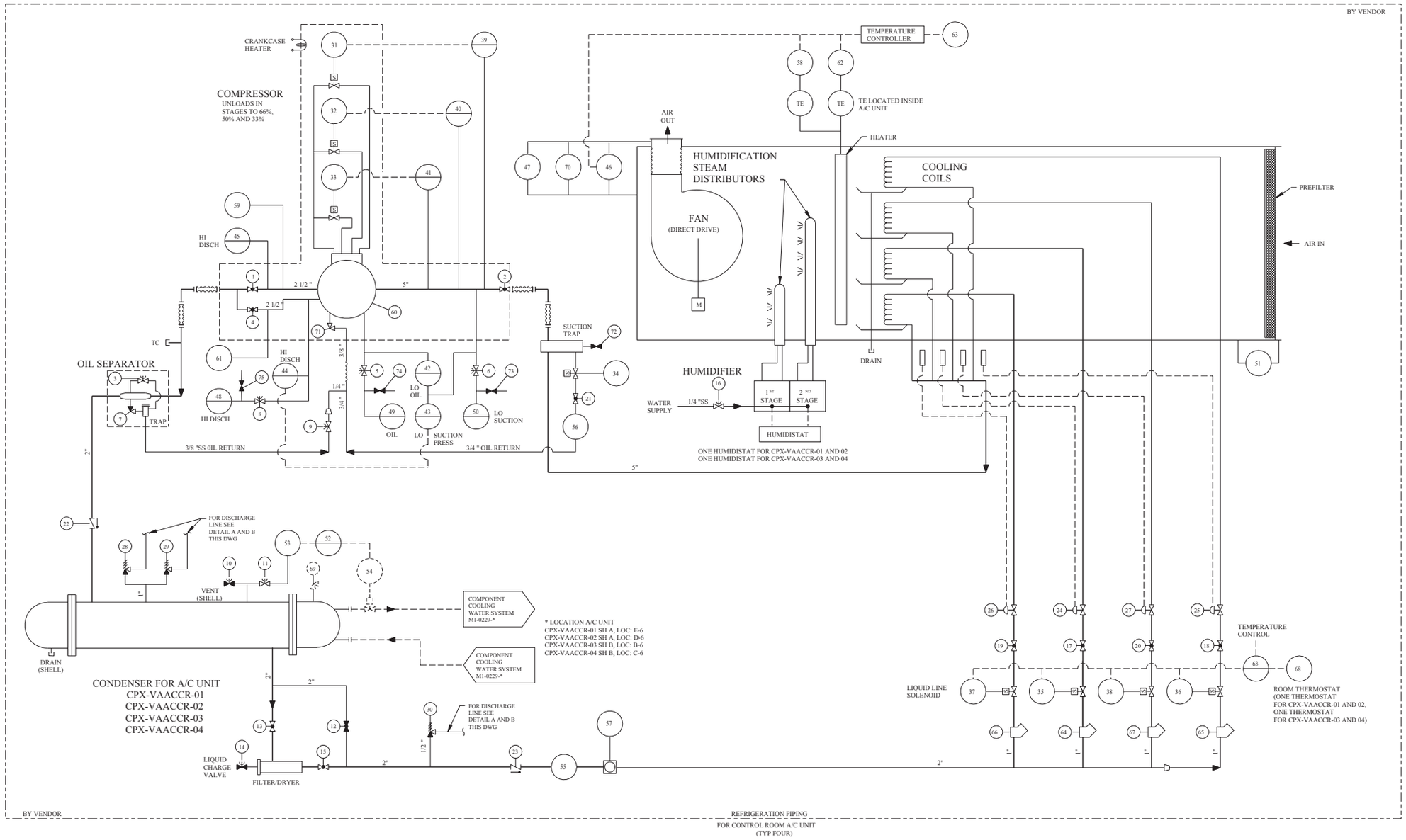

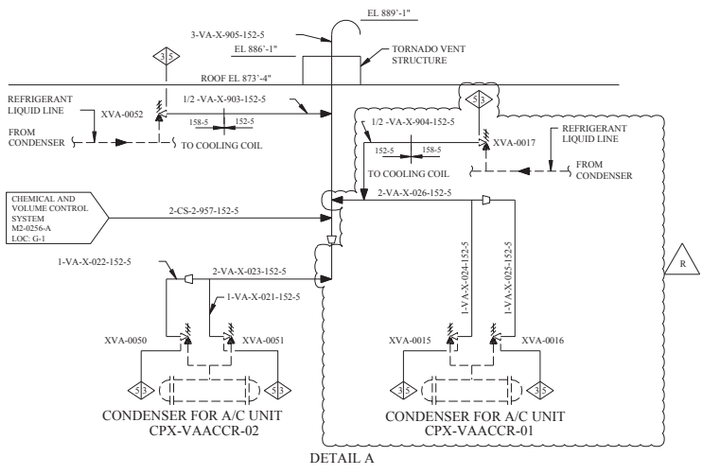

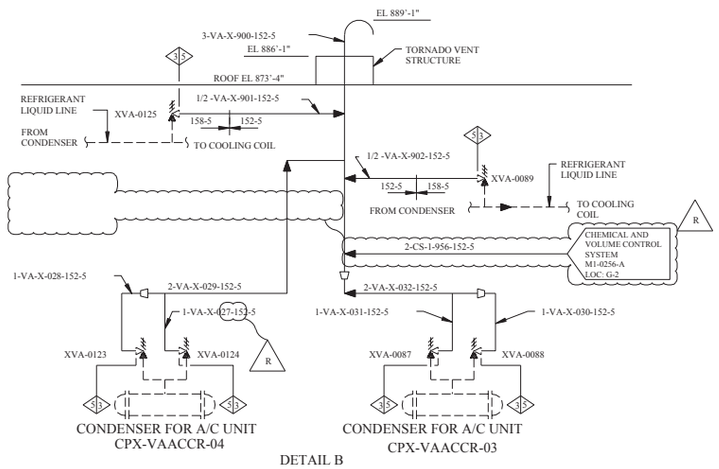

REV	DWN	CHKD	APVD	REMARKS
CP-4	MM 05-22-2008	DLK 05-22-2008		THIS DRAWING REVISED TO INCORPORATE DESIGN CHANGE FDA-2008-001745-01-00 PER SK-0001-08-001745-01-00.

NOTES:

1. THIS DIAGRAM IS A SCHEMATIC REPRESENTATION AND IS INTENDED TO SHOW GENERAL FLOW PATHS.
2. FOR ABBREVIATIONS AND SYMBOLS SEE DRAWINGS M1-0313 AND M1-0200.
3. THIS FLOW DIAGRAM IS COMMON FOR UNIT 1 AND 2.
4. WORK THIS DRAWING WITH M1-0304-D.

REFERENCES:

1.	M1-0313	FLOW DIAGRAM VENTILATION AAP BLDG AND CONTROL BLDG UPS AREA A/C SYSTEMS
2.	M1-0200	MECHANICAL SYMBOLS AND NOTES
3.	M1-0227	FLOW DIAGRAM POTABLE AND SANITARY WATER SYSTEM
4.	M1-0788	PLUMBING AUXILIARY BUILDING PLANT AT EL 830'-0"
5.	M1-0306	FLOW DIAGRAM VENTILATION TURBINE BUILDING
6.	M1-0304	FLOW DIAGRAM VENTILATION CONTROL ROOM AIR CONDITIONING
7.	M1-0304-A	FLOW DIAGRAM VENTILATION CONTROL ROOM AIR CONDITIONING
8.	M1-0304-B	FLOW DIAGRAM VENTILATION CONTROL ROOM AIR CONDITIONING
9.	M1-0229-A	FLOW DIAGRAM COMPONENT COOLING WATER SYSTEM
10.	M1-0229-B	FLOW DIAGRAM COMPONENT COOLING WATER SYSTEM
11.	M2-0256-A	FLOW DIAGRAM CHEMICAL AND VOLUME CONTROL SYSTEM
12.	B-587-0200	CVI P&I DIAGRAM AIR CONDITIONING SYSTEM

FSAR FIGURE 9.4-1

THIS DRAWING CREATED ELECTRONICALLY

DRAWING M1-0304 REV CP-20
HAS BEEN SPLIT INTO THE FOLLOWING SHEETS:
M1-0304
M1-0304-C

CLASS I
(NUCLEAR SAFETY-RELATED)
SAFETY CLASS 1
SAFETY CLASS 2
SAFETY CLASS 3
SEISMIC CATEGORY I
CLASS 1E
ASSOCIATED CIRCUITS

LUMINANT
CPSES
GLEN ROSE, TEXAS

FLOW DIAGRAM-VENTILATION
CONTROL ROOM AIR CONDITIONING

DWG. NO. M1-0304 | SH. NO. C | REV. CP-4

FINAL PRINT

me879200.dgn A M1-0304-C

ITEM	DESCRIPTION	CVI TAG NUMBER	CONTROL ROOM A/C UNIT			
			CPX-VAACCR-01	CPX-VAACCR-02	CPX-VAACCR-03	CPX-VAACCR-04
1	CR A/C UNIT REFRIG COMPRESSOR DISCHARGE VALVE	HOV-10	XVA-0026	XVA-0061	XVA-0098	XVA-0134
2	CR A/C UNIT REFRIG COMPRESSOR SUCTION VALVE	HOV-11	XVA-0027	XVA-0062	XVA-0099	XVA-0135
3	CR A/C UNIT REFRIG DISCHARGE LINE OIL SEPARATOR ANGLE STOP VALVE	HOV-12	XVA-0028	XVA-0063	XVA-0100	XVA-0136
4	CR A/C UNIT REFRIG COMPRESSOR DISCHARGE VALVE	HOV-13	XVA-0029	XVA-0064	XVA-0101	XVA-0137
5	CR A/C UNIT REFRIG COMPRESSOR LUBE OIL PRESSURE INDICATOR ROOT VALVE	HOV-14	XVA-0030	XVA-0065	XVA-0102	XVA-0138
6	CR A/C UNIT REFRIG COMPRESSOR LUBE OIL PRESSURE INDICATOR ROOT VALVE	HOV-15	XVA-0031	XVA-0066	XVA-0103	XVA-0139
7	CR A/C UNIT REFRIG COMPRESSOR DISCH LINE OIL SEPARATOR ANGLE STOP VALVE	HOV-16	XVA-0032	XVA-0067	XVA-0104	XVA-0140
8	CR A/C UNIT REFRIG COMPRESSOR LUBE OIL PRESSURE INDICATOR ROOT VALVE	HOV-17	XVA-0033	XVA-0068	XVA-0105	XVA-0141
9	CR A/C UNIT REFRIG COMPRESSOR DISCH OIL SEPARATOR RETURN ISO VALVE	HOV-18	XVA-0034	XVA-0069	XVA-0106	XVA-0142
10	CR A/C UNIT REFRIG CONDENSER SHELL VENT VALVE	HOV-21	XVA-0035	XVA-0070	XVA-0107	XVA-0143
11	CR A/C UNIT REFRIG CONDENSER SHELL PRESS TRANSMITTER ROOT VALVE	HOV-22	XVA-0036	XVA-0071	XVA-0108	XVA-0144
12	CR A/C UNIT REFRIG FILTER/DRYER BYPASS VALVE	HOV-23	XVA-0037	XVA-0072	XVA-0109	XVA-0145
13	CR A/C UNIT REFRIG FILTER/DRYER INLET VALVE	HOV-24	XVA-0038	XVA-0073	XVA-0110	XVA-0146
14	CR A/C UNIT REFRIG FILTER/DRYER LIQUID CHARGING VALVE	HOV-25	XVA-0039	XVA-0074	XVA-0111	XVA-0147
15	CR A/C UNIT REFRIG FILTER/DRYER OUTLET VALVE	HOV-26	XVA-0040	XVA-0075	XVA-0112	XVA-0148
16	CR A/C UNIT HUMIDIFIER WATER SUPPLY ISOLATION VALVE	HOV-30	XVA-0041	XVA-0076	XVA-0113	XVA-0149
17	CR A/C UNIT COOLING COIL REFRIG SUPPLY ISOLATION VALVE	HOV-31	XVA-0042	XVA-0077	XVA-0114	XVA-0150
18	CR A/C UNIT COOLING COIL REFRIG SUPPLY ISOLATION VALVE	HOV-32	XVA-0043	XVA-0078	XVA-0115	XVA-0151
19	CR A/C UNIT COOLING COIL REFRIG SUPPLY ISOLATION VALVE	HOV-33	XVA-0044	XVA-0079	XVA-0116	XVA-0152
20	CR A/C UNIT COOLING COIL REFRIG SUPPLY ISOLATION VALVE	HOV-34	XVA-0045	XVA-0080	XVA-0117	XVA-0153
21	CR A/C UNIT REFRIG COMPRESSOR SUCTION TRAP OIL RETURN THROTTLE VALVE	HCV-8	XVA-0046	XVA-0081	XVA-0118	XVA-0154
22	CR A/C UNIT REFRIG COMPRESSOR DISCHARGE CHECK VALVE	CKV-92	XVA-0158	XVA-0160	XVA-0162	XVA-0164
23	CR A/C UNIT COOLING COIL REFRIG SUPPLY LINE CHECK VALVE	CKV-61	XVA-0159	XVA-0161	XVA-0163	XVA-0165
24	CR A/C UNIT COOLING COIL REFRIG THERMAL EXPANSION VALVE	TCV-75	XVA-0166	XVA-0170	XVA-0174	XVA-0178
25	CR A/C UNIT COOLING COIL REFRIG THERMAL EXPANSION VALVE	TCV-76	XVA-0167	XVA-0171	XVA-0175	XVA-0179
26	CR A/C UNIT COOLING COIL REFRIG THERMAL EXPANSION VALVE	TCV-77	XVA-0168	XVA-0172	XVA-0176	XVA-0180
27	CR A/C UNIT COOLING COIL REFRIG THERMAL EXPANSION VALVE	TCV-78	XVA-0169	XVA-0173	XVA-0177	XVA-0181
28	CR A/C UNIT REFRIG CONDENSER SHELL SIDE RELIEF VALVE	PSV-54	XVA-0015	XVA-0050	XVA-0087	XVA-0123
29	CR A/C UNIT REFRIG CONDENSER SHELL SIDE RELIEF VALVE	PSV-55	XVA-0016	XVA-0051	XVA-0088	XVA-0124
30	CR A/C UNIT LIQUID LINE RELIEF VALVE	PSV-56	XVA-0017	XVA-0052	XVA-0089	XVA-0125
31	CR A/C UNIT REFRIG COMPRESSOR 1 ST STAGE PRESSURE CONTROL UNLOADING	SOV-1	X-SV-3583C	X-SV-3584C	X-SV-3585C	X-SV-3586C
32	CR A/C UNIT REFRIG COMPRESSOR 2 ND STAGE PRESSURE CONTROL UNLOADING	SOV-2	X-SV-3583D	X-SV-3584D	X-SV-3585D	X-SV-3586D
33	CR A/C UNIT REFRIG COMPRESSOR 3 RD STAGE PRESSURE CONTROL UNLOADING	SOV-3	X-SV-3583E	X-SV-3584E	X-SV-3585E	X-SV-3586E
34	CR A/C UNIT REFRIG COMPRESSOR SUCTION TRAP OIL RETURN SOLENOID VALVE	SOV-4	X-SV-3587	X-SV-3588	X-SV-3589	X-SV-3590
35	CR A/C UNIT LIQUID LINE SOLENOID VALVE	SOV-70	X-SV-3583-1A	X-SV-3583-2A	X-SV-3585-1A	X-SV-3585-2A
36	CR A/C UNIT LIQUID LINE SOLENOID VALVE	SOV-71	X-SV-3583-1B	X-SV-3583-2B	X-SV-3585-1B	X-SV-3585-2B

ITEM	DESCRIPTION	CVI TAG NUMBER	CONTROL ROOM A/C UNIT			
			CPX-VAACCR-01	CPX-VAACCR-02	CPX-VAACCR-03	CPX-VAACCR-04
37	CR A/C UNIT LIQUID LINE SOLENOID VALVE	SOV-72	X-SV-3583-1C	X-SV-3583-2C	X-SV-3585-1C	X-SV-3585-2C
38	CR A/C UNIT LIQUID LINE SOLENOID VALVE	SOV-73	X-SV-3583-1D	X-SV-3583-2D	X-SV-3585-1D	X-SV-3585-2D
39	CR A/C UNIT REFRIG COMPRESSOR 1 ST STAGE UNLOADING PRESSURE SWITCH	PSS-35	X-PS-3583C	X-PS-3584C	X-PS-3585C	X-PS-3586C
40	CR A/C UNIT REFRIG COMPRESSOR 2 ND STAGE UNLOADING PRESSURE SWITCH	PSS-36	X-PS-3583D	X-PS-3584D	X-PS-3585D	X-PS-3586D
41	CR A/C UNIT REFRIG COMPRESSOR 3 RD STAGE UNLOADING PRESSURE SWITCH	PSS-37	X-PS-3583E	X-PS-3584E	X-PS-3585E	X-PS-3586E
42	CR A/C UNIT REFRIG COMPRESSOR OIL PRESSURE SWITCH	PSS-49	X-PS-3583B	X-PS-3584B	X-PS-3585B	X-PS-3586B
43	CR A/C UNIT REFRIG COMPRESSOR SUCTION PRESSURE SWITCH	PSS-50	X-PS-3583A	X-PS-3584A	X-PS-3585A	X-PS-3586A
44	CR A/C UNIT REFRIG COMPRESSOR DISCHARGE PRESSURE SWITCH	PSS-51	X-PS-3583F	X-PS-3584F	X-PS-3585F	X-PS-3586F
45	CR A/C UNIT REFRIG COMPRESSOR DISCHARGE PRESSURE SWITCH	PSS-52	X-PS-3583G	X-PS-3584G	X-PS-3585G	X-PS-3586G
46	CR A/C UNIT FAN DIFFERENTIAL PRESSURE SWITCH	DPS-81	X-PS-3583H	X-PS-3584H	X-PS-3585H	X-PS-3586H
47	CR A/C UNIT FAN DIFFERENTIAL PRESSURE INDICATOR	DPI-83	X-PI-5849	X-PI-5852	X-PI-5850	X-PI-5854 R
48	CR A/C UNIT REFRIG COMPRESSOR DISCHARGE PRESSURE INDICATOR	PI-45	X-PI-3583A	X-PI-3584A	X-PI-3585A	X-PI-3586A
49	CR A/C UNIT REFRIG COMPRESSOR LUBE OIL PRESSURE INDICATOR	PI-46	X-PI-3583B	X-PI-3584B	X-PI-3585B	X-PI-3586B
50	CR A/C UNIT REFRIG COMPRESSOR SUCTION PRESSURE INDICATOR	PI-47	X-PI-3583C	X-PI-3584C	X-PI-3585C	X-PI-3586C
51	CR A/C UNIT PREFILTER DIFFERENTIAL PRESSURE INDICATOR	DPI-80	X-PI-3583D	X-PI-3584D	X-PI-3585D	X-PI-3586D
52	CR A/C UNIT REFRIG CONDENSER SHELL SIDE PRESSURE INDICATOR CONTROL	PIC-58	X-PIC-3583	X-PIC-3584	X-PIC-3585	X-PIC-3586
53	CR A/C UNIT REFRIG CONDENSER SHELL SIDE PRESSURE TRANSMITTER	PT-58	X-PT-3583	X-PT-3584	X-PT-3585	X-PT-3586
54	CR A/C UNIT CCW RETURN PRESSURE CONTROL VALVE	PCV-58	X-PV-3583 (REF M1-0229-A)	X-PV-3584 (REF M1-0229-A)	X-PV-3585 (REF M1-0229-B)	X-PV-3586 (REF M1-0229-B)
55	CR A/C UNIT REFRIG LIQUID LINE SIGHT GLASS	FI-63	X-FI-3583A	X-FI-3584A	X-FI-3585A	X-FI-3586A
56	CR A/C UNIT REFRIG COMPRESSOR SUCTION OIL RETURN SIGHT GLASS	FI-64	X-FI-3583B	X-FI-3584B	X-FI-3585B	X-FI-3586B
57	CR A/C UNIT REFRIG LIQUID LINE MOISTURE INDICATOR	MI-62	X-MI-3583A	X-MI-3584A	X-MI-3585A	X-MI-3586A
58	CR A/C UNIT AUTOMATIC RESET HEATER TEMPERATURE SWITCH	TSS-39	X-TS-3583D	X-TS-3584D	X-TS-3585D	X-TS-3586D
59	CR A/C UNIT REFRIG COMPRESSOR DISCHARGE TEMPERATURE SWITCH	TSS-40	X-TS-3583A	X-TS-3584A	X-TS-3585A	X-TS-3586A
60	CR A/C UNIT REFRIG COMPRESSOR OIL TEMPERATURE SWITCH	TSS-41	X-TS-3583B	X-TS-3584B	X-TS-3585B	X-TS-3586B
61	CR A/C UNIT REFRIG COMPRESSOR DISCHARGE TEMPERATURE SWITCH	TSS-42	X-TS-3583C	X-TS-3584C	X-TS-3585C	X-TS-3586C
62	CR A/C UNIT MANUAL RESET HEATER TEMPERATURE SWITCH	TSS-43	X-TS-3583E	X-TS-3584E	X-TS-3585E	X-TS-3586E
63	CR A/C UNIT CPX-VAACCR-01/02 CPX-VAACCR-03/04 TEMP CONTROLLER	TC-90	X-TC-3583		X-TC-3585	
64	CR A/C UNIT REFRIG COOLING COIL SUPPLY LINE STRAINER	STR-65	CPX-VASRCR-01	CPX-VASRCR-05	CPX-VASRCR-09	CPX-VASRCR-13
65	CR A/C UNIT REFRIG COOLING COIL SUPPLY LINE STRAINER	STR-66	CPX-VASRCR-02	CPX-VASRCR-06	CPX-VASRCR-10	CPX-VASRCR-14
66	CR A/C UNIT REFRIG COOLING COIL SUPPLY LINE STRAINER	STR-67	CPX-VASRCR-03	CPX-VASRCR-07	CPX-VASRCR-11	CPX-VASRCR-15
67	CR A/C UNIT REFRIG COOLING COIL SUPPLY LINE STRAINER	STR-68	CPX-VASRCR-04	CPX-VASRCR-08	CPX-VASRCR-12	CPX-VASRCR-16
68	CONTROL ROOM THERMOSTAT	TE-87	X-TS-5847		X-TS-5848	
69	CR A/C UNIT CONDENSER TUBE SIDE RELIEF VALVE	PSV-53	1CC-1025 (REF M1-0229-A)	1CC-1024 (REF M1-0229-A)	1CC-1026 (REF M1-0229-B)	1CC-1027 (REF M1-0229-B)
70	CR A/C UNIT FAN DIFFERENTIAL PRESSURE SWITCH	DPS-82	X-PS-5849	X-PS-5852	X-PS-5850	X-PS-5854
71	CR A/C UNIT REFRIG COMPRESSOR OIL RETURN ANGLE STOP VALVE	-	XVA-0255	XVA-0256	XVA-0257	XVA-0258
72	CR A/C UNIT REFRIG SUCTION TRAP STOP VALVE	-	XVA-0259	XVA-0260	XVA-0261	XVA-0262

ITEM	DESCRIPTION	CVI TAG NUMBER	CONTROL ROOM A/C UNIT			
			CPX-VAACCR-01	CPX-VAACCR-02	CPX-VAACCR-03	CPX-VAACCR-04
73	CR A/C UNIT SUCTION PRESSURE ACCESS VALVE	-	XVA-0263	XVA-0264	XVA-0265	XVA-0266
74	CR A/C UNIT OIL PRESSURE ACCESS VALVE	-	XVA-0267	XVA-0268	XVA-0269	XVA-0270
75	CR A/C UNIT DISCHARGE PRESSURE ACCESS VALVE	-	XVA-0271	XVA-0272	XVA-0273	XVA-0274

REV	DWN	CHKD	APVD	REMARKS
CP-4	EES 09-08-2005	GAW 09-08-2005		THIS DRAWING REVISED TO INCORPORATE DESIGN CHANGE FDA-2003-002013-01-00 PER SK-0004-03-002013-01-00.

NOTES:

1. THIS DIAGRAM IS A SCHEMATIC REPRESENTATION AND IS INTENDED TO SHOW GENERAL FLOW PATHS.
2. FOR ABBREVIATIONS AND SYMBOLS SEE DRAWINGS M1-0313 AND M1-0200.
3. THIS FLOW DIAGRAM IS COMMON FOR UNIT 1 AND 2.
4. WORK THIS DRAWING WITH M1-0304-C.

REFERENCES:

1.	M1-0313	FLOW DIAGRAM VENTILATION AAP BLDG AND CONTROL BLDG UPS AREA A/C SYSTEMS
2.	M1-0200	MECHANICAL SYMBOLS AND NOTES
3.	M1-0304	FLOW DIAGRAM VENTILATION CONTROL ROOM AIR CONDITIONING
4.	M1-0304-A	FLOW DIAGRAM VENTILATION CONTROL ROOM AIR CONDITIONING
5.	M1-0304-B	FLOW DIAGRAM VENTILATION CONTROL ROOM AIR CONDITIONING
6.	M1-0229-A	FLOW DIAGRAM COMPONENT COOLING WATER SYSTEM
7.	M1-0229-B	FLOW DIAGRAM COMPONENT COOLING WATER SYSTEM
8.	B-587-0200	CVI P&I DIAGRAM AIR CONDITIONING SYSTEM

FSAR FIGURE 9.4-1

THIS DRAWING CREATED ELECTRONICALLY

DRAWING M1-0304 REV CP-20
HAS BEEN SPLIT INTO THE FOLLOWING SHEETS:
M1-0304
M1-0304-D

CLASS I
(NUCLEAR SAFETY-RELATED)
SAFETY CLASS 1 — SEISMIC CATEGORY I
SAFETY CLASS 2 — CLASS 1E
SAFETY CLASS 3 — ASSOCIATED CIRCUITS

LUMINANT
CPSES
GLEN ROSE, TEXAS

FLOW DIAGRAM-VENTILATION
CONTROL ROOM AIR CONDITIONING

DWG NO. M1-0304 | SH NO. D | REV. CP-4

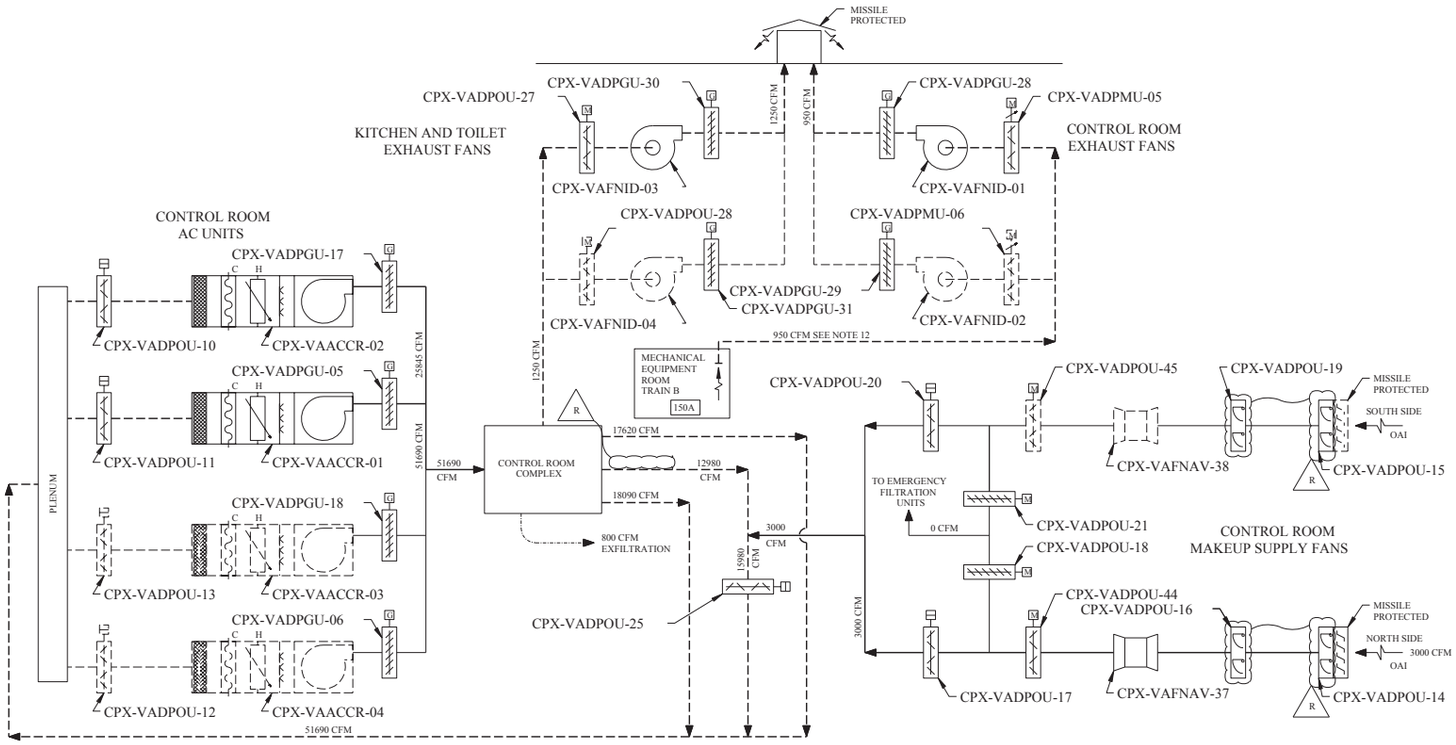

NORMAL OPERATION MODE
STANDBY EQUIPMENT IS DOTTED ( ) — — —

NORMAL OPERATION SEE NOTE 10			
DAMPERS OPEN	FANS ON	DAMPERS CLOSED	FANS OFF
CPX-VADPOU-11	CPX-VAACCR-01	CPX-VADPOU-13	CPX-VAACCR-03
CPX-VADPGU-05		CPX-VADPGU-18	
CPX-VADPOU-10	CPX-VAACCR-02	CPX-VADPOU-12	CPX-VAACCR-04
CPX-VADPGU-17		CPX-VADPGU-06	
CPX-VADPOU-25			
CPX-VADPOU-15			
CPX-VADPOU-14			
CPX-VADPOU-16	CPX-VAFNAV-37	CPX-VADPOU-19	CPX-VAFNAV-38
CPX-VADPOU-17		CPX-VADPOU-20	
CPX-VADPOU-44		CPX-VADPOU-18	
CPX-VADPOU-45		CPX-VADPOU-21	
CPX-VADPMU-05	CPX-VAFNID-01	CPX-VADPMU-06	CPX-VAFNID-02
CPX-VADPGU-28		CPX-VADPGU-29	
CPX-VADPOU-27	CPX-VAFNID-03	CPX-VADPOU-28	CPX-VAFNID-04
CPX-VADPGU-30		CPX-VADPGU-31	
		CPX-VADPOU-22	CPX-VAFNCB-05
		CPX-VADPGU-01	
		CPX-VADPOU-23	CPX-VAFNCB-06
		CPX-VADPGU-02	
		CPX-VADPOU-41	CPX-VAFNCB-23
		CPX-VADPGU-03	
		CPX-VADPOU-42	CPX-VAFNCB-24
		CPX-VADPGU-04	

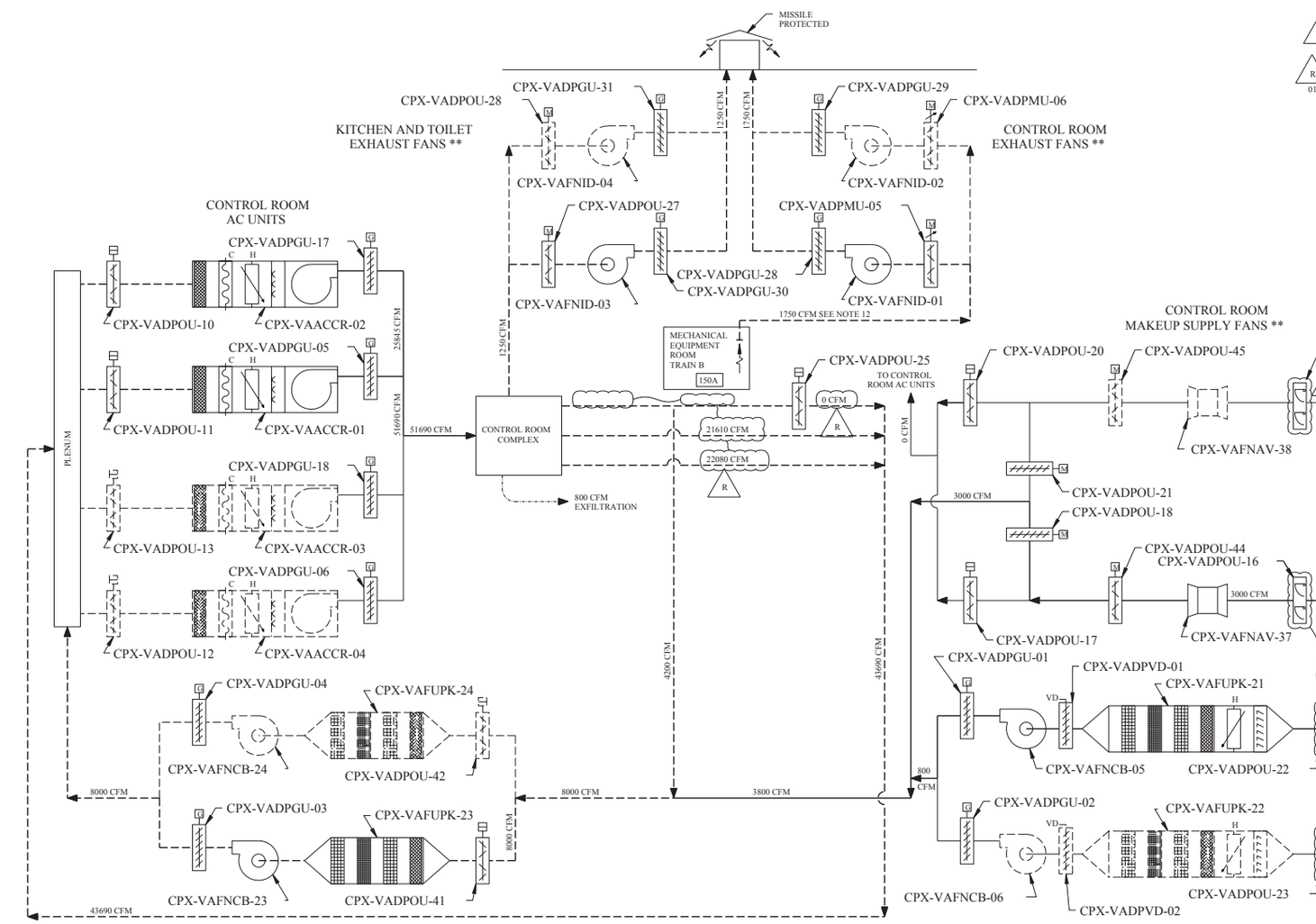

EMERGENCY FILTRATION UNITS
(2) 100% UNITS (1) STANDBY

EMERGENCY VENTILATION MODE
STANDBY EQUIPMENT IS DOTTED ( ) — — —

EMERGENCY PRESSURIZATION UNITS
** CONTROL ROOM MAKEUP SUPPLY AND EXHAUST FANS OPERATE PERIODICALLY TO REPLENISH CONTROL ROOM OXYGEN SUPPLY (SEE NOTE 13)

EMERGENCY VENTILATION MODE SEE NOTE 10			
DAMPERS OPEN	FANS ON	DAMPERS CLOSED	FANS OFF
CPX-VADPOU-11	CPX-VAACCR-01	CPX-VADPOU-13	CPX-VAACCR-03
CPX-VADPGU-05		CPX-VADPGU-18	
CPX-VADPOU-10	CPX-VAACCR-02	CPX-VADPOU-12	CPX-VAACCR-04
CPX-VADPGU-17		CPX-VADPGU-06	
		CPX-VADPOU-25	
CPX-VADPOU-41	CPX-VAFNCB-23	CPX-VADPOU-42	CPX-VAFNCB-24
CPX-VADPGU-03		CPX-VADPGU-04	
		CPX-VADPOU-15	
CPX-VADPOU-14			
CPX-VADPOU-22	CPX-VAFNCB-05	CPX-VADPOU-23	CPX-VAFNCB-06
CPX-VADPGU-01		CPX-VADPGU-02	
CPX-VADPOU-16	CPX-VAFNAV-37	CPX-VADPOU-19	CPX-VAFNAV-38
CPX-VADPOU-18		CPX-VADPOU-21	
CPX-VADPOU-44			
CPX-VADPMU-05	CPX-VAFNID-01	CPX-VADPMU-06	CPX-VAFNID-02
CPX-VADPGU-28		CPX-VADPGU-29	
CPX-VADPOU-27	CPX-VAFNID-03	CPX-VADPOU-28	CPX-VAFNID-04
CPX-VADPGU-30		CPX-VADPGU-31	
CPX-VADPOU-45		CPX-VADPOU-17	
		CPX-VADPOU-20	

REV	DWN	CHKD	APVD	REMARKS
CP-12	DGK 11-18 2005	MSJ 11-18 2005		THIS DRAWING REVISED TO INCORPORATE DESIGN CHANGE FDA 2001-002847-01-04 PER SK-0056-01-002847-01-01.

NOTES:

1. FOR ABBREVIATIONS AND SYMBOLS SEE DRAWINGS M1-0313 AND M1-0200.
2. DELETED
3. THIS DIAGRAM IS A SCHEMATIC REPRESENTATION AND IS INTENDED TO SHOW GENERAL AIR DISTRIBUTION AND FLOW PATHS.
4. BALANCING DAMPERS, REGISTERS, DIFFUSERS, FLEXIBLE CONNECTIONS AND ALL OTHER RELATED ACCESSORIES NOT SHOWN ON THIS DIAGRAM SHALL BE PROVIDED AS INDICATED ON THE HVAC ARRANGEMENT DRAWINGS AND SPECIFICATIONS.
5. WORK THIS DRAWING WITH M1-0304, M1-0304-A AND M1-0304-B.
6. THIS FLOW DIAGRAM IS COMMON FOR UNITS 1 AND 2.
7. DURING OXYGEN REPLENISHMENT THE EMERGENCY RECIRCULATION MODE IS REPLACED BY THE EMERGENCY VENTILATION MODE FOR SHORT INTERVALS.
8. DELETED
9. DELETED
10. DAMPERS CPX-VADPMU-05 AND -06 ARE MODULATING CONTROL DAMPERS.
11. FOR DAMPER AND FAN MODE OF OPERATIONS SEE TABLES.
12. VALUES SHOWN ARE MINIMUM AIR FLOWS. ACTUAL AIR FLOW DEPENDS ON THE LEAK TIGHTNESS OF THE CONTROL ROOM PRESSURE BOUNDARY.
13. DAMPER CPX-VADPOU-14 OR -15 IS CLOSED BY THE OPERATOR WHEN SHUTTING DOWN THE ASSOCIATED TRAIN OF CRAC VENTILATION SYSTEM AFTER AN SI, BLACKOUT OR HIGH RADIATION SIGNAL. R

REFERENCES:

1. M1-0313 — FLOW DIAGRAM - VENTILATION AAP BLDG AND CONTROL BLDG UPS AREA A/C SYSTEMS
2. M1-0200 — MECHANICAL SYMBOLS AND NOTES
3. M1-0304, M1-0304-A, M1-0304-B — FLOW DIAGRAM - VENTILATION CONTROL ROOM AIR CONDITIONING

FSAR FIGURE 9.4-1

THIS DRAWING CREATED ELECTRONICALLY

DRAWING M1-0308 REV CP-4
HAS BEEN SPLIT INTO THE FOLLOWING SHEETS:
M1-0308
M1-0308-A

CLASS I
(NUCLEAR SAFETY-RELATED)
SAFETY CLASS 1 — SEISMIC CATEGORY I
SAFETY CLASS 2 — CLASS 1E
SAFETY CLASS 3 — ASSOCIATED CIRCUITS

LUMINANT
CPSES
GLEN ROSE, TEXAS

FLOW DIAGRAM - VENTILATION
CONTROL ROOM AIR CONDITIONING

DWG. NO. M1-0308 | SH. NO. - | REV. CP-12

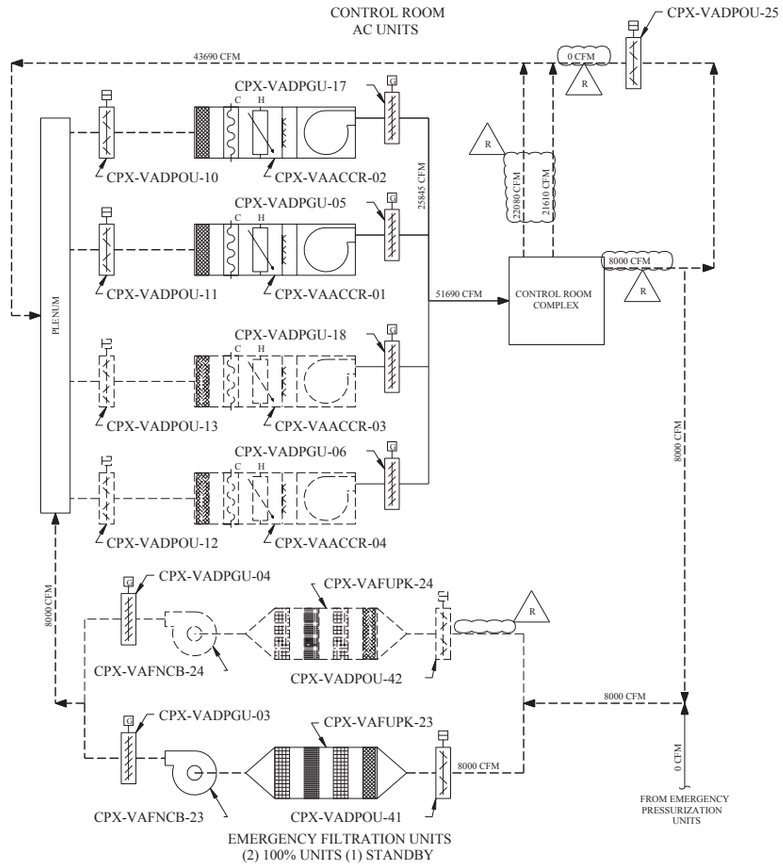

EMERGENCY FILTRATION UNITS
(2) 100% UNITS (1) STANDBY

ISOLATION MODE
STANDBY EQUIPMENT IS DOTTED ( ) — — —

TRAIN A EQUIPMENT LINE-UP FOR CONTROL ROOM
AIR CONDITIONING SYSTEM

ISOLATION MODE SEE NOTE 9			
DAMPERS OPEN	FANS ON	DAMPERS CLOSED	FANS OFF
CPX-VADPOU-11	CPX-VAACCR-01	CPX-VADPOU-13	CPX-VAACCR-03
CPX-VADPGU-05		CPX-VADPGU-18	
CPX-VADPOU-10	CPX-VAACCR-02	CPX-VADPOU-12	CPX-VAACCR-04
CPX-VADPGU-17		CPX-VADPGU-06	
		CPX-VADPOU-25	
CPX-VADPOU-41	CPX-VAFNCB-23	CPX-VADPOU-42	CPX-VAFNCB-24
CPX-VADPGU-03		CPX-VADPGU-04	
		CPX-VADPOU-14	
		CPX-VADPOU-22	CPX-VAFNCB-05
		CPX-VADPGU-01	
		CPX-VADPOU-23	CPX-VAFNCB-06
		CPX-VADPGU-02	
CPX-VADPOU-44		CPX-VADPOU-15	CPX-VAFNAV-37
		CPX-VADPOU-17	
		CPX-VADPOU-18	
CPX-VADPOU-45		CPX-VADPOU-19	CPX-VAFNAV-38
		CPX-VADPOU-20	
		CPX-VADPOU-21	
		CPX-VADPMU-05	CPX-VAFNID-01
		CPX-VADPGU-28	
		CPX-VADPMU-06	CPX-VAFNID-02
		CPX-VADPGU-29	
		CPX-VADPOU-27	CPX-VAFNID-03
		CPX-VADPGU-30	
		CPX-VADPOU-28	CPX-VAFNID-04
		CPX-VADPGU-31	

R

EMERGENCY RECIRCULATION MODE SEE NOTE 7			
DAMPERS OPEN	FANS ON	DAMPERS CLOSED	FANS OFF
CPX-VADPOU-11	CPX-VAACCR-01	CPX-VADPOU-13	CPX-VAACCR-03
CPX-VADPGU-05		CPX-VADPGU-18	
CPX-VADPOU-10	CPX-VAACCR-02	CPX-VADPOU-12	CPX-VAACCR-04
CPX-VADPGU-17		CPX-VADPGU-06	
		CPX-VADPOU-25	
CPX-VADPOU-41	CPX-VAFNCB-23	CPX-VADPOU-42	CPX-VAFNCB-24
CPX-VADPGU-03		CPX-VADPGU-04	
		CPX-VADPOU-15	
		CPX-VADPOU-14	
CPX-VADPOU-22	CPX-VAFNCB-05	CPX-VADPOU-23	CPX-VAFNCB-06
CPX-VADPGU-01		CPX-VADPGU-02	
CPX-VADPOU-44		CPX-VADPOU-16	CPX-VAFNAV-37
		CPX-VADPOU-17	
		CPX-VADPOU-18	
CPX-VADPOU-45		CPX-VADPOU-19	CPX-VAFNAV-38
		CPX-VADPOU-20	
		CPX-VADPOU-21	
		CPX-VADPMU-05	CPX-VAFNID-01
		CPX-VADPGU-28	
		CPX-VADPMU-06	CPX-VAFNID-02
		CPX-VADPGU-29	
		CPX-VADPOU-27	CPX-VAFNID-03
		CPX-VADPGU-30	
		CPX-VADPOU-28	CPX-VAFNID-04
		CPX-VADPGU-31	

R

REV	DWN	CHKD	APVD	REMARKS
CP-5	DGK 11-18 2005	MM 11-18 2005		THIS DRAWING REVISED TO INCORPORATE DESIGN CHANGE FDA 2001-002847-01-04 PER SK-0057-01-002847-01-01.

NOTES:

1. FOR ABBREVIATIONS AND SYMBOLS SEE DRAWINGS M1-0313 AND M1-0200.
2. DELETED
3. THIS DIAGRAM IS A SCHEMATIC REPRESENTATION AND IS INTENDED TO SHOW GENERAL AIR DISTRIBUTION AND FLOW PATHS.
4. BALANCING DAMPERS, REGISTERS, DIFFUSERS, FLEXIBLE CONNECTIONS AND ALL OTHER RELATED ACCESSORIES NOT SHOWN ON THIS DIAGRAM SHALL BE PROVIDED AS INDICATED ON THE HVAC ARRANGEMENT DRAWINGS AND SPECIFICATIONS.
5. WORK THIS DRAWING WITH M1-0304, M1-0304-A AND M1-0304-B.
6. THIS FLOW DIAGRAM IS COMMON FOR UNITS 1 AND 2.
7. DURING OXYGEN REPLENISHMENT THE EMERGENCY RECIRCULATION MODE IS REPLACED BY THE EMERGENCY VENTILATION MODE FOR SHORT INTERVALS.
8. DELETED
9. ISOLATION MODE IS USED IF SMOKE IS DETECTED.
10. DELETED
11. FOR DAMPER AND FAN MODE OF OPERATIONS SEE TABLES.
12. DAMPER CPX-VADPOU-14 OR -15 IS CLOSED BY THE OPERATOR WHEN SHUTTING DOWN THE ASSOCIATED TRAIN OF CRAC VENTILATION SYSTEM AFTER AN SI, BLACKOUT OR HIGH RADIATION SIGNAL.

R

REFERENCES:

1. M1-0313 — FLOW DIAGRAM - VENTILATION AAP BLDG AND CONTROL BLDG UPS AREA A/C SYSTEMS
2. M1-0200 — MECHANICAL SYMBOLS AND NOTES
3. M1-0304, M1-0304-A, M1-0304-B — FLOW DIAGRAM - VENTILATION CONTROL ROOM AIR CONDITIONING

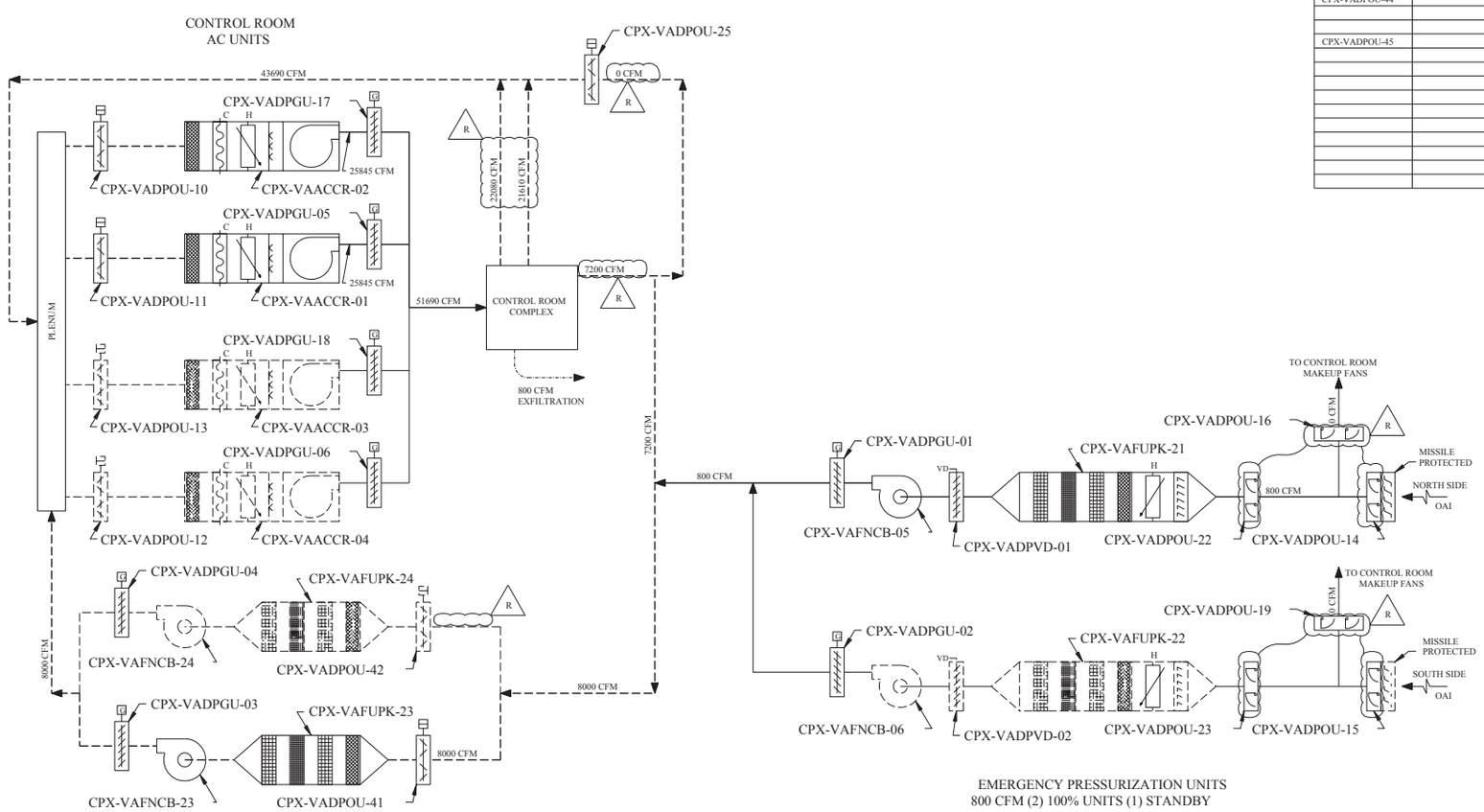

EMERGENCY FILTRATION UNITS
(2) 100% UNITS (1) STANDBY

EMERGENCY PRESSURIZATION UNITS
800 CFM (2) 100% UNITS (1) STANDBY

EMERGENCY RECIRCULATION MODE
STANDBY EQUIPMENT IS DOTTED ( ) — — —
(SEE NOTE 12)

FSAR FIGURE 9.4-1

THIS DRAWING CREATED ELECTRONICALLY

DRAWING M1-0308 REV CP-4
HAS BEEN SPLIT INTO THE FOLLOWING SHEETS:
M1-0308
M1-0308-A

CLASS I
(NUCLEAR SAFETY-RELATED)
SAFETY CLASS 1 — SEISMIC CATEGORY I
SAFETY CLASS 2 — CLASS 1E
SAFETY CLASS 3 — ASSOCIATED CIRCUITS

LUMINANT
CPSES
GLEN ROSE, TEXAS

FLOW DIAGRAM - VENTILATION
CONTROL ROOM AIR CONDITIONING

DWG. NO. M1-0308 | SH. NO. A | REV. CP-5

FINAL PRINT

REV	DWN	CHKD	APVD	REMARKS
CP-18	DLK 04-28 2003	MM 04-29 2003		THIS DRAWING REVISED TO INCORPORATE DESIGN CHANGE FDA 2001-001860-02-00 PER SK-0009-02-001860-02-00.

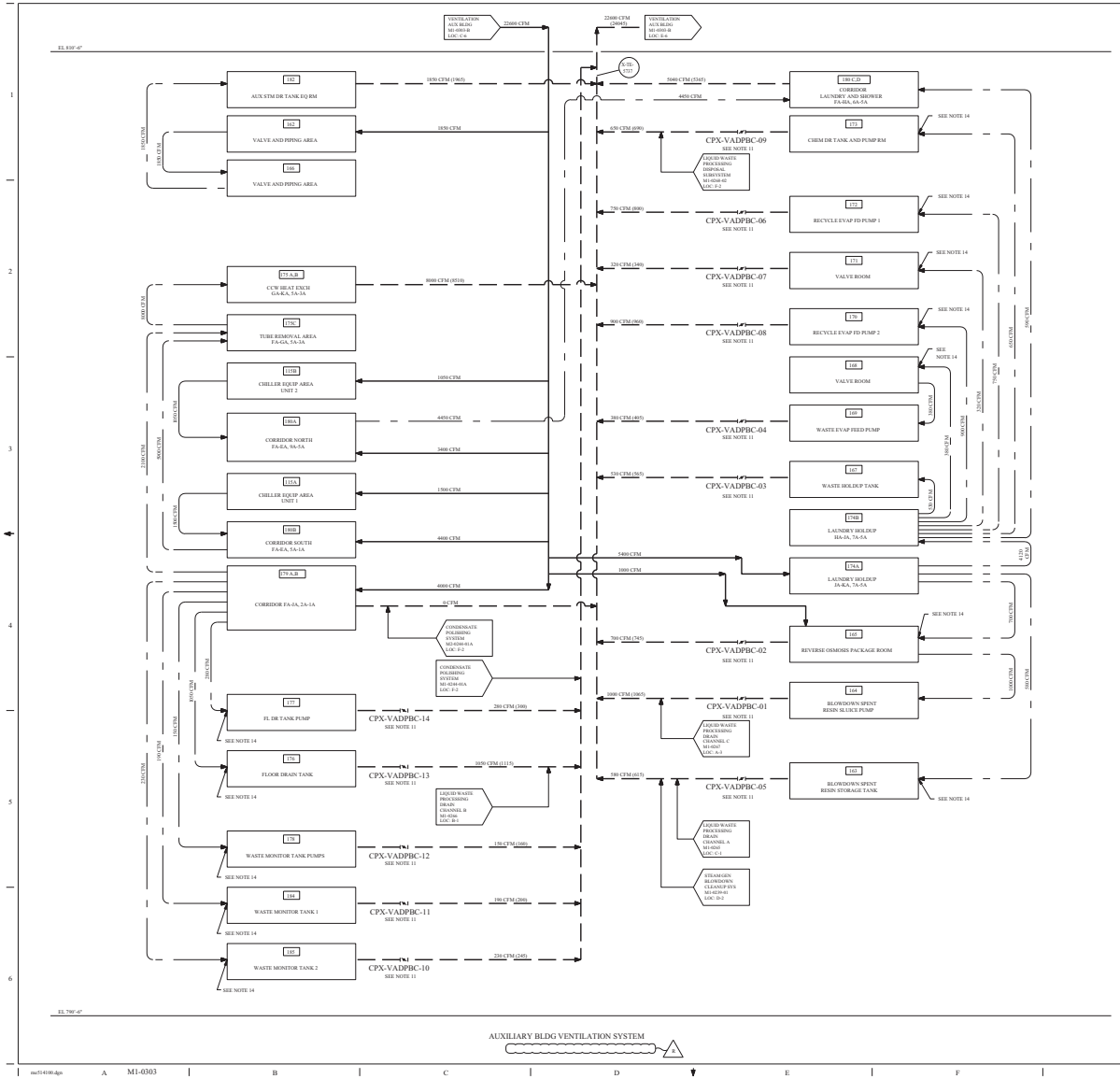

AUXILIARY BLDG VENTILATION SYSTEM

R

NOTES:

1. FOR HVAC ABBREVIATIONS AND SYMBOLS SEE DRAWINGS M1-0313 AND M1-0200.
2. THIS DIAGRAM IS A SCHEMATIC REPRESENTATION AND IS INTENDED TO SHOW GENERAL AIR DISTRIBUTION AND FLOW PATH.
3. BALANCING DAMPERS, REGISTERS, DIFFUSERS, FLEXIBLE CONNECTIONS AND ALL OTHER RELATED ACCESSORIES NOT SHOWN ON THIS DIAGRAM SHALL BE PROVIDED AS INDICATED ON THE HVAC ARRANGEMENT DRAWINGS AND OR SPECIFICATIONS.
4. INSTRUMENTATION AND CONTROLS FOR ROOM COOLING UNITS ARE TO BE SUPPLIED BY EQUIPMENT MANUFACTURERS.
5. THIS FLOW DIAGRAM IS COMMON FOR UNITS 1 AND 2. ALL CP2 EQUIPMENT SHOWN ON THIS FLOW DIAGRAM WILL BE INSTALLED WITH UNIT NUMBER 1 EQUIPMENT.
6. THE AUXILIARY BUILDING WILL BE MAINTAINED AT A SLIGHT NEGATIVE PRESSURE.
7. FOR LOGIC OF X-TIS-6249 AND X-TIS-6249A SEE I&C DRAWING M1-2300-05.
8. FOR LOGIC OF 1-PV-5688 , 1-HV-5689 , 2-PV-5688 AND 2-HV-5689 SEE I&C DRAWING M1-2302-09
9. FOR LOGIC OF 1-TIC-6098 AND 2-TIC-6098 SEE I&C DRAWINGS M1-2307-06 AND M2-2307-03 RESPECTIVELY.
10. FOR LOGIC OF 1-RE-5698 AND 2-RE-5698 SEE I&C DRAWINGS M1-2302-10A AND M2-2302-10A.
11. DAMPER ABANDONED IN PLACE (IN OPEN POSITION), ALL AIR CONNECTIONS AND ELECTRICAL CONNECTIONS ARE DISCONNECTED.
12. AIR FLOW QUANTITIES SHOWN ARE BASED ON A DENSITY OF 0.075 LB/FT^3 OCCURING AT THE STANDARD CONDITION OF DRY AIR AT 70^F AND 29.92" HG BAROMETRIC PRESSURE. QUANTITIES IN PARENTHESES ARE ACTUAL AIR FLOW RATES BASED ON DENSITY AT DESIGN CONDITIONS.
13. AIR ENTERS THROUGH A DOOR WITH AN ELECTRO-THERMAL LINK CONTROL FOR FIRE PROTECTION AND TORNADO VENTING PURPOSES.
14. AIR ENTERS THROUGH LOUVERS IN DOOR OR WIRE MESH DOORS.
15. THE MAXIMUM AIR DISCHARGE (6900 CFM) FROM THE CONDENSER EXHAUSTING VACUUM PUMPS IS NOT CONSIDERED IN THE FLOW DIAGRAM BALANCE DUE TO THE SHORT DURATION OF THE PRIMING AND HOGGING MODES ASSOCIATED WITH THE VACUUM PUMPS.
16. THE AIR FLOW RATES SHOWN ARE ORIGINAL DESIGN VALUES FOR INITIAL FLOW BALANCING AND DO NOT REPRESENT AS-BUILT. AIR FLOW IS BALANCED TO MAINTAIN ROOM TEMPERATURES WITHIN DESIGN DURING NORMAL OPERATION AND TO ENSURE THE DIRECTION OF AIR FLOW IS AS SHOWN.

R

REFERENCES:

M1-0200	MECHANICAL DRAWING NOTES AND SYMBOLS
M1-0244-01	FLOW DIAGRAM CONDENSATE POLISHING SYSTEM
M1-0265	FLOW DIAGRAM LIQUID WASTE PROCESSING DRAIN CHANNEL A
M1-0266	FLOW DIAGRAM LIQUID WASTE PROCESSING DRAIN CHANNEL B
M1-0267	FLOW DIAGRAM LIQUID WASTE PROCESSING DRAIN CHANNEL C
M1-0268-02	FLOW DIAGRAM LIQUID WASTE PROCESSING DISPOSAL SUBSYSTEM
M1-0300	FLOW DIAGRAM VENTILATION CONTAINMENT
M1-0302	FLOW DIAGRAM VENTILATION SAFEGUARD AND ELECTRICAL AREA
M1-0303-B	FLOW DIAGRAM VENTILATION AUXILIARY BUILDING
M1-0304-01	FLOW DIAGRAM VENTILATION OFFICE AND SERVICE AREAS AIR CONDITIONING
M1-0307	FLOW DIAGRAM VENTILATION CHILLED WATER SYSTEM
M1-0309	FLOW DIAGRAM VENTILATION PRIMARY PLANT SUPPLY AND EXHAUST
M1-0311	FLOW DIAGRAM VENTILATION SAFETY CHILLED WATER SYSTEM
M2-0244	FLOW DIAGRAM CONDENSATE POLISHING SYSTEM
M2-0302	FLOW DIAGRAM VENTILATION SAFEGUARD AND ELECTRICAL AREA
M2-0311	FLOW DIAGRAM VENTILATION SAFETY CHILLED WATER SYSTEM

FSAR FIGURE 9.4-2

DRAWING M1-0303 REV CP-13
HAS BEEN SPLIT INTO THE FOLLOWING SHEETS:
M1-0303
M1-0303-B

DRAWING M1-0303 REV CP-12
HAS BEEN SPLIT INTO THE FOLLOWING SHEETS:
M1-0303
M1-0303-A

THIS DRAWING CREATED ELECTRONICALLY

CLASS II

R

TXU POWER
CPSES
GLEN ROSE, TEXAS

FLOW DIAGRAM VENTILATION
AUXILIARY BUILDING

DWG. NO.	SH. NO.	REV.
M1-0303	-	CP-18

SSSSSSDATESSSSSS

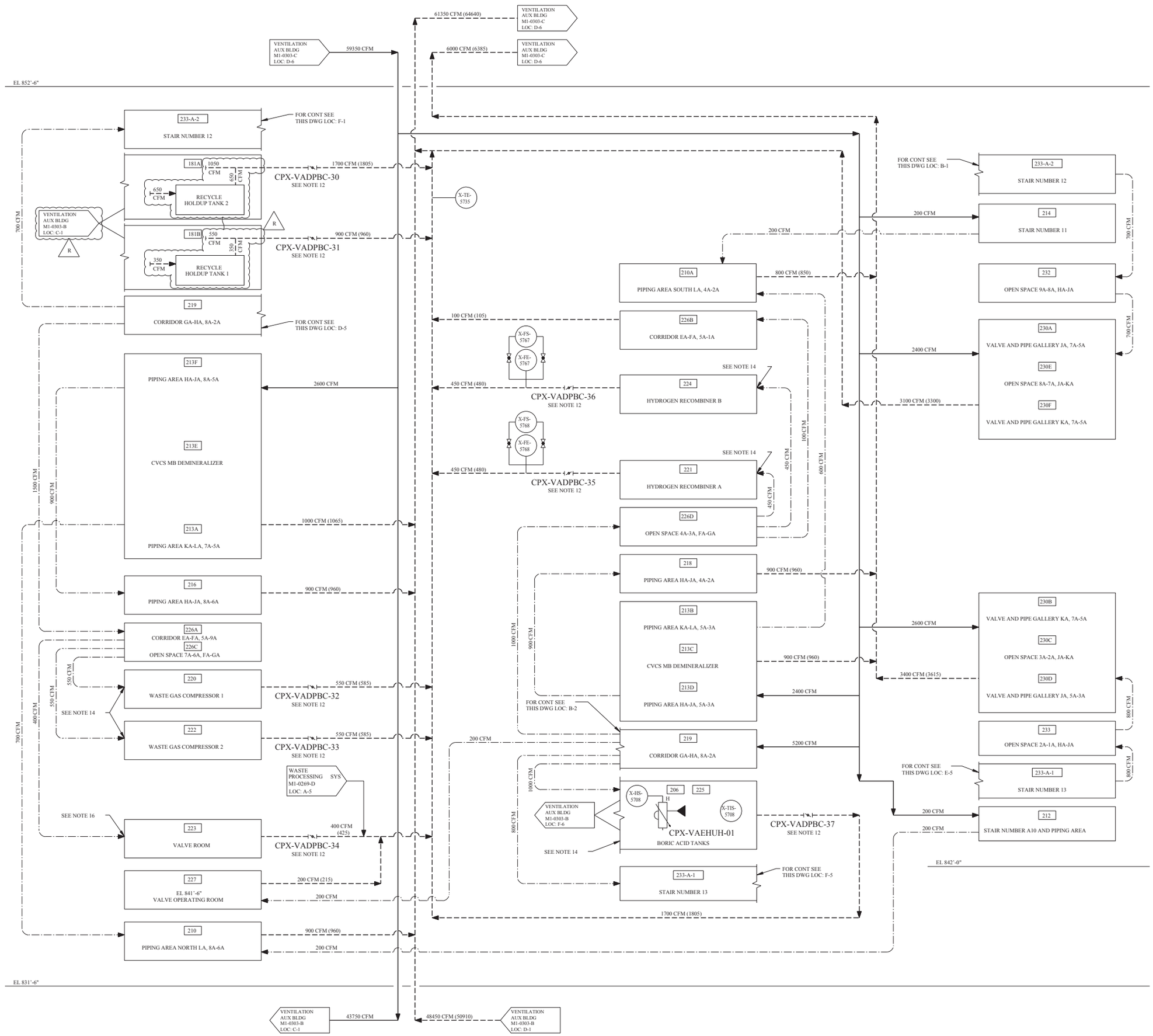

AUXILIARY BLDG VENTILATION SYSTEM

REV	DWN	CHKD	APVD	REMARKS
CP-8	D.K. 11-15 2004	MM 11-15 2004		THIS DRAWING REVISED TO INCORPORATE DESIGN CHANGE FDA 2004-003380-01-00 PER SK-0001-04-003380-01-00.

NOTES:

1. FOR HVAC ABBREVIATIONS AND SYMBOLS SEE DRAWINGS M1-0313 AND M1-0200.
2. DELETED
3. THIS DIAGRAM IS A SCHEMATIC REPRESENTATION AND IS INTENDED TO SHOW GENERAL AIR DISTRIBUTION AND FLOW PATH.
4. BALANCING DAMPERS, REGISTERS, DIFFUSERS, FLEXIBLE CONNECTIONS AND ALL OTHER RELATED ACCESSORIES NOT SHOWN ON THIS DIAGRAM SHALL BE PROVIDED AS INDICATED ON THE HVAC ARRANGEMENT DRAWINGS AND OR SPECIFICATIONS.
5. INSTRUMENTATION AND CONTROLS FOR ROOM COOLING UNITS ARE TO BE SUPPLIED BY EQUIPMENT MANUFACTURERS.
6. THIS FLOW DIAGRAM IS COMMON FOR UNITS 1 AND 2. ALL CP2 EQUIPMENT SHOWN ON THIS FLOW DIAGRAM WILL BE INSTALLED WITH UNIT NUMBER 1 EQUIPMENT.
7. THE AUXILIARY BUILDING WILL BE MAINTAINED AT A SLIGHT NEGATIVE PRESSURE.
8. FOR LOGIC OF X-TIS-6249 AND X-TIS-6249A SEE I&C DRAWING M1-2300-05.
9. FOR LOGIC OF 1-PV-5688 , 1-HV-5689 , 2-PV-5688 AND 2-HV-5689 SEE I&C DRAWING M1-2302-09
10. FOR LOGIC OF 1-TIC-6098 AND 2-TIC-6098 SEE I&C DRAWINGS M1-2307-06 AND M2-2307-09 RESPECTIVELY.
11. FOR LOGIC OF 1-RE-5698 AND 2-RE-5698 SEE I&C DRAWINGS M1 AND M2-2302 SERIES.
12. DAMPER ABANDONED IN PLACE (IN OPEN POSITION). ALL AIR CONNECTIONS AND ELECTRICAL CONNECTIONS ARE DISCONNECTED.
13. AIR FLOW QUANTITIES SHOWN ARE BASED ON A DENSITY OF 0.075 LB/FT OCCURING AT THE STANDARD CONDITION OF DRY AIR AT 70°F AND 29.92" HG BAROMETRIC PRESSURE. QUANTITIES IN PARENTHESES ARE ACTUAL AIR FLOW RATES BASED ON DENSITY AT DESIGN CONDITIONS.
14. AIR ENTERS THROUGH A DOOR WITH AN ELECTRO-THERMAL LINK CONTROL FOR FIRE PROTECTION AND TORNADO VENTING PURPOSES.
15. DELETED
16. AIR ENTERS THROUGH LOUVERS IN DOOR OR WIRE MESH DOORS.
17. THE MAXIMUM AIR DISCHARGE (6900 CFM) FROM THE CONDENSER EXHAUSTING VACUUM PUMPS IS NOT CONSIDERED IN THE FLOW DIAGRAM BALANCE DUE TO THE SHORT DURATION OF THE PRIMING AND HOGGING MODES ASSOCIATED WITH THE VACUUM PUMPS.
18. THE AIR FLOW RATES SHOWN ARE ORIGINAL DESIGN VALUES FOR INITIAL FLOW BALANCING AND DO NOT REPRESENT AS-BUILT. AIR FLOW IS BALANCED TO MAINTAIN ROOM TEMPERATURES WITHIN DESIGN DURING NORMAL OPERATION AND TO ENSURE THE DIRECTION OF AIR FLOW IS AS SHOWN.

REFERENCES:

M1-0200	MECHANICAL DRAWING NOTES AND SYMBOLS
M1-0263	FLOW DIAGRAM SAFETY INJECTION SYSTEM
M1-0300	FLOW DIAGRAM VENTILATION CONTAINMENT
M1-0302	FLOW DIAGRAM VENTILATION SAFEGUARD AND ELECTRICAL AREA
M1-0303-B	FLOW DIAGRAM VENTILATION AUXILIARY BUILDING
M1-0303-C	FLOW DIAGRAM VENTILATION AUXILIARY BUILDING
M1-0304-01	FLOW DIAGRAM VENTILATION OFFICE AND SERVICE AREAS AIR CONDITIONING
M1-0307	FLOW DIAGRAM VENTILATION CHILLED WATER SYSTEM
M1-0309	FLOW DIAGRAM VENTILATION PRIMARY PLANT SUPPLY AND EXHAUST
M1-0311	FLOW DIAGRAM VENTILATION SAFETY CHILLED WATER SYSTEM
M2-0302	FLOW DIAGRAM VENTILATION SAFEGUARD AND ELECTRICAL AREA
M2-0311	FLOW DIAGRAM VENTILATION SAFETY CHILLED WATER SYSTEM

FSAR FIGURE 9.4-2

DRAWING M1-0303-A REV CP-1
HAS BEEN SPLIT INTO THE FOLLOWING SHEETS:
M1-0303-A
M1-0303-C

DRAWING M1-0303 REV CP-12
HAS BEEN SPLIT INTO THE FOLLOWING SHEETS:
M1-0303
M1-0303-A

THIS DRAWING CREATED ELECTRONICALLY

CLASS II

LUMINANT
CPSES
GLEN ROSE, TEXAS

FLOW DIAGRAM VENTILATION
AUXILIARY BUILDING

DWG. NO. M1-0303 | SH. NO. A | REV. CP-8

FINAL PRINT

REF CHKD 3/22/2001

me566300.dgn A M1-0303-A

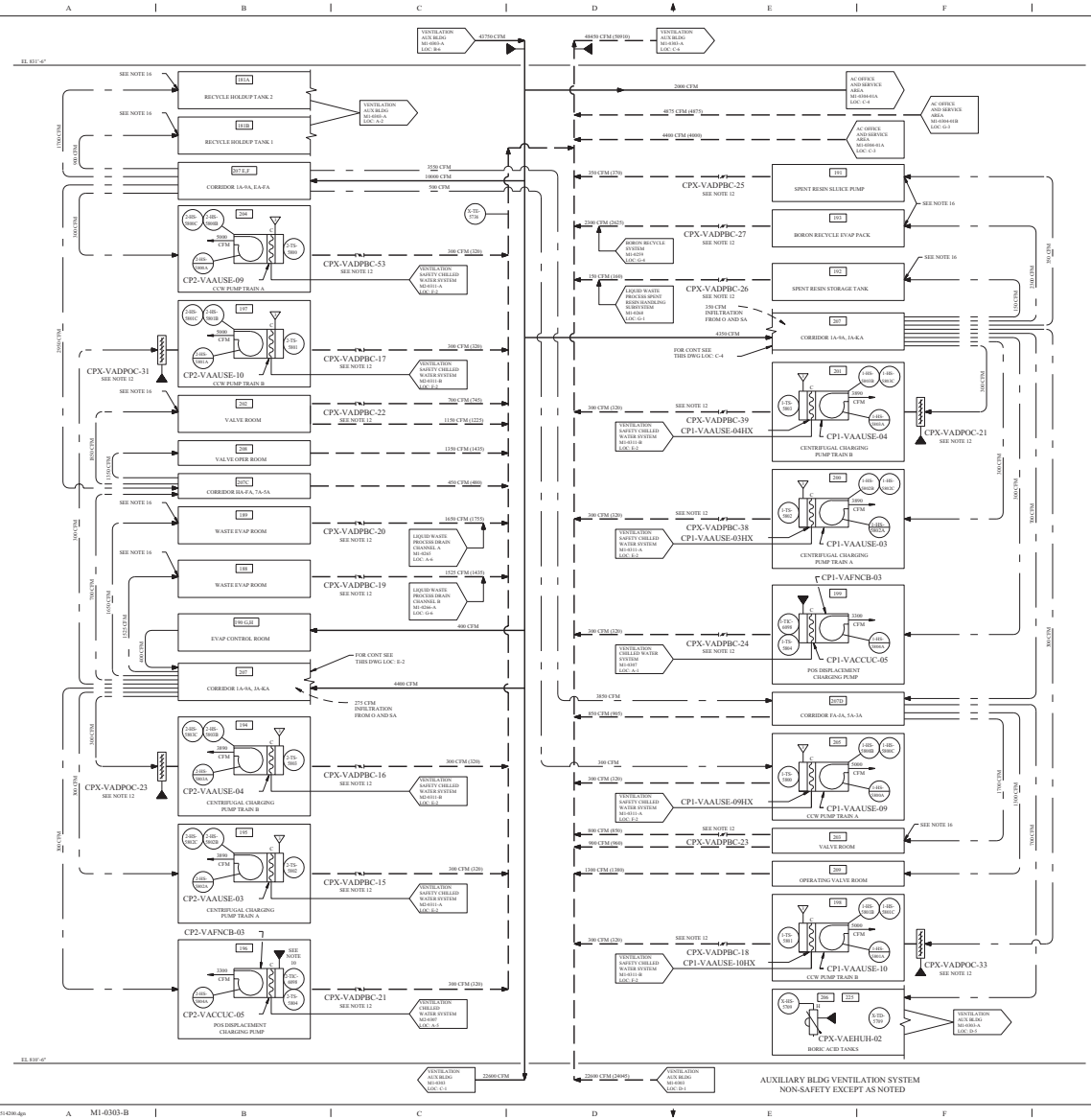

REV	DRN	CHKD	APPD	REMARKS
CP-15				THIS DRAWING REVISED TO INCORPORATE DESIGN CHANGE FCL 2001-00-0010-02 PER SE-2001-T1-SE-0010-02-00.

NOTES:

1. FOR HVAC ABBREVIATIONS AND SYMBOLS SEE DRAWINGS M1-0113 AND M1-0200.
2. DELETED
3. THIS DIAGRAM IS A SCHEMATIC REPRESENTATION AND IS INTENDED TO SHOW GENERAL AIR DISTRIBUTION AND FLOW PATH.
4. BALANCING DAMPERS, REGISTERS, DIFFUSERS, FLEXIBLE CONNECTIONS AND ALL OTHER RELATED ACCESSORIES NOT SHOWN ON THIS DIAGRAM SHALL BE PROVIDED AS INDICATED ON THE HVAC ARRANGEMENT DRAWINGS AND OR SPECIFICATIONS.
5. INSTRUMENTATION AND CONTROLS FOR ROOM COOLING UNITS ARE TO BE SUPPLIED BY EQUIPMENT MANUFACTURERS.
6. THIS FLOW DIAGRAM IS COMMON FOR UNITS 1 AND 2. ALL CPT EQUIPMENT SHOWN ON THIS FLOW DIAGRAM WILL BE INSTALLED WITH UNIT NUMBER 1 EQUIPMENT.
7. THE AUXILIARY BUILDING WILL BE MAINTAINED AT A SLIGHT NEGATIVE PRESSURE.
8. FOR LOGIC OF X-TIS-6249 AND X-TIS-6249-A SEE I&C DRAWING M1-2300-05.
9. FOR LOGIC OF 1-4PV-5688 , 1-4IV-5689 2-4PV-5688 AND 2-4IV-5689 SEE I&C DRAWING M1-2302-09.
10. FOR LOGIC OF 1-TIC-6098 AND 2-TIC-6098 SEE I&C DRAWINGS M1-2307-04 AND M2-2307-09 RESPECTIVELY.
11. FOR LOGIC OF 1-RE-5698 AND 2-RE-5698 SEE I&C DRAWINGS M1 AND M2-2302 SERIES.
12. DAMPER ABANDONED IN PLACE (IN OPEN POSITION). ALL AIR CONNECTIONS AND ELECTRICAL CONNECTIONS ARE DICONNECTED.
13. AIR FLOW QUANTITIES SHOWN ARE BASED ON A DENSITY OF 0.075 LB/FT. OCCURRING AT THE STANDARD CONDITION OF DRY AIR AT 70°F AND 29.92" HG BAROMETRIC PRESSURE. QUANTITIES IN PARENTHESES AND ON DISCHARGE OF SAFETY RELATED FAN COIL UNITS ARE ACTUAL AIR FLOW RATES BASED ON DENSITY AT DESIGN CONDITIONS.
14. AIR ENTERS THROUGH A DOOR WITH AN ELECTRO-THERMAL LINK CONTROL FOR FIRE PROTECTION AND TORNADO VENTING PURPOSES.
15. THE MAXIMUM AIR DISCHARGE (6900 CFM) FROM THE CONDENSER EXHAUSTING VACUUM PUMPS IS NOT CONSIDERED IN THE FLOW DIAGRAM BALANCE DUE TO THE SHORT DURATION OF THE PRIMING AND HOGGING MODES ASSOCIATED WITH THE VACUUM PUMPS.
16. AIR ENTERS THROUGH LOUVERS IN DOOR OR WIRE MESH DOORS.
17. FOR THE NON-SAFETY VENTILATION SYSTEMS, THE AIR FLOW RATES SHOWN ARE ORIGINAL DESIGN VALUES FOR INITIAL FLOW BALANCING AND DO NOT REPRESENT AS-BUILT. AIR FLOW IS BALANCED TO MAINTAIN ROOM TEMPERATURES WITHIN DESIGN DURING NORMAL OPERATION AND TO ENSURE THE DIRECTION OF AIR FLOW IS AS SHOWN.

REFERENCES:

M1-0200	MECHANICAL DRAWING NOTES AND SYMBOLS
M1-0259	FLOW DIAGRAM BORON RECYCLE SYSTEM
M1-0265	FLOW DIAGRAM LIQUID WASTE PROCESSING DRAIN CHANNEL A
M1-0266	FLOW DIAGRAM LIQUID WASTE PROCESSING DRAIN CHANNEL B
M1-0268	FLOW DIAGRAM LIQUID WASTE PROCESSING SPENT RESIN HANDLING SUBSYSTEM
M1-0313	FLOW DIAGRAM VENTILATION AAP BLDG AND CONTROL BLDG UPS AREA A/C SYSTEMS
M1-0303	FLOW DIAGRAM VENTILATION AUXILIARY BUILDING
M1-0303-A	FLOW DIAGRAM VENTILATION AUXILIARY BUILDING
M1-0307	FLOW DIAGRAM VENTILATION CHILLED WATER SYSTEM
M1-0311-A	FLOW DIAGRAM VENTILATION SAFETY CHILLED WATER SYSTEM
M1-0311-B	FLOW DIAGRAM VENTILATION SAFETY CHILLED WATER SYSTEM
M2-0311	FLOW DIAGRAM VENTILATION SAFETY CHILLED WATER SYSTEM
M2-0307	FLOW DIAGRAM VENTILATION CHILLED WATER SYSTEM
M1-0304-01A	FLOW DIAGRAM AIR CONDITIONING OFFICE AND SERVICE AREA
M1-0304-01B	FLOW DIAGRAM AIR CONDITIONING OFFICE AND SERVICE AREA

DRAWING M1-0303 REV CP-13
HAS BEEN SPLIT INTO THE FOLLOWING SHEETS

M1-0303
M1-0303-B

FSAR FIGURE 9.4-2

FIGURES NOT LISTED BELOW THIS DOUBLE LINE

CLASS I
(NUCLEAR SAFETY-RELATED)

SAFETY CLASS 1	SEISMIC CATEGORY I
SAFETY CLASS 2	CLASS 1E
SAFETY CLASS 3	ASSOCIATED CIRCUITS

TXU POWER
CPSES
GLEN ROSE, TEXAS

FLOW DIAGRAM VENTILATION
AUXILIARY BUILDING

DWG. NO. M1-0303 | SH. NO. B | REV. CP-15

SBSSSBD-AUE BRXSS

ma514200.dgn M1-0303-B

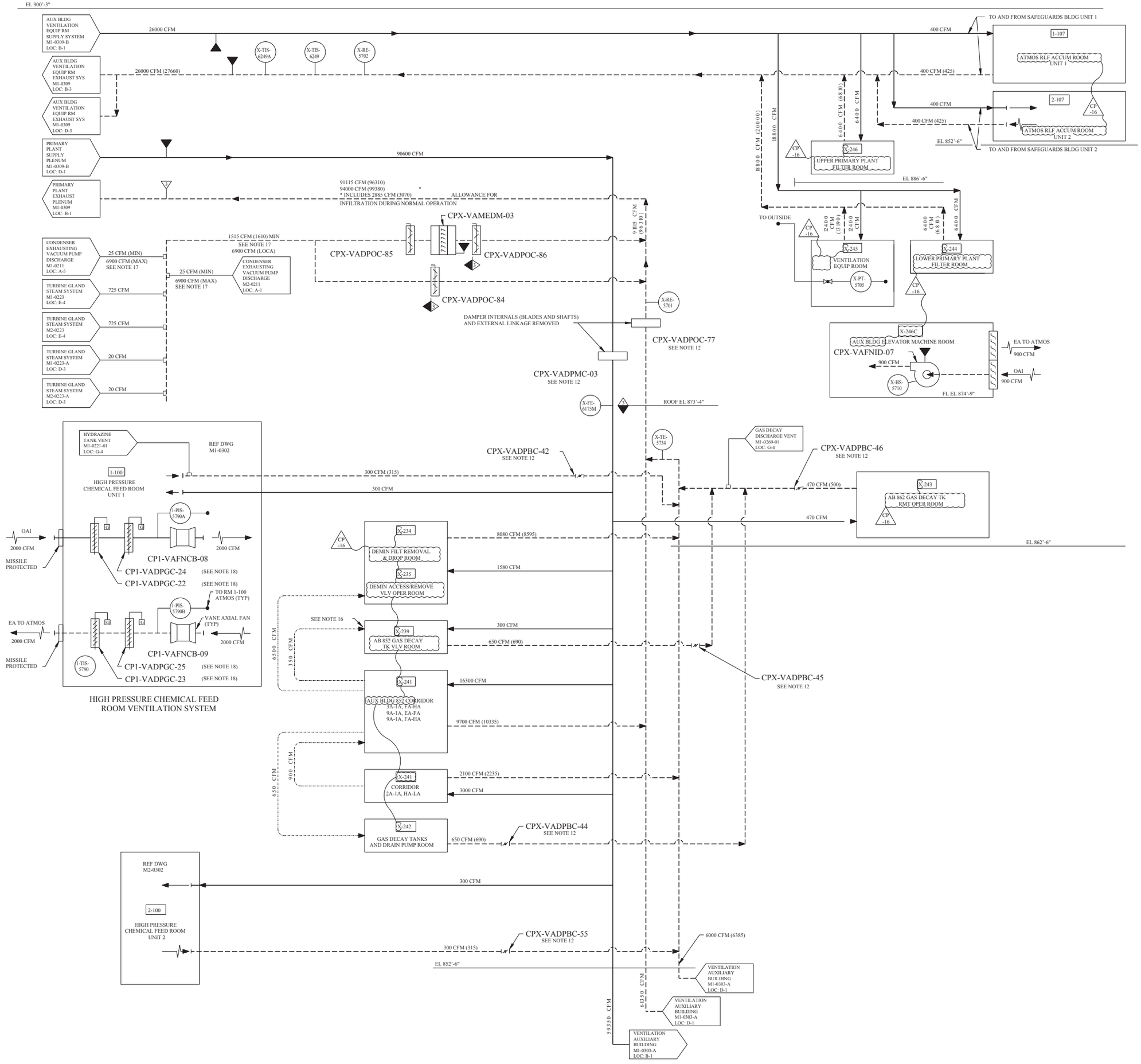

REV	DWN	CHKD	APVD	REMARKS
CP-16	CWG 05-05-2014			THIS DRAWING REVISED TO INCORPORATE EDITORIAL CHANGES PER AI-CR-2014-004067-1.

NOTES:

1. FOR HVAC ABBREVIATIONS AND SYMBOLS SEE DRAWINGS M1-0313 AND M1-0200.
2. DELETED
3. THIS DIAGRAM IS A SCHEMATIC REPRESENTATION AND IS INTENDED TO SHOW GENERAL AIR DISTRIBUTION AND FLOW PATH.
4. BALANCING DAMPERS, REGISTERS, DIFFUSERS, FLEXIBLE CONNECTIONS AND ALL OTHER RELATED ACCESSORIES NOT SHOWN ON THIS DIAGRAM SHALL BE PROVIDED AS INDICATED ON THE HVAC ARRANGEMENT DRAWINGS AND OR SPECIFICATIONS.
5. INSTRUMENTATION AND CONTROLS FOR ROOM COOLING UNITS ARE TO BE SUPPLIED BY EQUIPMENT MANUFACTURERS.
6. THIS FLOW DIAGRAM IS COMMON FOR UNITS 1 AND 2. ALL CP2 EQUIPMENT SHOWN ON THIS FLOW DIAGRAM WILL BE INSTALLED WITH UNIT NUMBER 1 EQUIPMENT.
7. THE AUXILIARY BUILDING WILL BE MAINTAINED AT A SLIGHT NEGATIVE PRESSURE.
8. FOR LOGIC OF X-TIS-6249 AND X-TIS-6249A SEE I&C DRAWING M1-2300-05.
9. FOR LOGIC OF 1-PV-5688 , 1-HV-5689 , 2-PV-5688 AND 2-HV-5689 SEE I&C DRAWING M1-2302-09
10. FOR LOGIC OF 1-TIC-6098 AND 2-TIC-6098 SEE I&C DRAWINGS M1-2307-06 AND M2-2307-09 RESPECTIVELY.
11. FOR LOGIC OF 1-RE-5698 AND 2-RE-5698 SEE I&C DRAWINGS M1 AND M2-2302 SERIES.
12. DAMPER ABANDONED IN-PLACE (IN OPEN POSITION). ALL AIR CONNECTIONS AND ELECTRICAL CONNECTIONS ARE DISCONNECTED.
13. AIR FLOW QUANTITIES SHOWN ARE BASED ON A DENSITY OF 0.075 LB/FT OCCURRING AT THE STANDARD CONDITION OF DRY AIR AT 70□F AND 29.92" HG BAROMETRIC PRESSURE. QUANTITIES IN PARENTHESES ARE ACTUAL AIR FLOW RATES BASED ON DENSITY AT DESIGN CONDITIONS.
14. AIR ENTERS THROUGH A DOOR WITH AN ELECTRO-THERMAL LINK CONTROL FOR FIRE PROTECTION AND TORNADO VENTING PURPOSES.
15. DELETED
16. AIR ENTERS THROUGH LOUVERS IN DOOR OR WIRE MESH DOORS.
17. THE MAXIMUM AIR DISCHARGE (6900 CFM) FROM THE CONDENSER EXHAUSTING VACUUM PUMPS IS NOT CONSIDERED IN THE FLOW DIAGRAM BALANCE DUE TO THE SHORT DURATION OF THE PRIMING AND HOGGING MODES ASSOCIATED WITH THE VACUUM PUMPS.
18. DAMPERS CP1-VADPGC-22 , CP1-VADPGC-23 , CP1-VADPGC-24 AND CP1-VADPGC-25 WERE RETAGGED FROM DAMPERS CP2-VADPGC-16 , CP2-VADPGC-17 , CP2-VADPGC-18 AND CP2-VADPGC-15 RESPECTIVELY.
19. THE AIR FLOW RATES SHOWN ARE ORIGINAL DESIGN VALUES FOR INITIAL FLOW BALANCING AND DO NOT REPRESENT AS-BUILT. AIR FLOW IS BALANCED TO MAINTAIN ROOM TEMPERATURES WITHIN DESIGN DURING NORMAL OPERATION AND TO ENSURE THE DIRECTION OF AIR FLOW IS AS SHOWN.

REFERENCES:

M1-0200	MECHANICAL DRAWING NOTES AND SYMBOLS
M1-0211	FLOW DIAGRAM CONDENSER VACUUM AND WATER BOX PRIMING SYSTEM
M1-0221	FLOW DIAGRAM CHEMICAL FEED SYSTEM STEAM GENERATOR RECIRCULATION SUBSYSTEMS
M1-0225	FLOW DIAGRAM FIRE PROTECTION SYSTEM
M1-0269	FLOW DIAGRAM WASTE PROCESSING (GAS)
M1-0302	FLOW DIAGRAM VENTILATION SAFEGUARDS AND ELECTRICAL AREA
M1-0303-A	FLOW DIAGRAM VENTILATION AUXILIARY BUILDING
M1-0309	FLOW DIAGRAM VENTILATION PRIMARY PLANT SUPPLY AND EXHAUST
M1-0309-B	FLOW DIAGRAM VENTILATION PRIMARY PLANT SUPPLY AND EXHAUST
M2-0302	FLOW DIAGRAM VENTILATION SAFEGUARDS AND ELECTRICAL AREA
M1-0313	FLOW DIAGRAM VENTILATION AAP BLDG AND CONTROL BLDG UPS AREA A/C SYSTEMS

FSAR FIGURE 9.4-2

THIS DRAWING CREATED ELECTRONICALLY

DRAWING M1-0303-A REV CP-1
HAS BEEN SPLIT INTO THE FOLLOWING SHEETS:
M1-0303-A
M1-0303-C

CLASS I
(NUCLEAR SAFETY-RELATED)

SAFETY CLASS 1	SEISMIC CATEGORY I
SAFETY CLASS 2	CLASS IE
SAFETY CLASS 3	ASSOCIATED CIRCUITS

LUMINANT
CPNPP
GLEN ROSE, TEXAS

FLOW DIAGRAM VENTILATION AUXILIARY BUILDING

DWG. NO. M1-0303 | SH. NO. C | REV. CP-16

< FINAL PRINT >

me526300.dgn A M1-0303-C

$$$$$$$$DATE$$$$$$$ REF CHKD 10/24/2003

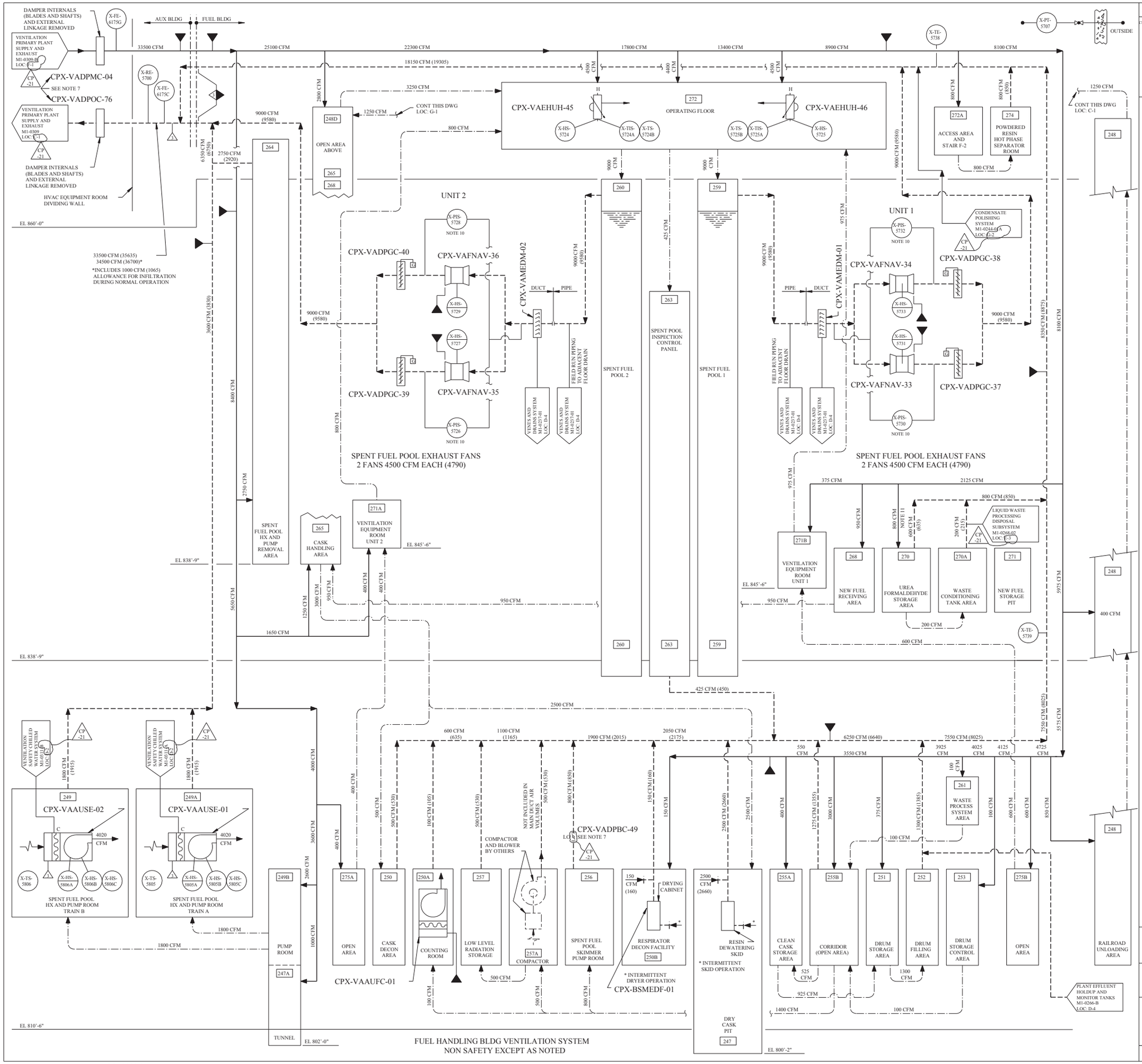

FUEL HANDLING BLDG VENTILATION SYSTEM
NON SAFETY EXCEPT AS NOTED

REV	DWN	CHKD	APVD	REMARKS
CP-21	DEK 06-03-2010			THIS DRAWING REVISED TO EDITORIALLY CORRECT DRAWING REFERENCES PER CR-2010-007228 AND SHOW CORRECT VALVE SYMBOL FOR CPX-VDDPBC-49.

NOTES:

1. FOR ABBREVIATIONS AND SYMBOLS SEE DRAWINGS M1-0313 AND M1-0200.
2. THIS DIAGRAM IS A SCHEMATIC REPRESENTATION AND IS INTENDED TO SHOW GENERAL AIR DISTRIBUTION AND FLOW PATHS.
3. BALANCING DAMPERS, REGISTERS, DIFFUSERS, FLEXIBLE CONNECTIONS AND ALL OTHER RELATED ACCESSORIES NOT SHOWN ON THIS DIAGRAM SHALL BE PROVIDED AS INDICATED ON THE HVAC ARRANGEMENT DRAWING AND SPECIFICATIONS.
4. INSTRUMENTATION AND CONTROLS FOR ROOM COOLING UNITS ARE TO BE SUPPLIED BY EQUIPMENT MANUFACTURERS.
5. THE FUEL HANDLING BUILDING WILL BE MAINTAINED AT A SLIGHT NEGATIVE PRESSURE.
6. FOR LOGIC OF CHANNEL X-FE-6175C SEE ICD M1-2509.
7. DAMPER ABANDONED IN PLACE (IN OPEN POSITION). ALL AIR CONNECTIONS AND ELECTRICAL CONNECTIONS ARE DISCONNECTED.
8. AIR FLOW QUANTITIES SHOWN ARE BASED ON A DENSITY OF 0.075 LB/FT OCCURRING AT THE STANDARD CONDITION OF DRY AIR AT 70°F AND 29.92" HG BAROMETRIC PRESSURE. QUANTITIES IN PARENTHESES AND ON DISCHARGE OF SAFETY RELATED FAN COIL UNITS ARE ACTUAL AIR FLOW RATES BASED ON DENSITY AT DESIGN CONDITIONS.
9. AIR FLOW FOR ROOM 270 INCLUDES ADDITIONAL 500 CFM RESERVED FOR ROOM 271 IF REQUIRED AT A LATER DATE.
10. THE ALARM FUNCTION OF THIS INSTRUMENT IS DEACTIVATED.

REFERENCES:

M1-0200	MECHANICAL SYMBOLS AND NOTES
M1-0237-01	FLOW DIAGRAM VENTS AND DRAINS SYSTEM TURBINE AND FUEL HANDLING BLDG SHEET 3 OF 4
M1-0244-01	FLOW DIAGRAM CONDENSATE POLISHING SYSTEM
M1-0268-02	FLOW DIAGRAM LIQUID WASTE PROCESSING DISPOSAL SUBSYSTEM
M1-0300	FLOW DIAGRAM VENTILATION CONTAINMENT
M1-0309	FLOW DIAGRAM VENTILATION PRIMARY PLANT SUPPLY AND EXHAUST
M1-0311	FLOW DIAGRAM VENTILATION SAFETY CHILLED WATER SYSTEM
M1-0313	FLOW DIAGRAM VENTILATION AAP BLDG AND CONTROL BLDG UPS AREA A/C SYSTEMS

FSAR FIGURE 9.4-2

THIS DRAWING CREATED ELECTRONICALLY

CLASS I
(NUCLEAR SAFETY-RELATED)

SAFETY CLASS 1	SEISMIC CATEGORY I
SAFETY CLASS 2	CLASS 1E
SAFETY CLASS 3	ASSOCIATED CIRCUITS

LUMINANT
CPNPP
GLEN ROSE, TEXAS

FLOW DIAGRAM
VENTILATION
FUEL HANDLING BUILDING

DWG. NO. M1-0303 | SH. NO. 01 | REV. CP-21

FINAL PRINT

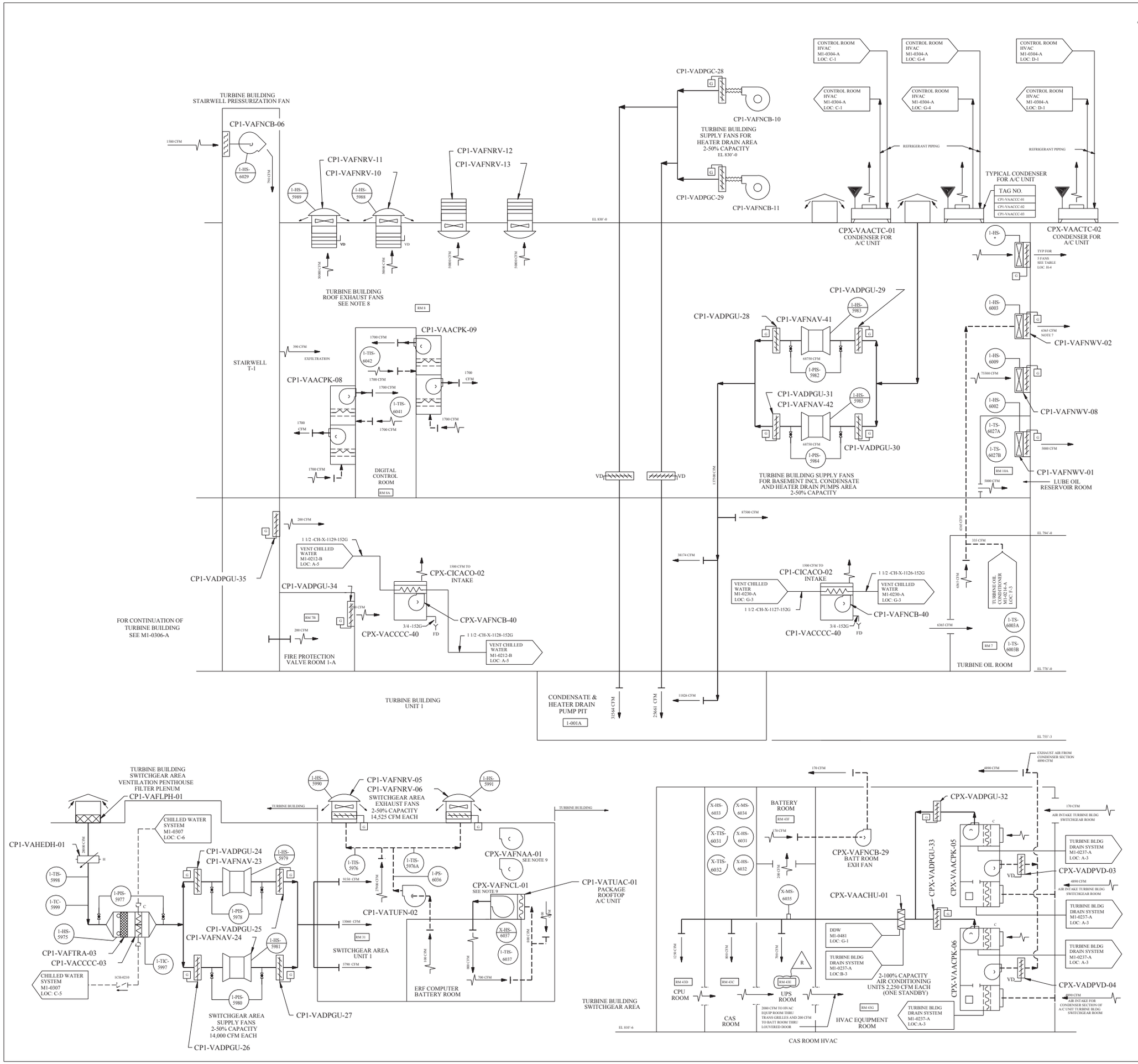

REV	DWN	CHKD	APVD	REMARKS
CP-30	JKG 04-21 2010	SM 04-21 2010		THIS DRAWING REVISED TO INCORPORATE DESIGN CHANGE FDA-2010-000075-01-00 PER SK-0001-10-000075-01-00.

NOTES:

1. FOR HVAC ABBREVIATIONS AND SYMBOLS SEE DWG M1-0313.
2. FOR I&C AND MECHANICAL SYMBOLS SEE DWG M1-0200.
3. THIS DIAGRAM IS A SCHEMATIC REPRESENTATION AND IS INTENDED TO SHOW GENERAL AIR DISTRIBUTION AND FLOW PLANS.
4. BALANCING DAMPERS, REGISTERS, DIFFUSERS, FLEXIBLE CONNECTIONS AND ALL OTHER RELATED ACCESSORIES NOT SHOWN ON THIS DIAGRAM SHALL BE PROVIDED AS INDICATED ON THE HVAC ARRANGEMENT DRAWING AND SPECIFICATION.
5. THE TURBINE BUILDING AND SWITCHGEAR AREA WILL BE MAINTAINED AT ATMOSPHERIC PRESSURE.
6. ALL ROOT VALVES FOR DIFFERENTIAL PRESSURE INDICATING SWITCHES SHOWN ON THIS DRAWING WILL BE SUPPLIED BY SPECIFICATION MS-85.
7. AIR FLOW QUANTITY FOR CP1-VAFNWV-02 , LOC G-2 REFLECTS EQUIPMENT AS BUILT CAPACITY.
8. THERE ARE FOUR ROOF EXHAUST FANS: THREE ARE RUNNING AND ONE IS KEPT IN STANDBY.
9. FAN ABANDONED IN PLACE WITH ALL CONNECTING DUCTWORK REMOVED.
10. AIR FLOW RATES SHOWN ARE ORIGINAL DESIGN VALUES FOR INITIAL FLOW BALANCING AND DO NOT REPRESENT AS-BUILT. AIR FLOW IS BALANCED TO MAINTAIN ROOM TEMPERATURES WITHIN DESIGN DURING NORMAL OPERATION AND TO ENSURE THE DIRECTION OF AIR FLOW IS AS SHOWN.

REFERENCES:

1. M1-0313	FLOW DIAGRAM-VENTILATION AAP BLDG AND CONTROL BLDG UPS AREA A/C SYSTEMS
2. M1-0200	MECHANICAL SYMBOLS AND NOTES

TURBINE BUILDING WALL VENTILATORS (LOC. G-2)

TAG NO	CFM	I-HS-
CP1-VAFNWV-03	75,500	6004
CP1-VAFNWV-04	75,500	6005
CP1-VAFNWV-05	75,500	6006
CP1-VAFNWV-06	75,500	6007
CP1-VAFNWV-07	75,500	6008

FSAR FIGURE 9.4-3

THIS DRAWING CREATED ELECTRONICALLY

DRAWING M1-0306 REV CP-18
HAS BEEN SPLIT INTO THE FOLLOWING SHEETS:
M1-0306
M1-0306-A

NON-SAFETY

LUMINANT
CPNPP
GLEN ROSE, TEXAS

FLOW DIAGRAM
VENTILATION
TURBINE BUILDING

DWG. NO. M1-0306 | SH. NO. - | REV. CP-30

FINAL PRINT

me979000.dgn M1-0306

REF CKD CP-25 01-05-01

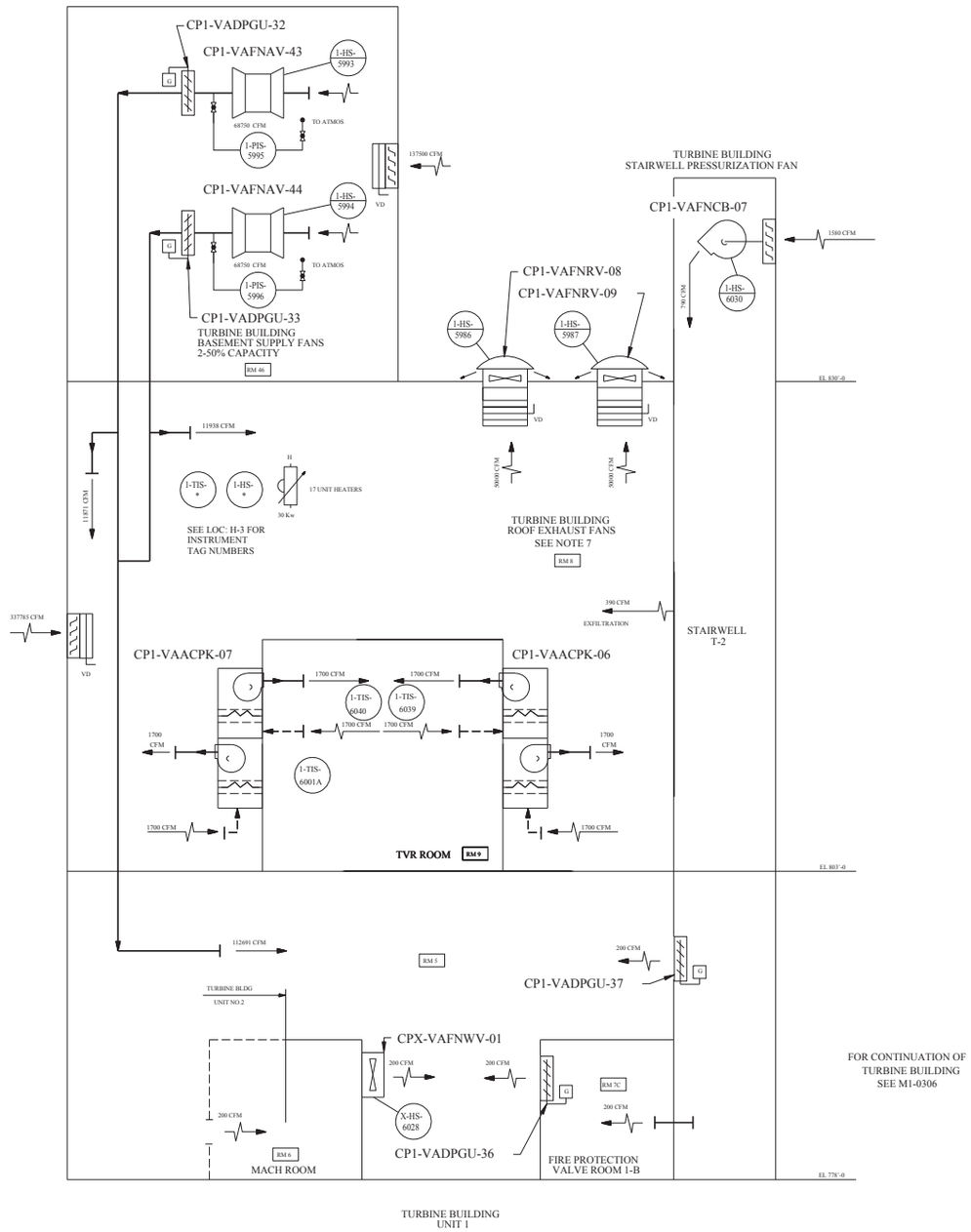

FOR CONTINUATION OF
TURBINE BUILDING
SEE M1-0306

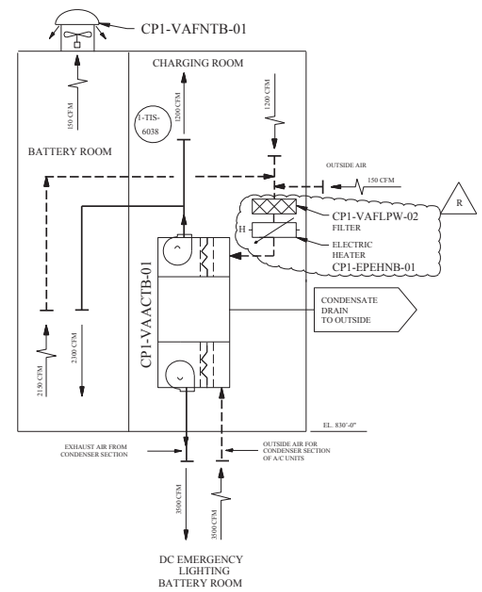

REV	DWN	CHKD	APVD	REMARKS
CP-4	JRMC 03-31 2007	SM 03-31 2007		THIS DRAWING REVISED TO INCORPORATE DESIGN CHANGE FDA-2006-003693-01-00 PER SK-0001-06-003693-01-00.

NOTES:

1. FOR HVAC ABBREVIATIONS AND SYMBOLS SEE DWG M1-0313.
2. FOR I&C AND MECHANICAL SYMBOLS SEE DWG M1-0200.
3. THIS DIAGRAM IS A SCHEMATIC REPRESENTATION AND IS INTENDED TO SHOW GENERAL AIR DISTRIBUTION AND FLOW PLANS.
4. BALANCING DAMPERS, REGISTERS, DIFFUSERS, FLEXIBLE CONNECTIONS AND ALL OTHER RELATED ACCESSORIES NOT SHOWN ON THIS DIAGRAM SHALL BE PROVIDED AS INDICATED ON THE HVAC ARRANGEMENT DRAWING AND SPECIFICATION.
5. THE TURBINE BUILDING AND SWITCHGEAR AREA WILL BE MAINTAINED AT ATMOSPHERIC PRESSURE.
6. ALL ROOT VALVES FOR DIFFERENTIAL PRESSURE INDICATING SWITCHES SHOWN ON THIS DRAWING WILL BE SUPPLIED BY SPECIFICATION MS-85.
7. THERE ARE FOUR ROOF EXHAUST FANS: THREE ARE RUNNING AND ONE IS KEPT IN STANDBY.
8. AIR FLOW RATES SHOWN ARE ORIGINAL DESIGN VALUES FOR INITIAL FLOW BALANCING AND DO NOT REPRESENT AS-BUILT AIR FLOW IS BALANCED TO MAINTAIN ROOM TEMPERATURES WITHIN DESIGN DURING NORMAL OPERATION AND TO ENSURE THE DIRECTION OF AIR FLOW IS AS SHOWN.

REFERENCES:

1. M1-0313 — FLOW DIAGRAM-VENTILATION AAP BLDG AND CONTROL BLDG UPS AREA A/C SYSTEMS
2. M1-0200 — MECHANICAL SYMBOLS AND NOTES

UNIT HEATERS		
TAG NUMBER	1-HS-	1-TIS-
CP1-VAEHUH-03	6010	6010
CP1-VAEHUH-04	6011	6011
CP1-VAEHUH-05	6012	6012
CP1-VAEHUH-06	6013	6013
CP1-VAEHUH-07	6014	6014
CP1-VAEHUH-08	6015	6015
CP1-VAEHUH-09	6016	6016
CP1-VAEHUH-10	6017	6017
CP1-VAEHUH-11	6018	6018
CP1-VAEHUH-12	6019	6019
CP1-VAEHUH-13	6020	6020
CP1-VAEHUH-14	6021	6021
CP1-VAEHUH-15	6022	6022
CP1-VAEHUH-16	6023	6023
CP1-VAEHUH-17	6024	6024
CP1-VAEHUH-18	6025	6025
CP1-VAEHUH-19	6026	6026

FSAR FIGURE 9.4-3

THIS DRAWING CREATED ELECTRONICALLY

DRAWING M1-0306 REV CP-18
HAS BEEN SPLIT INTO THE FOLLOWING SHEETS:
M1-0306
M1-0306-A

NON-SAFETY

LUMINANT
CPSES
GLEN ROSE, TEXAS

FLOW DIAGRAM
VENTILATION
TURBINE BUILDING

DWG. NO. M1-0306 | SH. NO. A | REV. CP-4

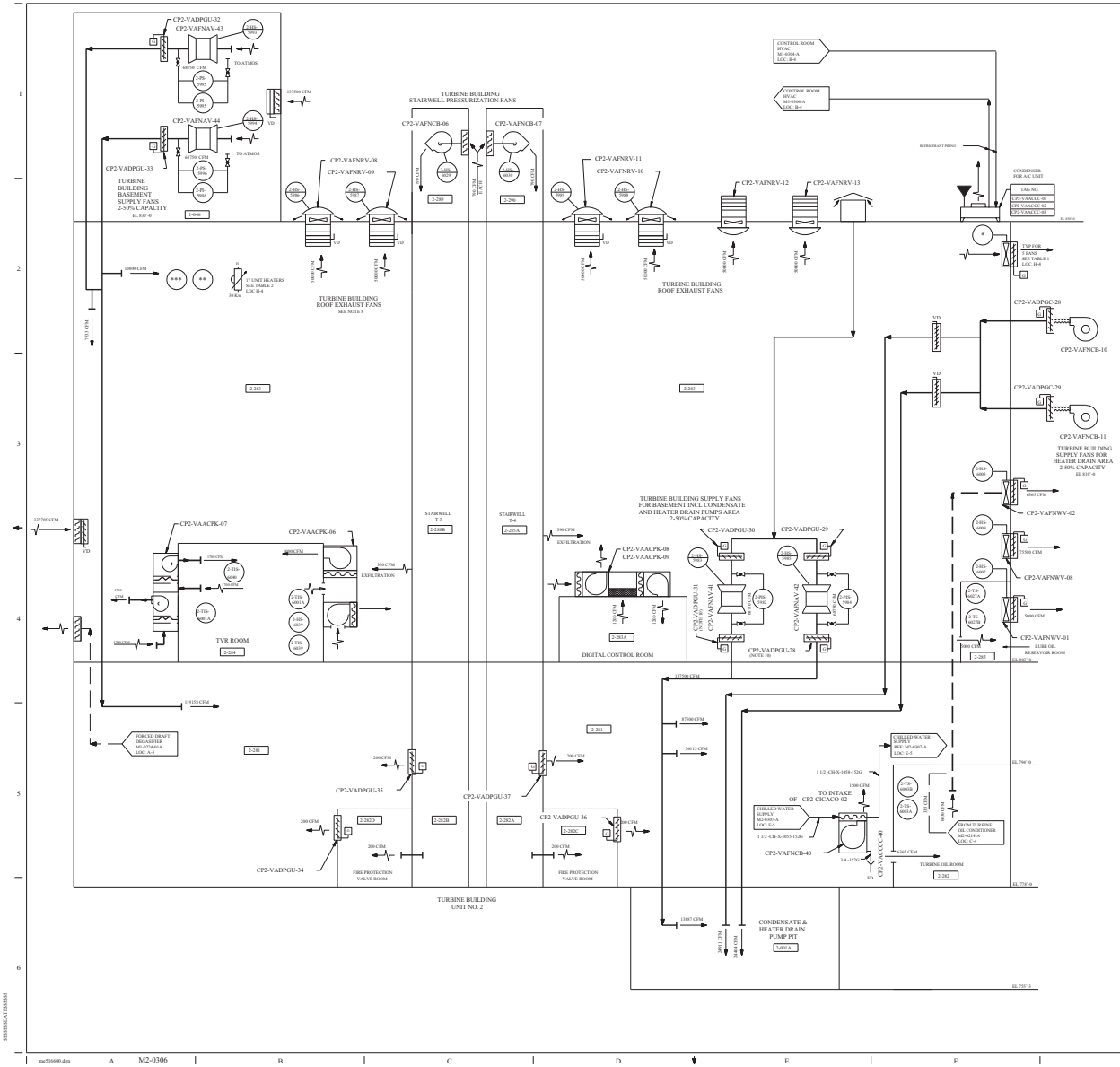

REV	DWG	DRG	APV	REMARKS
CP-23				THIS DRAWING REVISED TO INCORPORATE DESIGN CHANGE PEG 2001-0050/0420 AS PER ML-0051-01 AND ML-02-09. EDITORIAL CHANGES AS NOTED

NOTES:

1. FOR HVAC ABBREVIATIONS AND SYMBOLS SEE DWG M1-0311 AND M1-0200.
2. THIS DIAGRAM IS A SCHEMATIC REPRESENTATION AND IS INTENDED TO SHOW GENERAL AIR DISTRIBUTION.
3. BALANCING DAMPERS, REGISTERS, DIFFUSERS, FLEXIBLE CONNECTIONS AND ALL OTHER RELATED ACCESSORIES NOT SHOWN ON THIS DIAGRAM SHALL BE PROVIDED AS INDICATED ON THE HVAC ARRANGEMENT DRAWINGS
4. THE TURBINE BUILDING WILL BE MAINTAINED AT ATMOSPHERIC PRESSURE.
5. ALL ROOF VALVES FOR DIFFERENTIAL PRESSURE INDICATING SWITCHES SHOWN ON THIS DRAWING WILL BE SUPPLIED BY SPECIFICATION MS-0015
6. AIR FLOW QUANTITIES SHOWN ARE BASED ON A DENSITY OF 0.075 lb/FT OCCURRING AT THE STANDARD CONDITION OF DRY AIR AT 70° F AND 29.92" HG BAROMETRIC PRESSURE.
7. FIRE DAMPERS REMOVED FROM FLOW DIAGRAM ONLY, FOR LOCATIONS SEE DUCT LAYOUT DRAWINGS.
8. THERE ARE FOUR EXHAUST FANS THREE ARE RUNNING AND ONE IS KEPT STANDBY.
9. DELETED
10. DELETED
11. AIR FLOW RATES SHOWN ARE ORIGINAL DESIGN VALUES FOR INITIAL FLOW BALANCING AND DO NOT REPRESENT AS-BUILT. AIR FLOW IS BALANCED TO MAINTAIN ROOM TEMPERATURES WITHIN DESIGN DURING NORMAL OPERATION AND TO ENSURE THE DIRECTION OF AIR FLOW IS AS SHOWN.

REFERENCE DRAWING:

1.	M1-0200	MECHANICAL SYMBOLS AND NOTES
2.	M1-0300-A	FLOW DIAGRAM CONTROL ROOM AIR CONDITIONING
3.	M2-0307	FLOW DIAGRAM VENTILATION CHILLED WATER SYSTEM
4.	M1-0313	FLOW DIAGRAM VENT AAP BLDG AND CONTROL BLDG UPS AREA A/C SYSTEM
5.	M2-0459 SERIES	VENTILATION-TURBINE BLDG PLAN AT EL 775'-0"
6.	M2-0451 SERIES	VENTILATION-TURBINE BLDG PLAN AT EL 803'-0"
7.	M2-0452 SERIES	VENTILATION-TURBINE BLDG PLAN AT EL 810'-0"
8.	M2-0453 SERIES	VENTILATION-TURBINE BLDG PART PLANS AND SECTIONS

EDITORIAL

TABLE 1

TURBINE BUILDING WALL VENTILATORS (LOC. F-2)

TAG NO	CFM	*
CP2-VAFNWV-01	7550	2-HS-6004
CP2-VAFNWV-04	7550	2-HS-6005
CP2-VAFNWV-05	7550	2-HS-6006
CP2-VAFNWV-06	7550	2-HS-6007
CP2-VAFNWV-07	7550	2-HS-6008

TABLE 2

UNIT HEATERS

TAG NO	**	***
CP2-VAEHS-01	2-HS-6010	2-TIS-6010
CP2-VAEHS-04	2-HS-6011	2-TIS-6011
CP2-VAEHS-05	2-HS-6012	2-TIS-6012
CP2-VAEHS-06	2-HS-6013	2-TIS-6013
CP2-VAEHS-07	2-HS-6014	2-TIS-6014
CP2-VAEHS-08	2-HS-6015	2-TIS-6015
CP2-VAEHS-09	2-HS-6016	2-TIS-6016
CP2-VAEHS-10	2-HS-6017	2-TIS-6017
CP2-VAEHS-11	2-HS-6018	2-TIS-6018
CP2-VAEHS-12	2-HS-6019	2-TIS-6019
CP2-VAEHS-13	2-HS-6020	2-TIS-6020
CP2-VAEHS-14	2-HS-6021	2-TIS-6021
CP2-VAEHS-15	2-HS-6022	2-TIS-6022
CP2-VAEHS-16	2-HS-6023	2-TIS-6023
CP2-VAEHS-17	2-HS-6024	2-TIS-6024
CP2-VAEHS-18	2-HS-6025	2-TIS-6025
CP2-VAEHS-19	2-HS-6026	2-TIS-6026

DRAWING M2-0306 REV CP-19
HAS BEEN SPLIT INTO THE FOLLOWING SHEETS:
M2-0306
M2-0306-A

FSAR FIGURE 9.4-3

THIS DRAWING CAN BE UTILIZED VERTICALLY

NON-SAFETY

TXU POWER
CPSES
GLEN ROSE, TEXAS

FLOW DIAGRAM
VENTILATION
TURBINE BUILDING

DWG. NO. M2-0306 | SH. NO. | REV. CP-23

mc516680.dgn M2-0306

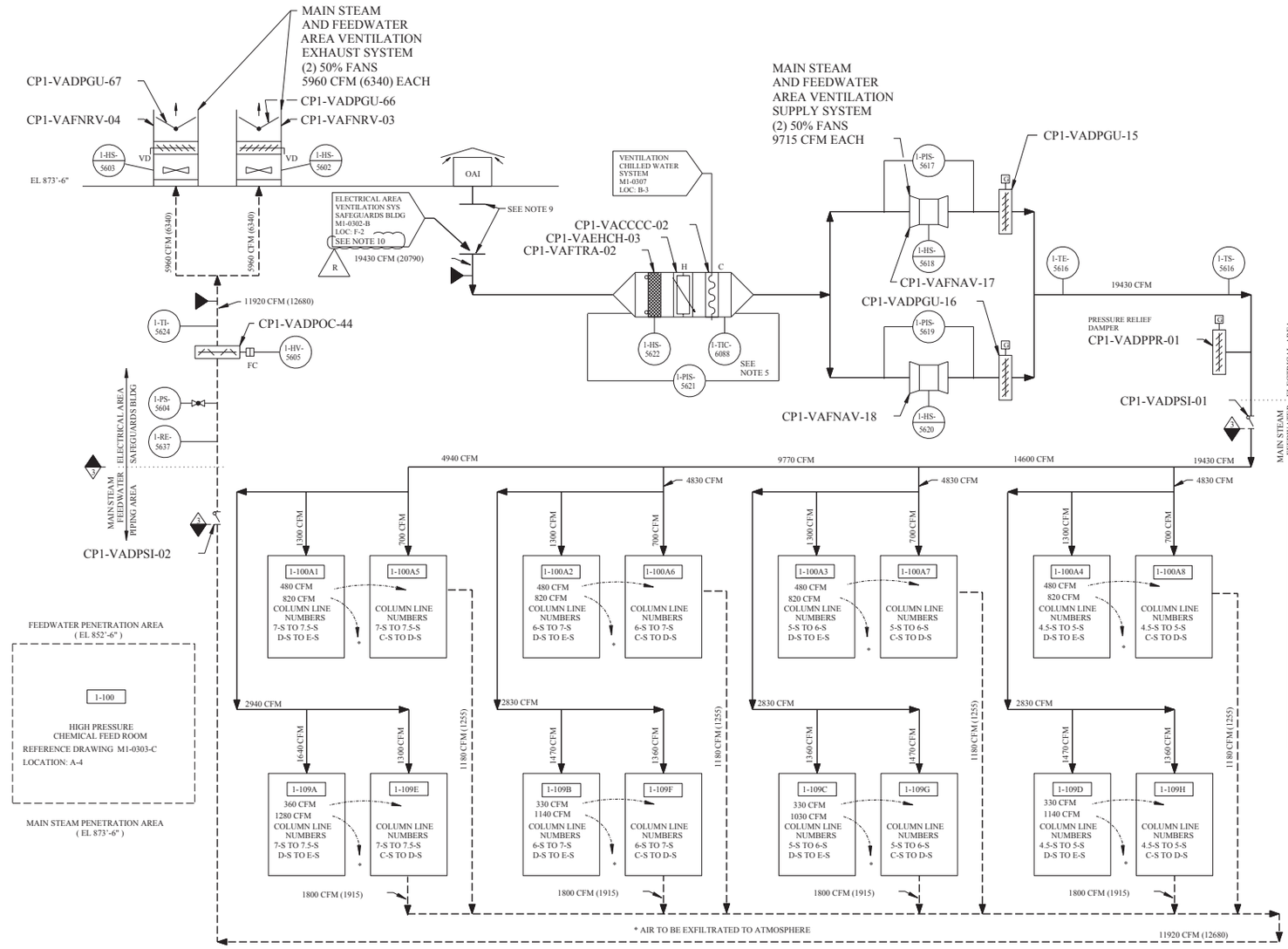

MAIN STEAM AND FEEDWATER AREA VENTILATION SYSTEM
NON-NUCLEAR SAFETY (EXCEPT AS NOTED)

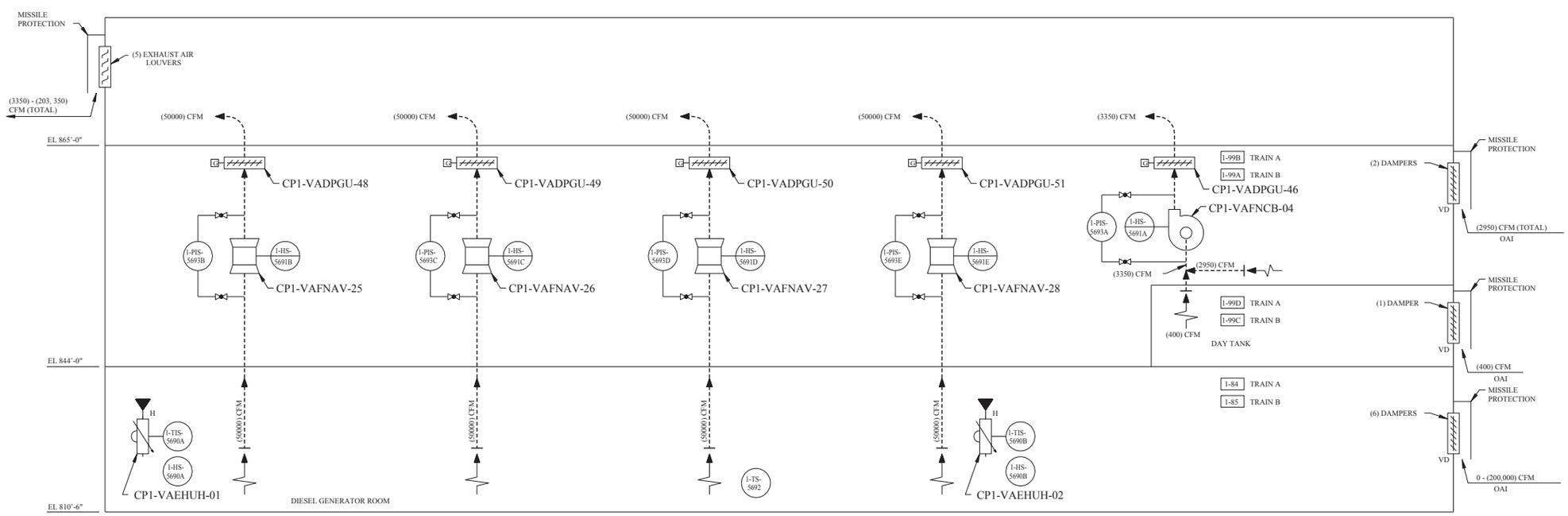

DIESEL GENERATOR AREA VENTILATION SYSTEM
SAFETY CLASS 3 (EXCEPT AS NOTED)
(TAG NUMBERS FOR TRAIN A SHOWN - SEE TABLE FOR CORRESPONDING TRAIN B TAG NUMBERS)

DIESEL GENERATOR AREA TRAIN A			DIESEL GENERATOR AREA TRAIN B		
TAG NUMBER			TAG NUMBER		
FAN AND UNIT HEATER	DAMPER	I/C NUMBER	FAN AND UNIT HEATER	DAMPER	I/C NUMBER
CP1-VAFNCB-04	CP1-VADPGU-46	1-HS-5691A	CP1-VAFNCB-05	CP1-VADPGU-47	1-HS-5695A
CP1-VAFNCB-04	CP1-VADPGU-46	1-PIS-5693A	CP1-VAFNCB-05	CP1-VADPGU-47	1-PIS-5697A
CP1-VAFNAV-25	CP1-VADPGU-48	1-HS-5691B	CP1-VAFNAV-29	CP1-VADPGU-52	1-HS-5695B
CP1-VAFNAV-25	CP1-VADPGU-48	1-PIS-5693B	CP1-VAFNAV-29	CP1-VADPGU-52	1-PIS-5697B
CP1-VAFNAV-26	CP1-VADPGU-49	1-HS-5691C	CP1-VAFNAV-30	CP1-VADPGU-53	1-HS-5695C
CP1-VAFNAV-26	CP1-VADPGU-49	1-PIS-5693C	CP1-VAFNAV-30	CP1-VADPGU-53	1-PIS-5697C
CP1-VAFNAV-27	CP1-VADPGU-50	1-HS-5691D	CP1-VAFNAV-31	CP1-VADPGU-54	1-HS-5695D
CP1-VAFNAV-27	CP1-VADPGU-50	1-PIS-5693D	CP1-VAFNAV-31	CP1-VADPGU-54	1-PIS-5697D
CP1-VAFNAV-28	CP1-VADPGU-51	1-HS-5691E	CP1-VAFNAV-32	CP1-VADPGU-55	1-HS-5695E
CP1-VAFNAV-28	CP1-VADPGU-51	1-PIS-5693E	CP1-VAFNAV-32	CP1-VADPGU-55	1-PIS-5697E
CP1-VAEHUH-01	-	1-HS-5690A	CP1-VAEHUH-23	-	1-HS-5694A
CP1-VAEHUH-01	-	1-TIS-5690A	CP1-VAEHUH-23	-	1-TIS-5694A
CP1-VAEHUH-02	-	1-HS-5690B	CP1-VAEHUH-24	-	1-HS-5694B
CP1-VAEHUH-02	-	1-TIS-5690B	CP1-VAEHUH-24	-	1-TIS-5694B
- -	-	1-TS-5692	-	-	1-TS-5696

REV	DWN	CHKD	APVD	REMARKS
CP-22	MM 01-17 2006	MHI 01-17 2006		THIS DRAWING REVISED TO INCORPORATE DESIGN CHANGE FDA-1999-001133-01-04 PER SK-0083-99-003133-01-00.

NOTES:

1. FOR ABBREVIATIONS AND SYMBOLS SEE DRAWINGS M1-0313 AND M1-0200.
2. THIS DIAGRAM IS A SCHEMATIC REPRESENTATION AND IS INTENDED TO SHOW GENERAL AIR DISTRIBUTION AND FLOW PATHS.
3. BALANCING DAMPERS, REGISTERS, DIFFUSERS, FLEXIBLE CONNECTIONS AND ALL OTHER RELATED ACCESSORIES NOT SHOWN ON THIS DIAGRAM SHALL BE PROVIDED AS INDICATED ON THE HVAC ARRANGEMENT DRAWINGS AND SPECIFICATIONS.
4. INSTRUMENTATION AND CONTROLS FOR ROOM COOLING UNITS ARE TO BE SUPPLIED BY EQUIPMENT MANUFACTURERS.
5. FOR LOGIC CHANNELS 1-TIC-6087 AND 1-TIC-6088 , SEE ICD M1-2307-06.
6. 750 CFM INTERMITTENTLY FROM EACH SAMPLE PANEL MODULE.
7. AIR FLOW QUANTITIES SHOWN ARE BASED ON A DENSITY OF 0.075 LB/FT OCCURING AT THE STANDARD CONDITION OF DRY AIR AT 70°F AND 29.92" HG BAROMETRIC PRESSURE. QUANTITIES IN PARENTHESES ARE ACTUAL AIR FLOW RATES BASED ON DENSITY AT DESIGN CONDITIONS.
8. FOR THE NON-SAFETY VENTILATION SYSTEM, THE AIR FLOW RATES SHOWN ARE ORIGINAL DESIGN VALUES FOR INITIAL FLOW BALANCING AND DO NOT REPRESENT AS-BUILT. AIR FLOW IS BALANCED TO MAINTAIN ROOM TEMPERATURES WITHIN DESIGN DURING NORMAL OPERATION AND TO ENSURE THE DIRECTION OF AIR FLOW IS AS SHOWN.
9. WIRE MESH GRILLE IS INSTALLED OVER THE DUCT FLANGE AT THE CEILING. A SUPPLY DUCT ELBOW WITH WIRE MESH GRILLE IS INSTALLED ON THE TOP OF THE AHU.
10. THE S-5 STAIRWELL (ROOMS 085C, 096B AND 105B) IS PART OF THE NORMAL EAVS EXHAUST AIR FLOW PATH FROM THE MAJOR EQUIPMENT ROOMS TO THE HVAC EQUIPMENT ROOM 104 PER DBD-ME-302B AND DBD-ME-302C.

R

REFERENCES:

1. M1-0313	FLOW DIAGRAM VENTILATION AAP BLDG AND CONTROL BLDG UPS AREA A/C SYSTEMS
2. M1-0200	MECHANICAL SYMBOLS AND NOTES
3. M1-0307	FLOW DIAGRAM VENTILATION CHILLED WATER SYSTEM
4. M1-0302-A	FLOW DIAGRAM VENTILATION SAFEGUARDS AND ELECTRICAL AREA
5. M1-0302-B	FLOW DIAGRAM VENTILATION SAFEGUARDS AND ELECTRICAL AREA
6. M1-0303-C	FLOW DIAGRAM VENTILATION AUXILIARY BUILDING

FSAR FIGURE 9.4-4

THIS DRAWING CREATED ELECTRONICALLY

DRAWING M1-0302 REV CP-9
HAS BEEN SPLIT INTO THE FOLLOWING SHEETS:
M1-0302
M1-0302-B

DRAWING M1-0302 REV CP-8
HAS BEEN SPLIT INTO THE FOLLOWING SHEETS:
M1-0302
M1-0302-A

LUMINANT
CPSES
GLEN ROSE, TEXAS

FLOW DIAGRAM - VENTILATION
SAFEGUARDS AND ELECTRICAL AREA

DWG. NO. M1-0302 | SH. NO. - | REV. CP-22

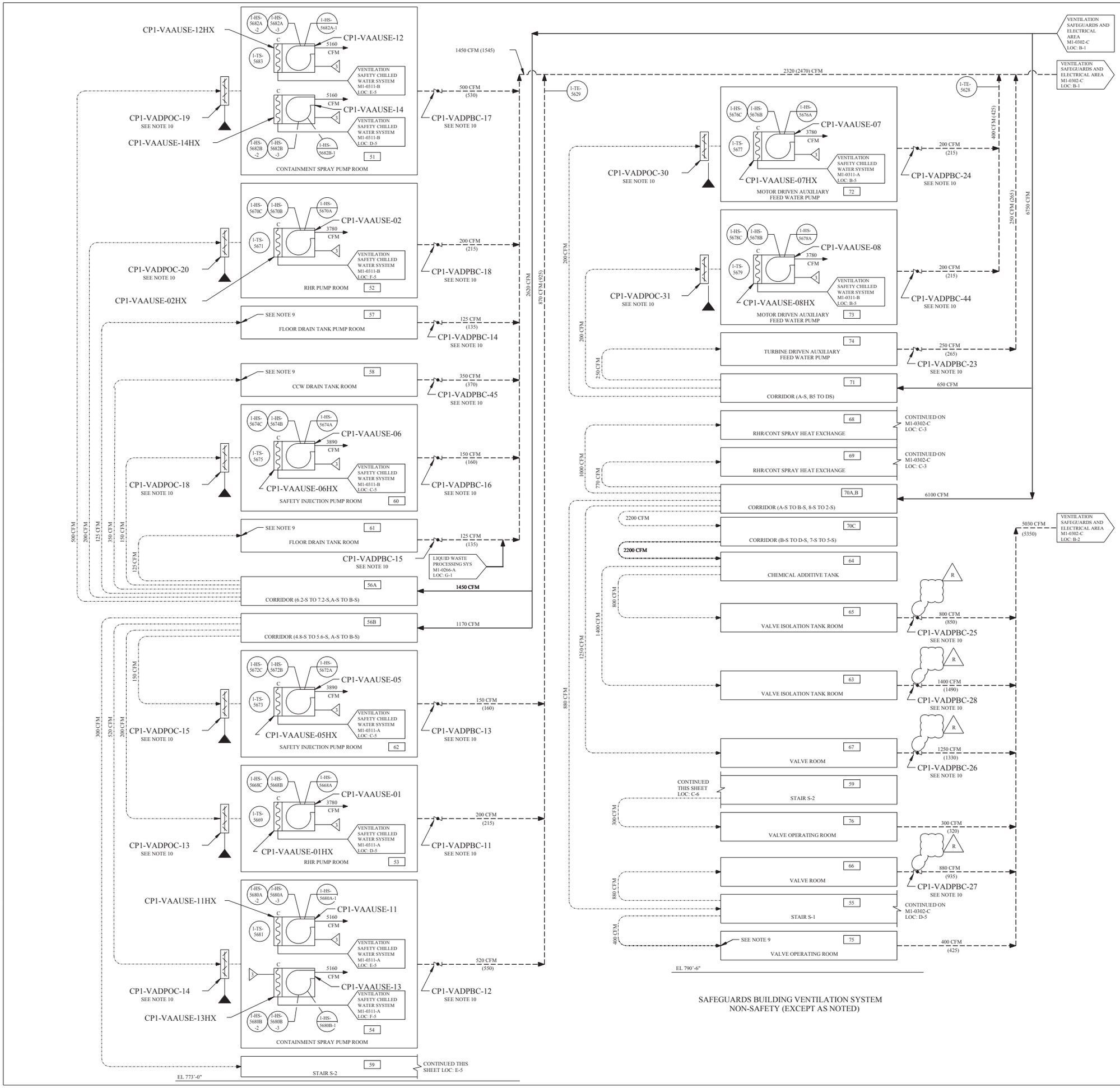

SAFEGUARDS BUILDING VENTILATION SYSTEM
NON-SAFETY (EXCEPT AS NOTED)

REV	DWN	CHKD	APVD	REMARKS
CP-13	DGK 07-11 2005	MSH 07-12 2005		THIS DRAWING REVISED TO INCORPORATE DESIGN CHANGE FDA 2005-002581-01-00 PER SK-0005-05-002581-01-00.

NOTES:

1. FOR ABBREVIATIONS AND SYMBOLS SEE DRAWINGS M1-0313 AND M1-0200.
2. AIR FLOW QUANTITIES SHOWN ARE BASED ON A DENSITY OF 0. 075 LB/FT OCCURRING AT THE STANDARD CONDITION OF DRY AIR AT 70°F AND 29.92" HG BAROMETRIC PRESSURE. QUANTITIES IN PARENTHESES AND ON DISCHARGE OF SAFETY RELATED FAN COIL UNITS ARE ACTUAL AIR FLOW RATES BASED ON DENSITY AT DESIGN CONDITIONS.
3. THIS DIAGRAM IS A SCHEMATIC REPRESENTATION AND IS INTENDED TO SHOW GENERAL AIR DISTRIBUTION AND FLOW PATHS.
4. BALANCING DAMPERS, REGISTERS, DIFFUSERS, FLEXIBLE CONNECTIONS AND ALL OTHER RELATED ACCESSORIES NOT SHOWN ON THIS DIAGRAM SHALL BE PROVIDED AS INDICATED ON THE HVAC ARRANGEMENT DRAWINGS AND SPECIFICATIONS.
5. INSTRUMENTATION AND CONTROLS FOR ROOM COOLING UNITS ARE TO BE SUPPLIED BY EQUIPMENT MANUFACTURERS.
6. THE SAFEGUARD BUILDING WILL BE MAINTAINED AT SLIGHT NEGATIVE PRESSURE.
7. FOR LOGIC CELLS 1-TIC-6087 AND 1-TIC-6088 SEE ICD-M1-2307-06.
8. 750 CFM INTERMITTENTLY FROM EACH SAMPLE PANEL MODULE.
9. AIR INTAKE FOR THE INDICATED ROOMS IS THROUGH DOORWAY. DOORS ARE OPEN FOR TORNADO VENTING PURPOSES.
10. DAMPER ABANDONED IN PLACE (IN OPEN POSITION), ALL AIR CONNECTIONS AND ELECTRICAL CONNECTIONS ARE DISCONNECTED.
11. FOR THE NON-SAFETY VENTILATION SYSTEMS, THE AIR FLOW RATES SHOWN ARE ORIGINAL DESIGN VALUES FOR INITIAL FLOW BALANCING AND DO NOT REPRESENT AS-BUILT. AIR FLOW IS BALANCED TO MAINTAIN ROOM TEMPERATURES WITHIN DESIGN DURING NORMAL OPERATION AND TO ENSURE THE DIRECTION OF AIR FLOW IS AS SHOWN.

REFERENCES:

M1-0313	FLOW DIAGRAM VENTILATION AAP BLDG AND CONTROL BLDG UPS AREA A/C SYSTEMS
M1-0200	MECHANICAL SYMBOLS AND NOTES
M1-0302-C	FLOW DIAGRAM VENTILATION SAFEGUARDS AND ELECTRICAL AREA
M1-0311-A	FLOW DIAGRAM VENTILATION SAFETY CHILLED WATER SYSTEM
M1-0311-B	FLOW DIAGRAM VENTILATION SAFETY CHILLED WATER SYSTEM
M1-0260	FLOW DIAGRAM LIQUID WASTE PROCESSING SYSTEM

FSAR FIGURE 9.4-4

THIS DRAWING CREATED ELECTRONICALLY

DRAWING M1-0302-A REV CP-1
HAS BEEN SPLIT INTO THE FOLLOWING SHEETS:
M1-0302-A
M1-0302-C

CLASS I
(NUCLEAR SAFETY-RELATED)
SAFETY CLASS 1 — SEISMIC CATEGORY I
SAFETY CLASS 2 — CLASS 1E
SAFETY CLASS 3 — ASSOCIATED CIRCUITS

LUMINANT
CPSES
GLEN ROSE, TEXAS

FLOW DIAGRAM-VENTILATION
SAFEGUARDS AND ELECTRICAL AREA

DWG. NO. M1-0302 | SH. NO. A | REV. CP-13

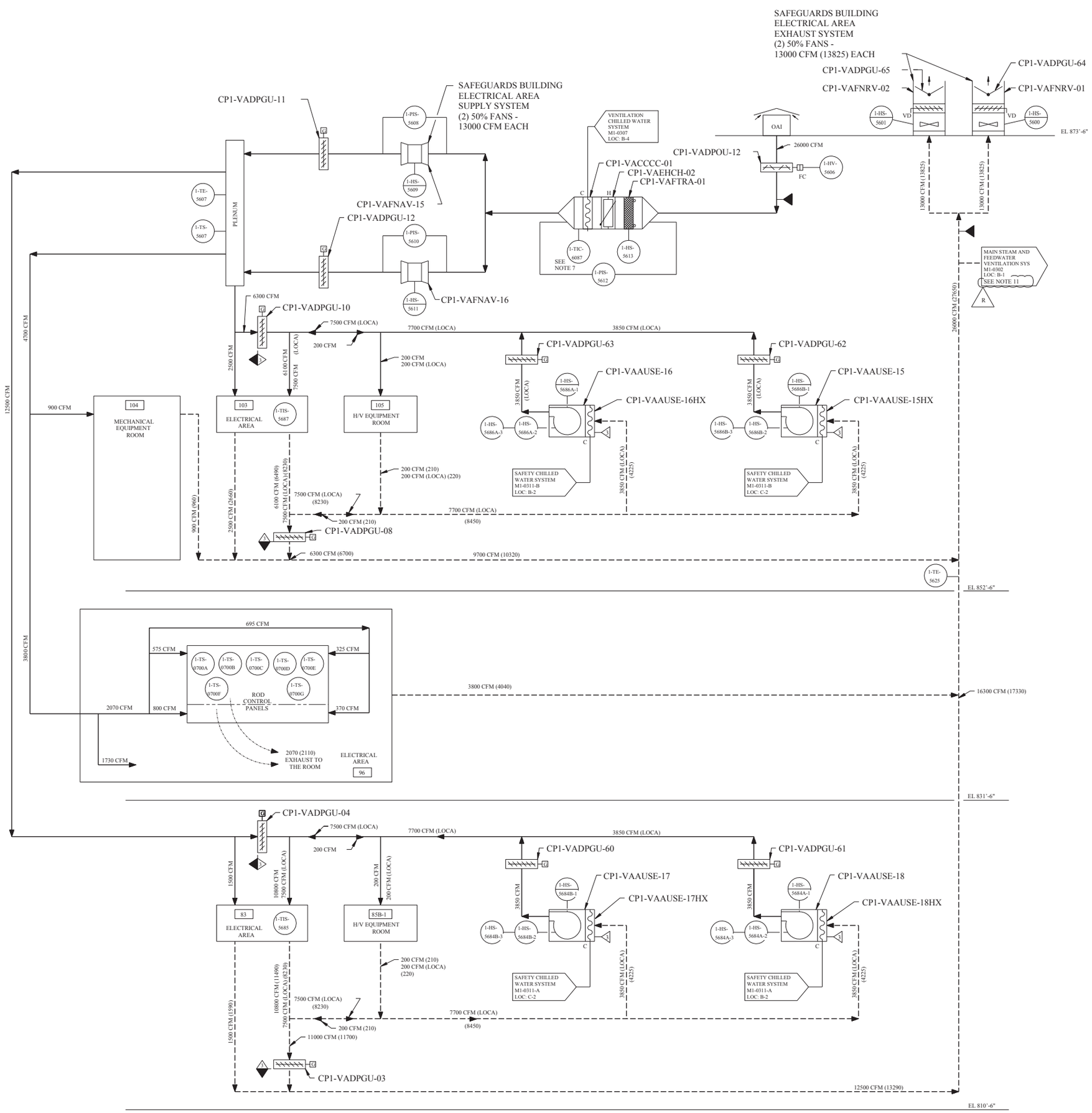

ELECTRICAL AREA VENTILATION SYSTEM
SAFETY CLASS 3 (EXCEPT AS NOTED)

REV	DWN	CHKD	APVD	REMARKS
CP-17	MJ 01-17 2006	MH 01-17 2006		THIS DRAWING REVISED TO INCORPORATE DESIGN CHANGE FDA-1999-003133-01-04 PER SK-0084-99-003133-01-00.

NOTES:

1. FOR ABBREVIATIONS AND SYMBOLS SEE DRAWINGS M1-0313 AND M1-0200.
2. DELETED
3. THIS DIAGRAM IS A SCHEMATIC REPRESENTATION AND IS INTENDED TO SHOW GENERAL AIR DISTRIBUTION AND FLOW PATHS.
4. BALANCING DAMPERS, REGISTERS, DIFFUSERS, FLEXIBLE CONNECTIONS AND ALL OTHER RELATED ACCESSORIES NOT SHOWN ON THIS DIAGRAM SHALL BE PROVIDED AS INDICATED ON THE HVAC ARRANGEMENT DRAWINGS AND SPECIFICATIONS.
5. INSTRUMENTATION AND CONTROLS FOR ROOM COOLING UNITS ARE TO BE SUPPLIED BY EQUIPMENT MANUFACTURERS.
6. AIR FLOW QUANTITIES SHOWN ARE BASED ON A DENSITY OF 0. 075 LB/FT OCCURRING AT THE STANDARD CONDITION OF DRY AIR AT 70°F AND 29.92" HG BAROMETRIC PRESSURE. QUANTITIES IN PARENTHESES AND ON DISCHARGE OF SAFETY RELATED FAN COIL UNITS ARE ACTUAL AIR FLOW RATES BASED ON DENSITY AT DESIGN CONDITIONS.
7. FOR LOGIC CHANNELS 1-TIC-6087 AND 1-TIC-6088 , SEE ICD M1-2307-06 AND M1-0307-C.
8. 750 CFM INTERMITTENTLY FROM EACH SAMPLE PANEL MODULE.
9. FOR THE NON-SAFETY VENTILATION SYSTEMS, THE AIR FLOW RATES SHOWN ARE ORIGINAL DESIGN VALUES FOR INITIAL FLOW BALANCING AND DO NOT REPRESENT AS-BUILT. AIR FLOW IS BALANCED TO MAINTAIN ROOM TEMPERATURES WITHIN DESIGN DURING NORMAL OPERATION AND TO ENSURE THE DIRECTION OF AIR FLOW IS AS SHOWN.
10. THE SAFEGUARDS BUILDING ELECTRICAL AREA MUST BE MAINTAINED AT A SLIGHTLY POSITIVE PRESSURE.
11. THE S-5 STAIRWELL (ROOMS 085C, 096B AND 105B) IS PART OF THE NORMAL EAVS EXHAUST AIR FLOW PATH FROM THE MAJOR EQUIPMENT ROOMS TO THE HVAC EQUIPMENT ROOM 104 PER DBD-ME-302B AND DBD-ME-302C.

REFERENCES:

M1-0313	FLOW DIAGRAM VENTILATION AAP BLDG AND CONTROL BLDG UPS AREA A/C SYSTEMS
M1-0200	MECHANICAL SYMBOLS AND NOTES
M1-0307	FLOW DIAGRAM VENTILATION CHILLED WATER SYSTEM
M1-0311-A	FLOW DIAGRAM VENTILATION SAFETY CHILLED WATER SYSTEM
M1-0311-B	FLOW DIAGRAM VENTILATION SAFETY CHILLED WATER SYSTEM

FSAR FIGURE 9.4-4

THIS DRAWING CREATED ELECTRONICALLY

DRAWING M1-0302 REV CP-9
HAS BEEN SPLIT INTO THE FOLLOWING SHEETS:
M1-0302
M1-0302-B

CLASS I
(NUCLEAR SAFETY-RELATED)
SAFETY CLASS 1 — SEISMIC CATEGORY I
SAFETY CLASS 2 — CLASS 1E
SAFETY CLASS 3 — ASSOCIATED CIRCUITS

LUMINANT
CPSES
GLEN ROSE, TEXAS

FLOW DIAGRAM - VENTILATION
SAFEGUARDS AND ELECTRICAL AREA

DWG. NO. M1-0302 | SH. NO. B | REV. CP-17

FINAL PRINT

REF CKD CP-13 2/16/98

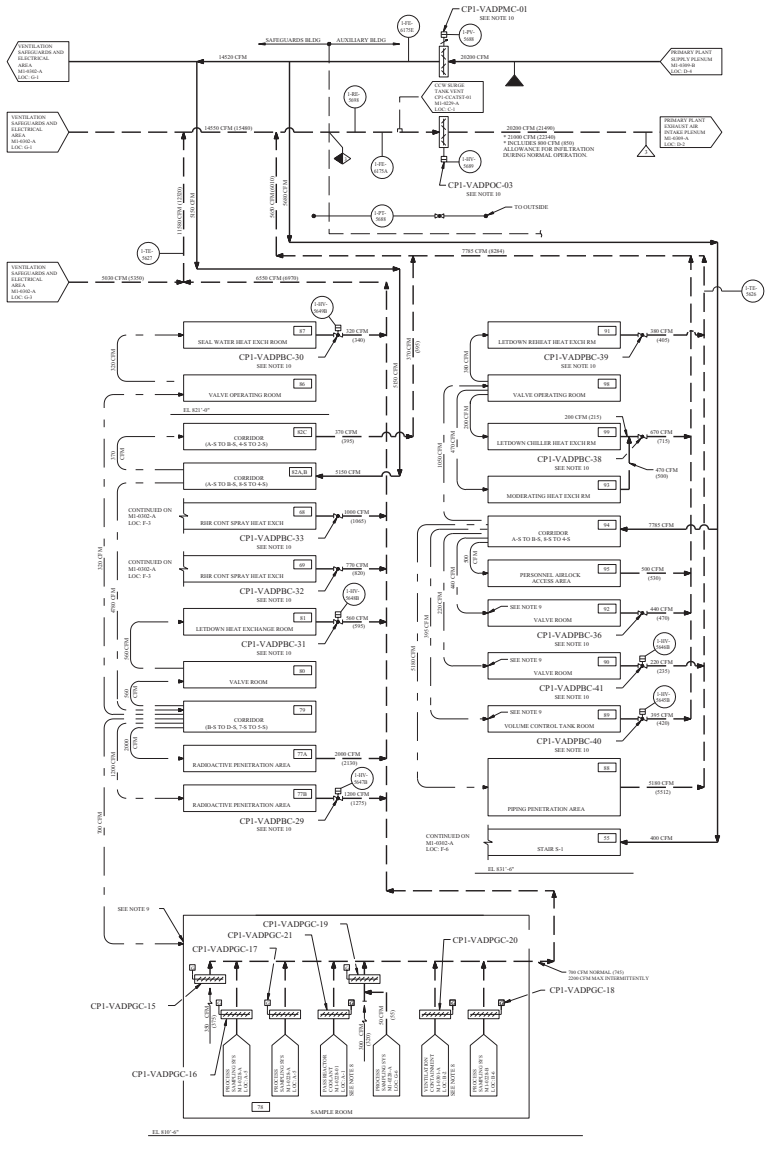

REV	DRWN	CHKD	APVD	REMARKS
CP-8	DAA 04/01/2003	DRC 04/01/2003		THIS DRAWING REVISED TO INCORPORATE DESIGN CHANGE: FDA- 2001-00164 SUAR PMR SL-0040-01-00000-01-00.

NOTES:

1. FOR ABBREVIATIONS AND SYMBOLS SEE DRAWINGS M1-0313 AND M1-0200.
2. AIR FLOW QUANTITIES SHOWN ARE BASED ON A DENSITY OF 0.075 LB/FT OCCURING AT THE STANDARD CONDITION OF DRY AIR AT 70° F AND 29.92" HG BAROMETRIC PRESSURE. QUANTITIES IN PARENTHESES ARE ACTUAL AIR FLOW RATES BASED ON DENSITY AT DESIGN CONDITIONS.
3. **THIS DIAGRAM IS A SCHEMATIC REPRESENTATION AND IS INTENDED TO SHOW GENERAL AIR DISTRIBUTION AND FLOW PATHS.**
4. BALANCING DAMPERS, REGISTERS, DIFFUSERS, FLEXIBLE CONNECTIONS AND ALL OTHER RELATED ACCESSORIES NOT SHOWN ON THIS DIAGRAM SHALL BE PROVIDED AS INDICATED ON THE HVAC ARRANGEMENT DRAWINGS AND SPECIFICATIONS.
5. **INSTRUMENTATION AND CONTROLS FOR ROOM COOLING UNITS ARE TO BE SUPPLIED BY EQUIPMENT MANUFACTURERS.**
6. **THE SAFEGUARD BUILDING WILL BE MAINTAINED AT SLIGHT NEGATIVE PRESSURE.**
7. **FOR LOGIC CELLS** 1-TIC-6087 **AND** 1-TIC-6088 **SEE ICD-M1-2307-06.**
8. **750 CFM INTERMITTENTLY FROM EACH SAMPLE PANEL MODULE.**
9. AIR INTAKE FOR THE INDICATED ROOMS IS THROUGH DOORWAY. DOORS ARE OPEN FOR TORNADO VENTING PURPOSES.
10. DAMPER ABANDONED IN PLACE (IN OPEN POSITION), ALL AIR CONNECTIONS AND ELECTRICAL CONNECTIONS ARE DISCONNECTED.
11. THE AIR FLOW RATES SHOWN ARE ORIGINAL DESIGN VALUES FOR INITIAL FLOW BALANCING AND DO NOT REPRESENT AS-BUILT. AIR FLOW IS BALANCED TO MAINTAIN ROOM TEMPERATURES WITHIN DESIGN DURING NORMAL OPERATION AND TO ENSURE THE DIRECTION OF AIR FLOW IS AS SHOWN.

A

REFERENCES:

M1-0313	FLOW DIAGRAM VENTILATION A/P BLDG AND CONTROL BLDG UPS AREA A/C SYSTEM
M1-0200	MECHANICAL SYMBOLS AND NOTES
M1-0228	FLOW DIAGRAM PROCESS SAMPLING SYSTEM
M1-0228-01	FLOW DIAGRAM POST ACCIDENT SAMPLING SYSTEM REACTOR COOLANT
M1-0301-A	FLOW DIAGRAM VENTILATION CONTAINMENT
M1-0302-A	FLOW DIAGRAM VENTILATION SAFEGUARD AND ELECTRICAL AREA
M1-0309-A	FLOW DIAGRAM VENTILATION PRIMARY PLANT SUPPLY AND EXHAUST
M1-0309-B	FLOW DIAGRAM VENTILATION PRIMARY PLANT SUPPLY AND EXHAUST

FSAR FIGURE 9.4-4

DRAWING VARIES OR VERSIONS VERSIONS 1, 3

DRAWING: M1-0302-A REV CP-1
HAS BEEN SPLIT INTO THE FOLLOWING SHEETS:
M1-0302-A
M1-0302-C

CLASS I
(NUCLEAR SAFETY-RELATED)
EQUIPMENT CLASS I QUALITY CATEGORY I
SAFETY CLASS 2 CLASS 1E
SAFETY CLASS 3 ASSOCIATED CIRCUITS

TXU POWER
CPSES
GLEN ROSE, TEXAS

FLOW DIAGRAM - VENTILATION
SAFEGUARDS AND ELECTRICAL AREA

DWG. NO.	SH. NO.	REV.
M1-0302	C	CP-8

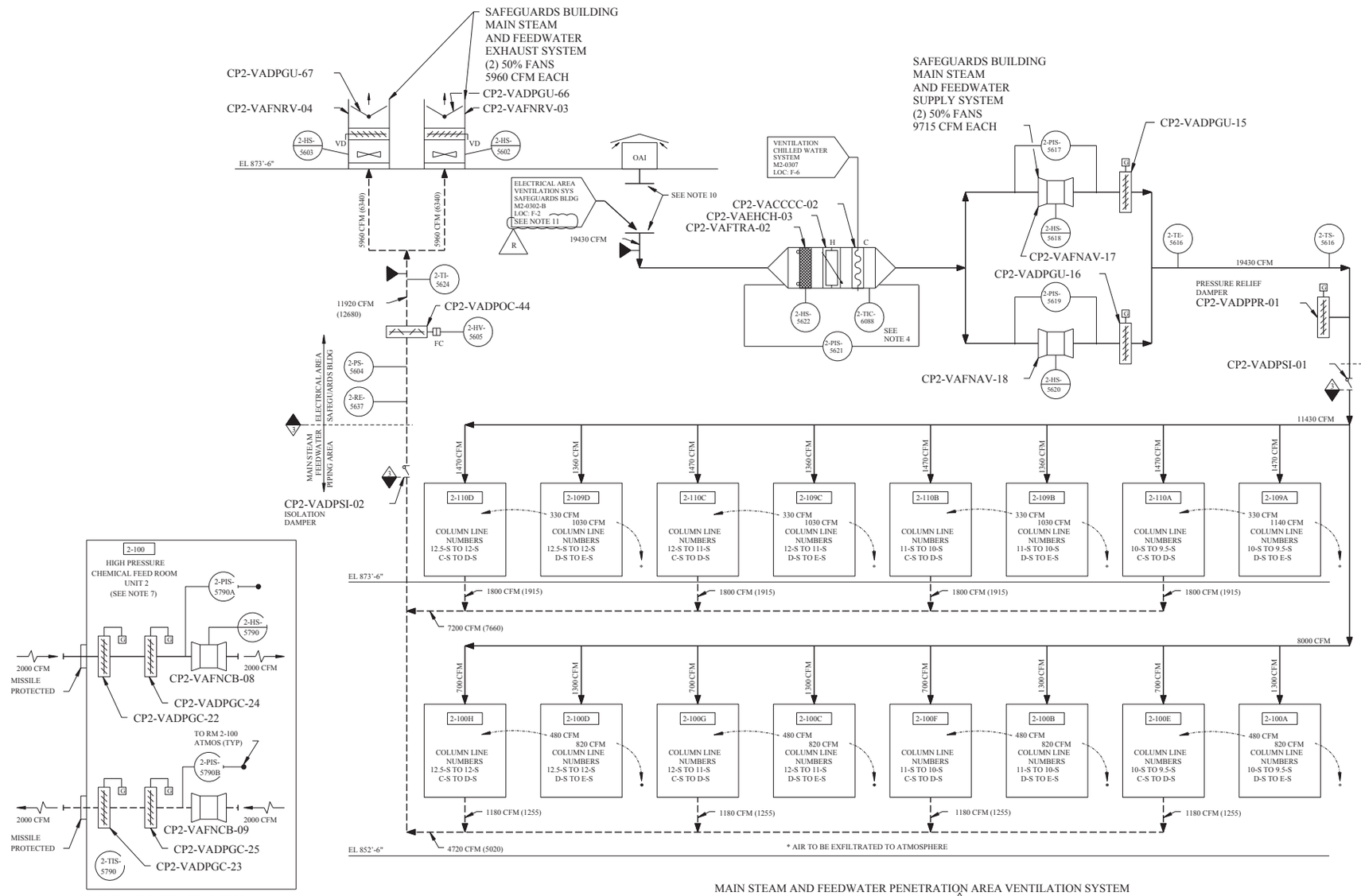

HIGH PRESSURE CHEMICAL FEED ROOM
VENTILATION SYSTEM
SAFETY CLASS 3 (EXCEPT AS NOTED)

MAIN STEAM AND FEEDWATER PENETRATION AREA VENTILATION SYSTEM
SAFETY CLASS 3 (EXCEPT AS NOTED)

DIESEL GENERATOR AREA TRAIN A		
TAG NUMBER		
FAN AND UNIT HEATER	DAMPER	I/C NUMBER
CP2-VAFNCB-04	CP2-VADPGU-46	2-HS-5691A-1
CP2-VAFNCB-04	CP2-VADPGU-46	2-PIS-5693A
CP2-VAFNAV-25	CP2-VADPGU-48	2-HS-5691B-1
CP2-VAFNAV-25	CP2-VADPGU-48	2-PIS-5693B
CP2-VAFNAV-26	CP2-VADPGU-49	2-HS-5691C-1
CP2-VAFNAV-26	CP2-VADPGU-49	2-PIS-5693C
CP2-VAFNAV-27	CP2-VADPGU-50	2-HS-5691D-1
CP2-VAFNAV-27	CP2-VADPGU-50	2-PIS-5693D
CP2-VAFNAV-28	CP2-VADPGU-51	2-HS-5691E-1
CP2-VAFNAV-28	CP2-VADPGU-51	2-PIS-5693E
CP2-VAEHUH-01	-	2-HS-5690A
CP2-VAEHUH-01	-	2-TS-5690A
* CP2-VAEHUH-02	-	2-HS-5690B
* CP2-VAEHUH-02	-	2-TS-5690B
-	-	2-TS-5692
CP2-VAEHAC-01	-	2-HS-5791A
CP2-VAEHAC-01	-	2-TS-5791A

* SEE NOTE 8

DIESEL GENERATOR AREA TRAIN B		
TAG NUMBER		
FAN AND UNIT HEATER	DAMPER	I/C NUMBER
CP2-VAFNCB-05	CP2-VADPGU-47	2-HS-5695A
CP2-VAFNCB-05	CP2-VADPGU-47	2-PIS-5697A
CP2-VAFNAV-29	CP2-VADPGU-52	2-HS-5695B
CP2-VAFNAV-29	CP2-VADPGU-52	2-PIS-5697B
CP2-VAFNAV-30	CP2-VADPGU-53	2-HS-5695C
CP2-VAFNAV-30	CP2-VADPGU-53	2-PIS-5697C
CP2-VAFNAV-31	CP2-VADPGU-54	2-HS-5695D
CP2-VAFNAV-31	CP2-VADPGU-54	2-PIS-5697D
CP2-VAFNAV-32	CP2-VADPGU-55	2-HS-5695E
CP2-VAFNAV-32	CP2-VADPGU-55	2-PIS-5697E
* CP2-VAEHUH-23	-	2-HS-5694A
* CP2-VAEHUH-23	-	2-TS-5694A
CP2-VAEHUH-24	-	2-HS-5694B
CP2-VAEHUH-24	-	2-TS-5694B
-	-	2-TS-5696
CP2-VAEHAC-02	-	2-HS-5791B
CP2-VAEHAC-02	-	2-TS-5791B

* SEE NOTE 8

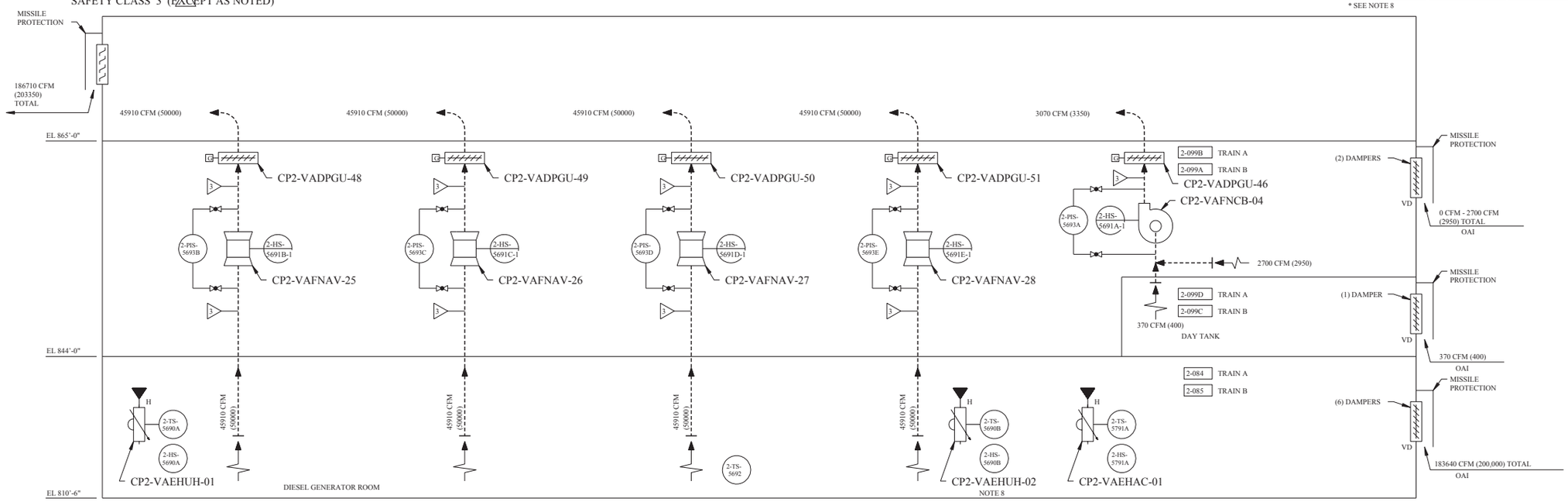

DIESEL GENERATOR AREA TRAIN A AND TRAIN B VENTILATION SYSTEM
SAFETY CLASS 3 (EXCEPT AS NOTED)
(TAG NUMBERS FOR TRAIN A SHOWN - SEE TABLE FOR CORRESPONDING TRAIN B TAG NUMBERS)

REV	DWN	CHKD	APVD	REMARKS
CP-13	MM 01-17 2006	MHI 01-17 2006		THIS DRAWING REVISED TO INCORPORATE DESIGN CHANGE FDA-1999-003133-01-04 PER SK-0085-99-003133-01-00.

NOTES:

1. FOR HVAC ABBREVIATIONS AND SYMBOLS SEE DRAWINGS M1-0313 AND M1-0200.
2. THIS DIAGRAM IS A SCHEMATIC REPRESENTATION AND IS INTENDED TO SHOW GENERAL AIR DISTRIBUTION AND FLOW PATHS.
3. BALANCING DAMPERS, REGISTERS, DIFFUSERS, FLEXIBLE CONNECTIONS AND ALL OTHER RELATED ACCESSORIES NOT SHOWN ON THIS DIAGRAM SHALL BE PROVIDED AS INDICATED ON THE HVAC ARRANGEMENT DRAWINGS AND SPECIFICATIONS.
4. FOR LOGIC OF 2-TIC-6088 SEE ICD M2-2307-03
5. AIR FLOW QUANTITES SHOWN ARE BASED ON A DENSITY OF 0.075 LB/FT OCCURING AT THE STANDARD CONDITION OF DRY AIR AT 70°F AND 29.92" HG BAROMETRIC PRESSURE. QUANTITIES IN PARENTHESES ARE ACTUAL AIR FLOW RATES BASED ON DENSITY AT DESIGN CONDITIONS.
6. FIRE DAMPERS REMOVED FROM FLOW DIAGRAM ONLY, FOR LOCATIONS SEE DUCT LAYOUT DRAWINGS.
7. FOR NORMAL VENTILATION SYSTEM (NON SAFETY RELATED) REFER TO DWG M1-0303-C.
8. UNIT HEATER ABANDONED IN PLACE. ELECTRICAL CONNECTIONS ARE DISCONNECTED.
9. FOR THE NON-SAFETY VENTILATION SYSTEMS, THE AIR FLOW RATES SHOWN ARE ORIGINAL DESIGN VALUES FOR INITIAL FLOW BALANCING AND DO NOT REPRESENT AS-BUILT. AIR FLOW IS BALANCED TO MAINTAIN ROOM TEMPERATURES WITHIN DESIGN DURING NORMAL OPERATION AND TO ENSURE THE DIRECTION OF AIR FLOW IS AS SHOWN.
10. WIRE MESH GRILLE IS INSTALLED OVER THE DUCT FLANGE AT THE CEILING. A SUPPLY DUCT ELBOW WITH WIRE MESH GRILLE IS INSTALLED ON TOP OF THE AHU.
11. THE S-5 STAIRWELL (ROOMS 085C, 096B AND 105B) IS PART OF THE NORMAL EAVS EXHAUST AIR FLOW PATH FROM THE MAJOR EQUIPMENT ROOMS TO THE HVAC EQUIPMENT ROOM 104 PER DBD-ME-302B AND DBD-ME-302C.

R

REFERENCE DRAWINGS:

1. FLOW DIAG VENT AAP BLDG AND CONTROL BLDG UPS AREA A/C SYSTEM	M1-0313
2. MECHANICAL DRAWING NOTES AND SYMBOLS	M1-0200
3. FLOW DIAGRAM VENT CHILLED WATER	M2-0307
4. DELETED	
5. FLOW DIAG VENT SAFEGUARDS AND ELEC AREA	M2-0302A
6. FLOW DIAG VENT SAFEGUARDS AND ELEC AREA	M2-0302B
7. FLOW DIAG VENT SAFEGUARDS AND ELEC AREA	M2-0302C
8. DELETED	
9. VENT SAFEGUARDS BLDG PLAN @ EL 852"-6"	M2-0654 SERIES
10. VENT SAFEGUARDS BLDG DIESEL GEN AREA PLAN	M2-0658 SERIES
11. VENT SAFEGUARDS BLDG PLAN @ EL 873"-6"	M2-0655 SERIES
12. FLOW DIAG VENT AUXILIARY BLDG	M1-0303-C

FSAR FIGURE 9.4-4

THIS DRAWING CREATED ELECTRONICALLY

DRAWING 2323-M2-0302 REV CP-2 HAS BEEN SPLIT INTO THE FOLLOWING SHEETS:
M2-0302
M2-0302-A
M2-0302-B
M2-0302-C

CLASS I
(NUCLEAR SAFETY-RELATED)
SAFETY CLASS 1 — SEISMIC CATEGORY I
SAFETY CLASS 2 — CLASS 1E
SAFETY CLASS 3 — ASSOCIATED CIRCUITS

LUMINANT
CPSES
GLEN ROSE, TEXAS

FLOW DIAGRAM - VENTILATION
SAFEGUARDS AND ELECTRICAL AREA

DWG. NO. M2-0302 | SH. NO. - | REV. CP-13

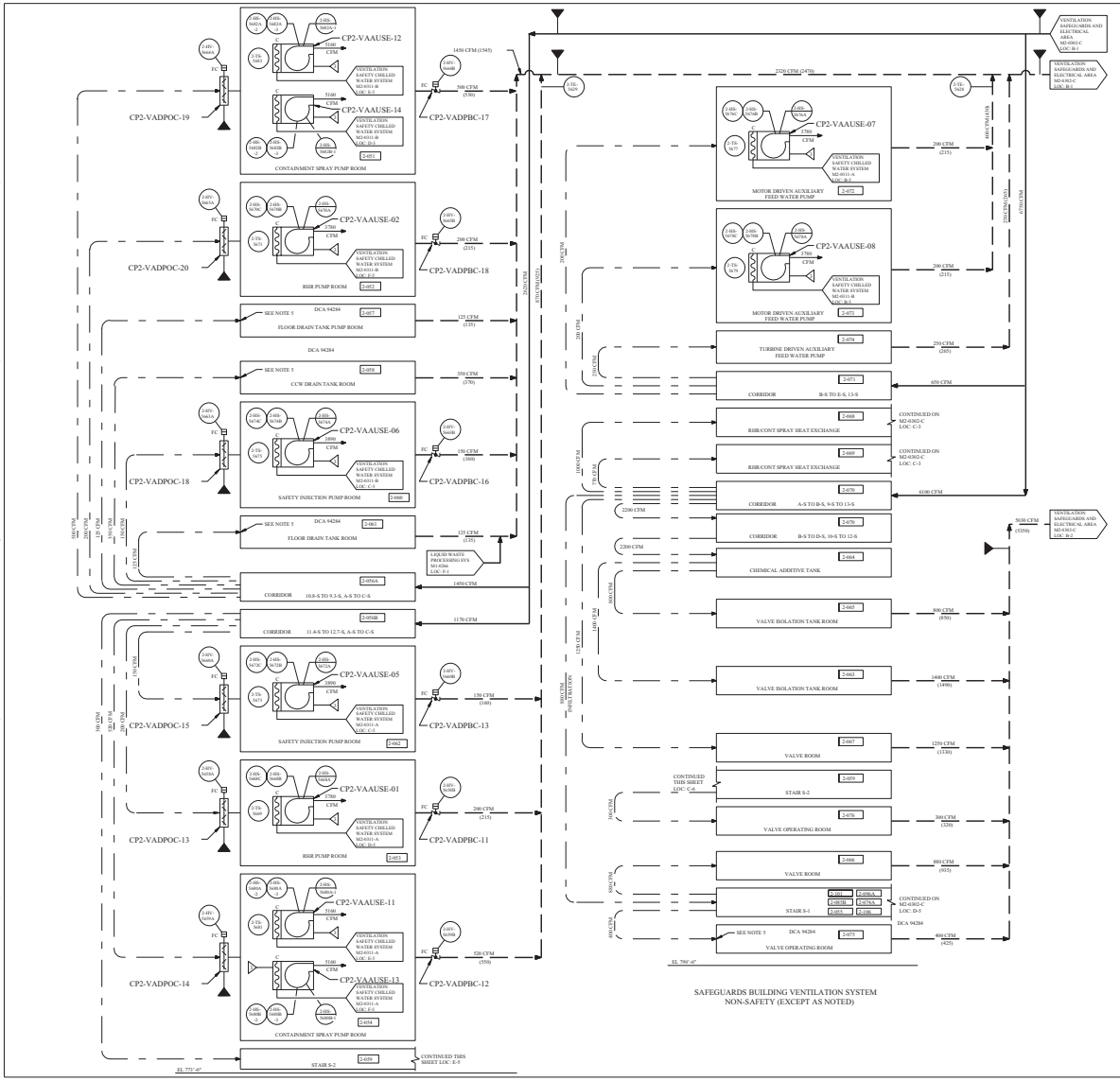

REV	DRN	CHKD	APVD	REMARKS
CP-2				THIS DRAWING REVISED TO INCORPORATE DESIGN CHANGE FNA-2001-00166-02,00 PER DL-2001-01-00-DRAW-00

NOTES:

1. FOR HVAC ABBREVIATIONS AND SYMBOLS SEE DRAWING M1-0313 AND M1-0200.
2. THIS DIAGRAM IS A SCHEMATIC REPRESENTATION AND IS INTENDED TO SHOW GENERAL AIR DISTRIBUTION AND FLOW PATHS.
3. BALANCING DAMPERS, REGISTERS, DIFFUSERS, FLEXIBLE CONNECTIONS AND ALL OTHER RELATED ACCESSORIES NOT SHOWN ON THIS DIAGRAM SHALL BE PROVIDED AS INDICATED ON THE HVAC ARRANGEMENT DRAWINGS AND SPECIFICATIONS.
4. INSTRUMENTATION AND CONTROLS FOR ROOM COOLING UNITS ARE TO BE SUPPLIED BY EQUIPMENT MANUFACTURERS.
5. AIR INTAKE FOR THE INDICATED ROOMS IS THROUGH DOORWAY. DOORS ARE OPEN FOR TORNADO VENTING PURPOSES.
6. DELETED
7. AIR FLOW QUANTITES SHOWN ARE BASED ON A DENSITY OF 0.075 LB/FT OCCURING AT THE STANDARD CONDITION OF DRY AIR AT 70°F AND 29.92" HG BAROMETRIC PRESSURE. QUANTITIES IN PARENTHESES ARE ACTUAL AIR FLOW RATES BASED ON DENSITY AT DESIGN CONDITIONS.
8. FIRE DAMPERS ARE REMOVED FROM FLOW DIAGRAM ONLY. FOR LOCATIONS SEE DUCT LAYOUT DRAWINGS.
9. FOR THE NON-SAFETY VENTILATION SYSTEMS, THE AIR FLOW RATES SHOWN ARE ORIGINAL DESIGN VALUES FOR INITIAL FLOW BALANCING AND DO NOT REPRESENT AS-BUILT. AIR FLOW IS BALANCED TO MAINTAIN ROOM TEMPERATURES WITHIN DESIGN DURING NORMAL OPERATION AND TO ENSURE THE DIRECTION OF AIR FLOW IS AS SHOWN.

REFERENCE DRAWINGS:

1.	FLOW DIAGRAM VENTILATION AAP BLDG AND CONTROL BLDG UPS AREA A/C SYSTEM	M1-0313
2.	MECHANICAL DRAWING NOTES AND SYMBOLS	M1-0200
3.	LIQUID WASTE PROCESSING SYSTEM	M1-0266
4.	DELETED	
5.	FLOW DIAG VENT CHILLED WATER SYSTEM NUCLEAR SAFETY SYSTEM.	M2-0311-A
6.	FLOW DIAG VENT CHILLED WATER SYSTEM NUCLEAR SAFETY SYSTEM	M2-0311-B
7.	FLOW DIAG VENT SAFEGUARDS AND ELEC AREA	M2-0302
8.	FLOW DIAG VENT SAFEGUARDS AND ELEC AREA	M2-0302-B
9.	FLOW DIAG VENT SAFEGUARDS AND ELEC AREA	M2-0302-C
10.	VENT SAFEGUARDS BLDG PLAN @ EL 775'-9" AND 755'-6"	M2-0659 SERIES
11.	VENT SAFEGUARDS BLDG PLAN @ EL 790'-6"	M2-0651 SERIES

FSAR FIGURE 9.4-4

THIS DRAWING WAS CREATED BY DESIGN QUALITY

DRAWING	2123-M2-0302	REV	CP-2
HAS BEEN SPLIT INTO THE FOLLOWING SHEETS:			
M2-0302			
M2-0302-A			
M2-0302-B			
M2-0302-C			

CLASS I
(NUCLEAR SAFETY-RELATED)
SAFETY CLASS 1 SEISMIC CATEGORY 1
SAFETY CLASS 2 G.ASME VIII
SAFETY CLASS 3 ASME/ANSI B31.1 NFPA

TXU POWER
CPSES
GLEN ROSE, TEXAS

FLOW DIAGRAM-VENTILATION
SAFEGUARDS AND ELECTRICAL AREA

DWG. NO. M2-0302 | RR NO. A | REV. CP-4

SBSSSBAA AUB BBSSS

ma516300.dgn A M2-0302-A

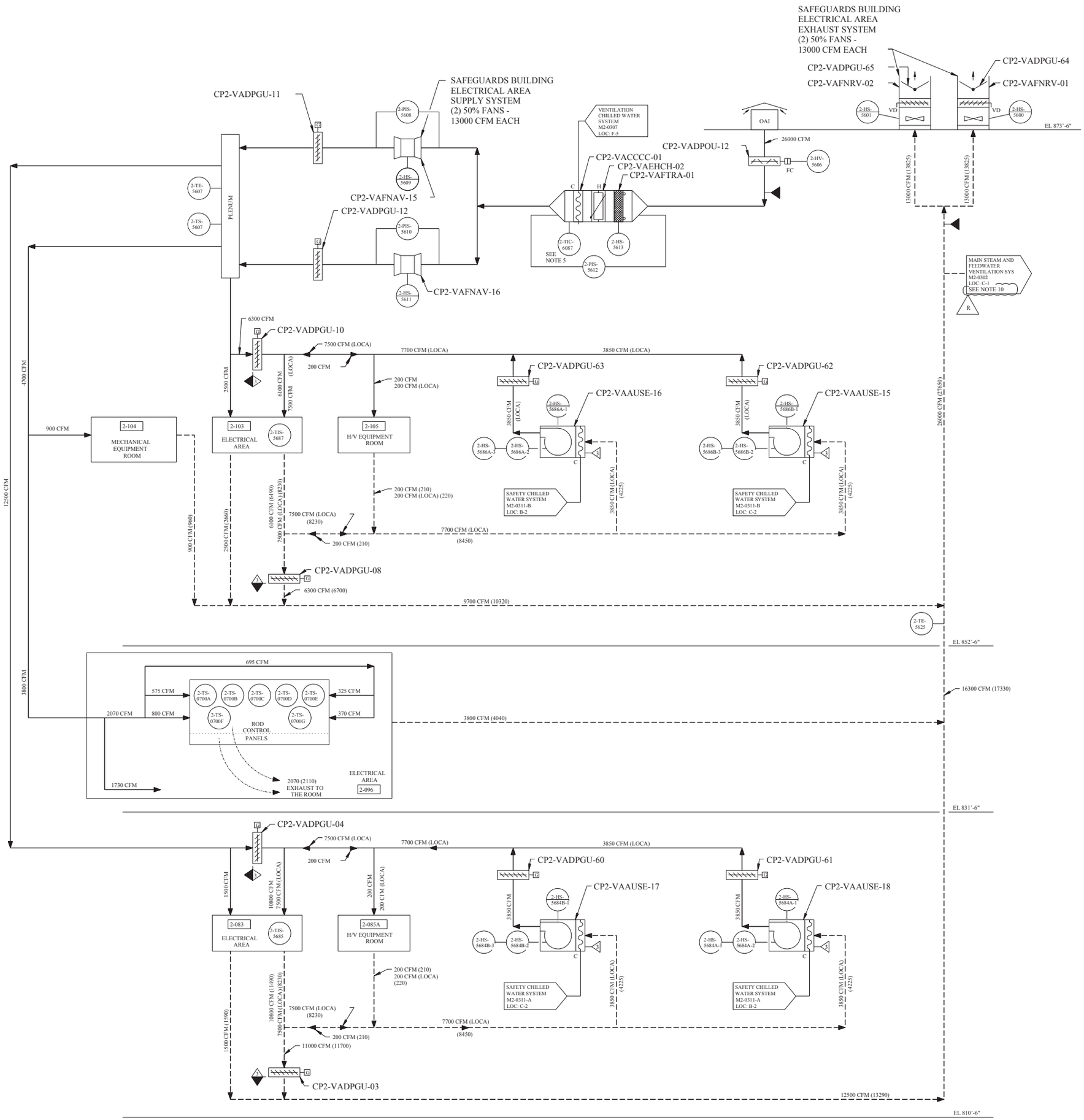

ELECTRICAL AREA VENTILATION SYSTEM
SAFETY CLASS 3 (EXCEPT AS NOTED)

REV	DWN	CHKD	APVD	REMARKS
CP-11	MM 01-17 2006	MH 01-17 2006		THIS DRAWING REVISED TO INCORPORATE DESIGN CHANGE FDA-1999-003133-01-04 PER SK-0086-99-003133-01-00.

NOTES

1. FOR HVAC ABBREVIATIONS AND SYMBOLS SEE DRAWING M1-0313 AND M1-0200.
2. THIS DIAGRAM IS A SCHEMATIC REPRESENTATION AND IS INTENDED TO SHOW GENERAL AIR DISTRIBUTION AND FLOW PATHS.
3. BALANCING DAMPERS, REGISTERS, DIFFUSERS, FLEXIBLE CONNECTIONS AND ALL OTHER RELATED ACCESSORIES NOT SHOWN ON THIS DIAGRAM SHALL BE PROVIDED AS INDICATED ON THE HVAC ARRANGEMENT DRAWINGS AND SPECIFICATIONS.
4. INSTRUMENTATION AND CONTROLS FOR ROOM COOLING UNITS ARE TO BE SUPPLIED BY EQUIPMENT MANUFACTURERS.
5. FOR LOGIC OF 2-TIC-6087 SEE ICD M2-2307-06
6. FIRE DAMPERS REMOVED FROM FLOW DIAGRAM ONLY, FOR LOCATIONS SEE DUCT LAYOUT DRAWINGS.
7. AIR FLOW QUANTITIES SHOWN ARE BASED ON DENSITY OF 0.075 LB/FT^3 OCCURING AT THE STANDARD CONDITION OF DRY AIR AT 70°F AND 29.92" HG BAROMETRIC PRESSURE. QUANTITIES IN PARENTHESIS ARE ACTUAL AIR FLOW RATES BASED ON DENSITY AT DESIGN CONDITION.
8. FOR THE NON-SAFETY VENTILATION SYSTEMS, THE AIR FLOW RATES SHOWN ARE ORIGINAL DESIGN VALUES FOR INITIAL FLOW BALANCING AND DO NOT REPRESENT AS-BUILT. AIR FLOW IS BALANCED TO MAINTAIN ROOM TEMPERATURES WITHIN DESIGN DURING NORMAL OPERATION AND TO ENSURE THE DIRECTION OF AIR FLOW IS AS SHOWN.
9. THE SAFEGUARDS BUILDING ELECTRICAL AREA MUST BE MAINTAINED AT A SLIGHTLY POSITIVE PRESSURE.
10. THE S-5 STAIRWELL (ROOMS 085C, 096B AND 105B) IS PART OF THE NORMAL EAVS EXHAUST AIR FLOW PATH FROM THE MAJOR EQUIPMENT ROOMS TO THE HVAC EQUIPMENT ROOM 104 PER DBD-ME-302B AND DBD-ME-302C.

R

REFERENCE DRAWINGS

1.	FLOW DIAGRAM VENTILATION AAP BLDG AND CONTROL BLDG UPS AREA A/C SYSTEM	M1-0313
2.	MECHANICAL DRAWING NOTES AND SYMBOLS	M1-0200
3.	FLOW DIAGRAM VENT CHILLED WATER	M2-0307
4.	FLOW DIAG VENT CHILLED WATER SYSTEM NUCLEAR SAFETY SYSTEM.	M2-0311-A
5.	FLOW DIAG VENT CHILLED WATER SYSTEM NUCLEAR SAFETY SYSTEM.	M2-0311-B
6.	VENT SAFEGUARDS BLDG PLAN @ EL 810"-6"	M2-0652 SERIES
7.	VENT SAFEGUARDS BLDG PLAN @ EL 831"-6"	M2-0653 SERIES
8.	VENT SAFEGUARDS BLDG PLAN @ EL 852"-6"	M2-0654 SERIES
9.	VENT SAFEGUARDS BLDG PLAN @ EL 873"-6"	M2-0655 SERIES

FSAR FIGURE 9.4-4

THIS DRAWING CREATED ELECTRONICALLY

DRAWING 2323-M2-0302 REV CP-2
HAS BEEN SPLIT INTO THE FOLLOWING SHEETS:

M2-0302
M2-0302-A
M2-0302-B
M2-0302-C

CLASS I
(NUCLEAR SAFETY-RELATED)
SAFETY CLASS 1 — SEISMIC CATEGORY I
SAFETY CLASS 2 — CLASS 1E
SAFETY CLASS 3 — ASSOCIATED CIRCUITS

LUMINANT
CPSES
GLEN ROSE, TEXAS

FLOW DIAGRAM - VENTILATION
SAFEGUARDS AND ELECTRICAL AREA

DWG. NO. M2-0302 | SH. NO. B | REV. CP-11

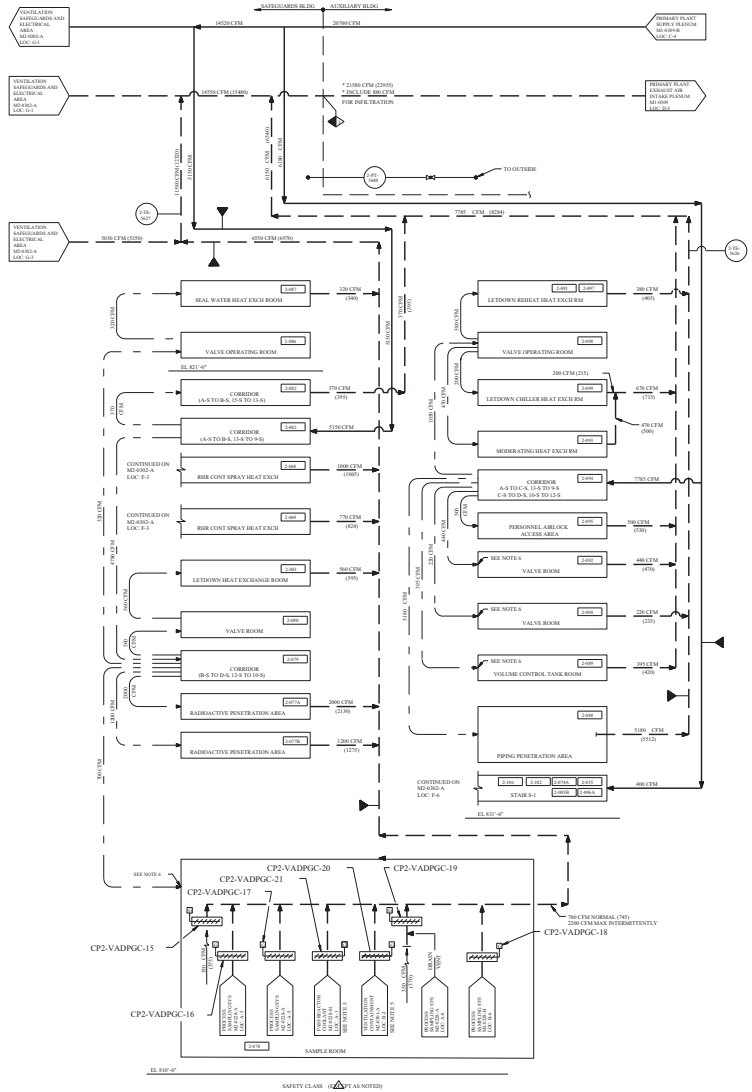

REV	DRN	CHKD	APVD	REMARKS
CP-7				THIS DIAGRAM HAS BEEN REVISED TO INCORPORATE DESIGN CHANGE FNA-2003-00150 AS AS PER SK-2003-31-M1SH1SC-00.

NOTES:

1. FOR HVAC ABBREVIATIONS AND SYMBOLS SEE DRAWING M1-6513 AND M1-6200.
2. THIS DIAGRAM IS A SCHEMATIC REPRESENTATION AND IS INTENDED TO SHOW GENERAL AIR DISTRIBUTION AND FLOW PATHS.
3. BALANCING DAMPERS, REGISTERS, DIFFUSERS, FLEXIBLE CONNECTIONS AND ALL OTHER RELATED ACCESSORIES NOT SHOWN ON THIS DIAGRAM SHALL BE PROVIDED AS INDICATED ON THE HVAC ARRANGEMENT DRAWINGS AND SPECIFICATIONS.
4. THE SAFEGUARD BUILDING WILL BE MAINTAINED AT A SLIGHT NEGATIVE PRESSURE.
5. 750 CFM INTERMITTENTLY FROM EACH SAMPLE PANEL MODULE.
6. AIR INTAKE FOR THE INDICATED ROOMS IS THROUGH DOORWAY. DOORS ARE OPEN FOR TORNADO VENTING PURPOSES.
7. AIR FLOW QUANTITIES SHOWN ARE BASED ON A DENSITY OF 0.075 LB/FT³ OCCURING AT THE ST ANDARD CONDITION OF DRY AIR AT 70°F AND 29.92" HG BAROMETRIC PRESSURE. QUANTITIES IN PARENTHESES ARE AIR FLOW RATES BASED ON DENSITY AT DESIGN CONDITIONS.
8. FIRE DAMPERS REMOVED FROM FLOW DIAGRAM ONLY. FOR LOCATIONS SEE SECTL LAYOUT DRAWINGS.
9. THE AIR FLOW RATES SHOWN ARE ORIGINAL DESIGN VALUES FOR INITIAL FLOW BALANCING AND DO NOT REPRESENT AS-BUILT. AIR FLOW IS BALANCED TO MAINTAIN ROOM TEMPERATURES WITHIN DESIGN DURING NORMAL OPERATION AND TO ENSURE THE DIRECTION OF AIR FLOW IS AS SHOWN.

REFERENCE DRAWINGS:

1.	FLOW DIAGRAM VENTILATION AAP BLDG AND CONTROL BLDG UPS AREA A/C SYSTEM	M1-6313
2.	MECHANICAL DRAWING NOTES AND SYMBOLS	M1-6200
3.	DELETED	
4.	FLOW DIAG VENT PRIM PLANT SUPPLY AND EXHAUST	M1-6309
5.	FLOW DIAG VENT PRIM PLANT SUPPLY AND EXHAUST	M1-6309-B
6.	FLOW DIAG VENT SAFEGUARD AND ELEC AREA	M2-0302-A
7.	VENT SAFEGUARDS BLDG PLAN @ EL 810'-6"	M2-6652 SERIES
8.	VENT SAFEGUARDS BLDG PLAN @ EL 831'-6"	M2-6653 SERIES
9.	FLOW DIAGRAM VENTILATION CONTAINMENT	M2-6301-A
10.	FLOW DIAGRAM PROCESS SAMPLING SYSTEM	M2-0228-A
11.	FLOW DIAGRAM PROCESS SAMPLING SYSTEM	M2-0228-B
12.	FLOW DIAGRAM POST ACCIDENT SAMPLING SYSTEM REACTOR COOLANT	M2-0228-01

FSAR FIGURE 9.4-4

THIS DRAWING IS DERIVED FROM CAD FILE

DRAWING	2123-M2-0302	REV	CP-2
HAS BEEN SPLIT INTO THE FOLLOWING SHEETS:			
M2-0302			
M2-0302-A			
M2-0302-B			
M2-0302-C			

CLASS I
(NUCLEAR SAFETY-RELATED)
SAFETY CLASS 1 SEISMIC CATEGORY 1
SAFETY CLASS 2 G-AM-01
SAFETY CLASS 3 G-AM-01/CS/ET/FX

TXU POWER
CPSES
GLEN ROSE, TEXAS

FLOW DIAGRAM - VENTILATION
SAFEGUARDS AND ELECTRICAL AREA

DWG. NO.	REV. NO.	REV.
M2-0302	C	CP-7

SBSSSBD.AUB BRXSS

ms516590.dgn M2-0302-C

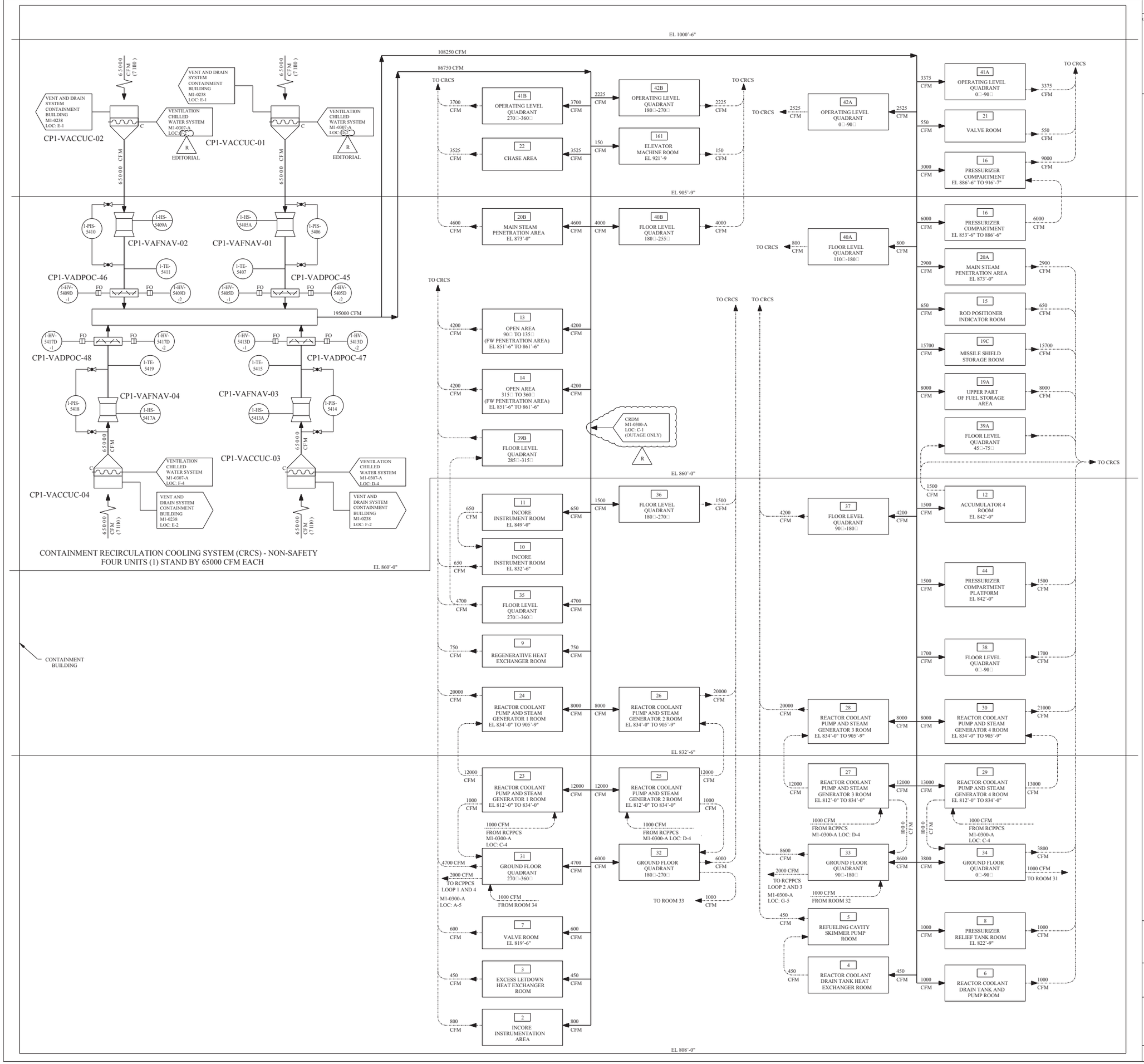

REV	DWN	CHK	APVD	REMARKS
CP-12	JRMC 01-24 2008	DJL 02-15 2008		THIS DRAWING REVISED TO INCORPORATE DESIGN CHANGE FDA 2007-001775-01-00 PER SK-0001-07-001775-01-00. EDITORIAL CHANGES AS NOTED.

NOTES:

1. FOR SYMBOLS AND ABBREVIATIONS SEE DRAWINGS M1-0313 AND M1-0200.
2. THIS DIAGRAM IS A SCHEMATIC REPRESENTATION AND IS INTENDED TO SHOW GENERAL AIR DISTRIBUTION AND FLOW PATHS.
3. BALANCING DAMPERS, REGISTERS, DIFFUSERS, FLEXIBLE CONNECTIONS AND ALL OTHER RELATED ACCESSORIES SHALL BE PROVIDED AS INDICATED ON THE HVAC ARRANGEMENT DRAWING AND SPECIFICATIONS.
4. THIS FLOW DIAGRAM IS FOR UNIT 1 ONLY.
5. THE CONTAINMENT BUILDING WILL BE MAINTAINED AT ATMOSPHERIC PRESSURE.
6. AIR FLOW QUANTITIES SHOWN ARE BASED ON A DENSITY OF 0.075 LB/FT OCCURRING AT THE STANDARD CONDITION OF DRY AIR AT 70°F AND 29.92" HG BAROMETRIC PRESSURE. QUANTITIES IN PARENTHESES ARE ACTUAL AIR FLOW RATES BASED ON DENSITY AT DESIGN CONDITIONS.
7. AIR FLOW RATES SHOWN ARE ORIGINAL DESIGN VALUES FOR INITIAL FLOW BALANCING AND DO NOT REPRESENT AS-BUILT. AIR FLOW IS BALANCED TO MAINTAIN ROOM TEMPERATURES WITHIN DESIGN DURING NORMAL OPERATION AND TO ENSURE THE DIRECTION OF AIR FLOW IS AS SHOWN.

REFERENCES:

1.	M1-0200	MECHANICAL SYMBOLS AND NOTES
2.	M1-0313	FLOW DIAGRAM - VENTILATION AAP BLDG AND CONTROL BLDG UPS AREA A/C SYSTEMS
3.	M1-0307-A	FLOW DIAGRAM - VENTILATION CHILLED WATER SYSTEM
4.	M1-0238	FLOW DIAGRAM - VENT AND DRAIN SYSTEM CONTAINMENT BLDG
5.	M1-0300-A	FLOW DIAGRAM - VENTILATION CONTAINMENT

FSAR FIGURE 9.4-5

THIS DRAWING CREATED ELECTRONICALLY

DRAWING M1-0300 REV CP-8
HAS BEEN SPLIT INTO THE FOLLOWING SHEETS:
M1-0300
M1-0300-A

CLASS II

LUMINANT
CPNPP
GLEN ROSE, TEXAS

FLOW DIAGRAM - VENTILATION CONTAINMENT

DWG. NO. M1-0300 | SH. NO. - | REV. CP-12

< FINAL PRINT >

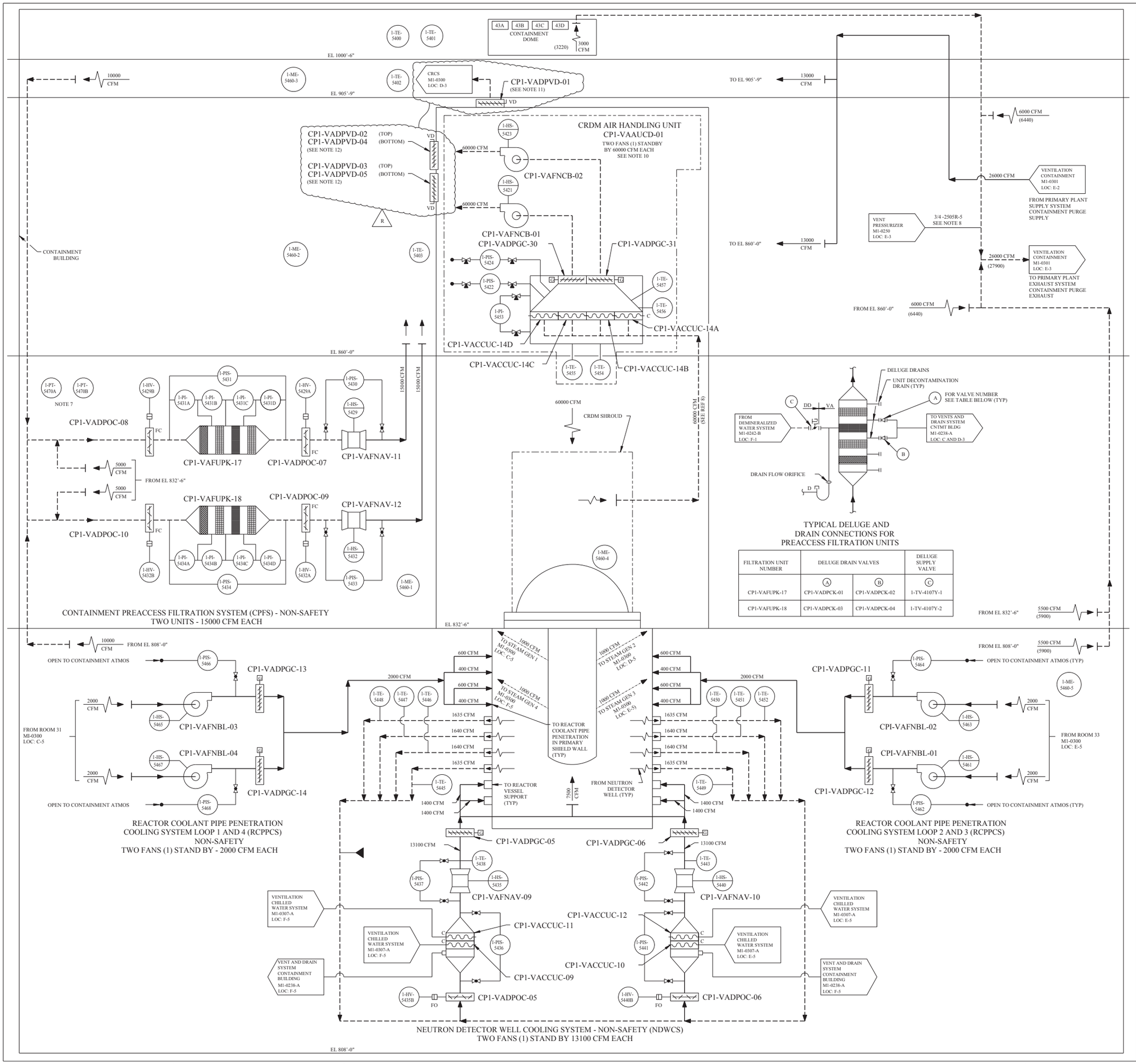

REV	DWN	CHKD	APVD	REMARKS
CP-10	JRMC 01-28-2008	DJL 02-15-2008		THIS DRAWING REVISED TO INCORPORATE DESIGN CHANGE FDA 2007-001775-01-00 PER SK-0002-07-001775-01-01.

NOTES:

1. FOR SYMBOLS AND ABBREVIATIONS SEE DRAWINGS M1-0313 AND M1-0200.
2. THIS DIAGRAM IS A SCHEMATIC REPRESENTATION AND IS INTENDED TO SHOW GENERAL AIR DISTRIBUTION AND FLOW PATHS.
3. BALANCING DAMPERS, REGISTERS, DIFFUSERS, FLEXIBLE CONNECTIONS AND ALL OTHER RELATED ACCESSORIES SHALL BE PROVIDED AS INDICATED ON THE HVAC ARRANGEMENT DRAWING AND SPECIFICATIONS.
4. THIS FLOW DIAGRAM IS FOR UNIT 1 ONLY.
5. THE CONTAINMENT BUILDING WILL BE MAINTAINED AT ATMOSPHERIC PRESSURE.
6. AIR FLOW QUANTITIES SHOWN ARE BASED ON A DENSITY OF 0.075 LB/FT OCCURRING AT THE STANDARD CONDITION OF DRY AIR AT 70°F AND 29.92" HG BAROMETRIC PRESSURE. QUANTITIES IN PARENTHESES ARE ACTUAL AIR FLOW RATES BASED ON DENSITY AT DESIGN CONDITIONS.
7. 1-PT-5470A AND B MONITOR THE CONTAINMENT PRESSURE (NARROW RANGE).
8. 3/4 " TUBING TO BE INSTALLED AT THIS CONNECTION TO VENT PRESSURIZER DURING DRAINING AND FILLING.
9. AIR FLOW RATES SHOWN ARE ORIGINAL DESIGN VALUES FOR INITIAL FLOW BALANCING AND DO NOT REPRESENT AS-BUILT. AIR FLOW IS BALANCED TO MAINTAIN ROOM TEMPERATURES WITHIN DESIGN DURING NORMAL OPERATION AND TO ENSURE THE DIRECTION OF AIR FLOW IS AS SHOWN.
10. SEE GENERAL ARRANGEMENT DRAWINGS N1559-GA SERIES FOR THE AIR HANDLING UNIT (AHU) FOR THE CRDM VENTILATION SYSTEM.
11. DAMPER CLOSED EXCEPT DURING OUTAGES.
12. DAMPER OPEN EXCEPT DURING OUTAGES.

R

REFERENCES:

1.	M1-0200	MECHANICAL SYMBOLS AND NOTES
2.	M1-0301	FLOW DIAGRAM - VENTILATION CONTAINMENT
3.	M1-0307-A	FLOW DIAGRAM - VENTILATION CHILLED WATER SYSTEM
4.	M1-0238	FLOW DIAGRAM - VENT AND DRAIN SYSTEM CONTAINMENT BLDG
5.	M1-0242	DEMINERALIZED WATER
6.	M1-0300	FLOW DIAGRAM - VENTILATION CONTAINMENT
7.	M1-0313	FLOW DIAGRAM - VENTILATION AAP BLDG AND CONTROL BLDG UPS AREA A/C SYSTEMS
8.	10023E90	VENDOR DRAWING - RRVCH/HAUP FINAL ASSEMBLY

FSAR FIGURE 9.4-5

THIS DRAWING CREATED ELECTRONICALLY

DRAWING M1-0300 REV CP-8
HAS BEEN SPLIT INTO THE FOLLOWING SHEETS:
M1-0300
M1-0300-A

CLASS II

LUMINANT
CPNPP
GLEN ROSE, TEXAS

FLOW DIAGRAM - VENTILATION CONTAINMENT

DWG. NO. M1-0300 | SH. NO. A | REV. CP-10

FINAL PRINT

REF CKD 3/18/97 CP-4

me104290.dgn M1-0300-A

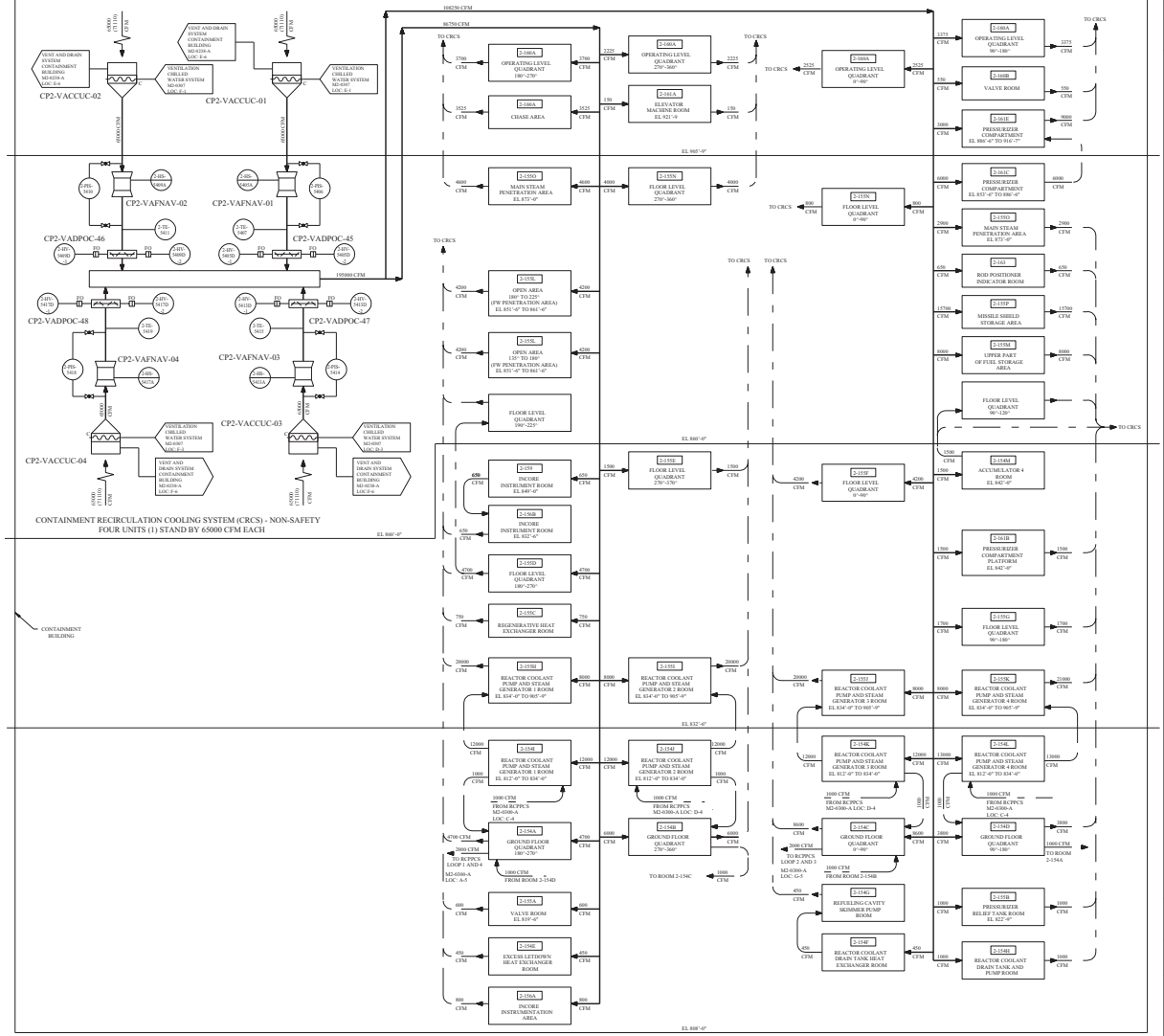

REV.	DRAWN	CHECKED	APPVD	REMARKS
CP-6				THIS DRAWING REVISED TO INCORPORATE DESIGN CHANGE FSK-2001-001/0000-02-00 PER DE-2002-01-001/000-02-00. EDITORIAL CHANGE AS NOTED

NOTES:

1. FOR SYMBOLS AND ABBREVIATIONS SEE DRAWINGS M1-0113 AND M1-0200.
2. THIS DIAGRAM IS A SCHEMATIC REPRESENTATION AND IS INTENDED TO SHOW GENERAL AIR DISTRIBUTION AND FLOW PATHS.
3. BALANCING DAMPERS, REGISTERS, DIFFUSERS, FLEXIBLE CONNECTIONS AND ALL OTHER RELATED ACCESSORIES SHALL BE PROVIDED AS INDICATED ON THE HVAC ARRANGEMENT DRAWING AND SPECIFICATIONS.
4. THIS FLOW DIAGRAM IS FOR UNIT 2 ONLY.
5. THE CONTAINMENT BUILDING WILL BE MAINTAINED AT ATMOSPHERIC PRESSURE.
6. AIR FLOW QUANTITIES SHOWN ARE BASED ON A DENSITY OF 0.075 LB/FT³ OCCURING AT THE STANDARD CONDITION OF DRY AIR AT 70°F AND 29.92" HG BAROMETRIC PRESSURE. QUANTITIES IN PARENTHESES ARE AIR FLOW RATES BASED ON DENSITY AT DESIGN CONDITIONS.

A AIR FLOW RATES SHOWN ARE ORIGINAL DESIGN VALUES FOR INITIAL FLOW BALANCING AND DO NOT REPRESENT AS-BUILT. AIR FLOW IS BALANCED TO MAINTAIN ROOM TEMPERATURES WITHIN DESIGN DURING NORMAL OPERATION AND TO ENSURE THE DIRECTION OF AIR FLOW IS AS SHOWN.

REFERENCES:

1.	M1-0200	MECHANICAL SYMBOLS AND NOTES
2.	M1-0113	FLOW DIAGRAM - VENTILATION AAP BLDG AND CONTROL BLDG UPS AREA A/C SYSTEMS
3.	M2-0307	FLOW DIAGRAM - VENTILATION CHILLED WATER SYSTEM
4.	M2-0238-A	FLOW DIAGRAM - VENT AND DRAIN SYSTEM CONTAINMENT BLDG
5.	M2-0300-A	FLOW DIAGRAM - VENTILATION CONTAINMENT

FSAR FIGURE 9.4-5

THIS DRAWING HAS BEEN SPLIT INTO THE FOLLOWING SHEETS

DRAWING	REV
2323-M2-0300	CP-2
M2-0300	
M2-0300-A	

EDITORIAL

CLASS II

TXU POWER
CPSES
GLEN ROSE, TEXAS

FLOW DIAGRAM - VENTILATION CONTAINMENT

DWG. NO. M2-0300 | RE. NO. - | REV. CP-6

M2-0300

mo519300.dgn

SBSSSSBA AUB BSSSS

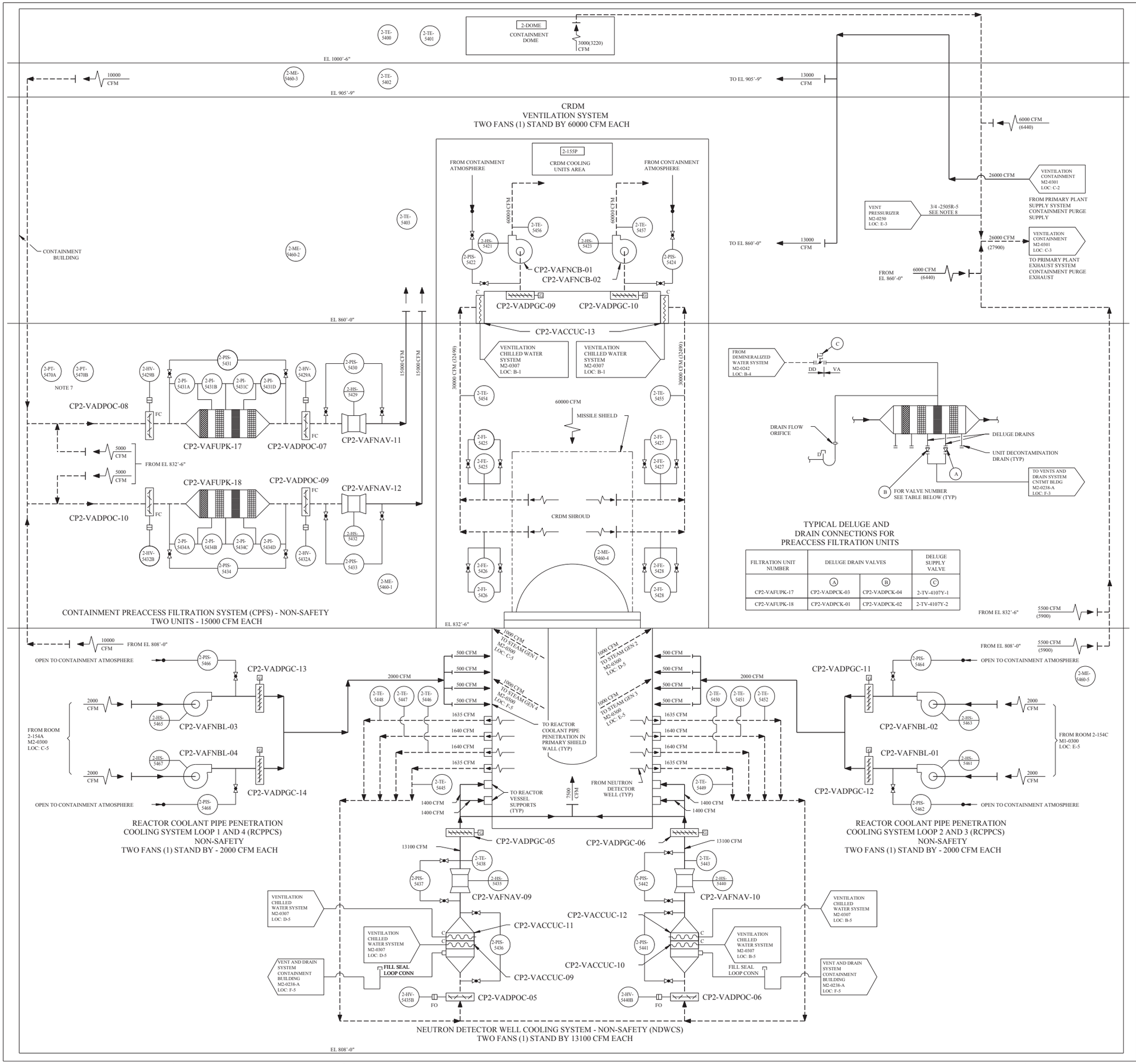

REV	DWN	CHKD	APVD	REMARKS
CP-11	DGK 10-18-2006	MHI 10-18-2006		THIS DRAWING REVISED TO INCORPORATE DESIGN CHANGE FDA 2005-003364-05-02 PER SK-0031-05-003364-05-00.

NOTES:

1. FOR SYMBOLS AND ABBREVIATIONS SEE DRAWINGS M1-0313 AND M1-0200.
2. THIS DIAGRAM IS A SCHEMATIC REPRESENTATION AND IS INTENDED TO SHOW GENERAL AIR DISTRIBUTION AND FLOW PATHS.
3. BALANCING DAMPERS, REGISTERS, DIFFUSERS, FLEXIBLE CONNECTIONS AND ALL OTHER RELATED ACCESSORIES SHALL BE PROVIDED AS INDICATED ON THE HVAC ARRANGEMENT DRAWING AND SPECIFICATIONS.
4. AIR FLOW QUANTITIES SHOWN ARE BASED ON A DENSITY OF 0.075 LB/FT OCCURING AT THE STANDARD CONDITION OF DRY AIR AT 70°F AND 29.92" HG BAROMETRIC PRESSURE. QUANTITIES IN PARENTHESES ARE AIR FLOW RATES BASED ON DENSITY AT DESIGN CONDITIONS.
5. THIS FLOW DIAGRAM IS FOR UNIT 2 ONLY.
6. THE CONTAINMENT BUILDING WILL BE MAINTAINED AT ATMOSPHERIC PRESSURE.
7. 2-PT-5470A AND B MONITOR THE CONTAINMENT PRESSURE (NARROW RANGE).
8. 3/4 " TUBING TO BE INSTALLED AT THIS CONNECTION TO VENT PRESSURIZER DURING DRAINING AND FILLING.
9. AIR FLOW RATES SHOWN ARE ORIGINAL DESIGN VALUES FOR INITIAL FLOW BALANCING AND DO NOT REPRESENT AS-BUILT. AIR FLOW IS BALANCED TO MAINTAIN ROOM TEMPERATURES WITHIN DESIGN DURING NORMAL OPERATION AND TO ENSURE THE DIRECTION OF AIR FLOW IS AS SHOWN.

REFERENCES:

1.	M1-0200	MECHANICAL SYMBOLS AND NOTES
2.	M2-0301 M2-0301-A	FLOW DIAGRAM - VENTILATION CONTAINMENT
3.	M2-0307	FLOW DIAGRAM - VENTILATION CHILLED WATER SYSTEM
4.	M2-0238-A	FLOW DIAGRAM - VENT AND DRAIN SYSTEM CONTAINMENT BLDG
5.	M2-0242	DEMINERALIZED WATER
6.	M2-0300	FLOW DIAGRAM - VENTILATION CONTAINMENT
7.	M1-0313	FLOW DIAGRAM - VENTILATION AAP BLDG AND CONTROL BLDG UPS AREA A/C SYSTEMS

FSAR FIGURE 9.4-5

THIS DRAWING CREATED ELECTRONICALLY

DRAWING 2323-M2-0300 REV CP-2
HAS BEEN SPLIT INTO THE FOLLOWING SHEETS:
M2-0300
M2-0300-A

CLASS II

TXU POWER
CPSES
GLEN ROSE, TEXAS

FLOW DIAGRAM - VENTILATION CONTAINMENT

DWG. NO. M2-0300 | SH. NO. A | REV. CP-11

FINAL PRINT

REF CKD 09/22/97 CP-7

me722000.dgn M2-0300-A

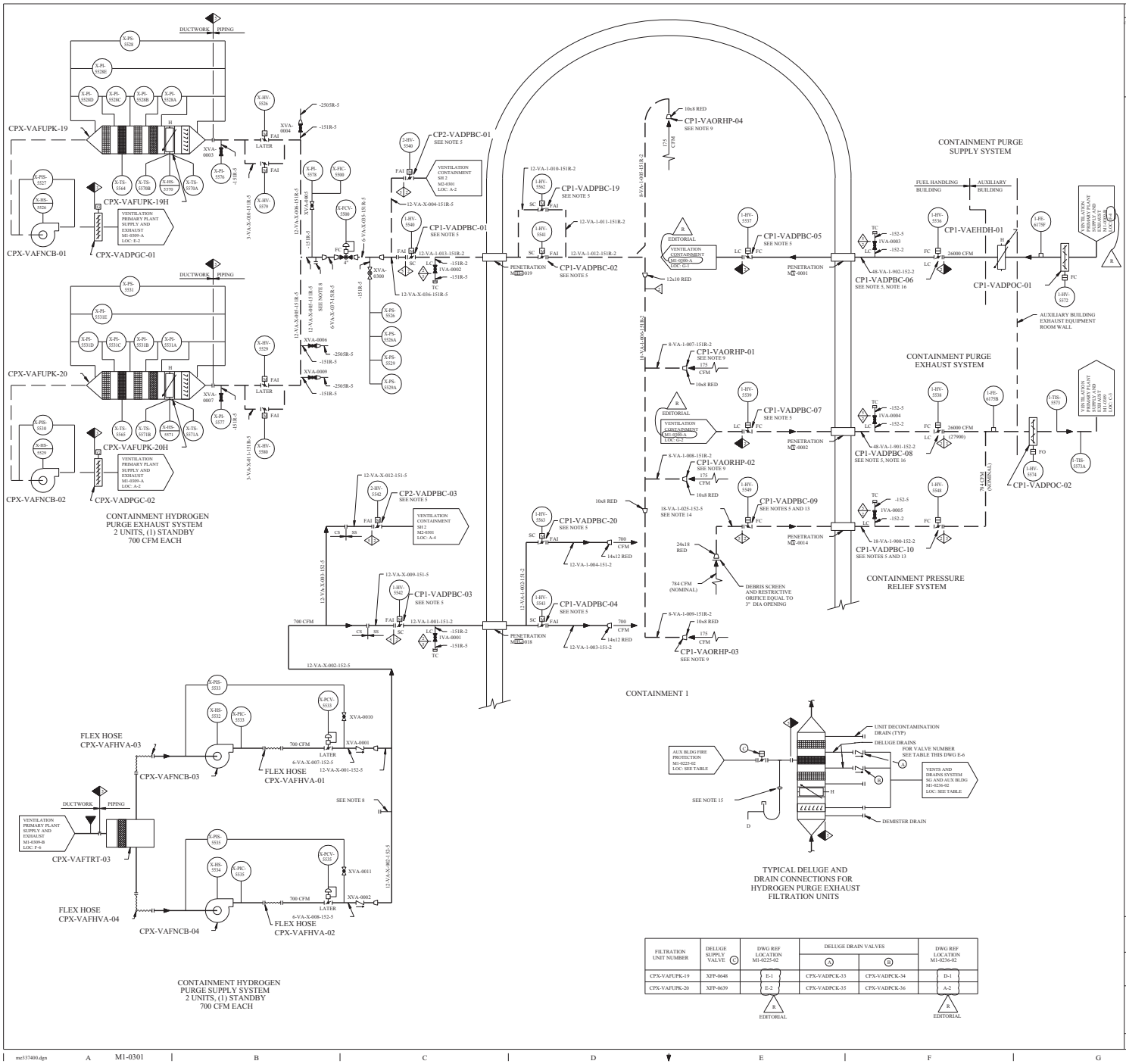

FILTRATION UNIT NUMBER	DELUGE SUPPLY VALVE (C)	DWG REF LOCATION M1-0225-02	DELUGE DRAIN VALVES (A)	DELUGE DRAIN VALVES (B)	DWG REF LOCATION M1-0236-02
CPX-VAFUPK-19	XFP-0648	E-1	CPX-VADPCK-33	CPX-VADPCK-34	D-1
CPX-VAFUPK-20	XFP-0639	E-2	CPX-VADPCK-35	CPX-VADPCK-36	A-2

EDITORIAL

REV	DWN	CHKD	APVD	REMARKS
P-21	SK 04-08-2005	SDL 04-11-2002		THIS DRAWING REVISED TO INCORPORATE DESIGN CHANGE FDA-2003-00137-01-01 PER SK-4002-01-001.170-01-00. EDITORIAL CHANGES AS NOTED.

NOTES:

1. FOR ABBREVIATIONS AND SYMBOLS SEE DRAWINGS M1-0313 AND M1-0200.
2. THIS DIAGRAM IS A SCHEMATIC REPRESENTATION AND IS INTENDED TO SHOW GENERAL AIR DISTRIBUTION AND FLOW PATHS.
3. BALANCING DAMPERS, REGISTERS, DIFFUSERS, FLEXIBLE CONNECTIONS AND ALL OTHER RELATED ACCESSORIES NOT SHOWN ON THIS DIAGRAM SHALL BE PROVIDED AS INDICATED ON THE HVAC ARRANGEMENT DRAWINGS AND SPECIFICATIONS.
4. 1-PT-0934 THRU 1-PT-0939 ARE TO BE PROVIDED BY WESTINGHOUSE. SEE WESTINGHOUSE DRAWING 8758D39, SHEETS 22 AND 42 FOR PROCESS CONTROL BLOCK DIAGRAM.
5. VALVES ARE WELDED ON THE END CLOSEST TO THE PENETRATIONS AND FLANGED ON THE OPPOSITE END.
6. BLIND FLANGES TO BE INSTALLED DURING PENETRATION LEAK TEST ONLY.
7. FOR CONTAINMENT RADIATION MONITORING SYSTEM DETAILS SEE GENERAL ATOMIC COMPANY DRAWING ELD 353-1700.
8. THE BLIND FLANGE IS PROVIDED TO FACILITATE FILTER TRAIN TESTING AND FOR ON LINE TESTING OF H2 PURGE SUPPLY AND EXHAUST FANS.
9. PROVIDE SUITABLE SIZE ORIFICE PLATE TO BALANCE AIR FLOW. PLATE SHALL BE MIN WELDED TO 8"x10" AIR INTAKES. ORIFICE DIAMETER MAY VARY FROM 3" TO 8".
10. RADIATION MONITOR IS SEISMIC CATEGORY I AND HAS A DESIGN PRESSURE OF 1 ATMOSPHERE. MONITOR IS BUILT TO MANUFACTURERS STANDARDS.
11. PENETRATIONS M -0019 AND M -0007 DETAILS TRANSFERRED FROM FLOW DIAGRAM M1-0217.
12. END OF PENETRATION PROVIDED WITH THREADED PLUG FOR HYDRO AND ILRT.
13. VALVES CP1-VADPBC-09 AND CP1-VADPBC-10 ARE LIMITED TO 65° MAX OPEN.
14. LINE 18-VA-1-025-152-5 HAS BEEN QUALIFIED AS SEISMIC CATEGORY I BY ANALYSIS.
15. FOR DRAIN FLOW ORIFICE NUMBER AND LINE CONT SEE DWG M1-0225-02 AND 02A LOCATION C,D,E AND F2.
16. A BLIND FLANGE, LOCKED CLOSED TC, PIPE FITTINGS AND CONTAINMENT ISOLATION CAP PER VENDOR DRAWING 4808D196L3G SHT 01 MAY BE USED ON THE OUTBOARD SIDE OF THE CONTAINMENT AIR SUPPLY AND/OR EXHAUST ISOLATION VALVES IF THE PENETRATION FAILS THE LOCAL LEAK RATE TEST.

REFERENCES:

M1-0200	MECHANICAL SYMBOLS AND NOTES
M1-0225-02	FLOW DIAGRAM AUXILIARY BUILDING FIRE PROTECTION
M1-0236-02	FLOW DIAGRAM VENTS AND DRAINS SYSTEM SAFEGUARDS AND AUXILIARY BUILDINGS
M1-0300	FLOW DIAGRAM VENTILATION CONTAINMENT
M1-0309	FLOW DIAGRAM VENTILATION PRIMARY PLANT SUPPLY AND EXHAUST
M1-0313	FLOW DIAGRAM VENTILATION AAP BLDG AND CONTROL BLDG UPS AREA A/C SYSTEMS
M2-0301	FLOW DIAGRAM VENTILATION CONTAINMENT SH 2
S1-0513	RB CONTAINMENT LINER DETAILS SH 3
BRP-PN-RB-001	PENETRATION PNEUMATIC AND HYDRAULIC CONN
BRP-PN-RB-002	PENETRATION PNEUMATIC AND HYDRAULIC CONN
BRP-PN-1-503-004	REACTOR CONTAINMENT PENETRATION AND DETAIL

FSAR FIGURE 9.4-6

THIS DRAWING CREATED FROM CAD

DRAWING M1-0301 REV CP-10 HAS BEEN SPLIT INTO THE FOLLOWING SHEETS:
M1-0301
M1-0301-A

CLASS I
(NUCLEAR SAFETY-RELATED)

SAFETY CLASS 1
SAFETY CLASS 2
SAFETY CLASS 3
SEISMIC CATEGORY I
CLASS 1E
ASSOCIATED CIRCUITS

TXU ELECTRIC
CPSES
GLEN ROSE, TEXAS

FLOW DIAGRAM
VENTILATION CONTAINMENT

DWG. NO. M1-0301 | SH. NO. - | REV. CP-21

R-CP CHKD 5-5-03 DOC01

SSS SSS SSS

mz337400.dgn M1-0301

REV	DWN	CHKD	APVD	REMARKS
CP-17	JRMC 03-04-2014	DJL 03-05-2014		THIS DRAWING REVISED TO INCORPORATE DESIGN CHANGE FDA 2013-000203-01-00 PER SK-0001-13-000205-01-00.

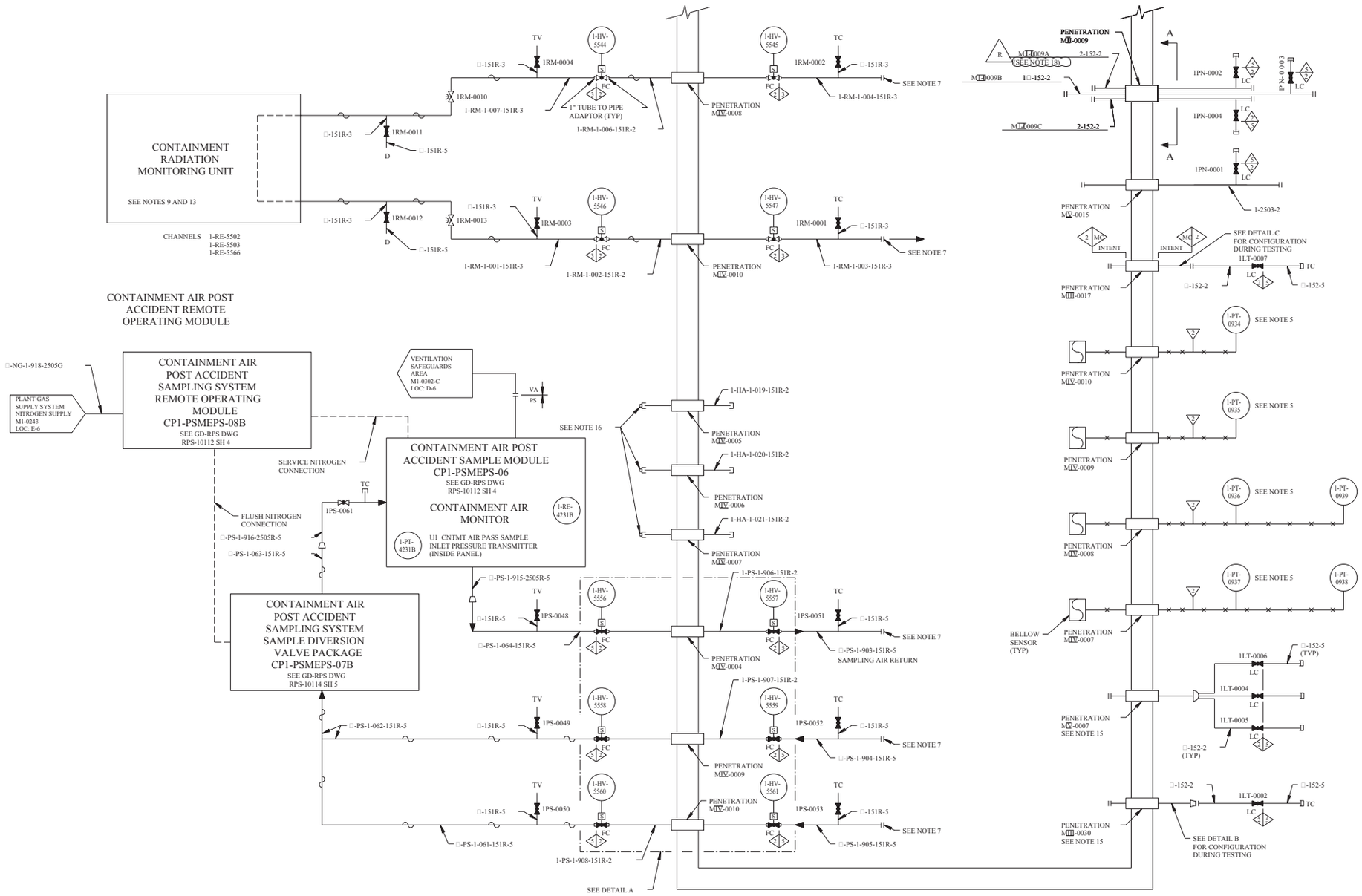

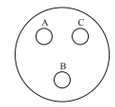

SECTION A-A

NOTES:

1. FOR ABBREVIATIONS AND SYMBOLS SEE DRAWINGS M1-0313 AND M1-0200.
2. DELETED
3. DELETED
4. DELETED
5. 1-PT-0934 THRU 1-PT-0937 ARE TO BE PROVIDED BY WESTINGHOUSE. SEE WESTINGHOUSE DRAWING 8758D39, SHEETS 22 AND 42 FOR PROCESS CONTROL BLOCK DIAGRAM.
6. VALVES ARE WELDED ON THE END CLOSEST TO THE PENETRATIONS AND FLANGED ON THE OPPOSITE END.
7. BLIND FLANGES TO BE INSTALLED DURING PENETRATION LEAK TEST ONLY.
8. DELETED
9. FOR CONTAINMENT RADIATION MONITORING SYSTEM DETAILS SEE TAG NUMBER 1-REK-5502/03/66.
10. DELETED
11. DELETED
12. DELETED
13. RADIATION MONITOR IS SEISMIC CATEGORY AND HAS A DESIGN PRESSURE OF 1 ATMOSPHERE. MONITOR IS BUILT TO MANUFACTURERS STANDARDS.
14. DELETED
15. PENETRATIONS M -0008 AND M -0007 DETAILS TRANSFERRED FROM FLOW DIAGRAM M1-0217.
16. END OF PENETRATION PROVIDED WITH THREADED PLUG FOR HYDRO AND ILRT.
17. DELETED
18. ACCEPTABLE ALTERNATE PENETRATION INSERT X-M -0009 IS II APPROVED FOR MODES 5, 6 AND DEFUELED (SEE FDA-2013-000203-01).

REFERENCES:

M1-0200	MECHANICAL SYMBOLS AND NOTES
M1-0243	FLOW DIAGRAM PLANT GAS SUPPLY SYSTEM NITROGEN SUPPLY
M1-0302	FLOW DIAGRAM VENTILATION SAFEGUARDS AND ELECTRICAL AREA
M1-0313	FLOW DIAGRAM VENTILATION AAP BLDG AND CONTROL BLDG UPS AREA A/C SYSTEMS
S1-0513	RB CONTAINMENT LINER DETAILS SH 3
BRP-PN-RB-001	PENETRATION PNEUMATIC AND HYDRAULIC CONN
BRP-PN-RB-002	PENETRATION PNEUMATIC AND HYDRAULIC CONN
BRP-PN-1-503-004	REACTOR CONTAINMENT PENETRATION AND DETAIL

FSAR FIGURE 9.4-6

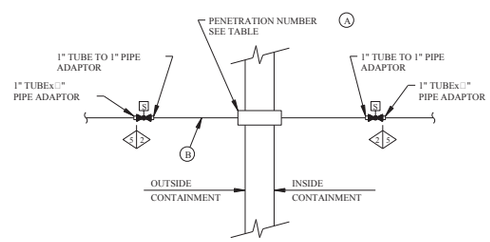

DETAIL A
ZONE C-5

LINE NUMBERS FOR POST-ACCIDENT SAMPLING SYSTEM CONTAINMENT PENETRATIONS	
PENETRATION NUMBER (A)	LINE NUMBER (B)
MU-0004	1-PS-1-906-151R-2
MU-0009	1-PS-1-907-151R-2
MU-0010	1-PS-1-908-151R-2

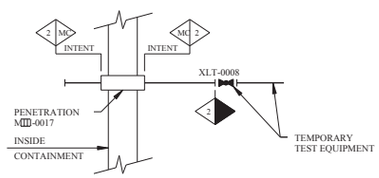

DETAIL C
F-2
TO BE USED DURING TESTING ONLY.
CONTAINMENT DEPRESSURIZATION PERFORMED UTILIZING TEMPORARY TEST VALVE XLT-0008 .

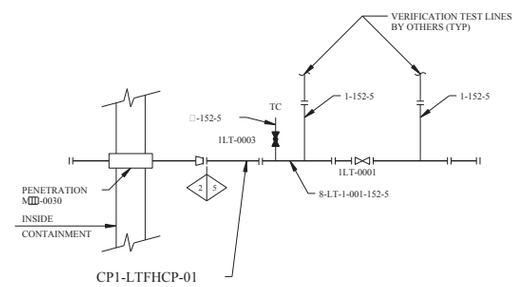

DETAIL B
F-4
TO BE USED DURING TESTING ONLY

DRAWING M1-0301 REV CP-10
HAS BEEN SPLIT INTO THE FOLLOWING SHEETS:
M1-0301
M1-0301-A

TIRS DRAWING CREATED ELECTRONICALLY

CLASS I
(NUCLEAR SAFETY-RELATED)
SAFETY CLASS 1 SAFETY CLASS 2 SAFETY CLASS 3
SEISMIC CATEGORY I CLASS 1E ASSOCIATED CIRCUITS

LUMINANT
CPNPP
GLEN ROSE, TEXAS

FLOW DIAGRAM
VENTILATION CONTAINMENT

DWG. NO. M1-0301 | SH. NO. A | REV. CP-17

$$$$$$$ DATE $$$$$$ REF CHK CP- II 06/04/97

me513500.dgn A M1-0301-A

< FINAL PRINT >

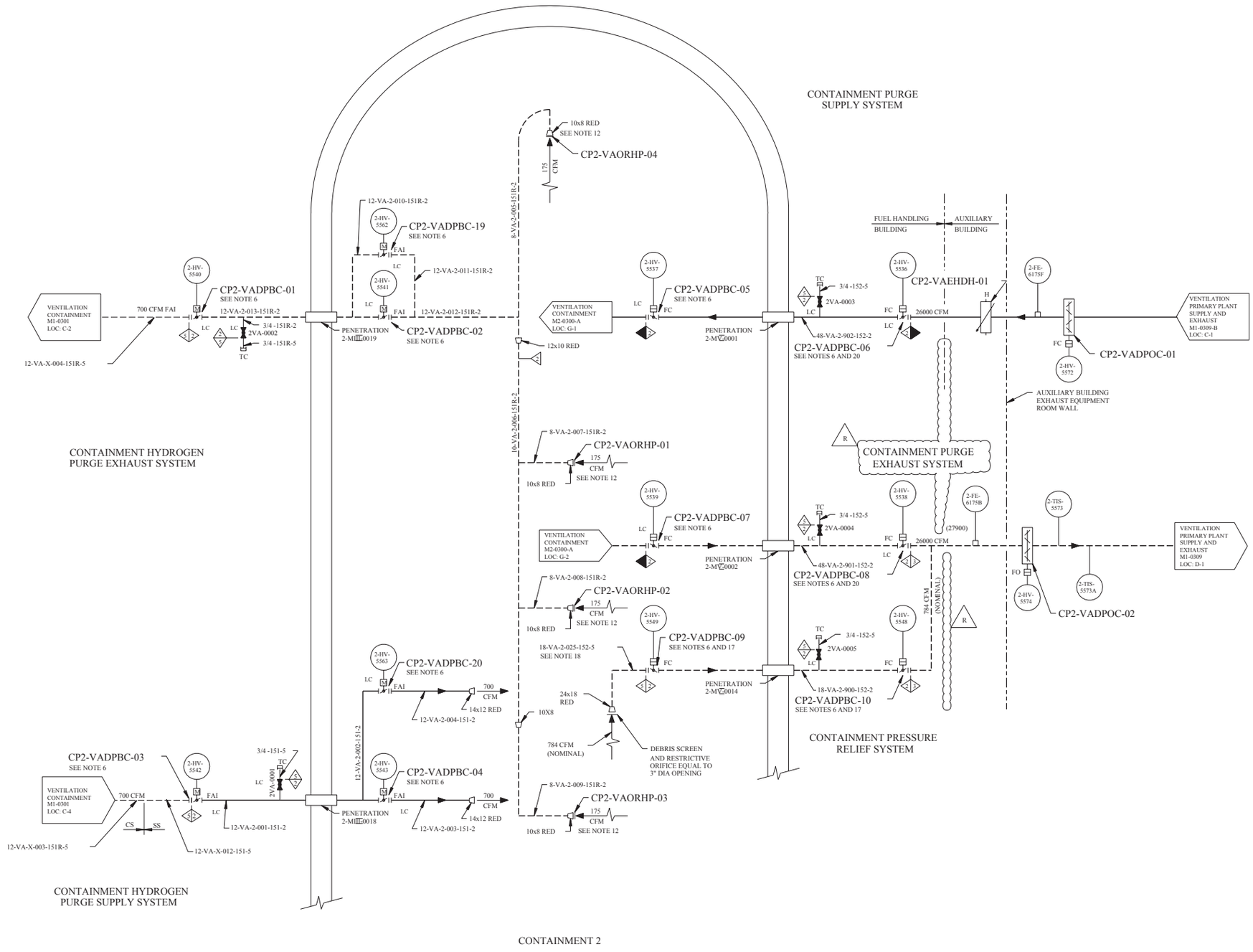

REV	DWN	CHKD	APVD	REMARKS
CP-13	JRMC 08-24 2009	DJL 08-24 2009		THIS DRAWING REVISED TO INCORPORATE DESIGN CHANGE FDA-2009-001372-01-00 PER SK-0002-09-001372-01-00.

NOTES:

1. FOR ABBREVIATIONS AND SYMBOLS SEE DRAWINGS M1-0200 & M1-0313.
2. DELETED
3. THIS DIAGRAM IS A SCHEMATIC REPRESENTATION AND IS INTENDED TO SHOW GENERAL AIR DISTRIBUTION AND FLOW PATHS.
4. BALANCING DAMPERS, REGISTERS, DIFFUSERS, FLEXIBLE CONNECTIONS AND ALL OTHER RELATED ACCESSORIES NOT SHOWN ON THIS DIAGRAM SHALL BE PROVIDED AS INDICATED ON THE HVAC ARRANGEMENT DRAWINGS AND SPECIFICATIONS.
5. DELETED
6. VALVES ARE WELDED ON END CLOSEST TO THE PENETRATIONS AND FLANGED ON THE OPPOSITE END.
7. BLIND FLANGES TO BE INSTALLED DURING PENETRATION LEAK TEST ONLY.
8. DELETED
9. FOR CONTAINMENT RADIATION MONITORING SYSTEM DETAILS SEE GENERAL ATOMIC COMPANY DRAWING ELD 353-1700.
10. DELETED
11. DELETED
12. PROVIDE SUITABLE SIZE ORIFICE PLATE TO BALANCE AIR FLOW. THE ORIFICE PLATE SHALL BE 1/8 INCH THICK MINIMUM AND WELDED TO 8"x10" AIR INTAKES. ORIFICE SIZE MAY VARY FROM 3" TO 8" IN DIAMETER.
13. DELETED
14. RADIATION MONITOR IS SEISMIC CATEGORY 1 AND HAS A DESIGN PRESSURE OF 1 ATMOSPHERE. MONITOR IS BUILT TO MANUFACTURERS STANDARDS.
15. DELETED
16. DELETED
17. VALVES CP2-VADPBC-09 AND CP2-VADPBC-10 ARE LIMITED TO 65° MAX OPEN.
18. LINE 18-VA-2-025-152-5 HAS BEEN QUALIFIED AS SEISMIC CATEGORY 1 BY ANALYSIS.
19. FOR DRAIN FLOW ORIFICE NUMBER AND LINE CONT SEE DWG M2-0225-02 AND 02A LOCATION C, D, E AND F2.
20. A BLIND FLANGE, LOCKED CLOSED TC, PIPE FITTINGS AND CONTAINMENT ISOLATION CAP PER VENDOR DRAWING 4800D186LXI SHT 01 MAY BE USED ON THE OUTBOARD SIDE OF THE CONTAINMENT AIR SUPPLY AND/OR EXHAUST ISOLATION VALVES IF THE PENETRATION FAILS THE LOCAL LEAK RATE TEST.

REFERENCE DRAWINGS:

M1-0200	MECHANICAL SYMBOLS AND NOTES.
M1-0225-02	FLOW DIAGRAM AUXILIARY BUILDING FIRE PROTECTION.
M2-0300	FLOW DIAGRAM VENTILATION CONTAINMENT.
M1-0309 & M1-0309B	FLOW DIAGRAM VENTILATION PRIMARY PLANT SUPPLY AND EXHAUST.
M1-0313	FLOW DIAGRAM VENTILATION AAP BUILDING AND CONTROL BUILDING. UPS AREA A/C SYSTEMS
M2-0301-A	FLOW DIAGRAM VENTILATION CONTAINMENT
BRP-VA-2-AB-001	HEATING & VENTILATION (CONTAINMENT PENETRATIONS)
BRP-VA-2-AB-002	HEATING & VENTILATION (CONTAINMENT PENETRATIONS)
BRP-VA-2-FB-001	HEATING & VENTILATION (CONTAINMENT PENETRATIONS)
BRP-VA-2-RB-001	HEATING & VENTILATION (CONTAINMENT PENETRATIONS)
BRP-VA-2-RB-002	HEATING & VENTILATION (CONTAINMENT PENETRATIONS)
BRP-VA-2-RB-005	HEATING & VENTILATION (CONTAINMENT PENETRATIONS)
BRP-VA-2-RB-007	HEATING & VENTILATION (CONTAINMENT PENETRATIONS)
M1-0301 & M1-0301-A	FLOW DIAGRAM VENTILATION CONTAINMENT.

FSAR FIGURE 9.4-6

THIS DRAWING CREATED ELECTRONICALLY

DRAWING 2323-M2-0301	REV CP-4
HAS BEEN SPLIT INTO THE FOLLOWING SHEETS:	
M2-0301	
M2-0301-A	

CLASS I
(NUCLEAR SAFETY-RELATED)
SAFETY CLASS 1 / SAFETY CLASS 2 / SAFETY CLASS 3 — SEISMIC CATEGORY I / CLASS 1E / ASSOCIATED CIRCUITS

LUMINANT
CPNPP
GLEN ROSE, TEXAS

FLOW DIAGRAM
VENTILATION CONTAINMENT

DWG. NO. M2-0301 | SH. NO. - | REV. CP-13

REF CKD CP-10 12/19/96

$$$$$$$DATE$$$$$$

me962400.dgn A M2-0301 < FINAL PRINT >

REV	DWN	CHKD	APVD	REMARKS
CP-15	JRMC 03-04 2014	DJL 03-05 2014		THIS DRAWING REVISED TO INCORPORATE DESIGN CHANGE FDA 2013-000203-01-00 PER SK-0002-13-000203-01-00.

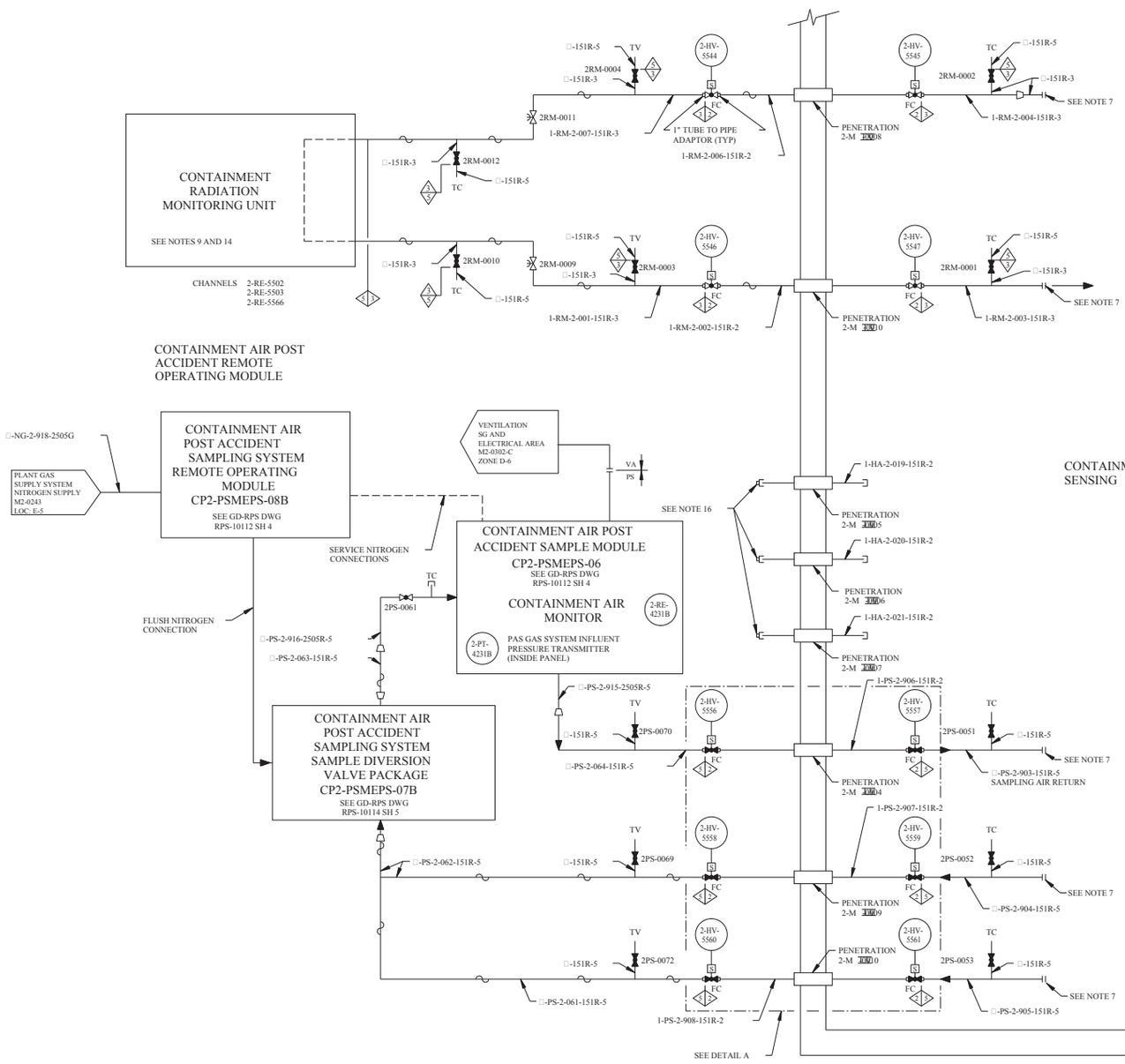

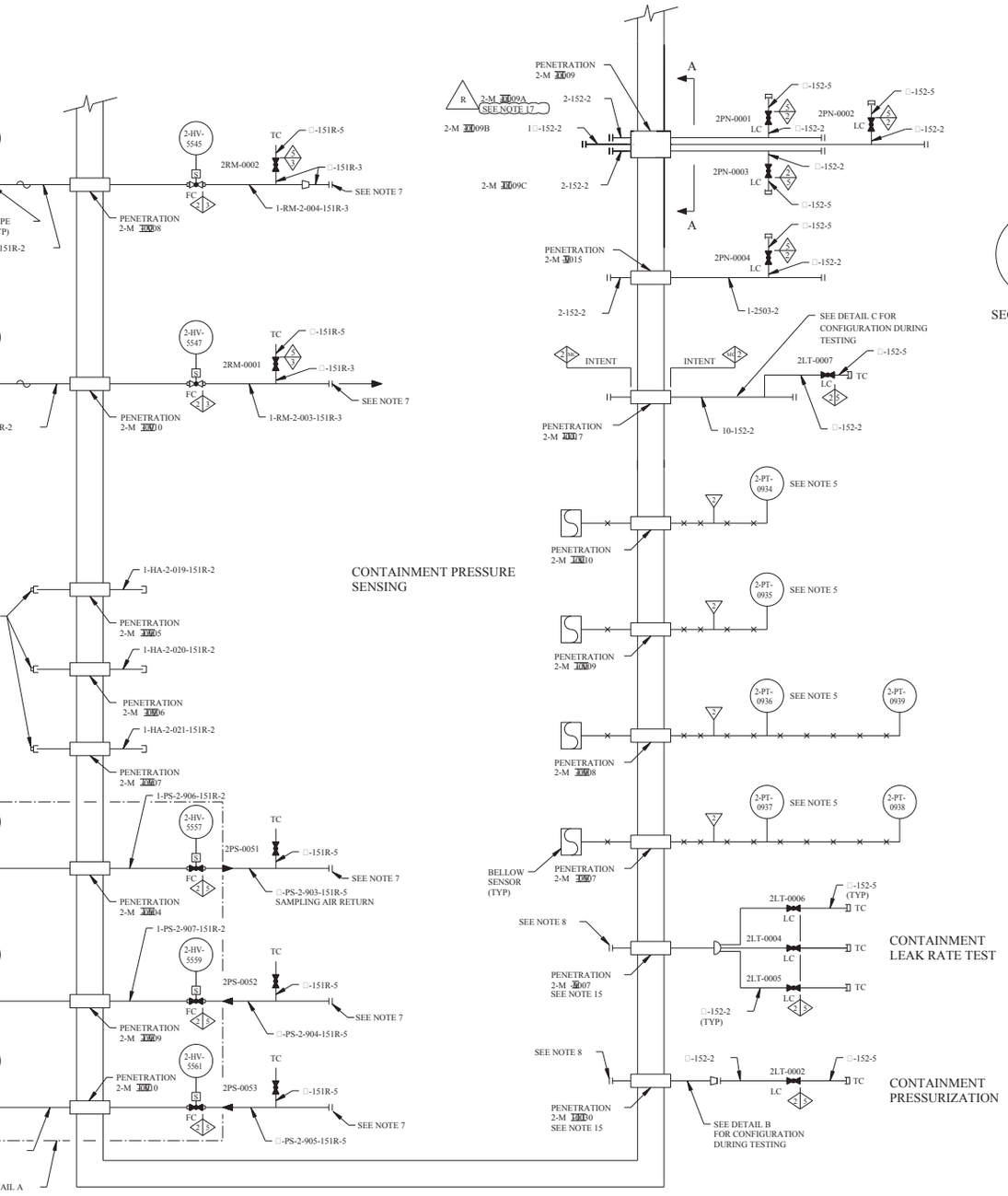

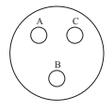

SECTION A-A

CONTAINMENT 2

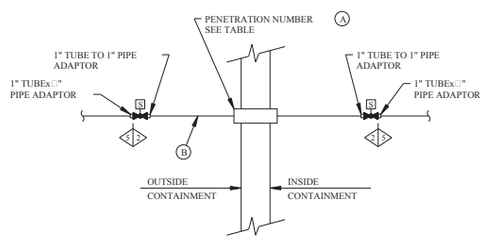

DETAIL A
(C-5)

LINE NUMBERS FOR POST-ACCIDENT SAMPLING SYSTEM CONTAINMENT PENETRATIONS	
PENETRATION NUMBER (A)	LINE NUMBER (B)
M1-0004	1-PS-2-906-151R-2
M1-0009	1-PS-2-907-151R-2
M1-0010	1-PS-2-908-151R-2

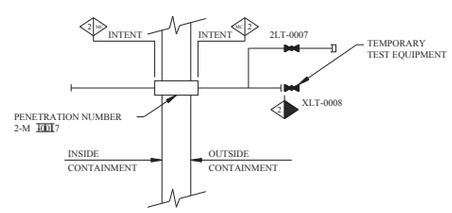

DETAIL C
(F-2)
TO BE USED DURING TESTING ONLY. CONTAINMENT DEPRESSURIZATION PERFORMED UTILIZING TEMPORARY TEST VALVE XLT-0008.

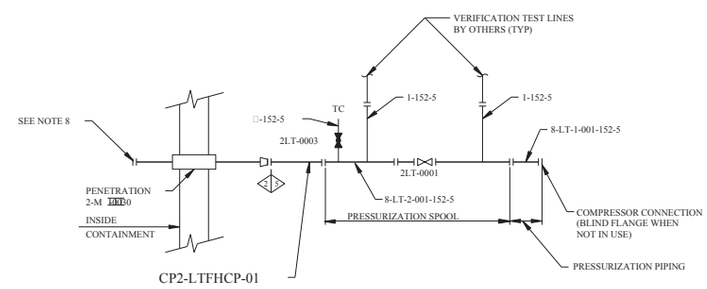

DETAIL B (F-4)
TO BE USED DURING TESTING ONLY

NOTES:

1. FOR ABBREVIATIONS AND SYMBOLS SEE DRAWINGS M1-0313 & M1-0200.
2. DELETED
3. DELETED
4. DELETED
5. 2-PT-0934 THRU 2-PT-0937 ARE TO BE PROVIDED BY WESTINGHOUSE. SEE WESTINGHOUSE DRAWING 8768D39, SHEET 22 AND 42 FOR PROCESS CONTROL BLOCK DIAGRAM.
6. DELETED
7. BLIND FLANGES TO BE INSTALLED DURING PENETRATION LEAK TEST ONLY.
8. DELETED
9. FOR CONTAINMENT RADIATION MONITORING SYSTEM DETAILS SEE TAG NUMBER 2-REK-5502/03/66.
10. DELETED
11. DELETED
12. DELETED
13. DELETED
14. RADIATION MONITOR IS SEISMIC CATEGORY AND HAS A DESIGN PRESSURE OF 1 ATMOSPHERE. MONITOR IS BUILT TO MANUFACTURERS STANDARDS.
15. PENETRATIONS M -0001 AND M -0007 DETAILS TRANSFERRED FROM FLOW DIAGRAM M2-0217.
16. END OF PENETRATION PROVIDED WITH THREADED PLUG FOR HYDRO AND ILRT.
17. ACCEPTABLE ALTERNATE PENETRATION INSERT X-M -0009 IS APPROVED FOR MODES 5, 6 AND DEFUELED (SEE FDA-2013-000203-01).

REFERENCE DRAWINGS:

M1-0200	MECHANICAL SYMBOLS AND NOTES.
M2-0300 & M2-0300-A	FLOW DIAGRAM VENTILATION CONTAINMENT.
M1-0313	FLOW DIAGRAM VENTILATION AAP BUILDING. AND CONTROL BUILDING. UPS AREA A/C SYSTEMS
M1-0301 & M1-0301-A	FLOW DIAGRAM VENTILATION CONTAINMENT SHEET 2.
BRP-PN-RB-001	PENETRATION (PNEUMATIC & HYDRAULIC CONN)
BRP-PN-RB-002	PENETRATION (PNEUMATIC & HYDRAULIC CONN)
BRP-HA-RB-004	PENETRATION (PNEUMATIC & HYDRAULIC CONN)
BRP-HA-RB-005	PENETRATION (PNEUMATIC & HYDRAULIC CONN)
BRP-HA-RB-006	PENETRATION (PNEUMATIC & HYDRAULIC CONN)
M1-0243	PLANT GAS SUPPLY SYSTEM, NITROGEN SUPPLY
M2-0302	VENTILATION SG AND ELECTRICAL

FSAR FIGURE 9.4-6

THIS DRAWING CREATED ELECTRONICALLY

DRAWING 2323-M2-0301 REV CP-4
HAS BEEN SPLIT INTO THE FOLLOWING SHEETS:
M2-0301
M2-0301-A

CLASS I
(NUCLEAR SAFETY-RELATED)
SAFETY CLASS 1 SAFETY CLASS 2 SAFETY CLASS 3
SEISMIC CATEGORY I CLASS 1E ASSOCIATED CIRCUITS

LUMINANT
CPNPP
GLEN ROSE, TEXAS

FLOW DIAGRAM
VENTILATION CONTAINMENT

DWG. NO. M2-0301 | SH. NO. A | REV. CP-15

< FINAL PRINT >

REF CKD CP-10 06/04/97 $$$$$$$DATE$$$$$$

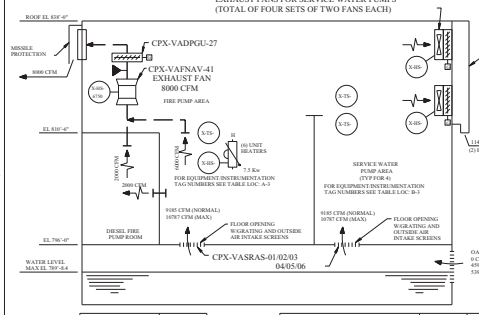

UNIT HEATERS	X-8B-	LO-LO TEMP THERMOSTAT X-7B-
TAG NUMBER		
CPX-VAEHUH-44	6759	6759B
CPX-VAEHUH-45	6760	6760B
CPX-VAEHUH-46	6761	6761B
CPX-VAEHUH-47	6762	6762B
CPX-VAEHUH-48	6763	6763
CPX-VAEHUH-49	6764	6764

EXHAUST FANS	ACTM	X-8B-	X-7Ts-	HI TEMP THERMOSTAT X-7B-	DAMPER
TAG NUMBER					TAG NUMBER
CPX-VAFNRV-02	6523	6751	6755	6759A	CPX-VADPSW-02
CPX-VAFNRV-03	6523	6752			CPX-VADPSW-03
CPX-VAFNRV-04	6523	6753	6756	6760A	CPX-VADPSW-04
CPX-VAFNRV-05	6523	6754			CPX-VADPSW-05
CPX-VAFNRV-06	6523	6755	6757	6761A	CPX-VADPSW-06
CPX-VAFNRV-07	6523	6756			CPX-VADPSW-07
CPX-VAFNRV-08	6523	6757	6758	6762A	CPX-VADPSW-08
CPX-VAFNRV-09	6523	6758			CPX-VADPSW-09

SERVICE WATER INTAKE STRUCTURE VENTILATION SYSTEM
SAFETY CLASS 3 (EXCEPT AS NOTED)

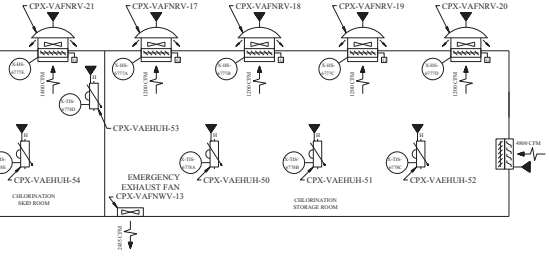

CIRCULATING WATER INTAKE STRUCTURE - CHLORINATION BUILDING VENTILATION SYSTEM
NON-SAFETY
(NOT DESIGN VALIDATED BY EBASCO)

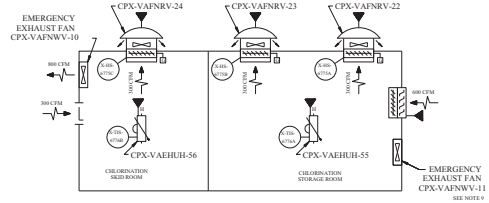

SERVICE WATER INTAKE STRUCTURE - CHLORINATION BUILDING VENTILATION SYSTEM
NON-SAFETY
(NOT DESIGN VALIDATED BY EBASCO)

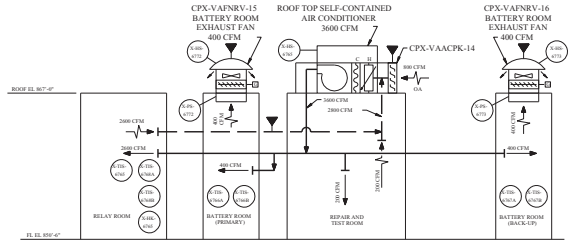

SWITCHYARD RELAY HOUSE A/C SYSTEM
NON-SAFETY
(NOT DESIGN VALIDATED BY EBASCO)

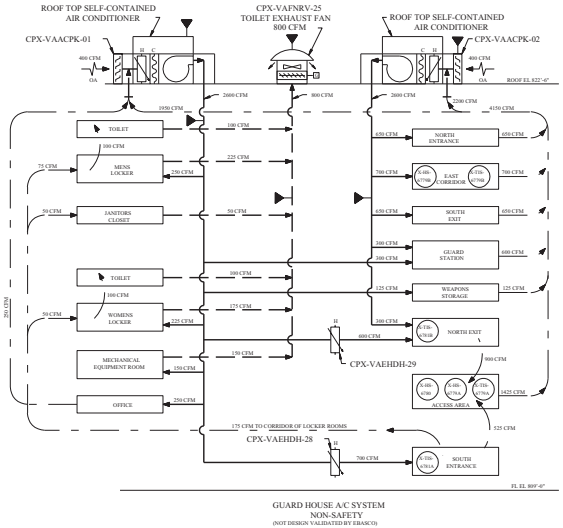

GUARD HOUSE A/C SYSTEM
NON-SAFETY
(NOT DESIGN VALIDATED BY EBASCO)

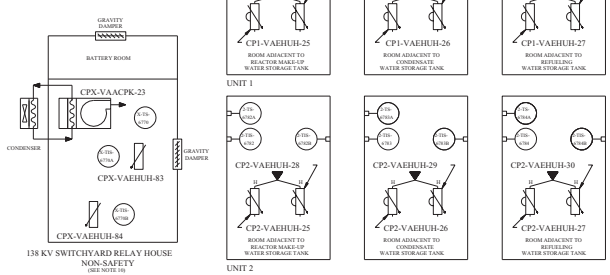

138 KV SWITCHYARD RELAY HOUSE
NON-SAFETY
(SEE NOTE 10)

REV.	DRN.	CHKD.	APP'D	REMARKS
09-17				THIS DRAWING REVISED TO INCORPORATE DESIGN CHANGE TXA-3861-00000-SE-00-PER ME-0000-SE-00-000012-00.

NOTES:

1. FOR ABBREVIATIONS AND SYMBOLS SEE DRAWINGS M1-0113 AND M1-0200.
2. DELETED
3. THIS DIAGRAM IS A SCHEMATIC REPRESENTATION AND IS INTENDED TO SHOW GENERAL AIR DISTRIBUTION AND FLOW PATHS.
4. BALANCING DAMPERS, REGISTERS, DIFFUSERS, FLEXIBLE CONNECTIONS AND ALL OTHER RELATED ACCESSORIES NOT SHOWN ON THIS DIAGRAM SHALL BE PROVIDED AS INDICATED ON THE HVAC ARRANGEMENT DRAWINGS AND SPECIFICATIONS.
5. IN THE SERVICE WATER INTAKE STRUCTURE, ANY OPERATING FAN DRAWS AIR EQUALLY THRU ALL FIVE AIR INTAKES AT FLOOR.
6. AIR FLOW QUANTITIES SHOWN ARE BASED ON A DENSITY OF 0.075 LB/FT³ OCCURRING AT THE STANDARD CONDITION OF DRY AIR AT 70° F AND 29.92" HG BAROMETRIC PRESSURE. QUANTITIES SHOWN ARE ACTUAL AIR FLOW RATES BASED ON DENSITY AT DESIGN CONDITIONS.
7. MAX CFM IS BASED ON ALL EXHAUST FANS, INCLUDING DIESEL FIRE PUMP ROOM EXHAUST FAN, RUNNING.
8. SWIS EXHAUST FANS CPX-VAFNRV-06,07,08,09 TO BE POWERED FROM UNIT 1 EMERGENCY POWER SOURCE AND CPX-VAFNWV-02,03,04,05 TO BE POWERED FROM UNIT 2 EMERGENCY POWER SOURCE (TWO ON TRAIN A AND TWO ON TRAIN B FOR EACH UNIT).
9. EXHAUST FAN CPX-VAFNWV-11 HAS BEEN DISCONNECTED AND IS ABANDONED IN PLACE.
10. OWNERSHIP OF THIS BUILDING BELONGS TO GLEN ROSE TRANSMISSION, REFER TO E-46763 SHEETS 1 AND 2 FOR DETAIL INFORMATION.
11. FOR THE NON-SAFETY VENTILATION SYSTEMS, THE AIR FLOW RATES SHOWN ARE ORIGINAL DESIGN VALUES FOR INITIAL FLOW BALANCING AND DO NOT REPRESENT AS-BUILT AIR FLOW RATES. THE DIRECTION OF AIR FLOW WAS ASSUMED DURING DESIGN DURING NORMAL OPERATION AND TO ENSURE THE DIRECTION OF AIR FLOW IS AS SHOWN.

REFERENCES:

1. M1-0113 — FLOW DIAGRAM-VENTILATION AAP BLDG AND CONTROL BLDG UPS AREA A/C SYSTEMS
2. M1-0200 — MECHANICAL SYMBOLS AND NOTES

FSAR FIGURE 9.4-7

FIGURE NAME: CLASS I

CLASS I
(NUCLEAR SAFETY-RELATED)
SAFETY CLASS 1 — SEISMIC CATEGORY I
SAFETY CLASS 2 — CLASS 1E
SAFETY CLASS 3 — ASME/ANSI CIRCUITS

TXU POWER
CPSES
GLEN ROSE, TEXAS

FLOW DIAGRAM - VENTILATION
SERVICE WATER INTAKE STRUCTURE
AND MISCELLANEOUS BUILDINGS

DWG. NO. M1-0312 — REV. CP-17

SBSSSSBA-LEE BRXSS

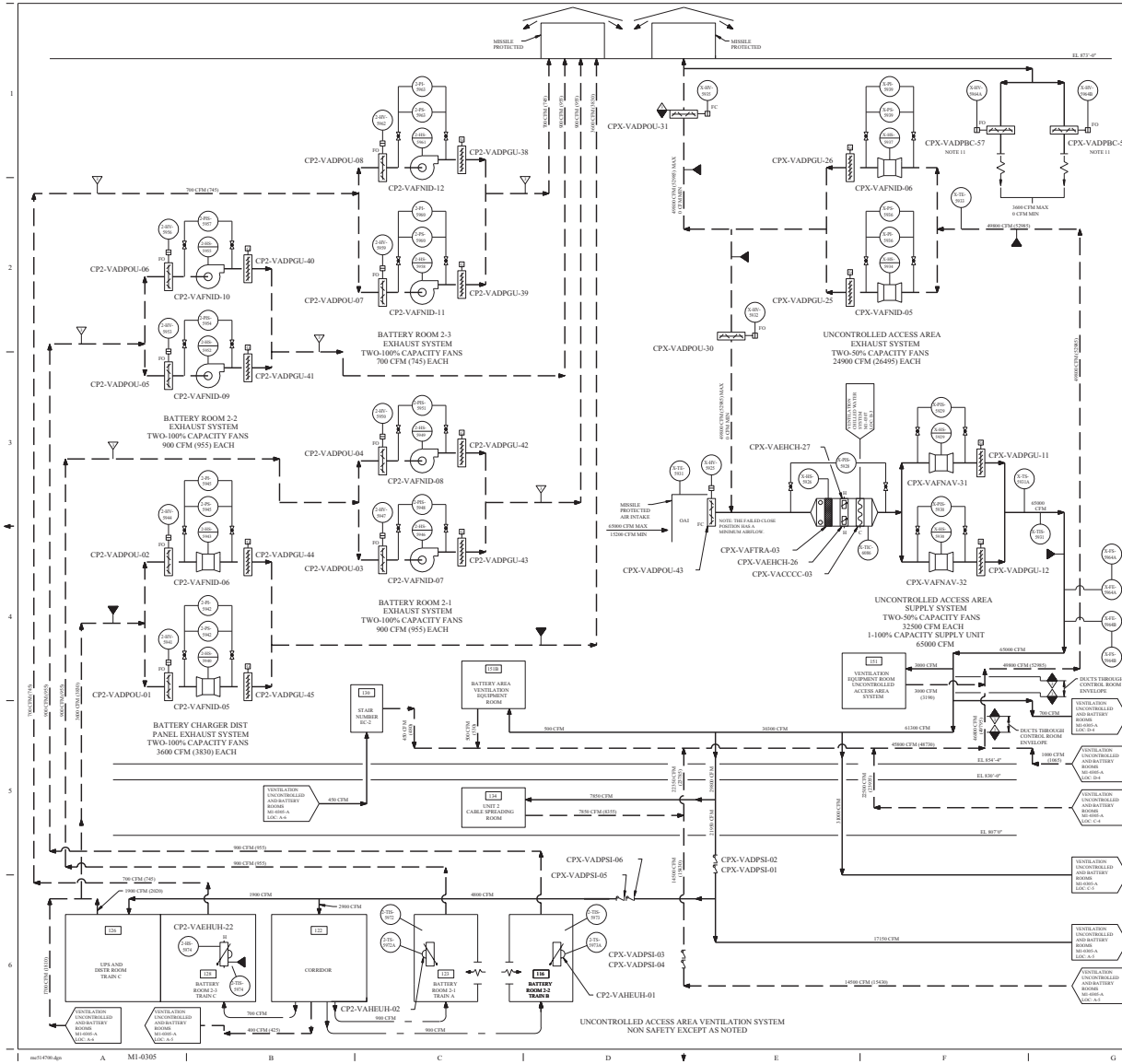

REV	DRAWN	CHECKED	APVD	REMARKS
19-19				THIS DRAWING REVISED TO INCORPORATE DESIGN CHANGE TXX-2001-00168 (SEE PER 00-2010-0112-00)

NOTES:

1. FOR ABBREVIATIONS AND SYMBOLS SEE DRAWINGS M1-0313 AND M1-0200.
2. DELETED
3. THIS DIAGRAM IS A SCHEMATIC REPRESENTATION AND IS INTENDED TO SHOW GENERAL AIR DISTRIBUTION AND FLOW PATHS.
4. BALANCING DAMPERS, REGISTERS, DIFFUSERS, FLEXIBLE CONNECTIONS AND ALL OTHER RELATED ACCESSORIES NOT SHOWN ON THIS DIAGRAM SHALL BE PROVIDED AS INDICATED ON THE HVAC ARRANGEMENT DRAWING AND SPECIFICATIONS.
5. DELETED
6. THIS FLOW DIAGRAM IS COMMON FOR UNITS 1 AND 2. ALL UNIT 2 EQUIPMENT SHOWN ON THIS FLOW DIAGRAM WILL BE INSTALLED WITH UNIT 1 EQUIPMENT.
7. THE UNCONTROLLED ACCESS AREA WILL BE MAINTAINED AT ATMOSPHERIC PRESSURE.
8. FOR LOGIC OF CHANNEL X-TIC-6086 SEE ICD M1-2507-06.
9. DELETED
10. AIR FLOW QUANTITIES SHOWN ARE BASED ON A DENSITY OF 0.0751 LB/FT OCCURING AT THE STANDARD CONDITION OF DRY AIR AT 70° F AND 29.92" HG BAROMETRIC PRESSURE. QUANTITIES IN PARENTHESES ARE ACTUAL AIR FLOW RATES BASED ON DENSITY AT DESIGN CONDITIONS.
11. DAMPER NUMBER CPX-VADPBC-57 IS RETAGGED FROM ORIGINAL TAG NUMBER CP2-VADPBC-25 (SPARE PER ECR-1460). DAMPER NUMBER CPX-VADPBC-58 IS RETAGGED FROM ORIGINAL TAG NUMBER CP2-VADPBC-28 (SPARE PER ECR-1460)
12. DELETED
13. DELETED
14. DELETED
15. IT IS ACCEPTABLE TO REMOVE CPX-VADPGU-11 OR CPX-VADPGU-12 FOR MAINTENANCE AND INSTALL A BLIND FLANGE ON FAN SIDE AND EXHAUST DUCT SIDE. THE SYSTEM REQUIREMENTS (COOLING REQUIRED) WILL HAVE TO BE EVALUATED AT THE TIME AS TO ADEQUATE FLOW PRIOR TO TAKING FAN OUT OF SERVICE. BLIND TO BE SUPPLIED TO HOLD PRESSURE AS SMALL AS (50.5MM) 2 INCHES LESS THAN THE DIAMETER OF THE FAN CONNECTION THE BLIND TO PREVENT EXCESSIVE DISTORTION. BLIND THICKNESS SHOULD BE SAME AS DUCT OR THICKER. WEIGHT OF BLIND NOT TO EXCEED WEIGHT OF DAMPER. MATERIALS OTHER THAN METAL ARE ACCEPTABLE (i.e. PLYWOOD). MINIMUM OF 4 BOLTS ARE REQUIRED TO HOLD THE BLIND IN PLACE. SUPPORT THE FAN SIDE OF THE PLENUM AS REQUIRED TO AVOID EXCESS NOZZLE LOADS ON THE FAN. FLOOR JACK STAND IS ADEQUATE. (DCN 4268)
16. FOR THE NON-SAFETY VENTILATION SYSTEMS, THE AIR FLOW RATES SHOWN ARE ORIGINAL DESIGN VALUES FOR INITIAL FLOW BALANCING AND DO NOT REPRESENT AS-BUILT AIR FLOW IS BALANCED TO MAINTAIN ROOM TEMPERATURES WITHIN DESIGN DURING NORMAL OPERATION AND TO ENSURE THE DIRECTION OF AIR FLOW IS AS SHOWN.

REFERENCES:

M1-0200	MECHANICAL SYMBOLS AND NOTES
M1-0305-A	FLOW DIAGRAM VENTILATION UNCONTROLLED AND BATTERY ROOMS
M1-0307	FLOW DIAGRAM VENTILATION CHILLED WATER SYSTEM
M1-0313	FLOW DIAGRAM VENTILATION A/P BLDG AND CONTROL BLDG UPS AREA A/C SYSTEMS

FSAR FIGURE 9.4-8

THIS DRAWING WAS CREATED BY DESIGN QUALITY

DRAWING M1-0305 REV CP-0
HAS BEEN SPLIT INTO THE FOLLOWING SHEETS:
M1-0305
M1-0305-A

CLASS I
(NUCLEAR SAFETY-RELATED)

SAFETY CLASS 1	SEISMIC CATEGORY I
SAFETY CLASS 2	CLASS 1E
SAFETY CLASS 3	ASSOCIATED CIRCUITS

TXU POWER
CPSES
GLEN ROSE, TEXAS

FLOW DIAGRAM
VENTILATION
UNCONTROLLED AND BATTERY ROOMS

DWG. NO. M1-0305 | RE. NO. - | REV. CP-19

SSSSSSSS AUTO SCHEDULE

ma514700.dgn

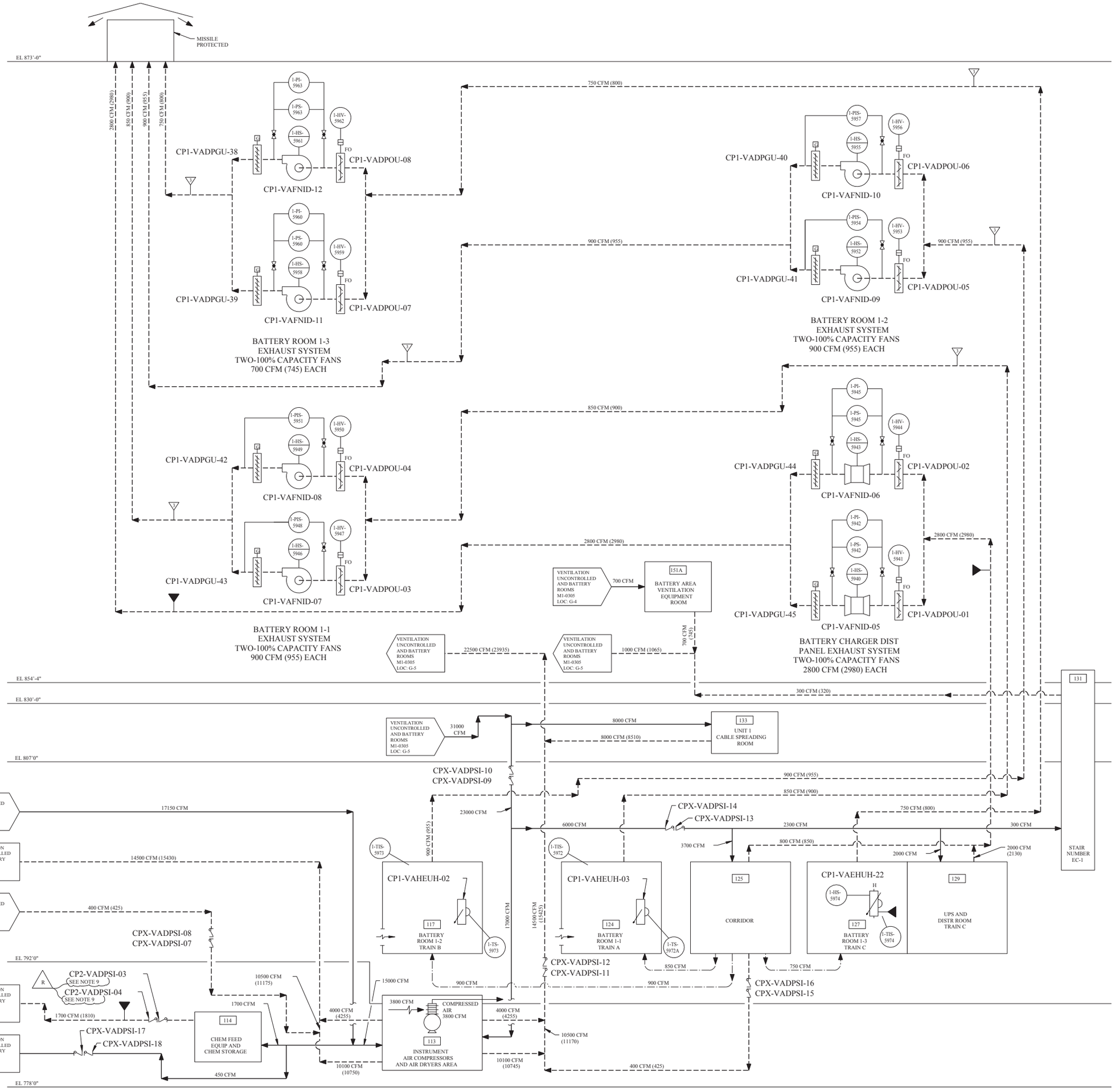

REV	DWN	CHKD	APVD	REMARKS
CP-10	DGK 08-11 2004	MM 08-11 2004		THIS DRAWING REVISED TO INCORPORATE DESIGN CHANGE FDA 2000-003261-02-00 PER SK-0030-00-003261-02-00.

NOTES:

1. FOR ABBREVIATIONS AND SYMBOLS SEE DRAWINGS M1-0313 AND M1-0200.
2. THIS DIAGRAM IS A SCHEMATIC REPRESENTATION AND IS INTENDED TO SHOW GENERAL AIR DISTRIBUTION AND FLOW PATHS.
3. BALANCING DAMPERS, REGISTERS, DIFFUSERS, FLEXIBLE CONNECTIONS AND ALL OTHER RELATED ACCESSORIES NOT SHOWN ON THIS DIAGRAM SHALL BE PROVIDED AS INDICATED ON THE HVAC ARRANGEMENT DRAWING AND SPECIFICATIONS.
4. THIS FLOW DIAGRAM IS COMMON FOR UNITS 1 AND 2 ALL UNIT 2 EQUIPMENT SHOWN ON THIS FLOW DIAGRAM WILL BE INSTALLED WITH UNIT 1 EQUIPMENT.
5. THE UNCONTROLLED ACCESS AREA WILL BE MAINTAINED AT ATMOSPHERIC PRESSURE.
6. ALL EXHAUST DUCTWORK IN THE CHEMICAL FEED EQUIPMENT AND CHEMICAL STORAGE ROOM IS CLASSIFIED NNS AND NON-SEISMIC.
7. AIR FLOW QUANTITIES SHOWN ARE BASED ON A DENSITY OF 0.075 LB/FT OCCUPYING AT THE STANDARD CONDITION OF DRY AIR AT 70°F AND 29.92" HG BAROMETRIC PRESSURE. QUANTITIES IN PARENTHESES ARE ACTUAL AIR FLOW RATES BASED ON DENSITY AT DESIGN CONDITIONS.
8. FOR THE NON-SAFETY VENTILATION SYSTEMS, THE AIR FLOW RATES SHOWN ARE ORIGINAL DESIGN VALUES FOR INITIAL FLOW BALANCING AND DO NOT REPRESENT AS-BUILT. AIR FLOW IS BALANCED TO MAINTAIN ROOM TEMPERATURES WITHIN DESIGN DURING NORMAL OPERATION AND TO ENSURE THE DIRECTION OF AIR FLOW IS AS SHOWN.
9. POSITION SWITCHES 2-ZS-5964A AND B MOUNTED ON DAMPERS CP2-VADPSI-03 AND 04 RESPECTIVELY ARE SPARED IN PLACE. SEE DRAWING E2-0066-47.

R

REFERENCES:

M1-0200	MECHANICAL SYMBOLS AND NOTES
M1-0305	FLOW DIAGRAM VENTILATION UNCONTROLLED AND BATTERY ROOMS
M1-0313	FLOW DIAGRAM VENTILATION AAP BLDG AND CONTROL BLDG UPS AREA A/C SYSTEMS

FSAR FIGURE 9.4-8

THIS DRAWING CREATED ELECTRONICALLY

DRAWING M1-0305 REV CP-9
HAS BEEN SPLIT INTO THE FOLLOWING SHEETS:
M1-0305
M1-0305-A

CLASS I
(NUCLEAR SAFETY-RELATED)
SAFETY CLASS 1 — SEISMIC CATEGORY I
SAFETY CLASS 2 — CLASS 1E
SAFETY CLASS 3 — ASSOCIATED CIRCUITS

LUMINANT
CPSES
GLEN ROSE, TEXAS

FLOW DIAGRAM
VENTILATION
UNCONTROLLED AND BATTERY ROOMS

DWG. NO. M1-0305 | SH. NO. A | REV. CP-10

FINAL PRINT

REF CKD 7-10-98 CP-7

me571600.dgn M1-0305-A

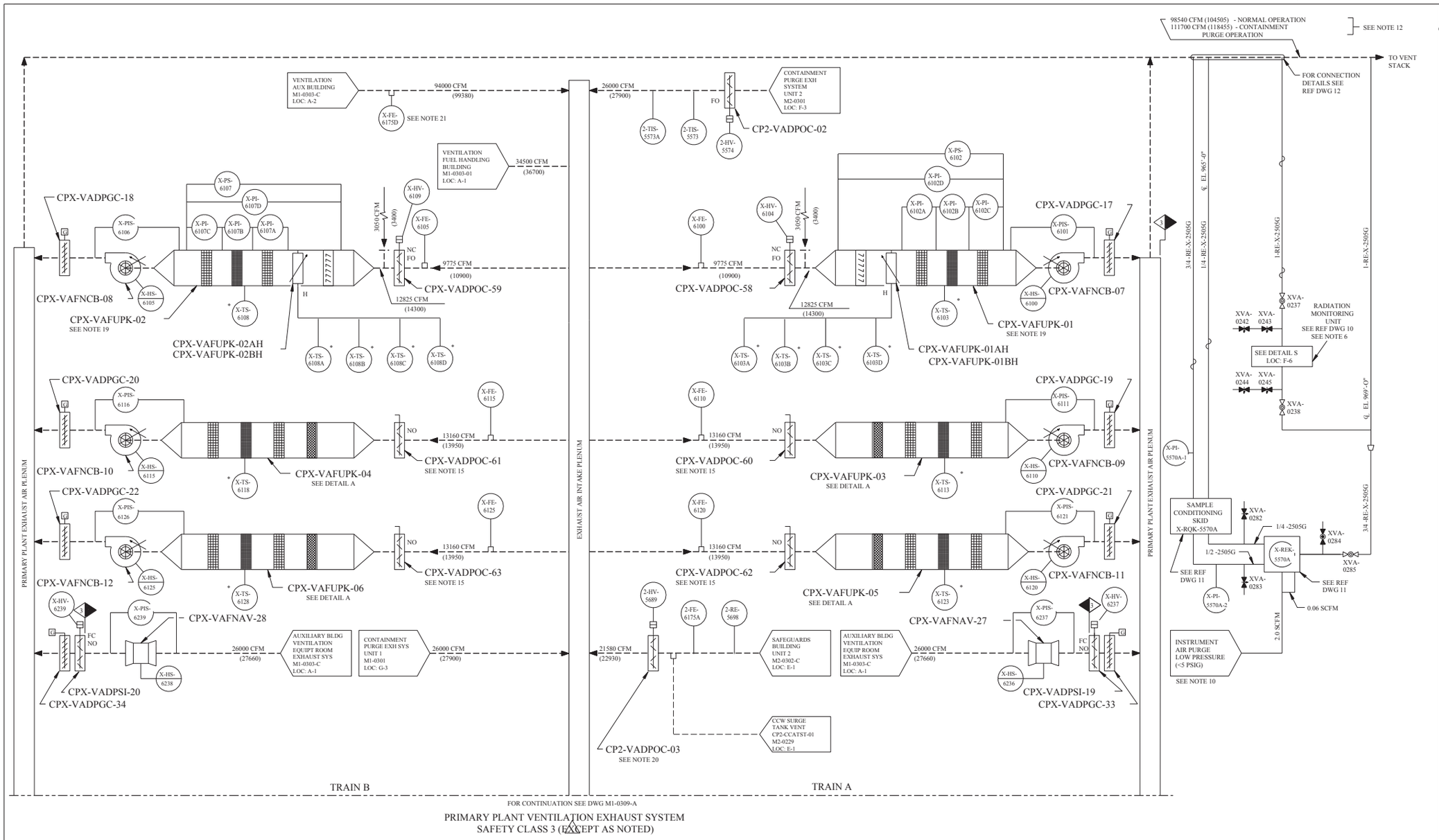

PRIMARY PLANT VENTILATION EXHAUST SYSTEM
SAFETY CLASS 3 (EXCEPT AS NOTED)

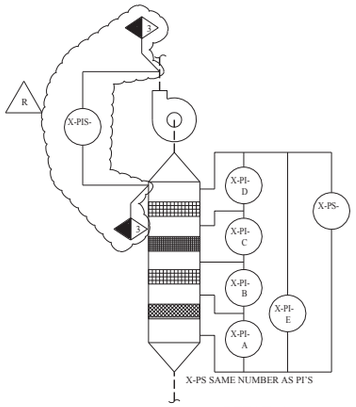

DETAIL A
TYPICAL FOR
CPX-VAFUPK-03,04,05,06
SEE TABLE

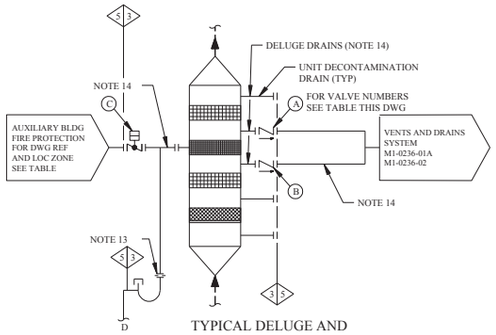

TYPICAL DELUGE AND
DRAIN CONNECTIONS FOR
NON ESF FILTRATION UNITS

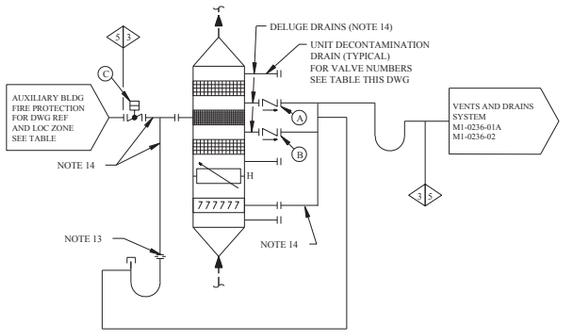

TYPICAL DELUGE AND
DRAIN CONNECTIONS FOR
ESF FILTRATION UNITS
CPX-VAFUPK-01
AND
CPX-VAFUPK-02

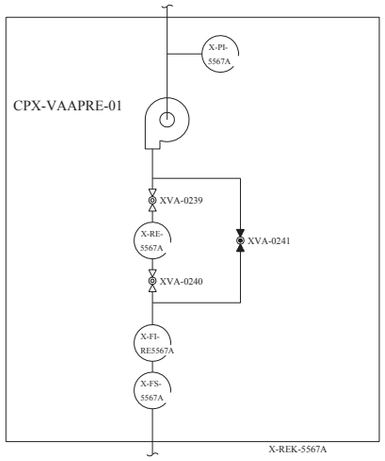

DETAIL S

VALVE AND INSTRUMENT TABLE

FILTRATION UNIT NUMBER (SEE NOTE 17)	DELUGE DRAIN VALVES		DELUGE SUPPLY		PRESSURE SWITCHES AND PRESSURE INDICATORS A, B, C, D AND E	PRESSURE INDICATING SWITCH
	A	B	C	DRAWING REF: AND ZONE LOCATION		
CPX-VAFUPK-01	CPX-VADPCK-01	CPX-VADPCK-02	XFP-0653	M1-0225-02A LOC: D-1	SEE DIAGRAM	SEE DIAGRAM
CPX-VAFUPK-02	CPX-VADPCK-03	CPX-VADPCK-04	XFP-0644	M1-0225-02A LOC: D-2	SEE DIAGRAM	SEE DIAGRAM
CPX-VAFUPK-03	CPX-VADPCK-05	CPX-VADPCK-06	XFP-0652	M1-0225-02A LOC: C-1	6112	6111
CPX-VAFUPK-04	CPX-VADPCK-07	CPX-VADPCK-08	XFP-0643	M1-0225-02A LOC: C-2	6117	6116
CPX-VAFUPK-05	CPX-VADPCK-09	CPX-VADPCK-10	XFP-0651	M1-0225-02A LOC: B-1	6122	6121
CPX-VAFUPK-06	CPX-VADPCK-11	CPX-VADPCK-12	XFP-0642	M1-0225-02A LOC: B-2	6127	6126

R

REV	DWN	CHKD	APVD	REMARKS
CP-30	MM 01-09 2006	DLK 01-09 2006		THIS DRAWING REVISED TO INCORPORATE DESIGN CHANGE FDA-2003-002423-01-00 PER SK-0007-03-002423-01-00.

NOTES:

1. FOR HVAC ABBREVIATIONS AND SYMBOLS SEE DRAWINGS M1-0313 AND M1-0200.
2. DELETED
3. THIS DIAGRAM IS A SCHEMATIC REPRESENTATION AND IS INTENDED TO SHOW GENERAL AIR DISTRIBUTION AND FLOW PATHS.
4. BALANCING DAMPERS, REGISTERS, DIFFUSERS, FLEXIBLE CONNECTIONS AND ALL OTHER RELATED ACCESSORIES NOT SHOWN ON THIS DIAGRAM SHALL BE PROVIDED AS INDICATED ON THE HVAC ARRANGEMENT DRAWINGS AND SPECIFICATIONS.
5. THIS FLOW DIAGRAM IS COMMON FOR UNITS 1 AND 2.
6. FOR LOGIC OF CHANNEL NUMBER X-RE-5567A, X-RE-5567B, X-RE-5570A AND X-RE-5570B SEE ICD M1-2301-10.
7. IN LINE AIR FLOW ELEMENTS ARE PROVIDED TO MEASURE AIR FLOW THRU DUCTS. MANUAL ADJUSTMENT OF THE INLET VANES ON EXHAUST FANS IS METHOD OF CONTROLLING FLOW. INSTRUMENT CONNECTIONS ARE PROVIDED WITH FLOW ELEMENTS. FLOW ELEMENTS 1-FE-6175B AND 1-FE-6175F ARE SHOWN ON DRAWING M1-0301 FLOW ELEMENTS 2-FE-6175B AND 2-FE-6175F ARE SHOWN ON M2-0301. FLOW ELEMENT X-FE-6175C IS SHOWN ON DRAWING M1-0301-01.
8. DELETED
9. THREE ISOKINETIC NOZZLES ARE PROVIDED AT REFERENCE ELEVATION.
10. FOR INSTRUMENT PURGE LOW PRESSURE (<5 PSIG) CLEAN DRY PURGE GAS FLOW RATE 2.0 SCFM AND 0.06 SCFM FOR EACH MONITOR.
11. MIN SLOPE 1/4 " : 12" TOWARD ALL MONITORS.
12. AIR FLOW THRU VENT STACK IS BASED ON THE MAXIMUM CAPACITY OF THE OPERATING UNITS.
13. FOR DRAIN FLOW ORIFICE NUMBERS AND LINE CONTINUATION SEE DRAWING M1-0225-02 AND 02A, LOC: C, D, E AND F-2.
14. NOT WITHIN ASME CODE BOUNDARY.
15. MANUAL OPERATION (DISCONNECTED OPERATOR).
16. AIR FLOW QUANTITIES SHOWN ARE BASED ON A DENSITY OF 0.075 LB/FT OCCURRING AT THE STANDARD CONDITION OF DRY AIR AT 70°F AND 29.92" HG BAROMETRIC PRESSURE. QUANTITIES IN PARENTHESES ARE ACTUAL AIR FLOW RATES BASED ON DENSITY AT DESIGN CONDITIONS.
17. FILTRATION UNITS CPX-VAFUPK-01,02,15,16 ARE ESF. FILTRATION UNITS CPX-VAFUPK-03,04,05,06,07,08,09 , AND CPX-VAFUPK-10,11,12,13,14 ARE NON ESF.
18. * SHOWS COMPONENT IS BY VENDOR.
19. FILTRATION UNIT MAXIMUM AIR FLOW CAPACITY OF 15,000 CFM IS NOT TO BE EXCEEDED AT ALL MODES AND CONDITIONS.
20. DAMPER ABANDONED IN-PLACE (IN OPEN POSITION). ALL AIR CONNECTIONS ARE CLOSED AND ELECTRICAL CONNECTIONS ARE DISCONNECTED.
21. AIR EQUALIZER IS REMOVED, STATIC AND TOTAL PRESSURE SENSORS ARE INSTALLED.
22. THE AIR FLOW RATES SHOWN ARE ORIGINAL VALUES FOR INITIAL FLOW BALANCING AND DO NOT REPRESENT AS-BUILT. AIR FLOW IS BALANCED TO MAINTAIN ROOM TEMPERATURES WITHIN DESIGN DURING NORMAL OPERATION AND TO ENSURE THE DIRECTION OF AIR FLOW IS AS SHOWN.

REFERENCES:

1.	M1-0313	FLOW DIAGRAM - VENTILATION AAP BLDG AND CONTROL BLDG UPS AREA A/C SYSTEMS
2.	M1-0200	MECHANICAL DRAWING NOTES AND SYMBOLS
3.	M1-0301	FLOW DIAGRAM - VENTILATION CONTAINMENT
4.	M1-0225-02A	FLOW DIAGRAM - AUXILIARY BUILDING FIRE PROTECTION
5.	M1-0303-C	FLOW DIAGRAM - VENTILATION AUXILIARY BUILDING
6.	M1-0303-01	FLOW DIAGRAM - VENTILATION FUEL HANDLING BUILDING
7.	M2-0302	FLOW DIAGRAM - VENTILATION SAFEGUARDS AND ELECTRICAL AREA
8.	M2-0301	FLOW DIAGRAM - VENTILATION CONTAINMENT
9.	M1-0236-01A M1-0236-02	FLOW DIAGRAM - VENTS AND DRAINS SYSTEM
10.	FLO-353-1700	GENERAL ATOMIC-OUTLINE AND FLOW DIAGRAM
11.	0366-1600 0366-2000	GENERAL ATOMIC SAMPLE CONDITIONING SKID SAMPLE DETECTION SKID
12.	0353-5100	GENERAL ATOMIC - ISOKINETIC NOZZLE PROBE INSTALLATION (WRGM)
13.	M1-0309-A	FLOW DIAGRAM - VENTILATION PRIMARY PLANT SUPPLY AND EXHAUST
14.	M1-0309-B	FLOW DIAGRAM - VENTILATION PRIMARY PLANT SUPPLY AND EXHAUST

FSAR FIGURE 9.4-9

THIS DRAWING CREATED ELECTRONICALLY

DRAWING M1-0309 REV CP-9
HAS BEEN SPLIT INTO THE FOLLOWING SHEETS:
M1-0309
M1-0309-A
M1-0309-B

CLASS I
(NUCLEAR SAFETY-RELATED)
SAFETY CLASS 1
SAFETY CLASS 2
SAFETY CLASS 3
SEISMIC CATEGORY I
CLASS 1E
ASSOCIATED CIRCUITS

LUMINANT
CPSES
GLEN ROSE, TEXAS

FLOW DIAGRAM
VENTILATION PRIMARY PLANT
SUPPLY AND EXHAUST

DWG. NO. M1-0309 | SH. NO. - | REV. CP-30

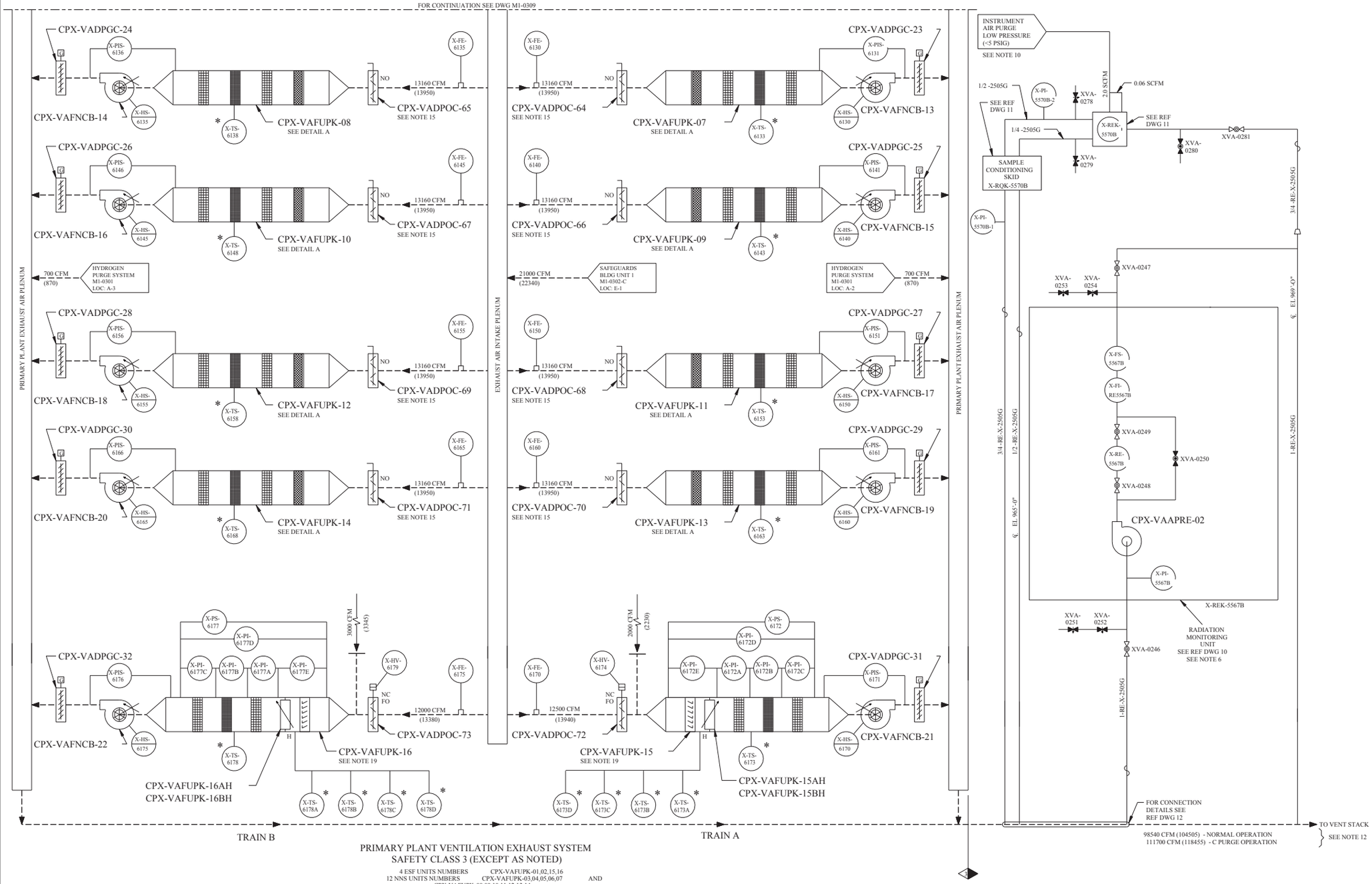

PRIMARY PLANT VENTILATION EXHAUST SYSTEM
SAFETY CLASS 3 (EXCEPT AS NOTED)

4 ESF UNITS NUMBERS CPX-VAFUPK-01,02,15,16
12 NNS UNITS NUMBERS CPX-VAFUPK-03,04,05,06,07 AND
CPX-VAFUPK-08,09,10,11,12,13,14

PRIMARY PLANT VENTILATION SUMMARY

	PPVSS		PPVES		
	CFM DESIGN FLOW *	NO UNITS	CFM DESIGN FLOW *		NO UNITS
			SCFM	ACFM	
AUXILIARY BLDG	81,600		94,000	99,380	
FUEL HANDLING BLDG	33,500		34,500	36,700	
SAFEGUARD BLDG - U1	20,200		21,000	22,340	
SAFEGUARD BLDG - U2	20,700		21,580	22,930	
NORMAL MODE U1 AND U2	156,000	6	171,080	181,350	13
CONT BLDG PURGE U1 OR U2	26,000		26,000	27,900	
PURGE MODE U1 OR U2	161,300	7	197,080	209,250	15

* ACCEPTANCE CRITERIA FOR TESTING AND BALANCING SHOULD BE BASED ON TOTAL DESIGN AIR FLOWS, AND PROVIDING SLIGHTLY NEGATIVE PRESSURE WITHIN THE PRESSURE BOUNDARY.

VALVE AND INSTRUMENT TABLE

FILTRATION UNIT NUMBER (SEE NOTE 17)	DELUGE DRAIN VALVES		DELUGE SUPPLY		PRESSURE SWITCHES AND PRESSURE INDICATORS A, B, C, D AND E	PRESSURE INDICATING SWITCH
	(A)	(B)	(C)	DRAWING REF. AND ZONE LOCATION		
CPX-VAFUPK-07	CPX-VADPCK-13	CPX-VADPCK-14	XFP-0650	M1-0225-02A LOC: A-1	6132	6131
CPX-VAFUPK-08	CPX-VADPCK-15	CPX-VADPCK-16	XFP-0641	M1-0225-02A LOC: A-2	6137	6136
CPX-VAFUPK-09	CPX-VADPCK-17	CPX-VADPCK-18	XFP-0649	M1-0225-02 LOC: F-1	6142	6141
CPX-VAFUPK-10	CPX-VADPCK-19	CPX-VADPCK-20	XFP-0640	M1-0225-02 LOC: F-2	6147	6146
CPX-VAFUPK-11	CPX-VADPCK-21	CPX-VADPCK-22	XFP-0647	M1-0225-02 LOC: E-1	6152	6151
CPX-VAFUPK-12	CPX-VADPCK-23	CPX-VADPCK-24	XFP-0638	M1-0225-02 LOC: D-2	6157	6156
CPX-VAFUPK-13	CPX-VADPCK-25	CPX-VADPCK-26	XFP-0646	M1-0225-02 LOC: D-1	6162	6161
CPX-VAFUPK-14	CPX-VADPCK-27	CPX-VADPCK-28	XFP-0637	M1-0225-02 LOC: D-2	6167	6166
CPX-VAFUPK-15	CPX-VADPCK-29	CPX-VADPCK-30	XFP-0645	M1-0225-02 LOC: C-1	SEE DIAGRAM	SEE DIAGRAM
CPX-VAFUPK-16	CPX-VADPCK-31	CPX-VADPCK-32	XFP-0636	M1-0225-02 LOC: C-2	SEE DIAGRAM	SEE DIAGRAM

R

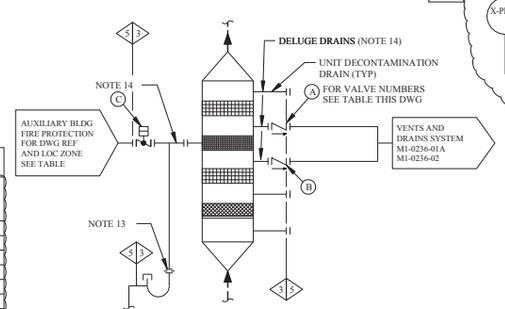

TYPICAL DELUGE AND
DRAIN CONNECTIONS FOR
NON ESF FILTRATION UNITS

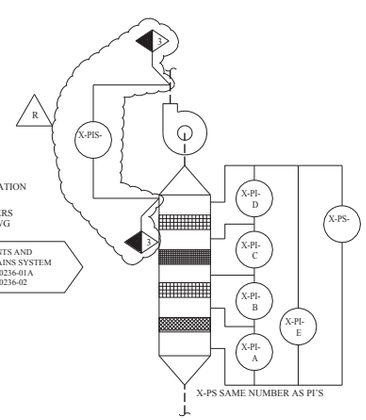

DETAIL A
TYPICAL FOR CPX-VAFUPK-07,08,
09,10,11,12,13,14
SEE TABLE

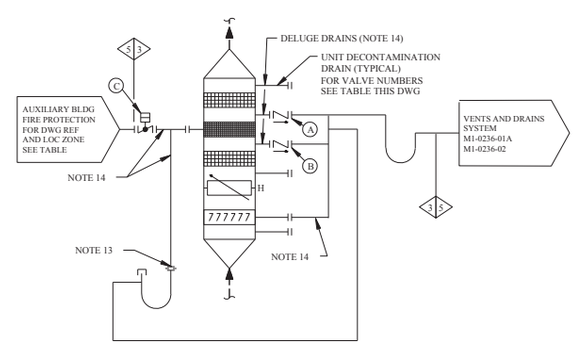

TYPICAL DELUGE AND
DRAIN CONNECTIONS FOR
ESF FILTRATION UNITS
CPX-VAFUPK-15
AND
CPX-VAFUPK-16

REV	DWN	CHKD	APVD	REMARKS
CP-20	MM 01-09 2006	DLK 01-09 2006		THIS DRAWING REVISED TO INCORPORATE DESIGN CHANGE FDA-2003-002423-01-00 PER SK-0008-03-002423-01-00.

NOTES:

1. FOR HVAC ABBREVIATIONS AND SYMBOLS SEE DRAWINGS M1-0313 AND M1-0200.
2. DELETED
3. THIS DIAGRAM IS A SCHEMATIC REPRESENTATION AND IS INTENDED TO SHOW GENERAL AIR DISTRIBUTION AND FLOW PATHS.
4. BALANCING DAMPERS, REGISTERS, DIFFUSERS, FLEXIBLE CONNECTIONS AND ALL OTHER RELATED ACCESSORIES NOT SHOWN ON THIS DIAGRAM SHALL BE PROVIDED AS INDICATED ON THE HVAC ARRANGEMENT DRAWINGS AND SPECIFICATIONS.
5. THIS FLOW DIAGRAM IS COMMON FOR UNITS 1 AND 2.
6. FOR LOGIC OF CHANNEL NUMBER X-RE-5570A, X-RE-5570B, X-RE-5567A AND X-RE-5567B SEE ICD M1-2301-10.
7. IN LINE AIR FLOW ELEMENTS ARE PROVIDED TO MEASURE AIR FLOW THRU DUCTS. MANUAL ADJUSTMENT OF THE INLET VANES ON EXHAUST FANS IS METHOD OF CONTROLLING FLOW. INSTRUMENT CONNECTIONS ARE PROVIDED WITH FLOW ELEMENTS. FLOW ELEMENTS 1-FE-6175B AND 1-FE-6175F ARE SHOWN ON DRAWING M1-0301 FLOW ELEMENTS 2-FE-6175B AND 2-FE-6175F ARE SHOWN ON DRAWING M2-0301. FLOW ELEMENT X-FE-6175C IS SHOWN ON DRAWING M1-0301-01.
8. DELETED
9. THREE ISOKINETIC NOZZLES ARE PROVIDED AT REFERENCE ELEVATION.
10. FOR INSTRUMENT PURGE LOW PRESSURE (<5 PSIG) CLEAN DRY PURGE GAS FLOW RATE 2.0 SCFM AND 0.06 SCFM FOR EACH MONITOR.
11. MIN SLOPE 1/4 " : 12" TOWARD ALL MONITORS.
12. AIR FLOW THRU VENT STACK IS BASED ON THE MAXIMUM CAPACITY OF THE OPERATING UNITS.
13. FOR DRAIN FLOW ORIFICE NUMBERS AND LINE CONTINUATION SEE DRAWING M1-0225-02 AND 02A, LOC: C, D, E AND F-2.
14. NOT WITHIN ASME CODE BOUNDARY.
15. MANUAL OPERATION (DISCONNECTED OPERATOR).
16. AIR FLOW QUANTITIES SHOWN ARE BASED ON A DENSITY OF 0.075 LB/FT OCCURRING AT THE STANDARD CONDITION OF DRY AIR AT 70°F AND 29.92" HG BAROMETRIC PRESSURE. QUANTITIES IN PARENTHESES ARE ACTUAL AIR FLOW RATES BASED ON DENSITY AT DESIGN CONDITIONS.
17. FILTRATION UNITS CPX-VAFUPK-01,02,15,16 ARE ESF. FILTRATION UNITS CPX-VAFUPK-03,04,05,06,07,08,09 AND CPX-VAFUPK-10,11,12,13,14 ARE NON ESF.
18. * SHOWS COMPONENT IS BY VENDOR
19. FILTRATION UNIT MAXIMUM AIR FLOW CAPACITY OF 15,000 CFM IS NOT TO BE EXCEEDED AT ALL MODES AND CONDITIONS.
20. THE AIR FLOW RATES SHOWN ARE ORIGINAL VALUES FOR INITIAL FLOW BALANCING AND DO NOT REPRESENT AS-BUILT. AIR FLOW IS BALANCED TO MAINTAIN ROOM TEMPERATURES WITHIN DESIGN DURING NORMAL OPERATION AND TO ENSURE THE DIRECTION OF AIR FLOW IS AS SHOWN.

REFERENCES:

1.	M1-0313	FLOW DIAGRAM - VENTILATION AAP BLDG AND CONTROL BLDG UPS AREA A/C SYSTEMS
2.	M1-0200	MECHANICAL DRAWING NOTES AND SYMBOLS
3.	M1-0301	FLOW DIAGRAM - VENTILATION CONTAINMENT
4.	M1-0302-C	FLOW DIAGRAM - VENTILATION SAFEGUARDS AND ELECTRICAL AREA
5.	M1-0236-01A M1-0236-02	FLOW DIAGRAM - VENTS AND DRAINS SYSTEM
6.	M1-0225-02	FLOW DIAGRAM - AUXILIARY BUILDING FIRE PROTECTION
7.	M1-0225-02A	FLOW DIAGRAM - AUXILIARY BUILDING FIRE PROTECTION
8.	M1-0309	FLOW DIAGRAM - VENTILATION PRIMARY PLANT SUPPLY AND EXHAUST
9.	M1-0309-B	FLOW DIAGRAM - VENTILATION PRIMARY PLANT SUPPLY AND EXHAUST
10.	FLO-353-1700	GENERAL ATOMIC - OUTLINE AND FLOW DIAGRAM
11.	0366-1600 0366-2000	GENERAL ATOMIC SAMPLE CONDITIONING SKID SAMPLE DETECTION SKID
12.	0353-5100	GENERAL ATOMIC - ISOKINETIC NOZZLE PROBE INSTALLATION (WRGM)

FSAR FIGURE 9.4-9

THIS DRAWING CREATED ELECTRONICALLY

DRAWING M1-0309 REV CP-9
HAS BEEN SPLIT INTO THE FOLLOWING SHEETS:
M1-0309
M1-0309-A
M1-0309-B

CLASS I
(NUCLEAR SAFETY-RELATED)
SAFETY CLASS 1 SEISMIC CATEGORY I
SAFETY CLASS 2 CLASS 1E
SAFETY CLASS 3 ASSOCIATED CIRCUITS

LUMINANT
CPSES
GLEN ROSE, TEXAS

FLOW DIAGRAM
VENTILATION PRIMARY PLANT
SUPPLY AND EXHAUST

DWG. NO. M1-0309 | SH. NO. A | REV. CP-20

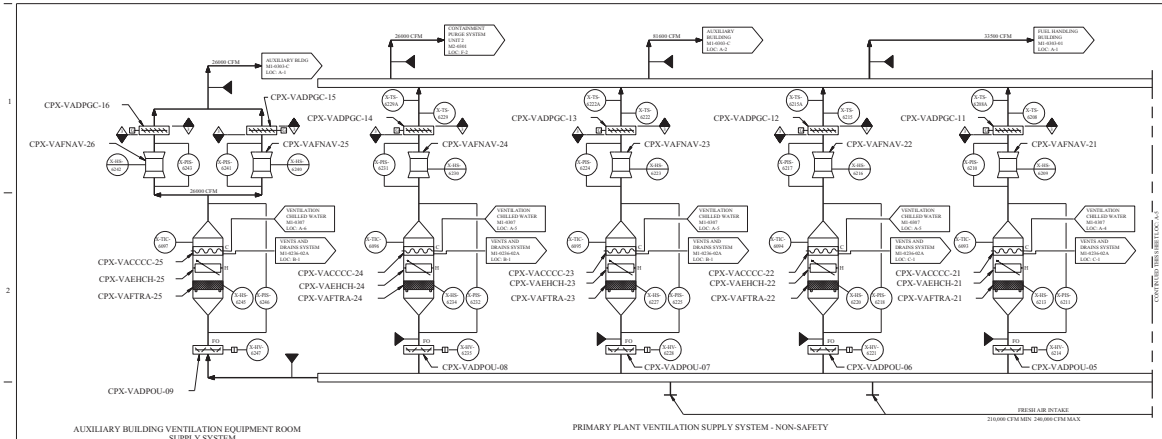

AUXILIARY BUILDING VENTILATION EQUIPMENT ROOM
SUPPLY SYSTEM
NON-SAFETY
2 FANS - (1 STANDBY)
26000 CFM EACH

PRIMARY PLANT VENTILATION SUPPLY SYSTEM - NON-SAFETY

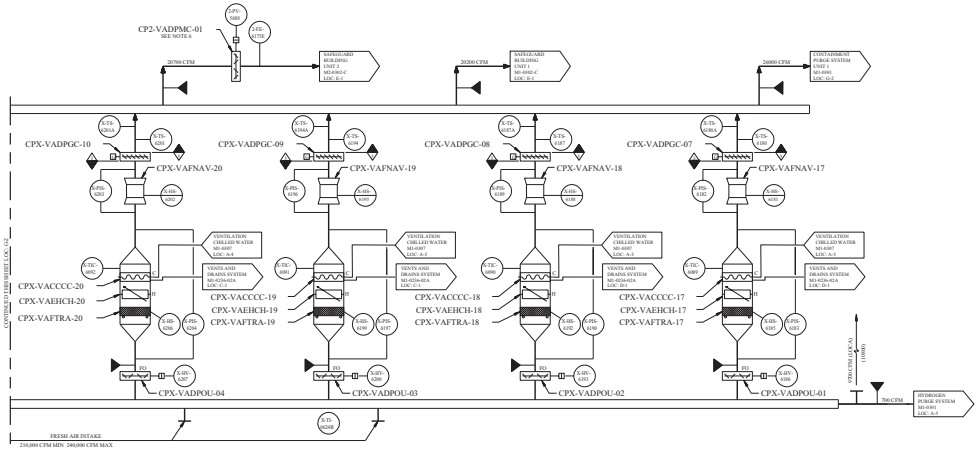

PRIMARY PLANT VENTILATION SUPPLY SYSTEM - NON-SAFETY
EIGHT UNITS 26000 CFM EACH
6 UNITS - NORMAL OPERATION
7 UNITS - NORMAL OPERATION &
CONTAINMENT PURGE
1 UNIT - STANDBY

REV	DRN	CHKD	APVD	REMARKS
CP-11				THIS DRAWING REVISED TO INCORPORATE DESIGN CHANGE FNA-2005-0010-0140 PER TRC0402-01-00300-01-00.

NOTES:

1. FOR HVAC ABBREVIATIONS AND SYMBOLS SEE DRAWINGS M1-0313 AND M1-0200.
2. THIS DIAGRAM IS A SCHEMATIC REPRESENTATION AND IS INTENDED TO SHOW GENERAL AIR DISTRIBUTION AND FLOW PATHS.
3. BALANCING DAMPERS, REGISTERS, DIFFUSERS, FLEXIBLE CONNECTIONS AND ALL OTHER RELATED ACCESSORIES NOT SHOWN ON THIS DIAGRAM SHALL BE PROVIDED AS INDICATED ON THE HVAC ARRANGEMENT DRAWINGS AND SPECIFICATIONS.
4. THIS FLOW DIAGRAM IS COMMON FOR UNITS 1 AND 2.
5. AIR FLOW QUANTITIES SHOWN ARE BASED ON A DENSITY OF 0.075 LB/FT OCCUPERING AT THE STANDARD CONDITION OF DRY AIR AT 70°F AND 29.92" HG BAROMETRIC PRESSURE. QUANTITIES IN PARENTHESES ARE ACTUAL AIR FLOW RATES BASED ON DENSITY AT DESIGN CONDITIONS.
6. DAMPER ABANDONED IN-PLACE (IN OPEN POSITION). ALL AIR CONNECTIONS AND ELECTRICAL CONNECTIONS ARE DISCONNECTED.
7. AIR FLOW RATES SHOWN ARE ORIGINAL DESIGN VALUES FOR INITIAL FLOW BALANCING AND DO NOT REPRESENT AS-BUILT. AIR FLOW IS BALANCED TO MAINTAIN ROOM TEMPERATURES WITHIN DESIGN LIMITATION AND TO ENSURE THE DIRECTION OF AIR FLOW IS AS SHOWN.

A

REFERENCES:

1.	M1-0313	FLOW DIAGRAM - VENTILATION AAP BLDG AND CONTROL BLDG UPS AREA A/C SYSTEMS
2.	M1-0200	MECHANICAL DRAWING NOTES AND SYMBOLS
3.	M1-0301	FLOW DIAGRAM-VENTILATION CONTAINMENT
4.	M1-0303-C	FLOW DIAGRAM-VENTILATION AUXILIARY BUILDING
5.	M1-0303-01	FLOW DIAGRAM-VENTILATION FUEL HANDLING BUILDING
6.	M2-0302	FLOW DIAGRAM-VENTILATION SAFEGUARD AND ELECTRICAL AREA
7.	M2-0301	FLOW DIAGRAM-VENTILATION CONTAINMENT
8.	M1-0307	FLOW DIAGRAM - VENTILATION CHILLED WATER SYSTEM
9.	M1-0309	FLOW DIAGRAM - VENTILATION PRIMARY PLANT SUPPLY AND EXHAUST
10.	M1-0309-A	FLOW DIAGRAM - VENTILATION PRIMARY PLANT SUPPLY AND EXHAUST
11.	M1-0236-02A	FLOW DIAGRAM - VENTS AND DRAIN SYSTEM - AUXILIARY BUILDING

FSAR FIGURE 9.4-9

FOR REFERENCE ONLY SEE FSAR FIGURE 9.4-9

DRAWING M1-0309 REV CP-9 HAS BEEN SPLIT INTO THE FOLLOWING SHEETS:
M1-0309
M1-0309-A
M1-0309-B

CLASS I
(NUCLEAR SAFETY-RELATED)
SAFETY CLASS 1 SEISMIC CATEGORY I
SAFETY CLASS 2 CLASS IE
SAFETY CLASS 3 ESSENTIAL AND CIRCUITS

TXU POWER
CPSES
GLEN ROSE, TEXAS

FLOW DIAGRAM
VENTILATION AND PRIMARY PLANT
SUPPLY AND EXHAUST

DWG. NO. M1-0309 | BR. NO. B | REV. CP-11

REF. CIRCLE 530.2011

SBSSSBD.AUB.BS0.03

nuc515200.dgn

A M1-0309-B

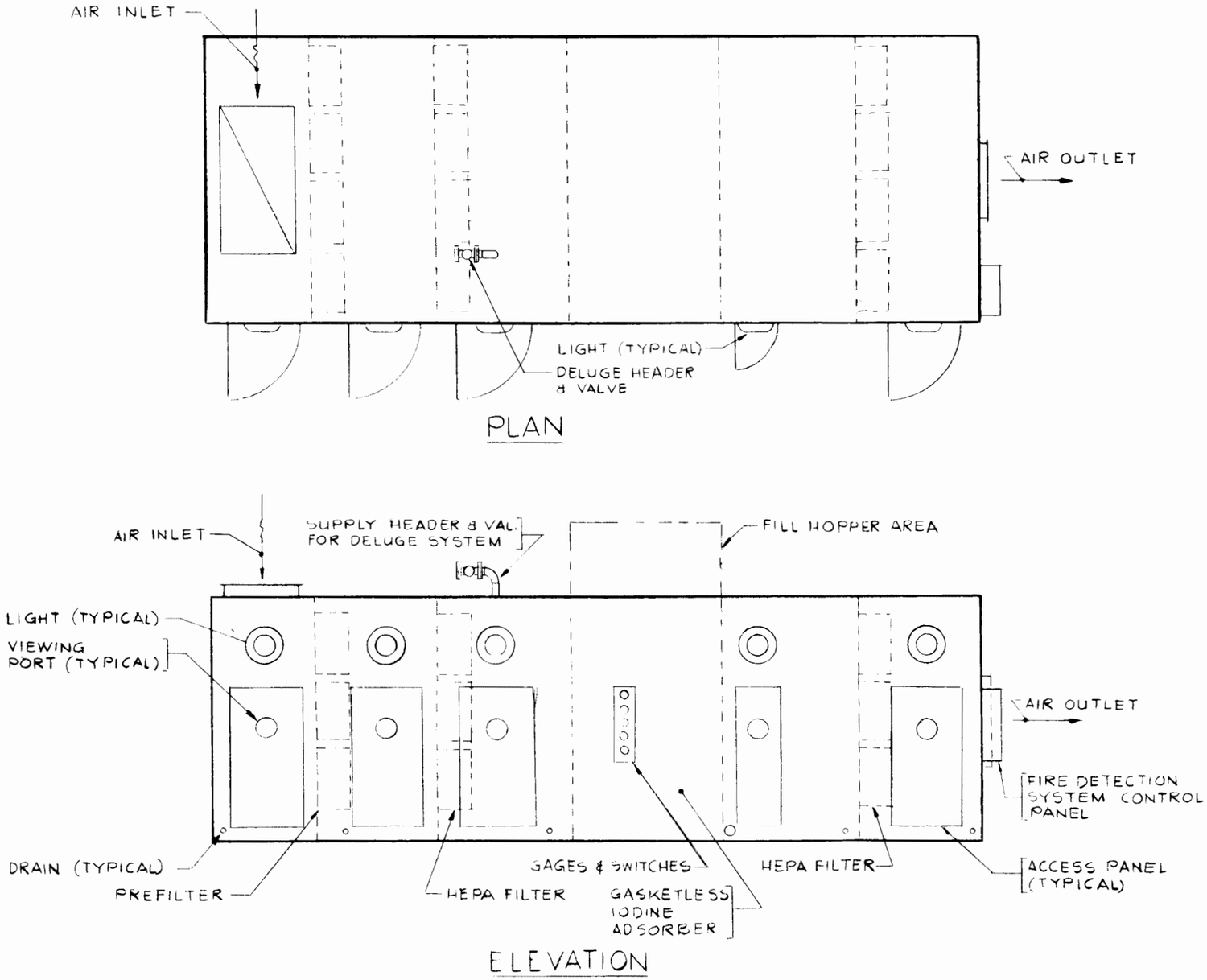

COMANCHE PEAK S.E.S.
FINAL SAFETY ANALYSIS REPORT
UNITS 1 and 2

NON-ESF
CHARCOAL FILTER TRAIN

FIGURE 9.4.10

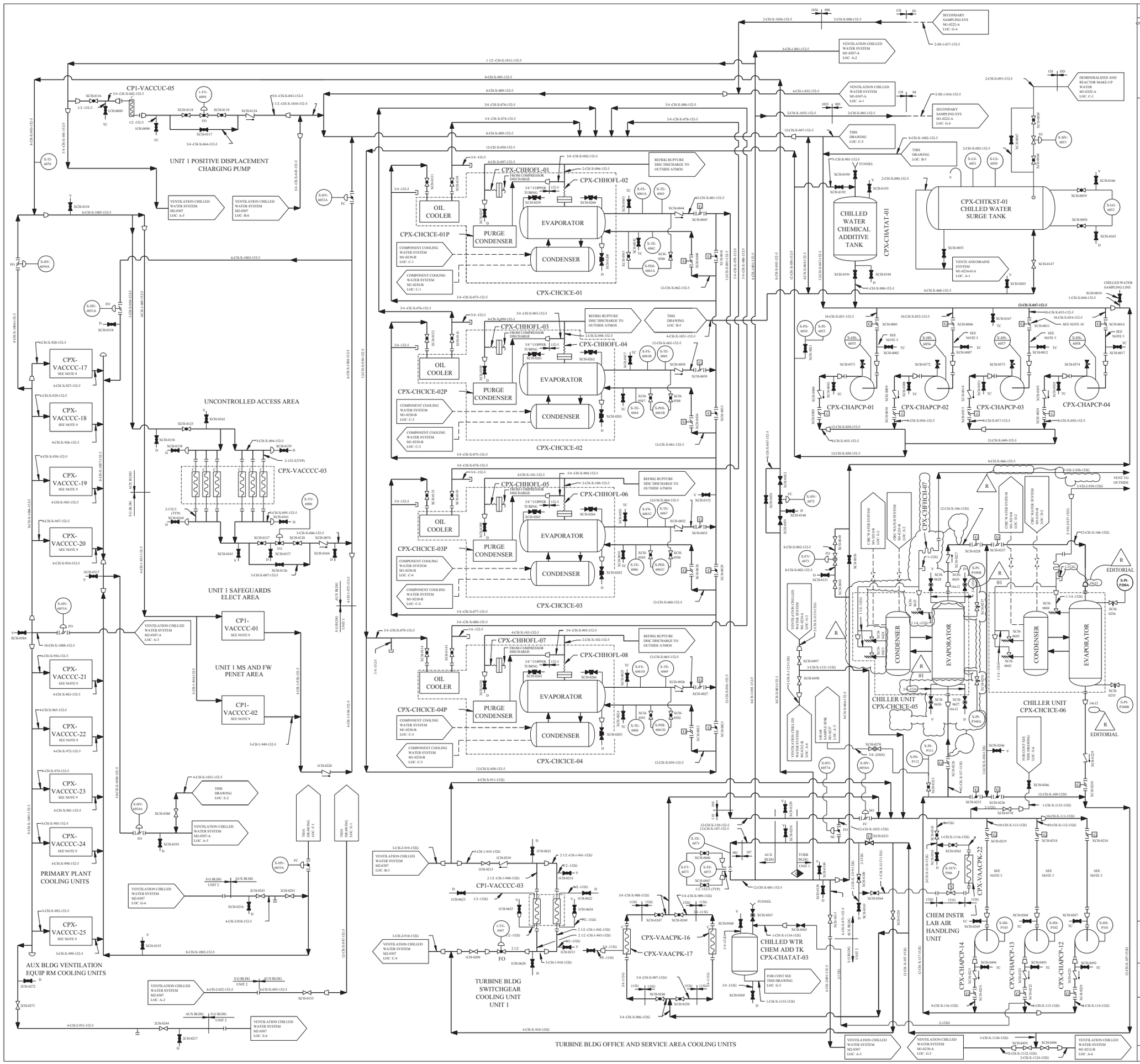

REV	DWN	CHKD	APVD	REMARKS
CP-45	DLK 06-20-2010	GAW 06-20-2010		THIS DRAWING REVISED TO INCORPORATE DESIGN CHANGE FDA-2008-003750-02-01 PER SK-0002-08-003750-02-01. EDITORIAL CHANGES AS NOTED.

NOTES:

1. SEE DRAWING M1-0200 AND M1-0313 FOR I/C AND MECHANICAL SYMBOLS.
2. FOR UNIT 2 PIPE SIZES AND EQUIPMENT IDENTIFICATION SEE DWG M2-0307.
3. SEE TRANE COMPANY DRAWINGS E6000.2450 AND B6000.3134 FOR DETAILS ON ELECTRICAL CONNECTIONS AND LOGIC FS CONNECTIONS.
4. ALL VENTS, DRAINS AND INSTRUMENTATION PIPES HAVE LINE DESIGNATION 3/4 -152-S IN ALL BUILDINGS EXCEPT TURBINE BLDG, WHICH ARE 3/4 -152G, UNLESS OTHERWISE NOTED.
5. TEMPORARY STRAINERS CPX-CHSRPS-01,02,03,04 AND TEMPORARY STRAINERS FOR PUMPS CPX-CHAPCP-12,13,14 ARE PLACED IN THE SPOOL PIECES DURING INITIAL FLUSHING OPERATIONS. STRAINERS MUST BE REMOVED AT PLANT START-UP.
6. UNLESS OTHERWISE NOTED, DRAINS COLLECTED BY CCW DRAIN SYSTEM.
7. DELETED
8. PROVIDE VENTS AT HIGH POINTS AND DRAINS AT LOW POINTS ON PIPING SYSTEM.
9. COOLING COIL DETAILS FOR UNITS CPX-VACCCC-17,18,19,20,21,22,23,24,25 ARE SHOWN ON DWG M1-0307-C.
10. VALVE HAS BEEN "TEAM LEAKED" BUT IS NO LONGER TRACKED UNDER THE TEMP MOD PROCESS. ANY FURTHER REWORK SHOULD BE ADDRESSED BY THE NORMAL WORK PROCESS.

REFERENCES:

M1-0307-A	FLOW DIAGRAM VENTILATION CHILLED WATER SYSTEM
M1-0307-B	FLOW DIAGRAM VENTILATION CHILLED WATER SYSTEM
M1-0307-C	FLOW DIAGRAM VENTILATION CHILLED WATER SYSTEM
M2-0307	FLOW DIAGRAM VENTILATION CHILLED WATER SYSTEM
M1-0230-B	COMPONENT COOLING WATER SYSTEM
M1-0236-01A	VENTS AND DRAINS SYSTEM
M1-0222-A	SECONDARY SAMPLING SYSTEM
M1-0242-A	DEMINERALIZED AND REACTOR MAKE-UP WATER
M1-0210-B	CIRCULATING WATER SYSTEM

FSAR FIGURE 9.4-11

THIS DRAWING CREATED ELECTRONICALLY

DRAWING M1-0307 REV CP-11
HAS BEEN SPLIT INTO THE FOLLOWING SHEETS:
M1-0307
M1-0307-B
M1-0307-C

DRAWING 2323-M1-0307 REV CP-8
HAS BEEN SPLIT INTO THE FOLLOWING SHEETS:
M1-0307
M1-0307-A

CLASS II

LUMINANT
CPNPP
GLEN ROSE, TEXAS

FLOW DIAGRAM VENTILATION CHILLED WATER SYSTEM

DWG. NO. M1-0307 | SH. NO. - | REV. CP-45

FINAL PRINT

REF CKD CP-28 12/19/96

mc991300.dgn M1-0307

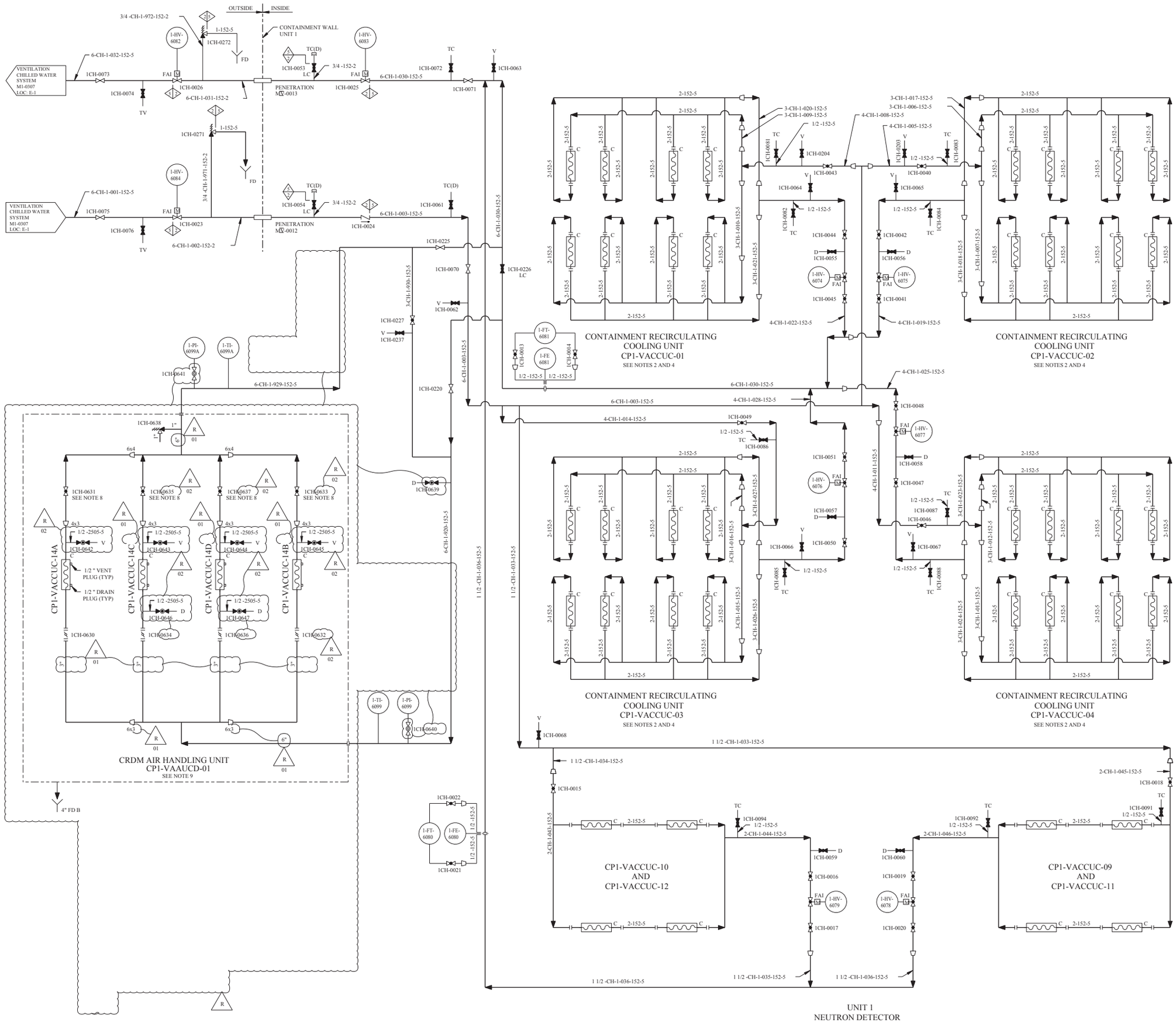

REV	DWN	CHKD	APVD	REMARKS
CP-8	DLK 03-19 2007	GAW 03-19 2007		THIS DRAWING REVISED TO INCORPORATE DESIGN CHANGE FDA 2004-002710-03-03 PER SK-0037-04-002710-03-02.

NOTES:

1. SEE DRAWINGS M1-0200 AND M1-0313 FOR I&C AND MECHANICAL SYMBOLS.
2. ONE OF THE FOUR CONTAINMENT RECIRCULATING COOLING UNITS IS STANDBY.
3. DELETED
4. FOR CONDENSATE FROM COOLING COILS CP1-VACCUC-01 , CP1-VACCUC-02 ,CP1-VACCUC-03 AND CP1-VACCUC-04 SEE DRAWING M1-0238-A LOCATION E-6.
5. ALL VENTS, DRAINS AND INSTRUMENTATION PIPES HAVE LINE DESIGNATION 3/4 -152-5 IN ALL BUILDINGS EXCEPT TURBINE BUILDING, WHICH ARE 3/4 -152G, UNLESS OTHERWISE NOTED.
6. UNLESS OTHERWISE NOTED, DRAINS COLLECTED BY CCW DRAIN SYSTEM.
7. PROVIDE VENTS AT HIGH POINTS AND DRAINS AT LOW POINTS ON PIPING SYSTEM.
8. CIRCUIT SETTER CALIBRATED BALANCE VALVE.
9. SEE GENERAL ARRANGEMENT DRAWING N1559-GA SERIES FOR THE AIR HANDLING UNIT (AHU) FOR THE CRDM VENTILATION SYSTEM. SEE N1559-CP FOR THE CONTAINMENT COOLER PIPING LAYOUT.

R

REFERENCES:

M1-0307	FLOW DIAGRAM VENTILATION CHILLED WATER SYSTEM
M1-0200	MECHANICAL SYMBOLS AND NOTES
M1-0313	FLOW DIAGRAM VENTILATION AAP BUILDING AND CONTROL BUILDING UPS AREA A/C SYSTEMS

FSAR FIGURE 9.4-11

THIS DRAWING CREATED ELECTRONICALLY

DRAWING 2323-M1-0307 REV CP-8
HAS BEEN SPLIT INTO THE FOLLOWING SHEETS:
M1-0307
M1-0307-A

CLASS I
(NUCLEAR SAFETY-RELATED)
SAFETY CLASS 1 / SAFETY CLASS 2 / SAFETY CLASS 3 — SEISMIC CATEGORY I / CLASS 1E / ASSOCIATED CIRCUITS

LUMINANT
CPSES
GLEN ROSE, TEXAS

FLOW DIAGRAM
VENTILATION
CHILLED WATER SYSTEM

DWG. NO. M1-0307 | SH. NO. A | REV. CP-8

REV	DWN	CHKD	APVD	REMARKS
CP-8	DLK 07-30-2012	MM 07-30-2012		THIS DRAWING REVISED TO INCORPORATE DESIGN CHANGE FDA 2009-001966-02-07 PER SK-0060-09-001966-02-02.

NOTES:

1. SEE DRAWINGS M1-0200 AND M1-0313 FOR I/C AND MECHANICAL SYMBOLS.
2. ALL VENTS, DRAINS AND INSTRUMENTATION PIPES HAVE LINE DESIGNATION □-152-5 IN ALL BUILDINGS EXCEPT TURBINE BUILDING, WHICH ARE □-152G, UNLESS OTHERWISE NOTED.
3. UNLESS OTHERWISE NOTED, DRAINS COLLECTED BY CCW DRAIN SYSTEM.
4. PROVIDE VENTS AT HIGH POINTS AND DRAINS AT LOW POINTS ON PIPING SYSTEM.
5. VENDOR SUPPLIED COMPONENTS (WHERE APPLICABLE) SHALL BE HEAT TRACED AND INSULATED FOR FREEZE PROTECTION.
6. THROTTLE VALVE (XCH-0092) DOWNSTREAM OF FAN COIL UNIT TO BE LOCKED IN POSITION (LIP) AFTER BALANCING OF CHILLED WATER THROUGH CPX-VAACPK-12 COIL.

R 02

REFERENCE DRAWINGS:

M1-0242-A	FLOW DIAGRAM DEMINERALIZED AND REACTOR MAKE-UP WATER SHEET 4 OF 5
M1-0200	MECHANICAL SYMBOLS AND NOTES
M1-0313	FLOW DIAGRAM VENTILATION AAP BLDG AND CONTROL BLDG UPS AREA A/C SYSTEMS

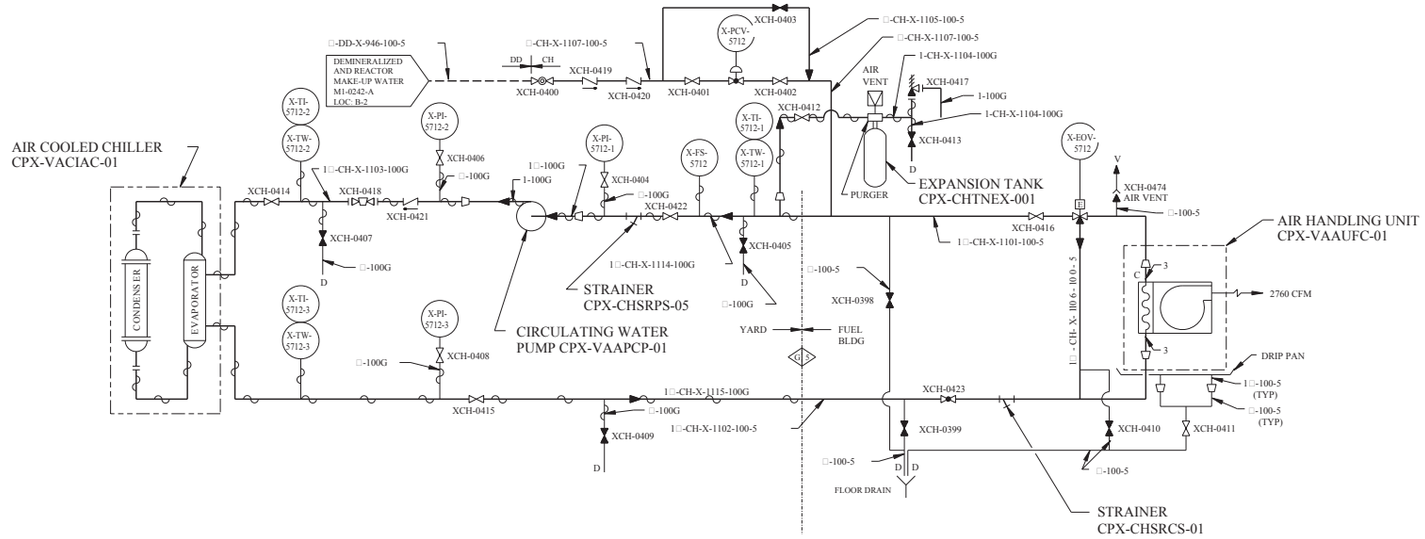

SUPPLEMENTARY AIR CONDITIONING SYSTEM
FOR THE FUEL HANDLING BLDG

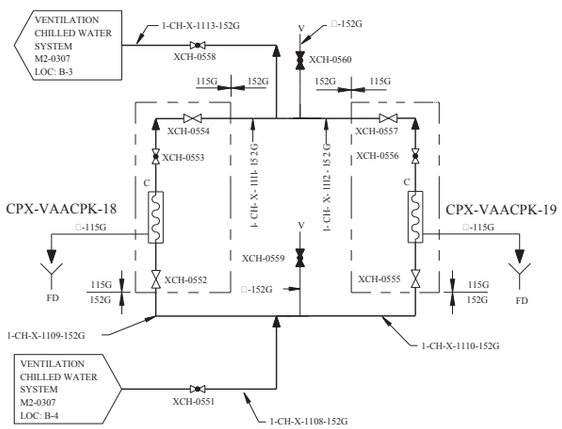

SUPPLEMENTARY VENTILATION CHILLED WATER SYSTEM
TURBINE BLDG OFFICE AREA, ROOM 39: ALTERNATE RCA ACCESS

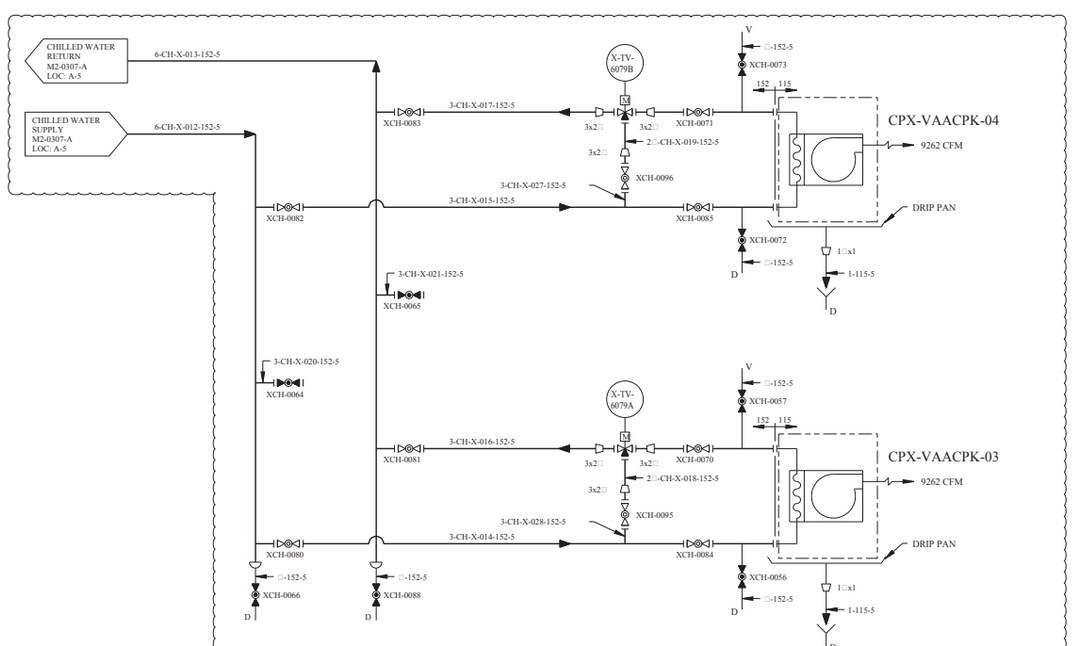

SUPPLEMENTARY OFFICE AND SERVICE
AIR CONDITIONING SYSTEM
FOR THE ELECTRICAL AND CONTROL BLDG

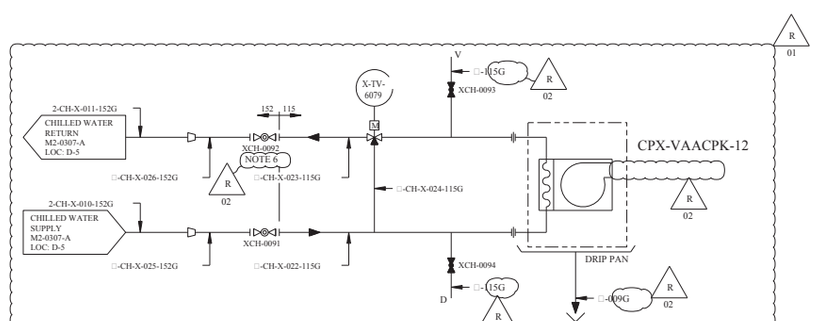

SUPPLEMENTARY OFFICE & SERVICE AREA SECURITY READY ROOM
AIR CONDITIONING SYSTEM

FSAR FIGURE 9.4-11

THIS DRAWING CREATED ELECTRONICALLY

DRAWING M1-0307 REV CP-11 HAS BEEN SPLIT INTO THE FOLLOWING SHEETS:
M1-0307
M1-0307-B
M1-0307-C

CLASS II

LUMINANT
CPNPP
GLEN ROSE, TEXAS

FLOW DIAGRAM - VENTILATION
CHILLED WATER SYSTEM

DWG. NO. M1-0307 | SH. NO. B | REV. CP-8

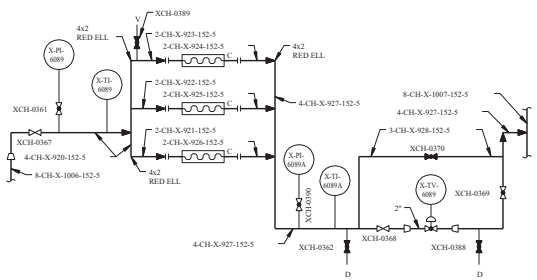

COOLING COILS CPX-VACCCC-17
REF DWG M1-0307 LOCATION (A-2)

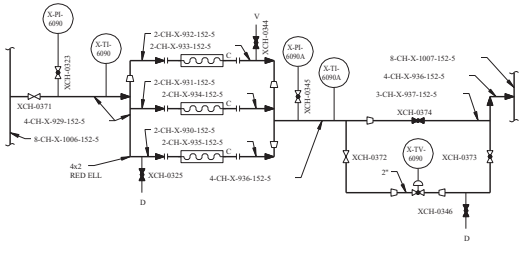

COOLING COILS CPX-VACCCC-18
REF DWG M1-0307 LOCATION (A-3)

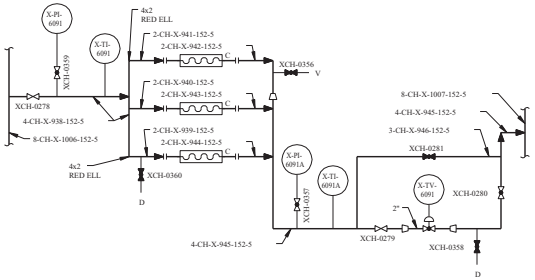

COOLING COILS CPX-VACCCC-19
REF DWG M1-0307 LOCATION (A-3)

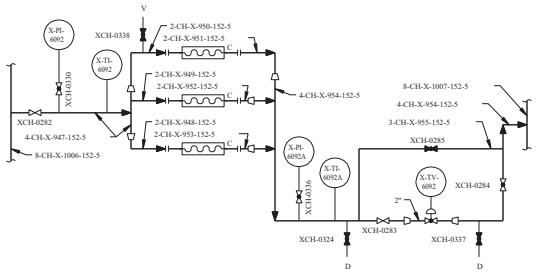

COOLING COILS CPX-VACCCC-20
REF DWG M1-0307 LOCATION (A-3)

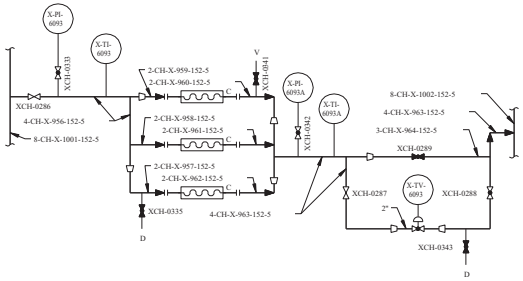

COOLING COILS CPX-VACCCC-21
REF DWG M1-0307 LOCATION (A-4)

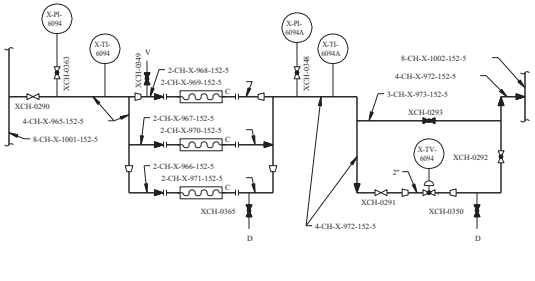

COOLING COILS CPX-VACCCC-22
REF DWG M1-0307 LOCATION (A-4)

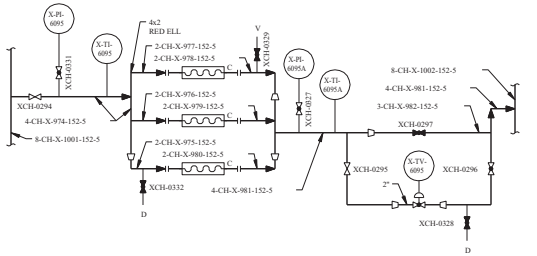

COOLING COILS CPX-VACCCC-23
REF DWG M1-0307 LOCATION (A-5)

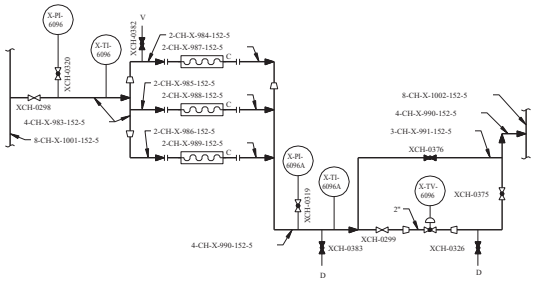

COOLING COILS CPX-VACCCC-24
REF DWG M1-0307 LOCATION (A-5)

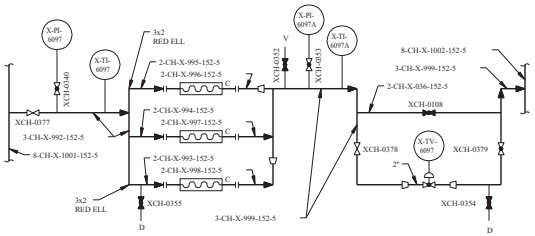

AUX BLDG VENTILATION EQPT RM COOLING UNIT
COOLING COILS CPX-VACCCC-25
REF DWG M1-0307 LOCATION (A-6)

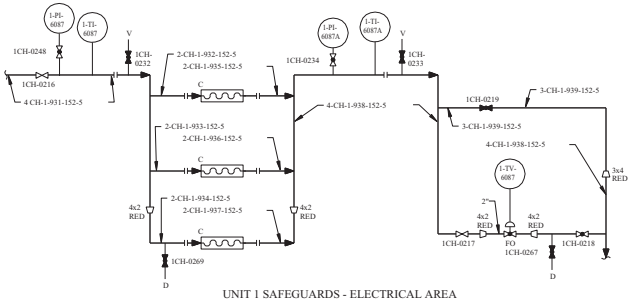

UNIT 1 SAFEGUARDS - ELECTRICAL AREA
COOLING COILS CP1-VACCCC-01
REF DWG M1-0307 LOCATION (B-4)

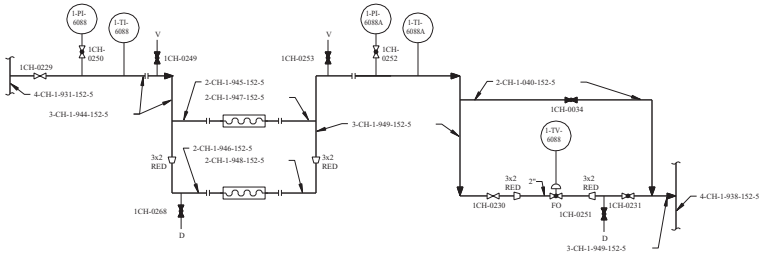

UNIT 1 SAFEGUARDS - MS/FW PENET AREA
COOLING COILS CP1-VACCCC-02
REF DWG M1-0307 LOCATION (B-4,5)

REV	DWN	CHKD	APVD	REMARKS
CP-4	RMS 06-07-1996			THIS DRAWING REVISED TO ADD THE FSAR FIGURE NUMBER AS AN EDITORIAL CHANGE.

NOTES:

1. SEE DRAWINGS M1-0200 AND M1-0313 FOR I/C AND MECHANICAL SYMBOLS.
2. ALL VENTS, DRAINS AND INSTRUMENTATION PIPES HAVE LINE DESIGNATION 3/4 -152-5 IN ALL BUILDINGS EXCEPT TURBINE BUILDING, WHICH ARE 3/4 -152G, UNLESS OTHERWISE NOTED.
3. UNLESS OTHERWISE NOTED, DRAINS COLLECTED BY CCW DRAIN SYSTEM.
4. PROVIDE VENTS AT HIGH POINTS AND DRAINS AT LOW POINTS ON PIPING SYSTEM.

REFERENCES:

M1-0307	FLOW DIAGRAM VENTILATION CHILLED WATER SYSTEM
M1-0200	MECHANICAL SYMBOLS AND NOTES
M1-0313	FLOW DIAGRAM-VENTILATION AAP BUILDING AND CONTROL BUILDING UPS AREA A/C SYSTEMS

FSAR FIGURE 9.4-11

CP 4

THIS DRAWING CREATED ELECTRONICALLY

DRAWING	M1-0307	REV	CP-11
HAS BEEN SPLIT INTO THE FOLLOWING SHEETS:			
M1-0307			
M1-0307-B			
M1-0307-C			

NON-NUCLEAR SAFETY
QA PROGRAM APPLICABLE

CLASS 5 SEISMIC CATEGORY II
FIRE PROTECTION SYSTEM
RADIOACTIVE WASTE MANAGEMENT SYSTEM

TXU ELECTRIC
CPSES
GLEN ROSE, TEXAS

FLOW DIAGRAM - VENTILATION
CHILLED WATER SYSTEM

DWG. NO.	SH. NO.	REV.
M1-0307	C	CP-4

vs0000ho.dgn

$$$$$$$D:\TESSSSS

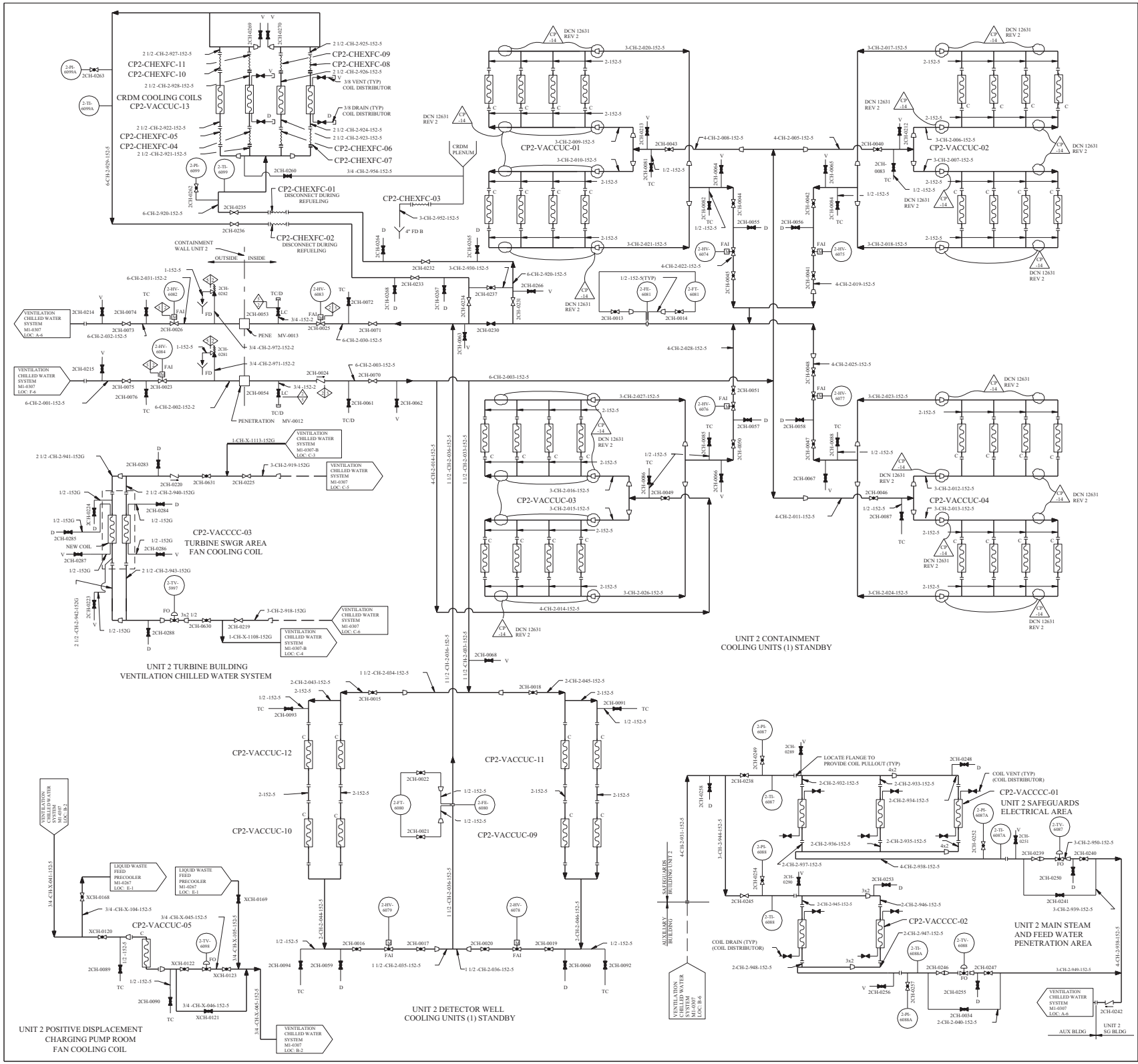

REV	DWN	CHKD	APVD	REMARKS
CP-14	CA 08-29-1989			THIS DRAWING REVISED TO INCORPORATE DESIGN CHANGE DCN 12631 REV 2.

NOTES

1. SEE DRAWING M1-0200 FOR I/C AND MECHANICAL SYMBOLS.
2. ALL DRAINS ON THIS DRAWING DRAIN TO LOCAL FLOOR DRAINS UNLESS OTHERWISE NOTED.
3. ALL VENTS, DRAINS AND INSTRUMENTATION PIPES HAVE LINE DESIGNATION 3/4 -152-5 IN ALL BUILDINGS EXCEPT TURBINE BLDG, WHICH ARE 3/4 -152G UNLESS OTHERWISE NOTED.
4. DELETED.

REFERENCES

M1-0307	FLOW DIAGRAM VENTILATION CHILLED WATER SYSTEM.
M1-0267	LIQUID WASTE PROCESSING SYSTEM.

FSAR FIGURE 9.4-11

THIS DRAWING CREATED ELECTRONICALLY

DRAWING M2-0307	REV CP-3
HAS BEEN SPLIT INTO THE FOLLOWING SHEETS:	
M2-0307	
M2-0307-A	

CLASS I

(NUCLEAR SAFETY-RELATED)

SAFETY CLASS 1	SEISMIC CATEGORY I
SAFETY CLASS 2	CLASS 1E
SAFETY CLASS 3	ASSOCIATED CIRCUITS

TXU ELECTRIC
CPSES
GLEN ROSE, TEXAS

FLOW DIAGRAM - VENTILATION CHILLED WATER SYSTEM

DWG. NO.	SH. NO.	REV.
M2-0307	-	CP-14

me00011d.dgn

R/F CK:D/C P-11/8/12/97

SSSSSSSD:\TESSSSSS

REV	DWN	CHKD	APVD	REMARKS
CP-27	DKK 07-30-2012	MM 07-30-2012		THIS DRAWING REVISED TO INCORPORATE DESIGN CHANGE: FDA 2009-001966-02-01 PER SK-0011-09-001966-02-01. EDITORIAL CHANGE AS NOTED.

NOTES:

1. SEE DRAWING M1-0200 FOR I/C AND MECHANICAL SYMBOLS.
2. ALL DRAINS ON THIS DRAWING DRAIN TO LOCAL FLOOR DRAINS UNLESS OTHERWISE NOTED.
3. ALL VENTS, DRAINS AND INSTRUMENTATION PIPES HAVE LINE DESIGNATION □-152-5 IN ALL BUILDINGS EXCEPT TURBINE BLDG, WHICH ARE □-152G UNLESS OTHERWISE NOTED.
4. TEMPORARY STRAINERS ARE PLACED IN THE SPOOL PIECES DURING INITIAL FLUSHING OPERATIONS. THEY MUST BE REMOVED AT PLANT START-UP.
5. DELETED
6. X-FS-6070A IS ABANDONED IN PLACE.

REFERENCES:

M1-0307	FLOW DIAGRAM VENTILATION CHILLED WATER SYSTEM.
M2-0210	FLOW DIAGRAM CIRCULATING WATER SYSTEM.

* - SUPPLIED BY VENDOR.

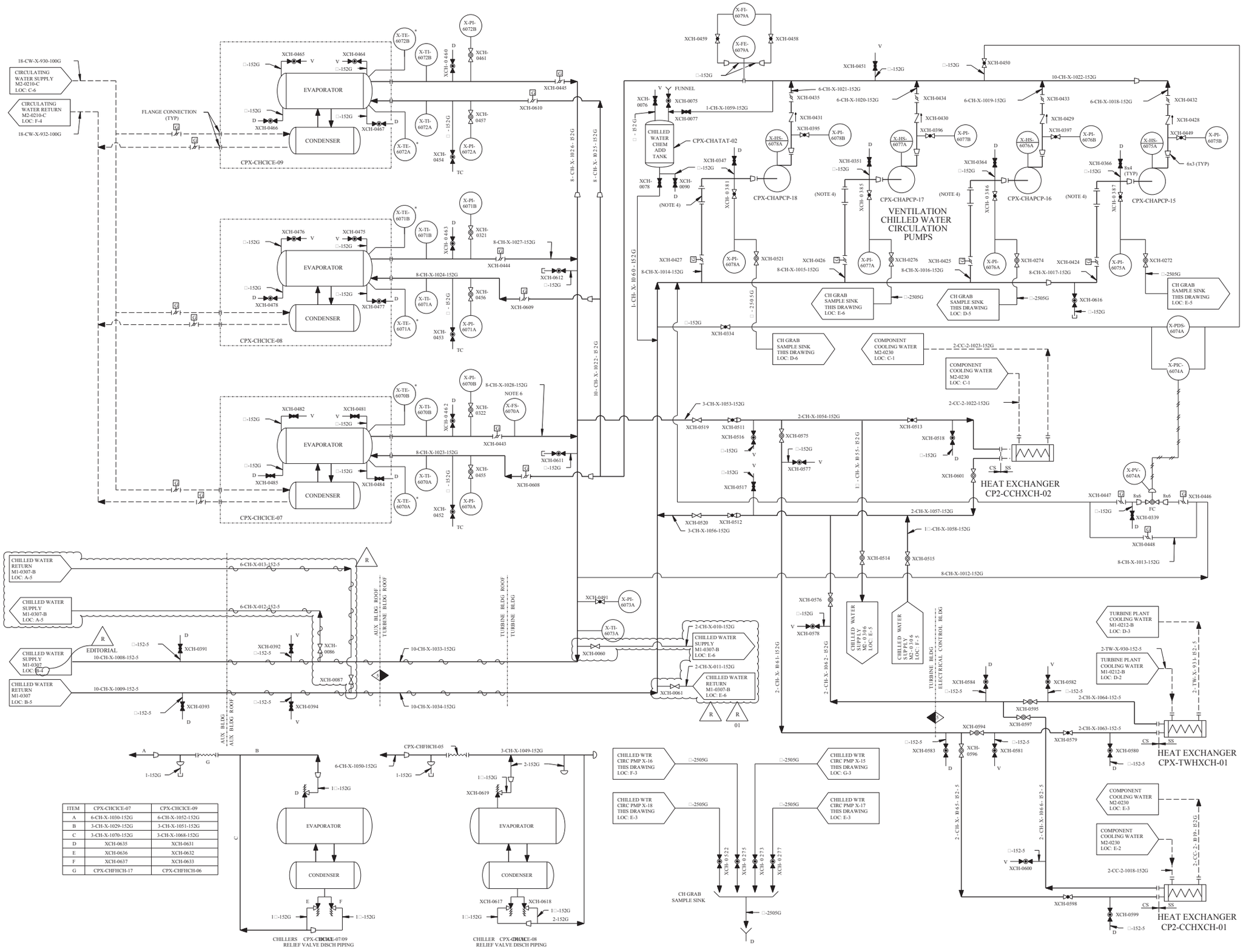

ITEM	CPX-CHCICE-07	CPX-CHCICE-09
A	6-CH-X-1030-152G	6-CH-X-1052-152G
B	3-CH-X-1029-152G	3-CH-X-1051-152G
C	3-CH-X-1070-152G	3-CH-X-1068-152G
D	XCH-0635	XCH-0631
E	XCH-0636	XCH-0632
F	XCH-0637	XCH-0633
G	CPX-CHFHCH-17	CPX-CHFHCH-06

DRAWING M2-0307 REV CP-3
HAS BEEN SPLIT INTO THE FOLLOWING SHEETS:
M2-0307
M2-0307-A

THIS DRAWING CREATED ELECTRONICALLY

CLASS II

LUMINANT
CPNPP
GLEN ROSE, TEXAS

FLOW DIAGRAM - VENTILATION CHILLED WATER SYSTEM

DWG. NO. M2-0307 | SH. NO. A | REV. CP-27

< FINAL PRINT >

me00081w.dgn M2-0307-A

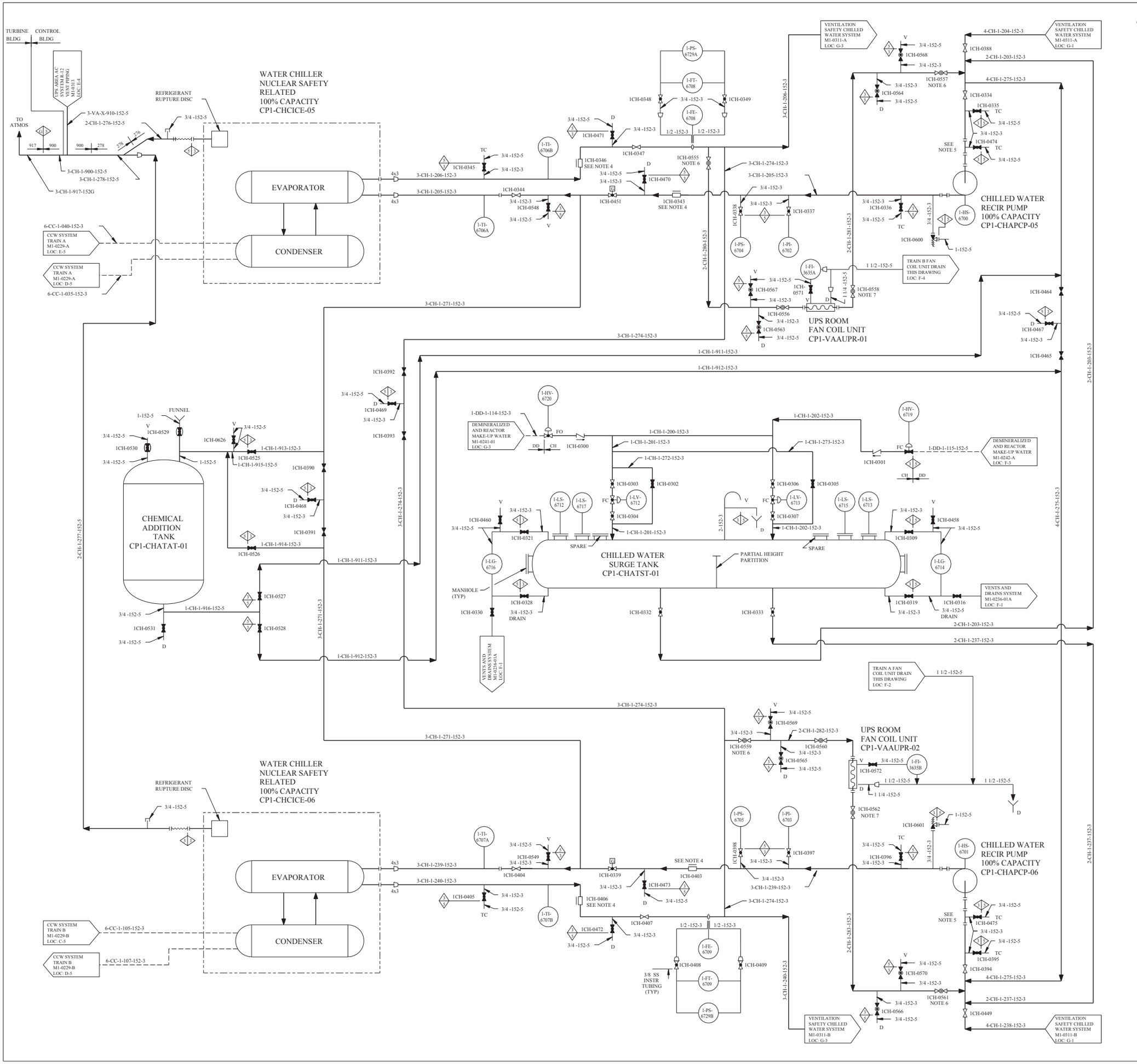

REV	DWN	CHKD	APVD	REMARKS
CP-30	JRMC 04-28-2006	SM 04-27-2006		THIS DRAWING REVISED TO INCORPORATE DESIGN CHANGE FDA-2006-001196-01-00 PER SK-00013-06-001196-01-00

NOTES:

1. FOR MECHANICAL SYMBOLS AND NOTES SEE DWG M1-0200.
2. THE PIPE CATEGORY FOR ALL ROOT VALVE LINES, TEST CONNECTIONS, DRAINS AND VENTS WILL BE THE SAME AS THE MAIN PROCESS LINE, UNLESS OTHERWISE NOTED.
3. UNLESS OTHERWISE NOTED, ALL DRAINS COLLECTED AS FOLLOWS:
   DRAINS FROM FAN COIL UNITS BY LOCAL DRAIN SYSTEM.
   DRAINS FROM PROCESS LINES AND EQUIPMENT BY CCW DRAIN SYSTEM.
4. REMOVE CHECK VALVE INTERNALS, ABANDON VALVE BODIES 1CH-0343 , 1CH-0346 , 1CH-0403 AND 1CH-0406 IN PLACE.
5. TEMPORARY STRAINERS CP1-CHSRPS-01 AND CP1-CHSRPS-02 ARE PLACED IN SPOOL PIECES DURING INITAL FLUSHING OPERATIONS. STRAINERS MUST BE REMOVED AT PLANT START-UP. THE TEMPORARY STRAINERS CAN BE RE-INSTALLED FOR POST MAINTENANCE ACTIVITY. R
6. VALVE IS FIXED IN THE OPEN POSITION BY A WELDED FASTENER.
7. THROTTLE VALVE DOWNSTREAM OF EACH FAN COIL UNIT TO BE LOCKED IN POSITION (LIP) AFTER BALANCING OF CHILLED WATER FLOW THOUGH EACH COIL.

REFERENCES:

M1-0229-A	FLOW DIAGRAM COMPONENT COOLING WATER SYSTEM SH 2 OF 8
M1-0229-B	FLOW DIAGRAM COMPONENT COOLING WATER SYSTEM SH 3 OF 8
M1-0236-01A	FLOW DIAGRAM VENTS AND DRAINS SYSTEM SAFEGUARDS AND AUX BLDG
M1-0241-01	FLOW DIAGRAM DEMINERALIZED AND REACTOR MAKE-UP WATER SH 3 OF 6
M1-0242-A	FLOW DIAGRAM DEMINERALIZED AND REACTOR MAKE-UP WATER SH 4 OF 5
M1-0311-A	FLOW DIAGRAM VENTILATION SAFETY CHILLED WATER SYSTEM
M1-0311-B	FLOW DIAGRAM VENTILATION SAFETY CHILLED WATER SYSTEM
M1-0313	FLOW DIAGRAM VENTILATION AAP BLDG AND CONTROL BLDG UPS AREA A/C SYSTEMS

FSAR FIGURE 9.4-12

THIS DRAWING CREATED ELECTRONICALLY

DRAWING M1-0311 REV CP-9
HAS BEEN SPLIT INTO THE FOLLOWING SHEETS:

M1-0311
M1-0311-A
M1-0311-B

CLASS I
(NUCLEAR SAFETY-RELATED)
SAFETY CLASS 1 SAFETY CLASS 2 SAFETY CLASS 3
SEISMIC CATEGORY I CLASS II ASSOCIATED CIRCUITS

LUMINANT
CPSES
GLEN ROSE, TEXAS

FLOW DIAGRAM
VENTILATION
SAFETY CHILLED WATER SYSTEM

DWG. NO. M1-0311 | SH. NO. - | REV. CP-30

FINAL PRINT

REF CKD CP-24 3/10/98

me683600.dgn M1-0311

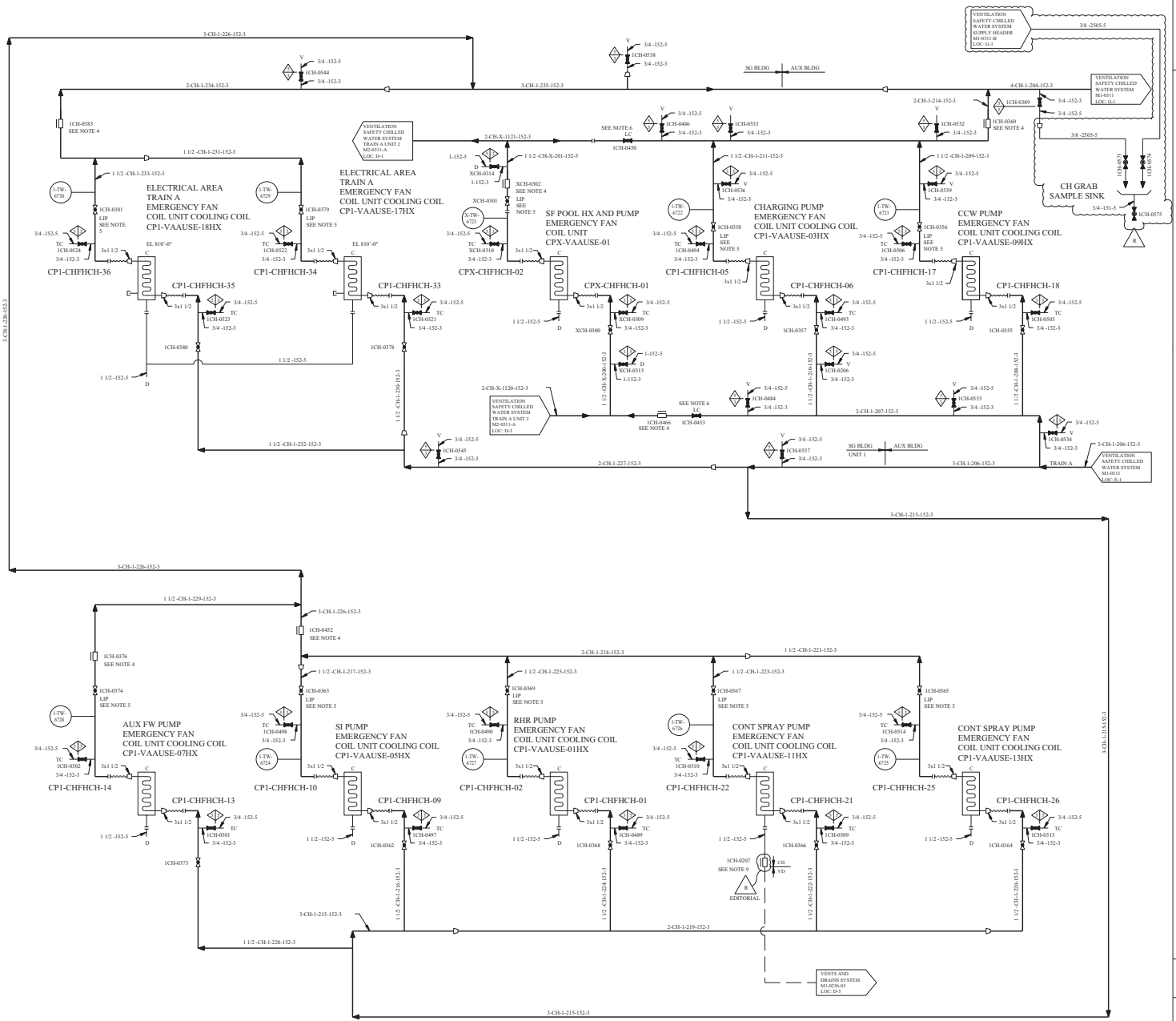

REV	DWN	CHK	APVD	REMARKS
CP-11				THIS DRAWING REVISED TO INCORPORATE DESIGN CHANGE EDA 2009-00145R-01-00 PER SK-0006-00-00-059-01-00. EDITORIAL CHANGE AS NOTED.

NOTES:

1. FOR MECHANICAL SYMBOLS AND NOTES SEE DWG M1-0200.
2. THE PIPE CATEGORY FOR ALL ROOT VALVE LINES, TEST CONNECTIONS, DRAINS AND VENTS WILL BE THE SAME AS THE MAIN PROCESS LINE, UNLESS OTHERWISE NOTED.
3. UNLESS OTHERWISE NOTED, ALL DRAINS COLLECTED AS FOLLOWS:
   DRAINS FROM FAN COIL UNITS BY LOCAL DRAIN SYSTEM.
   DRAINS FROM PROCESS LINES AND EQUIPMENT BY CCW DRAIN SYSTEM.
4. REMOVE CHECK VALVE INTERNALS, ABANDON VALVE BODIES 1CH-0360 , 1CH-0376 , 1CH-0383 , 1CH-0452 , 1CH-0466 AND XCH-0302 IN PLACE.
5. THROTTLE VALVE DOWNSTREAM OF EACH FAN COIL UNIT TO BE LOCKED IN POSITION (LIP) AFTER BALANCING OF CHILLED WATER FLOW THROUGH EACH COIL.
6. THIS IS A UNIT ISOLATION VALVE AND SHALL BE NORMALLY OPEN WHEN CHILLED WATER IS PROVIDED BY UNIT 1 CH AND LOCKED CLOSED WHEN CHILLED WATER IS PROVIDED BY UNIT 2 CH.
7. DELETED
8. DELETED
9. INTERNALS REMOVED FROM VALVE . 1CH-0207

REFERENCES:

M1-0236-03	FLOW DIAGRAM VENTS AND DRAINS SYSTEM SAFEGUARDS BLDG
	FLOW DIAGRAM VENTILATION SAFETY
M2-0311	CHILLED WATER SYSTEM
M1-0311	FLOW DIAGRAM VENTILATION SAFETY CHILLED WATER SYSTEM

FSAR FIGURE 9.4-12

THIS DRAWING OPERATED BY FRONC-ALLY

DRAWING M1-0311 REV CP-9
HAS BEEN SPLIT INTO THE FOLLOWING SHEETS:

M1-0311
M1-0311-A
M1-0311-B

CLASS I
(NUCLEAR SAFETY-RELATED)
SAFETY CLASS 1 SAFETY CLASS 2 SAFETY CLASS 3
SEISMIC CATEGORY CLASS II ASSOCIATED CIRCUITS I

TXU ELECTRIC
CPSES
GLEN ROSE, TEXAS

FLOW DIAGRAM
VENTILATION
SAFETY CHILLED WATER SYSTEM

DWG. NO. M1-0311 | SH. NO. A | REV. CP-11

M1-0311-A

mc374200.dgn

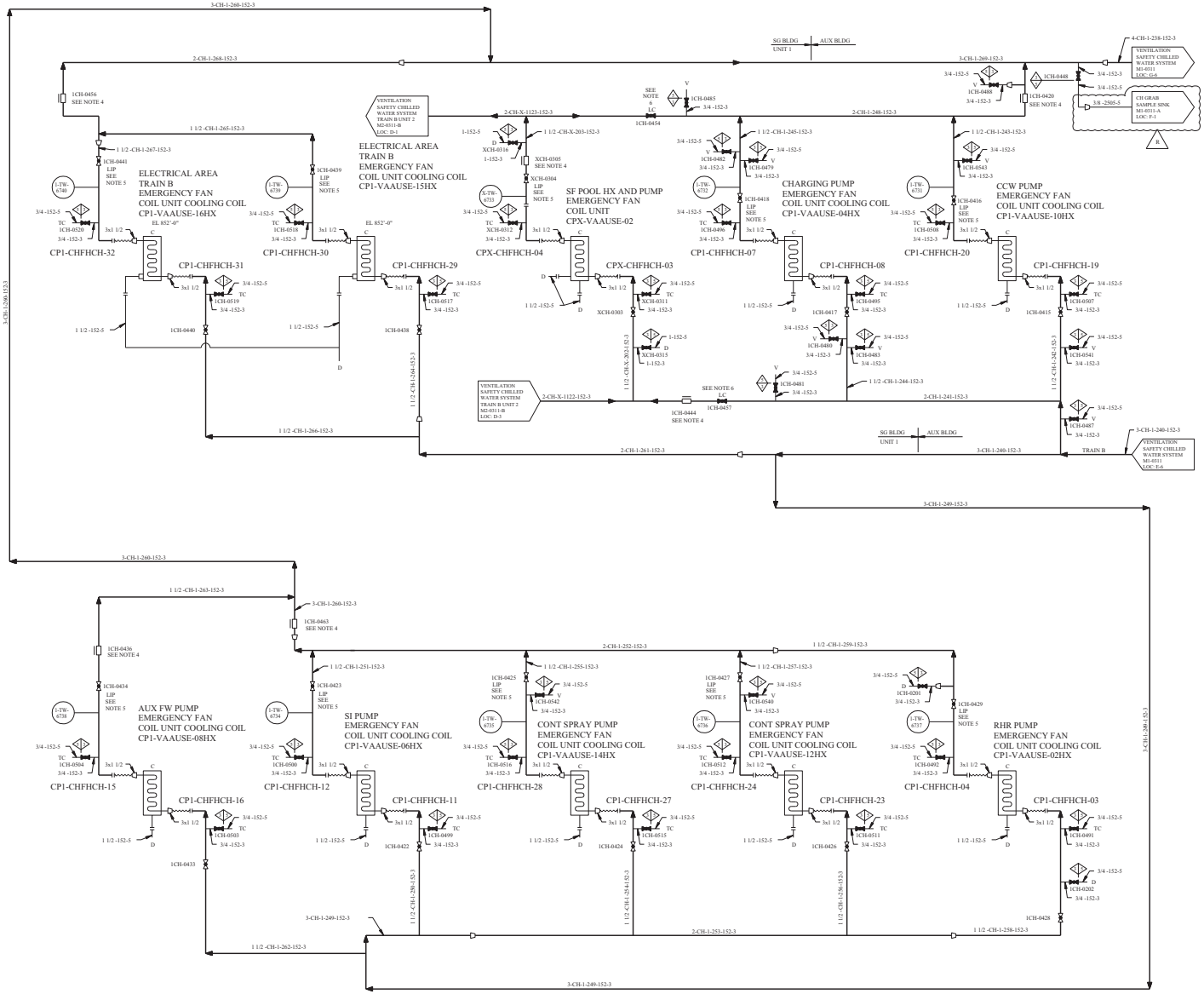

REV	DWN	CHKD	APVD	REMARKS
CP-9	HLK 04-01-2000	RHS 04-01-2002		THIS DRAWING REVISED TO INCORPORATE DESIGN CHANGE FDA 2000-00145R-01-00 PER SK-0007-00-001-034-01-00.

NOTES:

1. FOR MECHANICAL SYMBOLS AND NOTES SEE DWG M1-0200.
2. THE PIPE CATEGORY FOR ALL ROOT VALVE LINES, TEST CONNECTIONS, DRAINS AND VENTS WILL BE THE SAME AS THE MAIN PROCESS LINE, UNLESS OTHERWISE NOTED.
3. UNLESS OTHERWISE NOTED, ALL DRAINS COLLECTED AS FOLLOWS:
   DRAINS FROM FAN COIL UNITS BY LOCAL DRAIN SYSTEM.
   DRAINS FROM PROCESS LINES AND EQUIPMENT BY CCW DRAIN SYSTEM.
4. REMOVE CHECK VALVE INTERNALS, ABANDON VALVE BODIES 1CH-0420 , 1CH-0436 , 1CH-0444 , 1CH-0456 , 1CH-0463 AND XCH-0305 IN PLACE.
5. THROTTLE VALVE DOWNSTREAM OF EACH FAN COIL UNIT TO BE LOCKED IN POSITION (LIP) AFTER BALANCING OF CHILLED WATER FLOW THROUGH EACH COIL.
6. THIS IS A UNIT ISOLATION VALVE AND SHALL BE NORMALLY OPEN WHEN CHILLED WATER IS PROVIDED BY UNIT 1 CH AND LOCKED CLOSED WHEN CHILLED WATER IS PROVIDED BY UNIT 2 CH.
7. DELETED
8. DELETED

REFERENCES:

M1-0311 FLOW DIAGRAM VENTILATION SAFETY CHILLED WATER SYSTEM

M2-0311 FLOW DIAGRAM VENTILATION SAFETY CHILLED WATER SYSTEM

FSAR FIGURE 9.4-12

THIS DR AWING CRE A TED EFECTIV ON DEC-AL U.T

DRAWING	M1-0311	REV	CP-9
HAS BEEN SPLIT INTO THE FOLLOWING SHEETS:			
M1-0311			
M1-0311-A			
M1-0311-B			

CLASS I
(NUCLEAR SAFETY-RELATED)
SAFETY CLASS 1
SAFETY CLASS 2
SAFETY CLASS 3
SEISMIC CATEGORY I
CLASS IE
ASSOCIATED CIRCUITS

TXU ELECTRIC
CPSES
GLEN ROSE, TEXAS

FLOW DIAGRAM
VENTILATION
SAFETY CHILLED WATER SYSTEM

DWG. NO. M1-0311 | SH. NO. B | REV. CP-9

M1-0311-B

me374300.dgn

$$$$$$DATE$$$$$

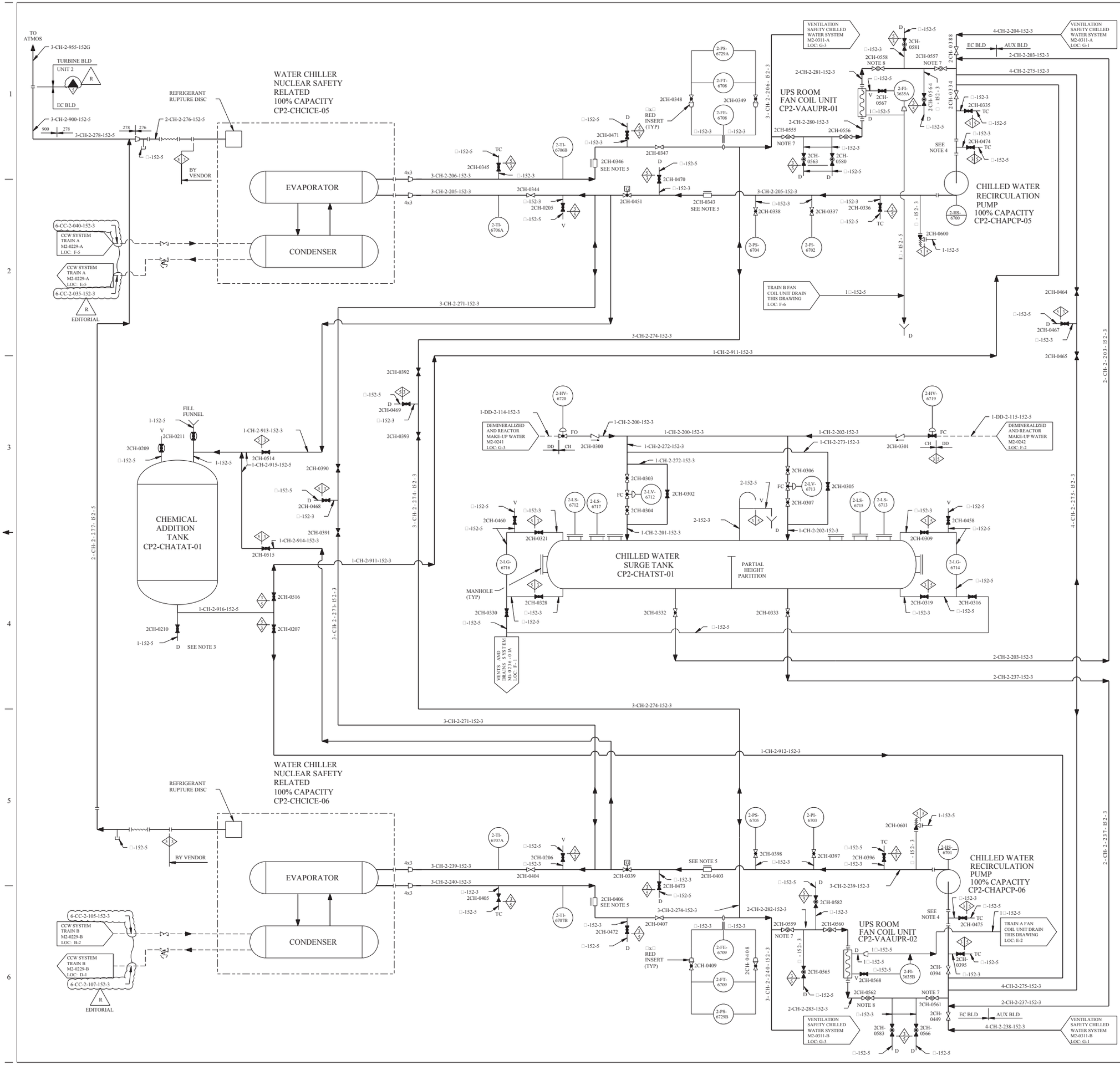

REV	DWN	CHKD	APVD	REMARKS
CP-19	DKK 04-26-2012	MM 04-27-2012		THIS DRAWING REVISED TO INCORPORATE DESIGN CHANGE FDA 2012-000074-01-00 PER SK-0001-12-000074-01-00. EDITORIAL CHANGES AS NOTED.

NOTES:

1. FOR MECHANICAL SYMBOLS AND NOTES SEE DWG M1-0200.
2. THE PIPE CATEGORY FOR ALL ROOT VALVE LINES, TEST CONNECTIONS, DRAINS AND VENTS WILL BE THE SAME AS THE MAIN PROCESS LINE UNLESS OTHERWISE NOTED.
3. DRAINS TO BE LOCALLY COLLECTED UNDER ADMINISTRATIVE CONTROLS.
4. TEMPORARY STRAINERS CP2-CHSRPS-01 AND CP2-CHSRPS-02 ARE PLACED IN SPOOL PIECES DURING INITIAL FLUSHING OPERATIONS. STRAINERS MUST BE REMOVED AT PLANT START-UP. THE TEMPORARY STRAINERS CAN BE RE-INSTALLED FOR POST MAINTENANCE ACTIVITY.
5. REMOVE CHECK VALVE INTERNALS, ABANDON VALVE BODIES IN PLACE.
6. UNLESS OTHERWISE NOTED ALL DRAINS COLLECTED BY LOCAL DRAIN SYSTEM EXCEPT AS FOLLOWS:
   CHILLED WATER SURGE TANK DRAIN BY CCW
   DRAIN SYSTEM VIA VENTS AND DRAIN SYSTEM
7. VALVE IS FIXED IN THE OPEN POSITION BY A WELDED FASTENER.
8. THROTTLE VALVE DOWNSTREAM OF EACH FAN COIL UNIT TO BE LOCKED IN POSITION (LIP) AFTER BALANCING OF CHILLED WATER THROUGH EACH COIL.

REFERENCES:

M2-0229-A	FLOW DIAGRAM COMPONENT COOLING WATER SYSTEM
M2-0229-B	FLOW DIAGRAM COMPONENT COOLING WATER SYSTEM
M2-0236-01A	FLOW DIAGRAM VENTS AND DRAIN SYSTEM
M2-0242	FLOW DIAGRAM DEMINERALIZED AND REACTOR MAKE-UP WATER SYSTEM
M2-0241-01	FLOW DIAGRAM DEMINERALIZED AND REACTOR MAKE-UP WATER SYSTEM
M2-0311-A	FLOW DIAGRAM VENTILATION SAFETY CHILLED WATER SYSTEM
M2-0311-B	FLOW DIAGRAM VENTILATION SAFETY CHILLED WATER SYSTEM

FSAR FIGURE 9.4-12

THIS DRAWING CREATED ELECTRONICALLY

DRAWING 2323-M2-0311 REV CP-3
HAS BEEN SPLIT INTO THE FOLLOWING SHEETS:

M2-0311
M2-0311-A
M2-0311-B

CLASS I
(NUCLEAR SAFETY-RELATED)
SAFETY CLASS 1 SAFETY CLASS 2 SAFETY CLASS 3 — SEISMIC CATEGORY CLASS 1E ASSOCIATED CIRCUITS I

LUMINANT
CPNPP
GLEN ROSE, TEXAS

FLOW DIAGRAM
VENTILATION
SAFETY CHILLED WATER SYSTEM

DWG. NO. M2-0311 | SH. NO. - | REV. CP-19

< FINAL PRINT >

me683700.dgn M2-0311

REF CKD CP-10 IV 8/97

SSSSSSSDATESSSSSS

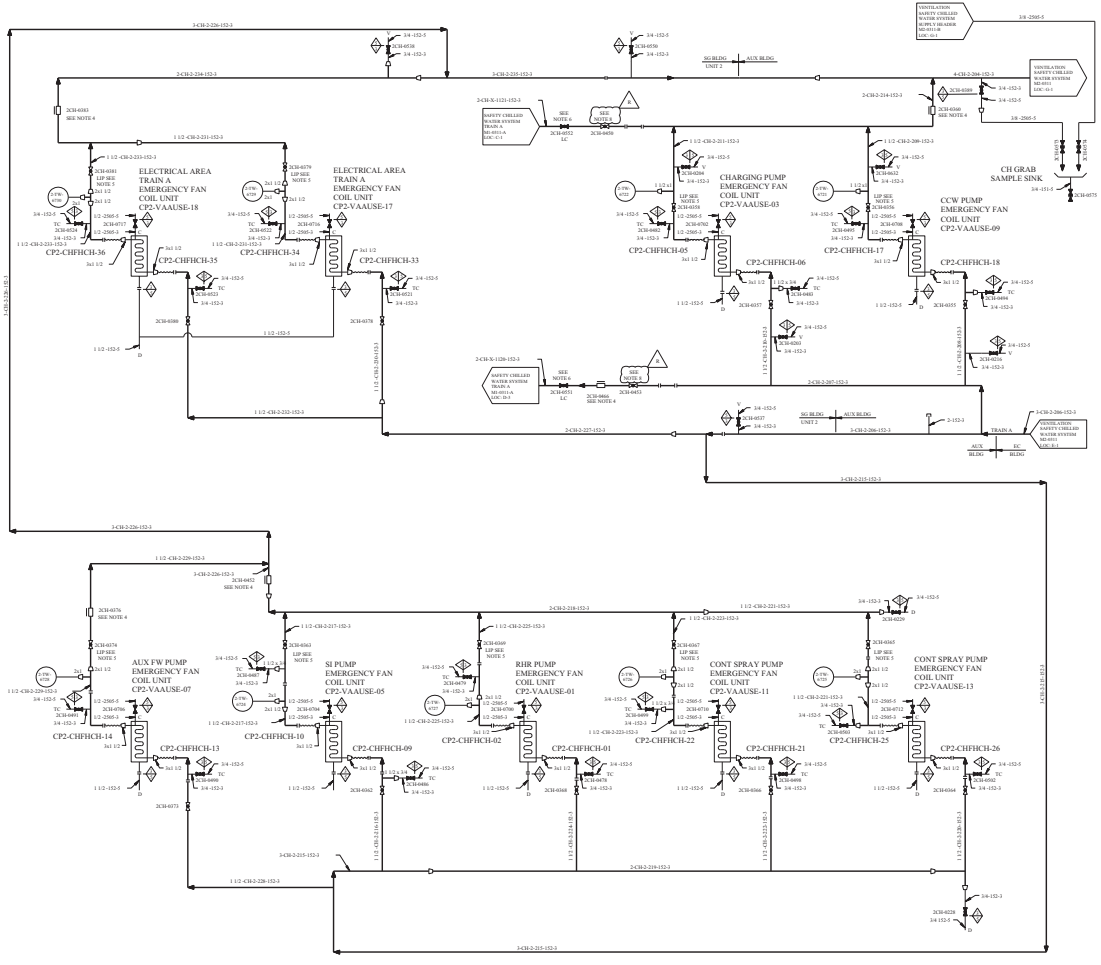

REV	DATE	DRN	CHK	APPD	REMARKS
A	10/ 2/ 2001	TEST			THIS DRAWING REVISED TO INCORPORATE DESIGN CHANGE FCA_1999-1999-0-01 AS PER SR_0000_0-0-0000-0-01-00.

NOTES:

1. FOR MECHANICAL SYMBOLS AND NOTES SEE DWG M1-0200.
2. THE PIPE CATEGORY FOR ALL ROOT VALVE LINES, TEST CONNECTIONS, DRAINS AND VENTS WILL BE THE SAME AS THE MAIN PROCESS LINE UNLESS OTHERWISE NOTED.
3. DURING UNIT 2 CONSTRUCTION, UNIT 2 PIPING IS TO BE PHYSICALLY ISOLATED FROM UNIT 1 PIPING BY REMOVAL OF A SPOOL PIECE TO PROVIDE AN INTERIM PIPING CONFIGURATION. BLIND FLANGES SHALL BE INSTALLED AS INDICATED ON DETAIL Y ON THE PIPING ISOMETRIC DRAWINGS. THE SPOOL PIECE, AFTER REMOVAL, SHALL BE STORED AS REQUIRED UNTIL RE-INSTALLATION.
4. REMOVE CHECK VALVE INTERNALS, ABANDON VALVE BODIES 2CH-6360 , 2CH-6376 , 2CH-6393 , 2CH-6452 , 2CH-9466 IN PLACE.
5. THROTTLE VALVE DOWNSTREAM OF EACH FAN COIL UNIT TO BE LOCKED IN POSITION (LIP) AFTER BALANCING OF CHILLED WATER FLOW THRU EACH COIL.
6. THIS IS A UNIT ISOLATION VALVE AND SHALL BE LOCKED CLOSED WHEN CHILLED WATER IS PROVIDED BY UNIT 1 CH AND OPEN WHEN CHILLED WATER IS PROVIDED BY UNIT 2 CH.
7. UNLESS OTHERWISE NOTED ALL DRAINS COLLECTED BY LOCAL DRAIN SYSTEM.
8. VALVE IS OPEN WHEN CHILLED WATER IS PROVIDED BY UNIT 2. VALVE IS CONTROLLED BY OPERATIONS WHEN CHILLED WATER IS PROVIDED BY UNIT 1.

REFERENCES:

M2-0311	FLOW DIAGRAM VENTILATION SAFETY CHILLED WATER SYSTEM
M1-0311-A	FLOW DIAGRAM VENTILATION SAFETY CHILLED WATER SYSTEM

FSAR FIGURE 9.4-12

THIS DRAWING IS CLASSIFIED AS CLASS I

DRAWING 2103-M2-0311 REV CP-5
HAS BEEN SPLIT INTO THE FOLLOWING SHEETS:
M2-0311
M2-0311-A
M2-0311-B

CLASS I
(NUCLEAR SAFETY-RELATED)
SAFETY CLASS 2 SEISMIC CATEGORY I
SAFETY CLASS 3 QUALITY GROUP D
SAFETY CLASS 3 ASSOCIATED CIRCUITS

TXU POWER
CPSES
GLEN ROSE, TEXAS

FLOW DIAGRAM
VENTILATION
SAFETY CHILLED WATER SYSTEM

DWG. NO. M2-0311 | SH. NO. A | REV. CP-6

M2-0311-A

ma541000.dgn

SHEET 1 OF 1

REV	DWN	CHKD	APVD	REMARKS
CP-7	MM 06-21 2004	DLK 06-21 2004		THIS DRAWING REVISED TO INCORPORATE DESIGN CHANGE FDA-2004-000040-01-00 PER SK-0002-04-000040-01-00.

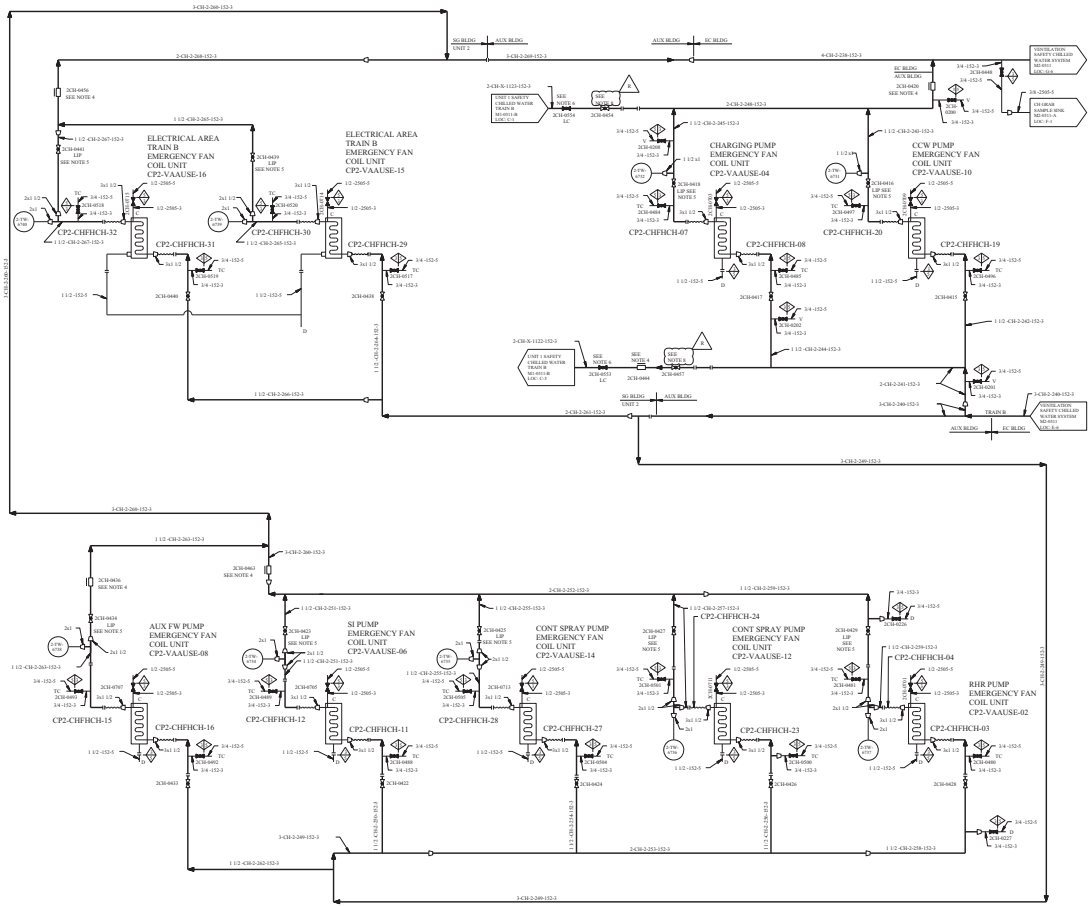

NOTES:

1. FOR MECHANICAL SYMBOLS AND NOTES SEE DWG M1-0200.
2. THE PIPE CATEGORY FOR ALL ROOT VALVE LINES, TEST CONNECTIONS, DRAINS AND VENTS WILL BE THE SAME AS THE MAIN PROCESS LINE UNLESS OTHERWISE NOTED.
3. DURING UNIT 2 CONSTRUCTION, UNIT 2 PIPING IS TO BE PHYSICALLY ISOLATED FROM UNIT 1 PIPING BY REMOVAL OF A SPOOL PIECE TO PROVIDE AN INTERIM PIPING CONFIGURATION. BLIND FLANGES SHALL BE INSTALLED AS INDICATED ON DETAIL Y ON THE PIPING ISOMETRIC DRAWINGS. THE SPOOL PIECE, AFTER REMOVAL, SHALL BE STORED AS REQUIRED UNTIL RE-INSTALLATION.
4. REMOVE CHECK VALVE INTERNALS, ABANDON VALVE BODIES 2CH-0420 , 2CH-0436 , 2CH-0444 , 2CH-0456 , 2CH-0463 IN PLACE.
5. THROTTLE VALVE DOWNSTREAM OF EACH FAN COIL UNIT TO BE LOCKED IN POSITION (LIP) AFTER BALANCING OF CHILLED WATER FLOW THRU EACH COIL.
6. THIS IS A UNIT ISOLATION VALVE AND SHALL BE LOCKED CLOSED WHEN CHILLED WATER IS PROVIDED BY UNIT 1 CH AND OPEN WHEN CHILLED WATER IS PROVIDED BY UNIT 2 CH.
7. UNLESS OTHERWISE NOTED ALL DRAINS COLLECTED BY LOCAL DRAIN SYSTEM.
8. VALVE IS OPEN WHEN CHILLED WATER IS PROVIDED BY UNIT 2. VALVE IS CONTROLLED BY OPERATIONS WHEN CHILLED WATER IS PROVIDED BY UNIT 1.

R

REFERENCES:

M2-0311	FLOW DIAGRAM VENTILATION SAFETY CHILLED WATER SYSTEM
M1-0311-B	FLOW DIAGRAM VENTILATION SAFETY CHILLED WATER SYSTEM

FSAR FIGURE 9.4-12

THIS DRAWING CREATED ELECTRONICALLY

DRAWING 2323-M2-0311 REV CP-3
HAS BEEN SPLIT INTO THE FOLLOWING SHEETS:
M2-0311
M2-0311-A
M2-0311-B

CLASS I
(NUCLEAR SAFETY-RELATED)

SAFETY CLASS 1	SEISMIC CATEGORY I
SAFETY CLASS 2	CLASS 1E
SAFETY CLASS 3	ASSOCIATED CIRCUITS

TXU POWER
CPSES
GLEN ROSE, TEXAS

FLOW DIAGRAM
VENTILATION
SAFETY CHILLED WATER SYSTEM

DWG. NO.	SH. NO.	REV.
M2-0311	B	CP-7

$$$$$$SDATE$$$$$$

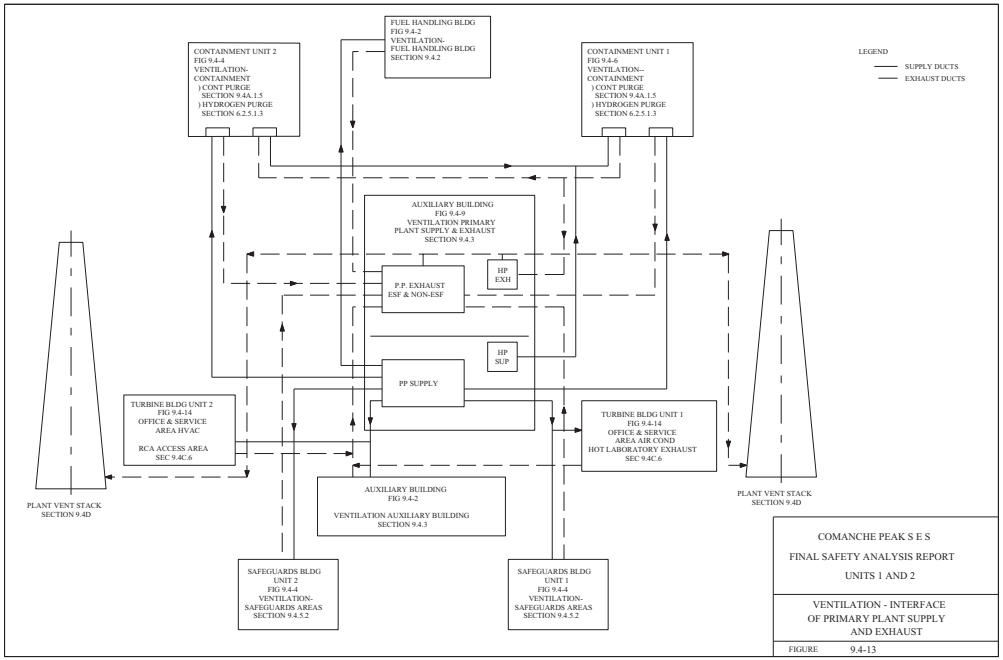

VENTILATION - INTERFACE
OF PRIMARY PLANT SUPPLY
AND EXHAUST

FIGURE 9.4-13

REV	DWN	CHKD	APVD	REMARKS
CP-14	MHF 10-03-2012	GAW 10-03-2012		THIS DRAWING REVISED TO INCORPORATE DESIGN CHANGE FDA 2009-001966-01-00 PER SK-0018-09-001966-01-00.

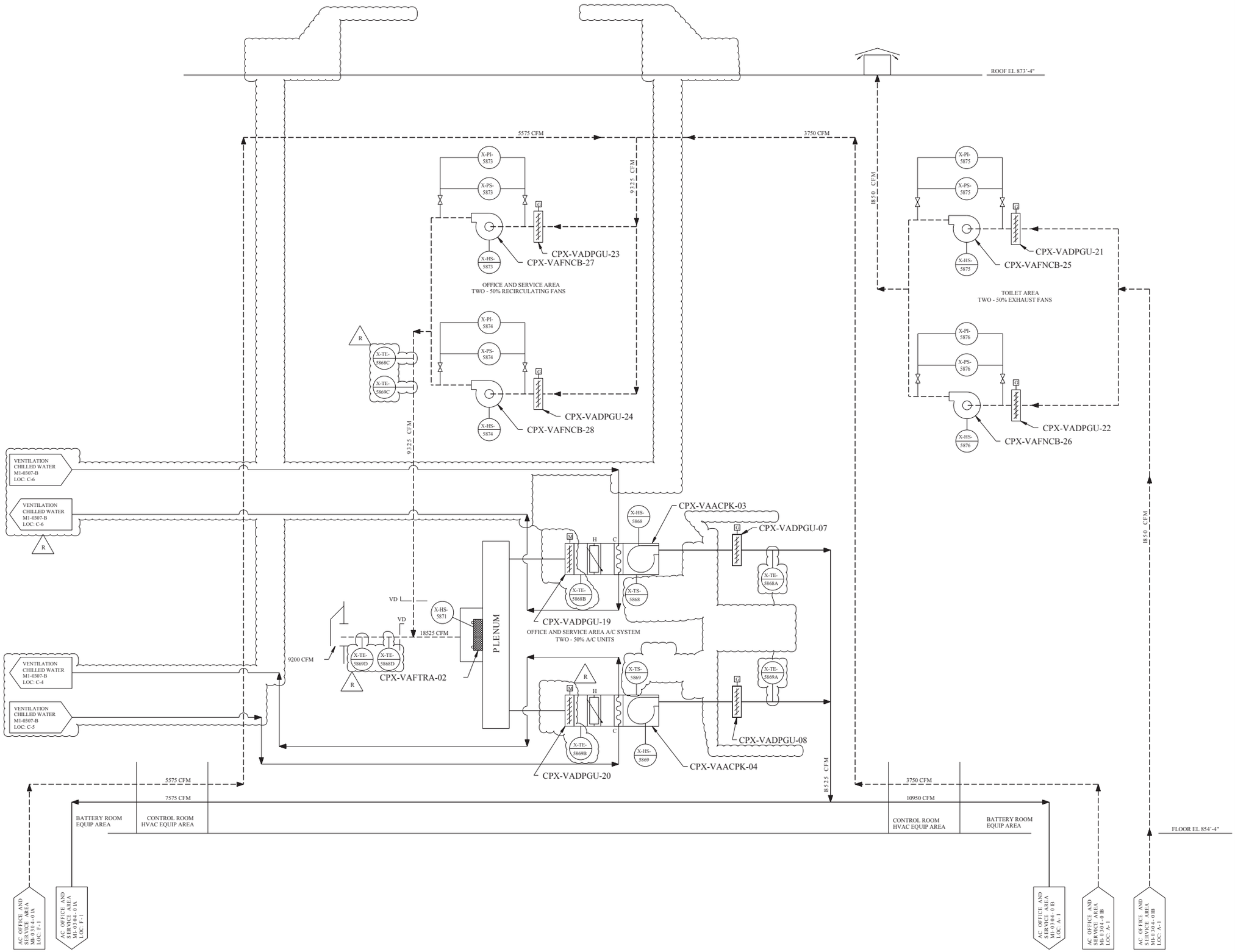

NOTES:

1. FOR HVAC ABBREVIATIONS AND SYMBOLS SEE M1-0313.
2. FOR I&C AND MECHANICAL SYMBOLS SEE M1-0200.
3. THIS DIAGRAM IS A SCHEMATIC REPRESENTATION AND IS INTENDED TO SHOW GENERAL AIR DISTRIBUTION AND FLOW PATHS.
4. BALANCING DAMPERS, REGISTERS, DIFFUSERS, FLEXIBLE CONNECTIONS AND ALL OTHER ACCESSORIES NOT SHOWN ON THIS DIAGRAM SHALL BE PROVIDED AS INDICATED ON THE HVAC ARRANGEMENT DRAWINGS AND SPECIFICATIONS.
5. ALL ROOM NAMES AND NUMBERS CORRESPOND TO ARCHITECTURAL DRAWINGS.
6. ALL AIRFLOW VALUES SHOWN ARE FOR NORMAL OPERATION AND DO NOT REFLECT DISTRIBUTION DURING OPERATION OF INTERMITTENT EQUIPMENT. GRILLS, REGISTERS, DIFFUSERS AND VOLUME DAMPERS SHALL BE SET FOR THE NORMAL OPERATION FLOWS. HVAC CONTRACTOR SHALL SUPPLY AIRFLOW TEST DATA INDICATING ACTUAL AIRFLOWS WITH INTERMITTENT EQUIPMENT IN OPERATION.
7. FIRE DAMPERS REMOVED FROM FLOW DIAGRAM ONLY. FOR LOCATIONS SEE DUCT LAYOUT DRAWINGS.
8. THE AIR FLOW RATES SHOWN ARE ORIGINAL DESIGN VALUES FOR INITIAL FLOW BALANCING AND DO NOT REPRESENT AS-BUILT. AIR FLOW IS BALANCED TO MAINTAIN ROOM TEMPERATURES WITHIN DESIGN DURING NORMAL OPERATION AND TO ENSURE THE DIRECTION OF AIR FLOW IS AS SHOWN.

REFERENCES:

1.	M1-0304-01A M1-0304-01B	FLOW DIAGRAM - AIR CONDITIONING OFFICE AND SERVICE AREA
2.	M1-0200	MECHANICAL DRAWING NOTES
3.	M1-0227	POTABLE AND SANITARY WATER SYSTEM
4.	M1-0313	FLOW DIAGRAM VENTILATION AAP BLDG AND CONTROL BLDG UPS AREA A/C SYSTEMS

FSAR FIGURE 9.4-14

THIS DRAWING CREATED ELECTRONICALLY

DRAWING 2323-M1-0304-01 REV CP-6
HAS BEEN SPLIT INTO THE FOLLOWING SHEETS:

M1-0304-01
M1-0304-01A
M1-0304-01B

CLASS II

LUMINANT
CPNPP
GLEN ROSE, TEXAS

FLOW DIAGRAM - AIR CONDITIONING
OFFICE AND SERVICE AREA

DWG. NO.	SH. NO.	REV.
M1-0304	01	CP-14

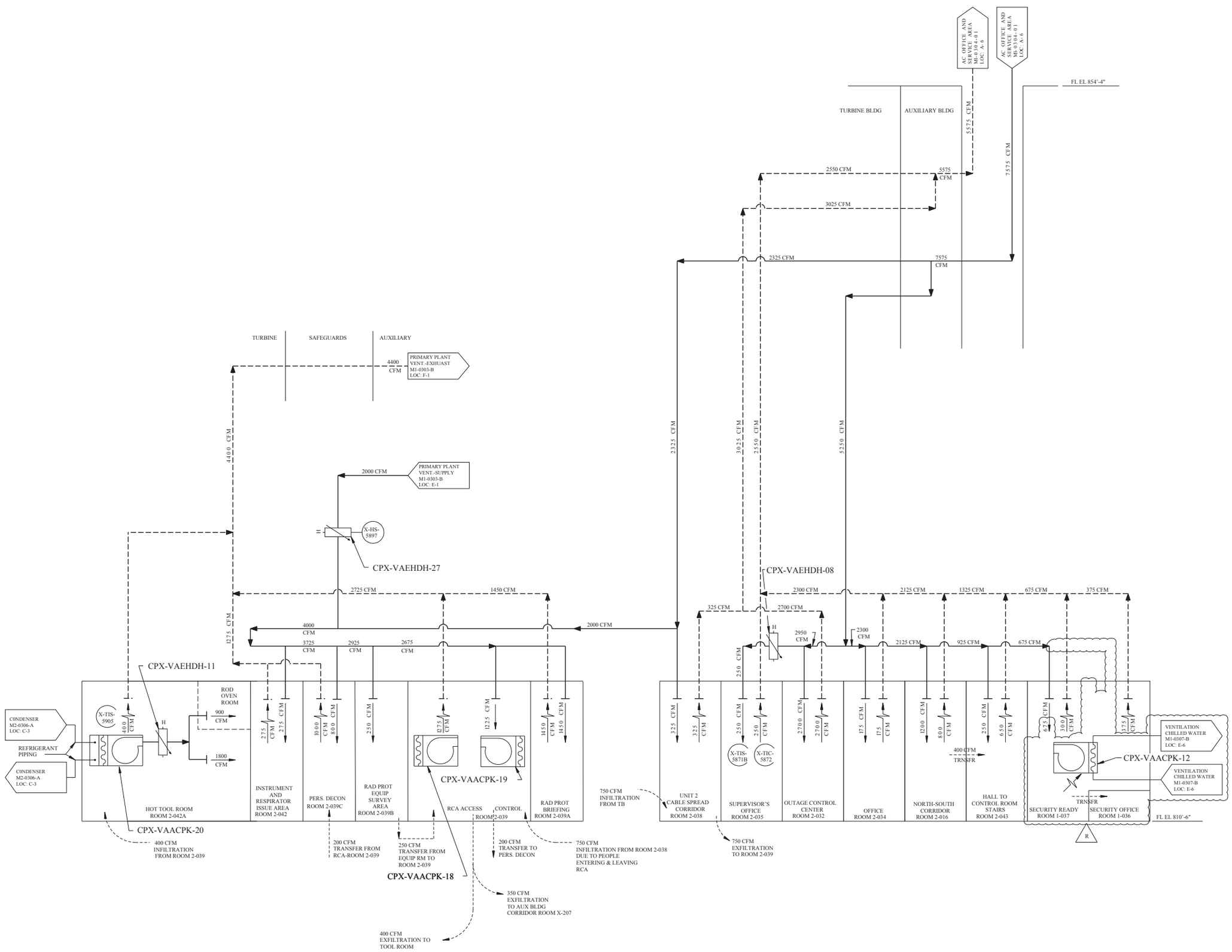

REV	DWN	CHKD	APVD	REMARKS
CP-8	DLK 03-24-2011	MM 03-29-2011		THIS DRAWING REVISED TO INCORPORATE DESIGN CHANGE FDA 2009-001966-02-01 PER SK-0076-09-001966-02-00.

NOTES:

1. FOR HVAC ABBREVIATIONS AND SYMBOLS SEE M1-0313.
2. FOR I&C AND MECHANICAL SYMBOLS SEE M1-0200.
3. THIS DIAGRAM IS A SCHEMATIC REPRESENTATION AND IS INTENDED TO SHOW GENERAL AIR DISTRIBUTION AND FLOW PATHS.
4. BALANCING DAMPERS, REGISTERS, DIFFUSERS, FLEXIBLE CONNECTIONS AND ALL OTHER ACCESSORIES NOT SHOWN ON THIS DIAGRAM SHALL BE PROVIDED AS INDICATED ON THE HVAC ARRANGEMENT DRAWINGS AND SPECIFICATIONS.
5. ALL ROOM NAMES AND NUMBERS CORRESPOND TO ARCHITECTURAL DRAWINGS.
6. ALL AIRFLOW VALUES SHOWN ARE FOR NORMAL OPERATION AND DO NOT REFLECT DISTRIBUTION DURING OPERATION OF INTERMITTENT EQUIPMENT. GRILLS, REGISTERS, DIFFUSERS AND VOLUME DAMPERS SHALL BE SET FOR THE NORMAL OPERATION FLOWS. HVAC CONTRACTOR SHALL SUPPLY AIRFLOW TEST DATA INDICATING ACTUAL AIRFLOWS WITH INTERMITTENT EQUIPMENT IN OPERATION.
7. FIRE DAMPERS REMOVED FROM FLOW DIAGRAM ONLY. FOR LOCATIONS SEE DUCT LAYOUT DRAWINGS.
8. THE AIR FLOW RATES SHOWN ARE ORIGINAL DESIGN VALUES FOR INITIAL FLOW BALANCING AND DO NOT REPRESENT AS-BUILT. AIR FLOW IS BALANCED TO MAINTAIN ROOM TEMPERATURES WITHIN DESIGN DURING NORMAL OPERATION AND TO ENSURE THE DIRECTION OF AIR FLOW IS AS SHOWN.

REFERENCES:

1.	M1-0304-01 M1-0304-01B	FLOW DIAGRAM - AIR CONDITIONING OFFICE AND SERVICE AREA
2.	M1-0200	MECHANICAL DRAWING NOTES
3.	M1-0306	FLOW DIAGRAM VENTILATION AAP BLDG AND CONTROL BLDG UPS AREA A/C SYSTEMS
4.	M1-0303-B	FLOW DIAGRAM VENTILATION AUX BLDG

FSAR FIGURE 9.4-14

THIS DRAWING CREATED ELECTRONICALLY

DRAWING 2323-M1-0304-01 REV CP-6
HAS BEEN SPLIT INTO THE FOLLOWING SHEETS:
M1-0304-01
M1-0304-01A
M1-0304-01B

NON-SAFETY

LUMINANT
CPNPP
GLEN ROSE, TEXAS

FLOW DIAGRAM - AIR CONDITIONING
OFFICE AND SERVICE AREA

DWG. NO. M1-0304 | SH. NO. 01A | REV. CP-8

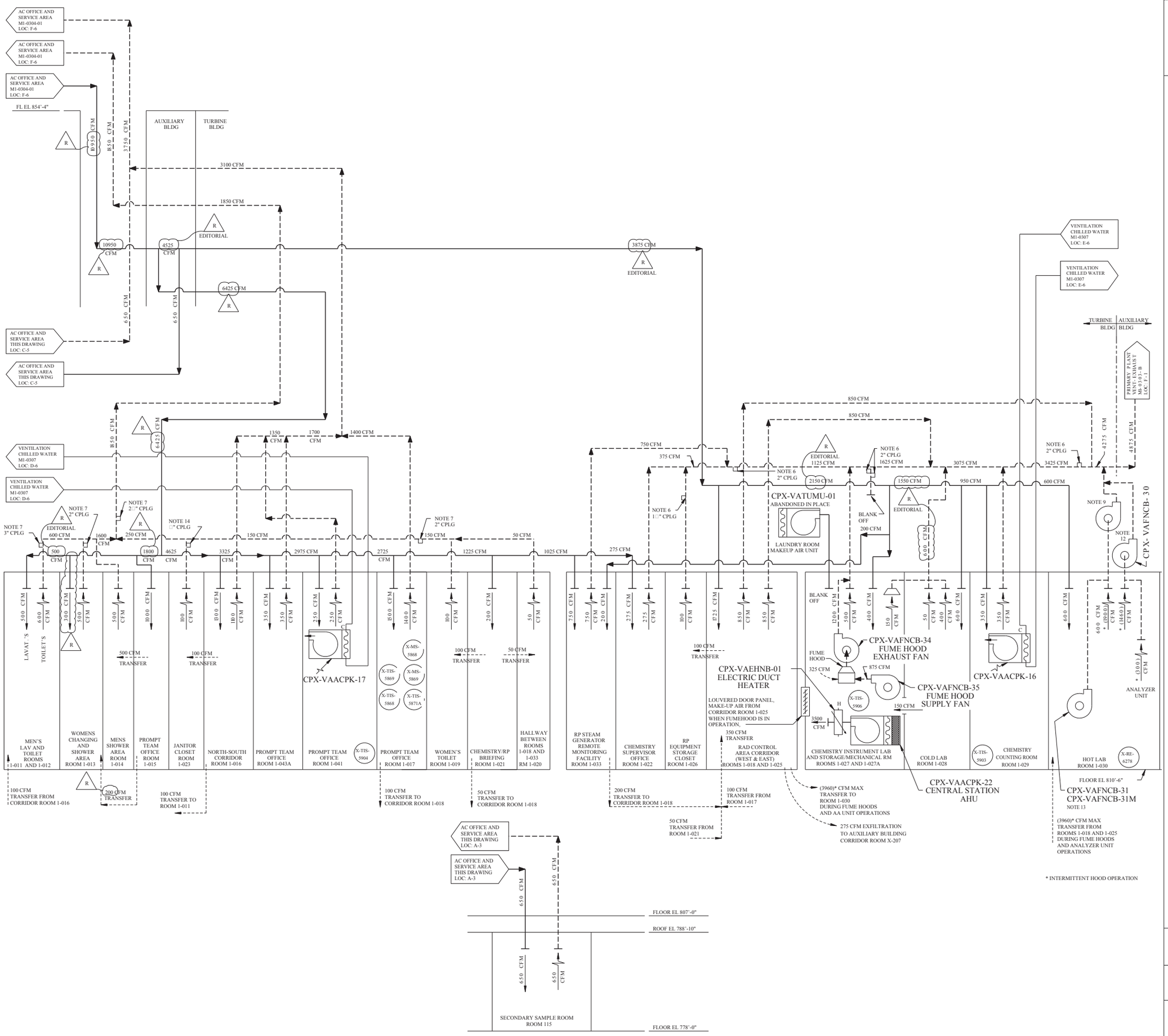

REV	DWN	CHKD	APVD	REMARKS
CP-13	DLK 03-24-2011	MM 03-29-2011		THIS DRAWING REVISED TO INCORPORATE DESIGN CHANGE FDA 2009-001966-02-01 PER SK-0056-09-001966-02-01. EDITORIAL CHANGES AS NOTED.

NOTES:

1. FOR HVAC ABBREVIATIONS AND SYMBOLS SEE M1-0313.
2. FOR I&C AND MECHANICAL SYMBOLS SEE M1-0200.
3. THIS DIAGRAM IS A SCHEMATIC REPRESENTATION AND IS INTENDED TO SHOW GENERAL AIR DISTRIBUTION AND FLOW PATHS.
4. BALANCING DAMPERS, REGISTERS, DIFFUSERS, FLEXIBLE CONNECTIONS AND ALL OTHER ACCESSORIES NOT SHOWN ON THIS DIAGRAM SHALL BE PROVIDED AS INDICATED ON THE HVAC ARRANGEMENT DRAWINGS AND SPECIFICATIONS.
5. ALL ROOM NAMES AND NUMBERS CORRESPOND TO ARCHITECTURAL DRAWINGS.
6. FOR CONTINUATION OF PLUMBING VENTS SEE M1-0237.
7. FOR CONTINUATION OF PLUMBING VENTS SEE M2-0237.
8. ALL AIRFLOW VALUES SHOWN ARE FOR NORMAL OPERATION AND DO NOT REFLECT DISTRIBUTION DURING OPERATION OF INTERMITTENT EQUIPMENT. GRILLS, REGISTERS, DIFFUSERS AND VOLUME DAMPERS SHALL BE SET FOR THE NORMAL OPERATION FLOWS. HVAC CONTRACTOR SHALL SUPPLY AIRFLOW TEST DATA INDICATING ACTUAL AIRFLOWS WITH INTERMITTENT EQUIPMENT IN OPERATION.
9. FUME HOOD FAN (KEWAUNEE SCIENTIFIC) SUPPLIED BY TU OPERATIONS.
10. DELETED
11. FIRE DAMPERS REMOVED FROM FLOW DIAGRAM ONLY. FOR LOCATIONS SEE DUCT LAYOUT DRAWINGS.
12. FUME HOOD FAN CPX-VAFNCB-30 MFG BY FISHER SCIENTIFIC.
13. RETAGGED FROM HOT CELL EXHAUST FAN, PO CPF-05244.
14. FOR CONTINUATION OF PLUMBING VENTS SEE M1-0227-02.
15. THE AIR FLOW RATES SHOWN ARE ORIGINAL DESIGN VALUES FOR INITIAL FLOW BALANCING AND DO NOT REPRESENT AS-BUILT. AIR FLOW IS BALANCED TO MAINTAIN ROOM TEMPERATURES WITHIN DESIGN DURING NORMAL OPERATION AND TO ENSURE THE DIRECTION OF AIR FLOW IS AS SHOWN.

REFERENCES:

1.	M1-0304-01 M1-0304-01A	FLOW DIAGRAM - AIR CONDITIONING OFFICE AND SERVICE AREA
2.	M1-0200	MECHANICAL DRAWING NOTES
3.	M1-0306	FLOW DIAGRAM VENTILATION TURBINE BLDG
4.	M1-0303-B	FLOW DIAGRAM VENTILATION AUX BLDG
5.	M1-0313	FLOW DIAGRAM VENTILATION AAP BLDG AND CONTROL BLDG UPS AREA A/C SYSTEMS
6.	M1-0237	FLOW DIAGRAM VENTS AND DRAINS TURBINE AND FUEL HANDLING BLDG
7.	M2-0237	FLOW DIAGRAM VENTS AND DRAINS
8.	M1-0307	FLOW DIAGRAM VENTILATION CHILLED WATER SYSTEM

FSAR FIGURE 9.4-14

THIS DRAWING CREATED ELECTRONICALLY

DRAWING 2323-M1-0304-01 REV CP-6
HAS BEEN SPLIT INTO THE FOLLOWING SHEETS:
M1-0304-01
M1-0304-01A
M1-0304-01B

NON-SAFETY

LUMINANT
CPNPP
GLEN ROSE, TEXAS

FLOW DIAGRAM - AIR CONDITIONING
OFFICE AND SERVICE AREA

DWG. NO. M1-0304 | SH. NO. 01B | REV. CP-13

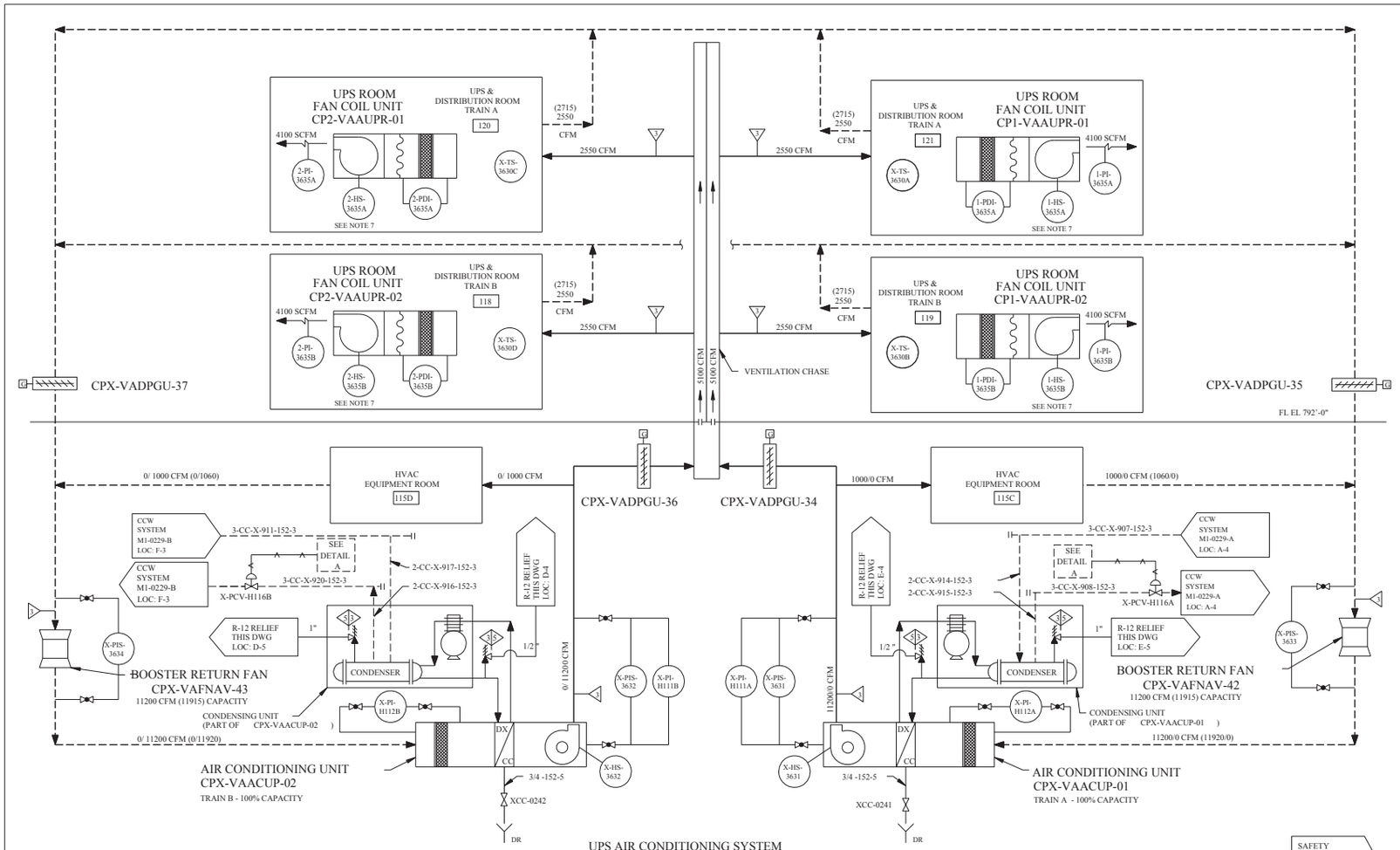

UPS AIR CONDITIONING SYSTEM

SAFETY CLASS

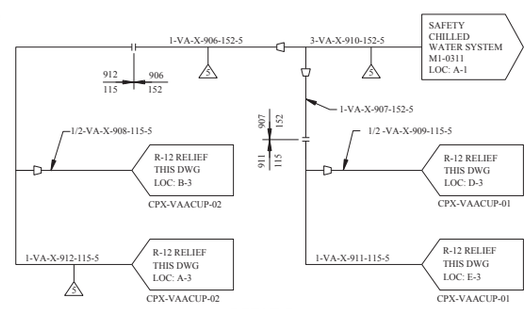

DETAIL B

REFRIGERANT (R-12) RELIEF VENT PIPING

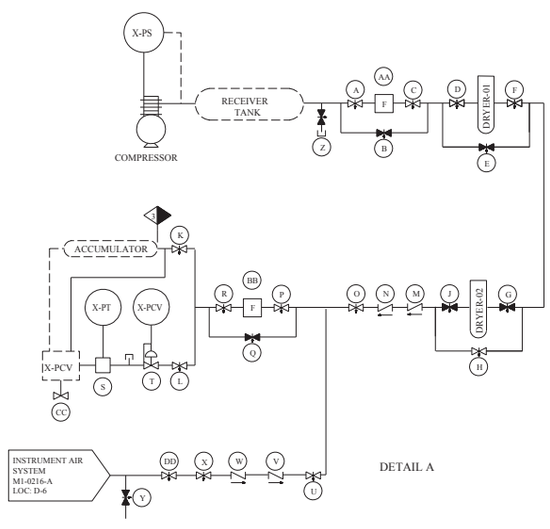

DETAIL A

*** ACCUMULATOR IS EQUIPPED WITH AN INTERNAL CHECK VALVE.

CONTROL AIR SUPPLY
FOR UPS AIR CONDITIONING SYSTEM
COMPONENT LOCATION TAG NUMBERS

	TRAIN A	TRAIN B
PRESSURE SWITCH	X-PS-H105A	X-PS-H105B
COMPRESSOR	CPX-VACAUP-01	CPX-VACAUP-02
RECEIVER TANK	CPX-VAATUP-01	CPX-VAATUP-03
PREFILTER AA	CPX-VAFTUP-01	CPX-VAFTUP-02
DRYER-01	CPX-VADYUP-01	CPX-VADYUP-03
DRYER-02	CPX-VADYUP-02	CPX-VADYUP-04
PREFILTER BB	CPX-VAFTUP-04	CPX-VAFTUP-03
ACCUMULATOR ***	CPX-VAATUP-02	CPX-VAATUP-04
CONTROL VALVE CC	X-PCV-H116A	X-PCV-H116B
SERVICE VALVE A	XVA-0194	XVA-0205
BYPASS VALVE B	XVA-0195	XVA-0206
SERVICE VALVE C	XVA-0196	XVA-0207
SERVICE VALVE D	XVA-0197	XVA-0208
BYPASS VALVE E	XVA-0198	XVA-0209
SERVICE VALVE F	XVA-0199	XVA-0210
SERVICE VALVE G	XVA-0200	XVA-0211
BYPASS VALVE H	XVA-0201	XVA-0212
SERVICE VALVE J	XVA-0202	XVA-0213
CUTOFF VALVE K	XVA-0203	XVA-0214
CUTOFF VALVE L	XVA-0204	XVA-0215
SERVICE VALVE M	XVA-0236	XVA-0234
SERVICE VALVE N	XVA-0231	XVA-0229
SERVICE VALVE O	XVA-0227	XVA-0221
SERVICE VALVE P	XVA-0224	XVA-0218
BYPASS VALVE Q	XVA-0226	XVA-0220
SERVICE VALVE R	XVA-0225	XVA-0219
TRANSMITTER S	X-PT-H107A	X-PT-H107B
REGULATOR T	X-PCV-H116A-PR1	X-PCV-H116B-PR1
SERVICE VALVE U	XVA-0223	XVA-0217
SERVICE VALVE V	XVA-0230	XVA-0228
SERVICE VALVE W	XVA-0235	XVA-0233
SERVICE VALVE X	XVA-0222	XVA-0216
DRAIN VALVE Y	XVA-0232	-
TEST VALVE Z	XVA-0276	XVA-0275
SERVICE VALVE DD	-	XVA-0277

HVAC ABBREVIATIONS

AC	AIR CONDITIONING
AD	ACCESS DOOR
BOT	BOTTOM
CD	CEILING DIFFUSER
CFM	CUBIC FEET/MINUTE
CONT	CONTINUATION
DN	DOWN
DWG	DRAWING
EL	ELEVATION
EXH	EXHAUST
FAI	FAIL AS IS
FC	FAIL CLOSED
FO	FAIL OPEN
FCON	FLEXIBLE CONNECTION
FD	FIRE DAMPER
FL	FLOOR
NC	NORMALLY CLOSED
NNS	NON-NUCLEAR SAFETY
NO	NORMALLY OPEN
OAI	OUTSIDE AIR INTAKE
OPNG	OPENING
OPP	OPPOSITE
REG	REGISTER
RET	RETURN
SD	SUPPLY DAMPER
SPD	SPLITTER DAMPER
SUP	SUPPLY
SYS	SYSTEM
TYP	TYPICAL
VEL	VELOCITY
VOL	VOLUME
VD	VOLUME DAMPER
VPE	VELOCITY PRESSURE ELEMENT (PITOT TUBE)
WMS	WIRE MESH SCREEN
LC	LOCKED CLOSED
LO	LOCKED OPEN

SYMBOL LIST

- AUTOMATIC PARTICULATE FILTER
- PARTICULATE FILTER
- CARBON FILTER
- HEPA FILTER
- MIST ELIMINATOR
- COOLING COIL
- DAMPER OPPOSED BLADES
- DAMPER OPPOSED BLADES (MANUAL)
- DAMPER PARALLEL BLADES
- DAMPER PARALLEL BLADES (MANUAL)
- FIXED LOUVER (STORM PROOF)
- BUBBLE TIGHT DAMPER
- SINGLE BLADE DAMPER
- ISOLATION DAMPER
- ELECTRIC HEATING COIL
- UNIT HEATER (ELECTRIC)
- OUTSIDE AIR INTAKE
- AXIAL FAN
- ELECTRIC STRIP HEATER
- DAMPER COUNTERWEIGHT GRAVITY OPERATED
- MOTOR OPERATOR
- PISTON OPERATOR (MODULATING) (PNEUMATIC)
- DIRECT EXPANSION COOLING COIL
- HUMIDIFIER
- PROPELLER FAN
- VARIABLE INLET VANE
- COMPRESSOR
- FAN COIL UNIT
- SUPPLY AIR
- EXHAUST OR RETURN AIR
- AIR FLOW FROM OR TO OPEN AREAS (UNDUCTED)
- LOUVER IN DOOR
- FIRE PROTECTION COATING ON DUCT
- CENTRIFUGAL FAN
- VELOCITY PRESSURE ELEMENT (PITOT TUBE)
- ROOF MOUNTED FAN

REV	DWN	CHKD	APVD	REMARKS
CP-21	JRMC 12-17 2009	SM 12-17 2009		THIS DRAWING REVISED TO INCORPORATE DESIGN CHANGE FDA 2007-002527-01-00 PER SK-0005-07-002527-01-00.

NOTES:

1. FOR ABBREVIATIONS AND SYMBOLS SEE THIS DWG (E-5) AND (F-1) AND DWG M1-0200.
2. DELETED
3. THIS DIAGRAM IS A SCHEMATIC REPRESENTATION AND IS INTENDED TO SHOW GENERAL AIR DISTRIBUTION AND FLOW PATHS.
4. BALANCING DAMPERS, FIRE DAMPERS, REGISTERS DIFFUSERS, FLEXIBLE CONNECTIONS AND ALL OTHER ACCESSORIES NOT SHOWN ON THIS DIAGRAM SHALL BE PROVIDED AS INDICATED ON THE HVAC ARRANGEMENT DRAWINGS AND SPECIFICATIONS.
5. AIR FLOW QUANTITIES SHOWN ARE BASED ON A DENSITY OF 0.075 LB/FT OCCURRING AT THE STANDARD CONDITION OF DRY AIR AT 70°F AND 29.92" HG BAROMETER PRESSURE. QUANTITIES IN PARENTHESES ARE ACTUAL AIR FLOW RATES BASED ON DENSITY AT DESIGN CONDITIONS.
6. FOR INTERCONNECTING PIPING TO THE CONDENSER OF THE CONDENSING UNIT FOR UPS AND DISTRIBUTION ROOM AIR CONDITIONING UNIT SEE DWG M1-0229.
7. THIS HAND SWITCH IS LOCAL, MOUNTED ON THE ASSOCIATED EQUIPMENT.

REFERENCES:

M1-0200	MECHANICAL DRAWING NOTES AND SYMBOLS
M1-2313-01	INSTRUMENT & CONTROL DIAGRAM

FSAR FIGURE 9.4-15

THIS DRAWING CREATED ELECTRONICALLY

CLASS I
(NUCLEAR SAFETY-RELATED)
SAFETY CLASS 1 — SEISMIC CATEGORY I
SAFETY CLASS 2 — CLASS 1E
SAFETY CLASS 3 — ASSOCIATED CIRCUITS

LUMINANT
CPNPP
GLEN ROSE, TEXAS

FLOW DIAGRAM-VENTILATION
CONTROL BLDG
UPS AREA A/C SYSTEMS

DWG. NO. M1-0313 | SH. NO. - | REV. CP-21

FINAL PRINT

REF CKD 3/6/97 CP-15

me967500.dgn

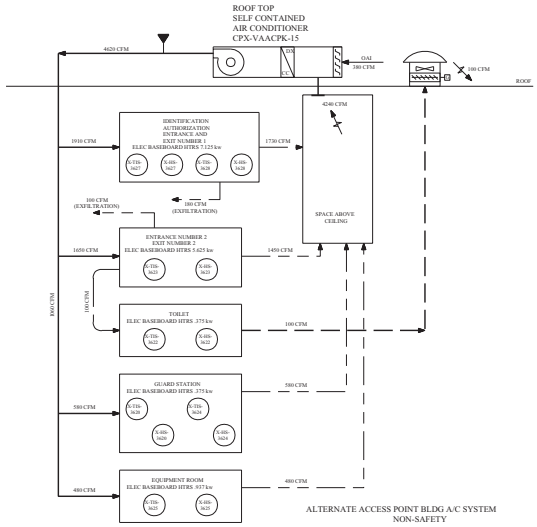

ALTERNATE ACCESS POINT BLDG A/C SYSTEM
NON-SAFETY

REV	DRWN	CHKD	APVD	REMARKS
CP-3	MAR 2001	MAR 2001	MAR 2001	THIS DRAWING REVISED TO INCORPORATE DESIGN CHANGE TTA-2001-000368-02.00 PER SK-0020-01-000368-02.00.

NOTES:

1. FOR ABBREVIATIONS AND SYMBOLS SEE DWG M1-0313 (E-5) AND (F-1) AND DWG M1-0200.
2. DELETED
3. THIS DIAGRAM IS A SCHEMATIC REPRESENTATION AND IS INTENDED TO SHOW GENERAL AIR DISTRIBUTION AND FLOW PATHS.
4. BALANCING DAMPERS, FIRE DAMPERS, REGISTERS DIFFUSERS, FLEXIBLE CONNECTIONS, AND ALL OTHER ACCESSORIES NOT SHOWN ON THIS DIAGRAM SHALL BE PROVIDED AS INDICATED ON THE HVAC ARRANGEMENT DRAWINGS AND SPECIFICATIONS.
5. AIR FLOW QUANTITIES SHOWN ARE BASED ON A DENSITY OF 4.075 LB/FT OCCURING AT THE STANDARD CONDITION OF DRY AIR AT 70°F AND 29.92" HG BAROMETER PRESSURE. QUANTITIES IN PARENTHESES ARE ACTUAL AIR FLOW RATES BASED ON DENSITY AT DESIGN CONDITIONS.
6. FOR INTERCONNECTING PIPING TO THE CONDENSER OF THE CONDENSING UNIT FOR UPS AND DISTRIBUTION ROOM AIR CONDITIONING UNIT SEE DWG M1-0229.
7. DELETED
8. DELETED
9. AIR FLOW RATES SHOWN ARE ORIGINAL DESIGN VALUES FOR INITIAL FLOW BALANCING AND DO NOT REPRESENT AS-BUILT AIR FLOW IS BALANCED TO MAINTAIN ROOM TEMPERATURES WITHIN DESIGN DURING NORMAL OPERATION AND TO ENSURE THE DIRECTION OF AIR FLOW IS AS SHOWN.

9

REFERENCES:

M1-0200 MECHANICAL DRAWING NOTES AND SYMBOLS

FSAR FIGURE 9.4-15

THIS DRAWING CREATED FROM CAD

DRAWING	M1-0313	REV	CP-0
HAS BEEN SPLIT INTO THE FOLLOWING SHEETS:			
M1-0313			
M1-0313-A			

NON-SAFETY

TXU POWER
CPSES
GLEN ROSE, TEXAS

FLOW DIAGRAM-VENTILATION
ALTERNATE ACCESS POINT GUARDHOUSE

DWG. NO. M1-0313 | SH. NO. A | REV. CP-3

mc515800.dgn M1-0313-A

SIEMENS NAVIS DSSIB5

FIGURES 9.5-1 thru 9.5-42
HAVE BEEN DELETED

FIGURES 9.5-1 thru 9.5-42
HAVE BEEN DELETED

FIGURES 9.5-1 thru 9.5-42
HAVE BEEN DELETED

FIGURES 9.5-1 thru 9.5-42
HAVE BEEN DELETED

FIGURES 9.5-1 thru 9.5-42
HAVE BEEN DELETED

FIGURES 9.5-1 thru 9.5-42
HAVE BEEN DELETED

FIGURES 9.5-1 thru 9.5-42
HAVE BEEN DELETED

FIGURES 9.5-1 thru 9.5-42
HAVE BEEN DELETED

FIGURES 9.5-1 thru 9.5-42
HAVE BEEN DELETED

FIGURES 9.5-1 thru 9.5-42
HAVE BEEN DELETED

FIGURES 9.5-1 thru 9.5-42
HAVE BEEN DELETED

FIGURES 9.5-1 thru 9.5-42
HAVE BEEN DELETED

FIGURES 9.5-1 thru 9.5-42
HAVE BEEN DELETED

FIGURES 9.5-1 thru 9.5-42
HAVE BEEN DELETED

FIGURES 9.5-1 thru 9.5-42
HAVE BEEN DELETED

FIGURES 9.5-1 thru 9.5-42
HAVE BEEN DELETED

FIGURES 9.5-1 thru 9.5-42
HAVE BEEN DELETED

FIGURES 9.5-1 thru 9.5-42
HAVE BEEN DELETED

FIGURES 9.5-1 thru 9.5-42
HAVE BEEN DELETED

FIGURES 9.5-1 thru 9.5-42
HAVE BEEN DELETED

FIGURES 9.5-1 thru 9.5-42
HAVE BEEN DELETED

FIGURES 9.5-1 thru 9.5-42
HAVE BEEN DELETED

FIGURES 9.5-1 thru 9.5-42
HAVE BEEN DELETED

FIGURES 9.5-1 thru 9.5-42
HAVE BEEN DELETED

FIGURES 9.5-1 thru 9.5-42
HAVE BEEN DELETED

FIGURES 9.5-1 thru 9.5-42
HAVE BEEN DELETED

FIGURES 9.5-1 thru 9.5-42
HAVE BEEN DELETED

FIGURES 9.5-1 thru 9.5-42
HAVE BEEN DELETED

FIGURES 9.5-1 thru 9.5-42
HAVE BEEN DELETED

FIGURES 9.5-1 thru 9.5-42
HAVE BEEN DELETED

FIGURES 9.5-1 thru 9.5-42
HAVE BEEN DELETED

FIGURES 9.5-1 thru 9.5-42
HAVE BEEN DELETED

FIGURES 9.5-1 thru 9.5-42
HAVE BEEN DELETED

FIGURES 9.5-1 thru 9.5-42
HAVE BEEN DELETED

FIGURES 9.5-1 thru 9.5-42
HAVE BEEN DELETED

FIGURES 9.5-1 thru 9.5-42
HAVE BEEN DELETED

FIGURES 9.5-1 thru 9.5-42
HAVE BEEN DELETED

FIGURES 9.5-1 thru 9.5-42
HAVE BEEN DELETED

FIGURES 9.5-1 thru 9.5-42
HAVE BEEN DELETED

FIGURES 9.5-1 thru 9.5-42
HAVE BEEN DELETED

FIGURES 9.5-1 thru 9.5-42
HAVE BEEN DELETED

FIGURES 9.5-1 thru 9.5-42
HAVE BEEN DELETED

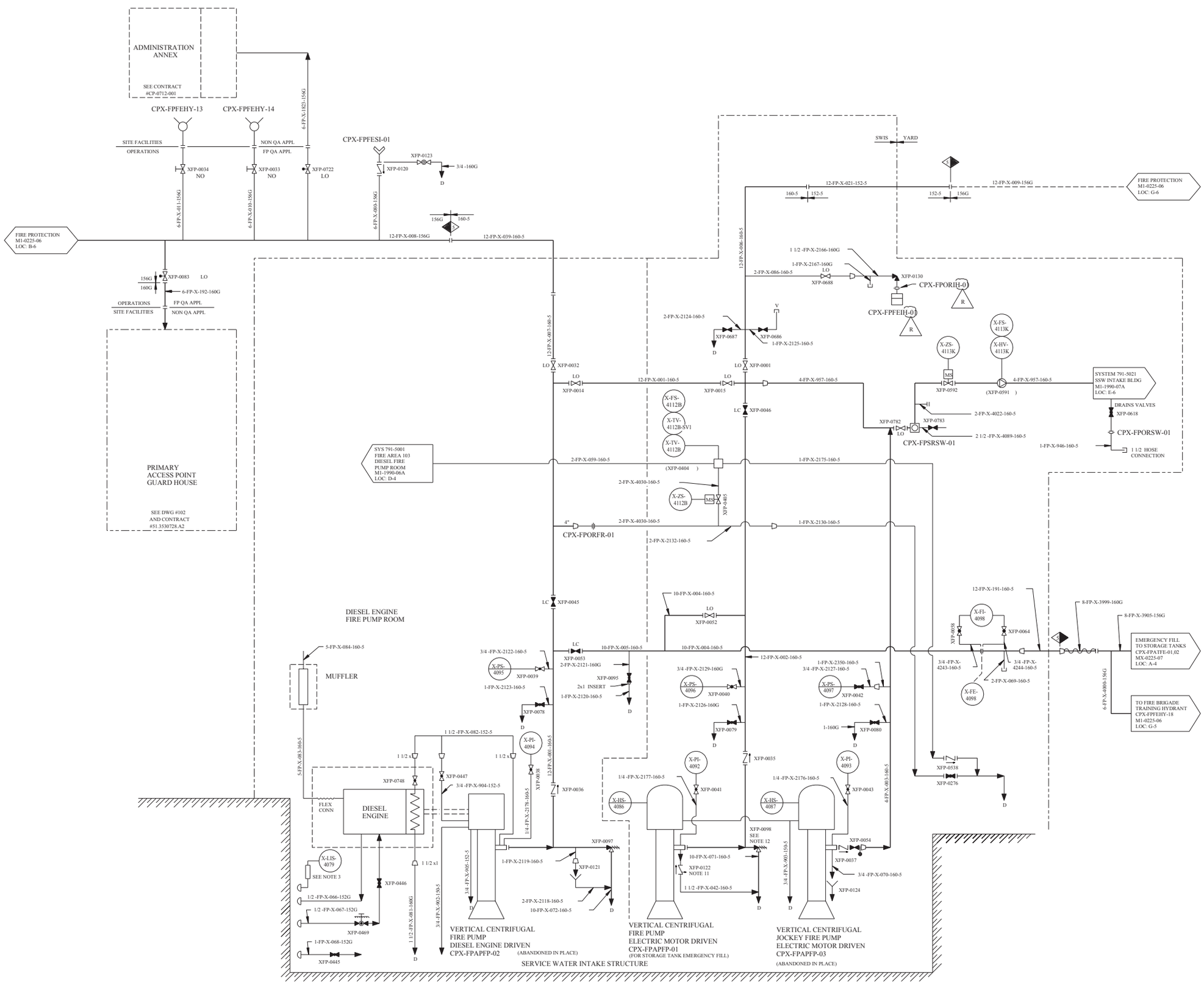

REV	DWN	CHKD	APVD	REMARKS
CP-23	DGK 04-08-2009	MSB 04-09-2009		THIS DRAWING REVISED TO INCORPORATE DESIGN CHANGE FDA 2009-000339-01-00 PER SK-0001-09-000339-01-00.

NOTES:

1. DELETED
2. DELETED
3. ABANDONED IN PLACE.
4. DELETED
5. DELETED
6. FOR OTHER SYMBOLS AND NOTES SEE MECHANICAL SYMBOLS AND NOTES DRAWING M1-0200.
7. DELETED
8. UNLESS OTHERWISE NOTED, DRAINS COLLECTED BY LOCAL DRAIN SYSTEM UNDER ADMINISTRATIVE CONTROL.
9. DELETED
10. VALVE NUMBERS IN PARENTHESIS ARE VALVE BODY NUMBERS PER ECE 5.04-02 AND ARE ENTERED FOR HISTORICAL INFORMATION ONLY.
11. XFP-0122 IS AN AIR RELEASE CHECK VALVE INSTALLED WITH THE FLOW TOWARDS THE PUMP. SEE VL03-005055 FOR DETAILS.
12. VALVE TO BE NORMALLY SET AT 128 PSIG. RESET TO 165 PSIG WHEN PUMP IS USED AS AN ALTERNATE FIRE SUPPRESSION PUMP. 3 ±

LEGEND:

INSTRUMENT AND CONTROLS

U (FIRST LETTER IN BALLOON) - MONITOR
Z (FIRST LETTER IN BALLOON) - MONITOR
FOR EXPLANATION AND OTHER INSTR AND CONTROL SYMBOLS SEE NOTE 6

ABBREVIATIONS:

		STA	STATION
FIN FL EL	FINISHED FLOOR ELEVATION	CORR	CORRIDOR
BO	BY OTHERS	CONT	CONTINUATION
RED	REDUCER	GEN	GENERATOR
ECC	ECCENTRIC	RM	ROOM
DWG	DRAWING	BSMT	BASEMENT

EQUIPMENT:

- FIN FL — HOSE VALVE IN EXTERIOR MOUNTED HOSE CABINET-PIPE HEAT TRACED
- STRAINER WITH CLOSED DRAIN VALVE
- SIAMESE FIRE DEPT CONN FOR EMERGENCY FILL BY PUMP TRUCK
- INTERIOR FIRE HOSE STATION
- TWO WAY FIRE HYDRANT WITH HOSE HOUSE
- WATER MOTOR ALARM
- FIRE PROT WATER SUPPLY LINE
- SPECTACLE FLANGE (CLOSED)

VALVES:

- VALVE WITH CURB BOX-MECHANICAL END ON YARD PIPING FLANGED END ON HYDRANT PIPING
- DIVISION POST INDICATOR VALVE MECHANICAL JOINT ENDS (LOCKED OPEN UNLESS NOTED OTHERWISE)
- MS — VALVE WITH MONITORING SWITCH, FLANGED ENDS
- DELUGE VALVE
- ALARM CHECK VALVE
- AIR RELEASE CHECK VALVE

REFERENCE BLOCKS:

SYSTEM REFERENCE
SYSTEM 786-9121 CABLE SPREADING RM-SOUTH HALF — DIRECTION OF FLOW
SYSTEM LOCATION
FOR CONT SEE DWG M1-0225 LOC: G-4
DRAWING COORDINATES

FSAR FIGURE 9.5-43

THIS DRAWING CREATED ELECTRONICALLY

NON-SAFETY

LUMINANT
CPNPP
GLEN ROSE, TEXAS

FLOW DIAGRAM
FIRE PROTECTION SYSTEM

DWG. NO. M1-0225 | SH. NO. - | REV. CP-23

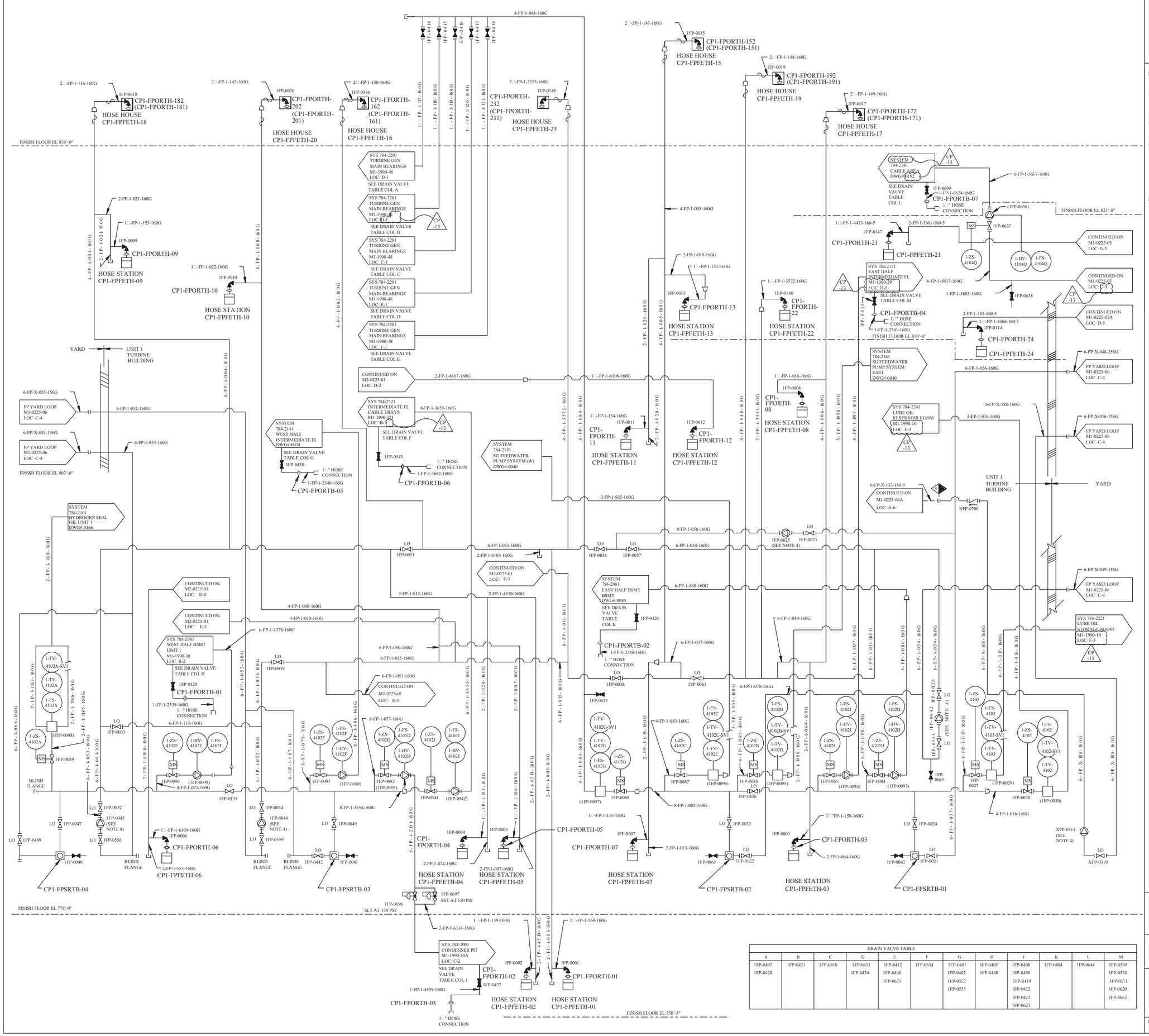

REV	DWN	CHKD	APVD	REMARKS
CP-13	DLK 07-10-2012			THIS DRAWING REVISED TO EDITORIALLY CORRECT CONTINUATION BLOCK AT LOCATION F-2 (REF DWG 184 TO 192) PER AI-CR-2012-006847-1 AND TO CORRECT OTHER CONTINUATION BLOCKS.

NOTES:

1. FOR GENERAL NOTES AND LEGEND SEE DRAWING M1-0225.
2. THE TURBINE BUILDING ON THIS DRAWING WAS REDRAWN FROM THE ORIGINAL FLOW DIAGRAM TURBINE BUILDING FIRE PROTECTION DRAWING M1-0225-01, REV 3.
3. DELETED
4. ALARM CHECK VALVES 1FP-0025, 1FP-0042, 1FP-0043, 1FP-0044 AND XFP-0311 ARE NOT ELECTRICALLY CONNECTED.
5. DELETED
6. VALVE NUMBERS IN PARENTHESIS ARE VALVE BODY NUMBERS PER ECE 5-04-02 AND ARE ENTERED FOR HISTORICAL INFORMATION ONLY.
7. ORIFICE DISC NUMBERS IN PARENTHESIS ARE PROVIDED FOR THE 2□" DISCS STORED IN THE TURBINE DECK HOSE HOUSES FOR THE 2□" FIRE HOSES.

REFERENCES:

M1-0225	FLOW DIAGRAM FIRE PROTECTION SYSTEM
M2-0225-01	FLOW DIAGRAM TURBINE BLDG UNIT 2 FIRE PROTECTION
M1-0225-04	FLOW DIAGRAM FUEL AND ELECTRIC CONTROL BUILDINGS-UNITS 1 AND 2 FIRE PROTECTION
M1-0225-03	FLOW DIAGRAM SAFEGUARDS AND DIESEL GENERATOR BUILDINGS UNIT 1 FIRE PROTECTION

DRAIN VALVE TABLE

A	B	C	D	E	F	G	H	J	K	L	M
1FP-0407 1FP-0420	1FP-0421	1FP-0410	1FP-0411 1FP-0434	1FP-0412 1FP-0406 1FP-0675	1FP-0634	1FP-0401 1FP-0402 1FP-0552 1FP-0553	1FP-0405 1FP-0448	1FP-0408 1FP-0409 1FP-0419 1FP-0422 1FP-0423 1FP-0623	1FP-0404	1FP-0644	1FP-0569 1FP-0570 1FP-0571 1FP-0620 1FP-0662

FSAR FIGURE 9.5-44

THIS DRAWING CREATED ELECTRONICALLY

CLASS II

LUMINANT
CPNPP
GLEN ROSE, TEXAS

FLOW DIAGRAM
TURBINE BUILDING UNIT 1
FIRE PROTECTION

DWG. NO. M1-0225 | SH. NO. 01 | REV. CP-13

< FINAL PRINT >

mc0000vc_1.dgn M1-0225-01

$$$$$$$$ DATE $$$$$$

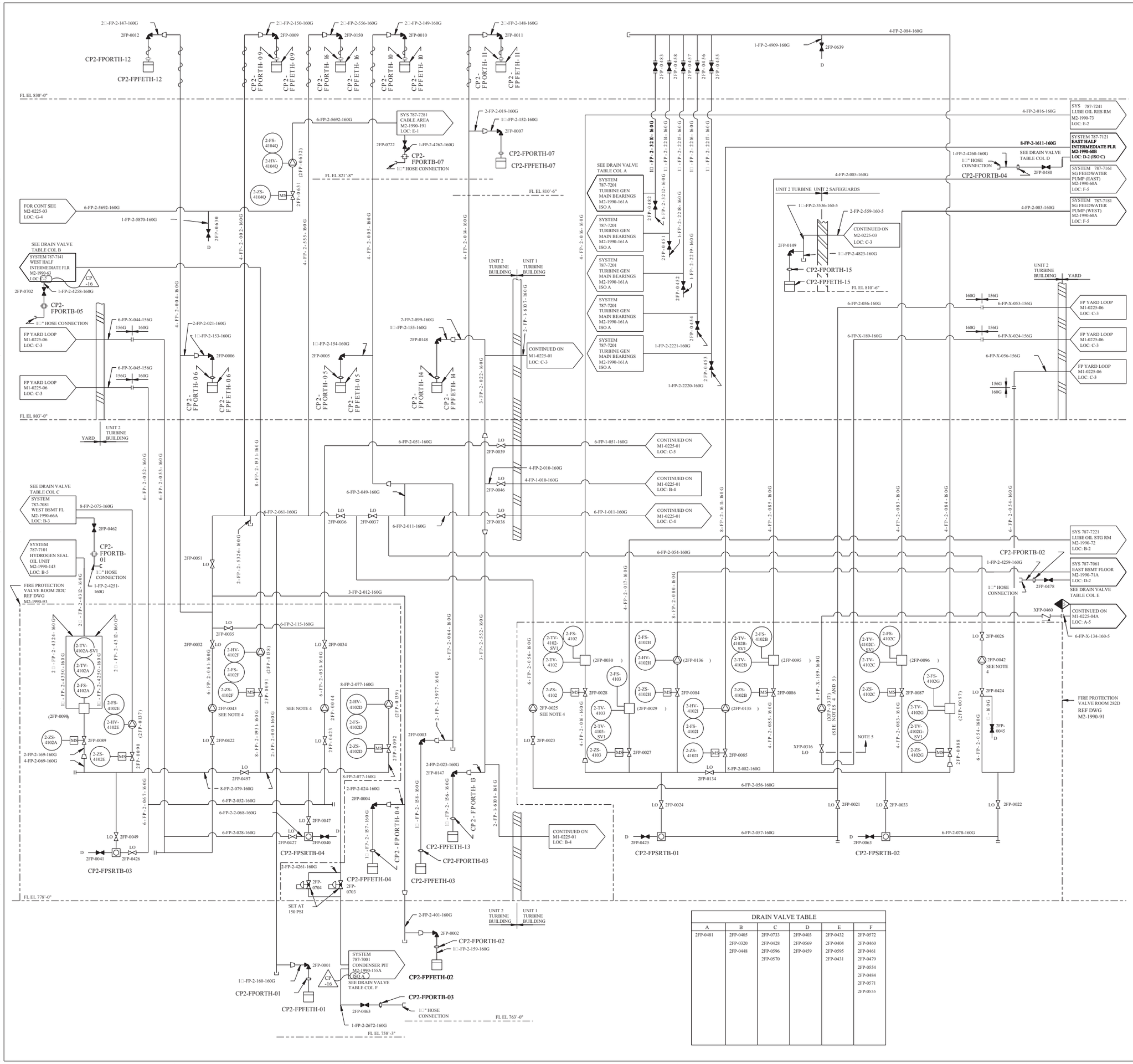

REV	DWN	CHKD	APVD	REMARKS
CP-16	DLK 06-25-2015	MM 06-29-2015	MHP 06-29-2015	THIS DRAWING REVISED TO INCORPORATE AI-CR-2015-005606-1 TO EDITORIALLY CORRECT THE CONTINUATION BLOCK DRAWING LOCATION AT A-2, FROM D-1 TO C-2. EDITORIAL CHANGE AT LOCATION C-6, ADDED ISO A TO THE REFERENCE BLOCK.

NOTES:

1. PROVIDE VENT VALVES AT HIGH POINTS AND DRAIN VALVES AT THE LOW POINTS.
2. UNLESS OTHERWISE NOTED, ALL DRAINS ARE COLLECTED LOCALLY UNDER ADMINISTRATIVE CONTROLS.
3. FOR FIRE PROTECTION COMMON SUPPLY HEADER/UNIT 2 SYSTEM BOUNDARIES, ALSO SEE DRAWINGS M2-0225-03, M1-0225-02 AND M1-0225-06.
4. ALARM CHECK VALVES 2FP-0043 , 2FP-0044 , 2FP-0042 , 2FP-0025 AND XFP-0317 ARE NOT ELECTRICALLY CONNECTED.
5. PIPING AND COMPONENTS DEPICTED ARE WITHIN UNIT 2 BOUNDRIES AND SHALL BE WORKED IN ACCORDANCE WITH SPECIFICATION NUMBER CPES-M-2017 EXCEPT LINE NUMBERS 6-FP-X-189-160G AND 6-FP-X-134-160-5. IN ALL CASES COORDINATE WITH OPERATIONS PRIOR TO COMMENCEMENT OF WORK.

REFERENCE DRAWINGS:

M1-0225	FLOW DIAGRAM FIRE PROTECTION SYSTEM
M1-0200	MECHANICAL DRAWING
M2-1990	LAYOUT DRAWINGS

DRAIN VALVE TABLE

A	B	C	D	E	F
2FP-0481	2FP-0405	2FP-0733	2FP-0403	2FP-0432	2FP-0572
	2FP-0320	2FP-0428	2FP-0569	2FP-0404	2FP-0460
	2FP-0448	2FP-0596	2FP-0459	2FP-0595	2FP-0461
		2FP-0570		2FP-0431	2FP-0479
					2FP-0554
					2FP-0484
					2FP-0571
					2FP-0555

FSAR FIGURE 9.5-44

THIS DRAWING CREATED ELECTRONICALLY

CLASS II

LUMINANT
CPNPP
GLEN ROSE, TEXAS

FLOW DIAGRAM
TURBINE BUILDING
FIRE PROTECTION

DWG. NO. M2-0225 | SH. NO. 01 | REV. CP-16

REF CKD CP-16 06/25/15

$$$$$$$DATE$$$$$$

me955600.dgn A M2-0225-01 B C D E F G < FINAL PRINT > H

Figure 9.5-44 and 9.5-44A have been transferred to the Flow Diagram Volume. (See Figure 9.5-44 in Table 3.2-4 for the flow diagram for both Figures.) 94

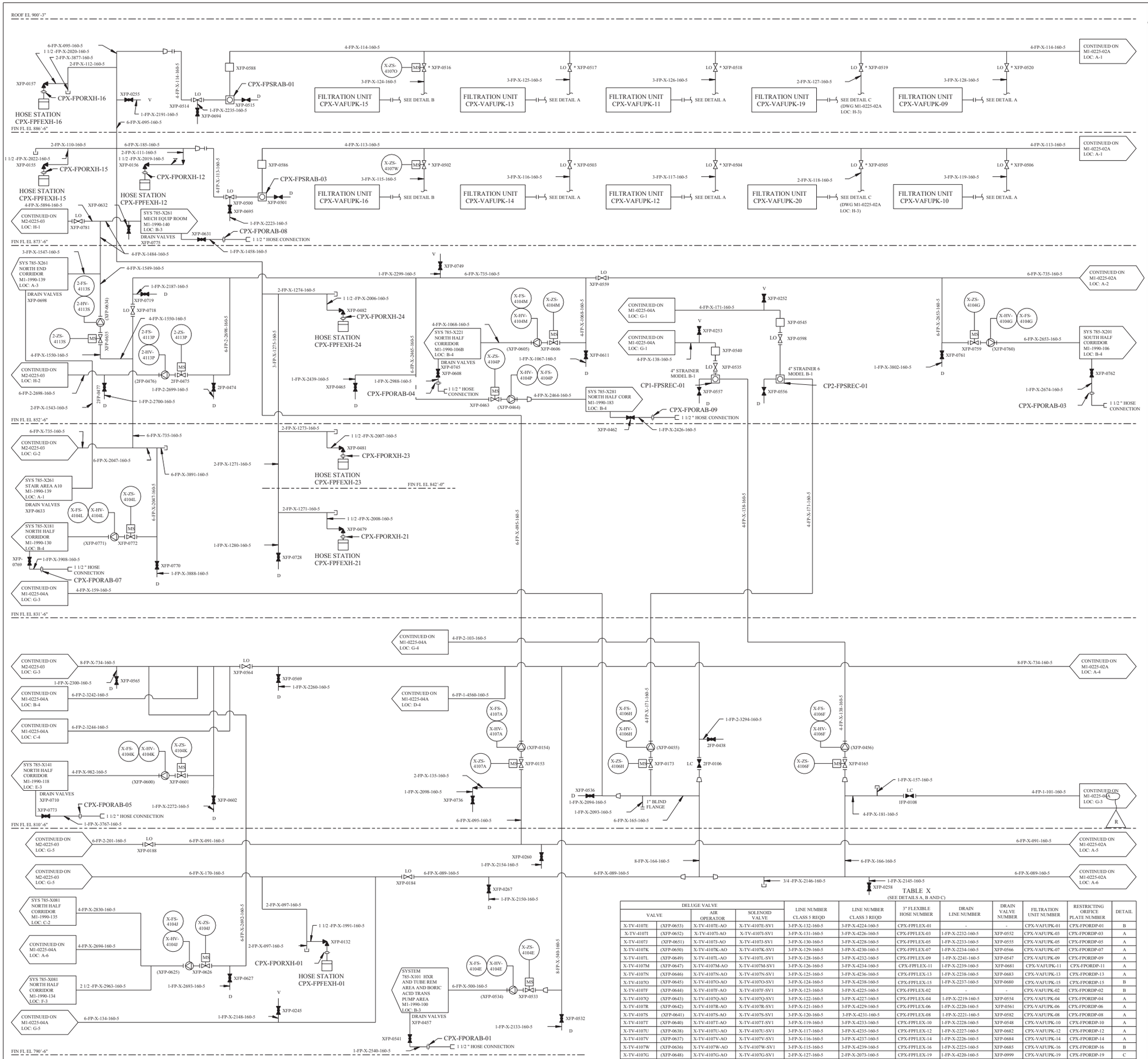

REV	DWN	CHKD	APVD	REMARKS
CP-23	DGK 09-10-2007	MM 09-11-2007		THIS DRAWING REVISED TO INCORPORATE DESIGN CHANGE FDA 2004-000481-01-00 PER SK-0001-04-000481-01-00.

NOTES:

1. FOR GENERAL NOTES AND LEGEND SEE DRAWING M1-0225.
2. PROVIDE VENT VALVES AT THE HIGH POINTS AND DRAIN VALVES AT THE LOW POINTS.
3. THIS DRAWING WAS REDRAWN FROM THE ORIGINAL AUXILIARY BUILDING, SAFEGUARDS BUILDING, AND CONTROL BUILDING FIRE PROTECTION DRAWING M1-0225-02, REV. 2.
4. UNLESS OTHERWISE NOTED DRAINS COLLECTED BY LOCAL DRAIN SYSTEM.
5. PIPING INSTALLED WITHIN THE DASHED LINES (DESIGNATED CLASS 3) IS ASSOCIATED WITH THE FILTRATION UNITS. SEE DRAWINGS M1-0301 AND M1-0309 AND NCR-88-15777 FOR MORE INFORMATION.
6. VALVE NUMBERS IN PARENTHESIS ARE VALVE BODY NUMBER PER ECE 5.04-02 AND ARE ENTERED FOR HISTORICAL INFORMATION ONLY.

REFERENCE DRAWINGS:

1. FLOW DIAGRAM FIRE PROTECTION SYSTEM DWG M1-0225
2. FLOW DIAGRAM SAFEGUARD AND DIESEL GENERATOR BUILDING UNIT 1 FIRE PROTECTION DWG M1-0225-03
3. FLOW DIAGRAM ELEC CONTROL, SWITCHGEAR AND FUEL BUILDING UNITS 1 AND 2 FIRE PROTECTION DWG M1-0225-04
4. FLOW DIAGRAM SAFEGUARD AND DIESEL GENERATOR BUILDING UNIT 2 FIRE PROTECTION DWG M2-0225-03
5. FOR SYSTEM NUMBERS AND PIPING PLANS AND SECTIONS SEE FIRE PROTECTION ISOMETRIC DRAWINGS

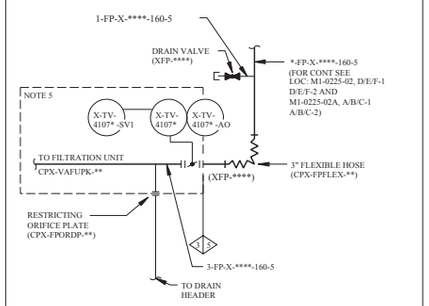

DETAIL A
SEE TABLE X FOR ITEM NUMBERS

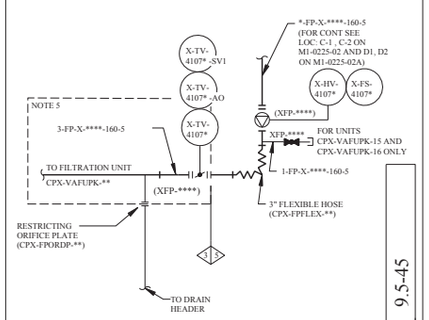

DETAIL B
SEE TABLE X AND X-1 FOR ITEM NUMBERS

FSAR FIGURE 9.5-45

THIS DRAWING CREATED ELECTRONICALLY

TABLE X
(SEE DETAILS A, B AND C)

DELUGE VALVE VALVE		DELUGE VALVE AIR OPERATOR	DELUGE VALVE SOLENOID VALVE	LINE NUMBER CLASS 5 REQD	LINE NUMBER CLASS 3 REQD	3" FLEXIBLE HOSE NUMBER	DRAIN LINE NUMBER	DRAIN VALVE NUMBER	FILTRATION UNIT NUMBER	RESTRICTING ORIFICE PLATE NUMBER	DETAIL
X-TV-4107E	(XFP-0653)	X-TV-4107E-AO	X-TV-4107E-SV1	3-FP-X-132-160-5	3-FP-X-4224-160-5	CPX-FPFLEX-01	-	-	CPX-VAFUPK-01	CPX-FPORDP-01	B
X-TV-4107I	(XFP-0652)	X-TV-4107I-AO	X-TV-4107I-SV1	3-FP-X-131-160-5	3-FP-X-4226-160-5	CPX-FPFLEX-03	1-FP-X-2232-160-5	XFP-0552	CPX-VAFUPK-03	CPX-FPORDP-03	A
X-TV-4107J	(XFP-0651)	X-TV-4107J-AO	X-TV-4107J-SV1	3-FP-X-130-160-5	3-FP-X-4228-160-5	CPX-FPFLEX-05	1-FP-X-2233-160-5	XFP-0555	CPX-VAFUPK-05	CPX-FPORDP-05	A
X-TV-4107K	(XFP-0650)	X-TV-4107K-AO	X-TV-4107K-SV1	3-FP-X-129-160-5	3-FP-X-4230-160-5	CPX-FPFLEX-07	1-FP-X-2234-160-5	XFP-0566	CPX-VAFUPK-07	CPX-FPORDP-07	A
X-TV-4107L	(XFP-0649)	X-TV-4107L-AO	X-TV-4107L-SV1	3-FP-X-128-160-5	3-FP-X-4232-160-5	CPX-FPFLEX-09	1-FP-X-2241-160-5	XFP-0547	CPX-VAFUPK-09	CPX-FPORDP-09	A
X-TV-4107M	(XFP-0647)	X-TV-4107M-AO	X-TV-4107M-SV1	3-FP-X-126-160-5	3-FP-X-4234-160-5	CPX-FPFLEX-11	1-FP-X-2239-160-5	XFP-0681	CPX-VAFUPK-11	CPX-FPORDP-11	A
X-TV-4107N	(XFP-0646)	X-TV-4107N-AO	X-TV-4107N-SV1	3-FP-X-125-160-5	3-FP-X-4236-160-5	CPX-FPFLEX-13	1-FP-X-2238-160-5	XFP-0683	CPX-VAFUPK-13	CPX-FPORDP-13	A
X-TV-4107O	(XFP-0645)	X-TV-4107O-AO	X-TV-4107O-SV1	3-FP-X-124-160-5	3-FP-X-4238-160-5	CPX-FPFLEX-15	1-FP-X-2237-160-5	XFP-0680	CPX-VAFUPK-15	CPX-FPORDP-15	B
X-TV-4107F	(XFP-0644)	X-TV-4107F-AO	X-TV-4107F-SV1	3-FP-X-123-160-5	3-FP-X-4225-160-5	CPX-FPFLEX-02	-	-	CPX-VAFUPK-02	CPX-FPORDP-02	B
X-TV-4107Q	(XFP-0643)	X-TV-4107Q-AO	X-TV-4107Q-SV1	3-FP-X-122-160-5	3-FP-X-4227-160-5	CPX-FPFLEX-04	1-FP-X-2219-160-5	XFP-0554	CPX-VAFUPK-04	CPX-FPORDP-04	A
X-TV-4107R	(XFP-0642)	X-TV-4107R-AO	X-TV-4107R-SV1	3-FP-X-121-160-5	3-FP-X-4229-160-5	CPX-FPFLEX-06	1-FP-X-2220-160-5	XFP-0561	CPX-VAFUPK-06	CPX-FPORDP-06	A
X-TV-4107S	(XFP-0641)	X-TV-4107S-AO	X-TV-4107S-SV1	3-FP-X-120-160-5	3-FP-X-4231-160-5	CPX-FPFLEX-08	1-FP-X-2221-160-5	XFP-0582	CPX-VAFUPK-08	CPX-FPORDP-08	A
X-TV-4107T	(XFP-0640)	X-TV-4107T-AO	X-TV-4107T-SV1	3-FP-X-119-160-5	3-FP-X-4233-160-5	CPX-FPFLEX-10	1-FP-X-2228-160-5	XFP-0548	CPX-VAFUPK-10	CPX-FPORDP-10	A
X-TV-4107U	(XFP-0638)	X-TV-4107U-AO	X-TV-4107U-SV1	3-FP-X-117-160-5	3-FP-X-4235-160-5	CPX-FPFLEX-12	1-FP-X-2227-160-5	XFP-0682	CPX-VAFUPK-12	CPX-FPORDP-12	A
X-TV-4107V	(XFP-0637)	X-TV-4107V-AO	X-TV-4107V-SV1	3-FP-X-116-160-5	3-FP-X-4237-160-5	CPX-FPFLEX-14	1-FP-X-2226-160-5	XFP-0684	CPX-VAFUPK-14	CPX-FPORDP-14	A
X-TV-4107W	(XFP-0636)	X-TV-4107W-AO	X-TV-4107W-SV1	3-FP-X-115-160-5	3-FP-X-4239-160-5	CPX-FPFLEX-16	1-FP-X-2225-160-5	XFP-0685	CPX-VAFUPK-16	CPX-FPORDP-16	B
X-TV-4107G	(XFP-0648)	X-TV-4107G-AO	X-TV-4107G-SV1	2-FP-X-127-160-5	2-FP-X-2073-160-5	CPX-FPFLEX-19	1-FP-X-4220-160-5	XFP-0999	CPX-VAFUPK-19	CPX-FPORDP-19	C
X-TV-4107H	(XFP-0639)	X-TV-4107H-AO	X-TV-4107H-SV1	2-FP-X-118-160-5	2-FP-X-2074-160-5	CPX-FPFLEX-20	1-FP-X-4221-160-5	XFP-1000	CPX-VAFUPK-20	CPX-FPORDP-20	C

DRAWING 2323-M1-0225-02 REV CP-5
HAS BEEN SPLIT INTO THE FOLLOWING SHEETS:
M1-0225-02
M1-0225-02A

CLASS I
(NUCLEAR SAFETY-RELATED)
SAFETY CLASS 1 SAFETY CLASS 2 SAFETY CLASS 3 — SEISMIC CATEGORY I — CLASS IE ASSOCIATED CIRCUITS

LUMINANT
CPSES
GLEN ROSE, TEXAS

FLOW DIAGRAM
AUXILIARY BUILDING
FIRE PROTECTION

DWG. NO. M1-0225 | SH. NO. 02 | REV. CP-23

FINAL PRINT

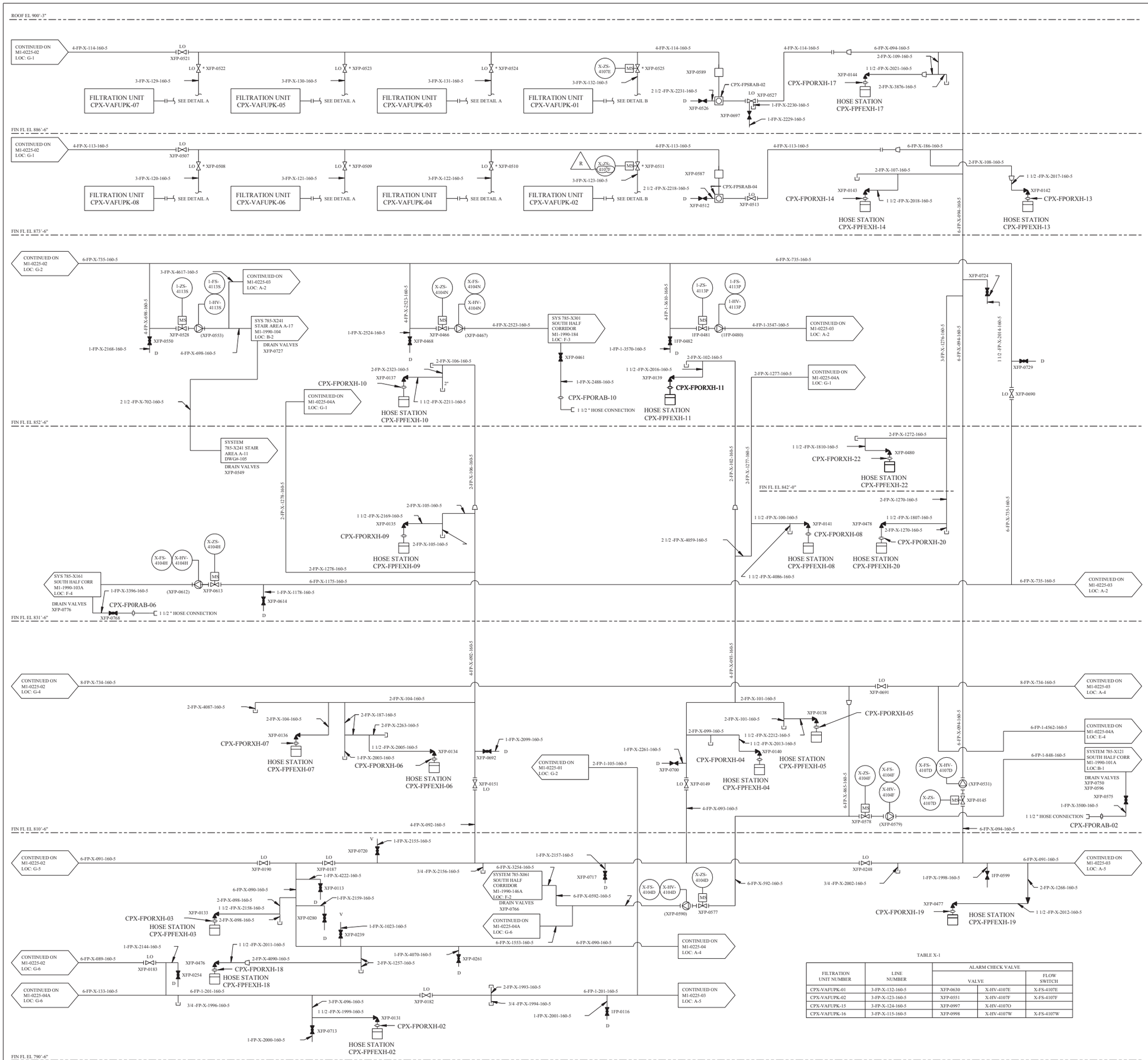

TABLE X-1

FILTRATION UNIT NUMBER	LINE NUMBER	ALARM CHECK VALVE		
		VALVE		FLOW SWITCH
CPX-VAFUPK-01	3-FP-X-132-160-5	XFP-0630	X-HIV-4107E	X-FS-4107E
CPX-VAFUPK-02	3-FP-X-123-160-5	XFP-0551	X-HIV-4107F	X-FS-4107F
CPX-VAFUPK-15	3-FP-X-124-160-5	XFP-0997	X-HIV-4107O	
CPX-VAFUPK-16	3-FP-X-115-160-5	XFP-0998	X-HIV-4107W	X-FS-4107W

REV	DWN	CHKD	APVD	REMARKS
CP-15	JESC 01-04 2011	SM 01-04 2011		THIS DRAWING REVISED TO INCORPORATE DESIGN CHANGE FDA-2010-000196-01-00 PER SK-0029-10-000196-01-00.

NOTES:

1. FOR GENERAL NOTES AND REFERENCE DRAWINGS SEE DRAWING M1-0225-02.
2. FOR SYSTEM NUMBERS AND PIPING PLANS AND SECTIONS SEE FIRE PROTECTION ISOMETRIC DRAWINGS.

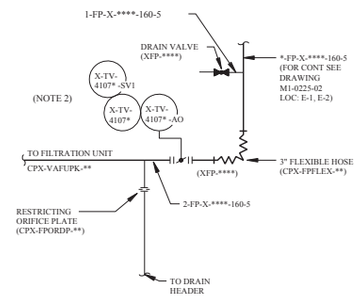

DETAIL C
SEE TABLE X FOR ITEM NUMBERS
(DRAWING M1-0225-02 LOC: E-6)

DRAWING 2323-M1-0225-02 REV CP-5
HAS BEEN SPLIT INTO THE FOLLOWING SHEETS:
2323-M1-0225-02
ECE-M1-0225-02A

CLASS I
(NUCLEAR SAFETY-RELATED)
SAFETY CLASS 1 — SEISMIC CATEGORY I
SAFETY CLASS 2 — CLASS 1E
SAFETY CLASS 3 — ASSOCIATED CIRCUITS

LUMINANT
CPNPP
GLEN ROSE, TEXAS

FLOW DIAGRAM
AUXILIARY BUILDING
FIRE PROTECTION

DWG. NO. M1-0225 | SH. NO. 02A | REV. CP-15

FSAR FIGURE 9.5-45

THIS DRAWING CREATED ELECTRONICALLY

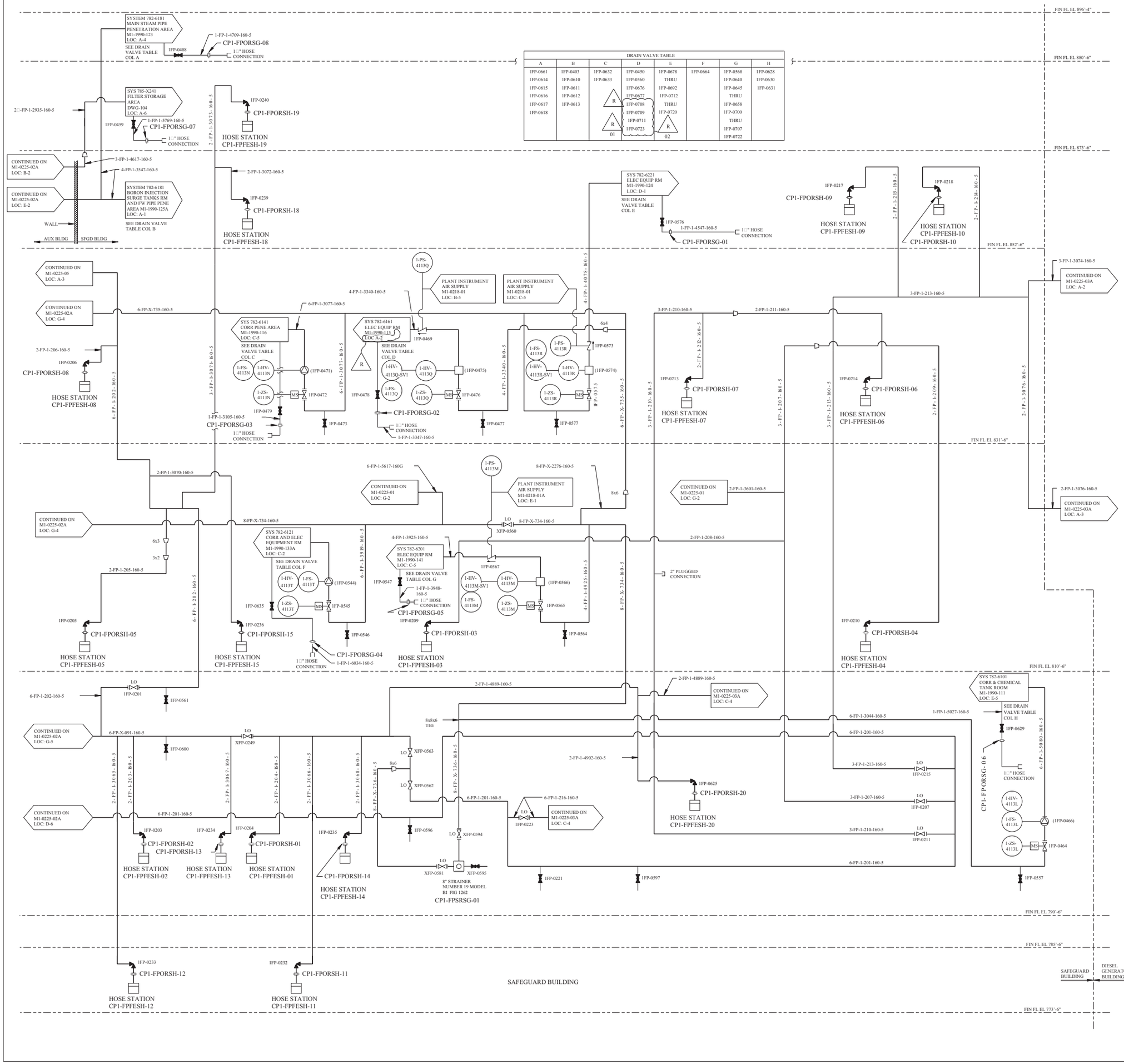

DRAIN VALVE TABLE

A	B	C	D	E	F	G	H
1FP-0661	1FP-0403	1FP-0632	1FP-0450	1FP-0678	1FP-0664	1FP-0568	1FP-0628
1FP-0614	1FP-0610	1FP-0633	1FP-0560	THRU		1FP-0640	1FP-0630
1FP-0615	1FP-0611		1FP-0676	1FP-0692		1FP-0645	1FP-0631
1FP-0616	1FP-0612		1FP-0677	1FP-0712		THRU	
1FP-0617	1FP-0613		1FP-0708	THRU		1FP-0658	
1FP-0618			1FP-0709	1FP-0720		1FP-0700	
			1FP-0711			THRU	
			1FP-0723			1FP-0707	
						1FP-0722	

R 01 R 02

REV	DWN	CHKD	APVD	REMARKS
CP-18	MM 03-26-2011	GAW 03-26-2011		THIS DRAWING REVISED TO INCORPORATE DESIGN CHANGE FDA 2008-000324-02-02 PER SK-0004-08-000324-02-02.

NOTES:

1. THE SAFEGUARD BUILDING ON THIS DRAWING WAS REDRAWN FROM THE ORIGINAL AUXILIARY BUILDING, SAFEGUARD BUILDING, ELECTRICAL AND CONTROL BUILDING DRAWING M1-0225-02 REV 2 AND THE DIESEL GENERATOR BUILDING ON THIS DRAWING WAS REDRAWN FROM THE ORIGINAL FUEL HANDLING, DIESEL GENERATOR BUILDING AND SERVICE WATER INTAKE STRUCTURE DRAWING M1-0225-03 REV 4.
2. PROVIDE VENT VALVES AT THE HIGH POINTS AND DRAIN VALVES AT LOW POINTS.
3. DELETED
4. VALVE NUMBERS IN PARENTHESIS ARE VALVE BODY NUMBERS PER ECE 5.04-02 AND ARE ENTERED FOR HISTORICAL INFORMATION ONLY.

REFERENCE DRAWINGS:

1. FLOW DIAGRAM FIRE PROTECTION SYSTEM DRAWING M1-0225.
2. FLOW DIAGRAM AUXILIARY BUILDING FIRE PROTECTION DRAWING M1-0225-02.
3. FLOW DIAGRAM FUEL AND ELECTRIC CONTROL BUILDINGS UNIT 1 AND 2 FIRE PROTECTION DRAWING M1-0225-04.
4. FLOW DIAGRAM CONTAINMENT BUILDING UNIT 1 FIRE PROTECTION DRAWING M1-0225-05.
5. FOR SYSTEM NUMBERS AND PIPING PLANS AND SECTIONS SEE GRINNELL FIRE PROTECTION SYSTEM DRAWINGS.
6. FLOW DIAGRAM PLANT GAS SUPPLY SYSTEM NITROGEN SUPPLY, DRAWING M1-0243.

FSAR FIGURE 9.5-46

THIS DRAWING CREATED ELECTRONICALLY

DRAWING M1-0225-03 REV CP-2
HAS BEEN SPLIT INTO THE FOLLOWING SHEETS:
M1-0225-03
M1-0225-03A

CLASS II

LUMINANT
CPNPP
GLEN ROSE, TEXAS

FLOW DIAGRAM
SAFEGUARD BUILDING
UNIT 1
FIRE PROTECTION

DWG. NO. M1-0225 | SH. NO. 03 | REV. CP-18

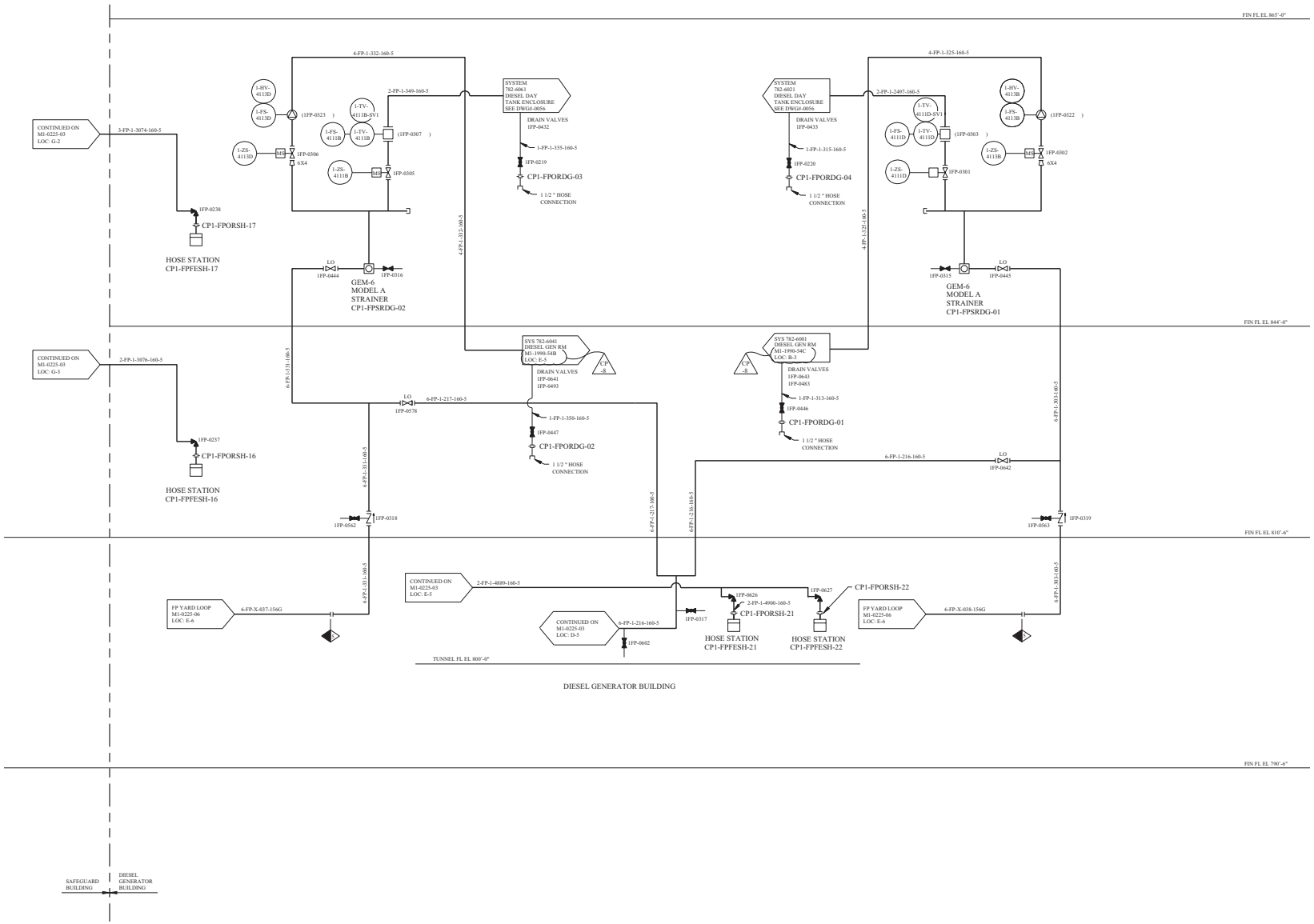

REV	DWN	CHKD	APVD	REMARKS
CP-8	RCW 11-01-1999			THIS DRAWING REVISED TO INCORPORATE EDITORIAL CHANGES AS NOTED.

NOTES:

1. THE SAFEGUARD BUILDING ON THIS DRAWING WAS REDRAWN FROM THE ORIGINAL AUXILIARY BUILDING, SAFEGUARD BUILDING, ELECTRICAL AND CONTROL BUILDING DRAWING M1-0225-02 REV. 2 AND THE DIESEL GENERATOR BUILDING ON THIS DRAWING WAS REDRAWN FROM THE ORIGINAL FUEL HANDLING, DIESEL GENERATOR BUILDING AND SERVICE WATER INTAKE STRUCTURE DRAWING M1-0225-03 REV. 4.
2. PROVIDE VENT VALVES AT THE HIGH POINTS AND DRAIN VALVES AT LOW POINTS.
3. DELETED
4. VALVE NUMBERS IN PARENTHESIS ARE VALVE BODY NUMBERS PER ECE 5.04-02 AND ARE ENTERED FOR HISTORICAL INFORMATION ONLY.

REFERENCE DRAWINGS:

1. FLOW DIAGRAM FIRE PROTECTION SYSTEM DRAWING M1-0225.
2. FLOW DIAGRAM AUXILIARY BUILDING FIRE PROTECTION DRAWING M1-0225-02.
3. FLOW DIAGRAM FUEL AND ELECTRIC CONTROL BUILDINGS UNIT 1 AND 2 FIRE PROTECTION DRAWING M1-0225-04.
4. FLOW DIAGRAM CONTAINMENT BUILDING UNIT 1 FIRE PROTECTION DRAWING M1-0225-05.
5. FOR SYSTEM NUMBERS AND PIPING PLANS AND SECTIONS SEE GRINNELL FIRE PROTECTION SYSTEM DRAWINGS.
6. FLOW DIAGRAM PLANT GAS SUPPLY SYSTEM NITROGEN SUPPLY, DRAWING M1-0243.

FSAR FIGURE 9.5-46

THIS DRAWING CREATED ELECTRONICALLY

DRAWING M1-0225-03 REV CP-3
HAS BEEN SPLIT INTO THE FOLLOWING SHEETS:
M1-0225-03
M1-0225-03A

CLASS II

TXU ELECTRIC
CPSES
GLEN ROSE, TEXAS

FLOW DIAGRAM
SAFEGUARD AND DIESEL GENERATOR BUILDINGS
UNIT 1
FIRE PROTECTION

DWG. NO.	SH. NO.	REV.
M1-0225	03A	CP-8

me0001wc.dgn

$$$$$$$D/A TE$$$$$$

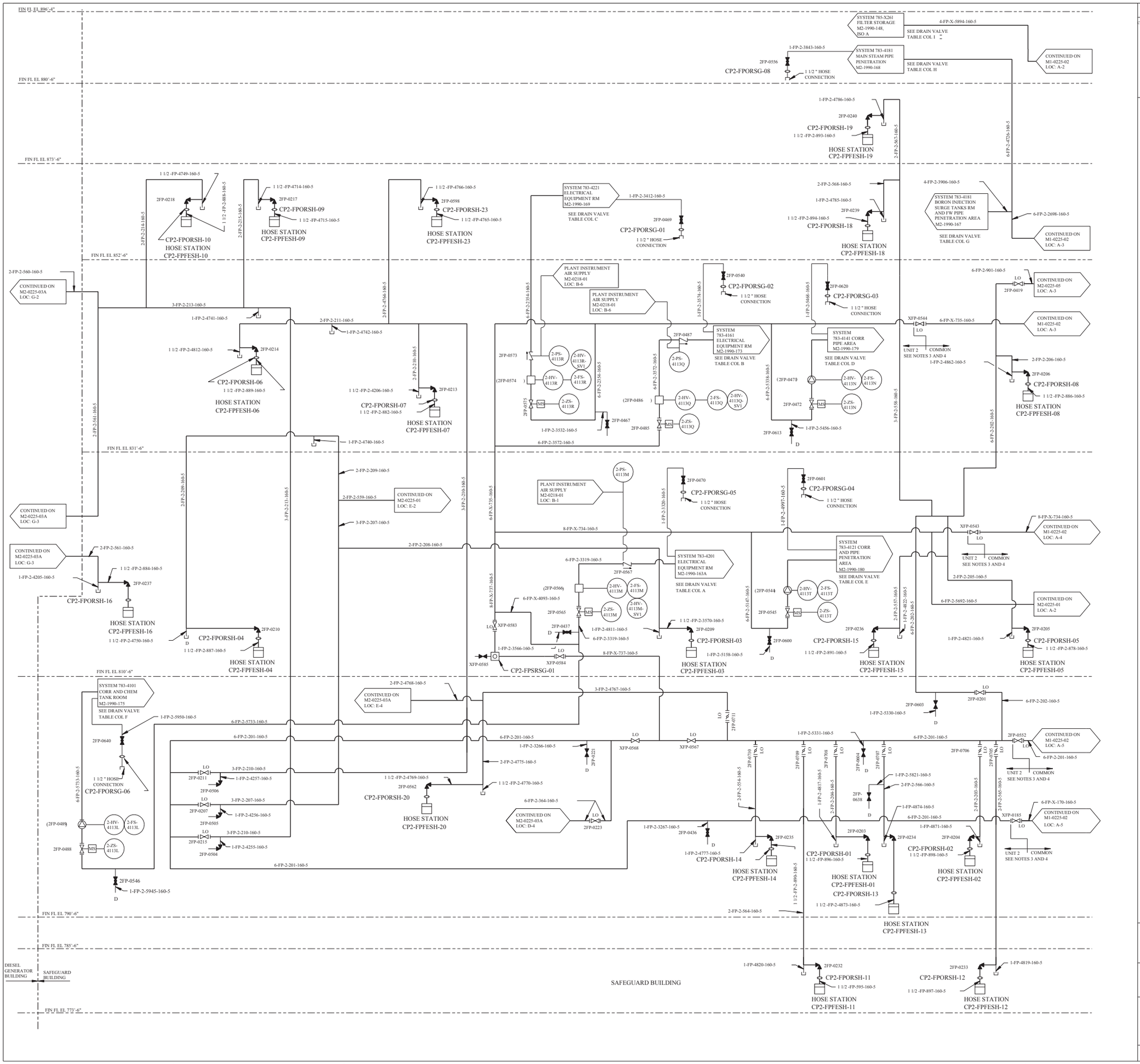

REV	DWN	CHKD	APVD	REMARKS
CP-12	HSK 03-18-2009	DJL 03-18-2009		THIS DRAWING REVISED TO INCORPORATE DESIGN CHANGE FDA-2009-000669-01-00 PER SK-0001-09-000669-01-00.

NOTES:

1. PROVIDE VENT VALVES AT THE HIGH POINTS AND DRAIN VALVES AT LOW POINTS.
2. UNLESS OTHERWISE NOTED ALL DRAINS ARE COLLECTED LOCALLY UNDER ADMINISTRATIVE CONTROL.
3. FOR FIRE PROTECTION COMMON SUPPLY HEADER/UNIT 2 SYSTEM BOUNDARIES, ALSO SEE DRAWINGS M2-0225-01, M1-0225-02, M1-0225-04A AND M1-0225-06.
4. PIPING AND COMPONENTS WITHIN UNIT 2 BOUNDARIES TO BE WORKED IN ACCORDANCE WITH SPECIFICATION NUMBER CPES-M-2017 EXCEPT SUPPLY PIPING AND IN LINE ISOLATION VALVES. IN ALL CASES COORDINATE WITH OPERATIONS PRIOR TO COMMENCEMENT OF WORK.

REFERENCE DRAWINGS:

M1-0225	FLOW DIAGRAM FIRE PROTECTION SYSTEM DRAWING
M1-0200	MECHANICAL DRAWING
M2-1990	LAYOUT DRAWINGS

DRAIN VALVE TABLE

A	B	C	C (CONT)	D
2FP-0490	2FP-0439	2FP-0517	2FP-0531	2FP-0615
2FP-0651	2FP-0541	2FP-0518	2FP-0532	2FP-0614
2FP-0437	2FP-0580	2FP-0519	2FP-0533	2FP-0617
2FP-0650	2FP-0581	2FP-0520	2FP-0534	2FP-0616
2FP-0510	2FP-0727	2FP-0521	2FP-0535	2FP-0618
2FP-0508	2FP-0728	2FP-0522	2FP-0536	2FP-0619
2FP-0509	2FP-0729	2FP-0523	2FP-0537	
2FP-0507		2FP-0524	2FP-0538	
2FP-0512		2FP-0525	2FP-0539	
2FP-0492		2FP-0526	2FP-0469	
2FP-0653		2FP-0527	2FP-0623	
2FP-0511		2FP-0528	2FP-0647	
2FP-0739		2FP-0529	2FP-0654	
2FP-0740		2FP-0530	2FP-0730	
2FP-0741		2FP-0742	2FP-0731	
2FP-0656		2FP-0743	2FP-0732	
2FP-0657				
2FP-0658				
2FP-0659				

R

DRAIN VALVE TABLE (CONT)

E	F	G	H	I
2FP-0643	2FP-0652	2FP-0477	2FP-0559	XFP-0775
2FP-0605	2FP-0649	2FP-0560	2FP-0549	XFP-0632
2FP-0646	2FP-0642	2FP-0597	2FP-0558	XFP-0633
2FP-0599	2FP-0636	2FP-0548		XFP-0698
2FP-0606				

FSAR FIGURE 9.5-46

THIS DRAWING CREATED ELECTRONICALLY

DRAWING ECE-M2-0225-03 REV CP-1
HAS BEEN SPLIT INTO THE FOLLOWING SHEETS:
M2-0225-03
M2-0225-03A

CLASS II

LUMINANT
CPNPP
GLEN ROSE, TEXAS

FLOW DIAGRAM
SAFEGUARD BUILDING
UNIT 2
FIRE PROTECTION

DWG. NO.	SH. NO.	REV.
M2-0225	03	CP-12

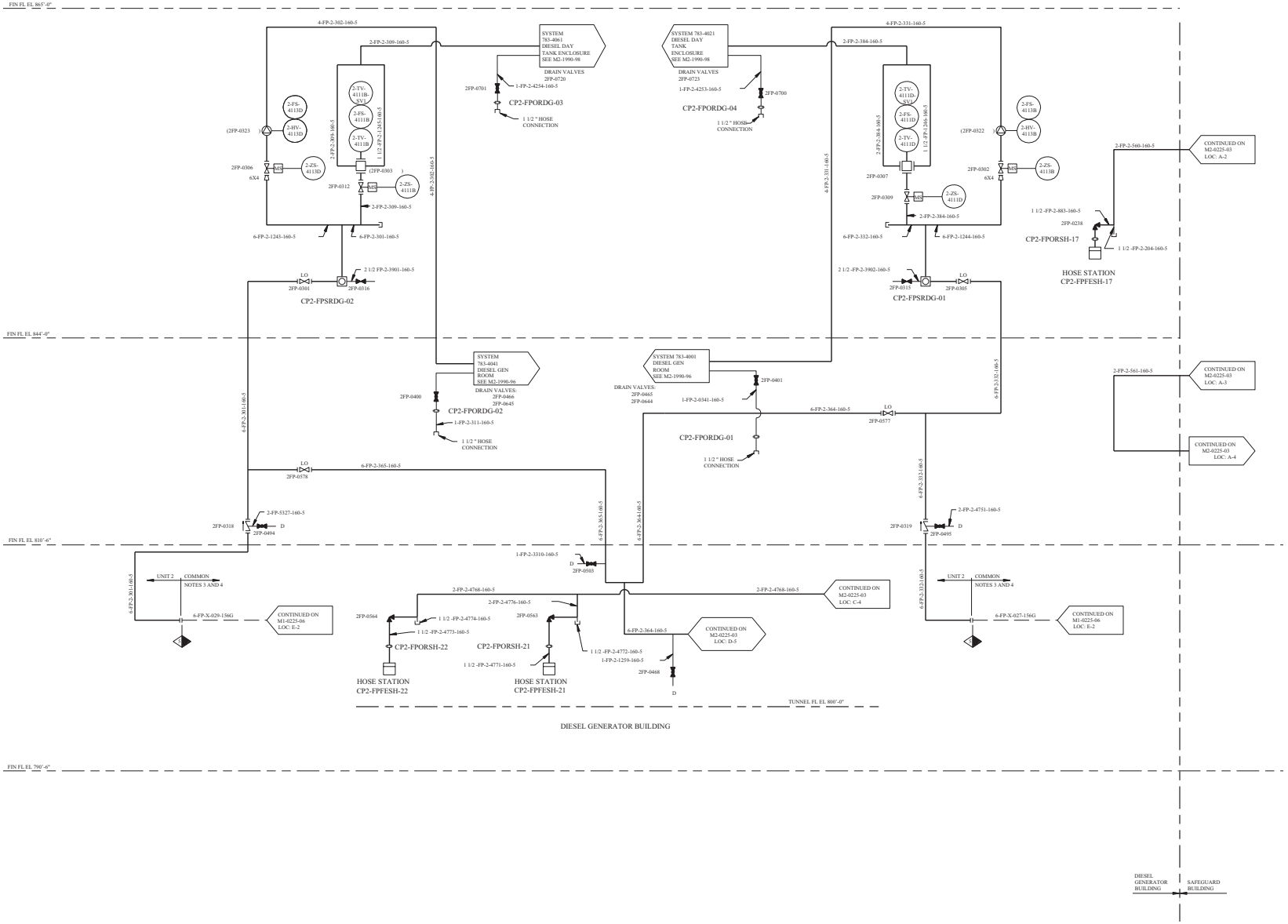

REV	DWN	CHKD	APVD	REMARKS
CP-5	ALTO 05-23-1996			THIS DRAWING REVISED TO ADD THE FSAR FIGURE NUMBER AS AN EDITORIAL CHANGE.

NOTES:

1. PROVIDE VENT VALVES AT THE HIGH POINTS AND DRAIN VALVES AT LOW POINTS.
2. UNLESS OTHERWISE NOTED ALL DRAINS ARE COLLECTED LOCALLY UNDER ADMINISTRATIVE CONTROL.
3. FOR FIRE PROTECTION COMMOM SUPPLY HEADER/UNIT 2 SYSTEM BOUNDARIES, SEE DRAWINGS M2-0225-01, M2-0225-03, M1-0225-02, M1-0225-04A AND M1-0225-06.
4. PIPING AND COMPONENTS WITHIN UNIT 2 BOUNDRIES TO BE WORKED IN ACCORDANCE WITH SPECIFICATION NUMBER CPES-M-2017 EXCEPT SUPPLY PIPING AND IN LINE ISOLATION VALVES. IN ALL CASES COORDINATE WITH OPERATIONS PRIOR TO COMMENCEMENT OF WORK.

REFERENCE DRAWINGS:

M1-0225	FLOW DIAGRAM FIRE PROTECTION SYSTEM DRAWING
M1-0200	MECHANICAL DRAWING
M2-1990	LAYOUT DRAWINGS

FSAR FIGURE 9.5-46

CP 5

THIS DRAWING CREATED ELECTRONICALLY

DRAWING ECE-M2-0225-03 REV CP-1
HAS BEEN SPLIT INTO THE FOLLOWING SHEETS:
M2-0225-03
M2-0225-03A

CLASS II

TXU ELECTRIC
CPSES
GLEN ROSE, TEXAS

FLOW DIAGRAM
DIESEL GENERATOR BUILDING
UNIT 2
FIRE PROTECTION

DWG. NO.	SH. NO.	REV.
M2-0225	03A	CP-5

vs000094.dgn

$$$$$$$D:\TESS$$$$

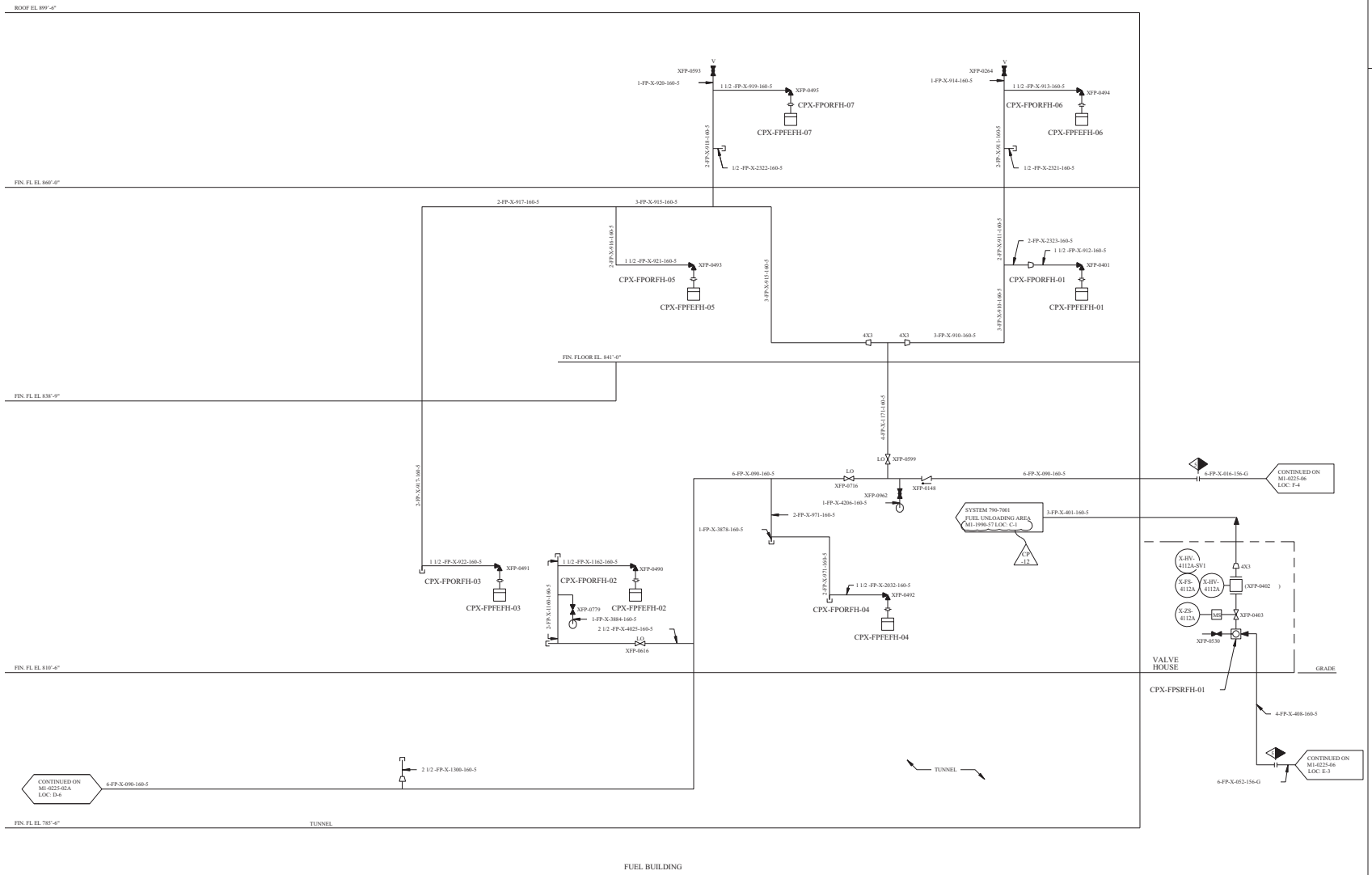

FUEL BUILDING

REV	DWN	CHKD	APVD	REMARKS
CP-12	RCW 11-03-1999			THIS DRAWING REVISED TO INCORPORATE EDITORIAL CHANGES AS NOTED.

NOTES

1. FOR GENERAL NOTES AND LEGEND SEE DRAWING M1-0225.
2. THE FUEL BUILDING ON THIS DRAWING WAS REDRAWN FROM THE ORIGINAL ELECTRICAL CONTROL, SWITCHGEAR AND FUEL BUILDINGS - UNITS 1 AND 2 FIRE PROTECTION, DRAWING M1-0225-04 REV CP-5. THE SWITCHGEAR BUILDING WHICH WAS DEPICTED ON EARLIER REVISIONS OF THIS DRAWING HAS BEEN RELOCATED TO THE TURBINE BUILDING UNIT 1 FIRE PROTECTION, DRAWING M1-0225-01 REV CP-4.

REFERENCES

1. M1-0225 FLOW DIAGRAM FIRE PROTECTION SYSTEM
2. M1-0225-01 FLOW DIAGRAM TURBINE BUILDING UNIT 1 FIRE PROTECTION
3. M1-0225-02 FLOW DIAGRAM AUXILIARY BUILDING FIRE PROTECTION
4. M1-0225-03 FLOW DIAGRAM SAFEGUARD AND DIESEL GENERATOR BUILDING UNIT 1 FIRE PROTECTION
5. FOR SYSTEMS PIPING PLANS AND SECTIONS SEE GRINNELL FIRE PROTECTION SYSTEM DRAWINGS

FSAR FIGURE 9.5-47

THIS DRAWING CREATED ELECTRONICALLY

CP
-12

DRAWING M1-0225-04 REV CP-4
HAS BEEN SPLIT INTO THE FOLLOWING SHEETS:
M1-0225-04
M1-0225-04A

CLASS II

TXU ELECTRIC
CPSES
GLEN ROSE, TEXAS

FLOW DIAGRAM
FUEL BUILDING
FIRE PROTECTION

DWG. NO.	SH. NO.	REV.
M1-0225	04	CP-12

me0001wd.dgn

$$$$$$$D/A TE$$$$$$

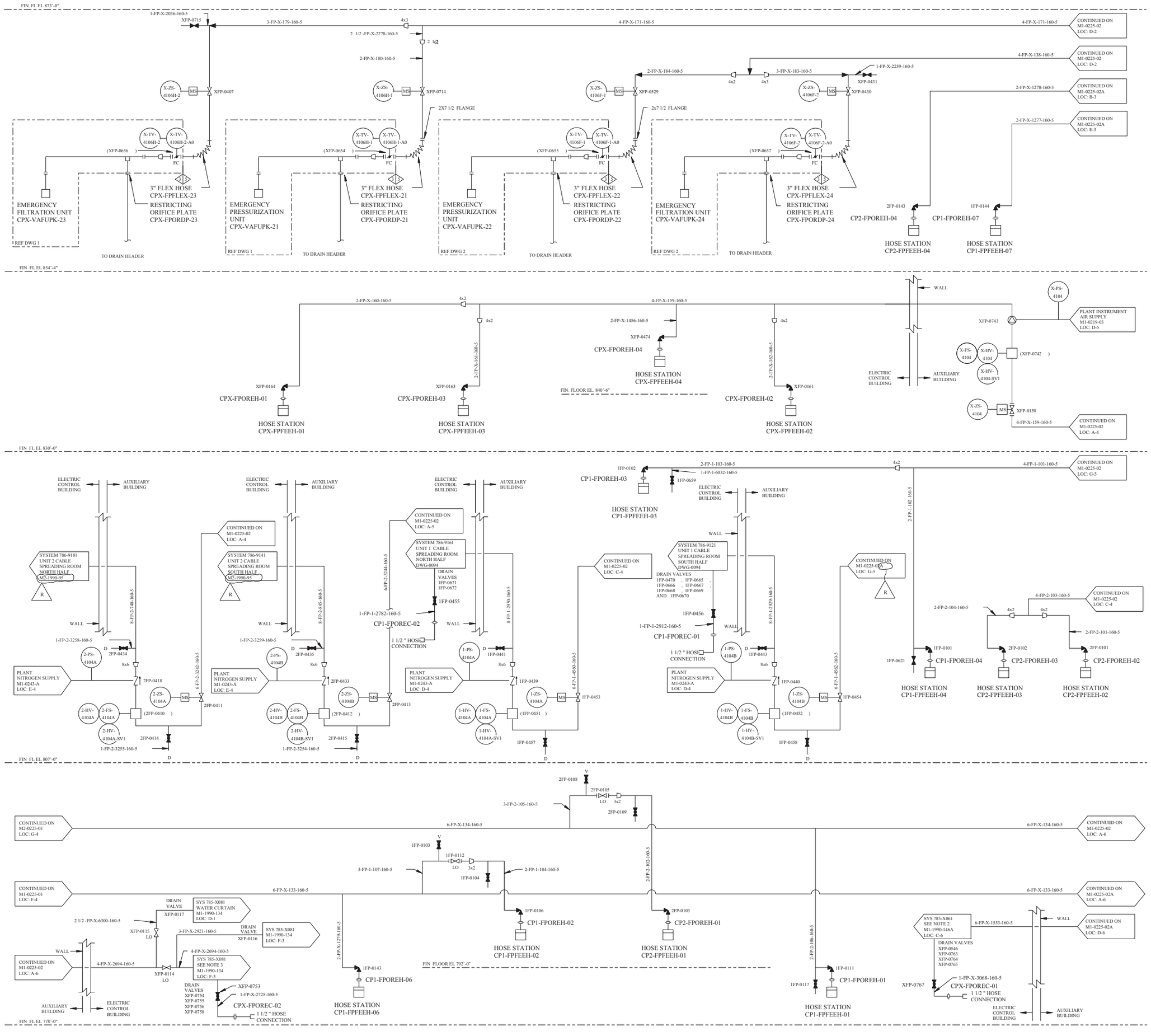

REV	DWN	CHKD	APVD	REMARKS
CP-15	DGK 06-18 2007	MH 09-11 2007		THIS DRAWING REVISED TO INCORPORATE DESIGN CHANGE FDA 2004-000481-01-00 PER SK-0002-04-000481-01-00.

NOTES:

1. FOR GENERAL NOTES AND LEGEND SEE DRAWING M1-0225.
2. SYSTEM No 785-X061 TO ALL AREAS ON SOUTH SIDE ELEVATION 778'-0" AND BATTERY ROOM CORRIDOR ELEVATION 792'-0".
3. SYSTEM No 785-X081 TO ALL AREAS ON NORTH SIDE ELEVATION 778'-0" AND BATTERY ROOM CORRIDOR ELEVATION 792'-0".

REFERENCE DWGS:

1. FLOW DIAGRAM VENT AND CONT RM AIR CONDITIONING M1-0304
2. FLOW DIAGRAM VENT AND CONT RM AIR CONDITIONING M1-0304-B

FSAR FIGURE 9.5-47

THIS DRAWING CREATED ELECTRONICALLY

DRAWING M1-0225-04 REV CP-4
HAS BEEN SPLIT INTO THE FOLLOWING SHEETS:
M1-0225-04
M1-0225-04A

CLASS I
(NUCLEAR SAFETY-RELATED)
SAFETY CLASS 1 / SAFETY CLASS 2 / SAFETY CLASS 3 — SEISMIC CATEGORY CLASS 1E ASSOCIATED CIRCUITS I

LUMINANT
CPSES
GLEN ROSE, TEXAS

FLOW DIAGRAM
ELECTRIC CONTROL BUILDING
FIRE PROTECTION

DWG. NO. M1-0225 | SH. NO. 04A | REV. CP-15

FINAL PRINT

me840200.dgn M1-0225-04A

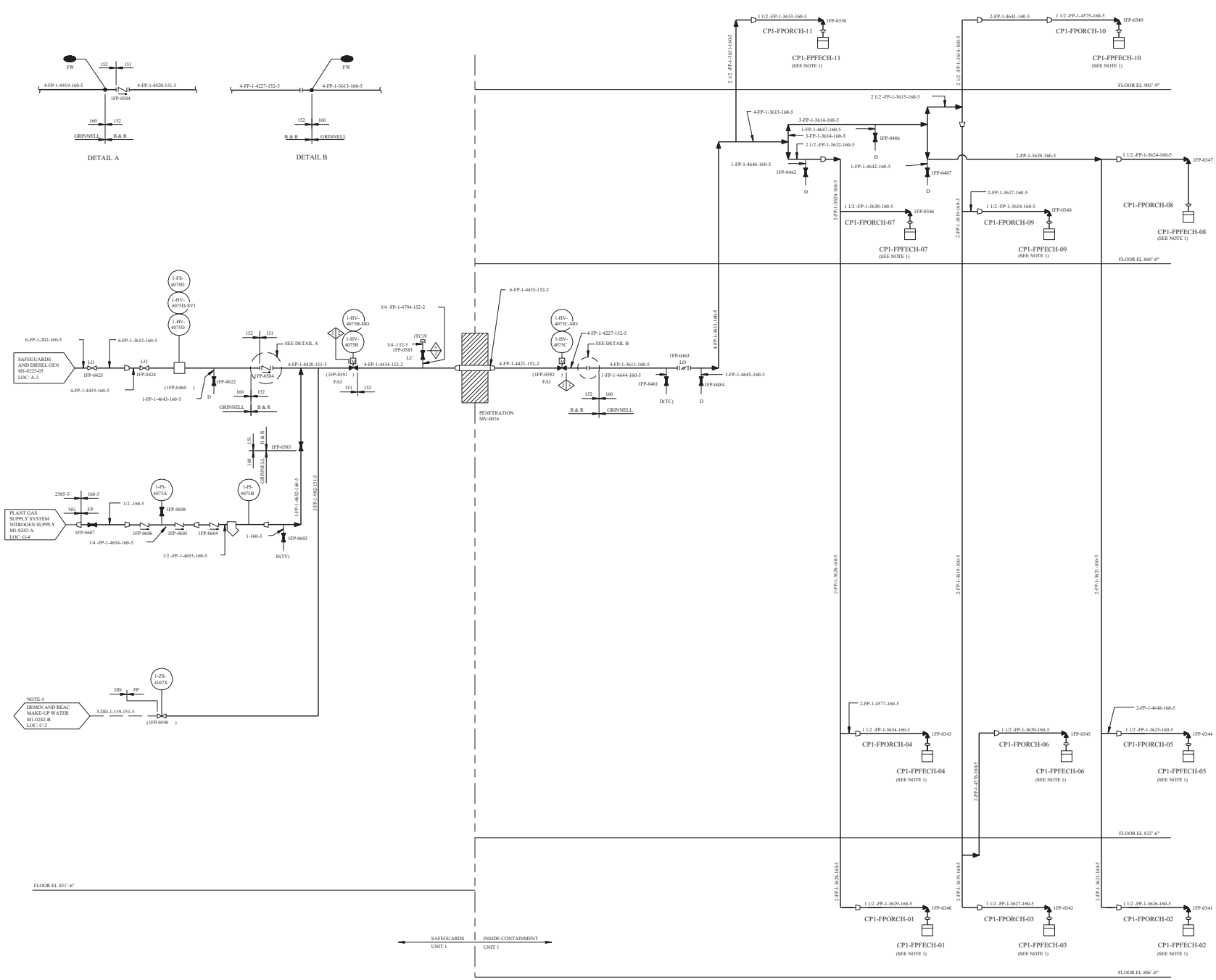

REV	DWN	CHKD	APVD	REMARKS
CP-12	RMS 06-04-096			THIS DRAWING REVISED TO ADD THE FSAR FIGURE NUMBER AS AN EDITORIAL CHANGE.

NOTES:

1. HOSE, NOZZLES AND SPANNER WRENCHES FOR HOSE STATIONS IN CONTAINMENT BUILDING ARE STORED IN HOSE RACKS LOCATED NEAR PERSONNEL AIR-LOCK IN SAFEGUARDS BUILDING.
2. PROVIDE VENT VALVES AT THE HIGH POINTS AND DRAIN VALVES AT THE LOW POINTS.
3. DELETED
4. FIRE PROTECTION DEMINERALIZED WATER SUPPLY TO DELUGE SYSTEMS FOR FILTRATION UNITS CP1-VAFUPK-17 AND CP1-VAFUPK-18 INSIDE CONTAINMENT UNIT 1.
5. DELETED
6. UNLESS OTHERWISE NOTED, ALL DRAINS ARE COLLECTED LOCALLY UNDER ADMINISTRATIVE CONTROLS.
7. VALVE NUMBERS IN PARENTHESIS ARE VALVE BODY NUMBERS PER ECE 5.04-02, AND ARE ENTERED FOR HISTORICAL INFORMATION ONLY.

REFERENCE DRAWINGS:

1. FLOW DIAGRAM FIRE PROTECTION SYSTEM DRAWING M1-0225 AND M1-0200 FOR SYMBOLS AND GENERAL NOTES
2. GRINNELL FIRE PROTECTION DRAWINGS 131 AND 132 (PO CP-702)

FSAR FIGURE 9.5-48

CP 12

THIS DRAWING CREATED ELECTRONICALLY

CLASS I
(NUCLEAR SAFETY-RELATED)
SAFETY CLASS 1 SEISMIC CATEGORY I
SAFETY CLASS 2 CLASS IE
SAFETY CLASS 3 ASSOCIATED CIRCUITS

TXU ELECTRIC
CPSES
GLEN ROSE, TEXAS

FLOW DIAGRAM
CONTAINMENT BUILDING UNIT 1
FIRE PROTECTION

DWG. NO.	SH. NO.	REV.
M1-0225	05	CP-12

vs000097.dgn

$$$$$$$D:\TESS$$$$$

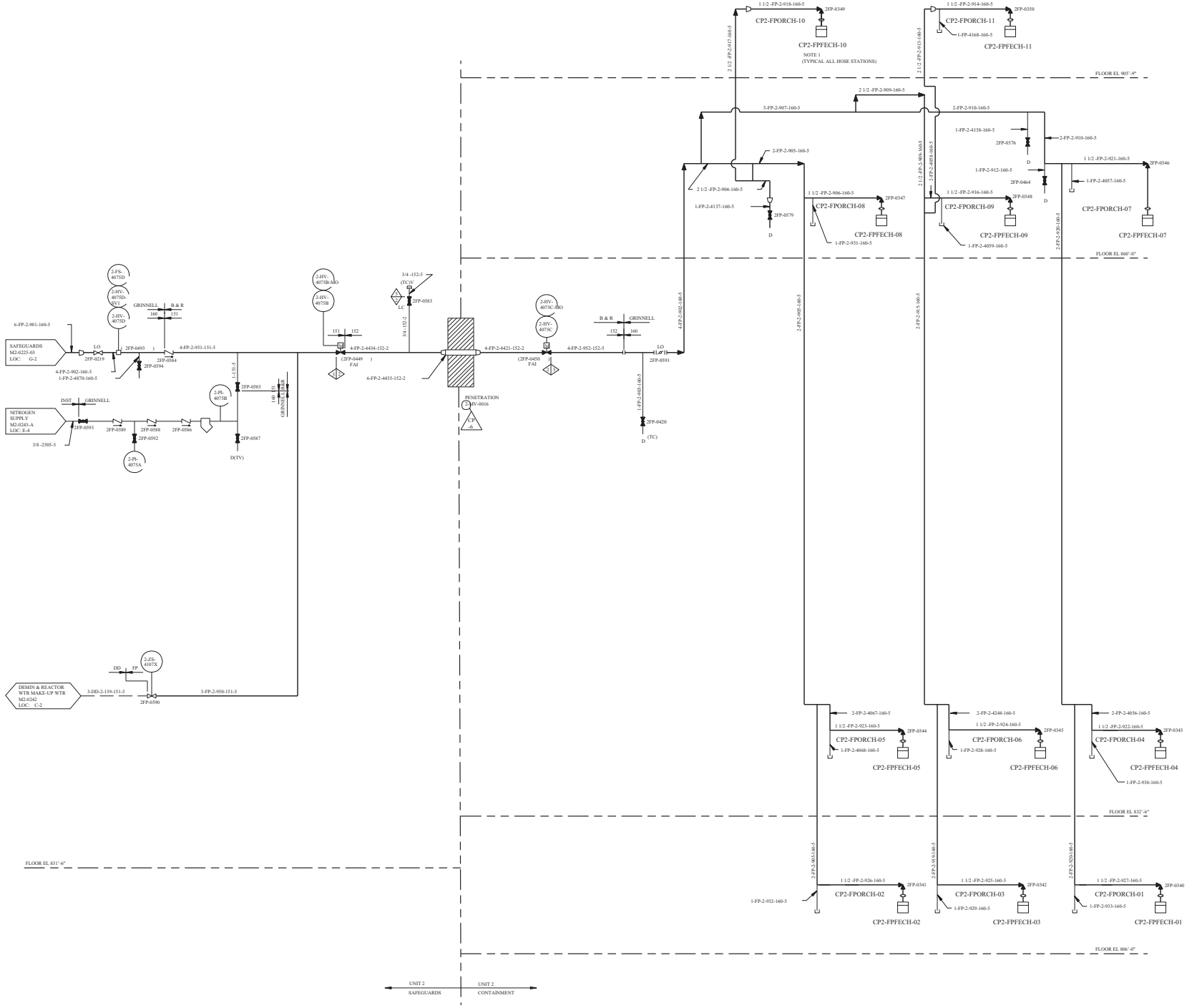

REV	DWN	CHK	APVD	REMARKS
CP-6	RAM 10-01-1998			THIS DRAWING REVISED TO INCORPORATE AN EDITORIAL CHANGE AS NOTED.

NOTES

1. FOR CONTAINMENT PREACCESS FILTRATION UNIT AND CP2-VAFUPK-18 CP2-VAFUPK-17 DELUGE SYSTEM ARRANGEMENT, SEE FLOW DIAGRAM M2-0242.
2. PROVIDE VENT VALVES AT THE HIGH POINTS AND DRAIN VALVE AT THE LOW POINTS.
3. UNLESS OTHERWISE NOTED, ALL DRAINS ARE COLLECTED LOCALLY UNDER ADMINISTRATIVE CONTROLS.
4. FOR FIRE PROTECTION COMMON SUPPPLY HEADER/UNIT 2 SYSTEM BOUNDARIES, SEE DRAWINGS M2-0225-01, M2-0225-03, M1-0225-02 AND M1-0225-06.

REFERENCE DRAWINGS

1. FLOW DIAGRAM FIRE PROTECTION SYSTEM DWG M1-0225 AND MECHANICAL DWG M1-0200.
2. M2-1990 SHEETS 119 AND 120.

FSAR FIGURE 9.5-48

THIS DRAWING CREATED ELECTRONICALLY

CLASS I
(NUCLEAR SAFETY-RELATED)
SAFETY CLASS 1 SEISMIC CATEGORY I
SAFETY CLASS 2 CLASS 1E
SAFETY CLASS 3 ASSOCIATED CIRCUITS

TXU ELECTRIC
CPSES
GLEN ROSE, TEXAS

FLOW DIAGRAM
CONTAINMENT BUILDING UNIT 2
FIRE PROTECTION

DWG. NO.	SH. NO.	REV.
M2-0225	05	CP-6

$$$$$$$D\TESSSSS

me0001b3.dgn

FIGURES 9.5-49 AND 9.5-50
HAVE BEEN DELETED

FIGURES 9.5-49 AND 9.5-50
HAVE BEEN DELETED

CPE

NOTE:
FOR LOCATION OF TANKS
SEE DWG FIG 9.5-8 & 1.2-8

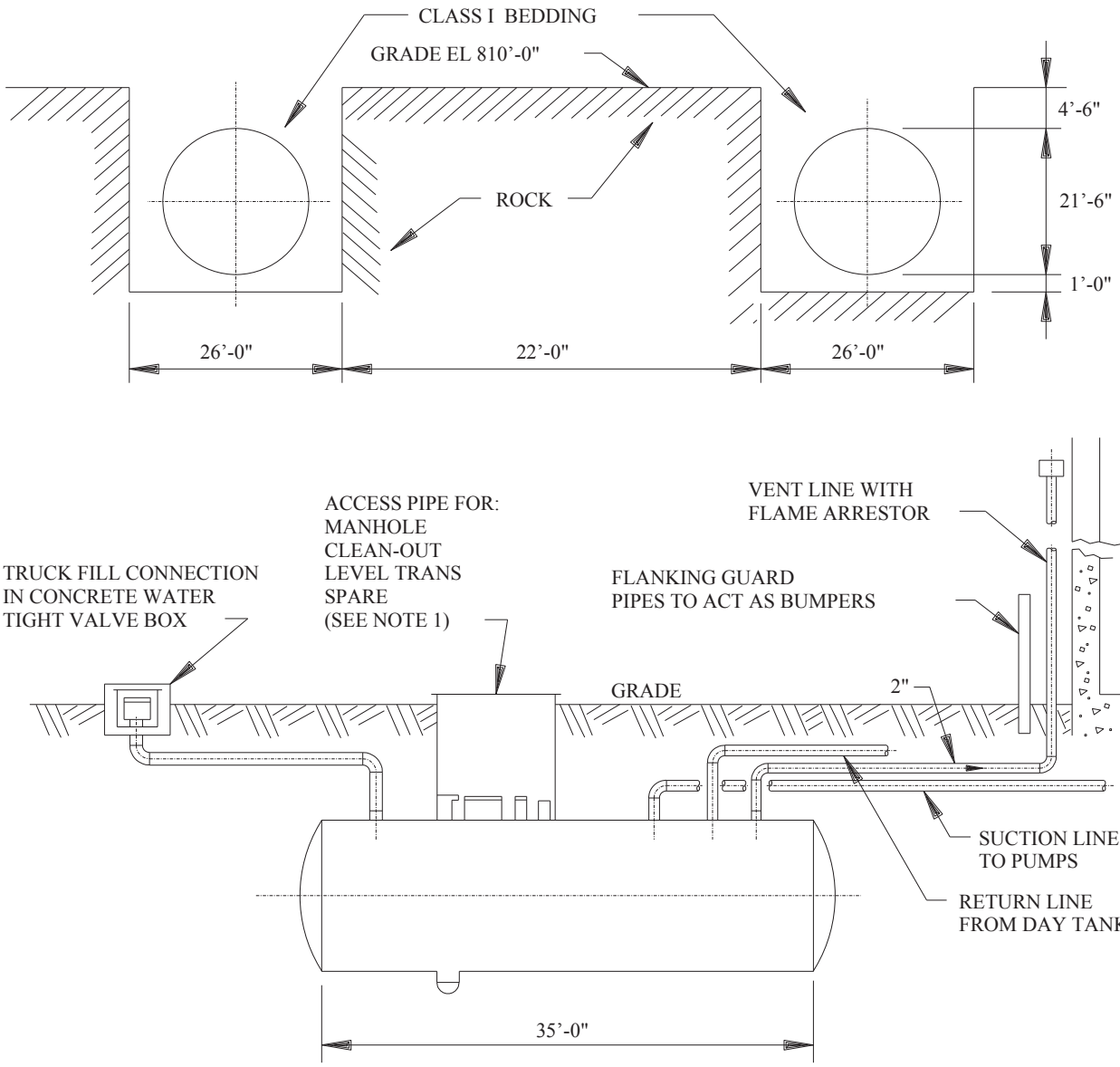

DIESEL FUEL OIL TANK

NOTES:

1. SAMPLE GRAB POINT CONNECTION PROVIDES ADDITIONAL TRUCK FILL METHOD VIA USE OF SPECIAL DIFFUSER TOOL. THIS BOX IS MAINTAINED WATERTIGHT.

Amendment 104

COMANCHE PEAK N P P FINAL SAFETY ANALYSIS REPORT UNITS 1 AND 2
DIESEL GENERATOR FUEL OIL STORAGE TANKS
FIGURE 9.5-51

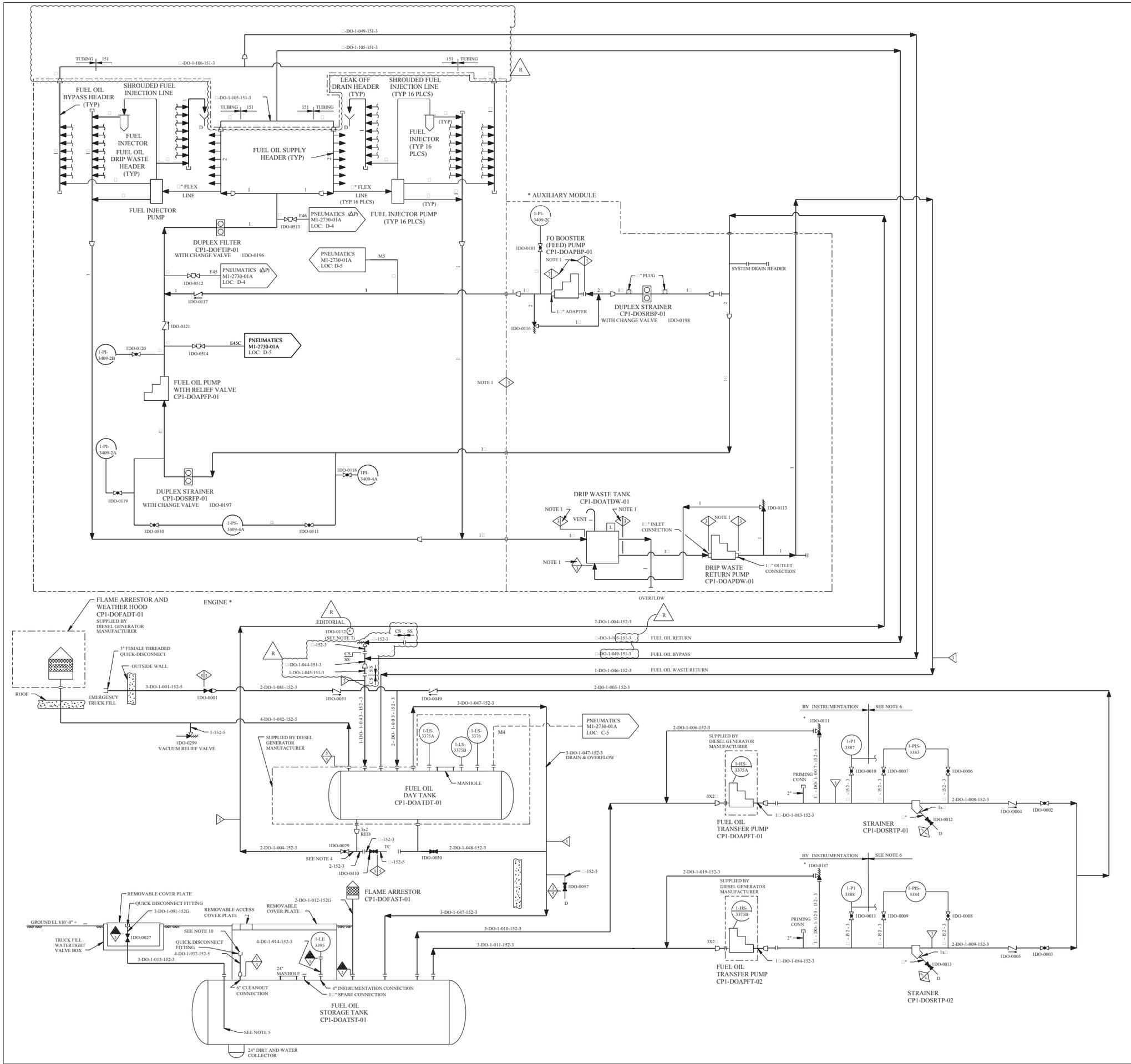

REV	DWN	CHKD	APVD	REMARKS
CP-8	DLK 11-26-2012	MM 01-08-2013		THIS DRAWING REVISED TO INCORPORATE DESIGN CHANGE FDA 2012-000130-02-00 PER SK-0001-12-000130-02-00. EDITORIAL CHANGE AS NOTED.

NOTES:

1. NUCLEAR SAFETY RELATED PER 1EEE-387. NOT IN SCOPE OF ANSI N18.2. EXEMPT FROM CODE STAMP.
2. SEE DRAWING M2-0215 SH F FOR UNIT 2 DIESELS (CP2-MEDGEE-01 AND -02).
3. ALL ITEMS MARKED * ARE SUPPLIED BY TRANSAMERICA DELAVAL.
4. THE FIRST HORIZONTAL PIPING RUN IS SLOPED BACK TOWARDS VALVE 1D0-0410.
5. FILL LINE RUN TO WITHIN 2 FEET OF BOTTOM OF TANK. THE END OF THE FILL LINE IS CAPPED AND THE LAST 2 FEET OF THE PIPE IS PERFORATED WITH APPROXIMATELY 16 1" DIAMETER HOLES.
6. TO FUEL OIL "GRAB SAMPLE" CONNECTION SEE M1-2533 SH 02 (NON-SAFETY RELATED).
7. EQUIPMENT IS SAFETY CLASS 3, NON-ASME.
8. ALL DRAINS ARE □" UNLESS OTHERWISE NOTED.
9. SEE FORM CAT 123 FROM CP-0034-001A FOR VENDOR SUPPLIED MECHANICAL SYMBOLS.
10. ALTERNATE FILL METHOD CONNECTION POINT. BOX WITH ACCESS COVER PLATE IS MAINTAINED WATERTIGHT.

EQUIPMENT SCHEDULE

MANUFACTURERS I.D.	TAG NO.

FSAR FIGURE 9.5-52

THIS DRAWING CREATED ELECTRONICALLY

DRAWING M1-0215 REV CP-11
HAS BEEN SPLIT INTO THE FOLLOWING SHEETS:

M1-0215
M1-0215-B
M1-0215-D
M1-0215-F
M1-0215-H

CLASS I
(NUCLEAR SAFETY-RELATED)
SAFETY CLASS 1 — SEISMIC CATEGORY I
SAFETY CLASS 2 — CLASS 1E
SAFETY CLASS 3 — ASSOCIATED CIRCUITS

LUMINANT
CPNPP
GLEN ROSE, TEXAS

FLOW DIAGRAM
DIESEL FUEL OIL PIPING
CP1-MEDGEE-01

DWG NO. M1-0215 | SH. NO. F | REV. CP-8

REF CKD CP-5 4/23/98

SSSSSSSDATESSSSSSS

me102410.dgn M1-0215-F

< FINAL PRINT >

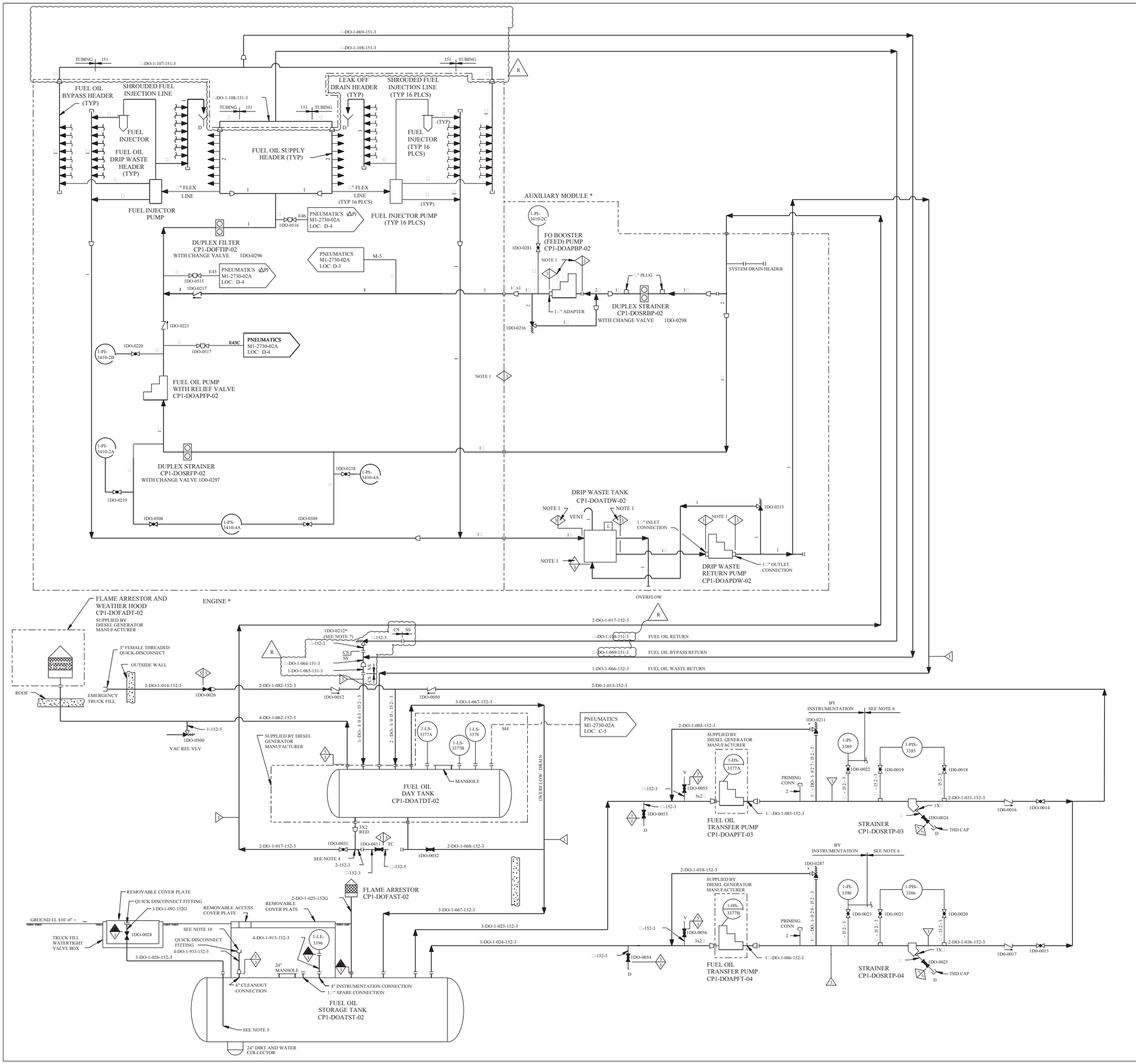

REV	DWN	CHKD	APVD	REMARKS
CP-9	DLK 11-29 2012	MM 01-11 2013		THIS DRAWING REVISED TO INCORPORATE DESIGN CHANGE FDA 2012-000130-03-00 PER SK-0001-12-000130-03-00.

NOTES:

1. NUCLEAR SAFTEY RELATED PER 1EEE-387. NOT IN SCOPE OF ANSI N18.2. EXEMPT FROM CODE STAMP.
2. SEE DWG M2-0215 SH G FOR UNIT 2 DIESELS (CP2-MEDGEE-01 AND CP2-MEDGEE-02).
3. ALL ITEMS MARKED * ARE SUPPLIED BY TRANSAMERICA DELAVAL.
4. THE FIRST HORIZONTAL PIPING RUN IS SLOPED BACK TOWARD VALVE 1DO-0411.
5. FILL LINE RUN TO WITHIN 2 FEET OF BOTTOM OF TANK. THE END OF THE FILL LINE IS CAPPED AND THE LAST 2 FEET OF THE PIPE IS PERFORATED WITH APPROXIMATELY 16-1" DIAMETER HOLES.
6. TO FUEL OIL "GRAB SAMPLE" CONNECTION SEE M1-2533-02 (NON-SAFETY RELATED).
7. EQUIPMENT IS SAFETY CLASS 3, NON-ASME.
8. ALL DRAINS ARE □" UNLESS OTHERWISE NOTED.
9. SEE FORM CAT-123 FROM CP-0034-001A FOR VENDOR SUPPLIED MECHANICAL SYMBOLS.
10. ALTERNATE FILL METHOD CONNECTION POINT. BOX WITH ACCESS COVER PLATE IS MAINTAINED WATERTIGHT.

EQUIPMENT SCHEDULE

MANUFACTURERS I.D.	TAG NO.

FSAR FIGURE 9.5-52

THIS DRAWING CREATED ELECTRONICALLY

DRAWING M1-0215-A REV CP-6
HAS BEEN SPLIT INTO THE FOLLOWING SHEETS:

M1-0215-A
M1-0215-C
M1-0215-E
M1-0215-G
M1-0215-J

CLASS I
(NUCLEAR SAFETY-RELATED)
SAFETY CLASS 1 SAFETY CLASS 2 SAFETY CLASS 3 — SEISMIC CATEGORY I CLASS 1E ASSOCIATED CIRCUITS

LUMINANT
CPNPP
GLEN ROSE, TEXAS

FLOW DIAGRAM
DIESEL FUEL OIL PIPING
CP1-MEDGEE-02

DWG. NO. M1-0215 | SH. NO. G | REV. CP-9

< FINAL PRINT >

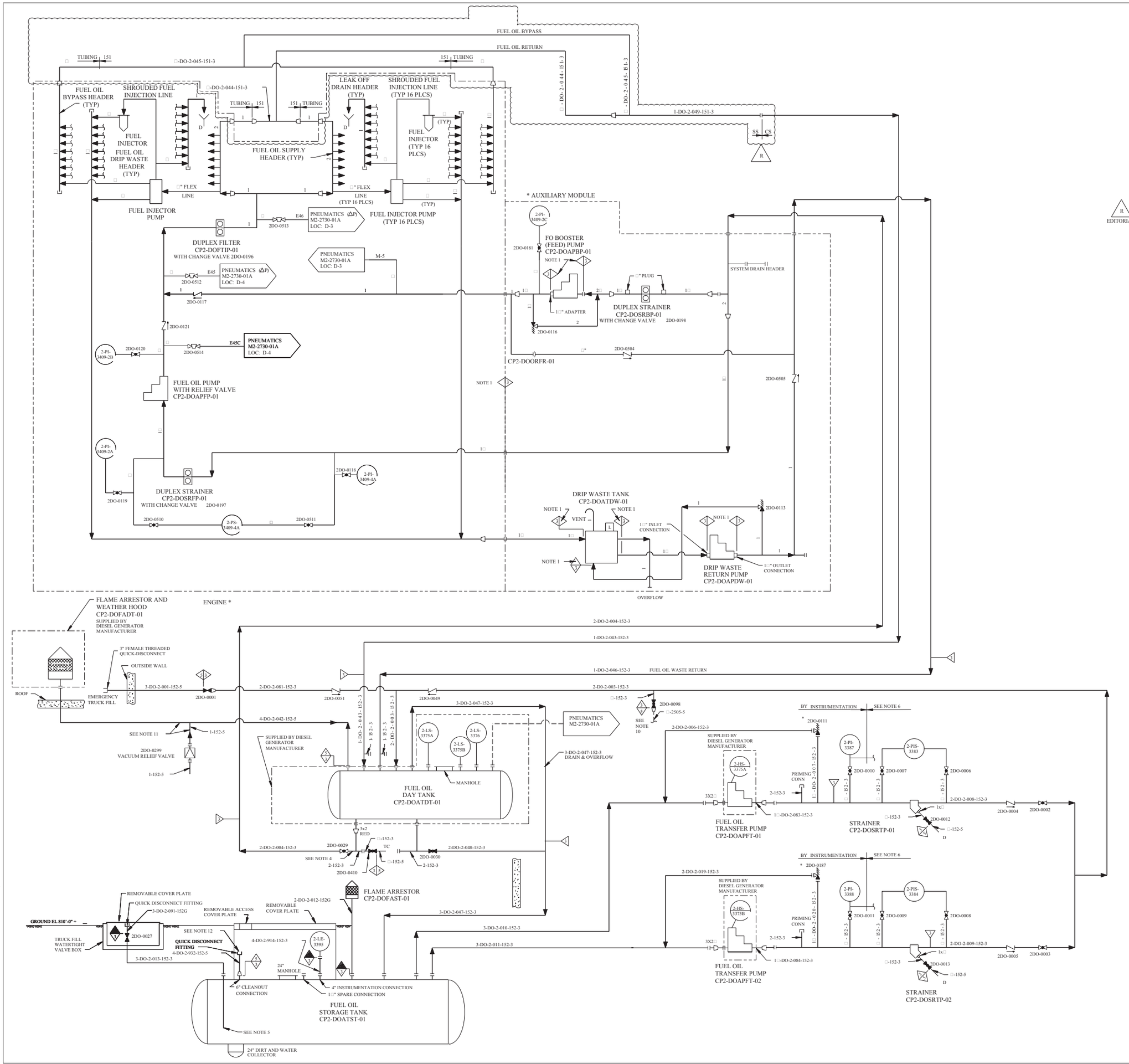

REV	DWN	CHKD	APVD	REMARKS
CP-9	DLK 04-08-2013	MM 07-17-2013		THIS DRAWING REVISED TO INCORPORATE DESIGN CHANGE FDA 2012-0001304-04-00 PER SK-0001-12-0001304-04-00. EDITORIAL CHANGE AS NOTED.

NOTES:

1. NUCLEAR SAFETY RELATED PER IEEE-387. NOT IN SCOPE OF ANSI N18.2. EXEMPT FROM CODE STAMP.
2. SEE DRAWING M1-0215 SH-F AND SH-G FOR UNIT 1 DIESELS (CP1-MEDGEE-01 AND CP1-MEDGEE-02).
3. ALL ITEMS MARKED * ARE SUPPLIED BY TRANSAMERICA DELAVAL.
4. THE FIRST HORIZONTAL PIPING RUN IS SLOPED BACK TOWARDS VALVE 2DO-0410 .
5. FILL LINE RUN TO WITHIN 2 FEET OF BOTTOM OF TANK. THE END OF THE FILL LINE IS CAPPED AND THE LAST 2 FEET OF THE PIPE IS PERFORATED WITH APPROXIMATELY 16 1" DIAMETER HOLES.
6. TO FUEL OIL "GRAB SAMPLE" CONNECTION SEE M2-2533 SH 02 (NON-SAFETY RELATED).
7. DELETED
8. ALL DRAINS ARE □" UNLESS OTHERWISE NOTED.
9. SEE FORM CAT 123 FROM CP-0034-001A FOR VENDOR SUPPLIED MECHANICAL SYMBOLS.
10. TO FUEL OIL SAMPLE STATION. (BY INSTRUMENTATION)
11. FUEL OIL DAY TANK VENT PIPING IS SEISMICALLY ANALYZED.
12. ALTERNATE FILL METHOD CONNECTION POINT. BOX WITH ACCESS COVER PLATE IS MAINTAINED WATERTIGHT.

R EDITORIAL

EQUIPMENT SCHEDULE

MANUFACTURERS I.D.	TAG NO.

FSAR FIGURE 9.5-52

THIS DRAWING CREATED ELECTRONICALLY

DRAWING 2323-M2-0215 REV CP-3
HAS BEEN SPLIT INTO THE FOLLOWING SHEETS:

M2-0215	M2-0215-E
M2-0215-A	M2-0215-F
M2-0215-B	M2-0215-G
M2-0215-C	M2-0215-H
M2-0215-D	M2-0215-J

CLASS I
(NUCLEAR SAFETY-RELATED)
SAFETY CLASS 1 — SEISMIC CATEGORY I
SAFETY CLASS 2 — CLASS 1E
SAFETY CLASS 3 — ASSOCIATED CIRCUITS

LUMINANT
CPNPP
GLEN ROSE, TEXAS

FLOW DIAGRAM
DIESEL FUEL OIL PIPING
CP2-MEDGEE-01

DWG. NO. M2-0215 | SH. NO. F | REV. CP-9

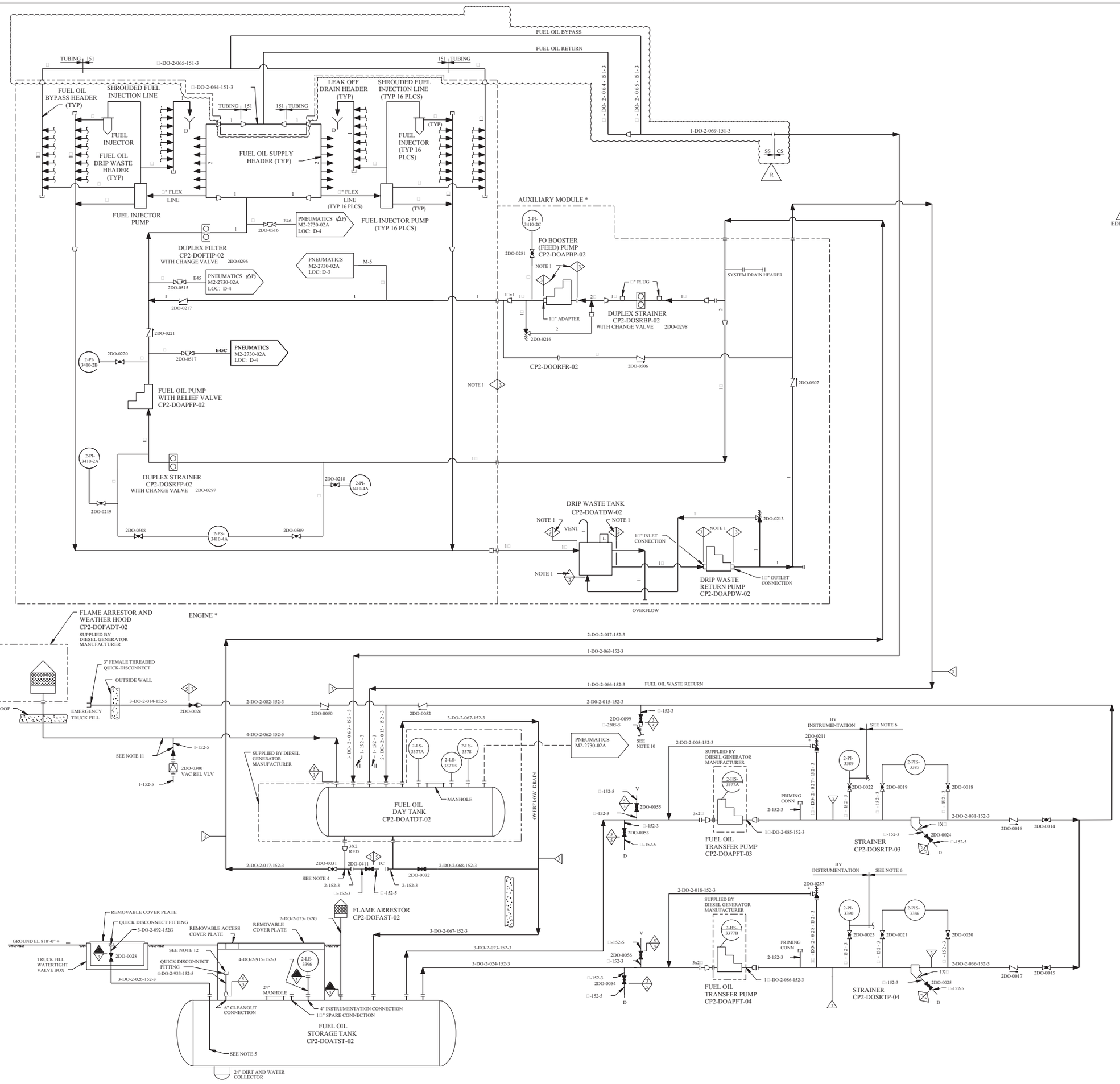

REV	DWN	CHK	APVD	REMARKS
CP-12	DLK 04-08 2013	MM 08-20 2013		THIS DRAWING REVISED TO INCORPORATE DESIGN CHANGE FDA 2012-000130-05-00 PER SC-0001-12-000130-05-00. EDITORIAL CHANGE AS NOTED.

NOTES:

1. NUCLEAR SAFETY RELATED PER IEEE-387. NOT IN SCOPE OF ANSI N18.2. EXEMPT FROM CODE STAMP.
2. SEE DRAWING M1-0215 SH -F AND SH -G FOR UNIT 1 DIESELS (CP1-MEDGEE-01 AND CP1-MEDGEE-02).
3. ALL ITEMS MARKED * ARE SUPPLIED BY TRANSAMERICA DELAVAL.
4. THE FIRST HORIZONTAL PIPING RUN IS SLOPED BACK TOWARDS VALVE 2DO-0411 .
5. FILL LINE RUN TO WITHIN 2 FEET OF BOTTOM OF TANK. THE END OF THE FILL LINE IS CAPPED AND THE LAST 2 FEET OF THE PIPE IS PERFORATED WITH APPROXIMATELY 16 1" DIAMETER HOLES.
6. TO FUEL OIL "GRAB SAMPLE" CONNECTION SEE M2-2533 SH 02 (NON-SAFETY RELATED).
7. DELETED
8. ALL DRAINS ARE □" UNLESS OTHERWISE NOTED.
9. SEE FORM CAT 123 FROM CP-0034-001A FOR VENDOR SUPPLIED MECHANICAL SYMBOLS.
10. TO FUEL OIL SAMPLE STATION (BY INSTRUMENTATION).
11. **FUEL OIL DAY TANK VENT PIPING IS SEISMICALLY ANALYZED.**
12. ALTERNATE FILL METHOD CONNECTION POINT. BOX WITH ACCESS COVER PLATE IS MAINTAINED WATERTIGHT.

R EDITORIAL

EQUIPMENT SCHEDULE

MANUFACTURERS I.D.	TAG NO.

FSAR FIGURE 9.5-52

THIS DRAWING CREATED ELECTRONICALLY

DRAWING 2323-M2-0215 REV CP-3
HAS BEEN SPLIT INTO THE FOLLOWING SHEETS:

M2-0215	M2-0215-E
M2-0215-A	M2-0215-F
M2-0215-B	M2-0215-G
M2-0215-C	M2-0215-H
M2-0215-D	M2-0215-J

CLASS I
(NUCLEAR SAFETY-RELATED)
SAFETY CLASS 1 SAFETY CLASS 2 SAFETY CLASS 3
SEISMIC CATEGORY I CLASS IE ASSOCIATED CIRCUITS

LUMINANT
CPNPP
GLEN ROSE, TEXAS

FLOW DIAGRAM
DIESEL FUEL OIL PIPING
CP2-MEDGEE-02

DWG. NO. M2-0215 | SH. NO. G | REV. CP-12

$$$$$$$ DATE $$$$$$$

me102420.dgn A M2-0215-G B C D E F G < FINAL PRINT > H

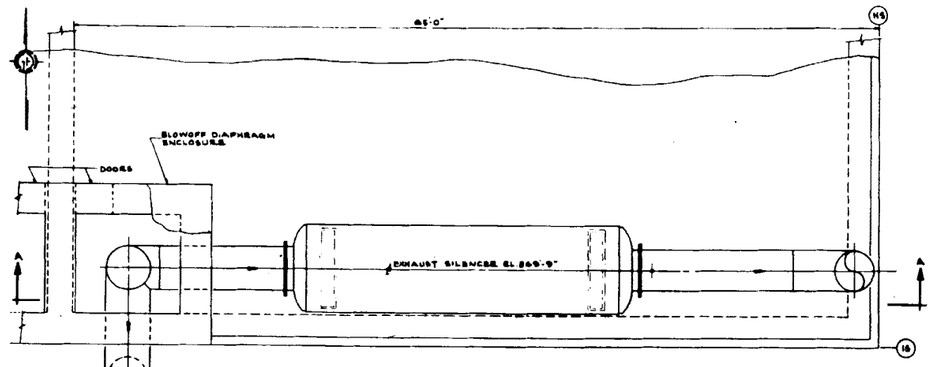

PARTIAL ROOF PLAN - SLAB EL 865'-0"

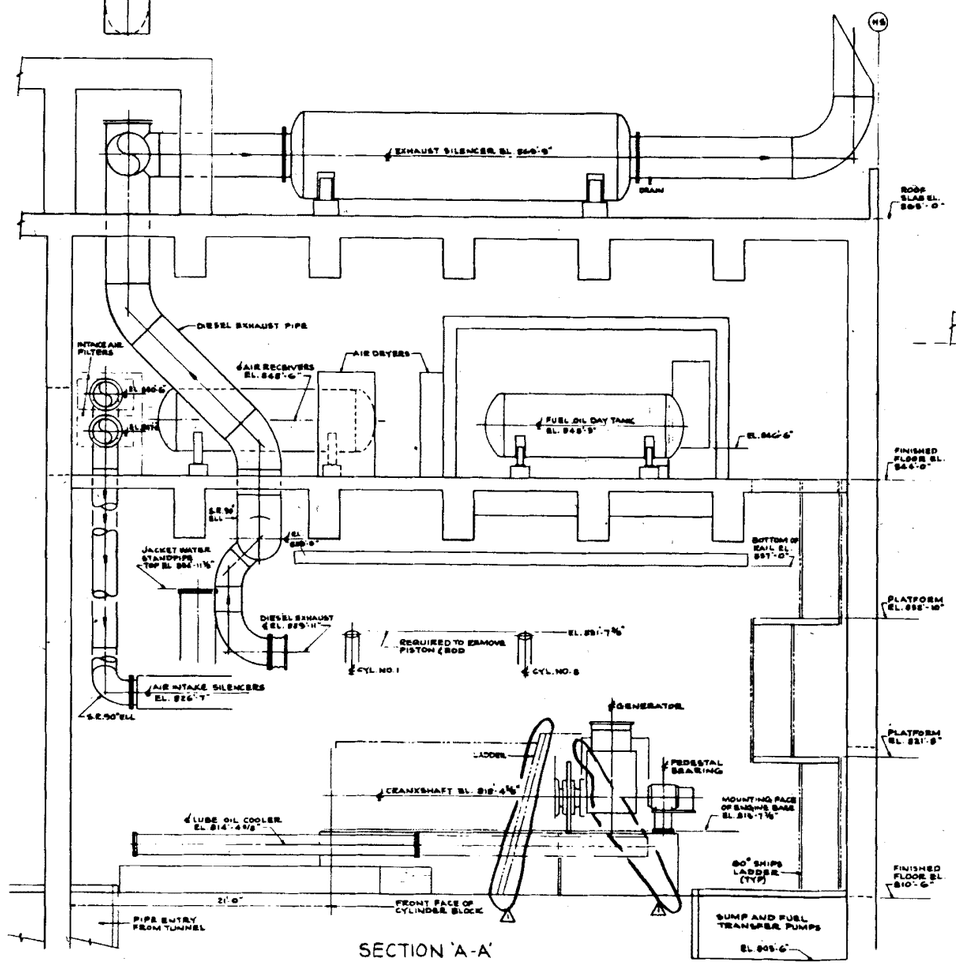

SECTION 'A-A'

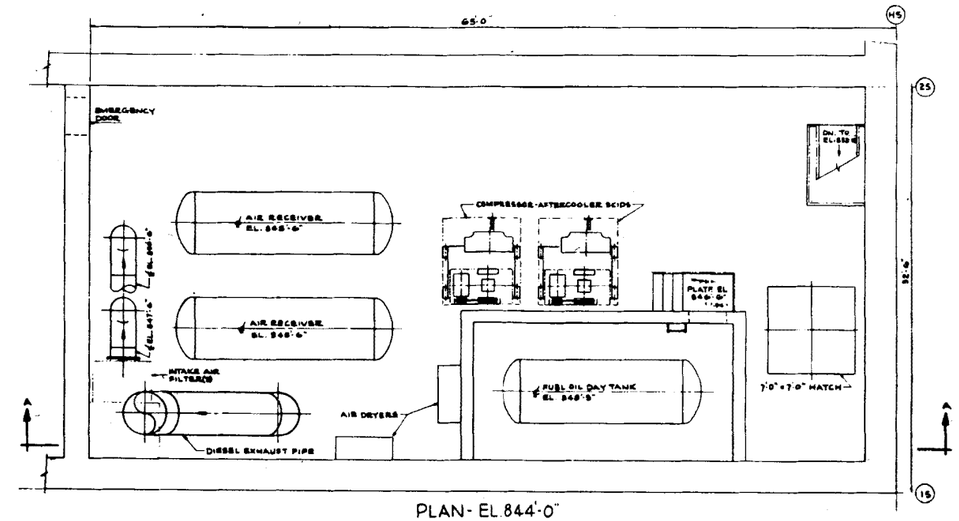

PLAN - EL 844'-0"

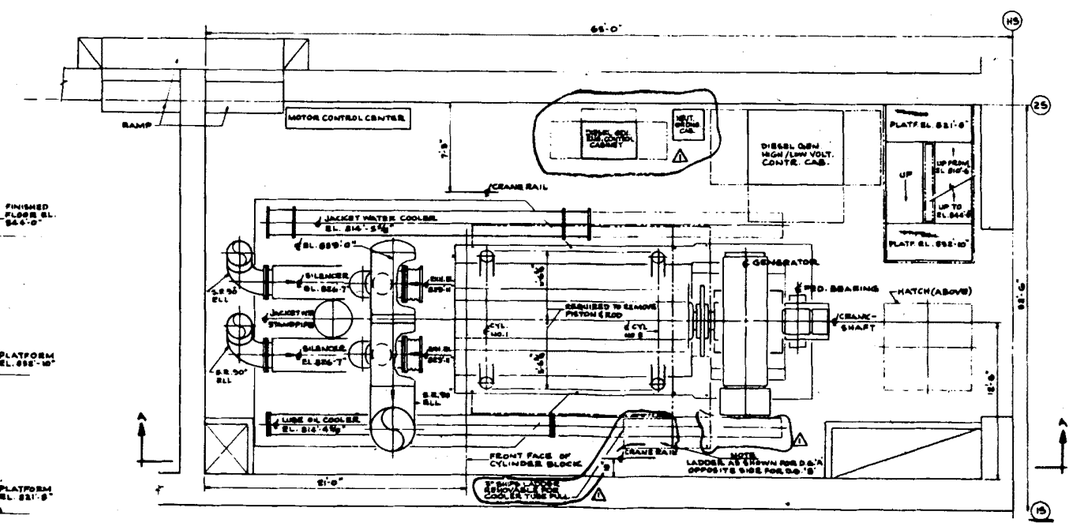

PLAN - EL. 810'-6"

WORK THIS DRAWING WITH 2323-MI-0017

June 15, 1978

COMANCHE PEAK S.E.S.
FINAL SAFETY ANALYSIS REPORT
UNITS 1 and 2

GENERAL ARRANGEMENT
DIESEL GENERATOR AREA

FIGURE 9.5-53

2323-MI-0018, REV. 1

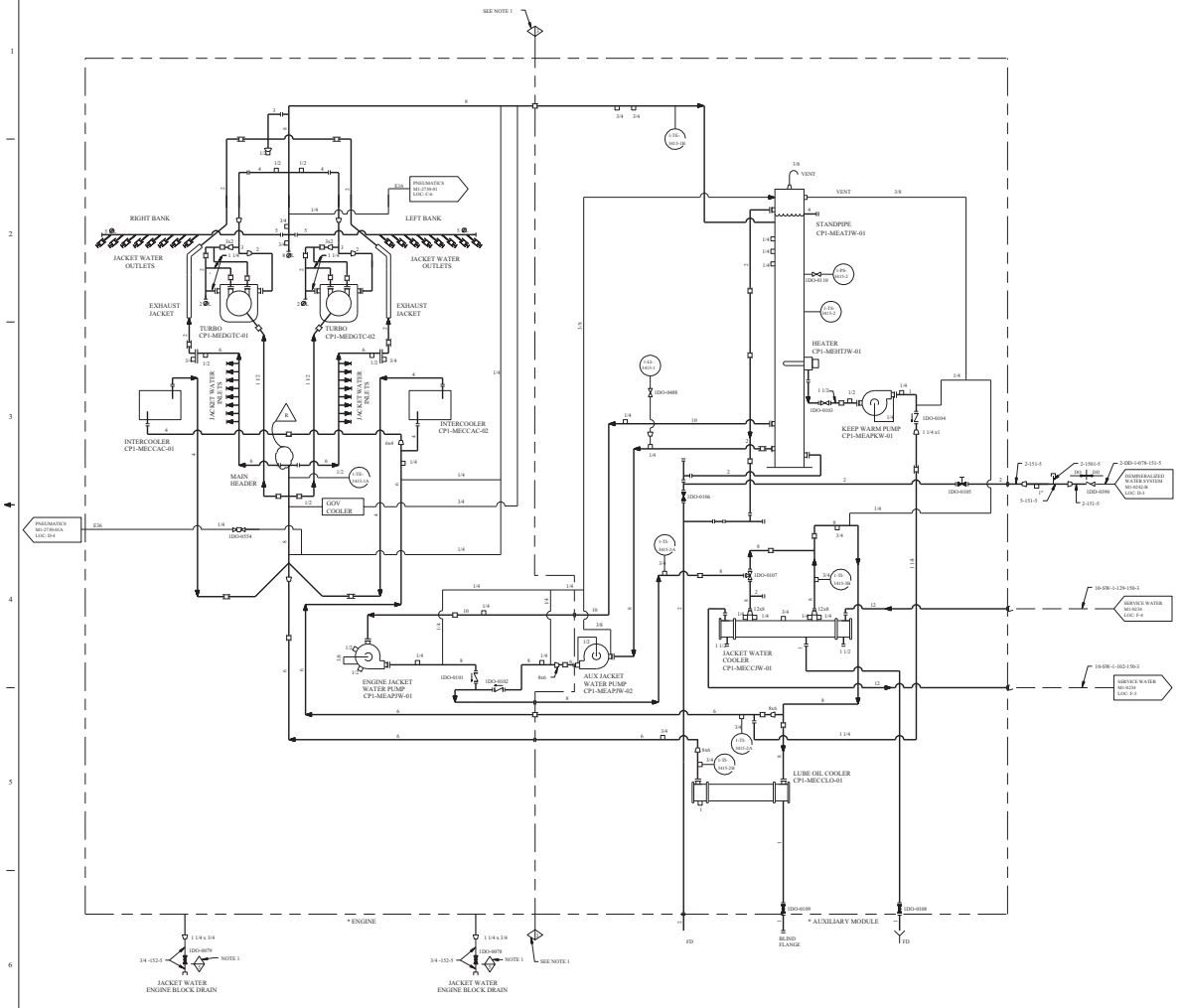

REV	DRWN	DSGN	APVD	REMARKS
P-10				THIS DRAWING REVISED TO INCORPORATE DESIGN CHANGE FSA-2001-000101-01 AS PER SILANO-01-000101-01-00

LEGEND

- DRESSER COUPLING
- 1/2 COUPLING WITH PIPE PLUG

NOTES

1. NUCLEAR SAFETY RELATED PER IEEE-197. NOT IN SCOPE O ANSI N18.2 EXEMPT FROM ASME CODE STAMPING.
2. SEE M2-0215-H FOR UNIT 2 DIESELS (CP2-MEDGEE-01, -02).
3. ALL ITEMS MARKED * ARE SUPPLIED BY TRANSAMERICA DELAVAL.
4. SEE FORM CAT 123 FROM CP-0634-006A FOR VENDOR SUPPLIED MECHANICAL SYMBOLS.

EQUIPMENT SCHEDULE

MANUFACTURERS I D	TAG NO

FSAR FIGURE 9.5.54

FILTER BOXES PRINTED ELECTRONICALLY

DRAWING M1-0215 REV CP-11
HAS BEEN SPLIT INTO THE FOLLOWING SHEETS:
M1-0215
M1-0215-H
M1-0215-D
M1-0215-F
M1-0215-H

CLASS I

(NUCLEAR SAFETY-RELATED)

SAFETY CLASS 1 SEISMIC CATEGORY I
SAFETY CLASS 1 QUALITY GROUP D
SAFETY CLASS 1 ASME/AWS CIRCUITS

TU ELECTRIC
CPSES
GLEN ROSE, TEXAS

FLOW DIAGRAM
JACKET WATER PIPING
CP1-MEDGEE-01

DWG NO. M1-0215 | SH. NO. H | REV. CP-10

REF CKD CP-6 4/1/95

DRESSER-RAND CORPORATION

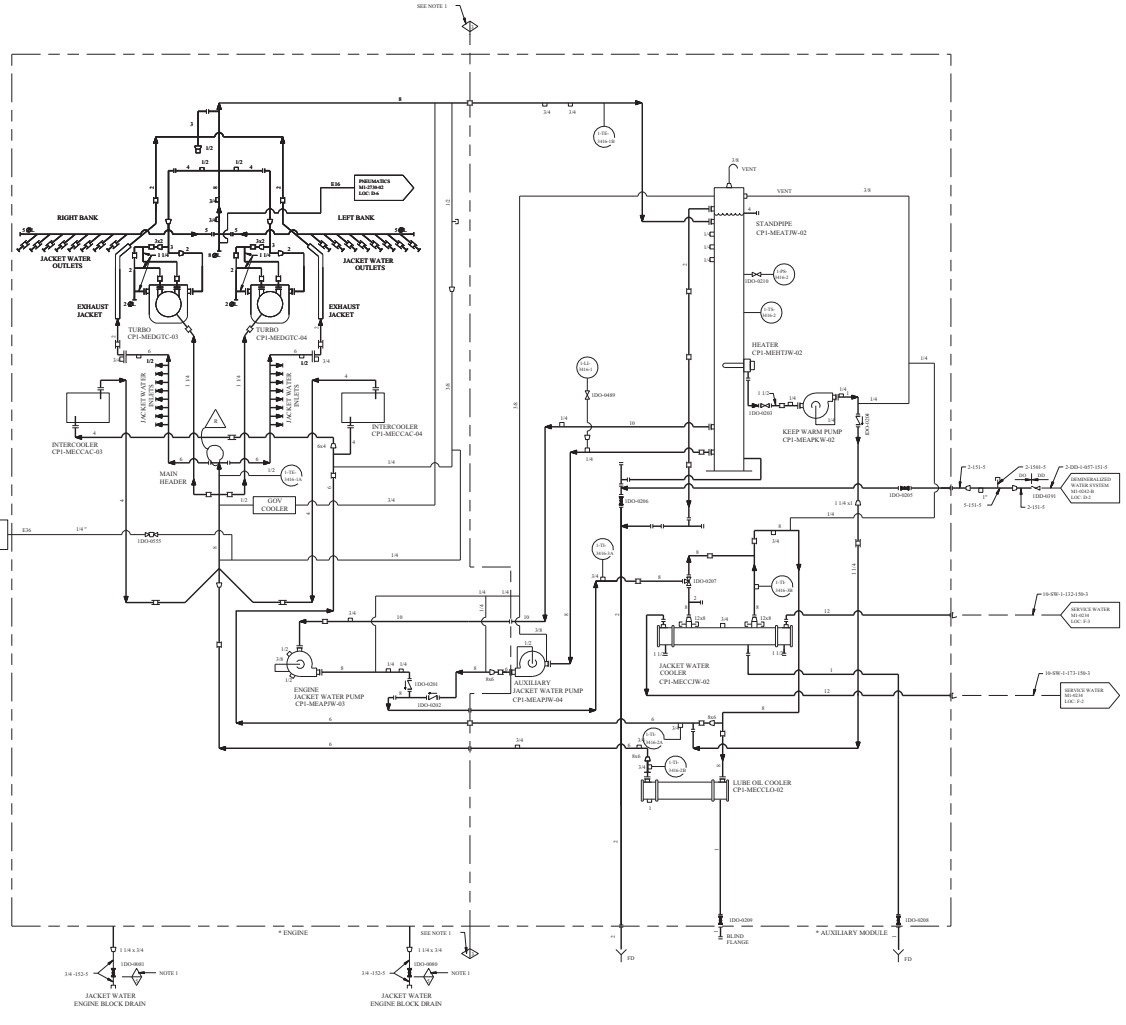

REV	DRWN	DSGN	APVD	REMARKES
P-10				THIS DRAWING REVISED TO INCORPORATE DESIGN CHANGE FDA-2001-00010 AS PER SL-0002-01-00010-01-00.

LEGEND

- DRESSER COUPLING
- 1/2 COUPLING WITH PIPE PLUG

NOTES

1. NUCLEAR SAFETY RELATED PER IEEE-387. NOT IN SCOPE O ANSI N18.2 EXEMPT FROM ASME CODE STAMPING.
2. SEE M2-0215-J FOR UNIT 2 DIESELS (CP2-MEDGEE-01, -02).
3. ALL ITEMS MARKED * SUPPLIED BY TRANSAMERICA DELAVAL.
4. SEE FORM CAT 123 FROM CP-0634-001A FOR VENDOR SUPPLIED MECHANICAL SYMBOLS.

EQUIPMENT SCHEDULE

MANUFACTURERS I D	TAG NO

FSAR FIGURE 9.5-54

DRAWING - M1-0215-A REV CP-6
HAS BEEN SPLIT INTO THE FOLLOWING SHEETS:

M1-0215-A
M1-0215-C
M1-0215-E
M1-0215-G
M1-0215-J

CLASS I

(NUCLEAR SAFETY RELATED)
SAFETY CLASS 1 CLASS I STATIONARY I
SAFETY CLASS 2 CLASS IE
SAFETY CLASS 3 ASSOCIATED CIRCUITS

TU ELECTRIC
CPSES
GLEN ROSE, TEXAS

FLOW DIAGRAM
JACKET WATER PIPING
CP1-MEDGEE-02

DWG. NO. M1-0215 | SH. NO. J | REV. CP-10

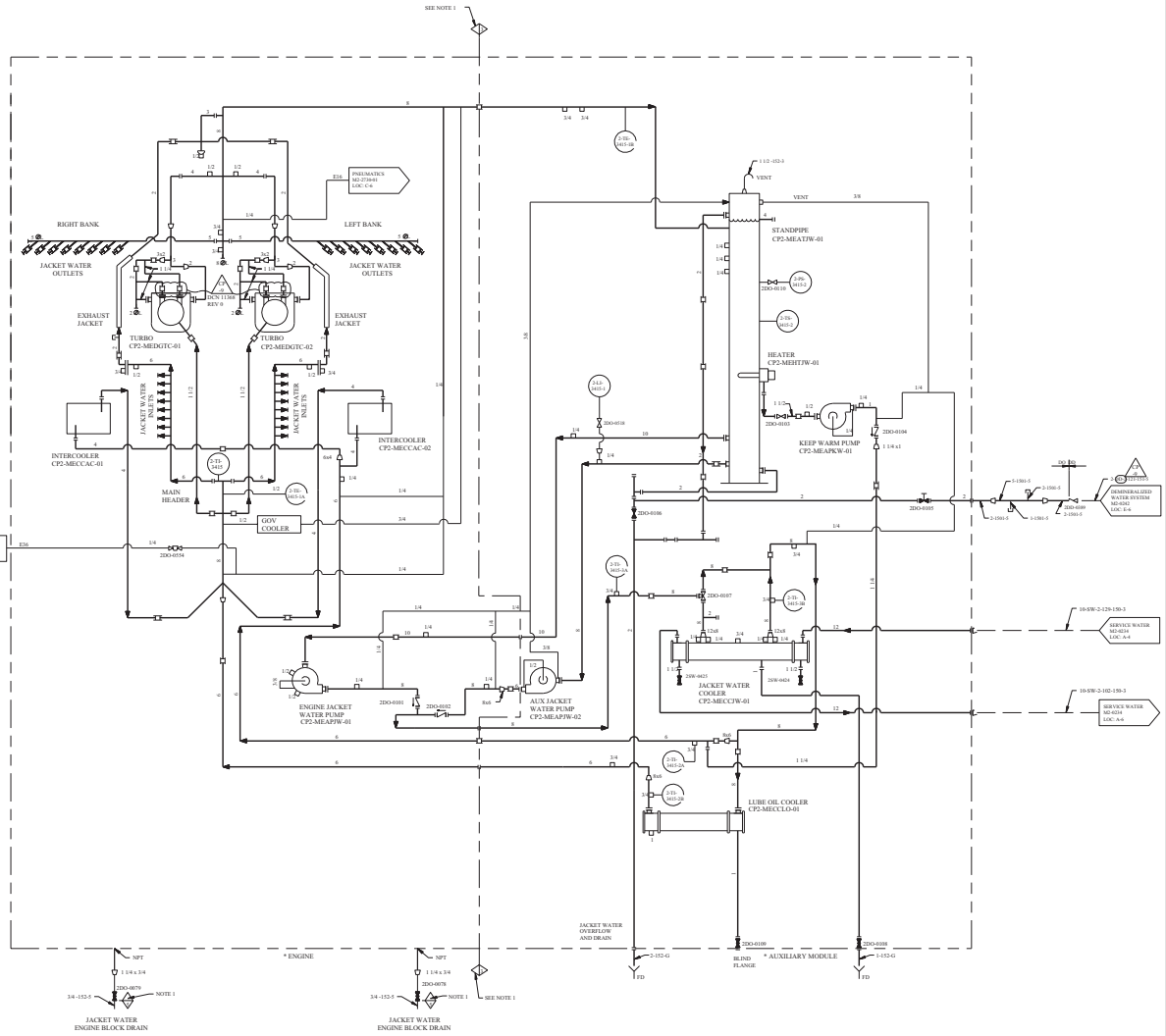

REV	DWN	CHKD	APVD	REMARKS
CP-9				THIS DRAWING REVISED TO INCORPORATE DESIGN CHANGE DCN 11368 REV 0. EDITORIAL CHANGES AS NOTED

NOTES

1. NUCLEAR SAFETY RELATED PER IEEE-387. NOT IN SCOPE OF ANSI N18.2 EXEMPT FROM ASME CODE STAMPING
2. SEE M1-0215 SH.H AND SH.J FOR UNIT 1 DIESELS (CP1-MEDGIE-01 AND CP1-MEDGIE-02)
3. ALL ITEMS MARKED * ARE SUPPLIED BY TRANSAMERICA DELAVAL.
4. SEE FORM CAT 123 FROM CP-0034-001A FOR VENDOR SUPPLIED MECHANICAL SYMBOLS.

LEGEND

- DRESSER COUPLING
- HALF COUPLING WITH PIPE PLUG

EQUIPMENT SCHEDULE

MANUFACTURERS I D	TAG NO

FSAR FIGURE 9.5-54

THIS DRAWING REVISED BY REVISION OF DRAWING 2123-M2-0215

DRAWING 2123-M2-0215 REV CP-3 HAS BEEN SPLIT INTO THE FOLLOWING SHEETS:	
M2-0215	M2-0215-G
M2-0215-A	M2-0215-F
	M2-0215-G
	M2-0215-H
M2-0215-D	M2-0215-J

CLASS I

(NUCLEAR SAFETY-RELATED)

SAFETY CLASS 1 SEISMIC CATEGORY I
SAFETY CLASS 2 QA CATEGORY I
SAFETY CLASS 3 ASME/ISO/IEC/CLSTS

TXU ELECTRIC
CPSES
GLEN ROSE, TEXAS

FLOW DIAGRAM
JACKET WATER PIPING
CP2-MEDGIEE-01

DWG. NO. M2-0215 | SH. NO. H | REV. CP-9

FINAL PRINT

REF 2-XD 21-0297 CP-4

ma0000mp.dgn

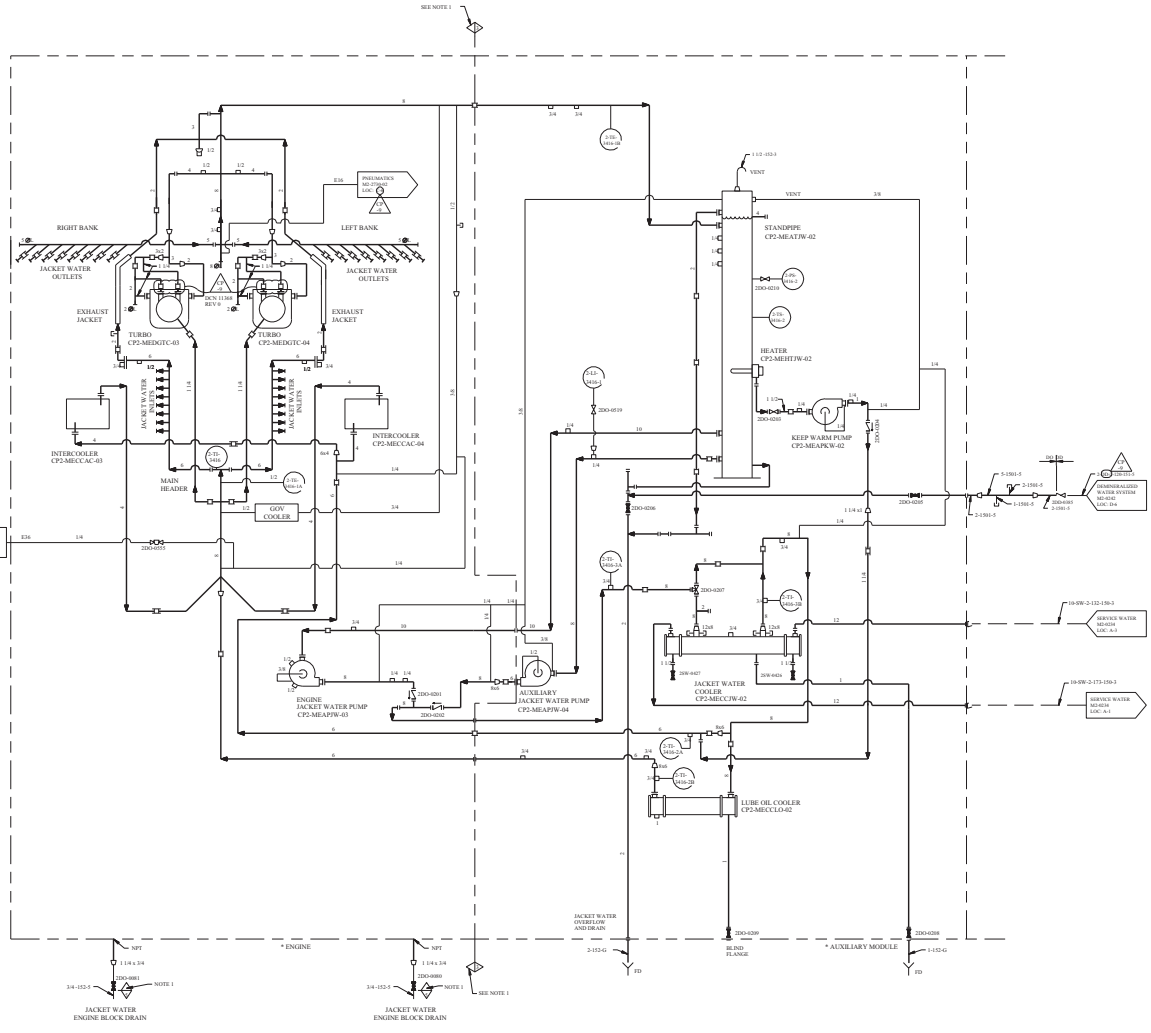

REV	DWG	CHG	DATE	REMARKS
CP-9				THIS DRAWING REVISED TO INCORPORATE DESIGN CHANGE DCN 11368 REV 0. EDITORIAL CHANGES AS NOTED

NOTES

1. NUCLEAR SAFETY RELATED PER IEEE-307. NOT IN SCOPE OF ANSI N18.2 EXEMPT FROM ASME CODE STAMPING.
2. SEE M1-0215 SH II AND SH I FOR UNIT 1 DIESELS (CP1-MEDGEE-01 AND CP1-MEDGEE-02)
3. ALL ITEMS MARKED * SUPPLIED BY TRANSAMERICA DELAVAL.
4. SEE FORM CAT 123 FROM CP-0034-001A FOR VENDOR SUPPLIED MECHANICAL SYMBOLS.

LEGEND

- DRESSER COUPLING
- HALF COUPLING WITH PIPE PLUG

EQUIPMENT SCHEDULE

MANUFACTURER'S I D	TAG NO

FSAR FIGURE 9.5-54

THIS DRAWING CIRCULATED ELECTRONICALLY

DRAWING M2-0215	REV CP-3
HAS BEEN SPLIT INTO THE FOLLOWING SHEETS:	
M2-0215	M2-0215-E
M2-0215-A	M2-0215-F
M2-0215-B	M2-0215-G
M2-0215-C	M2-0215-H
M2-0215-D	M2-0215-J

CLASS I
(NUCLEAR SAFETY-RELATED)
SAFETY CLASS 1 SEISMIC CATEGORY I
SAFETY CLASS 2 CLASS 1E
SAFETY CLASS 3 VIBRATED CIRCUITS

TXU ELECTRIC
CPSES
GLEN ROSE, TEXAS

FLOW DIAGRAM
JACKET WATER PIPING
CP2-MEDGEE-02

DWG. NO. M2-0215 | SH. NO. J | REV. CP-9

FINAL PRINT

m0000ag.dgn

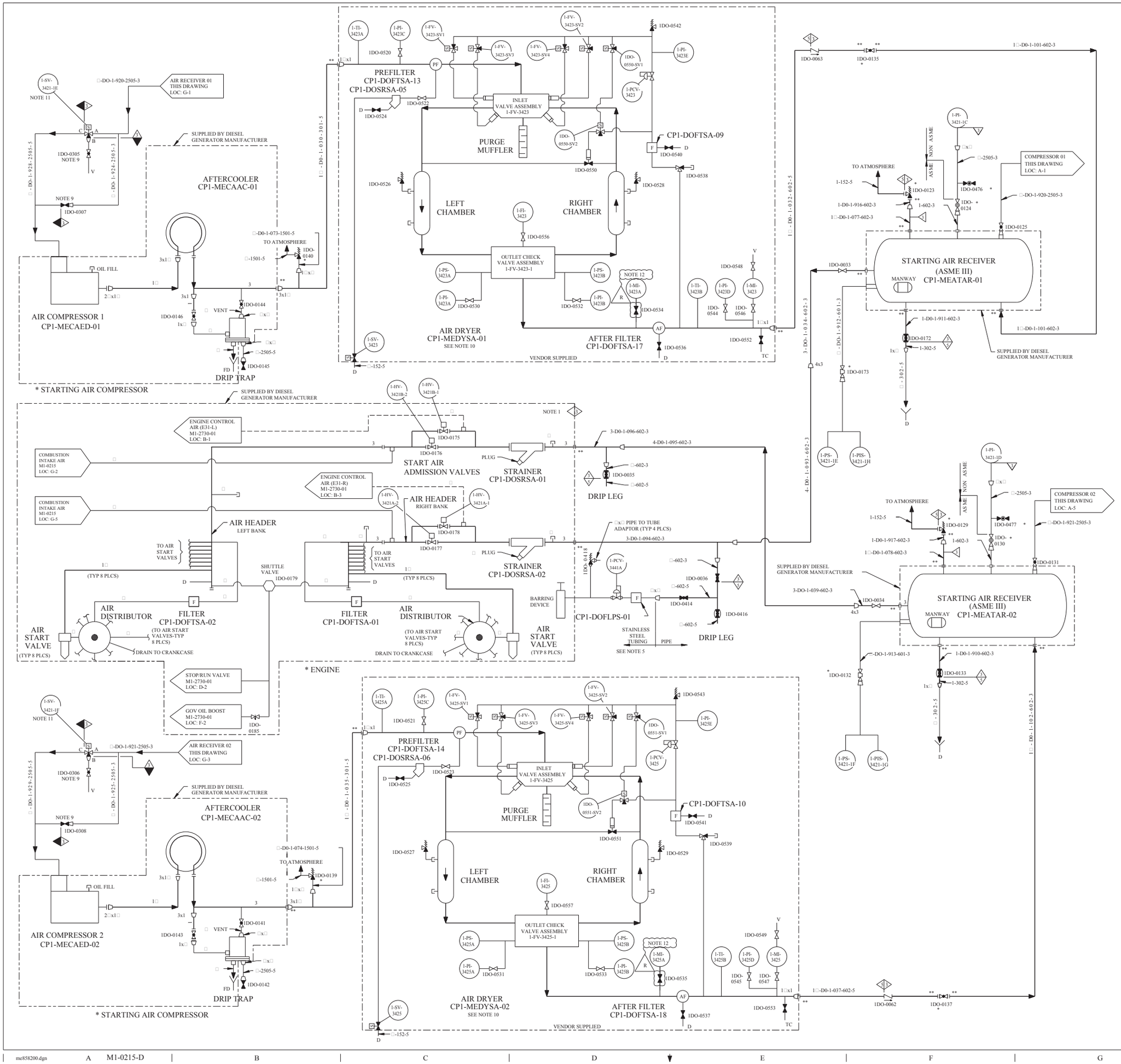

REV	DWN	CHKD	APVD	REMARKS
CP-25	JRMC 06-26-2014	DJL 06-26-2014		THIS DRAWING REVISED TO INCORPORATE DESIGN CHANGE FDA-2014-000145-01-00 PER SK-0001-14-000145-01-00.

NOTES:

1. NUCLEAR SAFETY RELATED PER IEEE-337, NOT IN SCOPE OF ANSI N18.2 EXEMPT FROM ASME CODE STAMPING.
2. SEE M2-0215 SH D FOR UNIT 2 DIESELS (CP2-MEDGEE-01 AND CP2-MEDGEE-02).
3. ALL ITEMS MARKED * ARE SUPPLIED BY DELAVAL.
4. SEE M1-2730-01,-01A,-02 AND -02A FOR PNEUMATIC CONTROL SCHEMATIC.
5. NON-NUCLEAR SAFETY CLASS TUBING INSTALLED PER SPEC CPES-I-1018.
6. FLANGE RATING SUPPLIED BY DIESEL GENERATOR MANUFACTURER.
7. ALL DRAINS ARE □* UNLESS OTHERWISE NOTED.
8. SEE FORM CAT-123 FROM CP-0034-0014 FOR VENDOR SUPPLIED MECHANICAL SYMBOLS.
9. REVERSE VALVE POSITION TO MANUALLY UNLOAD COMPRESSOR LP CYLINDERS.
10. VALVE POSITIONS AND FLOW DIRECTION SHOWN FOR LEFT CHAMBER DRYING AND RIGHT CHAMBER REGENERATION.
11. FLOW SCHEMATIC FOR SOLENOID VALVE:

DE-ENERGIZED — C, A, B
ENERGIZED — C, A, B

A: PRESSURE
B: VENT
C: CYLINDER

12. MOISTURE INDICATOR ABANDONED IN PLACE.

EQUIPMENT SCHEDULE

MANUFACTURERS I D	TAG NUMBER

FSAR FIGURE 9.5-55

THIS DRAWING CREATED ELECTRONICALLY

DRAWING M1-0215 REV CP-11
HAS BEEN SPLIT INTO THE FOLLOWING SHEETS:

M1-0215
M1-0215-B
M1-0215-D
M1-0215-F
M1-0215-H

CLASS I

(NUCLEAR SAFETY-RELATED)

SAFETY CLASS 1
SAFETY CLASS 2
SAFETY CLASS 3

SEISMIC CATEGORY I
CLASS 1E
ASSOCIATED CIRCUITS

LUMINANT
CPNPP
GLEN ROSE, TEXAS

FLOW DIAGRAM
STARTING AIR PIPING
CP1-MEDGEE-01

DWG. NO. M1-0215 | SH. NO. D | REV. CP-25

REF CKD 9/23/97 CP-18

SSSSSSSDATESSSSSS

me858200.dgn A M1-0215-D

< FINAL PRINT >

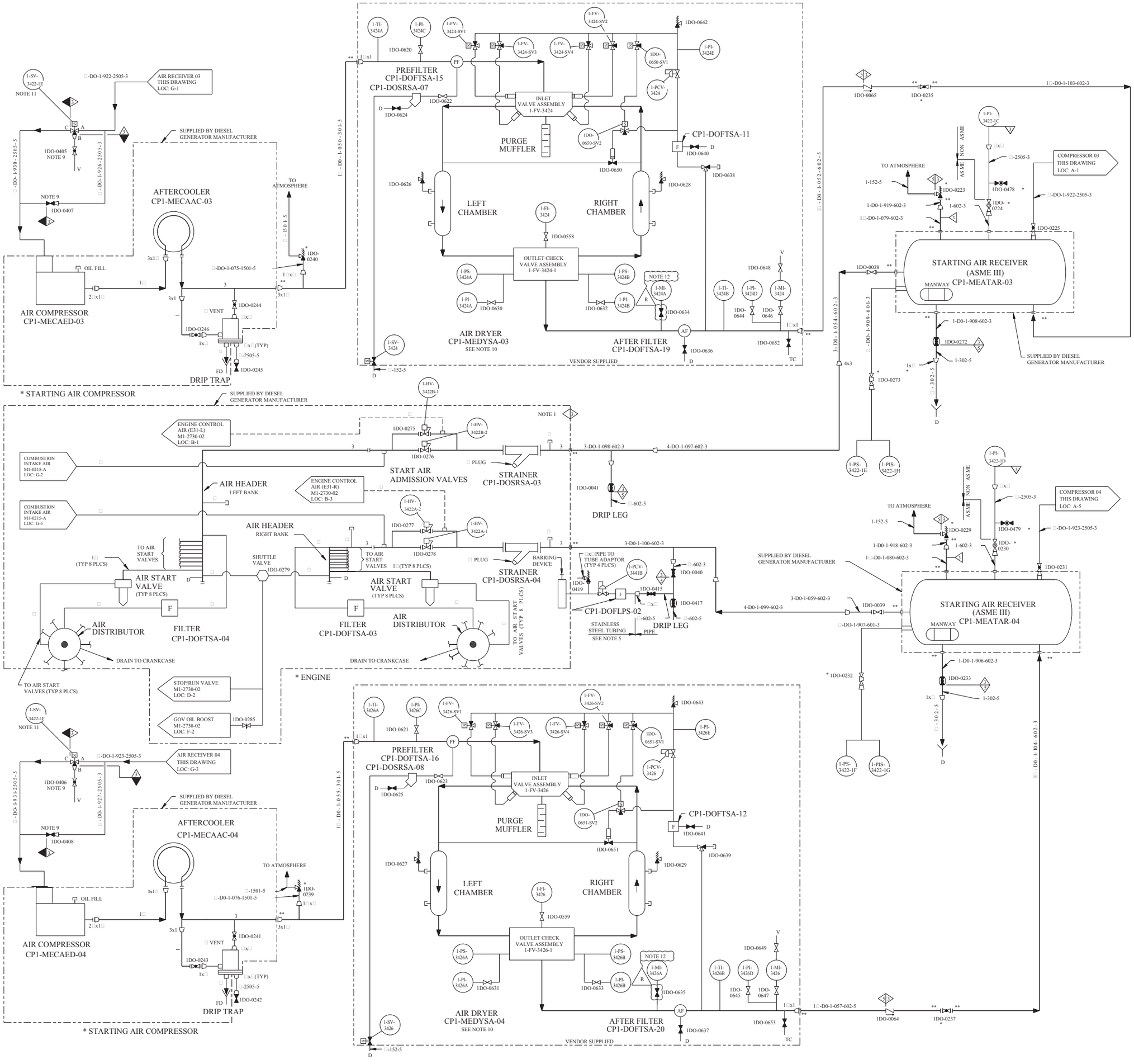

REV	DWN	CHKD	APVD	REMARKS
CP-27	JRMC 06-26-2014	DJL 06-26-2014		THIS DRAWING REVISED TO INCORPORATE DESIGN CHANGE FDA-2014-000145-01-00 PER SK-0002-14-000145-01-00.

NOTES:

1. NUCLEAR SAFETY RELATED PER IEEE-337, NOT IN SCOPE OF ANSI N18.2 EXEMPT FROM ASME CODE STAMPING.
2. SEE M2-0215 SH E FOR UNIT 2 DIESELS (CP2-MEDGEE-01 AND CP2-MEDGEE-02).
3. ALL ITEMS MARKED * ARE SUPPLIED BY DELAVAL.
4. SEE M1-2730-01, -01A, -02 AND -02A FOR PNEUMATIC CONTROL SCHEMATIC.
5. NON-NUCLEAR SAFETY CLASS TUBING INSTALLED PER SPEC CPES-1-1018.
6. ** - 300 LB RF FLANGE RATING TO MATERIAL WITH COMPONENT FLANGE RATING SUPPLIED BY DIESEL GENERATOR MANUFACTURER.
7. ALL DRAINS ARE □" UNLESS OTHERWISE NOTED.
8. SEE FORM CAT-123 FROM CP-0034-0014 FOR VENDOR SUPPLIED MECHANICAL SYMBOLS.
9. REVERSE VALVE POSITION TO MANUALLY UNLOAD COMPRESSOR LP CYLINDERS.
10. VALVE POSITIONS AND FLOW DIRECTION SHOWN FOR LEFT CHAMBER DRYING AND RIGHT CHAMBER REGENERATION.
11. FLOW SCHEMATIC FOR SOLENOID VALVE:

DE-ENERGIZED — ENERGIZED — A: PRESSURE B: VENT C: CYLINDER

12. MOISTURE INDICATOR ABANDONED IN PLACE.

EQUIPMENT SCHEDULE

MANUFACTURERS I D	TAG NO

DRAWING M1-0215-A REV CP-6
HAS BEEN SPLIT INTO THE FOLLOWING SHEETS:

M1-0215-A
M1-0215-C
M1-0215-E
M1-0215-G
M1-0215-J

CLASS I
(NUCLEAR SAFETY-RELATED)
SAFETY CLASS 1 / SAFETY CLASS 2 / SAFETY CLASS 3 — SEISMIC CATEGORY I / CLASS 1E / ASSOCIATED CIRCUITS

LUMINANT
CPNPP
GLEN ROSE, TEXAS

FLOW DIAGRAM
STARTING AIR PIPING
CP1-MEDGEE-02

DWG. NO. M1-0215 | SH. NO. E | REV. CP-27

FSAR FIGURE 9.5-55

THIS DRAWING CREATED ELECTRONICALLY

REF CKD 9/23/97 CP-20

$$$$$$$DATE$$$$$$$

me858300.dgn M1-0215-E

< FINAL PRINT >

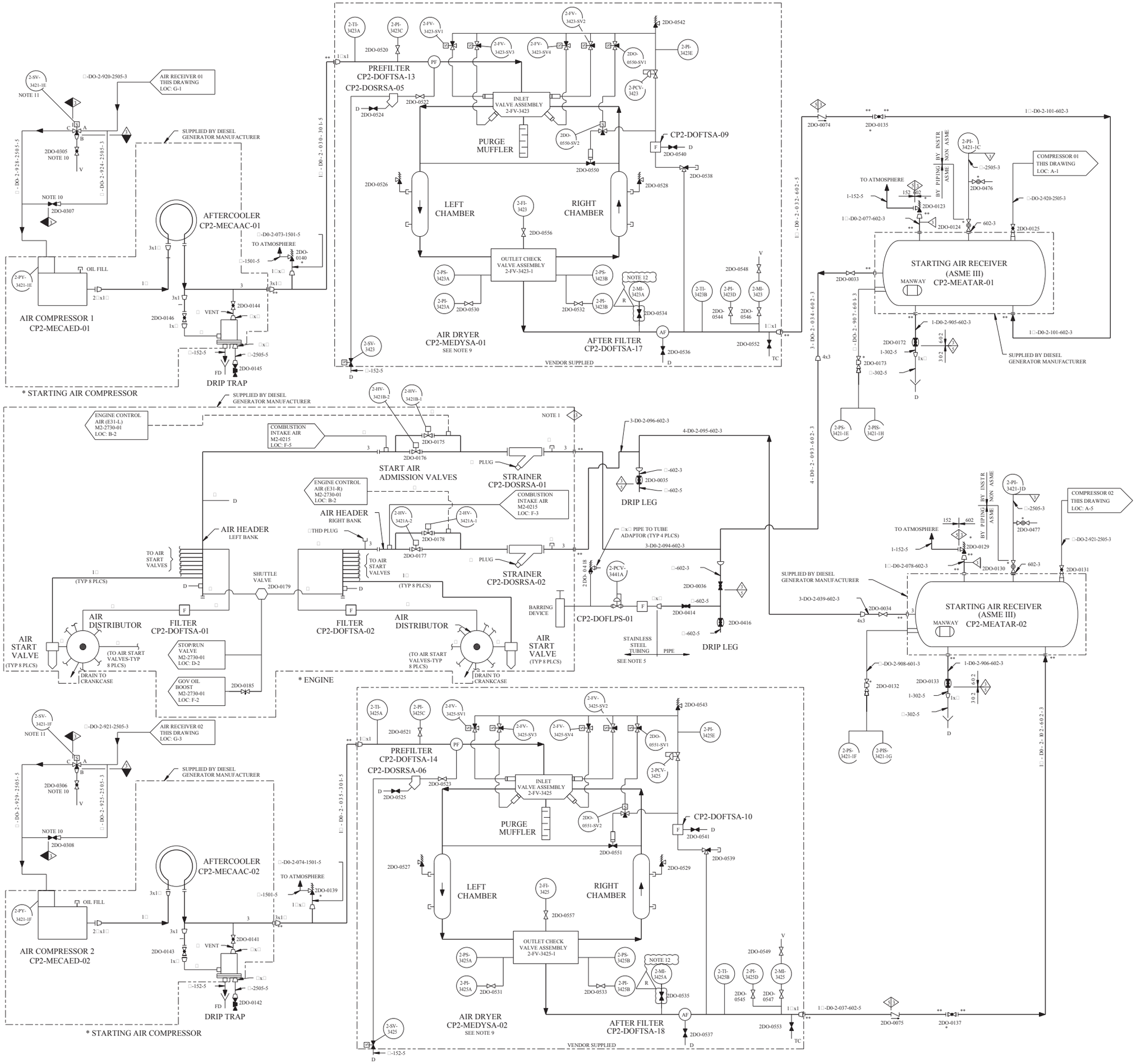

REV	DWN	CHKD	APVD	REMARKS
CP-17	BMC 06-26-2014	DJL 06-26-2014		THIS DRAWING REVISED TO INCORPORATE DESIGN CHANGE FDA-2014-000145-01-00 PER SK-0003-14-000145-01-00.

NOTES:

1. NUCLEAR SAFETY RELATED PER IEEE-337, NOT IN SCOPE OF ANSI N18.2 EXEMPT FROM ASME CODE STAMPING.
2. SEE M1-0215 SH D AND SH E FOR UNIT 1 DIESELS (CP1-MEDGEE-01 AND CP1-MEDGEE-02).
3. ALL ITEMS MARKED * ARE SUPPLIED BY DELAVAL.
4. SEE M2-2730-01,-01A,-02 AND -02A FOR PNEUMATIC CONTROL SCHEMATIC.
5. NON-NUCLEAR SAFETY CLASS TUBING INSTALLED PER SPEC CPES-1-1018.
6. ** -300 LB RF FLANGE RATING TO MATCH WITH COMPONENT FLANGE RATING SUPPLIED BY DIESEL GENERATOR MANUFACTURER.
7. ALL DRAINS ARE □" UNLESS OTHERWISE NOTED.
8. SEE FORM CAT-123 FROM CP-0034-0014 FOR VENDOR SUPPLIED MECHANICAL SYMBOLS.
9. VALVE POSITIONS AND FLOW DIRECTION SHOWN FOR LEFT CHAMBER DRYING AND RIGHT CHAMBER REGENERATION.
10. REVERSE VALVE POSITION TO MANUALLY UNLOAD COMPRESSOR LP CYLINDERS.
11. FLOW SCHEMATIC FOR SOLENOID VALVE:

DE-ENERGIZED C B A — ENERGIZED C B A — A: PRESSURE B: VENT C: CYLINDER

12. MOISTURE INDICATOR ABANDONED IN PLACE.

EQUIPMENT SCHEDULE

MANUFACTURERS I D	TAG NUMBER
76001-146	2DO-0135 (137)
76001-126	CP2-MECAAC-01 (02)
76001-153	2DO-0145 (142)

DRAWING 2323-M2-0215 REV CP-3
HAS BEEN SPLIT INTO THE FOLLOWING SHEETS:

M2-0215	M2-0215-E
M2-0215-A	M2-0215-F
M2-0215-B	M2-0215-G
M2-0215-C	M2-0215-H
M2-0215-D	M2-0215-J

CLASS I
(NUCLEAR SAFETY-RELATED)
SAFETY CLASS 1 — SAFETY CLASS 2 — SAFETY CLASS 3 — SEISMIC CATEGORY I — CLASS 1E — ASSOCIATED CIRCUITS

LUMINANT
CPNPP
GLEN ROSE, TEXAS

FLOW DIAGRAM
STARTING AIR PIPING
CP2-MEDGEE-01

DWG. NO. M2-0215 — SH. NO. D — REV. CP-17

FSAR FIGURE 9.5-5.5

THIS DRAWING CREATED ELECTRONICALLY

REF CKD CP-12 9/26/97

SSSSSSSDATESSSSSS

me858400.dgn M2-0215-D < FINAL PRINT >

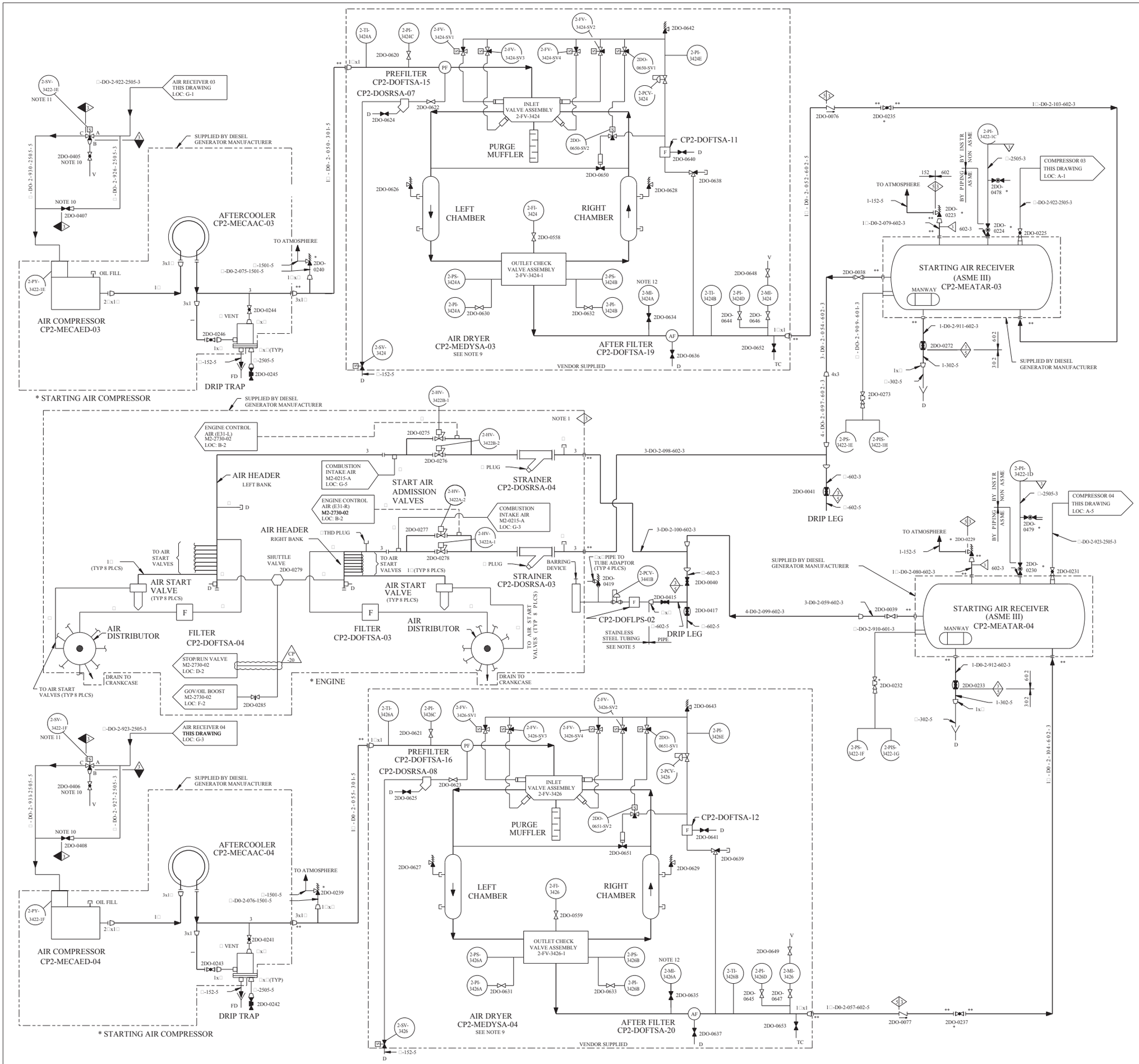

REV	DWN	CHKD	APVD	REMARKS
CP-20	DLK 10-23-2015			THIS DRAWING REVISED TO INCORPORATE ALCR-2015-002427-1 TO EDITORIALLY RECONNECT REFERENCE BLOCK TO INSTRUMENT LINE THAT WAS DELETED BY MISTAKE.

NOTES:

1. NUCLEAR SAFETY RELATED PER IEEE-337, NOT IN SCOPE OF ANSI N18.2 EXEMPT FROM ASME CODE STAMPING.
2. SEE M1-0215 SH E AND SH F FOR UNIT 1 DIESELS (CP1-MEDGEE-01 AND CP1-MEDGEE-02).
3. ALL ITEMS MARKED * ARE SUPPLIED BY DELAVAL.
4. SEE M2-2730-01, -01A, -02 AND -02A FOR PNEUMATIC CONTROL SCHEMATIC.
5. NON-NUCLEAR SAFETY CLASS TUBING INSTALLED PER SPEC CPES-1-1018.
6. ** - 300 LB RF FLANGE RATING TO MATCH WITH COMPONENT FLANGE RATING SUPPLIED BY DIESEL GENERATOR MANUFACTURER.
7. ALL DRAINS ARE □" UNLESS OTHERWISE NOTED.
8. SEE FORM CAT-123 FROM CP-0034-0014 FOR VENDOR SUPPLIED MECHANICAL SYMBOLS.
9. VALVE POSITIONS AND FLOW DIRECTION SHOWN FOR LEFT CHAMBER DRYING AND RIGHT CHAMBER REGENERATION.
10. REVERSE VALVE POSITION TO MANUALLY UNLOAD COMPRESSOR LP CYLINDERS.
11. FLOW SCHEMATIC FOR SOLENOID VALVE:

DE-ENERGIZED: C, A, B — ENERGIZED: C, A, B

A: PRESSURE
B: VENT
C: CYLINDER

12. MOISTURE INDICATOR ABANDONED IN PLACE.

EQUIPMENT SCHEDULE

MANUFACTURERS I D	TAG NO

FSAR FIGURE 9.5-55

THIS DRAWING CREATED ELECTRONICALLY

DRAWING 2323-M2-0215	REV CP-3
HAS BEEN SPLIT INTO THE FOLLOWING SHEETS:	
M2-0215	M2-0215-E
M2-0215-A	M2-0215-F
M2-0215-B	M2-0215-G
M2-0215-C	M2-0215-H
M2-0215-D	M2-0215-J

CLASS I
(NUCLEAR SAFETY-RELATED)
SAFETY CLASS 1 / SAFETY CLASS 2 / SAFETY CLASS 3 — SEISMIC CATEGORY I / CLASS 1E / ASSOCIATED CIRCUITS

LUMINANT
CPNPP
GLEN ROSE, TEXAS

FLOW DIAGRAM
STARTING AIR PIPING
CP2-MEDGEE-02

DWG. NO.	SH. NO.	REV.
M2-0215	E	CP-20

< FINAL PRINT >

REF CKD CP-14 9/26/97

SSSSSSSDATESSSSSS

me858500.dgn M2-0215-E

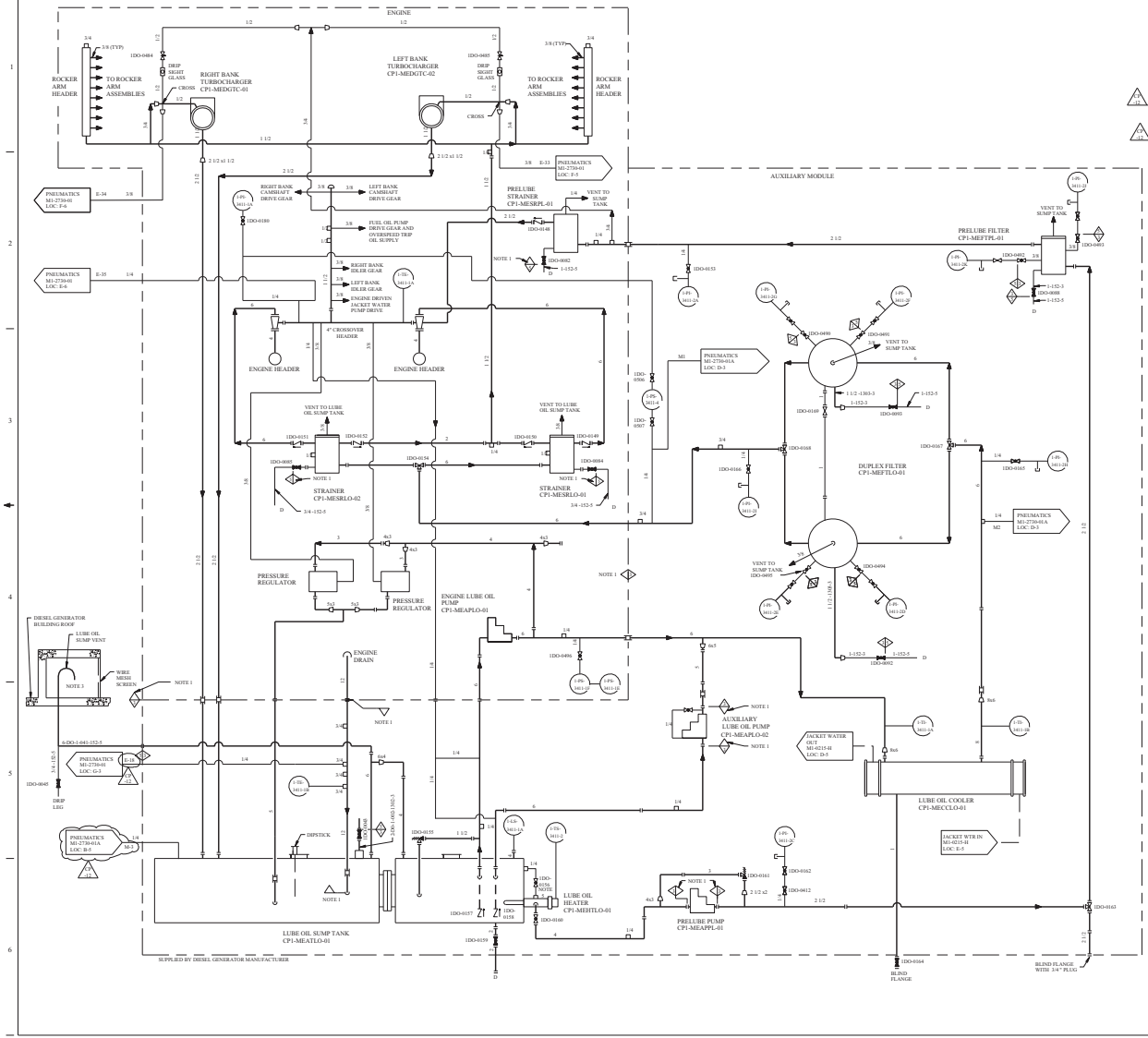

REV	DWG CHG	DESCRIPTION	REMARKS
B-11	N/A Front sheet		THIS DRAWING REVISED TO INCORPORATE EDITORIAL CHANGES AS NOTED.

NOTES

1. NUCLEAR SAFETY RELATED PER REE-307. NOT IN SCOPE OF ASME NA 2.2 EXEMPT FROM ASME CODE STAMP.
2. SEE DRAWING M2-0215-B AND M2-0215-D FOR DIESELS (CP2-MEDGEE-01 AND CP2-MEDGEE-02)
3. LUBE OIL SUMP VENT IS SEISMICALLY ANALYZED AND TORNADO MISSILE PROTECTED.
4. DELETED.
5. CLOSE ONLY WHEN PUMPING SUMP OUT WITH PRELUBE PUMP.
6. SEE FORM CAT 123 FROM CP-0034-001A FOR VENDOR SUPPLIED MECHANICAL SYMBOLS.

LEGEND

DRESSER COUPLING

HALF COUPLING WITH PIPE PLUG

EQUIPMENT SCHEDULE

MANUFACTURERS I D	TAG NO

FSAR FIGURE 9.5-56

THIS DRAWING IS ATTACHED TO DOCK-A-1.1

DRAWING M1-0215 REV CP-11

HAS BEEN SPLIT INTO THE FOLLOWING SHEETS.

M1-0215
M1-0215-B
M1-0215-D
M1-0215-F
M1-0215-H

CLASS I

(NUCLEAR SAFETY-RELATED)
SAFETY CLASS 1 SEISMIC CATEGORY I
SAFETY CLASS 2 CLASS IE
SAFETY CLASS 3 ASSOCIATED CIRCUITS

TXU ELECTRIC
CPSES
GLEN ROSE, TEXAS

FLOW DIAGRAM
LUBE OIL PIPING AND INSTRUMENT DIAGRAM
CP1-MEDGEE-01

DWG. NO.	REV. NO.	REV.
M1-0215	B	CP-12

FINAL PRINT

REF CHK DWG 15/0F

ma0006ca.dgn

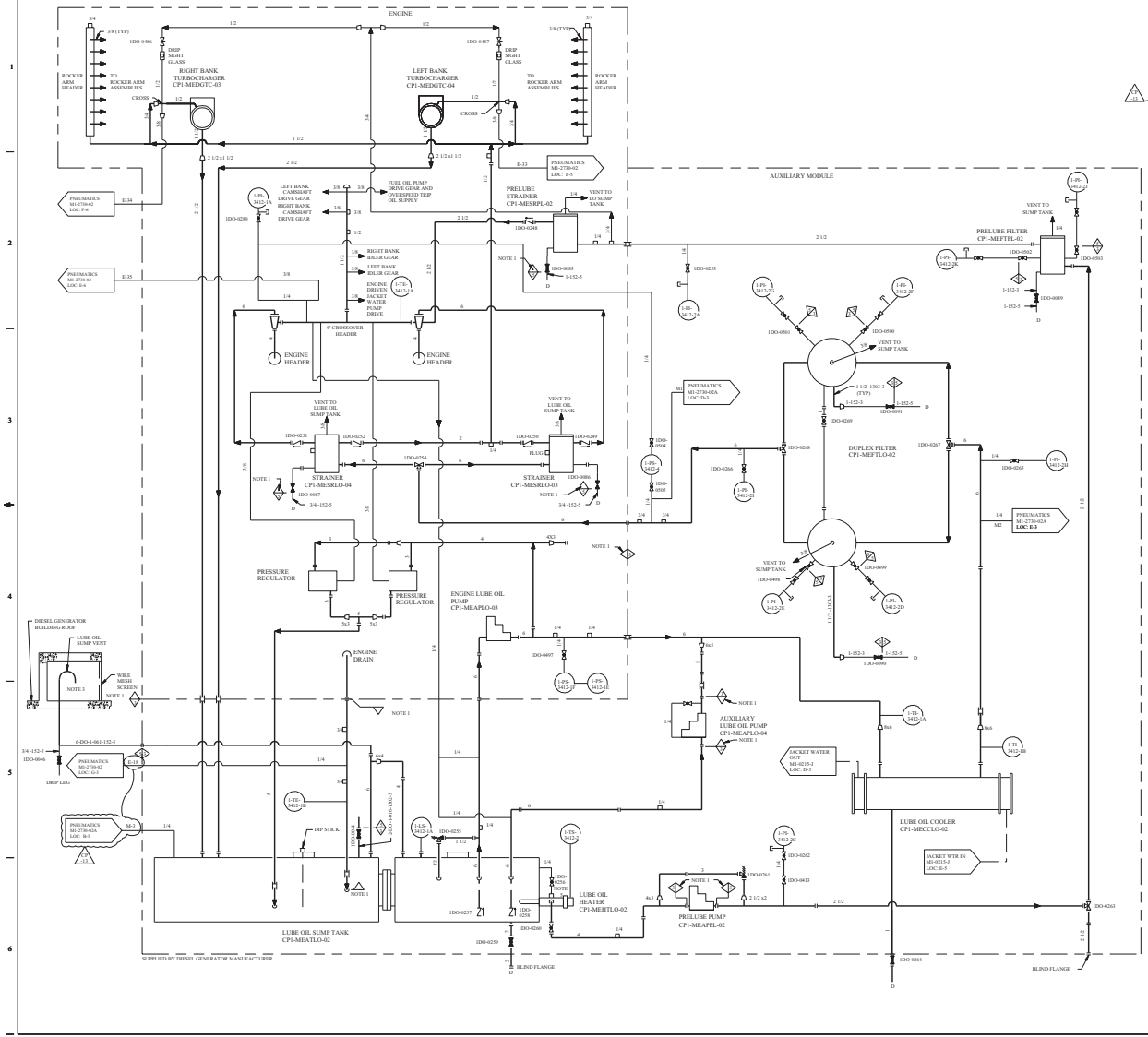

REV	DRWN	CHKD	APVD	REMARKS
C				THIS DRAWING REVISED TO INCORPORATE EDITORIAL CHANGES AS NOTED

NOTES

1. NUCLEAR SAFETY RELATED PER IEEE-387 NOT IN SCOPE OF ANSI N18.2 EXEMPT FROM ASME CODE STAMP.
2. SEE DRAWING M1-0215-K AND M1-0215-L FOR UNIT 2 DIESELS (CP2-MEDGEE-01 AND CP2-MEDGEE-02).
3. LUBE OIL SUMP VENT IS SEISMIC ALLY ANALYZED AND TORNADO MISSILE PROTECTED.
4. DELETED.
5. CLOSE ONLY WHEN PUMPING SUMP OUT WITH PRELUBE PUMP.
6. SEE FORM CAT 123 FROM CP-0634-001A FOR VENDOR SUPPLIED MECHANICAL SYMBOLS.

LEGEND

- DRESSER COUPLING
- SOCKET COUPLING WITH PIPE PLUG

EQUIPMENT SCHEDULE

MANUFACTURERS I D	TAG NO

FSAR FIGURE 9.5-56

THIS DRAWING CREATED ELECTRONICALLY

DRAWING	M1-0215-A	REV	CP-6
HAS BEEN SPLIT INTO THE FOLLOWING SHEETS:			
M1-0215-A			
M1-0215-C			
M1-0215-E			
M1-0215-G			
M1-0215-I			

CLASS I

(NUCLEAR SAFETY-RELATED)
SAFETY CLASS 1 ELECTRICAL EQUIPMENT
SAFETY CLASS 2 CLASS 1E
SAFETY CLASS 3 NON-ISOLATED CIRCUITS

TEXAS UTILITIES

CPSES

GLEN ROSE, TEXAS

FLOW DIAGRAM
LUBE OIL PIPING AND INSTRUMENT DIAGRAM
CP1-MEDGEE-02

DWG. NO.	SH. NO.	REV.
M1-0215	C	CP-13

FINAL PRINT

m0006cd.dgn

REF CHKD 09/15/97

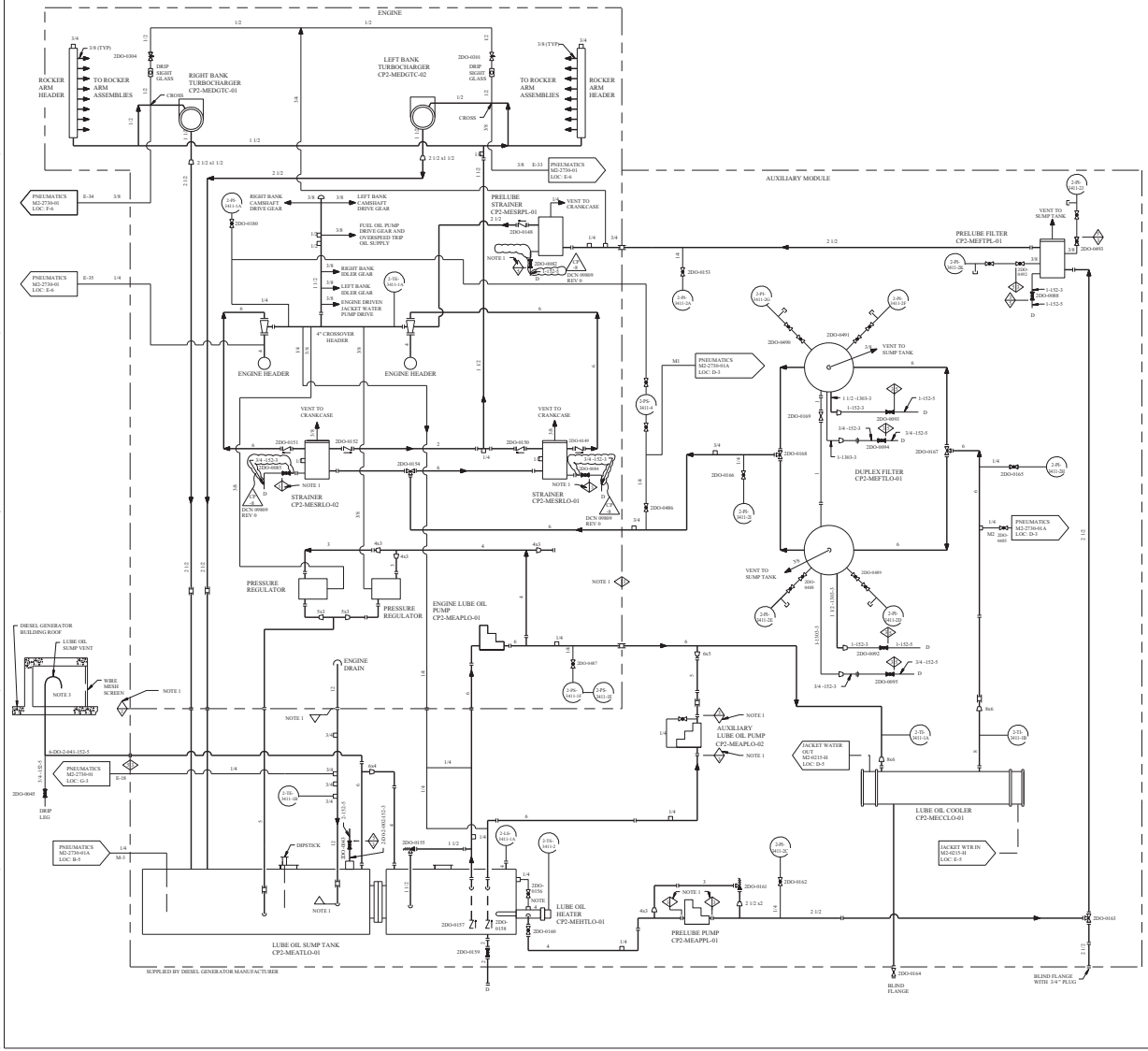

REV	DWG CHG	DESCRIPTION	REMARKS
CP-8	9/97		THIS DRAWING REVISED TO INCORPORATE DESIGN CHANGE DCN 00869 REV 0.

NOTES

1. NUCLEAR SAFETY RELATED PER IEEE-307. NOT IN SCOPE OF ASME NA-2 EXEMPT FROM ASME CODE STAMP.
2. SEE DRAWING M1-4015-B AND -C FOR UNIT 1 DIESELS (CP1-MEDGEE-01 AND CP1-MEDGEE-02)
3. LUBE OIL SUMP VENT IS SEISMICALLY ANALYZED AND TORNADO MISSILE PROTECTED.
4. CLOSE ONLY WHEN PUMPING SUMP OUT WITH PRELUBE PUMP.
5. SEE FORM CAT 123 FROM CP-0034-001A FOR VENDOR SUPPLIED MECHANICAL SYMBOLS.

LEGEND

- DRESSER COUPLING
- HALF COUPLING WITH PIPE PLUG

EQUIPMENT SCHEDULE

MANUFACTURERS I D	TAG NO

FSAR FIGURE 9.5-56

THIS DRAWING IS ATTACHED TO DOCKET NO. 50-445

DRAWING	2322-M2-0215	REV	CP-3
HAS BEEN SPLIT INTO THE FOLLOWING SHEETS:			
M2-0215	M2-0215-E		
M2-0215-A	M2-0215-F		
M2-0215-B	M2-0215-G		
M2-0215-C	M2-0215-H		
M2-0215-D	M2-0215-J		

CLASS I

(NUCLEAR SAFETY-RELATED)
SAFETY CLASS 2 SEISMIC CATEGORY I
SAFETY CLASS 3 CLASS IE
SAFETY CLASS 3 ASSOCIATED CIRCUITS

TXU ELECTRIC
CPSES
GLEN ROSE, TEXAS

FLOW DIAGRAM
LUBE OIL PIPING AND INSTRUMENT DIAGRAM
CP2-MEDGEE-01

DWG. NO. M2-0215 | SIZE B | REV. CP-8

FINAL PRINT

ma0006f1b.dgn

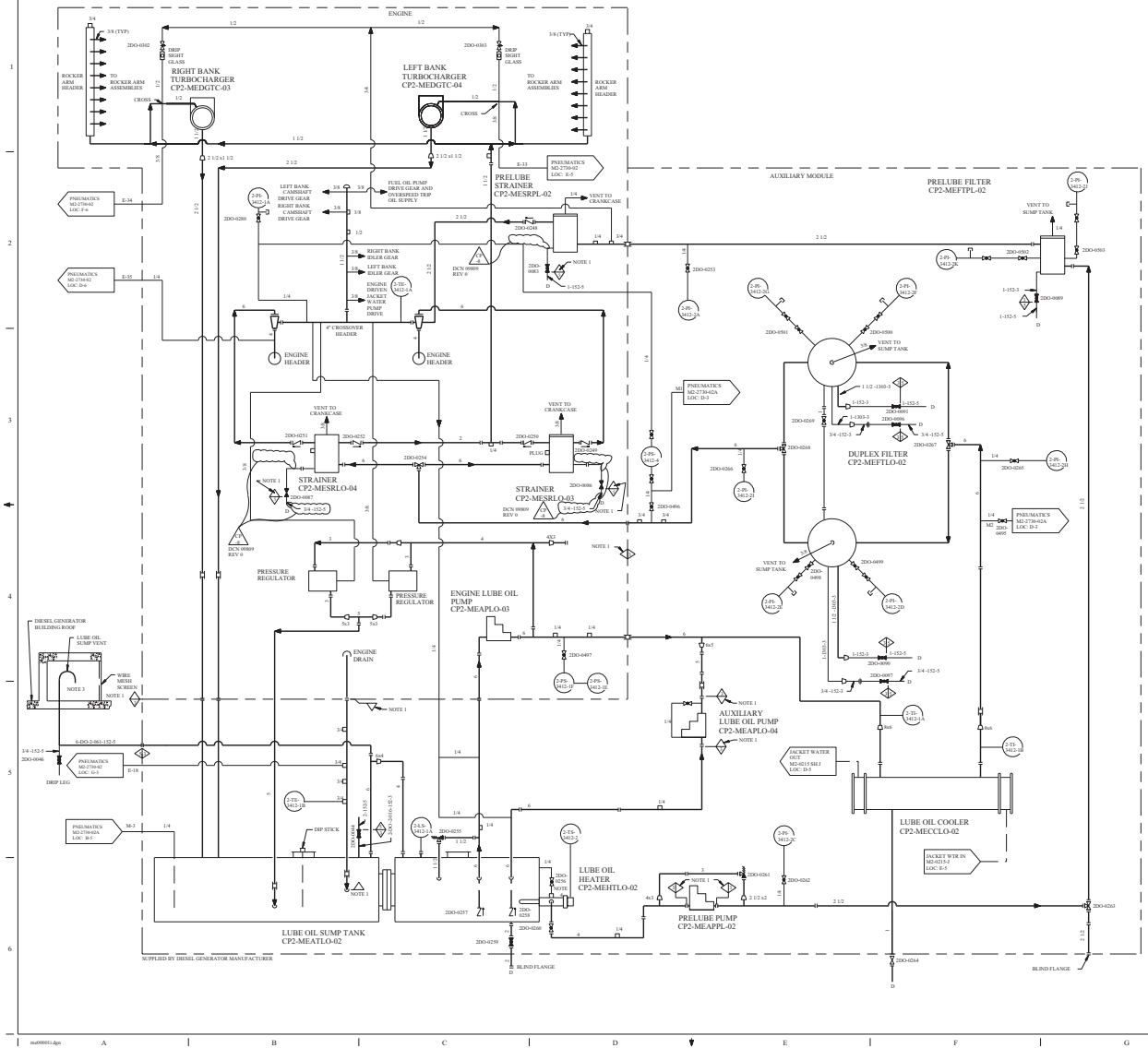

REV	DWN	CHKD	APVD	REMARKS
C-8				THIS DRAWING REVISED TO INCORPORATE DESIGN CHANGE DCN 9809 REV 0.

NOTES

1. NUCLEAR SAFETY RELATED PER IEEE-307 NOT IN SCOPE OF ANSI/N18.2 EXIMPT FROM ASME CODE STAMP.
2. SEE DRAWING M1-0215-B AND -C FOR UNIT 1 DIESELS (CP1-MEDGEE-01 AND CP1-MEDGEE-02)
3. LUBE OIL SUMP VENT IS SEISMICALLY ANALYZED AND TORNADO MISSILE PROTECTED.
4. CLOSE ONLY WHEN PUMPING SUMP OUT WITH PRELUBE PUMP.
5. SEE FORM CAT 123 FROM CP-0034-001A FOR VENDOR SUPPLIED MECHANICAL SYMBOLS.

LEGEND

- DRESSER COUPLING
- HALF COUPLING WITH PIPE PLUG

EQUIPMENT SCHEDULE

MANUFACTURERS I D	TAG NO

FSSAR FIGURE 9.5-56

THIS DRAWING IS AFFECTED BY TORNADO SAFETY

DRAWING 2323-M2-0215	REV CP-3
HAS BEEN SPLIT INTO THE FOLLOWING SHEETS:	
M2-0215	M2-0215-E
M2-0215-A	M2-0215-F
M2-0215-B	M2-0215-G
M2-0215-C	M2-0215-H
M2-0215-D	M2-0215-J

CLASS I

(NUCLEAR SAFETY-RELATED)

SAFETY CLASS 1 — ALL PIPING AND ACCESSORY
SAFETY CLASS 2 — CLASS 1E
SAFETY CLASS 3 — ASSOCIATED CIRCUITS

TXU ELECTRIC
CPSES
GLEN ROSE, TEXAS

FLOW DIAGRAM
LUBE OIL PIPING AND INSTRUMENT DIAGRAM
CP2-MEDGEE-02

DWG. NO.	SH. NO.	REV.
M2-0215	C	CP-8

FINAL PRINT

ma00001.dgn

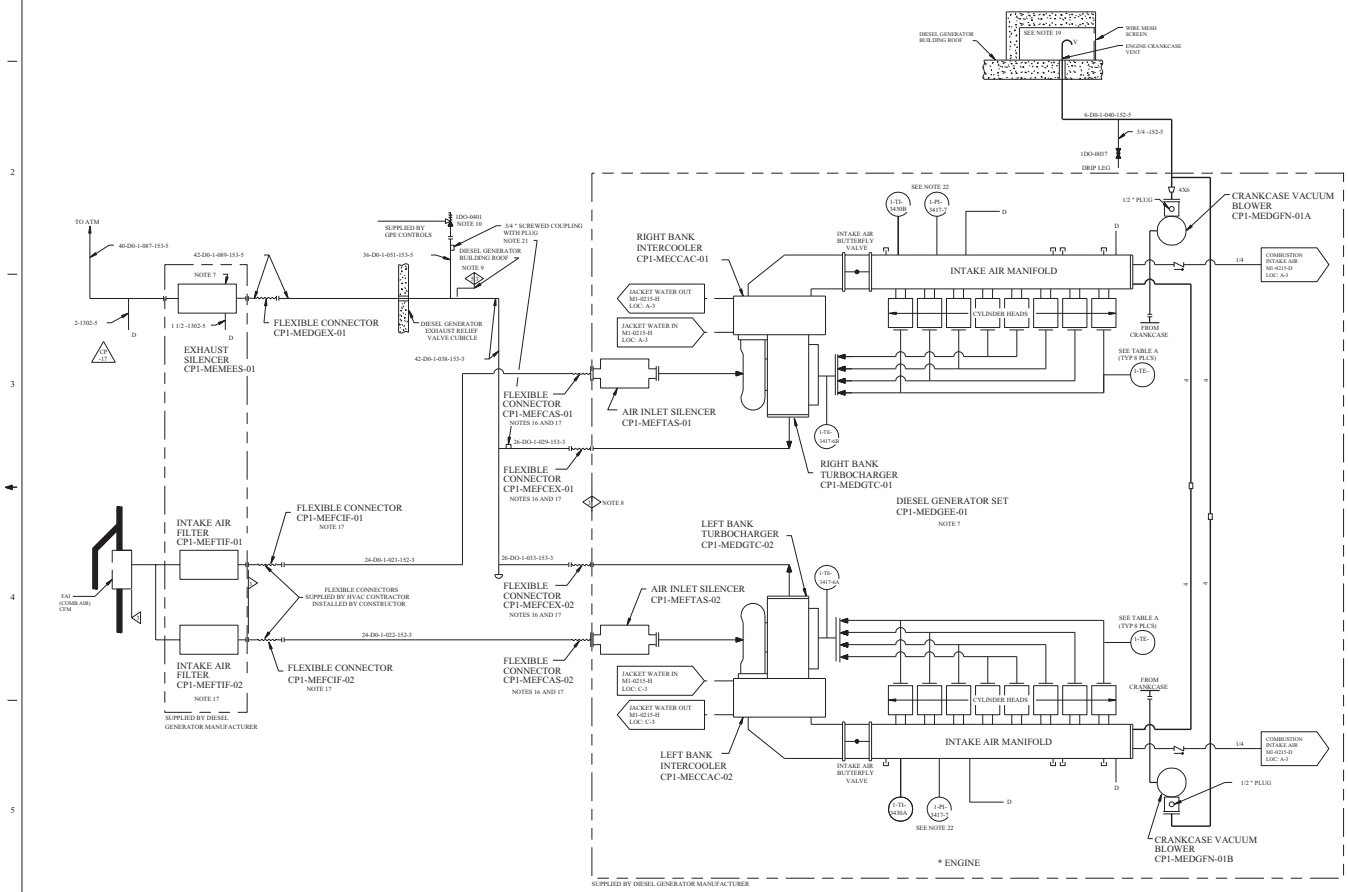

REV	DWN	CHK	APVD	REMARKS
CP-18				THIS DRAWING REVISED TO INCORPORATE FDA-2008-000011-01-00 AND SK-0001-00-000001-01-00.

NOTES:

1. ALL DRAINS ARE 3/4 " UNLESS OTHERWISE NOTED.
2. DELETED
3. ITEMS MARKED BY * ARE SUPPLIED BY TRANSAMERICA DELAVAL.
4. INSTRUMENTATION CONTROLS PROVIDED BY DIESEL GENERATOR MANUFACTURER ARE NOT SHOWN ON THIS DRAWING.
5. DELETED
6. DELETED
7. SEISMIC CATEGORY 1.
8. NUCLEAR SAFETY RELATED PER IEEE-387, NOT IN SCOPE OF ANSI N18.2.
9. EXHAUST PIPING AND SILENCER MOUNTED ON ROOF ARE SEISMICALLY ANALYZED.
10. RELIEF VALVE IS NON SEISMIC, NON NUCLEAR SAFETY RELATED, BUT VALVE AND UPSTREAM PIPING SHALL BE TORNADO MISSILE PROTECTED.
11. DELETED
12. DELETED
13. DELETED
14. DELETED
15. DELETED
16. SUPPLIED BY DIESEL GENERATOR MANUFACTURER.
17. EQUIPMENT IS SAFETY CLASS 3, NON-ASME.
18. DELETED
19. ENGINE CRANKCASE AND LUBE OIL SUMP VENTS ARE SEISMICALLY ANALYZED AND TORNADO MISSILE PROTECTED.
20. DELETED
21. THREADED TAPS ADDED FOR TESTING OF 1DO-0401 .
22. 1-PI-3417-7 HAS SEPARATE TAPS FOR BOTH THE RIGHT BANK AND THE LEFT BANK (REF DWG M1-2730 SH 01A).

LEGEND

- DRESSER COUPLING
- 1/2 COUPLING WITH PIPE PLUG

EQUIPMENT SCHEDULE

MANUFACTURERS I D	TAG NO

FSAR FIGURE 9.5-57

THESE DRAWINGS CREATED ELECTRONICALLY

DRAWING M1-0215 REV CP-11
HAS BEEN SPLIT INTO THE FOLLOWING SHEETS:
M1-0215
M1-0215-B
M1-0215-D
M1-0215-F
M1-0215-H

DRAWING 2323-M1-0215 REV CP-5
HAS BEEN SPLIT INTO THE FOLLOWING SHEETS:
M1-0215
M1-0215-A

TABLE A

CYLINDER NO	INSTR TAG NO
1L	1-TE-3417-5A
2L	1-TE-3417-5B
3L	1-TE-3417-5C
4L	1-TE-3417-5D
5L	1-TE-3417-5E
6L	1-TE-3417-5F
7L	1-TE-3417-5G
8L	1-TE-3417-5H
1R	1-TE-3417-5I
2R	1-TE-3417-5J
3R	1-TE-3417-5K
4R	1-TE-3417-5L
5R	1-TE-3417-5M
6R	1-TE-3417-5N
7R	1-TE-3417-5P
8R	1-TE-3417-5Q

CLASS I
(NUCLEAR SAFETY-RELATED)
SAFETY CLASS 1 SEISMIC CATEGORY 1
SAFETY CLASS 2 CLASS 1E
SAFETY CLASS 3 ASSOCIATED CIRCUITS

TXU ELECTRIC
CPSES
GLEN ROSE, TEXAS

FLOW DIAGRAM
AIR INTAKE AND EXHAUST SYSTEM
CP1-MEDGEE-01

DWG. NO. M1-0215 | SH. NO. - | REV. CP-18

FINAL PRINT

REV	DWN	CHK	APVD	REMARKS
CP-13				THIS DRAWING REVISED TO INCORPORATE FDA-2000-00-000081-01-00 AND SE-0042-00-000101-01-00.

NOTES:

1. ALL DRAINS ARE 3/4 " UNLESS OTHERWISE NOTED.
2. DELETED
3. ITEMS MARKED BY * ARE SUPPLIED BY TRANSAMERICA DELAVAL.
4. INSTRUMENTATION CONTROLS PROVIDED BY DIESEL GENERATOR MANUFACTURER ARE NOT SHOWN ON THIS DRAWING.
5. DELETED
6. DELETED
7. SEISMIC CATEGORY 1.
8. NUCLEAR SAFETY RELATED PER IEEE-387, NOT IN SCOPE OF ANSI N18.2.
9. EXHAUST PIPING AND SILENCER MOUNTED ON ROOF ARE SEISMICALLY ANALYZED.
10. RELIEF VALVE IS NON-SEISMIC, NON-NUCLEAR SAFETY RELATED, BUT VALVE AND UPSTREAM PIPING SHALL BE TORNADO MISSILE PROTECTED.
11. DELETED
12. DELETED
13. DELETED
14. DELETED
15. DELETED
16. SUPPLIED BY DIESEL GENERATOR MANUFACTURER.
17. EQUIPMENT IS SAFETY CLASS 3, NON-ASME.
18. DELETED
19. ENGINE CRANKCASE AND LUBE OIL SUMP VENTS ARE SEISMICALLY ANALYZED AND TORNADO MISSILE PROTECTED.
20. DELETED
21. 1-PI-3418-7 HAS SEPARATE TAPS FOR BOTH THE RIGHT BANK AND THE LEFT BANK (REF M1-2730 SH 02A).

LEGEND

- DRESSER COUPLING
- 1/2 COUPLING WITH PIPE PLUG

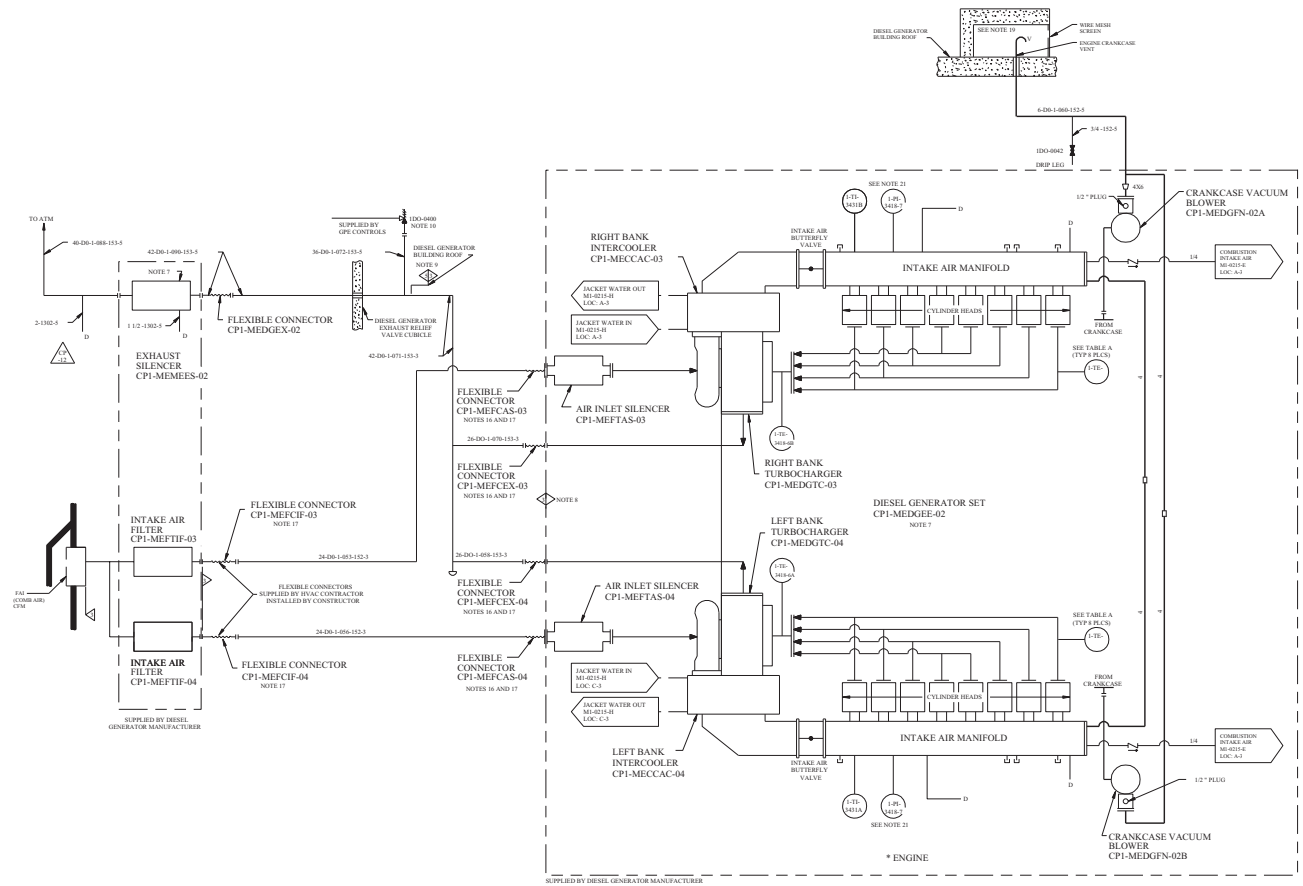

TABLE A	
CYLINDER NO	INSTR TAG NO
1L	1-TE-3418-5A
2L	1-TE-3418-5B
3L	1-TE-3418-5C
4L	1-TE-3418-5D
5L	1-TE-3418-5E
6L	1-TE-3418-5F
7L	1-TE-3418-5G
8L	1-TE-3418-5H
1R	1-TE-3418-5I
2R	1-TE-3418-5J
3R	1-TE-3418-5K
4R	1-TE-3418-5L
5R	1-TE-3418-5M
6R	1-TE-3418-5N
7R	1-TE-3418-5P
8R	1-TE-3418-5Q

EQUIPMENT SCHEDULE	
MANUFACTURERS I.D.	TAG NO.

DRAWING M1-0215-A REV CP-6 HAS BEEN SPLIT INTO THE FOLLOWING SHEETS:
M1-0215-A
M1-0215-C
M1-0215-E
M1-0215-G
M1-0215-J

DRAWING 2123-M1-0215 REV CP-5 HAS BEEN SPLIT INTO THE FOLLOWING SHEETS:
M1-0215
M1-0215-A

FSAR FIGURE 9.5-57

THESE DRAWINGS CREATED ELECTRONICALLY

CLASS I
(NUCLEAR SAFETY-RELATED)
SAFETY CLASS 1 SEISMIC CATEGORY :
SAFETY CLASS 2 CLASS 1E
SAFETY CLASS 3 ASSOCIATED CIRCUITS

TXU ELECTRIC
CPSES
GLEN ROSE, TEXAS

FLOW DIAGRAM
AIR INTAKE AND EXHAUST SYSTEM
CP1-MEDGEE-02

DWG. NO. M1-0215 | SH. NO. A | REV. CP-13

FINAL PRINT

mc273700.dgn A M1-0215-A

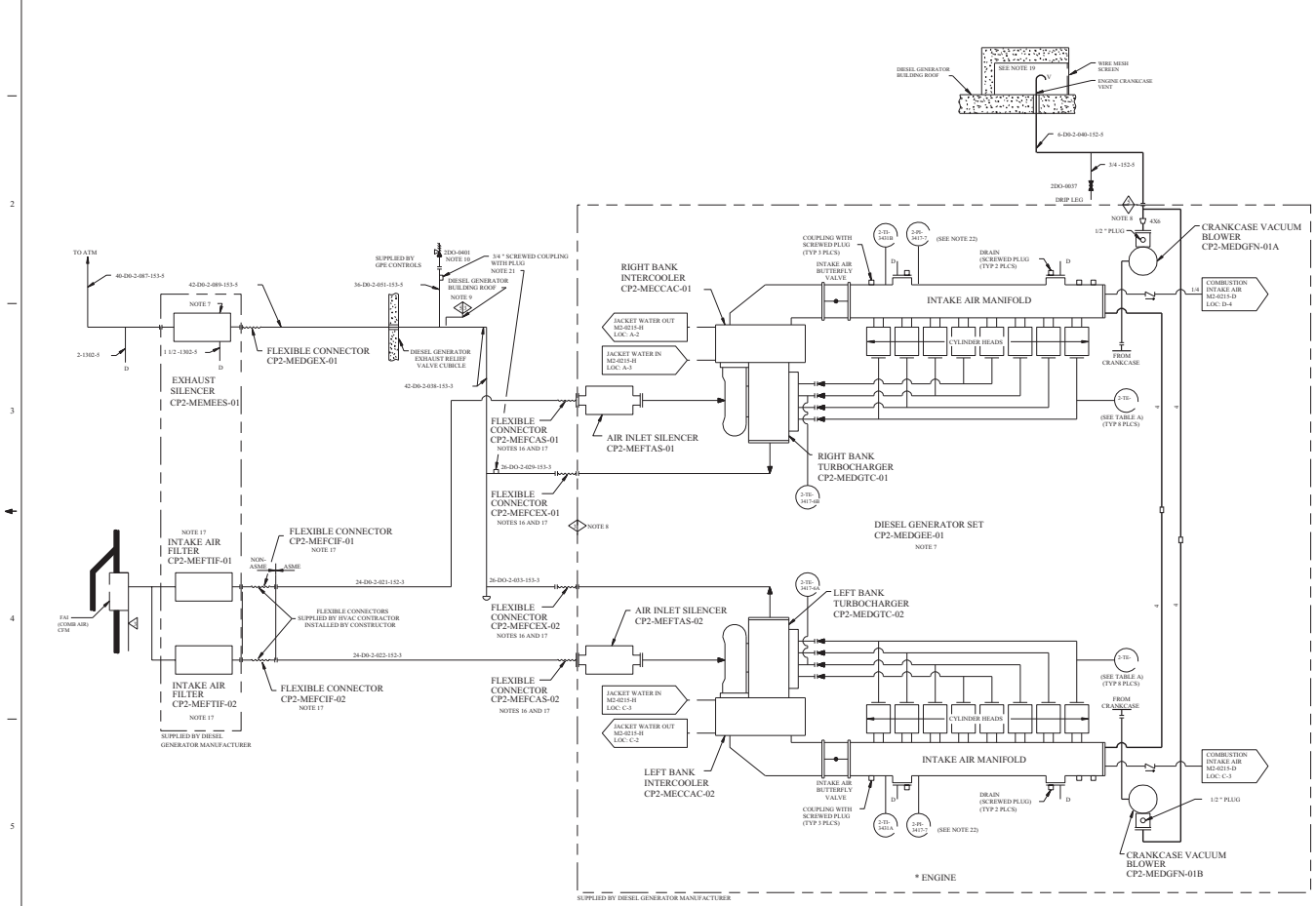

TABLE A	
CYLINDER NO.	INST TAG NO.
1L	2-TE-3417-5A
2L	2-TE-3417-5B
3L	2-TE-3417-5C
4L	2-TE-3417-5D
5L	2-TE-3417-5E
6L	2-TE-3417-5F
7L	2-TE-3417-5G
8L	2-TE-3417-5H
1R	2-TE-3417-5I
2R	2-TE-3417-5J
3R	2-TE-3417-5K
4R	2-TE-3417-5L
5R	2-TE-3417-5M
6R	2-TE-3417-5N
7R	2-TE-3417-5P
8R	2-TE-3417-5Q

REV.	DATE	BY	CHKD	APVD	REMARKS
CP-9	9-5-2002	RG	AJR		THIS DRAWING REVISED TO INCORPORATE FDA-2000-000001-01-00 AND SL-0003-00-000001-01-00.

NOTES

1. ALL DRAINS ARE 3/4 " UNLESS OTHERWISE NOTED.
2. DELETED
3. ITEMS MARKED BY * ARE SUPPLIED BY TRANSAMERICA DELAVAL.
4. INSTRUMENTATION CONTROLS PROVIDED BY DIESEL GENERATOR MANUFACTURER ARE NOT SHOWN ON THIS DRAWING.
5. DELETED
6. DELETED
7. SEISMIC CATEGORY . I
8. NUCLEAR SAFETY RELATED PER IEEE-387, NOT IN SCOPE OF ANSI N18.2.
9. EXHAUST PIPING AND SILENCER MOUNTED ON ROOF ARE SEISMICALLY ANALYZED.
10. RELIEF VALVE IS NON-SEISMIC, NON-NUCLEAR SAFETY RELATED; BUT VALVE AND UPSTREAM PIPING SHALL BE TORNADO MISSILE PROTECTED.
11. DELETED
12. DELETED
13. DELETED
14. DELETED
15. DELETED
16. SUPPLIED BY DIESEL GENERATOR MANUFACTURER.
17. EQUIPMENT IS SAFETY CLASS 3, NON-ASME.
18. DELETED
19. ENGINE CRANKCASE VENT IS SEISMICALLY ANALYZED AND TORNADO MISSILE PROTECTED.
20. DELETED
21. THREADED TAPS ADDED FOR TESTING OF 2DO-0401 .
22. 2-PE-3417 HAS SEPARATE TAPS FOR BOTH THE RIGHT BANK AND THE LEFT BANK(REF DWG M2-2730 SH 01A).

LEGEND

- DRESSER COUPLING
- HALF COUPLING WITH PIPE PLUG

EQUIPMENT SCHEDULE	
MANUFACTURERS I D	TAG NO

FSAR FIGURE 9.5-57

THIS DRAWING CREATED ELECTRONICALLY

DRAWING 2323-M2-0215	REV CP-3
HAS BEEN SPLIT INTO THE FOLLOWING SHEETS:	
M2-0215	M2-0215-E
M2-0215-A	M2-0215-F
M2-0215-B	M2-0215-G
M2-0215-C	M2-0215-H
M2-0215-D	M2-0215-J

CLASS I

(NUCLEAR SAFETY-RELATED)

SAFETY CLASS 1 SAFETY CLASS 2 SAFETY CLASS 3 — SEISMIC CATEGORY I CLASS 1E ASSOCIATED CIRCUITS

TU ELECTRIC
CPSES
GLEN ROSE, TEXAS

FLOW DIAGRAM
AIR INTAKE AND EXHAUST SYSTEM
CP2-MEDGEE-01

DWG. NO. M2-0215 | SH. NO. - | REV. CP-9

FINAL PRINT

mc273800.dgn A M2-0215

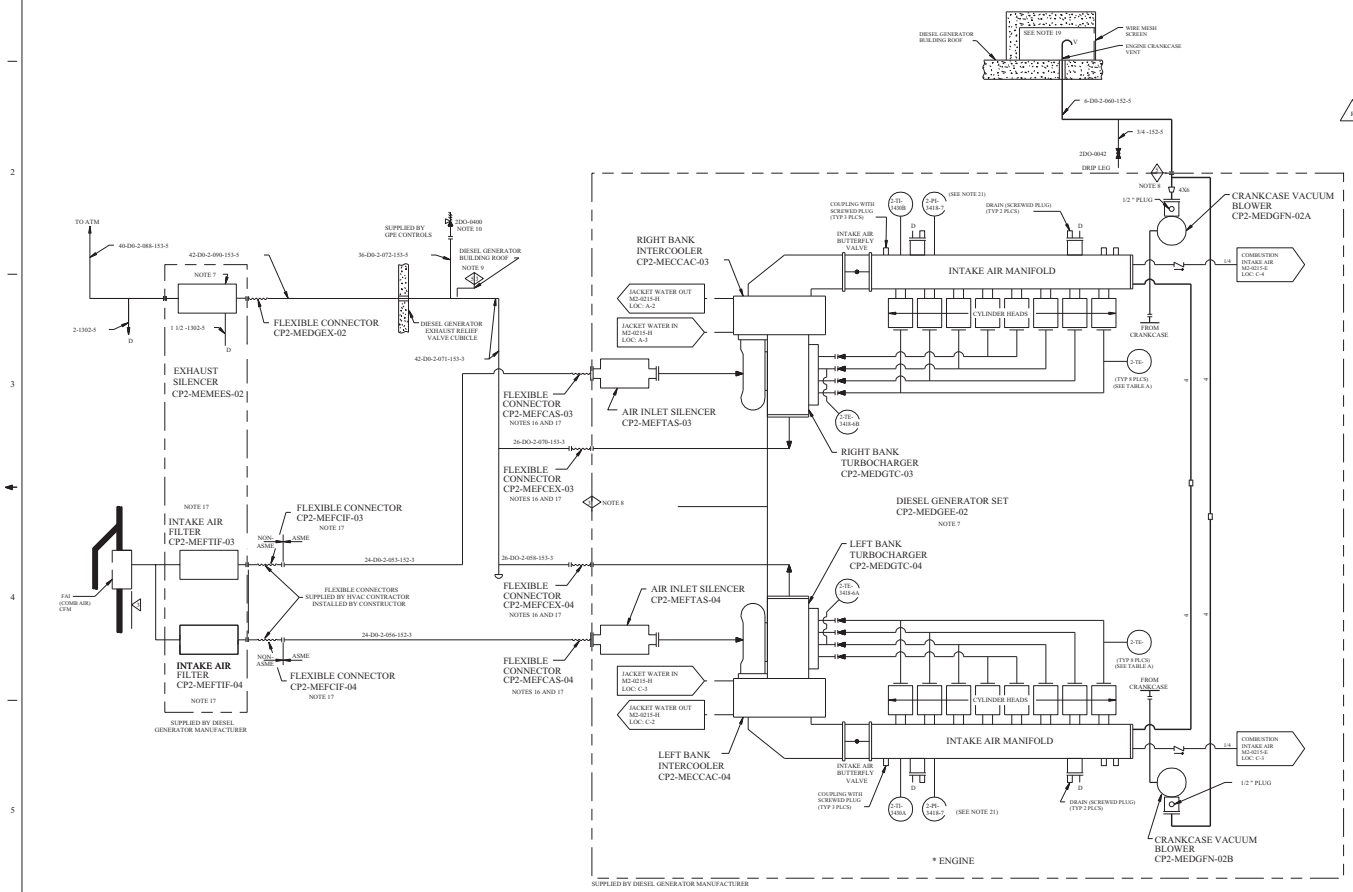

REV	DATE	BY	APVD	REMARKS
CP-6	9-5-2002	RG AJR		THIS DRAWING REVISED TO INCORPORATE FDA-2000-000001-01-00 AND SE-0004-00-000001-01-00.

NOTES

1. ALL DRAINS ARE 3/4 " UNLESS OTHERWISE NOTED.
2. DELETED
3. ITEMS MARKED BY * ARE SUPPLIED BY TRANSAMERICA DELAVAL.
4. INSTRUMENTATION CONTROLS PROVIDED BY DIESEL GENERATOR MANUFACTURER ARE NOT SHOWN ON THIS DRAWING.
5. DELETED
6. DELETED
7. SEISMIC CATEGORY . I
8. NUCLEAR SAFETY RELATED PER IEEE-387, NOT IN SCOPE OF ANSI N18.2.
9. EXHAUST PIPING AND SILENCER MOUNTED ON ROOF ARE SEISMICALLY ANALYZED.
10. RELIEF VALVE IS NON-SEISMIC, NON-NUCLEAR SAFETY RELATED, BUT VALVE AND UPSTREAM PIPING SHALL BE TORNADO MISSILE PROTECTED.
11. DELETED
12. DELETED
13. DELETED
14. DELETED
15. DELETED
16. SUPPLIED BY DIESEL GENERATOR MANUFACTURER.
17. EQUIPMENT IS SAFETY CLASS 3, NON-ASME.
18. DELETED
19. ENGINE CRANKCASE VENT IS SEISMICALLY ANALYZED AND TORNADO MISSILE PROTECTED.
20. DELETED
21. 2-PS-3418 HAS SEPARATE TAPS FOR BOTH THE RIGHT BANK AND THE LEFT BANK (REF M2-2730 SH 02A).

LEGEND

- DRESSER COUPLING
- HALF COUPLING WITH PIPE PLUG

EQUIPMENT SCHEDULE

MANUFACTURERS I.D.	TAG NO.

FSAR FIGURE 9.5-57

THESE DRAWINGS CREATED IE BY PROMCALC

DRAWING 2123-M2-0215	REV CP-3
HAS BEEN SPLIT INTO THE FOLLOWING SHEETS:	
M2-0215	M2-0215-E
M2-0215-A	M2-0215-F
M2-0215-B	M2-0215-G
M2-0215-C	M2-0215-H
M2-0215-D	M2-0215-J

TABLE A

CYLINDER NO.	INST TAG NO.
1L	2-TE-3418-5A
2L	2-TE-3418-5B
3L	2-TE-3418-5C
4L	2-TE-3418-5D
5L	2-TE-3418-5E
6L	2-TE-3418-5F
7L	2-TE-3418-5G
8L	2-TE-3418-5H
1R	2-TE-3418-5I
2R	2-TE-3418-5J
3R	2-TE-3418-5K
4R	2-TE-3418-5L
5R	2-TE-3418-5M
6R	2-TE-3418-5N
7R	2-TE-3418-5P
8R	2-TE-3418-5Q

CLASS I

(NUCLEAR SAFETY-RELATED)

SAFETY CLASS 1 — SEISMIC CATEGORY I
SAFETY CLASS 2 — CLASS 1E
SAFETY CLASS 3 — ASSOCIATED CIRCUITS

TU ELECTRIC
CPSES
GLEN ROSE, TEXAS

FLOW DIAGRAM
AIR INTAKE AND EXHAUST SYSTEM
CP2-MEDGEE-02

DWG. NO.	SH. NO.	REV.
M2-0215	A	CP-6

FINAL PRINT

mc273900.dgn A M2-0215-A

DIESEL GENERATOR BUILDING
PLAN AT EL 810'-6"

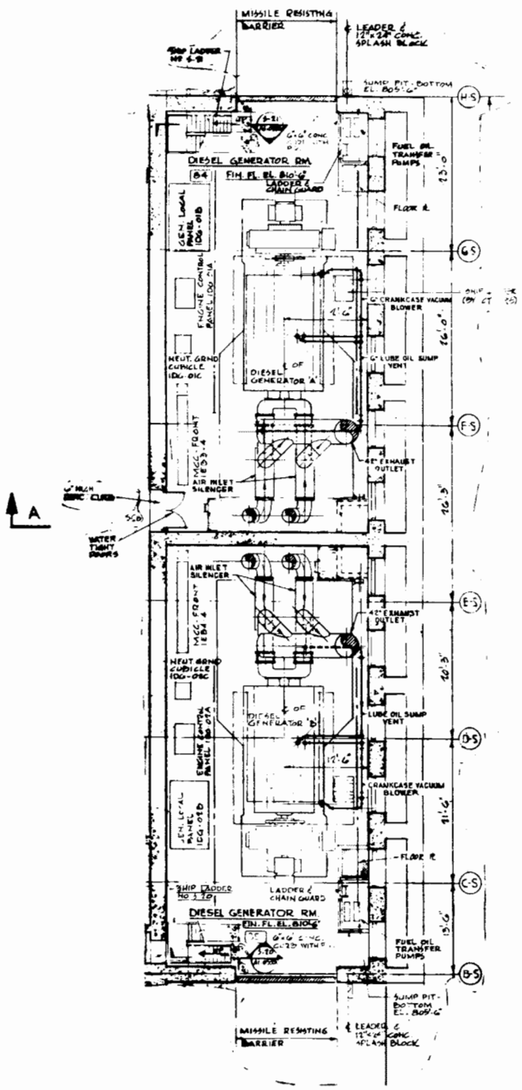

DIESEL GENERATOR BUILDING
PLAN AT EL. 844'-0"

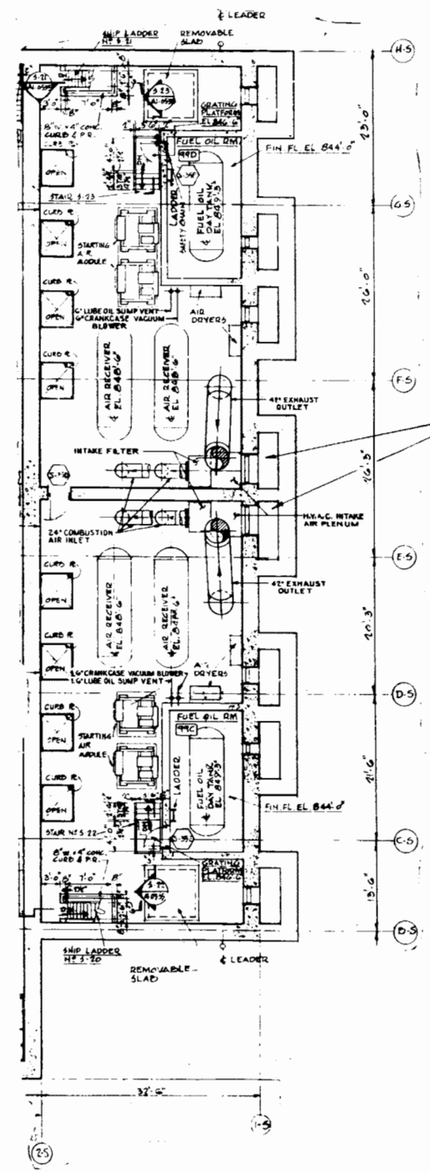

DIESEL GENERATOR BUILDING
PLAN AT EL. 865'-0"

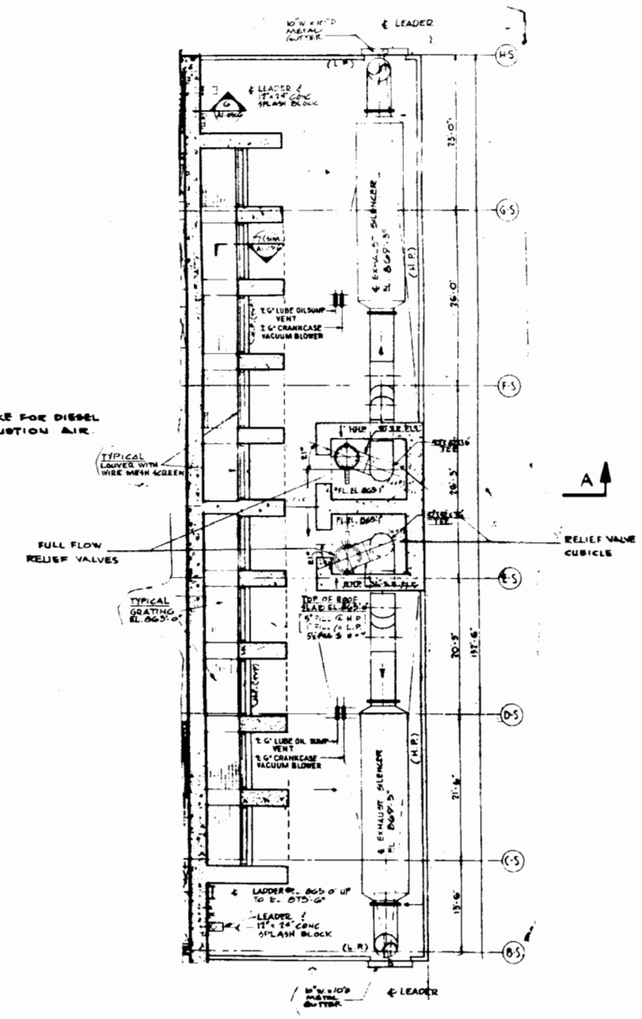

AMENDMENT 11
JULY 31, 1980

COMANCHE PEAK S.E.S.
FINAL SAFETY ANALYSIS REPORT
UNITS 1 and 2

DIESEL GENERATOR
BUILDING PLAN

FIGURE 9.5-58

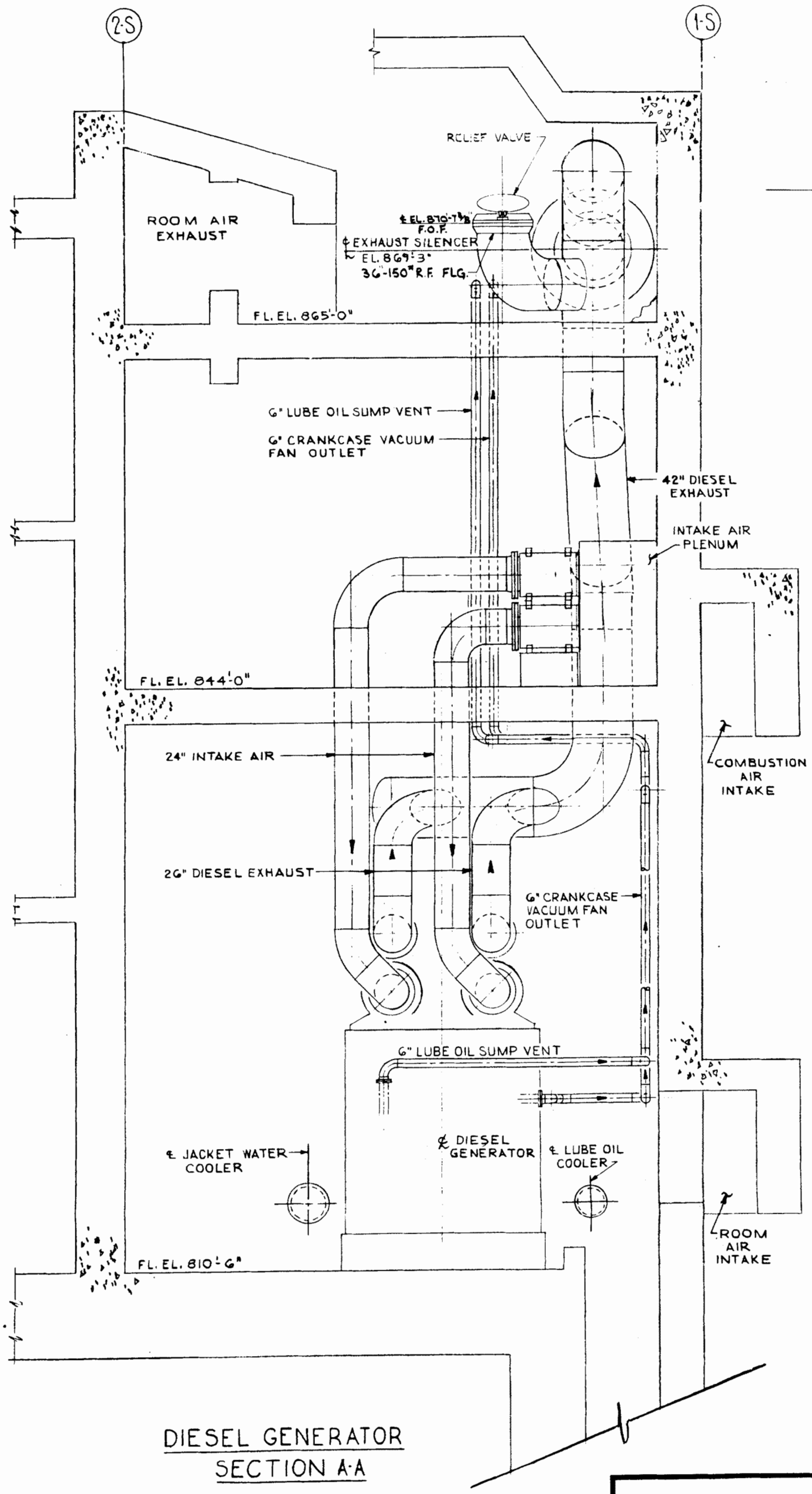

DIESEL GENERATOR
SECTION A-A

COMANCHE PEAK S.E.S.
FINAL SAFETY ANALYSIS REPORT
UNITS 1 and 2

DIESEL GENERATOR
BUILDING ELEVATION

FIGURE 9.5-59

FIGURE 9.5-60 96

This Figure Not Used

REV	DWN	CHKD	APVD	REMARKS
CP-34	MM 07-22-2014	GAW 07-22-2014		THIS DRAWING REVISED TO INCORPORATE DESIGN CHANGE FDA 2013-000008-29-00 PER SK-0001-13-000008-29-00.

NOTES:

1. FOR FIRE PROTECTION SYMBOLS AND NOTES SEE DRAWING M1-0225. FOR MECHANICAL SYMBOLS AND NOTES SEE DRAWING M1-0200.
2. UNLESS OTHERWISE NOTED, DRAINS COLLECTED BY LOCAL DRAIN SYSTEM UNDER ADMINISTRATIVE CONTROL.
3. THE FIRE SUPPRESSION SYSTEM FOR STARTUP TRANSFORMER XST2 WILL NOT BE IN SERVICE WHEN SPARE TRANSFORMER XST1/2 IS USED TO REPLACE XST2.
4. THE FIRE SUPPRESSION SYSTEM FOR TRANSFORMERS XST1 AND XST1A WILL ONLY BE IN SERVICE WHEN ITS ASSOCIATED TRANSFORMER IS ENERGIZED.
5. SITE FACILITIES, NON QA APPLICABLE.
6. OPERATIONS, FP QA APPLICABLE.

REFERENCE DRAWINGS:

1. CP-0712-003
2. CP-0708
3. DWG#-1-51.326-920-5A2
4. TSS-FP-86004
5. DWG#-1-51.3530728.A2
6. 1869-B-3
7. DWG#-2-51.326-920-5A2
8. SP-1-CP-0749
9. DWG#-1-51.334681-1A8
10. DWG#-2-51.304201-4A2
11. DWG#-1-80.353034-5A3
12. DWG#-2-80.353034-5A3
13. DWG#-2.1-80.353034-5A3
14. DWG#-3-80.353034-5A3
15. DWG#-3.1-80.353034-5A3
16. DWG#-1-51.304201-4A2
17. DWG#-3-51.304201-4A2
18. DWG#-M1-1012
19. DWG#-E-2J14-F-0289
    DWG#-E-2J14-F-0292
20. DWG#-E-2J17-F-0308

CLASS II

LUMINANT
CPNPP
GLEN ROSE, TEXAS

FLOW DIAGRAM
FIRE PROTECTION SYSTEM
MAIN LOOP

DWG. NO. M1-0225 | SH. NO. 06 | REV. CP-34

FSAR FIGURE 9.5-61

THIS DRAWING CREATED ELECTRONICALLY

< FINAL PRINT >

me00084h.dgn A M1-0225-06

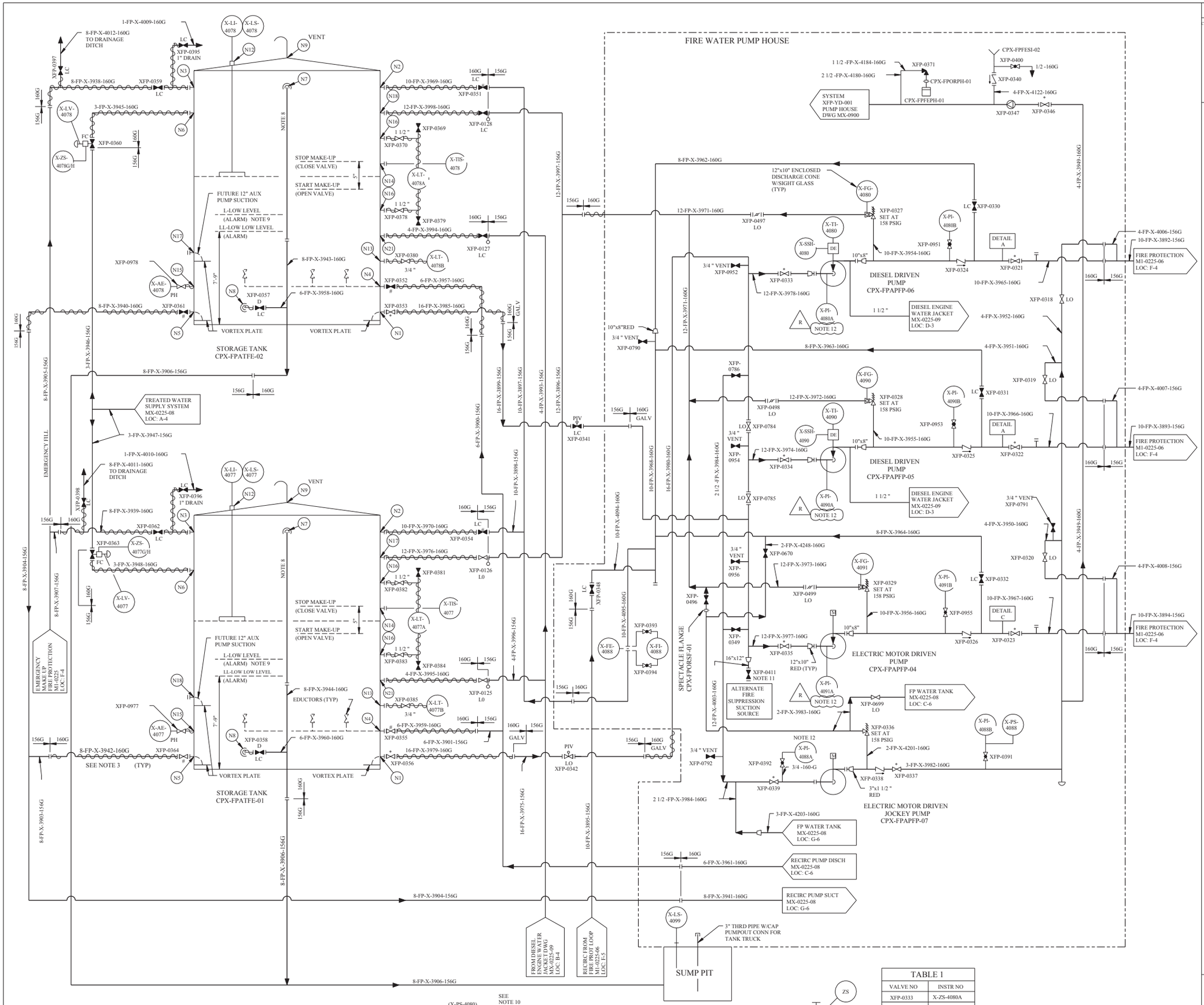

REV	DWN	CHKD	APVD	REMARKS
CP-16	JRMC 03-13 2008	SM 03-13 2008		THIS DRAWING REVISED TO INCORPORATE DESIGN CHANGE FDA 2007-002675-01-00 PER SK-0001-07-002675-01-00.

NOTES:

1. FOR INSTRUMENT LEGEND, SYMBOLS AND NOTES REFER TO DWG M1-2200-01. FOR MECHANICAL SYMBOLS AND NOTES REFER TO DWG M1-0200.
2. ALL VALVES MARKED WITH A * AND # WILL HAVE INDICATION SHOWN ON DETAIL B AND D RESPECTIVELY.
3. ALL ABOVE GROUND EXPOSED PIPING IS TO BE HEAT TRACED.
4. DELETED
5. LCP-1 COMMON LOCAL PANEL (CPX-FPCPLV-01) IN CHEMICAL FEED EQUIPMENT ROOM.
   LCP-4 LOCAL CONTROL PANEL FOR MOTOR DRIVEN PUMP 04 (CPX-FPAPFP-04)
   LCP-5 LOCAL CONTROL PANEL FOR DIESEL PUMP 05 (CPX-FPAPFP-05)
   LCP-6 LOCAL CONTROL PANEL FOR DIESEL PUMP 06 (CPX-FPAPFP-06)
   CR-UNIT 1 AND 2 MAIN CONTROL ROOM (COMMON AREA)
6. ALL BUILDING FLOOR AND EQUIPMENT DRAINS WILL BE ROUTED TO SUMP PIT.
7. SEE 15454.15-ESK-4FPS03 SH 1 TO 4 AND 15454.15-ESK-10FPS01 FOR ALARMS ON LOCAL DIESEL DRIVEN PUMP CONTROLLER PANELS WHICH ACTUATE COMMON TROUBLE ALARMS ON THE MAIN CONTROL PANEL, FIRE DETECTION PANEL CPX-EIPRLV-02 AND LOCAL PANEL CPX-FPCPLV-01.
8. TANK OVERFLOW PIPING BY TANK VENDOR (CBI).
9. LOW LEVEL ALARM SET AT 519,586 GALLONS IN THE TANK ABOVE CENTERLINE OF PUMP SUCTION.
10. DIESEL DRIVEN PUMPS CPX-FPAPFP-05 AND CPX-FPAPFP-06 START WHEN THE DISCHARGE HEADER PRESSURE DROPS BELOW 140 PSIG AT 10 AND 20 SECOND INTERVALS RESPECTIVELY.
11. XFP-0411 IS AN APPROVED AND PROCEDURALIZED ALTERNATIVE FIRE SUPPRESSION SUCTION SOURCE.
12. ACCEPTABLE SAMPLE POINT.

REFERENCES:

FLOW DIAGRAM - FIRE PROTECTION SYSTEM MAIN LOOP
DWG M1-0225-6
FLOW DIAGRAM - POTABLE AND SANITARY WATER SYSTEM
DWG M1-0227
FLOW DIAGRAM - FIRE PROTECTION TREATED WATER SYSTEM
DWG MX-0225-08
FLOW DIAGRAM - FIRE PROTECTION TREATED WATER SYSTEM
DWG MX-0225-09
PUMP HOUSE SUPPRESSION SYSTEM
DWG MX-0900

TABLE 1

VALVE NO	INSTR NO
XFP-0333	X-ZS-4080A
XFP-0321	X-ZS-4080B
XFP-0334	X-ZS-4090A
XFP-0322	X-ZS-4090B
XFP-0335	X-ZS-4091A
XFP-0323	X-ZS-4091B
XFP-0339	X-ZS-4088A
XFP-0337	X-ZS-4088B
XFP-0356	X-ZS-4077
XFP-0353	X-ZS-4078
XFP-0346	X-ZS-4088

TABLE 2

VALVE	INSTR
XFP-0364	X-ZS-4077C/D
XFP-0361	X-ZS-4078C/D
XFP-0355	X-ZS-4077E/F
XFP-0352	X-ZS-4078E/F

DETAIL D
TYPICAL FOR ALL VALVES MARKED WITH # AND LISTED IN TABLE 2

DETAIL C

DETAIL A

DETAIL B
TYPICAL FOR ALL VALVES MARKED WITH * AND LISTED IN TABLE 1

FSAR FIGURE 9.5-62

THIS DRAWING CREATED ELECTRONICALLY

CLASS II

LUMINANT
CPSES
GLEN ROSE, TEXAS

FLOW DIAGRAM
FIRE PROTECTION TREATED WATER SUPPLY SYSTEM

DWG. NO. MX-0225 | SH. NO. 07 | REV. CP-16

me871600.dgn MX-0225-07 FINAL PRINT

REV	DWN	CHKD	APVD	REMARKS
CP-11	DGK 05-30-2006	MSI 05-30-2006		THIS DRAWING REVISED TO INCORPORATE DESIGN CHANGE FDA 2003-002435-04-01 PER SK-0002-03-002435-04-01.

NOTES:

1. FOR INSTRUMENT LEGEND, SYMBOLS AND NOTES REFER TO DWG M1-2200-01. FOR MECHANICAL SYMBOLS AND NOTES REFER TO DWG M1-0200.
2. 3" CONNECTION FOR WATER TRUCK FILL, NOT FOR FILL BY POTABLE WATER SOURCE.
3. DELETED
4. PIPING SHOWN ON THIS DRAWING IS EXEMPT FROM QA APPLICABILITY REQUIREMENT PER SPECIFICATION 2323-MS-98.
5. ACCEPTABLE SAMPLE POINT.

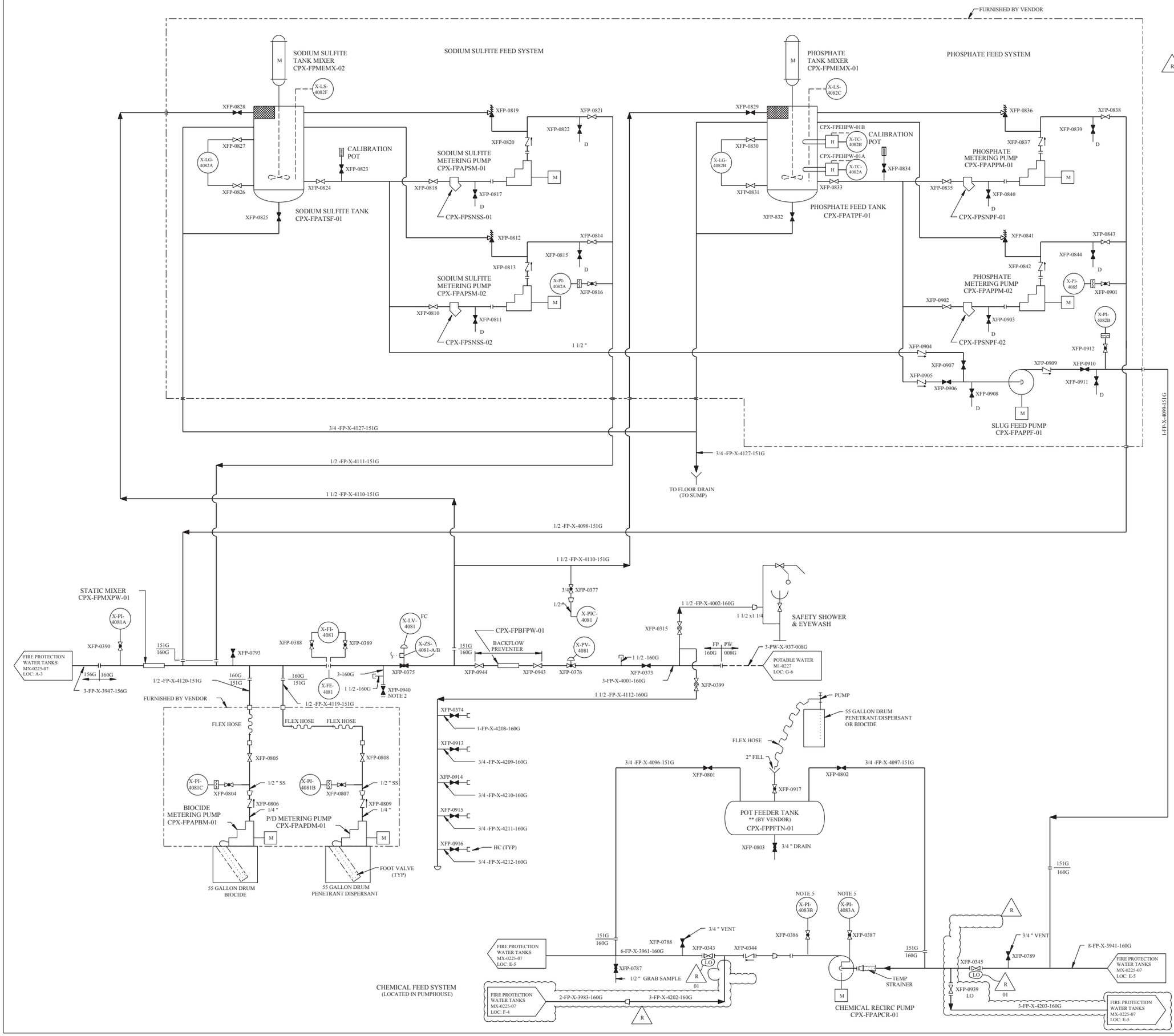

CLASS II

LUMINANT
CPSES
GLEN ROSE, TEXAS

FLOW DIAGRAM
FIRE PROTECTION TREATED WATER SUPPLY SYSTEM

DWG. NO. MX-0225 | SH. NO. 08 | REV. CP-11

FSAR FIGURE 9.5-62

THIS DRAWING CREATED ELECTRONICALLY

REF CKD 6-1-98 CP-10

me686700.dgn MX-0225-08

FINAL PRINT

REV	DWN	CHKD	APVD	REMARKS
CP-11	RC 12-23-09			THIS DRAWING REVISED TO INCORPORATE DESIGN CHANGE DCN 13208 REV 0.

NOTES:

1. FOR INSTRUMENT LEGEND, SYMBOLS AND NOTES REFER TO DWG MI-2280-01. FOR MECHANICAL SYMBOLS AND NOTES REFER TO TO DWG M1-0200.
2. PIPING SHOWN ON THIS DRAWING IS EXEMPT FROM QA APPLICABILITY REQUIREMENT PER SPECIFICATION MS-98, EXCEPT LINE NUMBERS 3/4 -FP-X-4100-152G AND 3/4 -FP-X-4105-152G.
3. * * VENDOR SUPPLIED

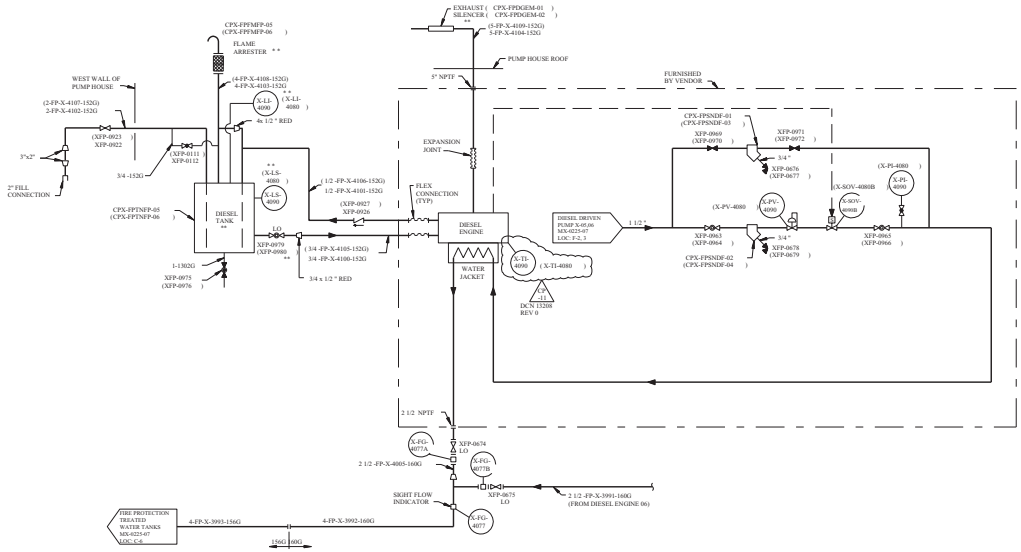

DIESEL ENGINE
CPX-FPAPFP-05,06
LINE NUMBERS AND INSTRUMENT NUMBERS IN PARENTHESES ARE FOR DIESEL PUMP CPX-FPAPFP-06

FSAR FIGURE 9.5-62

THIS DRAWING CREATED ELECTRONICALLY

CLASS II

TXU ELECTRIC
CPSES
GLEN ROSE, TEXAS

FLOW DIAGRAM
FIRE PROTECTION TREATED WATER
SUPPLY SYSTEM

DWG. NO.	SH. NO.	REV.
MX-0225	09	CP-11

FINAL PRINT

mx0001z9.dgn

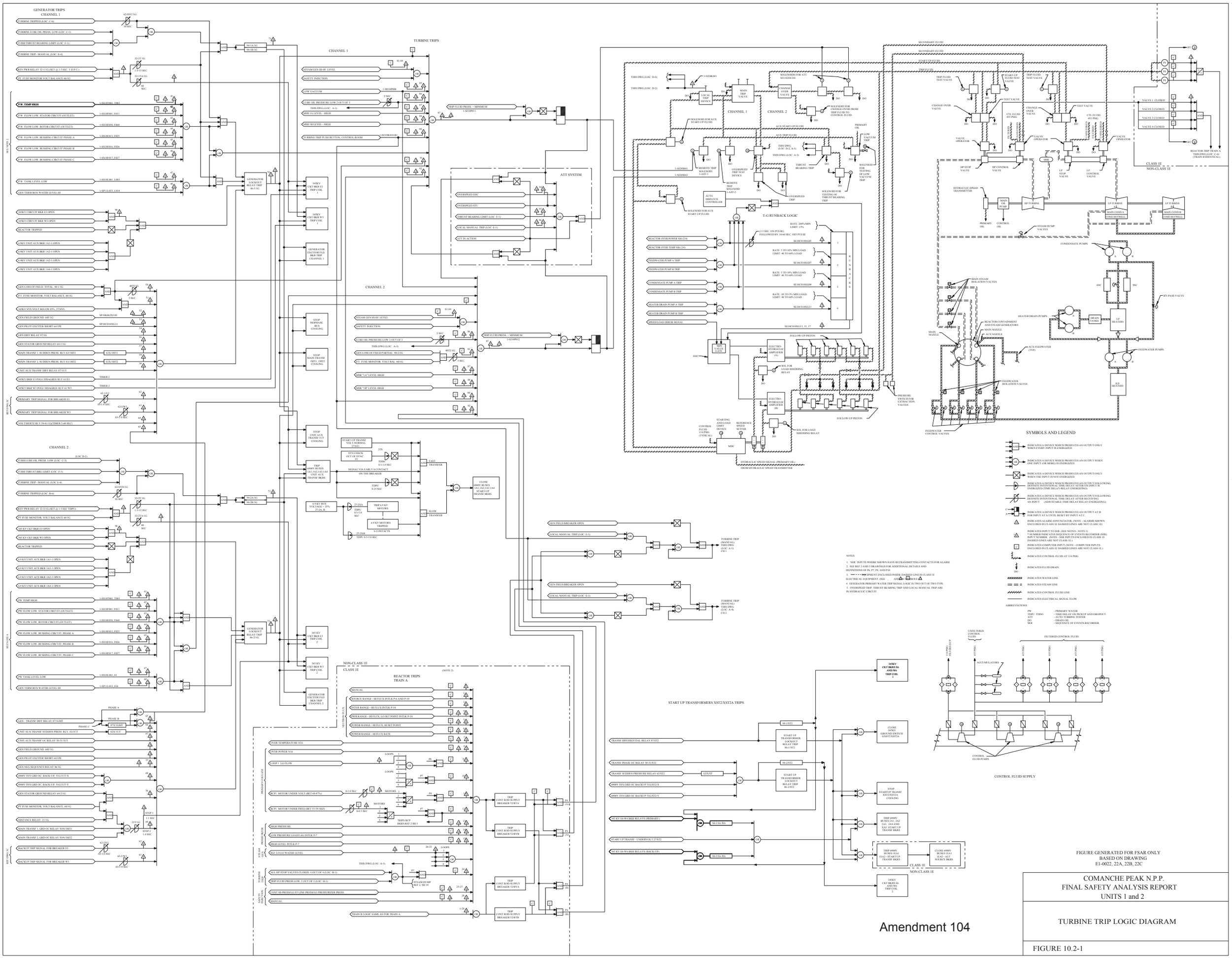

FIGURE GENERATED FOR FSAR ONLY BASED ON DRAWING E1-0022, 22A, 22B, 22C

COMANCHE PEAK N.P.P.
FINAL SAFETY ANALYSIS REPORT
UNITS 1 and 2

TURBINE TRIP LOGIC DIAGRAM

FIGURE 10.2-1

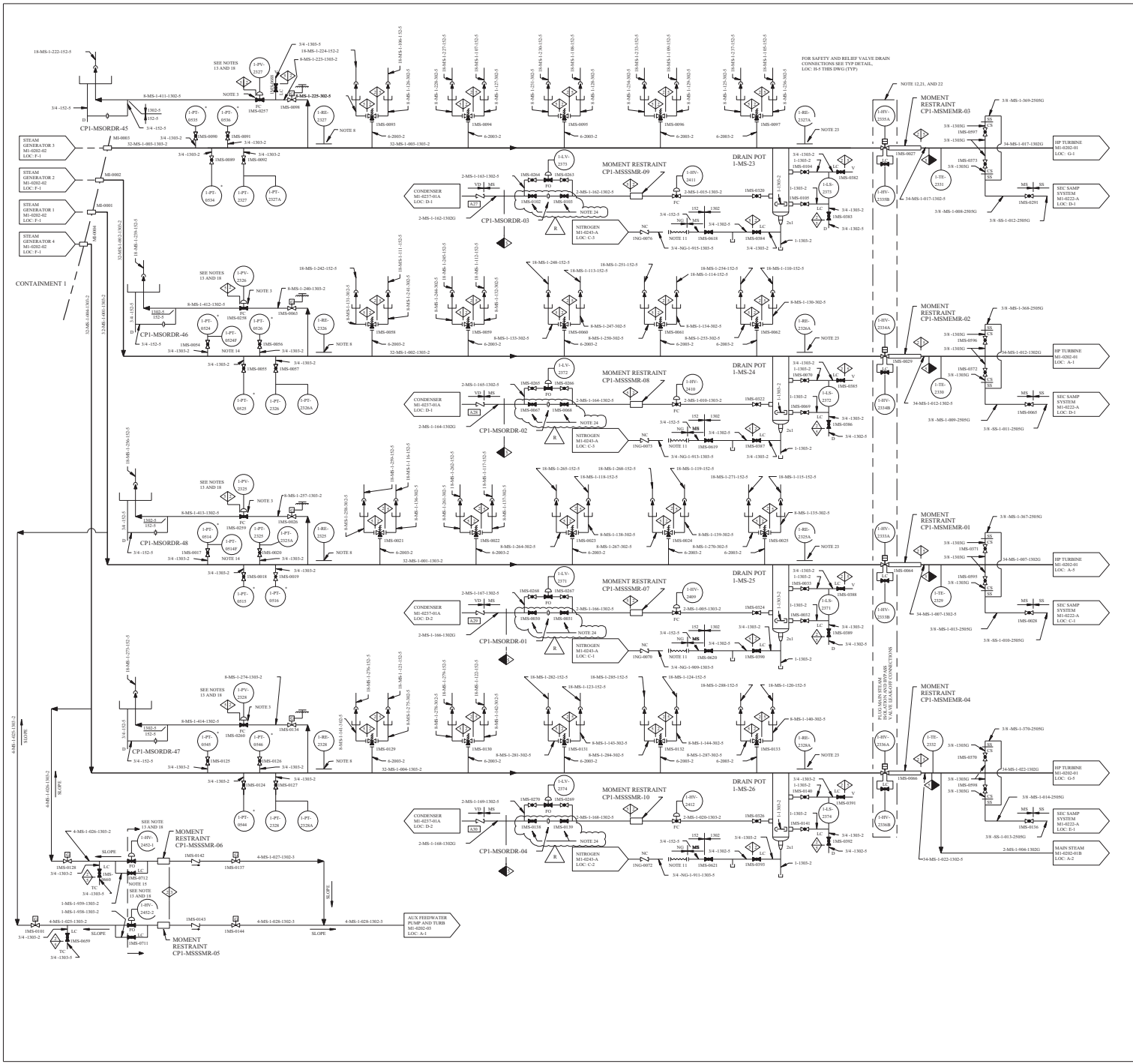

REV	DWN	CHKD	APVD	REMARKS
CP-33	CA 11-01-2001	TE 11-01-2001		THIS DRAWING REVISED TO INCORPORATE DESIGN CHANGE FDA-2001-001305-01-00 PER SK-0001-01-00,1305-01-00.

NOTES:

1. * INSTRUMENT BY WESTINGHOUSE.
2. FOR GENERAL NOTES AND SYMBOLS SEE DRAWING M1-0200.
3. POWER OPR. VALVE SHALL BE LOCATED ON THE HORIZONTAL RUN.
4. ALL NUCLEAR CLASS LINES 2" AND SMALLER WILL HAVE THE SAME PIPE CATEGORY AS THE MAIN RUN LINE UNLESS NOTED OTHERWISE.
5. DELETED
6. A29 REPRESENTS DRAIN CONNECTIONS SHOWN IN DRAWING M1-0237-01.
7. DELETED
8. MAIN STEAM LINE MONITOR DETECTOR ASSEMBLY IS LOCATED BETWEEN THE PORV AND THE FIRST SAFETY VALVE. IT IS A PROXIMITY DEVICE MOUNTED ADJACENT TO THE PIPE.
9. INSTRUMENT AIR SUPPLY FROM SAFEGUARD BUILDING HEADER NUMBER 3-C3-1-4906-115-5.
10. UNLESS OTHERWISE NOTED ALL DRAINS COLLECTED BY LOCAL DRAIN SYSTEM.
11. NITROGEN SUPPLY THRU HOSE CONNECTION.
12. MAIN STEAM ISOLATION VALVES AND BYPASS VALVES SUPPLIED BY ROCKWELL.
13. CONTROL VALVE HAS AN ASSOCIATED SAFETY CLASS 3 ACCUMULATOR AS NOTED.

1-HV-2452-2	CP1-CIATMS-02
1-HV-2452-1	CP1-CIATMS-01
1-PV-2327	CP1-MSATRT-03
1-PV-2326	CP1-MSATRT-01
1-PV-2325	CP1-MSATRT-02
1-PV-2328	CP1-MSATRT-04

14. REFER TO WESTINGHOUSE DWG 875ID39 SH 13.
15. REFER TO ICD M1-2206-02A, B.
16. DELETED
17. DELETED
18. FOR TYPICAL ARRANGEMENT REFER TO M1-2120-01,-03.
19. DELETED
20. DELETED
21. CAUTION: MAIN STEAM ISOLATION VALVES WILL OPEN UPON LOSS OF POWER TO BOTH TRAIN A AND B HYDRAULIC SOLENOIDS UNLESS AIR OPERATED HYDRAULIC PUMP IS DEACTIVATED. SEE M1-2202-02 FOR LOGIC.
22.

ASSOCIATED MSIV NUM.	TRAIN A HYDR. ISOL. VALVE	TRAIN B HYDR. ISOL. VALVE
1-HV-2333A	IMS-0064A	IMS-0064B
1-HV-2334A	IMS-0029A	IMS-0029B
1-HV-2335A	IMS-0027A	IMS-0027B
1-HV-2336A	IMS-0066A	IMS-0066B

23. STEAM GENERATOR LEAK DETECTOR ASSEMBLY IS LOCATED BETWEEN THE DRIP POT AND MAIN STEAM ISOLATION VALVE. IT IS A PROXIMITY DEVICE MOUNTED ON TOP OF THE PIPE INSULATION.
24. EACH ORIFICE MAY BE ISOLATED USING EITHER MANUAL ISOLATION VALVE DURING NORMAL POWER OPERATION.

R

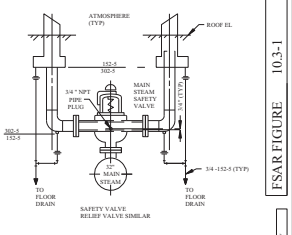

FSAR FIGURE 10.3-1

THIS DRAWING CREATED ELECTRONICALLY

DRAWING	M1-0202	REV	CP-28

HAS BEEN SPLIT INTO THE FOLLOWING SHEETS:

M1-0202
M1-0202-03

CLASS I

(NUCLEAR SAFETY-RELATED)

SAFETY CLASS 1 SAFETY CLASS 2 SAFETY CLASS 3 — SEISMIC CATEGORY I CLASS 1E ASSOCIATED CIRCUITS — I

TXU ELECTRIC
CPSES
GLEN ROSE, TEXAS

FLOW DIAGRAM
MAIN STEAM REHEAT
AND STEAM DUMP

DWG. NO.	SH. NO.	REV.
M1-0202	-	CP-33

mc378600.dgn M1-0202

REF CKD:CP-31 (02/15/98

$$$$$DATE$$$$$

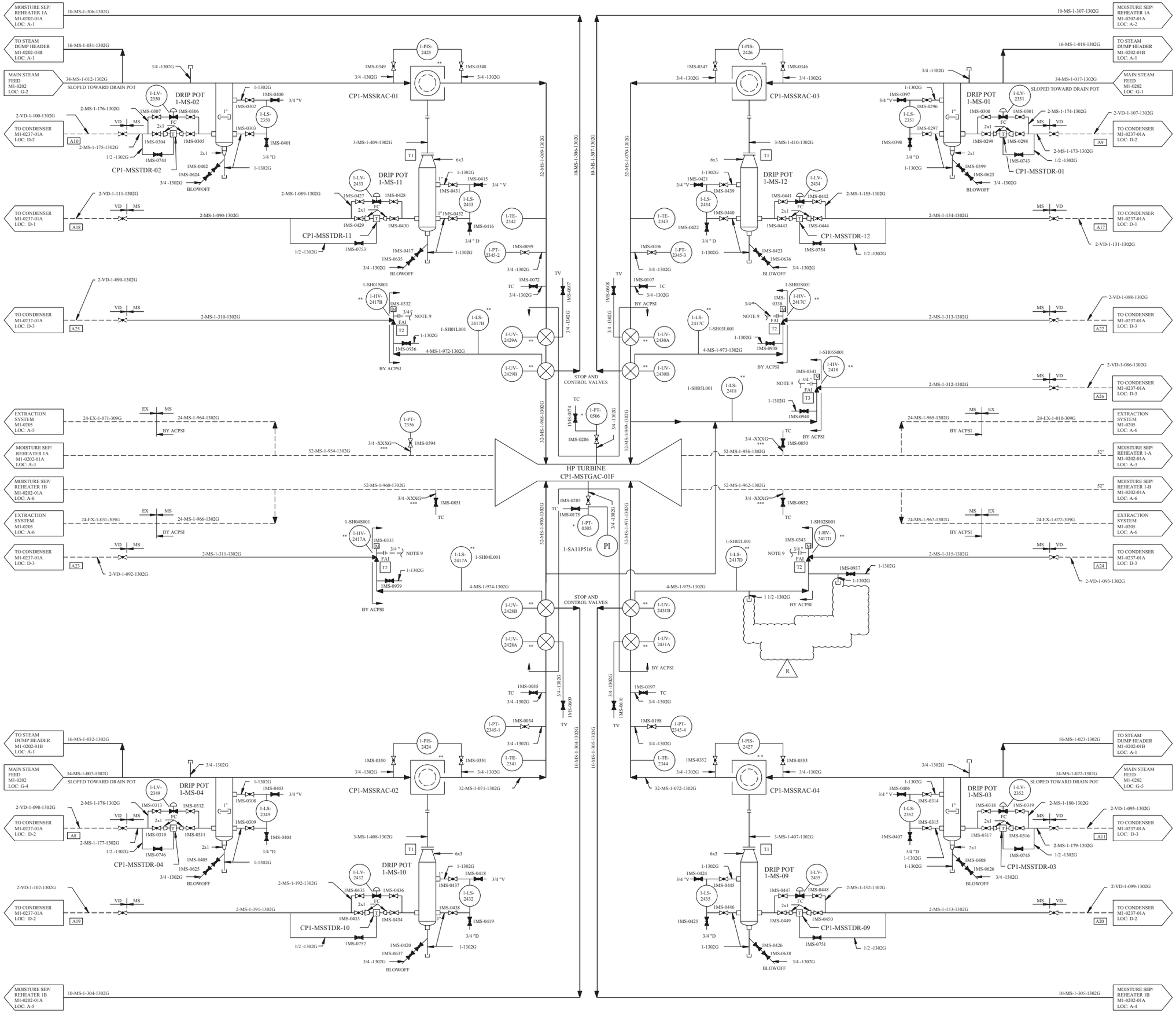

REV	DWN	CHKD	APVD	REMARKS
CP-21	DGK 08-23-2005	MM 08-23-2005		THIS DRAWING REVISED TO INCORPORATE DESIGN CHANGE FDA 2000-000247-04-00 PER SK-0054-00-000247-04-00. EDITORIAL CHANGE, REMOVED THE RED FROM 2x1 RED.

NOTES:

1. * INSTRUMENT BY WESTINGHOUSE.
2. ** BY ACPSI.
3. FOR GENERAL SYMBOLS AND NOTES SEE DRAWING M1-0200.
4. ☐ INDICATES CUSTOMER'S PIPE CONNECTION TO ACPSI SUPPLIED EQUIPMENT.
5. FOR DETAILS OF MSR SEE DRAWING M1-0209 AND M1-0209-A.
6. SLOPED DOWNWARD WITH A 2 FT MINIMUM VERTICAL LEG.
7. ☐ REPRESENTS DRAIN CONNECTIONS SHOWN ON FD M1-0237-01A.
8. DELETED
9. SEAL FLUID TO DRAIN VALVE LANTERN RING IS SUPPLIED FROM THE CONDENSATE SYSTEM. SEE M1-0204, LOC: A/B/C-3.
10. UNLESS OTHERWISE NOTED ALL DRAINS COLLECTED BY LOCAL DRAIN SYSTEM.
11. *** REFER TO ACPSI SPOOL SHEET PIECE PART NUMBERS FOR MATERIAL REQUIREMENTS.

LEGEND:

- MAIN STEAM
- HOT REHEAT (BY ACPSI)
- COLD REHEAT (BY ACPSI)
- AUXILIARY PIPING

FSAR FIGURE 10.3-1

THIS DRAWING CREATED ELECTRONICALLY

DRAWING 2323-M1-0202-01 REV CP-2
HAS BEEN SPLIT INTO THE FOLLOWING SHEETS:
M1-0202-01
M1-0202-01A
M1-0202-01B

NON-SAFETY

LUMINANT
CPSES
GLEN ROSE, TEXAS

FLOW DIAGRAM
MAIN STEAM REHEAT
AND STEAM DUMP

DWG. NO. M1-0202 | SH. NO. 01 | REV. CP-21

FINAL PRINT

me815300.dgn A M1-0202-01

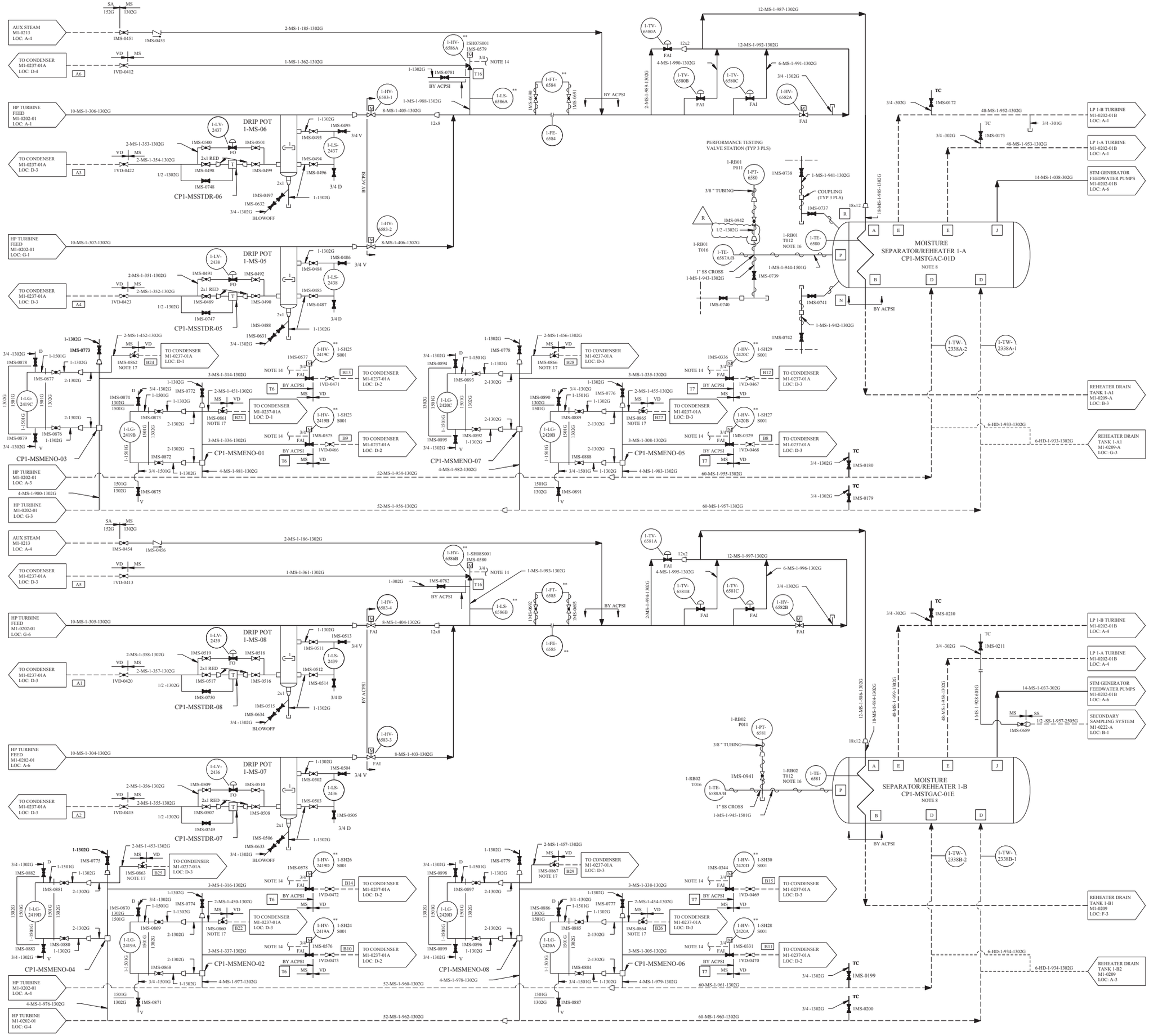

REV	DWN	CHKD	APVD	REMARKS
CP-23	DLK 10-05 2011	MM 10-05 2011		THIS DRAWING REVISED TO INCORPORATE DESIGN CHANGE FDA 2011-000159-01-00 PER SK-0002-11-000159-01-00.

NOTES:

1. * INSTRUMENT BY WESTINGHOUSE.
2. ** BY ACPSI
3. FOR GENERAL SYMBOLS AND NOTES SEE DRAWING M1-0200.
4. *** BY GENERAL ELECTRIC.
5. 10X8 REDUCERS ARE WELDED TO THE VALVE BODY BY FISHER CONTROLS.
6. ◯ INDICATES CUSTOMER'S PIPE CONNECTION TO WESTINGHOUSE SUPPLIED CONDENSER.
7. ▢ INDICATES CUSTOMER'S PIPE CONNECTION TO ACPSI SUPPLIED EQUIPMENT.
8. FOR DETAILS OF MSR SEE DRAWING M1-0209.
9. SLOPED DOWNWARD WITH A 2 FT MINIMUM VERTICAL LEG.
10. ▭ REPRESENTS DRAIN CONNECTIONS SHOWN ON FD M1-0237-01A.
11. ALL I&C CHANNEL NUMBERS WILL HAVE PREFIX ONE (1), IE 1-TE-3229 CONTROLS FOR CHANNEL NUMBERS ABOVE 6000, AS 1-HIV-6582 ARE FOUND IN TURBINE INSTRUMENT AND CONTROL DIAGRAMS.
12. ⬡ INDICATES CUSTOMER'S PIPE CONNECTION TO GENERAL ELECTRIC SUPPLIED EQUIPMENT.
13. DELETED
14. SEAL FLUID TO DRAIN VALVE LANTERN RING IS SUPPLIED FROM THE CONDENSATE SYSTEM. SEE M1-0204, LOC: A/B/C-3.
15. UNLESS OTHERWISE NOTED ALL DRAINS COLLECTED BY LOCAL DRAIN SYSTEM.
16. THERMOCOUPLES 1-TE-6580 (1-RB01T012) ARE EMBEDDED NEAR THE INLET STEAM SURFACE OF THE TUBESHEET.
17. VALVE MAY BE THROTTLED AS REQUIRED TO MAINTAIN DESIRED DRAIN LEVEL AT LEVEL GAUGE.

LEGEND:

- MAIN STEAM
- HOT REHEAT (BY ACPSI)
- COLD REHEAT (BY ACPSI)
- AUXILIARY PIPING

FSAR FIGURE 10.3-1

THIS DRAWING CREATED ELECTRONICALLY

DRAWING 2323-M1-0202-01	REV CP-2
HAS BEEN SPLIT INTO THE FOLLOWING SHEETS:	
M1-0202-01	
M1-0202-01A	
M1-0202-01B	

NON-SAFETY

LUMINANT
CPNPP
GLEN ROSE, TEXAS

FLOW DIAGRAM
MAIN STEAM REHEAT
AND STEAM DUMP

DWG. NO.	SH. NO.	REV.
M1-0202	01A	CP-23

FINAL PRINT

REF CKD CP-14 10/08/00

me103900.dgn M1-0202-01A

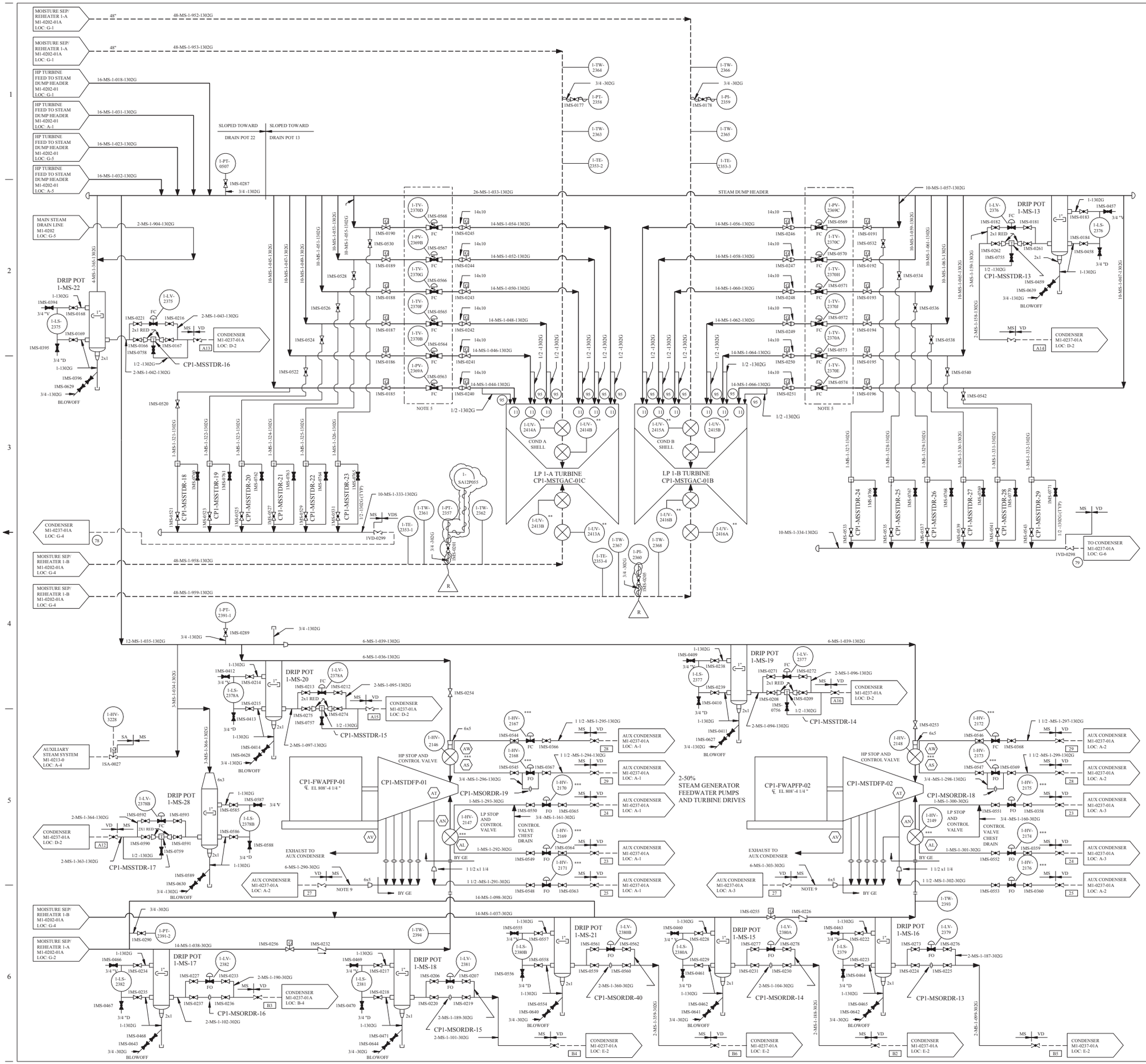

REV	DWN	CHKD	APVD	REMARKS
CP-12	BDC 11-15-2006	DIL 11-17-2006		THIS DRAWING REVISED TO INCORPORATE DESIGN CHANGE FDA-2006-003622-01-00 PER SK-0003-06-003622-01-00.

NOTES

1. DELETED
2. ** BY ACPSI.
3. FOR GENERAL SYMBOLS AND NOTES SEE DRAWING M1-0200.
4. *** BY GENERAL ELECTRIC.
5. 10x8 REDUCERS ARE WELDED TO THE VALVE BODY BY FISHER CONTROLS.
6. ◯ INDICATES CUSTOMER'S PIPE CONNECTION TO WESTINGHOUSE SUPPLIED CONDENSER.
7. ▢ INDICATES CUSTOMER'S PIPE CONNECTION TO ACPSI SUPPLIED EQUIPMENT.
8. FOR DETAILS OF MSR SEE DRAWING M1-0209.
9. SLOPED DOWNWARD WITH A 2 FT MINIMUM VERTICAL LEG.
10. ▭ REPRESENTS DRAIN CONNECTIONS SHOWN ON F.D. M1-0237-01.
11. ALL I&C CHANNEL NUMBERS WILL HAVE PREFIX ONE (1), i.e. 1-TE-3229. CONTROLS FOR CHANNEL NUMBER ABOVE 6000, AS 1-HV-6582 ARE FOUND IN TURBINE INSTRUMENTATION & CONTROL DIAGRAMS.
12. ⬡ INDICATES CUSTOMER'S PIPE CONNECTION TO GENERAL ELECTRIC SUPPLIED EQUIPMENT.
13. DELETED
14. SEAL FLUID TO DRAIN VALVE LANTERN IS SUPPLIED FROM THE CONDENSATE SYSTEM. SEE M1-0204, LOC: A/B/C-3.
15. UNLESS OTHERWISE NOTED ALL DRAINS COLLECTED BY LOCAL DRAIN SYSTEM.

LEGEND

- MAIN STEAM
- HOT REHEAT (BY ACPSI)
- COLD REHEAT (BY ACPSI)
- AUXILIARY PIPING

FSAR FIGURE 10.3-1

THIS DRAWING CREATED ELECTRONICALLY

DRAWING 2323-M1-0202-01 REV CP-2 HAS BEEN SPLIT INTO THE FOLLOWING SHEETS:

M1-0202 -01
M1-0202-01A
M1-0202-01B

NON-SAFETY

LUMINANT
CPSES
GLEN ROSE, TEXAS

FLOW DIAGRAM
MAIN STEAM REHEAT
AND STEAM DUMP

DWG. NO. M1-0202 | SH. NO. 01B | REV. CP-12

FINAL PRINT

me741700.dgn A M1-0202-01B

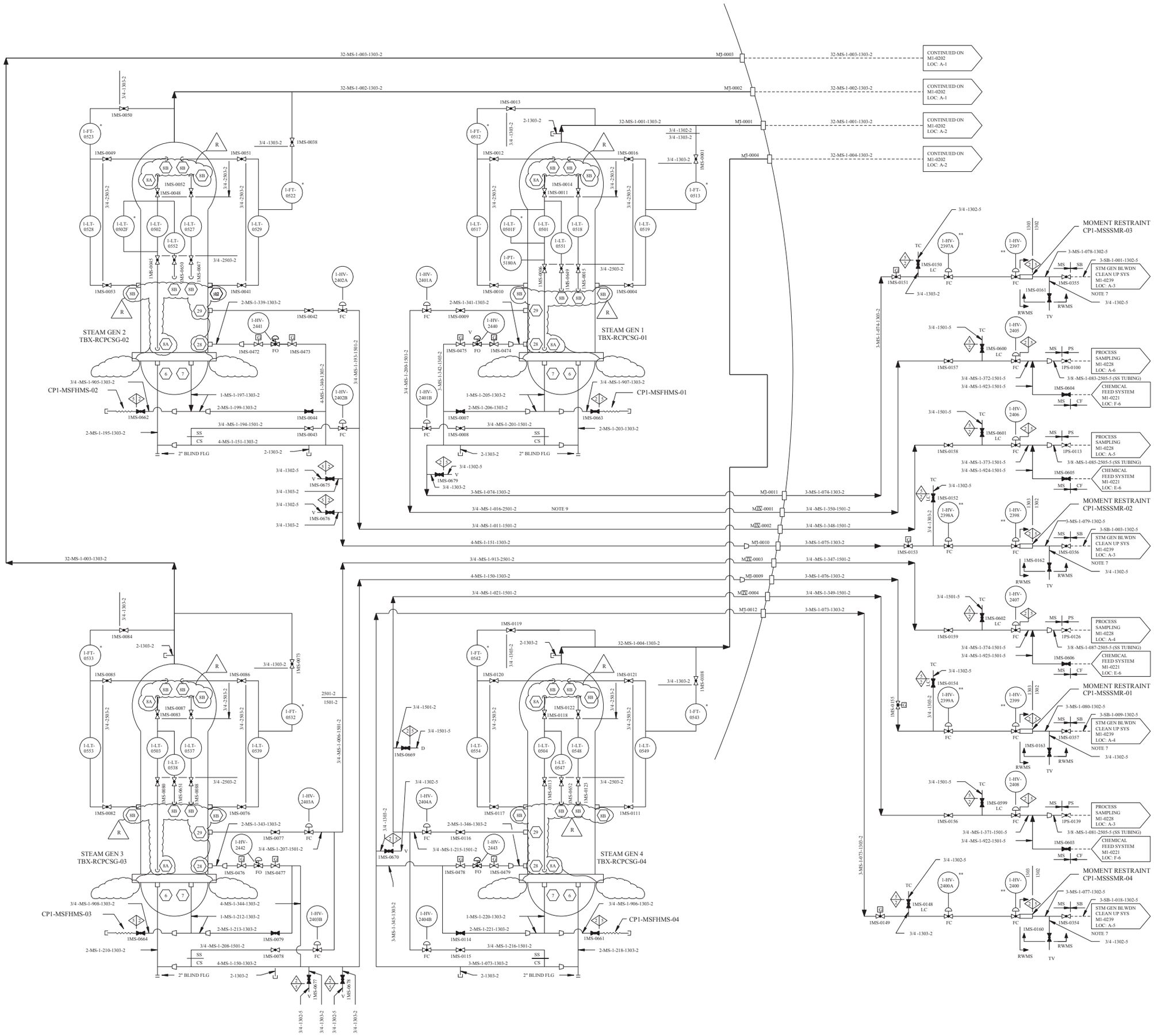

REV	DWN	CHKD	APVD	REMARKS
CP-21	MHF 04-18 2007	DLK 04-18 2007		THIS DRAWING REVISED TO INCORPORATE DESIGN CHANGE FDA-2005-000224-03-00 PER SK-0017-05-000224-03-00.

NOTES:

1. * INSTRUMENT BY WESTINGHOUSE.
2. UNLESS OTHERWISE NOTED ALL DRAINS COLLECTED BY LOCAL DRAIN SYSTEM.
3. FOR GENERAL NOTES AND SYMBOLS SEE DRAWING M1-0200.
4. CUSTOMER'S PIPE CONNECTIONS, AS SUPPLIED BY INDICATED BY ⬡ .
5. ALL NUCLEAR CLASS LINES 2" AND SMALLER WILL HAVE THE SAME PIPE CATEGORY AS THE MAIN RUN LINE UNLESS NOTED OTHERWISE.
6. ALL INSTRUMENT AND CONTROL CHANNEL NUMBERS WILL HAVE PREFIX ONE (1), I.E. 1-TE-2341.
7. DENOTES RADIOACTIVE WASTE MANAGEMENT SYSTEM CONTINUES ON IDENTIFIED DRAWING.
8. ** EQUIPMENT USED IN MITIGATION OF HELB.
9. PIPING CATEGORY SHOWN AS BUILT.
10. DELETED

R — DRAWING 6655E34

FSAR FIGURE 10.3-1

THIS DRAWING CREATED ELECTRONICALLY

CLASS I

(NUCLEAR SAFETY-RELATED)

SAFETY CLASS 1 — SEISMIC CATEGORY I
SAFETY CLASS 2 — CLASS 1E
SAFETY CLASS 3 — ASSOCIATED CIRCUITS

LUMINANT
CPSES
GLEN ROSE, TEXAS

FLOW DIAGRAM
MAIN STEAM REHEAT
AND STEAM DUMP

DWG. NO. M1-0202 | SH. NO. 02 | REV. CP-21

FINAL PRINT

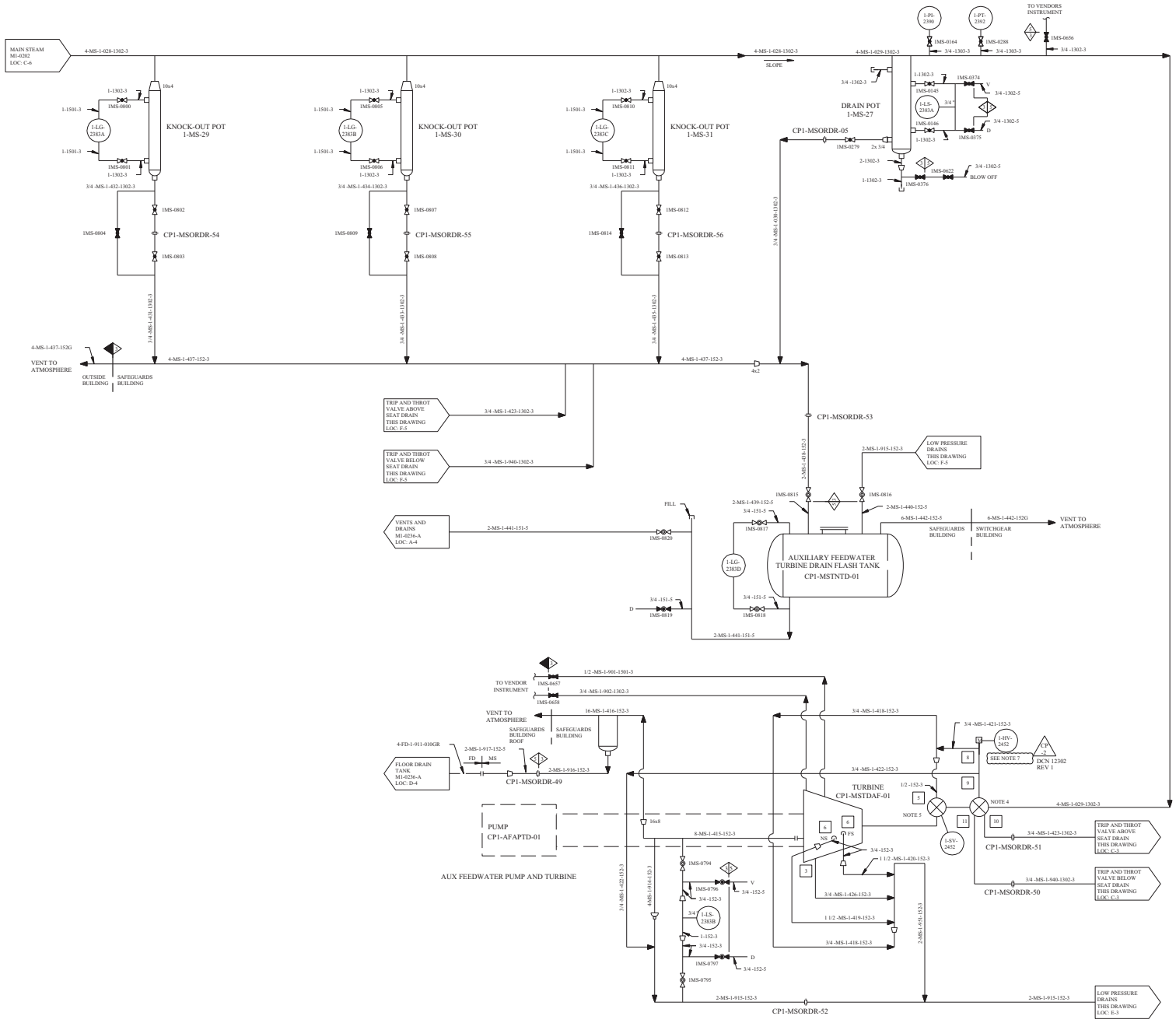

REV	DWN	CHKD	APVD	REMARKS
CP-2	C.A. 11-17-1999			THIS DRAWING REVISED TO INCORPORATE DESIGN CHANGE DCN 12302 REV 1.

NOTES:

1. FOR GENERAL NOTES AND SYMBOLS SEE DRAWING M1-0200.
2. UNLESS OTHERWISE NOTED ALL DRAINS COLLECTED BY LOCAL DRAIN SYSTEM.
3. 1.1 REPRESENTS PURCHASER PIPE CONNECTIONS TO TERRY TURBINE.
4. TURBINE TRIP AND THROTTLE VALVE, SUPPLIED BY CP-0007.
5. TURBINE GOVERNER VALVE, SUPPLIED BY CP-0007.
6. THREADED PORTION OF LINES 3/4 -MS-1-421-152-3 AND 3/4 -MS-1-422-152-3 ARE SCH 160 PIPE IN LIEU OF SPECIFIED SCH 80.
7. THE TRIP AND THROTTLE VALVE IS A SOLENOID ACTUATED TRIP VALVE. THE VALVE CAN BE MANUALLY OPENED BY USE OF THE HAND WHEEL. ELECTRICAL POWER TO THE MOTOR OPERATOR HAS BEEN DISCONNECTED.

CP-2
DCN 12302
REV 1

FSAR FIGURE 10.3-1

THIS DRAWING CREATED ELECTRONICALLY

DRAWING M1-0202	REV CP-28
HAS BEEN SPLIT INTO THE FOLLOWING SHEETS:	
M1-0202	
M1-0202-03	

CLASS I
(NUCLEAR SAFETY-RELATED)
SAFETY CLASS 1 — SEISMIC CATEGORY I
SAFETY CLASS 2 — CLASS 1E
SAFETY CLASS 3 — ASSOCIATED CIRCUITS

TXU ELECTRIC
CPSES
GLEN ROSE, TEXAS

FLOW DIAGRAM
MAIN STEAM REHEAT
AND STEAM DUMP

DWG. NO.	SH. NO.	REV.
M1-0202	03	CP-2

$$$$$$$D/A TE$$$$$$

me0001xb.dgn

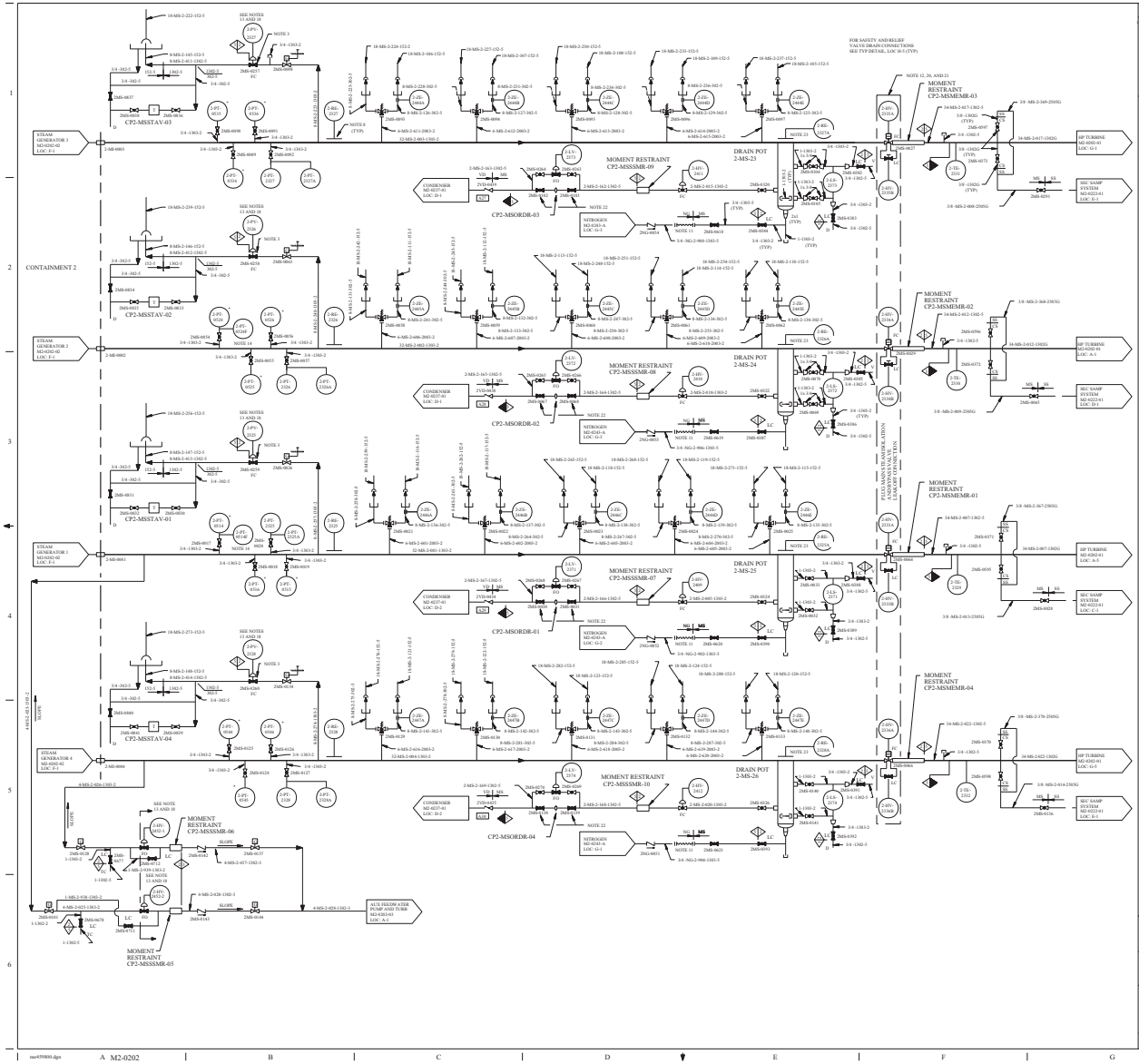

REV	DWN	CHKD	APVD	REMARKS
19-22	TBM 10-01-01	TBM 10-01-01	TBM 10-01-01	THIS DRAWING REVISED TO INCORPORATE ERRATA CHANGE PER A 2003-0010/EDI-00 PER SE-0001-03-00/SE-01-00.

NOTES:

1. * INSTRUMENT BY WESTINGHOUSE.
2. FOR GENERAL NOTES AND SYMBOLS SEE DRAWING M1-0200.
3. POWER OPR. VALVE SHALL BE LOCATED ON THE HORIZONTAL RUN.
4. ALL NUCLEAR CLASS LINES 2" AND SMALLER WILL HAVE THE SAME PIPE CATEGORY AS THE MAIN RUN LINE UNLESS NOTED OTHERWISE.
5. DELETED
6. [NOTE] REPRESENTS DRAIN CONNECTIONS SHOWN IN DRAWING M2-0227-01.
7. DELETED
8. MAIN STEAM LINE MONITOR DETECTOR ASSEMBLY IS LOCATED BETWEEN THE PORV AND THE FIRST SAFETY VALVE. IT IS A PROXIMITY DEVICE MOUNTED ADJACENT TO THE PIPE.
9. INSTRUMENT AIR SUPPLY FROM SAFEGUARD BUILDING HEADER NUMBER 1-CI-2-0496-115-5.
10. UNLESS OTHERWISE NOTED ALL DRAINS COLLECTED BY LOCAL DRAIN SYSTEM.
11. NITROGEN SUPPLY THRU HOSE CONNECTIONS.
12. MAIN STEAM ISOLATION VALVES AND BYPASS VALVES SUPPLIED BY ROCKWELL.
13. CONTROL VALVE HAS AN ASSOCIATED SAFETY CLASS 3 ACCUMULATOR AS NOTED:

2-HV-2412-2	CP2-CIA7M8-02
2-HV-2424-2	CP2-CIA7M8-01
2-PV-2326	CP2-MSA7R7-01
2-PV-2325	CP2-MSA7R7-02
2-PV-2328	CP2-MSA7R7-04

14. REFER TO WESTINGHOUSE DWG. 9758D19 SH. 13.
15. DELETED
16. DELETED
17. DELETED
18. FOR TYPICAL ARRANGEMENT REFER TO M1-2120-01, 03.
19. DELETED
20. CAUTION: MAIN STEAM ISOLATION VALVES WILL OPEN UPON LOSS OF POWER TO BOTH TRAIN A AND TRAIN B HYDRAULIC SOLENOIDS UNLESS AIR OPERATED HYDRAULIC PUMP IS DEACTIVATED. SEE M2-2202-02 FOR LOGIC.
21.

ASSOCIATED MSIV NUM.	TRAIN A HYDR. ISOL. VALVE	TRAIN B HYDR. ISOL. VALVE
2-HV-2310A	2MS-0866A	2MS-0866B
2-HV-2310A	2MS-0825A	2MS-0825B
2-HV-2310A	2MS-0827A	2MS-0827B
2-HV-2310A	2MS-0866A	2MS-0866B

22. EACH ORIFICE MAY BE ISOLATED USING EITHER MANUAL ISOLATION VALVE DURING NORMAL POWER OPERATION.
23. STEAM GENERATOR LEAK DETECTOR ASSEMBLY IS LOCATED ABOVE THE DRIP POT. IT IS A PROXIMITY DEVICE MOUNTED ON TOP OF THE PIPE INSULATION.

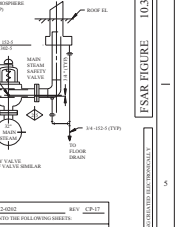

DRAWING	REV
M2-0202	CP-17

HAS BEEN SPLIT INTO THE FOLLOWING SHEETS:

M2-0202
M2-0202-03

THIS DRAWING CONTAINS ITEMS NOT SHOWN ON FSAR

FSAR FIGURE 10.3-1

CLASS I
(NUCLEAR SAFETY-RELATED)

SAFETY CLASS 1	SEISMIC CATEGORY I
SAFETY CLASS 2	QA CATEGORY I
SAFETY CLASS 3	ASSOCIATED CIRCUITS

TXU ENERGY
CPSES
GLEN ROSE, TEXAS

FLOW DIAGRAM
MAIN STEAM REHEAT
AND STEAM DUMP

DWG. NO. M2-0202 | SH. NO. - | REV. CP-22

REF CKD/CPT 11-1-96

SHSSSSSAVE/BSHS

ms459800.dgn

A M2-0202

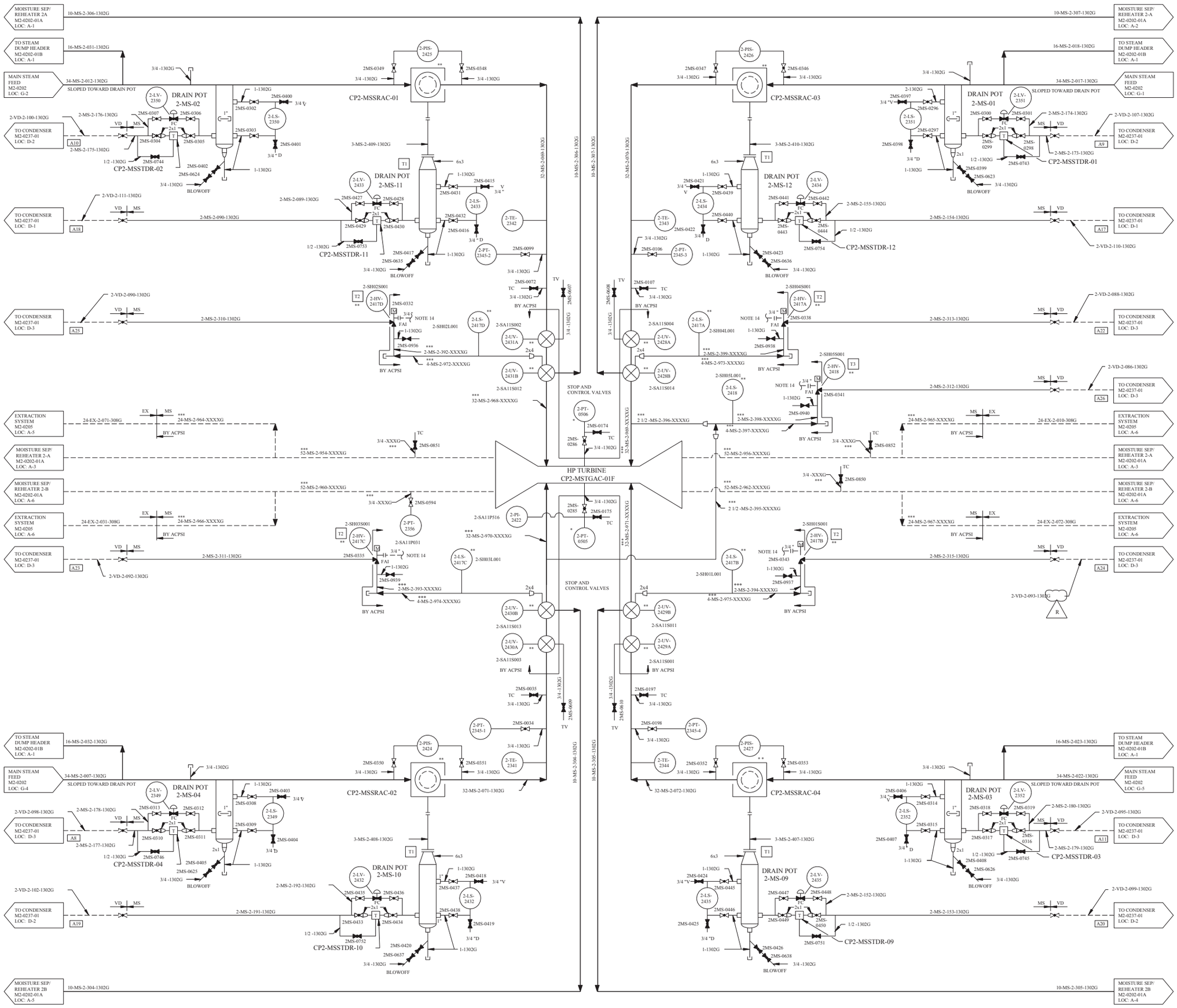

REV	DWN	CHKD	APVD	REMARKS
CP-16	DLK 02-18 2009	MM 02-18 2009		THIS DRAWING REVISED TO INCORPORATE DESIGN CHANGE FDA 2009-000538-01-00 PER SK-0001-09-000538-01-00.

NOTES:

1. * INSTRUMENT BY WESTINGHOUSE.
2. ** BY ACPSI.
3. FOR GENERAL SYMBOLS AND NOTES SEE DRAWING M1-0200.
4. DELETE
5. DELETE
6. DELETE
7. ☐ INDICATES CUSTOMER'S PIPE CONNECTION TO ACPSI SUPPLIED EQUIPMENT.
8. FOR DETAILS OF MSR SEE DRAWING M2-0209 AND M2-0209-A.
9. SLOPED DOWNWARD WITH A 2 FT MINIMUM VERTICAL LEG.
10. ☐ REPRESENTS DRAIN CONNECTIONS SHOWN ON FD M2-0237-01.
11. DELETED
12. DELETED
13. DELETED
14. SEAL FLUID TO DRAIN VALVE LANTERN RING IS SUPPLIED FROM THE CONDENSATE SYSTEM. SEE M2-0204, LOC: C/D-4.
15. UNLESS OTHERWISE NOTED ALL DRAINS COLLECTED BY LOCAL DRAIN SYSTEM.
16. *** REFER TO ACPSI SPOOL PIECE PART NUMBERS FOR MATERIAL REQUIREMENTS.

LEGEND:

- MAIN STEAM
- HOT REHEAT (BY ACPSI)
- COLD REHEAT (BY ACPSI)
- AUXILIARY PIPING

FSAR FIGURE 10.3-1

THIS DRAWING CREATED ELECTRONICALLY

DRAWING 2323-M2-0202-01 REV CP-1
HAS BEEN SPLIT INTO THE FOLLOWING SHEETS:

M2-0202-01
M2-0202-01A
M2-0202-01B

NON-SAFETY

LUMINANT
CPNPP
GLEN ROSE, TEXAS

FLOW DIAGRAM
MAIN STEAM REHEAT
AND STEAM DUMP

DWG. NO. M2-0202 | SH. NO. 01 | REV. CP-16

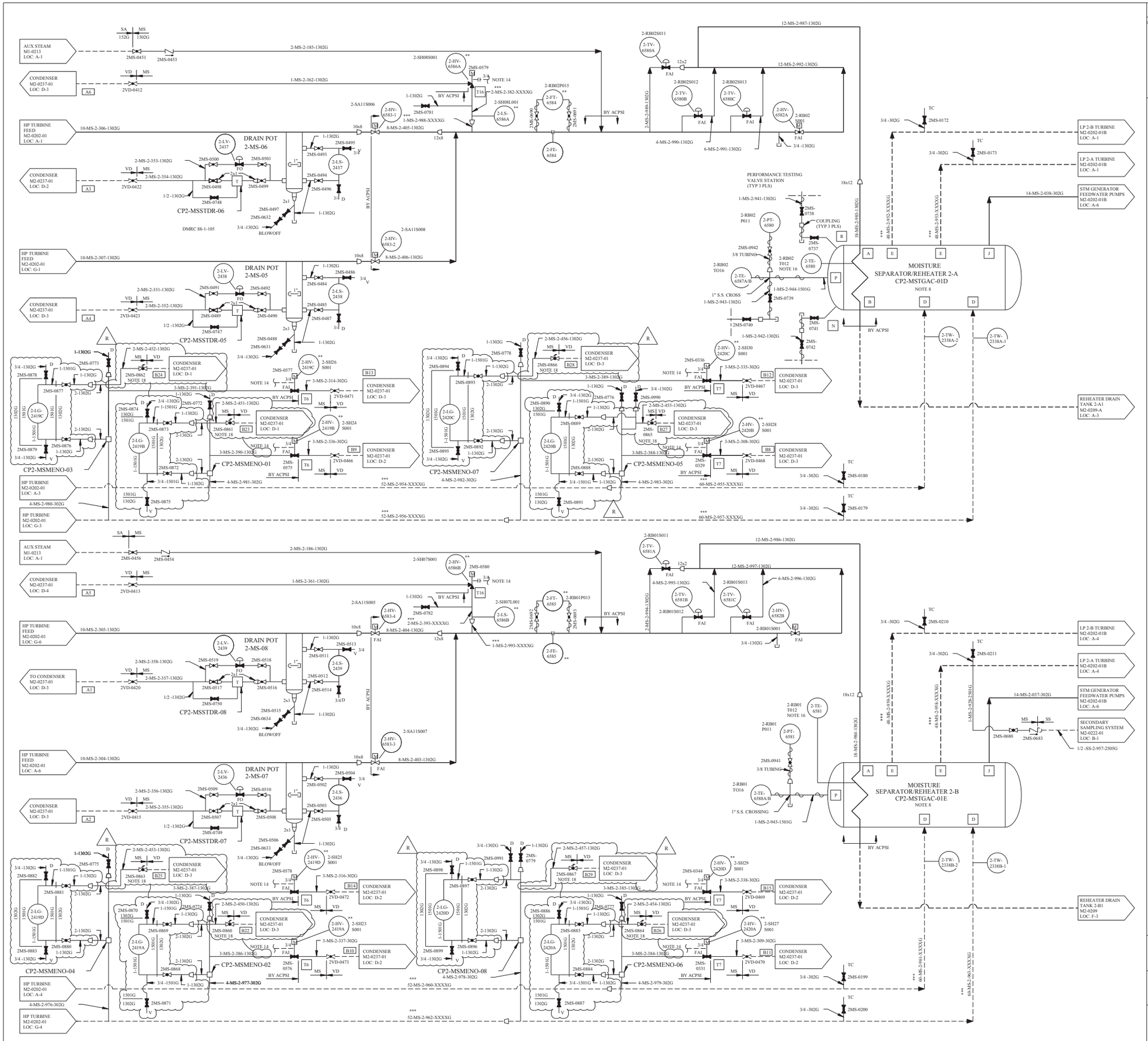

REV	DWN	CHKD	APVD	REMARKS
CP-13	DLK 06-25 2007	MM 06-25 2007		THIS DRAWING REVISED TO INCORPORATE DESIGN CHANGE FDA 2000-000247-05-00 PER SK-0022-00-000247-05-00.

NOTES:

1. * INSTRUMENT BY WESTINGHOUSE.
2. ** BY ACPSI.
3. FOR GENERAL SYMBOLS AND NOTES SEE DRAWING M1-0200.
4. DELETE
5. 10x8 REDUCERS ARE WELDED TO THE VALVE BODY BY FISHER CONTROLS.
6. DELETE
7. ☐ INDICATES CUSTOMER'S PIPE CONNECTION TO ACPSI SUPPLIED EQUIPMENT.
8. FOR DETAILS OF MSR SEE DRAWING M2-0209.
9. DELETED
10. ☐ REPRESENTS DRAIN CONNECTIONS SHOWN ON FD M2-0237-01.
11. DELETED
12. DELETED
13. DELETED
14. SEAL FLUID TO DRAIN VALVE LANTERN RING IS SUPPLIED FROM THE CONDENSATE SYSTEM. SEE M2-0204, LOC: C/D-4.
15. DELETE
16. THERMOCOUPLES 2-TE-6580 (2-RB01T012) AND 2-TE-6581 (2-RB02T012) ARE EMBEDDED NEAR THE INLET STEAM SURFACE OF THE TUBESHEET.
17. *** REFER TO ACPSI SPOOL PIECE PART NUMBERS FOR MATERIAL REQUIREMENTS.
18. VALVE MAY BE THROTTLED AS REQUIRED TO MAINTAIN DESIRED DRAIN LEVEL AT LEVEL GAUGE. (R)

LEGEND

- MAIN STEAM
- HOT REHEAT (BY ACPSI)
- COLD REHEAT (BY ACPSI)
- AUXILIARY PIPING

FSAR FIGURE 10.3-1

THIS DRAWING CREATED ELECTRONICALLY

DRAWING 2323-M2-0202-01 REV CP-1
HAS BEEN SPLIT INTO THE FOLLOWING SHEETS:

M2-0202-01
M2-0202-01A
M2-0202-01B

NON-SAFETY

LUMINANT
CPSES
GLEN ROSE, TEXAS

FLOW DIAGRAM
MAIN STEAM REHEAT
AND STEAM DUMP

DWG. NO. M2-0202 | SH. NO. 01A | REV. CP-13

FINAL PRINT

REF CHKD CP-11 10/04/00

me873800.dgn M2-0202-01A

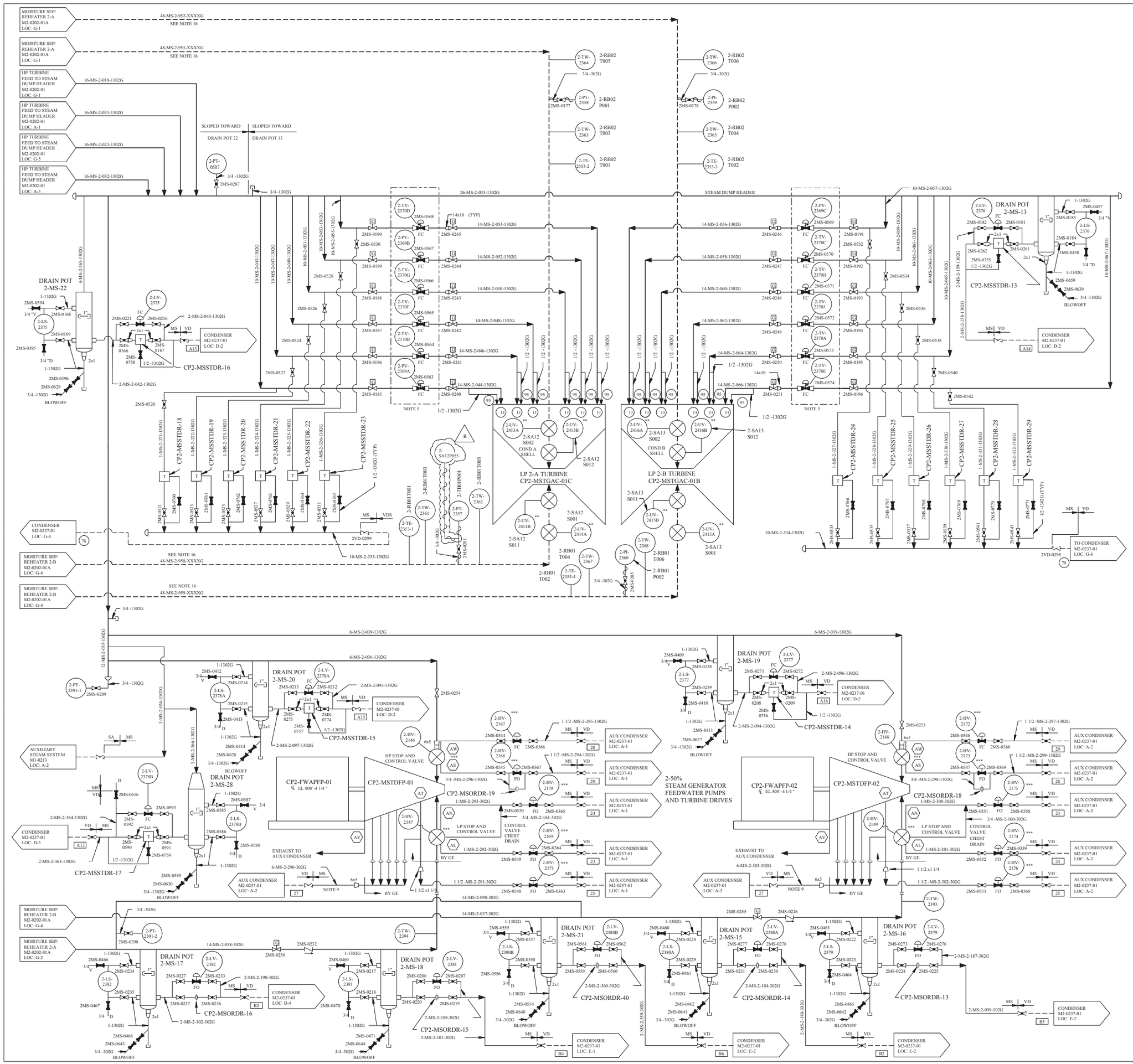

REV	DWN	CHKD	APVD	REMARKS
CP-8	JRMC 09-12 2007	DJL 09-13 2007		THIS DRAWING REVISED TO INCORPORATE DESIGN CHANGE FDA-2007-000138-01-00 PER SK-0003-07-000138-01-00.

NOTES

1. DELETED
2. ** BY ACPSI.
3. FOR GENERAL SYMBOLS AND NOTES SEE DRAWING M1-0200.
4. *** BY GENERAL ELECTRIC.
5. 10x8 REDUCERS ARE WELDED TO THE VALVE BODY BY FISHER CONTROLS.
6. ◯ INDICATES CUSTOMER'S PIPE CONNECTIONS TO WESTINGHOUSE SUPPLIED CONDENSER.
7. ▭ INDICATES CUSTOMER'S PIPE CONNECTION TO ACPSI SUPPLIED EQUIPMENT.
8. FOR DETAILS OF MSR SEE DRAWING M2-0209-0.
9. SLOPED DOWNWARD WITH A 2 FT MINIMUM VERTICAL LEG.
10. ▭ REPRESENTS DRAIN CONNECTIONS SHOWN ON FD M2-0237-01.
11. ALL I&C CHANNEL NUMBERS WILL HAVE PREFIX TWO (2), i.e. 2-TE-3229. CONTROLS FOR CHANNEL NUMBERS ABOVE 6000, AS 2-HV-6582, ARE FOUND IN TURBINE INSTRUMENTATION & CONTROL DIAGRAMS.
12. ⬡ INDICATES CUSTOMER'S PIPE CONNECTION TO GENERAL ELECTRIC SUPPLIED EQUIPMENT.
13. DELETED
14. SEAL FLUID TO DRAIN VALVE LANTERN RING IS SUPPLIED FROM THE CONDENSATE SYSTEM. SEE M2-0204, LOC: C/D-6.
15. UNLESS OTHERWISE NOTED ALL DRAINS COLLECTED BY LOCAL DRAIN SYSTEM.
16. REFER TO ACPSI SPOOL PIECE PART NUMBERS FOR MATERIAL REQUIREMENTS.

LEGEND

- MAIN STEAM
- HOT REHEAT (BY ACPSI)
- COLD REHEAT (BY ACPSI)
- AUXILIARY PIPING

FSAR FIGURE 10.3-1

THIS DRAWING CREATED ELECTRONICALLY

DRAWING 2323-M2-0202-01 REV CP-1
HAS BEEN SPLIT INTO THE FOLLOWING SHEETS:
M2-0202-01
M2-0202-01A
M2-0202-01B

NON-SAFETY

LUMINANT
CPSES
GLEN ROSE, TEXAS

FLOW DIAGRAM
MAIN STEAM REHEAT
AND STEAM DUMP

DWG. NO. M2-0202 | SH. NO. 01B | REV. CP-8

FINAL PRINT

me872300.dgn A M2-0202-01B

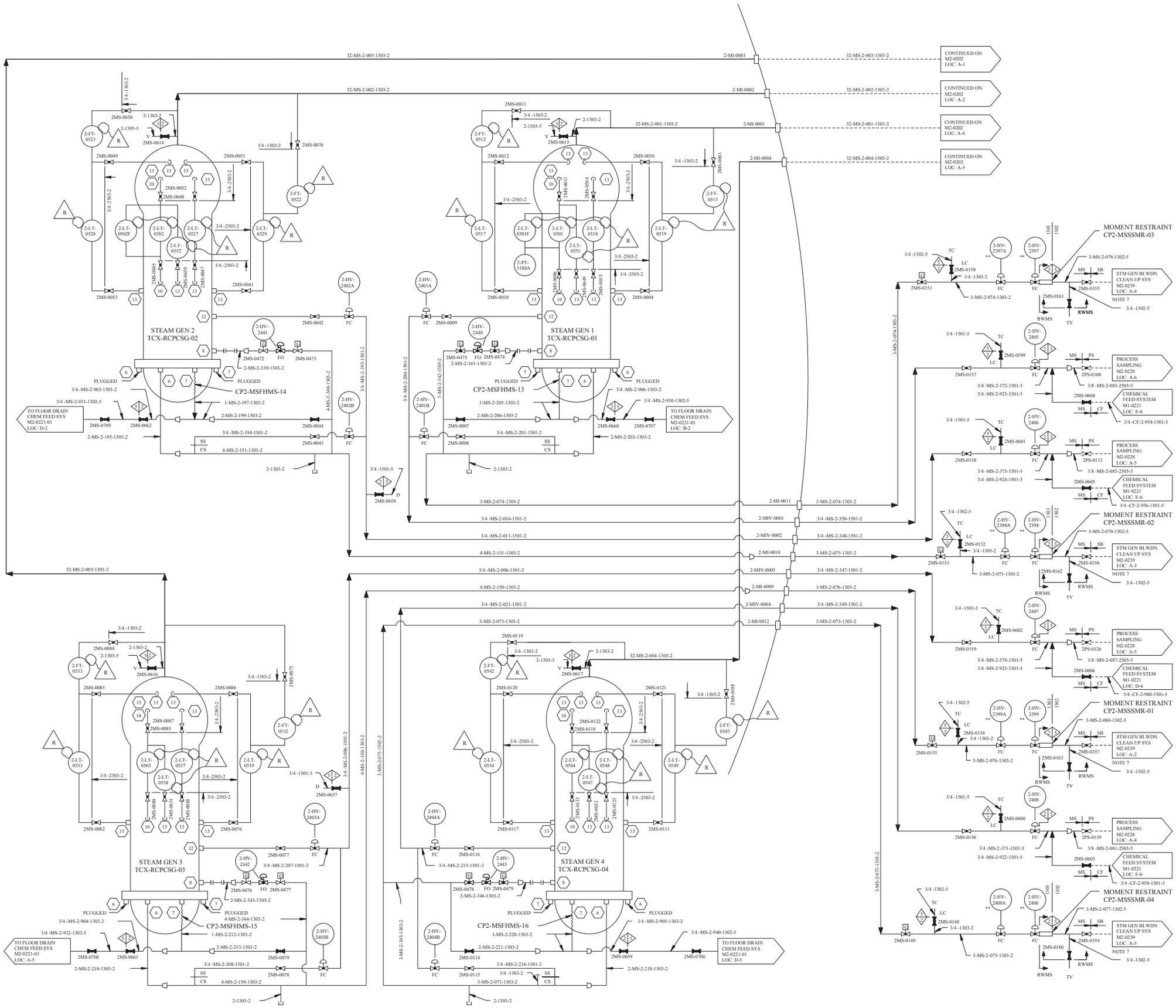

REV	DWN	CHKD	APVD	REMARKS
CP-16	DLK 10-10 2005	MM 10-10 2005		THIS DRAWING REVISED TO INCORPORATE DESIGN CHANGE FDA 2005-003740-01-00 PER SK-0001-05-003740-01-00.

NOTES:

1. DELETED
2. UNLESS OTHERWISE NOTED ALL DRAINS COLLECTED BY LOCAL DRAIN SYSTEM.
3. FOR GENERAL NOTES AND SYMBOLS SEE DRAWING M1-0200.
4. CUSTOMERS PIPE CONNECTIONS, AS SUPPLIED BY WESTINGHOUSE DRAWING 1106362 INDICATED BY
5. ALL NUCLEAR CLASS LINES 2" AND SMALLER WILL HAVE THE SAME PIPE CATEGORY AS THE MAIN RUN LINE UNLESS NOTED OTHERWISE.
6. ALL I&C CHANNEL NUMBERS WILL HAVE PREFIX TWO (2), I.E. 2-TE-2341.
7. DENOTES RADIOACTIVE WASTE MANAGEMENT SYSTEM CONTINUES ON IDENTIFIED DRAWING.
8. ** EQUIPMENT USED IN MITIGATION OF HELB.
9. PIPING CATEGORY SHOWN AS BUILT.

FSAR FIGURE 10.3-1

THIS DRAWING CREATED ELECTRONICALLY

CLASS I

(NUCLEAR SAFETY-RELATED)

SAFETY CLASS 1 — SEISMIC CATEGORY I
SAFETY CLASS 2 — CLASS 1E
SAFETY CLASS 3 — ASSOCIATED CIRCUITS

LUMINANT
CPSES
GLEN ROSE, TEXAS

FLOW DIAGRAM
MAIN STEAM REHEAT
AND STEAM DUMP

DWG. NO. M2-0202 | SH. NO. 02 | REV. CP-16

FINAL PRINT

me623600.dgn A M2-0202-02

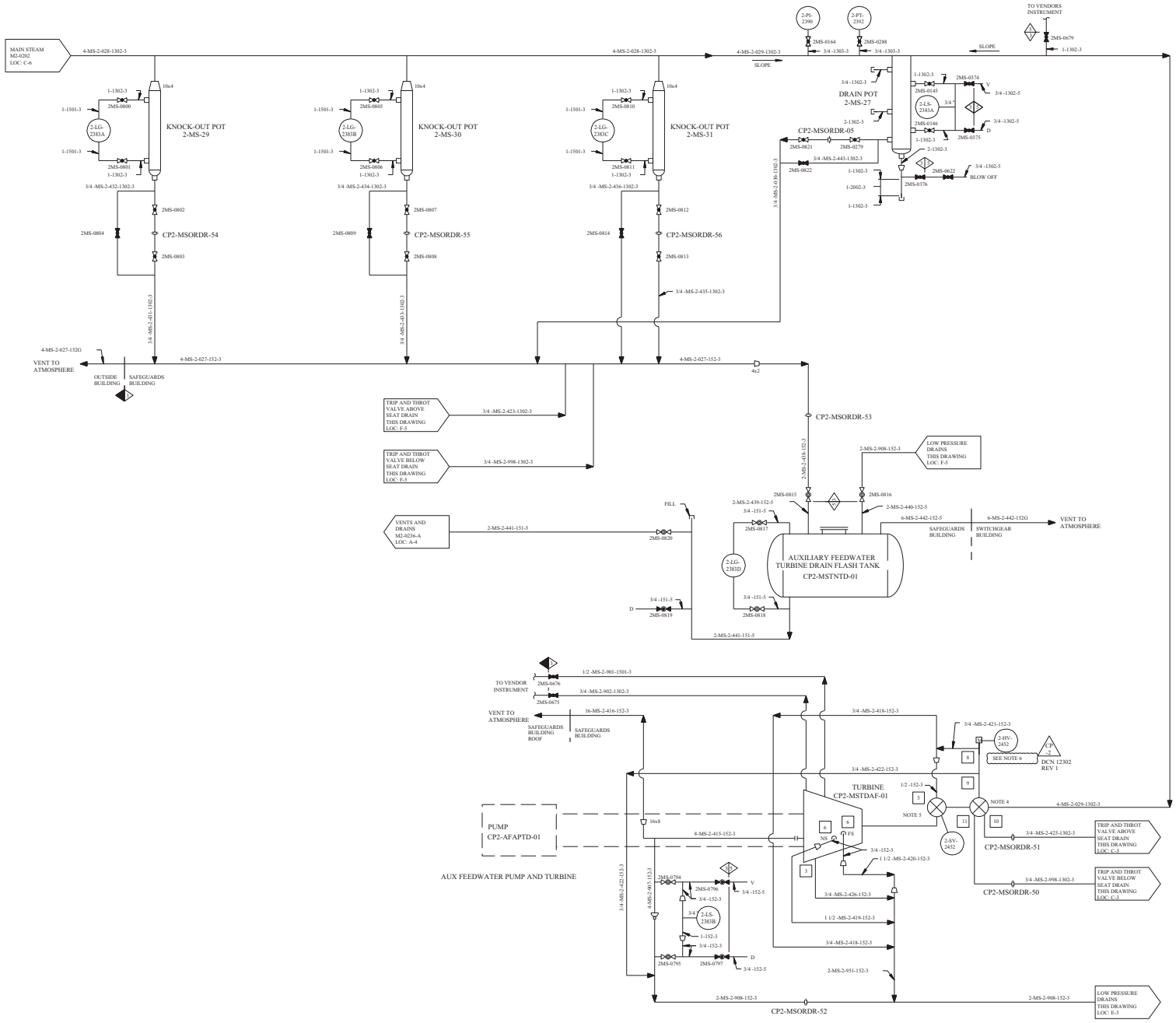

REV	DWN	CHKD	APVD	REMARKS
CP-2	C.A. 11-17-1999			THIS DRAWING REVISED TO INCORPORATE DESIGN CHANGE DCN 12302 REV 1.

NOTES:

1. FOR GENERAL NOTES AND SYMBOLS SEE DRAWING M1-0200.
2. UNLESS OTHERWISE NOTED ALL DRAINS COLLECTED BY LOCAL DRAIN SYSTEM.
3. 13 REPRESENTS PURCHASER PIPE CONNECTIONS TO TERRY TURBINE.
4. TURBINE TRIP AND THROTTLE VALVE, SUPPLIED BY CP-0007.
5. TURBINE GOVERNER VALVE, SUPPLIED BY CP-0007.
6. THE TRIP AND THROTTLE VALVE IS A SOLENOID ACTUATED TRIP VALVE. THE VALVE CAN BE MANUALLY OPENED BY USE OF THE HAND WHEEL. ELECTRICAL POWER TO THE MOTOR OPERATOR HAS BEEN DISCONNECTED.

CP-2
DCN 12302
REV 1

FSAR FIGURE 10.3-1

THIS DRAWING CREATED ELECTRONICALLY

DRAWING	M2-0202	REV	CP-17
HAS BEEN SPLIT INTO THE FOLLOWING SHEETS:			
M2-0202			
M2-0202-03			

CLASS I
(NUCLEAR SAFETY-RELATED)
SAFETY CLASS 1 — SEISMIC CATEGORY I
SAFETY CLASS 2 — CLASS 1E
SAFETY CLASS 3 — ASSOCIATED CIRCUITS

TXU ELECTRIC
CPSES
GLEN ROSE, TEXAS

FLOW DIAGRAM
MAIN STEAM REHEAT
AND STEAM DUMP

DWG. NO.	SH. NO.	REV.
M2-0202	03	CP-2

$$$$$$$D\ TE$$$$$$

me0001xc.dgn

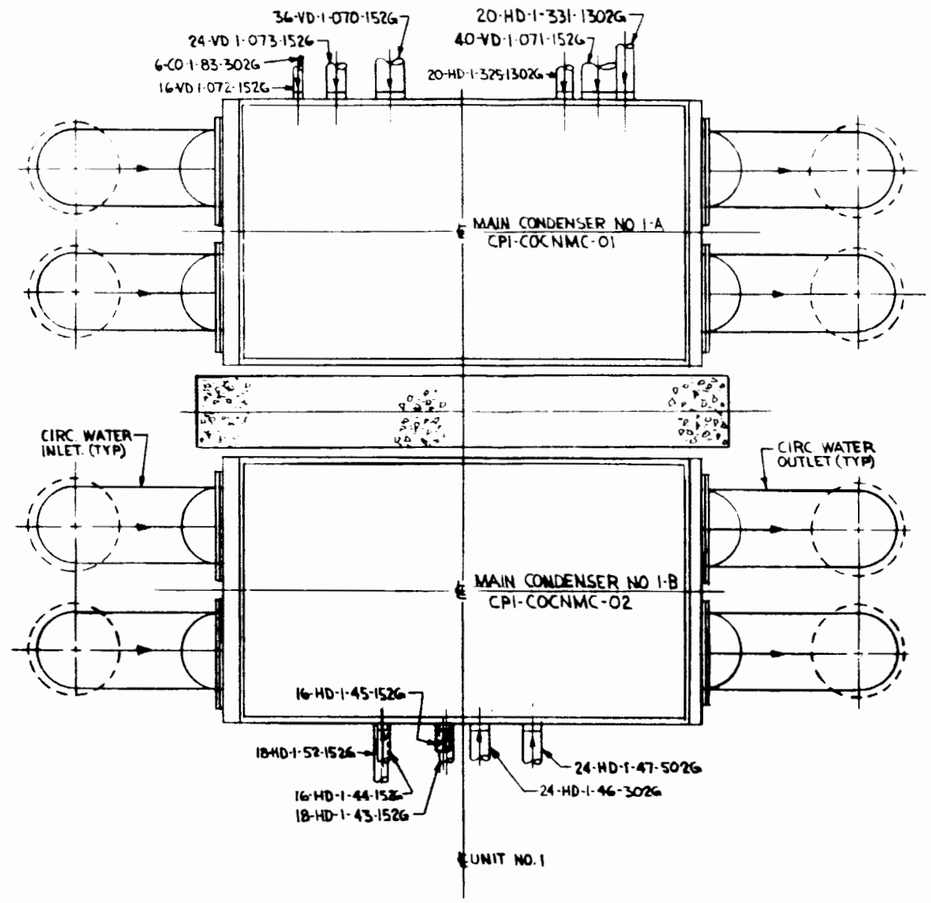

COMANCHE PEAK S.E.S
FINAL SAFETY ANALYSIS REPORT
UNITS 1 and 2

MAIN CONDENSER
PIPING DIAGRAM

FIGURE 10.4-1

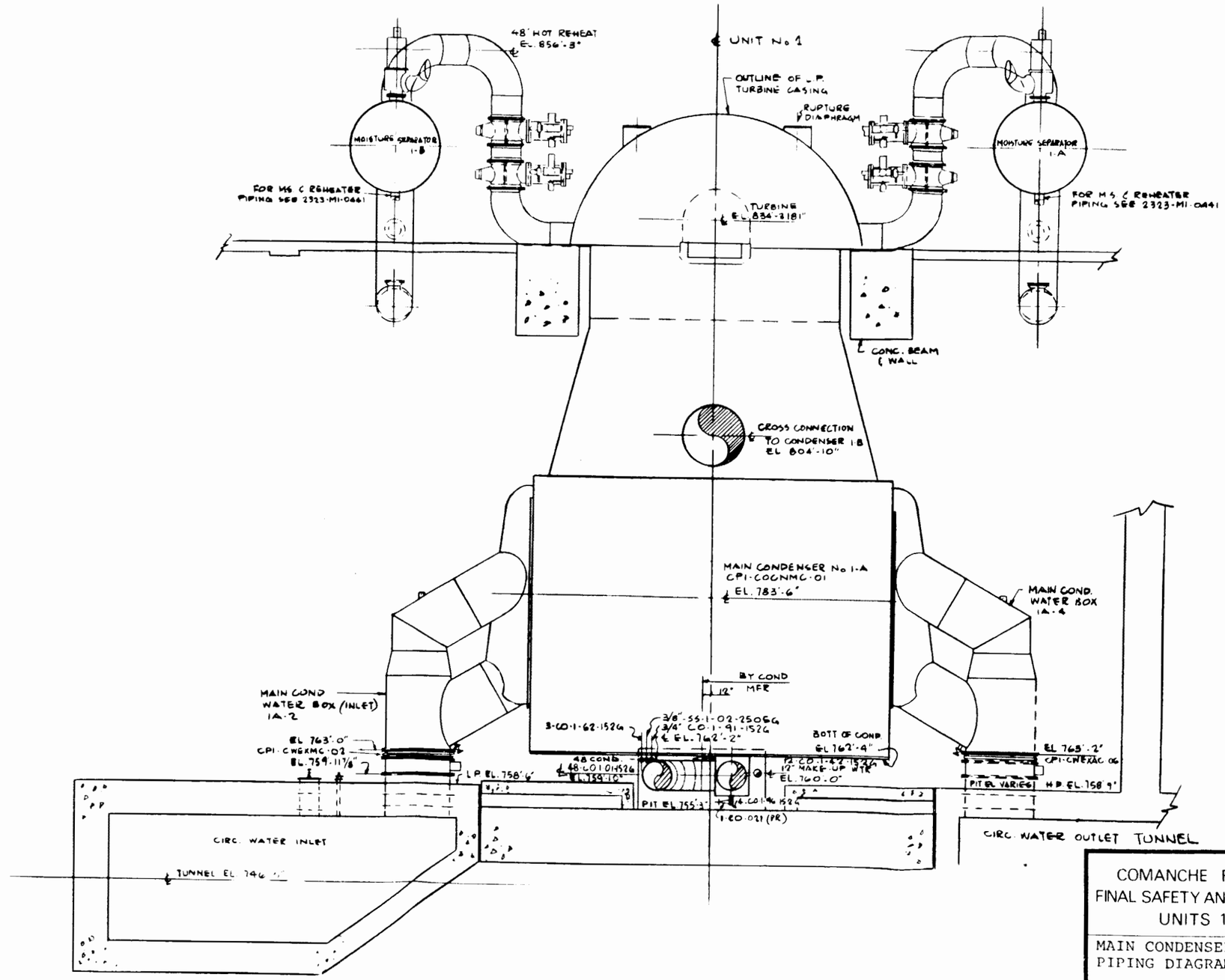

COMANCHE PEAK S.E.S
FINAL SAFETY ANALYSIS REPORT
UNITS 1 and 2

MAIN CONDENSER
PIPING DIAGRAM ELEVATIONS

FIGURE 10.4-2

5/76

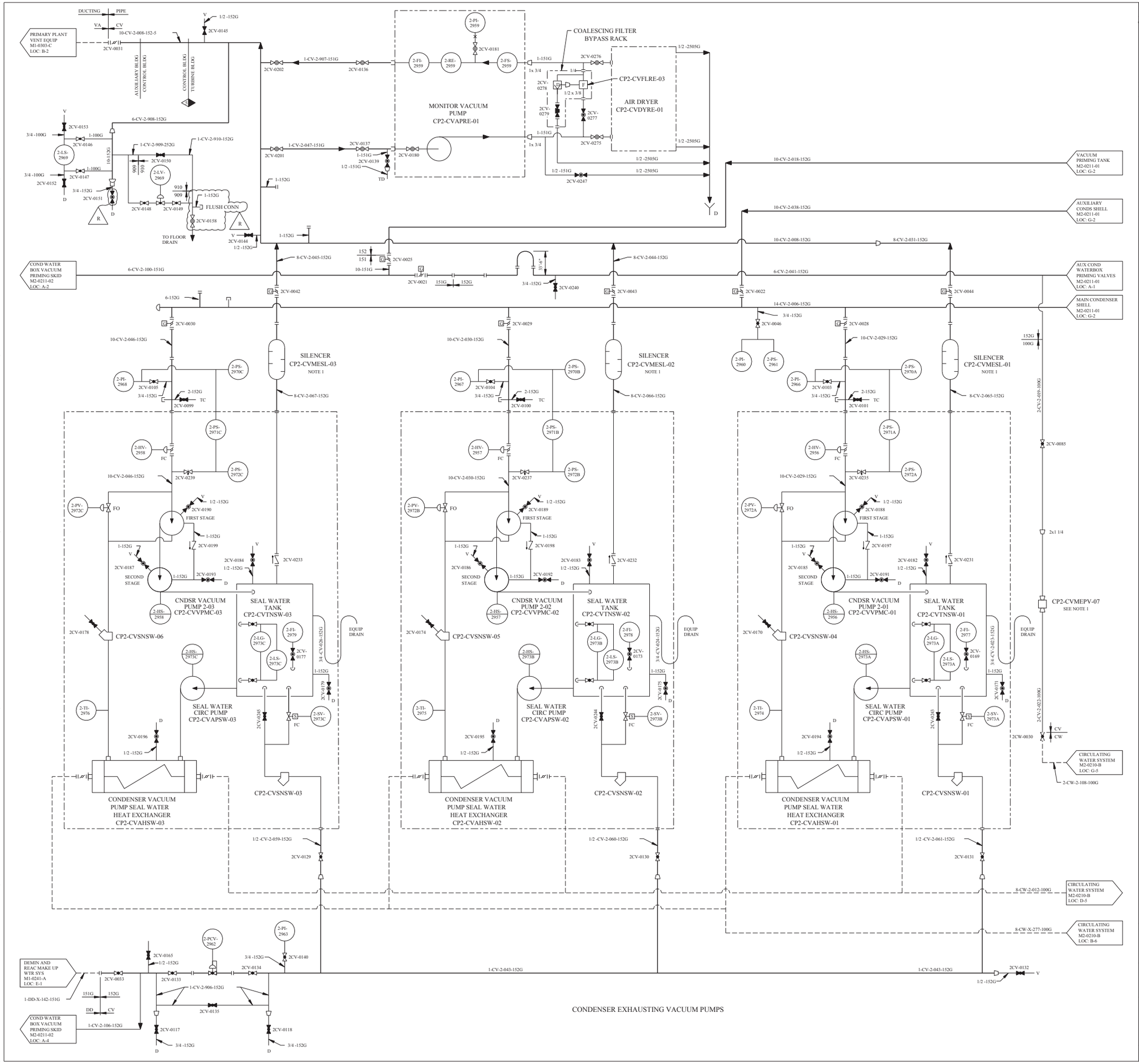

REV	DWN	CHKD	APVD	REMARKS
CP-29	SM 11-10 2009	JRMC 11-10 2009		THIS DRAWING REVISED TO INCORPORATE DESIGN CHANGE FDA 2003-002540-08-00 PER SK-0002-03-002540-08-00.

NOTES:

1. BY CONDENSER VACUUM PUMP SUPPLIER.
2. FOR CONDENSER INSTRUMENTATION SEE DRAWING M2-0210.
3. DELETED
4. DELETED
5. (4) VENDOR CONNECTION NUMBER (TYPICAL).
6. DELETED
7. FOR MECH SYMBOLS AND NOTES SEE DRAWING M1-0200.
8. ALL VALVE MATERIAL FOR VALVES 2" INCHES AND SMALLER ASSOCIATED WITH PIPING CATEGORY 100G WILL BE BRONZE WITH SCREWED ENDS.
9. ALL DRAINS TO BE COLLECTED BY LOCAL FLOOR DRAIN SYSTEM. UNLESS OTHERWISE NOTED.

FSAR FIGURE 10.4-3

THIS DRAWING CREATED ELECTRONICALLY

DRAWING 2323-M2-0211 REV CP-2
HAS BEEN SPLIT INTO THE FOLLOWING SHEETS:
M2-0211
M2-0211-01

CLASS II

LUMINANT
CPNPP
GLEN ROSE, TEXAS

FLOW DIAGRAM
CONDENSER VACUUM AND
WATER BOX PRIMING SYSTEM

DWG. NO. M2-0211 | SH. NO. - | REV. CP-29

REF CHKD 07-24-2002

$$$$$$$DATE$$$$$$

me962100.dgn M2-0211 < FINAL PRINT >

REV	DWN	CHKD	APVD	REMARKS
CP-22	JESC 10-10 2007	SM 10-11 2007		THIS DRAWING REVISED TO INCORPORATE DESIGN CHANGE FDA 2007-002153-01-00 PER SK-0001-07-002153-01-00.

NOTES:

1. BY CONDENSER VACUUM PUMP SUPPLIER.
2. FOR MECHANICAL SYMBOLS AND NOTES SEE DRAWING M1-0200.
3. ALL VALVE MATERIAL FOR VALVES 2 INCHES AND SMALLER ASSOCIATED WITH PIPING CATEGORY 100G WILL BE BRONZE WITH SCREWED ENDS.
4. TAG NOS. FOR CONDENSER VACUUM PUMP SPEED REDUCERS ARE CP1-CVVPGR-01, CP1-CVVPGR-02 & CP1-CVVPGR-03.
5. ALL DRAINS TO BE COLLECTED BY LOCAL FLOOR DRAIN SYSTEM, UNLESS OTHERWISE NOTED.

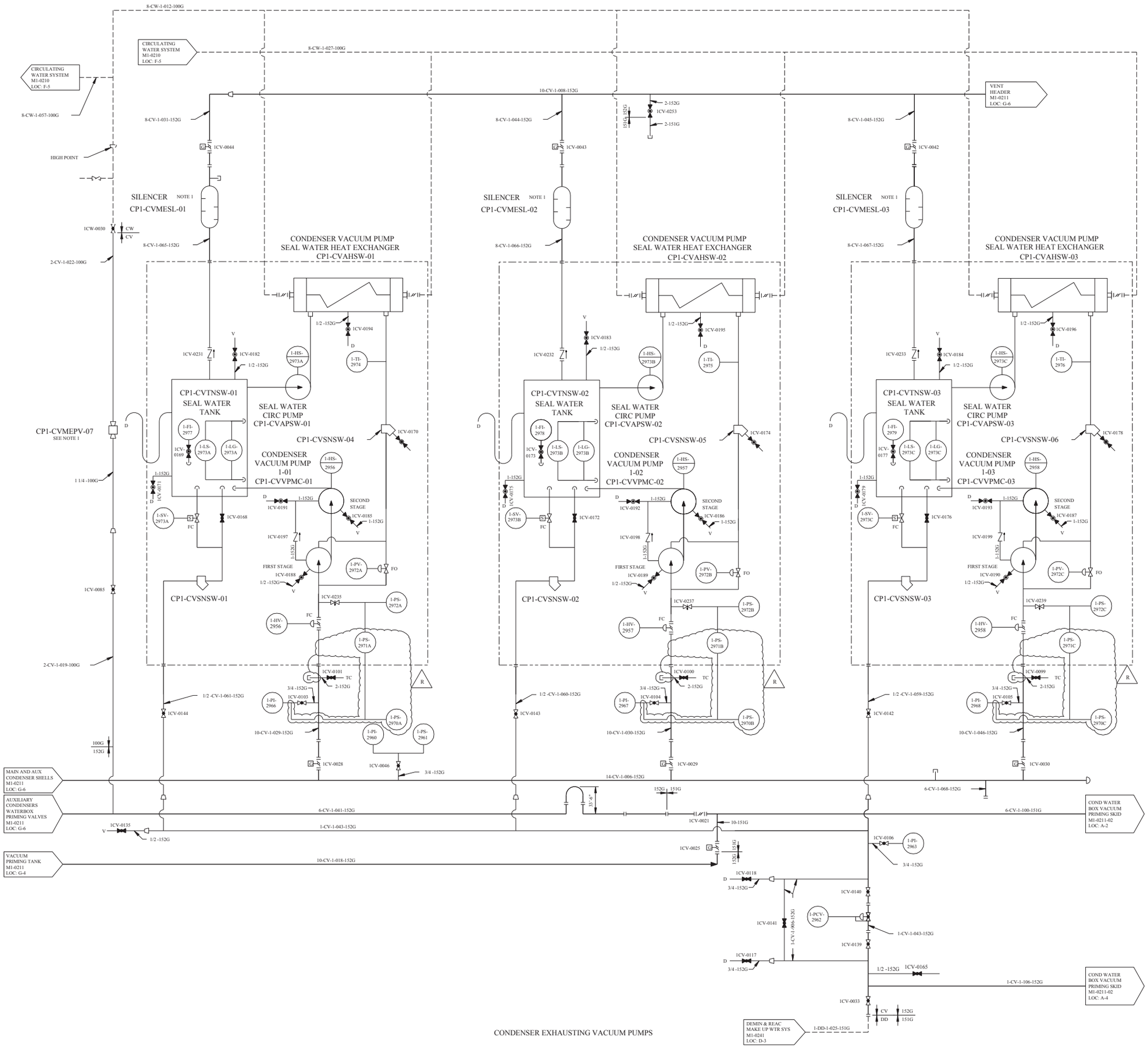

FSAR FIGURE 10.4-3

THIS DRAWING CREATED ELECTRONICALLY

NON-SAFETY

LUMINANT
CPNPP
GLEN ROSE, TEXAS

FLOW DIAGRAM
CONDENSER VACUUM &
WATER BOX PRIMING SYSTEM

DWG. NO. M1-0211 | SH. NO. 01 | REV. CP-22

< FINAL PRINT >

me910200.dgn M1-0211-01

REF CKD CP-15 5/1/98

$$$$$$DATE$$$$$$

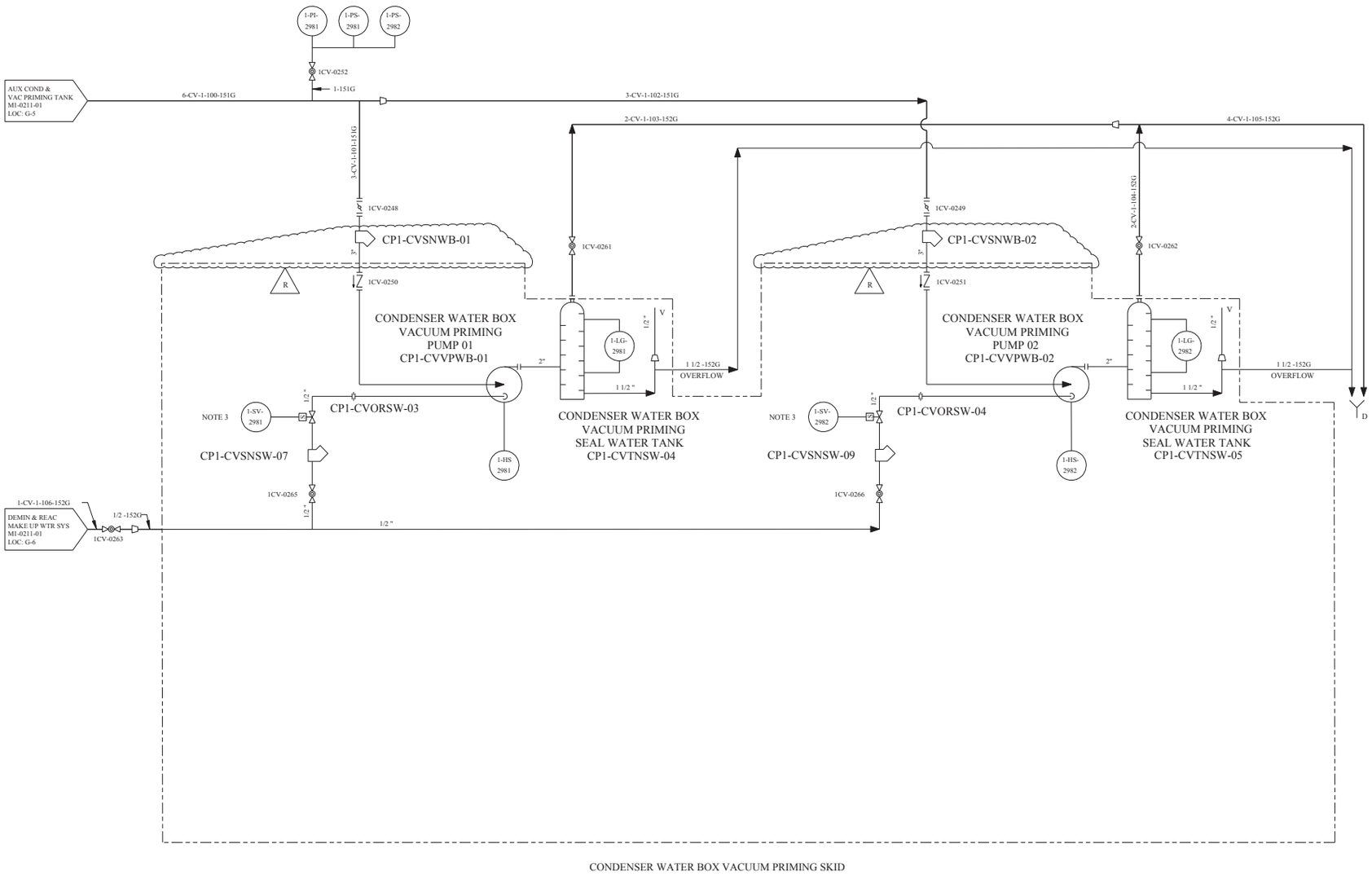

REV	DWN	CHKD	APVD	REMARKS
CP-7	JRMC 10-29 2008	SM 10-29 2008		THIS DRAWING REVISED TO INCORPORATE DESIGN CHANGE FDA-2005-004951-02-01 PER SK-0036-05-004951-02-00

NOTES:

1. FOR MECH. SYMBOLS AND NOTES SEE DWG. M1-0200.
2. ALL DRAINS TO BE COLLECTED BY LOCAL FLOOR DRAIN SYSTEM, UNLESS OTHERWISE NOTED.
3. SOLENOID VALVE HAS A MANUAL OPERATION FEATURE TO ALLOW OR STOP FLOW WHEN DE-ENERGIZED.

REFERENCE DRAWINGS

1. M1-2211-03 ICD
2. E1-0071-95 SCHEMATIC DIAGRAM
3. 14-9827 VENDOR WIRING DIAGRAM

FSAR FIGURE 10.4-3

THIS DRAWING CREATED ELECTRONICALLY

NON-SAFETY

LUMINANT
CPNPP
GLEN ROSE, TEXAS

FLOW DIAGRAM
CONDENSER VACUUM &
WATER BOX PRIMING SYSTEM

DWG. NO. M1-0211 | SH. NO. 02 | REV. CP-7

REF CHKD 07-15-2002

$$$$$$$$DATE$$$$$$$$

me906000.dgn M1-0211-02 < FINAL PRINT >

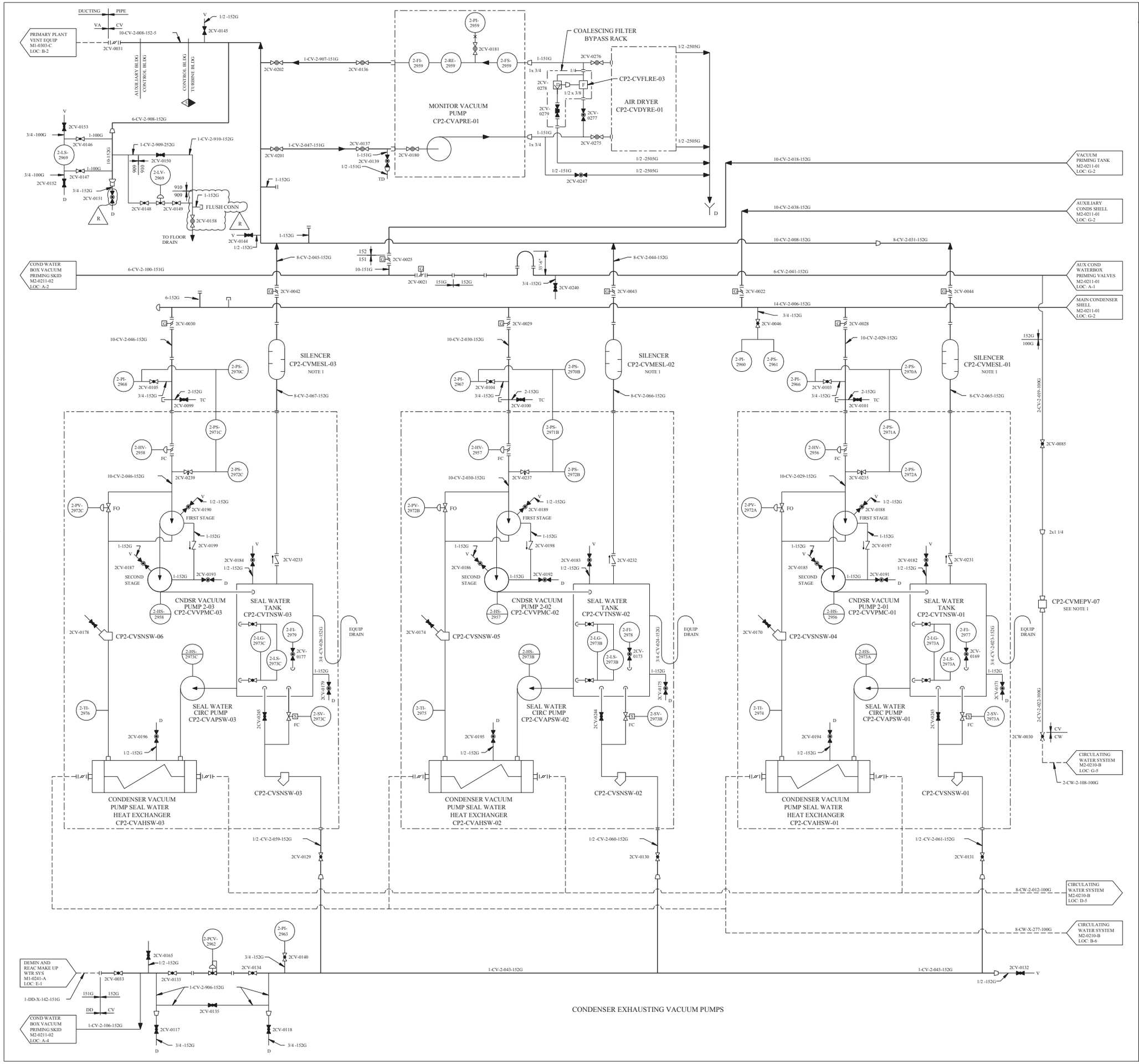

REV	DWN	CHKD	APVD	REMARKS
CP-29	SM 11-10 2009	JRMC 11-10 2009		THIS DRAWING REVISED TO INCORPORATE DESIGN CHANGE FDA 2003-002540-08-00 PER SK-0002-03-002540-08-00.

NOTES:

1. BY CONDENSER VACUUM PUMP SUPPLIER.
2. FOR CONDENSER INSTRUMENTATION SEE DRAWING M2-0210.
3. DELETED
4. DELETED
5. (4) VENDOR CONNECTION NUMBER (TYPICAL).
6. DELETED
7. FOR MECH SYMBOLS AND NOTES SEE DRAWING M1-0200.
8. ALL VALVE MATERIAL FOR VALVES 2" INCHES AND SMALLER ASSOCIATED WITH PIPING CATEGORY 100G WILL BE BRONZE WITH SCREWED ENDS.
9. ALL DRAINS TO BE COLLECTED BY LOCAL FLOOR DRAIN SYSTEM. UNLESS OTHERWISE NOTED.

FSAR FIGURE 10.4-3

THIS DRAWING CREATED ELECTRONICALLY

DRAWING 2323-M2-0211 REV CP-2
HAS BEEN SPLIT INTO THE FOLLOWING SHEETS:
M2-0211
M2-0211-01

CLASS II

LUMINANT
CPNPP
GLEN ROSE, TEXAS

FLOW DIAGRAM
CONDENSER VACUUM AND
WATER BOX PRIMING SYSTEM

DWG. NO. M2-0211 | SH. NO. - | REV. CP-29

REF CHKD 07-24-2002

$$$$$$$DATE$$$$$$

me962100.dgn M2-0211 < FINAL PRINT >

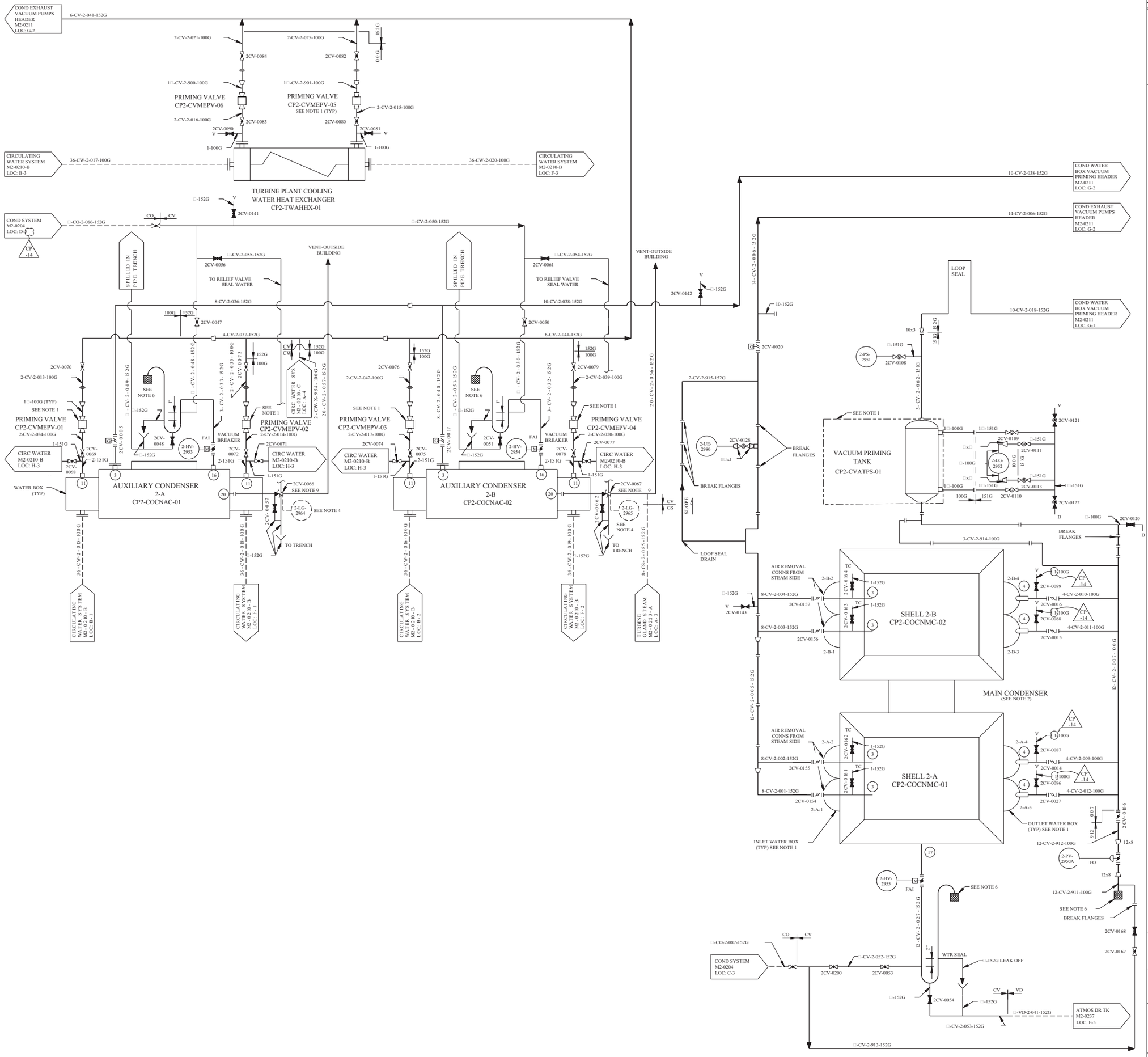

REV	DWN	CHKD	APVD	REMARKS
CP-14	DLK 12-01 2014			THIS DRAWING REVISED TO INCORPORATE AI-CR-2014-012966-1 TO EDITORIALLY REVISE THE LINE SIZE FROM 2" TO 1" FOR VENT VALVES 2CV-0086, 0087, 0088 AND 0089. EDITORIAL CHANGE AS NOTED.

NOTES:

1. * BY CONDENSER VACUUM PUMP SUPPLIER.
2. FOR CONDENSER INSTRUMENTATION SEE DRAWING M2-0210.
3. DELETED
4. BY AUXILIARY CONDENSER SUPPLIER.
5. (4) VENDOR CONNECTION NUMBER (TYPICAL).
6. COARSE WIRE MESH SCREEN.
7. FOR MECH SYMBOLS AND NOTES SEE DRAWING M1-0200.
8. ALL VALVE MATERIAL FOR VALVES 2" INCHES AND SMALLER ASSOCIATED WITH PIPING CATEGORY 100G WILL BE BRONZE WITH SCREWED ENDS.
9. LINE RELIEF VALVE.
10. ALL DRAINS TO BE COLLECTED BY LOCAL FLOOR DRAIN SYSTEM. UNLESS OTHERWISE NOTED.

THIS DRAWING CREATED ELECTRONICALLY

DRAWING 2323-M2-0211 REV CP-2
HAS BEEN SPLIT INTO THE FOLLOWING SHEETS:
M2-0211
M2-0211-01

NON-SAFETY

LUMINANT
CPNPP
GLEN ROSE, TEXAS

FLOW DIAGRAM
CONDENSER VACUUM AND
WATER BOX PRIMING SYSTEM

DWG. NO. M2-0211 | SH. NO. 01 | REV. CP-14

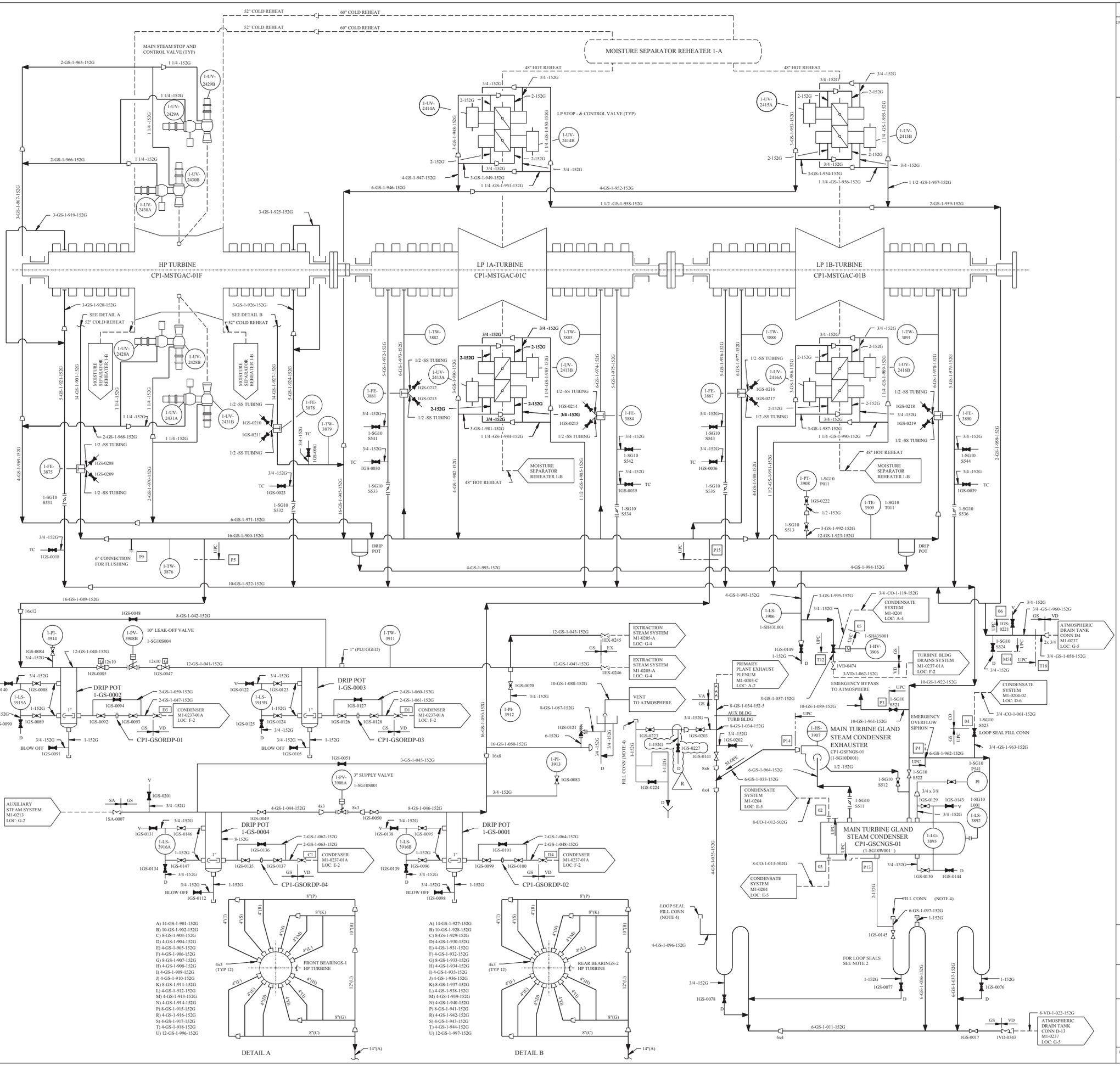

REV	DWN	CHKD	APVD	REMARKS
CP-18	OGK 06-02 2005	MSI 06-02 2005		THIS DRAWING REVISED TO INCORPORATE DESIGN CHANGE FDA 2004-001830-01-00 PER SK-0001-04-001830-01-00.

NOTES:

1. ALL ITEMS SHOWN IN PHANTOM INSIDE THIS BOUNDARY ARE SUPPLIED BY UPC. SHOWN WITH FULL LINES ARE PROVIDED BY TU ELECTRIC.
2. LOOP SEALS SHALL BE ARRANGED WITH 3 FEET 3.37 INCHES OF VERTICAL LOOP.
3. REPRESENTS DRAIN CONNECTIONS SHOWN ON DRAWING M1-0237-01A.
4. LOOP SEAL FILL CONNECTIONS (AS NOTED) WILL BE PROVIDED WITH A THREADED CAP FOR LOOP FILL.
5. FOR MECHANICAL SYMBOLS AND NOTES SEE DRAWING M1-0200.

FSAR FIGURE 10.4-4

THIS DRAWING CREATED ELECTRONICALLY

DRAWING 2323-M1-0223 REV CP-5
HAS BEEN SPLIT INTO THE FOLLOWING SHEETS:
M1-0223
M1-0223-A

CLASS II

TXU POWER
CPSES
GLEN ROSE, TEXAS

FLOW DIAGRAM
TURBINE GLAND STEAM SYSTEM

DWG. NO. M1-0223 | SH. NO. - | REV. CP-18

FINAL PRINT

REF CKD CP-16 6-23-98

me677000.dgn M1-0223

REV	DWN	CHKD	APVD	REMARKS
CP-9	MHF 06-12 2014	GAW 06-12 2014		THIS DRAWING REVISED TO INCORPORATE DESIGN CHANGE FDA 2005-004990-01-02 PER SK-0003-05-004990-01-02. EDITORIAL CHANGES AS NOTED.

NOTES:

1. ALL ITEMS SHOWN IN PHANTOM INSIDE THIS BOUNDARY ARE SUPPLIED BY G.E. PIPING, INSTRUMENTS, AND VALVES INSIDE THIS BOUNDARY WHICH ARE SHOWN WITH FULL LINES ARE PROVIDED BY TU ELECTRIC.
2. LOOP SEALS SHALL BE ARRANGED WITH 3 FEET 3.37 INCHES OF VERTICAL LOOP.
3. REPRESENTS DRAIN CONNECTIONS SHOWN ON DRAWING M1-0237-01A.
4. LOOP SEAL FILL CONNECTIONS (AS NOTED) WILL BE PROVIDED WITH A THREADED CAP FOR LOOP FILL.
5. FOR MECHANICAL SYMBOLS AND NOTES SEE DRAWING M1-0200.

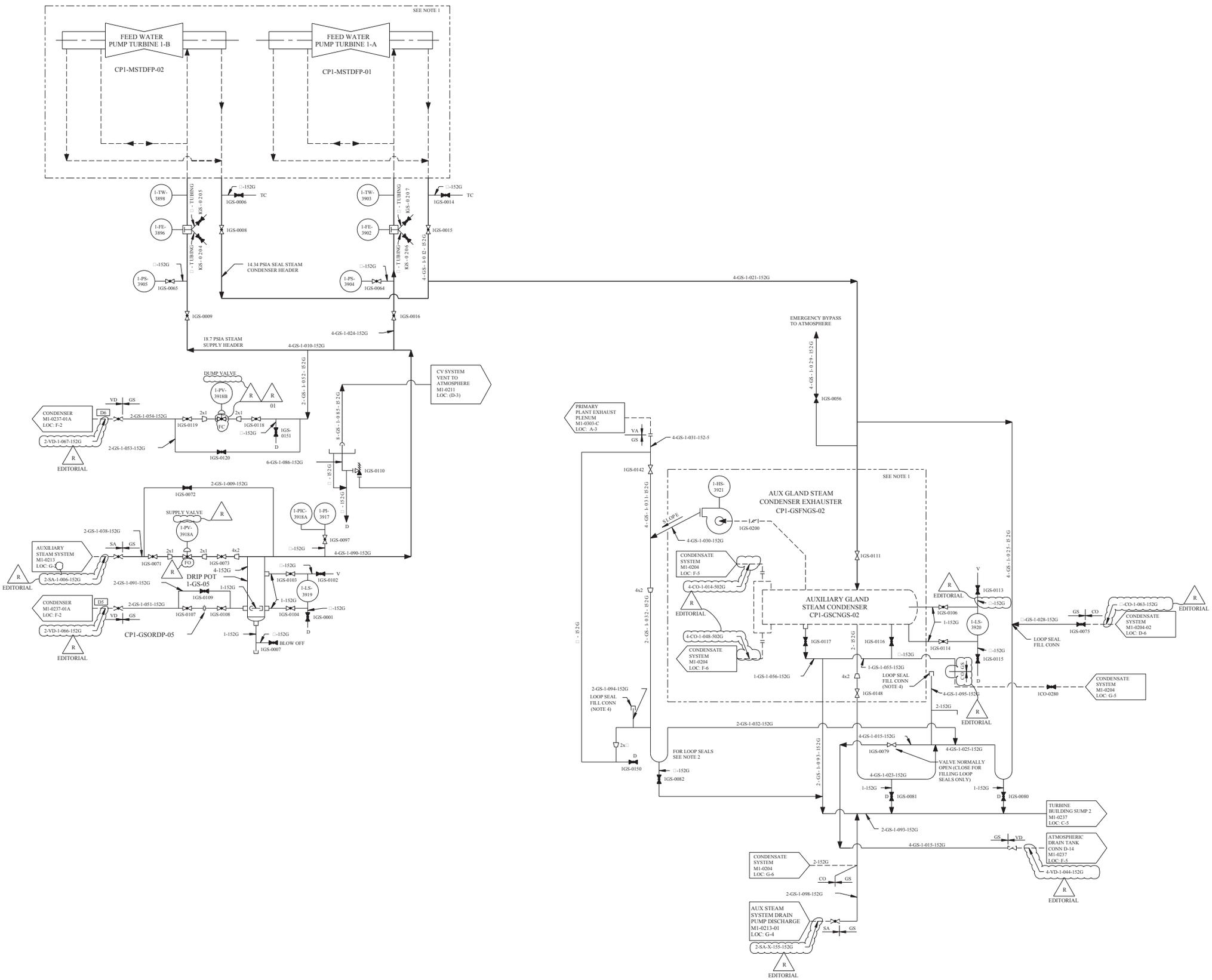

DRAWING 2323-M1-0223 REV CP-5
HAS BEEN SPLIT INTO THE FOLLOWING SHEETS:
M1-0223
M1-0223-A

FSAR FIGURE 10.4-4

THIS DRAWING CREATED ELECTRONICALLY

CLASS II

LUMINANT
CPNPP
GLEN ROSE, TEXAS

FLOW DIAGRAM
TURBINE GLAND STEAM SYSTEM

DWG. NO. M1-0223 | SH. NO. A | REV. CP-9

< FINAL PRINT >

REF CKD CP-6 6-23-98

SSSSSSS DATESSSSSS

me891000.dgn A M1-0223-A

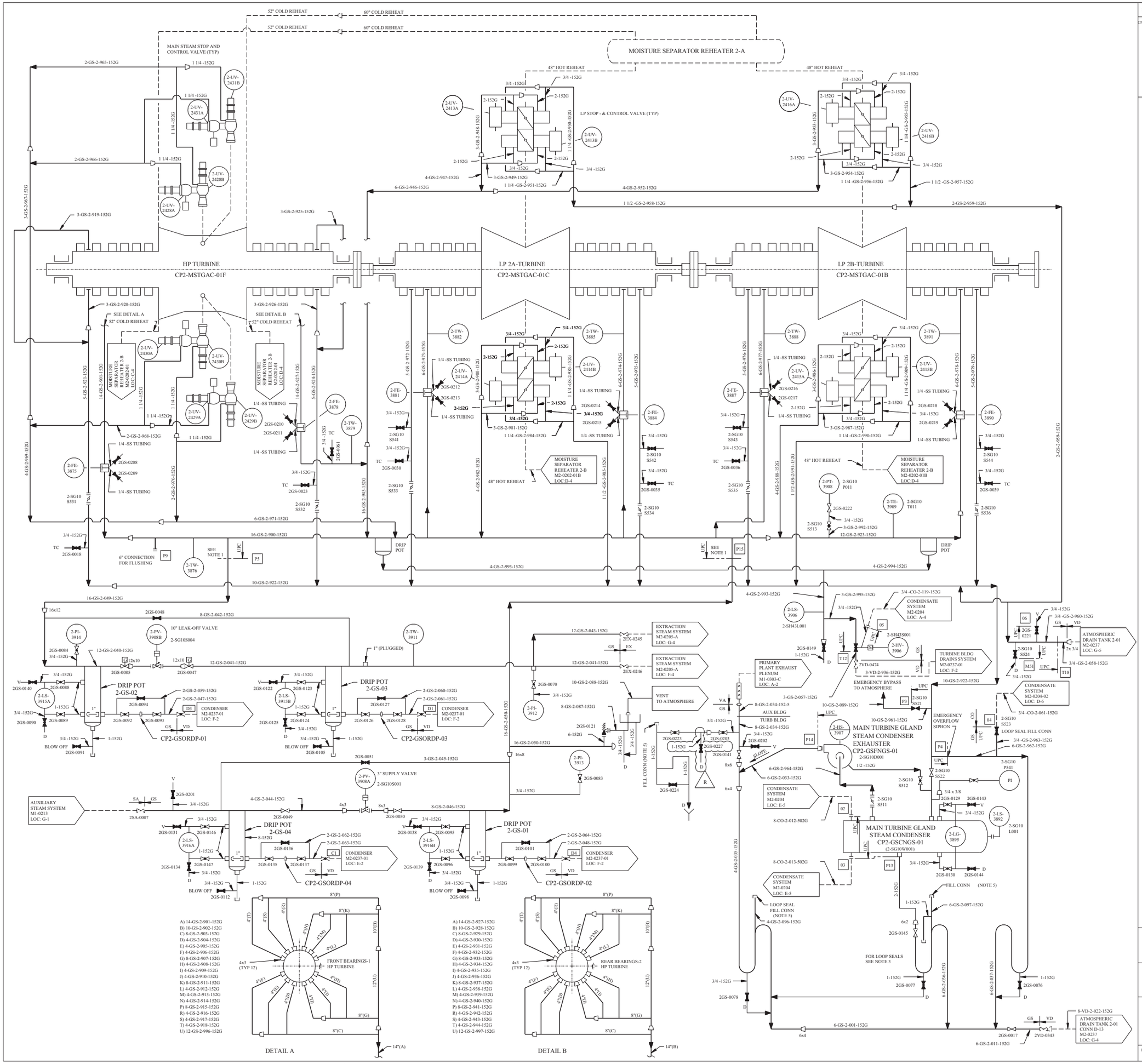

REV	DWN	CHKD	APVD	REMARKS
CP-13	OGK 06-02-2005	MJG 06-02-2005		THIS DRAWING REVISED TO INCORPORATE DESIGN CHANGE FDA 2004-001830-01-00 PER SK-0002-04-001830-01-00.

NOTES:

1. ALL ITEMS SHOWN IN PHANTOM INSIDE THIS BOUNDARY WILL BE SUPPLIED BY UPC. INSTRUMENTS AND VALVES INSIDE THIS BOUNDARY WHICH ARE SHOWN IN FULL LINES WILL BE PROVIDED BY TU ELECTRIC.
2. PT UPC CONNECTION NUMBER (TYPICAL.)
3. LOOP SEALS SHALL BE ARRANGED WITH 3 FEET 3.37 INCHES OF VERTICAL LEG.
4. REPRESENTS DRAIN CONNECTIONS SHOWN ON DRAWING M2-0237-01.
5. LOOP SEAL FILL CONNECTIONS WILL BE PROVIDED WITH A THREADED CAP FOR LOOP FILL.
6. UNLESS OTHERWISE NOTED ALL DRAINS TO BE COLLECTED BY LOCAL DRAIN SYSTEM.
7. DELETED
8. FOR MECHANICAL SYMBOLS AND NOTES SEE DRAWING M1-0200.

FSAR FIGURE 10.4-4

THIS DRAWING CREATED ELECTRONICALLY

DRAWING 2323-M2-0223 REV CP-2
HAS BEEN SPLIT INTO THE FOLLOWING SHEETS:
M2-0223
M2-0223-A

NON-SAFETY

LUMINANT
CPSES
GLEN ROSE, TEXAS

FLOW DIAGRAM
TURBINE GLAND STEAM SYSTEM

DWG. NO. M2-0223 | SH. NO. - | REV. CP-13

REF CKD 1-29-98

me676900.dgn M2-0223 + Approved LDCRs FINAL PRINT

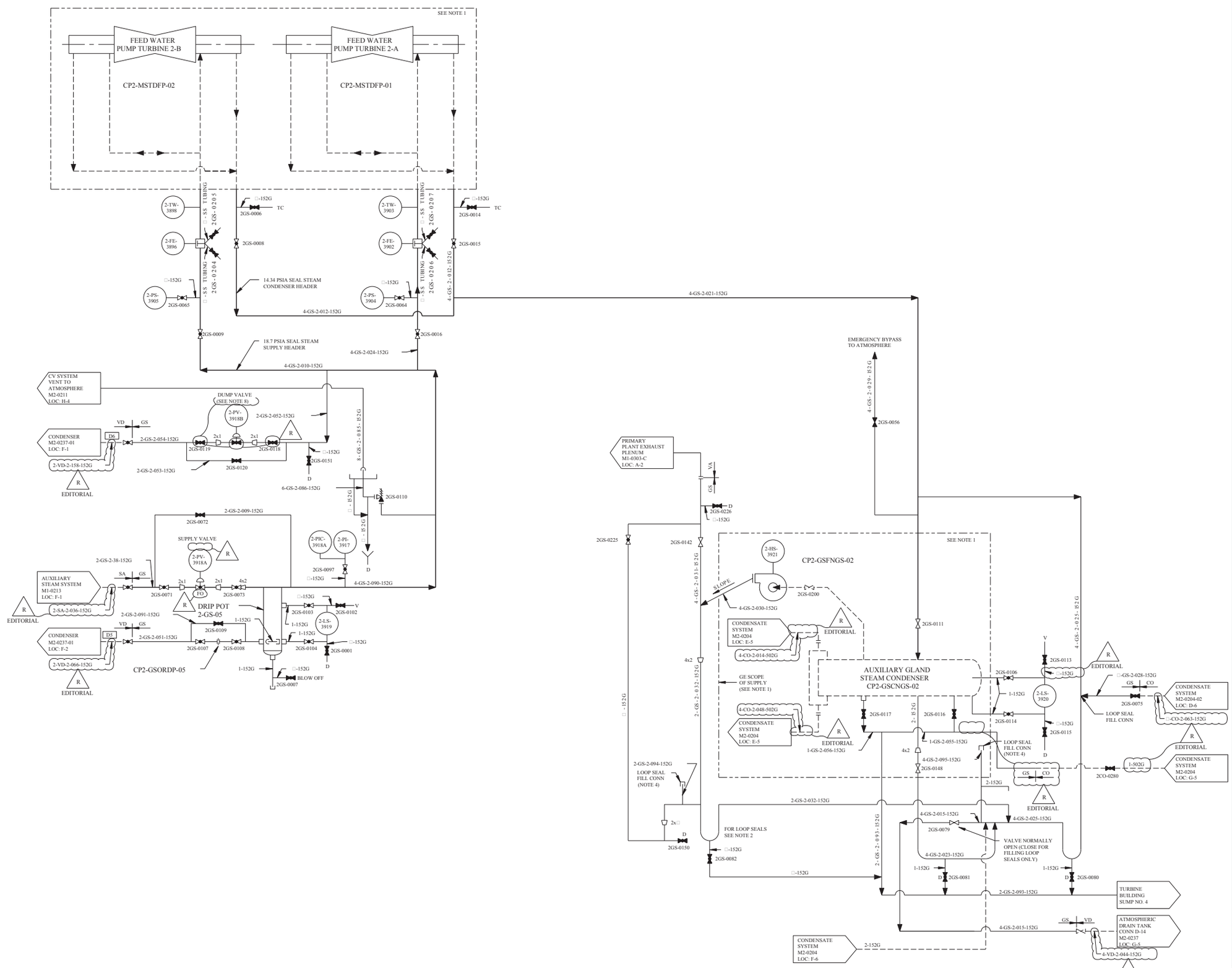

REV	DWN	CHKD	APVD	REMARKS
CP-8	DLK 01-05-2012	MM 01-13-2012		THIS DRAWING REVISED TO INCORPORATE DESIGN CHANGE FDA 2005-004990-02-00 PER SK-0004-05-004990-02-00. EDITORIAL CHANGES AS NOTED.

NOTES:

1. ALL ITEMS SHOWN IN PHANTOM INSIDE THIS BOUNDARY WILL BE SUPPLIED BY GE. PIPING INSTRUMENTS AND VALVES INSIDE THIS BOUNDARY WHICH ARE SHOWN WITH FULL LINES WILL BE PROVIDED BY TU ELECTRIC.
2. LOOP SEALS SHALL BE ARRANGED WITH 3 FEET 3.37 INCHES OF VERTICAL LEG.
3. REPRESENTS DRAIN CONNECTIONS SHOWN ON DRAWING M2-0237-01.
4. LOOP SEAL FILL CONNECTIONS WILL BE PROVIDED WITH A THREADED CAP FOR LOOP FILL. AN ANTI-SIPHON TELL TALE CONNECTION SHALL BE LOCATED 6 INCHES ABOVE THE CENTER LINE OF THE UPPER LOOP.
5. UNLESS OTHERWISE NOTED ALL DRAINS TO BE COLLECTED BY LOCAL DRAIN SYSTEM.
6. DELETED
7. FOR MECHANICAL SYMBOLS AND NOTES SEE DRAWING M1-0200.
8. VALVE 2-PV-3918B ABANDON IN PLACE, REF FDA 2005-004990-02.

R

FSAR FIGURE 10.4-4

THIS DRAWING CREATED ELECTRONICALLY

DRAWING 2323-M2-0223 REV CP-2
HAS BEEN SPLIT INTO THE FOLLOWING SHEETS:
M2-0223
M2-0223-A

NON-SAFETY

LUMINANT
CPNPP
GLEN ROSE, TEXAS

FLOW DIAGRAM
TURBINE GLAND STEAM SYSTEM

DWG. NO. M2-0223 | SH. NO. A | REV. CP-8

< FINAL PRINT >

me891100.dgn M2-0223-A

$$$$$$$DATE$$$$$$

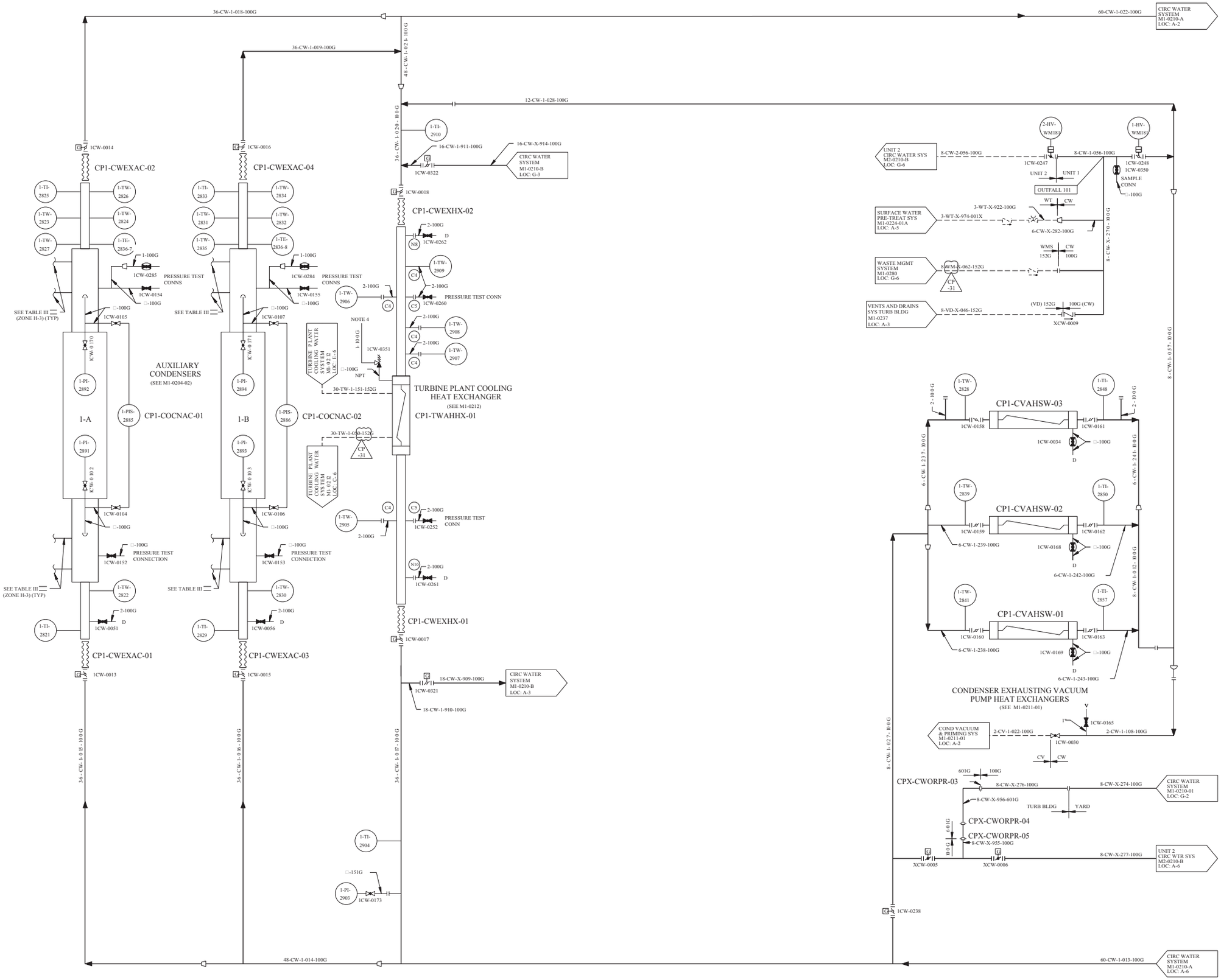

REV	DWN	CHKD	APVD	REMARKS
CP-31	DEK 09-16-2014			THIS DRAWING REVISED TO INCORPORATE AI-CR-2014-010053-1 TO EDITORIALLY CORRECT LINE NUMBER FROM WMS-X-062 TO WM-X-062. EDITORIAL CHANGE AS NOTED.

NOTES:

1. MANUFACTURERS CONNECTION POINTS ON THE MAIN CONDENSERS ARE REPRESENTED BY ENCIRCLED NUMBERS CORRESPONDING TO THE VENDOR'S DRAWINGS.
4. HEAT EXCHANGER CHANNEL RELIEF VALVE SUPPLIED BY MANUFACTURER.
5. UNLESS OTHERWISE NOTED ALL DRAINS COLLECTED BY LOCAL DRAIN SYSTEM.
6. FOR MECHANICAL NOTES AND SYMBOLS SEE DRAWING M1-0200.

TABLE III

			LG	A	B	C	D
AUX CONDENSERS (DETAIL A)	CP1-COCNAC-01	INLET	1-LG-2873	1CV-0068	1CW-0099	1CW-0132	1CW-0133
		OUTLET	1-LG-2874	1CV-0071	1CW-0109	1CW-0134	1CW-0135
	CP1-COCNAC-02	INLET	1-LG-2875	1CV-0074	1CW-0110	1CW-0136	1CW-0137
		OUTLET	1-LG-2876	1CV-0077	1CW-0111	1CW-0022	1CW-0026

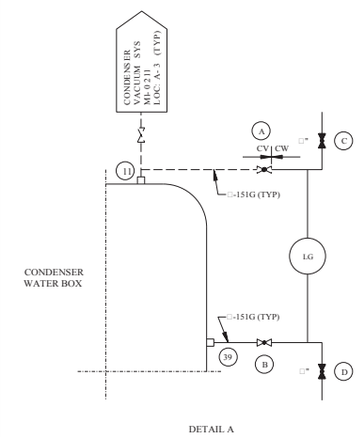

FSAR FIGURE 10.4-5

THIS DRAWING CREATED ELECTRONICALLY

DRAWING 2323-M1-0210 REV CP-10
HAS BEEN SPLIT INTO THE FOLLOWING SHEETS:
M1-0210
M1-0210-A

DRAWING M1-0210 REV CP-13
HAS BEEN SPLIT INTO THE FOLLOWING SHEETS:
M1-0210
M1-0210-B

NON-SAFETY

LUMINANT
CPNPP
GLEN ROSE, TEXAS

FLOW DIAGRAM
CIRCULATING WATER SYSTEM

DWG. NO.	SH. NO.	REV.
M1-0210	-	CP-31

REF CIRCD 9-16-2014 CP-31

$$$$$$$DATE$$$$$$$

REV	DWN	CHKD	APVD	REMARKS
CP-13	DLK 08-17 2010			THIS DRAWING REVISED TO EDITORIALLY CORRECT DRAWING REFERENCE PER CR-2010-007600.

NOTES:

1. MANUFACTURERS CONNECTION POINTS ON THE MAIN CONDENSERS ARE REPRESENTED BY ENCIRCLED NUMBERS CORRESPONDING TO THE VENDOR'S DRAWINGS.
2. UNLESS OTHERWISE NOTED ALL DRAINS COLLECTED BY LOCAL DRAIN SYSTEM.
3. FOR MECHANICAL NOTES AND SYMBOLS SEE DRAWING M1-0200.
4. DELETED

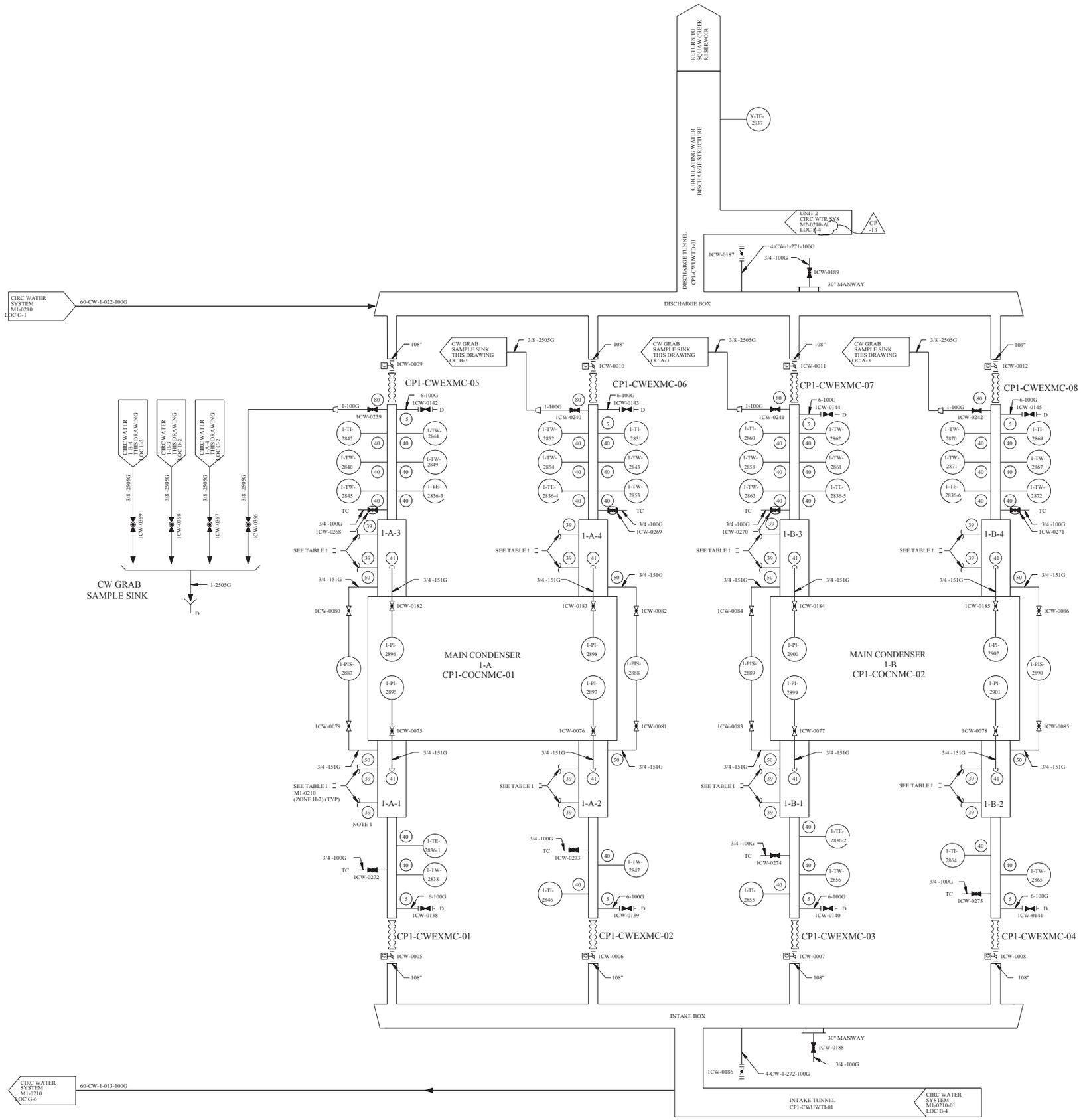

TABLE I

		MAIN CONDENSER (DETAIL "A")							
		CP1-COCNMC-01				CP1-COCNMC-02			
		INLET		OUTLET		INLET		OUTLET	
		1-A-1	1-A-2	1-A-3	1-A-4	1-B-1	1-B-2	1-B-3	1-B-4
LG		1-LG-2877	1-LG-2879	1-LG-2878	1-LG-2880	1-LG-2881	1-LG-2883	1-LG-2882	1-LG-2884
VALVES	A	1CW-0067	1CW-0069	1CW-0087	1CW-0089	1CW-0071	1CW-0073	1CW-0091	1CW-0093
	B	1CW-0068	1CW-0070	1CW-0088	1CW-0090	1CW-0072	1CW-0074	1CW-0092	1CW-0094
	C	1CW-0036	1CW-0038	1CW-0044	1CW-0055	1CW-0120	1CW-0122	1CW-0124	1CW-0126
	D	1CW-0037	1CW-0043	1CW-0054	1CW-0095	1CW-0121	1CW-0123	1CW-0125	1CW-0127

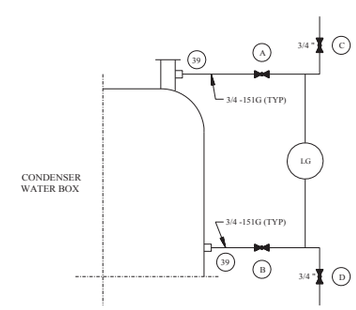

DETAIL "A"

FSAR FIGURE 10.4-5

THIS DRAWING CREATED ELECTRONICALLY

DRAWING 2323-M1-0210 REV CP-10
HAS BEEN SPLIT INTO THE FOLLOWING SHEETS:
M1-0210
M1-0210-A

NON-SAFETY

LUMINANT
CPNPP
GLEN ROSE, TEXAS

FLOW DIAGRAM
CIRCULATING WATER SYSTEM

DWG. NO. M1-0210 | SH. NO. A | REV. CP-13

FINAL PRINT

me0007om.dgn M1-0210-A

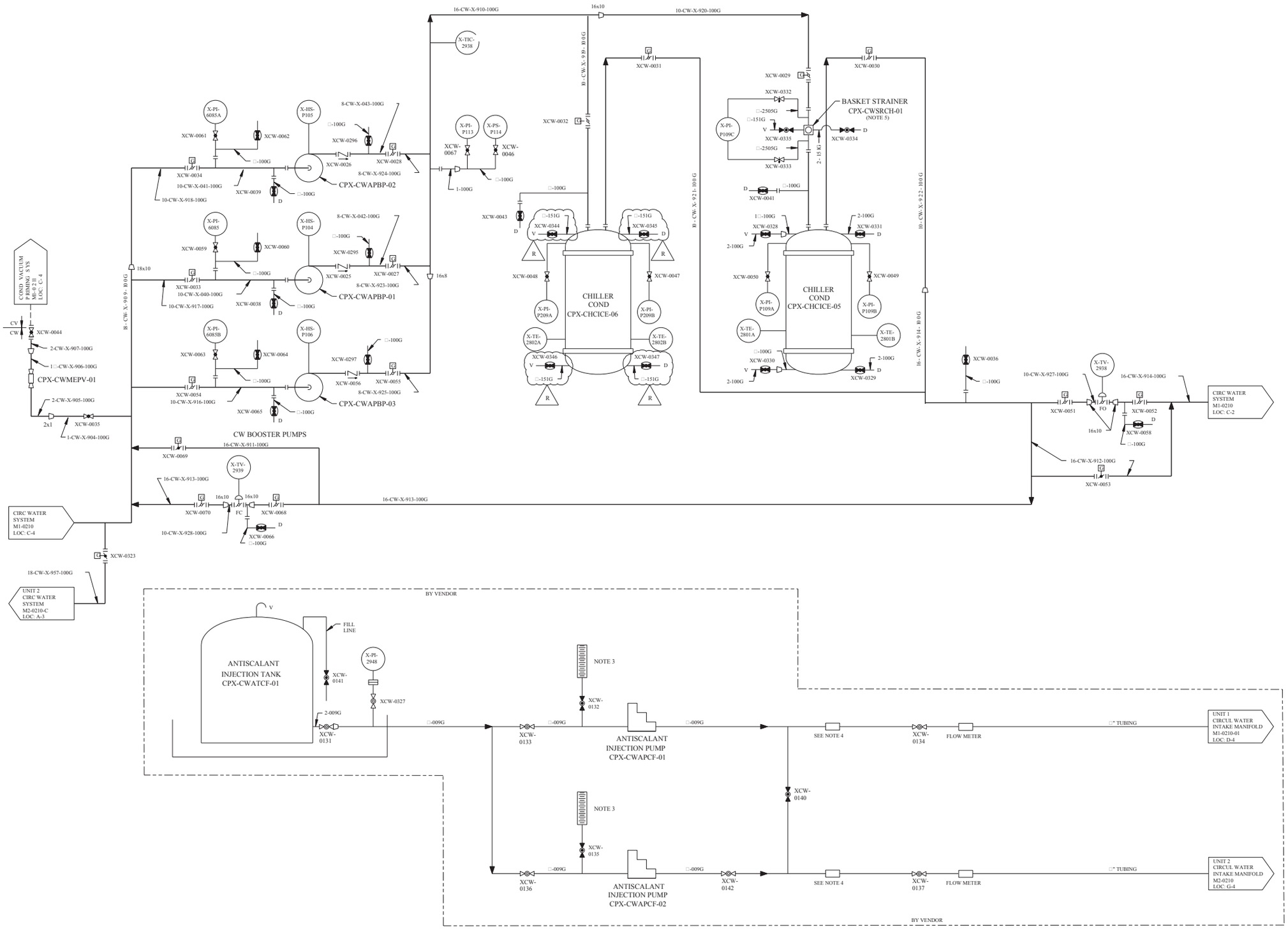

REV	DWN	CHKD	APVD	REMARKS
CP-17	JRMC 04-10-2012	DJL 04-11-2012		THIS DRAWING REVISED TO INCORPORATE DESIGN CHANGE: FDA-2012-000048-01-00 PER SK-0001-12-000048-01-00.

NOTES:

1. FOR MECHANICAL NOTES AND SYMBOLS SEE DWG M1-0200.
2. UNLESS OTHERWISE NOTED ALL DRAINS COLLECTED BY LOCAL DRAIN SYSTEM.
3. GRADUATED CALIBRATION CYLINDER.
4. ANTI-SIPHON DEVICE/SURGE SUPPRESSOR BY VENDOR.
5. BASKET STRAINER DESIGNED FOR BACKFLUSH SERVICE. REFERENCE FDA-2008-003750-02.

FSAR FIGURE 10.4-5

THIS DRAWING CREATED ELECTRONICALLY

DRAWING M1-0210	REV CP-13
HAS BEEN SPLIT INTO THE FOLLOWING SHEETS:	
M1-0210	
M1-0210-B	

NON-SAFETY

LUMINANT
CPNPP
GLEN ROSE, TEXAS

FLOW DIAGRAM
CIRCULATING WATER SYSTEM

DWG. NO.	SH. NO.	REV.
M1-0210	B	CP-17

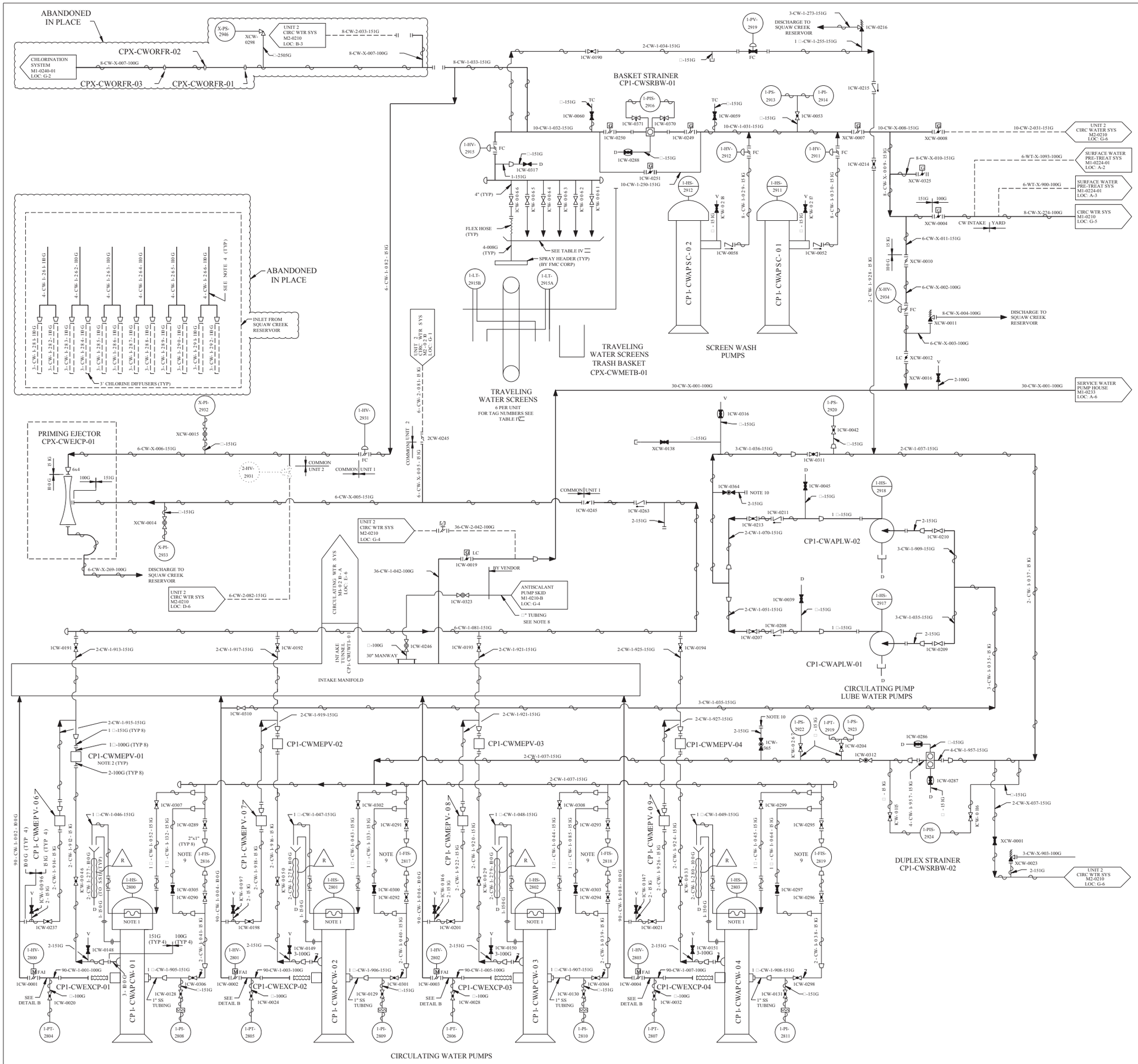

REV	DWN	CHKD	APVD	REMARKS
CP-39	JRMC 04-12-2013	EES 04-12-2013		THIS DRAWING REVISED TO INCORPORATE DESIGN CHANGE FDA-2013-000076-01-00 PER SK-0001-13-000076-01-00.

NOTES:

1. CIRCULATING WATER PUMP MOTOR BEARING COOLER BY GENERAL ELECTRIC.
2. PRIMING VALVE 1 □".
3. DELETED
4. SUBMERGED LINES 4-CW-1-261-110G THROUGH 4-CW-1-266-110G TO HAVE EXTERIOR COATING OF PLASITE PRIOR TO INSTALLATION.
5. DELETED
6. UNLESS OTHERWISE NOTED ALL DRAINS COLLECTED BY LOCAL DRAIN SYSTEM.
7. FOR MECHANICAL SYMBOLS AND NOTES SEE DRAWING M1-0200.
8. TUBING TO BE INSTALLED THROUGH BALL VALVE AND SEALED WITH A COMPRESSION FITTING.
9. FOR INSTALLATION DETAIL AS IT RELATES TO HEAT TRACE SEE E1-1500 SHEETS 006 AND 008.
10. BYPASS CONNECTIONS PROVIDED FOR MAINTENANCE OF THE DUPLEX STRAINER USING ENGINEERING REVIEWED PIPING WITH SUITABLE FILTRATION TO ENSURE PROPER FLOW TO THE HEADER.
11. BALL VALVES ARE APPROVED FOR VALVES A, B, C, AND D. (REF FDA-2007-001117-01-00/DCN 09013) UPDATE MEL ONCE THE BALL VALVES ARE INSTALLED.

TABLE II

PIPING AND INSTRUMENTS ON THE CIRCULATING WATER PUMP DISCHARGE SIDE (DETAIL B)					
VALVE		CP1-CWAPCW -01	CP1-CWAPCW -02	CP1-CWAPCW -03	CP1-CWAPCW -04
A		1CW-0219	1CW-0220	1CW-0221	1CW-0222
B		1CW-0223	1CW-0224	1CW-0225	1CW-0226
C		1CW-0227	1CW-0228	1CW-0229	1CW-0230
D		1CW-0231	1CW-0232	1CW-0233	1CW-0234
INSTS					
	LS	1-LS-2812	1-LS-2813	1-LS-2814	1-LS-2815

TABLE IV

TRAVELING SCREEN TAG		ISO VALVE	LINE	FLEX HOSE TAG
CP1-CWTSTS-01	1-HS-2925	1CW-0061	4-CW-1-101-151G	CP1-CWFHSC-01
CP1-CWTSTS-02	1-HS-2926	1CW-0062	4-CW-1-102-151G	CP1-CWFHSC-02
CP1-CWTSTS-03	1-HS-2927	1CW-0063	4-CW-1-103-151G	CP1-CWFHSC-03
CP1-CWTSTS-04	1-HS-2928	1CW-0064	4-CW-1-104-151G	CP1-CWFHSC-04
CP1-CWTSTS-05	1-HS-2929	1CW-0065	4-CW-1-105-151G	CP1-CWFHSC-05
CP1-CWTSTS-06	1-HS-2930	1CW-0066	4-CW-1-106-151G	CP1-CWFHSC-06

FSAR FIGURE 10.4-5

THIS DRAWING CREATED ELECTRONICALLY

NON-SAFETY

LUMINANT
CPNPP
GLEN ROSE, TEXAS

FLOW DIAGRAM
CIRCULATING WATER SYSTEM

DWG. NO.	SH. NO.	REV.
M1-0210	01	CP-39

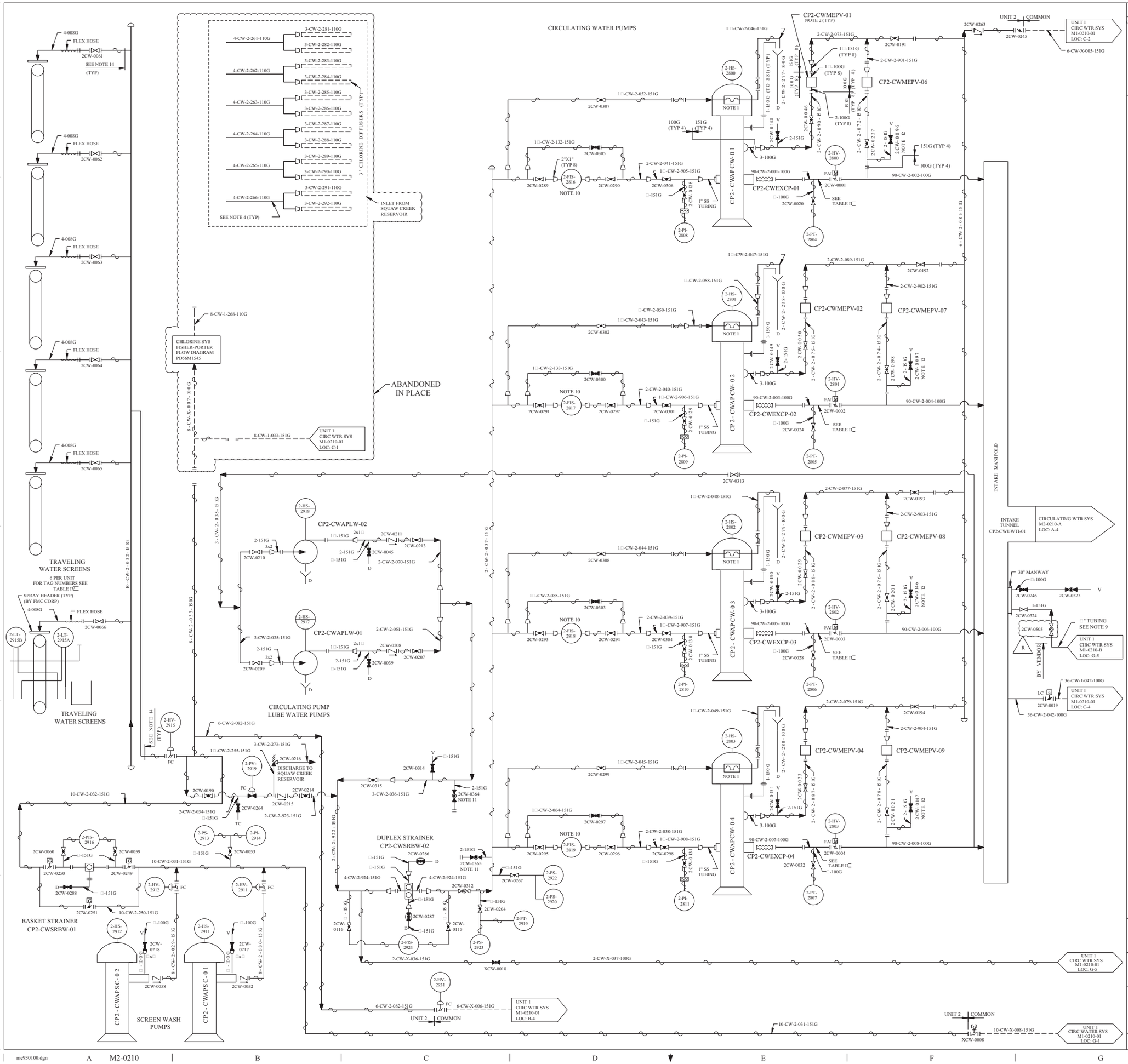

REV	DWN	CHK	APVD	REMARKS
CP-32	DSM 10-22 2014	RMG 10-22 2014		THIS DRAWING REVISED TO INCORPORATE DESIGN CHANGE FDA-2014-000244-01-00 PER SK-0004-14-000244-01-00.

NOTES:

1. CIRCULATING WATER PUMP MOTOR BEARING COOLER BY GENERAL ELECTRIC.
2. PRIMING VALVE 1□.
3. DELETED
4. SUBMERGED LINES 4-CW-2-261-110G THRU 4-CW-2-266-110G TO HAVE EXTERIOR COATING OF PLASITE PRIOR TO INSTALLATION.
5. DELETED
6. FOR MECHANICAL SYMBOLS AND NOTES SEE DRAWING M1-0200.
7. UNLESS OTHERWISE NOTED DRAINS COLLECTED BY LOCAL DRAIN SYSTEM.
8. DELETED
9. TUBING TO BE INSTALLED THROUGH THE VALVE AND SEALED WITH A COMPRESSION FITTING.
10. FOR INSTALLATION DETAIL AS IT RELATES TO HEAT TRACE SEE E2-1506 SHEETS 002, 014, 015 AND 017.
11. BYPASS CONNECTIONS PROVIDED FOR MAINTENANCE OF THE DUPLEX STRAINER USING ENGINEERING REVIEWED PIPING WITH SUITABLE FILTRATION TO ENSURE PROPER FLOW TO THE HEADER.
12. A BLANK FLANGE MAY BE INSTALLED AS REQUIRED PER FDA-2006-003493-01.
13. BALL VALVES ARE APPROVED FOR VALVES A, B, C, AND D. (REF FDA-2007-001117-01-00/DCN 09013) UPDATE MEL ONCE THE BALL VALVES ARE INSTALLED.
14. TRAVELING SCREENS WASH PIPING HEAT TRACE IS REQUIRED ONLY ABOVE THE CWIS DECK.

TABLE II

PIPING AND INSTRUMENTS ON THE CIRCULATING WATER PUMP DISCHARGE SIDE (DETAIL B)					
VALVE		CP2-CWAPCW -01	CP2-CWAPCW -02	CP2-CWAPCW -03	CP2-CWAPCW -04
A		2CW-0219	2CW-0220	2CW-0221	2CW-0222
B		2CW-0223	2CW-0224	2CW-0225	2CW-0226
C		2CW-0227	2CW-0228	2CW-0229	2CW-0230
D		2CW-0231	2CW-0232	2CW-0233	2CW-0234
INSTS					
	LS	2-LS-2812	2-LS-2813	2-LS-2814	2-LS-2815

TABLE IV

TRAVELING SCREEN TAG		ISO VALVE	LINE	FLEX HOSE TAG
CP2-CWTSTS-01	2-HS-2925	2CW-0061	4-CW-2-101-151G	CP2-CWFHSC-01
CP2-CWTSTS-02	2-HS-2926	2CW-0062	4-CW-2-102-151G	CP2-CWFHSC-02
CP2-CWTSTS-03	2-HS-2927	2CW-0063	4-CW-2-103-151G	CP2-CWFHSC-03
CP2-CWTSTS-04	2-HS-2928	2CW-0064	4-CW-2-104-151G	CP2-CWFHSC-04
CP2-CWTSTS-05	2-HS-2929	2CW-0065	4-CW-2-105-151G	CP2-CWFHSC-05
CP2-CWTSTS-06	2-HS-2930	2CW-0066	4-CW-2-106-151G	CP2-CWFHSC-06

FSAR FIGURE 10.4-5

DRAWING 2323-M2-0210	REV CP-3
HAS BEEN SPLIT INTO THE FOLLOWING SHEETS:	
M2-0210	
M2-0210-A	
M2-0210-B	
M2-0210-C	

NON-SAFETY

LUMINANT
CPNPP
GLEN ROSE, TEXAS

FLOW DIAGRAM
CIRCULATING WATER SYSTEM

DWG. NO. M2-0210 | SH. NO. - | REV. CP-32

me930100.dgn A M2-0210 < FINAL PRINT >

REV	DWN	CHK	APVD	REMARKS
CP-8	DLK 08-17 2010			THIS DRAWING REVISED TO EDITORIALLY CORRECT DRAWING REFERENCE PER CR-2010-007600.

NOTES:

1. MANUFACTURERS CONNECTION POINTS ON THE MAIN CONDENSERS ARE REPRESENTED BY ENCIRCLED NUMBERS CORRESPONDING TO THE VENDORS DRAWINGS.
2. FOR MECHANICAL SYMBOLS AND NOTES SEE DRAWING M1-0200.
3. UNLESS OTHERWISE NOTED DRAINS COLLECTED BY LOCAL DRAIN SYSTEM.

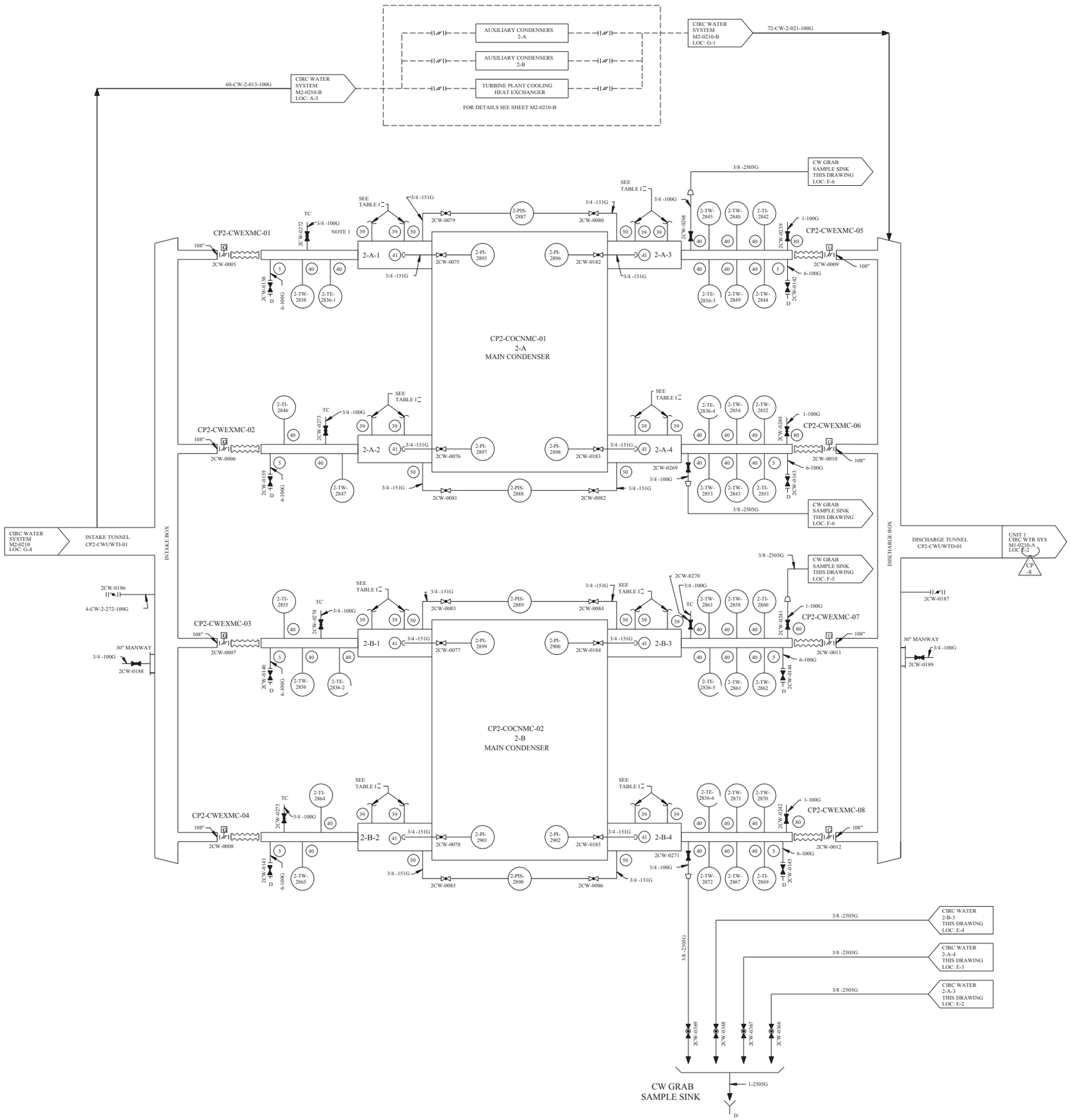

TABLE I

		MAIN CONDENSER (SEE DETAIL A)							
		CP2-COCNMC-01				CP2-COCNMC-02			
		INLET		OUTLET		INLET		OUTLET	
		2-A-1	2-A-2	2-A-3	2-A-4	2-B-1	2-B-2	2-B-3	2-B-4
LG		2-LG-2877	2-LG-2879	2-LG-2878	2-LG-2880	2-LG-2881	2-LG-2883	2-LG-2882	2-LG-2884
VALVES	A	2CW-0067	2CW-0069	2CW-0087	2CW-0089	2CW-0071	2CW-0073	2CW-0091	2CW-0093
	B	2CW-0068	2CW-0070	2CW-0088	2CW-0090	2CW-0072	2CW-0074	2CW-0092	2CW-0094
	C	2CW-0036	2CW-0038	2CW-0044	2CW-0055	2CW-0120	2CW-0122	2CW-0124	2CW-0126
	D	2CW-0037	2CW-0043	2CW-0054	2CW-0095	2CW-0121	2CW-0123	2CW-0125	2CW-0127

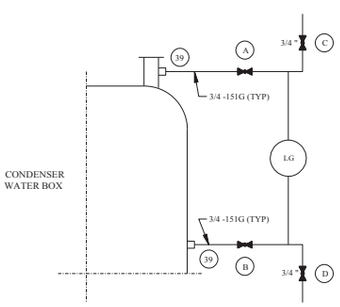

DETAIL "A"

FSAR FIGURE 10.4-5

THIS DRAWING CREATED ELECTRONICALLY

DRAWING 2323-M2-0210 REV CP-3
HAS BEEN SPLIT INTO THE FOLLOWING SHEETS:

M2-0210
M2-0210-A
M2-0210-B
M2-0210-C

NON-SAFETY

LUMINANT
CPNPP
GLEN ROSE, TEXAS

FLOW DIAGRAM
CIRCULATING WATER SYSTEM

DWG. NO. M2-0210 | SH. NO. A | REV. CP-8

FINAL PRINT

me0007ol.dgn M2-0210-A

REV	DWN	CHKD	APVD	REMARKS
CP-16	DIK 09-07-2007	JRMC 09-07-2007		THIS DRAWING REVISED TO INCORPORATE DESIGN CHANGE FDA-2003-002540-05-00 PER SK-0002-03-002540-05-00.

NOTES:

1. HEAT EXCHANGER CHANNEL RELIEF VALVE SUPPLIED BY MANUFACTURER.
2. FOR MECHANICAL SYMBOLS AND NOTES SEE DRAWING M1-0200.
3. UNLESS OTHERWISE NOTED DRAINS COLLECTED BY LOCAL DRAIN SYSTEM.

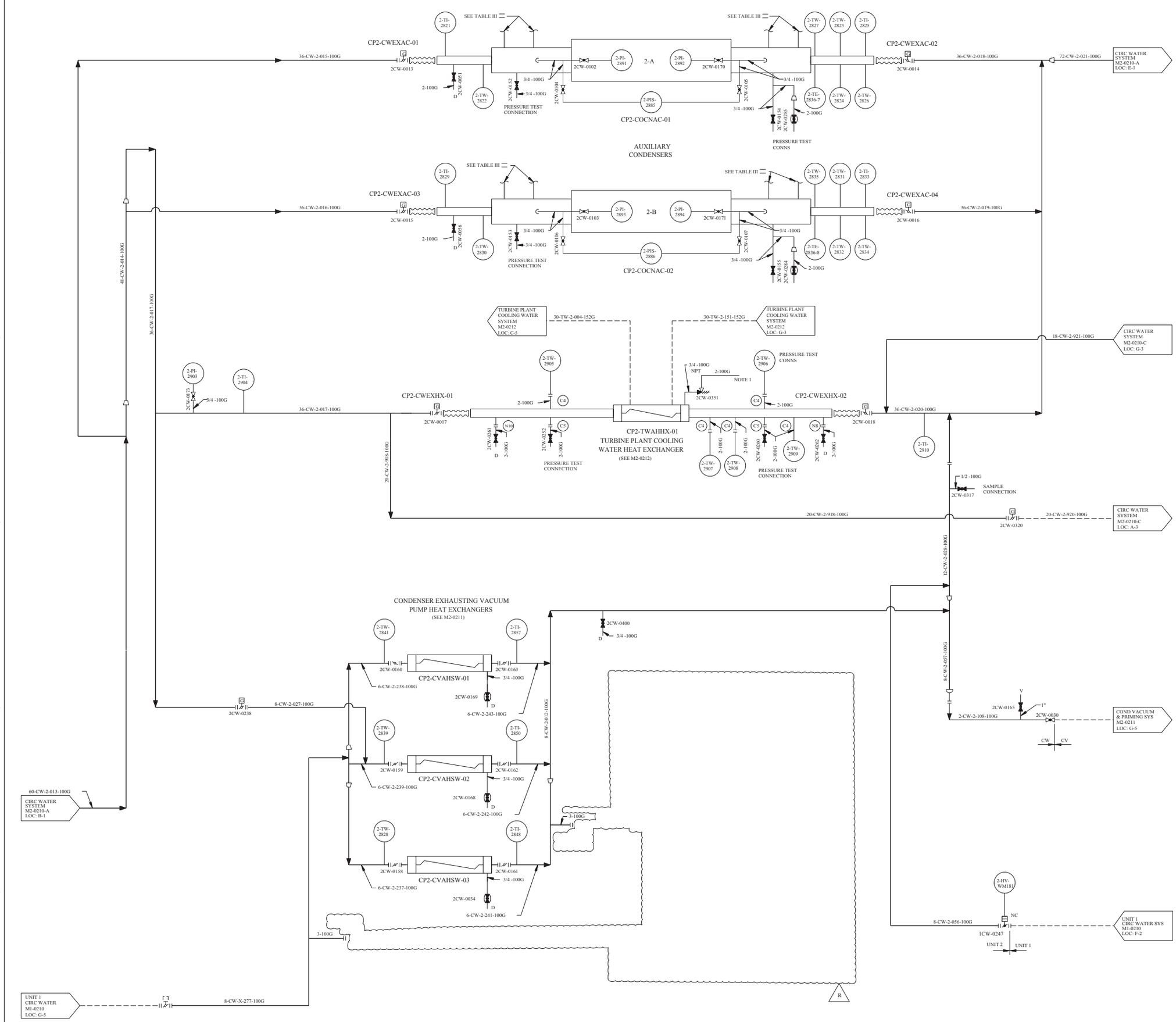

TABLE III

		LG	A	B	C	D
AUX. CONDENSERS (DETAIL "A") CP2-COCNAC-01	INLET	2-LG-2873	2CV-0068	2CW-0099	2CW-0132	2CW-0133
	OUTLET	2-LG-2874	2CV-0071	2CW-0109	2CW-0134	2CW-0135
CP2-COCNAC-02	INLET	2-LG-2875	2CV-0074	2CW-0110	2CW-0136	2CW-0137
	OUTLET	2-LG-2876	2CV-0077	2CW-0111	2CW-0022	2CW-0026

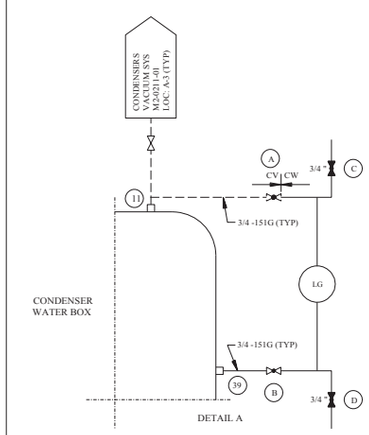

FSAR FIGURE 10.4-5

THIS DRAWING CREATED ELECTRONICALLY

DRAWING 2323-M2-0210 REV CP-3
HAS BEEN SPLIT INTO THE FOLLOWING SHEETS:

- M2-0210
- M2-0210-A
- M2-0210-B
- M2-0210-C

NON-SAFETY

LUMINANT
CPSES
GLEN ROSE, TEXAS

FLOW DIAGRAM
CIRCULATING WATER SYSTEM

DWG. NO. M2-0210 | SH. NO. B | REV. CP-16

FINAL PRINT

REFERENCES CHECKED 5/8/97 CP-8

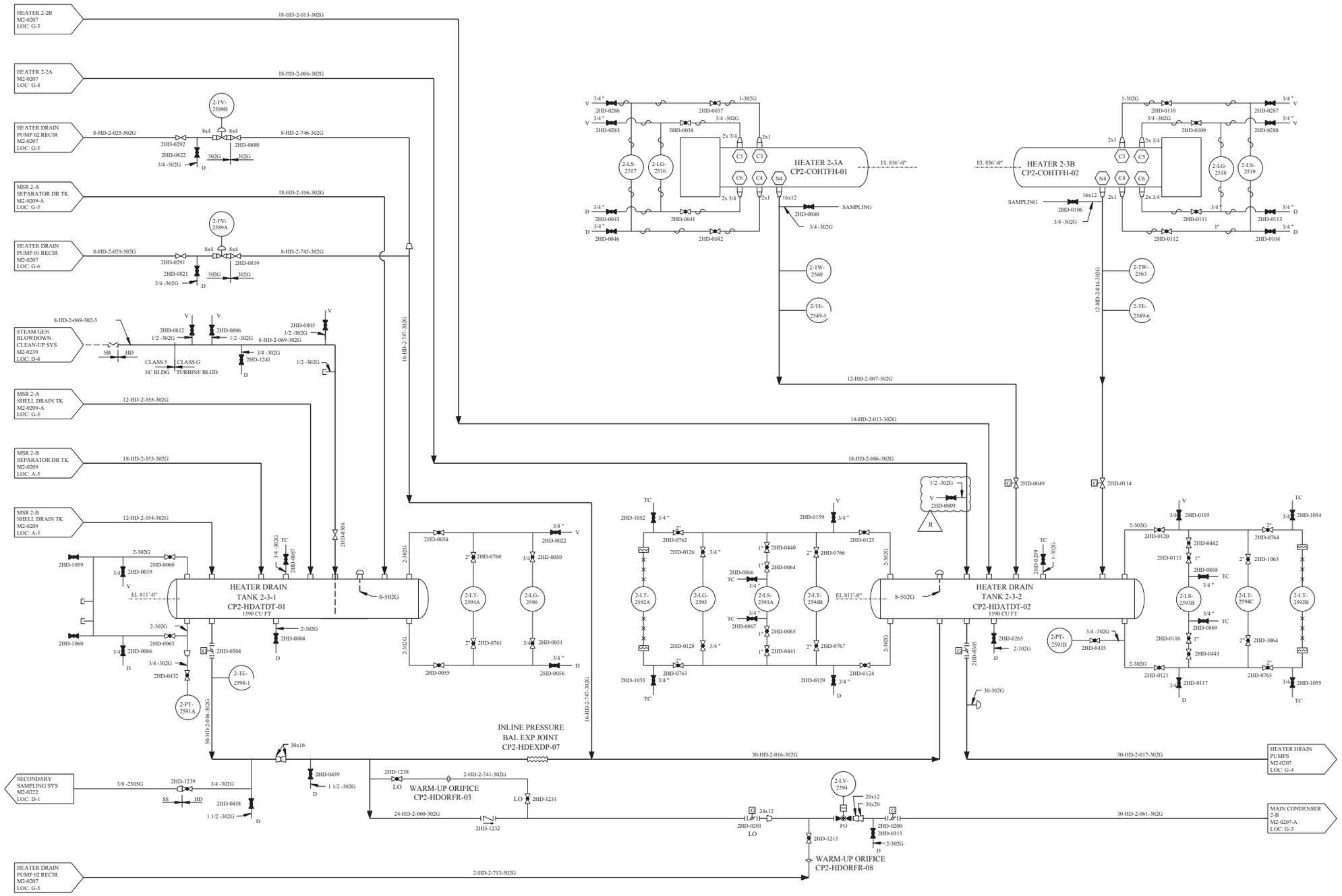

REV	DWN	CHKD	APVD	REMARKS
CP-3	D&K 11-01 2011	MM 11-01 2011		THIS DRAWING REVISED TO INCORPORATE DESIGN CHANGE FDA 2011-000205-01-00 PER SK-0001-11-000205-01-00.

NOTES:

1. HEATER CUSTOMER PIPE CONNECTIONS AS SUPPLIED BY STRUTHERS WELLS ARE INDICATED BY ⬡
2. SAMPLING CONNECTIONS ARE FOR THE TURBINE HEAT RATE TEST.
3. FOR MECHANICAL SYMBOLS AND NOTES SEE DRAWING M1-0200.
4. ALL I&C CHANNEL NUMBERS WILL HAVE PREFIX. I.E. 2-TE-2323
5. UNLESS OTHERWISE NOTED, ALL DRAINS TO BE COLLECTED BY LOCAL DRAIN SYSTEM TO TURBINE BUILDING SUMP.

FSAR FIGURE 10.4-14

THIS DRAWING CREATED ELECTRONICALLY

DRAWING M2-0207 REV CP-13
HAS BEEN SPLIT INTO THE FOLLOWING SHEETS:
M2-0207
M2-0207-B

CLASS II

LUMINANT
CPNPP
GLEN ROSE, TEXAS

FLOW DIAGRAM
HEATER DRAINS SYSTEM

DWG. NO. M2-0207 | SH. NO. B | REV. CP-3

FINAL PRINT

REV	DWN	CHKD	APVD	REMARKS
CP-13	DLK 03-24-2010	MSI 06-24-2010		THIS DRAWING REVISED TO INCORPORATE DESIGN CHANGE FDA 2007-003115-01-00 PER SK-0054-07-003115-01-00.

NOTES:

1. FOR MECHANICAL SYMBOLS AND NOTES SEE DRAWING M1-0200.
2. UNLESS OTHERWISE NOTED ALL DRAINS COLLECTED BY LOCAL DRAIN SYSTEM.
3. SIX INCHES OF 1/2 " DIA KYNAR AT PUMP SUCTION AND DISCHARGE.

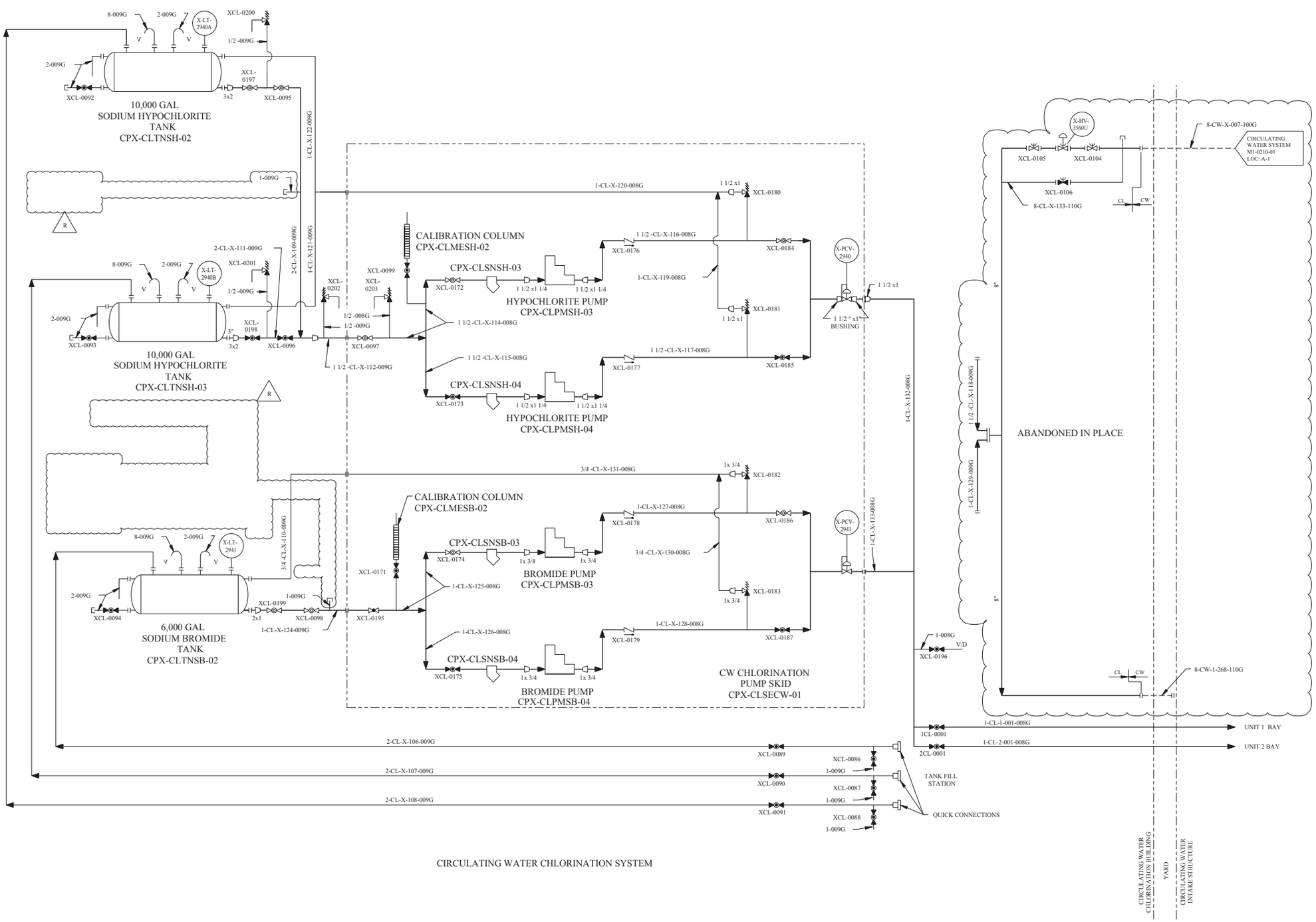

CIRCULATING WATER CHLORINATION SYSTEM

FSAR FIGURE 10.4-6

THIS DRAWING CREATED ELECTRONICALLY

NON-SAFETY

LUMINANT
CPNPP
GLEN ROSE, TEXAS

FLOW DIAGRAM
CHLORINATION SYSTEM

DWG. NO. M1-0240 | SH. NO. 01 | REV. CP-13

FINAL PRINT

REF CKD CP-6/9/18/97

me103000.dgn M1-0240-01

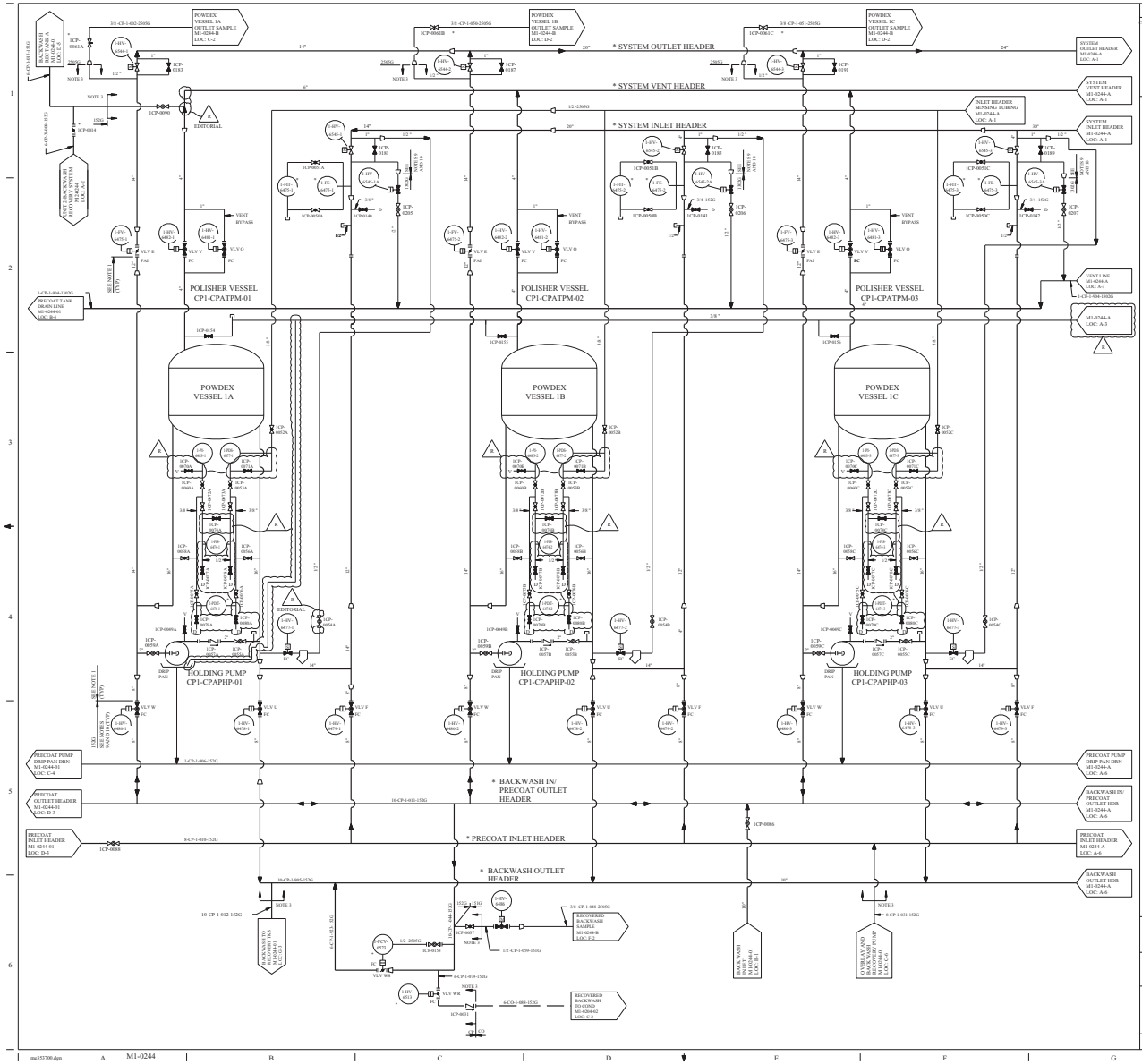

REV	DRN	DSGN	APVD	REMARKS
CP-15				THIS DRAWING REVISED TO INCORPORATE DESIGN CHANGE DESCRIBED IN CHANGE DR 98-0001-01-00183-01-00. HISTORICAL CHANGES AS NOTED.

NOTES:

1. ALL EQUIPMENT SHOWN ARE SHOP-ASSEMBLED SKIDDED MODULES SUPPLIED BY GRAVER.
2. ALL ITEMS DENOTED BY * SUPPLIED BY GRAVER.
3. ALL PIPING/HEADERS WHICH TERMINATE OR ORIGINATE WITHIN MODULES TO POINTS DENOTED BY SUPPLIED BY GRAVER. SEE NOTES 9 AND 10.
4. FOR MECHANICAL SYMBOLS AND NOTES SEE DWG M1-0200.
5. ALL EQUIPMENT FOR BACKWASH RECOVERY SUBSYSTEM IS SUPPLIED BY GRAVER WITH THE EXCEPTION OF PIPING.
6. WORK THIS DRAWING WITH M1-0244-01, -01A, -A AND -B.
7. DELETED
8. DELETED
9. UNLESS OTHERWISE NOTED, PIPE AND FITTINGS 2" AND SMALLER ARE SOCKET WELDED USING SCHEDULE 80 PIPE AND 3000 LB FITTINGS. PIPE AND FITTINGS 2 1/2 " AND LARGER ARE BUTT WELDED, EXCEPT FLANGED AT VALVES, PUMPS AND PRECOAT TANK CONNECTIONS. WALL THICKNESS IS STANDARD WEIGHT FOR SIZES 2 1/2 " TO 10" AND SCHEDULE 30 FOR SIZES 18" TO 30".
10. UNLESS OTHERWISE NOTED, PIPE MATERIAL IS A-106 GR B FOR SIZES 24" AND SMALLER AND A-155 GR KC60 (MIN) CLASS 1 OR 30" SIZE. FITTING MATERIAL IS A-105 GR II OR A-105 GR 71 FOR SIZES 2" AND SMALLER. A-234 GR WPB FOR SIZES 2 1/2 " TO 24" AND A-234 GR WPC OR A-515 GR60 MIN (100% X-RAY) FOR 30" SIZE.

FSAR FIGURE 10.4-7

THIS DRAWING CAN BE ACCESSED ELECTRONICALLY

DRAWING M1-0244 REV CP-6
HAS BEEN SPLIT INTO THE FOLLOWING SHEETS
M1-0244
M1-0244-A
M1-0244-B

NON-SAFETY

TXU ENERGY
CPSES
GLEN ROSE, TEXAS

FLOW DIAGRAM
CONDENSATE POLISHING
SYSTEM

DWG. NO. M1-0244 | SH. NO. - | REV. CP-15

ma355788.dgn A M1-0244

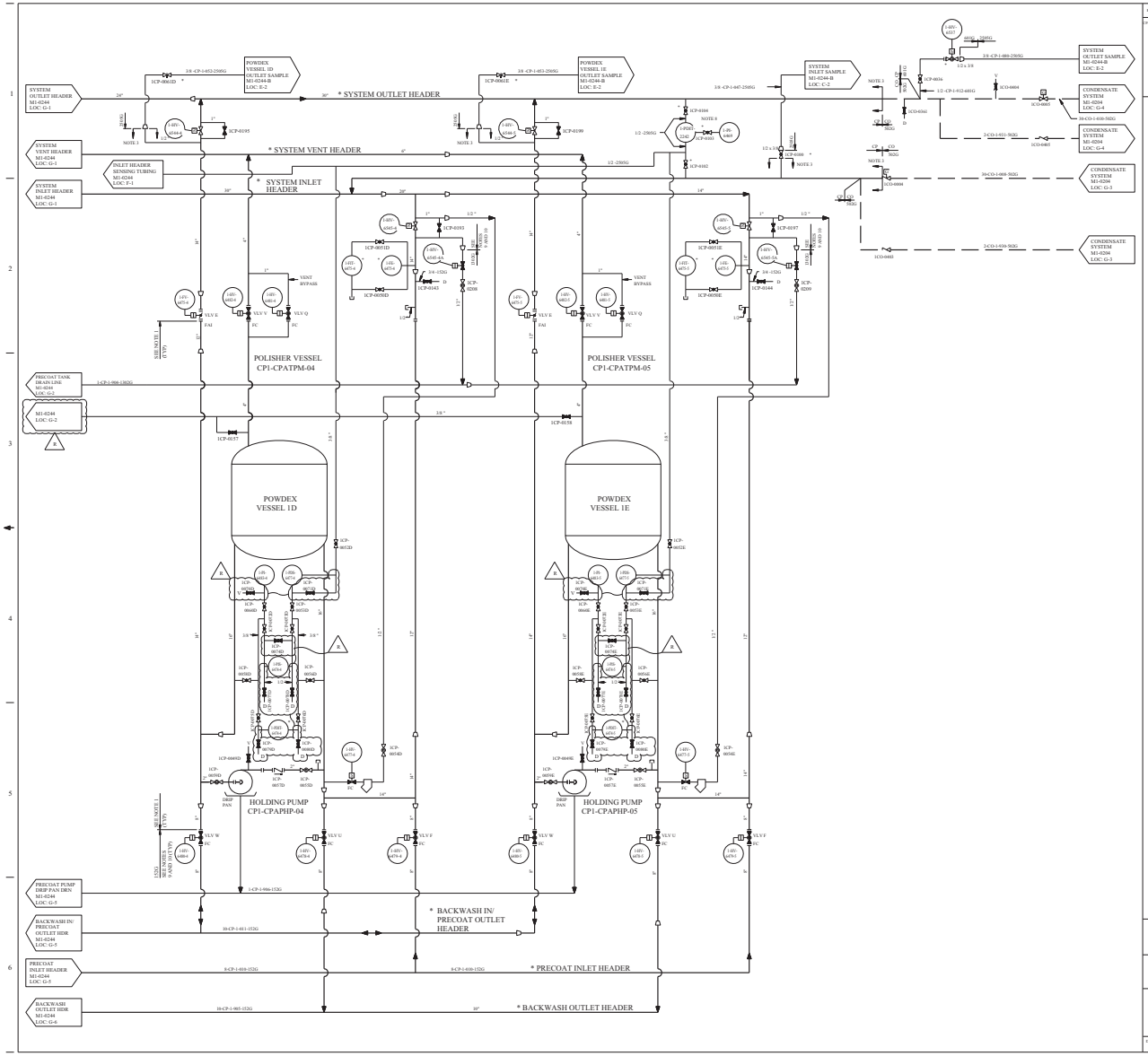

REV	DRWN	DSGN	APVD	REMARKS
CP-8				THIS DRAWING REVISED TO INCORPORATE DESIGN CHANGE FDA 2006-0050R0-01-00 PER SK-0050-01-00/REF-01-00.

NOTES:

1. ALL EQUIPMENT SHOWN ARE SHOP-ASSEMBLED SKIDDED MODULES SUPPLIED BY GRAVER.
2. ALL ITEMS DENOTED BY * SUPPLIED BY GRAVER.
3. ALL PIPING/HEADERS WHICH TERMINATE OR ORIGINATE WITHIN MODULES TO POINTS DENOTED BY SUPPLIED BY GRAVER. SEE NOTES 9 AND 10.
4. FOR MECHANICAL SYMBOLS AND NOTES SEE DWG M1-0286
5. ALL EQUIPMENT FOR BACKWASH RECOVERY SUBSYSTEM IS SUPPLIED BY GRAVER WITH THE EXCEPTION OF PIPING.
6. WORK THIS DRAWING WITH M1-0244, M1-0244-B, M1-0244-01, AND M1-0244-01A.
7. DELETED
8. HIGH DIFFERENTIAL PRESSURE SIGNAL FROM 1-PDIT-2242 OPENS CONDENSATE POLISHING SYSTEM BYPASS VALVE 1-PV-2242. SHOWN ON M1-0244 LOC. F-3, SEE ALSO M1-2204-04 FOR CONTROL SCHEMATIC.
9. UNLESS OTHERWISE NOTED, PIPE AND FITTINGS 2" AND SMALLER ARE SOCKET WELDED USING SCHEDULE 80 PIPE AND 3000 LB FITTINGS. PIPE AND FITTINGS 2 1/2 " AND LARGER ARE BUTT WELDED, EXCEPT FLANGED AT VALVES, PUMPS AND PRECOAT TANK CONNECTIONS. WALL THICKNESS IS STANDARD WEIGHT FOR SIZES 2 1/2 " TO 16" AND SCHEDULE 30 FOR SIZES 18" TO 30".
10. UNLESS OTHERWISE NOTED, PIPE MATERIAL IS A-106 GR B FOR SIZES 24" AND SMALLER AND A-155 GR KC60 (MIN CLASS 1) FOR 30" SIZE. FITTING MATERIAL IS A-105 GR II OR A-105 GR 71 FOR SIZES 2" AND SMALLER, A-234 GR WPB FOR SIZES 2 1/2 " TO 24" AND A-234 GR WPC OR A-515 GR60 MIN (100% X-RAY) FOR 30" SIZE.

FSAR FIGURE 10.4-7

DRAWING CONTENTS ARE SUBJECT TO PROPRIETARY

DRAWING	2323-M1-0244	REV	CP-6
HAS BEEN SPLIT INTO THE FOLLOWING SHEETS:			
M1-0244			
M1-0244-A			
M1-0244-B			

NON-SAFETY

TXU ENERGY
CPSES
GLEN ROSE, TEXAS

FLOW DIAGRAM
CONDENSATE POLISHING
SYSTEM

DWG. NO.	SH. NO.	REV
M1-0244	A	CP-8

REF CKD CP-6 10/20/97

XXXXXXXXXXXXXXXX

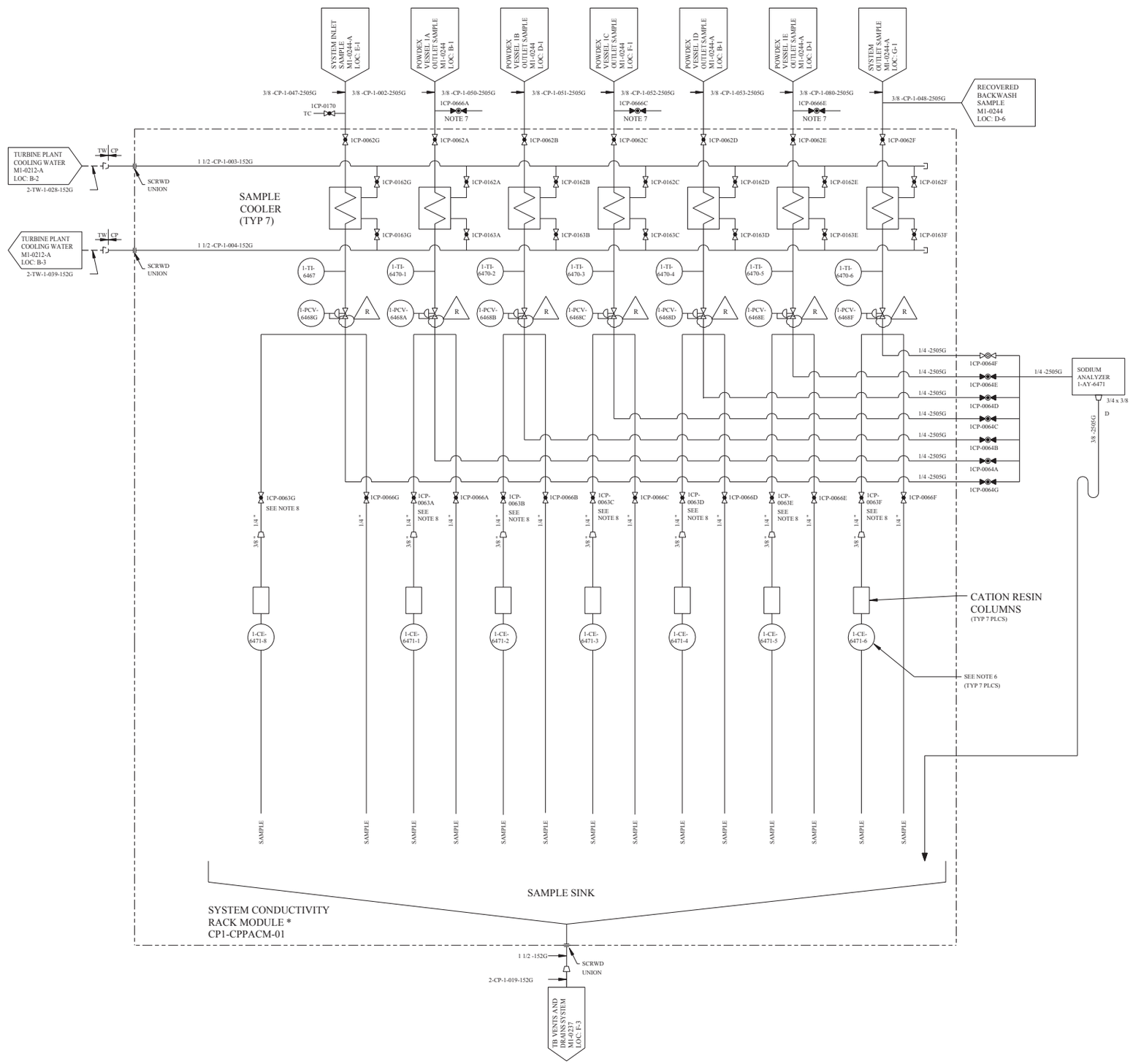

REV	DWN	CHKD	APVD	REMARKS
CP-11	DLK 06-22-2010	MM 06-22-2010		THIS DRAWING REVISED TO INCORPORATE DESIGN CHANGE FDA 2010-000103-01-00 PER SK-0001-10-000103-01-00.

NOTES:

1. ALL EQUIPMENT SHOWN WITHIN DASHED LINES WAS SUPPLIED AS SHOP-ASSEMBLED SKIDDED MODULES.
2. ALL EQUIPMENT DENOTED BY * WAS SUPPLIED BY GRAVER.
3. FOR MECHANICAL SYMBOLS AND NOTES SEE DWG M1-0200.
4. DELETED
5. WORK THIS DWG WITH M1-0244, M1-0244-A, -01 AND -01A.
6. CONDUCTIVITY RECORDER INPUTS:

1-CE-6471-1	VESSEL 1A EFFLUENT
1-CE-6471-2	VESSEL 1B EFFLUENT
1-CE-6471-3	VESSEL 1C EFFLUENT
1-CE-6471-4	VESSEL 1D EFFLUENT
1-CE-6471-5	VESSEL 1E EFFLUENT
1-CE-6471-6	SYSTEM INFLUENT
1-CE-6471-8	SYSTEM EFFLUENT/BACKWASH REC
1-AY-6471	LEAD BED SODIUM ANALYZER

7. VESSEL AUXILIARY SAMPLING POINTS.
8. CHEMISTRY THROTTLES VALVES ON IN SERVICE VESSELS.

FSAR FIGURE 10.4-7

THIS DRAWING CREATED ELECTRONICALLY

DRAWING 2323-M1-0244 REV CP-6
HAS BEEN SPLIT INTO THE FOLLOWING SHEETS:

M1-0244
M1-0244-A
M1-0244-B

NON-SAFETY

LUMINANT
CPNPP
GLEN ROSE, TEXAS

FLOW DIAGRAM
CONDENSATE POLISHING
SYSTEM

DWG. NO. M1-0244 | SH. NO. B | REV. CP-11

FINAL PRINT

me995600.dgn M1-0244-B

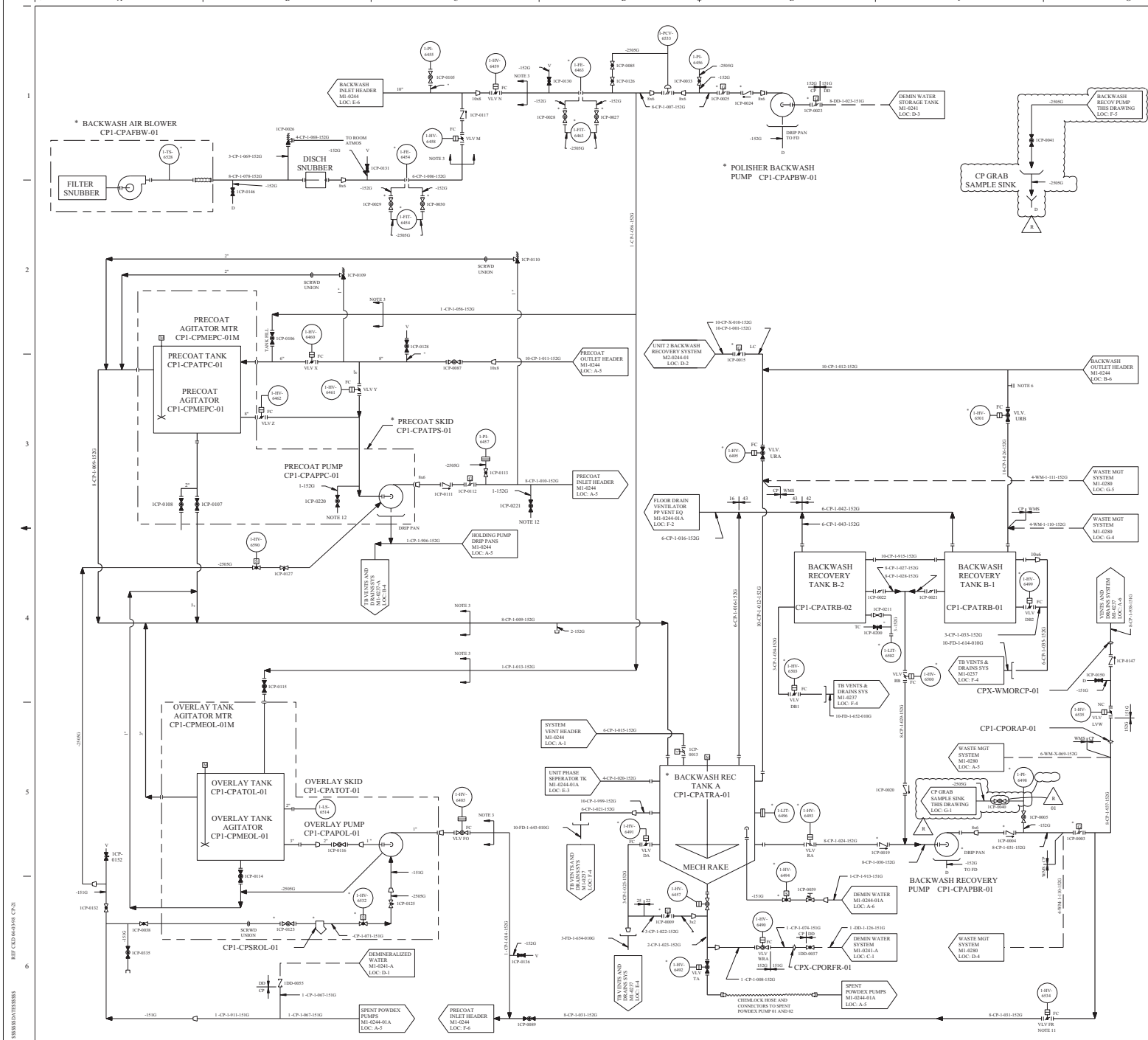

REV	DRWN	CHKD	APVD	REMARKS
CP-24	SLK 08-19-2003	SEE 08-22-2003		THIS DRAWING REVISED TO INCORPORATE DESIGN CHANGE FDA 2000-001658-01-01 PER SK-0658-08-001-F0-01-01.

NOTES:

1. ALL EQUIPMENT SHOWN WITHIN DASHED LINES AS SHOP-ASSEMBLED SKIDDED MODULES.
2. ALL ITEMS DENOTED BY * WERE SUPPLIED BY GRAVER.
3. ALL PIPING/HEADERS WHICH TERMINATE OR ORIGINATE WITHIN MODULES TO POINTS DENOTED BY SUPPLIED BY GRAVER. THE HEADERS AND EQUIPMENT MOUNTED THEREON ARE FIELD INSTALLED.
4. FOR MECHANICAL SYMBOLS AND NOTES SEE DWG M1-0200.
5. ALL EQUIPMENT FOR BACKWASH RECOVERY SUBSYSTEM IS SUPPLIED BY GRAVER WITH THE EXCEPTION OF PIPING.
6. THIS LINE IS FLANGED FOR POSSIBLE FUTURE USE IN DISPOSAL OF CHEMICAL CLEANING WASTES FROM THIS SYSTEM.
7. WORK THIS DWG WITH M1-0244, -A, -B AND -01A.
8. DELETED
9. UNLESS OTHERWISE NOTED, PIPE AND FITTINGS 2" AND SMALLER ARE SOCKET WELDED USING SCHEDULE 80 PIPE AND 3000 LB FITTINGS. PIPE AND FITTINGS 2 " AND LARGER ARE BUTT WELDED, EXCEPT FLANGED AT VALVES, PUMPS AND PRECOAT TANK CONNECTIONS. WALL THICKNESS IS STANDARD WEIGHT FOR SIZES 2 " TO 16" AND SCHEDULE 30 FOR SIZES 18" TO 30".
10. UNLESS OTHERWISE NOTED, PIPE MATERIAL IS A-106 GR B FOR SIZES 24" AND SMALLER AND A-155 GR KC60 (MIN) CLASS I FOR 30" SIZE. FITTING MATERIAL IS A-105 GR II OR A-105 GR71 FOR SIZES 2" AND SMALLER, A-234 GR WPB FOR SIZES 2 " TO 24" AND A-234 GR WPC OR A-515 GR 60 MIN (100% X-RAY) FOR 30" SIZE.
11. FC ON LOSS OF POWER AND FAI ON LOSS OF AIR.
12. HOOKUP CONNECTIONS FOR METERED PRECOAT SKID.
13. DELETED

DRAWING ECE-M1-0244-01 REV CP-5
HAS BEEN SPLIT INTO THE FOLLOWING SHEETS:
M1-0244-01
M1-0244-01A

NON-SAFETY

TXU ELECTRIC
CPSES
GLEN ROSE, TEXAS

FLOW DIAGRAM
CONDENSATE POLISHING SYSTEM

DWG. NO. M1-0244 | SH. NO. 01 | REV. CP-24

FSAR FIGURE 10.4-7

THIS DRAWING CREATED ELECTRONICALLY

REF CKD 04/03/08 CP-21

$$$$$$$DATE$$$$$$

me373700.dgn M1-0244-01

REV	DWN	CHKD	APVD	REMARKS
CP-14	JSSC 03-07-2009	SM 09-28-2009		THIS DRAWING REVISED TO INCORPORATE DESIGN CHANGE: FDA-2009-001033-01-00 PER SK-0001-09-001033-01-00.

NOTES:

1. ALL EQUIPMENT DENOTED BY * WAS SUPPLIED BY GRAVER.
2. FOR MECHANICAL SYMBOLS AND NOTES SEE DWG M1-0200.
3. ALL EQUIPMENT FOR BACKWASH RECOVERY SUBSYSTEM IS SUPPLIED BY GRAVER WITH THE EXCEPTION OF PIPING.
4. WORK THIS DWG WITH M1-0244, M1-0244-A, M1-0244-B AND M1-0244-01A.
5. DELETED

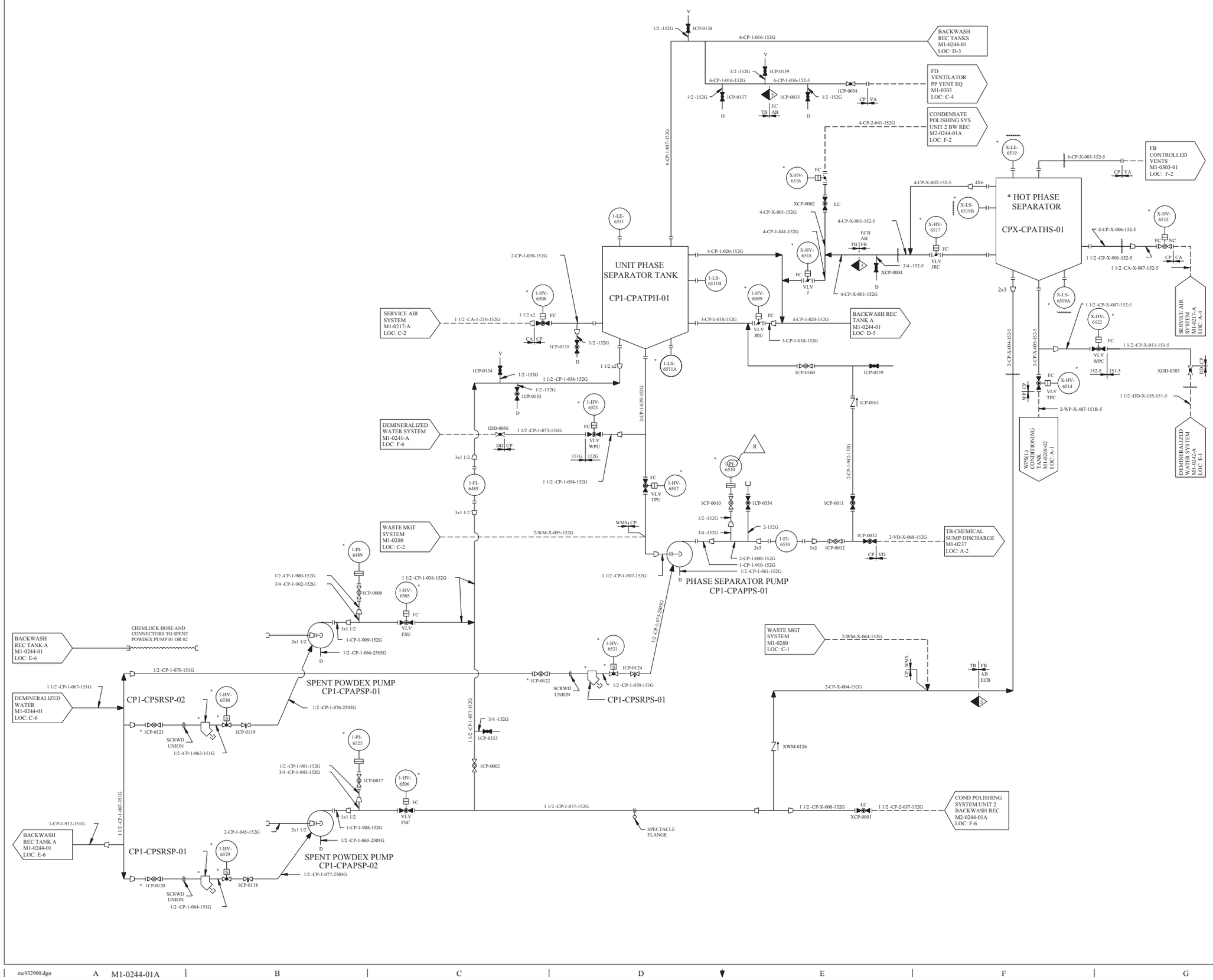

DRAWING ECE-M1-0244-01 REV CP-5
HAS BEEN SPLIT INTO THE FOLLOWING SHEETS:
M1-0244-01
M1-0244-01A

CLASS II

LUMINANT
CPNPP
GLEN ROSE, TEXAS

FLOW DIAGRAM
CONDENSATE POLISHING SYSTEM

DWG NO. M1-0244 | SH. NO. 01A | REV. CP-14

FSAR FIGURE 10.4-7

THIS DRAWING CREATED ELECTRONICALLY

REF CHKD 10/23/2000

SSSSSSDATESSSSS

me932900.dgn A M1-0244-01A

< FINAL PRINT >

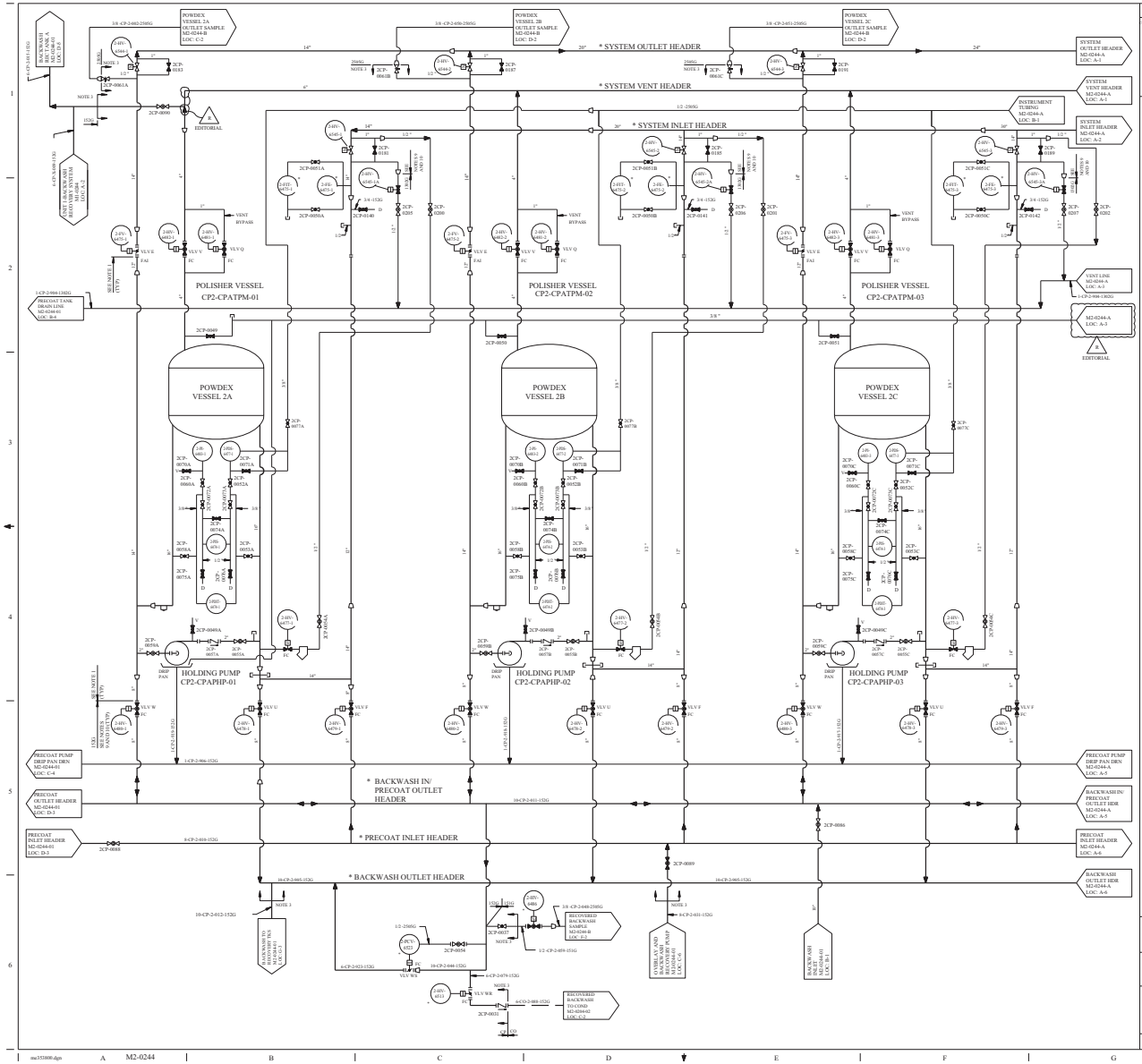

REV.	DWN	CHKD	APVD	REMARKS
CP-12	DLR 08-08-08	DL 08-08-08		THIS DRAWING REVISED TO INCORPORATE DESIGN CHANGE FDA 2005-0054R01-01 AND PER DL-2005-01-0010(R1-01-08).

NOTES:

1. ALL EQUIPMENT SHOWN ARE SHOP-ASSEMBLED SKIDDED MODULES SUPPLIED BY GRAVER.
2. ALL ITEMS DENOTED BY * SUPPLIED BY GRAVER.
3. ALL PIPING/HEADERS WHICH TERMINATE OR ORIGINATE WITHIN MODULES TO POINTS DENOTED BY SUPPLIED BY GRAVER. SEE NOTES 9 AND 10.
4. FOR MECHANICAL SYMBOLS AND NOTES SEE DWG M1-0200.
5. ALL EQUIPMENT FOR BACKWASH RECOVERY SUBSYSTEM IS SUPPLIED BY GRAVER WITH THE EXCEPTION OF PIPING.
6. WORK THIS DRAWING WITH M2-0244-01, M2-0244-01A, M2-0244-A AND M2-0244-B.
7. DELETED
8. UNLESS OTHERWISE NOTED, PIPE AND FITTINGS 2" AND SMALLER ARE SOCKET WELDED USING SCHEDULE 80 PIPE AND 3000 LB FITTINGS. PIPE AND FITTINGS 2 1/2 " AND LARGER ARE BUTT WELDED, EXCEPT FLANGED AT VALVES, PUMPS AND PRECOAT TANK CONNECTIONS. WALL THICKNESS IS STANDARD WEIGHT FOR SIZES 2 1/2 " TO 16" AND SCHEDULE 30 FOR SIZES 18" TO 30".
9. UNLESS OTHERWISE NOTED, PIPE MATERIAL IS A-106 GR B FOR SIZES 24" AND SMALLER AND A-155 GR KC60 (MIN) CLASS I FOR 30" SIZE. FITTING MATERIAL IS A-105 GR II OR A-105 GR 71 FOR SIZES 2" AND SMALLER, A-234 GR WPB FOR SIZES 2 1/2 " TO 24" AND A-234 GR WPC OR A-515 GR60 MIN (100% X-RAY) FOR 30" SIZE.

FSAR FIGURE 10.4-7

THIS DRAWING CAN BE AUTO-FILED IN TRIONGALA V

DRAWING M2-0244	REV CP-4
HAS BEEN SPLIT INTO THE FOLLOWING SHEETS	
M2-0244	
M2-0244-A	
M2-0244-B	
M2-0244-01	
M2-0244-01A	

NON-SAFETY

TXU ENERGY
CPSES
GLEN ROSE, TEXAS

FLOW DIAGRAM
CONDENSATE POLISHING
SYSTEM

DWG. NO. M2-0244 | SH. NO. - | REV. CP-12

ma353808.dgn A M2-0244 B C D E F G H

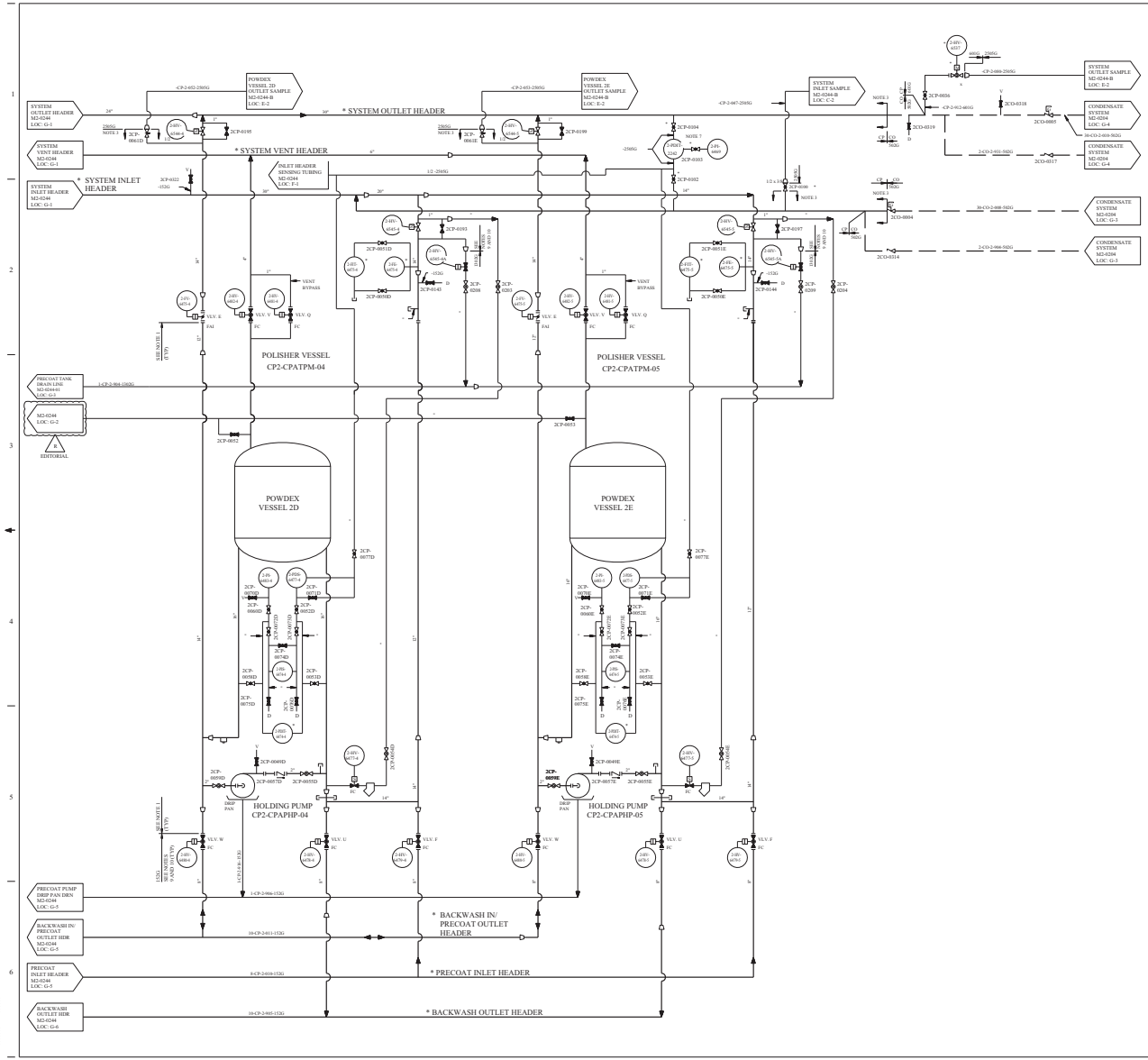

REV	DRWN	CHKD	APVD	REMARKS
CP-9	DATE 00/00/0000	DATE 00/00/0000		THIS DRAWING REVISED TO INCORPORATE DESIGN CHANGE FSA, ZONE-0003/0145 AS PER DR-0003-01 /0145-01-01.

NOTES:

1. ALL EQUIPMENT SHOWN ARE SKID-ASSEMBLED SKIDDED MODULES SUPPLIED BY GRAVER.
2. ALL ITEMS DENOTED BY * SUPPLIED BY GRAVER.
3. ALL PIPING/HEADERS WHICH TERMINATE OR ORIGINATE WITHIN MODULES TO POINTS DENOTED BY SUPPLIED BY GRAVER. SEE NOTES 9 AND 10.
4. FOR MECHANICAL SYMBOLS AND NOTES SEE DWG M1-0200.
5. ALL EQUIPMENT FOR BACKWASH RECOVERY SUBSYSTEM IS SUPPLIED BY GRAVER WITH THE EXCEPTION OF PIPING.
6. WORK THIS DRAWING WITH M2-0244, M2-0244-B, M2-0244-01, AND M2-0244-01A.
7. HIGH DIFFERENTIAL PRESSURE SIGNAL FROM 2-PDIT-2242 OPENS CONDENSATE POLISHING SYSTEM BYPASS VALVE 2-PV-2242. SHOWN ON M2-0204 LOC. F-3, SEE ALSO M2-2204-04 FOR CONTROL SCHEMATIC.
8. UNLESS OTHERWISE NOTED, PIPE AND FITTINGS 2" AND SMALLER ARE SOCKET WELDED USING SCHEDULE 80 PIPE AND 3000 LB FITTINGS. PIPE AND FITTINGS 2 " AND LARGER ARE BUTT WELDED, EXCEPT FLANGED AT VALVES, PUMPS AND PRECOAT TANK CONNECTIONS. WALL THICKNESS IS STANDARD WEIGHT FOR SIZES 2 " TO 16" AND SCHEDULE 30 FOR SIZES 18" TO 30".
9. UNLESS OTHERWISE NOTED, PIPE MATERIAL IS A-106 GR B FOR SIZES 24" AND SMALLER AND A-155 GR KC60 (MIN) CLASS 1 FOR 30" SIZE. FITTING MATERIAL IS A-105 GR II OR A-105 GR 71 FOR SIZES 2" AND SMALLER, A-234 GR WPB FOR SIZES 2 " TO 24" AND A-234 GR WPC OR A-515 GR60 MIN (100% X-RAY) FOR 30" SIZE.

FSAR FIGURE 10.4-7

THIS DRAWING CAN BE ATTACHED AS THE NOTICE

DRAWING M2-0244	REV CP-4
HAS BEEN SPLIT INTO THE FOLLOWING SHEETS:	
M2-0244	
M2-0244-A	
M2-0244-B	
M2-0244-01	
M2-0244-01A	

NON-SAFETY

TXU ENERGY
CPSES
GLEN ROSE, TEXAS

FLOW DIAGRAM
CONDENSATE POLISHING
SYSTEM

DWG. NO. M2-0244 | SH. NO. A | REV. CP-9

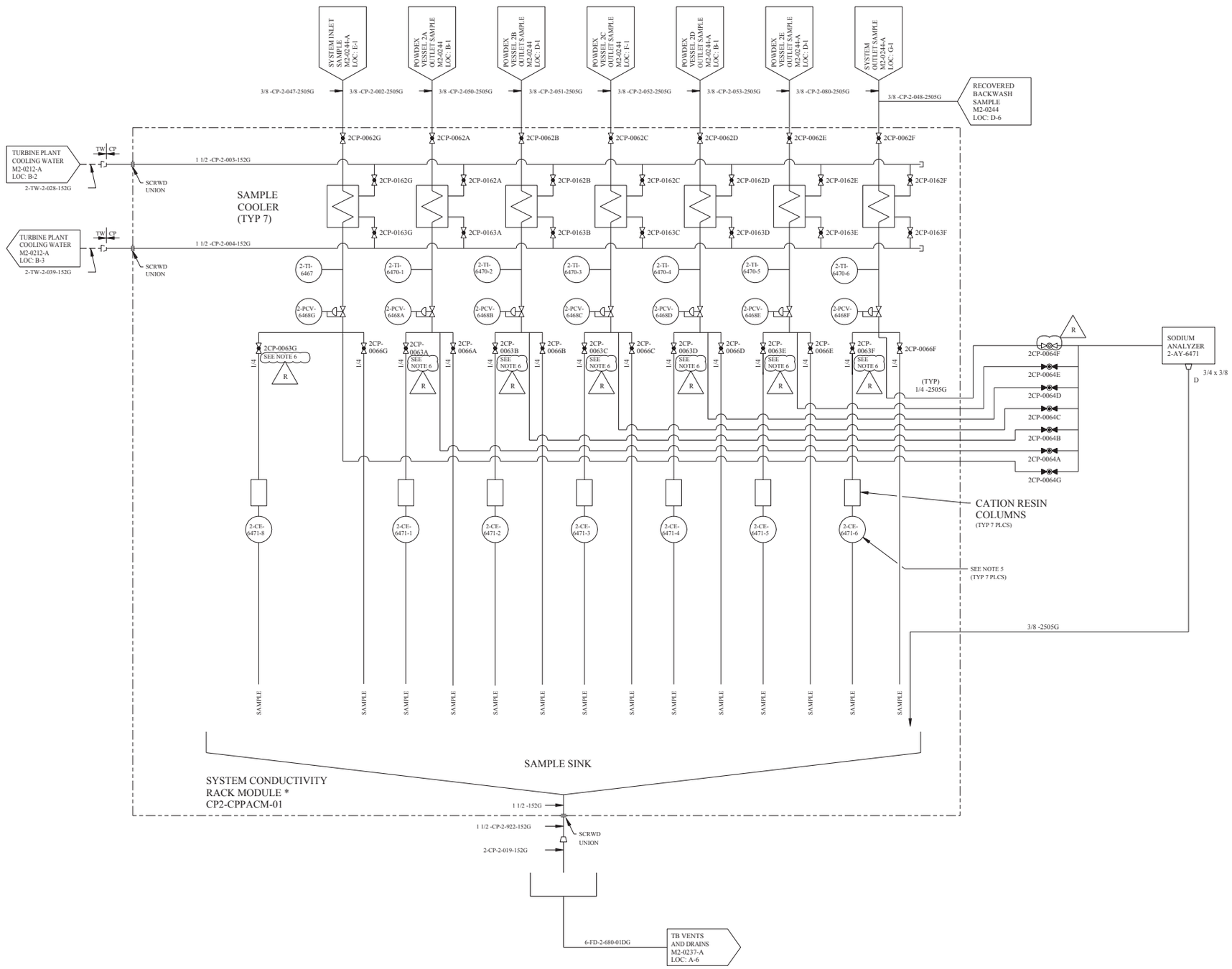

REV	DWN	CHKD	APVD	REMARKS
CP-9	D.L.K. 06-28-2004	MM 07-07-2004		THIS DRAWING REVISED TO INCORPORATE DESIGN CHANGE FDA 2000-003261-02-00 PER SK-0002-00-003261-02-00.

NOTES:

1. ALL EQUIPMENT SHOWN WITHIN DASHED LINES WAS SUPPLIED AS SHOP-ASSEMBLED SKIDDED MODULES.
2. ALL EQUIPMENT DENOTED BY * WAS SUPPLIED BY GRAVER.
3. FOR MECHANICAL SYMBOLS AND NOTES SEE DWG M1-0200.
4. WORK THIS DWG WITH M2-0244, M2-0244-A, -01 AND -01A.
5. CONDUCTIVITY RECORDER INPUTS:

2-CE-6471-1	VESSEL 2A EFFLUENT
2-CE-6471-2	VESSEL 2B EFFLUENT
2-CE-6471-3	VESSEL 2C EFFLUENT
2-CE-6471-4	VESSEL 2D EFFLUENT
2-CE-6471-5	VESSEL 2E EFFLUENT
2-CE-6471-6	SYSTEM INFLUENT
2-CE-6471-8	SYSTEM EFFLUENT/BACKWASH REC

6. CHEMISTRY THROTTLES VALVES ON IN SERVICE VESSELS.

R

FSAR FIGURE 10.4-7

THIS DRAWING CREATED ELECTRONICALLY

DRAWING M2-0244 REV CP-4
HAS BEEN SPLIT INTO THE FOLLOWING SHEETS:

M2-0244
M2-0244-A
M2-0244-B
M2-0244-01
M2-0244-01A

NON-SAFETY

LUMINANT
CPSES
GLEN ROSE, TEXAS

FLOW DIAGRAM
CONDENSATE POLISHING
SYSTEM

DWG. NO. M2-0244 | SH. NO. B | REV. CP-9

FINAL PRINT

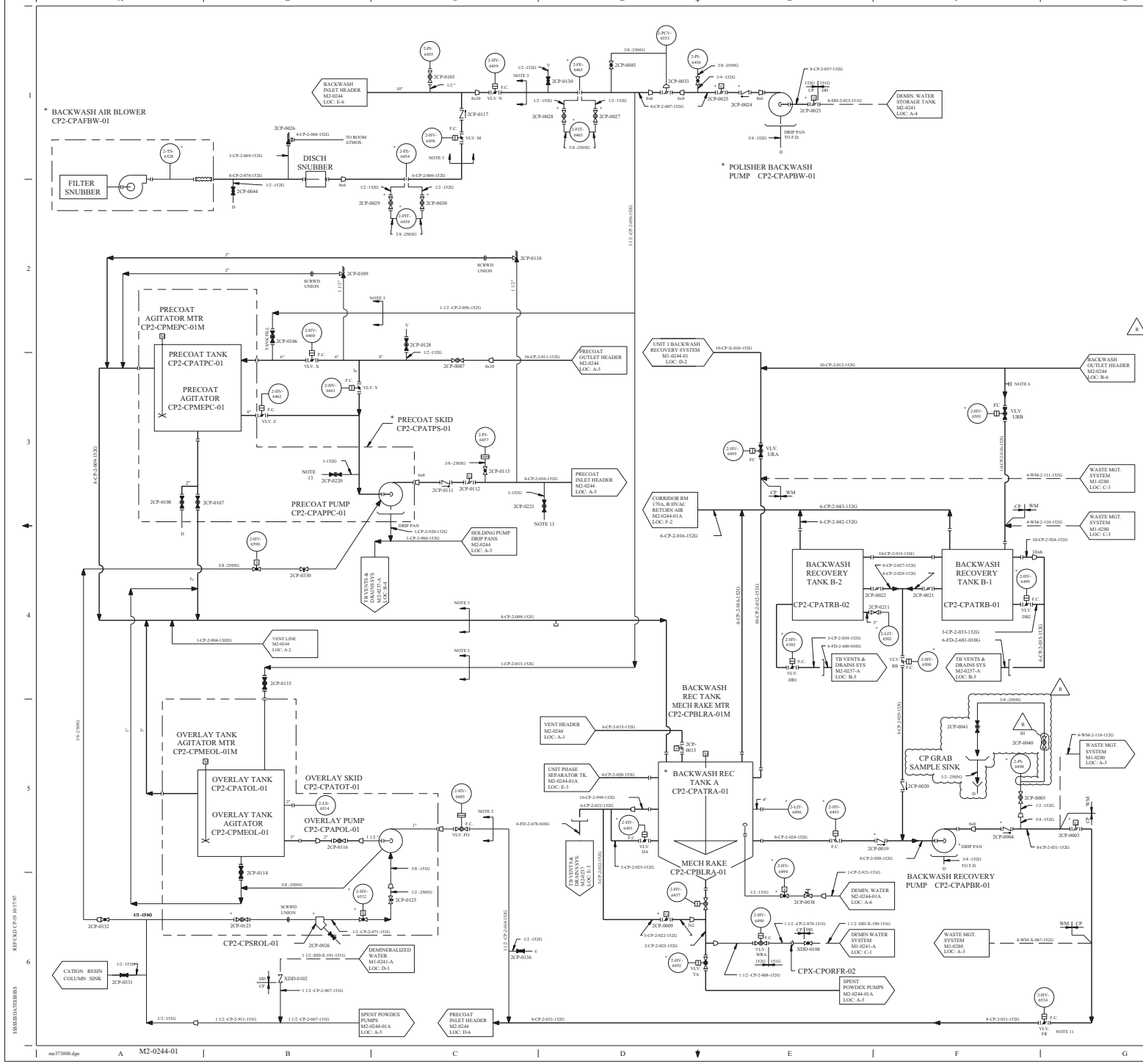

REV	DRWN	CHKD	APVD	REMARKS
CP-24	SLK 08/19/2003	SEE 09/22/2003		THIS DRAWING REVISED TO INCORPORATE DESIGN CHANGE FDA 2000-001658-01-01 PER SK-0659-08-001-010-01-01.

NOTES:

1. ALL EQUIPMENT SHOWN WITHIN DASHED LINES WERE SUPPLIED AS SHOP-ASSEMBLED SKIDDED MODULES.
2. ALL ITEMS DENOTED BY * WERE SUPPLIED BY GRAVER.
3. ALL PIPING/HEADERS WHICH TERMINATE OR ORIGINATE WITHIN MODULES TO POINTS DENOTED BY SUPPLIED BY GRAVER. THE HEADERS AND EQUIPMENT MOUNTED THEREON ARE FIELD INSTALLED.
4. FOR MECHANICAL SYMBOLS AND NOTES SEE DWG M1-0200.
5. ALL EQUIPMENT FOR BACKWASH RECOVERY SUBSYSTEM IS SUPPLIED BY GRAVER WITH THE EXCEPTION OF PIPING.
6. THIS LINE IS FLANGED FOR POSSIBLE FUTURE USE IN DISPOSAL OF CHEMICAL CLEANING WASTES FROM THIS SYSTEM.
7. WORK THIS DWG WITH M2-0244, -A, -B AND -01A.
8. DELETED
9. UNLESS OTHERWISE NOTED, PIPE AND FITTINGS 2" AND SMALLER ARE SOCKET WELDED USING SCHEDULE 80 PIPE AND 3000 LB FITTINGS. PIPE AND FITTINGS 2 1/2 " AND LARGER ARE BUTT WELDED, EXCEPT FLANGED AT VALVES, PUMPS AND PRECOAT TANK CONNECTIONS. WALL THICKNESS IS STANDARD WEIGHT FOR SIZES 2 1/2 " TO 16" AND SCHEDULE 30 FOR SIZES 18" TO 30".
10. UNLESS OTHERWISE NOTED, PIPE MATERIAL IS A-106 GR B FOR SIZES 24" AND SMALLER AND A-155 GR KC60 (MIN) CLASS I FOR 30" SIZE. FITTING MATERIAL IS A-105 GR II OR A-105 GR71 FOR SIZES 2" AND SMALLER, A-234 GR WPB FOR SIZES 2 1/2 " TO 24" AND A-234 GR WPC OR A-515 GR 60 MIN (100% X-RAY) FOR 30" SIZE.
11. F.C. ON LOSS OF POWER AND F.A.I. ON LOSS OF AIR.
12. DELETED
13. HOOKUP CONNECTIONS FOR METERED PRECOAT SKID.

FSAR FIGURE 10.4-7

THIS DRAWING CREATED ELECTRONICALLY

DRAWING M2-0244-01	REV CP-3
HAS BEEN SPLIT INTO THE FOLLOWING SHEETS:	
M2-0244-01	
M2-0244-01A	

NON-SAFETY

TXU ELECTRIC
CPSES
GLEN ROSE, TEXAS

FLOW DIAGRAM
CONDENSATE POLISHING SYSTEM

DWG. NO.	SH. NO.	REV.
M2-0244	01	CP-24

REF CKD CP-19 10/17/97

$$$$$$$DATE$$$$$$

mz373800.dgn M2-0244-01

REV	DWN	CHKD	APVD	REMARKS
CP-15	HMC 11-23 2009	DJL 11-23 2009		THIS DRAWING REVISED TO INCORPORATE DESIGN CHANGE FDA-2009-006303-01-00 PER SK-0001-09-006303-01-00.

NOTES

1. DELETED
2. ALL EQUIPMENT DENOTED BY * WAS SUPPLIED BY GRAVER.
3. FOR MECHANICAL SYMBOLS AND NOTES SEE DWG M1-0200.
4. ALL EQUIPMENT FOR BACKWASH RECOVERY SUBSYSTEM IS SUPPLIED BY GRAVER WITH THE EXCEPTION OF PIPING.
5. WORK THIS DWG WITH M2-0244, M2-0244-A, M2-0244-B AND M2-0244-01.

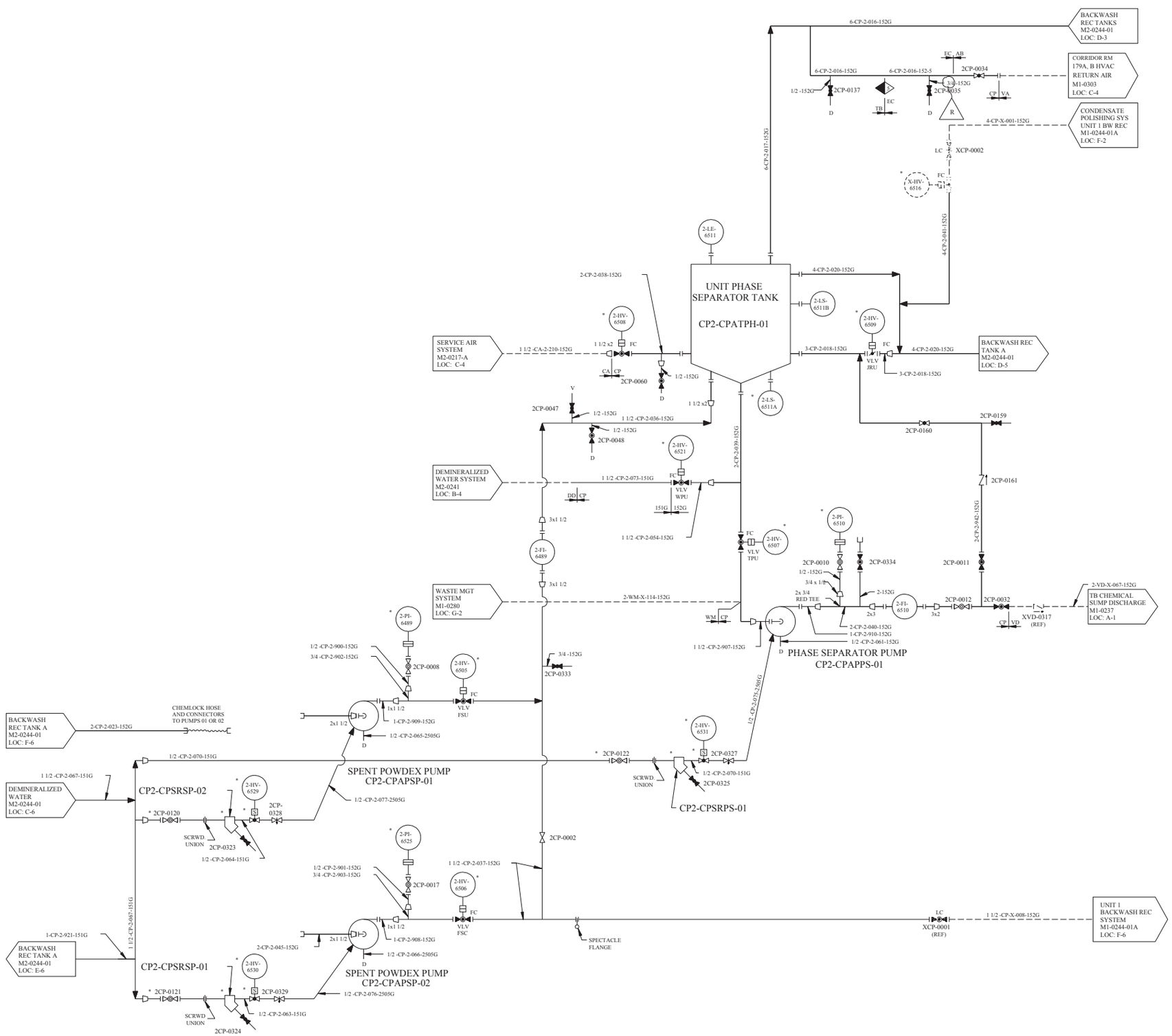

FSAR FIGURE 10.4-7

THIS DRAWING CREATED ELECTRONICALLY

DRAWING M2-0244-01 REV CP-3
HAS BEEN SPLIT INTO THE FOLLOWING SHEETS:
M2-0244-01
M2-0244-01A

CLASS II

LUMINANT
CPNPP
GLEN ROSE, TEXAS

FLOW DIAGRAM
CONDENSATE POLISHING SYSTEM

DWG. NO. M2-0244 | SH. NO. 01A | REV. CP-15

< FINAL PRINT >

me965200.dgn A M2-0244-01A

REF DWG CP10 11-96

SSSSSSDA TESSSSSS

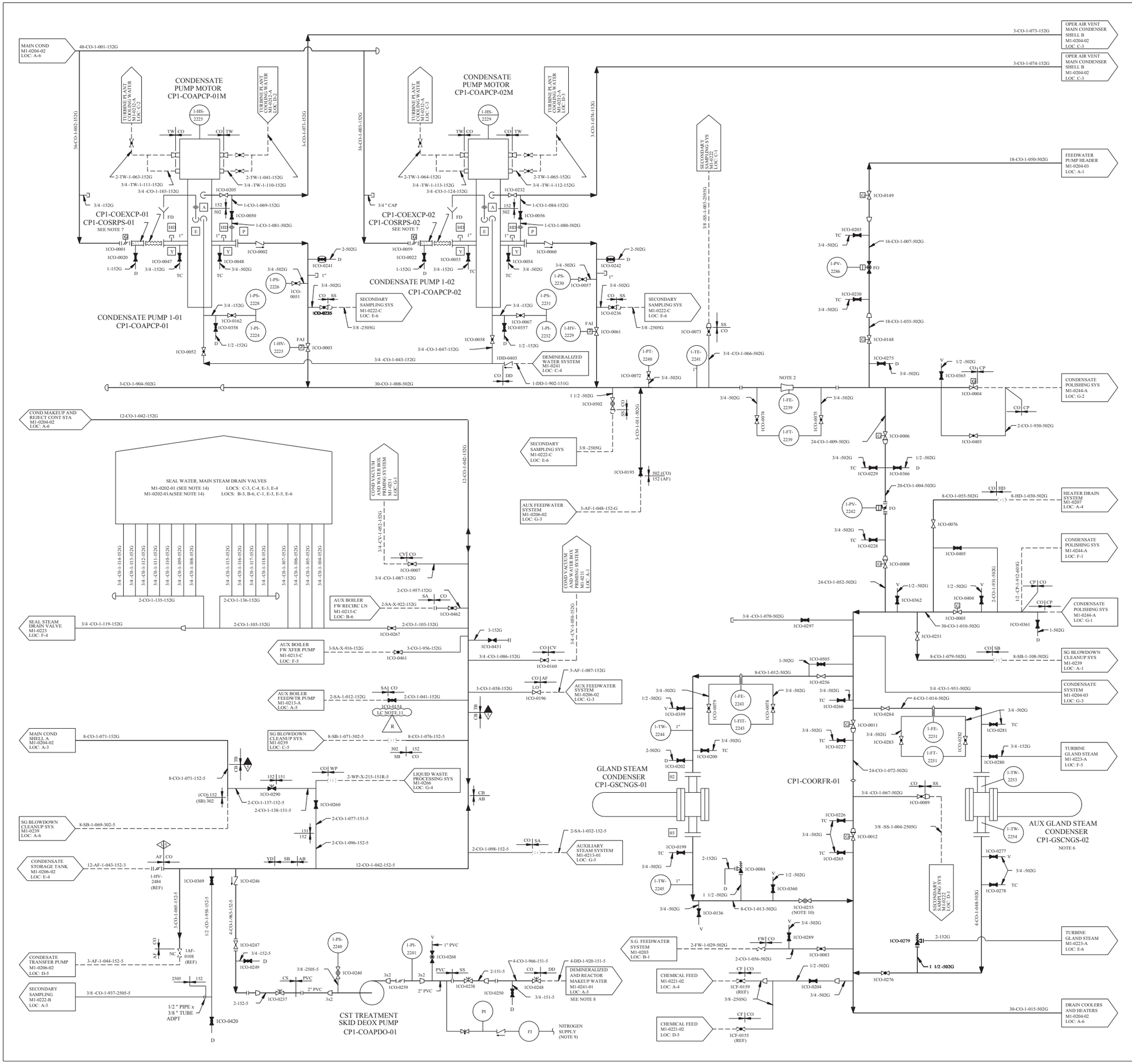

REV	DWN	CHKD	APVD	REMARKS
CP-39	JRMC 09-14 2011	DLK 09-15 2011		THIS DRAWING REVISED TO INCORPORATE DESIGN CHANGE FDA 2009-003957-01-00 PER SK-0003-09-003957-01-00.

NOTES:

1. FOR MECHANICAL SYMBOLS AND NOTES SEE DRAWING M1-0200.
2. VENTURI FLOW ELEMENTS FITTED IN SPOOL PIECES WHICH ARE FACTORY CALIBRATED. SPOOL PIECES FLANGED INTO PIPING.
3. GLAND STEAM CONDENDER SUPPLIED BY ALLIS-CHALMERS POWER SYSTEMS INC.
4. TYPICAL CUSTOMERS PIPING CONNECTIONS ARE INDICATED AS FOLLOWS:
   CONDENSATE PUMPS 1-8
   GLAND STEAM COND. ACISI
5. DELETED
6. AUXILIARY GLAND STEAM CONDENSER SUPPLIED BY GENERAL ELECTRIC.
7. TEMPORARY STRAINER INSTALLED IN SPOOL PIECE DURING FLUSHING OPERATIONS AND INITIAL START-UP. THE TEMPORARY STRAINERS ARE TO BE REMOVED AFTER THE EXTRACTION STEAM AND HEATER DRAIN SYSTEMS ARE PUT INTO OPERATION. TEMPORARY STRAINERS CAN BE RE-INSTALLED FOR POST MAINTENANCE ACTIVITY.
8. CST TREATMENT SKID DEOX PUMP PIPING CONFIGURATION ALSO SHOWN ON AUXILIARY FEEDWATER FLOW DIAGRAM M1-0206-02 LOC: E-4 FOR CLARITY.
9. NITROGEN SUPPLY TO CONSIST OF LOW PRESSURE DEWARS CANISTERS.
10. 1CO-0255 IS A V-BALL VALVE WHICH DOES NOT SEAL AGAINST REVERSE FLOW.
11. VALVE 1CO-0154 IS LOCKED CLOSED TO ISOLATE THE ABANDONED IN PLACE ELECTRIC AUXILIARY BOILER.

R

CLASS II

LUMINANT
CPNPP
GLEN ROSE, TEXAS

FLOW DIAGRAM
CONDENSATE SYSTEM

DWG. NO. M1-0204 | SH. NO. - | REV. CP-39

FINAL PRINT

me103150.dgn A M1-0204

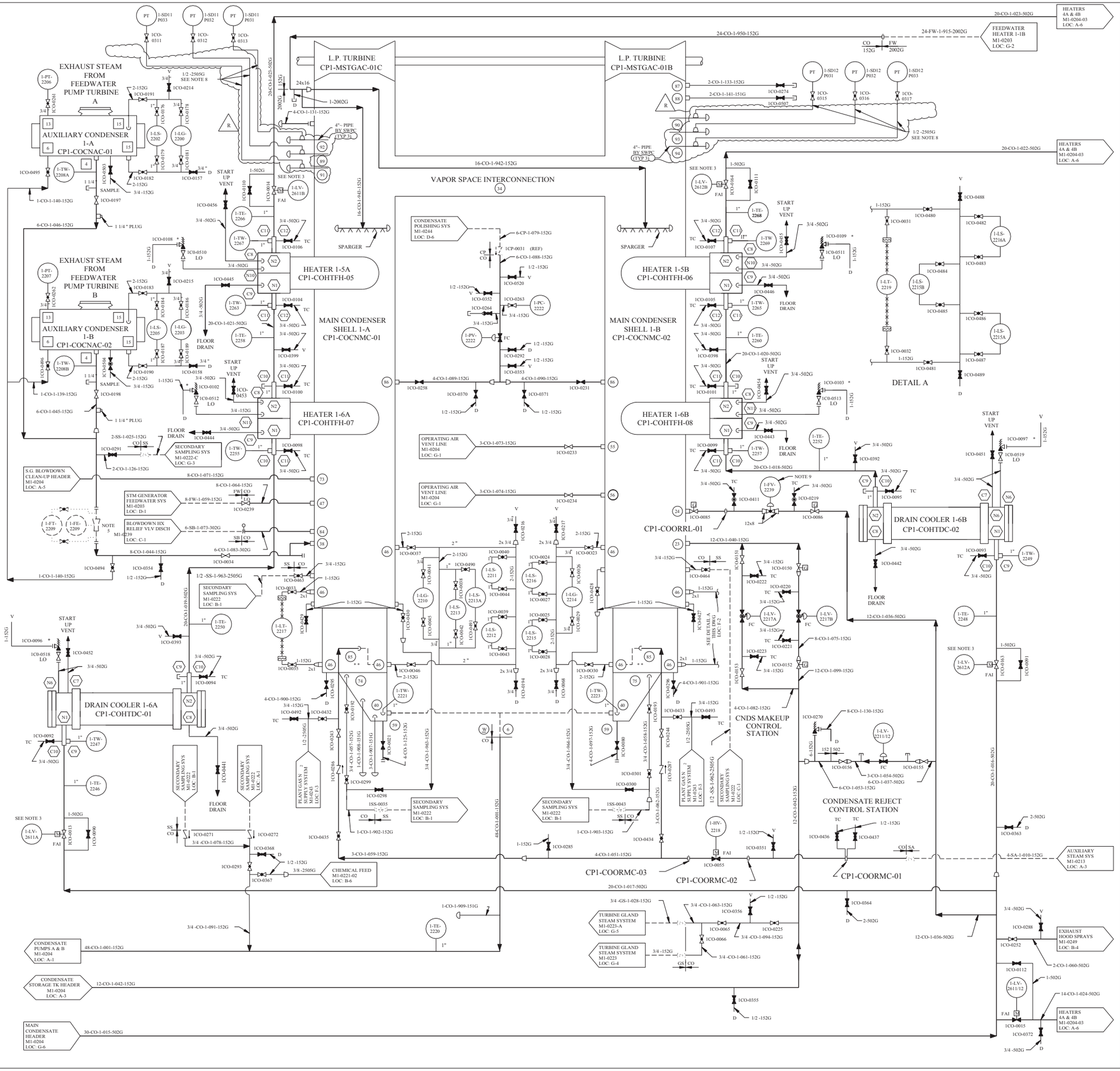

REV	DWN	CHKD	APVD	REMARKS
CP-36	JRMC 12-10-2008	EES 12-10-2008		THIS DRAWING REVISED TO INCORPORATE DESIGN CHANGE FDA 2008-000795-02-00 PER SK-0001-08-000795-02-00.

NOTES:

1. FOR MECHANICAL NOTES AND SYMBOLS SEE DRAWING M1-0200.
2. VENTURI FLOW ELEMENTS FITTED IN SPOOL PIECES ARE FACTORY CALIBRATED. SPOOL PIECES FLANGED INTO PIPE.
3. HEATERS 5 AND 6, DRAIN COOLER BYPASS AND ISOLATION VALVES ARE CONTROLLED BY SHELL SIDE LEVEL SWITCHES, SHOWN ON M1-0207-A.
4. TYPICAL CUSTOMER'S PIPING CONNECTIONS ARE INDICATED AS FOLLOWS:

FEEDWATER HEATERS	SWC
AUX. COND.	I-R
MAIN COND.	W-HTD
DRAIN COOLERS	

5. 10'-0" LENGTH SPOOL PIECE FOR INSERTION OF FLOW MEASUREMENT SECTION DURING INITIAL PERFORMANCE TESTING.
6. * INDICATED RELIEF VALVES BY STRUTHERS WELLS CORP.
7. DELETED
8. LINE SHALL SLOPE CONTINUOUSLY DOWNWARD TOWARD CONDENSER.
9. VALVE FAILS CLOSED ON LOSS OF SIGNAL AND OPENS ON LOSS OF AIR.

FSAR FIGURE 10.4-8

THIS DRAWING CREATED ELECTRONICALLY

NON-SAFETY

LUMINANT
CPNPP
GLEN ROSE, TEXAS

FLOW DIAGRAM
CONDENSATE SYSTEM

DWG. NO. M1-0204 | SH. NO. 02 | REV. CP-36

REF CKD CP-22 11/15/96

$$$$$$$DATE$$$$$$

me915300.dgn A M1-0204-02 < FINAL PRINT >

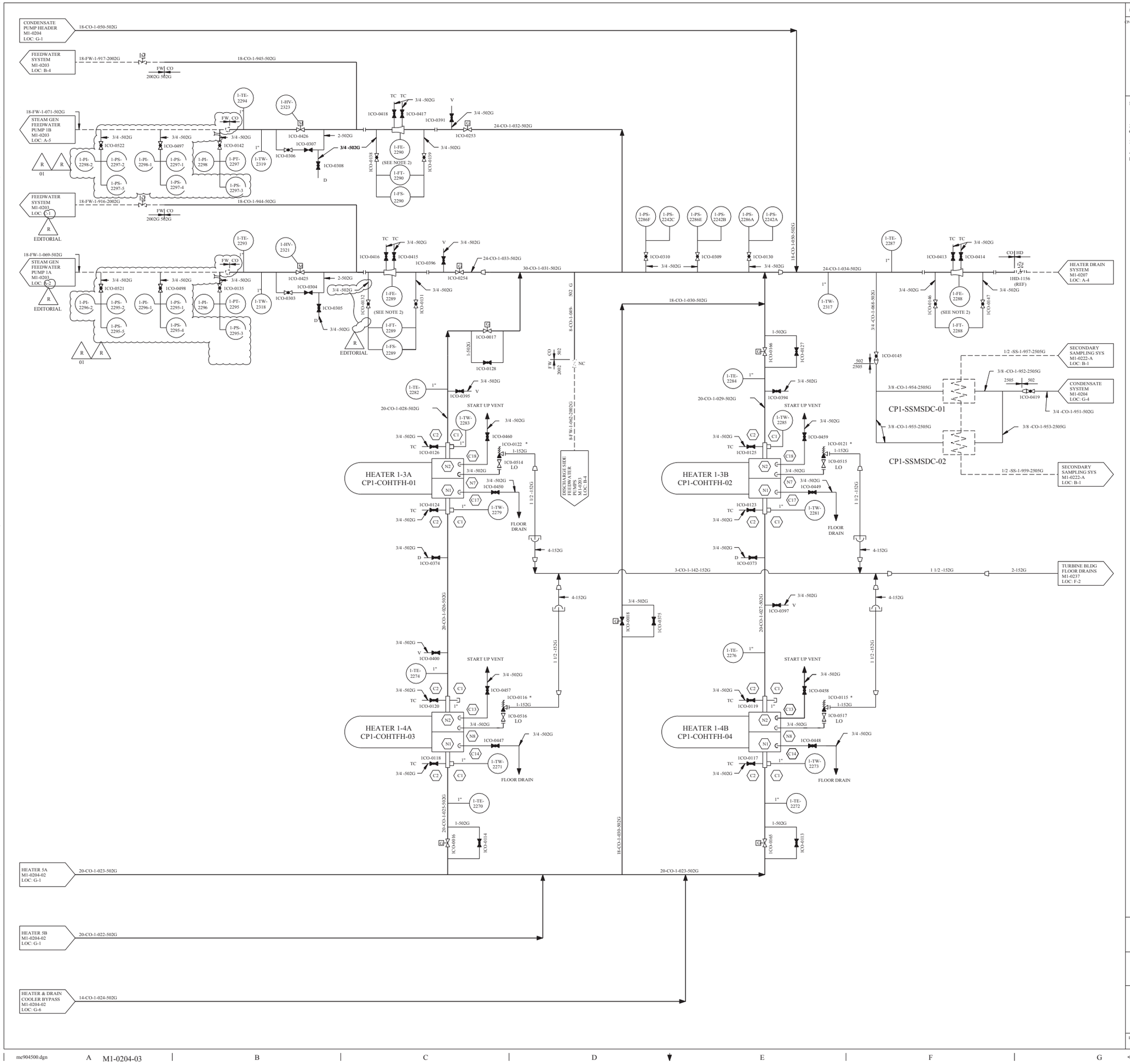

REV	DWN	CHKD	APVD	REMARKS
CP-20	DLK 05-21-2008	MM 05-21-2008		THIS DRAWING REVISED TO INCORPORATE DESIGN CHANGE: FDA-2006-003080-20-01 PER SK-0001-06-003080-20-01. EDITORIAL CHANGES AS NOTED.

NOTES:

1. FOR MECHANICAL NOTES AND SYMBOLS SEE DRAWING M1-0200.

2. VENTURI FLOW ELEMENTS FITTED IN SPOOL PIECES ARE FACTORY CALIBRATED, SPOOL PIECES FLANGED INTO PIPING.

3. * INDICATES RELIEF VALVES BY STRUTHERS WELLS CORPORATION.

4. TYPICAL CUSTOMER'S PIPING CONNECTIONS ARE INDICATED AS FOLLOWS:

FEEDWATER HEATERS ⬡ SWC.

FSAR FIGURE 10.4-8

THIS DRAWING CREATED ELECTRONICALLY

NON-SAFETY

LUMINANT
CPNPP
GLEN ROSE, TEXAS

FLOW DIAGRAM
CONDENSATE SYSTEM

DWG. NO. M1-0204 | SH. NO. 03 | REV. CP-20

REF CHKD 6/18/2001

$$$$$$$DATE$$$$$$

me904500.dgn M1-0204-03 < FINAL PRINT >

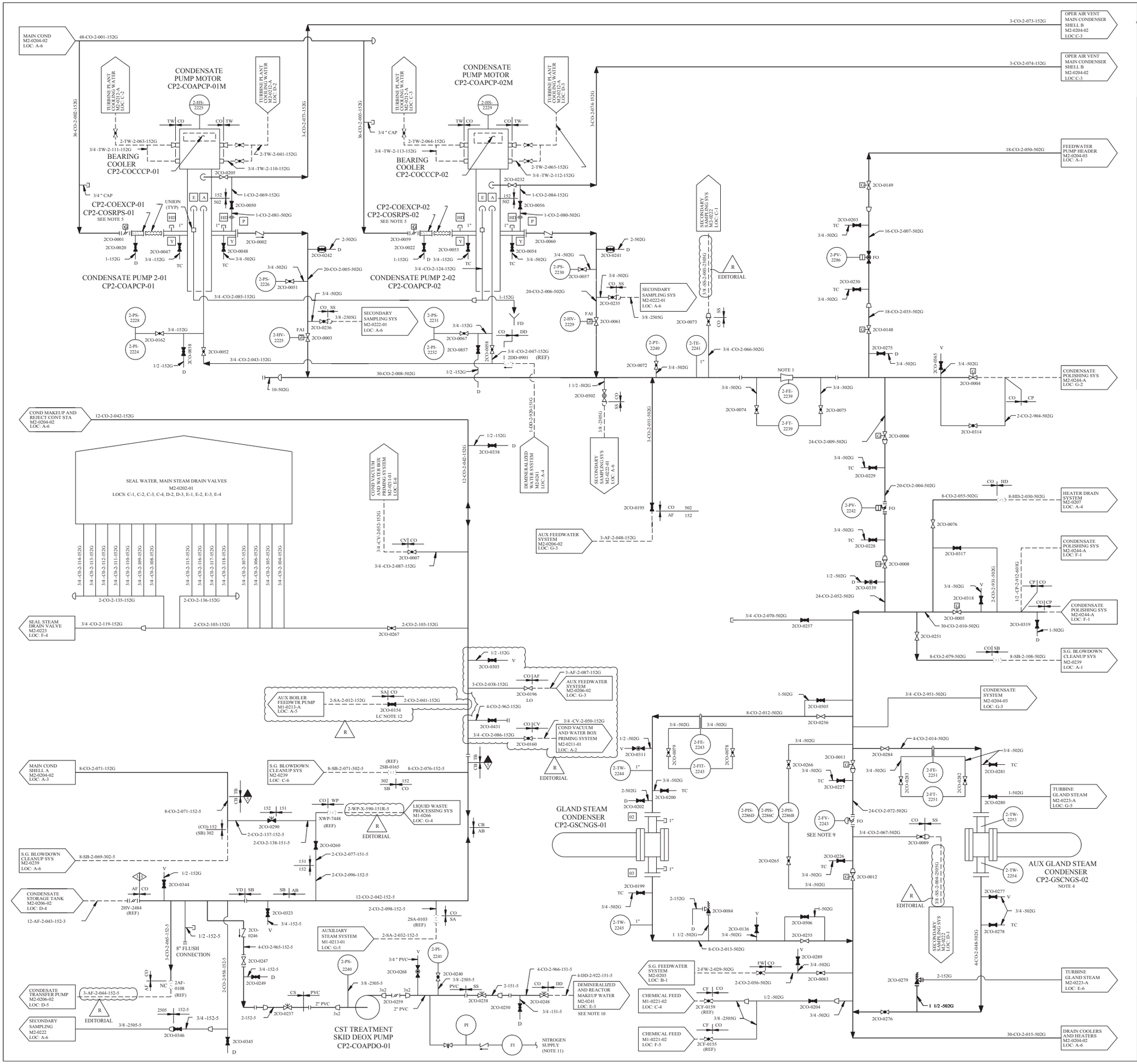

REV	DWN	CHKD	APVD	REMARKS
CP-29	HSC 09-14 2011	DLK 09-15 2011		THIS DRAWING REVISED TO INCORPORATE DESIGN CHANGE FDA 2009-002957-01-00 PER SK-0010-09-002957-01-00. EDITORIAL CHANGES AS NOTED.

NOTES:

1. VENTURI FLOW ELEMENTS WILL BE FITTED IN SPOOL PIECES WHICH WILL BE FACTORY CALIBRATED. SPOOL PIECES WILL THEN BE FLANGED INTO PIPING.
2. TYPICAL CUSTOMERS PIPING CONNECTIONS ARE INDICATED AS FOLLOWS:

⬡	SWC	FEEDWATER HEATERS
□	I-R	AUXILIARY CONDENSERS
○	W-HTD	MAIN CONDENSER
□	A-CPSI	GLAND STEAM CONDENSER
□	B-W	CONDENSATE PUMP

3. DELETED
4. AUXILIARY GLAND STEAM CONDENSER TO BE SUPPLIED BY GENERAL ELECTRIC.
5. TEMPORARY STRAINER INSTALLED IN SPOOL PIECE DURING FLUSHING OPERATIONS ONLY, MUST BE REMOVED PRIOR TO PLANT START-UP. TEMPORARY STRAINERS CAN BE RE-INSTALLED FOR POST MAINTENANCE ACTIVITY.
6. UNLESS OTHERWISE NOTED ALL DRAINS COLLECTED BY LOCAL DRAIN SYSTEM.
7. FOR MECHANICAL SYMBOLS AND NOTES SEE DRAWING MI-0200.
8. GLAND STEAM CONDENSER SUPPLIED BY ALLES-CHAMBERS POWER SYSTEMS INC.
9. VALVE MECHANICALLY SECURED IN THROTTLED POSITION. AIR OPERATOR RENDERED INOPERABLE, REFERENCE DCN 10158.
10. CST TREATMENT SKID DEOX PUMP PIPING CONFIGURATION ALSO SHOWN ON AUXILIARY FEEDWATER SYSTEM FLOW DIAGRAM M2-0206-02 LOC: E-4 FOR CLARITY.
11. NITROGEN SUPPLY TO CONSIST OF LOW PRESSURE DEWARS CANISTERS.
12. VALVE 2CO-0154 IS LOCKED CLOSED TO ISOLATE THE ABANDONED IN PLACE ELECTRIC AUXILIARY BOILER.

R

FSAR FIGURE 10.4-8

THIS DRAWING CREATED ELECTRONICALLY

DRAWING M2-0204 REV CP-5
HAS BEEN SPLIT INTO THE FOLLOWING SHEETS:

M2-0204
M2-0204-02
M2-0202-03

CLASS II

LUMINANT
CPNPP
GLEN ROSE, TEXAS

FLOW DIAGRAM
CONDENSATE SYSTEM

DWG. NO. M2-0204 | SH. NO. - | REV. CP-29

REF CKD CP-16 6-30-98

me103160.dgn M2-0204

FINAL PRINT

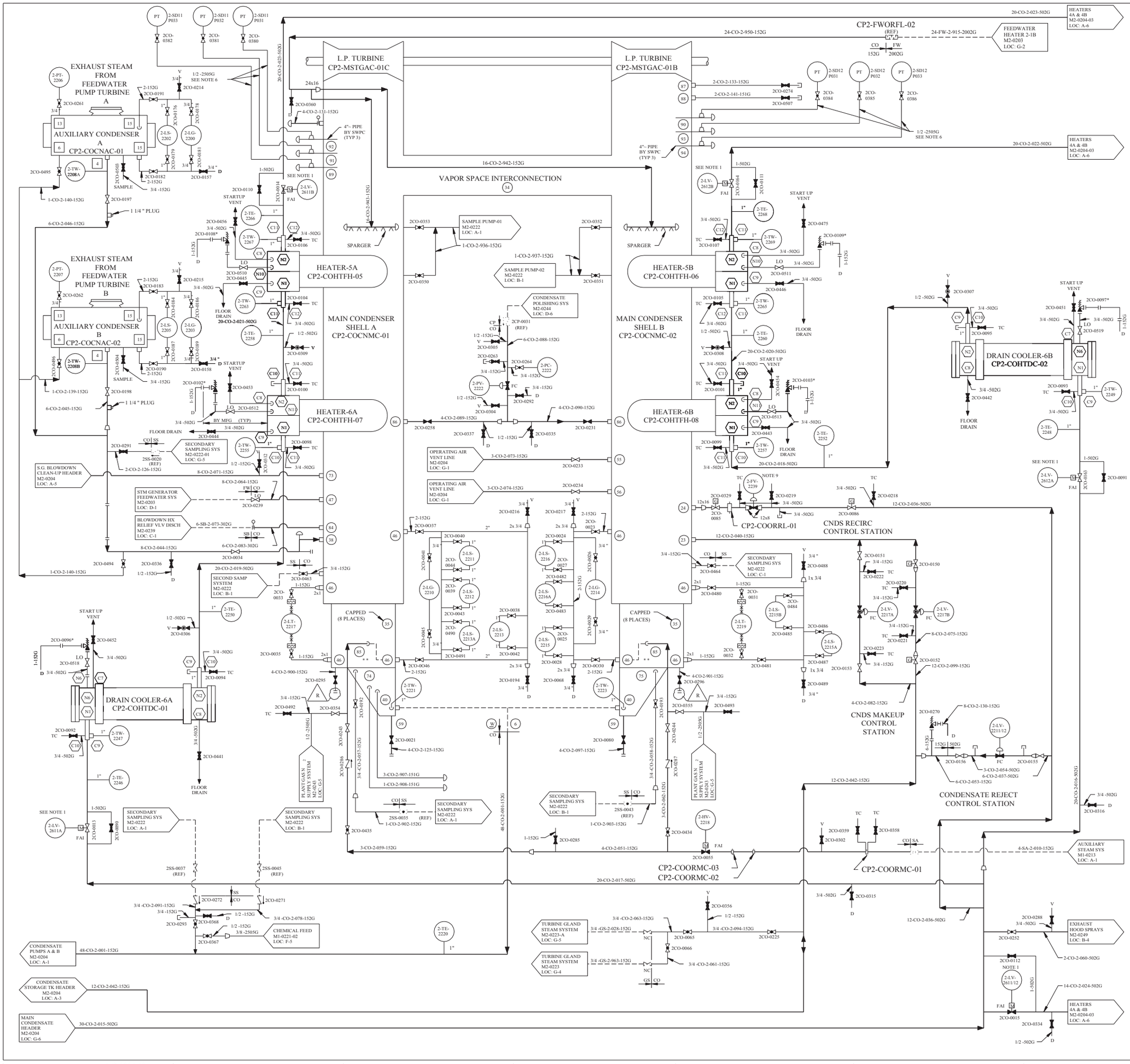

REV	DWN	CHKD	APVD	REMARKS
CP-31	JRMC 05-02-2011	DLK 05-16-2011		THIS DRAWING REVISED TO INCORPORATE DESIGN CHANGE FDA-2011-000079-01-00 PER SK-0001-11-000079-01-00.

NOTES:

1. HEATERS 5 AND 6 BYPASS AND ISOLATION VALVES ARE CONTROLLED BY SHELL SIDE LEVEL SWITCHES SHOWN ON M2-0205.
2. TYPICAL CUSTOMERS PIPING CONNECTIONS ARE INDICATED AS FOLLOWS:
   - SWC — FEEDWATER HEATERS
   - I-R — AUXILIARY CONDENSERS
   - W-HTD — MAIN CONDENSER
   - A-CPSI — GLAND STEAM CONDENSER
   - B-W — CONDENSATE PUMP
3. DELETED
4. TUBE SIDE FEEDWATER HEATER RELIEF VALVES (INDICATED BY *) TO BE SUPPLIED BY STRUTHERS WELLS CO.
5. DELETED
6. LINE SHALL SLOPE CONTINUOUSLY DOWNWARD TOWARDS CONDENSER.
7. UNLESS OTHERWISE NOTED ALL DRAINS COLLECTED BY LOCAL DRAIN SYSTEM.
8. FOR MECHANICAL NOTES AND SYMBOLS SEE DRAWING M1-0200.
9. VALVE FAILS CLOSED ON LOSS OF SIGNAL AND OPEN ON LOSS OF AIR.
10. DELETED

FSAR FIGURE 10.4-8

THIS DRAWING CREATED ELECTRONICALLY

DRAWING M2-0204 REV CP-5
HAS BEEN SPLIT INTO THE FOLLOWING SHEETS:
M2-0204
M2-0204-02
M2-0204-03

NON-SAFETY

LUMINANT
CPNPP
GLEN ROSE, TEXAS

FLOW DIAGRAM
CONDENSATE SYSTEM

DWG. NO. M2-0204 | SH. NO. 02 | REV. CP-31

FINAL PRINT

REF CKD CP-18 12/12/97

me102200.dgn M2-0204-02

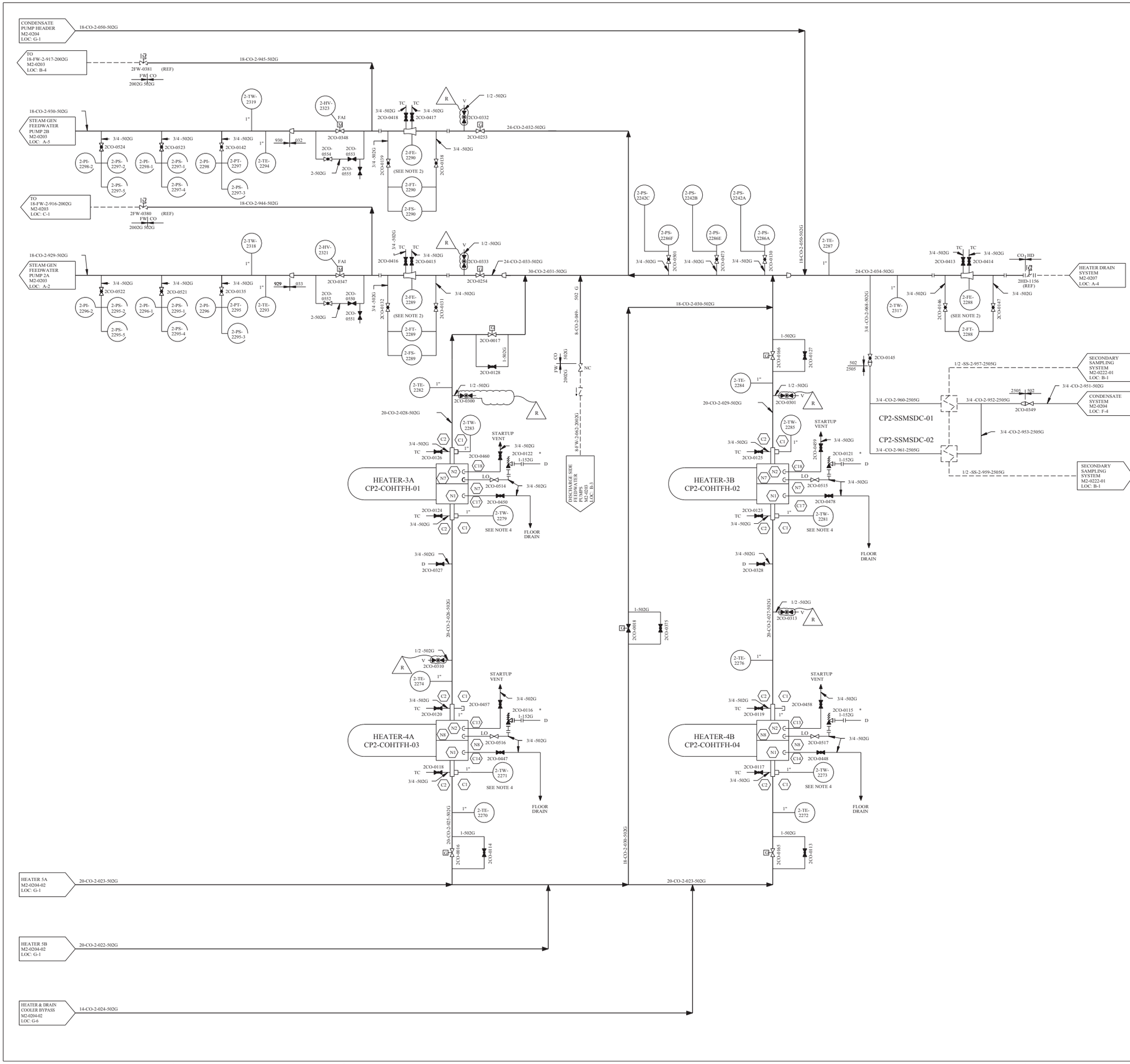

REV	DWN	CHKD	APVD	REMARKS
CP-14	SM 04-17 2011	PLB 04-17 2011		THIS DRAWING REVISED TO INCORPORATE DESIGN CHANGE FDA-2008-001394-01-00 PER SK-0003-08-001394-01-00.

NOTES:

1. TYPICAL CUSTOMERS PIPING CONNECTIONS ARE INDICATED AS FOLLOWS:

⬡	SWC	FEEDWATER HEATERS
□	I-R	AUXILIARY CONDENSERS
○	W-HTD	MAIN CONDENSER
□	A-CPSI	GLAND STEAM CONDENSER
□	B-W	CONDENSATE PUMP

2. VENTURI FLOW ELEMENTS WILL BE FITTED IN SPOOL PIECES WHICH WILL BE FACTORY CALIBRATED. SPOOL PIECES WILL THEN BE FLANGED INTO PIPING.
3. TUBE SIDE FEEDWATER HEATER RELIEF VALVES (INDICATED BY *) TO BE SUPPLIED BY STRUTHERS WELLS COPY.
4. AUXILIARY GLAND STEAM CONDENSER TO BE SUPPLIED BY GENERAL ELECTRIC.
5. UNLESS OTHERWISE NOTED ALL DRAINS COLLECTED BY LOCAL DRAIN SYSTEM.
6. FOR MECHANICAL SYMBOLS AND NOTES SEE DWG M1-0200.

FSAR FIGURE 10.4-8

THIS DRAWING CREATED ELECTRONICALLY

DRAWING M2-0204 REV CP-5
HAS BEEN SPLIT INTO THE FOLLOWING SHEETS:
M2-0204
M2-0204-02
M2-0204-03

NON-SAFETY

LUMINANT
CPNPP
GLEN ROSE, TEXAS

FLOW DIAGRAM
CONDENSATE SYSTEM

DWG. NO. M2-0204 | SH. NO. 03 | REV. CP-14

FINAL PRINT

me101740.dgn M2-0204-03

REF CKD 12/3/97/CP-30

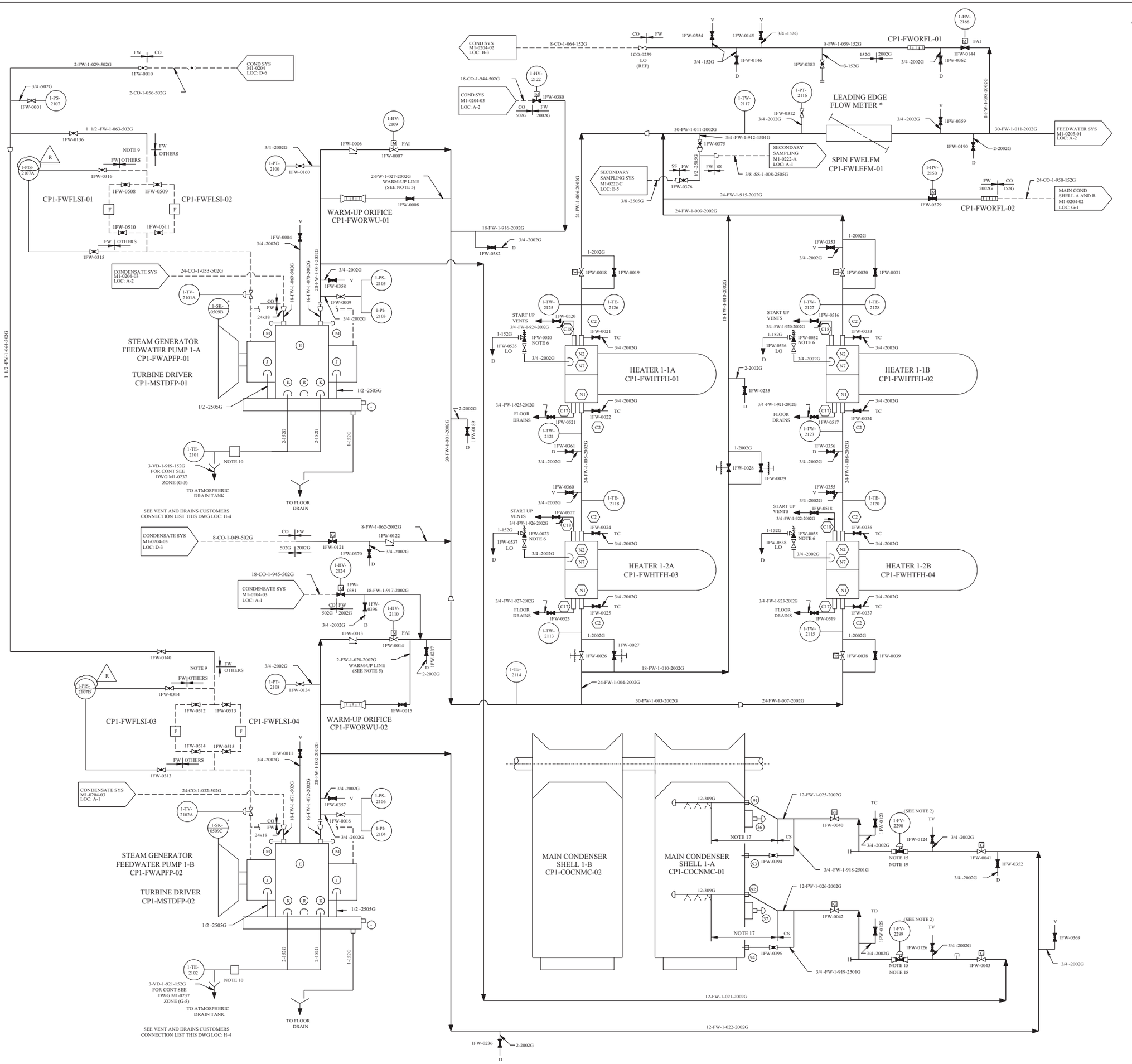

REV	DWN	CHKD	APVD	REMARKS
CP-29	DLK 09-14 2005	MM 09-14 2005		THIS DRAWING REVISED TO INCORPORATE DESIGN CHANGE FDA 2005-003545-01-00 PER SK-0001-05-003545-01-00.

NOTES:

1. INSTRUMENTS AND DEVICES IDENTIFIED WITH * ARE TO BE PROVIDED BY WESTINGHOUSE-SEE DWG 105D452 FOR BLOCK DIAGRAM.

2. SEE DWG M1-0204-03 FOR FLOW ELEMENT AND TRANSMITTER (LOC B-1, C-1 AND B-2, C-2).

3. DELETED

4. DESIGN CONDITIONS (FROM FEEDWATER PUMPS UP TO AND INCLUDING FEEDWATER ISOLATION VALVES): PRESSURE-1800 PSIG TEMPERATURE-400^-500^ F.

5. WARM-UP BREAKDOWN ORIFICE TO BE SUPPLIED BY PUMP MANUFACTURER.

6. TUBE SIDE FEEDWATER HEATER RELIEF VALVES TO BE SUPPLIED BY STRUTHERS WELLS CORP.

7. DELETED

8. FOR MECHANICAL SYMBOLS AND NOTES SEE DWG M1-0200.

9. CUSTOMER'S 1 1/2 " SCH 40 PIPING CONNECTS TO PUMP MANUFACTURER'S SEAL INJECTION SYSTEM (1 1/2 " SW x 1 1/2 " NPT ADAPTER BY FIELD).

10. PROVISION FOR INSERTION OF PUMP MANUFACTURER'S SEAL INJECTION SYSTEM THERMOWELL IN CUSTOMER'S DRAIN PIPING.

11. DRAIN LINE TO SLOPE CONTINUOUSLY TO AUXILIARY DRAINS TANK.

12. TYPICAL CUSTOMER'S PIPING CONNECTIONS ARE INDICATED AS FOLLOWS:

FEEDWATER HEATERS

MAIN CONDENSER

STEAM GENERATOR FEEDWATER PUMPS

13. DELETED

14. DELETED

15. RECIRCULATION VALVES SUPPLIED WITH 12"x8" REDUCERS.

16. DELETED

17. PIPE AND FITTINGS TO BE 12" A335 GRADE P22 AND A234 GRADE WP22 SCH 140 RESPECTIVELY. PIPE END CONNECTION TO CONDENSER SPARGER SHALL BE BORED TO 12" STANDARD WALL.

18. VALVE FAILS CLOSED ON LOSS OF SIGNAL AND OPEN ON LOSS OF AIR. VALVE OPENS ON LOSS OF SIGNAL IN CONJUNCTION WITH LOW FLOW VIA 1-FS-2289.

19. VALVE FAILS CLOSED ON LOSS OF SIGNAL AND OPEN ON LOSS OF AIR. VALVE OPENS ON LOSS OF SIGNAL IN CONJUNCTION WITH LOW FLOW VIA 1-FS-2290.

CUSTOMER CONNECTION LIST

CONN	NOTES	DESCRIPTION OF SERVICE
E	3/4 " SOCKET WELD	VENT CONNECTION - 3/4 " SCH 80 PIPE WITH PROTECTIVE CAP
J	1/2 " NPT x 3/4 " SW ADAPTER - BY FIELD	AUXILIARY (SECONDARY) STUFFING BOX LEAKAGE CONNECTIONS
K	2" NPT x 2" SW ADAPTER - BY FIELD	PRIMARY STUFFING BOX LEAKAGE CONNECTION
M	3/4 " NPT - CAPPED	GAUGE CONNECTION
N	1/2 " NPT - PLUGGED	INSPECTION LOCATION
R	3/4 " NPT - PLUGGED	CASE DRAIN CONNECTION LEFT PLUGGED AT OWNERS REQUEST
-	1" NPT - PLUGGED TYPICAL BY FIELD	TROUGH DRAIN

FSAR FIGURE 10.4-9

THIS DRAWING CREATED ELECTRONICALLY

NON-SAFETY

TXU POWER
CPSES
GLEN ROSE, TEXAS

FLOW DIAGRAM
STEAM GENERATOR
FEEDWATER SYSTEM

DWG. NO. M1-0203 | SH. NO. - | REV. CP-29

FINAL PRINT

REF CKD 5-19-98 CP-26

me619600.dgn M1-0203

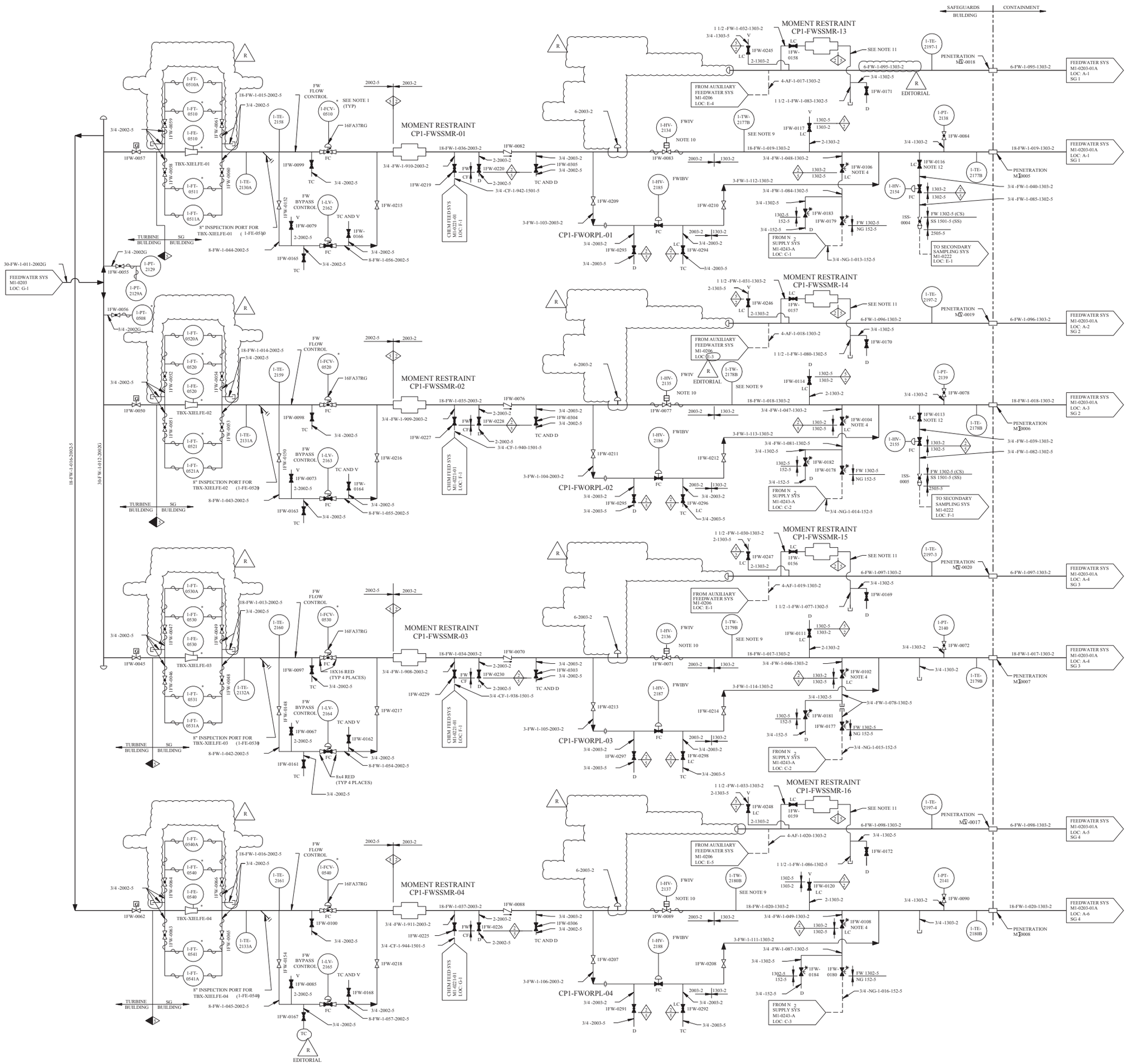

REV	DWN	CHKD	APVD	REMARKS
CP-25	SL 07-11-2005	GFB 05-12-2006		THIS DRAWING REVISED TO INCORPORATE DESIGN CHANGE FDA-2005-000224-02-00 PER SK-0015-05-000224-02-00. EDITORIAL CHANGES AS NOTED.

NOTES:

1. INSTRUMENTS AND DEVICES IDENTIFIED WITH * ARE TO BE PROVIDED BY WESTINGHOUSE. SEE DWG 1OSD452 FOR BLOCK DIAGRAM.

2. FEEDWATER SYSTEM PIPING FROM MOMENT RESTRAINTS UPSTREAM OF CHECK VALVES AND FEEDWATER ISOLATION VALVES TO STEAM GENERATOR FEEDWATER INLET NOZZLES IS DESIGNATED NUCLEAR SAFETY CLASS 2.

3. DESIGN CONDITIONS (FROM FEEDWATER PUMPS UP TO AND INCLUDING FEEDWATER ISOLATION VALVES.) PRESSURE 1800 PSIG TEMP 400° F-500° F.

4. DELETED

5. FOR MECHANICAL SYMBOLS AND NOTES SEE DWG M1-0200.

6. FEEDWATER ISOLATION VALVE FAILS CLOSED ON LOSS OF HYDRAULIC FLUID, ON LOSS OF ELECTRIC POWER IT DOES NOT FAIL CLOSED.

7. DELETED

8. UNLESS OTHERWISE NOTED, ALL DRAINS COLLECTED BY LOCAL DRAIN SYSTEM.

9. THESE THERMOWELLS ARE PROVIDED WITH THREADED PLUGS.

10. THE FOLLOWING HEATERS ARE EXTERNAL ELECTRIC RESISTANCE HEATERS USED TO MAINTAIN THE CORRESPONDING VALVE BODY ABOVE THE LOW TEMPERATURE BRITTLE FRACTURE THRESHOLD DURING FEEDWATER SYSTEM START-UP CONDITIONS.

HEATER	VALVE	TEMPERATURE INDICATOR
CP1-HTEHNB-01	1-HV-2134	1-TI-2152-1
CP1-HTEHNB-02	1-HV-2135	1-TI-2152-2
CP1-HTEHNB-03	1-HV-2136	1-TI-2152-3
CP1-HTEHNB-04	1-HV-2137	1-TI-2152-4

11. REFER TO DCN-8010 AND ONE FORM 94-0718 FOR INSTALLED PIPING CATEGORY DOWNSTREAM OF MOMENT RESTRAINTS CP1-FWSSMR-13 , CP1-FWSSMR-14 , CP1-FWSSMR-15 AND CP1-FWSSMR-16 .

12. LOCKED CLOSED IN MODES 1-3 TO ENSURE AFW SYSTEM OPERABILITY. LOCKED CLOSED IN MODES 1-4 FOR CONTAINMENT ISOLATION.

FSAR FIGURE 10.4-9

THIS DRAWING CREATED ELECTRONICALLY

DRAWING 2323-M1-0203-01 REV CP-5
HAS BEEN SPLIT INTO THE FOLLOWING SHEETS:
M1-0203-01
M1-0203-01A

CLASS I
(NUCLEAR SAFETY-RELATED)
SAFETY CLASS 1 / SAFETY CLASS 2 / SAFETY CLASS 3 — SEISMIC CATEGORY CLASS 1E / ASSOCIATED CIRCUITS — I

LUMINANT
CPSES
GLEN ROSE, TEXAS

FLOW DIAGRAM
STEAM GENERATOR
FEEDWATER SYSTEM

DWG. NO. M1-0203 | SH. NO. 01 | REV. CP-25

FINAL PRINT

M1-0203-01

me765300.dgn

REF CHKD 11/27/2000 CP-22

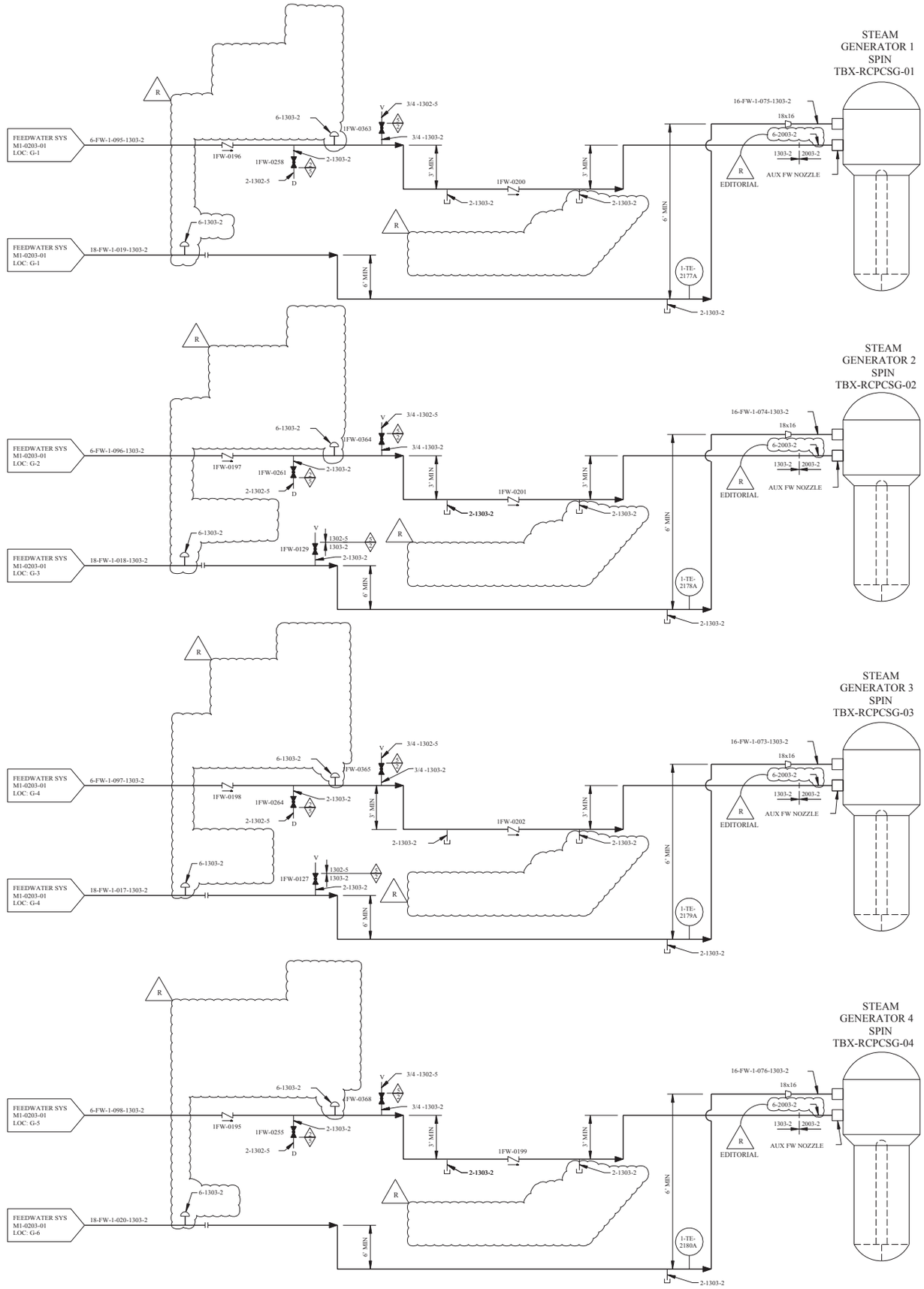

REV	DWN	CHKD	APVD	REMARKS
CP-15	DLS 04-17 2007	DLS 04-17 2007		THIS DRAWING REVISED TO INCORPORATE DESIGN CHANGE FDA-2005-000224-02-00 PER SK-0016-05-000224-02-00. EDITORIAL CHANGES AS NOTED.

NOTES:

1. FEEDWATER SYSTEM PIPING FROM MOMENT RESTRAINTS UPSTREAM OF CHECK VALVES AND FEEDWATER ISOLATION VALVES TO STEAM GENERATOR FEEDWATER INLET NOZZLES IS DESIGNATED NUCLEAR SAFETY CLASS 2.
2. FOR MECHANICAL SYMBOLS AND NOTES SEE DRAWING M1-0200.
3. UNLESS OTHERWISE NOTED, ALL DRAINS COLLECTED BY LOCAL DRAIN SYSTEM.
4. DELETED

FSAR FIGURE 10.4-9

THIS DRAWING CREATED ELECTRONICALLY

DRAWING 2323-M1-0203-01 REV CP-5
HAS BEEN SPLIT INTO THE FOLLOWING SHEETS:
M1-0203-01
M1-0203-01A

CLASS I
(NUCLEAR SAFETY-RELATED)
SAFETY CLASS 1 — SEISMIC CATEGORY I
SAFETY CLASS 2 — CLASS 1E
SAFETY CLASS 3 — ASSOCIATED CIRCUITS

LUMINANT
CPSES
GLEN ROSE, TEXAS

FLOW DIAGRAM
STEAM GENERATOR
FEEDWATER SYSTEM

DWG. NO. M1-0203 | SH. NO. 01A | REV. CP-15

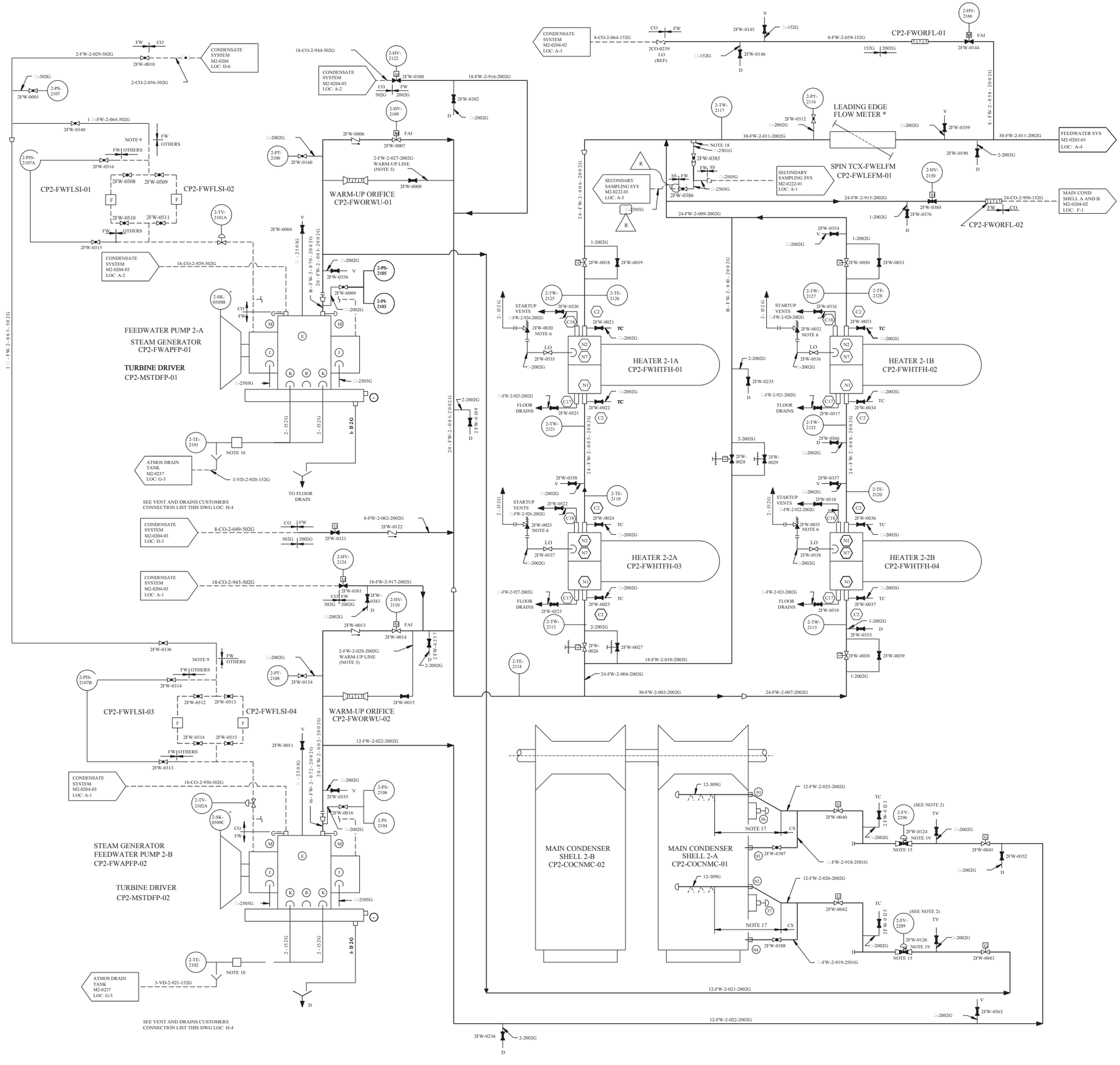

REV	DWN	CHKD	APVD	REMARKS
CP-14	BMC 09-09-2014	DJL 09-09-2014		THIS DRAWING REVISED TO INCORPORATE DESIGN CHANGE FDA-2014-000192-01-00 PER SK-0002-14-000192-01-00.

NOTES

1. INSTRUMENTS AND DEVICES IDENTIFIED WITH * ARE TO BE PROVIDED BY WESTINGHOUSE SEE DWG 10SD452 FOR BLOCK DIAGRAM.
2. SEE DWG M2-0204-03 (LOC: C-1, C-2) FOR FLOW ELEMENT AND TRANSMITTER.
3. DELETED
4. DESIGN CONDITIONS (FROM FEEDWATER PUMPS UP TO AND INCLUDING FEEDWATER ISOLATION VALVES): PRESSURE-1800 PSIG, TEMPERATURE-400□-500□ F.
5. WARM-UP BREAKDOWN ORIFICE TO BE SUPPLIED BY PUMP MANUFACTURER.
6. TUBE SIDE FEEDWATER HEATER RELIEF VALVES TO BE SUPPLIED BY STRUTHERS WELLS CORP.
7. DELETED
8. FOR MECHANICAL SYMBOLS AND NOTES SEE DWG M1-0200.
9. CUSTOMER'S 1□" SCH 40 PIPING CONNECTS TO PUMP MANUFACTURER'S SEAL INJECTION SYSTEM (1□" SW X 1□" NPT ADAPTER BY FIELD).
10. PROVISION FOR INSERTION OF PUMP MANUFACTURER'S SEAL INJECTION SYSTEM THERMOWELL IN CUSTOMER'S DRAIN PIPING.
11. DRAIN LINE TO SLOPE CONTINUOUSLY TO AUXILIARY DRAINS TANK.
12. TYPICAL CUSTOMER'S PIPING CONNECTIONS ARE INDICATED AS FOLLOWS:
    - (H) FEEDWATER HEATERS
    - (M) MAIN CONDENSER
    - (K) STEAM GENERATOR FEEDWATER PUMPS
13. DELETED
14. DELETED
15. RECIRCULATION VALVES SUPPLIED WITH 12"x8" REDUCERS.
16. DELETED
17. PIPE AND FITTINGS TO BE 12"A335 GRADE P22 AND A234 GRADE WP22 SCH 140 RESPECTIVELY. PIPE END CONNECTION TO CONDENSER SPARGER SHALL BE BORED TO 12" STANDARD WALL.
18. □" 2501G SAMPLING TAP TO BE FINISHED WITH 45□ OPEN END AND PROTRUDED FROM BELOW □" VERTICALLY INSIDE THE 30" 2002G PIPE THROUGH A □" 6000 LB A105 HALF COUPLING SERVED AS REINFORCEMENT. THE CHAMFERRED SURFACE OF THE OPEN END SHOULD BE ORIENTED FAVORABLY UPSTREAM TO FACILITATE SAMPLE FLOW.
19. VALVE FAILS CLOSED ON LOSS OF SIGNAL AND OPEN ON LOSS OF AIR. VALVE OPENS ON LOSS OF SIGNAL IN CONJUNCTION WITH LOW FLOW VIA 2-FS-2289 AND 90.

CUSTOMER CONNECTION LIST

CONN	NOTES	DESCRIPTION OF SERVICE
(E)	□" SOCKET WELD	VENT CONNECTION - □" SCH 80 PIPE WITH PROTECTIVE CAP
(J)	□" NPT x □" SW ADAPTER - BY FIELD	AUXILIARY (SECONDARY) STUFFING BOX LEAKAGE CONNECTIONS
(K)	2" NPT x 2" SW ADAPTER - BY FIELD	PRIMARY STUFFING BOX LEAKAGE CONNECTION
(M)	□" NPT - CAPPED	GAUGE CONNECTION
(N)	□" NPT - PLUGGED	INSPECTION LOCATION
(R)	□" NPT - PLUGGED	CASE DRAIN CONNECTION LEFT PLUGGED AT OWNERS REQUEST
(-)	1" NPT - PLUGGED TYPICAL BY FIELD	TROUGH DRAIN

FSAR FIGURE 10.4-9

THIS DRAWING CREATED ELECTRONICALLY

NON-SAFETY

LUMINANT
CPNPP
GLEN ROSE, TEXAS

FLOW DIAGRAM
STEAM GENERATOR
FEEDWATER SYSTEM

DWG. NO. M2-0203 | SH. NO. - | REV. CP-14

< FINAL PRINT >

rne0000nr.dgn M2-0203

$$$$$$$DATE$$$$$$$ REF CKD 05/13/97 CP-12

REV	DWN	CHKD	APVD	REMARKS
CP-15	SJL 09-19 2002	DJL 09-19 2002		THIS DRAWING REVISED TO INCORPORATE DESIGN CHANGE FDA 1999-000382-01-01 PER SK-0002-99-000382-01-01. EDITORIAL CHANGES AS NOTED.

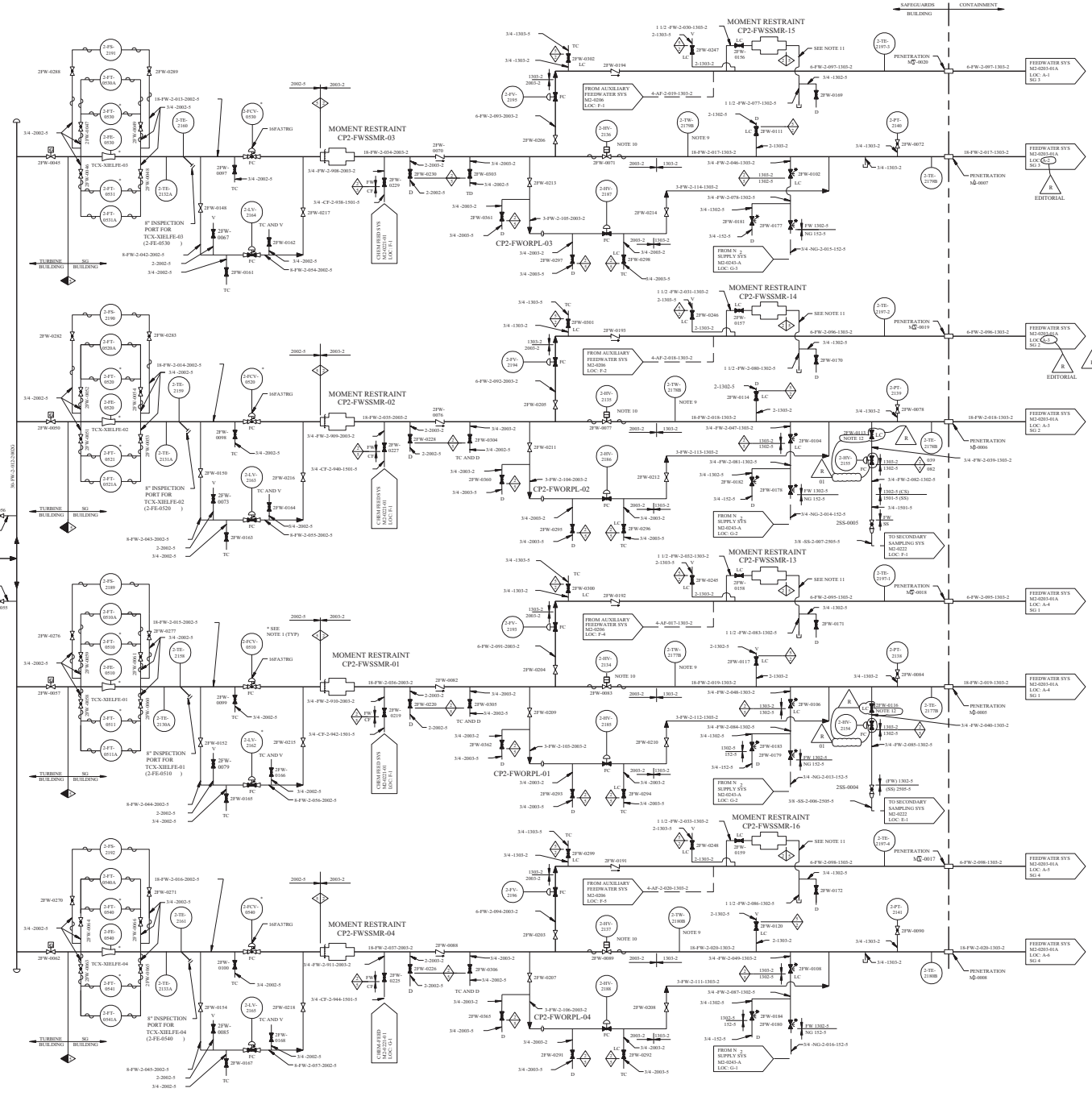

NOTES:

1. INSTRUMENTS AND DEVICES IDENTIFIED WITH * ARE TO BE PROVIDED BY WESTINGHOUSE. SEE DWG 105D452 FOR BLOCK DIAGRAM.
2. FEEDWATER SYSTEM PIPING, FROM THE MOMENT RESTRAINTS UPSTREAM OF CONTAINMENT ISOLATION VALVES AND CHECK VALVES TO THE STEAM GENERATORS, IS DESIGNATED NUCLEAR SAFETY CLASS 2.
3. DESIGN CONDITIONS FROM FEEDWATER PUMPS TO AND INCLUDING FEEDWATER ISOLATION VALVES ARE 1800 PSIG AND TEMP 400^F - 500^F.
4. DELETED
5. FOR MECHANICAL SYMBOLS AND NOTES SEE DWG M1-0200 .
6. FEEDWATER ISOLATION VALVE DOES NOT FAIL CLOSED ON LOSS OF ELECTRICAL POWER.
7. DELETED
8. UNLESS OTHERWISE NOTED, ALL DRAINS ARE COLLECTED BY LOCAL DRAIN SYSTEM.
9. THESE THERMOWELLS ARE PROVIDED WITH THREADED PLUGS.
10. THE FOLLOWING HEATERS ARE EXTERNAL ELECTRIC RESISTANCE HEATERS USED TO MAINTAIN THE CORRESPONDING VALVE BODY ABOVE THE LOW TEMPERATURE BRITTLE FRACTURE THRESHOLD DURING FEEDWATER SYSTEM START-UP CONDITIONS. TEMPERATURE INDICATORS ARE PROVIDED TO MONITOR VALVE BODY TEMPERATURE.

HEATER	VALVE	TEMP INDICATOR
CP2-HTEHNB-01	2-HV-2134	2-TI-2152-1
CP2-HTEHNB-02	2-HV-2135	2-TI-2152-2
CP2-HTEHNB-03	2-HV-2136	2-TI-2152-3
CP2-HTEHNB-04	2-HV-2137	2-TI-2152-4

11. REFER TO DCN-8010 AND ONE FORM 94-0718 FOR INSTALLED PIPING CATEGORY DOWNSTREAM OF MOMENT RESTRAINTS CP2-FWSSMR-13 , CP2-FWSSMR-14 , CP2-FWSSMR-15 AND CP2-FWSSMR-16 .
12. LOCKED CLOSED IN MODES 1-3 TO INSURE AFW SYSTEM OPERABILITY. LOCKED CLOSED IN MODES 1-4 FOR CONTAINMENT ISOLATION.

R
01

FSAR FIGURE 10.4-9

THIS DRAWING CREATED ELECTRONICALLY

DRAWING 2323-M2-0203-01 REV CP-4
HAS BEEN SPLIT INTO THE FOLLOWING SHEETS:
M2-0203-01
M2-0203-01A

CLASS I
(NUCLEAR SAFETY-RELATED)

SAFETY CLASS 1	SEISMIC CATEGORY I
SAFETY CLASS 2	CLASS 1E
SAFETY CLASS 3	ASSOCIATED CIRCUITS

TXU ENERGY
CPSES
GLEN ROSE, TEXAS

FLOW DIAGRAM
STEAM GENERATOR
FEEDWATER SYSTEM

DWG. NO. M2-0203
SH. NO. 01
REV. CP-15

REF CHKD 11/27/200 CP-14

$$$$$$$$DATE$$$$$$$$

me426800.dgn

M2-0203-01

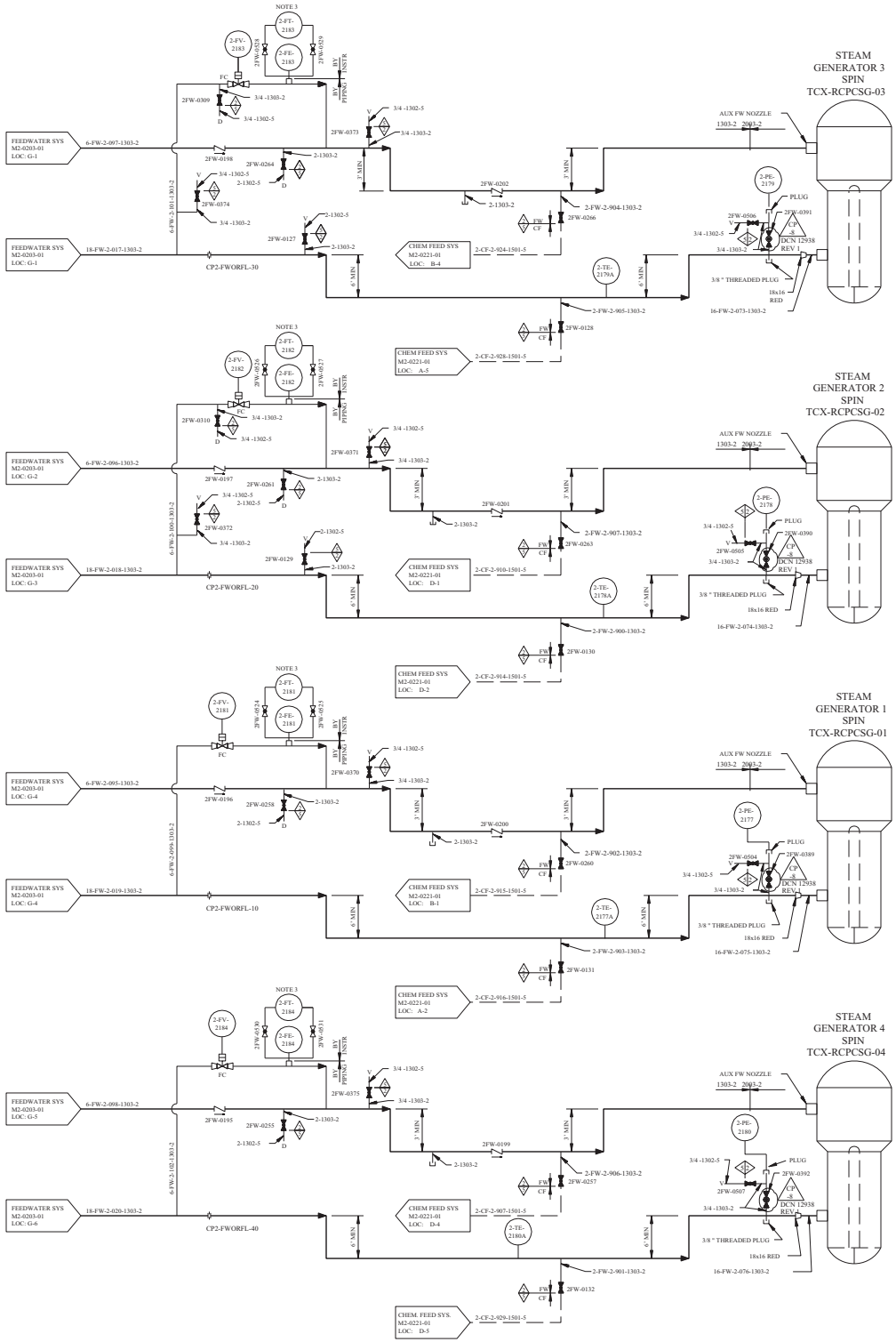

REV	DWN	CHKD	APVD	REMARKS
CP-8	RG 08-15-1999			THIS DRAWING REVISED TO INCORPORATE DESIGN CHANGE DCN 12938 REV 1.

NOTES

1. FEEDWATER SYSTEM PIPING, FROM THE MOMENT RESTRAINTS UPSTREAM OF CONTAINMENT ISOLATION VALVES AND CHECK VALVES TO THE STEAM GENERATORS, IS DESIGNATED NUCLEAR SAFETY CLASS 2.
2. FOR MECHANICAL SYMBOLS AND NOTES SEE DWG M1-0200.
3. INSTRUMENT VALVES FOR 2-FT-2181 , 2182 , 2183 AND 2184 ARE TO BE PROVIDED BY INSTRUMENTATION.
4. UNLESS OTHERWISE NOTED ALL DRAINS ARE COLLECTED BY LOCAL DRAIN SYSTEM.

FSAR FIGURE 10.4-9

THIS DRAWING CREATED ELECTRONICALLY

DRAWING 2323-M2-0203-01 REV CP-4
HAS BEEN SPLIT INTO THE FOLLOWING SHEETS:
M2-0203-01
M2-0203-01A

CLASS I
(NUCLEAR SAFETY-RELATED)
SAFETY CLASS 1 SEISMIC CATEGORY I
SAFETY CLASS 2 CLASS 1E
SAFETY CLASS 3 ASSOCIATED CIRCUITS

TXU ELECTRIC
CPSES
GLEN ROSE, TEXAS

FLOW DIAGRAM
STEAM GENERATOR
FEEDWATER SYSTEM

DWG. NO.	SH. NO.	REV.
M2-0203	01A	CP-8

$$$$$$$D/A TE$$$$$$

me0001k1.dgn

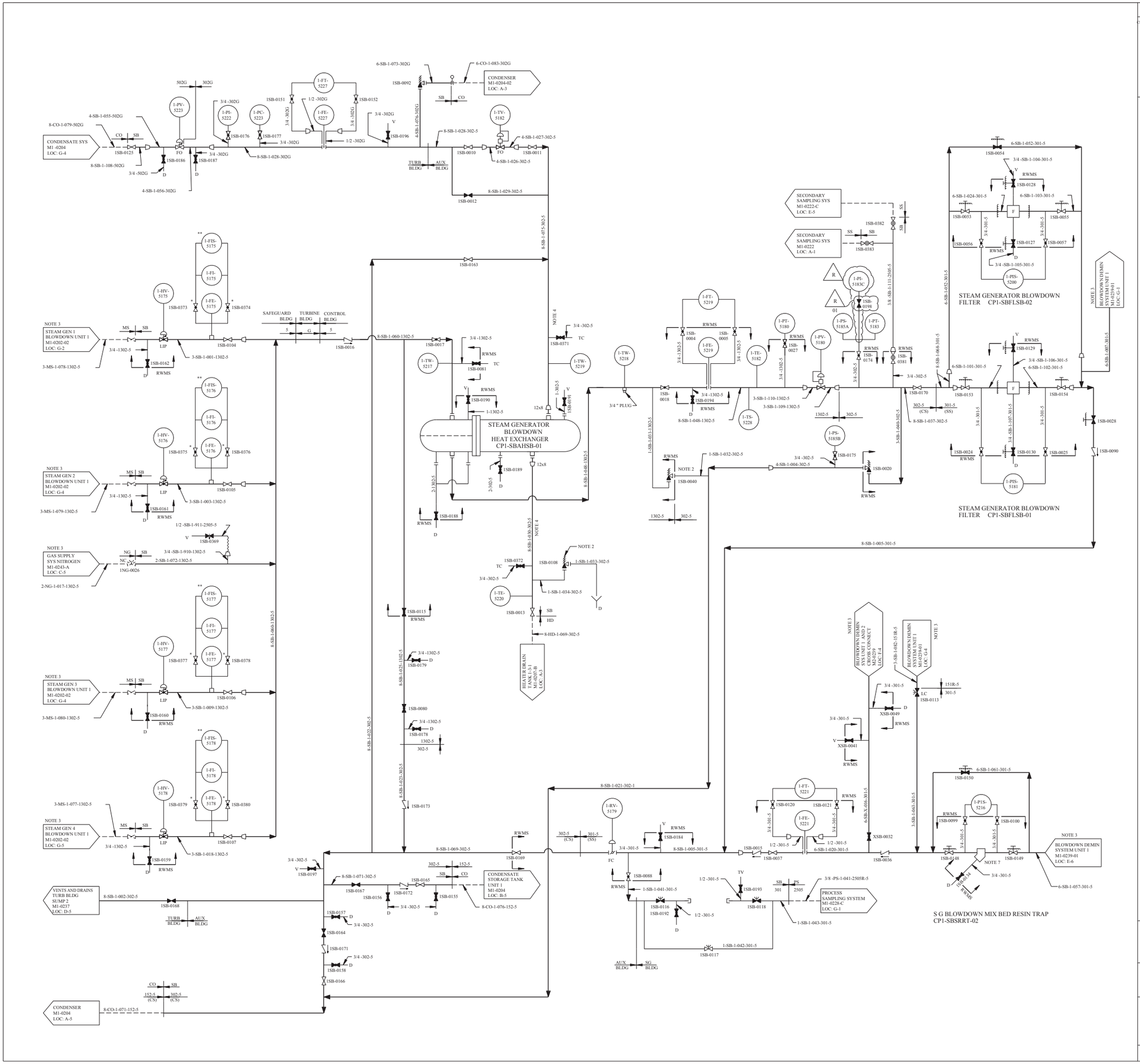

REV	DWN	CHKD	APVD	REMARKS
CP-27	JRMC 07-28 2004	DJL 07-28 2004		THIS DRAWING REVISED TO INCORPORATE DESIGN CHANGE FDA 2003-001603-01-01 PER SK-0002-03-001603-01-01.

NOTES:

1. FOR MECHANICAL SYMBOLS AND NOTES, SEE DRAWING M1-0200.
2. ITEMS INDICATED ARE SUPPLIED BY HEAT EXCHANGER MANUFACTURER.
3. DENOTES RADIOACTIVE WASTE MANAGEMENT SYSTEM - CONTINUES ON IDENTIFIED DRAWING.
4. FLUID SYSTEM CONNECTED TO THE SHELL SIDE OF THE STEAM GENERATOR BLOWDOWN HEAT EXCHANGER AND ALL PIPING CONNECTIONS ATTACHED OR LEADING THERETO ARE NOT PART OF THE RWMS.
5. ** DENOTES EQUIPMENT USED IN MITIGATION OF HELB.
6. * DENOTES INSTRUMENT VALVES FURNISHED WITH FLOW ELEMENT.
7. INDICATES EQUIPMENT SUPPLIED BY DEMINERALIZER MANUFACTURER.

FSAR FIGURE 10.4-10

THIS DRAWING CREATED ELECTRONICALLY

CLASS II

LUMINANT
CPSES
GLEN ROSE, TEXAS

FLOW DIAGRAM
STEAM GENERATOR BLOWDOWN
CLEANUP SYSTEM

DWG. NO.	SH. NO.	REV.
M1-0239	-	CP-27

FINAL PRINT

REF CHECKED CP-23 05/25/99

me620000.dgn

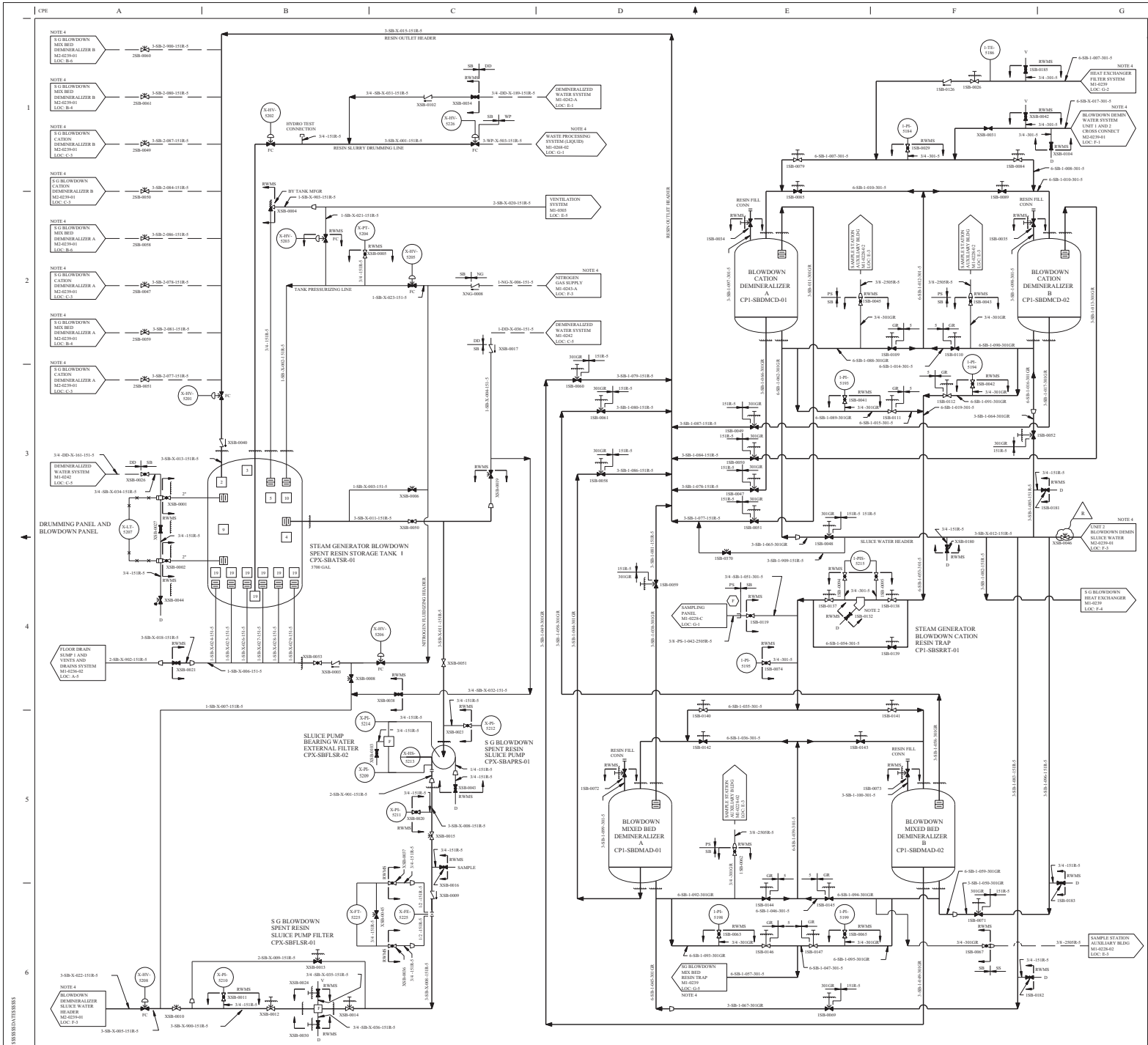

REV	DRWN	CHKD	APVD	REMARKS
CP-16	DEAP 12-14-2001	GOYP 12-18-2001		THIS DRAWING REVISED TO INCORPORATE DESIGN CHANGE FDA-2001-00253-01-00 PER SK-0001-01-00253-01-00.

NOTES:

1. SYSTEM VALVES ARE ARRANGED FOR NORMAL OPERATION. DEMINERALIZERS ARE BYPASSED WHEN EFFLUENT FLOWS TO CONDENSER.
2. INDICATES ITEM SUPPLIED BY DEMINERALIZER MANUFACTURER.
3. FOR MECHANICAL SYMBOLS AND NOTES SEE DRAWING M1-0200.
4. DENOTES RADIOACTIVE WASTE MANAGEMENT SYSTEM CONTINUES ON DRAWING IDENTIFIED.
5. DELETED

FSAR FIGURE 10.4-10

THIS DRAWING CREATED ELECTRONICALLY

CLASS II

TXU ELECTRIC
CPSES
GLEN ROSE, TEXAS

FLOW DIAGRAM
STEAM GENERATOR BLOWDOWN
CLEANUP SYSTEM

DWG. NO. M1-0239 | SH. NO. 01 | REV. CP-16

$$$$$$$DATE$$$$$$$

mc371100.dgn A M1-0239-01

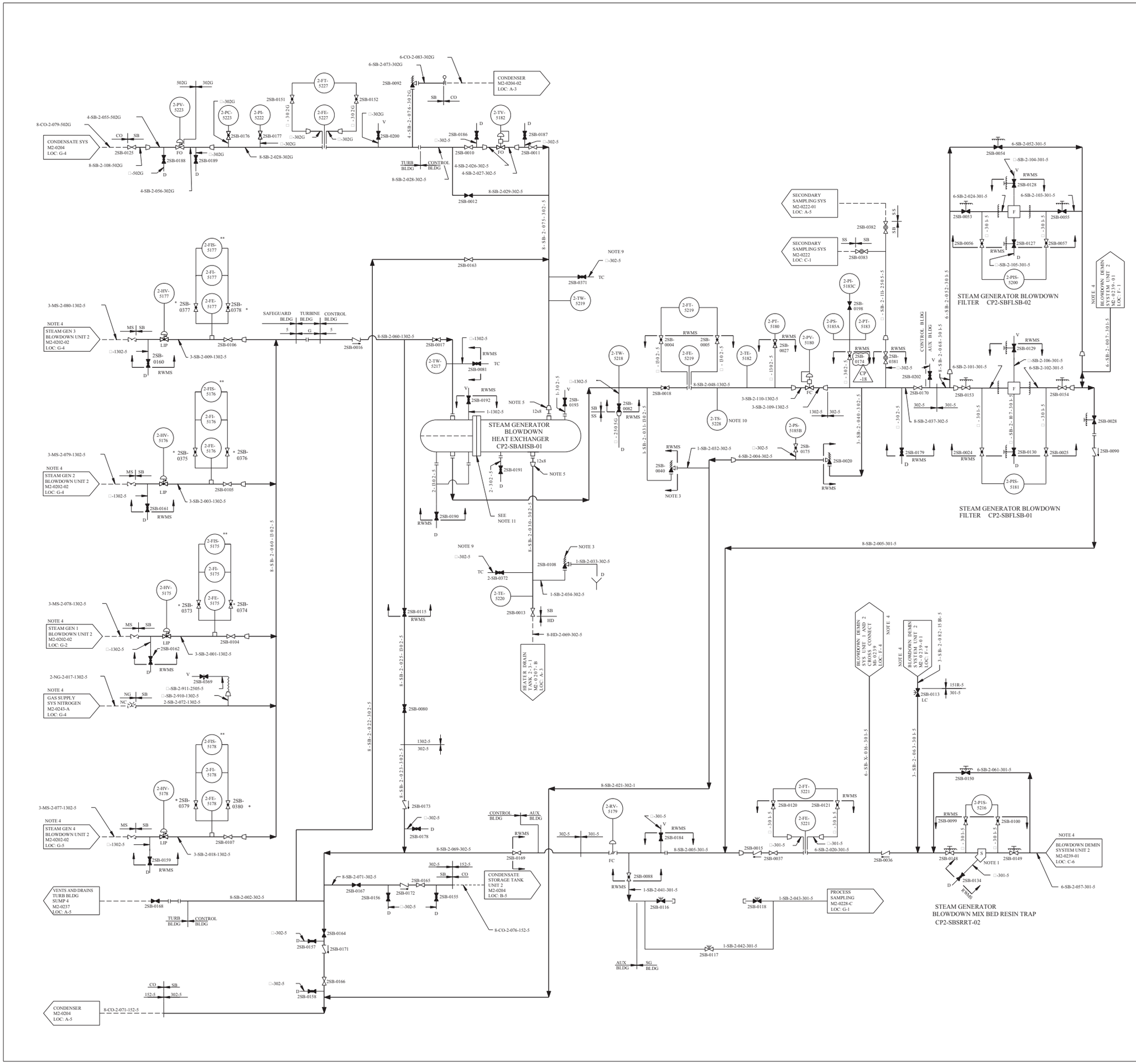

REV	DWN	CHKD	APVD	REMARKS
CP-18	DLK 09-30 2015	MM 09-30 2015	MHF 10-01 2015	THIS DRAWING REVISED TO INCORPORATE AI-CR-2015-008786-1 TO EDITORIALLY ADD ROOT VALVE LOCATION (TAG) 2SB-0174 FOR 2-PT-5183.

LEGEND:

- F - FILTER
- S - STRAINER
- R - VENDOR NOZZLE NUMBER

NOTES:

1. ITEMS INDICATED ARE SUPPLIED BY DEMINERALIZER MANUFACTURER.
2. FOR MECHANICAL SYMBOLS AND NOTES, SEE DRAWING M1-0200.
3. ITEMS INDICATED ARE SUPPLIED BY HEAT EXCHANGER MANUFACTURER.
4. DENOTES RADIOACTIVE WASTE MANAGEMENT SYSTEM CONTINUES ON IDENTIFIED DRAWING.
5. THE FLUID SYSTEM CONNECTED TO THE SHELL SIDE OF THE STEAM GENERATOR BLOWDOWN HEAT EXCHANGER AND ALL PIPING CONNECTED ATTACHED TO OR LEADING THERE TO ARE NOT PART OF THE RWMS.
6. FLOW AT ALL TEST CONNECTIONS, VENTS, AND DRAINS SHOULD BE DIRECTED AWAY FROM THE PROCESS PIPING.
7. ** DENOTES EQUIPMENT USED IN MITIGATION OF HELB.
8. * INDICATES INSTRUMENT VALVES FURNISHED WITH FLOW ELEMENT.
9. INCORPORATION OF UNIT 1 DM 89-09.
10. INCORPORATION OF UNIT 1 DM 89-101.
11. JOINT HAS BEEN TEAM LEAKED BUT IS NO LONGER TRACKED UNDER THE TEMP MOD PROCESS. ANY FURTHER REWORK SHOULD BE ADDRESSED BY THE NORMAL WORK ORDER PROCESS.

FSAR FIGURE 10.4-10

THIS DRAWING CREATED ELECTRONICALLY

DRAWING 2323-M2-0239 REV CP-3
HAS BEEN SPLIT INTO THE FOLLOWING SHEETS:
M2-0239
M2-0239-01

CLASS II

LUMINANT
CPNPP
GLEN ROSE, TEXAS

FLOW DIAGRAM
STEAM GENERATOR BLOWDOWN
CLEANUP SYSTEM

DWG. NO. M2-0239 | SH. NO. - | REV. CP-18

< FINAL PRINT >

me102170.dgn M2-0239

REF CKD CP9 16-1-96

SSSSSSSDATESSSSSS

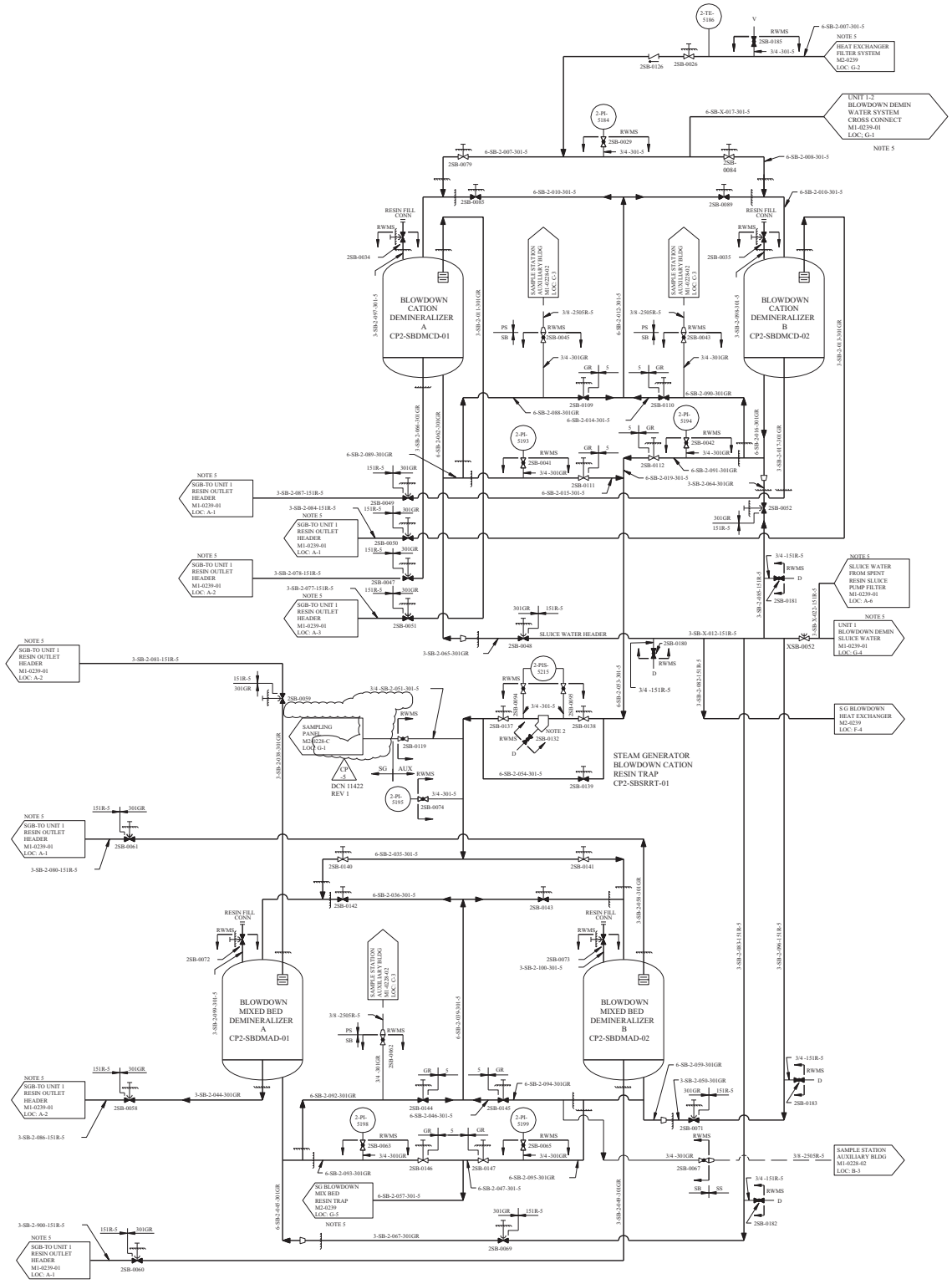

REV	DWN	CHKD	APVD	REMARKS
CP-5	CA 05-27-1999			THIS DRAWING REVISED TO INCORPORATE DESIGN CHANGE DCN 11422 REV 1.

LEGEND

F - FILTER

S - STRAINER

R - VENDOR NOZZLE NUMBER

NOTES

1. SYSTEM VALVES ARE ARRANGED FOR NORMAL OPERATION, DEMINERALIZERS ARE BYPASSED WHEN EFFLUENT FLOWS TO CONDENSER.
2. ITEMS INDICATED ARE SUPPLIED BY DEMINERALIZER MANUFACTURER.
3. FOR MECHANICAL SYMBOLS AND NOTES, SEE DRAWING M1-0200.
4. **ITEMS INDICATED ARE SUPPLIED BY HEAT EXCHANGER MANUFACTURER.**
5. DENOTES RADIOACTIVE WASTE MANAGEMENT SYSTEM CONTINUES ON IDENTIFIED DRAWING.

FSAR FIGURE 10.4-10

THIS DRAWING CREATED ELECTRONICALLY

DRAWING 2323-M2-0239 REV CP-3
HAS BEEN SPLIT INTO THE FOLLOWING SHEETS:

M2-0239
M2-0239-01

CLASS II

TXU ELECTRIC
CPSES
GLEN ROSE, TEXAS

FLOW DIAGRAM
STEAM GENERATOR BLOWDOWN
CLEANUP SYSTEM

DWG. NO.	SH. NO.	REV.
M2-0239	01	CP-5

me0001cd.dgn

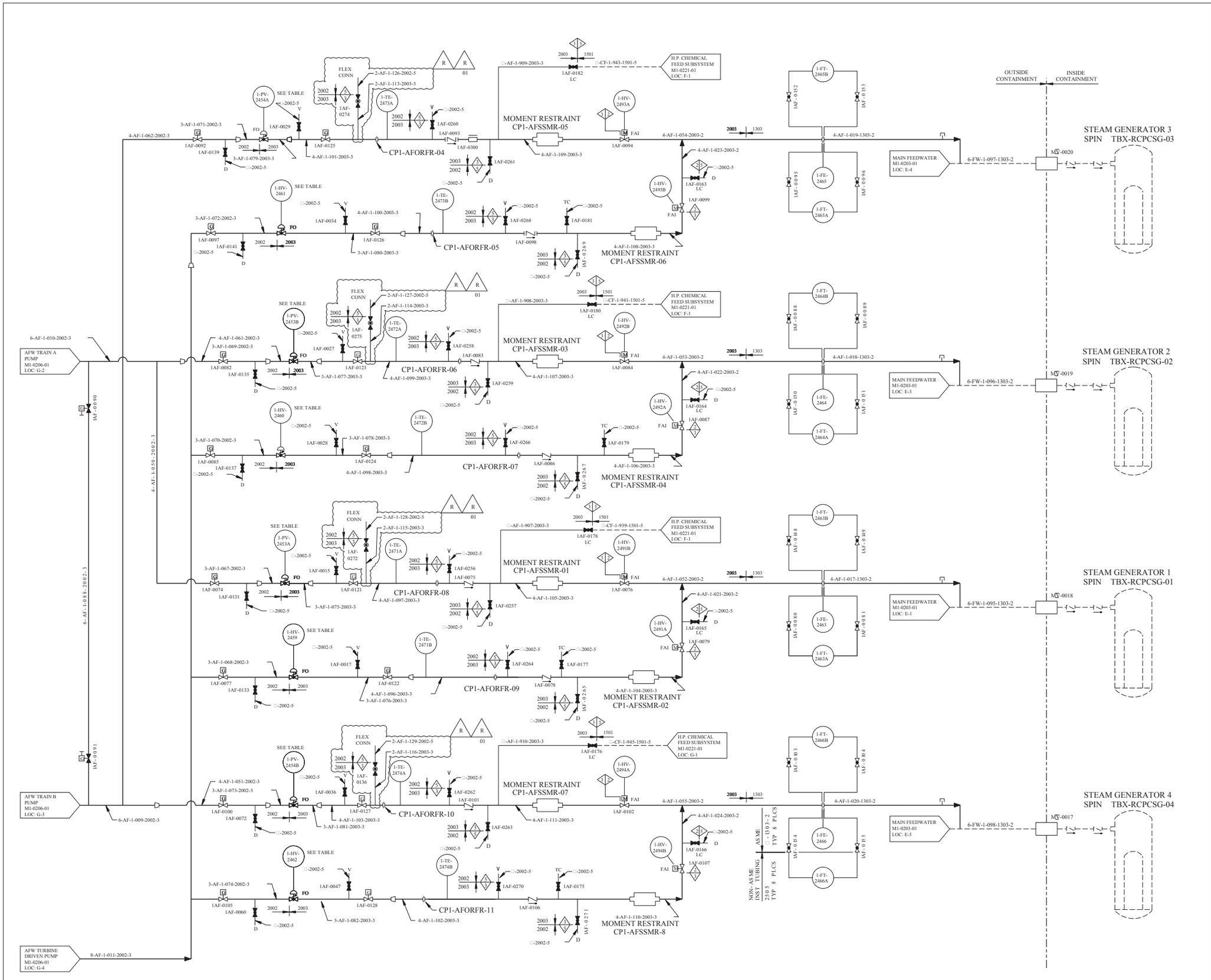

REV	DWN	CHKD	APVD	REMARKS
CP-21	DLK 08-27-2014	MM 09-02-2014		THIS DRAWING REVISED TO INCORPORATE DESIGN CHANGE FDA 2013-000008-01-01 PER SK-0001-13-000008-01-01.

NOTES:

1. FOR MECHANICAL SYMBOLS AND NOTES SEE DRAWING M1-0200.
2. CAPS WILL NOT BE PROVIDED ON VENT AND DRAIN LINES UNLESS OTHERWISE NOTED.
3. UNLESS OTHERWISE NOTED, DRAINS COLLECTED BY LOCAL DRAIN SYSTEM UNDER ADMINISTRATIVE CONTROL.
4. DELETED
5. REMOVE CHECK VALVE INTERNALS, ABANDON VALVE BODY 1AF-0300 IN PLACE.

R R 01

TABLE

CONTROL VALVE	SAFETY CLASS 3 AIR ACCUMULATOR
1-HV-2461	CP1-CIATAF-01 CP1-CIATAF-11
1-PV-2454A	CP1-CIATAF-02 CP1-CIATAF-16
1-PV-2454B AND 1-FV-2457	CP1-CIATAF-03 CP1-CIATAF-15
1-HV-2462	CP1-CIATAF-04 CP1-CIATAF-12
1-HV-2460	CP1-CIATAF-05 CP1-CIATAF-09
1-HV-2459	CP1-CIATAF-06 CP1-CIATAF-10
1-PV-2453A	CP1-CIATAF-07 CP1-CIATAF-14
1-PV-2453B AND 1-FV-2456	CP1-CIATAF-08 CP1-CIATAF-13

FSAR FIGURE 10.4-11

THIS DRAWING CREATED ELECTRONICALLY

DRAWING 2323-M1-0206 REV CP-5
HAS BEEN SPLIT INTO THE FOLLOWING SHEETS:
M1-0206
M1-0206-01
M1-0206-02

CLASS I
(NUCLEAR SAFETY-RELATED)
SAFETY CLASS 1 SEISMIC CATEGORY I
SAFETY CLASS 2 CLASS 1E
SAFETY CLASS 3 ASSOCIATED CIRCUITS

LUMINANT
CPNPP
GLEN ROSE, TEXAS

FLOW DIAGRAM
AUXILIARY FEEDWATER
SYSTEM

DWG. NO. M1-0206 | SH. NO. - | REV. CP-21

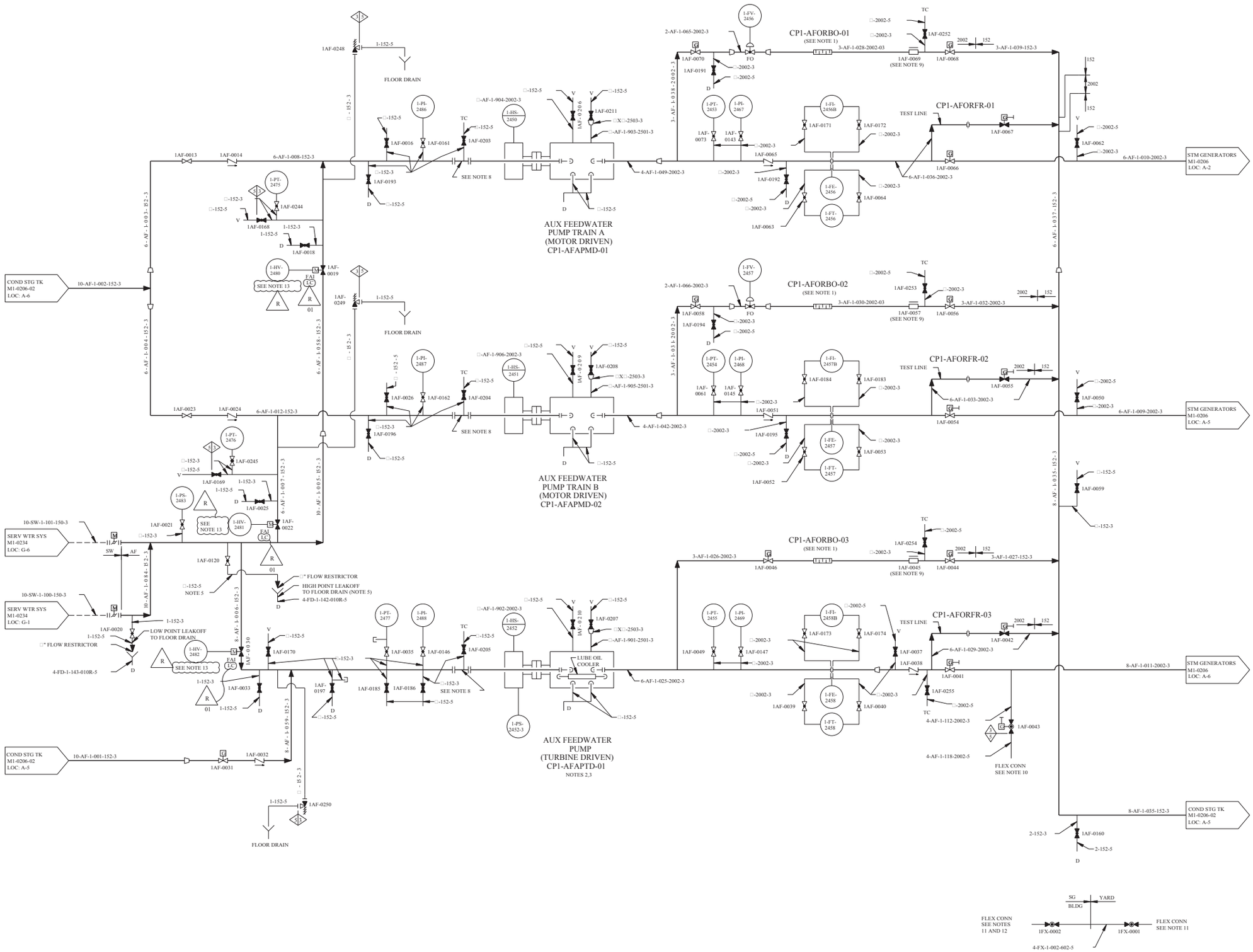

REV	DWN	CHKD	APVD	REMARKS
CP-19	GAW 05-06-2015	MHF 05-06-2015		THIS DRAWING REVISED TO INCORPORATE DESIGN CHANGE FDA 2010-000172-82-01 PER SK-0007-10-000172-82-01.

NOTES:

1. BREAKDOWN ORIFICE TO BE SUPPLIED BY PUMP MANUFACTURER.
2. TURBINE-DRIVEN AUXILIARY FEEDWATER PUMP LUBRICATING OIL COOLER TO BE SUPPLIED BY PUMP MANUFACTURER.
3. AUXILIARY FEEDWATER PUMP TURBINE DRIVER STEAM SUPPLY SYSTEM SHOWN ON DRAWING M1-0202, LOC: D-6.
4. FOR MECHANICAL SYMBOLS AND NOTES SEE DRAWING M1-0200.
5. HIGH POINT LEAKOFF CONNECTION FOR DETERMINATION OF SERVICE WATER IN-LEAKAGE.
6. CAPS WILL NOT BE PROVIDED ON VENT AND DRAIN LINES UNLESS OTHERWISE NOTED.
7. CLASS BREAK (CLASS 3 TO CLASS 5) IS DOWNSTREAM OF ALL VENT, DRAIN AND LEAK OFF VALVES.
8. TEMPORARY STRAINERS CP1-AFSRTS-01,02,03 ARE REQUIRED FOR SYSTEM FLUSHING. THE TEMPORARY STRAINERS CAN BE RE-INSTALLED FOR POST MAINTENANCE ACTIVITY.
9. REMOVE CHECK VALVE INTERNALS FROM VALVES 1AF-0045 , 1AF-0057 , AND 1AF-0069 AND ABANDON BODIES IN PLACE PER DCN 6538 REV 0.
10. AFW SECONDARY CONNECTION INSTALLED WITH HOSE FOLLOWING A BEYOND DESIGN BASIS EXTERNAL EVENT.
11. FLEX CONNECTION - MAY BE A PIPE CAP OR STORZ FITTING.
12. AFW SECONDARY CONNECTION INSTALLED WITH HOSE FOLLOWING A BEYOND DESIGN BASIS EXTERNAL EVENT. FOR NORMAL OPERATION SEE NOTE 10.
13. VALVE CLOSED AND DE-ENERGIZED (ONLY REQUIRED IN MODES 1 THROUGH 4). REF FDA-2010-000172-82.

FSAR FIGURE 10.4 - 11

THIS DRAWING CREATED ELECTRONICALLY

CLASS I
(NUCLEAR SAFETY-RELATED)
SAFETY CLASS 1 / SAFETY CLASS 2 / SAFETY CLASS 3 — SEISMIC CATEGORY I / CLASS 1E / ASSOCIATED CIRCUITS

LUMINANT
CPNPP
GLEN ROSE, TEXAS

FLOW DIAGRAM
AUXILIARY FEEDWATER SYSTEM
PUMP TRAINS

DWG. NO. M1-0206 | SH. NO. 01 | REV. CP-19

me970000.dgn A M1-0206-01 < FINAL PRINT >

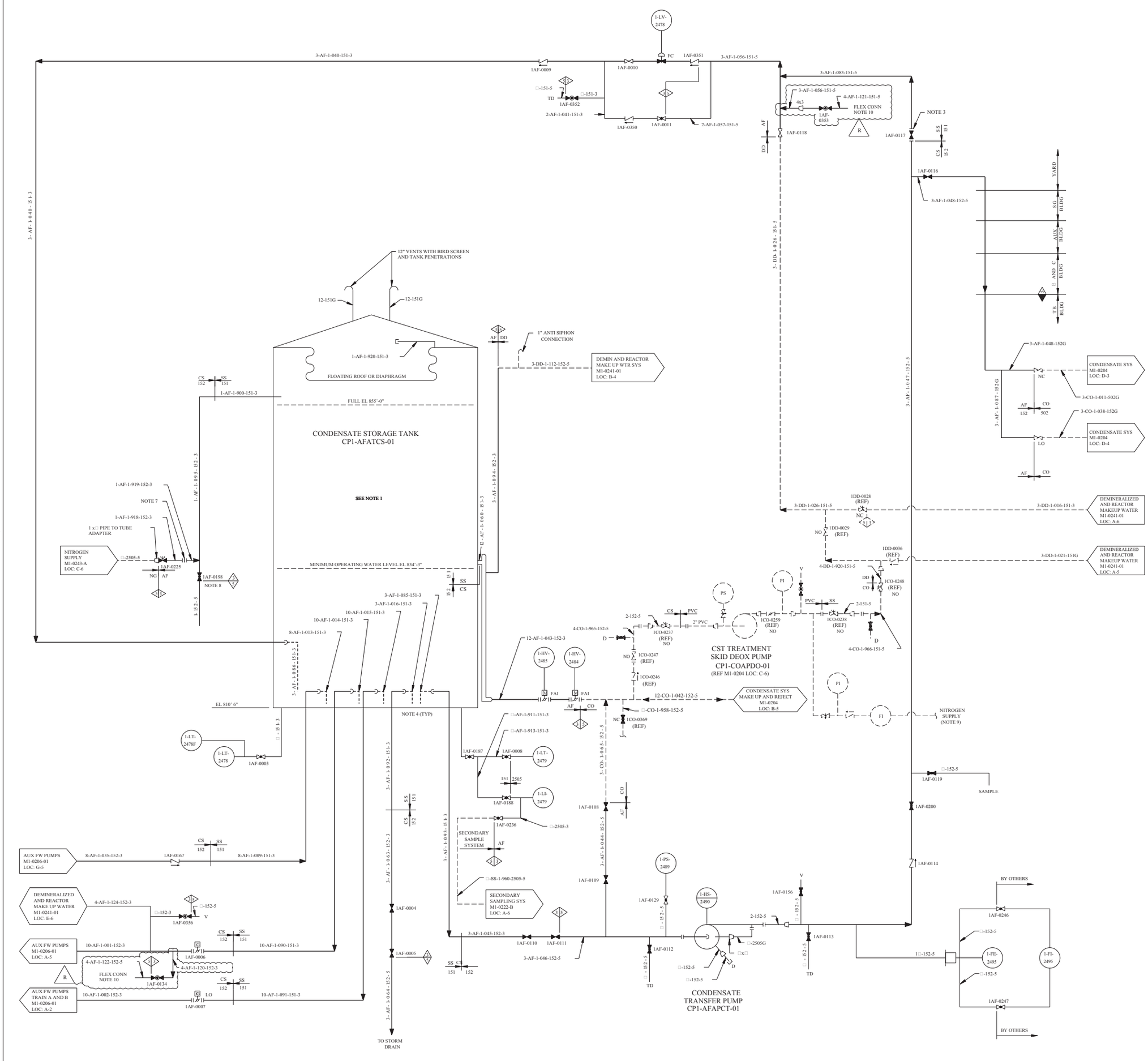

REV	DWN	CHKD	APVD	REMARKS
CP-22	CWG 11-26-2014	MHF 11-26-2014		THIS DRAWING REVISED TO INCORPORATE DESIGN CHANGE FDA 2013-000008-13-00 PER SK-0005-13-000008-13-00.

NOTES:

1. CONDENSATE STORAGE TANK IS SEISMIC CATEGORY I STRUCTURE AND NUCLEAR SAFETY CLASS 3.
2. FOR MECHANICAL SYMBOLS AND NOTES SEE DRAWING M1-0200.
3. CARBON STEEL WELD NECK FLANGE TO HAVE 150 LB RF RATING TO MATCH STAINLESS STEEL FLANGE ON VALVE.
4. TANK PENETRATIONS SUPPLIED BY OTHERS.
5. CAPS WILL NOT BE PROVIDED ON VENT AND DRAIN LINES UNLESS OTHERWISE NOTED.
6. UNLESS OTHERWISE NOTED, DRAINS COLLECTED BY LOCAL DRAIN SYSTEM UNDER ADMINISTRATIVE CONTROL.
7. CP1-AFORFR-12 HAS BEEN REPLACED WITH A PADDLE BLIND
8. VALVE 1AF-0198 IS USED BY CHEMISTRY FOR EVACUATION FROM UNDER THE BLADDER AND INJECTION OF NITROGEN AS REQUIRED.
9. NITROGEN SUPPLY TO CONSIST OF LOW PRESSURE DEWARS CANISTERS.
10. FLEX CONNECTION - MAY BE A PIPE CAP OR STORZ FITTING.

FSAR FIGURE 10.4-11

THIS DRAWING CREATED ELECTRONICALLY

CLASS I
(NUCLEAR SAFETY-RELATED)
SAFETY CLASS 1 — SEISMIC CATEGORY I
SAFETY CLASS 2 — CLASS IE
SAFETY CLASS 3 — ASSOCIATED CIRCUITS

LUMINANT
CPNPP
GLEN ROSE, TEXAS

FLOW DIAGRAM
AUXILIARY FEEDWATER SYSTEM
YARD LAYOUT

DWG. NO. M1-0206 | SH. NO. 02 | REV. CP-22

< FINAL PRINT >

me997900.dgn M1-0206-02

$$$$$$$DATE$$$$$$$ CHKD REF 9/17/2001

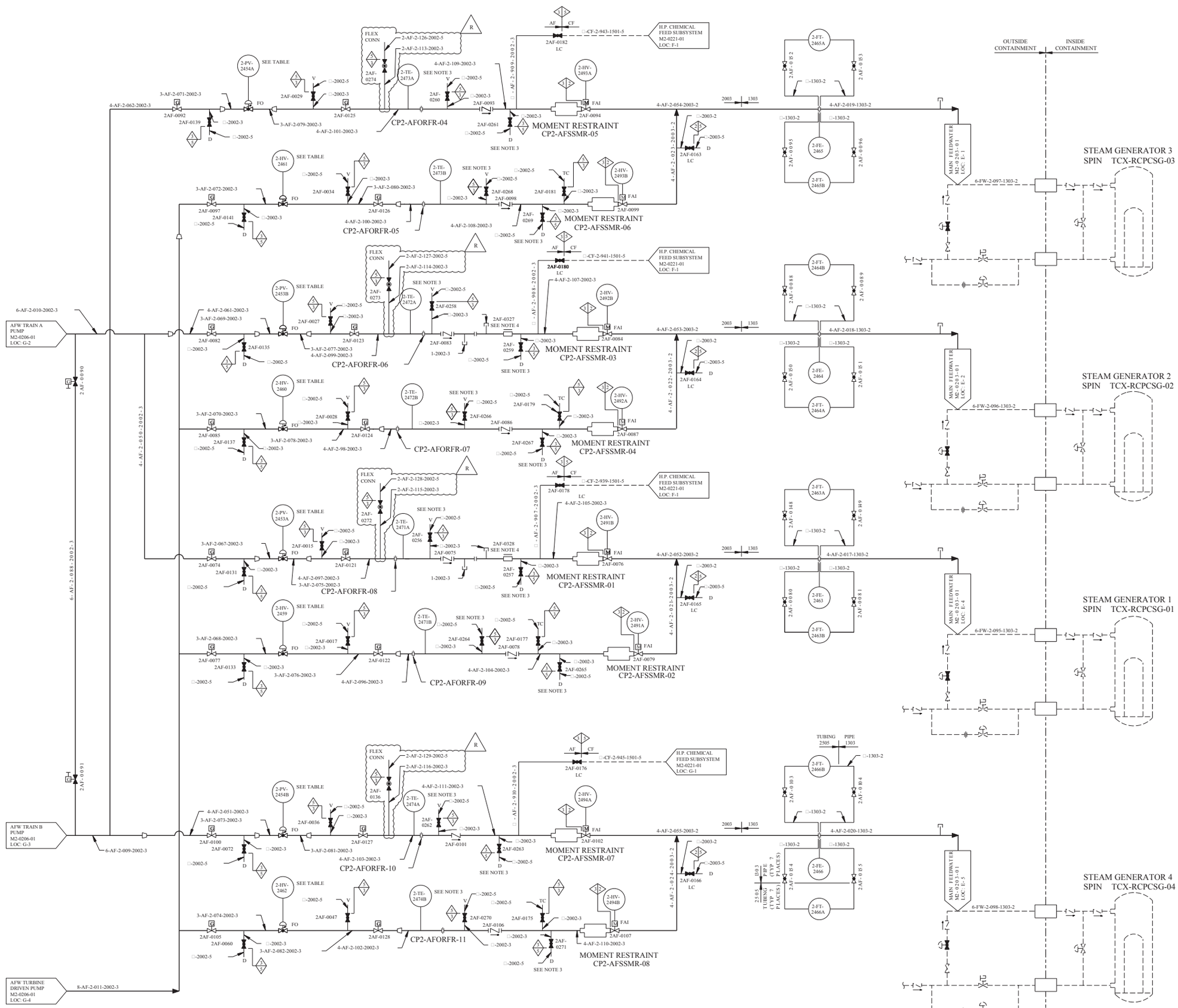

REV	DWN	CHKD	APVD	REMARKS
CP-15	DKK 09-29-2014	MM 10-01-2014		THIS DRAWING REVISED TO INCORPORATE DESIGN CHANGE FDA 2013-000008-02-00 PER SK-0001-13-000008-02-00.

NOTES:

1. FOR MECHANICAL SYMBOLS AND NOTES SEE DWG M1-0200.
2. DELETED
3. ADDED TO FACILITATE TESTING OF BORG/WARNER CHECK VALVES.
4. REMOVE CHECK VALVES INTERNALS, ABANDON VALVE BODIES 2AF-0327 AND 2AF-0328 IN PLACE.

TABLE

CONTROL VALVE	SAFETY CLASS 3 AIR ACCUMULATOR
2-HV-2461	CP2-CIATAF-01 CP2-CIATAF-11
2-PV-2454A	CP2-CIATAF-02 CP2-CIATAF-16
2-PV-2454B AND 2-FV-2457	CP2-CIATAF-03 CP2-CIATAF-15
2-HV-2462	CP2-CIATAF-04 CP2-CIATAF-12
2-HV-2460	CP2-CIATAF-05 CP2-CIATAF-09
2-HV-2459	CP2-CIATAF-06 CP2-CIATAF-10
2-PV-2453A	CP2-CIATAF-07 CP2-CIATAF-14
2-PV-2453B AND 2-FV-2456	CP2-CIATAF-08 CP2-CIATAF-13

FSAR FIGURE 10.4-11

THIS DRAWING CREATED ELECTRONICALLY

DRAWING 2323-M2-0206	REV CP-6
HAS BEEN SPLIT INTO THE FOLLOWING SHEETS:	
M2-0206	
M2-0206-01	
M2-0206-02	

CLASS I

(NUCLEAR SAFETY-RELATED)

SAFETY CLASS 1 — SEISMIC CATEGORY I
SAFETY CLASS 2 — CLASS 1E
SAFETY CLASS 3 — ASSOCIATED CIRCUITS

LUMINANT
CPNPP
GLEN ROSE, TEXAS

FLOW DIAGRAM
AUXILIARY FEEDWATER
SYSTEM

DWG. NO.	SH. NO.	REV.
M2-0206	-	CP-15

< FINAL PRINT >

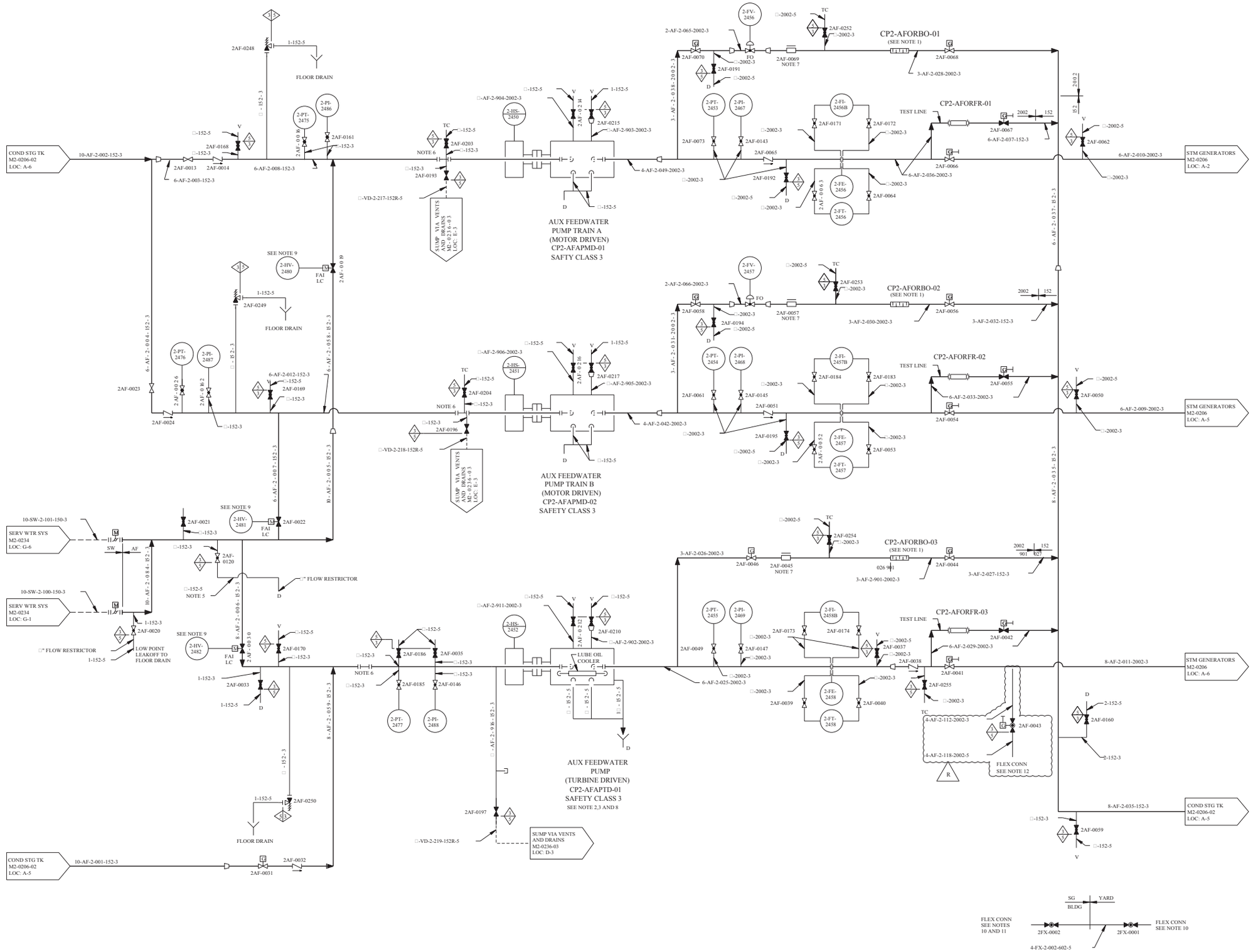

REV	DWN	CHK	APVD	REMARKS
CP-14	DLK 03-25-2015	JKG 03-25-2015		THIS DRAWING REVISED TO INCORPORATE DESIGN CHANGE FDA 2013-000008-02-00 PER SK-0002-13-000008-02-00.

NOTES:

1. BREAKDOWN ORIFICE TO BE SUPPLIED BY PUMP MANUFACTURER.
2. TURBINE-DRIVEN AUXILIARY FEEDWATER PUMP LUBRICATING OIL COOLER TO BE SUPPLIED BY PUMP MANUFACTURER.
3. AUXILIARY FEEDWATER PUMP TURBINE DRIVEN STEAM SUPPLY SYSTEM SHOWN ON DRAWING M2-0202.
4. FOR MECHANICAL SYMBOLS AND NOTES SEE DWG M1-0200.
5. HIGH-POINT LEAKOFF CONNECTION FOR DETERMINATION OF SERVICE WATER IN-LEAKAGE.
6. TEMPORARY STRAINERS CP2-AFSRTS-01 . CP2-AFSRTS-02 CP2-AFSRTS-03 ARE REQUIRED FOR SYSTEM FLUSHING. THE TEMPORARY STRAINERS CAN BE RE-INSTALLED FOR POST MAINTENANCE ACTIVITY.
7. VALVE INTERNALS REMOVED.
8. AUXILIARY FEEDWATER PUMP TURBINE LUBE OIL EQUALIZING LINE DRAIN VALVE (2AF-0326) IS LOCATED BELOW THE GOVERNOR VALVE ON THE NORTHWEST CORNER OF THE PUMP SKID. REFER TO TERRY DRAWING 1024620 FOR THE OIL PIPING SCHEMATIC.
9. VALVE CLOSED AND DE-ENERGIZED (ONLY REQUIRED IN MODES 1 THROUGH 4), REF FDA-2010-000172-82.
10. FLEX CONNECTION - WITH PIPE CAP.
11. AFW SECONDARY CONNECTION INSTALLED WITH HOSE FOLLOWING A BEYOND DESIGN BASIS EXTERNAL EVENT. FOR NORMAL OPERATION SEE NOTE 9.
12. AFW SECONDARY CONNECTION INSTALLED WITH HOSE FOLLOWING A BEYOND DESIGN BASIS EXTERNAL EVENT.

R

FSAR FIGURE 10.4-11

THIS DRAWING CREATED ELECTRONICALLY

DRAWING 2323-M2-0206 REV CP-6
HAS BEEN SPLIT INTO THE FOLLOWING SHEETS:
M2-0206
M2-0206-01
M2-0206-02

CLASS I

LUMINANT
CPNPP
GLEN ROSE, TEXAS

FLOW DIAGRAM
AUXILIARY FEEDWATER SYSTEM
PUMP TRAINS

DWG. NO. M2-0206 | SH. NO. 01 | REV. CP-14

< FINAL PRINT >

me682900.dgn M2-0206-01

$$$$$$$DATES$$$$$

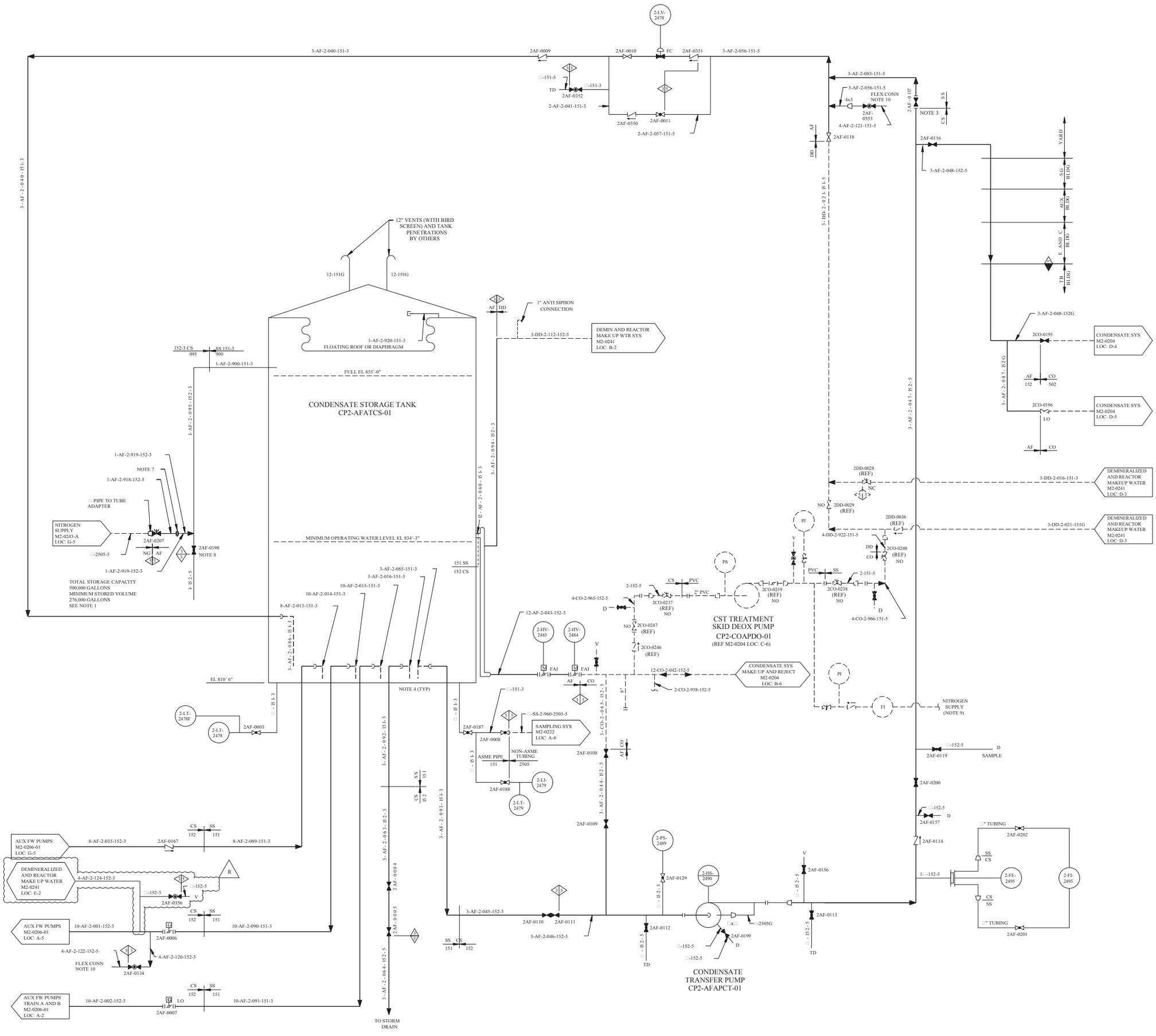

REV	DWN	CHK	APVD	REMARKS
CP-12	DLK 10-08 2014	MM 10-10 2014		THIS DRAWING REVISED TO INCORPORATE DESIGN CHANGE FDA 2013-000008-16-00 PER SK-0001-13-000008-16-00.

NOTES:

1. CONDENSATE STORAGE TANK IS SEISMIC CATEGORY 1 STRUCTURE NUCLEAR SAFETY CLASS 3.
2. FOR MECHANICAL SYMBOLS AND NOTES SEE DRAWING M1-0200.
3. CARBON STEEL WELD NECK FLANGE TO HAVE 150 LB RF RATING TO MATCH STAINLESS STEEL FLANGE ON VALVE.
4. TANK PENETRATIONS SUPPLIED BY OTHERS.
5. DELETED
6. 2CO-0196 LOCKED OPEN TO PREVENT OVER PRESSURIZATION OF 12-151G AUXILIARY FEEDWATER LINES.
7. CP2-AFORFR-12 HAS BEEN REPLACED WITH A PADDLE BLIND
8. VALVE 2AF-0198 IS USED BY CHEMISTRY FOR EVACUATION FROM UNDER THE BLADDER AND INJECTION OF NITROGEN AS REQUIRED.
9. NITROGEN SUPPLY TO CONSIST OF LOW PRESSURE DEWARS CANISTERS.
10. FLEX CONNECTION - MAY BE A PIPE CAP OR STORZ FITTING.

FSAR FIGURE 10.4-11

THIS DRAWING CREATED ELECTRONICALLY

DRAWING 2323-M2-0206 REV CP-6
HAS BEEN SPLIT INTO THE FOLLOWING SHEETS:
M2-0206
M2-0206-01
M2-0206-02

CLASS I
(NUCLEAR SAFETY-RELATED)
SAFETY CLASS 1 — SEISMIC CATEGORY I
SAFETY CLASS 2 — CLASS 1E
SAFETY CLASS 3 — ASSOCIATED CIRCUITS

LUMINANT
CPNPP
GLEN ROSE, TEXAS

FLOW DIAGRAM
AUXILIARY FEEDWATER SYSTEM
YARD LAYOUT

DWG. NO. M2-0206 | SH. NO. 02 | REV. CP-12

< FINAL PRINT >

me998000.dgn A M2-0206-02

CHKD REF 9/17/2001

SSSSSSSDATESSSSSSS

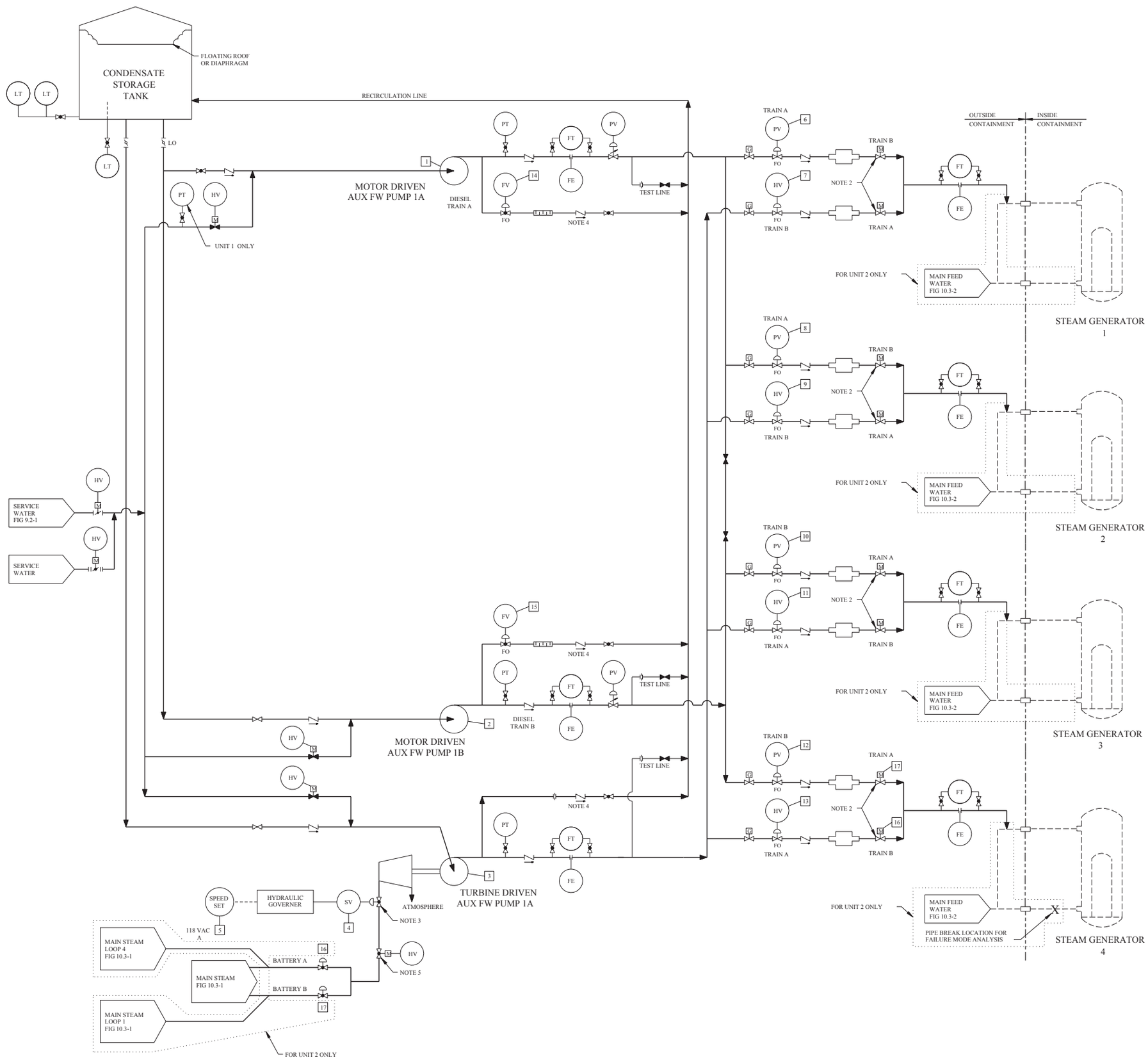

NOTES

1. NUMBERS IN ARE ITEM NUMBERS REFERENCED IN FAILURE MODE ANALYSIS.
2. NO - BLOCK VALVE UNDER ADMINISTRATIVE CONTROL (KEY SWITCH).
3. VALVE SHOWN IS THE GOVERNOR VALVE.
4. VALVE INTERNALS REMOVED.
5. TRIP THROTTLE VALVE IS LATCHED OPEN. THE MOTOR IS ABANDONED.

Amendment 102

FIGURE GENERATED FOR FSAR ONLY
BASED ON DRAWING
M1-0206

COMANCHE PEAK S.E.S.
FINAL SAFETY ANALYSIS REPORT
UNITS 1 AND 2

AUXILIARY FEEDWATER
FAILURE MODE ANALYSIS
FLOW DIAGRAM

FIGURE 10.4-12

FSAR10412.DGN

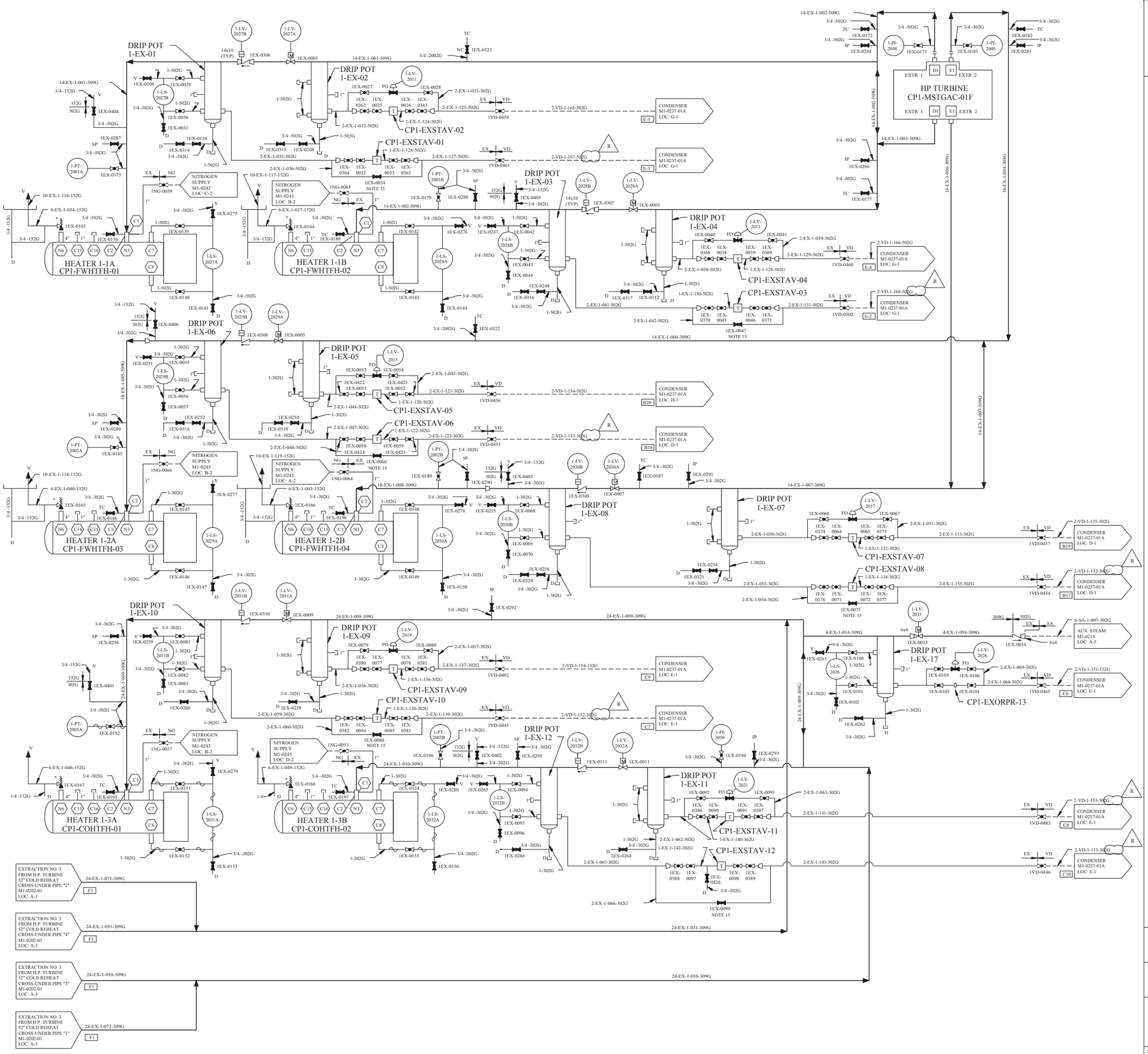

REV	DWN	CHKD	APVD	REMARKS
CP-20	JRMC 11-16 2006	DJL 11-17 2006		THIS DRAWING REVISED TO INCORPORATE DESIGN CHANGE FDA 2004-003813-01-00 PER SK-0003-04-003813-01-00.

NOTES:

1. 1/2 " PIPING USED FOR RADIOACTIVE TRACER SAMPLE AND INJECTION LINES IN THE CONDENSER NECK SHALL BE SCH XXS.
2. THE EXTRACTION STEAM SYSTEM IS NON-NUCLEAR SAFETY CLASS.
3. ALL INSTRUMENTATION, DRAINS AND TEST CONNECTION VALVES ARE 3/4 " UNLESS OTHERWISE NOTED.
4. FEEDWATER HEATER SHELL SIDE RELIEF VALVES (IDENTIFIED BY *) TO BE SUPPLIED BY STRUTHERS WELLS CORP.
5. RADIOACTIVE TRACER INJECTION POINTS (INDICATED AS I.P.) AND SAMPLING POINTS (INDICATED AS S.P.) WILL BE 3/4 " C.S. EXCEPT FOR PIPING AND VALVES AT CONDENSER NECK WILL BE 1/2 " S.S.
6. SYSTEM ORIFICES ARE PLUG RESISTANT.
7. FEEDWATER HEATER EXTRACTION STEAM INLET NOZZLES ARE FITTED WITH PRESSURE TEST AND TEST WELL CONNECTIONS. ALL CONNECTIONS NOT USED WILL BE CAPPED AS INDICATED.
8. FEEDWATER HEATER CUSTOMER PIPE CONNECTIONS, AS SUPPLIED BY STRUTHERS WELLS CORP. ARE INDICATED BY
9. CUSTOMER'S TB-PIPE CONNECTIONS, AS SUPPLIED BY ACPSI, ARE INDICATED BY
10. FOR MECHANICAL SYMBOLS AND NOTES SEE DRAWING M1-0200.
11. CUSTOMER'S CONDENSER PIPE CONNECTIONS AS SUPPLIED BY WESTINGHOUSE, ARE INDICATED BY
12. REPRESENTS DRAIN CONNECTIONS SHOWN ON F.D. M1-0237-01.
13. DELETED
14. UNLESS OTHERWISE NOTED, ALL DRAINS COLLECTED BY LOCAL DRAIN SYSTEM.
15. VALVE MAY BE PARTIALLY OPEN.

FSAR FIGURE 10.4-13

THIS DRAWING CREATED ELECTRONICALLY

DRAWING 2323-M1-0205 REV CP-5
HAS BEEN SPLIT INTO THE FOLLOWING SHEETS:
M1-0205
M1-0205 SH A

NON-SAFETY

LUMINANT
CPSES
GLEN ROSE, TEXAS

FLOW DIAGRAM
EXTRACTION STEAM SYSTEM

DWG. NO. M1-0205 | SH. NO. - | REV. CP-20

FINAL PRINT

me839700.dgn A M1-0205

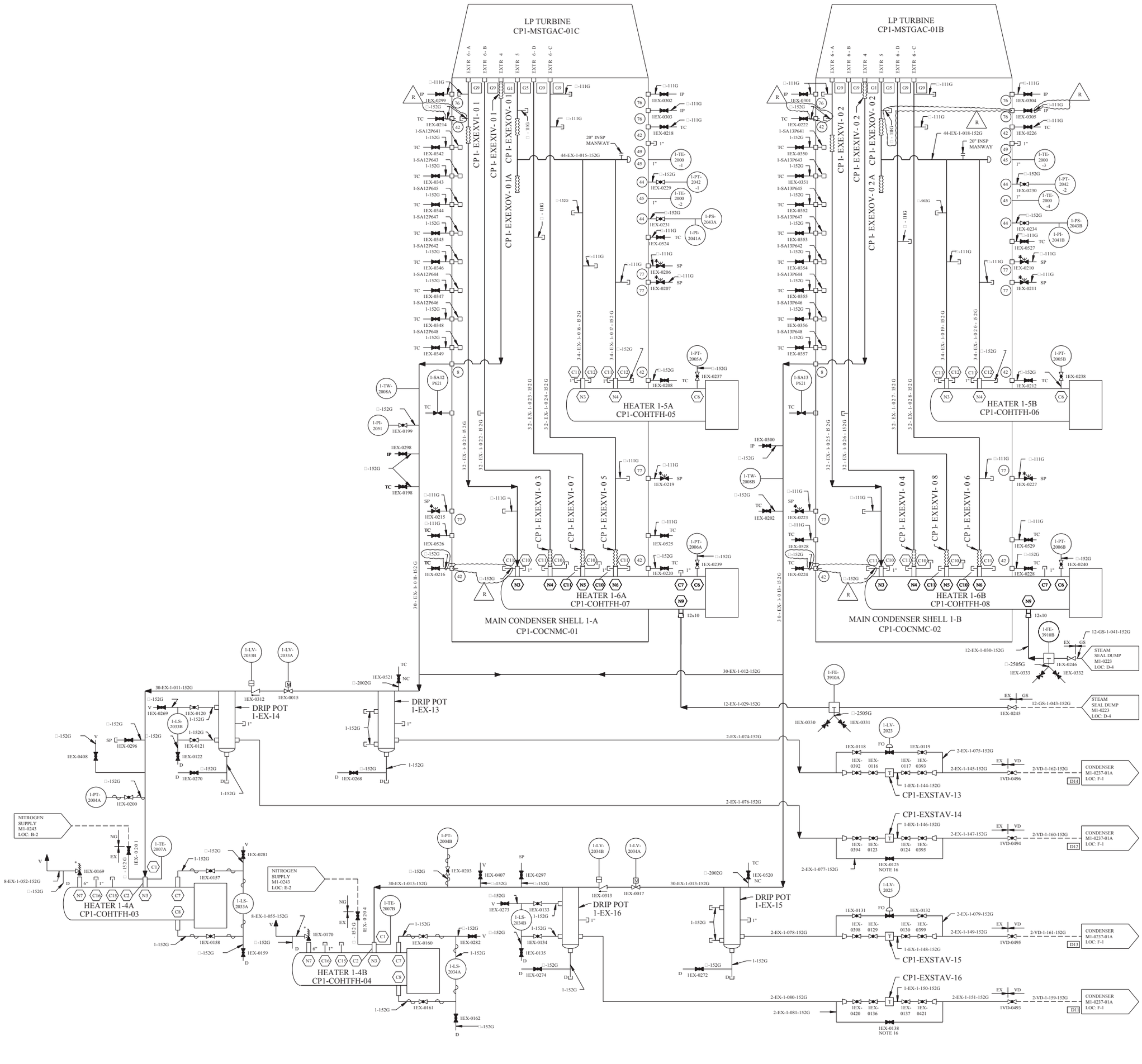

REV	DWN	CHKD	APVD	REMARKS
CP-21	JRMC 08-21-2012	DLK 09-12-2012		THIS DRAWING REVISED TO INCORPORATE DESIGN CHANGE FDA 2012-000114-01-00 PER SK-0001-12-000114-01-00.

NOTES:

1. □" PIPING USED FOR RADIOACTIVE TRACER SAMPLE AND INJECTION LINES IN THE CONDENSER NECK SHALL BE SCH XXS.
2. THE EXTRACTION STEAM SYSTEM IS NON-NUCLEAR SAFETY CLASS.
3. ALL INSTRUMENTATION, DRAINS AND TEST CONNECTION VALVES ARE □" UNLESS OTHERWISE NOTED.
4. FEEDWATER HEATER SHELL SIDE RELIEF VALVES (IDENTIFIED BY *) TO BE SUPPLIED BY STRUTHERS WELLS CORP.
5. RADIOACTIVE TRACER INJECTION POINTS (INDICATED AS IP) AND SAMPLING POINTS (INDICATED AS SP) WILL BE □" CS EXCEPT FOR PIPING AND VALVES AT CONDENSER NECK WILL BE □" SS.
6. SYSTEM ORIFICES ARE PLUG RESISTANT.
7. FEEDWATER HEATER EXTRACTION STEAM INLET NOZZLES ARE FITTED WITH PRESSURE TEST AND TEST WELL CONNECTIONS. ALL CONNECTIONS NOT USED WILL BE CAPPED AS INDICATED.
8. FEEDWATER HEATER CUSTOMER PIPE CONNECTIONS, AS SUPPLIED BY STRUTHERS WELLS CORP. ARE INDICATED BY .
9. CUSTOMER'S TB-PIPE CONNECTIONS, AS SUPPLIED BY ACPSI, ARE INDICATED BY
10. FOR MECHANICAL SYMBOLS AND NOTES SEE DRAWING M1-0200.
11. CUSTOMER'S CONDENSER PIPE CONNECTIONS AS SUPPLIED BY WESTINGHOUSE, ARE INDICATED BY .
12. REPRESENTS DRAIN CONNECTIONS SHOWN ON FD M1-0237-01.
13. DELETED
14. UNLESS OTHERWISE NOTED, ALL DRAINS COLLECTED BY LOCAL DRAIN SYSTEM.
15. FOR VENDOR TEST CONNECTIONS ON LP TURBINE EXTRACTION STEAM LINES REFER TO VENDOR DWG (UPC) 54-401-128-401.
16. VALVE MAY BE PARTIALLY OPEN.

FSAR FIGURE 10.4-13

THIS DRAWING CREATED ELECTRONICALLY

DRAWING 2323-M1-0205 REV CP-5
HAS BEEN SPLIT INTO THE FOLLOWING SHEETS:
M1-0205
M1-0205-A

NON-SAFETY

LUMINANT
CPNPP
GLEN ROSE, TEXAS

FLOW DIAGRAM
EXTRACTION STEAM SYSTEM

DWG. NO. M1-0205 | SH. NO. A | REV. CP-21

< FINAL PRINT >

me103880.dgn A M1-0205-A

$$$$$$$DATE$$$$$$

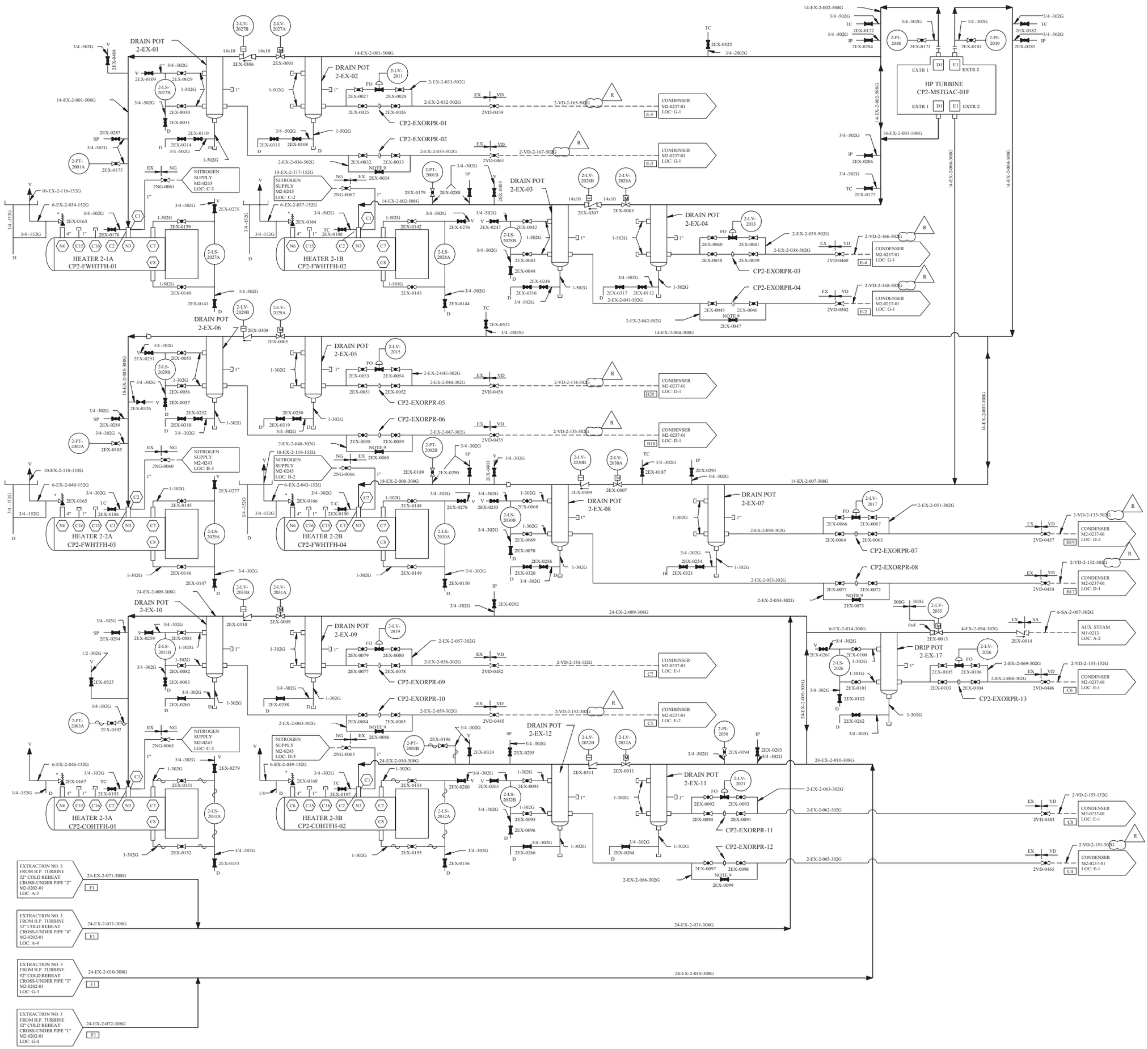

REV	DWN	CHKD	APVD	REMARKS
CP-13	SM 11-19 2009	JRMC 11-19 2009		THIS DRAWING REVISED TO INCORPORATE DESIGN CHANGE FDA 2004-003813-01-00 PER SK-0001-04-003813-01-00.

NOTES:

1. FEEDWATER HEATER SHELL SIDE RELIEF VALVES (IDENTIFIED BY *) TO BE SUPPLIED BY STRUTHERS WELLS CORP.
2. SYSTEM ORIFICES ARE PLUG RESISTANT.
3. FEEDWATER HEATER EXTRACTION STEAM INLET NOZZLES ARE FITTED WITH PRESSURE TEST AND TEST WELL CONNECTIONS. ALL CONNECTIONS NOT USED WILL BE CAPPED AS INDICATED.
4. FEEDWATER HEATER CUSTOMER PIPE CONNECTIONS, AS SUPPLIED BY STRUTHERS WELLS ARE INDICATED BY .
5. CUSTOMER'S TB-PIPE CONNECTIONS, AS SUPPLIED BY ACPSI, ARE INDICATED BY
6. FOR MECHANICAL SYMBOLS AND NOTES SEE DRAWING M1-0200.
7. REPRESENTS DRAIN CONNECTIONS SHOWN ON M2-0237-01.
8. UNLESS OTHERWISE NOTED, ALL DRAINS COLLECTED BY LOCAL DRAIN SYSTEM.
9. VALVE MAY BE PARTIALLY OPEN.

FSAR FIGURE 10.4-13

THIS DRAWING CREATED ELECTRONICALLY

DRAWING 2323-M2-0205 REV CP-4
HAS BEEN SPLIT INTO THE FOLLOWING SHEETS:
M2-0205
M2-0205 SH A

NON-SAFETY

LUMINANT
CPNPP
GLEN ROSE, TEXAS

FLOW DIAGRAM
EXTRACTION STEAM SYSTEM

DWG: NO. M2-0205 | SH. NO. - | REV. CP-13

me962700.dgn A M2-0205 < FINAL PRINT >

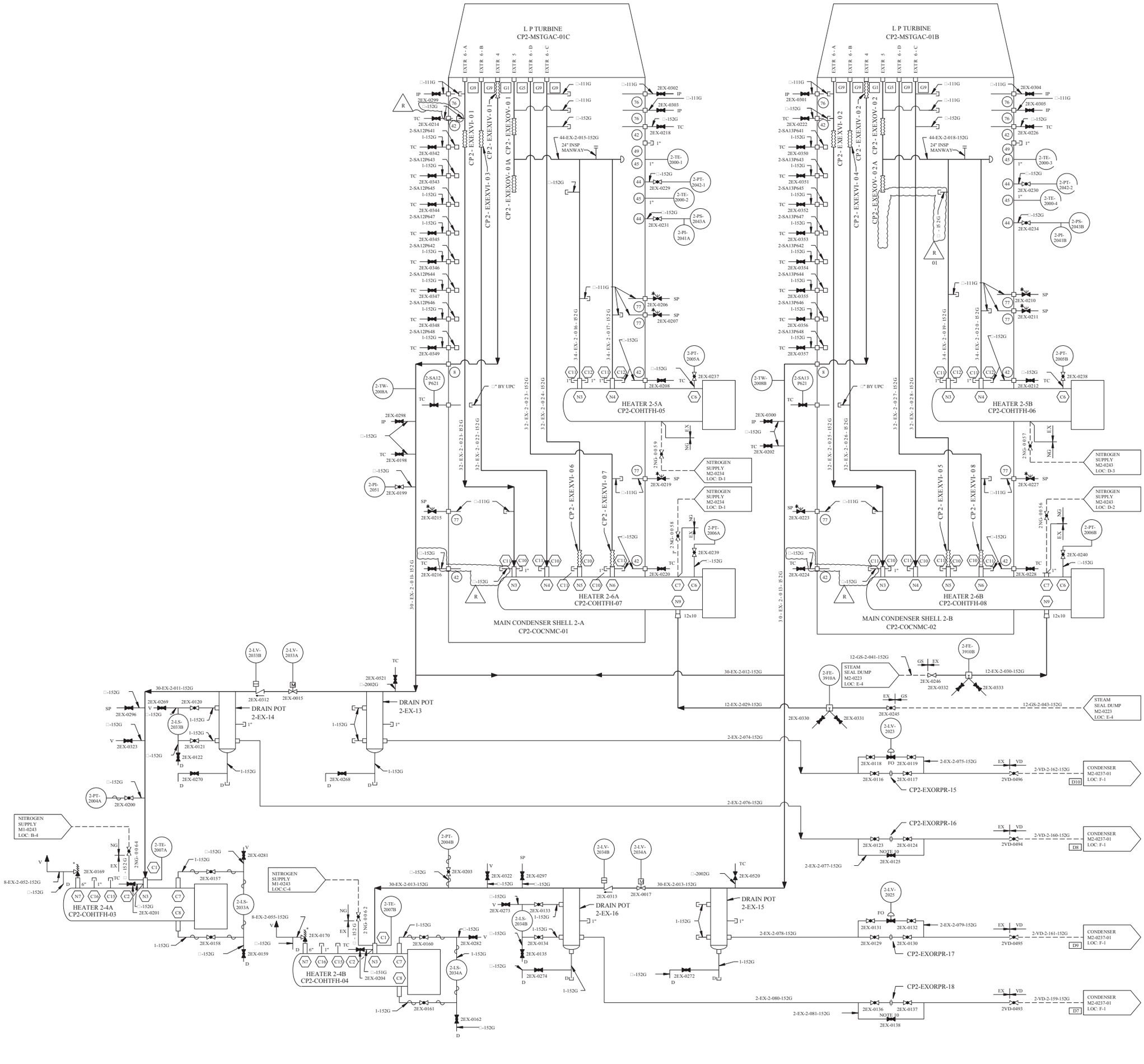

REV	DWN	CHKD	APVD	REMARKS
CP-14	SM 10-13 2012	KM 10-13 2012		THIS DRAWING REVISED TO INCORPORATE DESIGN CHANGE: FDA 2012-000114-01-01 PER SK-0002-12-000114-01-01.

NOTES:

1. FEEDWATER HEATER SHELL SIDE RELIEF VALVES (IDENTIFIED BY *) TO BE SUPPLIED BY STRUTHERS WELLS CORP.
2. SYSTEM ORIFICES ARE PLUG RESISTANT.
3. FEEDWATER HEATER EXTRACTION STEAM INLET NOZZLES ARE FITTED WITH PRESSURE TEST AND TEST WELL CONNECTIONS. ALL CONNECTIONS NOT USED WILL BE CAPPED AS INDICATED.
4. FEEDWATER HEATER CUSTOMER PIPE CONNECTIONS, AS SUPPLIED BY STRUTHERS WELLS CORP. ARE INDICATED BY .
5. CUSTOMER'S TB-PIPE CONNECTIONS, AS SUPPLIED BY ACPSI, ARE INDICATED BY
6. FOR MECHANICAL SYMBOLS AND NOTES SEE DRAWING M1-0200.
7. CUSTOMER'S CONDENSER PIPE CONNECTIONS AS SUPPLIED BY WESTINGHOUSE, ARE INDICATED BY .
8. REPRESENTS DRAIN CONNECTIONS SHOWN ON M2-0237-01.
9. UNLESS OTHERWISE NOTED, ALL DRAINS COLLECTED BY LOCAL DRAIN SYSTEM.
10. VALVE MAY BE PARTIALLY OPEN.

FSAR FIGURE 10.4-13

THIS DRAWING CREATED ELECTRONICALLY

DRAWING 2323-M2-0205	REV CP-4
HAS BEEN SPLIT INTO THE FOLLOWING SHEETS:	
M2-0205	
M2-0205-A	

NON-SAFETY

LUMINANT
CPNPP
GLEN ROSE, TEXAS

FLOW DIAGRAM
EXTRACTION STEAM SYSTEM

DWG. NO.	SH. NO.	REV.
M2-0205	A	CP-14

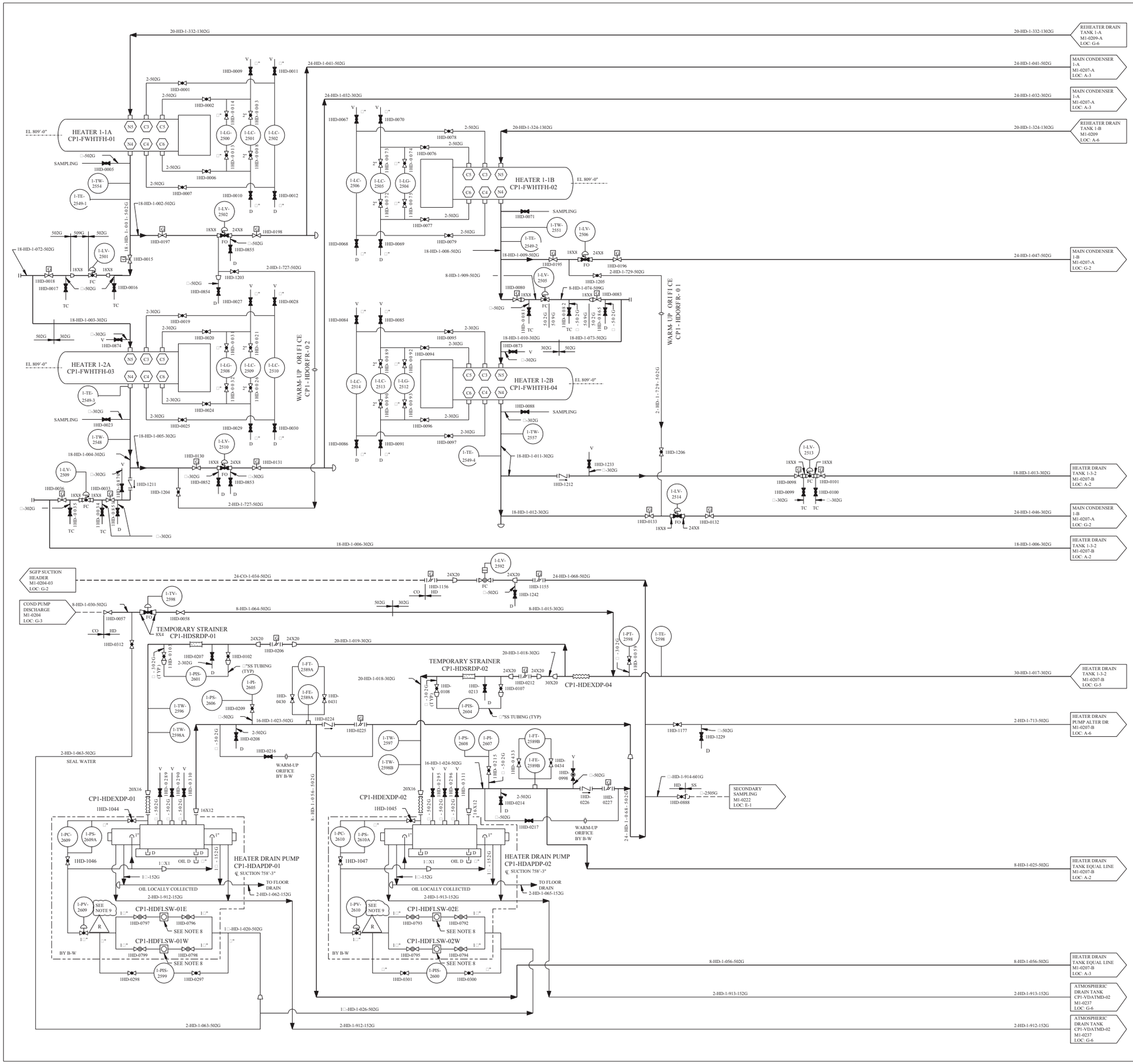

REV	DWN	CHKD	APVD	REMARKS
CP-28	JBMC 05-21-2014	DJL 05-21-2014		THIS DRAWING REVISED TO INCORPORATE DESIGN CHANGE FDA-2014-000131-01-00 PER SK-0001-14-000131-01-00.

NOTES:

1. * BY OTHERS.
2. HEATER CUSTOMER PIPE CONNECTIONS AS SUPPLIED BY STRUTHERS WELLS ARE INDICATED BY .
3. SAMPLING CONNECTIONS ARE FOR THE TURBINE HEAT RATE TEST.
4. FOR MECHANICAL SYMBOLS AND NOTES SEE DRAWING M1-0200.
5. REPRESENTS CONDENSER PENETRATION.
6. ALL I&C CHANNEL NUMBERS WILL HAVE PREFIX I.E. 1-TE-2323 .
7. UNLESS OTHERWISE NOTED, ALL DRAINS TO BE COLLECTED BY LOCAL DRAIN SYSTEM TO TURBINE BUILDING SUMP.
8. SEAL WATER INJECTION EAST AND WEST FILTERS WILL BE ALIGNED PER PROCEDURE SOP-308B.
9. 1-PV-2609 AND 1-PV-2610 DO NOT FULLY CLOSE DUE TO MECHANICAL STOP TO MAINTAIN MINIMUM FLOW (REF FDA-2014-000131-01).

R

FSAR FIGURE 10.4-14

THIS DRAWING CREATED ELECTRONICALLY

DRAWING M1-0207 REV CP-21
HAS BEEN SPLIT INTO THE FOLLOWING SHEETS:
M1-0207
M1-0207-B

DRAWING 2323-M1-0207 REV CP-5
HAS BEEN SPLIT INTO THE FOLLOWING SHEETS:
M1-0207
M1-0207-A

NON-SAFETY

LUMINANT
CPNPP
GLEN ROSE, TEXAS

FLOW DIAGRAM
HEATER DRAINS SYSTEM

DWG. NO. M1-0207 | SH. NO. - | REV. CP-28

me104350.dgn M1-0207 < FINAL PRINT >

$$$$$$$$$DATE$$$$$$$$$

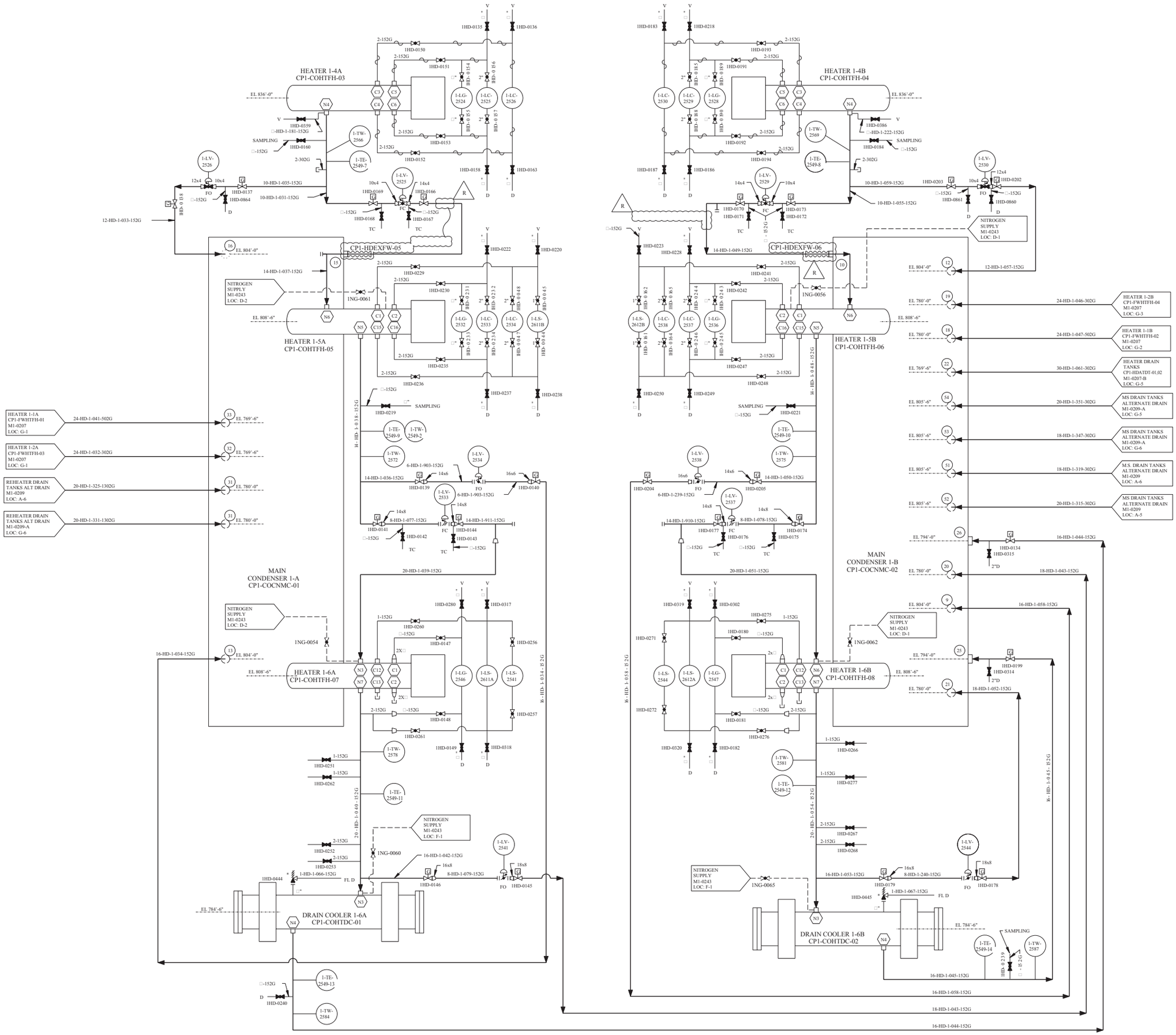

REV	DWN	CHKD	APVD	REMARKS
CP-14	DEK 09-17-2012	MM 09-18-2012		THIS DRAWING REVISED TO INCORPORATE DESIGN CHANGE FDA 2012-000087-02-00 PER SK-0001-12-000087-02-00.

NOTES:

1. * BY OTHERS.
2. HEATER CUSTOMER PIPE CONNECTIONS AS SUPPLIED BY STRUTHERS WELLS ARE INDICATED BY ⬡
3. SAMPLING CONNECTIONS ARE FOR THE TURBINE HEAT RATE TEST.
4. FOR MECHANICAL SYMBOLS AND NOTES SEE DRAWING M1-0200.
5. ◯ REPRESENTS CONDENSER PENETRATION.
6. UNLESS OTHERWISE NOTED, ALL DRAINS TO BE COLLECTED BY LOCAL DRAIN SYSTEM TO TURBINE BUILDING SUMP.

FSAR FIGURE 10.4-14

THIS DRAWING CREATED ELECTRONICALLY

DRAWING 2323-M1-0207	REV CP-5
HAS BEEN SPLIT INTO THE FOLLOWING SHEETS:	
M1-0207	
M1-0207-A	

NON-SAFETY

LUMINANT
CPNPP
GLEN ROSE, TEXAS

FLOW DIAGRAM
HEATER DRAINS SYSTEM

DWG. NO.	SH. NO.	REV.
M1-0207	A	CP-14

< FINAL PRINT >

REV	DWN	CHKD	APVD	REMARKS
CP-6	DLK 03-18-2010	MM 03-18-2010		THIS DRAWING REVISED TO INCORPORATE DESIGN CHANGE FDA 2010-000027-01-00 PER SK-0003-10-000027-01-00.

NOTES:

1. HEATER CUSTOMER PIPE CONNECTIONS AS SUPPLIED BY STRUTHERS WELLS ARE INDICATED BY .
2. SAMPLING CONNECTIONS ARE FOR THE TURBINE HEAT RATE TEST.
3. FOR MECHANICAL SYMBOLS AND NOTES SEE DRAWING M1-0200.
4. ALL I&C CHANNEL NUMBERS WILL HAVE PREFIX. I.E. 1-TE-2323 .
5. UNLESS OTHERWISE NOTED, ALL DRAINS TO BE COLLECTED BY LOCAL DRAIN SYSTEM TO TURBINE BUILDING SUMP.

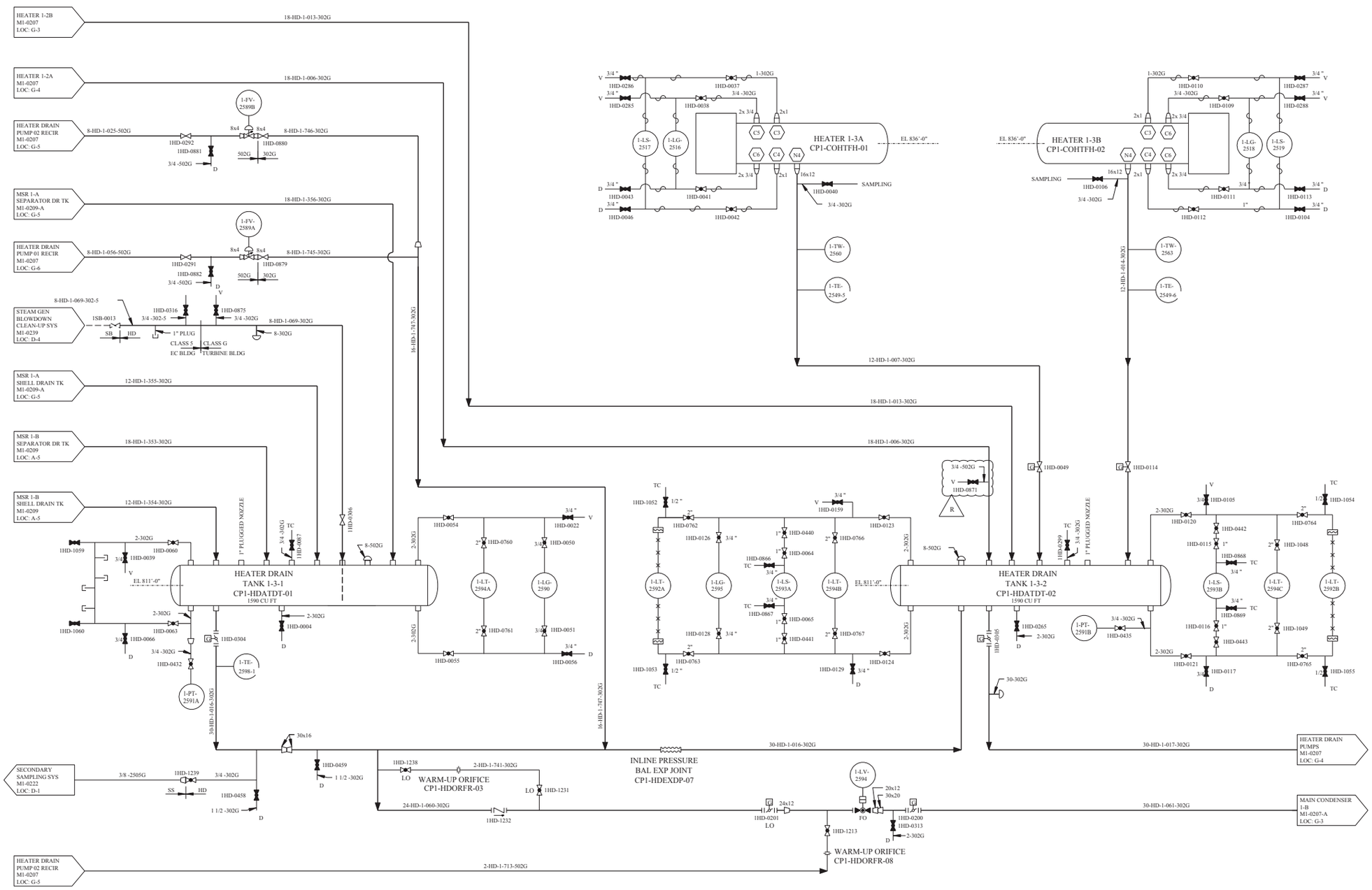

DRAWING M1-0207 REV CP-21
HAS BEEN SPLIT INTO THE FOLLOWING SHEETS:
M1-0207
M1-0207-B

FSAR FIGURE 10.4-14

THIS DRAWING CREATED ELECTRONICALLY

CLASS II

LUMINANT
CPNPP
GLEN ROSE, TEXAS

FLOW DIAGRAM
HEATER DRAINS SYSTEM

DWG. NO. M1-0207 | SH. NO. B | REV. CP-6

FINAL PRINT

me970900.dgn M1-0207-B

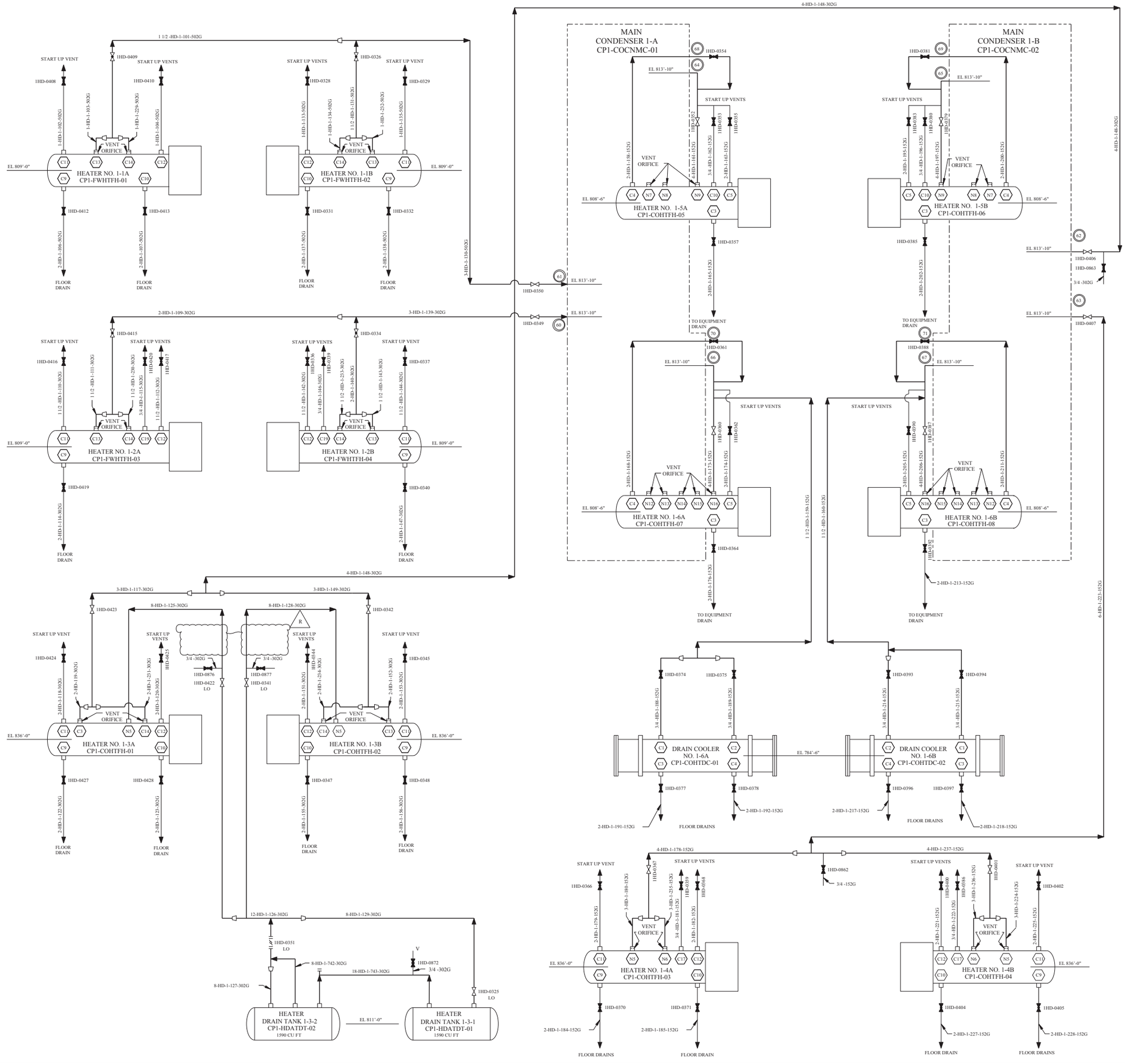

REV	DWN	CHKD	APVD	REMARKS
CP-13	DLK 03-19-2008	MM 03-20-2008		THIS DRAWING REVISED TO INCORPORATE DESIGN CHANGE FDA 2006-003080-12-00 PER SK-0018-06-003080-12-00

NOTES:

1. FOR NOZZLE CONNECTION SYMBOLS REFER TO THE STRUTHERS WELLS DRAWINGS.

HEATER NO.	1-1A & 1-1B:	1-74-06-32419D1
HEATER NO.	1-2A & 1-2B:	1-74-06-32420D1
HEATER NO.	1-3A & 1-3B:	1-74-06-32421D1
HEATER NO.	1-4A & 1-4B:	1-74-06-32422D1
HEATER NO.	1-5A & 1-5B:	1-74-06-32423D1
HEATER NO.	1-6A & 1-6B:	1-74-06-32424D1
HEATER NO.	1-6A & 1-6B:	DRAIN COOLERS: 3-74-06-324125D1

2. DELETED (R)

REFERENCES:

FOR GENERAL NOTES & SYMBOLS SEE DRAWING M1-0200.

(○) REPRESENTS PENETRATION TO CONDENSER.

FSAR FIGURE 10.4-14

THIS DRAWING CREATED ELECTRONICALLY

NON-SAFETY

LUMINANT
CPNPP
GLEN ROSE, TEXAS

FLOW DIAGRAM
HEATER DRAINS SYSTEM

DWG. NO. M1-0208 | SH. NO. - | REV. CP-13

< FINAL PRINT >

me901900.dgn A M1-0208

$$$$$$$DATE$$$$$$

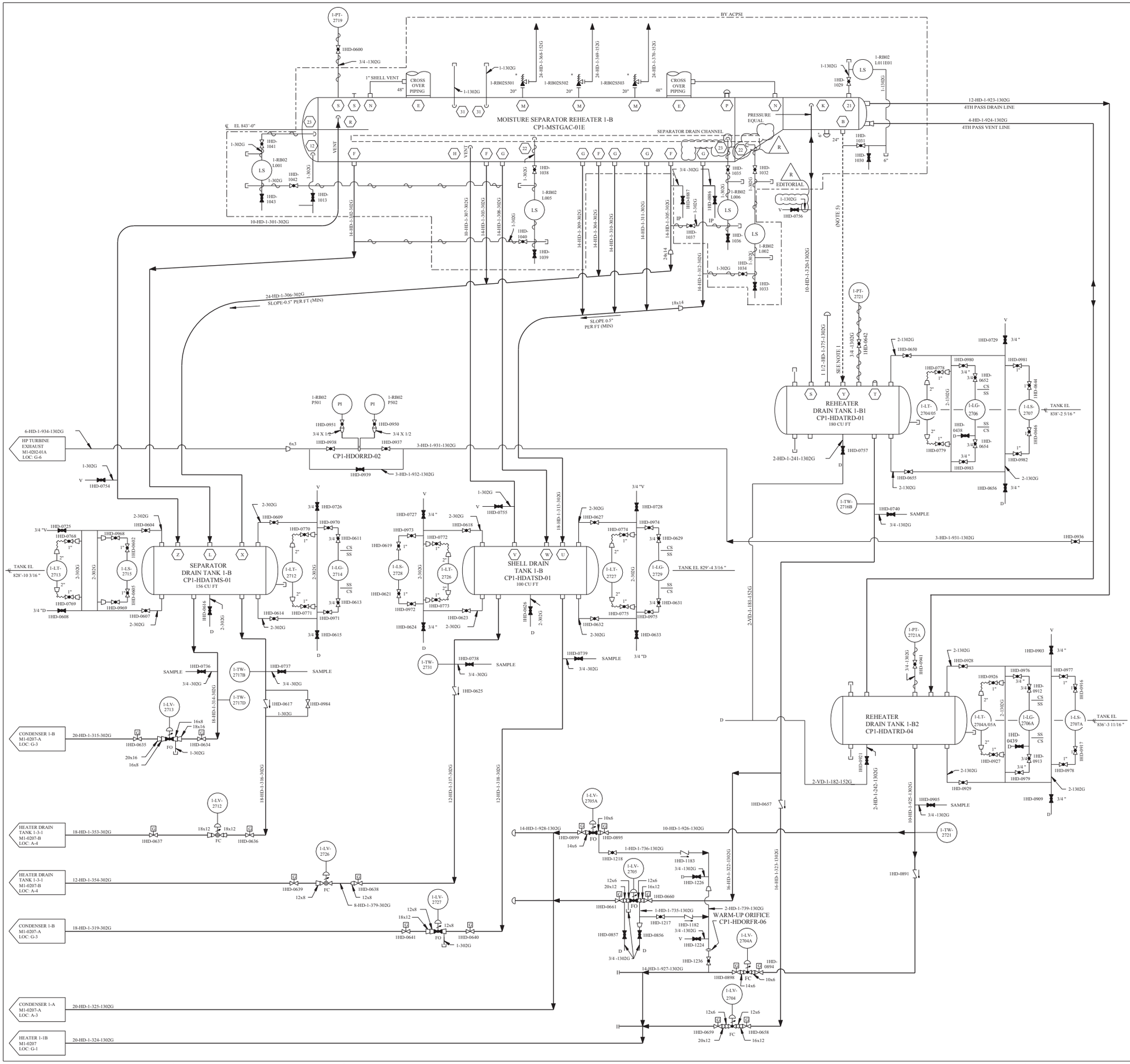

REV	DWN	CHKD	APVD	REMARKS
CP-33	DGK 04-02 2009	MHI 04-02 2009		THIS DRAWING REVISED TO INCORPORATE DESIGN CHANGE FDA 2009-000992-01-00 PER SK-0001-09-000992-01-00. EDITORIAL CHANGE AS NOTED.

NOTES:

1. ALL DRAINS ENTERING DRAIN TANKS ENTER AT THE TOP OF THE TANK.
2. DRAIN TANKS DESIGNED TO ASME BOILER AND PRESSURE VESSEL CODE SECTION VIII, DIVISION 1.
3. FOR MECHANICAL SYMBOLS AND NOTES SEE DRAWING M1-0200.
4. * BY ACPSI.
5. NOZZLE TO NOZZLE CONNECTION.
6. DELETED
7. ◯ REPRESENTS MSR AND DRAIN TANKS PENETRATION PER SOUTHWESTERN ENGINEERING DRAWING DM-94191.
8. EACH REHEATER DRAIN TANK DRAIN INLET NOZZLE IS PROVIDED WITH ONE 1" SIZE PIPE COUPLING FOR A-CPSI SUPPLIED MSR HEMI-HEAD LEVEL TRANSMITTER.
9. UNLESS OTHERWISE NOTED ALL DRAINS COLLECTED BY LOCAL DRAIN SYSTEM.

FSAR FIGURE 10.4-14

THIS DRAWING CREATED ELECTRONICALLY

DRAWING 2323-M1-0209	REV CP-2
HAS BEEN SPLIT INTO THE FOLLOWING SHEETS:	
M1-0209	
M1-0209-A	

NON–SAFETY

LUMINANT
CPNPP
GLEN ROSE, TEXAS

FLOW DIAGRAM
HEATER DRAINS SYSTEM

DWG. NO.	SH. NO.	REV.
M1-0209	-	CP-33

REF CKD 03/07/02 CP-31

$$$$$$$DATE$$$$$$

me927600.dgn M1-0209

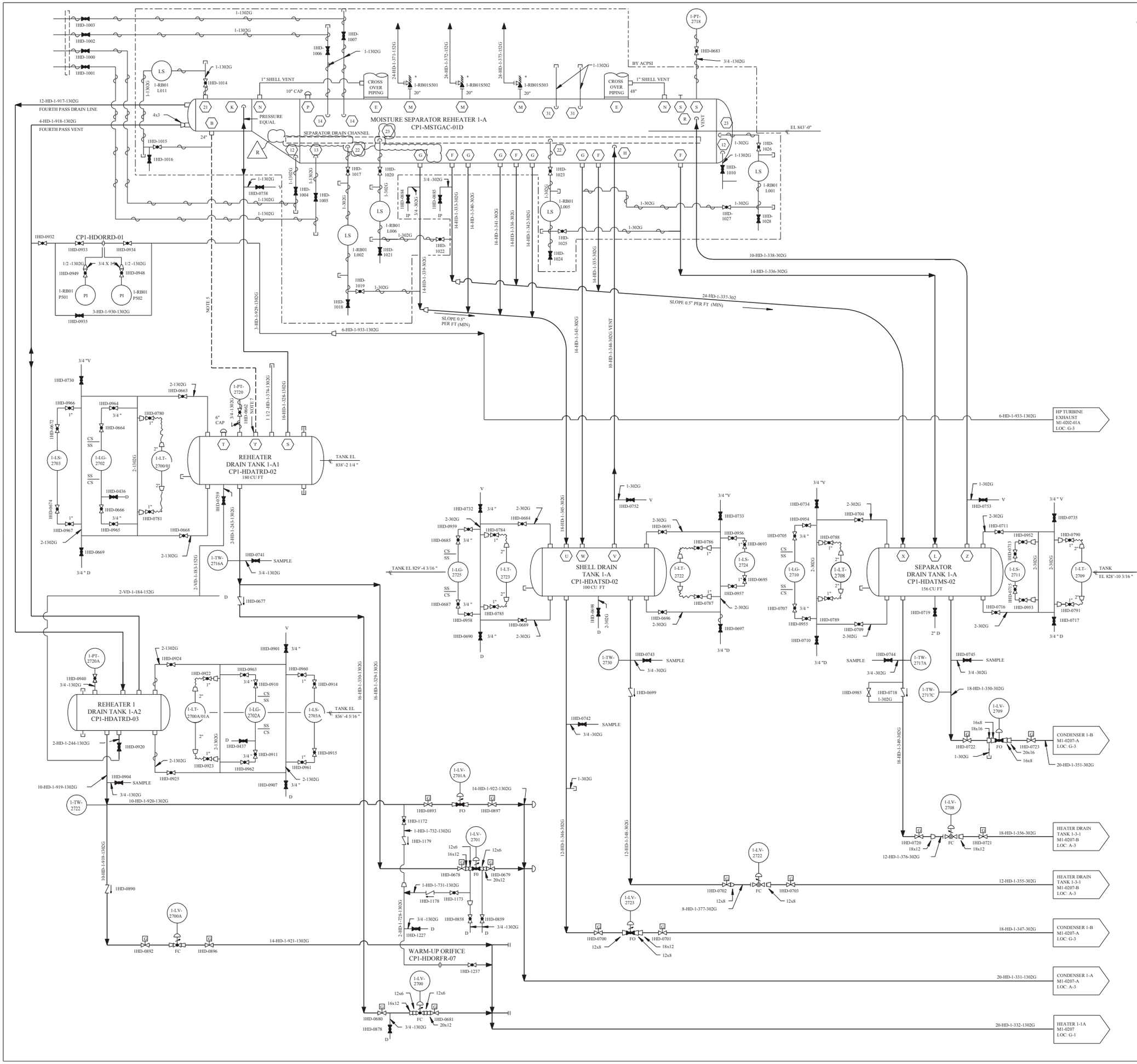

REV	DWN	CHKD	APVD	REMARKS
CP-26	DGK 04-02 2009	MEB 04-02 2009		THIS DRAWING REVISED TO INCORPORATE DESIGN CHANGE FDA 2009-000992-01-00 PER SK-0002-09-000992-01-00.

NOTES:

1. ALL DRAINS ENTERING DRAIN TANKS ENTER AT THE TOP OF THE TANK.
2. DRAIN TANKS DESIGNED TO ASME BOILER AND PRESSURE VESSEL CODE SECTION VIII, DIVISION 1.
3. FOR MECHANICAL SYMBOLS AND NOTES SEE DRAWING M1-0200.
4. * BY UPC.
5. NOZZLE TO NOZZLE CONNECTION.
6. DELETED
7. REPRESENTS MSR AND DRAIN TANKS PENETRATION PER SOUTHWESTERN ENGINEERING DRAWING NUMBER DM-94191.
8. EACH REHEATER DRAIN TANK DRAIN INLET NOZZLE IS PROVIDED WITH ONE 1" SIZE PIPE COUPLING FOR A-CPSI SUPPLIED MSR HEMI-HEAD LEVEL TRANSMITTER.
9. UNLESS OTHERWISE NOTED ALL DRAINS COLLECTED BY LOCAL DRAIN SYSTEM.

FSAR FIGURE 10.4-14

THIS DRAWING CREATED ELECTRONICALLY

DRAWING 2323-M1-0209 REV CP-2
HAS BEEN SPLIT INTO THE FOLLOWING SHEETS:
M1-0209
M1-0209-A

NON-SAFETY

LUMINANT
CPNPP
GLEN ROSE, TEXAS

FLOW DIAGRAM
HEATER DRAINS SYSTEM

DWG. NO. M1-0209 | SH. NO. A | REV. CP-26

REF CKD 03/07/02 CP-25

$$$$$$$DATE$$$$$$$

me927500.dgn M1-0209-A

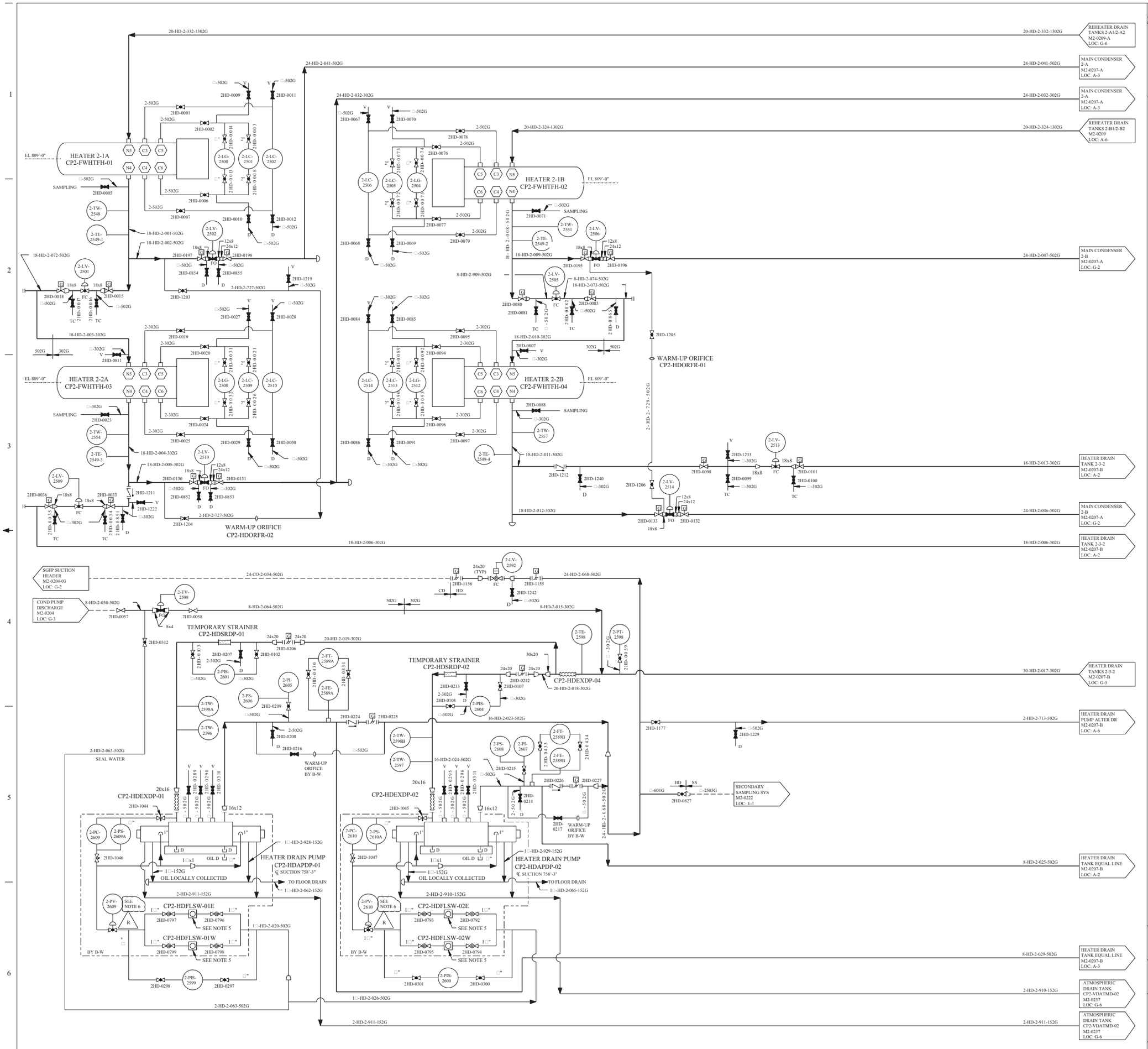

REV	DWN	CHK	APVD	REMARKS
CP-19	JRMC 05-21-2014	DJL 05-21-2014		THIS DRAWING REVISED TO INCORPORATE DESIGN CHANGE FDA-2014-000131-01-00 PER SK-0003-14-000131-01-00.

NOTES:

1. * BY OTHERS.
2. HEATER CUSTOMER PIPE CONNECTIONS AS SUPPLIED BY STRUTHERS WELLS ARE INDICATED BY .
3. SAMPLING CONNECTIONS ARE FOR THE TURBINE HEAT RATE TEST.
4. FOR MECHANICAL SYMBOLS AND NOTES SEE DRAWING M1-0200.
5. SEAL WATER INJECTION EAST AND WEST FILTERS WILL BE ALIGNED PER PROCEDURE SOP-308B.
6. 2-PV-2609 AND 2-PV-2610 DO NOT FULLY CLOSE DUE TO MECHANICAL STOP TO MAINTAIN MINIMUM FLOW (REF FDA-2014-000131-01).

R

FSAR FIGURE 10.4-14

THIS DRAWING CREATED ELECTRONICALLY

DRAWING M2-0207 REV CP-13
HAS BEEN SPLIT INTO THE FOLLOWING SHEETS:
M2-0207
M2-0207-B

DRAWING 2323-M2-0207 REV CP-2
HAS BEEN SPLIT INTO THE FOLLOWING SHEETS:
M2-0207
M2-0207-A

NON-SAFETY

LUMINANT
CPNPP
GLEN ROSE, TEXAS

FLOW DIAGRAM
HEATER DRAINS SYSTEM

DWG. NO. M2-0207 | SH. NO. - | REV. CP-19

< FINAL PRINT >

me101960.dgn M2-0207

$$$$$$$DATE$$$$$$$ REF CHK 12/05/97 CP-B

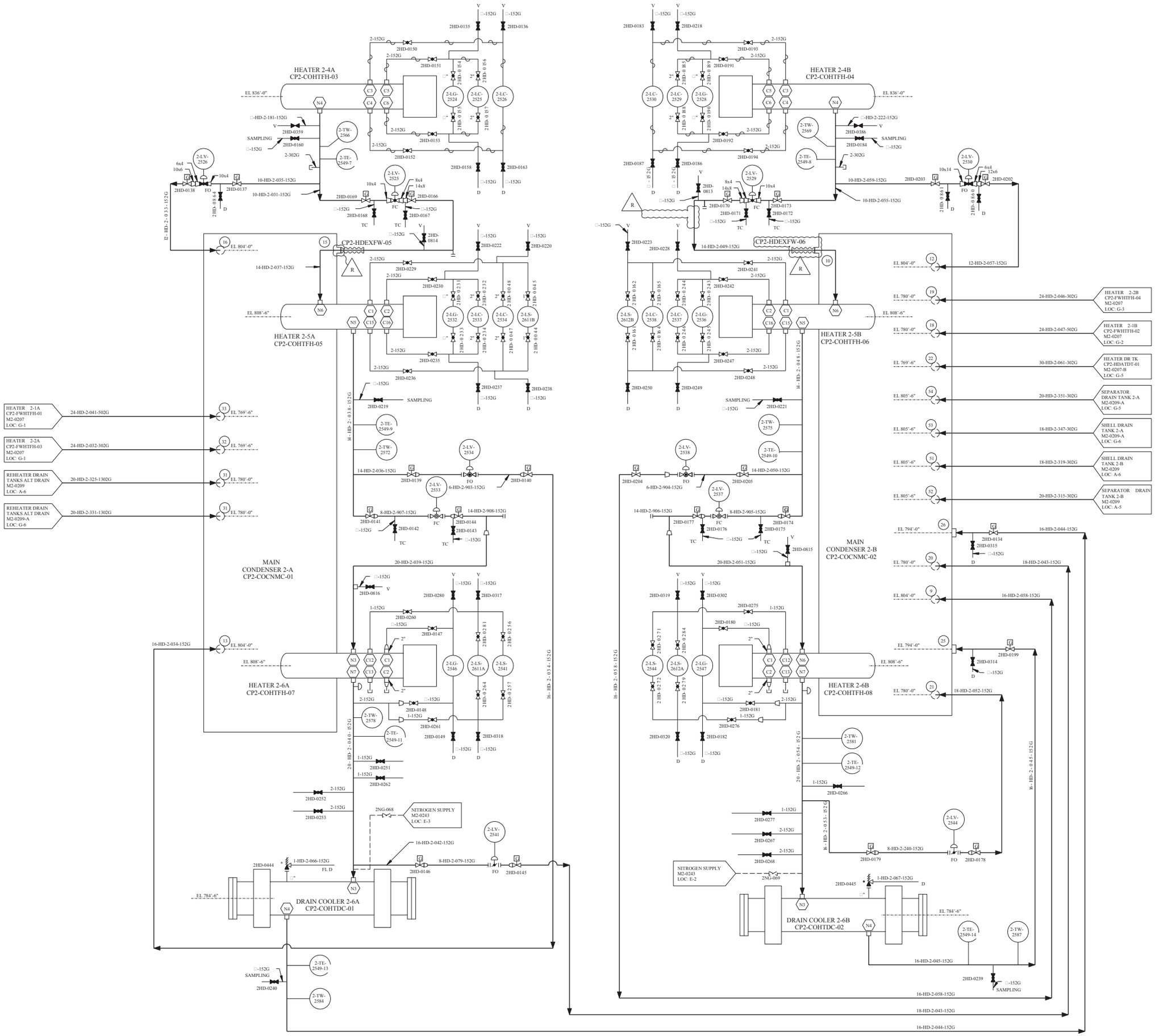

REV	DWN	CHKD	APVD	REMARKS
CP-13	DCK 07-16-2012	MM 07-16-2012		THIS DRAWING REVISED TO INCORPORATE DESIGN CHANGE FDA 2012-000087-01-00 PER SK-0003-12-000087-01-00.

NOTES:

1. * BY OTHERS.
2. HEATER CUSTOMER PIPE CONNECTIONS AS SUPPLIED BY STRUTHERS WELLS ARE INDICATED BY ⬡
3. SAMPLING CONNECTIONS ARE FOR THE TURBINE HEAT RATE TEST.
4. FOR MECHANICAL SYMBOLS AND NOTES SEE DRAWING M1-0200.
5. ◯ REPRESENTS CONDENSER PENETRATION.

FSAR FIGURE 10.4-14

THIS DRAWING CREATED ELECTRONICALLY

DRAWING 2323-M2-0207	REV CP-2
HAS BEEN SPLIT INTO THE FOLLOWING SHEETS:	
M2-0207	
M2-0207-A	

NON-SAFETY

LUMINANT
CPNPP
GLEN ROSE, TEXAS

FLOW DIAGRAM
HEATER DRAINS SYSTEM

DWG. NO.	SH. NO.	REV.
M2-0207	A	CP-13

< FINAL PRINT >

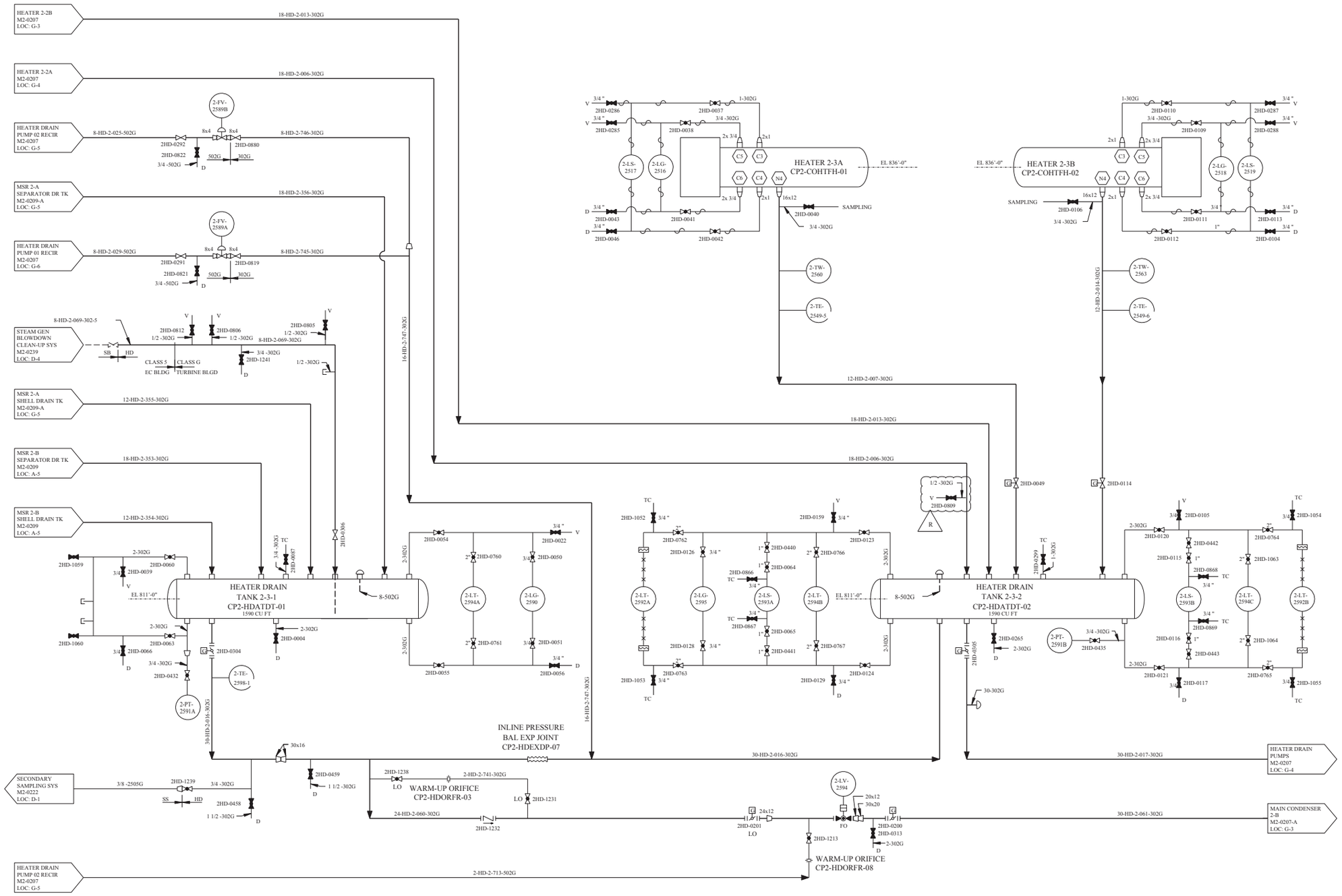

REV	DWN	CHKD	APVD	REMARKS
CP-3	DGK 11-01 2011	MSJ 11-01 2011		THIS DRAWING REVISED TO INCORPORATE DESIGN CHANGE FDA 2011-000205-01-00 PER SK-0001-11-000205-01-00.

NOTES:

1. HEATER CUSTOMER PIPE CONNECTIONS AS SUPPLIED BY STRUTHERS WELLS ARE INDICATED BY ⬡
2. SAMPLING CONNECTIONS ARE FOR THE TURBINE HEAT RATE TEST.
3. FOR MECHANICAL SYMBOLS AND NOTES SEE DRAWING M1-0200.
4. ALL I&C CHANNEL NUMBERS WILL HAVE PREFIX. I.E. 2-TE-2323
5. UNLESS OTHERWISE NOTED, ALL DRAINS TO BE COLLECTED BY LOCAL DRAIN SYSTEM TO TURBINE BUILDING SUMP.

FSAR FIGURE 10.4-14

THIS DRAWING CREATED ELECTRONICALLY

DRAWING M2-0207 REV CP-13
HAS BEEN SPLIT INTO THE FOLLOWING SHEETS:
M2-0207
M2-0207-B

CLASS II

LUMINANT
CPNPP
GLEN ROSE, TEXAS

FLOW DIAGRAM
HEATER DRAINS SYSTEM

DWG. NO. M2-0207 | SH. NO. B | REV. CP-3

FINAL PRINT

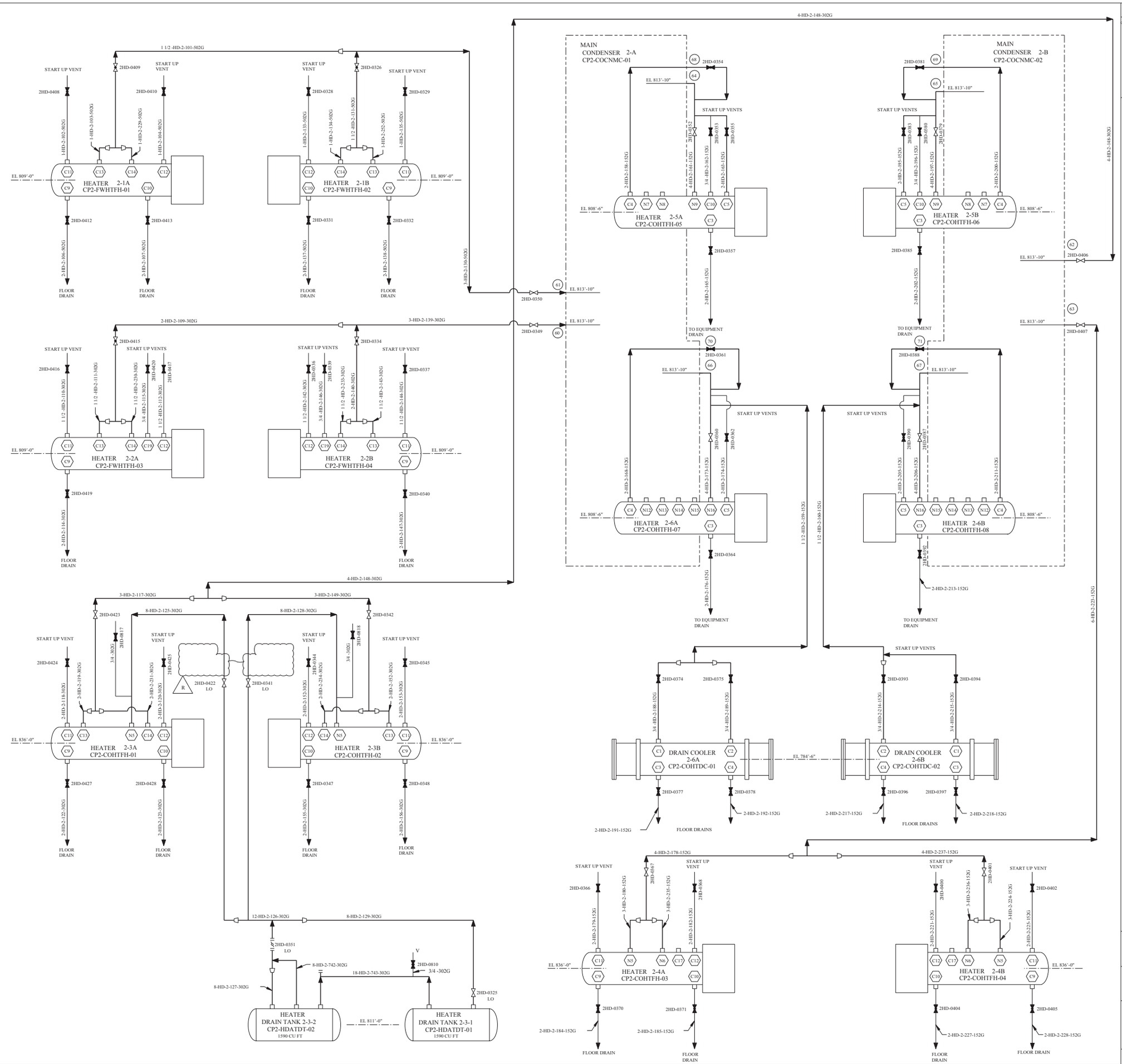

REV	DWN	CHK	APVD	REMARKS
CP-10	DLK 12-11 2008	MM 12-29 2008		THIS DRAWING REVISED TO INCORPORATE DESIGN CHANGE FDA 2006-003080-40-00 PER SK-0028-06-003080-40-00.

NOTES:

1. FOR NOZZLE CONNECTION SYMBOLS STRUTHERS WELLS DRAWINGS. REFER TO THE

HEATER	2-1A AND 2-1B:	1-74-06-32419D1
HEATER	2-2A AND 2-2B:	1-74-06-32420D1
HEATER	2-3A AND 2-3B:	1-74-06-32421D1
HEATER	2-4A AND 2-4B:	1-74-06-32422D1
HEATER	2-5A AND 2-5B:	1-74-06-32423D1
HEATER	2-6A AND 2-6B:	1-74-06-32424D1
HEATER	2-6A AND 2-6B	DRAIN COOLERS: 3-74-06-324125D1

2. THE FOLLOWING NOZZLE ORIFICE ARE SUPPLIED BY STRUTHERS WELLS:

HEATER	ORIFICE SIZE	NOZZLE CONNECTION
2-1A AND 2-1B	5/32 INCH DIA	C13, C14
2-2A AND 2-2B	7/32 INCH DIA	C13, C14
2-3A AND 2-3B	5/16 INCH DIA	N5, N6
2-4A AND 2-4B	3/8 INCH DIA	N5, N6
2-5A AND 2-5B	1/2 INCH DIA	N7, N8, N9
2-6A AND 2-6B	3/4 INCH DIA	N12, N13, N14, N15, N16

3. DELETED

REFERENCES:

FOR GENERAL NOTES AND SYMBOLS SEE DRAWING M1-0200.

REPRESENTS PENETRATION TO CONDENSER.

FSAR FIGURE 10.4-14

THIS DRAWING CREATED ELECTRONICALLY

NON-SAFETY

LUMINANT
CPNPP
GLEN ROSE, TEXAS

FLOW DIAGRAM
HEATER DRAINS SYSTEM

DWG. NO.	SH. NO.	REV.
M2-0208	-	CP-10

< FINAL PRINT >

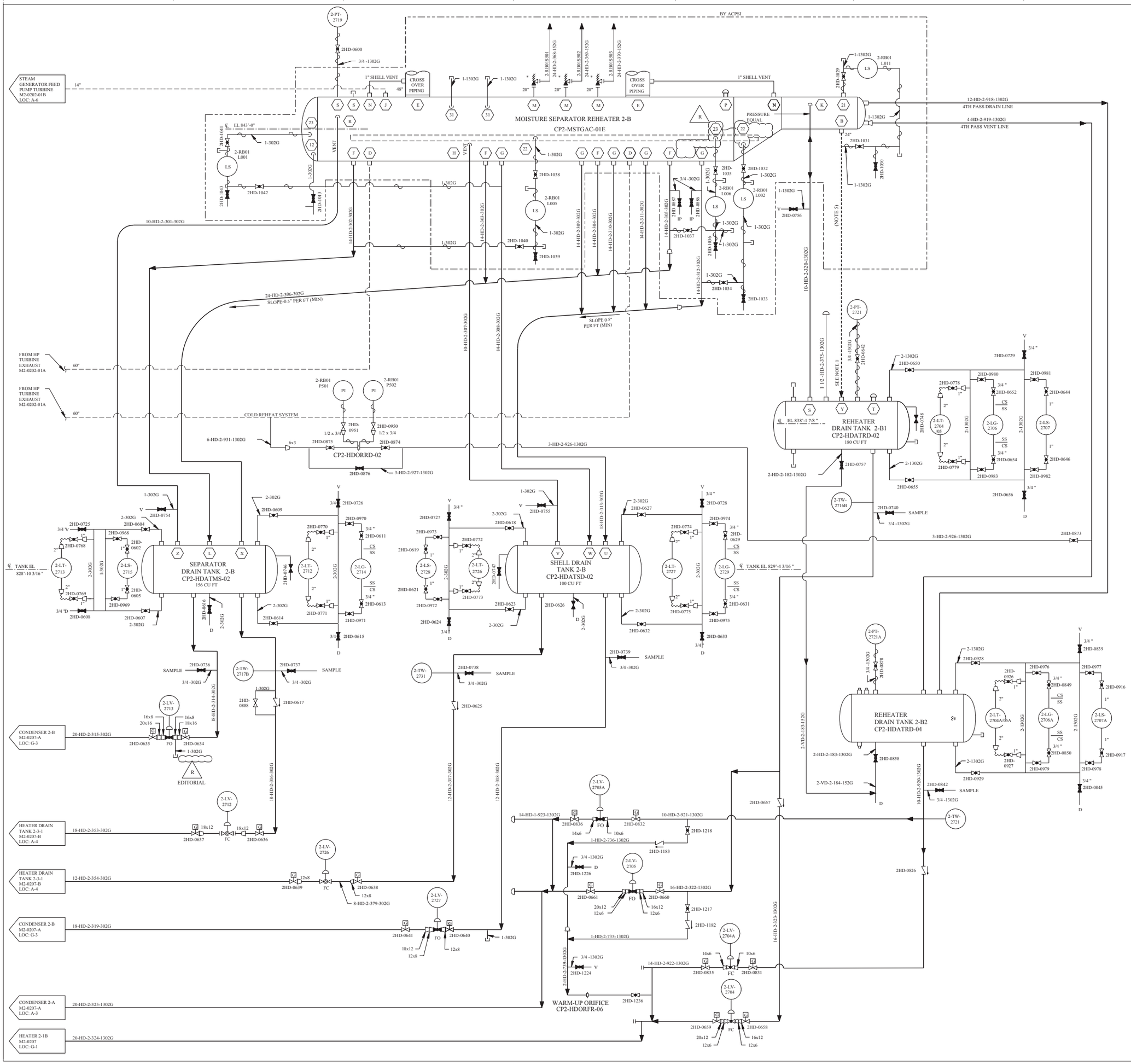

REV	DWN	CHKD	APVD	REMARKS
CP-19	GLK 04-02 2009	MHI 04-02 2009		THIS DRAWING REVISED TO INCORPORATE DESIGN CHANGE FDA-2009-000992-01-00 PER SK-0003-09-000992-01-00. EDITORIAL CHANGE AS NOTED.

NOTES:

1. ALL DRAINS ENTERING DRAIN TANKS ENTER AT THE TOP OF THE TANK.
2. DRAIN TANKS DESIGNED TO ASME BOILER AND PRESSURE VESSEL CODE SECTION VIII, DIVISION 1.
3. FOR MECHANICAL SYMBOLS AND NOTES SEE DRAWING M1-0200.
4. * BY ACPSI
5. NOZZLE TO NOZZLE CONNECTION.
6. ◯ REPRESENTS MSR AND DRAIN TANKS PENETRATION PER SOUTHWESTERN ENGINEERING DRAWING DM-94191.
7. EACH REHEATER DRAIN TANK DRAIN INLET NOZZLE IS PROVIDED WITH ONE 1" SIZE PIPE COUPLING FOR A-CPSI SUPPLIED MSR HEMI-HEAD LEVEL TRANSMITTER.
8. DELETED

FSAR FIGURE 10.4-14

THIS DRAWING CREATED ELECTRONICALLY

DRAWING 2323-M2-0209 REV CP-1
HAS BEEN SPLIT INTO THE FOLLOWING SHEETS:
M2-0209
M2-0209-A

NON-SAFETY

LUMINANT
CPNPP
GLEN ROSE, TEXAS

FLOW DIAGRAM
HEATER DRAINS SYSTEM

DWG. NO. M2-0209 | SH. NO. - | REV. CP-19

REF CHK 12/5/97 CP-11

SSSSSSDATESSSSS

me927400.dgn A M2-0209

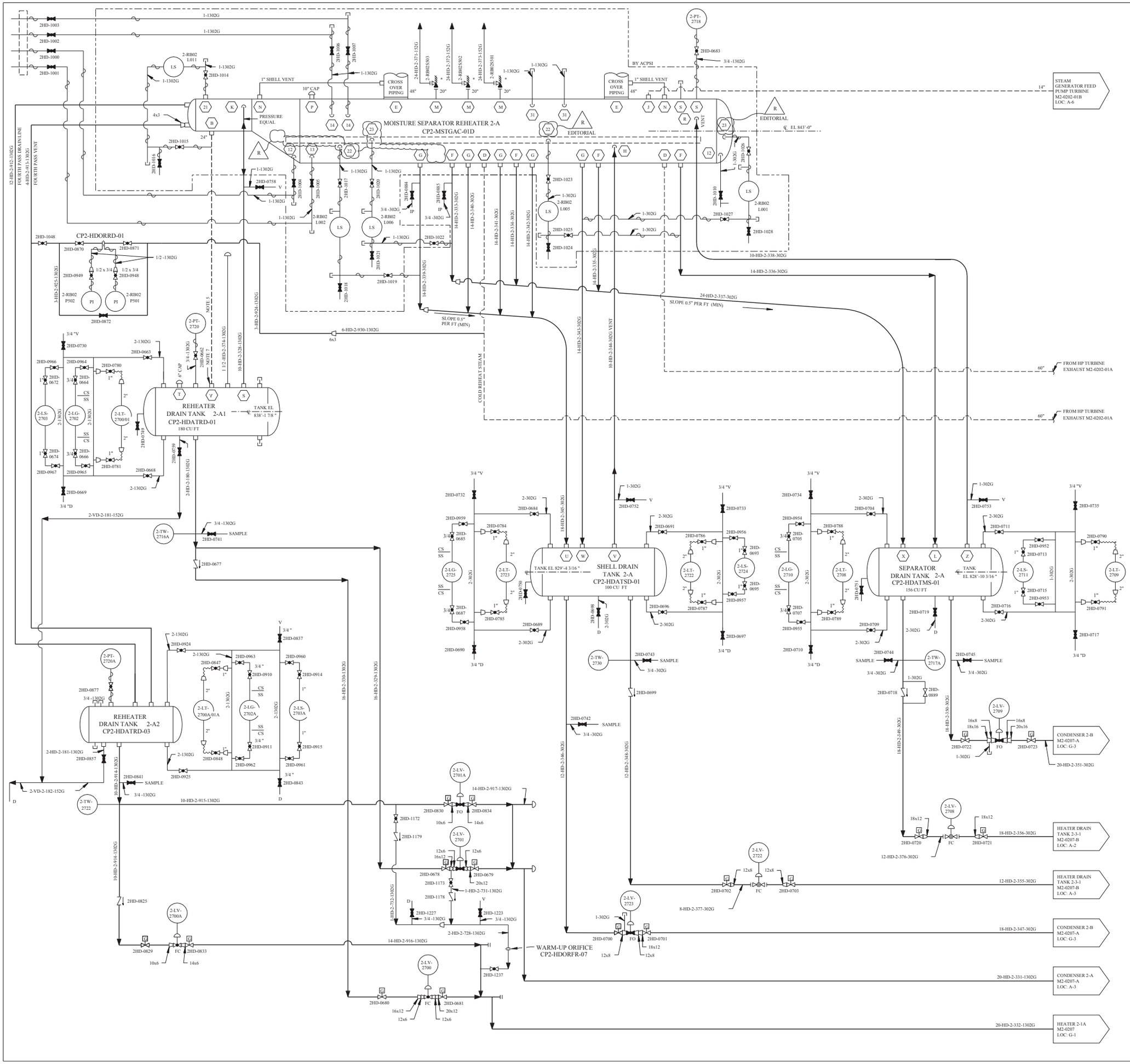

REV	DWN	CHKD	APVD	REMARKS
CP-18	GGK 04-02 2009	MEB 04-02 2009		THIS DRAWING REVISED TO INCORPORATE DESIGN CHANGE FDA-2009-000992-01-00 PEER SK-0004-09-000992-01-00. EDITORIAL CHANGES AS NOTED.

NOTES:

1. ALL DRAINS ENTERING DRAIN TANKS ENTER AT THE TOP OF THE TANK.
2. DRAIN TANKS DESIGNED TO ASME BOILER AND PRESSURE VESSEL CODE SECTION VIII, DIVISION 1.
3. FOR MECHANICAL SYMBOLS AND NOTES SEE DRAWING M1-0200.
4. * BY ACPSI
5. NOZZLE TO NOZZLE CONNECTION.
6. ⊗ REPRESENTS MSR AND DRAIN TANKS PENETRATION PER SOUTHWESTERN ENGINEERING DRAWING NUMBER DM-94191.
7. EACH REHEATER DRAIN TANK DRAIN INLET NOZZLE IS PROVIDED WITH ONE 1" SIZE PIPE COUPLING FOR ACPSI SUPPLIED MSR HEMI-HEAD LEVEL TRANSMITTER.
8. DELETED

FSAR FIGURE 10.4-14

THIS DRAWING CREATED ELECTRONICALLY

DRAWING 2323-M2-0209	REV CP-1
HAS BEEN SPLIT INTO THE FOLLOWING SHEETS:	
M2-0209	
M2-0209-A	

NON-SAFETY

LUMINANT
CPNPP
GLEN ROSE, TEXAS

FLOW DIAGRAM
HEATER DRAINS SYSTEM

DWG. NO. M2-0209 | SH. NO. A | REV. CP-18

REF CHK 12/5/97 CP-8

$$$$$$$DATE$$$$$$

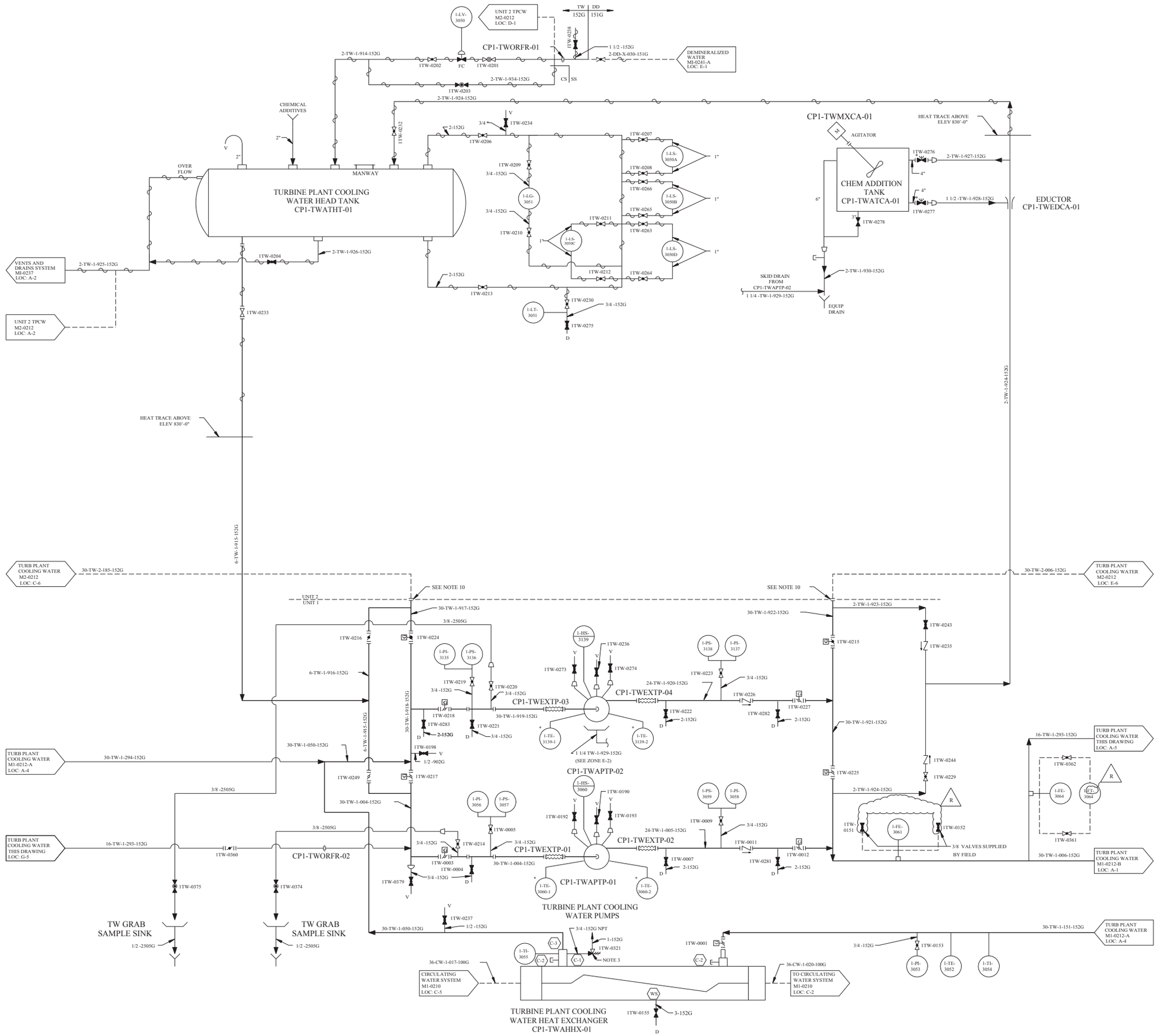

REV	DWN	CHKD	APVD	REMARKS
CP-32	HSK 04-14 2009	SM 04-14 2009		THIS DRAWING REVISED TO INCORPORATE DESIGN CHANGE FDA 2008-003429-01-00 PER SK-0001-08-003429-01-00.

NOTES:

1. DELETED
2. FOR MECHANICAL SYMBOLS AND NOTES SEE DWG M1-0200.
3. HEAT EXCHANGER SHELL RELIEF VALVE SUPPLIED BY MANUFACTURER.
4. DELETED
5. HEAT EXCHANGER TUBE SIDE RELIEF VALVE SUPPLIED BY CAM INDUSTRIES.
6. * DENOTES SUPPLIED BY EQUIPMENT MANUFACTURER.
7. UNLESS OTHERWISE NOTED ALL DRAINS COLLECTED BY LOCAL DRAIN SYSTEM.
8. DELETED
9. VALVE TAG NUMBERS: 1TW-0239 , 1TW-0240 , 1TW-0241 , 1TW-0242 , 1TW-0324 , 1TW-0325 , 1TW-0326 AND 1TW-0327 ARE PVC OR CPVC TRUE UNION BALL VALVES.
10. PERMANENTLY INSTALLED BLANK.

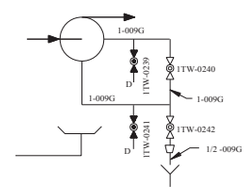

TURBINE PLANT COOLING WATER PUMP CP1-TWAPTP-02

SEAL LEAKOFF DETAIL

SEE NOTE 9

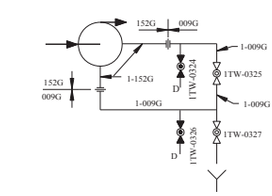

TURBINE PLANT COOLING WATER PUMP CP1-TWAPTP-01

SEAL LEAKOFF DETAIL

SEE NOTE 9

FSAR FIGURE 10.4-15

THIS DRAWING CREATED ELECTRONICALLY

DRAWING 2323-M1-0212	REV CP-7
HAS BEEN SPLIT INTO THE FOLLOWING SHEETS:	
M1-0212	
M1-0212-A	
M1-0212-B	

NON-SAFETY

LUMINANT
CPNPP
GLEN ROSE, TEXAS

FLOW DIAGRAM
TURBINE PLANT
COOLING WATER SYSTEM

DWG. NO. M1-0212 | SH. NO. - | REV. CP-32

FINAL PRINT

me105060.dgn

RIF CKD CP-25 10/25/96

REV	DWN	CHKD	APVD	REMARKS
CP-28	DLK 09-21 2009	MM 09-21 2009		THIS DRAWING REVISED TO INCORPORATE DESIGN CHANGE FDA 2008-003429-01-00 PER SK-0002-08-003429-01-00.

NOTES:

1. FOR MECHANICAL SYMBOLS AND NOTES SEE DWG M1-0200.
2. UNLESS OTHERWISE NOTED ALL DRAINS COLLECTED BY LOCAL DRAIN SYSTEM.
3. PERMANENTLY INSTALLED BLANK.

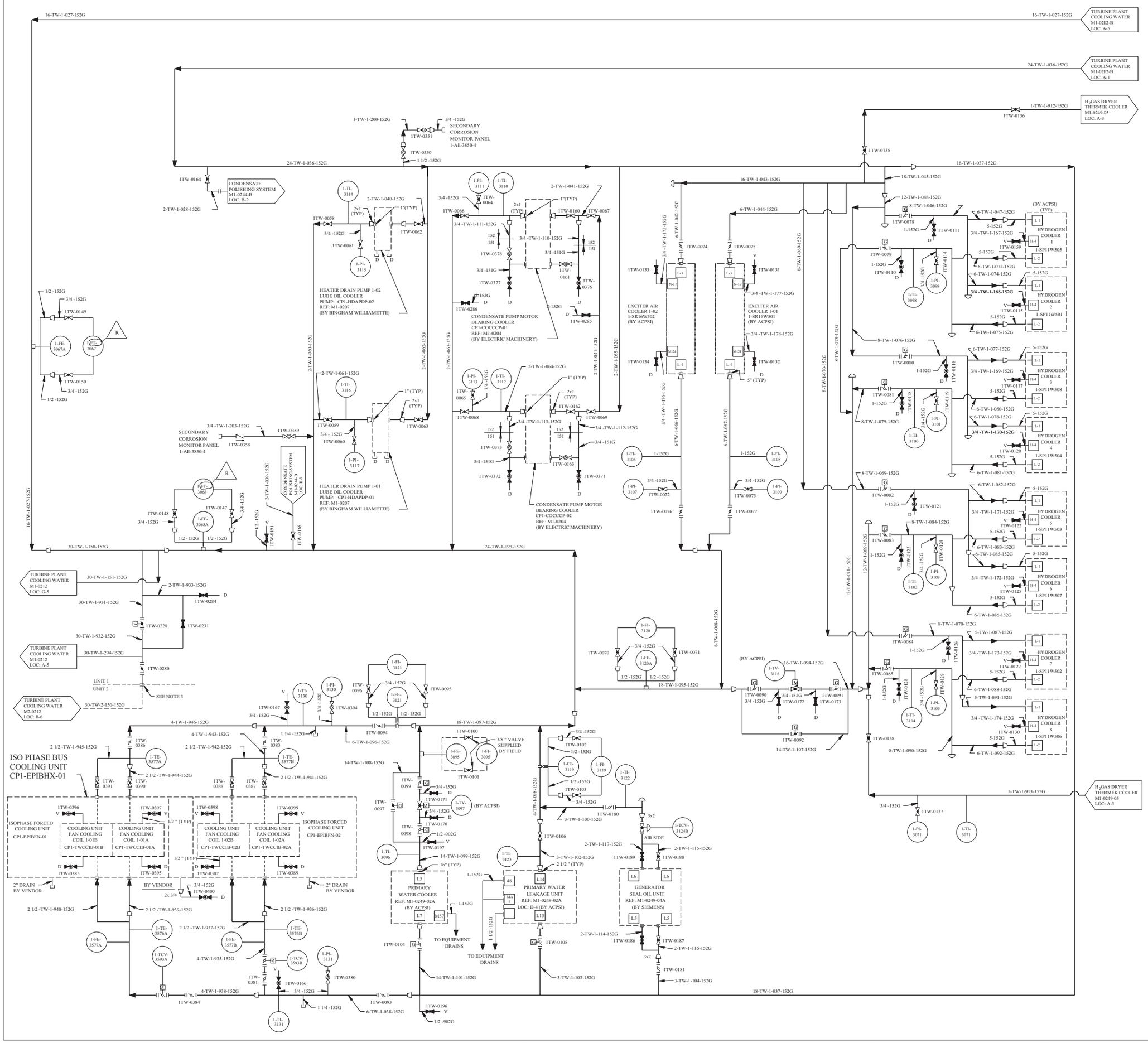

DRAWING	2323-M1-0212	REV	CP-7
HAS BEEN SPLIT INTO THE FOLLOWING SHEETS:			
M1-0212			
M1-0212-A			
M1-0212-B			

FSAR FIGURE 10.4-15

THIS DRAWING CREATED ELECTRONICALLY

NON-SAFETY

LUMINANT
CPNPP
GLEN ROSE, TEXAS

FLOW DIAGRAM
TURBINE PLANT
COOLING WATER SYSTEM

DWG. NO.	SH. NO.	REV.
M1-0212	A	CP-28

FINAL PRINT

REF CKD CP-14 10/25/96

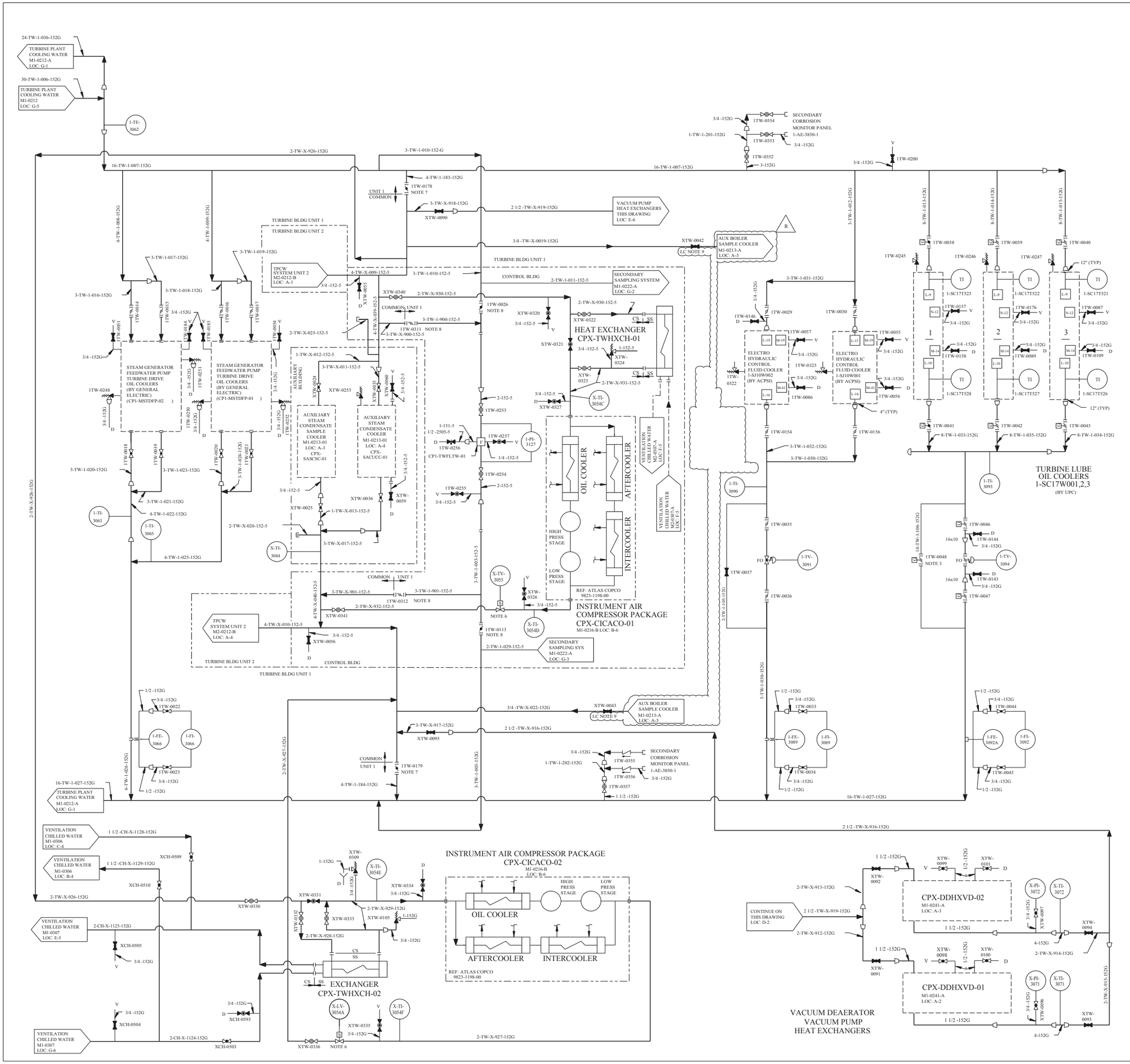

REV	DWN	CHKD	APVD	REMARKS
CP-37	DLK 10-13 2009	MM 10-06 2010		THIS DRAWING REVISED TO INCORPORATE DESIGN CHANGE FDA 2009-003957-01-00 PER SK-0002-09-003957-01-00.

NOTES:

1. COMMON DEVICES ARE PREFIXED WITH X.
2. FOR MECHANICAL SYMBOLS AND NOTES SEE DRAWING M1-0200.
3. VALVE 1TW-0048 HAS A REMOTE CHAIN OPERATOR ATTACHMENT
4. * DENOTES SUPPLIED BY EQUIPMENT MANUFACTURER.
5. UNLESS OTHERWISE NOTED ALL DRAINS COLLECTED BY LOCAL DRAIN SYSTEM.
6. VALVE OPEN WHEN COMPRESSOR IS ON. VALVE CLOSED WHEN COMPRESSOR IS OFF.
7. VALVE CLOSED WHEN UNIT 2 TPCW IS ALIGNED TO THE COMMON LOAD HEADER.
8. FILTER ISOLATION VALVES ARE ALIGNED PER OPERATIONS PROCEDURES MAINTAINING UNIT ISOLATION.
9. VALVES XTW-0042 AND XTW-0043 ARE LOCKED CLOSED TO ISOLATE THE ABANDONED IN PLACE ELECTRIC AUXILIARY BOILER.

R

FSAR FIGURE 10.4-15

THIS DRAWING CREATED ELECTRONICALLY

DRAWING 2323-M1-0212 REV CP-7
HAS BEEN SPLIT INTO THE FOLLOWING SHEETS:
M1-0212
M1-0212-A
M1-0212-B

CLASS II

LUMINANT
CPNPP
GLEN ROSE, TEXAS

FLOW DIAGRAM
TURBINE PLANT
COOLING WATER SYSTEM

DWG. NO. M1-0212 | SH. NO. B | REV. CP-37

FINAL PRINT

me103100.dgn M1-0212-B

REF CKD CP-21 2/25/98

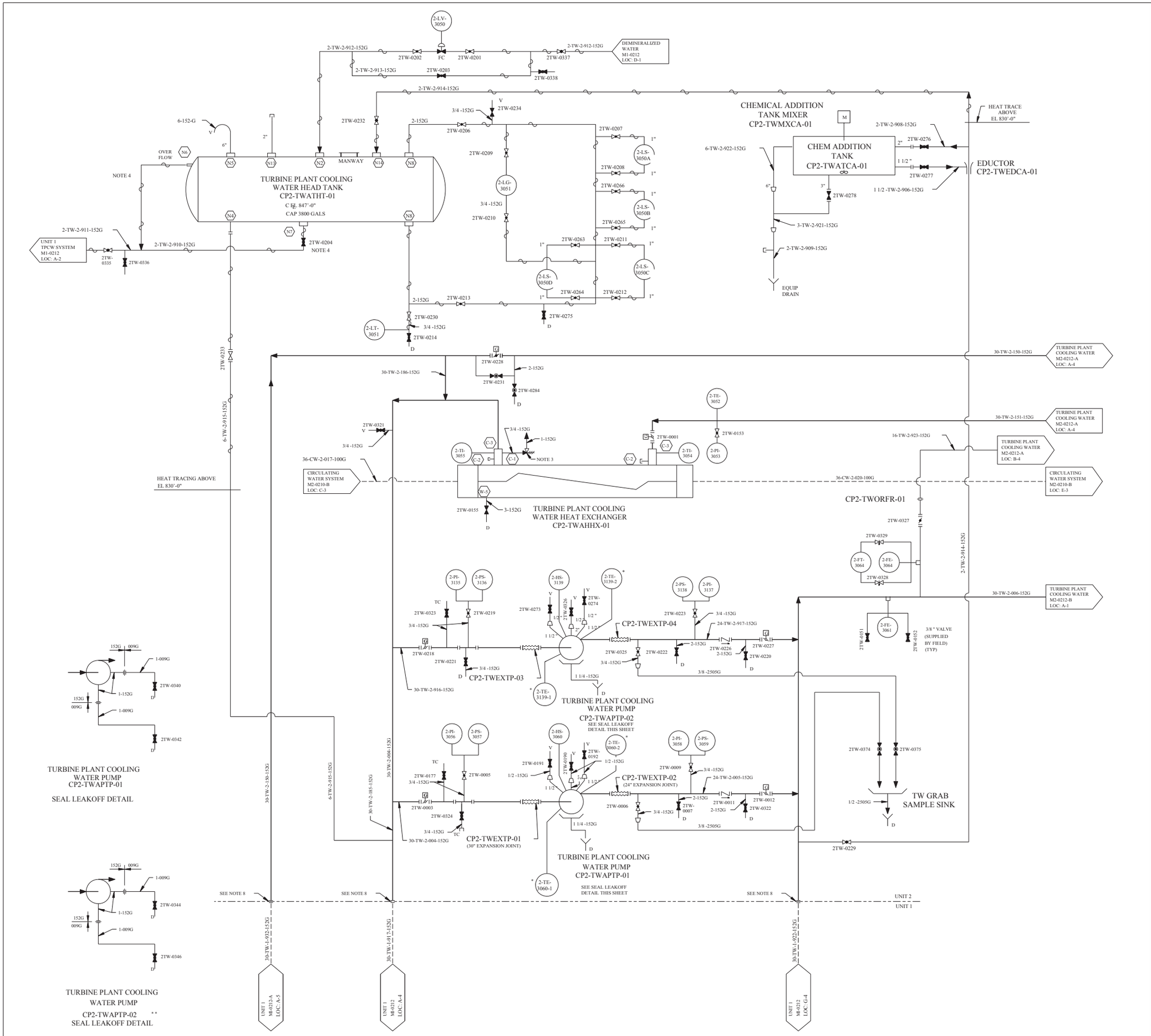

REV	DWN	CHKD	APVD	REMARKS
CP-18	JRMC 09-11 2006	DJL 09-11 2006		THIS DRAWING REVISED TO INCORPORATE DESIGN CHANGE FDA-2004-000897-01-01 PER SK-0009-04-000897-01-01. EDITORIAL CHANGES AS NOTED.

NOTES:

1. DELETED
2. FOR MECHANICAL SYMBOLS AND NOTES SEE DWG M1-0200.
3. HEAT EXCHANGER SHELL RELIEF VALVE SUPPLIED BY MANUFACTURER.
4. HEAT TRACING IS NOT REQUIRED ON THE OVER FLOW LINE OR THE DRAIN LINE DOWN STREAM OF DRAIN VALVE 2TW-0204. MAINTENANCE MAY ABANDON IN PLACE.
5. DELETED
6. * DENOTES SUPPLIED BY EQUIPMENT MANUFACTURER.
7. DELETED
8. PERMANENTLY INSTALLED BLANK.

⬡ INDICATES NOZZLE CONNECTIONS PER VENDOR TANK DRAWING.

FSAR FIGURE 10.4-15

THIS DRAWING CREATED ELECTRONICALLY

DRAWING 2323-M2-0212 REV CP-4 HAS BEEN SPLIT INTO THE FOLLOWING SHEETS:
M2-0212
M2-0212-A
M2-0212-B

NON-SAFETY

TXU POWER
CPSES
GLEN ROSE, TEXAS

FLOW DIAGRAM
TURBINE PLANT
COOLING WATER SYSTEM

DWG. NO. M2-0212 | SH. NO. - | REV. CP-18

FINAL PRINT

REF CKD CP-13 11/24/97

me703600.dgn A M2-0212

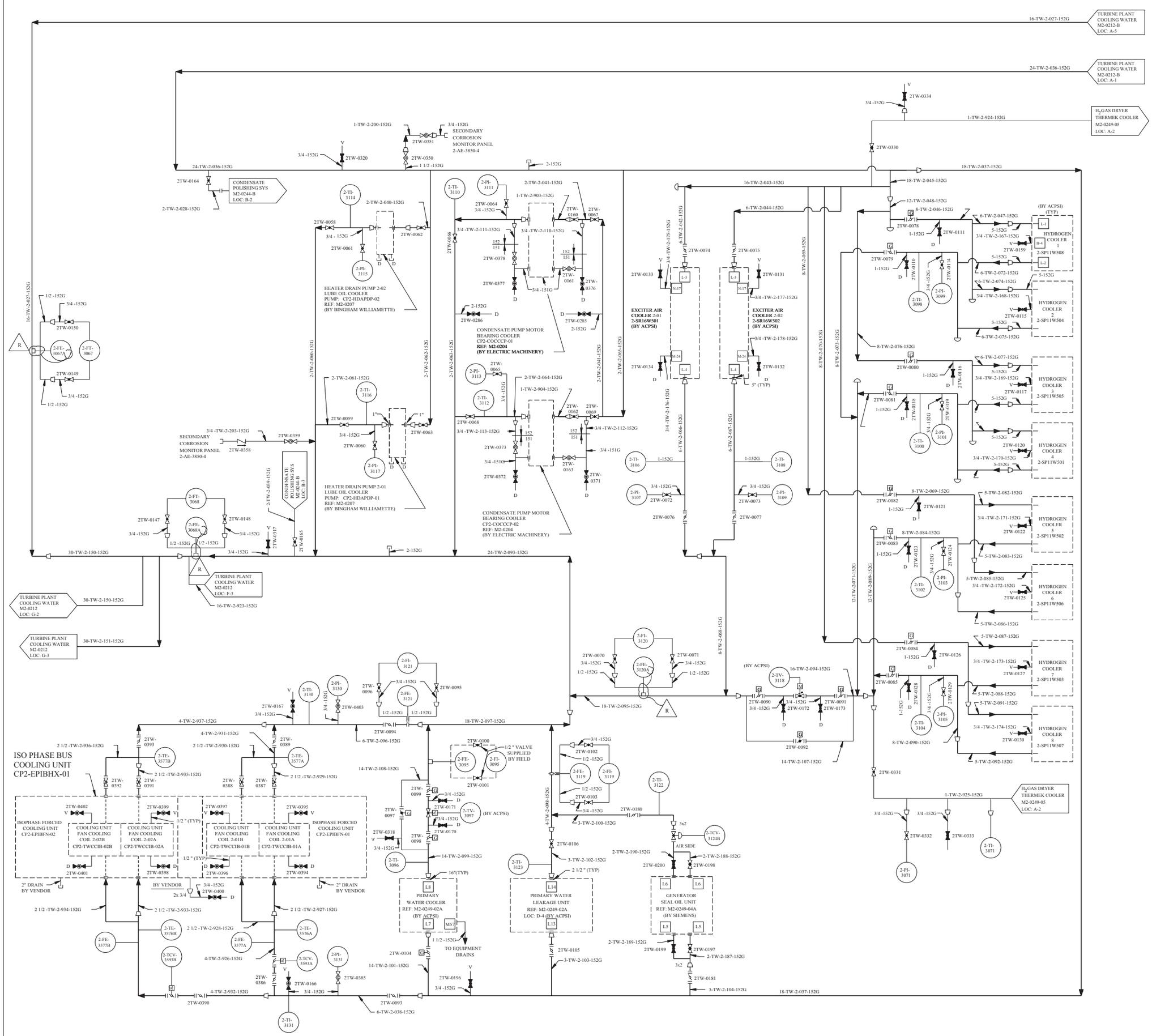

REV	DWN	CHKD	APVD	REMARKS
CP-22	EES 11-09-2009	MHF 11-09-2009		THIS DRAWING REVISED TO INCORPORATE DESIGN CHANGE FDA-2006-003080-36-00 PER SK-0001-06-003080-36-00.

NOTES:

1. FOR MECHANICAL SYMBOLS AND NOTES SEE DRAWING M1-0200.
2. NO DISCHARGE PIPING REQUIRED (SUPPLIED BY ACPSI).
3. DELETED
4. * DENOTES SUPPLIED BY EQUIPMENT MANUFACTURER.

FSAR FIGURE 10.4-15

THIS DRAWING CREATED ELECTRONICALLY

DRAWING 2323-M2-0212 REV CP-4
HAS BEEN SPLIT INTO THE FOLLOWING SHEETS:

M2-0212
M2-0212-A
M2-0212-B

NON-SAFETY

LUMINANT
CPNPP
GLEN ROSE, TEXAS

FLOW DIAGRAM
TURBINE PLANT
COOLING WATER SYSTEM

DWG. NO. M2-0212 | SH. NO. A | REV. CP-22

< FINAL PRINT >

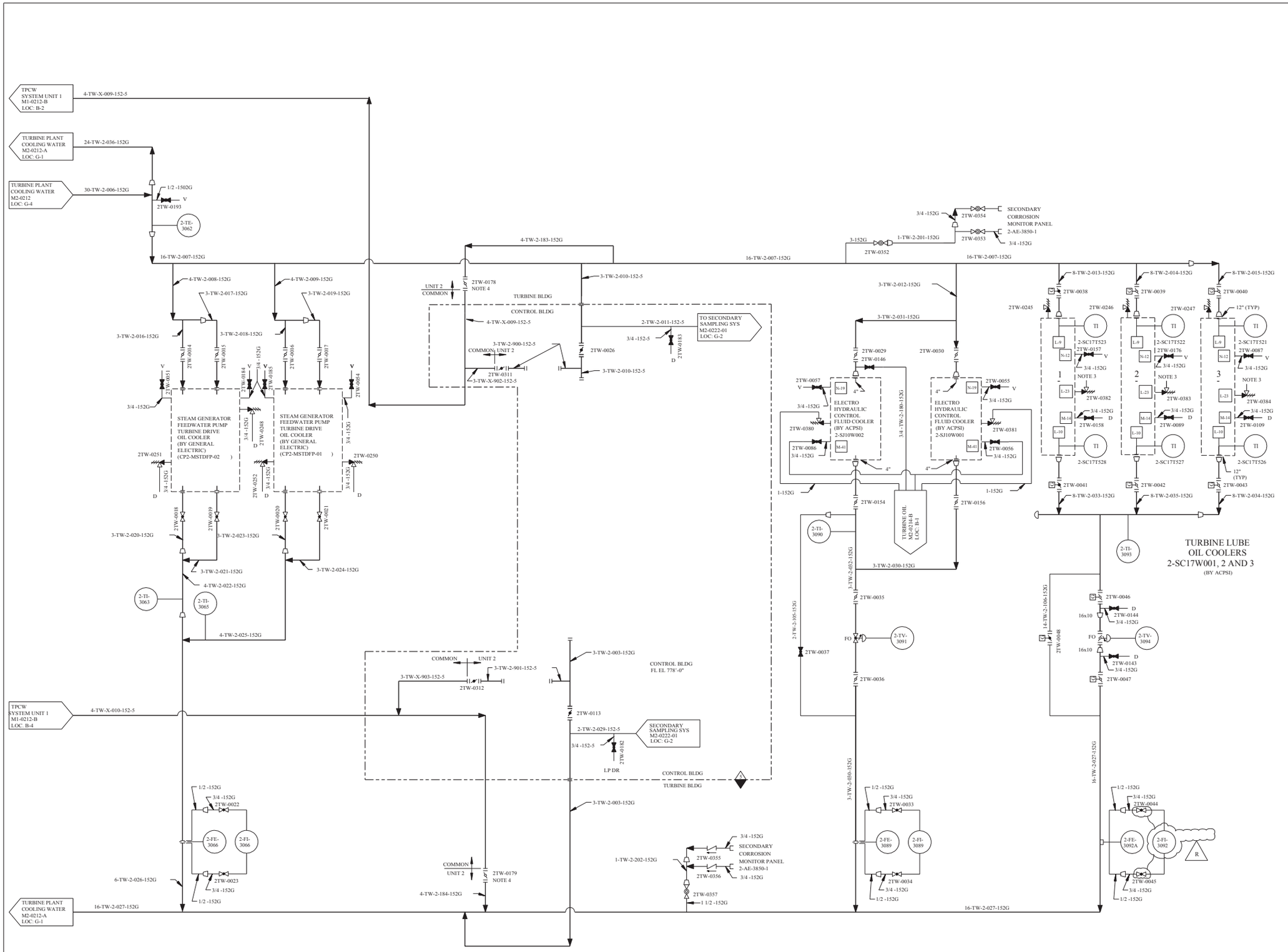

REV	DWN	CHKD	APVD	REMARKS
CP-16	EES 11-09 2009	GAW 11-09 2009		THIS DRAWING REVISED TO INCORPORATE DESIGN CHANGE FDA 2006-003080-59-00 PER SK-0001-06-003080-59-00.

NOTES:

1. COMMON DEVICES ARE PREFIXED WITH X.
2. FOR MECHANICAL SYMBOLS AND NOTES SEE DRAWING M1-0200.
3. NO DISCHARGE PIPING REQUIRED (SUPPLIED BY ACPSI).
4. VALVE CLOSED WHEN UNIT 1 TPCW IS ALIGNED TO THE COMMON LOAD HEADER.
5. * DENOTES SUPPLIED BY EQUIPMENT MANUFACTURER.
6. DELETED

R

FSAR FIGURE 10.4-15

THIS DRAWING CREATED ELECTRONICALLY

DRAWING 2323-M2-0212 REV CP-4
HAS BEEN SPLIT INTO THE FOLLOWING SHEETS:
M2-0212
M2-0212-A
M2-0212-B

CLASS II

LUMINANT
CPNPP
GLEN ROSE, TEXAS

FLOW DIAGRAM
TURBINE PLANT
COOLING WATER SYSTEM

DWG. NO. M2-0212 | SH. NO. B | REV. CP-16

FINAL PRINT

REF CKD CP-11 3/13/98

me101890.dgn M2-0212-B

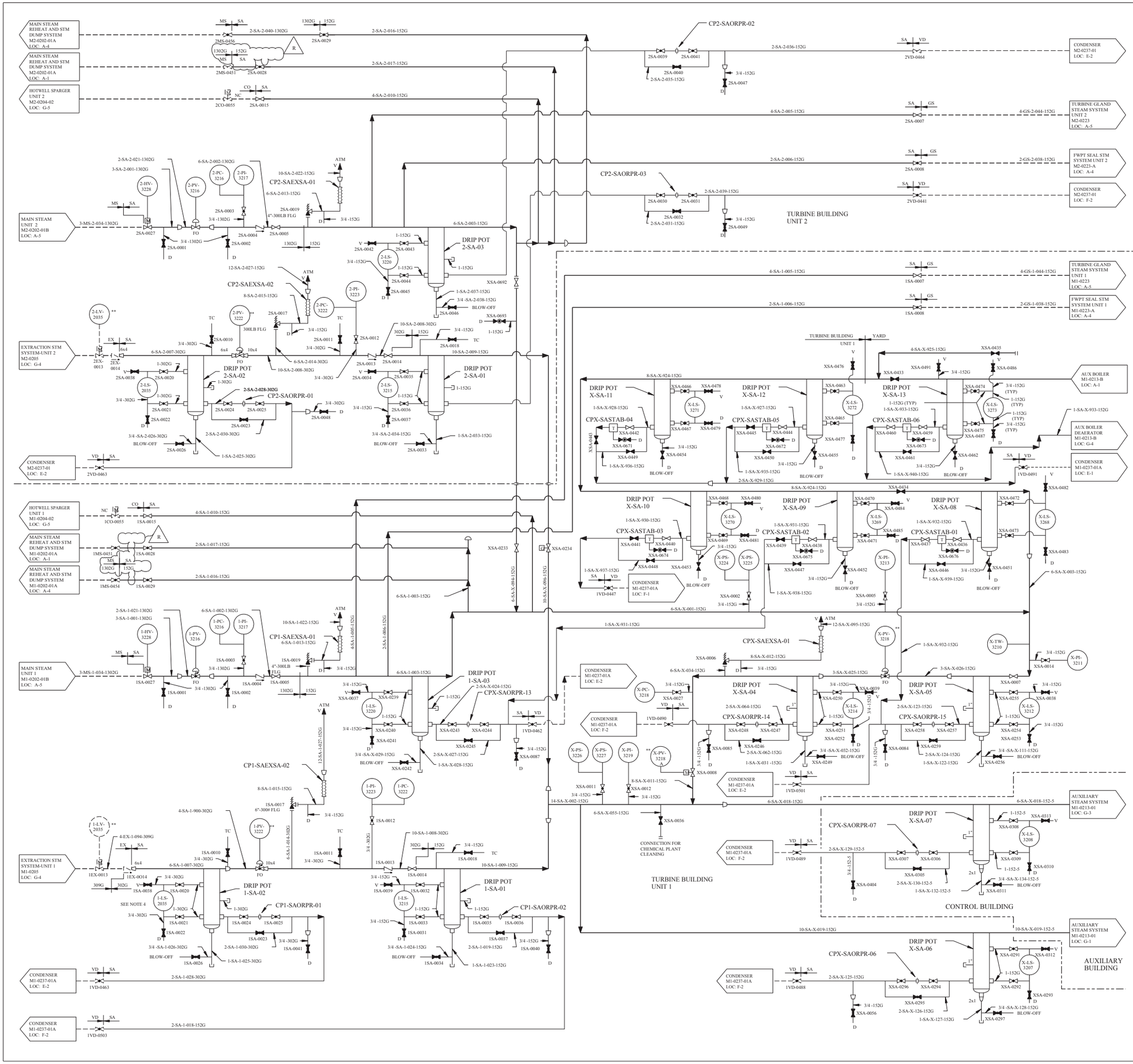

REV	DWN	CHKD	APVD	REMARKS
CP-23	MM 08-05-2005	DLK 08-08-2005		THIS DRAWING REVISED TO INCORPORATE DESIGN CHANGE FDA-2003-003096-01-00 PER SK-0001-03-003096-01-00.

NOTES:

1. ALL * MARKED PIPES AND VALVES IN CAM'S SCOPE TO BE SUPPLIED BY TU ELECTRIC.
2. FOR MECHANICAL SYMBOLS AND NOTES, SEE DRAWING M1-0200.
3. FOR AUTOMATIC CONTROL OF AUXILIARY BOILER SEE CAM DRAWING NUMBER C12033-4.
4. OPERATION LOGIC FOR 1-LS-2O35 SEE ICD M1-2205-05.
5. ALL INSTRUMENT ROOT VALVES SUPPLIED BY TU ELECTRIC ARE 3/4 " UNLESS OTHERWISE NOTED.
6. ALL PIPING AND TUBING (EXCEPT STEAM OUTLET ELBOW, LEVEL GAUGE PIPING AND PORTION OF BLOWDOWN LINE) IN CAMS SCOPE TO BE SUPPLIED BY TU ELECTRIC ALL VALVES TO BE SUPPLIED BY CAM.
7. DELETED
8. VENDOR SUPPLIED CHEMICAL FEED SYSTEM INCLUDES SUCTION PIPING.
9. FIELD TO INSTALL 1/4 -2505G TUBING BETWEEN BOTH THE BOILER CONNECTION AND STEAM OUTLET ROOT VALVE XSA-0098 AND THE CAM PANEL PER CAM DRAWING C12023-1.
10. FIELD TO INSTALL 3/8 -2505G TUBING BETWEEN THE HYDRAULIC CYLINDER AND THE HYDRAULIC POWER UNIT PER CAM DRAWING C12023-1.
11. THE CAM SUPPLIED CONDUCTIVITY CELL (BECKMAN TYPE CEL-VK-T 1" NPT FITTING) WILL BE INSTALLED IN A 2x2x2 THREADED TEE.
12. ** EQUIPMENT USED FOR MITIGATION OF HELB.

FSAR FIGURE 10.4-16

THIS DRAWING CREATED ELECTRONICALLY

DRAWING M1-0213 REV CP-6 HAS BEEN SPLIT INTO THE FOLLOWING SHEETS:
M1-0213
M1-0213-01
M1-0213-A
M1-0213-B
M1-0213-C

CLASS II

TXU POWER
CPSES
GLEN ROSE, TEXAS

FLOW DIAGRAM
AUXILIARY STEAM SYSTEM

DWG. NO. M1-0213 | SH. NO. - | REV. CP-23

FINAL PRINT

me650200.dgn M1-0213

REF CKD CP-20 10/26/96

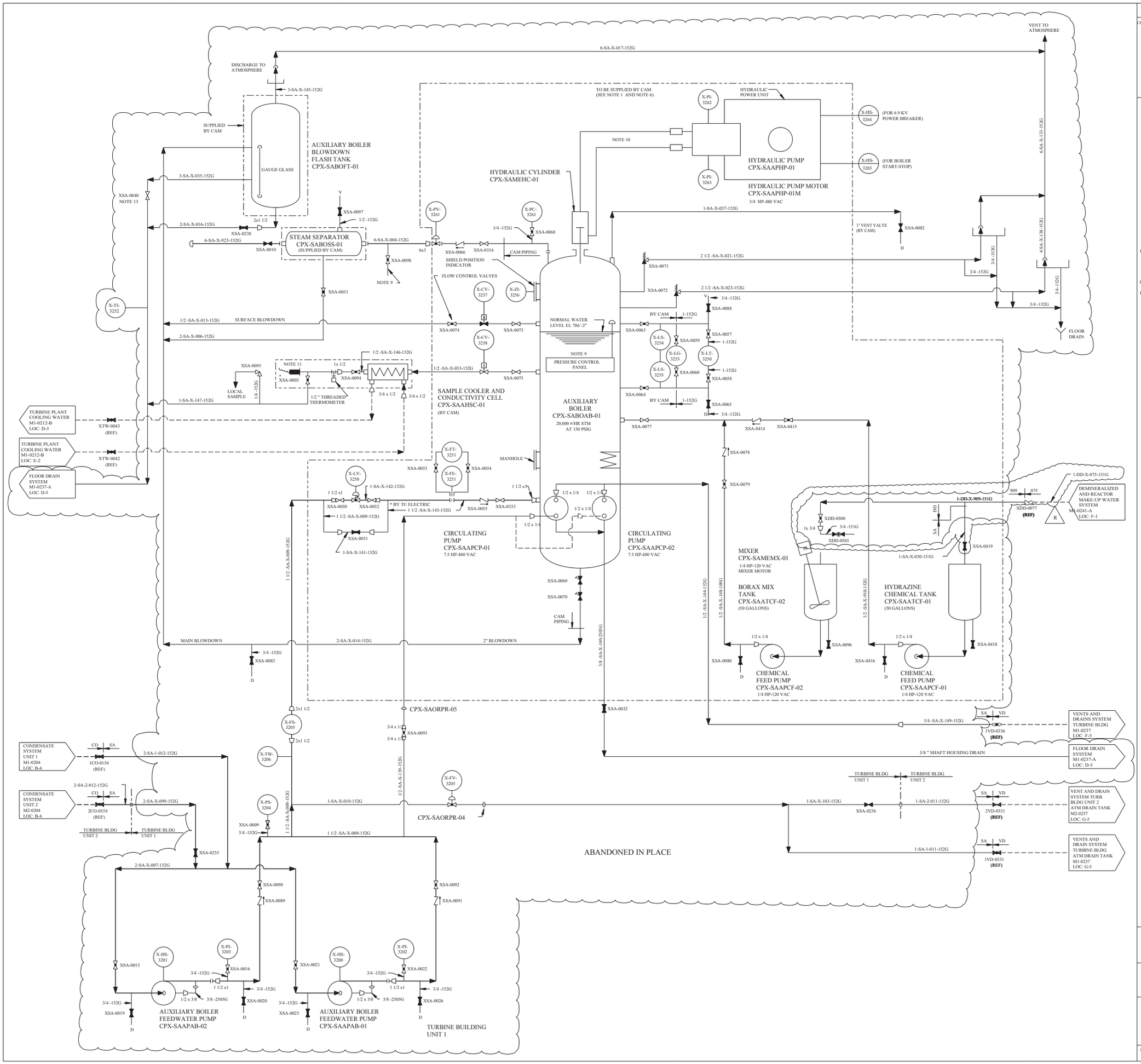

REV	DWN	CHKD	APVD	REMARKS
CP-11	JRMC 01-05 2012	DJL 01-05 2012		THIS DRAWING REVISED TO INCORPORATE DESIGN CHANGE FDA-2011-000018-01-00 PER SK-0001-11-000018-01-00.

NOTES:

1. ALL * MARKED PIPES AND VALVES IN CAM'S SCOPE SUPPLIED BY TU ELECTRIC.
2. FOR MECHANICAL SYMBOLS AND NOTES SEE DRAWING M1-0200.
3. FOR AUTOMATIC CONTROL OF AUXILIARY BOILER SEE CAM DRAWING NUMBER C12033-4.
4. OPERATION LOGIC FOR 1-LS-2035 SEE ICD M1-2205-05
5. ALL INSTRUMENT ROOT VALVES SUPPLIED BY TU ELECTRIC ARE 3/4 " UNLESS OTHERWISE NOTED.
6. ALL PIPING AND TUBING (EXCEPT STEAM OUTLET ELBOW, LEVEL GAUGE PIPING AND PORTION OF BLOWDOWN LINE) IN CAMS SCOPE SUPPLIED BY TU ELECTRIC. ALL VALVES SUPPLIED BY CAM.
7. DELETED
8. VENDOR SUPPLIED CHEMICAL FEED SYSTEM INCLUDES SUCTION PIPING.
9. 1/4 -2505G TUBING BETWEEN BOTH THE BOILER CONNECTION AND STEAM OUTLET ROOT VALVE XSA-0098 AND THE CAM PANEL PER CAM DRAWING C12023-1.
10. 3/8 -2505G TUBING BETWEEN THE HYDRAULIC CYLINDER AND THE HYDRAULIC POWER UNIT PER CAM DRAWING C12023-1.
11. THE CAM SUPPLIED CONDUCTIVITY CELL (BECKMAN TYPE CEL-VK-T 1" NPT FITTING) INSTALLED IN A 2X2X2 THREADED TEE.
12. DELETED
13. CHANGE TO NO (NORMALLY OPEN) FROM LO (LOCK OPEN) WHILE EQUIPMENT IS ABANDONED SO THAT XSA-0040 CAN BE REMOVED FROM THE REQUIREMENTS TO VERIFY LOCKED VALVE POSITION. IF CPX-SABOAB-01 IS EVER RETURNED TO SERVICE, XSA-0040 MUST BE RETURNED TO LO.

FSAR FIGURE 10.4-16

THIS DRAWING CREATED ELECTRONICALLY

DRAWING M1-0213 REV CP-6
HAS BEEN SPLIT INTO THE FOLLOWING SHEETS:

M1-0213
M1-0213-01
M1-0213-A
M1-0213-B
M1-0213-C

NON-SAFETY

LUMINANT
CPNPP
GLEN ROSE, TEXAS

FLOW DIAGRAM
AUXILIARY STEAM SYSTEM

DWG. NO. M1-0213 | SH. NO. A | REV. CP-11

FINAL PRINT

me105330.dgn A M1-0213-A

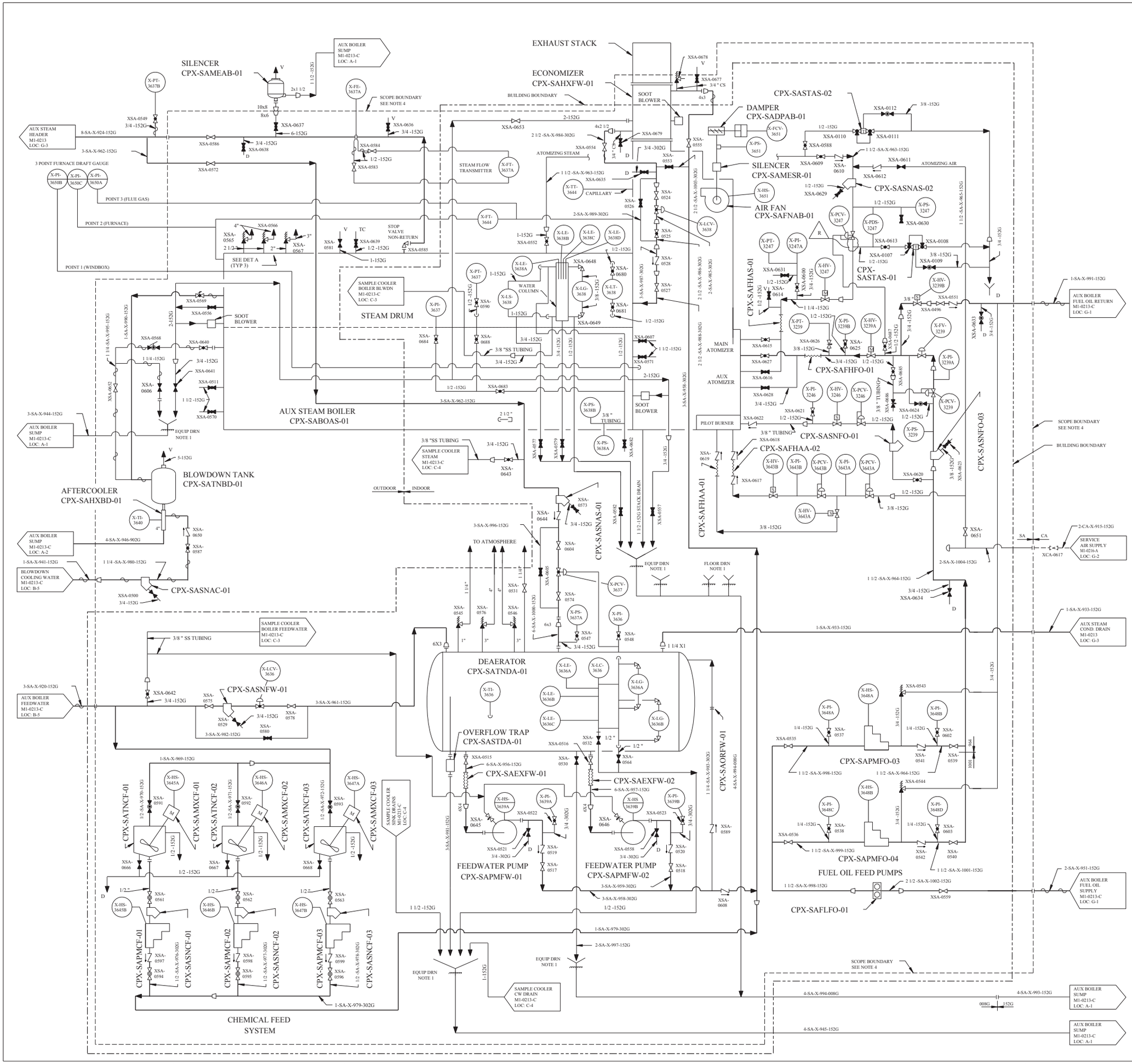

REV	DWN	CHKD	APVD	REMARKS
CP-12	DGK 10-10 2005	MM 10-10 2005		THIS DRAWING REVISED TO INCORPORATE DESIGN CHANGE FDA 2005-003751-01-00 PER SK-0001-05-003751-01-00.

NOTES:

1. EQUIPMENT AND FLOOR DRAINS BY PURCHASER.
2. BURNER CONTROL AND FLAME SAFEGUARD SYSTEM FOR PIPING, INSTRUMENTATION AND ELECTRICAL CONTROL DETAILS SEE DWG. 0500-606 PO 665-02951.
3. FOR MECHANICAL SYMBOLS AND NOTES SEE DRAWING M1-0200.
4. NATIONWIDE BOILER INC. PO 665-02951.

REFERENCES:

1. DWG M1-0216
2. NATIONWIDE BOILER INCORPORATED BOILER B 289 - MANUAL PO 665-02951

FSAR FIGURE 10.4-16

THIS DRAWING CREATED ELECTRONICALLY

DRAWING	M1-0213	REV	CP-6
HAS BEEN SPLIT INTO THE FOLLOWING SHEETS:			
M1-0213			
M1-0213-01			
M1-0213-A			
M1-0213-B			
M1-0213-C			

NON-SAFETY

TXU POWER
CPSES
GLEN ROSE, TEXAS

FLOW DIAGRAM
AUXILIARY STEAM SYSTEM

DWG. NO.	SH. NO.	REV.
M1-0213	B	CP-12

FINAL PRINT

REF CKD 05/31/05 CP-11

me623300.dgn M1-0213-B

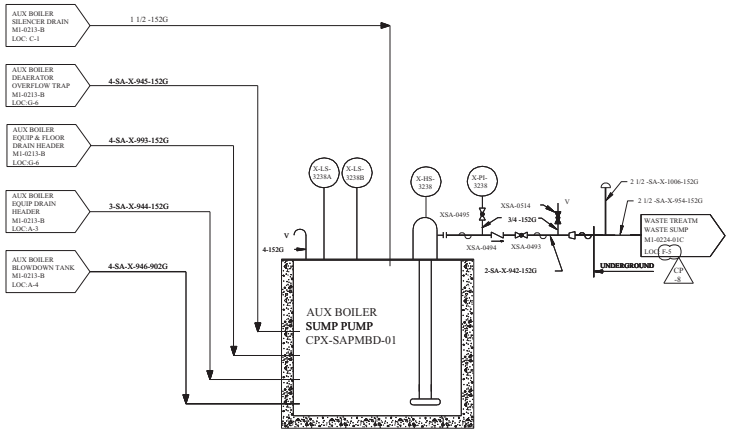

AUX BOILER SUMP

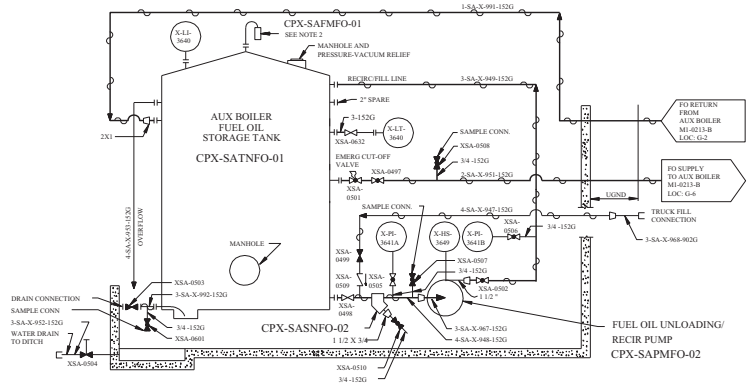

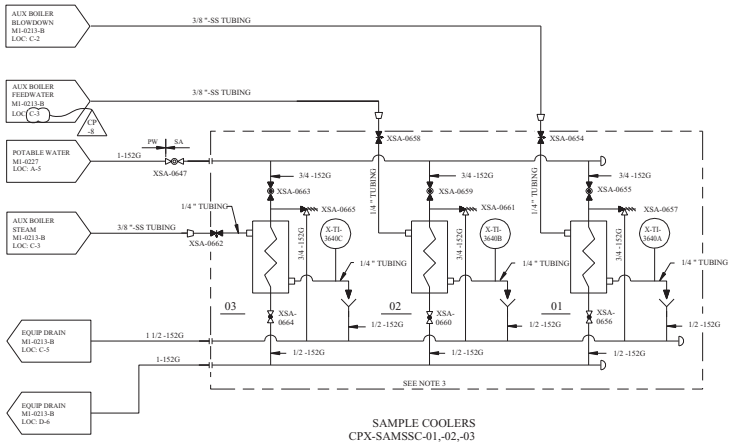

SAMPLE COOLERS
CPX-SAMSSC-01,-02,-03

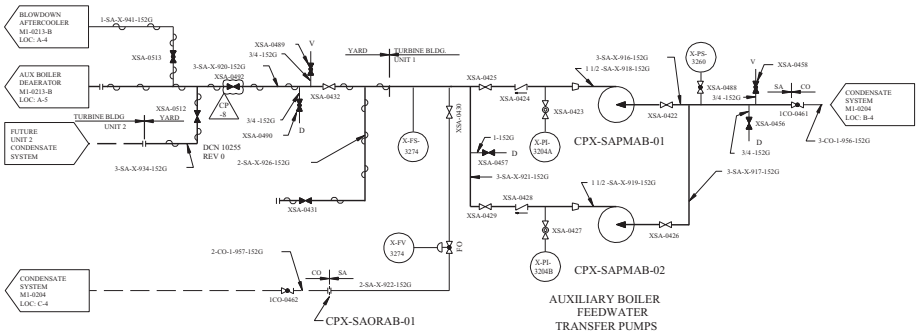

REV	DWN	CHK	APVD	REMARKS
CP-6	JEM 10-24-1996			THIS DRAWING REVISED TO INCORPORATE DESIGN CHANGE DCN 10255 REV 0. EDITORIAL CHANGES AS NOTED.

NOTES:

1. FOR MECHANICAL SYMBOLS AND NOTES SEE DRAWING M1-0200.
2. FLAME ARRESTER SUPPLIED BY TANK MANUFACTURER.
3. WATERS EQUIPMENT CO DWG B-WC070000, PO 665-07149.
4. UNLESS OTHERWISE NOTED, DRAIN TO BE LOCALLY COLLECTED UNDER ADMINISTRATIVE CONTROL.

FSAR FIGURE 10.4-16

THIS DRAWING CREATED ELECTRONICALLY

DRAWING M1-0213 REV CP-6 HAS BEEN SPLIT INTO THE FOLLOWING SHEETS:
M1-0213
M1-0213-01
M1-0213-A
M1-0213-B
M1-0213-C

NON-SAFETY

TXU ELECTRIC
CPSES
GLEN ROSE, TEXAS

FLOW DIAGRAM
AUXILIARY STEAM SYSTEM

DWG. NO.	SH. NO.	REV.
M1-0213	C	CP-8

$$$$$$$D/A TE$$$$$$

vs0000s8.dgn

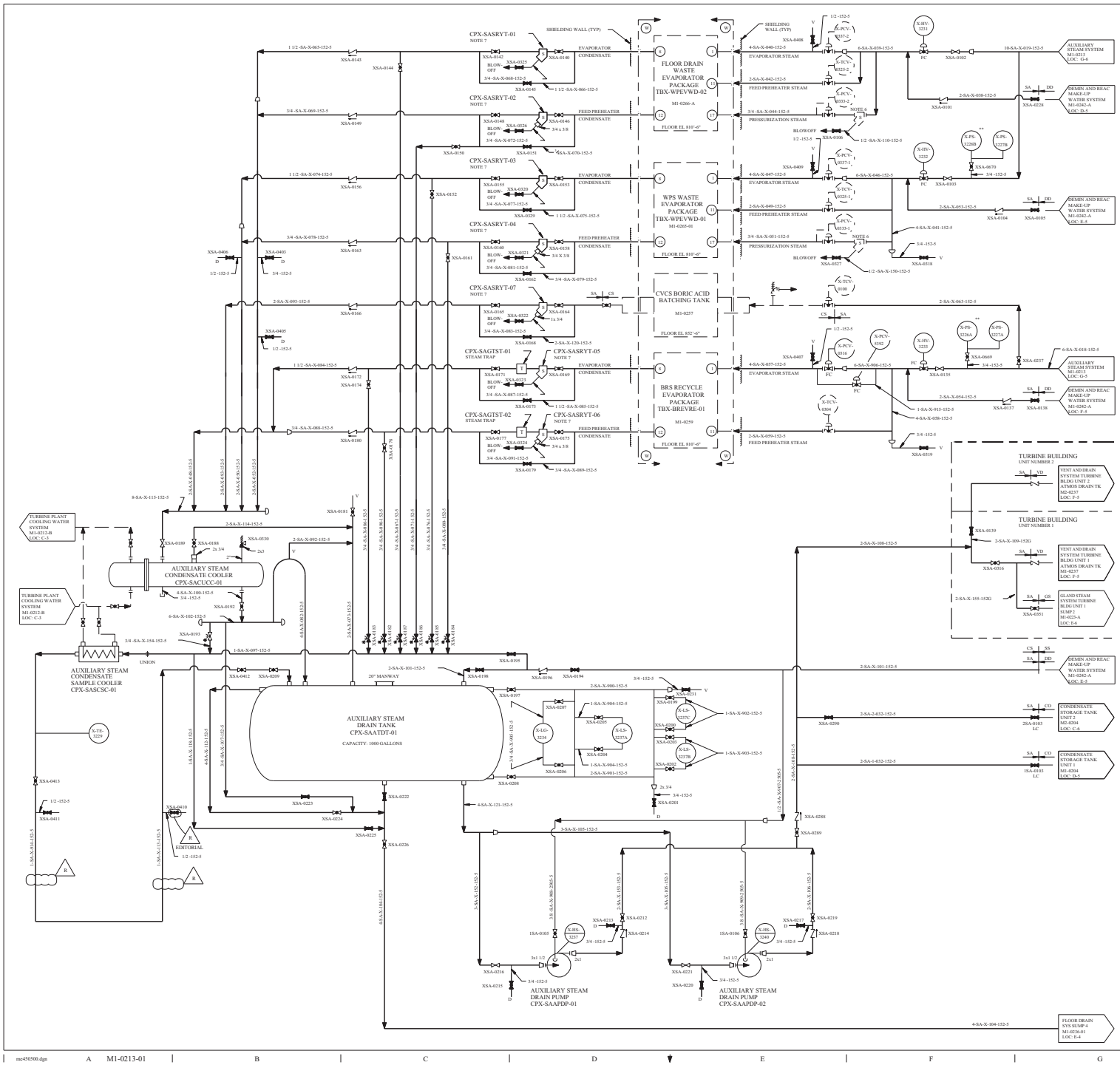

REV	DWN	CHKD	APVD	REMARKS
CP-20	HOLK 11-15-2002	DRG 11-15-2002		THIS DRAWING REVISED TO INCORPORATE DESIGN CHANGE EDA-1999-00247 AM-00 PER SK-0001-99-00267I-00-00. EDITORIAL CHANGE AS NOTED.

NOTES:

1. (W) NOTED EQUIPMENT SUPPLIED BY WESTINGHOUSE.
2. DELETED
3. FOR MECHANICAL SYMBOLS AND NOTES SEE DRAWING M1-0200.
4. DELETED
5. DELETED
6. STRAINERS ARE SUPPLIED BY WESTINGHOUSE WITH RESPECTIVE EVAPORATOR PACKAGE.
7. DELETE STRAINER ELEMENTS PER DCA 12483 R0.
8. ** EQUIPMENT IS USED IN MITIGATION OF HELB.
9. UNLESS OTHERWISE NOTED, ALL DRAINS TO BE COLLECTED BY LOCAL DRAIN SYSTEM.
10. DELETED

FSAR FIGURE 10.4-16

THIS DRAWING CREATED ELECTRONIC ALLY

DRAWING M1-0213 REV CP-6 HAS BEEN SPLIT INTO THE FOLLOWING SHEETS:
M1-0213
M1-0213-01
M1-0213-A
M1-0213-B
M1-0213-C

CLASS II

TXU ENERGY
CPSES
GLEN ROSE, TEXAS

FLOW DIAGRAM
AUXILIARY STEAM SYSTEM

DWG. NO. M1-0213 | SH. NO. 01 | REV. CP-20

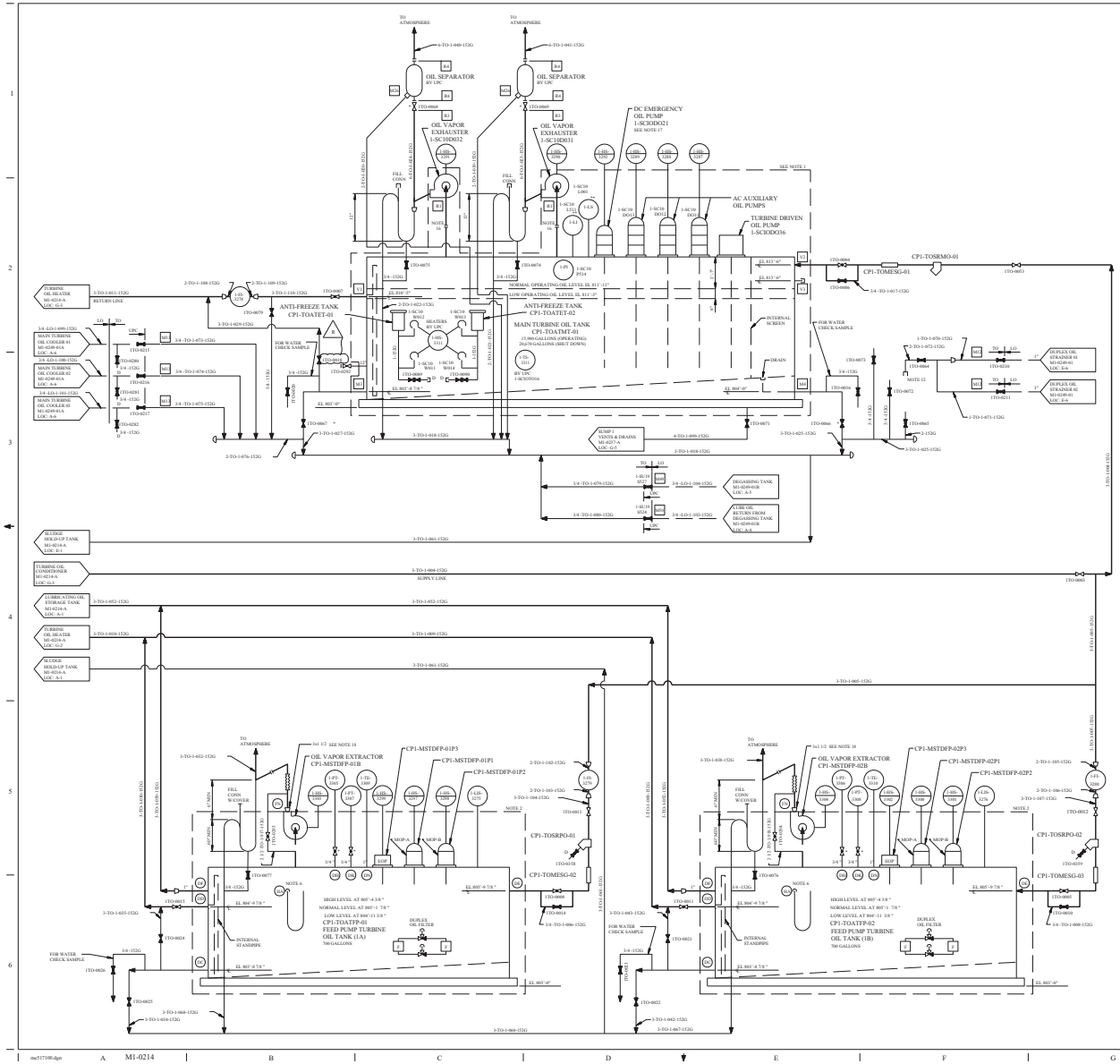

REV.	DWN	CHK	APVD	REMARKS
CP-24	Scott Dean 04/06/2006			THIS DRAWING REVISED TO INCORPORATE DESIGN CHANGE FSA-2004-0015 ISSUED AS PER SR-0001-04-003 SH-01-06.

NOTES:

1. SUPPLIED BY UTILITY POWER COMPANY EXCEPT FOR INDICATED PIPING AND CONTROLS BEARING I&C CHANNEL NUMBERS. SEE UPC MEASURING POINT LIST FOR INSTRUMENTATION AND CONTROLS PROVIDED BY UPC. FOR ADDITIONAL UPC PIPING SEE M1-0249-01.
2. SUPPLIED BY GENERAL ELECTRIC.
3. DELETED
4. VALVES MARKED * ARE SUPPLIED BY EQUIPMENT MANUFACTURER.
5. DELETED
6. INTERNAL PRESSURE INDICATION MANOMETER FURNISHED BY GENERAL ELECTRIC AND MOUNTED BY CUSTOMER.
7. DELETED
8. DELETED
9. DELETED
10. UPC CUSTOMERS PIPING CONNECTION TAG NUMBERS ARE SHOWN (TYPICAL) 1/2
11. DELETED
12. UPC DUPLEX OIL STRAINER DRAINS USE TEMPORARY PIPING BETWEEN VALVES ITO-0664 AND ITO-0665
13. DELETED
14. INSTRUMENTS MARKED ** SUPPLIED BY VENDORS.
15. FOR MECHANICAL SYMBOLS AND NOTES SEE DRAWING M1-0200.
16. INSTALLATION OF CLOSURE DISC AND/OR BLIND FLANGE IS REQUIRED ONLY WHEN EXHAUSTER IS REMOVED.
17. FOR DETAILS OF TURBINE LUBE OIL SUPPLY REFER TO DIAGRAM OF LUBRICATION OIL PIPING (DWG TX63-00670 CP-0001).
18. A REDUCING BUSHING CAN BE ADDED, AS REQUIRED, TO THE INLET AND/OR OUTLET OF THE BLOWER TO MATCH THAT WHICH THE VENDOR PROVIDES. THIS BUSHING IS TO BE A HEX HEAD BUSHING, A-105 MATERIAL. 3000 LB.

FSAR FIGURE 10.4-17

THIS DRAWING CAN BE ACCESSED ELECTRONICALLY

DRAWING 2323-M1-0214 REV CP-6
HAS BEEN SPLIT INTO THE FOLLOWING SHEETS:
M1-0214
M1-0214-A

NON-SAFETY

TXU POWER
CPSES
GLEN ROSE, TEXAS

FLOW DIAGRAM
TURBINE OIL PURIFICATION

DWG. NO. M1-0214 | SH. NO. - | REV. CP-24

REF CKD /SAVE CP-19

SSSSSSSSDATSSSSSS

tne517108.dgn A M1-0214 B C D E F G H

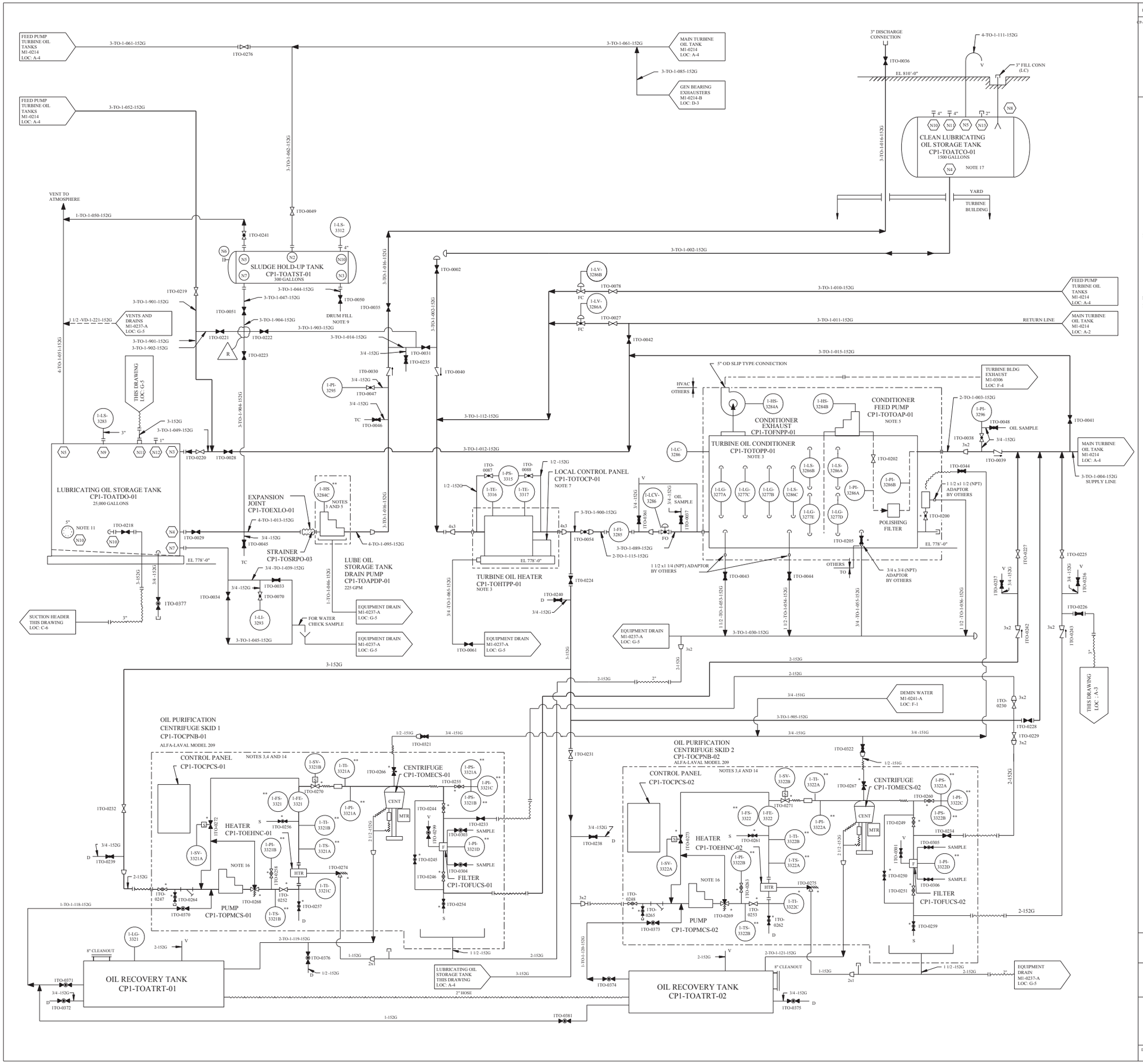

REV	DWN	CHKD	APVD	REMARKS
CP-23	DLK 04-11-2010	MM 04-12-2010		THIS DRAWING REVISED TO INCORPORATE DESIGN CHANGE FDA 2010-000056-01-00 PER SK-0001-10-000056-01-00.

NOTES:

1. SUPPLIED BY UTILITY POWER COMPANY EXCEPT FOR INDICATED PIPING AND CONTROLS BEARING I&C CHANNEL NUMBERS. SEE UPC MEASURING POINT LIST FOR INSTRUMENTATION AND CONTROLS PROVIDED BY UPC. FOR ADDITIONAL UPC PIPING SEE M1-0249-01.
2. DELETED
3. PURIFICATION EQUIPMENT TO BE SUPPLIED BY OTHERS, WITH ALL SUPERVISORY AND CONTROL INSTRUMENTATION EXCEPT AS OTHERWISE NOTED MOUNTED ON LOCAL CONTROL PANEL.
4. VALVES MARKED * ARE SUPPLIED BY EQUIPMENT MANUFACTURER.
5. CONDITIONER FEED PUMP AND LUBE OIL STORAGE TANK DRAIN PUMP EQUIPPED WITH INTERNAL RELIEF VALVES.
6. DELETED
7. LOCAL CONTROL PANEL TO BE SUPPLIED BY OTHERS AND MOUNTED ON HEATER SKID.
8. SUPPLIED BY OTHERS - INTERLOCK WITH 1-LV-3286A AND B. SEE NOTE 3 ON DWG M1-2214-01.
9. DRAINAGE PROVIDED BY DRUM OR PORTABLE PUMP USING TEMPORARY PIPING.
10. DELETED
11. TWO 5"-150 FF FLANGES ARE PROVIDED FOR THE FUTURE INSTALLATION OF TWO (2) CHROMALOX TMI-630 ELECTRIC HEATERS.
12. DELETED
13. DIP STICK SUPPLIED BY CLEAN LUBRICATING OIL STORAGE TANK MANUFACTURER. DO NOT STORE DIPSTICK IN FILL CONNECTION. THIS WILL MAKE VALVE 1TO-0343 INOPERABLE
14. INSTRUMENTS MARKED ** SUPPLIED BY VENDORS.
15. FOR MECHANICAL SYMBOLS AND NOTES SEE DRAWING M1-0200.
16. DRAIN PUMP EQUIPPED WITH INTERNAL RELIEF VALVES.
17. TANK HAS BEEN REMOVED FROM SERVICE, ABANDONED IN PLACE AND FILLED WITH INERT SOLIDS.

FSAR FIGURE 10.4-17

THIS DRAWING CREATED ELECTRONICALLY

DRAWING M1-0214-A REV CP-4
HAS BEEN SPLIT INTO THE FOLLOWING SHEETS:
M1-0214-A
M1-0214-B

DRAWING 2323-M1-0214 REV CP-6
HAS BEEN SPLIT INTO THE FOLLOWING SHEETS:
M1-0214
M1-0214-A

NON-SAFETY

LUMINANT
CPNPP
GLEN ROSE, TEXAS

FLOW DIAGRAM
TURBINE OIL PURIFICATION

DWG. NO. M1-0214 | SH. NO. A | REV. CP-23

FINAL PRINT

REF CKD 4/19/97 CP-13

me971700.dgn A M1-0214-A

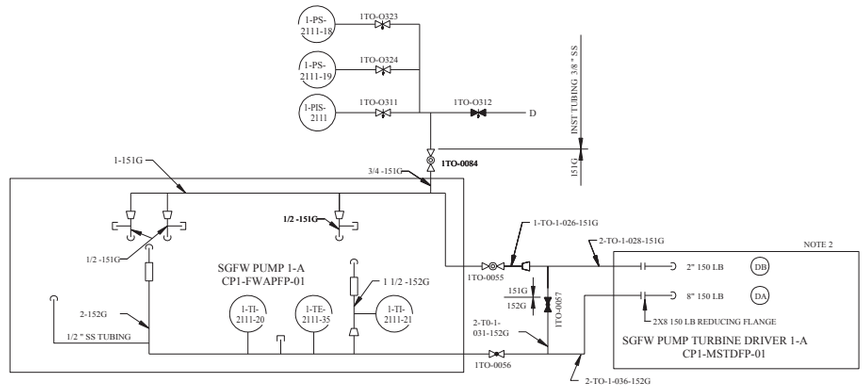

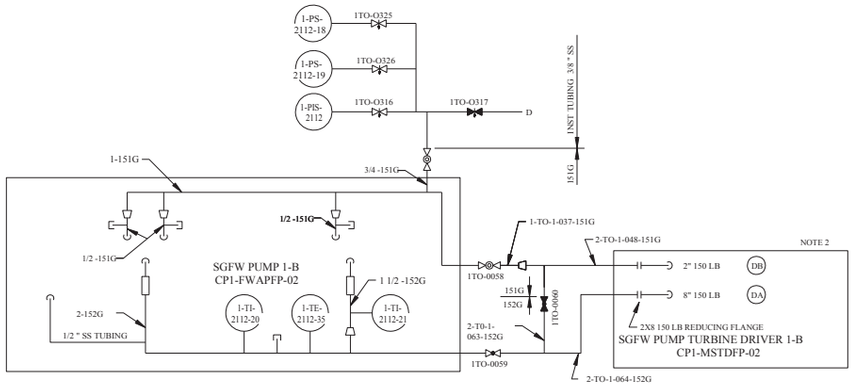

FEEDWATER-TURBINE LUBE OIL INTERFACES

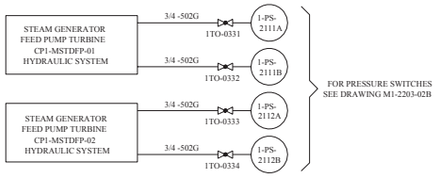

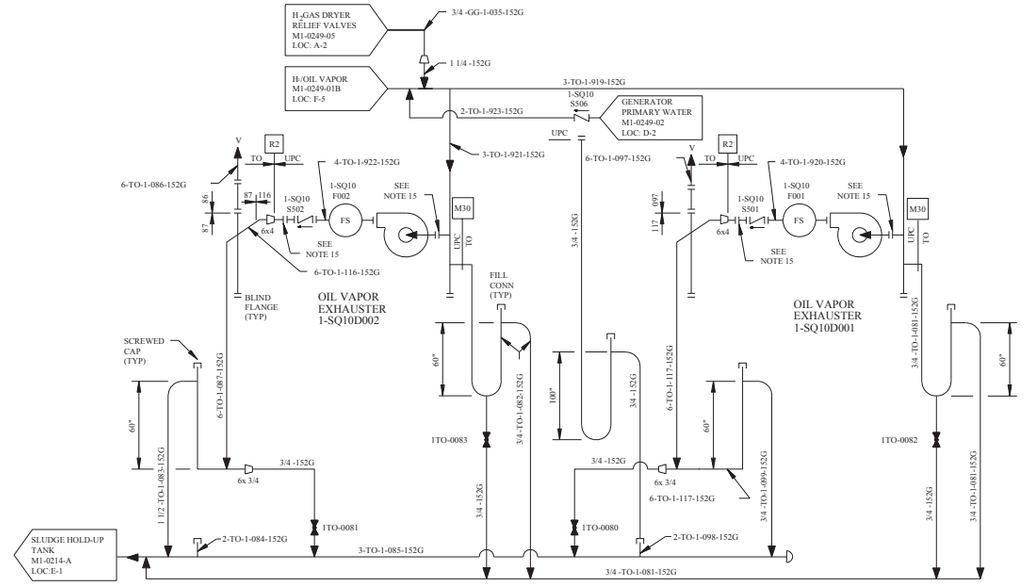

GENERATOR BEARING EXHAUSTERS

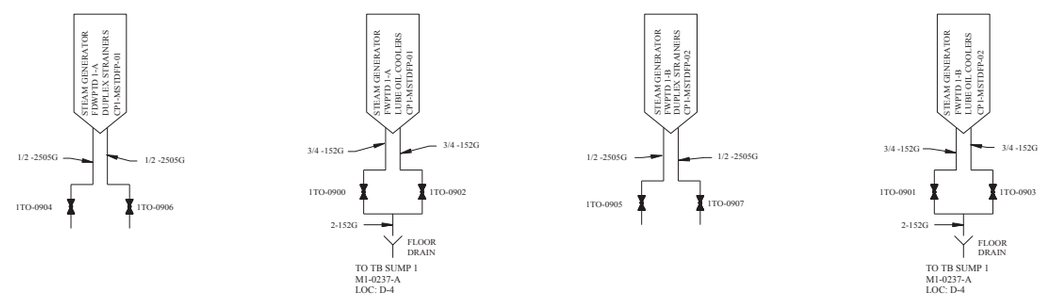

SGFW PUMPS MISC DRAINS

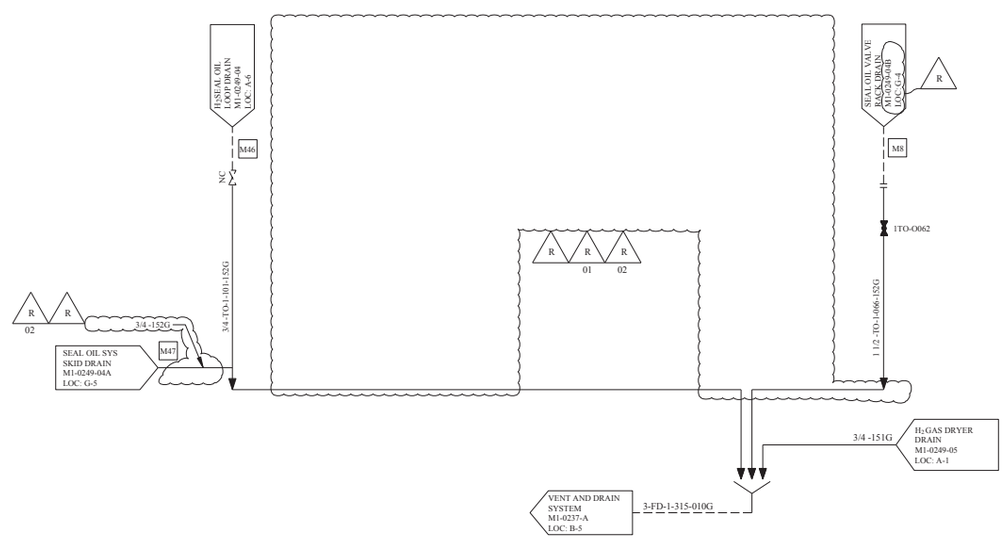

SEAL OIL DRAINS

REV	DWN	CHKD	APVD	REMARKS
CP-15	MM 06-11-2007	MHF 06-11-2007		THIS DRAWING REVISED TO INCORPORATE DESIGN CHANGE FDA-2004-002055-01-05 PER SK-0002-04-002055-01-02.

NOTES:

1. SUPPLIED BY UTILITY POWER COMPANY EXCEPT FOR INDICATED PIPING AND CONTROLS BEARING I&C CHANNEL NUMBERS. SEE UPC MEASURING POINT LIST FOR INSTRUMENTATION AND CONTROLS PROVIDED BY UPC. FOR ADDITIONAL UPC PIPING SEE M1-0249-01.
2. SUPPLIED BY GENERAL ELECTRIC.
3. DELETED
4. DELETED
5. DELETED
6. DELETED
7. DELETED
8. DELETED
9. DELETED
10. UPC CUSTOMERS PIPING CONNECTION TAG NUMBERS ARE SHOWN (TYP). V2
11. DELETED
12. DELETED
13. DELETED
14. FOR MECHANICAL SYMBOLS AND NOTES SEE DRAWING M1-0200.
15. INSTALLATION OF CLOSURE DISC AND OR BLIND FLANGE IS REQUIRED ONLY WHEN EXHAUSTER IS REMOVED.

FSAR FIGURE 10.4-17

THIS DRAWING CREATED ELECTRONICALLY

DRAWING M1-0214-A	REV CP-4
HAS BEEN SPLIT INTO THE FOLLOWING SHEETS:	
M1-0214-A	
M1-0214-B	

NON-SAFETY

LUMINANT
CPSES
GLEN ROSE, TEXAS

FLOW DIAGRAM
TURBINE OIL PURIFICATION

DWG. NO.	SH. NO.	REV.
M1-0214	B	CP-15

FINAL PRINT

REF CHK CP-1 12/03/96

me816700.dgn A M1-0214-B

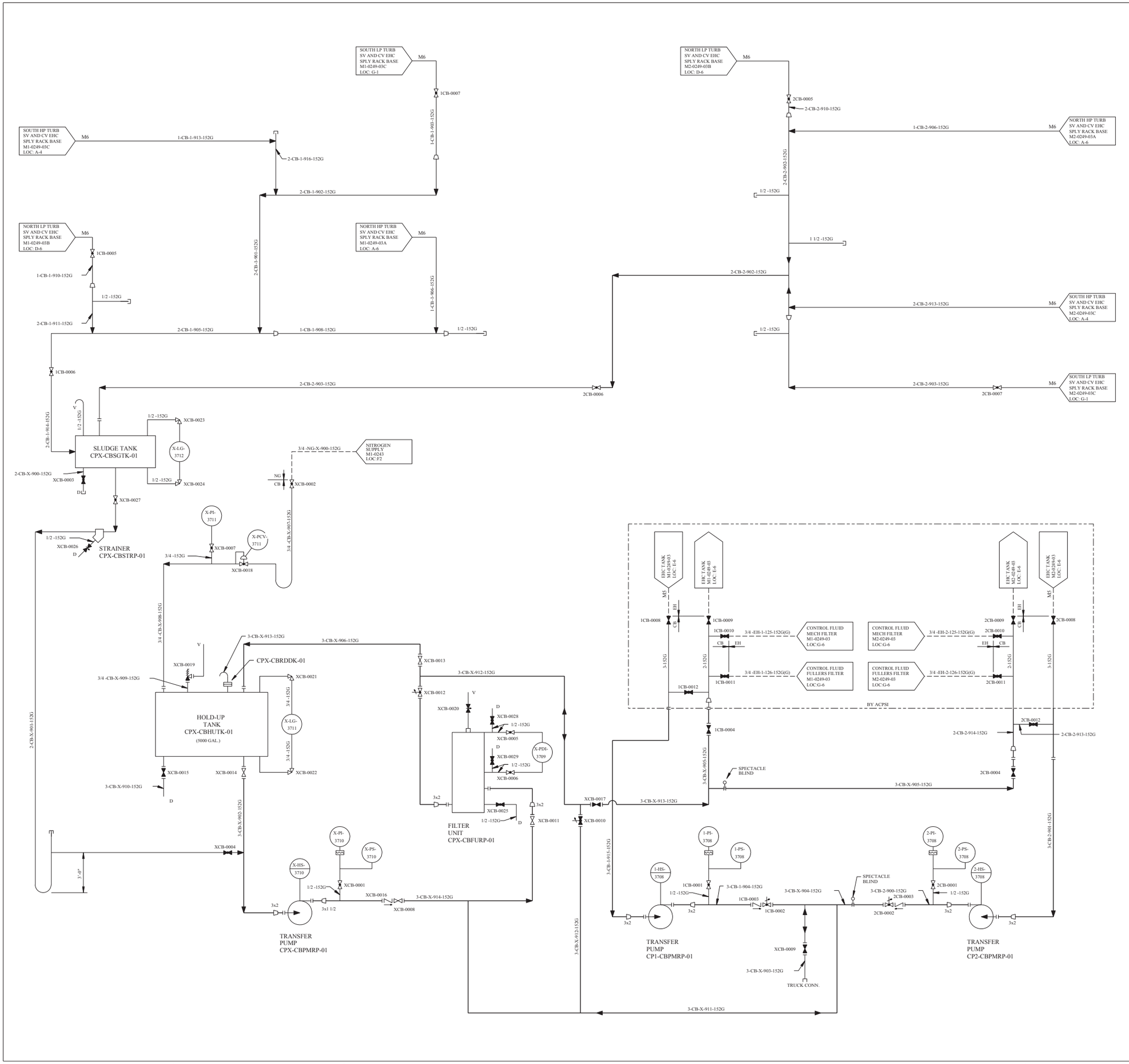

REV	DWN	CHKD	APVD	REMARKS
CP-12	DLK 04-03 2006	MM 04-03 2006		THIS DRAWING REVISED TO INCORPORATE DESIGN CHANGE FDA-2004-000773-08-00 PER SK-0078-04-000773-08-00.

NOTES:

1. USE 6 DIAMETER BENDS WHERE SHOWN.
2. DRILL HOLES OR ARC GOUGE IN CURB PLATES FOR DRIP PAN DRAIN LINES FROM CONTROL FLUID SUPPLY RACKS.
3. WELD BACK TO BACK 90 BW ELLS TO FLANGE CONNECTION AT HYDRAULIC CONTROL EQUIPMENT RACK DRIP PAN DRAIN; NOTCH CURB PLATE AS NEEDED.
4. ALL DRAINS WILL BE COLLECTED LOCALLY UNDER ADMINISTRATIVE CONTROL, UNLESS OTHERWISE NOTED.

REFERENCE DRAWINGS:

1. MECHANICAL SYMBOLS AND NOTES — M1-0200
2. CONTROL FLUID PIPING COMPOSITE — BRP-CL-1-92021
3. CONTROL FLUID PIPING COMPOSITE — BRP-CL-2-92021
4. ICD M1-2214-06A
5. E1-0012-A
6. E2-0012-A
7. E1-0069 SHEET 0

FSAR FIGURE 10.4-17

THIS DRAWING CREATED ELECTRONICALLY

NON-SAFETY

TXU POWER
CPSES
GLEN ROSE, TEXAS

FLOW DIAGRAM
CONTROL FLUID
HOLD UP SYSTEM

DWG. NO. M1-0214 | SH. NO. 01 | REV. CP-12

FINAL PRINT

REF CHKD 05-13/2003

me724000.dgn A M1-0214-01

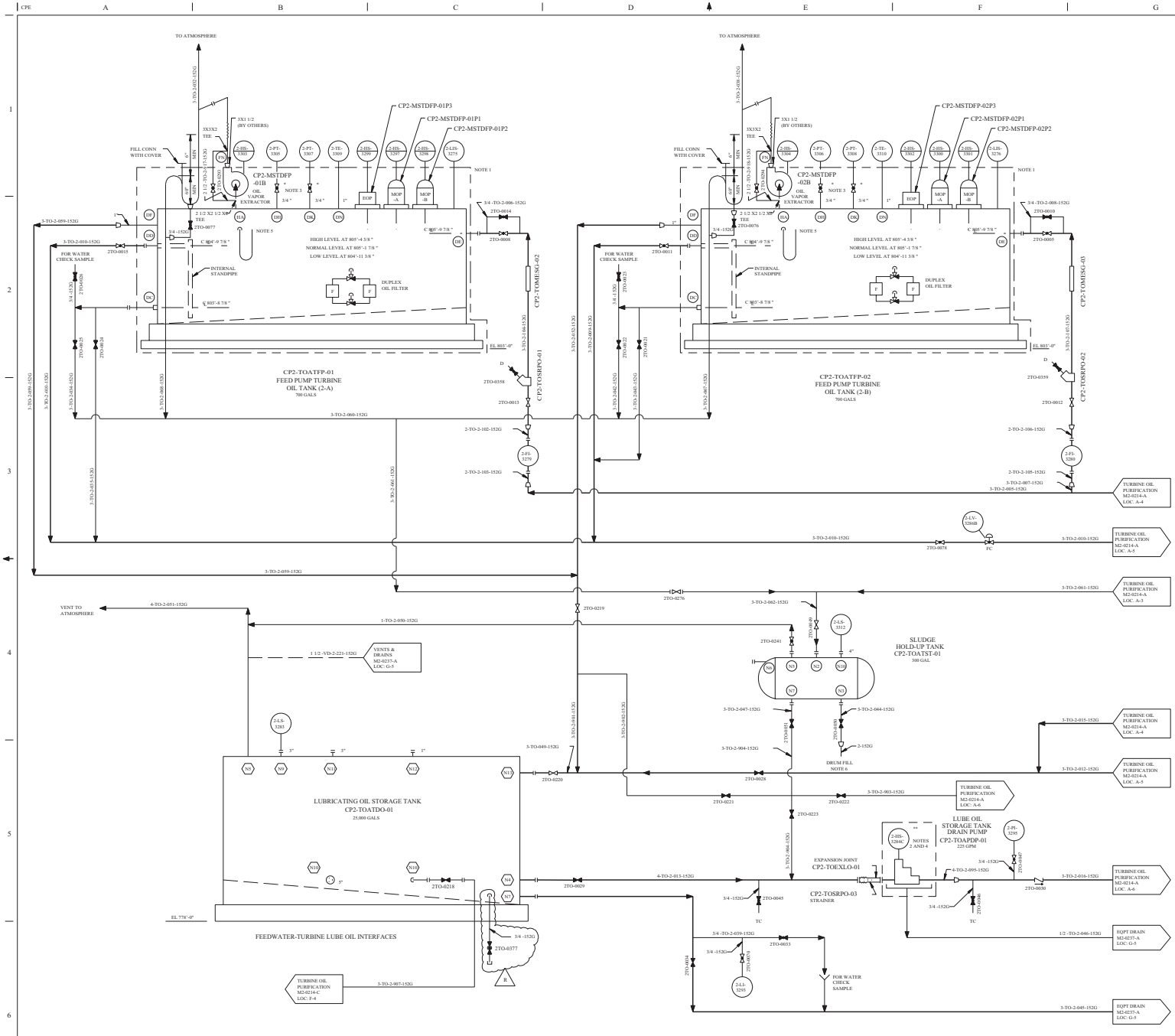

REV	DWN	CHK	APPD	REMARKS
CP-13	R. Hoff 2002	J. Ch 2000		THIS DRAWING REVISED TO INCORPORATE DESIGN CHANGE FDA-2001-002647-01-00 PER SK-0006-01-002647-01-00.

NOTES:

1. SUPPLIED BY GENERAL ELECTRIC.
2. PURIFICATION EQUIPMENT TO BE SUPPLIED BY OTHERS, WITH ALL SUPERVISORY AND CONTROL INSTRUMENTATION EXCEPT AS OTHERWISE NOTED MOUNTED ON LOCAL CONTROL PANEL.
3. VALVES MARKED * ARE SUPPLIED BY EQUIPMENT MANUFACTURER.
4. PURIFIER FEED PUMP AND DRAIN PUMP EQUIPPED WITH INTERNAL RELIEF VALVES.
5. INTERNAL PRESSURE INDICATION MANOMETER FURNISHED BY G E AND MOUNTED BY CUSTOMER.
6. DRAINAGE PROVIDED BY DRUM OR PORTABLE PUMP USING TEMPORARY PIPING.
7. INSTRUMENTS MARKED WITH ** SUPPLIED BY VENDORS.
8. FOR MECHANICAL SYMBOLS AND NOTES SEE DRAWING M1-0200.

FSAR FIGURE 10.4-17

THIS DRAWING CREATED ELECTRONICALLY

DRAWING 2323-M2-0214	REV CP-3
HAS BEEN SPLIT INTO THE FOLLOWING SHEETS:	
M2-0214	
M2-0214-A	
M2-0214-B	
M2-0214-C	

NON-SAFETY

TXU ELECTRIC
CPSES
GLEN ROSE, TEXAS

FLOW DIAGRAM
TURBINE OIL PURIFICATION

DWG. NO.	SH. NO.	REV.
M2-0214	-	CP-13

REF CKD 3/20/97 CP-11

$$$$$$DATE$$$$$$

mc387900.dgn

M2-0214

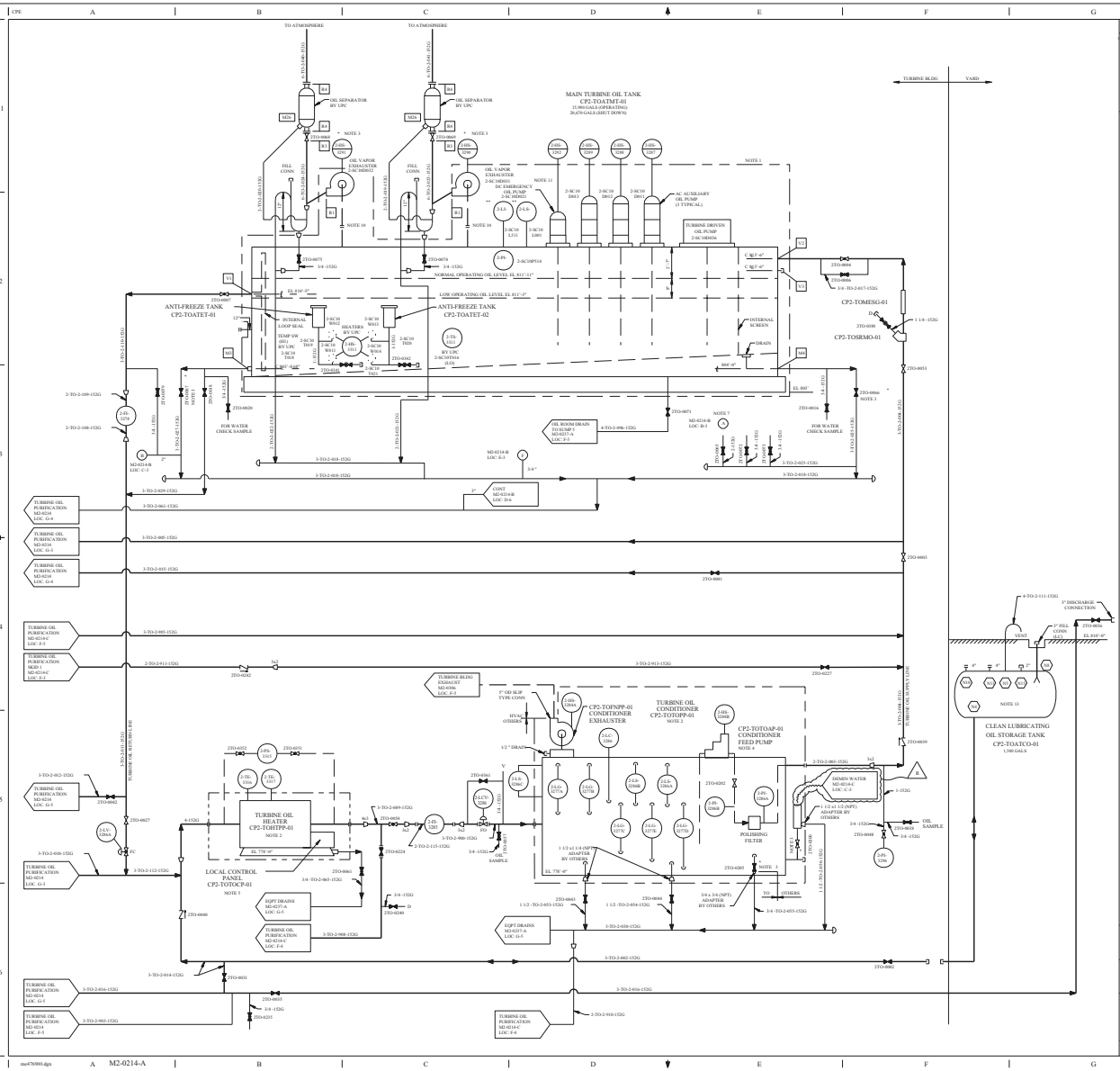

REV	DRWN	CHKD	APPR	REMARKS
CP-22				THIS DRAWING REVISED TO INCORPORATE ERRATA CHANGES PER ERA 2003-00-0151-01-00 PER SE-0002-03-003-033-01-00.

NOTES:

1. SUPPLIED BY UTILITY POWER COMPANY EXCEPT FOR INDICATED PIPING AND CONTROLS BEARING A & C CHANNEL NUMBERS, SEE UPC MEASURING POINT LIST FOR INSTRUMENTATION AND CONTROLS PROVIDED BY UPC.
2. PURIFICATION EQUIPMENT TO BE SUPPLIED BY OTHERS, WITH ALL SUPERVISORY AND CONTROL INSTRUMENTATION EXCEPT AS OTHERWISE NOTED MOUNTED ON LOCAL CONTROL PANEL.
3. VALVES MARKED * ARE SUPPLIED BY EQUIPMENT MANUFACTURER.
4. CONDITIONER FEED PUMP AND DRAIN PUMP EQUIPPED WITH INTERNAL RELIEF VALVES.
5. LOCAL CONTROL PANEL TO BE SUPPLIED BY OTHERS AND MOUNTED ON HEATER SKID.
6. UPC CUSTOMERS PIPING CONNECTION TAG NUMBERS ARE SHOWN (EX. 2-SC10 5211 LOCAL).
7. UPC DUPLEX OIL STRAINER DRAINS USE TEMPORARY PIPING BETWEEN VALVES 2TO-0664 AND 2TO-0665
8. DIP STICK SUPPLIED BY CLEAN LUBRICATING OIL STORAGE TANK MANUFACTURER. DO NOT STORE DIPSTICK IN FILL CONNECTION. THIS WILL MAKE VALVE 2TO-0163 INOPERABLE.
9. INSTRUMENTS MARKED ** SUPPLIED BY VENDOR.
10. INSTALLATION OF CLOSURE DISC AND/OR BLIND FLANGE IS REQUIRED ONLY WHEN EXHAUSTER IS REMOVED.
11. FOR DETAILS OF TURBINE LUBE OIL SUPPLY REFER TO DIAGRAM OF LUBRICATION OIL PIPING (DWG 7163-90200, CP-003).
12. FOR MECHANICAL SYMBOLS AND NOTES SEE DRAWING M2-0200.
13. TANK HAS BEEN REMOVED FROM SERVICE, ABANDONED IN PLACE AND FILLED WITH INERT SOLIDS.

FSAR FIGURE 10.4-17

THIS DRAWING CREATED FROM DWG 0-L-X

DRAWING: 2TO-MD-0214	REV: CP-3
HAS BEEN SPLIT INTO THE FOLLOWING SHEETS:	
M2-0214	
M2-0214-A	
M2-0214-B	
M2-0214-C	

NON-SAFETY

TXU ENERGY
CPSES
GLEN ROSE, TEXAS

FLOW DIAGRAM
TURBINE OIL PURIFICATION

DWG. NO. M2-0214 | RR. NO. A | REV. CP-22

M2-0214-A

REF CKD 4-25-97 CC-D

SRSSSSSAAEESSRS

ms478/000.dgn

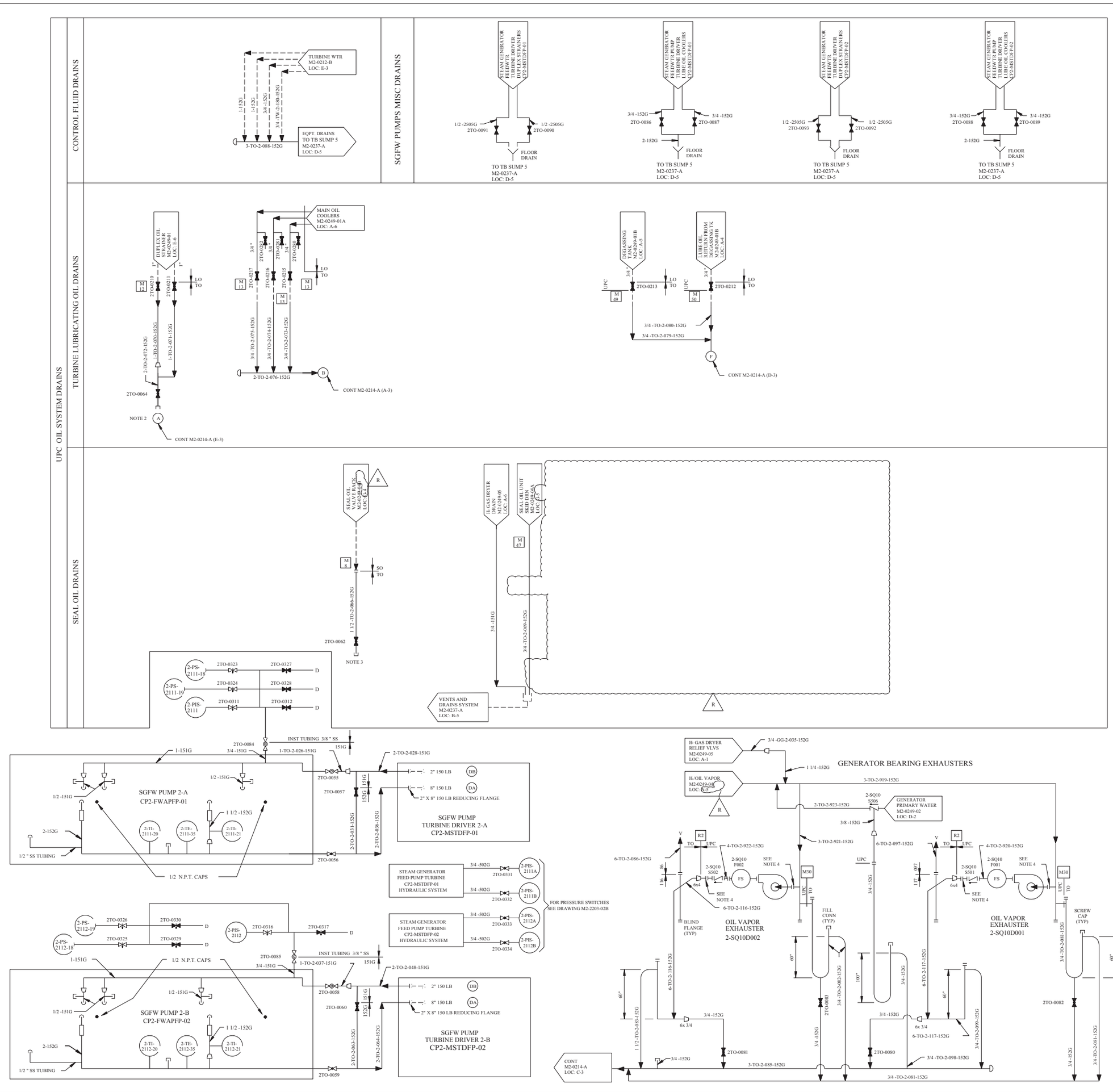

REV	DWN	CHKD	APVD	REMARKS
CP-14	DLK 06-27 2007	MM 07-03 2007		THIS DRAWING REVISED TO INCORPORATE DESIGN CHANGE FDA 2004-002055-06-00 PER SK-0060-04-002055-06-00.

NOTES:

1. UPC CUSTOMERS PIPING CONNECTION TAG NUMBERS ARE SHOWN (TYPICAL).
2. UPC DUPLEX OIL STRAINER DRAINS USE TEMPORARY PIPING BETWEEN VALVES 2TO-0064 AND 2TO-0065 .
3. SCREWED CAP TO REMAIN IN PLACE EXCEPT WHILE OIL IS BEING COLLECTED.
4. INSTALLATION OF CLOSURE DISC AND/OR BLIND FLANGE IS REQUIRED ONLY WHEN EXHAUSTER IS REMOVED.

FSAR FIGURE 10.4-17

THIS DRAWING CREATED ELECTRONICALLY

DRAWING 2323-M2-0214	REV CP-3
HAS BEEN SPLIT INTO THE FOLLOWING SHEETS:	
M2-0214	
M2-0214-A	
M2-0214-B	
M2-0214-C	

NON-SAFETY

LUMINANT
CPSES
GLEN ROSE, TEXAS

FLOW DIAGRAM
TURBINE OIL PURIFICATION

DWG. NO.	SH. NO.	REV.
M2-0214	B	CP-14

FINAL PRINT

REF CKD 2/27/97 CP-9

me862400.dgn A M2-0214-B

REV	DWN	CHKD	APVD	REMARKS
CP-14	GKS 01-31 2005	MHF 01-31 2005		THIS DRAWING REVISED TO INCORPORATE DESIGN CHANGE FDA-2003-001388-01-00 PER SK-0002-03-001388-01-00.

NOTES

1. PURIFICATION EQUIPMENT TO BE SUPPLIED BY OTHERS, WITH ALL SUPERVISORY AND CONTROL INSTRUMENTATION EXCEPT AS OTHERWISE NOTED MOUNTED ON LOCAL CONTROL PANEL.
2. VALVES MARKED * ARE SUPPLIED BY EQUIPMENT MANUFACTURER.
3. PURIFIER FEED PUMP EQUIPPED WITH INTERNAL RELIEF VALVE.
4. INSTRUMENTS MARKED ** SUPPLIED BY VENDOR.
5. THIS HOSE CONNECTION MAY BE UTILIZED TO MAKE UP WATER TO TURBINE CONDITIONER CP2-TOTOPP-01 OR OIL PURIFICATION CENTRIFUGE SKID CP2-TOCPNB-01.

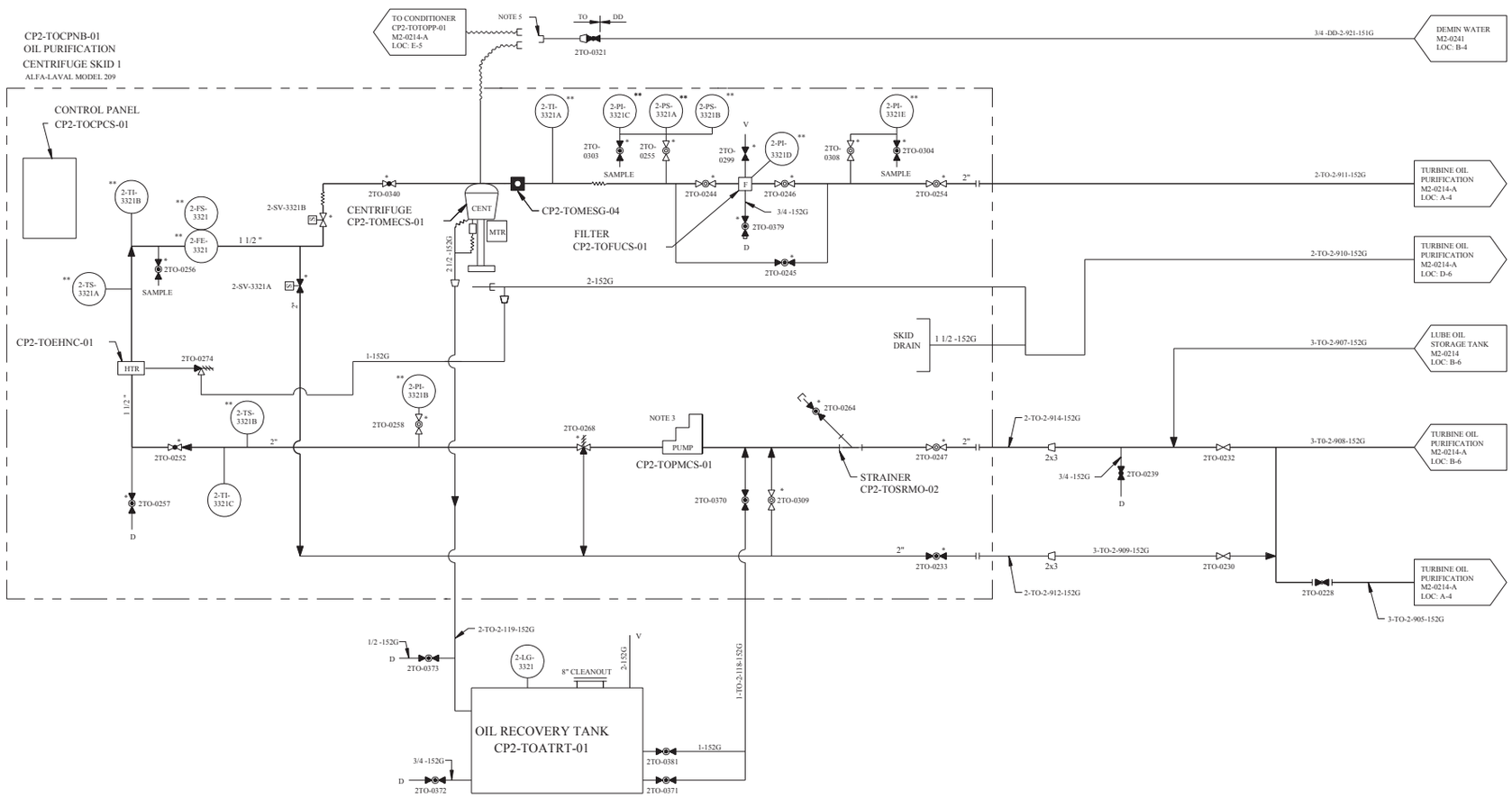

FSAR FIGURE 10.4-17

THIS DRAWING CREATED ELECTRONICALLY

DRAWING 2323-M2-0214	REV CP-3
HAS BEEN SPLIT INTO THE FOLLOWING SHEETS:	
M2-0214	
M2-0214-A	
M2-0214-B	
M2-0214-C	

NON-SAFETY

TXU POWER
CPSES
GLEN ROSE, TEXAS

FLOW DIAGRAM
TURBINE OIL PURIFICATION

DWG. NO.	SH. NO.	REV.
M2-0214	C	CP-14

FINAL PRINT

REF CKD 1/7/98 CP-8

me697000.dgn M2-0214-C

REV	DWN	CHKD	APVD	REMARKS
CP-26	SJL 03-24 2003	DJL 03-25 2003		THIS DRAWING REVISED TO INCORPORATE DESIGN CHANGE FDA-2002-002463-04-00 PER SK-0002-02-002463-04-00.

NOTES:

1. ADDITIONAL N_2 GAS CYLINDERS ACPSI COMPONENTS IS SHOWN ON DIAGRAM M1-0249-05A.
2. INDICATES OUT-OF-SYSTEM LINE.
3. FOR MECHANICAL SYMBOLS AND NOTES SEE DWG M1-0200.
4. X-PT-1066 IS FURNISHED BY WESTINGHOUSE. LOCAL INDICATION AND A REMOTE INDICATOR ON THE GASEOUS WASTE PROCESSING PANEL IS PROVIDED.
5. MATCHING CONNECTIONS USED ARE 0.965" OD WITH 14 NGO-RN INTERNAL THREADS.
6. 3/4 " NPT CAP.
7. INTERCONNECTING PIPING BETWEEN EQUIPMENT SHOWN ON AIR PRODUCTS AND CHEMICALS DRAWINGS IS SUPPLIED BY AIR PRODUCTS AND CHEMICALS BUT INSTALLATION ON THIS PIPING IS NOT IN THEIR SCOPE. REFER TO THE REFERENCED DRAWINGS AND CUSTOMER CONNECTION LIST FOR ASSEMBLY.
8. DELETED
9. DENOTES RADIOACTIVE WASTE MANAGEMENT SYSTEM CONTINUES ON IDENTIFIED DRAWING.
10. CRACK OPEN BLEED VALVE AND SHUT-OFF VALVES WITH BOTH BOTTLES FULL, SET REGULATOR 1-PCV-6809 TO 105 PSIG AND 1-PCV-6812 TO 100 PSIG. WHEN REGULATORS ARE SET, CLOSE BLEED VALVE. AFTER BOTTLE 1 IS DEPLETED, IDENTIFIED BY AN IDENTICAL PRESSURE READINGS ON THE THE HIGH PRESSURE AND OUTPUT GAGES ON VALVE 1-PCV-6809 , CLOSE SHUT-OFF VALVE ON REGULATOR 1-PCV-6809 AND REMOVE DEPLETED BOTTLE 1. INSTALL A FRESH BOTTLE IN ITS PLACE, AND CRACK BLEED VALVE OPEN. READJUST REGULATOR 1-PCV-6809 TO 100 PSIG AND 1-PCV-6812 TO 105 PSIG; CLOSE BLEED VALVE. REVERSE PROCEDURE WHEN SUPPLY BOTTLE 2 IS DEPLETED.
11. 1NG-0052 IS AN APPROVED AND PROCEDURALIZED ALTERNATE LP NITROGEN INJECTION POINT.

R

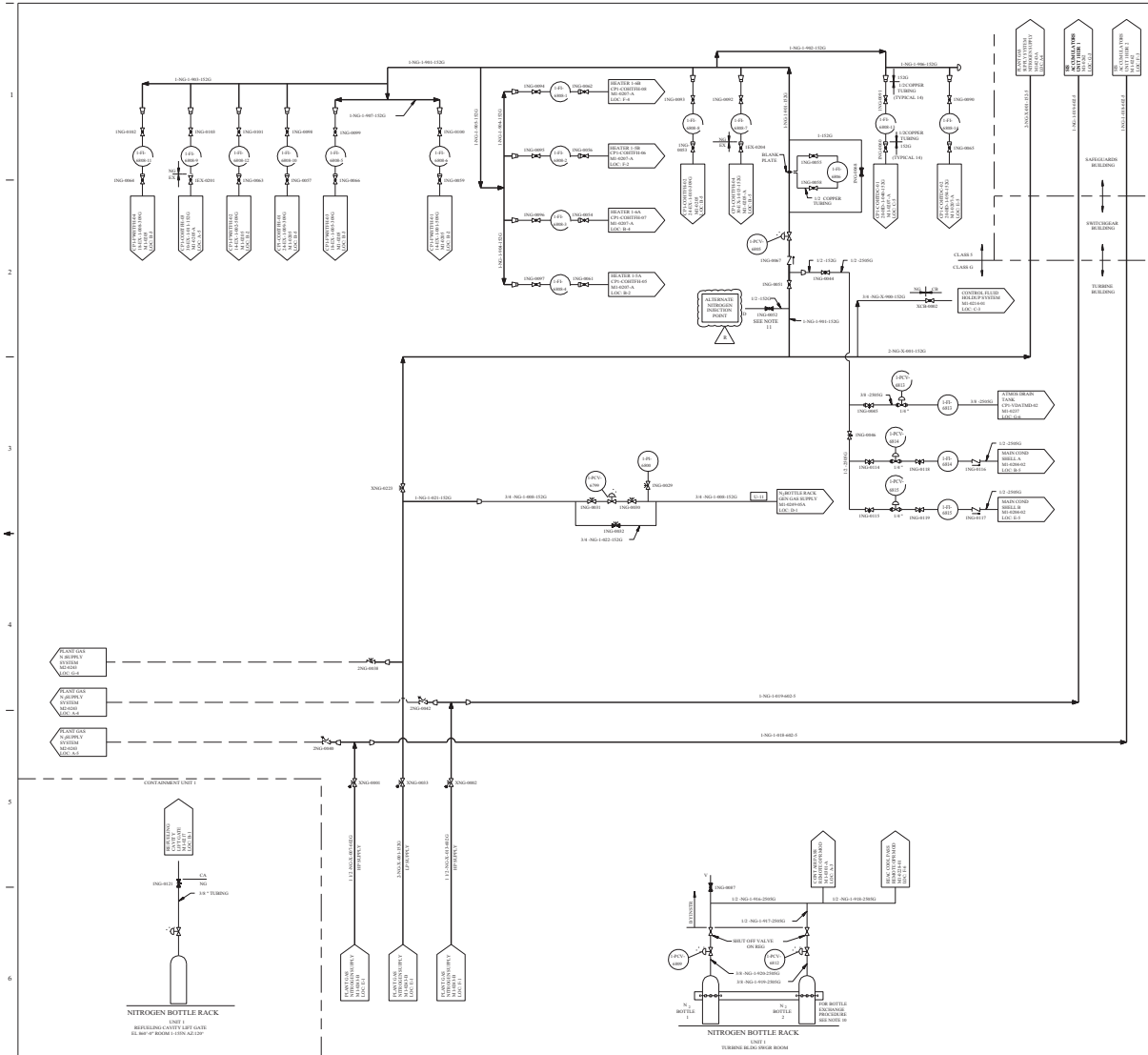

FSAR FIGURE 10.4-18

THIS DRAWING CREATED ELECTRONICALLY

DRAWING M1-0243 REV CP-12
HAS BEEN SPLIT INTO THE FOLLOWING SHEETS:
M1-0243
M1-0243-B

DRAWING 2323-M1-0243 REV CP-7
HAS BEEN SPLIT INTO THE FOLLOWING SHEETS:
M1-0243
M1-0243-A

CLASS II

TXU ENERGY
CPSES
GLEN ROSE, TEXAS

FLOW DIAGRAM
PLANT GAS SUPPLY SYSTEM
NITROGEN SUPPLY

DWG. NO.	SH. NO.	REV.
M1-0243	-	CP-26

$$$$$$DATE$$$$$$

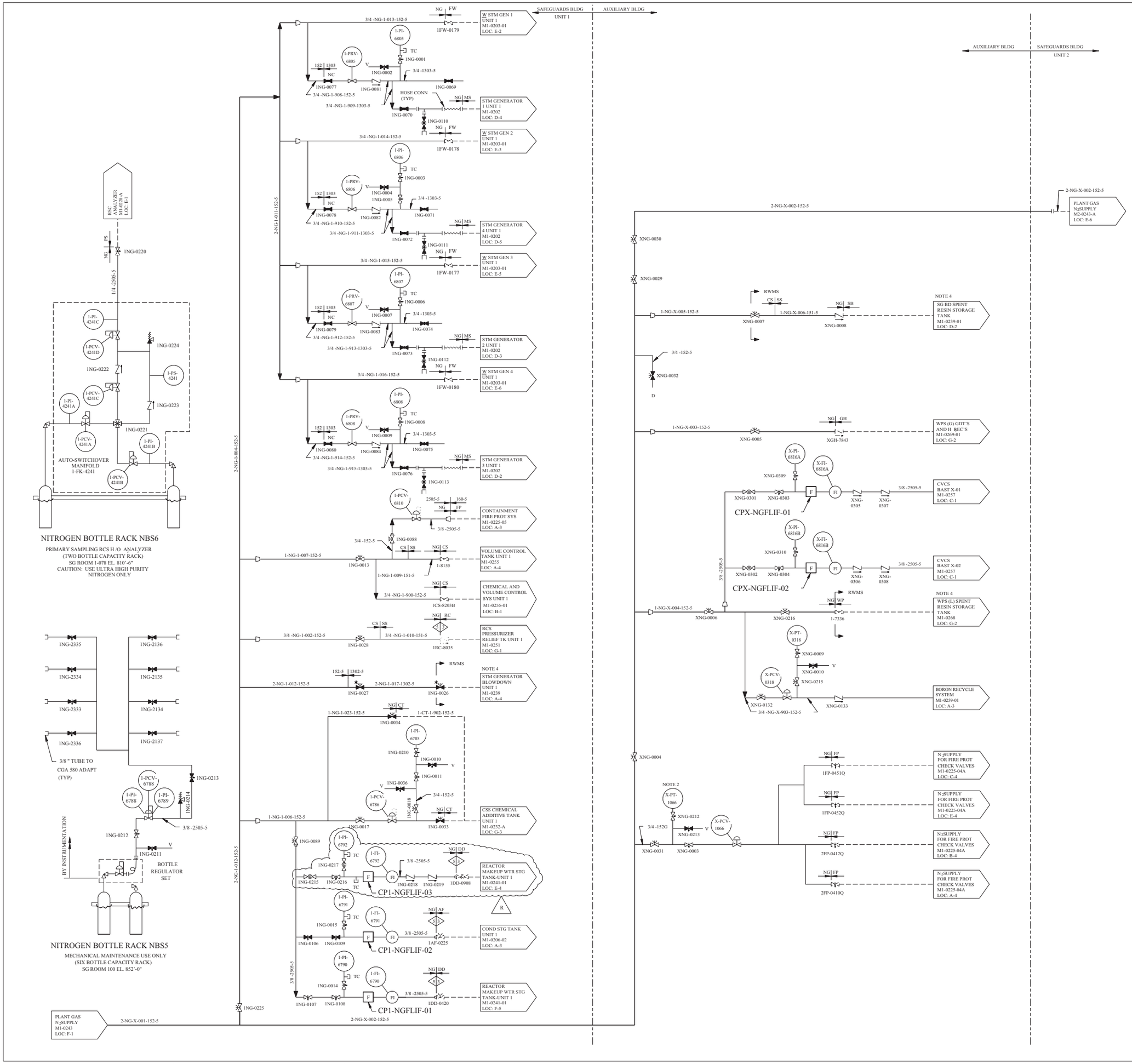

REV	DWN	CHKD	APVD	REMARKS
CP-26	JRMC 12-06-2004	DJL 12-07-2004		THIS DRAWING REVISED TO INCORPORATE DESIGN CHANGE FDA-2004-002128-01-00 PER SK-0004-04-002128-01-00.

NOTES:

1. FOR MECHANICAL SYMBOLS AND NOTES SEE DWG M1-0200.
2. X-PT-1066 IS FURNISHED BY WESTINGHOUSE. LOCAL INDICATION AND A REMOTE INDICATOR ON THE GASEOUS WASTE PROCESSING PANEL IS PROVIDED.
3. DELETED
4. DENOTES RADIOACTIVE WASTE MANAGEMENT SYSTEM CONTINUES ON THE IDENTIFIED DRAWING.

FSAR FIGURE 10.4-18

DRAWING M1-0243-A REV CP-10
HAS BEEN SPLIT INTO THE FOLLOWING SHEETS:
M1-0243-A
M2-0243-A

DRAWING 2323-M1-0243 REV CP-7
HAS BEEN SPLIT INTO THE FOLLOWING SHEETS:
M1-0243
M1-0243-A

THIS DRAWING CREATED ELECTRONICALLY

CLASS II

LUMINANT
CPSES
GLEN ROSE, TEXAS

FLOW DIAGRAM
PLANT GAS SUPPLY SYSTEM
NITROGEN SUPPLY

DWG. NO. M1-0243 | SH. NO. A | REV. CP-26

FINAL PRINT

REF CKD CP-20 01/10/97

me623500.dgn M1-0243-A

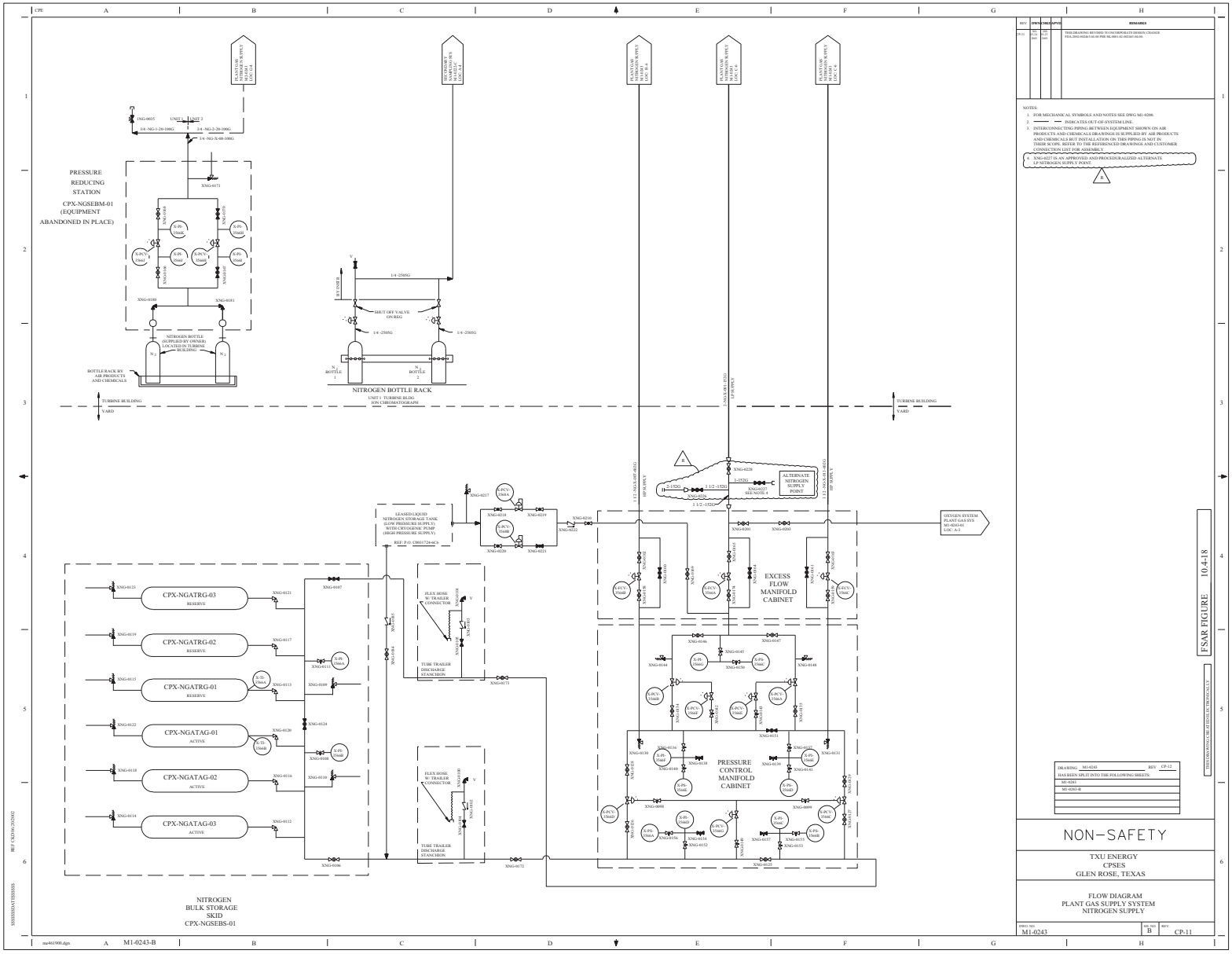

REV	DRWN	CHKD	APVD	REMARKS
CP-11	TJS 06/08/05	DJS 06/08/05		THIS DRAWING REVISED TO INCORPORATE DESIGN CHANGE FSA-2005-0028 DR-09 PER SR-0001-02-002-003-06.

NOTES:

1. FOR MECHANICAL SYMBOLS AND NOTES SEE DWG M1-0200.
2. ——— — INDICATES OUT-OF-SYSTEM LINE.
3. INTERCONNECTING PIPING BETWEEN EQUIPMENT SHOWN ON AIR PRODUCTS AND CHEMICALS DRAWINGS IS SUPPLIED BY AIR PRODUCTS AND CHEMICALS BUT INSTALLATION ON THIS PIPING IS NOT IN THIER SCOPE. REFER TO THE REFERENCED DRAWINGS AND CUSTOMER CONNECTION LIST FOR ASSEMBLY.
4. XNG-6027 IS AN APPROVED AND PROCEDURALIZED ALTERNATE LP NITROGEN SUPPLY POINT.

FSAR FIGURE 10.4-18

THIS DRAWING CAN BE AUTHORIZED TO BE DIGITALLY

DRAWING M1-0240 REV CP-12
HAS BEEN SPLIT INTO THE FOLLOWING SHEETS:
M1-0243
M1-0243-B

NON-SAFETY

TXU ENERGY
CPSES
GLEN ROSE, TEXAS

FLOW DIAGRAM
PLANT GAS SUPPLY SYSTEM
NITROGEN SUPPLY

DWG. NO. M1-0243 SHT. NO. B REV. CP-11

REF / CKD 06/25/02

$$$$$$$$DATE$$$$$$$$

REV	DWN	CHKD	APVD	REMARKS
CP-9	RMR 05-24-1996			THIS DRAWING REVISED TO ADD THE FSAR FIGURE NUMBER AS AN EDITORIAL CHANGE.

NOTES

1. ADDITIONAL N GAS CYLINDERS ACPSI COMPONENTS IS SHOWN ON DIAGRAM M1-0249-05A.
2. ——•—INDICATES OUT-OF-SYSTEM LINE.
3. FOR MECHANICAL SYMBOLS AND NOTES SEE DWG M1-0200.
4. X-FT-1066 IS FURNISHED BY WESTINGHOUSE. LOCAL INDICATION AND A REMOTE INDICATOR ON THE GASEOUS WASTE PROCESSING PANEL IS PROVIDED.
5. MATCHING CONNECTIONS USED ARE 0.965" OD WITH 14 NGO-RN INTERNAL THREADS.
6. DELETED
7. 3/4 " NPT CAP.
8. INTERCONNECTING PIPING BETWEEN EQUIPMENT SHOWN ON AIR PRODUCTS AND CHEMICALS DRAWINGS IS SUPPLIED BY AIR PRODUCTS AND CHEMICALS BUT INSTALLATION ON THIS PIPING IS NOT IN THEIR SCOPE. REFER TO THE REFERENCED DRAWINGS AND CUSTOMER CONNECTION LIST FOR ASSEMBLY.
9. DELETED
10. DENOTES RADIOACTIVE WASTE MANAGEMENT SYSTEM CONTINUES ON IDENTIFIED DRAWING.
11. CRACK OPEN BLEED VALVE AND SHUT-OFF VALVES WITH BOTH BOTTLES FULL, SET REGULATOR 2-PCV-6809 TO 105 PSIG AND 2-PCV-6810 TO 100 PSIG. WHEN REGULATORS ARE SET, CLOSE BLEED VALVE. AFTER BOTTLE 1 IS DEPLETED, IDENTIFIED BY AN IDENTICAL PRESSURE READINGS ON THE THE HIGH PRESSURE AND OUTPUT GAGES ON VALVE 2-PCV-6809 CLOSE SHUT-OFF VALVE ON REGULATOR 2-PCV-6809 AND REMOVE DEPLETED BOTTLE 1. INSTALL A FRESH BOTTLE IN ITS PLACE, AND CRACK BLEED VALVE OPEN. READJUST REGULATOR 2-PCV-6809 TO 100 PSIG AND 2-PCV-6810 TO 105 PSIG; CLOSE BLEED VALVE. REVERSE PROCEDURE WHEN SUPPLY BOTTLE 2 IS DEPLETED.

FSAR FIGURE 10.4.18

CP 9

THIS DRAWING CREATED ELECTRONICALLY

DRAWING M1-0243	REV CP-12
HAS BEEN SPLIT INTO THE FOLLOWING SHEETS:	
M1-0243	
M1-0243-B	
M2-0243	

NON-SAFETY

TXU ELECTRIC
CPSES
GLEN ROSE, TEXAS

FLOW DIAGRAM
PLANT GAS SUPPLY SYSTEM
NITROGEN SUPPLY

DWG. NO.	SH. NO.	REV.
M2-0243	-	CP-9

REV	DWN	CHKD	APVD	REMARKS
CP-11	DLK 05-29 2012			THIS DRAWING REVISED TO EDITORIALLY CORRECT DRAFTING ERROR PER AI-CR-2012-005587-1. THIS ERROR OCCURRED WHEN THE UNIT 2 PORTIONS OF THE DRAWING WAS SPLIT FROM M1-0243-A REV CP-10 IN 6/27/1991. THE CONTINUATION BLOCK WAS NEVER VERIFIED TO THE CORRESPONDING FLOW DIAGRAM.

NOTES:

1. FOR MECHANICAL SYMBOLS AND NOTES SEE DWG M1-0200.
2. DENOTES RADIOACTIVE WASTE MANAGEMENT SYSTEM CONTINUES ON THE IDENTIFIED DRAWING.

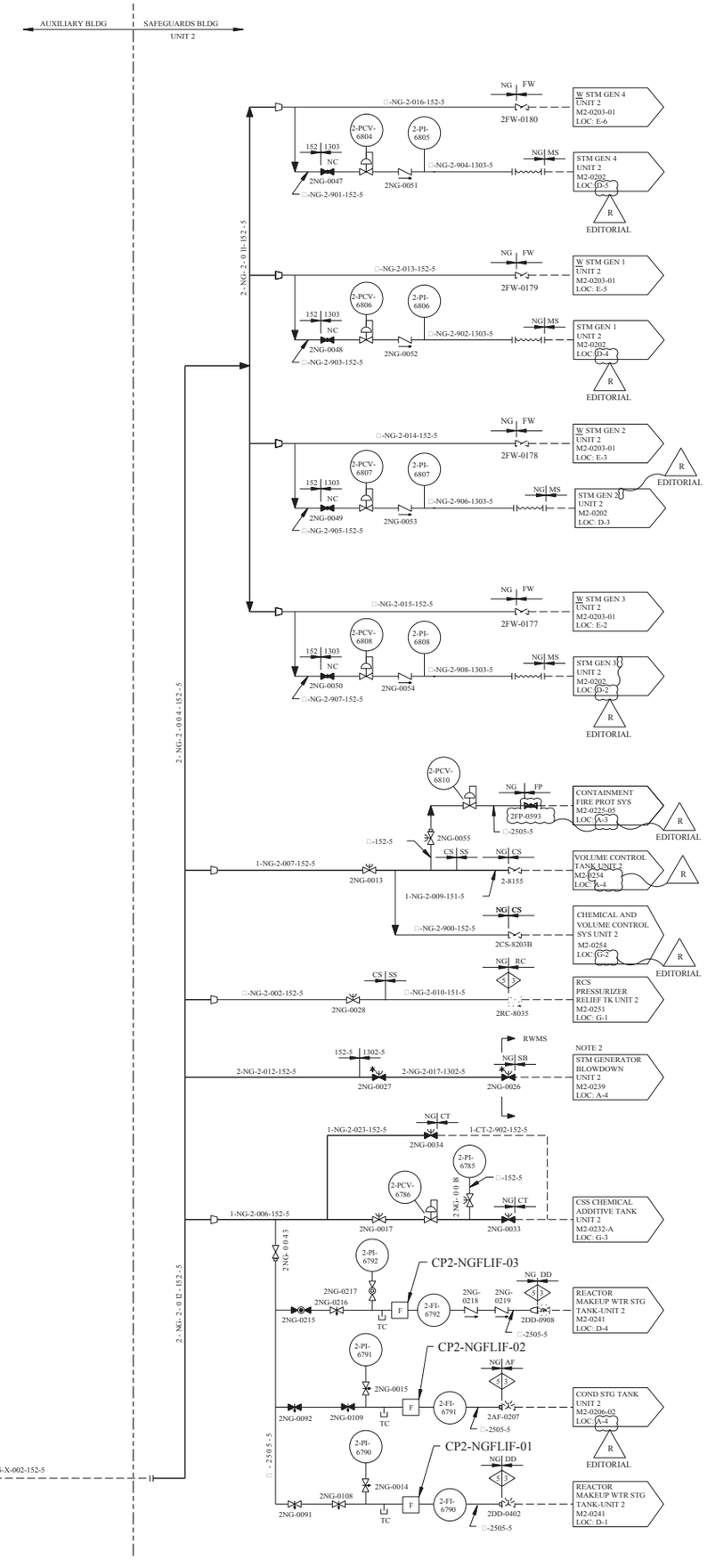

FSAR FIGURE 10.4-18

THIS DRAWING CREATED ELECTRONICALLY

DRAWING M1-0243-A	REV CP-10
HAS BEEN SPLIT INTO THE FOLLOWING SHEETS:	
M1-0243-A	
M2-0243-A	

CLASS II

LUMINANT
CPNPP
GLEN ROSE, TEXAS

FLOW DIAGRAM
PLANT GAS SUPPLY SYSTEM
NITROGEN SUPPLY

DWG. NO.	SH. NO.	REV.
M2-0243	A	CP-11

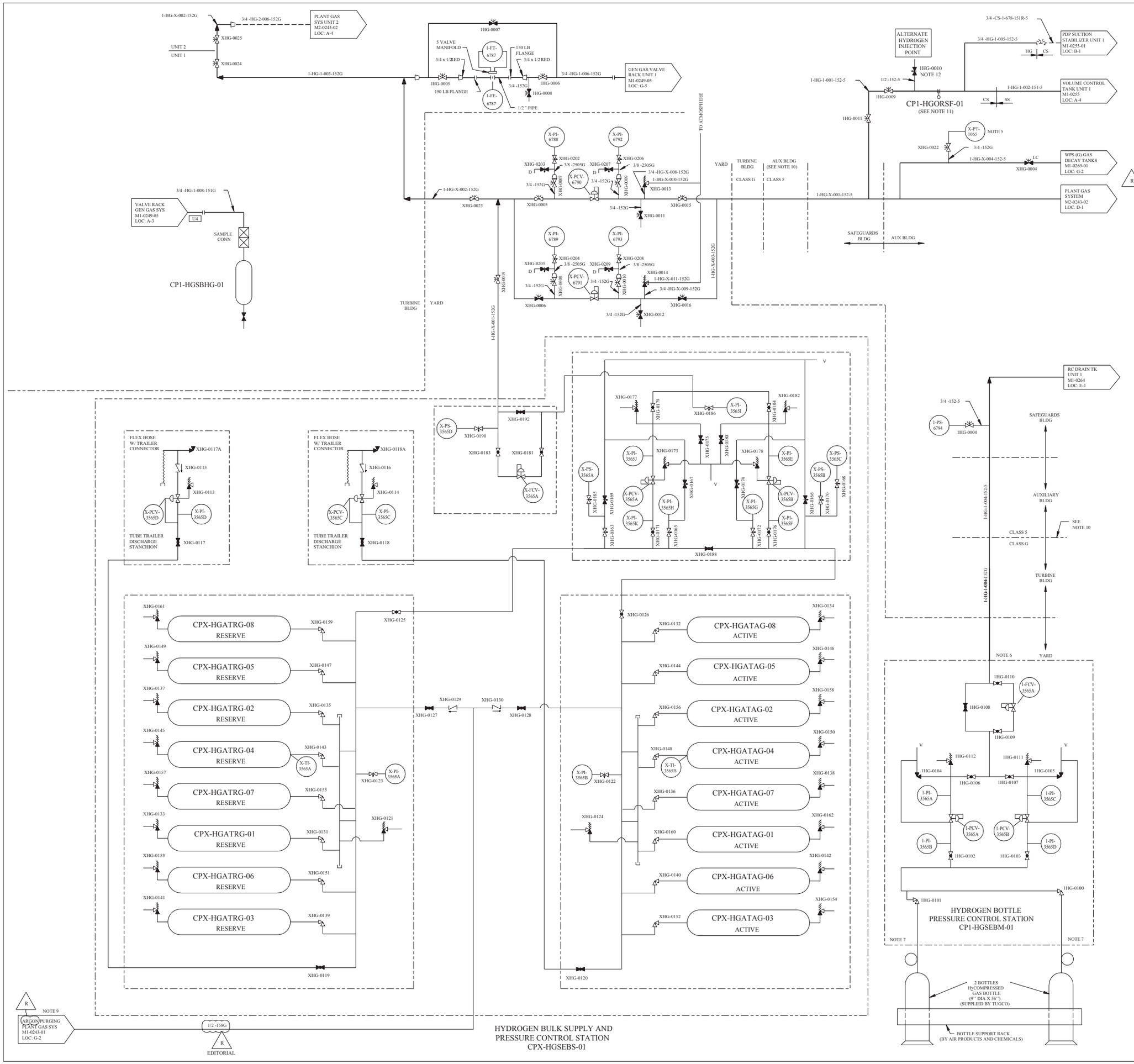

REV	DWN	CHKD	APVD	REMARKS
CP-23	MM 06-27-2007	RA 06-27-2007		THIS DRAWING REVISED TO INCORPORATE DESIGN CHANGE FDA-2003-001214-02.00 PER SK-0004-01-001214-02-00. EDITORIAL CHANGE AS NOTED.

NOTES:

1. SEE DWG M1-0249-05A FOR BACK-UP H2 BOTTLE SUPPLY WHICH IS NOT LOCATED IN PLANT GAS STORAGE AREA.
2. FOR MECHANICAL SYMBOLS AND NOTES SEE DWG M1-0200.
3. DELETED
4. CAPS WILL NOT BE PROVIDED ON VENTS AND DRAINS LINES.
5. PT-1065 IS FURNISHED BY WESTINGHOUSE. LOCAL INDICATION AND A REMOTE INDICATOR ON THE GASEOUS WASTE PROCESSING PANEL IS PROVIDED.
6. AIR PRODUCTS CONNECTION 1 1/8 " OD
7. MANIFOLD CONNECTION IS THE STANDARD COMPRESSED GAS ASSOCIATION HEADER VALVE FITTING CGA350; MANIFOLD BY AIR PRODUCTS AND CHEMICALS.
8. DELETED
9. ARGON PURGE IS FOR GASEOUS STORAGE VESSELS ONLY.
10. PORTIONS OF THIS SYSTEM HAVE BEEN SEISMICALLY ANALYZED AND SUPPORTED SO THAT PIPING FAILURE DURING A SEISMIC EVENT WOULD NOT YIELD UNACCEPTABLE HYDROGEN CONCENTRATIONS IN SAFETY RELATED PLANT AREAS.
11. SPECTACLE FLANGE SHOWN IN THE OPEN POSITION.
12. 1HG-0010 IS AN APPROVED AND PROCEDURALIZED ALTERNATE HYDROGEN INJECTION POINT.

FSAR FIGURE 10.4-19

THIS DRAWING CREATED ELECTRONICALLY

DRAWING M1-0243-02 REV CP-10
HAS BEEN SPLIT INTO THE FOLLOWING SHEETS:
M1-0243-02
M2-0243-02

CLASS II

LUMINANT
CPSES
GLEN ROSE, TEXAS

FLOW DIAGRAM
PLANT GAS SUPPLY SYSTEM
HYDROGEN SUPPLY

DWG. NO. M1-0243 | SH. NO. 02 | REV. CP-23

FINAL PRINT

me871300.dgn A M1-0243-02

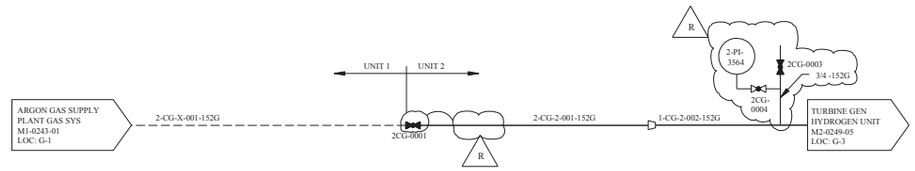

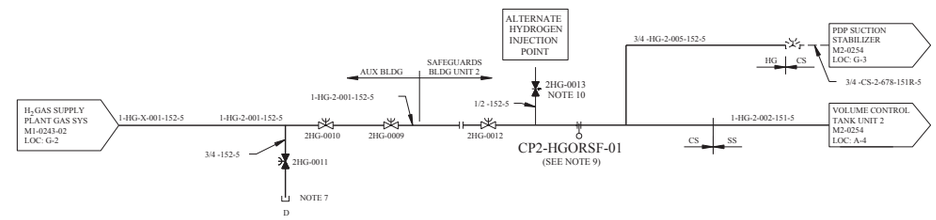

REV	DWN	CHKD	APVD	REMARKS
CP-14	EES 05-20 2008	DLK 05-20 2008		THIS DRAWING REVISED TO INCORPORATE DESIGN CHANGE FDA-2001-001214-02-04 PER SK-0059-01-001214-02-00.

NOTES:

1. SEE DWG M2-0249-05A FOR BACK-UP H2 BOTTLE SUPPLY WHICH IS NOT LOCATED IN PLANT GAS STORAGE AREA.
2. FOR MECHANICAL SYMBOLS AND NOTES SEE DWG M1-0200.
3. DELETED
4. AIR PRODUCTS CONNECTION 1 1/8 " OD
5. MANIFOLD CONNECTION IS THE STANDARD COMPRESSED GAS ASSOCIATION HEADER VALVE FITTING CGA350; MANIFOLD BY AIR PRODUCTS AND CHEMICALS.
6. DELETED
7. 3/4 INCH NPT CAP.
8. PORTIONS OF THIS SYSTEM HAVE BEEN SEISMICALLY ANALYZED AND SUPPORTED SO THAT PIPING FAILURE DURING A SEISMIC EVENT WOULD NOT YIELD UNACCEPTABLE HYDROGEN CONCENTRATIONS IN SAFETY RELATED PLANT AREAS.
9. SPECTACLE FLANGE SHOWN IN THE OPEN POSITION.
10. 2HG-0013 IS AN APPROVED AND PROCEDURALIZED ALTERNATE HYDROGEN INJECTION POINT.

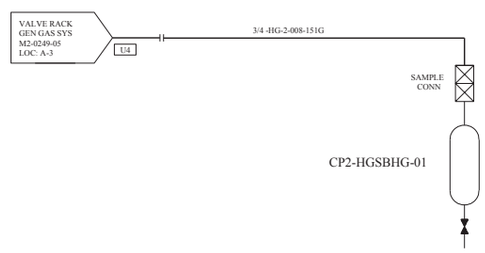

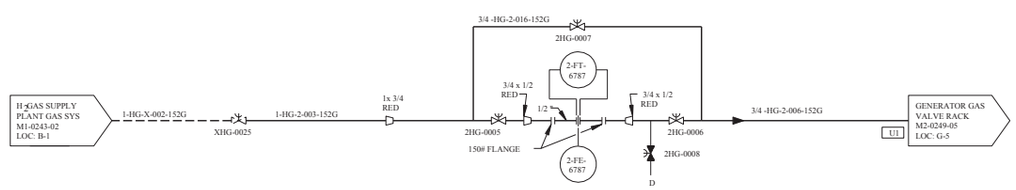

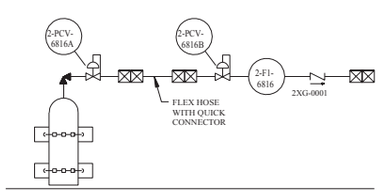

ARGON BOTTLE RACK
UNIT 2 SAFEGUARDS ROOM 2-078
ARGON INJECTION TO VOLUME CONTROL TANK
(REF M2-0228-A (G-4) AND NOTE 21)

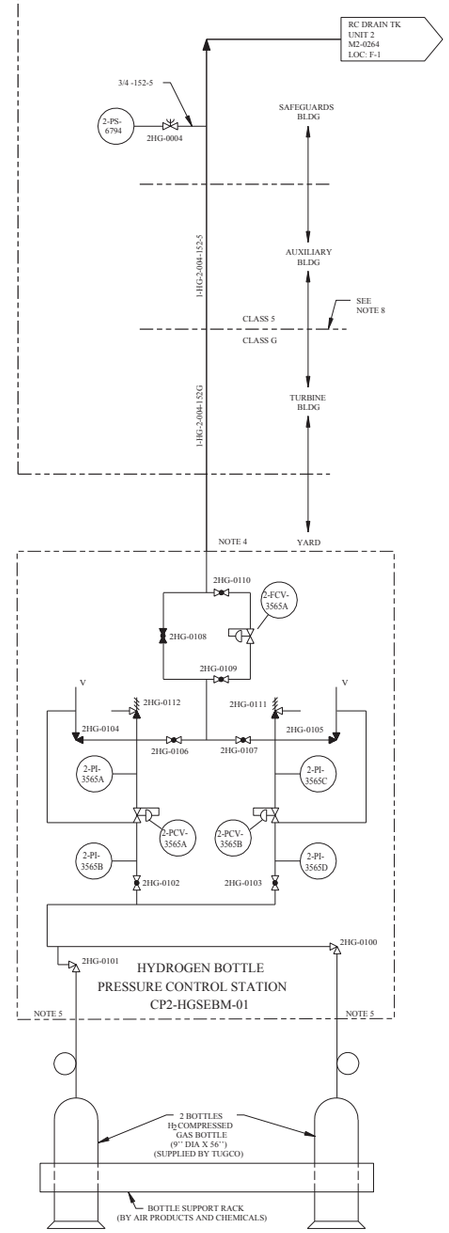

FSAR FIGURE 10.4-19

THIS DRAWING CREATED ELECTRONICALLY

DRAWING M1-0243-02 REV CP-10
HAS BEEN SPLIT INTO THE FOLLOWING SHEETS:
M1-0243-02
M2-0243-02

CLASS II

LUMINANT
CPNPP
GLEN ROSE, TEXAS

FLOW DIAGRAM
PLANT GAS SUPPLY SYSTEM
ARGON AND HYDROGEN SUPPLY

DWG. NO. M2-0243 | SH. NO. 02 | REV. CP-14

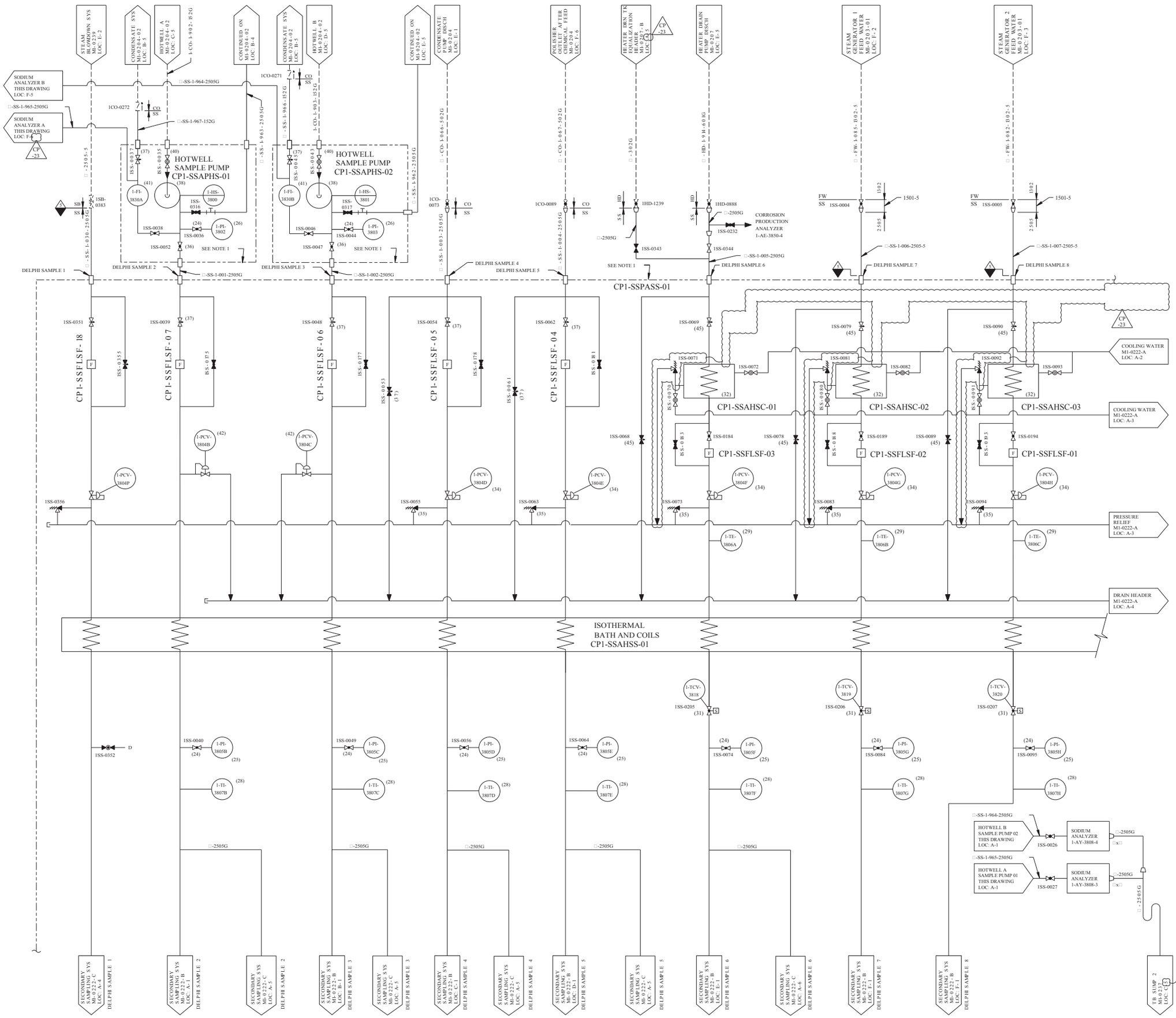

REV	DWN	CHKD	APVD	REMARKS
CP-23	DLK 10-02-2012			THIS DRAWING REVISED TO EDITORIALLY CORRECT THE OUTLET SAMPLE COOLERS CP1-SSAHSC-01 THRU -03 RELIEF VALVE LOCATIONS PER A1-CR-2012-009862-1. THESE CHANGES WILL BE IN AGREEMENT WITH VENDOR DWG 51011 OF TECH MANUAL CP-0155-001, FIELD WALK DOWN VERIFICATION AND WITH UNIT 2 FLOW DIAGRAM M2-0222 REV CP-21 WHICH WAS UPDATED PER APPROVED DESIGN DOCUMENT DCA 96500 REV 0. EDITORIALLY REVISED CONTINUATION BLOCKS.

NOTES:

1. ORIGINAL EQUIPMENT CP1-SSPASS-01 SAMPLE PANEL SUPPLIED BY DELPHI INDUSTRIES, EXCEPT FOR SAMPLE 1.
2. FOR MECHANICAL SYMBOLS AND NOTES SEE DRAWING M1-0200.
3. FOR NUMBERS SHOWN IN (XX) SEE BILL OF MATERIAL DELPHI DRAWING 19100 SH 1 THRU 5.
4. [XXXX] - REFERS TO DELPHI INSTRUMENT DESIGNATION ON ELECTRICAL DRAWING 019131 SH 1 THRU 18.
5. VALVES 1SS-0343 AND 1SS-0344 ARE □" WHITEY VALVES, MODEL SS-1RS6.

FSAR FIGURE 10.4-20

THIS DRAWING CREATED ELECTRONICALLY

DRAWING 2323-M1-0222	REV CP-6
HAS BEEN SPLIT INTO THE FOLLOWING SHEETS:	
M1-0222	
M1-0222-B	

CLASS II

LUMINANT
CPNPP
GLEN ROSE, TEXAS

FLOW DIAGRAM
SECONDARY SAMPLING SYSTEM

DWG. NO.	SH. NO.	REV.
M1-0222	-	CP-23

< FINAL PRINT >

REF CKD CP-23 10/3/12

SSSSSSSDATESSSSSS

me572500.dgn M1-0222

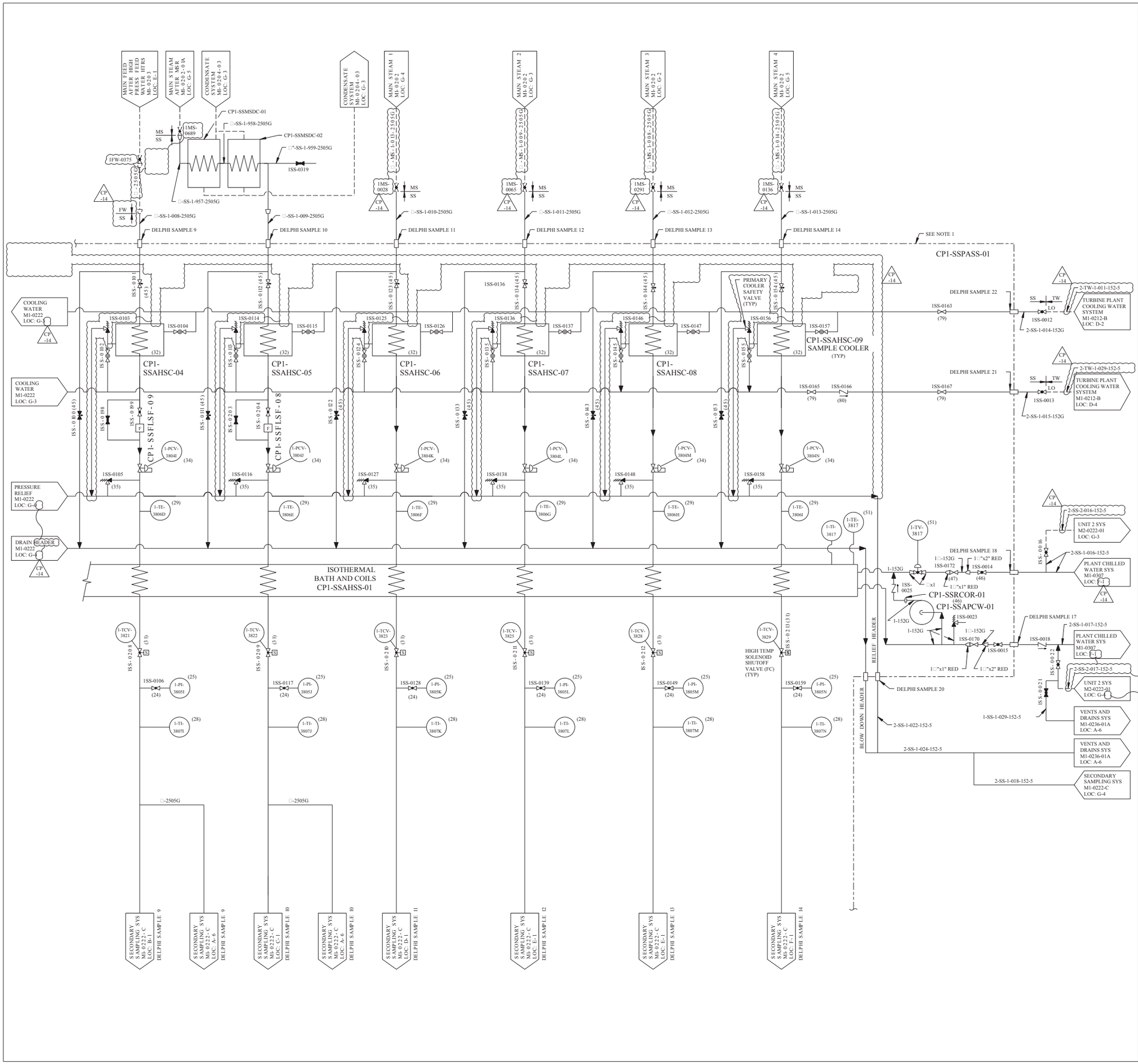

REV	DWN	CHKD	APVD	REMARKS
CP-14	DLK 10-02 2012			THIS DRAWING REVISED TO EDITORIALLY CORRECT THE OUTLET SAMPLE COOLERS CP1-SSAHSC-04 THRU -09 RELIEF VALVE LOCATIONS PER AI-CR-2012-000862-1. THESE CHANGES WILL BE IN AGREEMENT WITH VENDOR DWG 51011 OF TECH MANUAL CP-0155-001, FIELD WALK DOWN VERIFICATION AND WITH UNIT 2 FLOW DIAGRAM M2-0222-01 REV CP-21 WHICH WAS UPDATED PER APPROVED DESIGN DOCUMENT DCA 96500 REV 0. EDITORIALLY REVISED CONTINUATION BLOCKS, LINE AND VALVE NUMBERS.

NOTES:

1. ORIGINAL EQUIPMENT CP1-SSPASS-01 SAMPLE PANEL SUPPLIED BY DELPHI INDUSTRIES.
2. FOR MECHANICAL SYMBOLS AND NOTES SEE DRAWING M1-0200.
3. FOR NUMBERS SHOWN IN (XX) SEE BILL OF MATERIAL DELPHI DRAWING 19100 SH 1 THRU 5.
4. [XXXX] - REFERS TO DELPHI INSTRUMENT DESIGNATION ON ELECTRICAL DRAWING 019131 SH 1 THRU 18.

FSAR FIGURE 10.4-20

THIS DRAWING CREATED ELECTRONICALLY

DRAWING ECE-M1-0222-A REV CP-1
HAS BEEN SPLIT INTO THE FOLLOWING SHEETS:
M1-0222-A
M1-0222-C

CLASS II

LUMINANT
CPNPP
GLEN ROSE, TEXAS

FLOW DIAGRAM
SECONDARY SAMPLING
SYSTEM

DWG. NO. M1-0222 | SH. NO. A | REV. CP-14

me587800.dgn A M1-0222-A

< FINAL PRINT >

REF CKD CP-14 10/3/12

$$$$$$$DATE$$$$$$

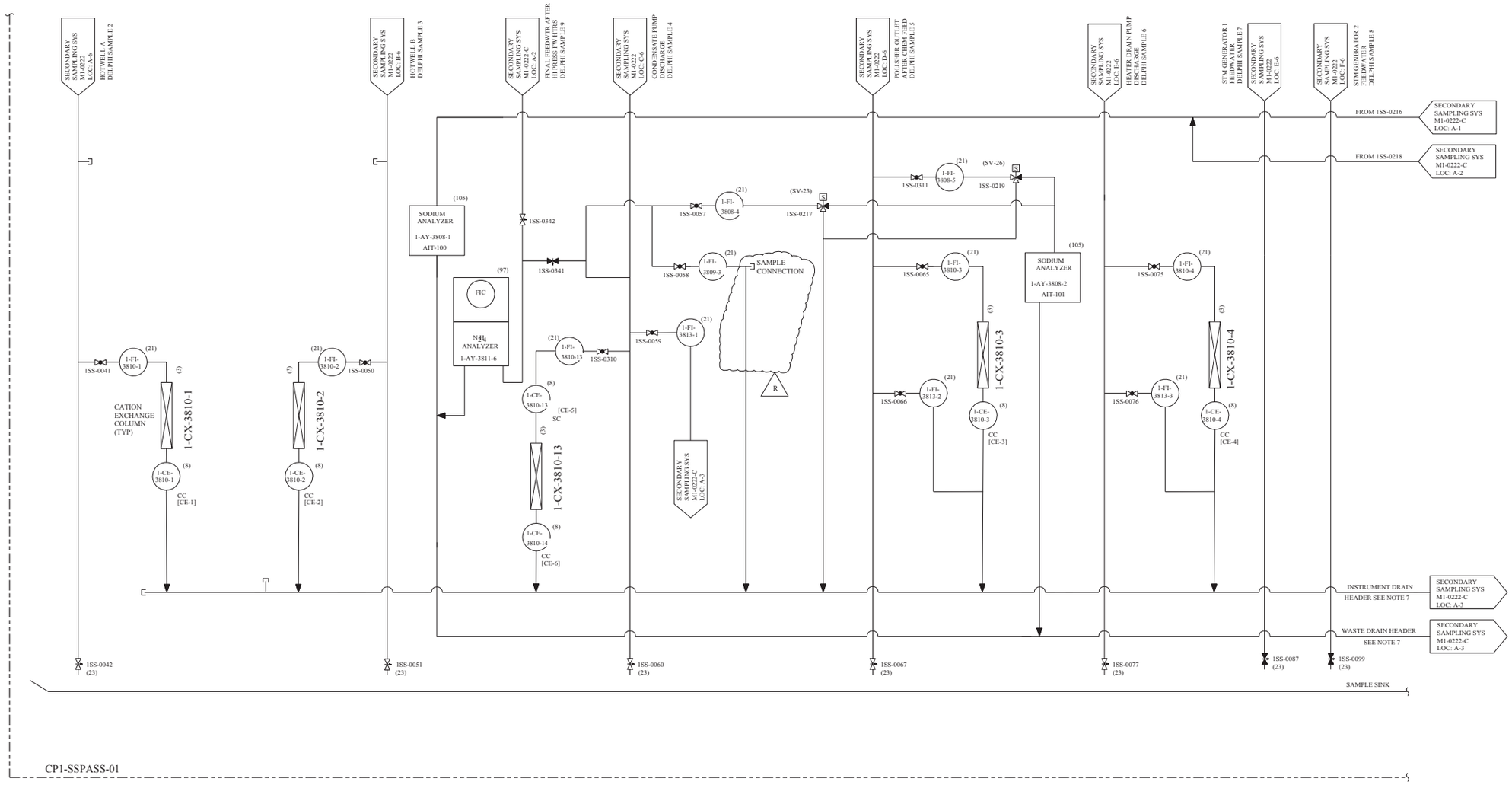

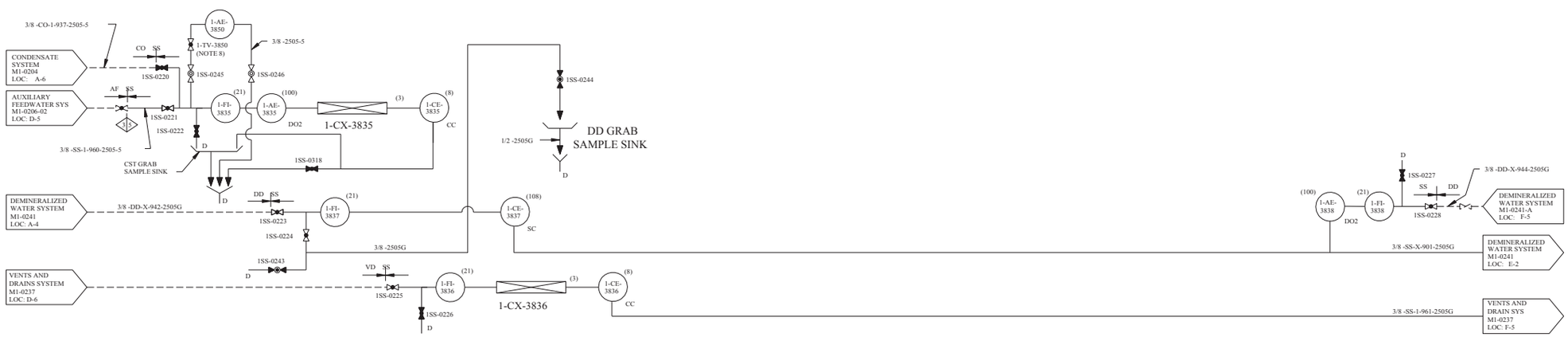

REV	DWN	CHKD	APVD	REMARKS
CP-16	JBMC 07-21 2009	DJL 07-21 2009		THIS DRAWING REVISED TO INCORPORATE DESIGN CHANGE FDA 2003-000239-02-02 PER SK-0019-03-000239-02-00.

NOTES:

1. ORIGINAL EQUIPMENT CP1-SSPASS-01 SAMPLE PANEL SUPPLIED BY DELPHI INDUSTRIES.
2. FOR MECHANICAL SYMBOLS AND NOTES SEE DRAWING M1-0200.
3. DELETED
4. FOR NUMBERS SHOWN IN (XX) SEE BILL OF MATERIAL DELPHI DRAWING 19100 SH 1 THRU 5.
5. ABREVATIONS:
   CC - CATION CONDUCTIVITY
   SC - SPECIFIC CONDUCTIVITY
   pH - PH
   DO_2 - DISSOLVED OXYGEN
   CL - CHLORIDE
   Na - SODIUM
6. [XXXX] - REFERS TO DELPHI INSTRUMENT DESIGNATION ON ELECTRICAL DRAWING 019131 SH 1 THRU 18.
7. ROUTING OF SAMPLE PANEL DRAINS TO THE SAMPLE SINK OR TO THE DRAIN HEADERS AS SHOWN HERE MAY NOT REFLECT ACTUAL PLANT CONFIGURATION.
8. THERMAL SHUT-OFF VALVE BY SENTRY EQUIPMENT CORPORATION.

FSAR FIGURE 10.4-20

THIS DRAWING CREATED ELECTRONICALLY

DRAWING 2323-M1-0222 REV CP-6
HAS BEEN SPLIT INTO THE FOLLOWING SHEETS:
M1-0222
M1-0222-B

CLASS II

LUMINANT
CPNPP
GLEN ROSE, TEXAS

FLOW DIAGRAM
SECONDARY SAMPLING
SYSTEM

DWG. NO. M1-0222 | SH. NO. B | REV. CP-16

< FINAL PRINT >

REF CKD CP-9 4/30/98

$$$$$$$DATE$$$$$$

me932700.dgn M1-0222-B

REV	DWN	CHKD	APVD	REMARKS
CP-22	JRMC 07-21 2009	DJL 07-21 2009		THIS DRAWING REVISED TO INCORPORATE DESIGN CHANGE FDA-2003-000239-02-02 PER SK-0015-03-000239-02-00.

NOTES:

1. ORIGINAL EQUIPMENT DELPHI INDUSTRIES. CP1-SSPASS-01 SAMPLE PANEL SUPPLIED BY
2. DELETED
3. FOR MECHANICAL SYMBOLS AND NOTES SEE DRAWING M1-0200.
4. FOR NUMBERS SHOWN IN (XX) SEE BILL OF MATERIAL DELPHI DRAWING 19100 SH 1 THRU 5.
5. ABBREVIATIONS:
   - CC - CATION CONDUCTIVITY
   - SC - SPECIFIC CONDUCTIVITY
   - pH - PH
   - DO - DISSOLVED OXYGEN
   - CL - CHLORIDE
   - Na - SODIUM
6. [XXXX] - REFERS TO DELPHI INSTRUMENT DESIGNATION ON ELECTRICAL DRAWING 019131 SH 1 THRU 18.
7. ROUTING OF SAMPLE PANEL DRAINS TO THE SAMPLE SINK OR TO THE DRAIN HEADERS AS SHOWN HERE MAY NOT REFLECT ACTUAL PLANT CONFIGURATION.

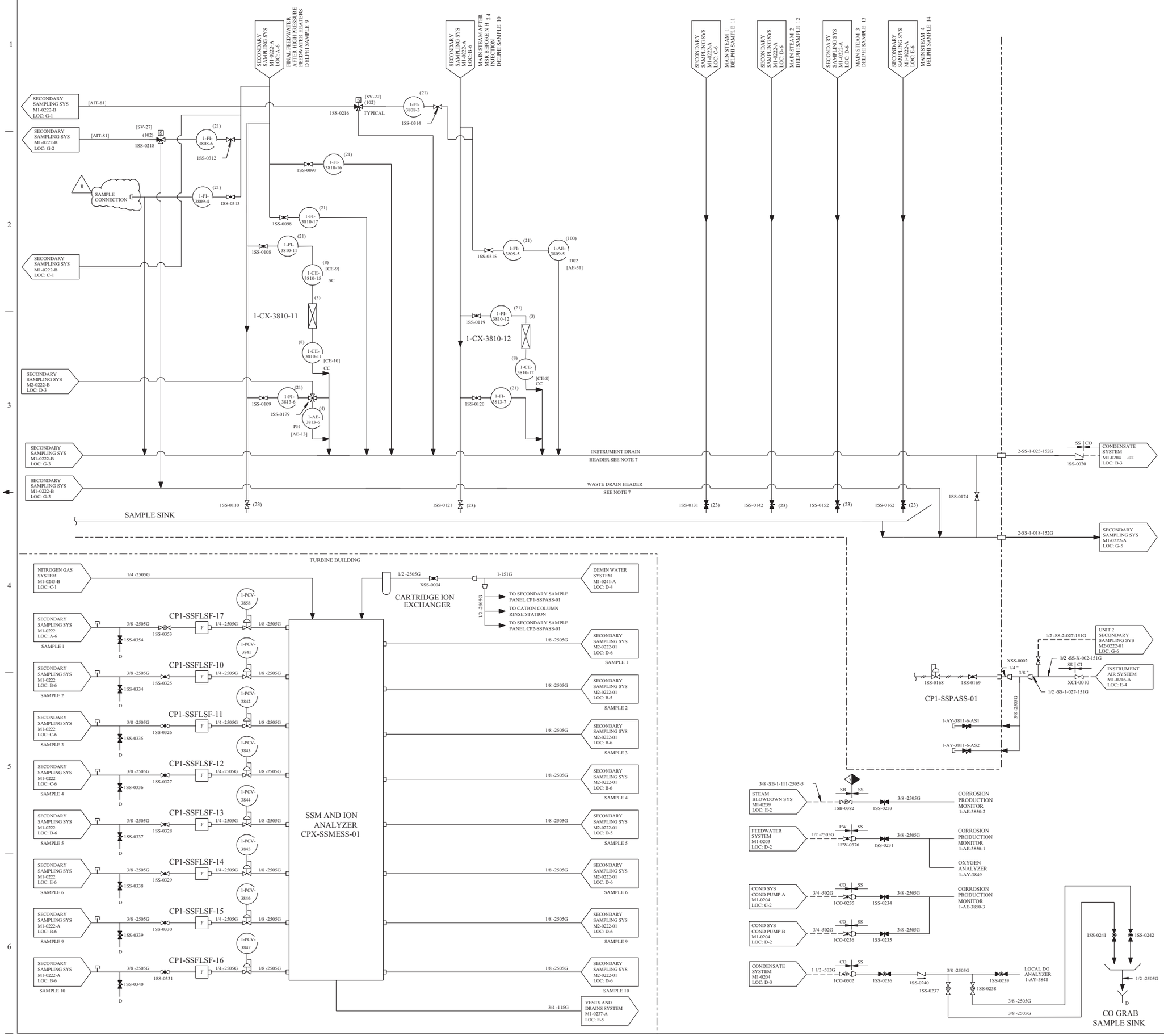

FSAR FIGURE 10.4-20

THIS DRAWING CREATED ELECTRONICALLY

DRAWING ECE-M1-0222-A REV CP-1
HAS BEEN SPLIT INTO THE FOLLOWING SHEETS:
M1-0222-A
M1-0222-C

NON-SAFETY

LUMINANT
CPNPP
GLEN ROSE, TEXAS

FLOW DIAGRAM
SECONDARY SAMPLING
SYSTEM

DWG. NO.	SH. NO.	REV.
M1-0222	C	CP-22

REF CKD CP-11 1/8/97

$$$$$$DATE$$$$$$

me932500.dgn M1-0222-C

< FINAL PRINT >

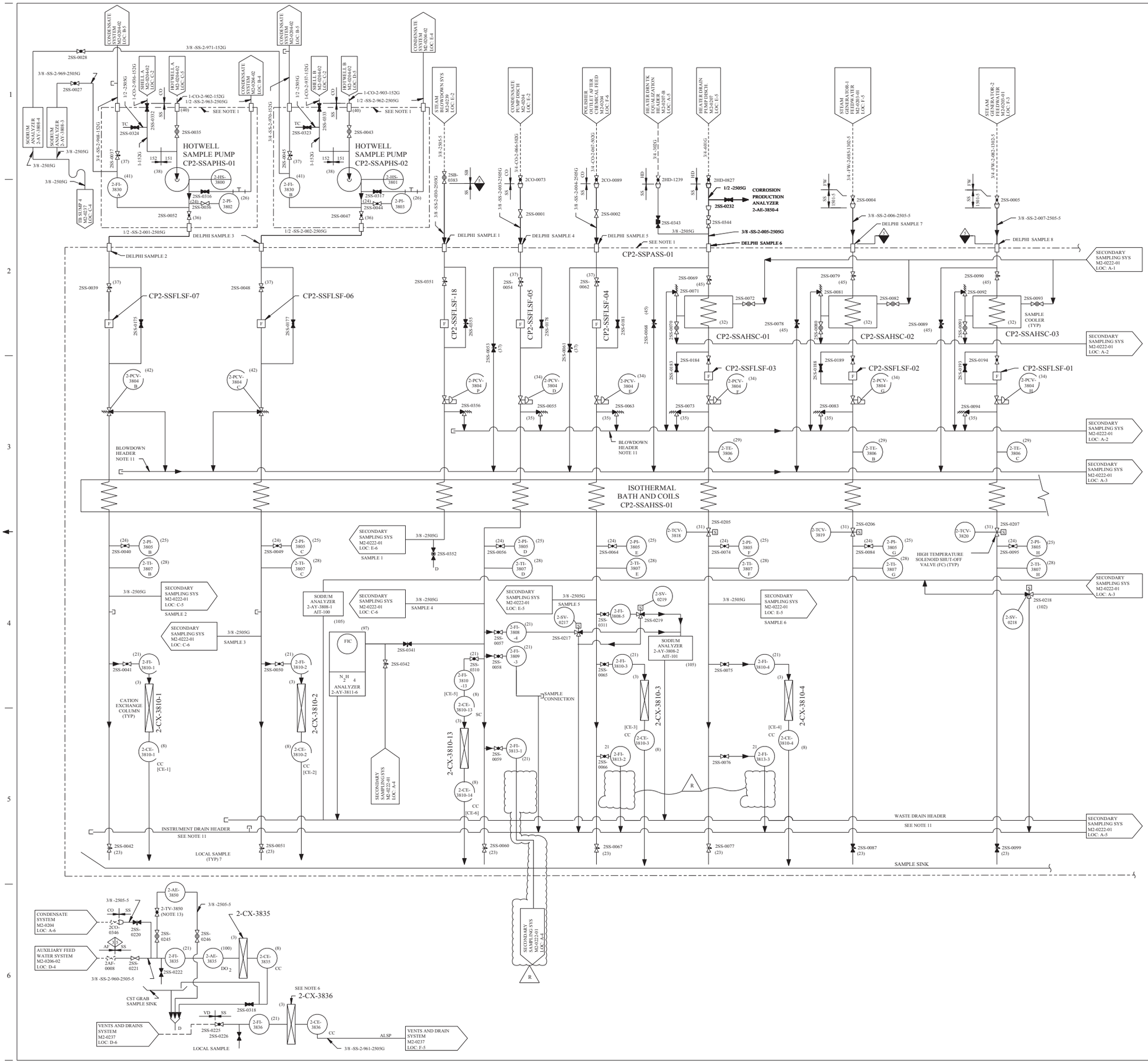

REV	DWN	CHKD	APVD	REMARKS
CP-21	SM 09-17 2009	JRM 09-17 2009		THIS DRAWING REVISED TO INCORPORATE DESIGN CHANGE FDA 2003-001127-01-00 PER SK-0031-03-001127-01-00.

NOTES:

1. ALL EQUIPMENT WITHIN LINE SUPPLIED BY DELPHI INDUSTRIES.
2. FOR MECHANICAL SYMBOLS AND NOTES SEE DRAWING M1-0200.
3. FOR NUMBERS SHOWN IN (XX) SEE BILL OF MATERIAL DELPHI DWG 19100 SHT 1 THRU 5.
4. SIGNAL TO Na + ANALYZERS SOLENOID.
5. DELETED
6. ABBREVIATIONS:
   CC - CATION CONDUCTIVITY
   SC - SPECIFIC CONDUCTIVITY
   PH - PH
   DO - DISSOLVED OXYGEN
   C - CHLORIDE
   CLSP - CONDENSATE STORAGE TANK SAMPLE PANEL
   ALSP - ATMOSPHERIC DRAIN TANK LOCAL SAMPLE PANEL
7. [XXXX]- REFERS TO DELPHI INSTRUMENT DESIGNATIONS ON ELECTRICAL DWGS.
8. DELPHI DRAWING 19120 SHEETS 1, 2, AND 3 FOR REFERENCE ONLY.
9. FOR PNEUMATIC CONTROL LOGIC SEE ICD'S M2-2222-01.
10. FLOW INDICATED AT ALL TEST CONNECTIONS, VENTS AND DRAINS SHOULD BE DIRECTED AWAY FROM THE PROCESS PIPING.
11. ROUTING OF SAMPLE PANEL DRAINS TO THE SAMPLE SINK OR TO THE DRAIN HEADERS AS SHOWN HERE MAY NOT REFLECT ACTUAL PLANT CONFIGURATION.
12. VALVES 2SS-0343 AND 2SS-0344 ARE 3/8 " WHITEY VALVES, MODEL SS-1RS6.
13. THERMAL SHUT-OFF VALVE BY SENTRY EQUIPMENT CORPORATION.

FSAR FIGURE 10.4-20

THIS DRAWING CREATED ELECTRONICALLY

2323-M2-0222 CP-2
DRAWING TNE-M2-0222-01 REV CP-2
HAVE BEEN REDRAWN INTO THE FOLLOWING:
M2-0222
M2-0222-01

CLASS II

LUMINANT
CPNPP
GLEN ROSE, TEXAS

FLOW DIAGRAM
SECONDARY SAMPLING
SYSTEM

DWG. NO. M2-0222 | SH. NO. - | REV. CP-21

< FINAL PRINT >

me939400.dgn M2-0222

$$$$$$DATE$$$$$$

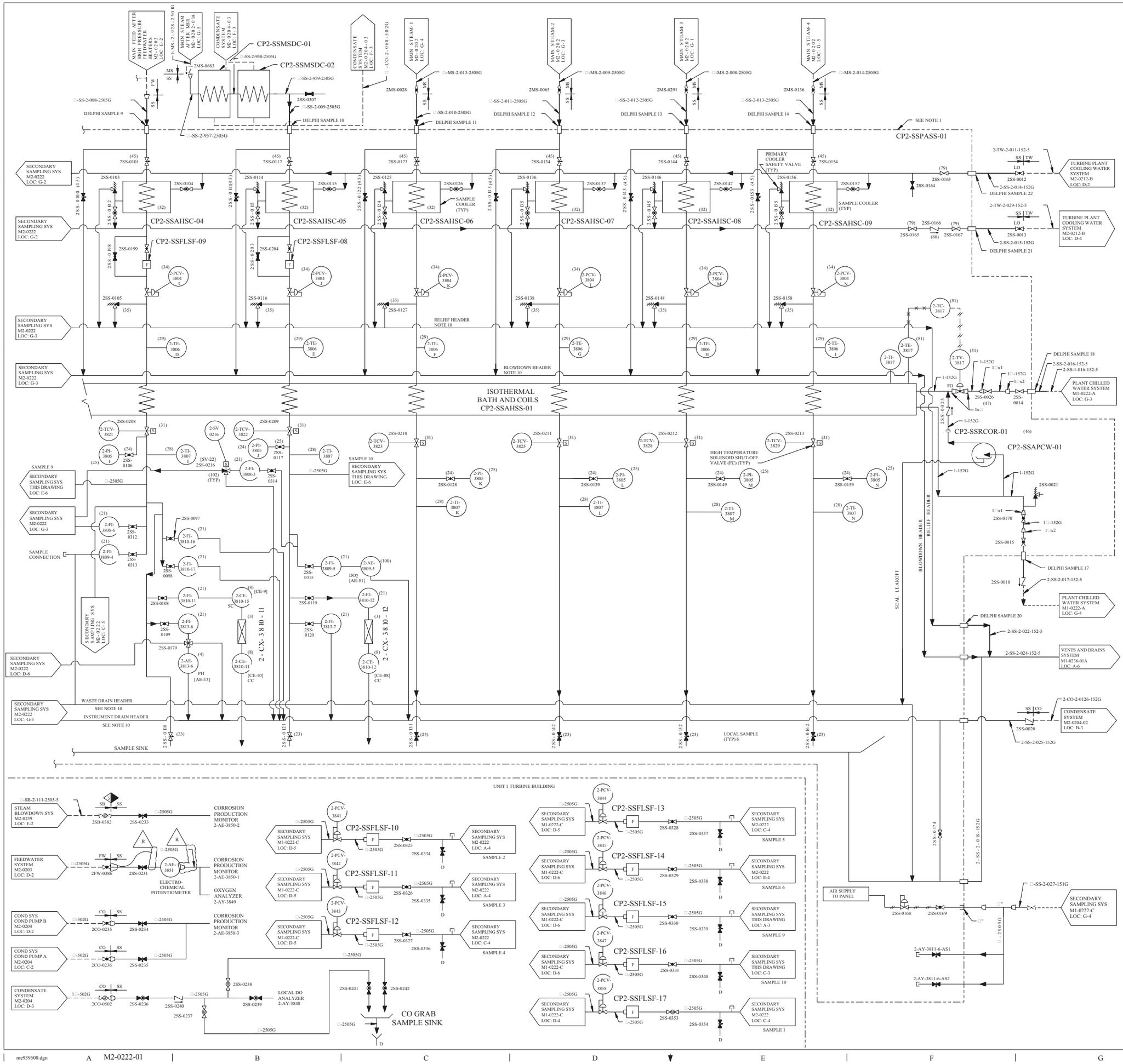

REV	DWN	CHKD	APVD	REMARKS
CP-22	JRMC 09-09-2014	DJL 09-09-2014		THIS DRAWING REVISED TO INCORPORATE DESIGN CHANGE FDA-2014-000192-01-00 PER SK-0001-14-000192-01-00.

NOTES:

1. ALL EQUIPMENT WITHIN LINE SUPPLIED BY DELPHI INDUSTRIES.
2. FOR MECHANICAL SYMBOLS & NOTES SEE DWG M1-0200.
3. FOR NUMBERS SHOWN IN (XX) SEE BILL OF MATERIAL DELPHI DWG 19100 SHT 1-5.
4. SIGNAL TO Na + ANALYZERS SOLENOID.
5. DELETED
6. ABBREVIATIONS:
   CC - CATION CONDUCTIVITY
   SC - SPECIFIC CONDUCTIVITY
   PH - PH
   DO - DISSOLVED OXYGEN
   C - CHLORIDE
7. [XXXX]- REFERS TO DELPHI INSTRUMENT DESIGNATIONS ON ELECTRICAL DWGS.
8. DELPHI DRAWING 19120 SHEETS 1, 2, AND 3 FOR REFERENCE ONLY.
9. FOR PNEUMATIC CONTROL LOGIC SEE ICD'S M2-2222-01.
10. ROUTING OF SAMPLE PANEL DRAINS TO THE SAMPLE SINK OR TO THE DRAIN HEADERS AS SHOWN HERE MAY NOT REFLECT ACTUAL PLANT CONFIGURATION.

FSAR FIGURE 10.4-20

THIS DRAWING CREATED ELECTRONICALLY

DRAWING		REV
2323-M2-0222		CP-2
TNE-M2-0222-01		CP-2

HAVE REDRAWN INTO THE FOLLOWING:

M2-0222	REV CP-3
M2-0222-01	REV CP-3

CLASS II

LUMINANT
CPNPP
GLEN ROSE, TEXAS

FLOW DIAGRAM
SECONDARY SAMPLING SYSTEM

DWG. NO. M2-0222 | SH. NO. 01 | REV. CP-22

REF CKD CP II 1-2-96

SSSSSSSDATESSSSSS

me939500.dgn A M2-0222-01 B C D E F G < FINAL PRINT > H

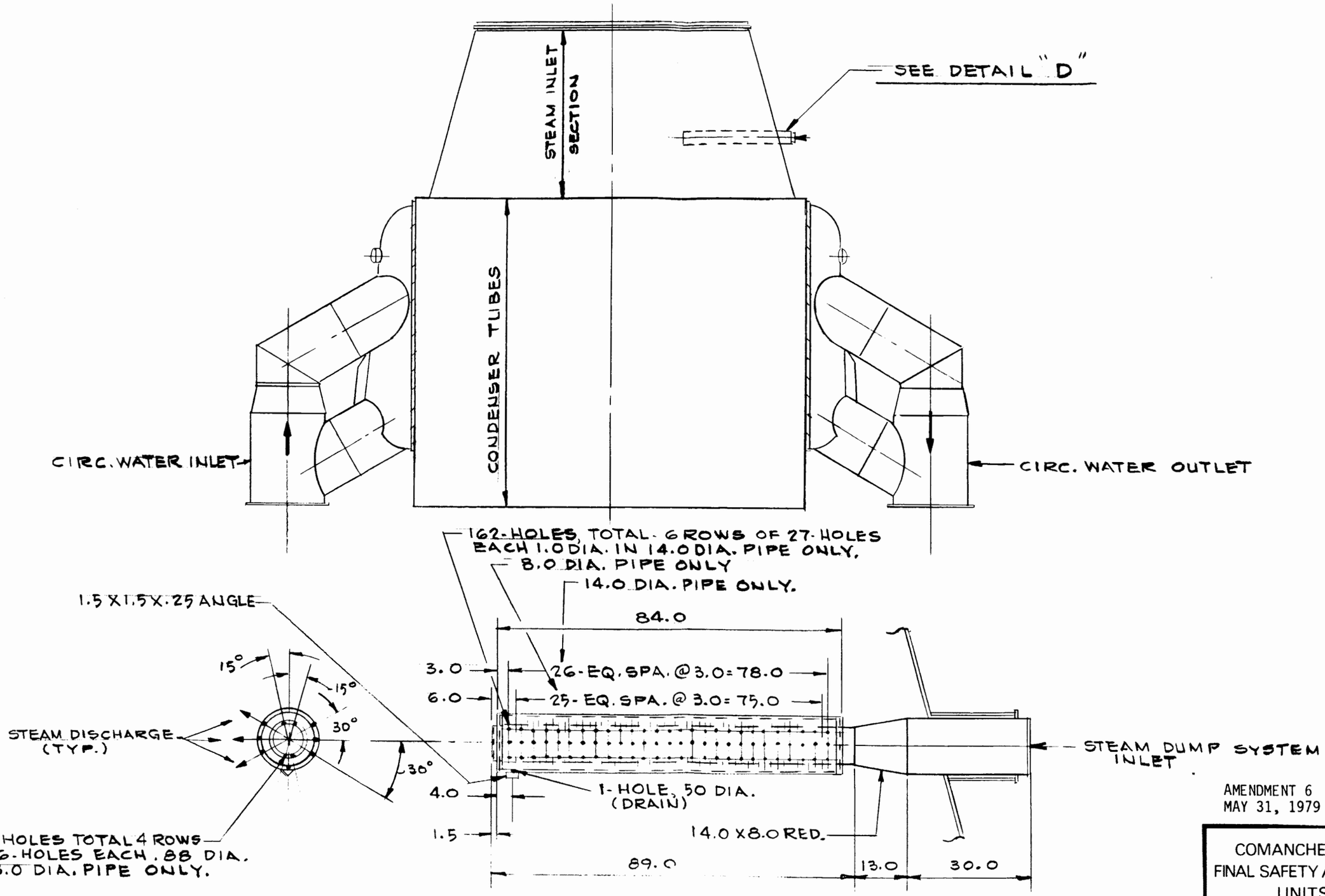

DETAIL "D"

AMENDMENT 6
MAY 31, 1979

COMANCHE PEAK S.E.S.
FINAL SAFETY ANALYSIS REPORT
UNITS 1 and 2

Steam Dump System
Discharge Into Condenser

FIGURE 10.4-21

5/78

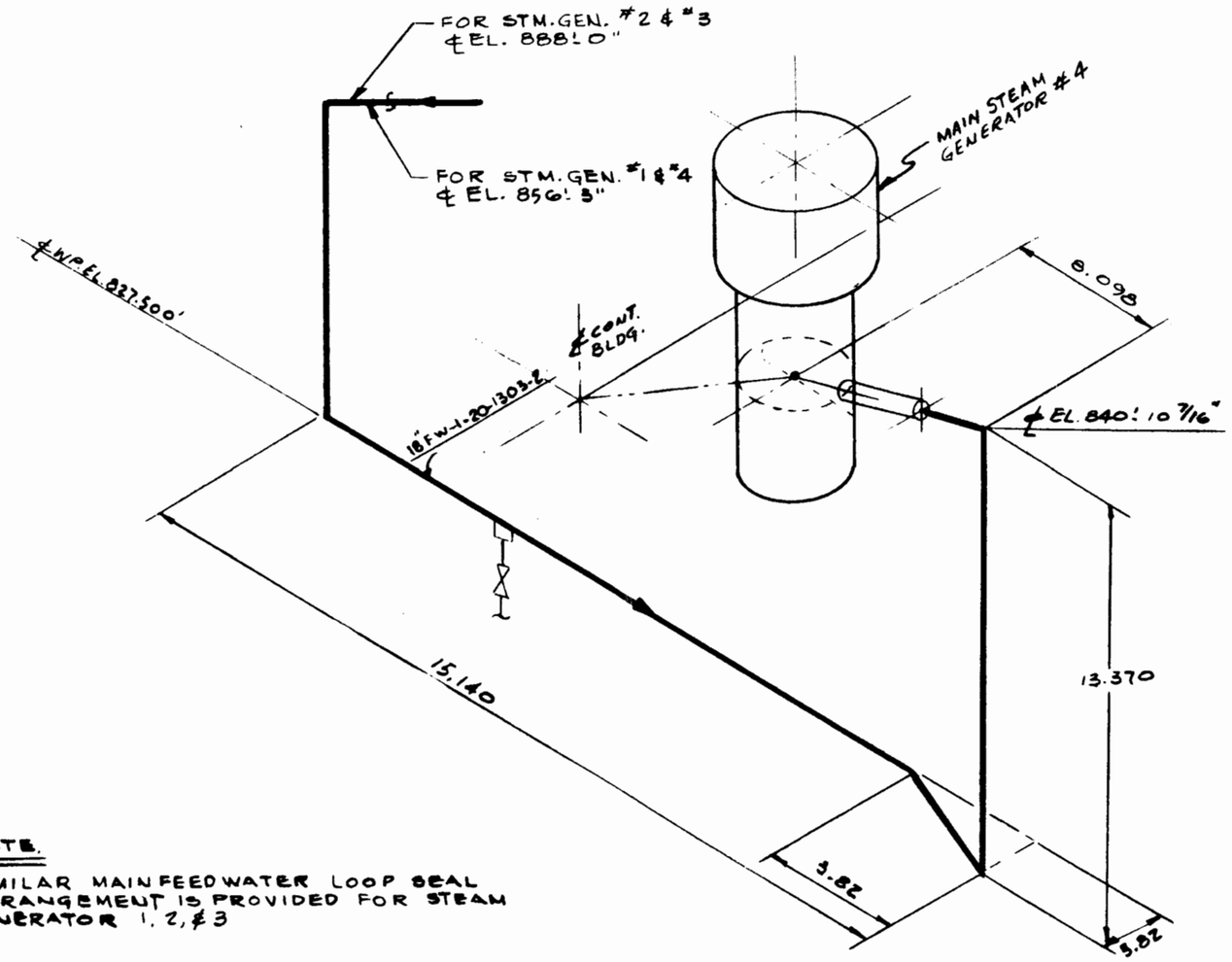

NOTE.

SIMILAR MAIN FEEDWATER LOOP SEAL ARRANGEMENT IS PROVIDED FOR STEAM GENERATOR 1, 2, & 3

AMENDMENT 10
MARCH 31, 1980

COMANCHE PEAK S.E.S.
FINAL SAFETY ANALYSIS REPORT
UNITS 1 and 2

MAIN FEEDWATER
LOOP SEAL ARRANGEMENT

FIGURE 10.4-22

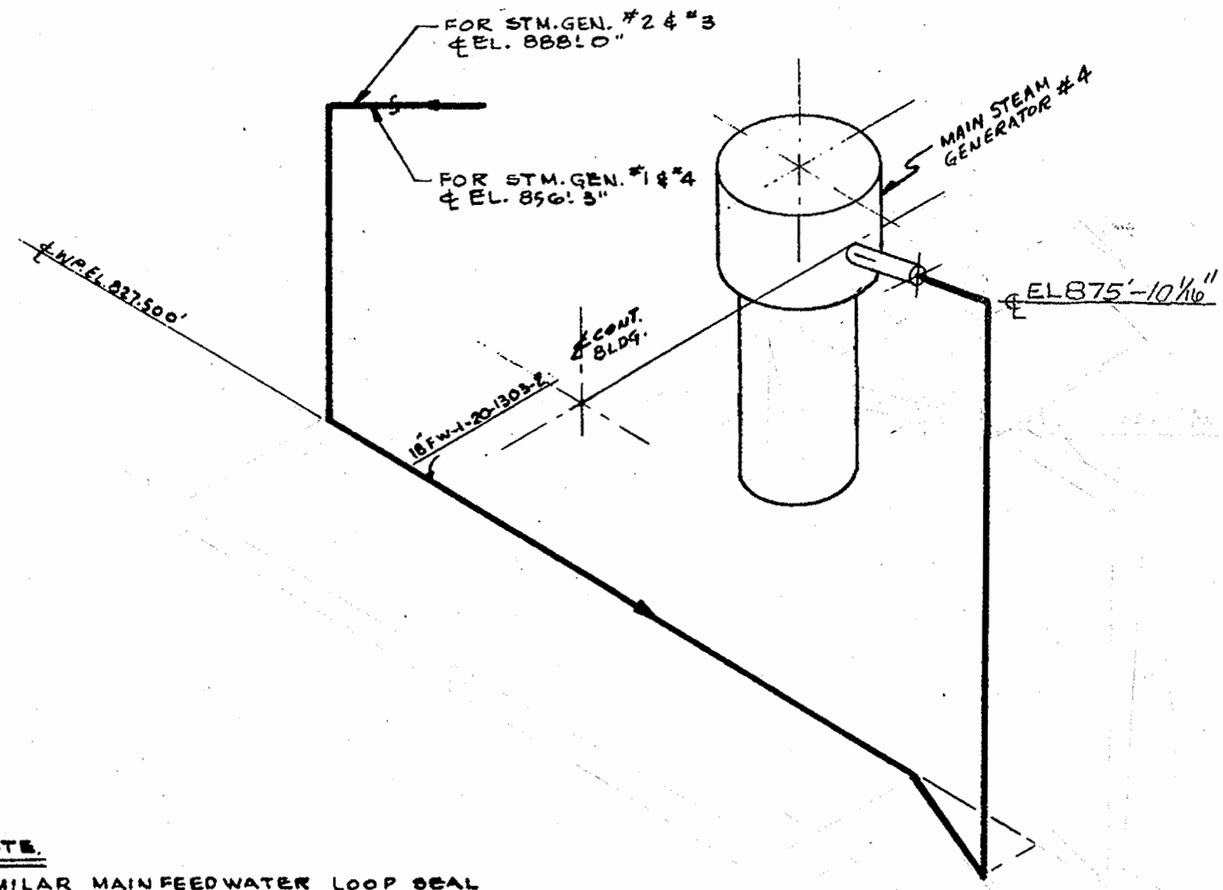

NOTE.

SIMILAR MAIN FEEDWATER LOOP SEAL ARRANGEMENT IS PROVIDED FOR STEAM GENERATOR 1, 2, & 3

Amendment 102

COMANCHE PEAK S.E.S.
FINAL SAFETY ANALYSIS REPORT
UNIT 1

MAIN FEEDWATER
LOOP SEAL ARRANGEMENT

FIGURE 10.4-22A

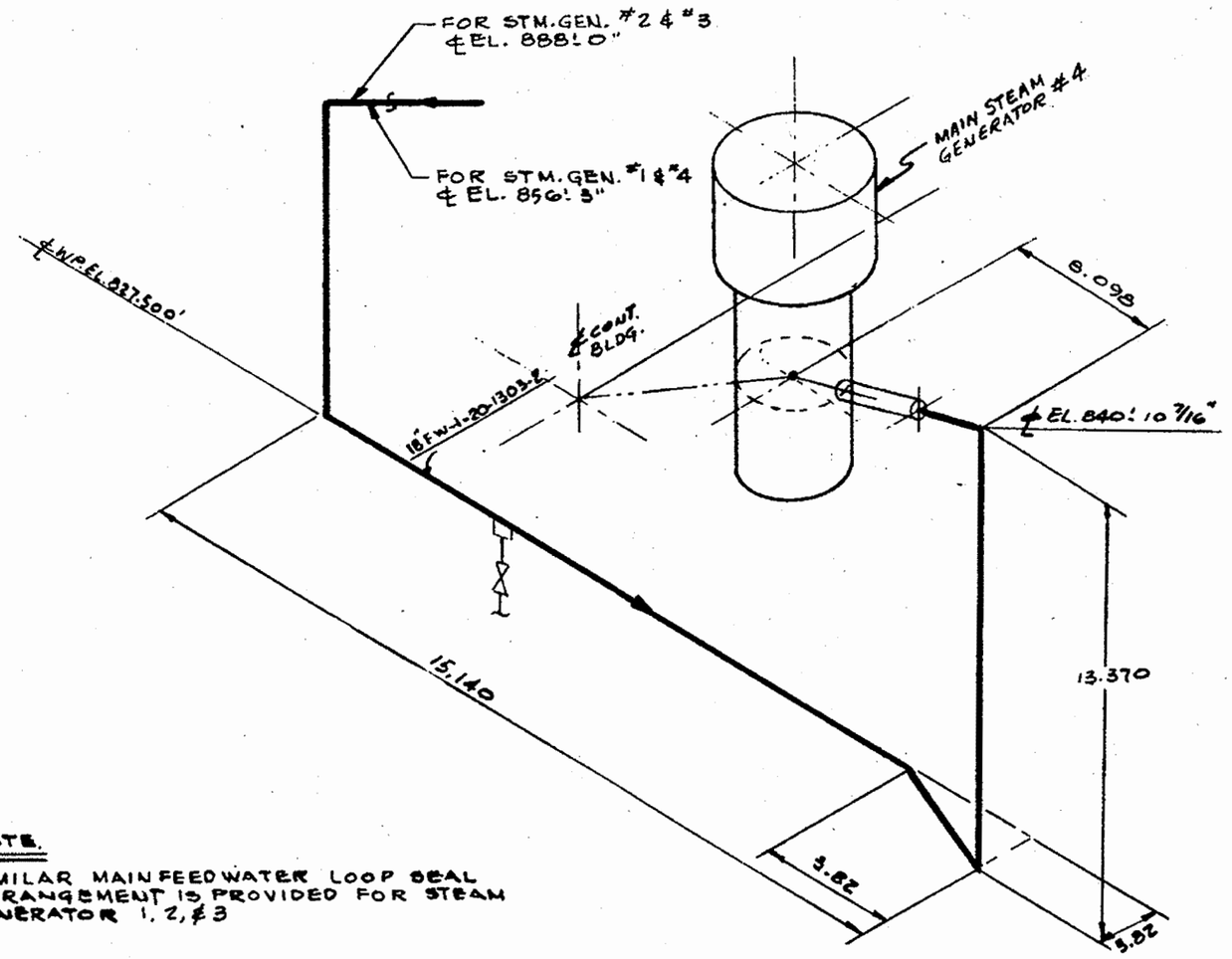

NOTE.

SIMILAR MAIN FEEDWATER LOOP SEAL ARRANGEMENT IS PROVIDED FOR STEAM GENERATOR 1, 2, & 3

Amendment 102

COMANCHE PEAK S.E.S.
FINAL SAFETY ANALYSIS REPORT
UNIT 2

MAIN FEEDWATER
LOOP SEAL ARRANGEMENT

FIGURE 10.4-22B

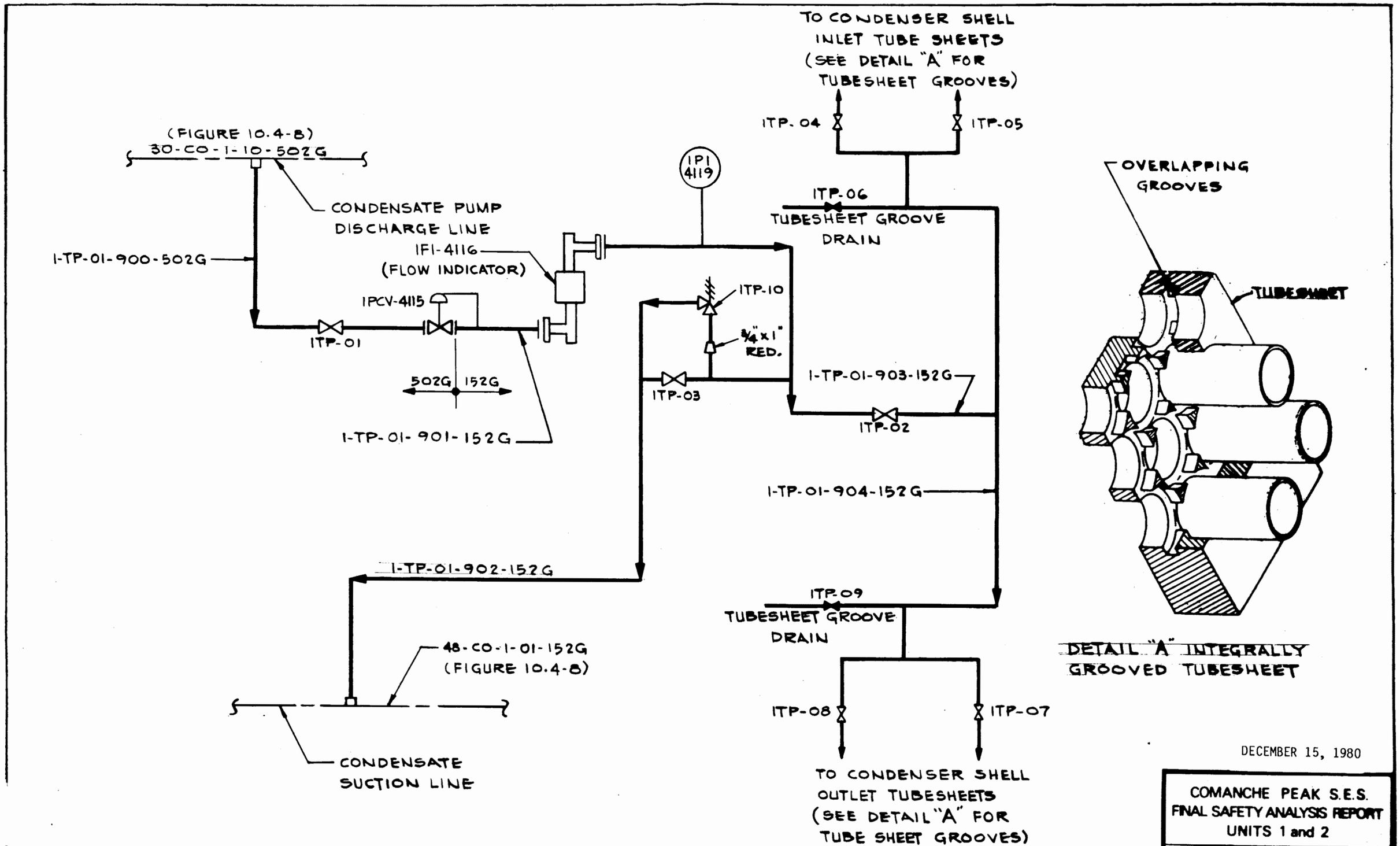

DECEMBER 15, 1980

COMANCHE PEAK S.E.S.
FINAL SAFETY ANALYSIS REPORT
UNITS 1 and 2

UNIT 1
INTEGRALLY GROOVED TUBE SHEET PRESSURIZATION SYS.

FIGURE 10.4-23

REF. DCA-4028 IMO-799

FIGURE 11.2-1 HAS BEEN DELETED. | 77

COMANCHE PEAK S.E.S.
FINAL SAFETY ANALYSIS REPORT
UNITS 1 and 2

PROCESS FLOW SHEET

FIGURE 11.2-1

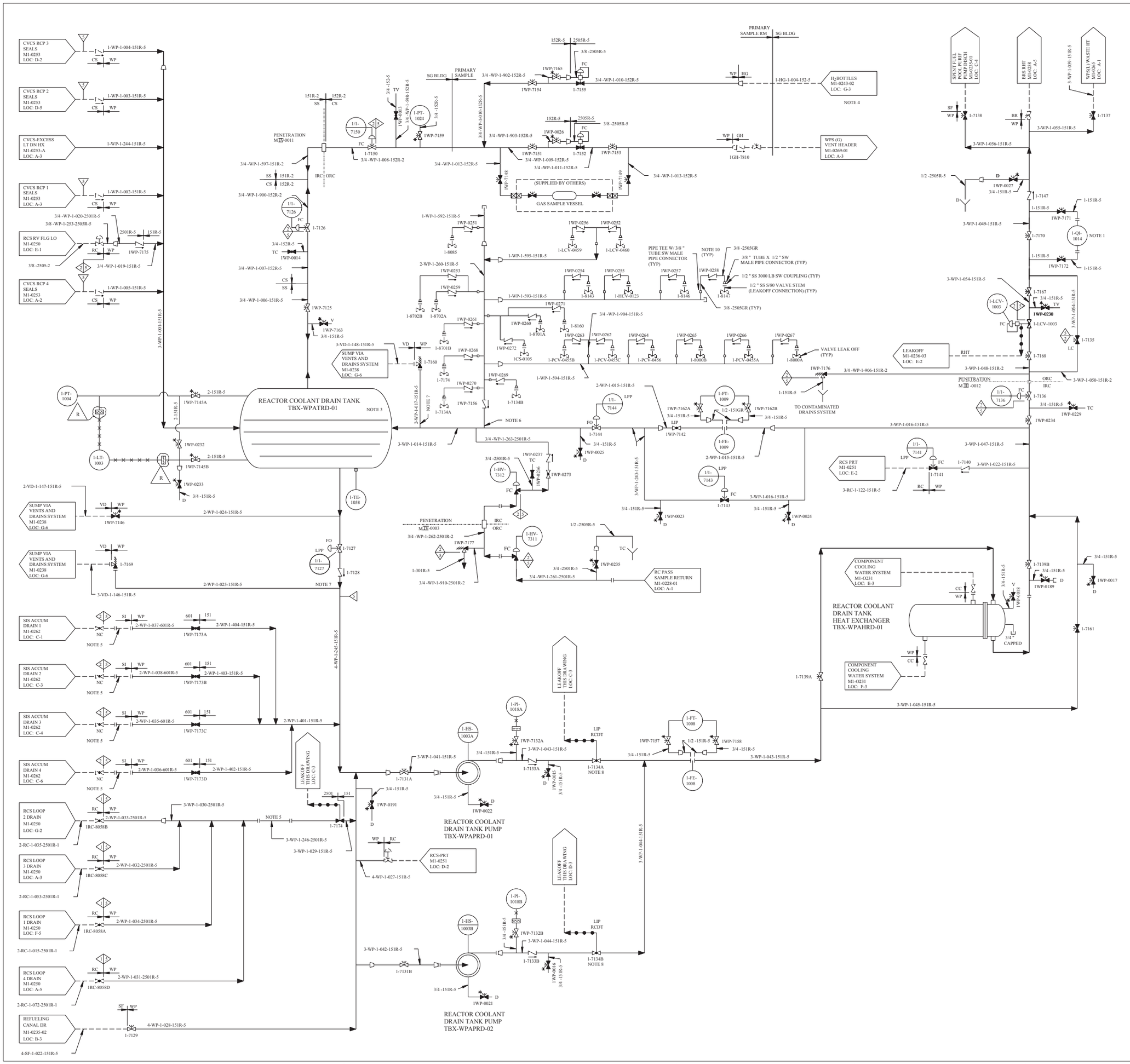

REV	DWN	CHKD	APVD	REMARKS
CP-19	DGK 09-13-2005	MM 09-13-2005		THIS DRAWING REVISED TO INCORPORATE DESIGN CHANGE FDA 2003-002730-01-00 PER SK-0006-03-002730-01-00.

NOTES:

1. FOR PERIODIC PLANT LEAKAGE EVALUATION.
2. THIS PORTION OF THE LWPS IS FOR UNIT 1. IDENTICAL EQUIPMENT IS FURNISHED FOR UNIT 2.
3. TANK INLET AND RECIRCULATION CONNECTION ARE BELOW THE NORMAL WATER LEVEL.
4. LIMIT AVAILABLE H SUPPLY TO TWO STANDARD BOTTLES. PRESSURE REGULATOR SUPPLIED ON BOTTLES TO BE SET AT 5 PSIG. PROVIDE A RELIEF VALVE AT EXIT OF THE REGULATOR AND SET AT 100 PSIG.
5. SPOOL PIECE NORMALLLY REMOVED. ONLY TO BE INSTALLED WHEN DRAINING AFTER DEPRESSURIZATION.
6. PIPE LENGTH DOWNSTREAM OF THIS POINT TO BE AS LONG AS PRACTICABLE.
7. MAKE CONNECTION ON SIDE OR BOTTOM.
8. THROTTLE VALVE TO PREVENT PUMP RUNOUT DURING DRAIN.
9. INDICATES HERMETICALLY SEALED VALVE.
10. CHECK VALVE MUST BE INSTALLED IN A HORIZONTAL RUN WITH THE UNION NUT ON TOP.

REFERENCE NOTES

THIS FLOW DIAGRAM HAS BEEN REDRAWN FROM WESTINGHOUSE DRAWING 1138E99 REV 5 WITH EXCEPTIONS AS FOLLOWS:

A. VALVES AND LINE NUMBERS HAVE BEEN ADDED.

B. CONTROL LOOPS HAVE BEEN DELETED EXCEPT FOR THE PRIMARY AND THE FINAL ELEMENTS. THE DETAILS OF THE CONTROL LOOPS WILL BE SHOWN ON INSTRUMENTATION AND CONTROL DIAGRAM.

C. PLANT SPECIFIC ADDITIONS TO THE WESTINGHOUSE DIAGRAM HAVE BEEN MADE.

FSAR FIGURE 11.2-2

THIS DRAWING CREATED ELECTRONICALLY

CLASS I
(NUCLEAR SAFETY-RELATED)
SAFETY CLASS 1 — SEISMIC CATEGORY I
SAFETY CLASS 2 — CLASS 1E
SAFETY CLASS 3 — ASSOCIATED CIRCUITS

LUMINANT
CPSES
GLEN ROSE, TEXAS

LIQUID WASTE PROCESSING
FLOW DIAGRAM
REACTOR COOLANT
DRAIN TANK SUBSYSTEM

DWG. NO. M1-0264 | SH. NO. - | REV. CP-19

REF CKD 2/6/97 CP-16

me619200.dgn A M1-0264 FINAL PRINT

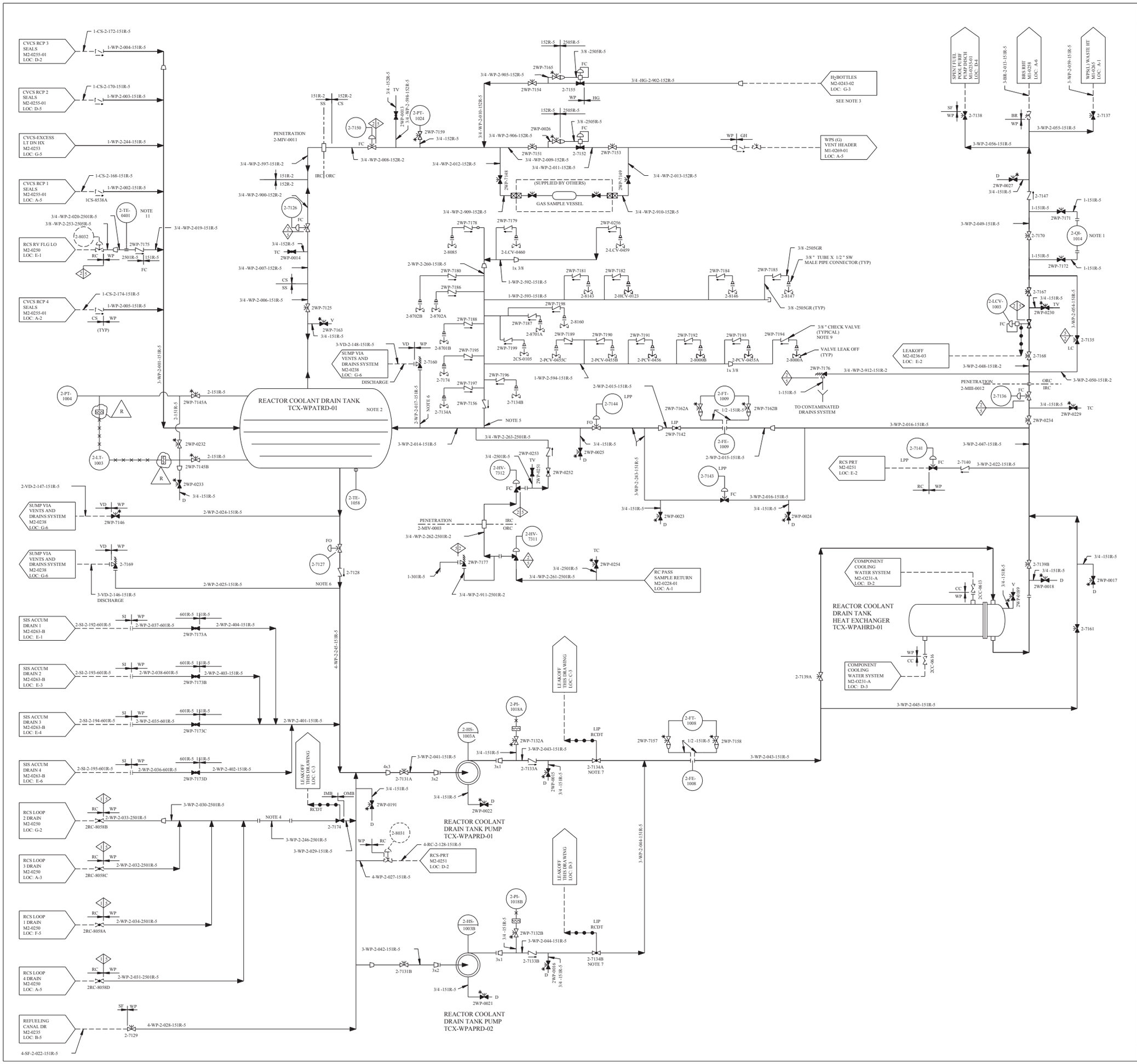

REV	DWN	CHKD	APVD	REMARKS
CP-11	DGK 09-13 2005	MM 09-13 2005		THIS DRAWING REVISED TO INCORPORATE DESIGN CHANGE FDA 2003-002730-01-00 PER SK-0007-03-002730-01-00.

NOTES:

1. FOR PERIODIC PLANT LEAKAGE EVALUATION.
2. TANK INLET AND RECIRCULATION CONNECTIONS ARE BELOW THE NORMAL WATER LEVEL.
3. LIMIT AVAILABLE H SUPPLY TO TWO STANDARD BOTTLES. PRESSURE REGULATOR SUPPLIED ON BOTTLES TO BE SET AT 5 PSIG. PROVIDE A RELIEF VALVE AT EXIT OF THE REGULATOR AND SET AT 100 PSIG.
4. SPOOL PIECE NORMALLY REMOVED. ONLY TO BE INSTALLED WHEN DRAINING AFTER DEPRESSURIZATION.
5. PIPE LENGTH DOWNSTREAM OF THIS POINT TO BE AS LONG AS PRACTICABLE.
6. MAKE CONNECTION ON SIDE OR BOTTOM.
7. THROTTLE VALVE TO PREVENT PUMP RUNOUT DURING DRAIN.
8. FOR GENERAL AND MECHANICAL NOTES SEE DWG M1-0200.
9. CHECK VALVE MUST BE INSTALLED IN A HORIZONTAL RUN WITH THE UNION NUT ON TOP.
10. UNLESS OTHERWISE NOTED ALL DRAINS COLLECTED BY LOCAL DRAIN SYSTEM.
11. STRAP-ON (SURFACE MOUNTED) RTD LOCATED AT BOTTOM OF PIPE AND LOCATED AS CLOSE TO VALVE 2-8032 AS PRACTICABLE.

REFERENCES

THIS FLOW DIAGRAM HAS BEEN REDRAWN FROM WESTINGHOUSE DWG 1138E99 REV 7 WITH EXCEPTIONS AS FOLLOWS:

a. VALVES AND LINE NUMBERS HAVE BEEN ADDED.
b. CONTROL LOOPS HAVE BEEN DELETED EXCEPT FOR THE PRIMARY AND THE FINAL ELEMENTS. THE DETAILS OF THE CONTROL LOOPS WILL BE SHOWN ON THE INSTRUMENTATION AND CONTROL DIAGRAM.
c. PLANT SPECIFIC ADDITIONS TO THE WESTINGHOUSE DIAGRAM HAVE BEEN MADE.

FSAR FIGURE 11.2-2

THIS DRAWING CREATED ELECTRONICALLY

CLASS I
(NUCLEAR SAFETY-RELATED)
SAFETY CLASS 1 — SEISMIC CATEGORY I
SAFETY CLASS 2 — CLASS 1E
SAFETY CLASS 3 — ASSOCIATED CIRCUITS

LUMINANT
CPSES
GLEN ROSE, TEXAS

LIQUID WASTE PROCESSING
FLOW DIAGRAM
REACTOR COOLANT
DRAIN TANK SUBSYSTEM

DWG. NO.	SH. NO.	REV.
M2-0264	-	CP-11

FINAL PRINT

REF CKD 2/5/97 CP-8

me619400.dgn M2-0264

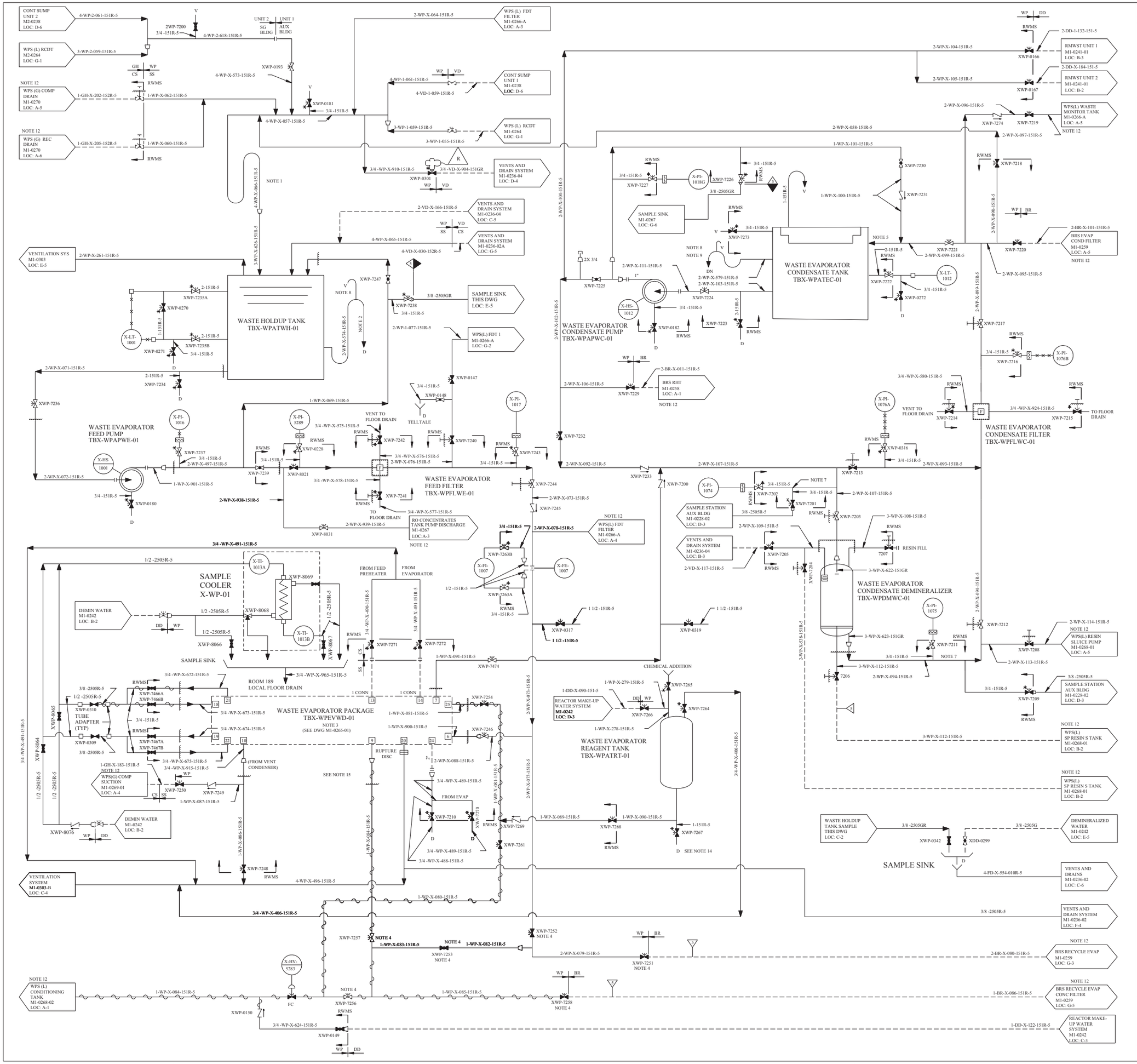

REV	DWN	CHKD	APVD	REMARKS
CP-31	MM 06-23-2005	DLK 06-23-2005		THIS DRAWING REVISED TO INCORPORATE DESIGN CHANGE FDA-2004-000686-01-00 PER SK-0001-04-000686-01-00.

NOTES:

1. LOOP SEAL TO EXTEND 12 INCHES BELOW AND ABOVE PIPE.
2. LOWER LOOP TO EXTEND 12 INCHES BELOW OVERFLOW CONNECTION AND TOP LOOP TO EXTEND TO TOP OF TANK.
3. FOR DETAILS REGARDING LINE SIZES AND NUMBER OF CONNECTIONS REFER TO WESTINGHOUSE DRAWING 7303J76. NUMBERS INDICATED THUS ⬡ REFER TO WESTINGHOUSE DRAWING NUMBER 4667D55.
4. LOCATE THESE VALVES AS CLOSE TOGETHER AS POSSIBLE.
5. CONNECTION LOCATED NEAR TANK BOTTOM TO PREVENT FLOW IMPINGEMENT ON DIAPHRAGM.
6. EQUIPMENT SHOWN IS COMMON FOR UNIT 1 AND UNIT 2.
7. LOCATE SAMPLE LINE CLOSE TO PROCESS LINE FOR REPRESENTATIVE SAMPLE.
8. SIPHON BREAKER LOCATED TOP OF TOP LOOP.
9. LOWER LOOP TO EXTEND 12 INCHES BELOW OVERFLOW CONNECTION AND TOP LOOP TO EXTEND 6 INCHES BELOW DIAPHRAGM FLANGE.
10. FOR MECHANICAL NOTES AND SYMBOLS SEE DRAWING M1-0200.
11. DELETED
12. DENOTES RADIOACTIVE WASTE MANAGEMENT SYSTEM CONTINUES ON IDENTIFIED DRAWING.
13. UNLESS OTHERWISE NOTED, ALL DRAINS COLLECTED BY LOCAL DRAIN SYSTEM TO DRAIN CHANNEL B.
14. DRAIN TO BE LOCALLY COLLECTED UNDER ADMINISTRATIVE CONTROL AND TRANSFERRED TO CHEMICAL SUMP IN TURBINE BUILDING.
15. WHEN LINES IN THE WASTE PROCESSING SYSTEM ARE NOT BEING USED FOR THE TRANSFER OF LIQUID CONTAINING CONCENTRATED BORIC ACID (UP TO 12% BY WEIGHT PER DBD-ME-0264), THE HEAT TRACING SET POINT MAY BE LOWER THAN 170 DEGREES F. SETPOINTS MAY BE SET FOR FREEZE PROTECTION WHEN THE LINE IS NOT IN USE, OR CONTAINS BORIC ACID SOLUTION (4% BY WEIGHT OR LESS).

REFERENCE DRAWINGS

THIS FLOW DIAGRAM HAS BEEN REDRAWN FROM WESTINGHOUSE DRAWING 1139E00 SHEET 1 OF 4, REV 5 WITH EXCEPTIONS AS FOLLOWS:

a. VALVE AND LINE NUMBERS HAVE BEEN ADDED.
b. CONTROL LOOPS HAVE BEEN DELETED EXCEPT FOR THE PRIMARY AND FINAL ELEMENTS. DETAILS OF THE CONTROL LOOPS WILL BE SHOWN ON INSTRUMENTATION AND CONTROL DIAGRAM.
c. PLANT SPECIFIC ADDITIONS TO THE ABOVE WESTINGHOUSE DIAGRAM HAVE BEEN MADE.

FSAR FIGURE 11.2-3

THIS DRAWING CREATED ELECTRONICALLY

CLASS II

LUMINANT
CPSES
GLEN ROSE, TEXAS

FLOW DIAGRAM
LIQUID WASTE PROCESSING
DRAIN CHANNEL A

DWG. NO. M1-0265 | SH. NO. - | REV. CP-31

FINAL PRINT

me609300.dgn M1-0265

REF CKD CP-27 10/17/97

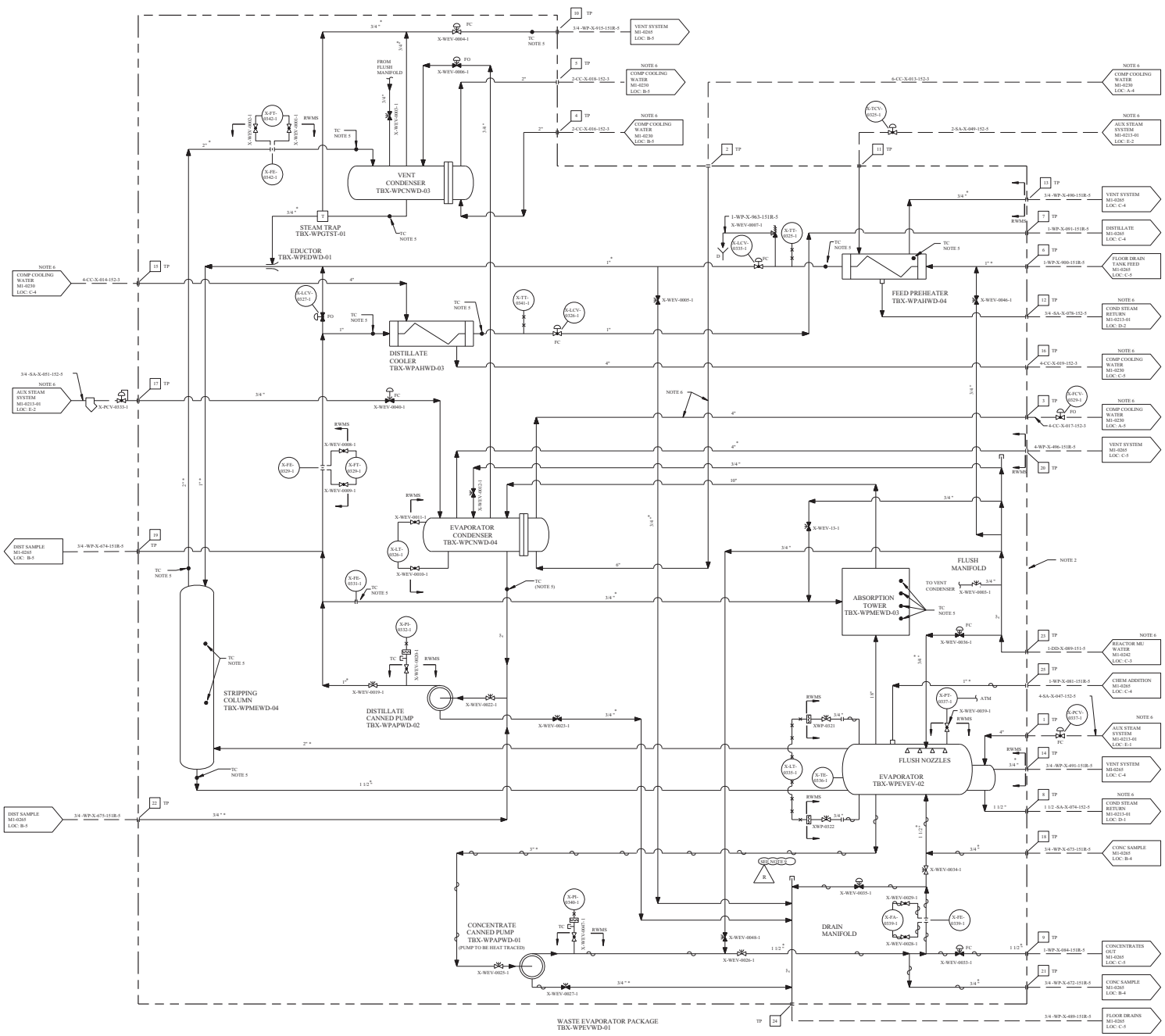

REV	DWN	CKD	APVD	REMARKS
CP-11	BD 04/07/2003	TJS 04/07/2003		THIS DRAWING REVISED TO INCORPORATE DESIGN CHANGE FDA-2001-000701-01-00 PER SK-0000-01-000701-01-00.

NOTES:

1. FOR MECHANICAL NOTES AND SYMBOLS, SEE DRAWING M1-0200.
2. 15 GPM WASTE EVAPORATOR SUPPLY BY WESTINGHOUSE, DRAWING 4667055, PIPING AND EQUIPMENT SUPPLIED ON A SKID, SHOP ORDER NO. 232, WNES SPIN NO. TBX-WPEVWD-01.
3. ALL LINES MARKED WITH * ARE CLASS 151R. THIS IS A DESIGNATION ONLY AND NO ADDITIONAL INSPECTION HAS BEEN PERFORMED ON THIS PIPING. ALL OTHER PIPE IS CLASS 151.
4. TP INDICATES TERMINAL POINT AND NOZZLE NUMBER ON EVAPORATOR, SEE WESTINGHOUSE DRAWING 7303376, R-10.
5. TC INDICATES TEST CONNECTIONS FOR FIELD TEST, 1/2 " NPT PLUGGED BOSSES.
6. VD, CC, SA, DD SYSTEMS, INTERFACING WITH WP SYSTEM, ARE NOT PART OF THE RADIOACTIVE WASTE MANAGEMENT SYSTEM (RWMS).
7. FOR INSTALLATION DETAILS OF INSTRUMENTATION FOR THE EVAPORATOR SKID, SEE WESTINGHOUSE DRAWING 7373885, R-1A.
8. FOR EQUIPMENT LOGIC DIAGRAM, SEE INSTRUMENTATION AND CONTROL DIAGRAM NO. TNE-M1-2265-SERIES.
9. WHEN LINES IN THE WASTE PROCESSING SYSTEM ARE NOT BEING USED FOR THE TRANSFER OF LIQUID CONTAINING CONCENTRATED BORIC ACID (UP TO 12% BY WEIGHT PER DBD-ME-0264), THE HEAT TRACING SET POINT MAY BE LOWER THAN 170 DEGREES F. SETPOINTS MAY BE SET FOR FREEZE PROTECTION WHEN THE LINE IS NOT IN USE, OR CONTAINS BORIC ACID SOLUTION (4% BY WEIGHT OR LESS).

R

FSAR FIGURE 11.2-3

THIS DRAWING CREATED FROM CADD

CLASS I

(NUCLEAR SAFETY-RELATED)

SAFETY CLASS 1	SEISMIC CATEGORY	I
SAFETY CLASS 2	CLASS OF ASSOCIATED CIRCUITS	
SAFETY CLASS 3		

TXU ELECTRIC
CPSES
GLEN ROSE, TEXAS

FLOW DIAGRAM
LIQUID WASTE PROCESSING
DRAIN CHANNEL A

DWG. NO.	SH. NO.	REV.
M1-0265	01	CP-11

$$$$$$DATE$$$$$$

me340100.dgn

A M1-0265-01

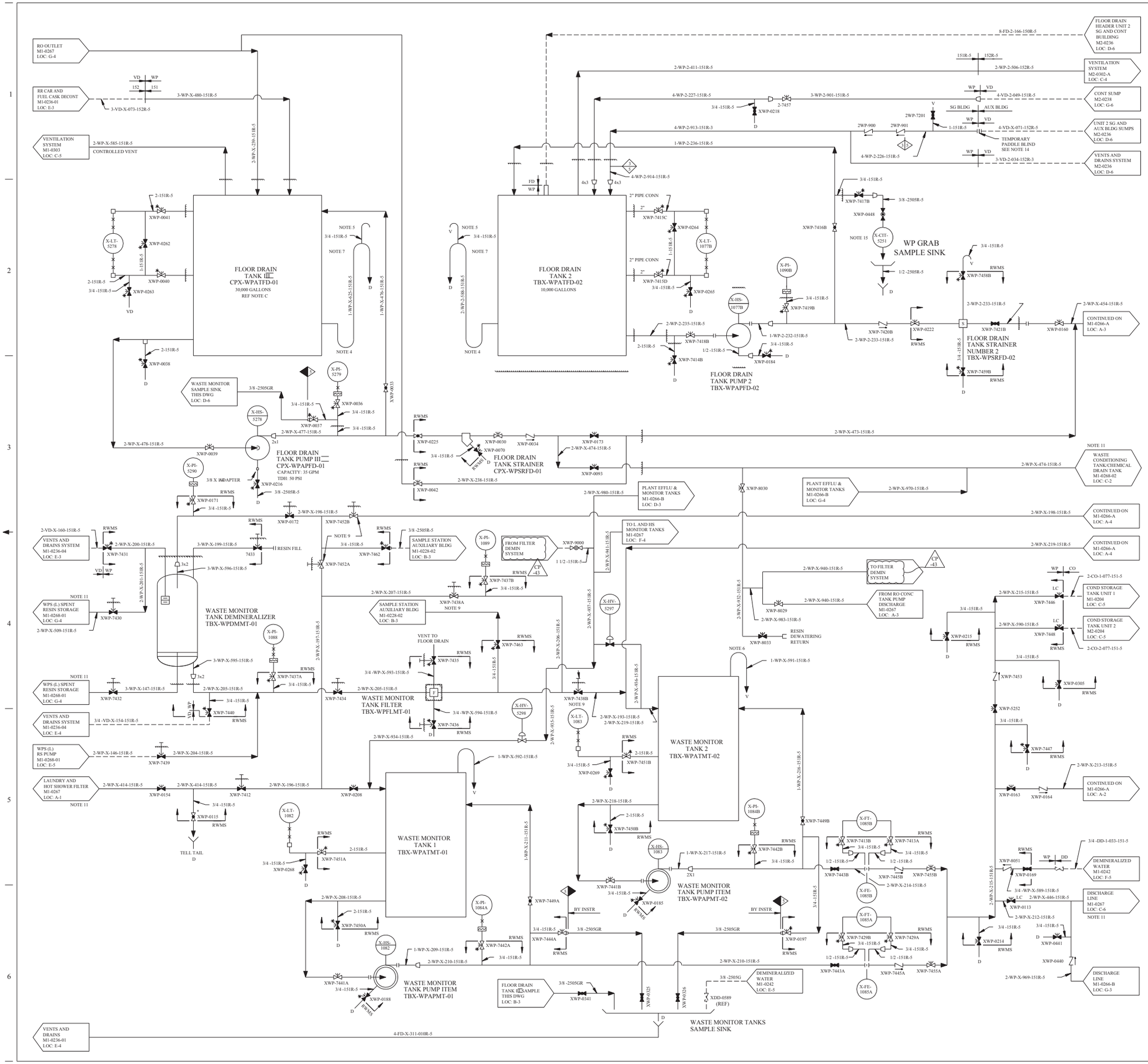

REV	DWN	CHKD	APVD	REMARKS
CP-43	HAC 12-09 2010			THIS DRAWING REVISED TO INCORPORATE EDITORIAL CHANGES AS NOTED AND AI-2010-01019-1.

NOTES:

1. FOR MECHANICAL SYMBOLS AND NOTES SEE DRAWING M1-0200.
2. DELETED
3. *THESE VALVES ARE OF THE HERMETICALLY-SEALED TYPE.
4. LOWER LOOP TO EXTEND 12 INCHES BELOW CONNECTION AND TOP LOOP TO EXTEND ABOVE HIGHEST ELEVATION OF OVERFLOW.
5. LOCATE SIPHON AT TOP OF LOOP.
6. VENT LINE TO BE NOT MORE THAN 12 INCHES ABOVE FLOOR.
7. ASSURE PIPING IS AT HIGHER ELEVATION THAN TANK TO PREVENT DRAINING TANK.
8. EQUIPMENT ON THIS DRAWING IS COMMON TO UNITS 1 AND 2, WITH THE EXCEPTION OF EQUIPMENT PER NOTE 2.
9. LOCATE THESE VALVES AS CLOSE TOGETHER AS POSSIBLE.
10. DELETED
11. INDICATES RADIOACTIVE WASTE MANAGEMENT SYSTEM CONTINUES ON IDENTIFIED DRAWING.
12. UNLESS OTHERWISE NOTED, DRAINS COLLECTED BY LOCAL DRAINS SYSTEM.
13. DELETED
14. THIS PADDLE BLIND TO BE REMOVED ONLY AT THE DIRECTION OF NUCLEAR OPERATIONS.
15. CONDUCTIVITY ANALYZER MAY BE USED IN LIEU OF GRAB SAMPLE.

REFERENCE NOTE:

THIS FLOW DIAGRAM HAS BEEN REDRAWN FROM WESTINGHOUSE DRAWING 1139E00 SH 3 AND 4 OF 4 REV 5 WITH EXCEPTIONS AS FOLLOWS:

a. VALVES AND LINE NUMBERS HAVE BEEN ADDED.
b. CONTROL LOOPS HAVE BEEN DELETED EXCEPT FOR THE PRIMARY AND FINAL ELEMENTS. DETAIL OF THE CONTROL LOOPS WILL BE SHOWN ON INSTRUMENTATION AND CONTROL DIAGRAM.
c. PLANT SPECIFIC ADDITIONS TO THE ABOVE REFERENCED WESTINGHOUSE DIAGRAM HAVE BEEN MADE.

FSAR FIGURE 11.2-4

THIS DRAWING CREATED ELECTRONICALLY

DRAWING M1-0266 REV CP-20
HAS BEEN SPLIT INTO THE FOLLOWING SHEETS:
M1-0266
M1-0266-B

DRAWING 2323-M1-0266 REV CP-8
HAS BEEN SPLIT INTO THE FOLLOWING SHEETS:
M1-0266
M1-0266-A

CLASS I
(NUCLEAR SAFETY-RELATED)
SAFETY CLASS 1 — SEISMIC CATEGORY I
SAFETY CLASS 2 — CLASS IE
SAFETY CLASS 3 — ASSOCIATED CIRCUITS

LUMINANT
CPNPP
GLEN ROSE, TEXAS

FLOW DIAGRAM
LIQUID WASTE PROCESSING
DRAIN CHANNEL B

DWG. NO. M1-0266 | SH. NO. - | REV. CP-43

FINAL PRINT

REF CHKD 8-19-2003

me0007p9.dgn M1-0266

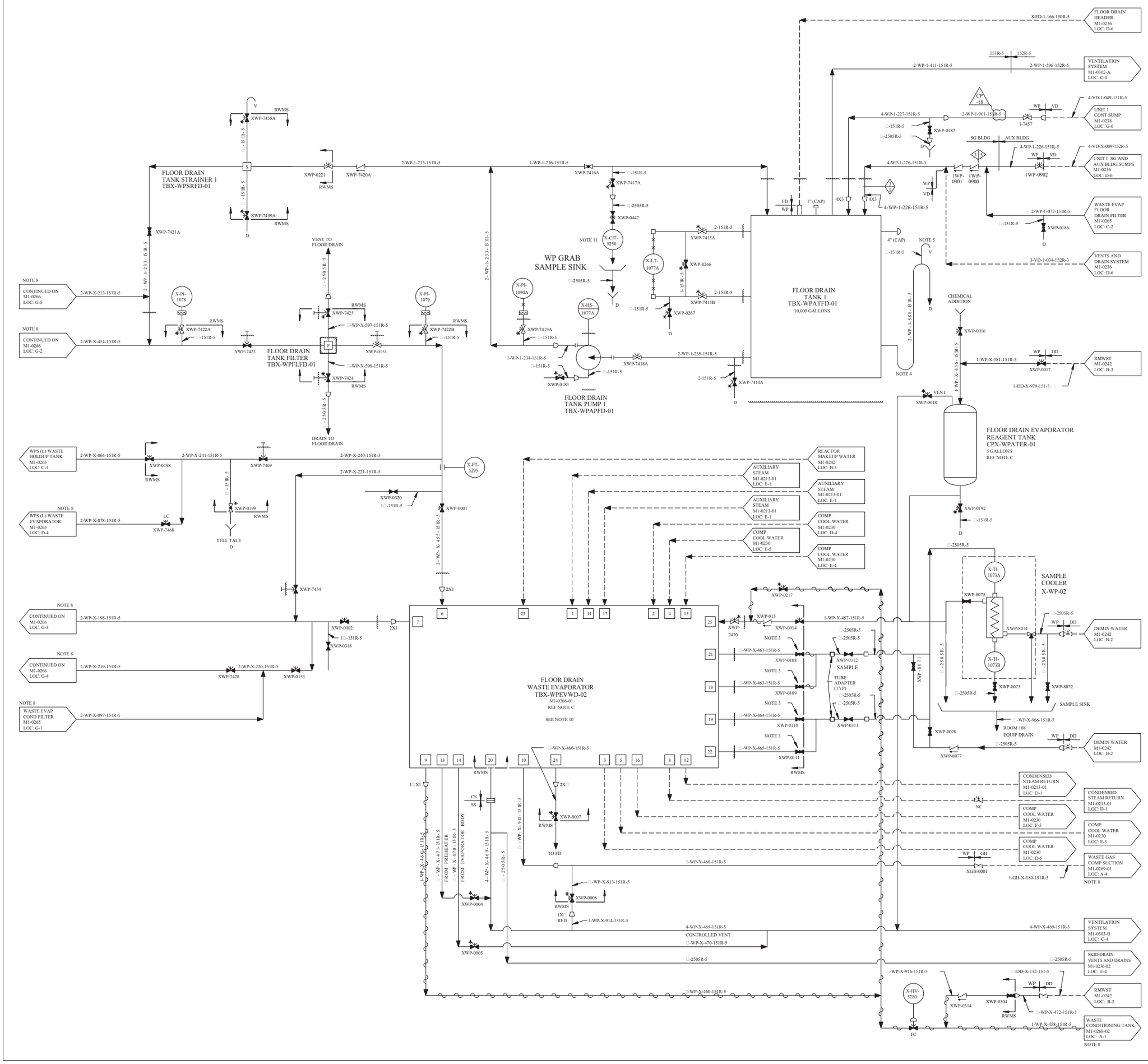

REV	DWN	CHK	APVD	REMARKS
CP-18	DLK 10-28 2015	GAW 10-28 2015	MHF 10-29 2015	THIS DRAWING REVISED TO INCORPORATE AI-CR-2015-010410-1 TO EDITORIALLY ADD R TO LINE NUMBER 3-WP-1-901-151-5.

NOTES:

1. FOR MECHANICAL SYMBOLS AND NOTES SEE DRAWING M1-0200.
2. VALVES XWP-7468 AND XWP-7469 (LOCATION B-3) ARE Q-VALVES WHICH REPLACED WESTINGHOUSE ORIGINALLY SUPPLIED NON-Q VALVES, XWP-0202 AND XWP-7427 RESPECTIVELY.
3. * THESE VALVES ARE OF THE HERMETICALLY-SEALED TYPE.
4. LOWER LOOP TO EXTEND 12 INCHES BELOW CONNECTION AND TOP LOOP TO EXTEND ABOVE HIGHEST ELEVATION OF OVERFLOW.
5. LOCATE SIPHON BREAKER AT TOP OF LOOP.
6. DELETED
7. EQUIPMENT ON THIS DRAWING IS COMMON TO UNITS 1 AND 2.
8. INDICATES RADIOACTIVE WASTE MANAGEMENT SYSTEM CONTINUES ON IDENTIFIED DRAWING.
9. UNLESS OTHERWISE NOTED, DRAINS COLLECTED BY LOCAL DRAINING SYSTEM.
10. WHEN LINES IN THE WASTE PROCESSING SYSTEM ARE NOT BEING USED FOR THE TRANSFER OF LIQUID CONTAINING CONCENTRATED BORIC ACID (UP TO 12% BY WEIGHT PER DBD-ME-0264), THE HEAT TRACING SET POINT MAY BE LOWER THAN 170 DEGREES F SETPOINTS MAY BE SET FOR FREEZE PROTECTION WHEN THE LINE IS NOT IN USE, OR CONTAINS BORIC ACID SOLUTION (4% BY WEIGHT OR LESS).
11. CONDUCTIVITY ANALYZER MAY BE USED IN LIEU OF GRAB SAMPLE.

REFERENCE NOTE:

THIS FLOW DIAGRAM HAS BEEN REDRAWN FROM WESTINGHOUSE DRAWING 1139E00 SH 3 AND 4 OF 4 REV 5 WITH EXCEPTIONS AS FOLLOWS:

A) VALVES AND LINE NUMBERS HAVE BEEN ADDED.

B) CONTROL LOOPS HAVE BEEN DELETED EXCEPT FOR THE PRIMARY AND FINAL ELEMENTS. DETAIL OF THE CONTROL LOOPS WILL BE SHOWN ON INSTRUMENTATION AND CONTROL DIAGRAM.

C) PLANT SPECIFIC ADDITIONS TO THE ABOVE REFERENCED WESTINGHOUSE DIAGRAM HAVE BEEN MADE.

FSAR FIGURE 11.2-4

THIS DRAWING CREATED ELECTRONICALLY

DRAWING 2323-M1-0266 REV CP-8
HAS BEEN SPLIT INTO THE FOLLOWING SHEETS:

M1-0266
M1-0266-A

CLASS I
(NUCLEAR SAFETY-RELATED)
SAFETY CLASS 1 SAFETY CLASS 2 SAFETY CLASS 3
SEISMIC CATEGORY I CLASS 1E ASSOCIATED CIRCUITS

LUMINANT
CPNPP
GLEN ROSE, TEXAS

FLOW DIAGRAM
LIQUID WASTE PROCESSING
DRAIN CHANNEL B

DWG. NO. M1-0266 | SH. NO. A | REV. CP-18

me475500.dgn A M1-0266-A

< FINAL PRINT >

REF CKD 9/10/97 CP-13

$$$$$$$DATE$$$$$$$

REV	DWN	CHKD	APVD	REMARKS
CP-5	DLK 12-09 2010			THIS DRAWING REVISED TO INCORPORATE EDITORIAL CHANGE AS NOTED AND AI-2010-011019-1.

NOTES:

1. FOR MECHANICAL SYMBOLS AND NOTES SEE DRAWING M1-0200.
2. UNLESS OTHERWISE NOTED, DRAINS COLLECTED BY LOCAL DRAINS SYSTEM.
3. ALL PIPING AND/OR TUBING DOWNSTREAM OF ROOT, SAMPLE, VENT OR DRAIN VALVES ARE EXEMPT FROM THE REQUIREMENTS OF 2323-MS-100, APPENDIX D, SECTION III.
4. INDICATES RADIOACTIVE WASTE MANAGEMENT SYSTEM CONTINUES ON IDENTIFIED DRAWING.

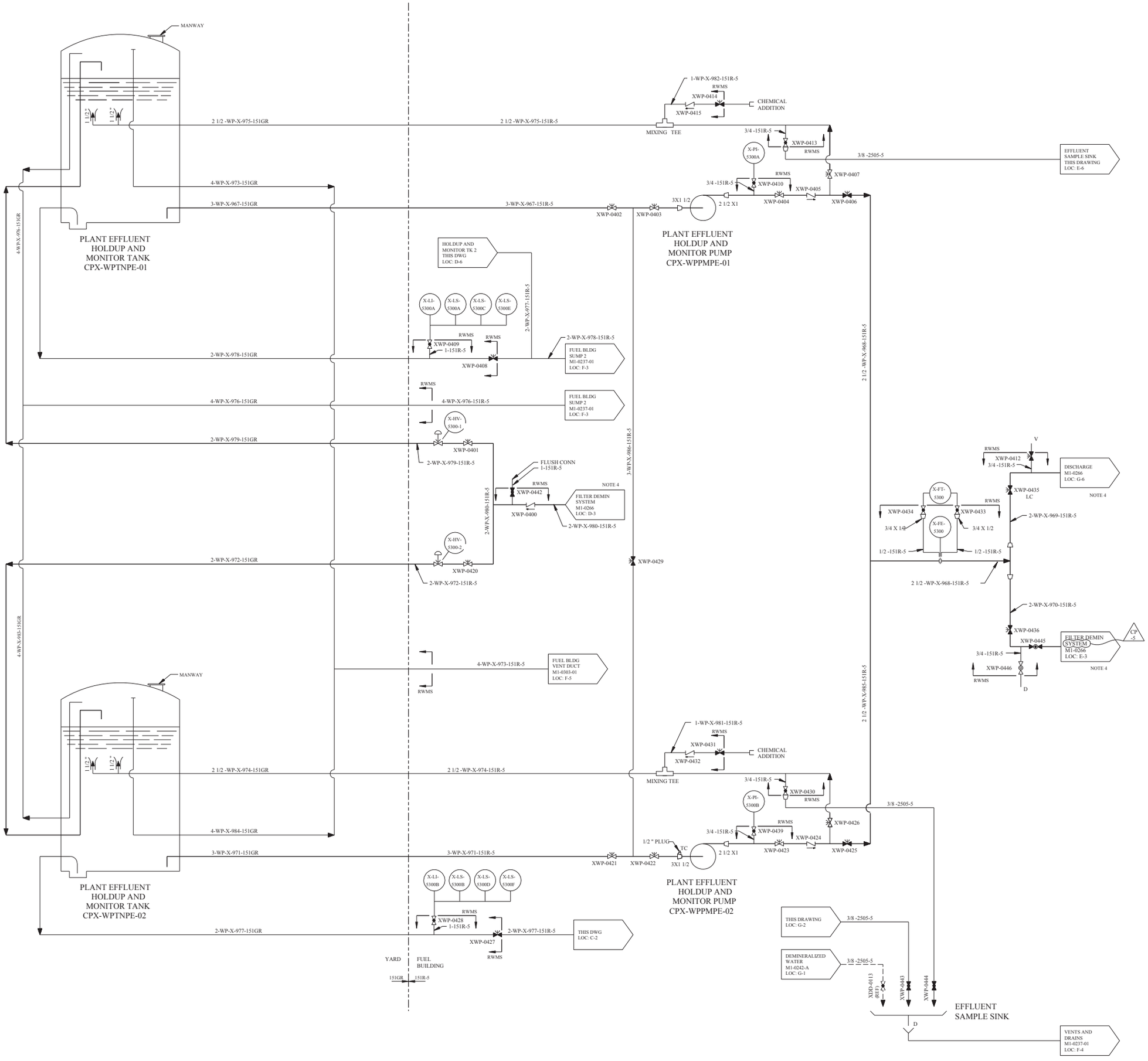

DRAWING M1-0266 REV CP-20
HAS BEEN SPLIT INTO THE FOLLOWING SHEETS:
M1-0266
M1-0266-B

FSAR FIGURE 11.2-9

THIS DRAWING CREATED ELECTRONICALLY

CLASS II

LUMINANT
CPNPP
GLEN ROSE, TEXAS

FLOW DIAGRAM
PLANT EFFLUENT
HOLDUP AND MONITOR TANKS

DWG. NO. M1-0266 | SH. NO. B | REV. CP-5

FINAL PRINT

me0007pa.dgn M1-0266-B

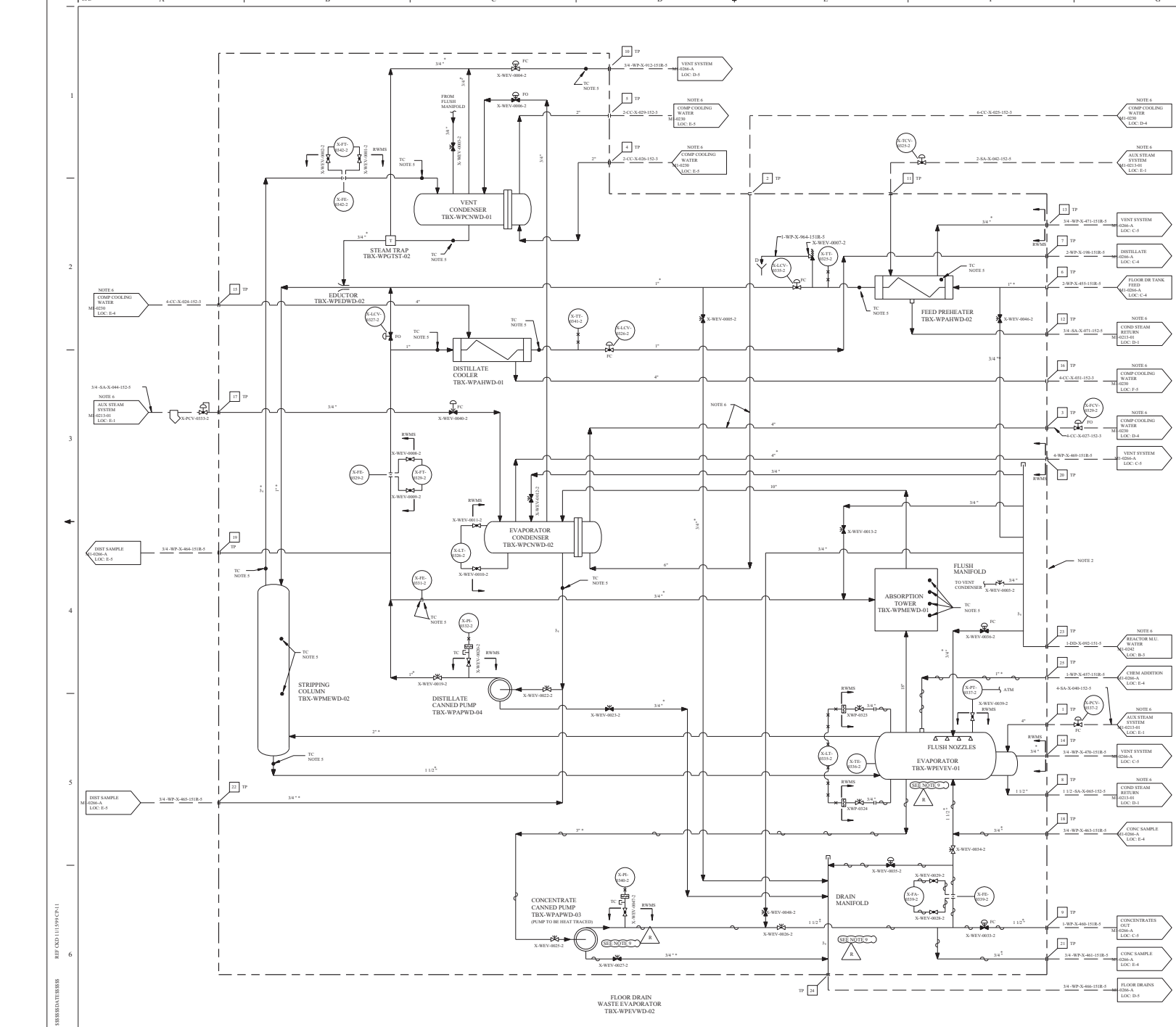

REV	DWN	CHK	APVD	REMARKS
CP-12	BG 2001	DJS 2001		THIS DRAWING REVISED TO INCORPORATE DESIGN CHANGE FDA-2001-000701-01-00 PER SK-0009-01-000701-01-00.

NOTES:

1. FOR MECHANICAL NOTES AND SYMBOLS SEE DRAWING M1-0200.
2. 15 GPM WASTE EVAPORATOR SUPPLY BY WESTINGHOUSE DRAWING 466TD54, PIPING AND EQUIPMENT SUPPLIED ON A SKID, SHOP ORDER NUMBER 232, WNES SPIN NUMBER TBX-WPEVWD-02.
3. ALL LINES MARKED WITH * ARE CLASS 151R. THIS IS A DESIGNATION ONLY AND NO ADDITIONAL INSPECTION HAS BEEN PERFORMED ON THIS PIPING, ALL OTHER PIPE IS CLASS 151.
4. TP INDICATES "TERMINAL POINT" AND NOZZLE NUMBER ON EVAPORATOR, SEE WESTINGHOUSE DRAWING 730376, R-10.
5. TC INDICATES "TEST CONNECTIONS" FOR FIELD TEST, 1/2 " NPT PLUGGED BOSSES.
6. VD, CC, SA, DD SYSTEMS, INTERFACING WITH WP SYSTEM, ARE NOT PART OF THE RADIOACTIVE WASTE MANAGEMENT SYSTEM (RWMS).
7. FOR INSTALLATION DETAILS OF INSTRUMENTATION FOR THE EVAPORATOR SKID, SEE WESTINGHOUSE DRAWING 737J885-UNIT-1, R-1A.
8. FOR EQUIPMENT LOGIC DIAGRAM SEE INSTRUMENTATION AND CONTROL DIAGRAM M1-2266-SERIES.
9. WHEN LINES IN THE WASTE PROCESSING SYSTEM ARE NOT BEING USED FOR THE TRANSFER OF LIQUID CONTAINING CONCENTRATED BORIC ACID (UP TO 12% BY WEIGHT PER DBD-ME-020-6), THE HEAT TRACING SET POINT MAY BE LOWER THAN 170 DEGREES F. SETPOINTS MAY BE SET FOR FREEZE PROTECTION WHEN THE LINE IS NOT IN USE, OR CONTAINS BORIC ACID SOLUTION 4% BY WEIGHT OR LESS).

R

FSAR FIGURE 11.2-4

THIS DRAWING CREATED ELECTRONICALLY

CLASS I

(NUCLEAR SAFETY-RELATED)

SAFETY CLASS 1 — SEISMIC CATEGORY I
SAFETY CLASS 2 — CLASS II
SAFETY CLASS 3 — ASSOCIATED CIRCUITS

TXU ELECTRIC
CPSES
GLEN ROSE, TEXAS

FLOW DIAGRAM
LIQUID WASTE PROCESSING
DRAIN CHANNEL B

DWG. NO. M1-0266 | SH. NO. 01 | REV. CP-12

$$$$$$DATE$$$$$$ REF CKD 11/15/99 CP-11

mc343900.dgn M1-0266-01

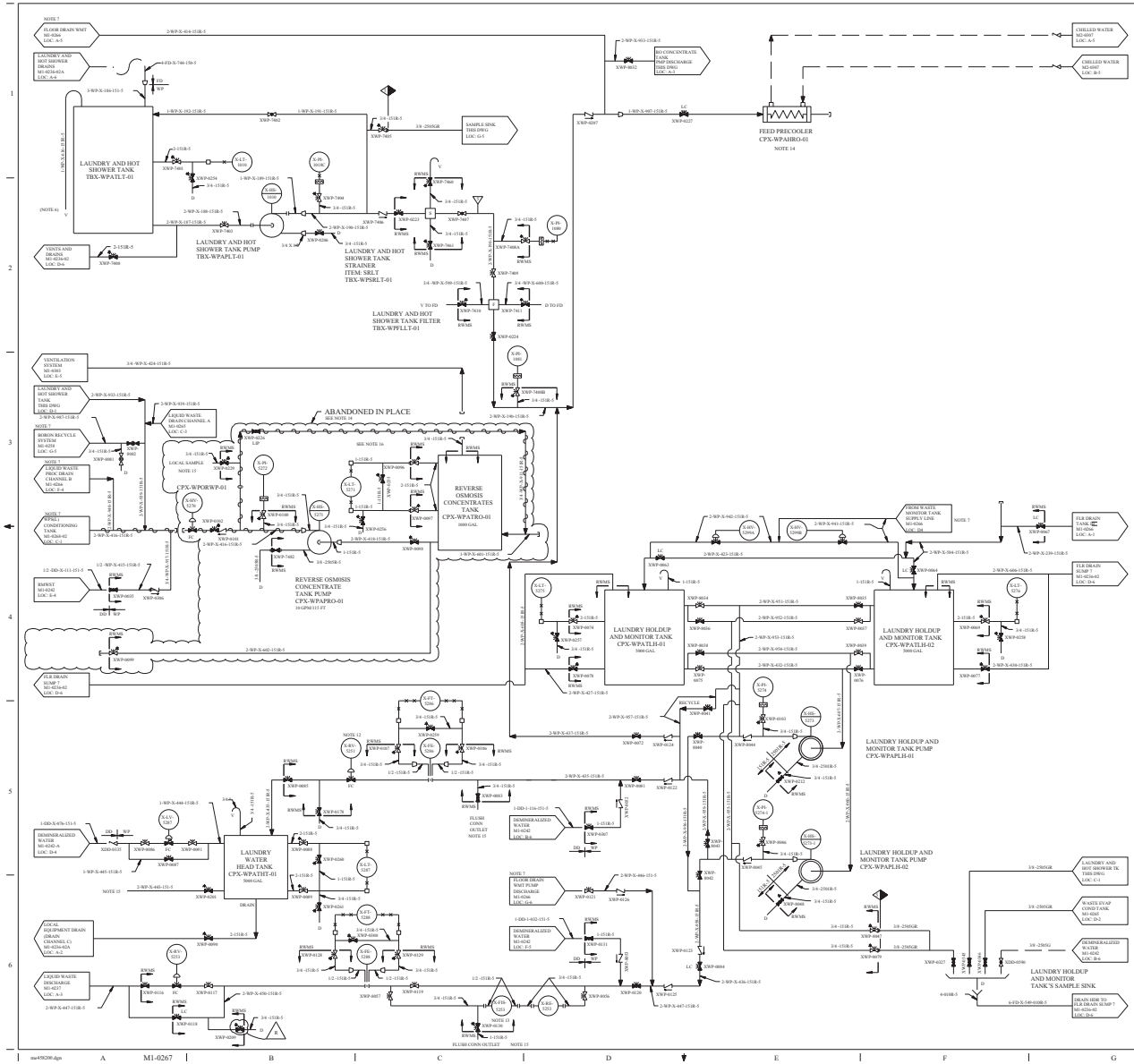

REV.	DWN	CHKD	APVD	REMARKS
CP-29	TCL mm/dd/yyyy	TCL mm/dd/yyyy		THIS DRAWING REVISED TO INCORPORATE DIMENS CHANGE FDA_DSD-0002-01-01 PER PR-0001-03-00-0211 01-06.

NOTES:

1. DELETED.
2. DELETED.
3. FOR MECHANICAL SYMBOLS AND NOTES SEE DRAWING M1-0200.
4. EQUIPMENT ON THIS DRAWING IS COMMON TO UNITS 1 AND 2.
5. DELETED.
6. VENT LINE TO END NOT MORE THAN 12 INCHES ABOVE FLOOR.
7. DENOTES RADIOACTIVE WASTE MANAGEMENT SYSTEM CONTINUES ON IDENTIFIED DRAWING.
8. DELETED.
9. DELETED.
10. ALL VENTS AND DRAINS ON THIS DRAWING DRAIN TO DRAIN CHANNEL B UNLESS OTHERWISE NOTED.
11. DELETED.
12. AIR OPERATED CONTROL VALVE X-RV-5251 IS CLOSED. ITS ASSOCIATED SOLENOID VALVE IS DISCONNECTED. REFERENCE DWG E1-0465-21.
13. VENDOR SUPPLIED FLOW SWITCH RELOCATED OFF VENDOR SKID.
14. THE REVERSE OSMOSIS EQUIPMENT WILL NOT BE USED FOR WASTE PROCESSING. THE EQUIPMENT IS ABANDONED IN PLACE.
15. THREADED PIPE CAPS MAY BE ADDED OR REMOVED FROM CONNECTIONS REFERRING TO THIS NOTE ALONG WITH PIPING DOWNSTREAM OF VENT AND DRAIN VALVES IN ACCORDANCE WITH NOTE 3c ON DWG M1-0266.
16. WHEN LINES IN THE WASTE PROCESSING SYSTEM ARE NOT BEING USED FOR THE TRANSFER OF LIQUID CONTAINING CONCENTRATED BORIC ACID (UP TO 12% BY WEIGHT PER DBD-M8-02004), THE HEAT TRACING SET POINT MAY BE LOWER THAN 176 DEGREES F. SETPOINTS MAY BE SET FOR FREEZE PROTECTION WHEN THE LINE IS NOT IN USE, OR CONTAINS BORIC ACID SOLUTION (4% BY WEIGHT OR LESS).

REFERENCE NOTE:

THIS FLOW DIAGRAM HAS BEEN REDRAWN FROM WESTINGHOUSE DRAWING 115K00 SH 144 OF 4, REV. 5 WITH EXCEPTIONS AS FOLLOWS:

a. VALVES AND LINE NUMBERS HAVE BEEN ADDED.
b. CONTROL LOOPS HAVE BEEN DELETED EXCEPT FOR THE PRIMARY AND FINAL ELEMENTS. DETAIL OF THE CONTROL LOOPS WILL BE SHOWN ON INSTRUMENTATION AND CONTROL DIAGRAM.
c. PLANT SPECIFIC ADDITIONS TO THE ABOVE REFERRED WESTINGHOUSE DIAGRAM HAVE BEEN MADE.

FSAR FIGURE 11.2-5

THIS DRAWING CAN BE ACCESSED BY THE ENGINEERING DATABASE

CLASS II

TXU ENERGY
CPSES
GLEN ROSE, TEXAS

FLOW DIAGRAM
LIQUID WASTE PROCESSING
DRAIN CHANNEL C

DWG. NO. M1-0267 | SH. NO. 1 | REV. CP-29

mu459280.dgn A M1-0267 B C D E F G H

REF CKD 12/07/ CP-29

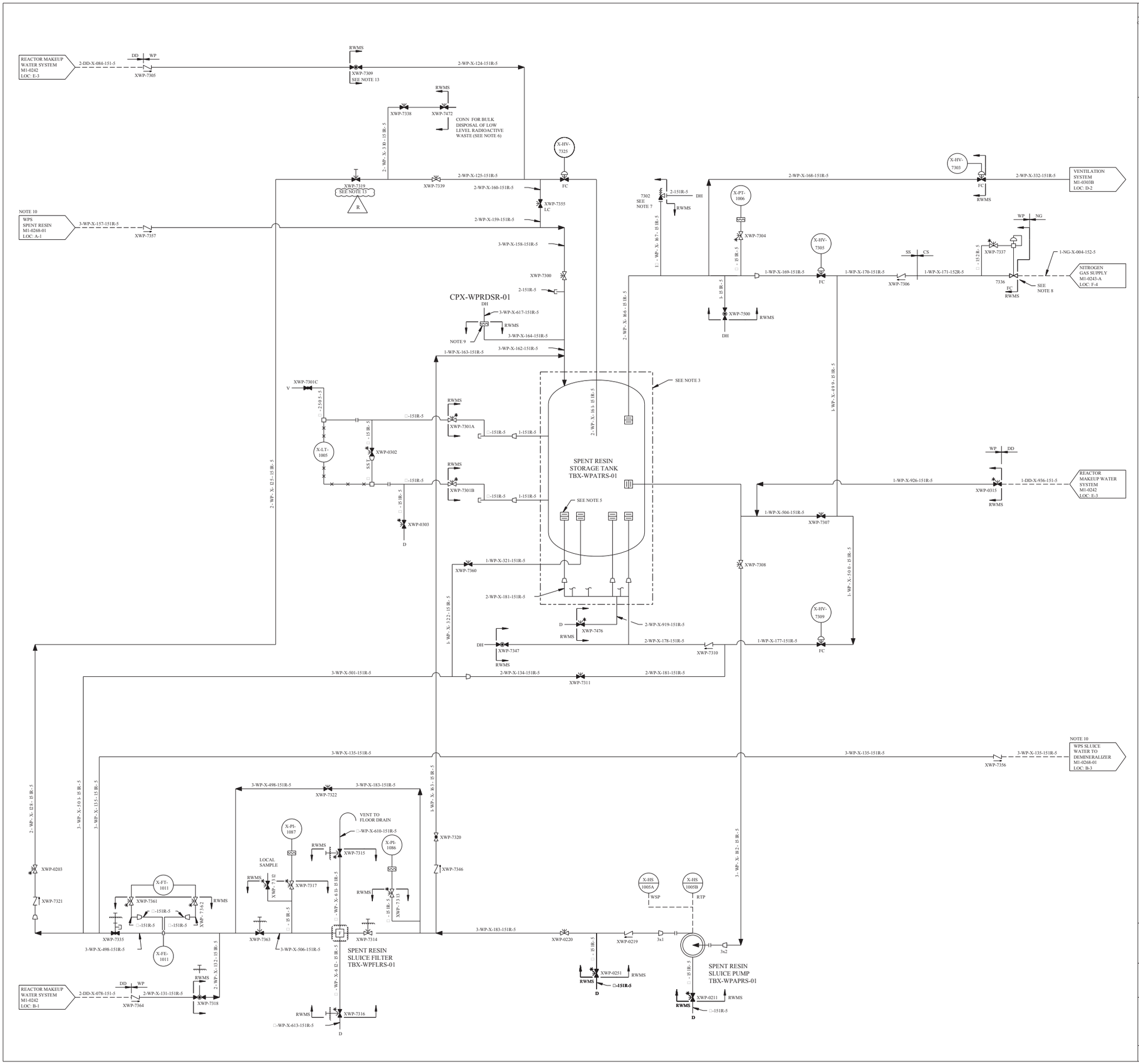

REV	DWN	CHK	APVD	REMARKS
CP-26	DLK 08-16-2013	MM 11-14-2013		THIS DRAWING REVISED TO INCORPORATE DESIGN CHANGE FDA 2013-000144-01-00 PER SK-0001-13-000144-01-00.

NOTES:

1. FOR MECHANICAL SYMBOLS AND NOTES SEE DRAWING M1-0200.
2. TEMPERATURE SENSOR THERMETICALLY CONTROLLED HEATERS ARE SUPPLIED BY MANUFACTURER OF BATCHING TANK.
3. BOUNDARY ON SPENT RESIN TANK CUBICLE.
4. MAKE CONNECTIONS TOP SIDE OF HEADER, RUN VERTICAL FOR 18 INCHES.
5. TANK FURNISHED WITH SIX (6) □" AND ONE (1) SW CPLG SPARGER CONNECTIONS TO BE PIPED IN FIELD.
6. LOCATE BRANCH IN TOP OF MAIN HEADER.
7. LOCATE THIS VALVE CLOSE TO TANK.
8. LOCATE THIS VALVE CLOSE TO THE NITROGEN SUPPLY.
9. PROVIDE RUPTURE DISC WITH DIAMETER OF AT LEAST 1.5 IN., BURST PRESSURE LESS THAN 150 PSIG.
10. INDICATES RADIOACTIVE WASTE MANAGEMENT SYSTEM CONTINUES ON IDENTIFIED DRAWING.
11. DRAIN LINES ROUTED TO FLOOR DRAINS.
12. WSP = WASTE SOLIDIFICATION PANEL X-LV-13
    RTP = RESIN TRANSFER PANEL X-LV-12
13. VALVE XWP-7319 HAS A REMOTE CHAIN OPERATOR ATTACHMENT.
    VALVE XWP-7337 HAS A REMOTE CHAIN OPERATOR ATTACHMENT, REFERENCE FDA-2013-000144-01.

R

GENERAL NOTE:

THIS FLOW DIAGRAM REDRAWN TO SEPARATE SYSTEM FUNCTION, FOR SOLIDIFICATION FUNCTION SEE M1-0268-02.

HISTORICAL NOTE:

THIS FLOW DIAGRAM HAS BEEN REDRAWN FROM WESTINGHOUSE DRAWING 1139E00 SH 2 OF 4 REV 3 WITH EXCEPTIONS AS FOLLOWS:

a. VALVES AND LINE NUMBERS HAVE BEEN ADDED.

b. CONTROL LOOPS HAVE BEEN DELETED EXCEPT FOR THE PRIMARY AND FINAL ELEMENTS. DETAIL OF THE CONTROL LOOPS WILL BE SHOWN ON INSTRUMENTATION AND CONTROL DIAGRAM.

c. PLANT SPECIFIC ADDITIONS TO THE ABOVE REFERENCED WESTINGHOUSE DIAGRAM HAVE BEEN MADE.

FSAR FIGURE 11.2-6

THIS DRAWING CREATED ELECTRONICALLY

CLASS II

LUMINANT
CPNPP
GLEN ROSE, TEXAS

FLOW DIAGRAM
LIQUID WASTE PROCESSING
SPENT RESIN HANDLING
SUBSYSTEM

DWG. NO.	SH. NO.	REV.
M1-0268	-	CP-26

< FINAL PRINT >

REF CKD 8/4/97 CP-19

SSSSSSSSDATESSSSSSS

me472800.dgn A M1-0268

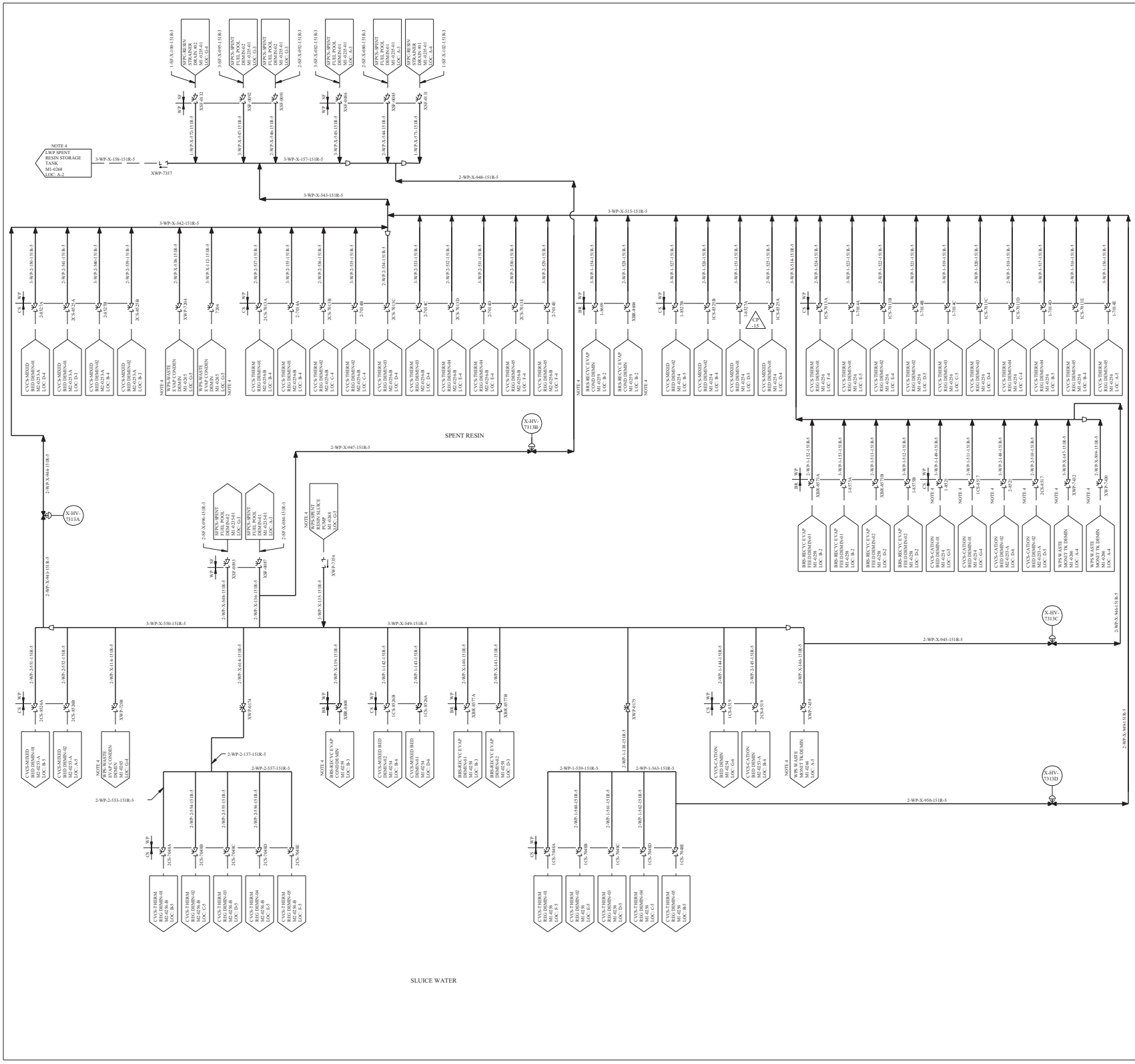

REV.	DRWN	CHKD	APVD	REMARKS
CP-16				THIS DRAWING REVISED TO ADD THE FSAR FIGURE NUMBER AS AN EDITORIAL CHANGE.

NOTES:

1. PIPE BENDS SHALL BE USED WHERE POSSIBLE.
2. HEADER SHALL SLOPE CONTINUOUSLY DOWNWARD TO SPENT RESIN STORAGE TANK.
3. HEADER LOW POINT TRAPS AND POCKETS SHALL BE AVOIDED.
4. SPENT RESIN HEADER AND SLUICE WATER HEADER ARE WITHIN THE RADIOACTIVE WASTE MANAGEMENT SYSTEM (RWMS) AND CONTINUE ON IDENTIFIED INTERFACING DRAWINGS.
5. FOR MECHANICAL SYMBOLS AND NOTES SEE DRAWING M1-0200.
6. DELETED
7. DELETED

CP 16

FSAR FIGURE 11.2-7

THIS DRAWING CREATED ELECTRONICALLY

CLASS II

TXU ELECTRIC
CPSES
GLEN ROSE, TEXAS

FLOW DIAGRAM
LIQUID WASTE PROCESSING
DISPOSAL SUBSYSTEM

DWG. NO.	SH. NO.	REV.
M1-0268	01	CP-16

vs0000ip.dgn

$$$$$$$DATA TE$$$$$$

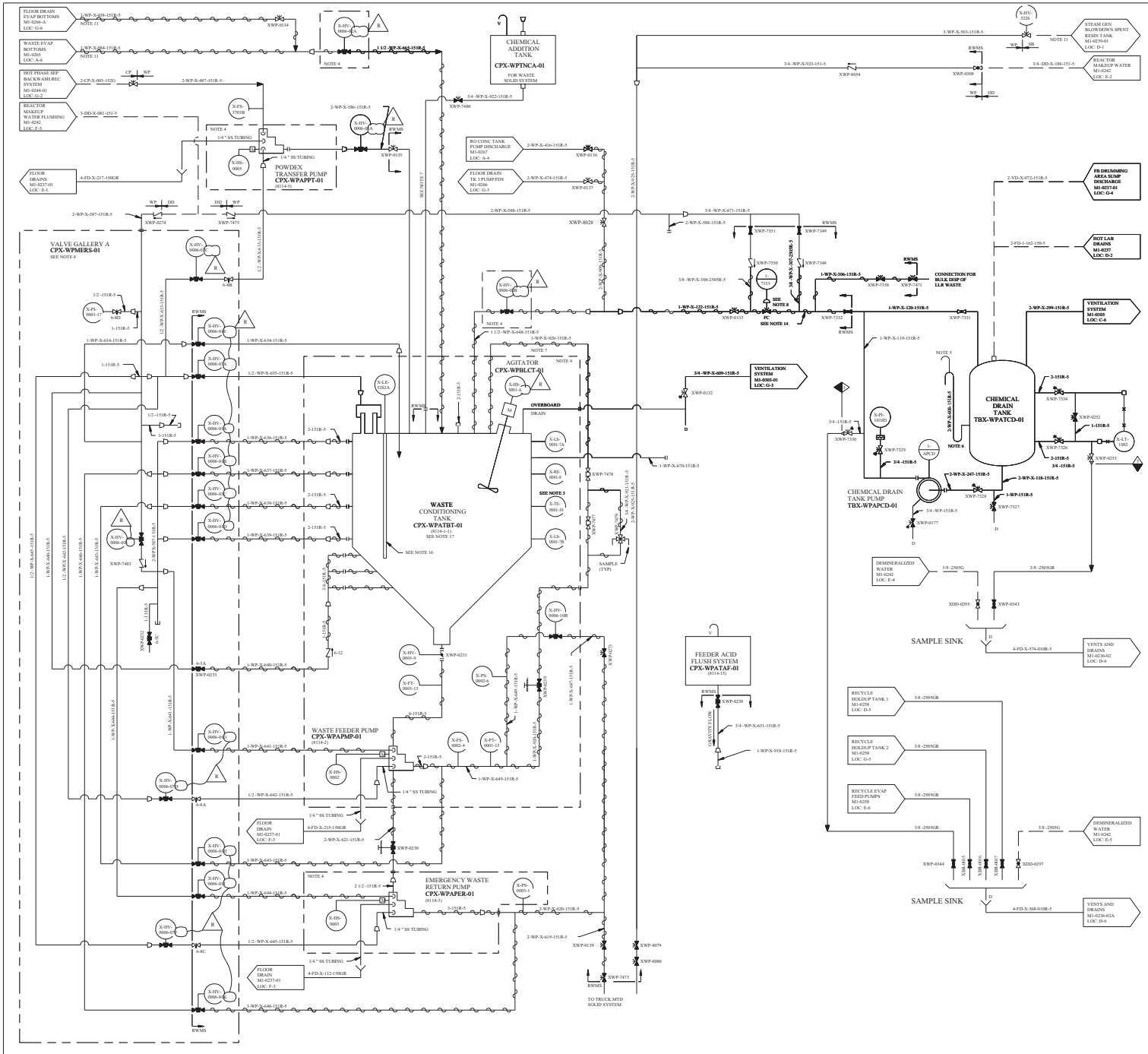

REV	DWN	CHKD	APVD	REMARKS
CP-23	MAR 01-07 2002	TEJE 01-15 2002		THIS DRAWING REVISED TO INCORPORATE DESIGN CHANGE FDA-2001-002012-01-00 PER SK-0806-01-002012-01-00.

NOTES:

1. FOR MECHANICAL SYMBOLS AND NOTES SEE DRAWING M1-0200.
2. DELETED
3. TEMPERATURE SENSOR THERMOSTATICALLY CONTROLLED HEATER IS SUPPLIED BY ATCOR.
4. EQUIPMENT AND PIPING WITHIN THE BOUNDARIES SHOWN IS SUPPLIED BY ATCOR.
5. SIPHON LOCATED AT TOP OF LOOP.
6. LOWER LOOP TO EXTEND 12 INCHES BELOW OVERFLOW AND TOP LOOP TO TOP OF TANK.
7. CONNECTION INTO TANK AND PIPING PROVIDED BY PURCHASER.
8. LOCATE FLUSH CONNECTIONS AS CLOSE TO VALVE AS POSSIBLE.
9. EQUIPMENT ON THIS DRAWING IS COMMON TO UNIT 1 AND 2.
10. LEVEL INSTRUMENT IS FURNISHED BY TANK SUPPLIER.
11. INDICATES RADIOACTIVE WASTE MANAGEMENT SYSTEM CONTINUES ON IDENTIFIED DRAWING.
12. EMERGENCY WASTE RETURN PUMP PROVIDED TO RETURN:
    a. SPENT RESINS TO RESPECTIVE SPENT RESIN STORAGE TANK.
    b. CHEMICAL DRAIN LIQUIDS TO THE CHEMICAL DRAIN TANK.
    c. EVAPORATOR BOTTOMS AND POWDEX RESIN TO THE TRUCK CONNECTION.
13. UNLESS OTHERWISE NOTED DRAINS TO BE LOCALLY COLLECTED UNDER ADMINISTRATIVE CONTROL.
14. HEAT TRACE AND INSULATE LINE IN THE FUEL BUILDING AND AUXILIARY BUILDING WHERE ACCESSIBLE.
15. DELETED
16. X-LE-5282A SUPPLIED BY FLUID COMPONENT INCORPORATED UNDER PO 665-71225.
17. WHEN LINES IN THE WASTE PROCESSING SYSTEM ARE NOT BEING USED FOR THE TRANSFER OF LIQUID CONTAINING CONCENTRATED BORIC ACID (UP TO 12% BY WEIGHT PER DBD-ME-0264); THE HEAT TRACING SET POINT MAY BE LOWER THAN 170 DEGREES F. SETPOINTS MAY BE SET FOR FREEZE PROTECTION WHEN THE LINE IS NOT IN USE, OR CONTAINS BORIC ACID SOLUTION (4% BY WEIGHT OR LESS).

REFERENCE NOTE:

THIS FLOW DIAGRAM HAS BEEN REDRAWN FROM WESTINGHOUSE DRAWING 1139E88, SH.2 OF 4, REV. 3 WITH EXCEPTIONS AS FOLLOWS:

a. VALVES AND LINE NUMBERS HAVE BEEN ADDED.
b. CONTROL LOOPS HAVE BEEN DELETED EXCEPT FOR THE PRIMARY AND FINAL ELEMENTS. DETAIL OF THE CONTROL LOOPS WILL BE SHOWN ON INSTRUMENTATION AND CONTROL DIAGRAMS.
c. PLANT SPECIFIC ADDITIONS TO THE ABOVE REFERENCED WESTINGHOUSE DIAGRAM HAVE BEEN MADE.

GENERAL NOTE:

THIS FLOW DIAGRAM PREPARED TO INCLUDE THE CONTENTS OF ATCOR FLOW DIAGRAM 8114-D-01 AND THE RADIOACTIVE WASTE SOLIDIFICATION SYSTEM FROM DRAWING M1-0268, CP-3.

FSAR FIGURE 11.2-8

THIS DRAWING IS REVISED ELECTRONICALLY

CLASS II

TXU ELECTRIC
CPSES
GLEN ROSE, TEXAS

FLOW DIAGRAM
LIQUID WASTE PROCESSING
DISPOSAL SUBSYSTEM

DWG. NO.	SH. NO.	REV.
M1-0268	02	CP-23

REV	DWN	CHKD	APVD	REMARKS
CP-4	DEC 01/24 1999			THIS DRAWING REVISED TO INCORPORATE DESIGN CHANGE DCN 12346 REV 1.

NOTES:

1. FOR MECHANICAL SYMBOLS AND NOTES SEE DRAWING M1-0200.
2. UNLESS OTHERWISE NOTED, DRAINS COLLECTED BY LOCAL DRAINS SYSTEM.
3. ALL PIPING AND/OR TUBING DOWNSTREAM OF ROOT, SAMPLE, VENT OR DRAIN VALVES ARE EXEMPT FROM THE REQUIREMENTS OF 2323-MS-100, APPENDIX D, SECTION III.
4. INDICATES RADIOACTIVE WASTE MANAGEMENT SYSTEM CONTINUES ON IDENTIFIED DRAWING.

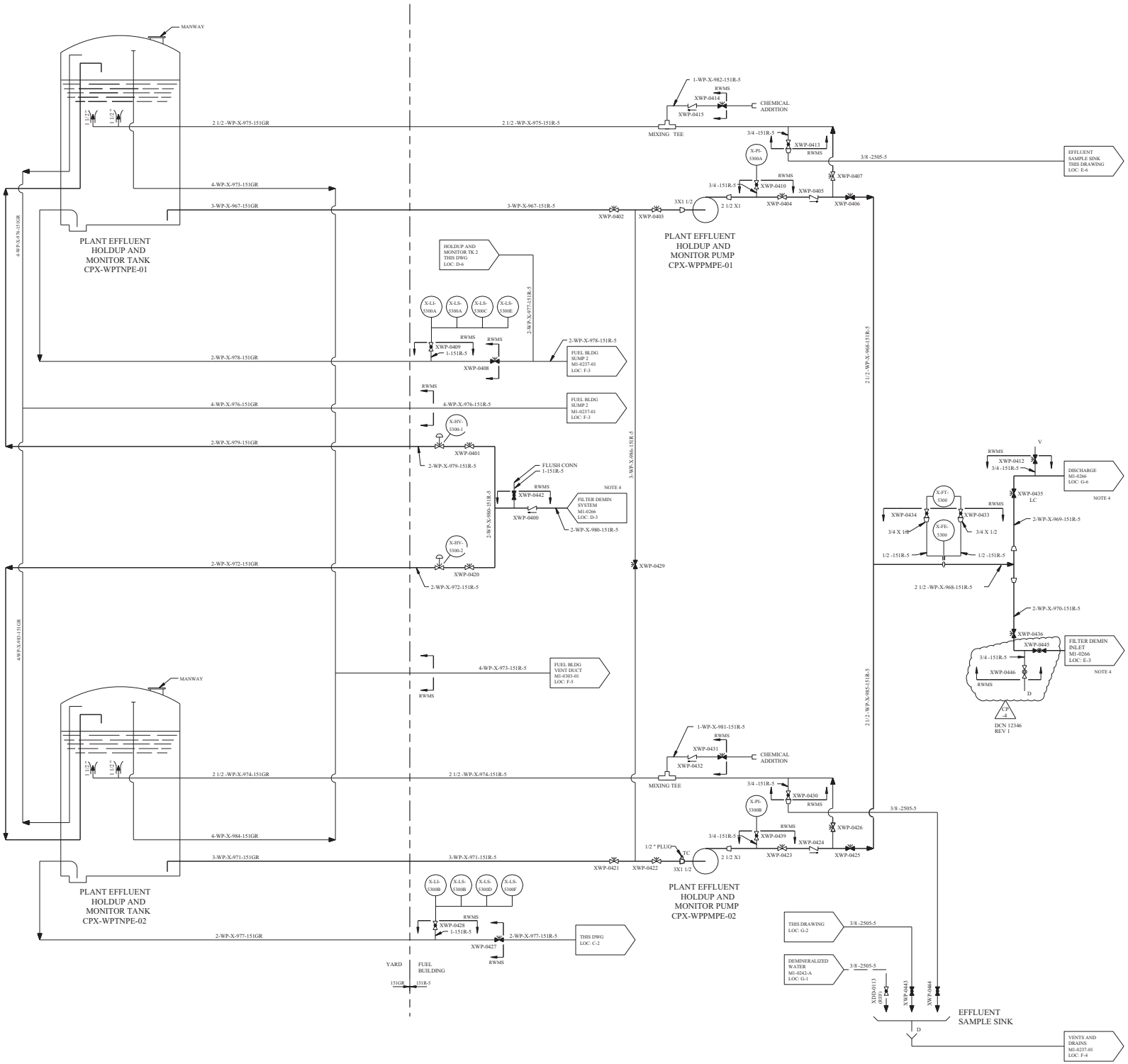

DRAWING M1-0266 REV CP-20
HAS BEEN SPLIT INTO THE FOLLOWING SHEETS:
M1-0266
M1-0266-B

CLASS II

TXU ELECTRIC
CPSES
GLEN ROSE, TEXAS

FLOW DIAGRAM
PLANT EFFLUENT
HOLDUP AND MONITOR TANKS

DWG. NO. M1-0266 | SH. NO. B | REV. CP-4

FSAR FIGURE 11.2-9

THIS DRAWING CREATED ELECTRONICALLY

me0001hj.dgn

$$$$$$$D\TESSSSS

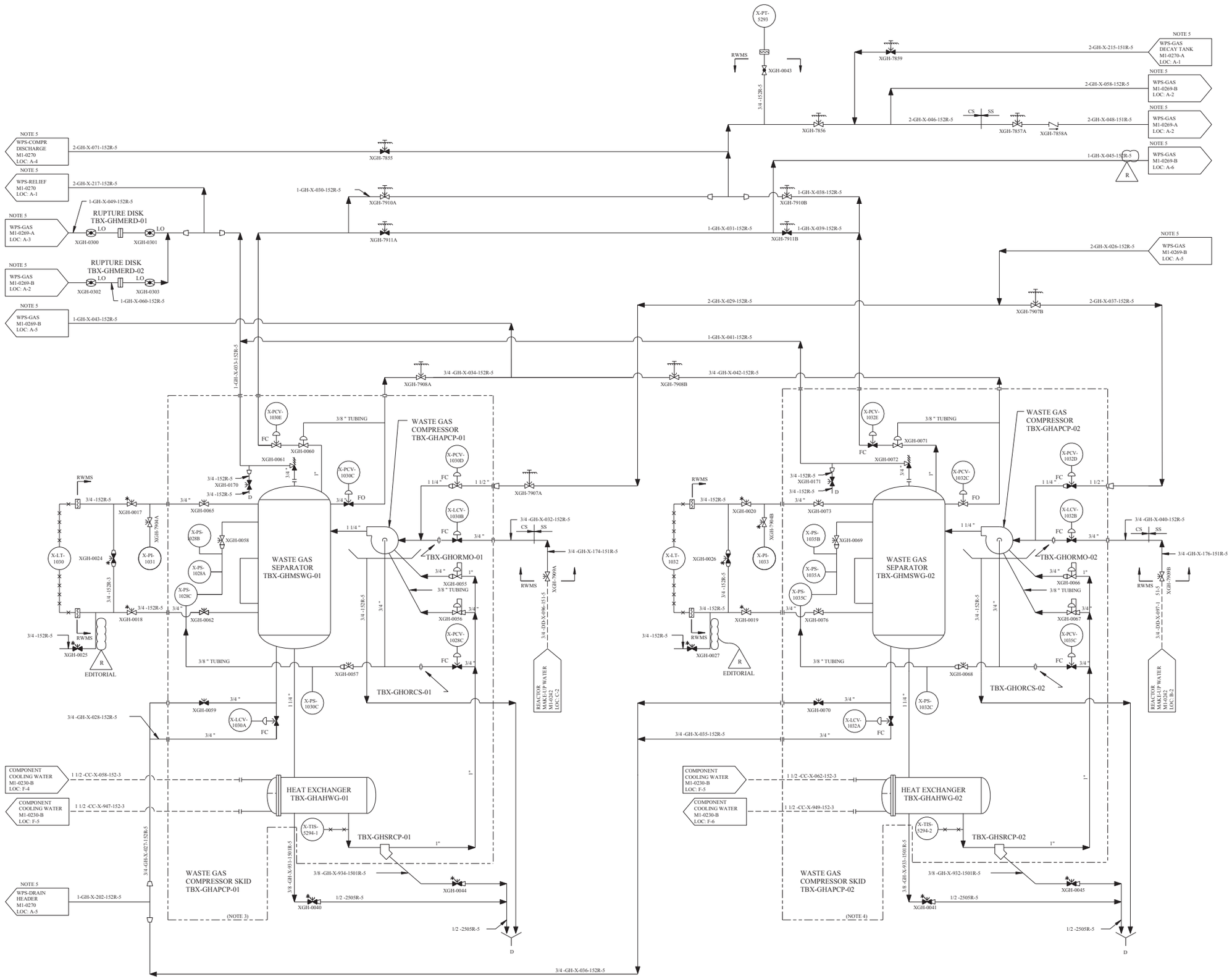

REV	DWN	CHKD	APVD	REMARKS
CP-24	MM 08-01-2011	DPR 08-11-2011		THIS DRAWING REVISED TO INCORPORATE DESIGN CHANGE FDA-2011-00130-01-00 PER SK-0005-11-000130-01-00. EDITORIAL CHANGES AS NOTED.

NOTES:

1. FOR GENERAL NOTES AND SYMBOLS SEE DRAWING M1-0200.
2. DRAWING IS COMMON TO UNITS 1 AND 2.
3. WASTE GAS COMPRESSOR PACKAGE TBX-GHAPCP-01 BY THE NASH ENG CO DRAWING 75-0044 SHEET 02.
4. WASTE GAS COMPRESSOR PACKAGE TBX-GHAPCP-02 BY THE NASH ENG CO DRAWING 75-0044 SHEET 03.
5. DENOTES RADIOACTIVE WASTE MANAGEMENT SYSTEM CONTINUES ON IDENTIFIED DRAWING.

FSAR FIGURE 11.3-1

THIS DRAWING CREATED ELECTRONICALLY

DRAWING	2323-M1-0269	REV	CP-10
HAS BEEN SPLIT INTO THE FOLLOWING SHEETS:			
M1-0269			
M1-0269 SH A			
M1-0269 SH B			

CLASS II

LUMINANT
CPNPP
GLEN ROSE, TEXAS

FLOW DIAGRAM
WASTE PROCESSING
SYSTEM (GAS)

DWG. NO.	SH. NO.	REV.
M1-0269	-	CP-24

FINAL PRINT

REF CKD 10/09/7 CP-22

me103670.dgn M1-0269

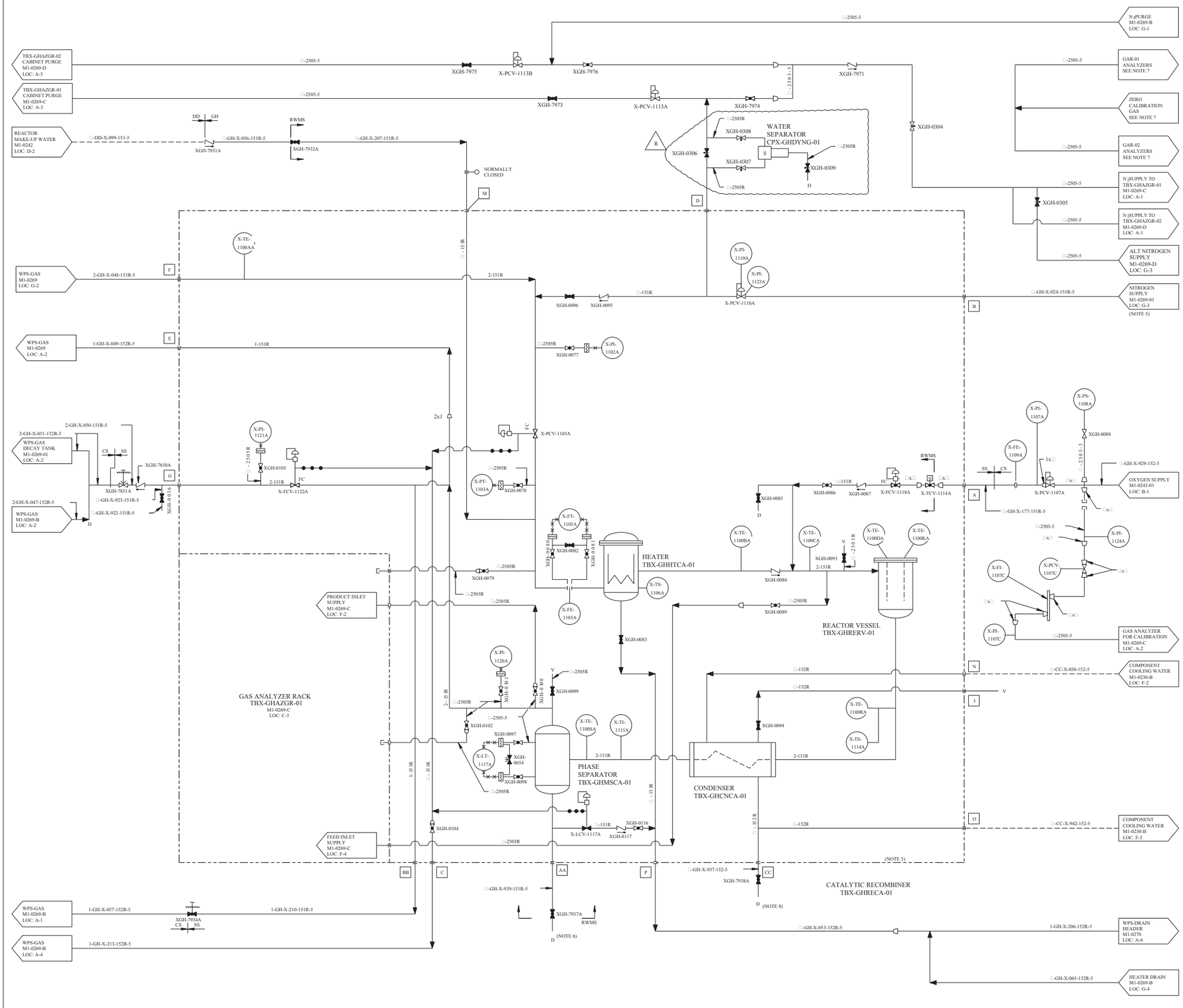

REV	DWN	CHK	APVD	REMARKS
CP-19	JBMC 08-04 2014	DJL 08-04 2014		THIS DRAWING REVISED TO INCORPORATE DESIGN CHANGE FDA 2014-000152-01-00 PER SK-0001-14-000152-01-00.

NOTES:

1. FOR GENERAL NOTES AND SYMBOLS SEE DRAWING M1-0200.
2. DRAWING IS COMMON TO UNITS 1 AND 2.
3. CATALYTIC RECOMBINER TBX-GHRECA-01 AND GAS ANALYZER RACK TBX-GHAZGR-01 BY AIR PRODUCTS DRAWING 00-1-2403-55.10 SH 3 AND 4, CP-2, CP-0001 S/0-230.
4. CATALYTIC RECOMBINERS TERMINAL POINTS COORDINATED WITH AIR PRODUCTS DRAWING 300044 CP-0001 S/0-230.
5. DENOTES RADIOACTIVE WASTE MANAGEMENT SYSTEM CONTINUES ON IDENTIFIED DRAWINGS.
6. CHEMICAL DRAIN TO BE UNDER ADMINISTRATIVE CONTROL AND NORMALLY ROUTED TO A "RAD" DRAIN.
7. FOR ADDITIONAL INFORMATION ON ZERO GAS AND PURGE GAS TO ANALYZERS AND BOTTLE RACKS, SEE VENDOR TECHNICAL MANUAL CP-0001-011 AND -012
8. CHEMICAL DRAIN TO BE UNDER ADMINISTRATIVE CONTROL AND NORMALLY ROUTED TO A "NON-RAD" DRAIN.

FSAR FIGURE 11.3 - 1

THIS DRAWING CREATED ELECTRONICALLY

DRAWING 2323-M1-0269 REV CP-10
HAS BEEN SPLIT INTO THE FOLLOWING SHEETS:
M1-0269
M1-0269-A
M1-0269-B

CLASS II

LUMINANT
CPNPP
GLEN ROSE, TEXAS

FLOW DIAGRAM
WASTE PROCESSING
SYSTEM (GAS)

DWG. NO. M1-0269 | SH. NO. A | REV. CP-19

REF CKD 8/ 19/ 97 CP-13

$$$$$$$$DATE$$$$$$

me610400.dgn A M1-0269-A

< FINAL PRINT >

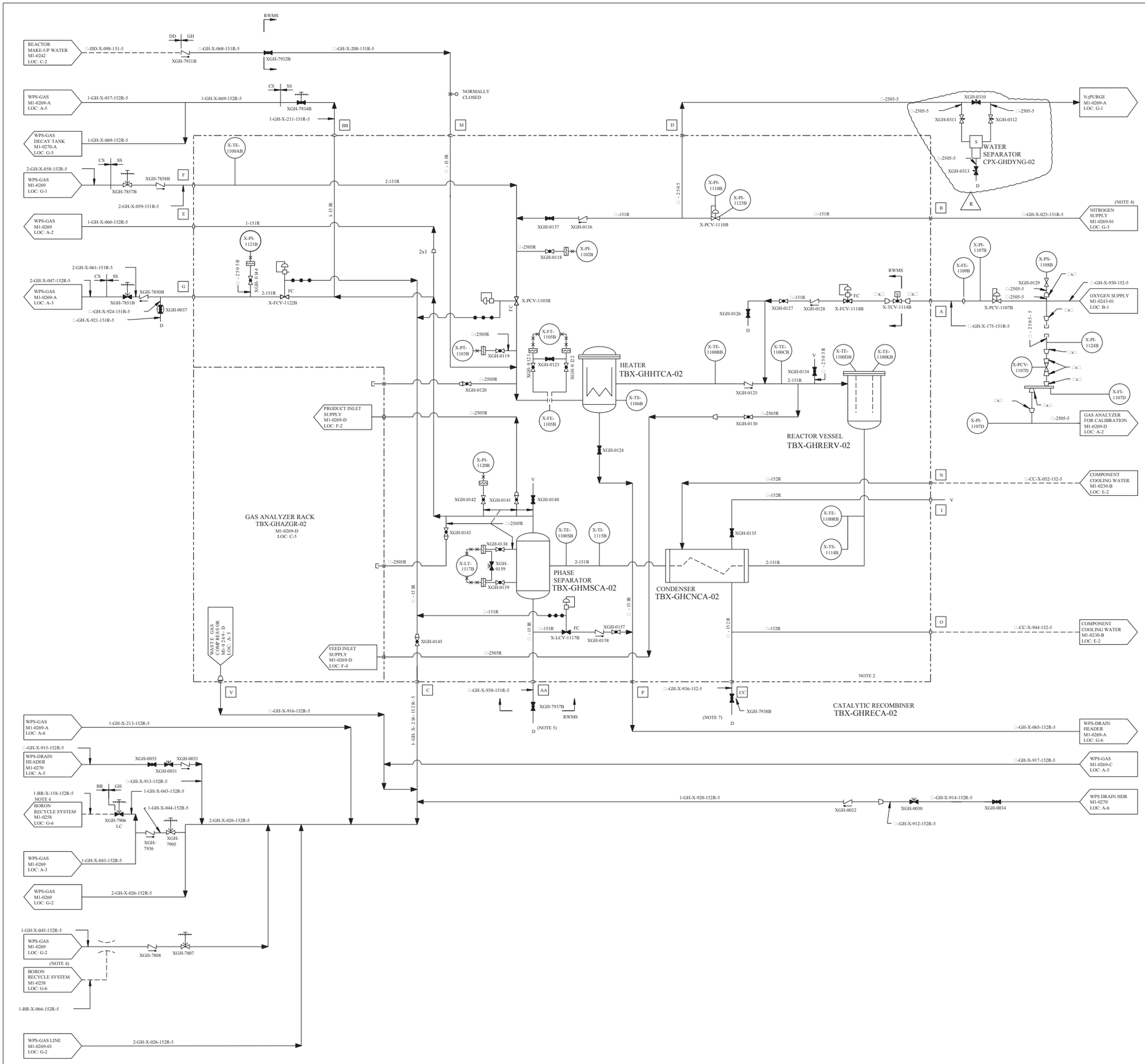

REV	DWN	CHKD	APVD	REMARKS
CP-21	JRMC 08-04 2014	DIL 08-04 2014		THIS DRAWING REVISED TO INCORPORATE DESIGN CHANGE FDA-2014-000152-01-00 PER SK-0002-14-000152-01-00.

NOTES:

1. DELETED
2. CATALYTIC RECOMBINER TBX-GHRECA-02 AND GAS ANALYZER RACK TBX-GHAZGR-02 BY AIR PRODUCTS DRAWING 00-1-2403-55.10 SHEETS 5 AND 6. CP-2, CP-0001 S/0-230.
3. CATALYTIC RECOMBINERS TERMINAL POINTS . CORRODIATED WITH AIR PRODUCTS DRAWING NO 300044 CP-0001 S/0-230.
4. DENOTES RADIOACTIVE WASTE MANAGEMENT SYSTEM CONTINUES ON IDENTIFIED DRAWING.
5. CHEMICAL DRAIN TO BE UNDER ADMINISTRATIVE CONTROL AND NORMALLY ROUTED TO A "RAD" DRAIN.
6. FOR GENERAL NOTES AND SYMBOLS SEE DRAWING M1-0200.
7. CHEMICAL DRAIN TO BE UNDER ADMINISTRATIVE CONTROL AND NORMALLY ROUTED TO A "NON-RAD" DRAIN.

FSAR FIGURE 11.3 - 1

THIS DRAWING CREATED ELECTRONICALLY

DRAWING 2323-M1-0269 REV CP-10
HAS BEEN SPLIT INTO THE FOLLOWING SHEETS:

M1-0269
M1-0269 SH A
M1-0269 SH B

CLASS II

LUMINANT
CPNPP
GLEN ROSE, TEXAS

FLOW DIAGRAM
WASTE PROCESSING
SYSTEM (GAS)

DWG. NO. M1-0269 | SH. NO. B | REV. CP-21

REF CKD 8/ 19/ 97 CP- 15

$$$$$$$$ DATES $$$$$$$$

me103630.dgn A M1-0269-B

< FINAL PRINT >

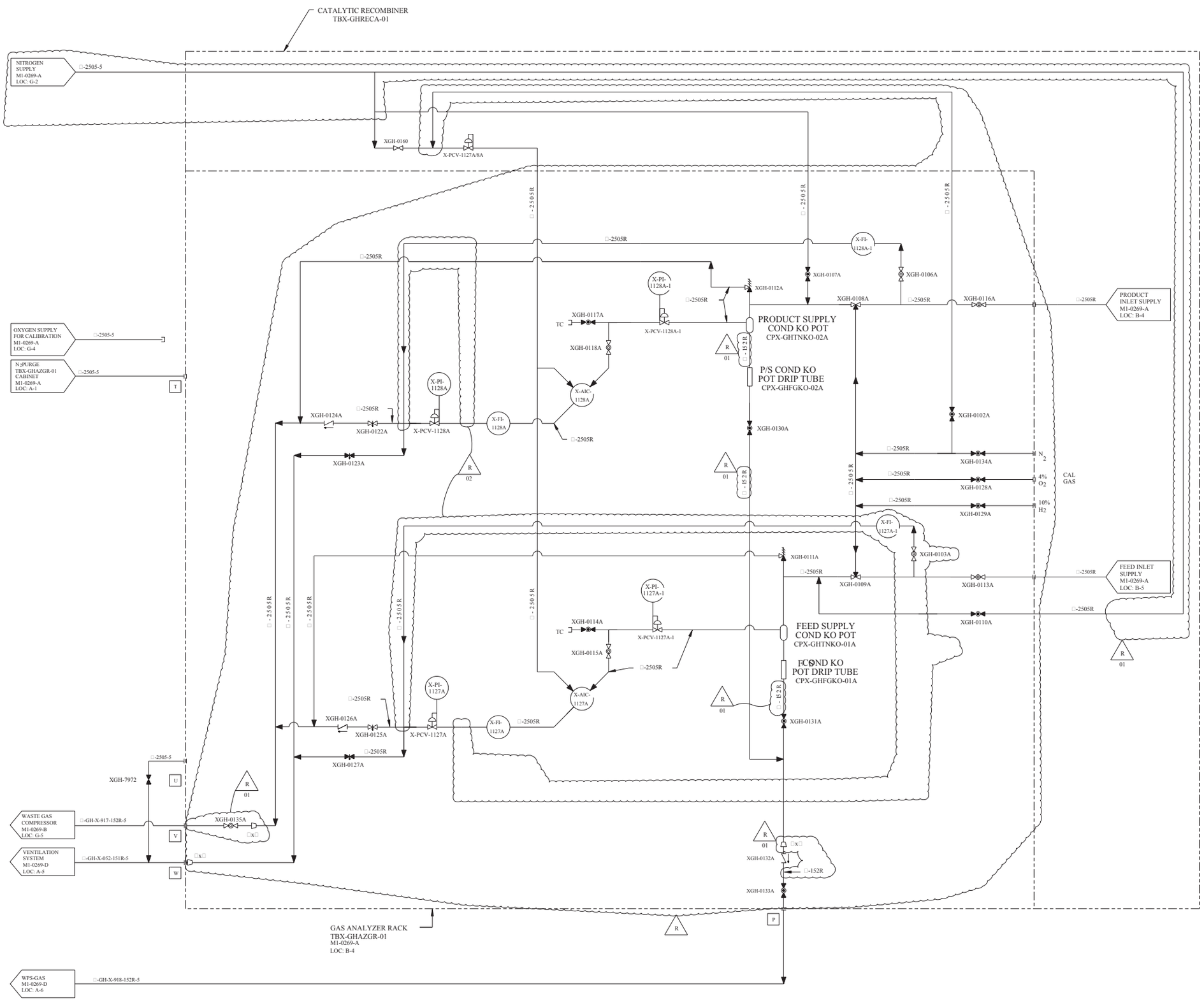

REV	DWN	CHKD	APVD	REMARKS
CP-1	SJL 09-16 2002	DJL 09-17 2002		THIS DRAWING CREATED TO INCORPORATE DESIGN CHANGE FDA-1999-001202-01-03 PER SK-0003-99-001202-01-02.

NOTES

1. FOR GENERAL NOTES AND SYMBOLS SEE DRAWING M1-0200.
2. DRAWING IS COMMON TO UNITS 1 AND 2.
3. CATALYTIC RECOMBINER TBX-GHRECA-01 AND GAS ANALYZER RACK TBX-GHAZGR-01 BY AIR PRODUCTS DRAWING 00-1-2403-55.10.
4. CATALYTIC RECOMBINERS TERMINAL POINTS COORDINATED WITH AIR PRODUCTS DRAWING 300044.

FSAR FIGURE 11.3-1

THIS DRAWING CREATED ELECTRONICALLY

DRAWING M1-0269-A REV CP-14
HAS BEEN SPLIT INTO THE FOLLOWING SHEETS:
M1-0269-A
M1-0269-C

CLASS II

LUMINANT
CPNPP
GLEN ROSE, TEXAS

FLOW DIAGRAM
WASTE PROCESSING
SYSTEM (GAS)

DWG. NO. M1-0269 | SH. NO. C | REV. CP-1

< FINAL PRINT >

REF CHKD 03/20/2001

$$$$$$$DATE$$$$$$

me423800.dgn A M1-0269-C

REV	DWN	CHKD	APVD	REMARKS
CP-2	DLK 04-25 2014	MHF 04-25 2014		THIS DRAWING REVISED TO INCORPORATE DESIGN CHANGE FDA 2014-000106-01-00 PER SK-0001-14-000106-01-00.

NOTES:

1. FOR GENERAL NOTES AND SYMBOLS SEE DRAWING M1-0200.
2. DRAWING IS COMMON TO UNITS 1 AND 2.
3. CATALYTIC RECOMBINER TBX-GHRECA-02 AND GAS ANALYZER RACK TBX-GHAZGR-02 BY AIR PRODUCTS DRAWING 00-1-2403-55.10.
4. CATALYTIC RECOMBINERS TERMINAL POINTS COORDINATED WITH AIR PRODUCTS DRAWING 300044.

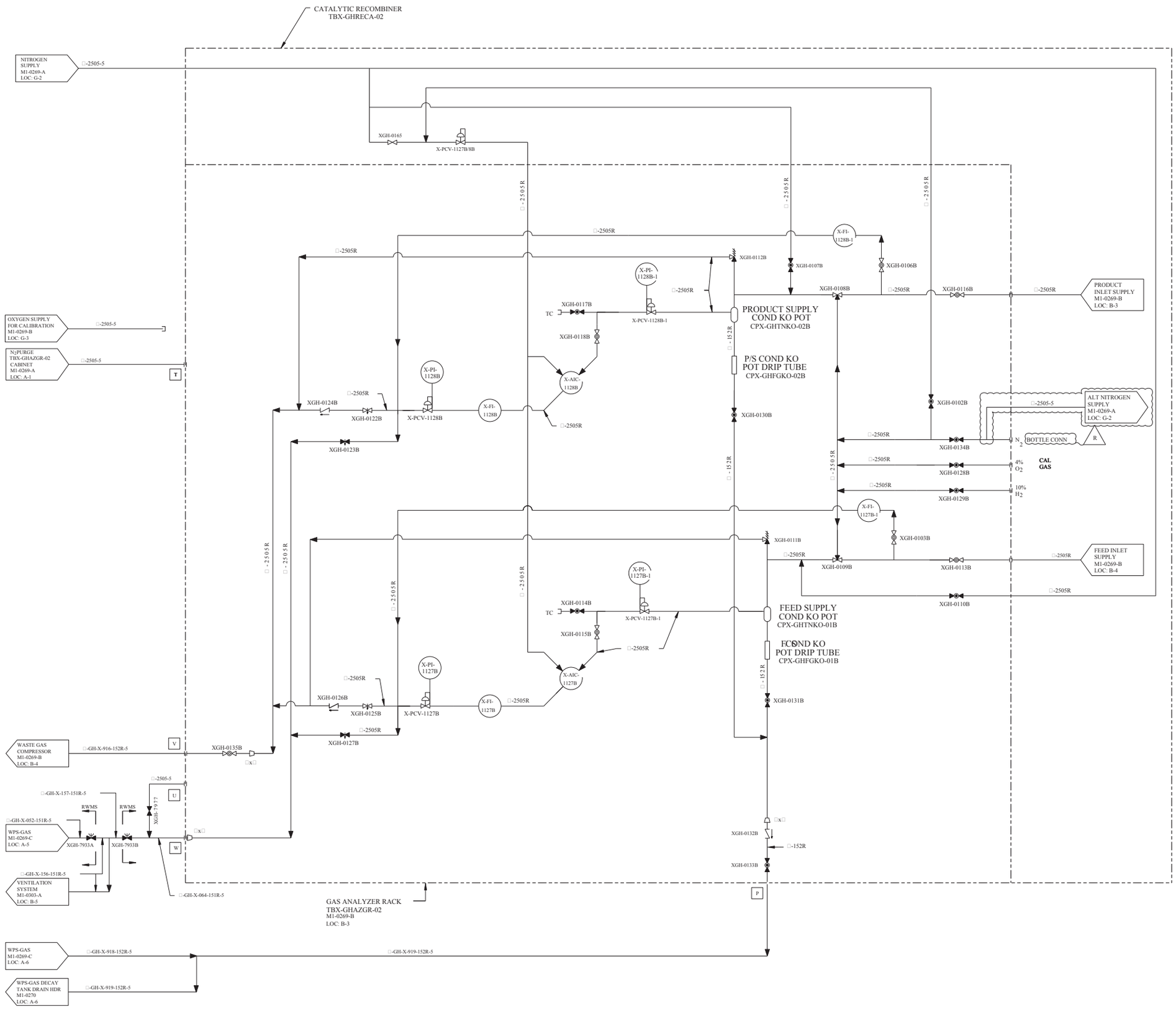

FSAR FIGURE 11.3-1

THIS DRAWING CREATED ELECTRONICALLY

DRAWING M1-0269-B REV CP-16 HAS BEEN SPLIT INTO THE FOLLOWING SHEETS:
M1-0269-B
M1-0269-D

CLASS II

LUMINANT
CPNPP
GLEN ROSE, TEXAS

FLOW DIAGRAM
WASTE PROCESSING
SYSTEM (GAS)

DWG. NO. M1-0269 | SH. NO. D | REV. CP-2

$$$$$$$DATE$$$$$ REF CHKD 3/22/2001

me445200.dgn M1-0269-D < FINAL PRINT >

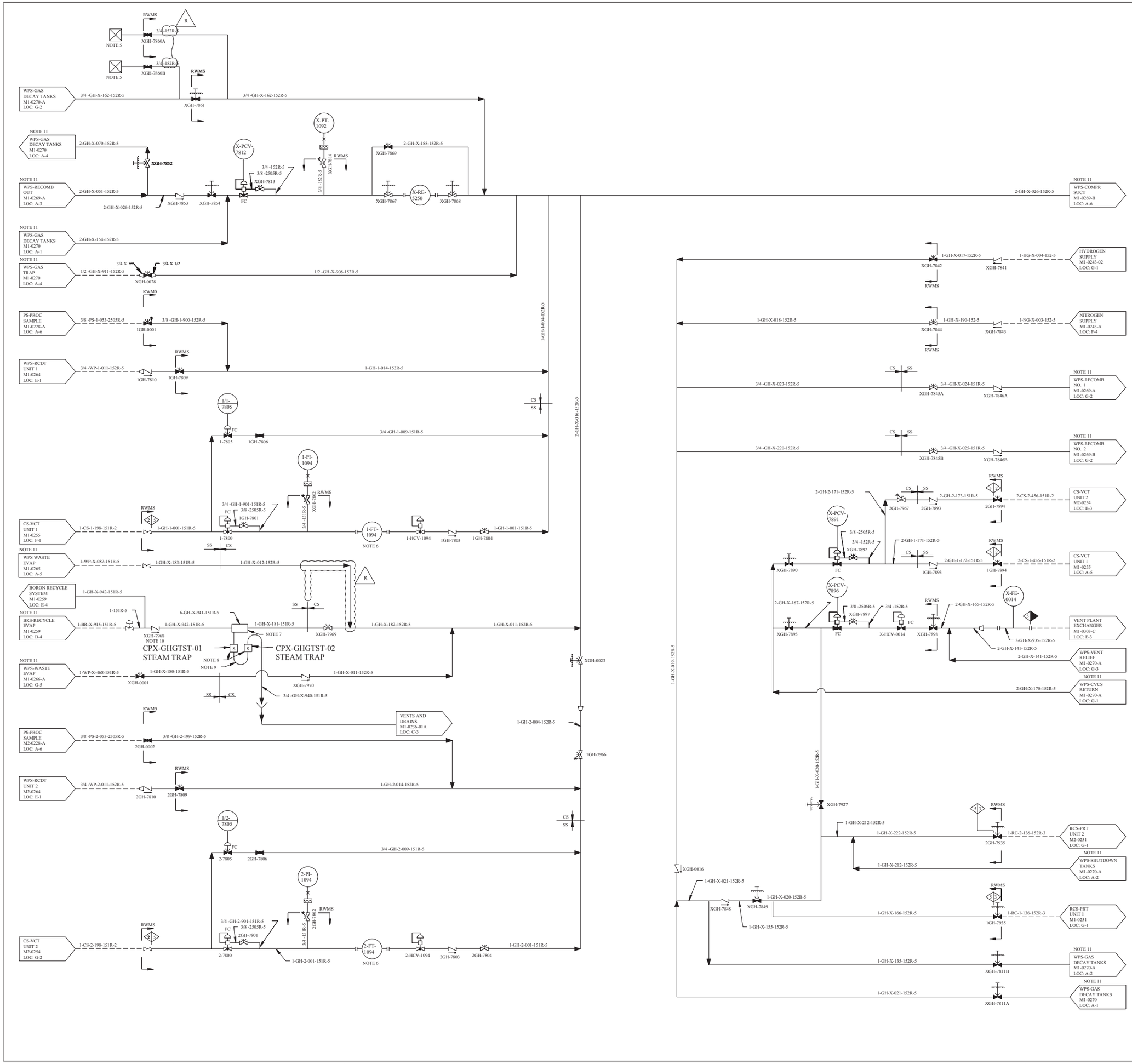

REV	DWN	CHKD	APVD	REMARKS
CP-22	MM 08-15-2011	DLK 09-19-2011		THIS DRAWING REVISED TO INCORPORATE DESIGN CHANGE FDA-2011-000130-01-00 PER SK-0006-11-000130-01-00.

NOTES:

1. FOR GENERAL NOTES AND SYMBOLS SEE DRAWING M1-0200.
2. DRAWING IS COMMON TO UNITS 1 AND 2.
3. FLOW DIAGRAM REDRAWN FROM WESTINGHOUSE DRAWING 114E71 SHEET 1, R-5 AND 114E71 SHEET 2, R-5.
4. GH-SYSTEM IS WITHIN RADIOACTIVE WASTE MANAGEMENT SYSTEM BOUNDARIES.
5. WELDED COUPLINGS AND TUBING ADAPTER TO RECEIVE PLANT GAS SAMPLING VESSEL.
6. PROTECT TURBINE METER FROM CONDENSATE DRAINAGE BY INSTALLING AT A LOCAL HIGH POINT; SLOPE INLET AND OUTLET PIPING DOWNWARD FROM METER.
7. VAPOR/LIQUID SEPARATOR FIELD FABRICATED FROM 6" DIA x 12" SS PIPE SECTION. INSTALLED HORIZONTAL AT ELEVATION 822'-8".
8. BALL FLOAT STEAM TRAPS (SUBMERGED).
9. 8'-0" DEPTH LOOP SEAL. TOP OF LOOP SEAL 1'-0" BELOW VAPOR/ LIQUID SEPARATOR AND 1'-0" ABOVE STEAM TRAPS.
10. REMOVE INTERNAL SPRING FROM XGH-7968 .
11. DENOTES RADIOACTIVE WASTE MANAGEMENT SYSTEM CONTINUES ON IDENTIFIED DRAWING.

FSAR FIGURE 11.3-1

THIS DRAWING CREATED ELECTRONICALLY

CLASS I
(NUCLEAR SAFETY-RELATED)
SAFETY CLASS 1 — SEISMIC CATEGORY I
SAFETY CLASS 2 — CLASS 1E
SAFETY CLASS 3 — ASSOCIATED CIRCUITS

LUMINANT
CPNPP
GLEN ROSE, TEXAS

FLOW DIAGRAM
WASTE PROCESSING SYSTEM
(GAS)

DWG. NO. M1-0269 | SH. NO. 01 | REV. CP-22

FINAL PRINT

REF CKD 10/20/97 CP-21

me103610.dgn M1-0269-01

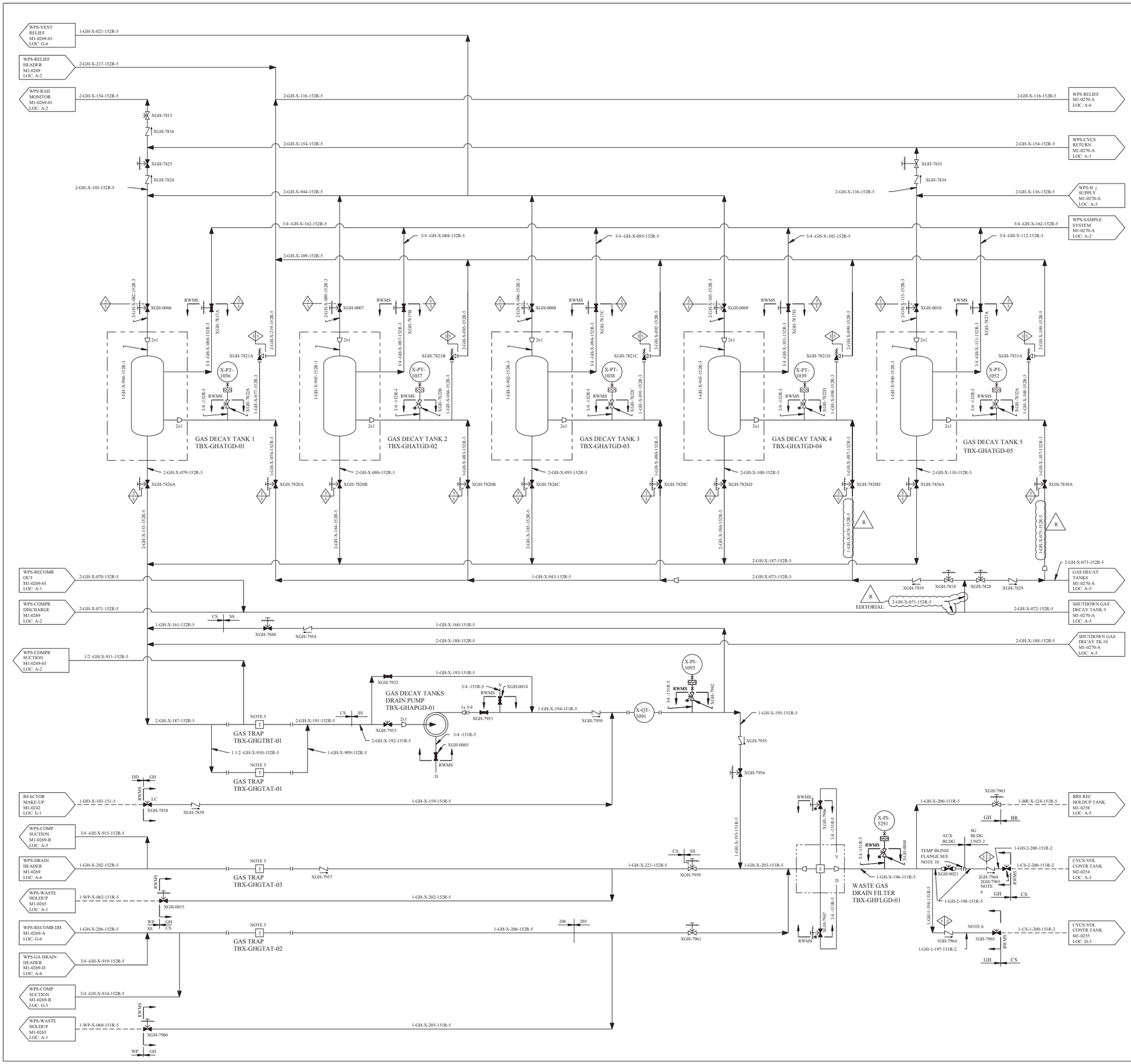

REV	DWN	CHKD	APVD	REMARKS
CP-20	MM 08-01-2011	BLK 08-11-2011		THIS DRAWING REVISED TO INCORPORATE DESIGN CHANGE FDA-2011-000130-01-00 PER SK-0001-11-000130-01-00. EDITORIAL CHANGE AS NOTED.

NOTES:

1. FOR GENERAL NOTES AND SYMBOLS SEE M1-0200.
2. DRAWING IS COMMON TO UNITS 1 AND 2.
3. CONNECTION TO GAS DECAY TANKS AS SPECIFIED BY WESTINGHOUSE DRAWING 1099E31 R-6.
4. FLOW DIAGRAM REDRAWN FROM WESTINGHOUSE DRAWINGS 1141E71 SHEET 1 R-5 AND 1141E71 SHEET 2 R-5.
5. TRAPS MUST BE LOCATED BELOW DRAIN SOURCE AND WITHOUT LOOP SEAL IN INLET PIPING.
6. VALVES 2GH-7964 AND 2GH-7965 MUST BE LOCATED NEAR VOLUME CONTROL TANK.
7. GH-SYSTEM IS WITHIN RADIOACTIVE WASTE MANAGEMENT SYSTEM BOUNDARIES.
8. DELETED
9. FOR INSTRUMENTATION AND CONTROL SEE 2200 SERIES I & C DIAGRAM.
10. THIS BLIND FLANGE TO BE REMOVED ONLY AT THE DIRECTION OF NUCLEAR OPERATIONS.
11. DELETED

FSAR FIGURE 11.3-1

THIS DRAWING CREATED ELECTRONICALLY

DRAWING 2323-M1-0270 REV CP-6
HAS BEEN SPLIT INTO THE FOLLOWING SHEETS:
M1-0270
M1-0270-A

CLASS I
(NUCLEAR SAFETY-RELATED)
SAFETY CLASS 1 SEISMIC CATEGORY I
SAFETY CLASS 2 CLASS 1E
SAFETY CLASS 3 ASSOCIATED CIRCUITS

LUMINANT
CPNPP
GLEN ROSE, TEXAS

FLOW DIAGRAM
WASTE PROCESSING SYSTEM
(GAS)

DWG. NO. M1-0270 | SH. NO. - | REV. CP-20

FINAL PRINT

REF CHKD 3/21/2001

mc103640.dgn A M1-0270

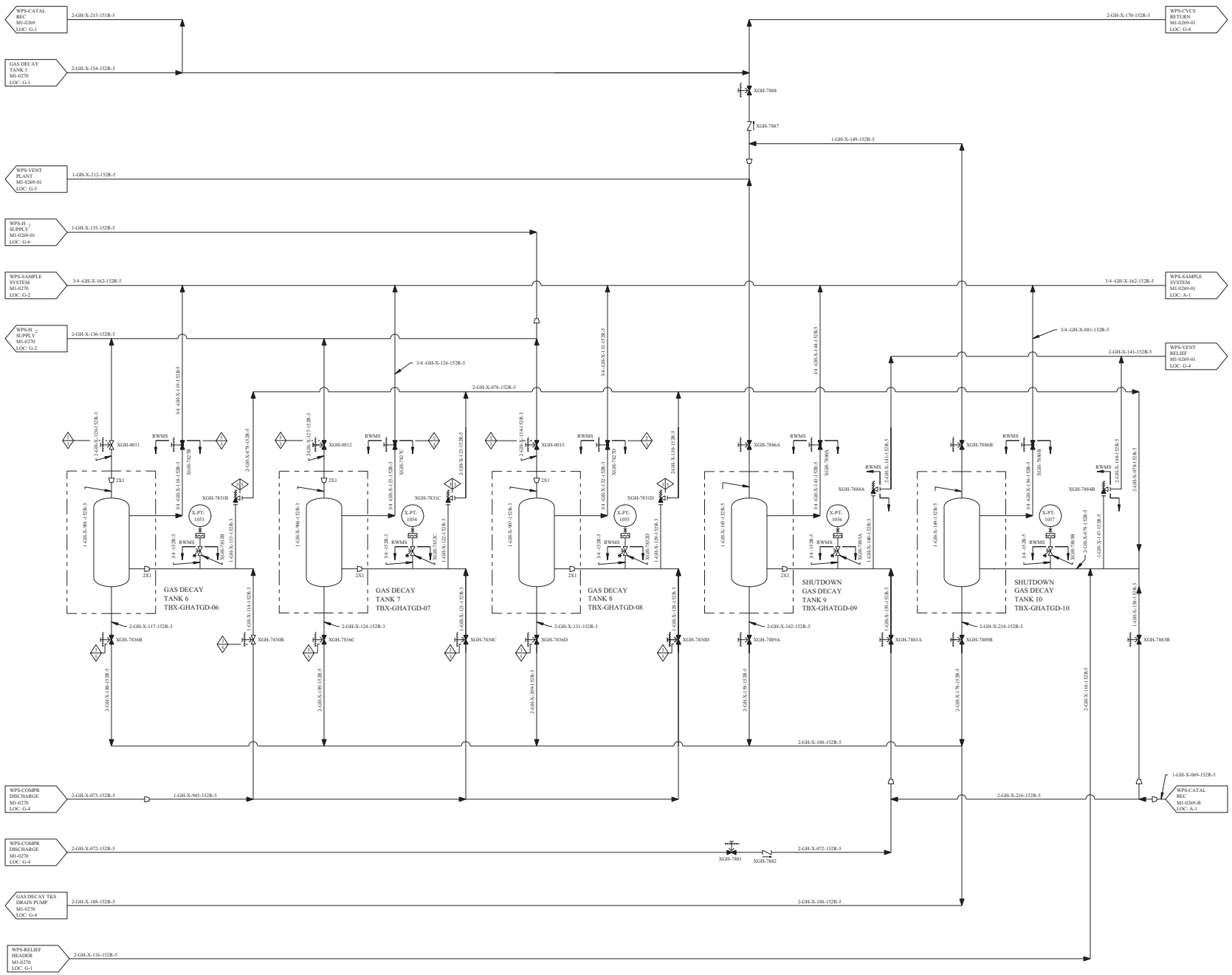

REV	DWN	CHKD	APVD	REMARKS
CP-6	RMB 05-24-1996			THIS DRAWING REVISED TO ADD THE FSAR FIGURE NUMBER AS AN EDITORIAL CHANGE.

NOTES:

1. FOR GENERAL NOTES AND SYMBOLS SEE M1-0200.
2. DRAWING IS COMMON TO UNITS 1 AND 2.
3. CONNECTION TO GAS DECAY TANKS AS SPECIFIED BY WESTINGHOUSE DRAWING 1099E31 R6.
4. FLOW DIAGRAM REDRAWN FROM WESTINGHOUSE DRAWING NUMBERS 1141E71 SH 1 R5 AND 1141E71 SH 2 R5
5. GH SYSTEM IS WITHIN RADIOACTIVE WASTE MANAGEMENT BOUNDARIES.
6. FOR INSTRUMENTATION AND CONTROL SEE 2200 SERIES I&C DIAGRAM.

CP 6

FSAR FIGURE 11.3-1

THIS DRAWING CREATED ELECTRONICALLY

DRAWING 2323-M1-0270 REV CP-6
HAS BEEN SPLIT INTO THE FOLLOWING SHEETS:
M1-0270
M1-0270-A

CLASS I
(NUCLEAR SAFETY-RELATED)
SAFETY CLASS 1 SEISMIC CATEGORY I
SAFETY CLASS 2 CLASS 1E
SAFETY CLASS 3 ASSOCIATED CIRCUITS

TXU ELECTRIC
CPSES
GLEN ROSE, TEXAS

FLOW DIAGRAM
WASTE PROCESSING SYSTEM
(GAS)

DWG. NO.	SH. NO.	REV.
M1-0270	A	CP-6

vs0000ge.dgn

FIGURE 11.3-2 96

This Figure has been deleted

FIGURE 11.3-3 96

This Figure has been deleted

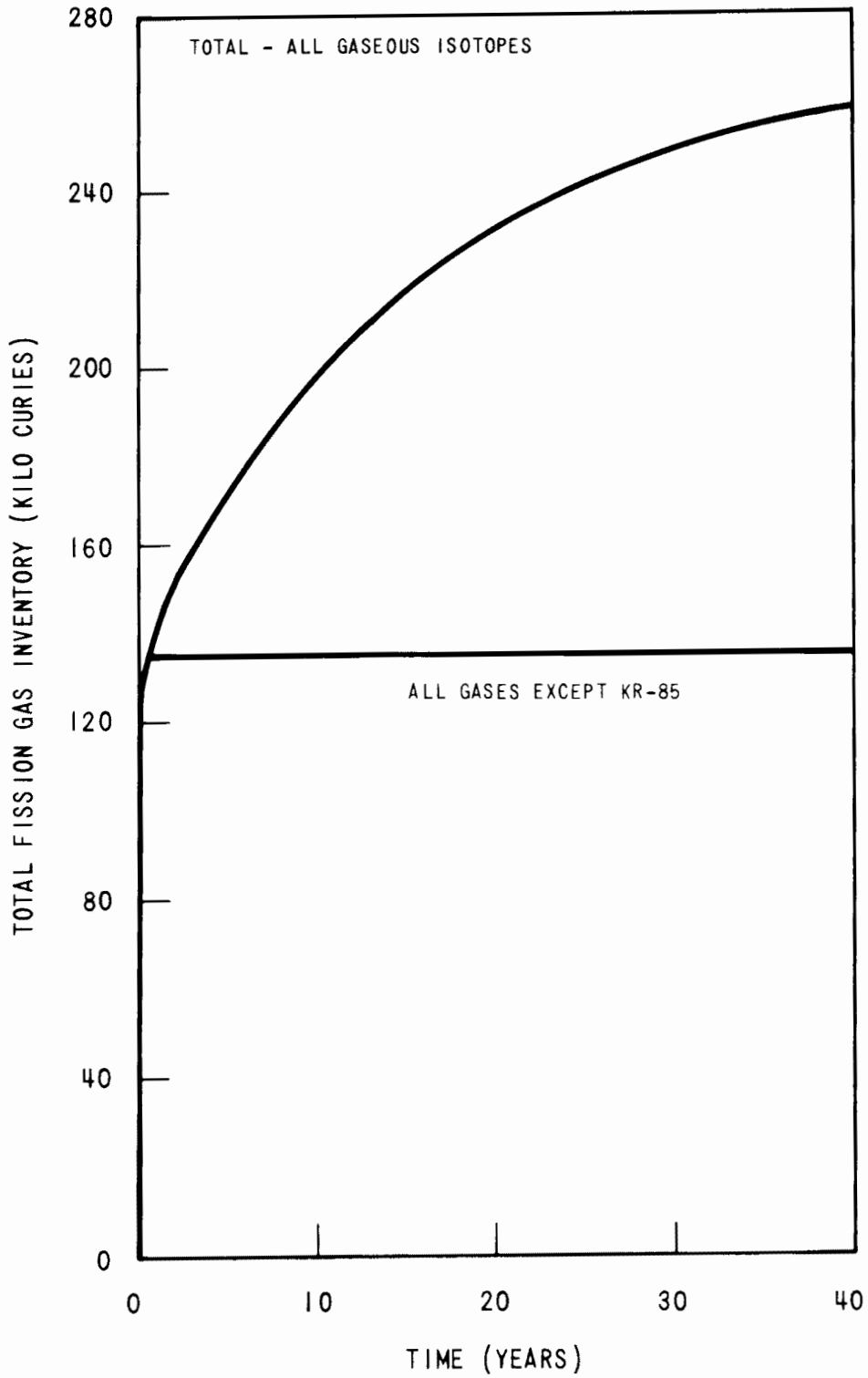

Note: Based on continuous core operation at 3565 Mwt with 1 percent fuel defects, stripping efficiency of 100 percent (refer to Table 11.1-1).

COMANCHE PEAK S.E.S.
FINAL SAFETY ANALYSIS REPORT
UNITS 1 and 2

GWPS Fission Gas Accumulation

FIGURE 11.3-4

UNITED STATES OF AMERICA
NUCLEAR REGULATORY COMMISSION

BEFORE THE ATOMIC SAFETY AND LICENSING BOARD

In the Matter of	)	
	)	
TEXAS UTILITIES GENERATING COMPANY, *et al.*	)	Docket Nos. 50-445- and 50-446
	)	
(Comanche Peak Steam Electric Station, Units 1 and 2)	)	

STIPULATION

In consideration of the following Stipulation, Citizens for Fair Utility Regulation ("CFUR") hereby voluntarily withdraws Contention 9 from litigation in this proceeding. It is agreed that this Stipulation is contingent upon its acceptance by the NRC Staff and upon dismissal of Contention 9 by the Licensing Board. It is also agreed that nothing in this Stipulation shall prevent modification of the Stipulation and/or the operating criteria for Comanche Peak if NRC Regulations change or if Applicants determine that there is a better method than that outlined below to achieve the objective.

It is agreed between CFUR and Applicants that Applicants will operate Comanche Peak such that dose commitments from planned gaseous radioactive batch releases are as low as is reasonably achievable. Applicants shall take meterology, demography and batch characteristics into consideration in

achieving this objective. Applicants will include this Stipulation in the Final Safety Analysis Report for Comanche Peak.

Citizens for Fair Utility Regulation

Counsel for Applicants

Date: November 20, 1981

COMANCHE PEAK S.E.S.
FINAL SAFETY ANALYSIS REPORT
UNITS 1 and 2

ALARA STIPULATION
(CFUR)

FIGURE 11.3-5

(DELETED)

JANUARY 21, 1985

COMANCHE PEAK S.E.S.
FINAL SAFETY ANALYSIS REPORT
UNITS 1 and 2

FLOW DIAGRAM - RADIOACTIVE WASTE SOLIDIFICATION SYSTEM

FIGURE 11.4-1

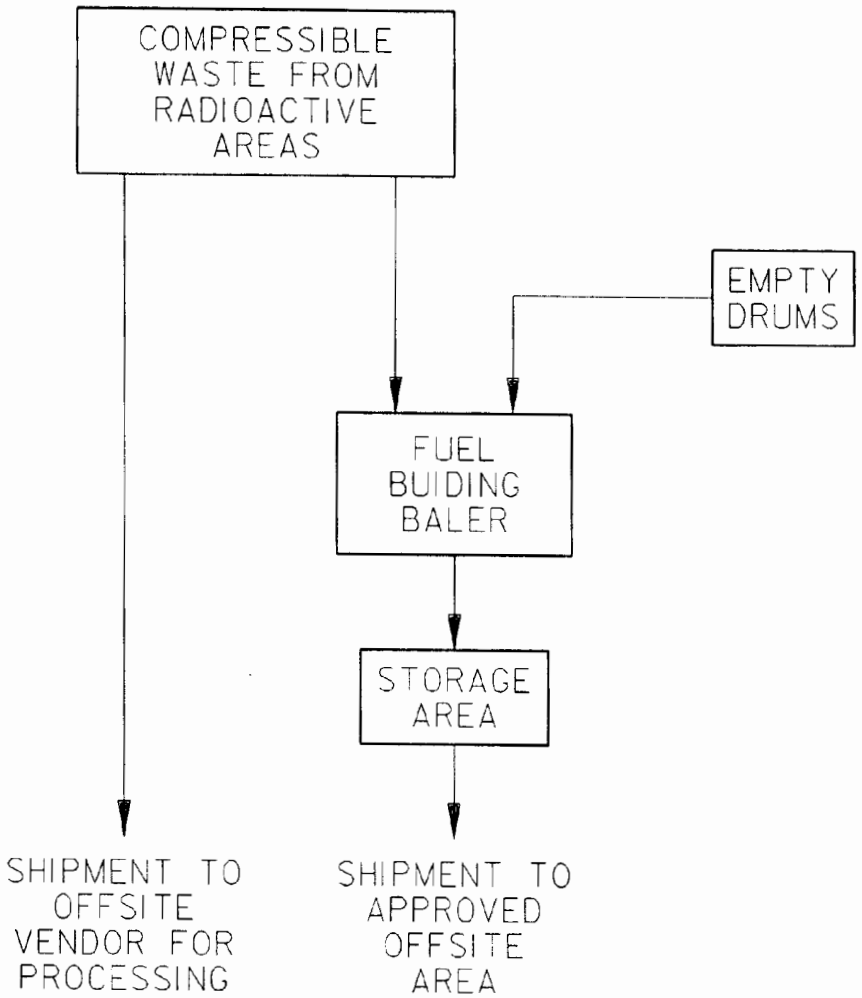

AMENDMENT 86
AUGUST 31, 1992

COMANCHE PEAK S E S
FINAL SAFETY ANALYSIS REPORT
UNITS 1 AND 2

FLOW SHEET
BALER - SUBSYSTEM

FIGURE 11.4-2

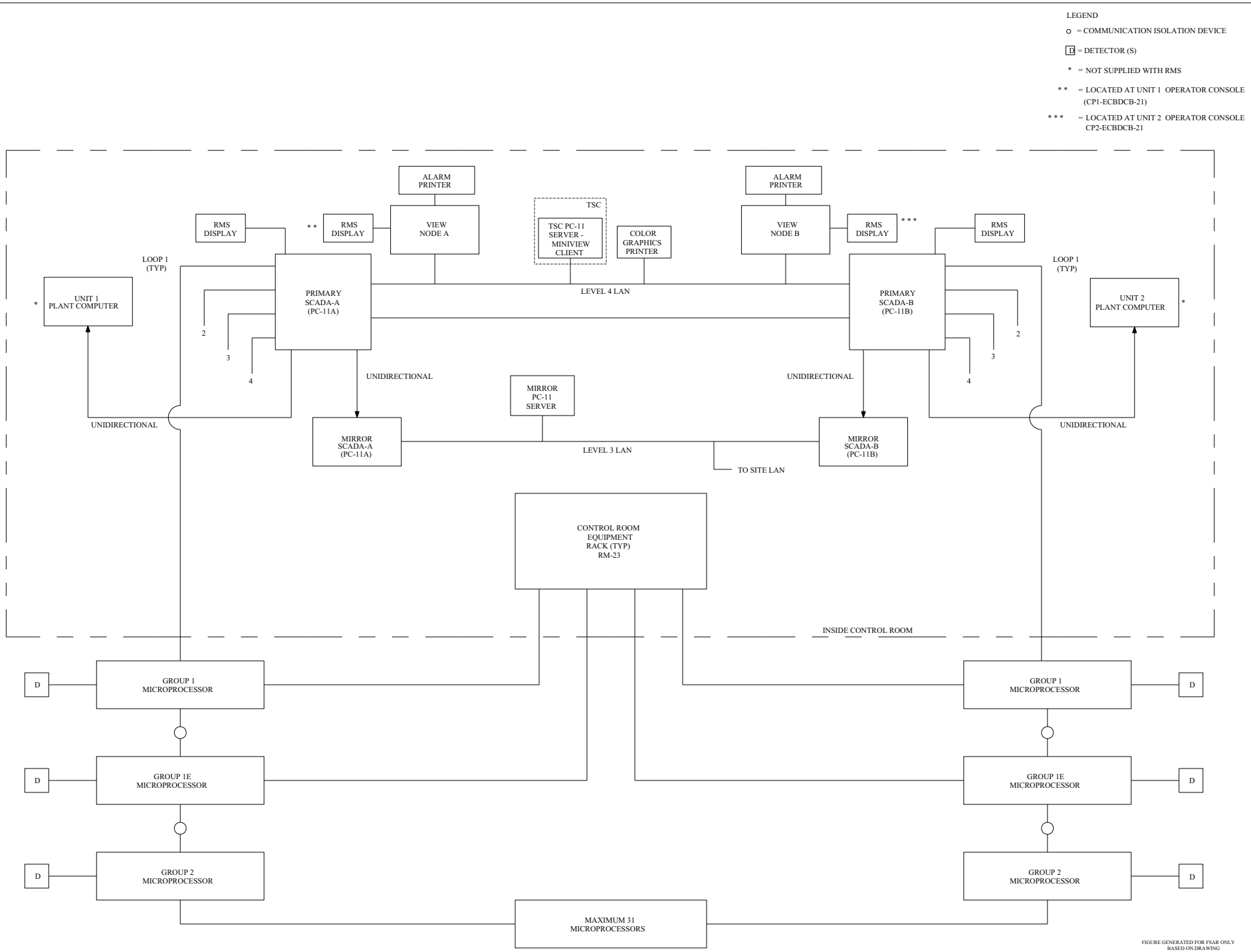

FIGURE GENERATED FOR FSAR ONLY BASED ON DRAWING

COMANCHE PEAK N.P.P.
FINAL SAFETY ANALYSIS REPORT
UNITS 1 AND 2

BLOCK DIAGRAM
DIGITAL RADIATION
MONITORING SYSTEM

FIGURE 11.5-1

Amendment No. 105

07-24-2012
FIG001151.DGN

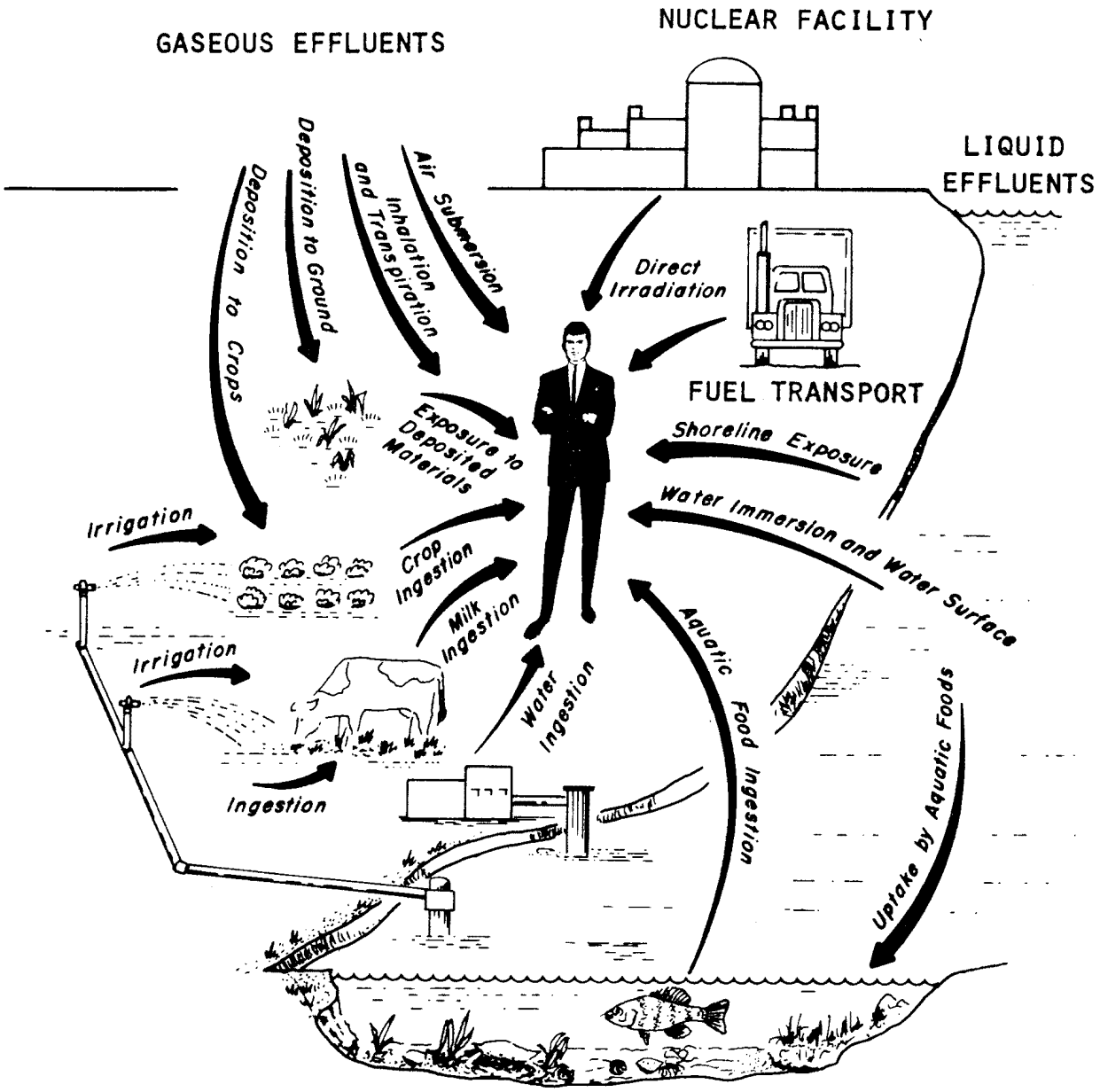

COMANCHE PEAK S.E.S.
FINAL SAFETY ANALYSIS REPORT
UNITS 1 and 2

EXPOSURE PATHWAYS TO MAN

FIGURE 11A-1

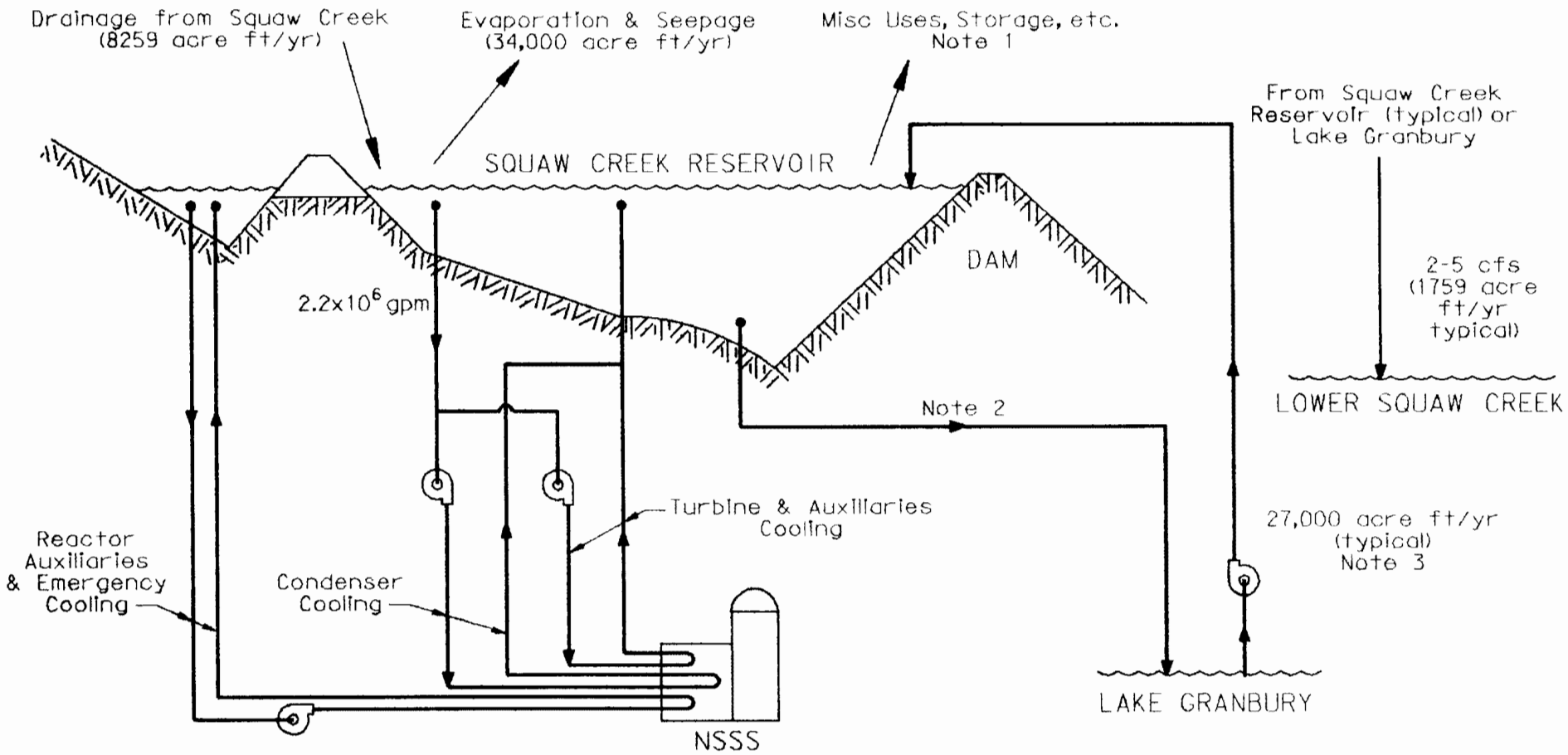

Notes:

(1) Negligible net volume removed from Squaw Creek Reservoir per year.

(2) Return flow to Lake Granbury from Squaw Creek Reservoir is not a typical flow path.

(3) Water is pumped from Lake Granbury to Squaw Creek Reservoir to maintain water level in reservoir. This amount of water varies, but is based on drainage from Squaw Creek, evaporation, release to lower Squaw Creek, etc.

AMENDMENT 85
MAY 29, 1992

COMANCHE PEAK S.E.S.
FINAL SAFETY ANALYSIS REPORT
UNITS 1 AND 2

RESERVOIR - CPSES FLOW PATH

FIGURE 11A-2

DS1392029

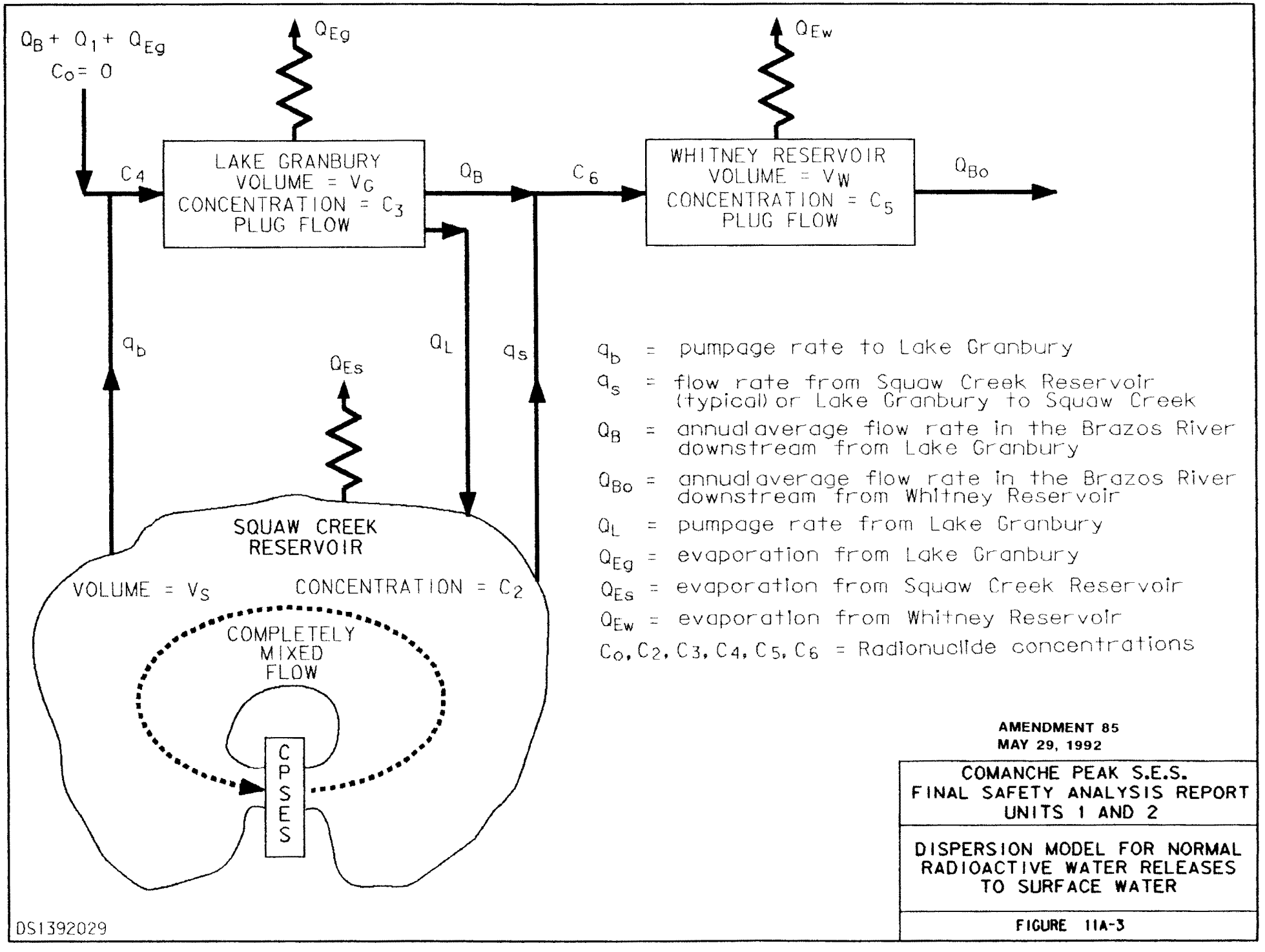

AMENDMENT 85
MAY 29, 1992

COMANCHE PEAK S.E.S.
FINAL SAFETY ANALYSIS REPORT
UNITS 1 AND 2

DISPERSION MODEL FOR NORMAL RADIOACTIVE WATER RELEASES TO SURFACE WATER

FIGURE 11A-3